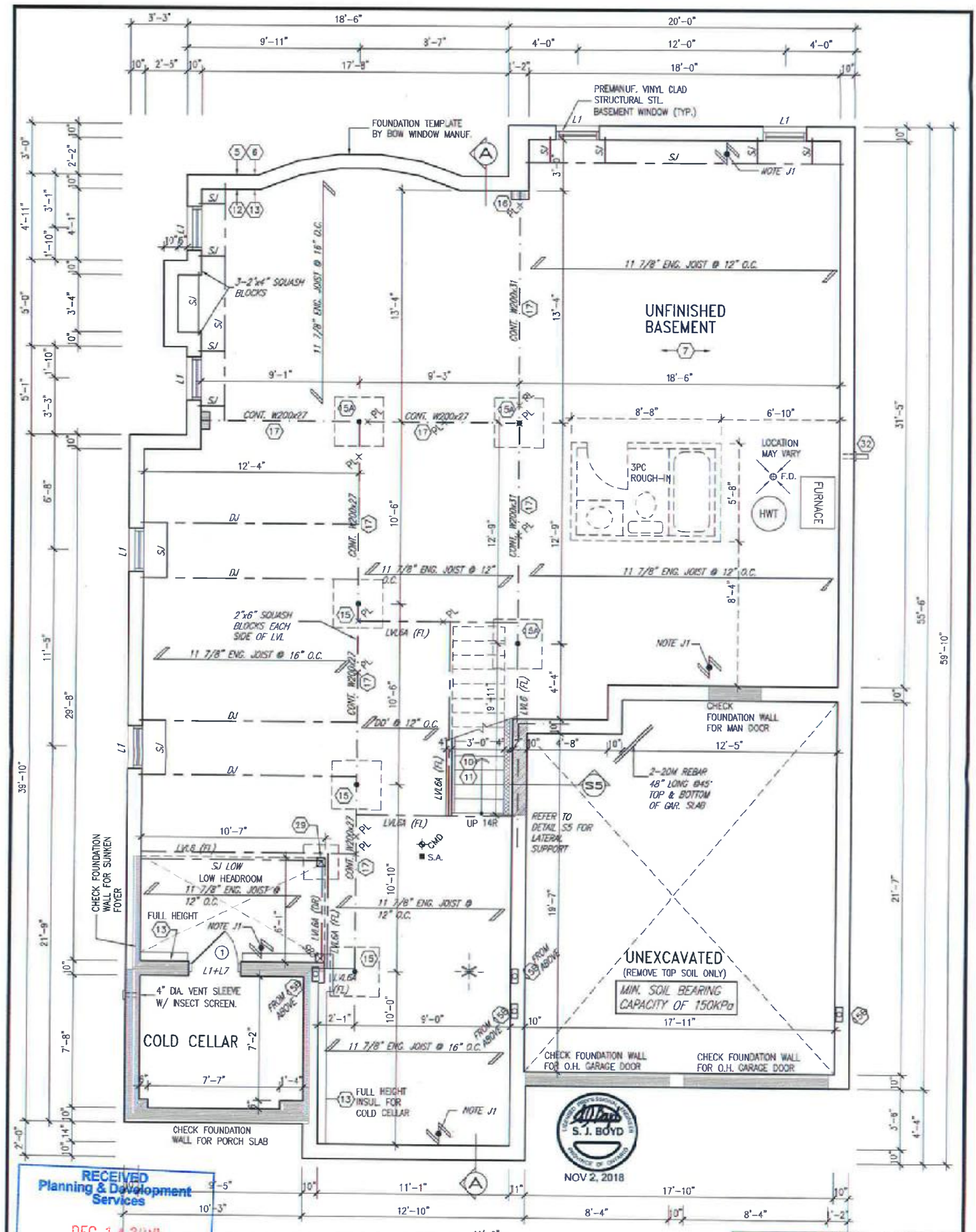

RECEIVED
Planning & Development Services
DEC 14 2018

NOTE J1: PROVIDE SOLID BLOCKING @ 24" O.C. WHERE FLOOR JOISTS ARE PARALLEL TO FOUNDATION WALL (TYP.)

NOTE: ALL LVL'S SUPPORTING FLOOR LOADS ARE TO BE SPECIFIED BY THE FLOOR TRUSS MANUFACTURER.

NOTE: SPACE ALL FLOOR JOISTS @ 12" O.C. UNDER ALL CERAMIC TILE AREAS.

NOTE: FLOOR FRAMING INFO REFER TO ENG SHOP DRAWINGS FOR ALL TRUSS-JOIST INFORMATION AND DETAILS. UNLESS OTHERWISE NOTED.

BASEMENT PLAN 'B'

REFER TO PAGE 8 FOR AREA CHART

LOT 187

JOHN C. WILLIAMS LTD., ARCHITECT
MICHAEL J. WILLIAMS, OF HEW
AND APPROVAL
APPROVED BY
DATE NOV.05.2018
This stamp certifies compliance with the applicable Design Guidelines only and bears no further professional responsibility

This is to certify that these plans comply with the applicable Architectural Design Guidelines approved by the Town of BRADFORD / WEST GWILLIMBURY.

In no way the Building Consultant assumes responsibility or ensures that all construction and/or materials and/or methods fully comply with the Architectural Guidelines and all applicable regulations and requirements in the Subdivision Agreement. The Consultant Architect is not responsible in any way for examining or approving the building plans or specifications as regards matters of zoning, building code or permit matter or that any house can be properly built or located on its lot.

no.	description	date	by
9			
8			
7	REVISED AS PER ENG'S COMMENTS	NOV 02-18	RC
6	CREATED FOR LOT 187	OCT. 25/18	WT
5	REVISED AS PER ENG'S COMMENTS	SEP 27-17	RC
4	REVISED AS PER 2017 CODE	MAR. 10-17	SB
3	REVISED AS PER ENG'S COMMENTS	JUN 06-15	RC
2	REVISED AS PER TRUSS LAYOUTS	MAY 16-16	RC
1	ISSUED FOR CLIENT REVIEW	JAN. 01-16	CM

The undersigned has reviewed and takes responsibility for this design, and has the qualifications and meets the requirements set out in the Ontario Building Code to be a Designer.
qualification information
Wellington Jna-Baptiste 25591
name signature BCIN
registration information
VA3 Design Inc. 42698

Contractor must verify all dimensions on the job and report any discrepancy to the Designer before proceeding with the work. All drawings and specifications are instruments of service and the property of the Designer which must be returned at the completion of the work. Drawings are not to be scaled.

VA3 DESIGN
300A Wilson Avenue
Toronto ON M3H 1S8
t 416.630.2255 f 416.630.4782
va3design.com

BAYVIEW WELLINGTON
project name: GREEN VALLEY ESTATES
municipality: BRADFORD, ON.
DECEMBER 2015
BASEMENT PLAN ELEVATION 'B'
date | drawn by: CM | checked by: - | scale: 3/16" = 1'-0"
file name: 13045-S50-1-L187
S50-1
CASTELLO 1
project no. 13045
drawing no. 1

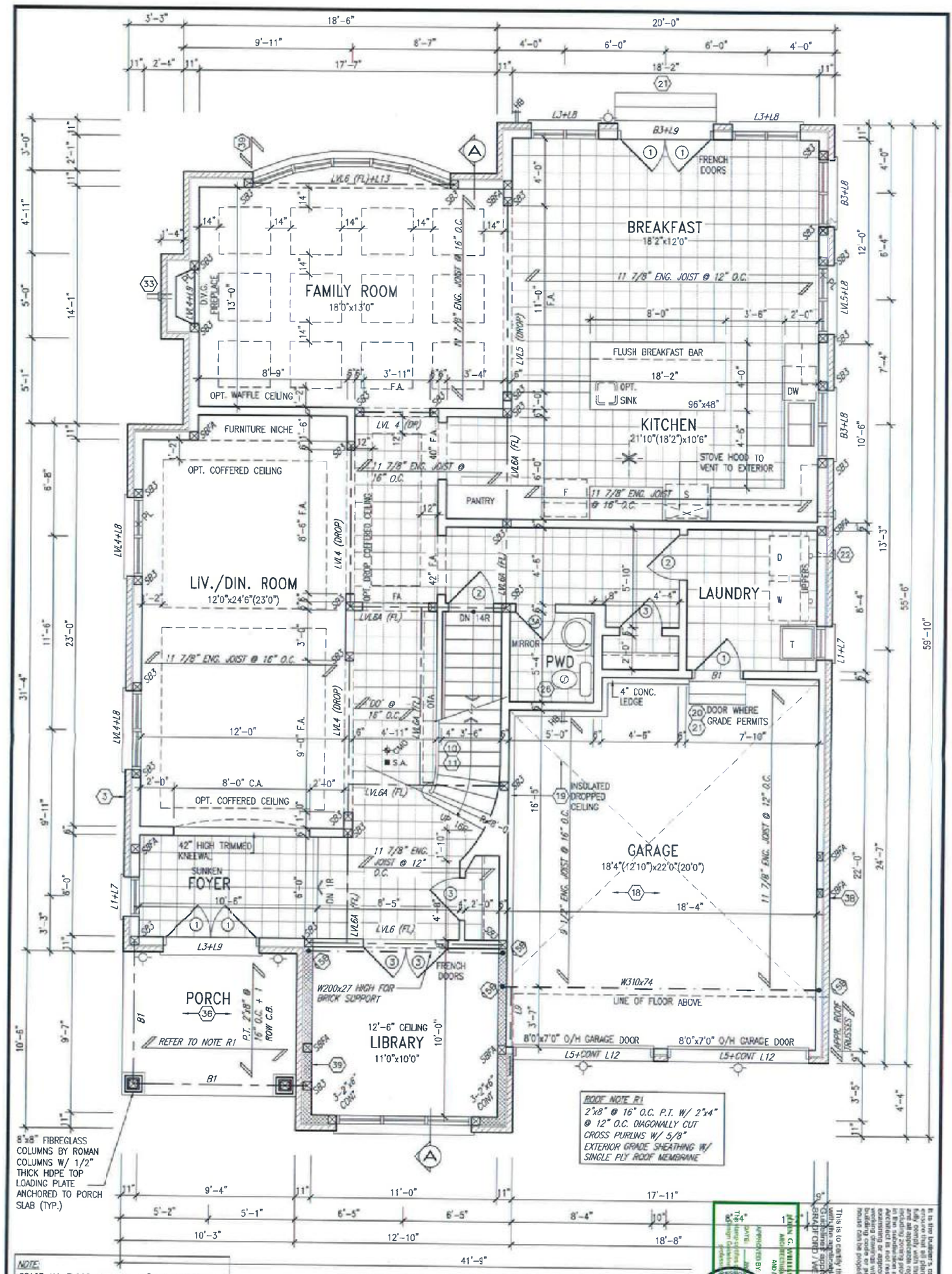

NOTE:
SPACE ALL FLOOR JOISTS @ 12" O.C. UNDER ALL CERAMIC TILE AREAS.

NOTE:
FLOOR FRAMING INFO REFER TO ENG SHOP DRAWINGS FOR ALL TRUSS-JOIST INFORMATION AND DETAILS. UNLESS OTHERWISE NOTED.

NOTE:
ALL LVL'S SUPPORTING FLOOR LOADS ARE TO BE SPECIFIED BY THE FLOOR TRUSS MANUFACTURER.

GROUND FLOOR PLAN 'B'

LOT 187

NOV 2, 2018

no.	description	date	by
9	.	-	
8	.	-	
7	REVISED AS PER ENG'S COMMENTS	NOV 02-18	RC
6	CREATED FOR LOT 187	OCT. 25/18	WT
5	REVISED AS PER ENG'S COMMENTS	SEP 27-17	RC
4	REVISED AS PER 2017 CODE	MAR. 10-17	SB
3	REVISED AS PER ENG'S COMMENTS	JUN 06-15	RC
2	REVISED AS PER TRUSS LAYOUTS	MAY 16-16	RC
1	ISSUED FOR CLIENT REVIEW	JAN. 01-16	CM

The undersigned has reviewed and takes responsibility for this design and has the qualifications and meets the requirements set out in the Ontario Building Code to be a Designer.
qualification information
Wellington Jno-Baptiste — signature — 25591
name — BCIN
registration information
VA3 Design Inc. — 42658

Contractor must verify all dimensions on the job and report any discrepancy to the Designer before proceeding with the work. All drawings and specifications are instruments of service and the property of the Designer which must be returned at the completion of the work. Drawings are not to be scaled.

VA3 DESIGN
300A Wilson Avenue
Toronto ON M3H 1S8
t 416.630.2255 f 416.630.4782
va3design.com

BAYVIEW WELLINGTON

project name: GREEN VALLEY ESTATES — municipality: BRADFORD, ON.

S50-1
CASTELLO 1

project no. 13045

DECEMBER 2015 — GROUND FLOOR PLAN ELEVATION 'B'

date	drawn by	checked by	scale	file name
CM	-	-	3/16" = 1'-0"	13045-S50-1-L187

drawing no. 2

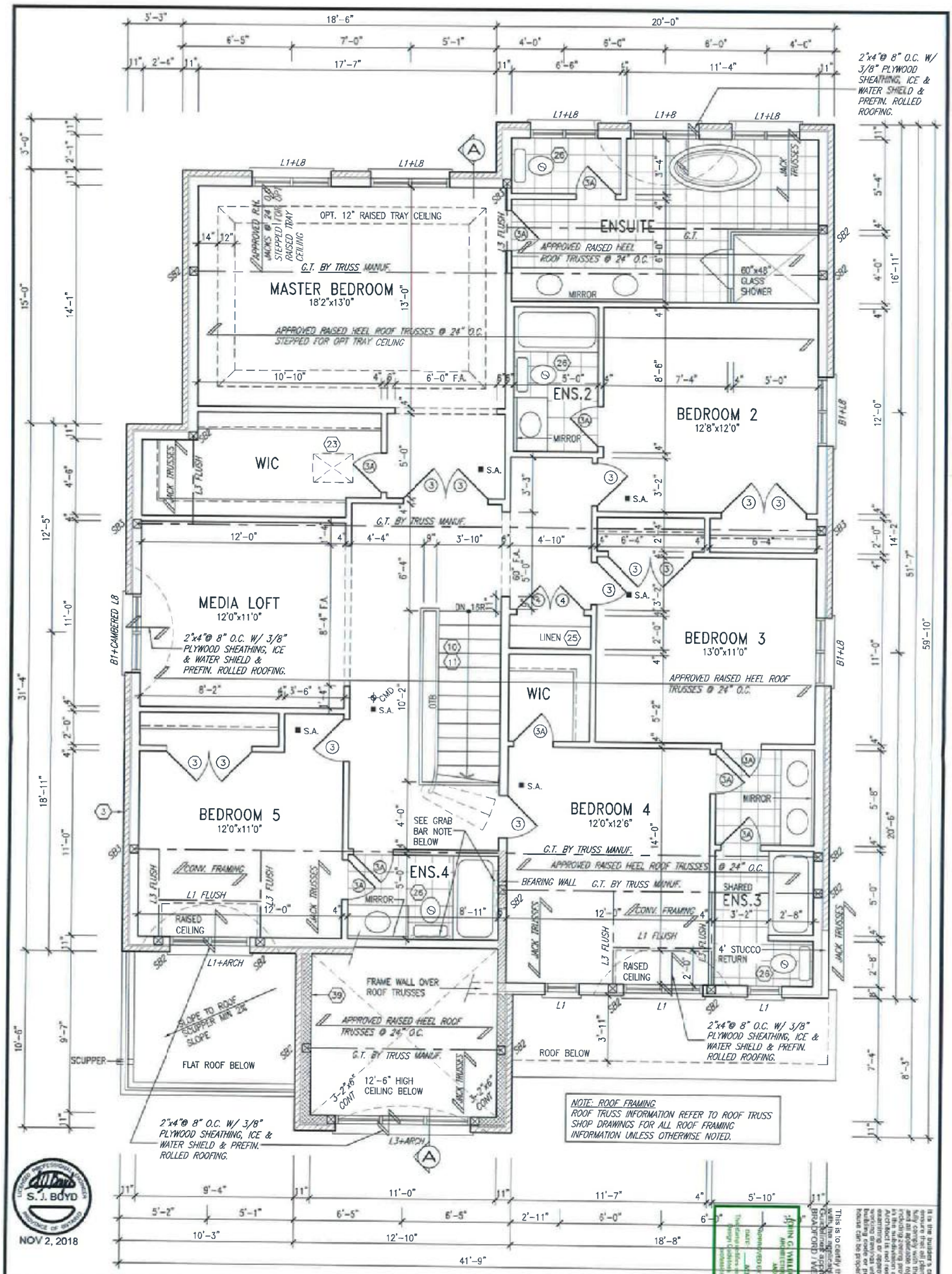

S. J. BOYD
NOV 2, 2018

STUD WALL REINFORCEMENT FOR FUTURE GRAB BARS IN MAIN BATHROOM
REINFORCEMENT OF STUD WALLS SHALL BE INSTALLED ADJACENT TO WATER CLOSETS AND SHOWER OR BATHTUB IN MAIN BATHROOM AS PER O.B.C. 9.5.2.3, 3.8.3.8.(1)(d), & 3.8.3.13.(1)(f) AND DETAILS PROVIDED

SECOND FLOOR PLAN 'B'
LOT 187

no.	description	date	by
9	.	.	
8	.	.	
7	REVISED AS PER ENG'S COMMENTS	NOV 02-18	RC
6	CREATED FOR LOT 187	OCT. 25/18	WT
5	REVISED AS PER ENG'S COMMENTS	SEP 27-17	RC
4	REVISED AS PER 2017 CODE	MAR. 10-17	SB
3	REVISED AS PER ENG'S COMMENTS	JUN 06-15	RC
2	REVISED AS PER TRUSS LAYOUTS	MAY 16-16	RC
1	ISSUED FOR CLIENT REVIEW	JAN. 01-16	CM

The undersigned has reviewed and takes responsibility for this design and has the qualifications and meets the requirements set out in the Ontario Building Code to be a Designer.
qualification information
Wellington Jno-Baptiste — 25691
name — signature — BCIN
registration information
VA3 Design Inc. — 42658

Contractor must verify all dimensions on the job and report any discrepancy to the Designer before proceeding with the work. All drawings and specifications are instruments of service and the property of the Designer which must be returned at the completion of the work. Drawings are not to be scaled

VA3 DESIGN
300A Wilson Avenue
Toronto ON M3H 1S8
t 416.630.2255 f 416.630.4782
va3design.com

BAYVIEW WELLINGTON
project name: GREEN VALLEY ESTATES — municipality: BRADFORD, ON.
DECEMBER 2015 — SECOND FLOOR PLAN ELEVATION 'B'
drawn by: CM — checked by: — scale: 3/16" = 1'-0"
file name: 13045-S50-1-L187

S50-1
CASTELLO 1
project no. 13045
drawing no. 3

JOHN G. WILLIAMS LTD. ARCHITECT
ARCHITECTURAL CONTROL REVIEW AND APPROVAL
APPROVED/REVISED
DATE: _____
This drawing signifies compliance with the applicable Design Guidelines only and bears no further professional responsibility.

This is to certify that these plans comply with the applicable Architectural Design Guidelines approved by the Town of BRADFORD / WEST GWILLIMBURY.

It is the builder's complete responsibility to ensure that the plans submitted for approval fully comply with the Architectural Control Guidelines and all applicable regulations and requirements. In the event of any conflict between the building code requirements and any provisions in the Architectural Control Guidelines, the Architect is not responsible in any way for examining or depicting site (lot/grading) plans or building permit or permit matter or that any house can be properly built or located on lot.

It is the builder's complete responsibility to ensure that all plans submitted for approval fully comply with the Architectural Guidelines and all applicable regulations and requirements including zoning provisions and any provisions in the subdivision agreement. The Control Architect is not responsible in any way for examining or approving site (lotting) plans or working drawings with respect to any zoning or building code or permit matter or that any house can be properly built or located on its lot.

This is to certify that these plans comply with the applicable Architectural Design Guidelines approved by the Town of BRADFORD / WEST GWILLIMBURY.

JOHN G. WILLIAMS LTD., ARCHITECT
ARCHITECTURAL CONTROL REVIEW AND APPROVAL
APPROVED BY:
DATE: NOV 05, 2018
This stamp certifies compliance with the applicable Design Guidelines only and bears no further professional responsibility.

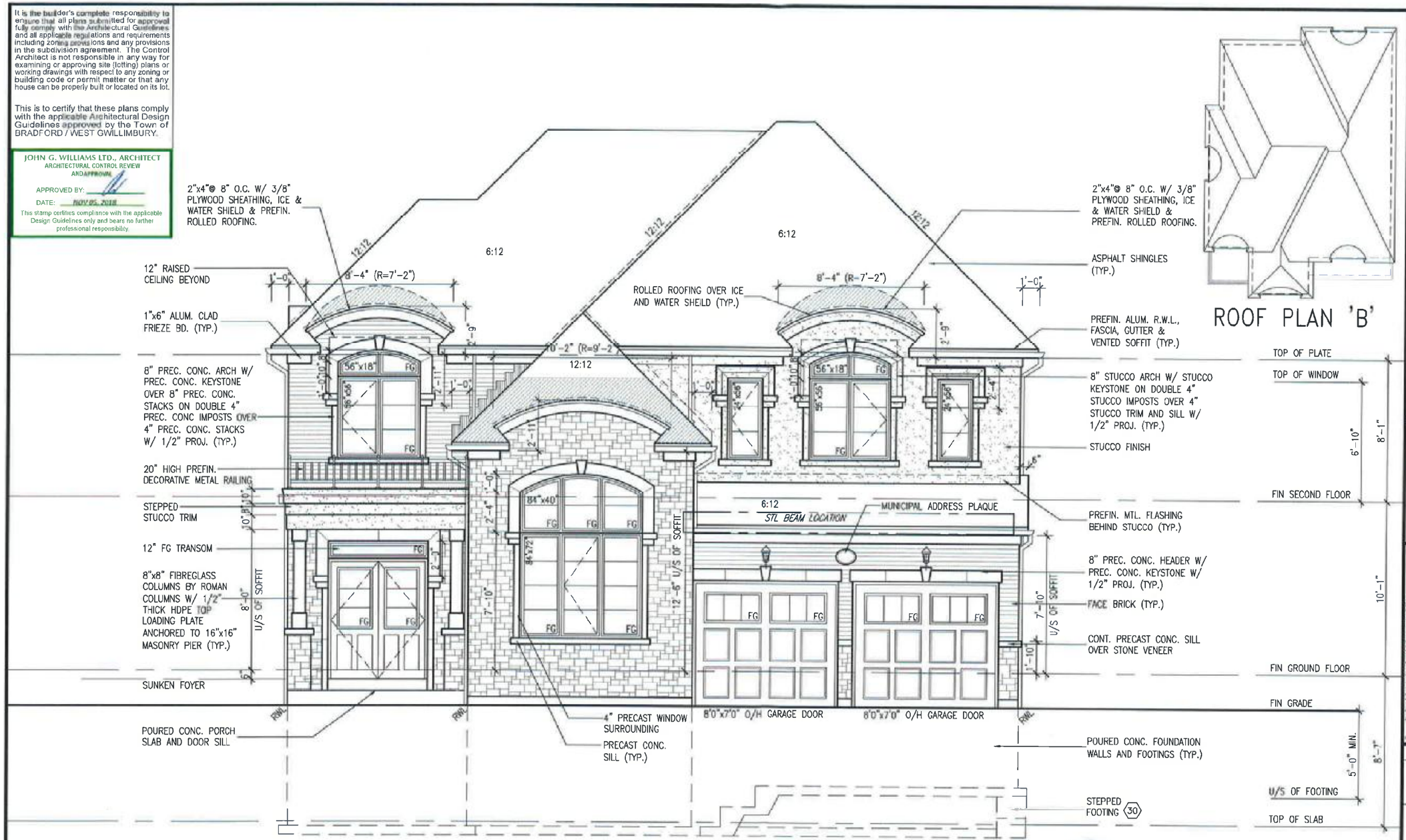

FRONT ELEVATION 'B'

ROOF PLAN 'B'

S. J. BOYD
NOV 2, 2018

LOT 187

BAYVIEW WELLINGTON

project name: GREEN VALLEY ESTATES
municipality: BRADFORD, ON.

S50-1
CASTELLO 1

project no. 13045

DECEMBER 2015
checked by: CM
scale: 3/16" = 1'-0"
drawing no. 4
FRONT ELEVATION 'B'
13045-S50-1-L187
Nov 2, 2018 8:16 AM

VA3 DESIGN
3004 Wilson Avenue
Toronto ON M3H 1S8
t 416.630.2255 f 416.630.4782
va3design.com

The undersigned has reviewed and takes responsibility for this design and that the qualifications and meets the requirements set out in the Ontario Building Code to be a Designer.

qualification information	
name	signature
Wellington Jno-Baptiste	25591
VA3 Design Inc.	42658

Contractor must verify all dimensions on site and report any discrepancies to the designer before proceeding with construction. Drawings and specifications are instruments of service and the property of the Designer which must be returned at the completion of the work. Drawings are not to be scaled.

no.	description	date	by
8			
7	REVISED AS PER ENG'S COMMENTS	NOV 02-18	RC
6	CREATED FOR LOT 187	OCT 25/18	WI
5	REVISED AS PER ENG'S COMMENTS	SEP 27-17	RC
4	REVISED AS PER 2017 CODE	MAR 10-17	SB
3	REVISED AS PER ENG'S COMMENTS	JUN 06-15	RC
2	REVISED AS PER TRUSS LAYOUTS	MAY 16-15	RC
1	ISSUED FOR CLIENT REVIEW	JAN. 01-16	CM

All drawings, specifications, related documents and design are the copyright property of VA3 DESIGN. Reproduction of this property in whole or in part is strictly prohibited without VA3 DESIGN's written permission.

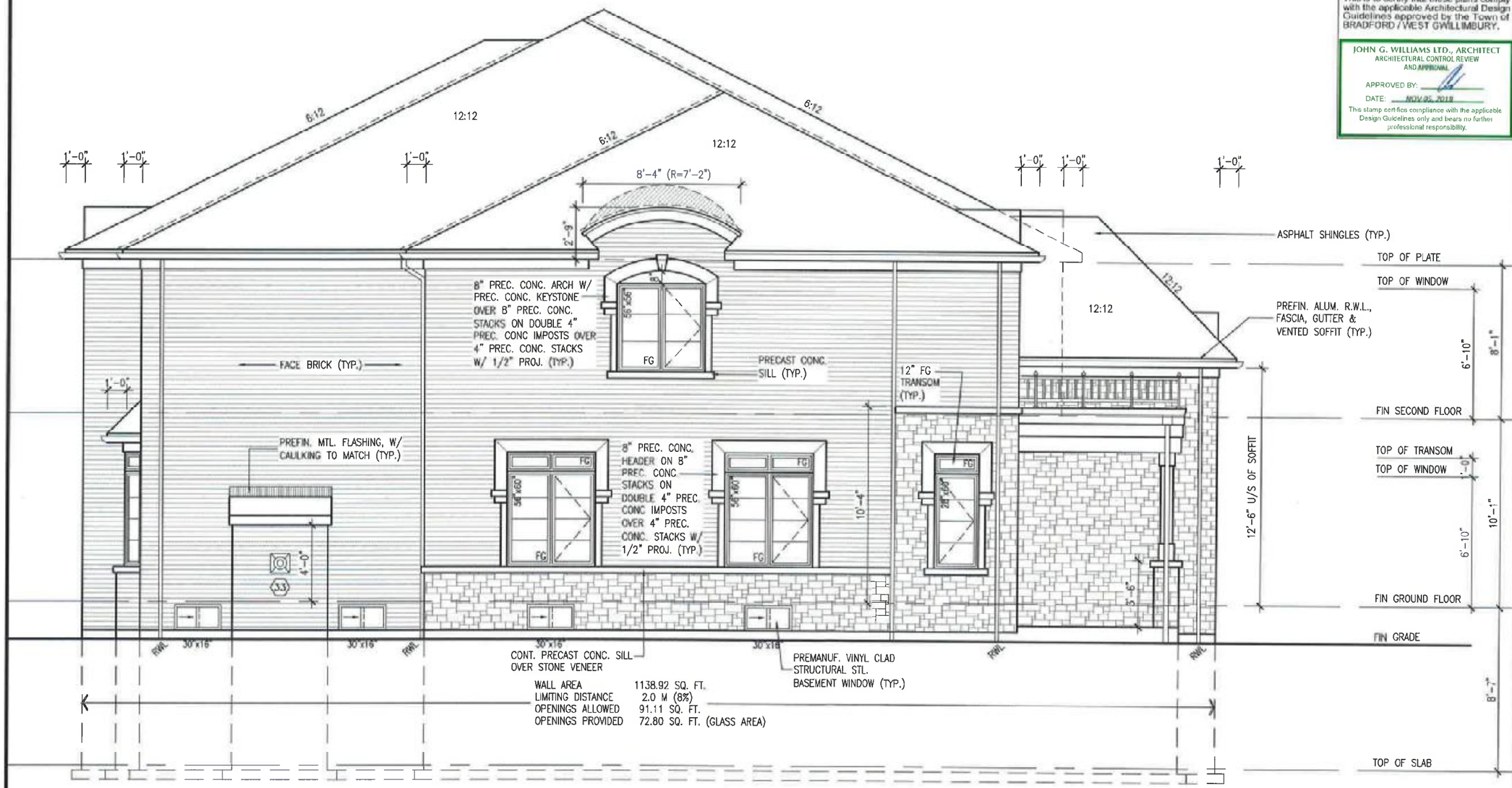

REFER TO FRONT ELEVATION FOR ADDITIONAL NOTES

UPGRADED LEFT SIDE ELEVATION 'B'

LICENSED PROFESSIONAL ENGINEER S. J. BOYD PROVINCE OF ONTARIO

NOV 2, 2018

LOT 187

It is the builder's complete responsibility to ensure that all plans submitted for approval fully comply with the Architectural Guidelines and all applicable regulations and requirements including zoning provisions and any provisions in the subdivision agreement. The Control Architect is not responsible in any way for examining or approving site (lotting) plans or working drawings with respect to any zoning or building code or permit matter or that any house can be properly built or located on its lot.

This is to certify that these plans comply with the applicable Architectural Design Guidelines approved by the Town of BRADFORD / WEST GWILLIMBURY.

JOHN G. WILLIAMS LTD., ARCHITECT
ARCHITECTURAL CONTROL REVIEW AND APPROVAL
APPROVED BY:
DATE: NOV 05, 2018
This stamp certifies compliance with the applicable Design Guidelines only and bears no further professional responsibility.

S50-1
CASTELLO 1

project no. 13045

BAYVIEW WELLINGTON

municipality BRADFORD, ON.

project name GREEN VALLEY ESTATES

UPGRADED LEFT SIDE ELEVATION 'B'

drawing no. 5

DECEMBER 2015

scale 3/16" = 1'-0"

file name 13045-S50-1-L187.dwg – Fri, Nov 2 2018 8:16 AM

drawn by CM

checked by –

RICHARD – W:\Projects\Wellington\13045 Bay View Wellington (JDG)\13045-S50-1-L187.dwg

VA3 DESIGN
300A Wilson Avenue
Toronto ON M3H 1S8
t 416.630.2255 f 416.630.4782
va3design.com

The undersigned has examined and knows responsibility for this design and has the qualifications and meets the requirements set out in the Ontario Building Code to be a Designer.

qualification information	
Wellington Jno-Baptiste	25591
registration information	BCIN
VA3 Design Inc.	42658

signature

Contractor must verify all dimensions on the job and report any discrepancy to the Designer before proceeding with the work. All drawings and specifications are instruments of service and the property of the Designer which must be returned at the completion of the work. Drawings are not to be scaled.

no.	description	date	by
9	-	-	-
8	-	-	-
7	REVISED AS PER ENG'S COMMENTS	NOV 02-18	RC
6	CREATED FOR LOT 187	OCT. 25/18	WT
5	REVISED AS PER ENG'S COMMENTS	SEP 27-17	RC
4	REVISED AS PER 2017 CODE	MAR. 10-17	SB
3	REVISED AS PER ENG'S COMMENTS	JUN 06-15	RC
2	REVISED AS PER TRUSS LAYOUTS	MAY 16-16	RC
1	ISSUED FOR CLIENT REVIEW	JAN. 01-16	CM

It is the builder's complete responsibility to ensure that all plans submitted for approval fully comply with the Architectural Guidelines and all applicable regulations and requirements including zoning provisions and any provisions in the subdivision agreement. The Control Architect is not responsible in any way for examining or approving site (lotting) plans or working drawings with respect to any zoning or building code or permit matter or that any house can be properly built or located on its lot.

This is to certify that these plans comply with the applicable Architectural Design Guidelines approved by the Town of BRADFORD / WEST GWILLIMBURY.

JOHN G. WILLIAMS LTD., ARCHITECT
ARCHITECTURAL CONTROL REVIEW
AND APPROVAL

APPROVED BY: _____

DATE: NOV.03, 2018

This stamp certifies compliance with the applicable Design Guidelines only and bears no further professional responsibility

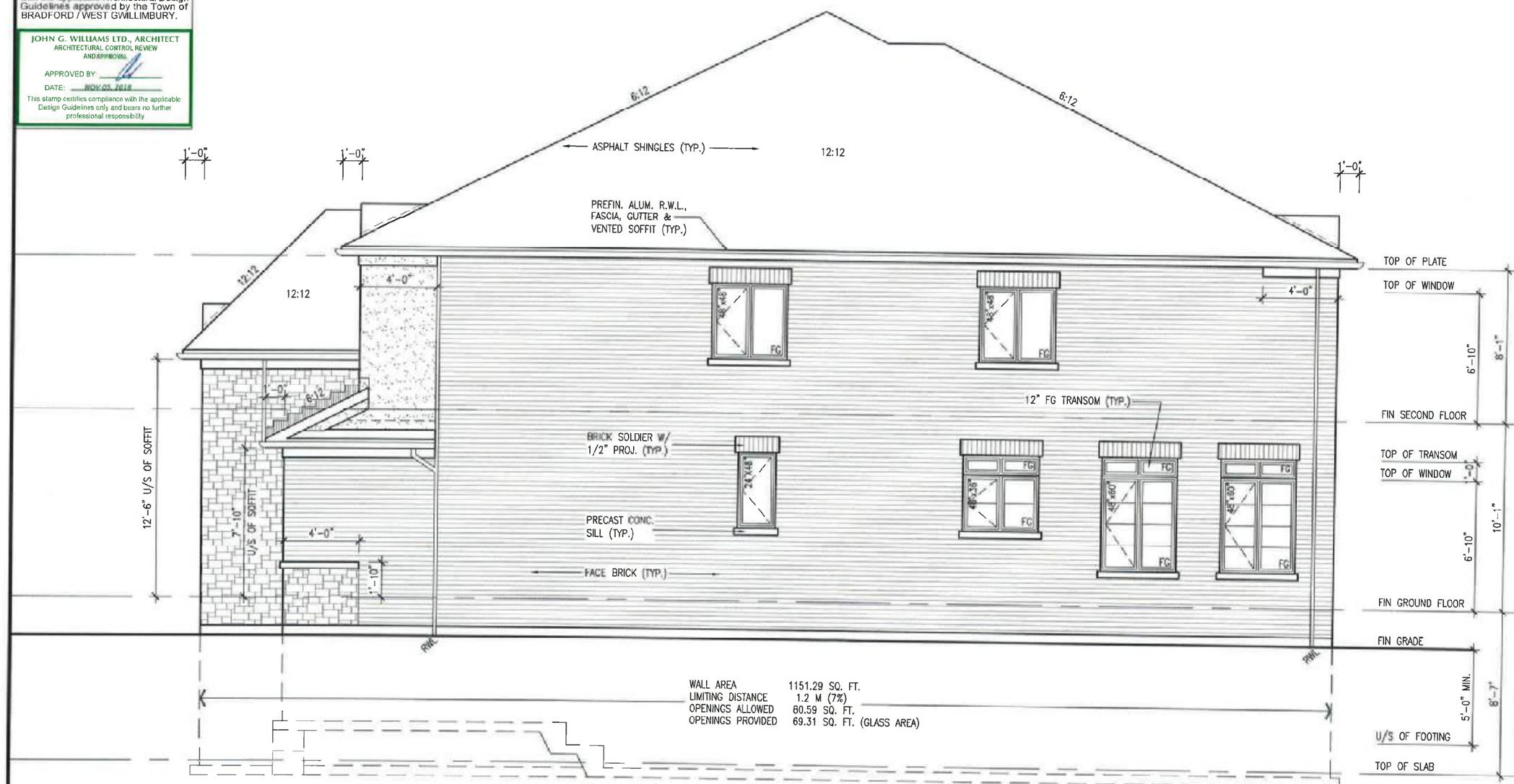

WALL AREA	1151.29 SQ. FT.
LIMITING DISTANCE	1.2 M (7%)
OPENINGS ALLOWED	80.59 SQ. FT.
OPENINGS PROVIDED	69.31 SQ. FT. (GLASS AREA)

REFER TO FRONT ELEVATION FOR ADDITIONAL NOTES

RIGHT SIDE ELEVATION 'B'

LICENSED PROFESSIONAL ENGINEER
S. J. BOYD
PROVINCE OF ONTARIO
NOV 2, 2018

LOT 187

BAYVIEW WELLINGTON

project name: GREEN VALLEY ESTATES
municipality: BRADFORD, ON.

S50-1
CASTELLO 1

project no. 13045

DECEMBER 2015 | drawn by: CW | checked by: - | scale: 3/16" = 1'-0" | drawing no. 6

RICHARD - w:\Architect\Wellington\2013\13045-550 1 L187.dwg - Fri, Nov 2 20 8 8:16 AM | file name: 13045-550-1-L187

VA3 DESIGN
300A Wilson Avenue
Toronto ON M3H 1S8
t 416.630.2235 f 416.630.4782
va3design.com

the undersigned has reviewed and takes responsibility for this design and has the qualifications and meets the requirements set out in the Ontario Building Code to be a designer.

qualification information	
Wellington Jno-Baptiste signature	25591
name	BCIN
registration information VA3 Design Inc.	42658

Contractor must verify all dimensions on the job and report any discrepancies to the designer before proceeding with construction. Drawings and specifications are instruments of service and the property of the designer which must be returned at the completion of the work. Drawings are not to be scaled.

no.	description	date	by
9	-	-	-
8	-	-	-
7	REVISED AS PER ENG'S COMMENTS	NOV 02-18	RC
6	CREATED FOR LOT 187	OCT. 25/18	WT
5	REVISED AS PER ENG'S COMMENTS	SEP 27-17	RC
4	REVISED AS PER 2017 CODE	MAR. 10-17	SB
3	REVISED AS PER ENG'S COMMENTS	JUN 06-15	RC
2	REVISED AS PER TRUSS LAYOUTS	MAY 16-16	RC
1	ISSUED FOR CLIENT REVIEW	JAN. 01-16	CM

It is the builder's complete responsibility to ensure that all plans submitted for approval fully comply with the Architectural Guidelines and all applicable regulations and requirements including zoning provisions and any provisions in the subdivision agreement. The Control Architect is not responsible in any way for examining or approving site (building) plans or working drawings with respect to any zoning or building code or permit matter or that any house plan be properly built or located on its lot.

This is to certify that these plans comply with the applicable Architectural Design Guidelines approved by the Town of BRADFORD / WEST GWILLIMBURY.

JOHN G. WILLIAMS LTD., ARCHITECT
ARCHITECTURAL CONTROL REVIEW AND APPROVAL
APPROVED BY
DATE: NOV 05, 2018
This stamp certifies compliance with the applicable Design Guidelines only and bears no further professional responsibility.

UNINSULATED OPENINGS (PER OBC. SB-12,3.1.1(7))			
S50-1 ELEVATION B LOT 187	ENERGY EFFICIENCY – OBC SB12		
ELEVATION	WALL AREA S.F.	OPENING S.F.	PERCENTAGE
FRONT	846 S.F.	181.679 S.F.	21.48 %
LEFT SIDE	1151 S.F.	105.06 S.F.	9.13 %
RIGHT SIDE	1151 S.F.	105.33 S.F.	9.15 %
REAR	835 S.F.	268.59 S.F.	32.17 %
* OPENINGS OMITTED AS PER SB-12 3.1.1.9(4) MAX 19.9 S.F. REFER TO ELEVATION FOR LOCATION		00.0 S.F.	
TOTAL SQ. FT.	3983.00 S.F.	660.66 S.F.	16.59 %
TOTAL SQ. M.	370.03 S.M.	61.38 S.M.	16.59 %

UPGRADED REAR ELEVATION 'B'

S. J. BOYD
NOV 2, 2018

LOT 187

S50-1
CASTELLO 1

project no. 13045

BAYVIEW WELLINGTON
municipality BRADFORD, ON.
UPGRADED REAR ELEVATION 'B'

project name GREEN VALLEY ESTATES

DECEMBER 2015 | drawn by CM | checked by - | scale 3/16" = 1'-0" | file name 13045-S50-1-L187 | RICHARD – H:\ARCHICAD\Wellington 2013\13045 Green Valley\13045-S50-1-L187.dwg – Nov 2, 2018, 8:16 AM

drawing no. 7

VAJ DESIGN
300A Wilson Avenue
Toronto ON M3H 1S8
t 416.630.2255 f 416.630.4782
va3design.com

The undersigned has reviewed and takes responsibility for this design and has the qualifications and meets the requirements set out in the Ontario Building Code to be a Designer.

qualification information: Wellington Jno-Baptiste 25591
signature
registration information: VAJ Design Inc. 42658

Contractor must verify all dimensions on the job and report any discrepancies to the designer before commencing work. The drawing and specifications are instruments of service and the property of the Designer which must be returned at the completion of the work. Drawings are not to be scaled.

no.	description	date	by
9	-	-	-
8	-	-	-
7	REVISED AS PER ENG'S COMMENTS	NOV 02-18	RC
6	CREATED FOR LOT 187	OCT. 25/18	WT
5	REVISED AS PER ENG'S COMMENTS	SEP 27-17	RC
4	REVISED AS PER 2017 CODE	MAR. 10-17	SB
3	REVISED AS PER ENG'S COMMENTS	JUN 06-15	RC
2	REVISED AS PER TRUSS LAYOUTS	MAY 16-16	RC
1	ISSUED FOR CLIENT REVIEW	JAN. 01-16	CM

It is the builder's complete responsibility to ensure that all plans submitted for approval fully comply with the Architectural Guidelines and all applicable regulations and requirements including zoning provisions and any provisions in the subdivision agreement. The Control Architect is not responsible in any way for examining or approving site (lotting) plans or working drawings with respect to any zoning or building code or permit matter or that any house can be properly built or located on its lot.

This is to certify that these plans comply with the applicable Architectural Design Guidelines approved by the Town of BRADFORD / WEST GWILLIMBURY.

AREA CALCULATIONS	ELEV. B
GROUND FLOOR AREA	1778 SF
SECOND FLOOR AREA	1991 SF
SUBTOTAL	3769 SF
DEDUCT ALL OPEN AREAS	7 SF
TOTAL NET AREA	**3762 SF** (349.13 m2)
FINISHED BSMT AREA	0 SF
COVERAGE W/OUT PORCH	2212 SF (205.50 m2)
COVERAGE W/ PORCH	**2299 SF** (213.58 m2)

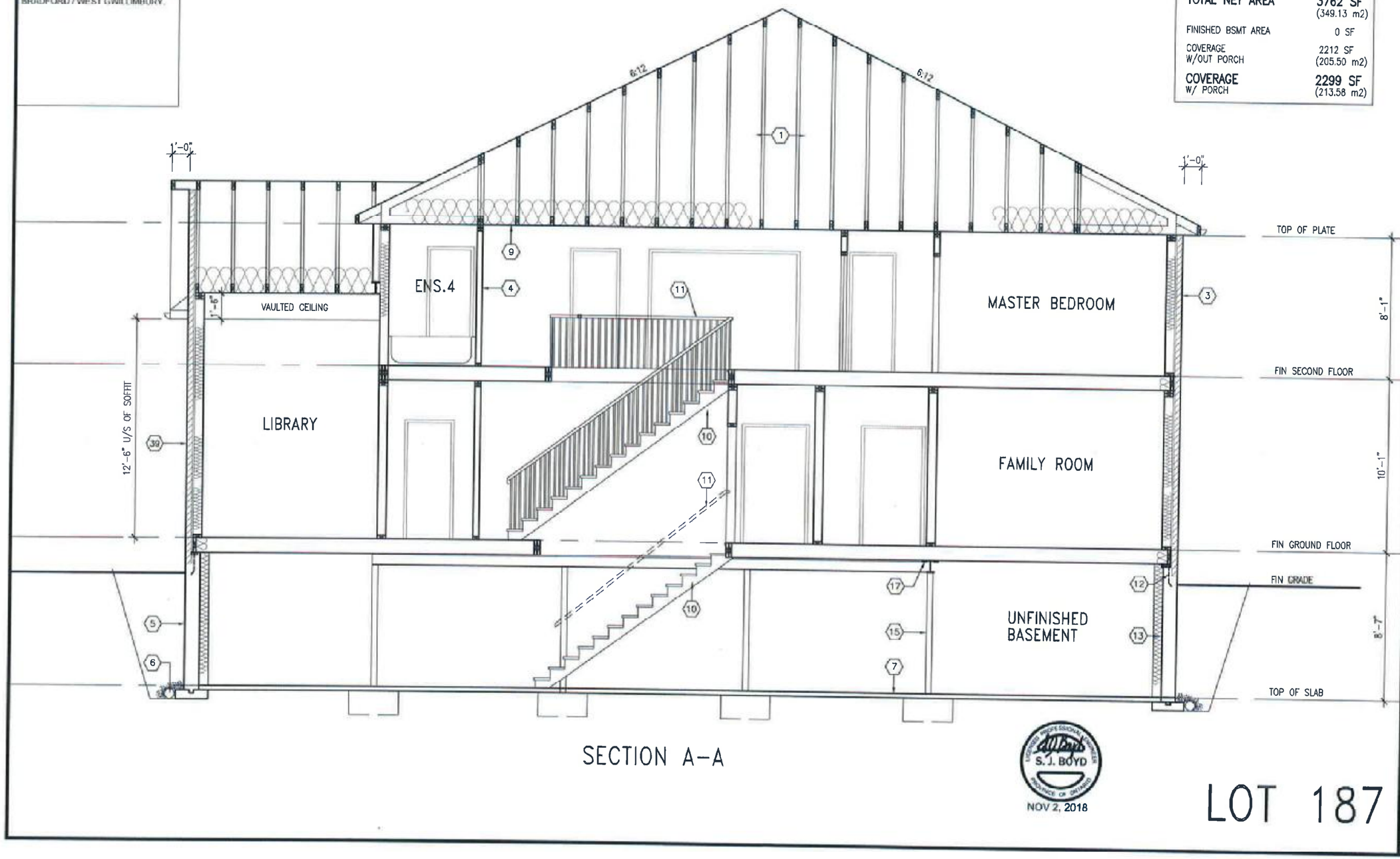

SECTION A-A

LICENSED PROFESSIONAL ENGINEER S. J. BOYD PROVINCE OF ONTARIO
NOV 2, 2018

LOT 187

S50-1
CASTELLO 1

project name: **BAYVIEW WELLINGTON**
GREEN VALLEY ESTATES
municipality: BRADFORD, ON.

project no. 13045

DECEMBER 2015
date | drawn by CM | checked by - | scale 3/16" = 1'-0"

SECTION A-A

file name: 13045-S50-1-187

drawing no. 8

VA3 DESIGN
30Wellington Avenue
Toronto ON M5H 1S8
t 416.630.2255 f 416.630.4782
va3design.com

The undersigned has reviewed and takes responsibility for this design and has the qualifications and meets the requirements set out in the Ontario Building Code to be a designer.
qualification information

Wellington Jns-Bipfiste 25591 BCIN
name signature
information VA3 Design Inc. 42654

Contractor must verify all dimensions on the job and report any errors or omissions to the designer before commencing with the work. All drawing and specifications are the property of the designer and must be returned at the completion of the work. Drawings are not to be scaled.

no.	description	date	by
8			
7	REVISED AS PER ENG'S COMMENTS	NOV. 07-18	RC
6	CREATED FOR LOT 187	OCT. 25/18	WT
5	REVISED AS PER ENG'S COMMENTS	SEP. 27-17	RC
4	REVISED AS PER 2017 CODE	MAR. 10-17	SB
3	REVISED AS PER ENG'S COMMENTS	JUN. 06-15	RC
2	REVISED AS PER TRUSS LAYOUTS	MAY 16-16	RC
1	ISSUED FOR CLIENT REVIEW	JAN. 01-16	CM

CONSTRUCTION NOTES (Unless otherwise noted)

ALL CONSTRUCTION TO ADHERE TO THESE PLANS AND SPEC'S AND TO CONFORM TO THE ONTARIO BUILDING CODE AND ALL OTHER APPLICABLE CODES AND AUTHORITIES HAVING JURISDICTION. THESE REQUIREMENTS ARE TO BE TAKEN AS MINIMUM SPECIFICATIONS. ONT. REG. 332/12-2012 OBC

1. **ROOF CONSTRUCTION**
NO.210 (10.25kg/m2) ASPHALT SHINGLES. 10mm (3/8") PLYWOOD SHEATHING WITH "H" CLIPS. APPROVED WOOD TRUSSES @ 600mm (24") O.C. MAX. APPROVED EAVES PROTECTION TO EXTEND 900mm (3'-0") FROM EDGE OF ROOF AND MIN. 300mm (12") BEYOND INNER FACE OF EXTERIOR WALL. (EAVES PROTECTION NOT REQ'D FOR ROOF SLOPES 8:12 OR GREATER) 38x89 (2"x4") TRUSS BRACING @ 1830mm (6'-0") O.C. AT BOTTOM CHORD. PREFIN. ALUM. EAVESTROUGH, FASCIA, RWL & VENTED SOFFIT. PROVIDE ICE & WATER SHIELD TO ALL ROOF/WALL SURFACES SUSCEPTIBLE TO ICE DAMMING. ROOF SHEATHING TO BE FASTENED 150 (6") c/c ALONG EDGES & INTERMEDIATE SUPPORTS WHEN TRUSSES SPACED GREATER THAN 406 (16"). ATTIC VENTILATION 1:300 OF INSULATED CEILING AREA WITH MIN. 25% AT EAVES & MIN. 25% AT RIDGE (OBC 9.19.1.2.).

2. ◆ **FRAME WALL CONSTRUCTION (2"x6") (SB-12-TABLE 3.1.1.2.A)**
SIDING AS PER ELEV., 19x38 (1"x2") VERTICAL WOOD FURRING. CONTIN. SHEATHING MEMBRANE, 9.5mm (3/8") EXT. TYPE SHEATHING, 38x140 (2"x6") STUDS @ 400mm (16") O.C., RSI 3.87 (R22) INSULATION AND APPR. VAPOUR BARRIER AND APPR. CONTIN. AIR BARRIER. 13mm (1/2") INT. DRYWALL FINISH. SIDING TO BE MIN. 200mm (8") ABOVE FINISH GRADE. REFER TO OBC SB-12, CHAPTER 3 FOR ADDITIONAL THERMAL INSULATION REQUIREMENTS.

2A. RESERVED

2B. **FRAME WALL CONSTRUCTION (2"x4")– GARAGE WALLS**
SIDING AS PER ELEV., 19x38 (1"x2") VERTICAL WOOD FURRING. CONTIN. SHEATHING MEMBRANE, 9.5mm (3/8") EXT. TYPE SHEATHING, 38x89 (2"x4") STUDS @ 400mm (16") O.C. (MAX. HEIGHT 3000mm (9'-10"). WITH APPR. DIAGONAL WALL BRACING. SIDING TO BE MIN. 200mm (8") ABOVE FINISH GRADE.

2C. RESERVED

2D. **STUCCO WALL CONSTRUCTION (2"x4") –GARAGE WALLS**
STUCCO CLADDING SYSTEM CONFORMING TO O.B.C. 9.27.1.1.(2) & 9.28 THAT EMPLOY A MINIMUM 10mm AIR SPACE BEHIND THE CLADDING WITH POSITIVE DRAINAGE TO THE EXTERIOR AND APPLIED PER MANUFACTURERS SPECIFICATIONS OVER 25mm (1") MIN. EXPANDED OR EXTRUDED RIGID POLYSTYRENE ON APPROVED AIR/MOISTURE BARRIER ON 13mm (1/2") EXT. TYPE SHEATHING ON 38x89 (2"x4") STUDS @ 400 (16") O.C. STUCCO TO BE MIN. 200 (8") ABOVE FINISH GRADE.

2E. ◆ **WALLS ADJACENT TO ATTIC SPACE – NO CLADDING**
9.5mm (3/8") EXT. TYPE SHEATHING, 38x140 (2"x6") STUDS @ 400mm (16") O.C., RSI 3.87 (R22) INSULATION AND APPR. VAPOUR BARRIER AND APPR. CONTIN. AIR BARRIER, 13mm (1/2") INTERIOR DRYWALL FINISH. MID-HEIGHT BLOCKING REQ'D. IF NO SHEATHING APPLIED. REFER TO OBC SB-12, CHAPTER 3 FOR ADDITIONAL THERMAL INSULATION REQUIREMENTS.

3. ◆ **BRICK VENEER CONSTRUCTION (2"x6") (SB-12-TABLE 3.1.1.2.A)**
90mm (4") FACE BRICK, 25mm (1") AIR SPACE, 22x180x0.76mm (7/8"x7"x0.03") GALV. METAL TIES @ 400mm (16") O.C. HORIZONTAL 600mm (24") O.C. VERTICAL. APPROVED SHEATHING PAPER. 9.5mm (3/8") EXT. TYPE SHEATHING. 38x140 (2"x6") STUDS @ 400mm (16") O.C., RSI 3.87 (R22) INSULATION & APPR. VAPOUR BARRIER WITH APPR. CONTIN. AIR BARRIER. 13mm (1/2") INTERIOR DRYWALL FINISH. PROVIDE WEEP HOLES @ 800mm (32") O.C. BOTTOM COURSE AND OVER OPENINGS. PROVIDE BASE FLASHING UP MIN. 150mm (6") BEHIND BUILDING PAPER. REFER TO OBC SB-12, CHAPTER 3 FOR ADDITIONAL THERMAL INSULATION REQUIREMENTS.
BRICK TO BE MIN. 150mm (6") ABOVE FINISH GRADE.

3A. RESERVED

S. J. BOYD

NOV 2, 2018

3B. **BRICK VENEER CONSTRUCTION (2"x4")– GARAGE WALLS**
90mm (4") FACE BRICK, 25mm (1") AIR SPACE, 22x180x0.76mm (7/8"x7"x0.03") GALV. METAL TIES @ 400mm (16") O.C. HORIZONTAL 600mm (24") O.C. VERTICAL. APPR. SHEATHING PAPER, 9.5mm (3/8") EXT. TYPE SHEATHING, 38x89 (2"x4") STUDS @ 400mm (16") O.C. (MAX. HEIGHT 3000mm (9'-10") WITH APPR. DIAGONAL WALL BRACING. PROVIDE WEEP HOLES @ 800mm (32") O.C. BOTTOM COURSE AND OVER OPENINGS. PROVIDE BASE FLASHING UP MIN. 150mm (6") BEHIND BUILDING PAPER.
BRICK TO BE MIN. 150mm (6") ABOVE FINISH GRADE.

3C. ◆ **STUCCO WALL CONSTRUCTION (2"x6") (SB-12-TABLE 3.1.1.2.A)**
STUCCO CLADDING SYSTEM CONFORMING TO O.B.C. 9.27.1.1.(2) & 9.28 THAT EMPLOYS A MINIMUM 10mm AIR SPACE BEHIND THE CLADDING WITH POSITIVE DRAINAGE TO THE EXTERIOR AND APPLIED PER MANUFACTURERS SPECIFICATIONS OVER 25mm (1") MIN. EXTRUDED OR EXPANDED RIGID POLYSTYRENE ON APPR. CONTIN. AIR/MOISTURE BARRIER ON 13mm (1/2") EXT. TYPE SHEATHING ON 38x140 (2"x6") STUDS @ 400mm (16") O.C., RSI 3.87 (R22) INSULATION, APPROVED VAPOUR BARRIER. 13mm (1/2") GYPSUM WALLBOARD INTERIOR FINISH. REFER TO OBC SB-12, CHAPTER 3 FOR ADDITIONAL THERMAL INSULATION REQUIREMENTS. STUCCO TO BE MIN. 200 (8") ABOVE FINISH GRADE.

4. **INTERIOR STUD PARTITIONS**
FOR BEARING PARTITIONS 38x89 (2"x4") @ 400mm (16") O.C. FOR 2 STOREYS AND 300mm (12") O.C. FOR 3 STOREYS. NON-BEARING PARTITIONS 38x89 (2"x4") @ 600mm (24") O.C. PROVIDE 38x89 (2"x4") BOTTOM PLATE AND 2/38x89 (2/2"x4") TOP PLATE. 13mm (1/2") INT. DRYWALL BOTH SIDES OF STUDS. PROVIDE 38x140 (2"x6") STUDS/PLATES WHERE NOTED.

5. **FOUNDATION WALL/FOOTINGS: (9.15.1, 9.15.4, 9.13.2, 9.14.2.1.(2))**
200mm (8") POURED CONC. FDTN. WALL 15MPa (2200psi) WITH BITUMINOUS DAMPPROOFING AND DRAINAGE LAYER. DRAINAGE LAYER REQ'D. WHEN BASEMENT INSUL. EXTENDS 900 (2'-11") BELOW FIN. GRADE. DRAINAGE LAYER IS NOT REQ'D. WHEN FDTN. WALL IS WATERPROOFED. MAXIMUM POUR HEIGHT 2390 (7'-10") ON 500x155 (20"x6") CONTINUOUS KEYED CONC. FTG. BRACE FDTN. WALL PRIOR TO BACKFILLING. ALL FOOTINGS SHALL REST ON NATURAL UNDISTURBED SOIL OR COMPACTED ENGINEERED FILL, WITH MIN. BEARING CAPACITY OF 150kPa OR GREATER. IF SOIL BEARING DOES NOT MEET MINIMUM CAPACITY, ENGINEERED FOOTINGS ARE REQUIRED.

STOREYS SUPPORTED	W/ MASONRY VENEER	W/ SIDING ONLY*
1	16" WIDE x 6" DEEP	15" WIDE x 6" DEEP
2	20" WIDE x 6" DEEP	20" WIDE x 6" DEEP
3	26" WIDE x 9" DEEP	20" WIDE x 6" DEEP

-SEE OBC 9.15.3.
-MAXIMUM FLOOR LIVE LOAD OF 2.4kPa (50psf.) PER FLOOR, AND MAX. LENGTH OF SUPPORTED FLOOR JOISTS IS 4.9m (16'-1").
-REFER TO SOILS REPORT FOR SOIL CONDITIONS AND BEARING CAPACITY.

STRIP FOOTING SUPPORTING EXTERIOR WALLS (FOR W.O.B.)
-ASSUMING MASONRY VENEER CONSTRUCTION. MAX. FLOOR LIVE LOAD OF 2.4kPa. (50psf.) PER FLOOR, AND MAX. LENGTH OF SUPPORTED FLOOR JOISTS IS 4.9m (16'-1"). THE STRIP FOOTING SIZE IS AS FOLLOWS:
2 STOREY WITH WALK-OUT BASEMENT 545x175 (22"x7")

6. **FOUNDATION DRAINAGE OBC 9.14.2. & 9.14.3.**
100mm (4") DIA. FOUNDATION DRAINAGE TILE 150mm (6") CRUSHED STONE OVER AND AROUND DRAINAGE TILES.

7. **BASEMENT SLAB OBC 9.3.1.6.(1)(b), 9.16.4.3.(1), 9.25.3.3.(15)**
80mm (3") MIN. 25MPa (3600psi) CONC. SLAB ON 100mm (4") COARSE GRANULAR FILL, OR 20MPa (3000psi) CONC. WITH DAMPPROOFING BELOW SLAB. UNDER SLAB INSULATION PER SB-12. ALL SLAB JOINTS & PENETRATIONS TO BE CAULKED.

8. ◆ **EXPOSED FLOOR TO EXTERIOR (SB-12-TABLE 3.1.1.2.A)**
PROVIDE RSI 5.46 (R31) INSULATION, APPROVED VAPOUR BARRIER AND CONTINUOUS AIR BARRIER, FINISHED SOFFIT.

9. ◆ **ATTIC INSULATION (SB-12-TABLE 3.1.1.2.A) (SB-12-3.1.1.8)**
RSI 10.56 (R60) BLOWN IN ROOF INSULATION AND APPROVED VAPOUR BARRIER. 16mm (5/8") INT. DRYWALL FINISH OR APPROVED EQUAL. RSI 3.52 (R20) MIN. ABOVE INNER SURFACE OF EXTERIOR WALL

10. **ALL STAIRS/EXTERIOR STAIRS –OBC. 9.8.–**

UNIFORM RISE	-5mm (1/4") MAX BETWEEN ADJACENT TREADS OR LANDINGS -10mm (1/2") MAX BETWEEN TALLEST & SHORTEST RISE IN FLIGHT
MAX. RISE	= 200 (7-7/8")
MIN. RUN	= 210 (8-1/4")
MIN. TREAD	= 235 (9-1/4")
MAX. NOSING	= 25 (1")
MIN. HEADROOM	= 1950 (6'-5")
RAIL @ LANDING	= 900 (2'-11")
RAIL @ STAIR	= 865 (2'-10") to 965 (3'-2")
MIN. STAIR WIDTH	= 860 (2'-10")
FOR CURVED STAIRS	
MIN. RUN	= 150 (6")
MIN. AVG. RUN	= 200 (8")

HANDRAILS –OBC. 9.8.7.–

11. FINISHED RAILING ON PICKETS SPACED MAXIMUM 100mm (4") BETWEEN PICKETS. CLEARANCE BETWEEN HANDRAIL AND SURFACE BEHIND IT TO BE 50 (2") MIN. HANDRAILS TO BE CONTINUOUS EXCEPT FOR NEWEL POST AT CHANGES OF DIRECTION.
INTERIOR GUARDS –OBC. 9.8.8.–
INTERIOR GUARDS: 900mm (2'-11") MIN. HIGH
EXTERIOR GUARDS – OBC. 9.8.8.
900mm (36") HIGH GUARD WHERE DISTANCE FROM PORCH TO FIN. GRADE IS LESS THAN 1800mm (71"). 1070mm (42") HIGH GUARD IS REQUIRED WHERE DISTANCE EXCEEDS 1800mm (71").

12. **SILL PLATE – OBC. 9.23.7.**
38x89 (2"x4") SILL PLATE WITH 13mm (1/2") DIA. ANCHOR BOLTS 200mm (8") LONG, EMBEDDED MIN. 100mm (4") INTO CONC. @ 2400mm (7'-10") O.C., CAULKING OR 25 (1") MIN. MINERAL WOOL BETWEEN PLATE AND TOP OF FDTN. WALL.
USE NON-SHRINK GROUT TO LEVEL SILL PLATE WHEN REQUIRED.

13. ◆ **BASEMENT INSULATION (SB-12-3.1.1.7), 9.25.2.3, 9.13.2.6)**
FOUNDATION WALLS ENCLOSING HEATED SPACE SHALL BE INSULATED FROM THE UNDERSIDE OF THE SUBFLOOR TO NOT MORE THAN 200mm (8") ABOVE THE FINISHED FLOOR & NO CLOSER THAN 50mm (2") OF THE BASEMENT SLAB. RSI3.52ci (R20ci) BLANKET INSULATION TO HAVE APPROVED VAPOUR BARRIER. RECOMMEND DAMPPROOF WITH BUILDING PAPER BETWEEN THE FOUNDATION WALL AND INSULATION UP TO GRADE LEVEL. NOTE: FULL HEIGHT INSULATION AT COLD CELLAR WALLS. AIR BARRIER TO BE SEALED TO FOUNDATION WALL WITH CAULKING. CONTINUOUS INSULATION (ci) IS NOT TO BE INTERRUPTED BY FRAMING.

14. **BEARING STUD PARTITION**
38x89 (2"x4") STUDS @ 400mm (16") O.C. 38x89 (2"x4") SILL PLATE ON DAMPPROOFING MATERIAL. 13mm (1/2") DIA. ANCHOR BOLTS 200mm (8") LONG, EMBEDDED MIN. 100mm (4") INTO CONC. @ 2400mm (7'-10") O.C. 100mm (4") HIGH CONC. CURB ON 350x155 (14"x6") CONC. FOOTING. ADD HORIZ. BLOCKING AT MID-HEIGHT IF WALL IS UNFINISHED.

15. **STEEL BASEMENT COLUMN (SEE O.B.C. 9.15.3.3)**
89mm (3-1/2") DIA x 3.0mm (0.118) SINGLE WALL TUBE TYPE 2 ADJUSTABLE STL. COL. W/ MIN. CAPACITY OF 71.2kN (16,000lbs.) AT A MAX. EXTENSION OF 2318mm (7'-7 1/2") CONFORMING TO CAN/CGSB-7.2-94, AND WITH 150x150x6.5 (6"x6"x3/8") STL. PLATE TOP & BOTTOM. 870x870x410 (34"x34"x16") CONC. FOOTING ON UNDISTURBED SOIL OR ENGINEERED FILL CAPABLE OF SUSTAINING A PRESSURE OF 150 Kpa. MINIMUM AND AS PER SOILS REPORT.

15A. **STEEL BASEMENT COLUMN (SEE O.B.C. 9.15.3.3)**
89mm (3-1/2") DIA x 4.78mm (.188) FIXED STL. COL. WITH 150x150x9.5 (6"x6"x3/8") STL. TOP & BOTTOM PLATE ON 1070x1070x460 (42"x42"x18"). CONC. FOOTING ON UNDISTURBED SOIL OR ENGINEERED FILL CAPABLE OF SUSTAINING A PRESSURE OF 150 Kpa. MIN. AND AS PER SOILS REPORT.

15B. **STEEL COLUMN**
90mm (3-1/2") DIA x 4.78mm (.188) NON-ADJUSTABLE STL. COL. TO BE ON 150x150x9.5 (6"x6"x3/8") STEEL TOP PLATE, & BOTTOM PLATE. BASE PLATE 120x250x12.5 (4 1/2"x10"x1/2") WITH 2-12mm DIA. x 300mm LONG x50mm HOOK ANCHORS (3-1/2"x12"x2") FIELD WELD COL. TO BASE PLATE.

16. BEAM POCKET OR 300x150 (12"x6") POURED CONC. NIB WALLS. MIN. BEARING 90mm (3-1/2")

17. 19x64 (1"x3") CONTINUOUS WOOD STRAPPING BOTH SIDES OF STEEL BEAM.

18. **GARAGE SLAB**
100mm (4") 32MPa (4640psi) CONC. SLAB WITH 5-8% AIR ENTRAINMENT ON OPT. 100 (4") COARSE GRANULAR FILL WITH COMPACTED SUB-BASE OR COMPACTED NATIVE FILL. SLOPE TO FRONT.

19. ◆ **GARAGE CEILINGS/INTERIOR WALLS**
13mm (1/2") GYPSUM BOARD ON WALL AND CEILING BETWEEN HOUSE AND GARAGE. TAPE AND SEAL ALL JOINTS AIRTIGHT PER O.B.C. 9.10.9.16. WALLS (R22), CEILINGS (R31). REFER TO SB-12 TABLE 3.1.1.2.A. FOR REQUIRED THERMAL INSULATION.

20. DOOR AND FRAME GASPROOFED. DOOR EQUIPPED WITH SELF CLOSING DEVICE AND WEATHERSTRIPPING PER OBC 9.10.13.15.

21. **EXTERIOR STEP**
PRECAST CONCRETE STEP OR WOOD STEP WHERE NOT EXPOSED TO WEATHER. MAX. RISE 200mm (7-7/8") MIN. TREAD 250mm (9-1/2"). SEE OBC. 9.8.9.2., 9.8.9.3. & 9.8.10.

22. **DRYER EXHAUST (OBC-6.2.3.8.(7) & 6.2.4.11.)**
CAPPED DRYER EXHAUST VENTED TO EXTERIOR. (USE 100mm (4") DIA. SMOOTH WALL VENT PIPE)

23. ◆ **INSULATED ATTIC ACCESS (OBC-9.19.2.1 & SB12-3.1.1.8)**
ATTIC ACCESS HATCH WITH MIN. DIMENSION OF 545x610mm (21 1/2"x24") & A MIN. AREA OF 0.32 SQ.M. (3.44 SQ.FT.) WITH WEATHERSTRIPPING. RSI 3.52 (R20) RIGID INSUL. BACKING.

24. **FIREPLACE CHIMNEYS OBC. 9.21.**
TOP OF FIREPLACE CHIMNEY SHALL BE 915mm (3'-0") ABOVE THE HIGHEST POINT AT WHICH IT COMES IN CONTACT WITH THE ROOF AND 610mm (2'-0") ABOVE THE ROOF SURFACE WITHIN A HORIZ. DISTANCE OF 3050mm (10'-0") FROM THE CHIMNEY.

25. LINEN CLOSET. 4 SHELVES MIN. 350mm (14") DEEP.

26. MECHANICAL EXHAUST FAN. VENTED TO EXTERIOR AS REQUIRED BY OBC. 9.32.3.5. & 9.32.3.10.

27. **STEEL BEARING PLATE FOR MASONRY WALLS**
280x280x16 (11"x11"x5/8") STL. PLATE FOR STL. BEAMS AND 280x280x12 (11"x11"x1/2") STL. PLATE FOR WOOD BEAMS BEARING ON CONC. BLOCK PARTYWALL. ANCHORED WITH 2-19mm (3/4") x 200mm (8") LONG GALV. ANCHORS WITHIN SOLID BLOCK COURSE. LEVEL WITH NON-SHRINK GROUT.
OR
SOLID WOOD BEARING FOR WOOD STUD WALLS
SOLID BEARING TO BE AT LEAST AS WIDE AS THE SUPPORTED MEMBER. SOLID WOOD BEARING COMPRISED OF BUILT-UP WOOD STUDS TO BE CONSTRUCTED IN ACCORDANCE WITH OBC 9.17.4.2(2).

28. RESERVED

29. **BEARING WOOD POST (BASEMENT) (OBC 9.17.4.)**
3-38x140 (3-2"x6") BUILT-UP-POST ON METAL BASE SHOE ANCHORED TO CONC. WITH 12.7 DIA. BOLT. 610x610x300 (24"x24"x12") CONC. FOOTING.

30. **STEPPED FOOTINGS OBC 9.15.3.9.**
MIN. HORIZ. STEP = 600mm (24")
MAX. VERT. STEP = 600mm (24")

31. ◆ **SLAB ON GRADE**
MIN. 100mm (4") CONCRETE SLAB ON GRADE ON 100mm (4") COARSE GRANULAR FILL REINFORCED WITH 6x6-W2.9xW2.9 MESH PLACED NEAR MID-DEPTH OF SLAB. CONC. STRENGTH 32 MPa (4640 psi) WITH 5-8% AIR ENTRAINMENT ON COMPACTED SUB-GRADE. WHERE REQUIRED, REFER TO OBC SB-12 TABLE 3.1.1.2.A. FOR REQUIRED MINIMUM INSULATION UNDER SLAB.

32. **DIRECT VENTING GAS FURNACE/ H.W.T. VENT**
DIRECT VENT FURNACE TERMINAL MIN. 900mm (36") FROM A GAS REGULATOR. MIN. 300mm (12") ABOVE FIN. GRADE, FROM ALL OPENINGS, EXHAUST AND INTAKE VENTS. HRV INTAKE TO BE A MIN. OF 1830mm (6'-0") FROM ALL EXHAUST TERMINALS. REFER TO GAS UTILIZATION CODE.

33. **DIRECT VENTING GAS FIREPLACE VENT**
DIRECT VENT GAS FIREPLACE. VENT TO BE A MINIMUM 300mm (12") FROM ANY OPENING AND ABOVE FIN. GRADE. REFER TO GAS UTILIZATION CODE.

34. **SUBFLOOR, JOIST STRAPPING AND BRIDGING**
16mm (5/8") T & G SUBFLOOR ON WOOD FLOOR JOISTS. FOR CERAMIC TILE APPLICATION (* SEE OBC 9.30.6. *) 6mm (1/4") PANEL TYPE UNDERLAY UNDER RESILIENT & PARQUET FLOORING. (* SEE OBC 9.30.2.*)
FLOOR JOISTS WITH SPANS OVER 2100mm (6'-11") TO BE BRIDGED WITH 38x38 (2"x2") CROSS BRACING OR SOLID BLOCKING @ 2100mm (6'-11") O.C. MAX. AND WHERE SPECIFIED BY JOIST TABLES A-1 OR A-2 STRAPPING SHALL BE 19x64 (1"x3") @ 2100mm (6'-11") O.C. UNLESS A PANEL TYPE CEILING FINISH IS APPLIED.
(* SEE OBC 9.23.9.4. *)

35. **EXPOSED BUILDING FACE OBC 9.10.15 & SB-2-2.3.5.(2)**
EXTERIOR WALLS TO HAVE A FIRE RESISTANCE RATING OF NOT LESS THAN 45 min. WHERE LIMITING DISTANCE (LD) IS LESS THAN 1.2M (3'-11"). WHERE THE LD IS LESS THAN 600mm (1'-11") THE EXPOSING FACE SHALL BE CLAD IN NON-COMBUSTIBLE MATERIAL. SEE ELEVATIONS FOR ADDITIONAL NOTES. OFFENDING GARAGE WALLS INCLUDED.

36. **COLD CELLAR PORCH SLAB (OBC 9.39.)**
FOR MAX. 2500mm (8'-2") PORCH DEPTH (SHORTEST DIM.), 125mm (5") 32MPa (4640psi) CONC. SLAB WITH 5-8% AIR ENTRAINMENT. REINF. WITH 10M BARS @ 200mm (7 7/8") O.C. EACH WAY IN BOTTOM THIRD OF SLAB. MIN. 30mm (1 1/4") COVER. 600x600 (23 5/8"x23 5/8") 10M DOWELS @ 600mm (23 5/8") O.C., ANCHORED IN PERIMETER FDTN. WALLS. SLOPE SLAB MIN. 1.0% FROM HOUSE WALL. SLAB TO HAVE MIN. 75mm (3") BEARING ON FDTN. WALLS. PROVIDE (L7) LINTEL OVER CELLAR DOOR WITH 100mm (4") END BEARING.

37. THE FDTN. WALL SHALL NOT BE REDUCED TO LESS THAN 90mm (3-1/2") THICK TO A MAX. DEPTH OF 600mm (24") AND SHALL BE TIED TO THE FACING MATERIAL WITH METAL TIES SPACED 200mm (8") O.C. VERTICALLY AND 900mm (36") O.C. HORIZONTALLY. FILL SPACE BETWEEN WALL AND FACING SOLID WITH MORTAR.

38. **CONVENTIONAL ROOF FRAMING (2.0Kpa. SNOW LOAD)**
38x140 (2"x6") RAFTERS @ 400mm (16"O.C.) FOR MAX 11'-7" SPAN, 38x184 (2"x8") RIDGE BOARD. 38x89 (2"x4") COLLAR TIES AT MIDSPANS. CEILING JOISTS TO BE 38x89 (2"x4") @ 400mm (16") O.C. FOR MAX. 2830mm (9'-3") SPAN & 38x140 (2"x6") @ 400 (16") O.C. FOR MAX. 4450mm (14'-7") SPAN.
RAFTERS FOR BUILT-UP ROOF TO BE 38x89 (2"x4") @ 600mm (24") O.C. WITH A 38x89 (2"x4") CENTRE POST TO THE TRUSS BELOW. LATERALLY BRACED @ 1800mm (6'-0") O.C. VERTICALLY.

GENERAL NOTES

WINDOWS:
1) **MINIMUM BEDROOM WINDOW –OBC. 9.9.10.1.–**
AT LEAST ONE BEDROOM WINDOW ON A GIVEN FLOOR IS TO HAVE MIN. 0.35m2 UNOBSTRUCTED GLAZED OR OPENABLE AREA WITH MIN. CLEAR WIDTH OF 380 mm (1'-3").
2) **WINDOW GUARDS –OBC. 9.8.8.1.(6).**
A GUARD IS REQUIRED WHERE THE TOP OF THE WINDOW SILL IS LOCATED LESS THAN 480mm (1'-7") ABOVE FIN. FLOOR AND THE DISTANCE FROM THE FIN. FLOOR TO THE ADJACENT GRADE IS GREATER THAN 1800mm (5'-11")
◆ 3) **EXTERIOR WINDOWS**
SHALL COMPLY WITH OBC DIV-B 9.7.3. & SB12-3.1.1.9

GENERAL:
1) MECHANICAL VENTILATION IS REQUIRED TO COMPLY WITH OBC-DIV. B. 6.2.2. SEE MECHANICAL DRAWINGS.
2) ALL DOWNSPOUTS TO DRAIN AWAY FROM THE BUILDING AS PER OBC 9.26.18.2. & 5.6.2.2.(3) AND MUNICIPAL STANDARDS.
3) ALL WINDOW WELLS TO DRAIN TO FOOTING LEVEL PER OBC 9.14.6.3. CHECK WITH THE LOCAL AUTHORITY.
4) **STUD WALL REINFORCEMENT FOR FUTURE GRAB BARS IN MAIN BATHROOM**
REINFORCEMENT OF STUD WALLS SHALL BE INSTALLED ADJACENT TO WATER CLOSETS AND SHOWER OR BATHTUB IN MAIN BATHROOM. REFER TO OBC. 9.5.2.3. 3.8.3.8.(1)(d) & 3.8.3.13.(1)(f). SEE DETAIL.
◆ 5) ALL EXTERIOR DOORS TO COMPLY WITH THERMAL RESISTANCE AS STATED IN O.B.C. SB-12-3.1.1.9.
6) ALL AIR BARRIER SYSTEMS ARE REQUIRED TO COMPLY WITH O.B.C. DIV-B 9.25.3.

LUMBER:
1) ALL LUMBER SHALL BE SPRUCE NO.2 GRADE, UNLESS NOTED OTHERWISE.
2) STUDS SHALL BE STUD GRADE SPRUCE, UNLESS NOTED OTHERWISE.
3) LUMBER EXPOSED TO THE EXTERIOR TO BE SPRUCE No.2 GRADE PRESSURE TREATED OR CEDAR, UNLESS NOTED OTHERWISE.
4) ALL LAMINATED VENEER LUMBER (L.V.L.) BEAMS, GIRDER TRUSSES, AND METAL HANGER CONNECTIONS SUPPORTING ROOF FRAMING TO BE DESIGNED & CERTIFIED BY TRUSS MANUFACTURER.
5) LVL BEAMS SHALL BE 2.0E -2950Fb MIN. NAIL EACH PLY OF LVL WITH 89mm (3 1/2") LONG COMMON WIRE NAILS @ 300mm (12") O.C. STAGGERED IN 2 ROWS FOR 184, 240 & 300mm (7 1/4", 9 1/2", 11 7/8") DEPTHS AND STAGGERED IN 3 ROWS FOR GREATER DEPTHS AND FOR 4 PLY MEMBERS ADD 13mm (1/2") DIA. GALVANIZED BOLTS BOLTED AT MID-DEPTH OF BEAM @ 915mm (3'-0") O.C.
6) PROVIDE FACE MOUNT BEAM HANGERS TYPE "SCL" MANUFACTURED BY SIMPSON STRONG-TIE OR EQUAL FOR ALL LVL BEAM TO BEAM CONNECTIONS UNLESS OTHERWISE NOTED. REFER TO ENG. FLOOR LAYOUTS.
7) JOIST HANGERS: PROVIDE METAL HANGERS FOR ALL JOISTS AND BUILT-UP WOOD MEMBERS INTERSECTING FLUSH BUILT-UP WOOD MEMBERS.
8) WOOD FRAMING NOT TREATED WITH A WOOD PRESERVATIVE IN CONTACT WITH CONCRETE, SHALL BE SEPARATED FROM THE CONCRETE BY AT LEAST 2 mil POLYETHYLENE FILM, No. 50 (45mil) ROLL ROOFING OR OTHER DAMPPROOFING MATERIAL, EXCEPT WHERE THE WOOD MEMBER IS AT LEAST 150mm (6") ABOVE THE GROUND.

STEEL:
1) STRUCTURAL STEEL SHALL CONFORM TO CAN/CSA-G40-21 GRADE 300W. HOLLOW STRUCTURAL SECTIONS SHALL CONFORM TO CSA-G40.21 GRADE 350W "STRUCTURAL QUALITY STEEL". OBC. B-9.23.4.3.
2) REINFORCING STEEL SHALL CONFORM TO CSA-G30-18M GRADE 400R

STUCCO:
1) ALL STUCCO WALLS TO HAVE A MINIMUM 10mm AIR SPACE BEHIND THE CLADDING WITH POSITIVE DRAINAGE TO THE EXTERIOR. THE EXTERIOR SHEATHING MUST NOT BE GYPSUM BASED. ALL STUCCO TO BE INSTALLED AS PER MANUFACTURERS SPECIFICATIONS.

LEGEND

CLASS 'B' VENT
DUPLEX OUTLET (12" ABOVE SURFACE)
WP WEATHERPROOF DUPLEX OUTLET
PL POT LIGHT
PC LIGHT FIXTURE (PULL CHAIN)
SWITCH
FD FLOOR DRAIN
EXHAUST FAN TO EXTERIOR
42" DUPLEX OUTLET (HEIGHT A.F.F)
42" GFI DUPLEX OUTLET (HEIGHT A.F.F)
HEAVY DUTY OUTLET (220 volt)
LIGHT FIXTURE (CEILING MOUNTED)
LIGHT FIXTURE (WALL MOUNTED)
HB HOSE BIB (NON–FREEZE)
SJ SINGLE JOIST
DJ DOUBLE JOIST
TJ TRIPLE JOIST
LVL LAMINATED VENEER LUMBER
PL POINT LOAD FROM ABOVE
P.T. PRESSURE TREATED LUMBER
G.T. GIRDER TRUSS BY ROOF TRUSS MANUF.
F.A. FLAT ARCH
C.A. CURVED ARCH
M.C. MEDICINE CABINET (RECESSED)
CONC. BLOCK WALL
DOUBLE VOLUME WALL SEE NOTE 39.
SB SOLID WOOD BEARING (SPRUCE No. 2) SOLID BEARING TO BE AS WIDE AS SUPPORTED MEMBER OR AS DIRECTED BY STRUCTURAL ENGINEER. SOLID BEARING TO BE MINIMUM 2 PIECES.
SBFA SOLID WOOD BEARING TO MATCH FROM ABOVE

SOIL GAS/ RADON CONTROL (OBC 9.1.1.7. & 9.13.4.)
PROVIDE CONSTRUCTION TO PREVENT LEAKAGE OF SOIL GAS INTO THE BUILDING IF REQUIRED.

CONTRACTOR MUST VERIFY ALL DIMENSIONS ON THE JOB AND REPORT ANY DISCREPANCY TO VA3 DESIGN BEFORE PROCEEDING WITH THE WORK. ALL DRAWINGS AND SPECIFICATIONS ARE INSTRUMENTS OF SERVICE AND THE PROPERTY OF VA3 DESIGN WHICH IF REQUESTED, MUST BE RETURNED AT THE COMPLETION OF THE WORK. ALL DRAWINGS TO BE USED FOR CONSTRUCTION ONLY AFTER BUILDING PERMIT HAS BEEN ISSUED.

39. **TWO STOREY VOLUME SPACES**
-FOR A MAXIMUM 5490 mm (18'-0") HEIGHT AND MAXIMUM SUPPORTED ROOF TRUSS LENGTH OF 6.0m. PROVIDE 2-38x140 (2-2"x6") SPR.#2 CONTIN. STUDS @ 300mm (12") O.C. (TRIPLE UP AT EVERY THIRD DOUBLE STUD FOR BRICK WALLS) C/W 9.6 (3/8") THICK EXT. PLYWOOD SHEATHING. PROVIDE SOLID WOOD BLOCKING BETWEEN WOOD STUDS @ 1220 mm (4'-0") O.C. VERTICALLY. -FOR WALLS WITH HORIZ. DISTANCES NOT EXCEEDING 2900 mm (9'-6"). PROVIDE 38x140 (2"x6") STUDS @ 400 (16") O.C. WITH CONTINUOUS 2-38x140 (2-2"x6")TOP PLATES + 1-38x140 (1-2"x6") BOTTOM PLATE & MINIMUM OF 3-38x184 (3-2"x8") CONT. HEADER AT GRND. CEILING LEVEL TOE-NAILED & GLUED AT TOP, BOTTOM PLATES AND HEADERS.

40. TYPICAL 1 HOUR RATED PARTY WALL. REFER TO DETAILS FOR TYPE AND SPECIFICATIONS

41. ◆ **FOUNDATION WALL (W.O.D./W.O.B.)**
- WHERE GRADE TO T/O BASEMENT SLAB EXCEEDS 1200mm (3'-11") A 250mm (10") WIDE FOUNDATION WALL IS REQUIRED.

42. **EXTERIOR WALLS FOR WALK–OUT CONDITIONS**
THE EXTERIOR BASEMENT STUD WALL TO BE 38x140 (2"x6") STUDS @ 400mm (16") o.c. OR 38x89 (2"x4") STUDS @ 300mm (12") o.c.

◆ **DRAIN WATER HEAT RECOVERY UNIT (DWHR)**
PER SB12-3.1.1.12., A DRAIN WATER HEAT RECOVERY (DWHR) UNIT SHALL BE INSTALLED IN EACH DWELLING UNIT TO RECEIVE DRAIN WATER FROM ALL SHOWERS OR FROM AT LEAST TWO SHOWERS WHERE THERE ARE TWO OR MORE SHOWERS IN THE DWELLING UNIT. DOES NOT APPLY IF THERE ARE NO SHOWERS OR NO STOREY BENEATH ANY OF THE SHOWERS.

◆ REVISED
ONT. REG. 332/12-2012 OBC
Amendment O. Reg. 368/13
MR-16-S-26 JAN. 25, 2017

WOOD LINTELS AND BUILT-UP WOOD BEAMS

L1	2/38 x 184 (2/2" x 8")	SPR.#2
B1	3/38 x 184 (3/2" x 8")	SPR.#2
B2	4/38 x 184 (4/2" x 8")	SPR.#2
B7	5/38 x 184 (5/2" x 8")	SPR.#2
L3	2/38 x 235 (2/2" x 10")	SPR.#2
B3	3/38 x 235 (3/2" x 10")	SPR.#2
B4	4/38 x 235 (4/2" x 10")	SPR.#2
L5	2/38 x 286 (2/2" x 12")	SPR.#2
B5	3/38 x 286 (3/2" x 12")	SPR.#2
B6	4/38 x 286 (4/2" x 12")	SPR.#2

LOOSE STEEL LINTELS

L7	89 x 89 x 6.4L	(3–1/2" x 3–1/2" x 1/4"L)
L8	89 x 89 x 7.9L	(3–1/2" x 3–1/2" x 5/16"L)
L9	102 x 89 x 7.9L	(4" x 3–1/2" x 5/16"L)
L10	127 x 89 x 7.9L	(5" x 3–1/2" x 5/16"L)
L11	152 x 89 x 10.0L	(6" x 3–1/2" x 3/8"L)
L12	152 x 102 x 11.0L	(6"x 4" x 7/16"L)
L13	178 x 102 x 11.0L	(7"x 4" x 7/16"L)

LAMINATED VENEER LUMBER (LVL) BEAMS

LVL1A	1–1 3/4"x7 1/4"	(1–45x184)
LVL1	2–1 3/4"x7 1/4"	(2–45x184)
LVL2	3–1 3/4"x7 1/4"	(3–45x184)
LVL3	4–1 3/4"x7 1/4"	(4–45x184)
LVL4A	1–1 3/4"x9 1/2"	(1–45x240)
LVL4	2–1 3/4"x9 1/2"	(2–45x240)
LVL5	3–1 3/4"x9 1/2"	(3–45x240)
LVL5A	4–1 3/4"x9 1/2"	(4–45x240)
LVL6A	1–1 3/4"x11 7/8"	(1–45x300)
LVL6	2–1 3/4"x11 7/8"	(2–45x300)
LVL7	3–1 3/4"x11 7/8"	(3–45x300)
LVL8	4–1 3/4"x11 7/8"	(4–45x300)

DOOR SCHEDULE

1.	EXTERIOR DOOR	815 x 2030 x 45 (2'–8" x 6'–8" x 1–3/4") INSULATED MIN. RSI 0.7 (R4)
1A	EXTERIOR DOOR	865 x 2030 x 45 (2'–10" x 6'–8" x 1–3/4")
1B	EXTERIOR DOOR	915 x 2030 x 45 (3'–0" x 6'–8" x 1–3/4") INSULATED MIN. RSI 0.7 (R4)
1C	EXTERIOR DOOR	915 x 2438 x 45 (3'–0" x 8'–0" x 1–3/4") INSULATED MIN. RSI 0.7 (R4)
1D	EXTERIOR DOOR	860 x 2438 x 45 (2'–10" x 8'–0" x 1–3/4") INSULATED MIN. RSI 0.7 (R4)
2.	INTERIOR DOOR	815 x 2030 x 35 (2'–8" x 6'–8" x 1–3/8")
2A	EXTERIOR DOOR	815 x 2030 x 45 (2'–8" x 6'–8" x 1–3/4") 20 MIN. RATED DOOR AND FRAME, WITH APPROVED SELF CLOSING DEVICE.
2B	EXTERIOR DOOR	815 x 2030 x 45 (2'–8" x 6'–8" x 1–3/4") (WEATHER STRIPPING INSTALLED)
2C	INTERIOR DOOR	815 x 2438 x 45 (2'–8" x 8'–0" x 1–3/4")
2D	EXTERIOR DOOR	815 x 2438 x 45 (2'–8" x 8'–0" x 1–3/4") 20 MIN. RATED DOOR AND FRAME, WITH APPROVED SELF CLOSING DEVICE.
3.	INTERIOR DOOR	760 x 2030 x 35 (2'–6" x 6'–8" x 1–3/8")
3A	INTERIOR DOOR	710 x 2030 x 35 (2'–4" x 6'–8" x 1–3/8")
3B	INTERIOR DOOR	760 x 2438 x 35 (2'–6" x 8'–0" x 1–3/8")
3C	INTERIOR DOOR	710 x 2438 x 35 (2'–4" x 8'–0" x 1–3/8")
4.	INTERIOR DOOR	610 x 2030 x 35 (2'–0" x 6'–8" x 1–3/8")
4A	INTERIOR DOOR	660 x 2030 x 35 (2'–2" x 6'–8" x 1–3/8")
4C	INTERIOR DOOR	660 x 2438 x 35 (2'–2" x 8'–0" x 1–3/8")
5.	INTERIOR DOOR	460 x 2030 x 35 (1'–6" x 6'–8" x 1–3/8")
6.	EXTERIOR DOOR	815 x 2030 x 45 (2'–8" x 6'–8" x 1–3/4") SOLID WOOD CORE

MECHANICAL SYMBOLS

HR HEAT PIPE
PL PLUMBING (TOILET)
PL PLUMBING (BATH, SINK,SHOWER)
WA WARM AIR
RA RETURN AIR DUCT

SA **SMOKE ALARM (REFER TO OBC 9.10.19)**
PROVIDE 1 PER FLOOR, NEAR THE STAIRS CONNECTING THE FLOOR LEVEL AND ALSO 1 IN EACH BEDROOM NEAR HALL DOOR. ALARMS TO BE CONNECTED TO AN ELECTRICAL CIRCUIT AND INTERCONNECTED TO ACTIVATE ALL ALARMS IF 1 SOUNDS. BATTERY BACK-UP REQUIRED. SMOKE ALARMS TO INCORPORATE VISUAL SIGNALLING COMPONENT (9.10.19.3.(3))

CMA **CARBON MONOXIDE ALARMS (OBC 9.33.4.)**
WHERE A FUEL-BURNING APPLIANCE IS INSTALLED IN A DWELLING UNIT, A CARBON MONOXIDE ALARM CONFORMING TO CAN./CSA-6.19 OR UL2034 SHALL BE INSTALLED ADJACENT TO EACH SLEEPING AREA. CARBON MONOXIDE DETECTOR(S) SHALL BE PERMANENTLY WIRED SO THAT ITS ACTIVATION WILL ACTIVATE ALL CARBON MONOXIDE DETECTORS AND BE EQUIPPED WITH AN ALARM THAT IS AUDIBLE WITHIN BEDROOMS WHEN THE INTERVENING DOORS ARE CLOSED. REFER TO MANUFACTURER FOR ADDDITIONAL REQUIREMENTS.

REFER TO UNIT DRAWINGS OR PAGE CN–2 FOR SB–12 COMPLIANCE PACKAGE A1 TO BE USED FOR THIS MODEL. The minimum thermal performance of building envelope and equipment shall conform to the selected package unless otherwise noted.

2017 A1
VA3 REFERENCE NUMBER

no.	description	date	by
9			
8			
7			
6			
5			
4			
3			
2	UPDATED TO NEW CODE	SEP 27-17	RC
1	ISSUE FOR CLIENT REVIEW	AUG 04-17	RC

The undersigned has reviewed and takes responsibility for this design, and has the qualifications and meets the requirements set out in the Ontario Building Code to be a Designer.
qualification information
Wellington Jno-Baptiste 25591
name signature BCIN
registration information
VA3 Design Inc. 42658
BCIN

Contractor must verify all dimensions on the job and report any discrepancy to the Designer before proceeding with the work. All drawings and specifications are instruments of service and the property of the Designer which must be returned at the completion of the work. Drawings are not to be scaled.

VA3 DESIGN
255 Consumers Rd Suite 120
Toronto ON M2J 1R4
t 416.630.2255 f 416.630.4782
va3design.com

BAYVIEW WELLINGTON
project name GREEN VALLEY ESTATES
municipality BRADFORD
CONST NOTE
project no. 13045
date MAY 2016
drawn by RC
checked by
scale 3/16" = 1'–0"
CONSTRUCTION NOTES
drawing no. CN1
file name 13045–CN–A1
RICHARD – H:\ARCHIVE\WORKING\2013\13045_BW\units\13045-CN-A1.dwg – Wed – Sep 27 2017 – 4:50 PM

SITE COPY

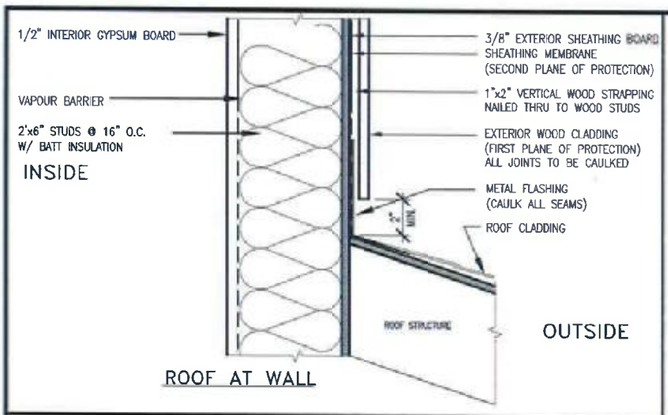

ROOF AT WALL

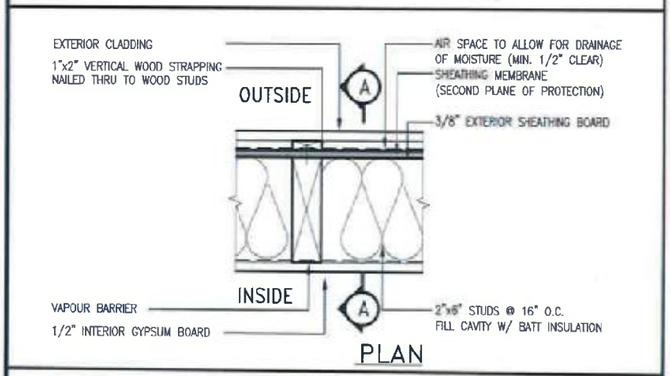

PLAN

EXTERIOR WOOD CLADDING WALL ASSEMBLY

STUD WALL REINFORCEMENT FOR FUTURE GRAB BARS IN MAIN BATHROOM

REINFORCEMENT OF STUD WALLS SHALL BE INSTALLED ADJACENT TO WATER CLOSETS AND SHOWER OR BATHTUB IN MAIN BATHROOM.
FUTURE GRAB BARS TO BE MOUNTED TO RESIST HORIZ. AND VERT. LOADS OF 1.3 KN (300 lb)
REFER TO OBC. DIV. B– 9.5.2.3.. WATER CLOSET 3.8.3.8.(3)(a) & 3.8.3.8.(3)(c).. SHOWER 3.8.3.13.(2)(f).. BATHTUB & 3.8.3.13.(4)(c). AND DETAILS PROVIDED.

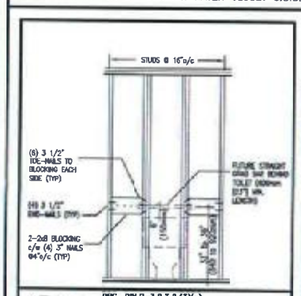

OBC. DIV.B–3.8.3.8.(5)(c)
OGB1 FUTURE GRAB BAR @ TOILET (BACK WALL)

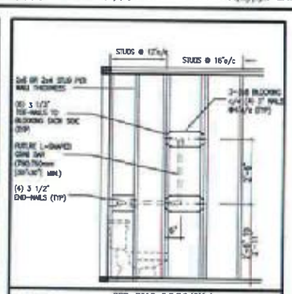

OBC. DIV.B–3.8.3.8.(3)(a)
OGB1A FUTURE L-SHAPE GRAB BAR DETAIL @ TOILET (ONLY IF SIDE WALL PRESENT)

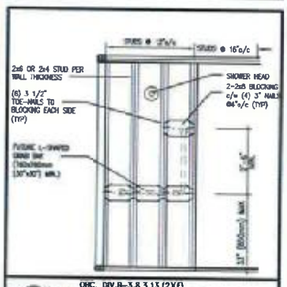

OBC. DIV.B–3.8.3.13.(2)(f)
OGB3 FUTURE L-SHAPE GRAB BAR DETAIL @ SHOWER (BACK WALL)

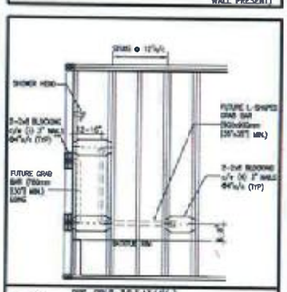

OBC. DIV.B–3.8.3.13.(4)(c)
OGB4 FUTURE GRAB BAR IN BATHTUB (SIDE VIEW)

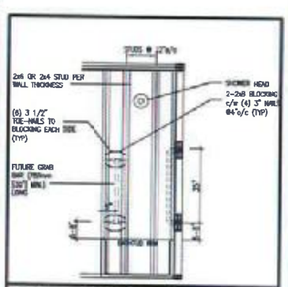

OBC. DIV.B–3.8.3.13.(2)(f)
OGB4A FUTURE GRAB BAR IN BATHTUB (VERTICAL BAR LOCATED @ EACH END WALL)

S. J. BOYD
NOV 2, 2018

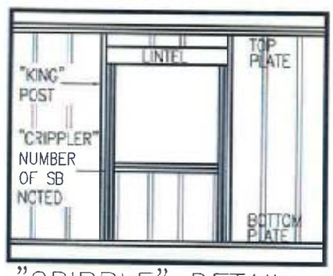

"CRIPPLE" DETAIL

MAX. HEIGHT FOR 2"x4" GARAGE WALL IS AS FOLLOW:
2"x4" @ 16" O.C. – 9'-10"
2-2"x4" @ 12" O.C. – 10'-9"
3-2"x4" @ 16" O.C. – 11'-2"
3-2"x4" @ 12" O.C. – 12'-4"

NOTES:
1. FOR ROOF DESIGN SNOW LOAD OF UP TO 2.5 KPa, SUPPORTED ROOF TRUSS LENGTH OF 6.0m AND FLOOR JOIST LENGTH OF 2.5m OF ONE FLOOR.
2. PROVIDE HORIZONTAL SOLID BLOCKING @ 1200 O.C. (4'-0")
3. PROVIDE A MINIMUM OF 9.5mm (3/8") PLYWOOD OR OSB EXTERIOR SHEATHING ON THE EXTERIOR FACE.
4. FOR A 1/50 YEAR REFERENCE WIND PRESSURE OF 0.6 KPa.
5. STUDS GREATER THAN 9'–10" HIGH TO BE No. 2 SPF
6. STUD SPECIFICATION IS SUITABLE FOR BRICK VENEER OR SIDING.

** MAX. HEIGHT FOR 2"x6" EXTERIOR WALL IS AS FOLLOW:
2"x6" @ 16" O.C. – 12'-6"
2"x6" @ 12" O.C. – 13'-10"
2-2"x6" @ 16" O.C. – 15'-0"
2-2"x6" @ 12" O.C. – 17'-4"

MAX. HEIGHT FOR 2"x8" EXTERIOR WALL IS AS FOLLOWS:
2"x8" @ 16" O.C. – 16'-0"
2"x8" @ 12" O.C. – 17'-9"
2-2"x8" @ 16" O.C. – 20'-4"
2-2"x8" @ 12" O.C. – 22'-4"

NOTES:
1. FOR ROOF DESIGN SNOW LOAD OF UP TO 2.5 KPa
2. SUPPORTED ROOF TRUSS LENGTH OF 6.0m ONLY.
3. PROVIDE HORIZONTAL SOLID BLOCKING @ 1200 O.C. (4'-0")
4. PROVIDE A MINIMUM OF 9.5mm (3/8") PLYWOOD OR OSB EXTERIOR SHEATHING ON THE EXTERIOR FACE AND 12.5mm (1/2") GYPSUM BOARD ON THE INTERIOR FACE.
5. WALL FRAMING SHALL CONFORM TO OBC 9.23.10.1.(2)
6. FOR A 1/50 YEAR REFERENCE WIND PRESSURE OF 0.6 KPa
7. STUDS GREATER THAN 9'–10" HIGH TO BE No. 2 SPF
8. STUD SPECIFICATION IS SUITABLE FOR BRICK VENEER OR SIDING.

** STUD INFORMATION TAKEN FROM OBC TABLE A–30

no.	description	date	by
9			
8			
7			
6			
5			
4			
3			
2	UPDATED TO NEW CODE	SEP 27–17	RC
1	ISSUE FOR CLIENT REVIEW	AUG 04–17	RC

The undersigned has reviewed and takes responsibility for this design and has the qualifications and meets the requirements set out in the Ontario Building Code to be a Designer.
qualification information
Wellington Jae-Baptiste — signature — 25591
name — BCIN
registration information
VA3 Design Inc. — 42658

Contractor must verify all dimensions on the job and report any discrepancy to the Designer before proceeding with the work. All drawings and specifications are instruments of service and the property of the Designer which must be returned at the completion of the work. Drawings are not to be scaled.

VA3 DESIGN
255 Consumers Rd Suite 120
Toronto ON M2J 1R4
t 416.630.2255 f 416.630.4782
va3design.com

BAYVIEW WELLINGTON
project name: GREEN VALLEY ESTATES — municipality: BRADFORD
CONST NOTE
project no. 13045
date: MAY 2016 — CONSTRUCTION NOTES
drawn by: RC — checked by: — scale: 3/16" = 1'-0" — file name: 13045-CN-A1
drawing no. CN2
RICHARD – H:\ARCHIVE\WORKING\2013\13045-BW\unit\13045-CN-A1.dwg – Wed – Sep 27 2017 – 4:58 PM

SITE COPY

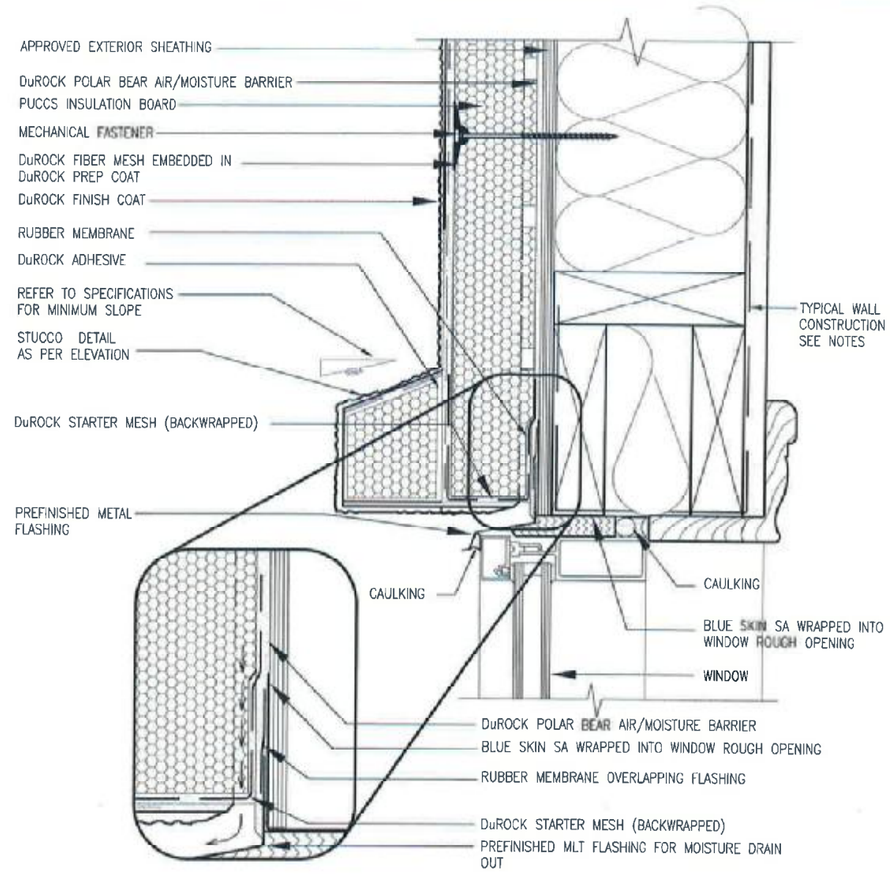

1 / CN3 WINDOW HEADER

SCALE: 3"=1'-0"

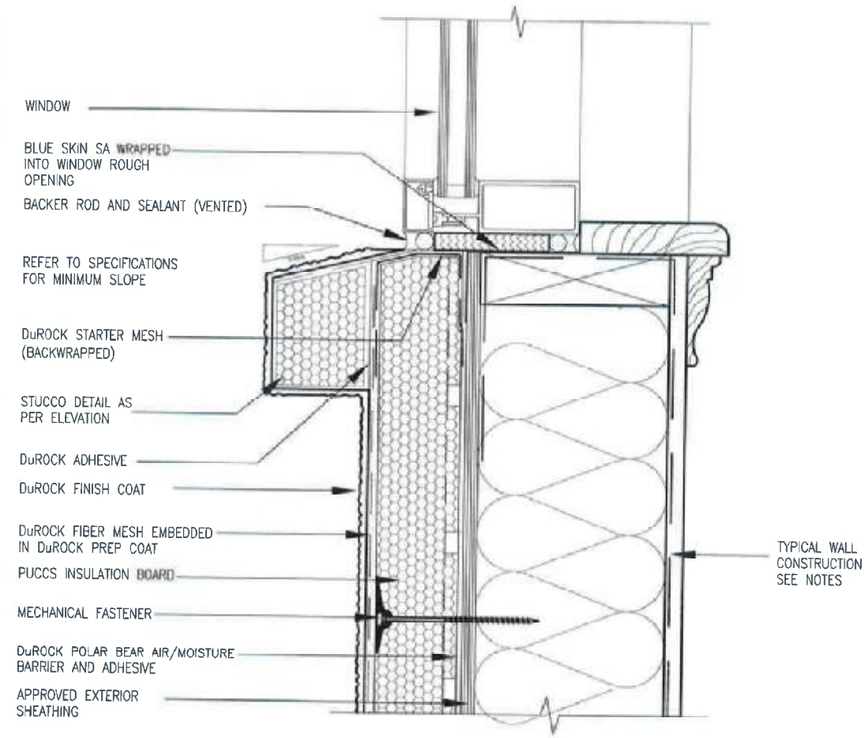

2 / CN3 WINDOW SILL

SCALE: 3"=1'-0"

ALL STUCCO WALLS TO HAVE A MINIMUM 10mm AIR SPACE BEHIND THE CLADDING WITH POSITIVE DRAINAGE TO THE EXTERIOR. THE EXTERIOR SHEATHING MUST NOT BE GYPSUM BASED. ALL STUCCO TO BE INSTALLED AS PER MANUFACTURERS SPECIFICATIONS.
DETAILS ARE BASED ON DuROCK PUCCS SYSTEM

CONST NOTE

BAYVIEW WELLINGTON

project name: GREEN VALLEY ESTATES
municipality: BRADFORD
project no. 13045
date: MAY 2016
drawn by: RC
checked by: -
scale: 3/16" = 1'-0"
file name: 13045-CN-A1
drawing no. CN3

CONSTRUCTION NOTES

VA3 DESIGN
255 Consumers Rd. Suite 120
Toronto ON M2J 1R4
t 416.630.2255 f 416.630.4782
va3design.com

Only those designers who have and take responsibility for this design are qualified in accordance with Ontario Building Code to be a Designer.
qualification information
Wellington Inc.-Bradford 25591
name BCIN
VA3 Design Inc. 42658
signature

Contractor must verify all dimensions on the job and report any discrepancies to the designer before proceeding with the work. All dimensions are approximate. Drawings are the property of the Designer which must be returned at the completion of the work. Drawings are not to be scaled.

No.	description	date	by
2	UPDATED TO NEW CODE	SEP 27-17	RC
1	ISSUE FOR CLIENT REVIEW	AUG 04-17	RC

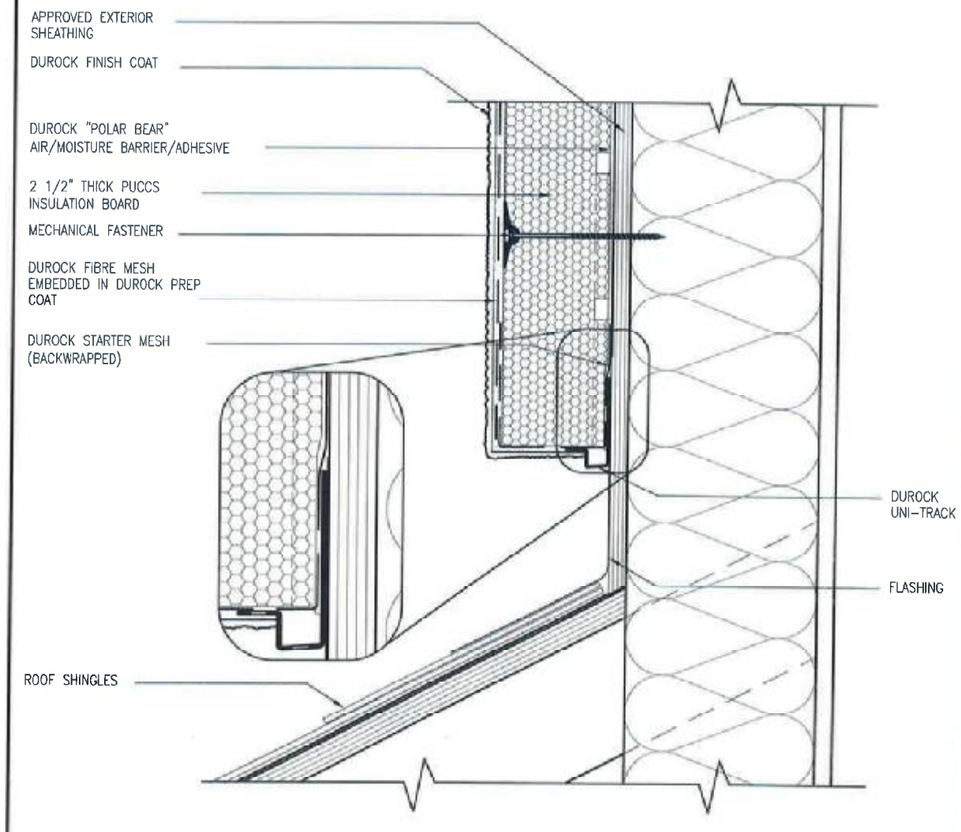

3 / CN4 STUCCO TERMINATION @ ROOF

SCALE: 3"=1'-0"

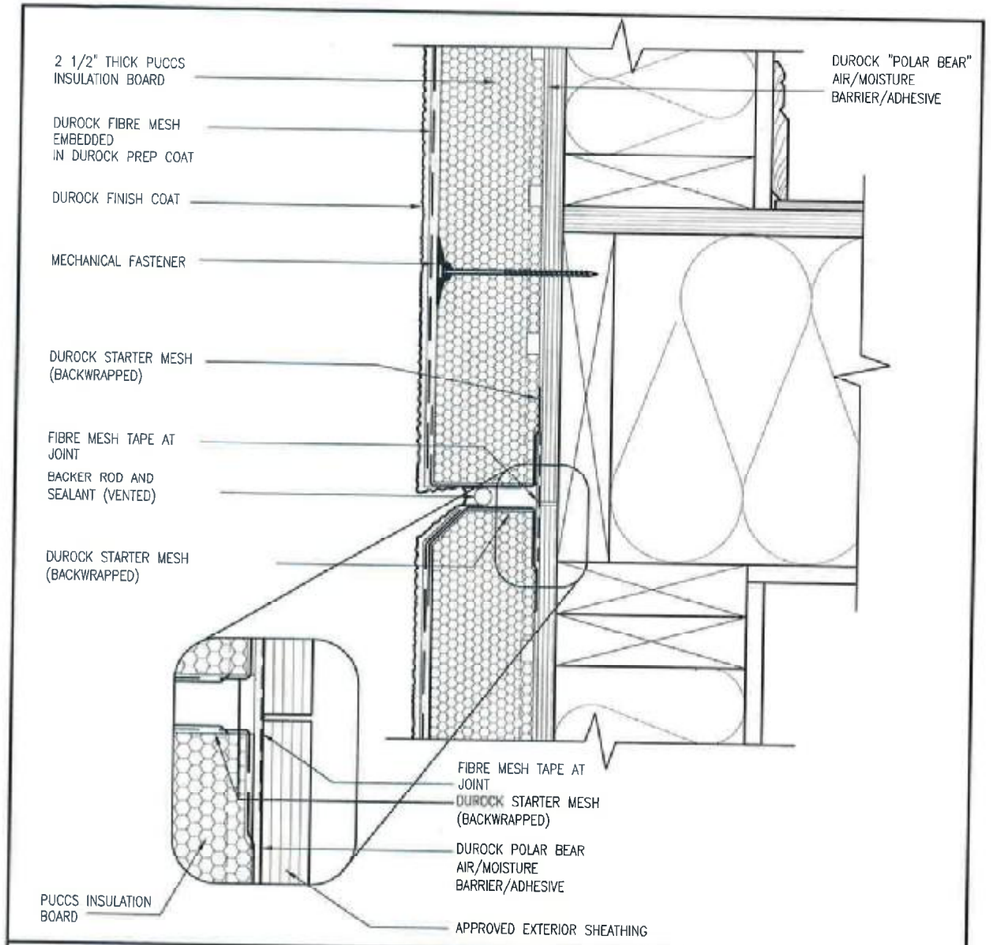

4 / CN4 HORIZONTAL EXPANSION JOINT

SCALE: 3"=1'-0"

ALL STUCCO WALLS TO HAVE A MINIMUM 10mm AIR SPACE BEHIND THE CLADDING WITH POSITIVE DRAINAGE TO THE EXTERIOR. THE EXTERIOR SHEATHING MUST NOT BE GYPSUM BASED. ALL STUCCO TO BE INSTALLED AS PER MANUFACTURERS SPECIFICATIONS.
DETAILS ARE BASED ON DuROCK PUCCS SYSTEM

CONST NOTE

project no. 13045

BAYVIEW WELLINGTON

GREEN VALLEY ESTATES

BRADFORD

CONSTRUCTION NOTES

drawing no. CN4

MAY 2016

RC

3/16" = 1'-0"

13045-CN-03

VA3 DESIGN

255 Consumers Rd Suite 120
Toronto ON M2J 1R4
t 416.630.2255 f 416.630.4782
va3design.com

The undersigned has the qualifications and meets the responsibility for this design as set out in the Ontario Building Code to be a Designer.

name	signature	BCIN
Wellington Jha-Baptiste		25591
firm name / registration information		BCIN
VA3 Design Inc.		42658

Contractor must verify all dimensions on the job and report any discrepancies to the Designer before proceeding with the work. All drawings are the property of the Designer and the property of this Designer which must be returned at the completion of the work. Drawings are not to be scaled.

no.	description	date	by
2	UPDATED TO NEW CODE	SEP 27-17	RC
1	ISSUE FOR CLIENT REVIEW	AUG 04-17	RC

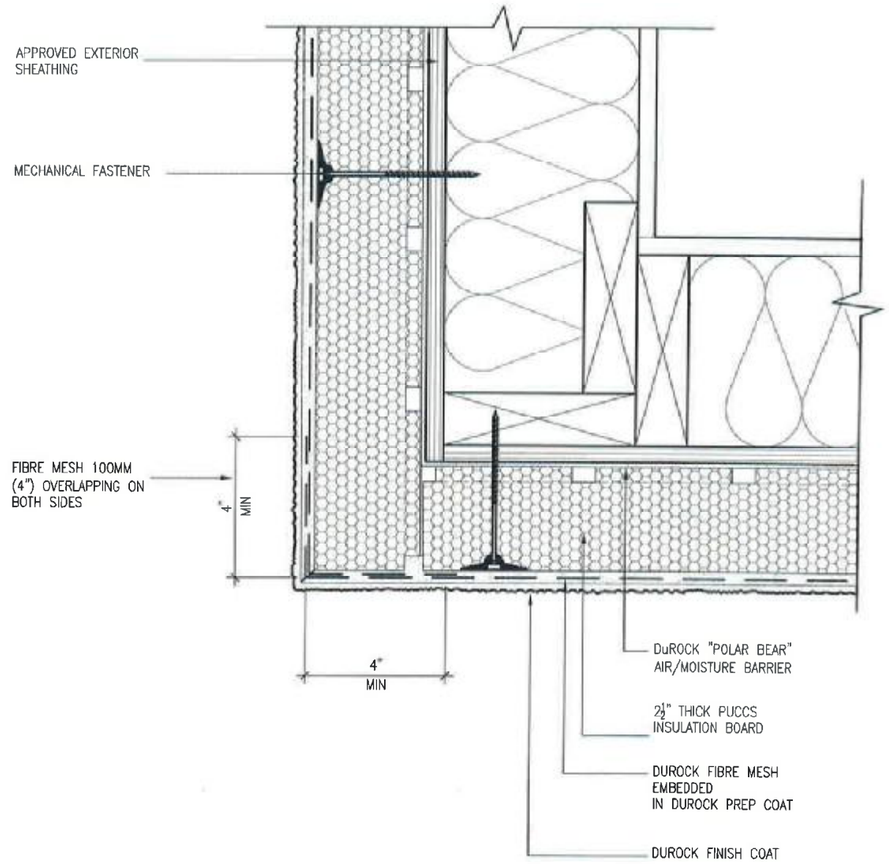

5 / CN5 CORNER DETAIL

SCALE: 3"=1'-0"

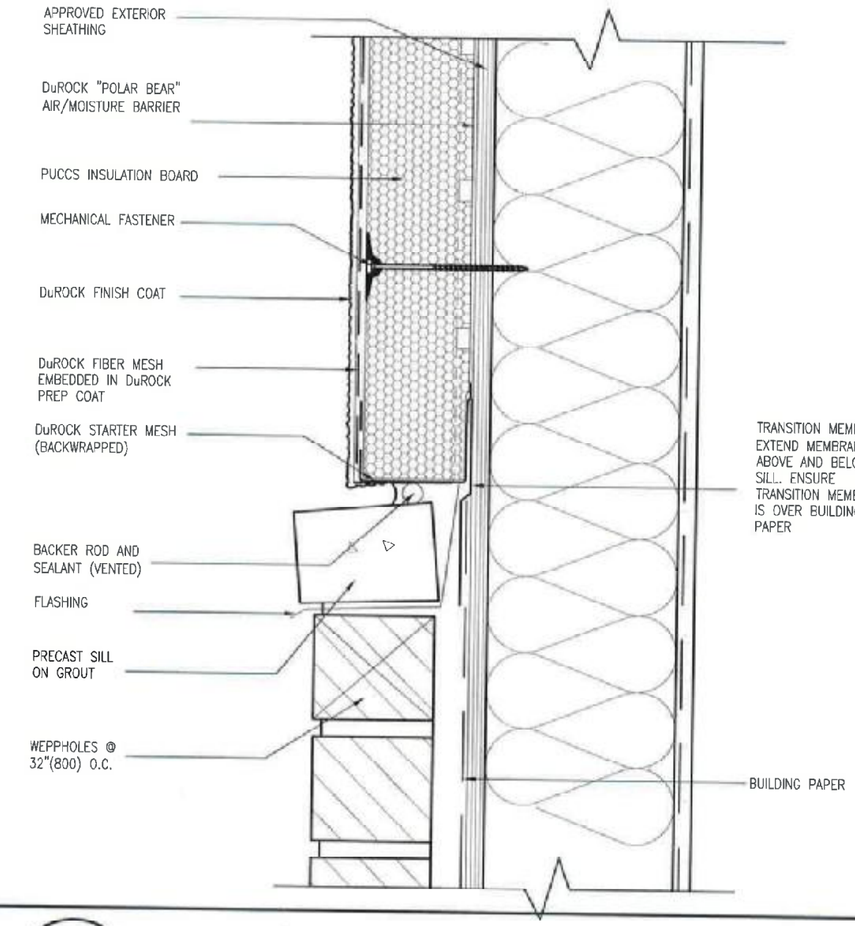

6 / CN5 STUCCO / MASONRY PLINTH CONNECTION

SCALE: 3"=1'-0"

ALL STUCCO WALLS TO HAVE A MINIMUM 10mm AIR SPACE BEHIND THE CLADDING WITH POSITIVE DRAINAGE TO THE EXTERIOR. THE EXTERIOR SHEATHING MUST NOT BE GYPSUM BASED. ALL STUCCO TO BE INSTALLED AS PER MANUFACTURERS SPECIFICATIONS.
DETAILS ARE BASED ON DuROCK PUCCS SYSTEM

CONST NOTE

BAYVIEW WELLINGTON

project name: GREEN VALLEY ESTATES
municipality: BRADFORD
project no: 13045
date: MAY 2016
drawn by: RC
checked by: -
scale: 3/16" = 1'-0"
CONSTRUCTION NOTES
drawing no: CN5
file name: 13045-CN-L1

VA3 DESIGN
255 Consumers Rd Suite 120
Toronto ON M2J 1R4
t 416.630.2255 f 416.630.4782
va3design.com

The undersigned has reviewed and takes responsibility for this design and has the qualifications and meets the requirements set out in the Ontario Building Code to be a Designer.

signature	name	BCIN
Wellington Jao-Baptiste	VA3 Design Inc.	25591 / 42658

Contractor must verify all dimensions on the job and report any discrepancies to the Designer before proceeding with the work. All drawings and specifications are instruments of service and the property of the Designer which must be returned at the completion of the work. Drawings are not to be scaled.

no.	description	date	by
2	UPDATED TO NEW CODE	SEP 27-17	RC
1	ISSUE FOR CLIENT REVIEW	AUG 04-17	RC

SB12-COMPLIANCE PACKAGE 'A1'

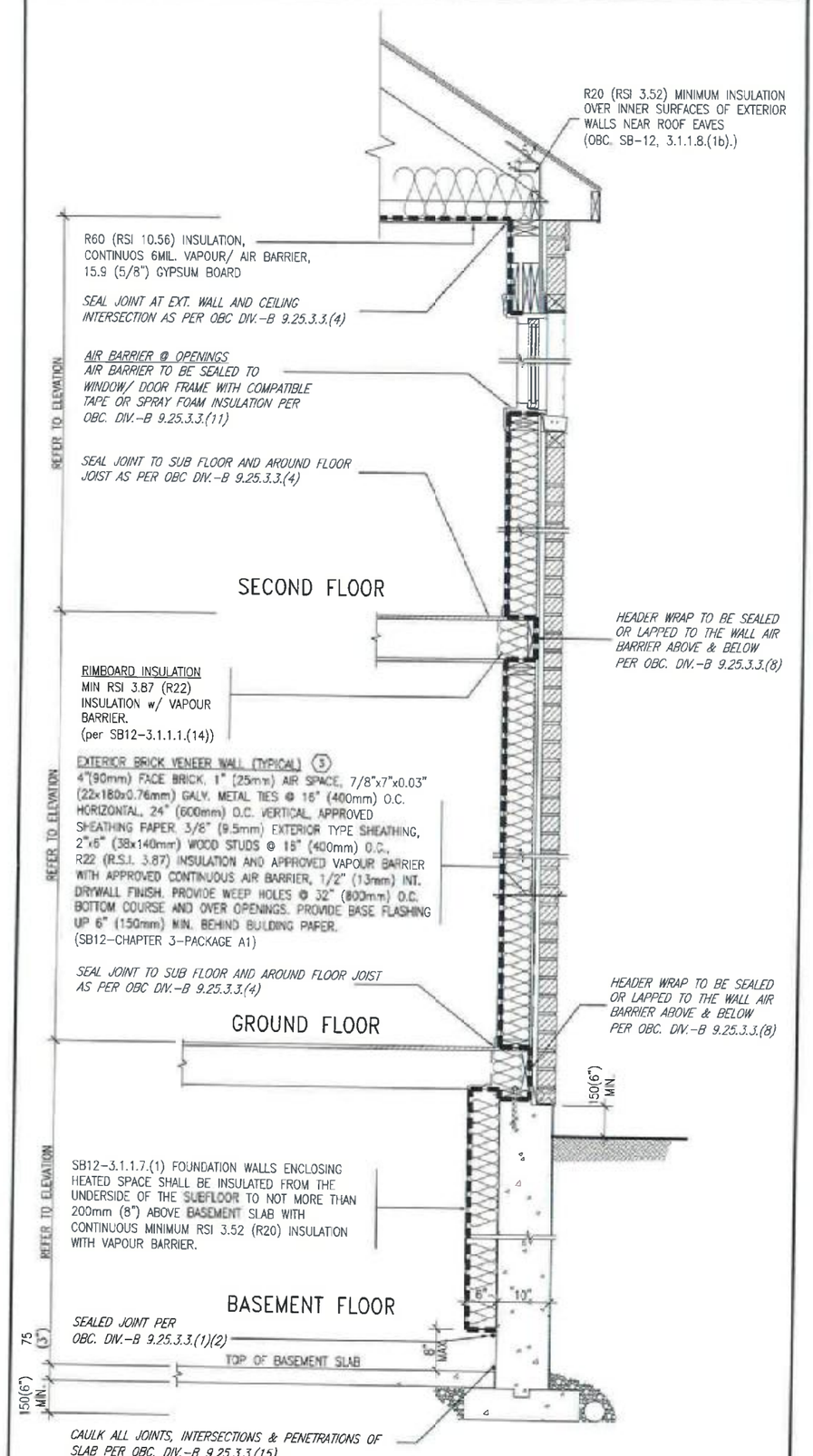

INSULATION REQUIREMENTS
REFER TO OBC SB-12, CHAPTER 3. ZONE 1- COMPLIANCE PACKAGE A1.

AIR BARRIER SYSTEMS
AIR BARRIER TO BE INSTALLED IN CONFORMANCE WITH OBC. DIV. B-9.25.3

REFER TO ADDITIONAL DETAILS FOR STRUCTURAL COMPONENTS

EW TYPICAL EXT. WALL AIR BARRIER CONTINUITY SECTION w/ BRICK VENEER (PACKAGE A1) 10" FOUNDATION WALL

SCALE: N.T.S.

THE MINIMAL THERMAL PERFORMANCE OF BUILDING ENVELOPE AND EQUIPMENT SHALL CONFORM TO THE FOLLOWING SB-12 COMPLIANCE PACKAGE AS PER OBC SUPPLEMENTARY STANDARD SB-12, SECTION 3.1.1.1.

USE SB-12 COMPLIANCE PACKAGE (A1):

COMPONENT	A1	Notes:
Ceiling with Attic Space Minimum RSI (R) value	10.56 (R60)	R20 at inner face of exterior walls
Ceiling without Attic Space Minimum RSI (R) value	5.46 (R31)	BATT or SPRAY
Exposed FLoor Minimum RSI (R) value	5.46 (R31)	BATT or SPRAY
Walls Above Grade Minimum RSI (R) value	3.87 (R22)	6" R22 BATT
Basement Walls Minimum RSI (R) value	3.52ci (R20ci)	OPTION TO USE R12+R10ci.
Edge of Below Grade Slab ≤600mm below grade Minimum RSI (R) value	1.76 (R10)	RIGID INSUL
Windows & Sliding glass Doors Maximum U-value	1.6	
Skylights Maximum U-value	2.8U	
Space Heating Equipment Minimum AFUE	96% Min.	NATURAL GAS
Hot Water Heater Minimum EF	0.8	NATURAL GAS
HRV Minimum Efficiency	75%	–
Drain Water Heat Recovery Unit (DWHR)	Minimum 1 OR Maximum 2 Required. Dependent on number of showers installed. Refer to SB12-3.1.1.12 for information	

ci- Denotes Continuous Insulation without framing interruption.

S. J. BOYD
NOV 2, 2018

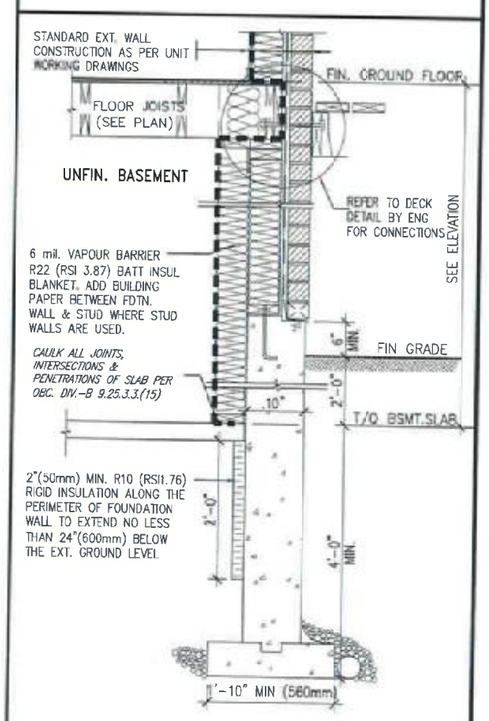

* REVISED-FEB 2017

SECTION AT W.O.D/W.O.B.

no.	description	date	by
9			
8			
7			
6			
5			
4			
3			
2	UPDATED TO NEW CODE	SEP 27-17	RC
1	ISSUE FOR CLIENT REVIEW	AUG 04-17	RC

The undersigned has reviewed and takes responsibility for this design, and has the qualifications and meets the requirements set out in the Ontario Building Code to be a Designer.
qualification information
Wellington Jno-Baptiste — signature — 25561
registration information — BCIN
VA3 Design Inc. — 42658

Contractor must verify all dimensions on the job and report any discrepancy to the Designer before proceeding with the work. All drawings and specifications are instruments of service and the property of the Designer which must be returned at the completion of the work. Drawings are not to be scaled.

VA3 DESIGN
255 Consumers Rd Suite 120
Toronto ON M2J 1R4
t 416.630.2255 f 416.630.4782
va3design.com

BAYVIEW WELLINGTON

project name: GREEN VALLEY ESTATES — municipality: BRADFORD

CONST NOTE

project no. 13045

date: MAY 2016 — CONSTRUCTION NOTES

drawn by: RC — checked by: – — scale: 3/16" = 1'-0"

drawing no. CN6 — file name: 13045-CN-L1

RICHARD – R:\ARCHIVE\WORKING\301.9\13045\DWG\13045-CN-L1.dwg – Wed – Sep 27 2017 – 4:54 PM

SB12-COMPLIANCE PACKAGE 'A1'

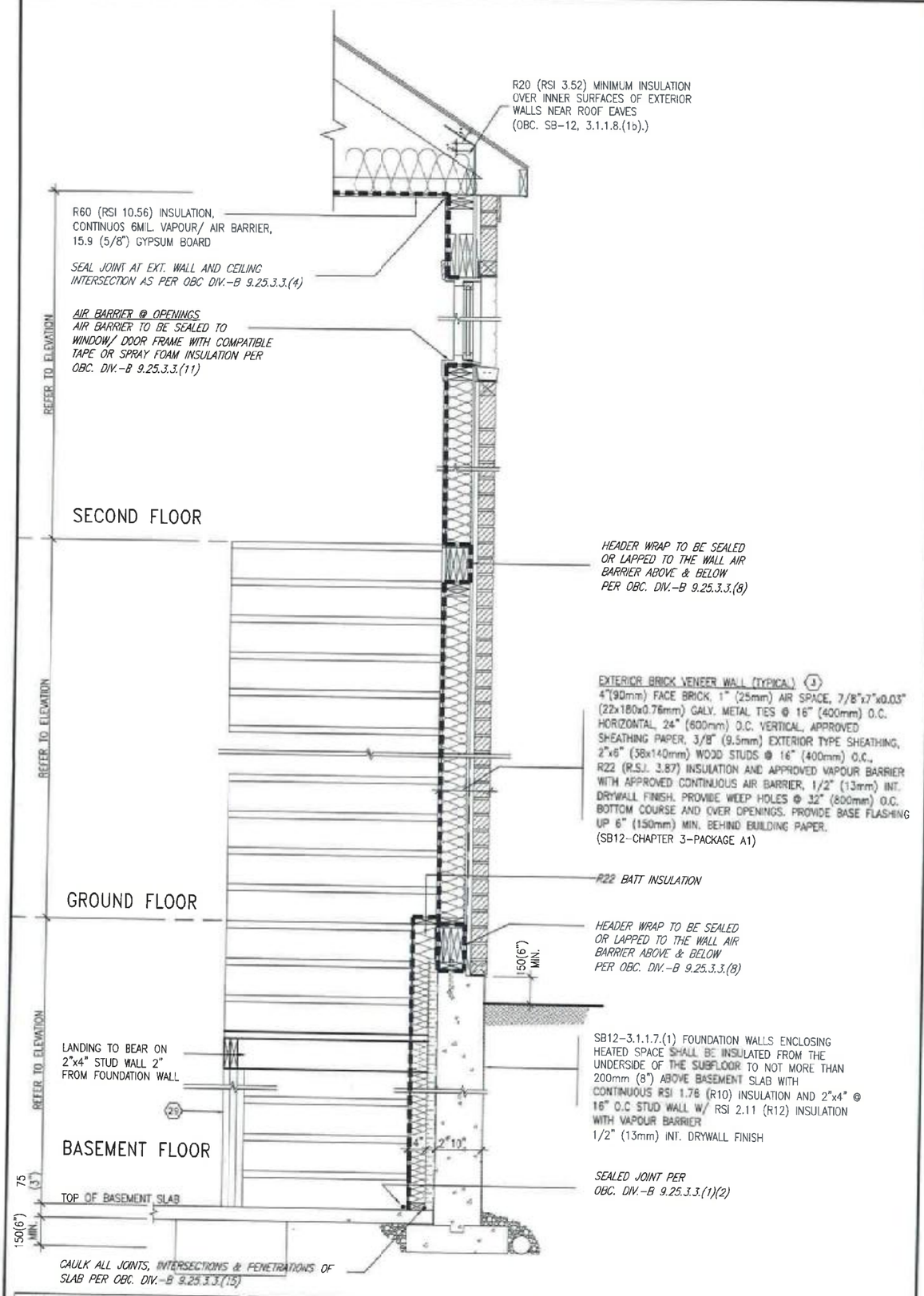

S. J. BOYD
NOV 2, 2018

EW / STR

TYPICAL EXT. WALL AIR BARRIER CONTINUITY SECTION w/ BRICK VENEER AT STAIR AND SUNKEN COND (PACKAGE A1) 10" FOUNDATION WALL

SCALE: N.T.S.

no.	description	date	by
9	.	.	.
8	.	.	.
7	.	.	.
6	.	.	.
5	.	.	.
4	.	.	.
3	.	.	.
2	UPDATED TO NEW CODE	SEP 27-17	RC
1	ISSUE FOR CLIENT REVIEW	AUG 04-17	RC

The undersigned has reviewed and takes responsibility for this design and has the qualifications and meets the requirements set out in the Ontario Building Code to be a Designer
qualification information
Wellington Ino-Baptiste 25591
name signature BCIN
registration information
VA3 Design Inc. 42654

Contractor must verify all dimensions on the job and report any discrepancy to the Designer before proceeding with the work. All drawings and specifications are instruments of service and the property of the Designer which must be returned at the completion of the work. Drawings are not to be scaled

VA3 DESIGN
255 Consumers Rd Suite 120
Toronto ON M2J 1R4
t 416.630.2255 f 416.630.4782
va3design.com

BAYVIEW WELLINGTON

project name: GREEN VALLEY ESTATES
municipality: BRADFORD

CONST NOTE

project no. 13045

date: MAY 2016
drawn by: RC
checked by: –
scale: 3/16" = 1'-0"

CONSTRUCTION NOTES

file name: 13045-CN-a1
drawing no. CN7

RICHARD – H:\ARCHIVE\BRAMND\2013\13045BW\wb1\13045-CN-A1.dwg – Wed – Sep 27 2017 – 4:54 PM

COMPLIANCE TO OBC SB-12 2.1.1.1(11)

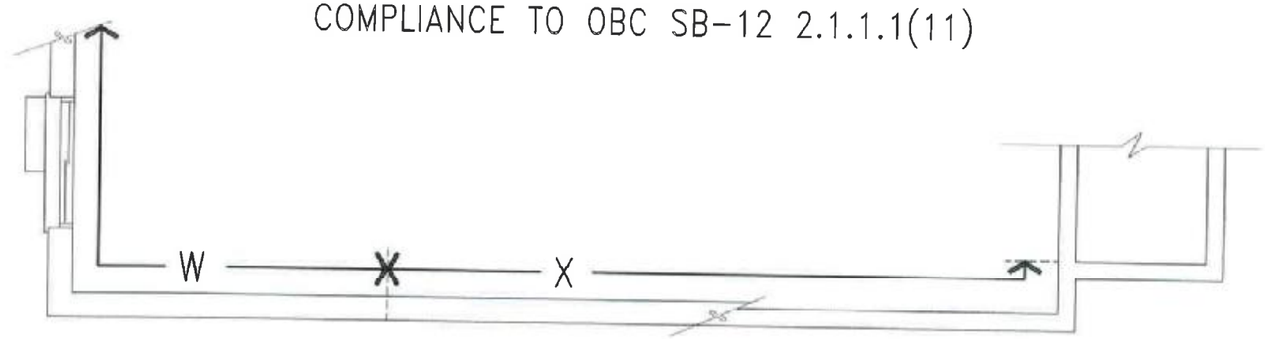

WOB PLAN

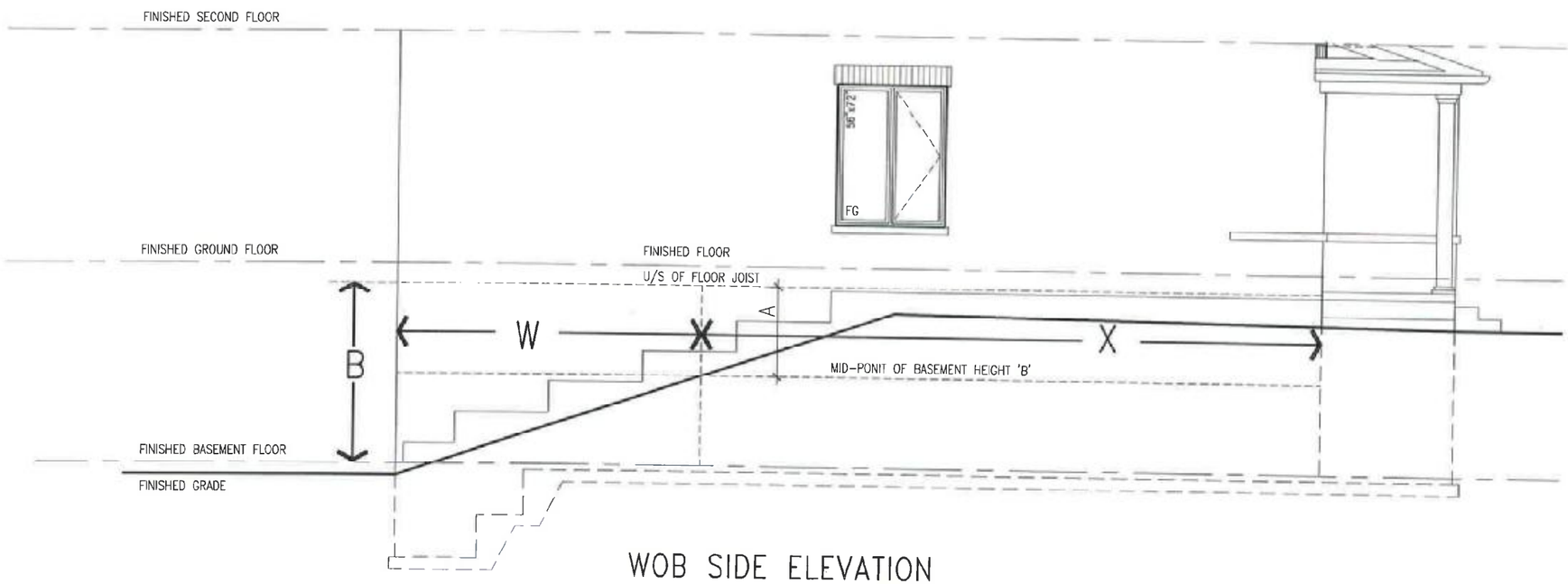

WOB SIDE ELEVATION

WHEN EXPOSED WALL "A" IS GREATER THAN 50% OF BASEMENT WALL HEIGHT "B"
INSULATION VALUE FOR WALL IN SECTION "W" IS NOT LESS THAN IS REQUIRED FOR ABOVE GRADE WALL AS REQUIRED BY TABLE 2.1.1.2A

WHEN EXPOSED WALL "A" IS LESS THAN 50% OF BASEMENT WALL HEIGHT "B"
INSULATION VALUE FOR WALL IN SECTION "X" IS NOT LESS THAN BASEMENT WALL AS REQUIRED BY TABLE 2.1.1.2A

NOV 2, 2018

CONST NOTE

BAYVIEW WELLINGTON

project name: GREEN VALLEY ESTATES
municipality: BRADFORD
CONSTRUCTION NOTES
project no. 13045
drawing no. CN8
date: MAY 2016
drawn by: RC
checked by: -
scale: 3/16" = 1'-0"
file name: 13045-CN-A1
RIC-ARTD - J:\ARCHICAD_APPROVED\13045 Wellington\13045-CN.pln - Wed - Sep 27 2017 - 4:5 PM

VAS DESIGN
255 Consumers Rd Suite 120
Toronto, ON M2J 1R4
t 416.630.2255 | f 416.630.4782
vas3design.com

no.	description	date	by
2	UPDATED TO NEW CODE	SEP 27-17	RC
1	ISSUE FOR CLIENT REVIEW	AUG 04-17	RC

SITE COPY

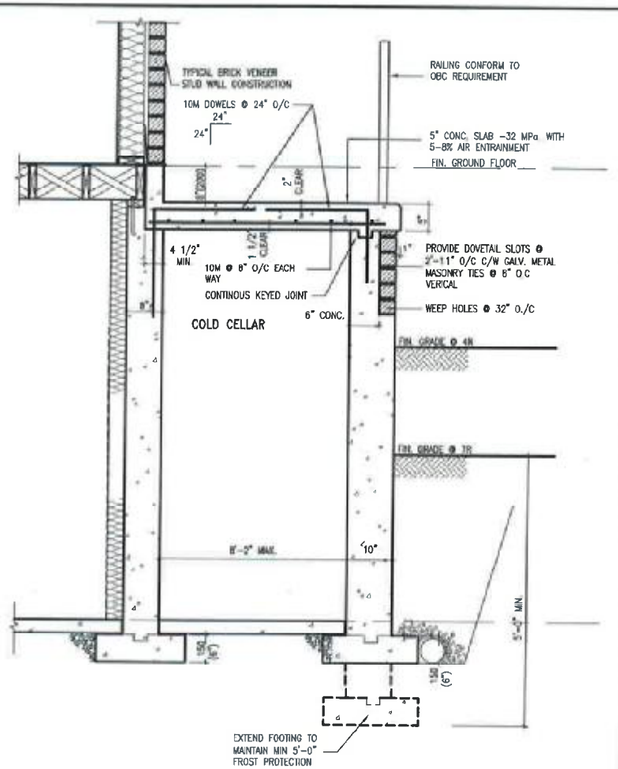

X1 SECTION AT PORCH FOR 4-7R CONDITION

SCALE: N.T.S.

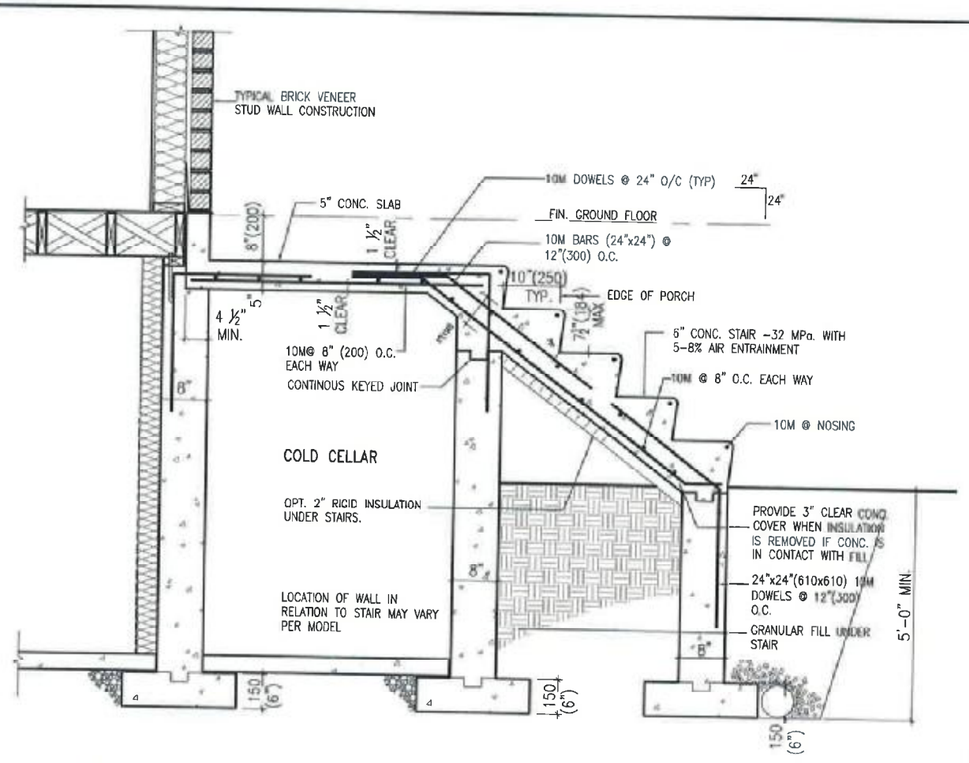

X2 EXTERIOR CONC. STAIR DETAIL (6 RISERS/ 7 RISERS SIMILAR)

SCALE: N.T.S.

NOV 2, 2018

CONST NOTE

project no. 13045

BAYVIEW WELLINGTON

municipality BRADFORD

project name GREEN VALLEY ESTATES

CONSTRUCTION NOTES

drawing no. CN9

date MAY 2016

drawn by RC

checked by

scale 3/16" = 1'-0"

file name 13045-CN-a1

RICHARD - J:\ARCHIVES\ARCHICAD\13\13045\13045-CN-a1.dwg - Rev. - Sep 27 2017 - 6:55 PM

VA3 DESIGN

255 Consumers Rd Suite 120
Toronto ON M2J 1R4
t 416.630.2255 f 416.630.4782
va3design.com

the consultant has relied on and takes responsibility for this design and has the qualifications and meets the requirements set out in the Ontario Building Code to be a Designer.

qualification information

Wellington John-Registrate 25591

name registration information

VA3 Design Inc. 42658

Contractor must verify all dimensions on the job and report any discrepancies to the Designer before proceeding with the work. All drawings are the property of the consultant and must be returned at the conclusion of the work. Drawings are not to be scaled.

no.	description	date	by
2	UPDATED TO NEW CODE	SEP 27-17	RC
1	ISSUE FOR CLIENT REVIEW	AUG 04-17	RC

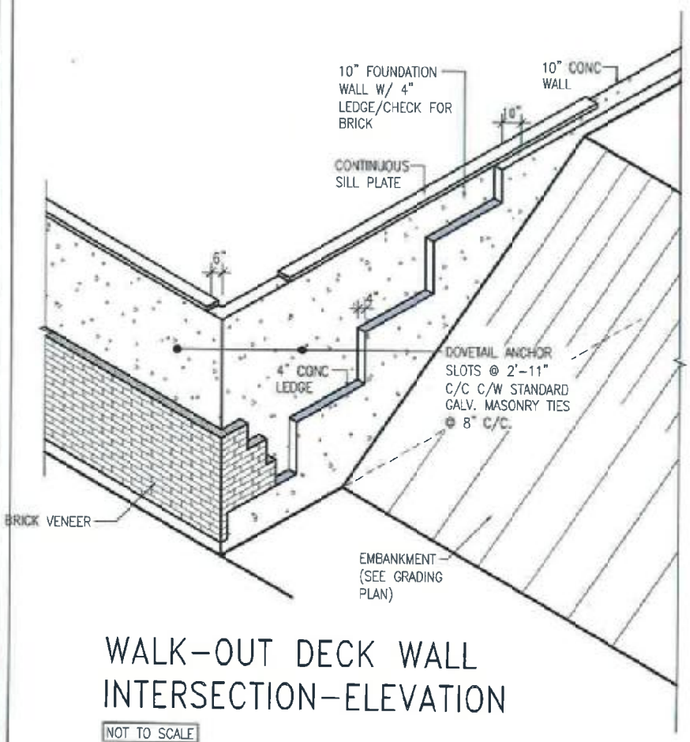

WALK-OUT DECK WALL INTERSECTION-ELEVATION

NOT TO SCALE

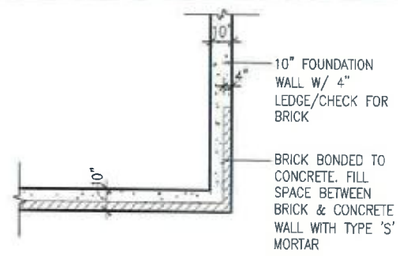

WALK-OUT DECK WALL INTERSECTION-PLAN

NOT TO SCALE

(10" FOUNDATION WALL)

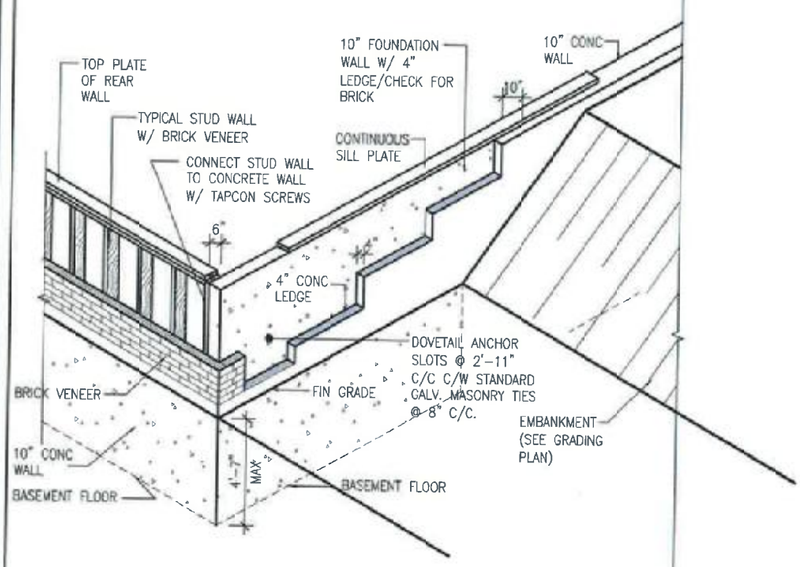

WALK-OUT DECK WALL INTERSECTION-ELEVATION MAX 4'-7" BACKFILL

NOT TO SCALE

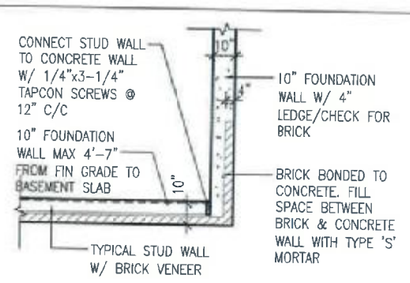

WALK-OUT BASEMENT WALL INTERSECTION-PLAN

NOT TO SCALE

(10" FOUNDATION WALL)

S. J. BOYD

NOV 2, 2018

no.	description	date	by
9			
8			
7			
6			
5			
4			
3			
2	UPDATED TO NEW CODE	SEP 27-17	RC
1	ISSUE FOR CLIENT REVIEW	AUG 04-17	RC

The undersigned has reviewed and takes responsibility for this design and has the qualifications and meets the requirements set out in the Ontario Building Code to be a Designer.

qualification information

Wellington Jno-Baptiste — signature — 25591 BCIN

registration information — VA3 Design Inc. — 42658

Contractor must verify all dimensions on the job and report any discrepancy to the Designer before proceeding with the work. All drawings and specifications are instruments of service and the property of the Designer which must be returned at the completion of the work. Drawings are not to be scaled

VA3 DESIGN

255 Consumers Rd Suite 120
Toronto ON M2J 1R4
t 416.630.2255 f 416.630.4782
va3design.com

BAYVIEW WELLINGTON

project name: GREEN VALLEY ESTATES — municipality: BRADFORD

CONST NOTE

project no. 13045

date: MAY 2016 — CONSTRUCTION NOTES

drawn by: RC — checked by: — scale: 3/16" = 1'-0" — file name: 13045-CN-A1

drawing no. CN10

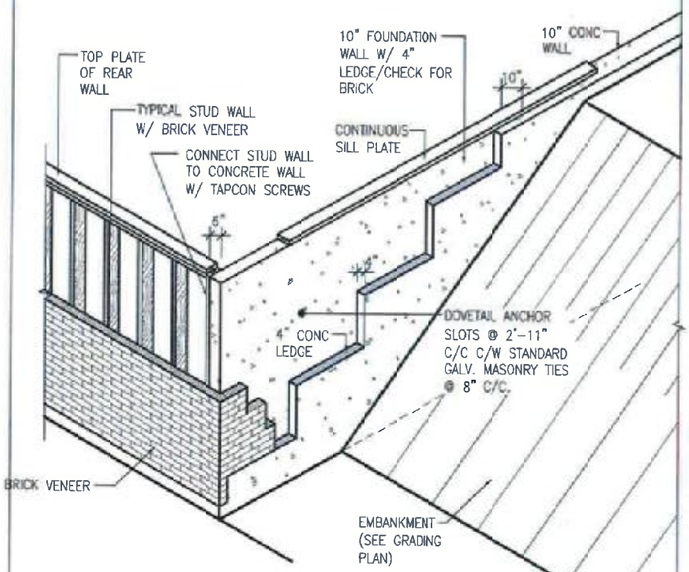

WALK-OUT BASEMENT WALL INTERSECTION-ELEVATION

NOT TO SCALE

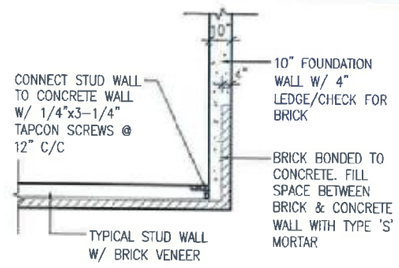

WALK-OUT BASEMENT WALL INTERSECTION-PLAN

NOT TO SCALE

(10" FOUNDATION WALL)

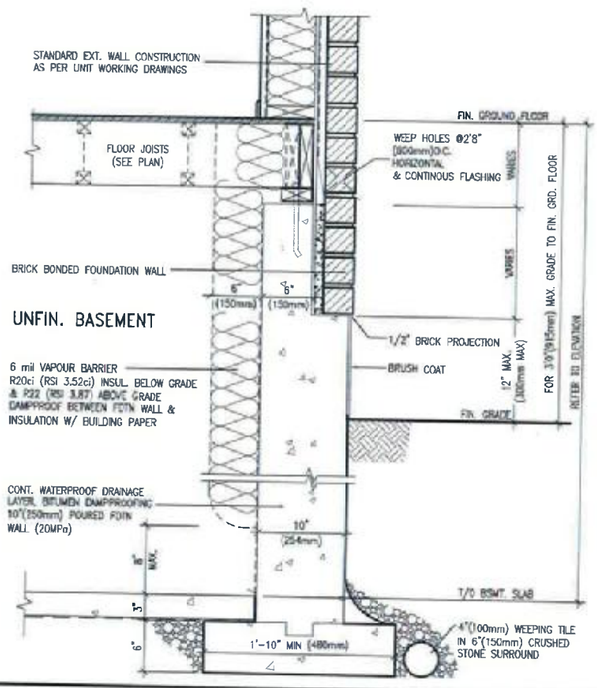

EW3.06x
PKG A1

WALL SECTION FOR GRADE TO FIN. FLOOR MORE THAN 4'7" (1400mm) HEIGHT DIFFERENCE

SCALE: N.T.S.

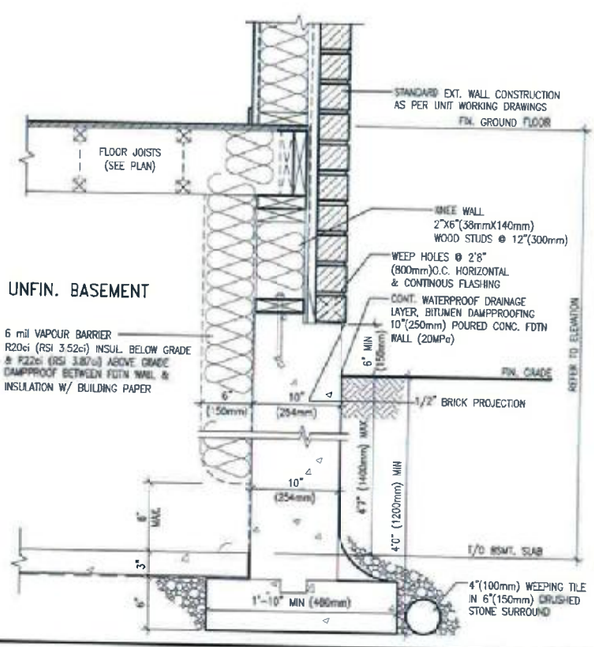

EW3.07x
PKG A1

WALL SECTION FOR GRADE TO BASEMENT SLAB 4'7"(1400mm) MAX. HEIGHT DIFFERENCE

SCALE: N.T.S.

S.J. BOYD
LICENSED PROFESSIONAL ENGINEER
PROVINCE OF ONTARIO
NOV 2, 2018

no.	description	date	by
9	.	.	.
8	.	.	.
7	.	.	.
6	.	.	.
5	.	.	.
4	.	.	.
3	.	.	.
2	UPDATED TO NEW CODE	SEP 27-17	RC
1	ISSUE FOR CLIENT REVIEW	AUG 04-17	RC

The undersigned has reviewed and takes responsibility for this design, and has the qualifications and meets the requirements set out in the Ontario Building Code to be a Designer.
qualification information
name: Wellington Jno-Baptiste — signature — 25591
registration information: VA3 Design Inc. — BCIN 42658

Contractor must verify all dimensions on the job and report any discrepancy to the Designer before proceeding with the work. All drawings and specifications are instruments of service and the property of the Designer which must be returned at the completion of the work. Drawings are not to be scaled.

VA3 DESIGN
255 Consumers Rd Suite 120
Toronto ON M2J 1R4
t 416.630.2255 f 416.630.4782
va3design.com

BAYVIEW WELLINGTON

CONST NOTE

project name: GREEN VALLEY ESTATES — municipality: BRADFORD — project no. 13045

date: MAY 2016 — drawn by: RC — checked by: – — scale: 3/16" = 1'-0"

CONSTRUCTION NOTES

file name: 13045-CN-A1

drawing no. CN11

RICHARD – H:\ARCHIVE\WORKING\2013\13045BW\units\13045-CN-A1.dwg – Wed – Sep 27 2017 – 4:51 PM

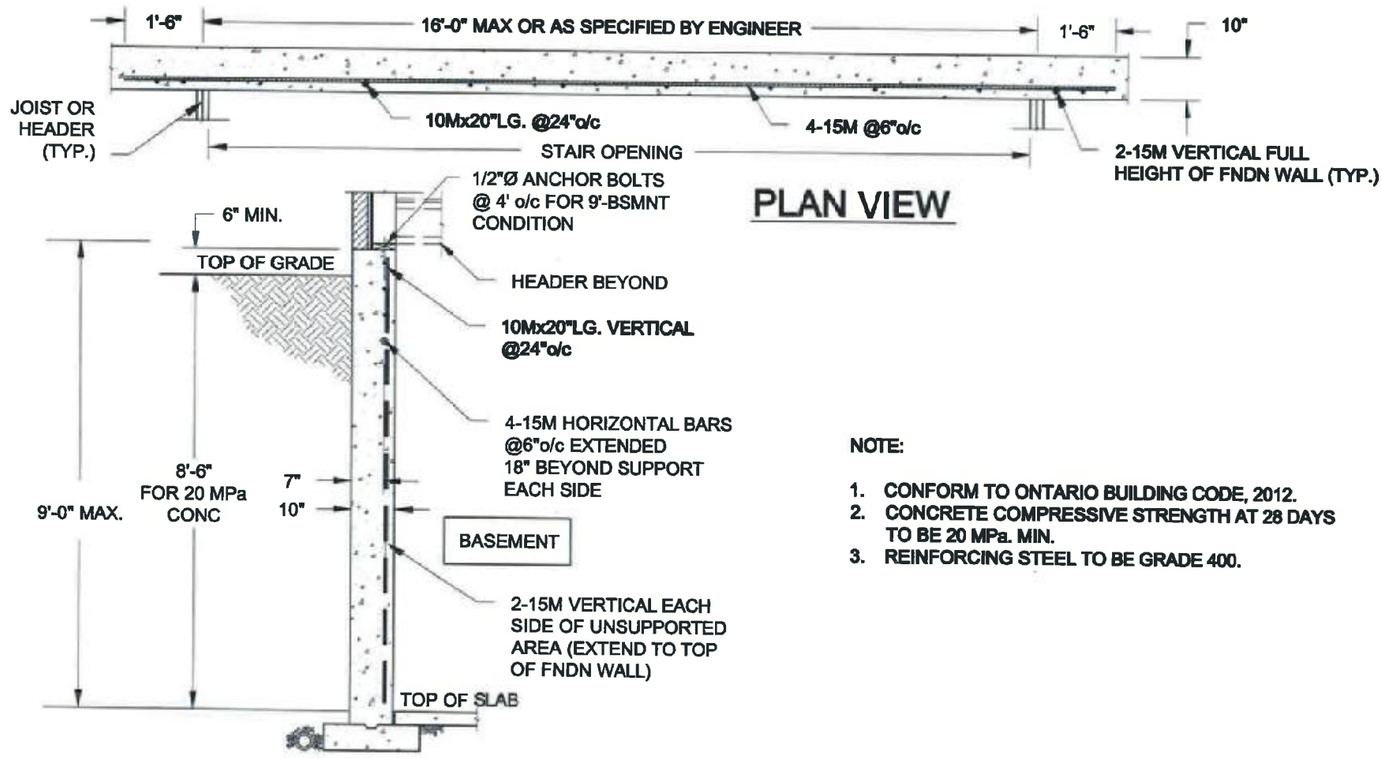

NOTE:

1. CONFORM TO ONTARIO BUILDING CODE, 2012.
2. CONCRETE COMPRESSIVE STRENGTH AT 28 DAYS TO BE 20 MPa. MIN.
3. REINFORCING STEEL TO BE GRADE 400.

1 / S1 LATERALLY UNSUPPORTED WALL

SCALE: 3/8" = 1'-0"

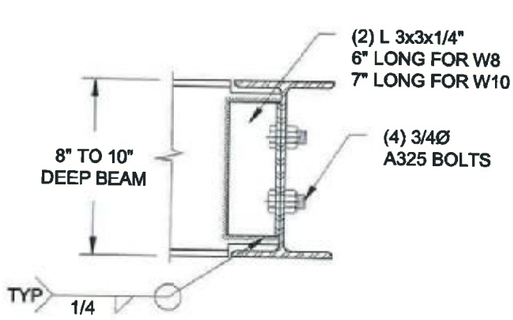

NOTE: DETAIL IS APPLICABLE TO W8x40 (W200x59) BEAM MAX AND W10x39 (W250x58) BEAM MAX.

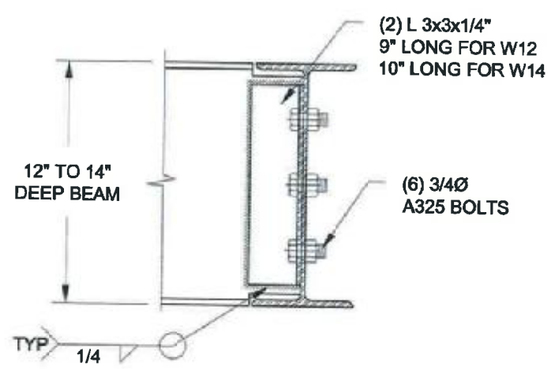

NOTE: DETAIL IS APPLICABLE TO W12x58 (W310x86) BEAM MAX AND W14x48 (W360x72) BEAM MAX.

2 / S1 STEEL BEAM CONNECTION DETAIL

SCALE: 1-1/2" = 1'-0"

Scale: AS NOTED	QUAILE ENGINEERING LTD. 38 Parkside Drive, UNIT 7 Newmarket, ON L3Y 8J9 T: 905-853-8547 E: quaile.eng@rogers.com	Engineer's Seal: S. J. BOYD JAN 16, 2018	Project: BAYVIEW WELLINGTON HOMES - GREEN VALLEY ESTATES - SINGLES BRADFORD, ONTARIO
Date: OCT-30-2017			TYPICAL STRUCTURAL DETAILS
Drawn: SC / Checked: SJB			Project No.: 17-215 / Drawing No.: S1

P:\SamC-08\2017\17-215 BAYVIEW WELLINGTON GREEN VALLEY SINGLES\17-215.dwg

FOR 9 1/2" JOIST DEPTH

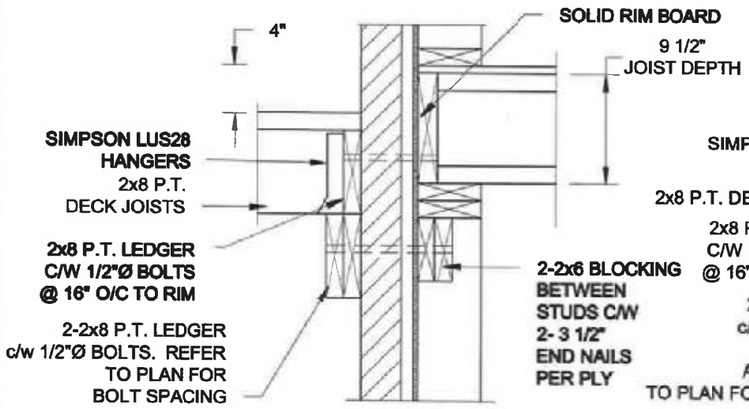

1A S2 **DECK FASTENING DETAIL**
SCALE: 1" = 1'-0"

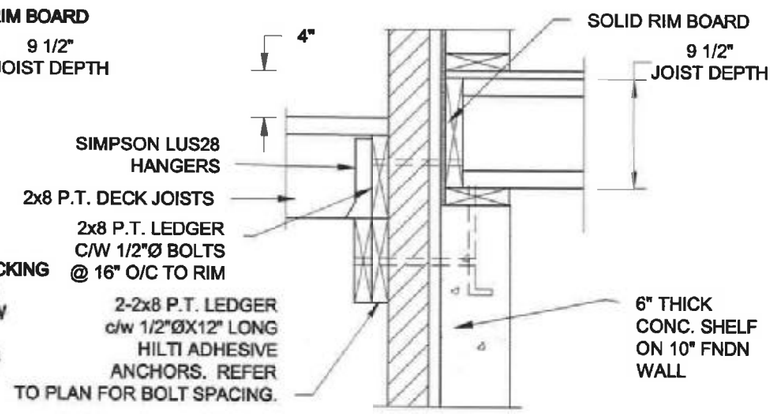

1B S2 **DECK FASTENING DETAIL**
SCALE: 1" = 1'-0"

FOR 11 7/8" JOIST DEPTH

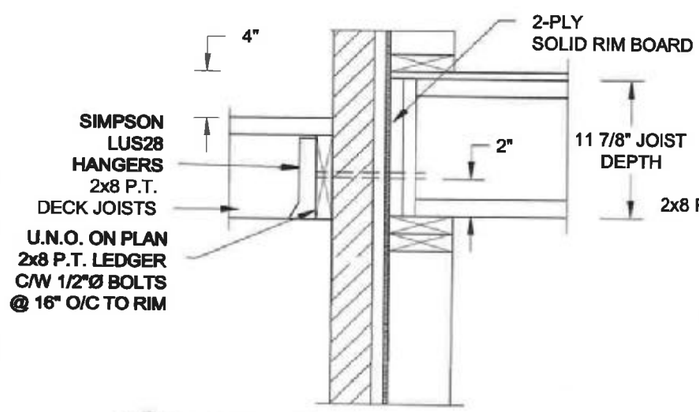

1C S2 **DECK FASTENING DETAIL**
SCALE: 1" = 1'-0"

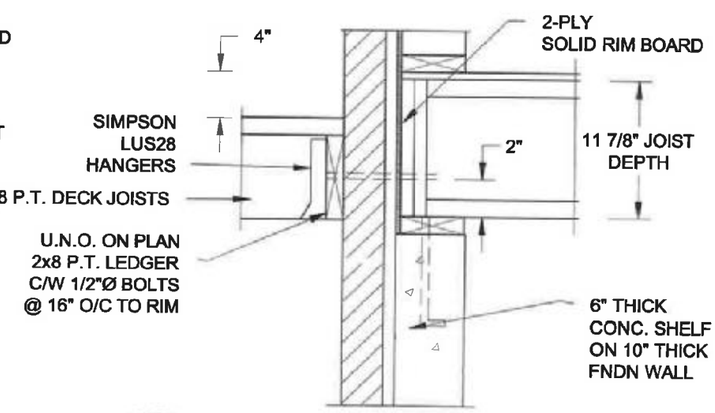

1D S2 **DECK FASTENING DETAIL**
SCALE: 1" = 1'-0"

NOTE: 1. WHERE BACKFILL HEIGHT < 4'-7", PROVIDE 2x6 @ 16" o/c KNEEWALL ON 10" THICK CONC FNDN WALL
2. WHERE BACKFILL HEIGHT > 4'-7", PROVIDE 6" CONC SHELF FOR BRICK VENEER ON 10" THICK CONC FNDN WALL
3. FOOTING TO BE 22"x6" THICK UNLESS NOTED OTHERWISE ON PLAN.

FOR 9 1/2" JOIST DEPTH

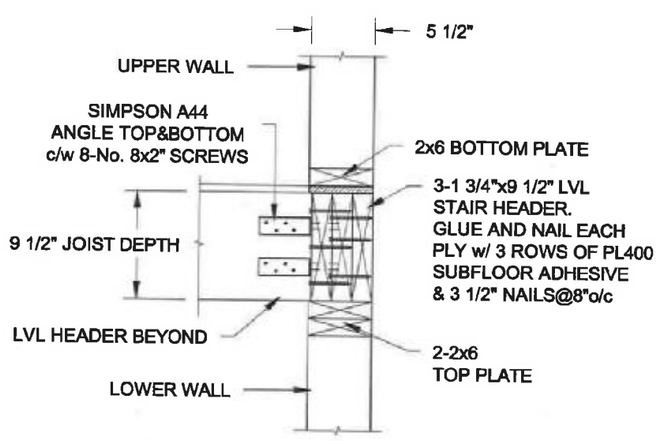

2A S2 **STAIR HEADER**
SCALE: 1" = 1'-0"

FOR 11 7/8" JOIST DEPTH

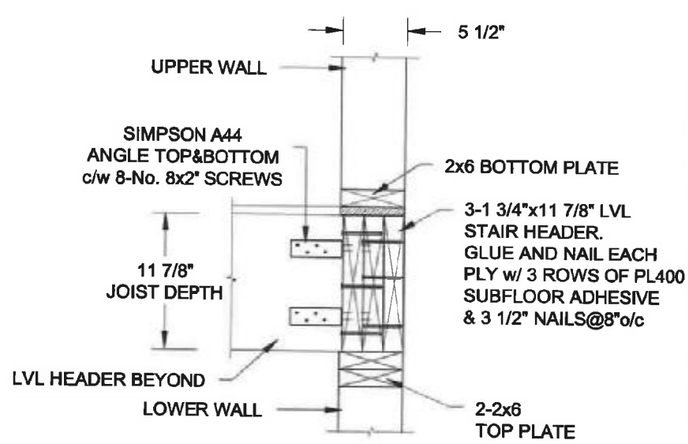

2B S2 **STAIR HEADER**
SCALE: 1" = 1'-0"

Scale: AS NOTED	QUAILE ENGINEERING LTD.	Engineer's Seal: S. J. BOYD, JAN 16, 2018	Project: BAYVIEW WELLINGTON HOMES - GREEN VALLEY ESTATES - SINGLES, BRADFORD, ONTARIO
Date: OCT-20-2017	38 Parkside Drive, UNIT 7, Newmarket, ON, L3Y 8J9, T: 905-853-8547, E: quaile.eng@rogers.com		TYPICAL STRUCTURAL DETAILS
Drawn: SC / Checked: SJB			Project No.: 17-215 / Drawing No.: S2

P:\SamC-08\2017\17-215 BAYVIEW WELLINGTON GREEN VALLEY SINGLES\17-215.dwg