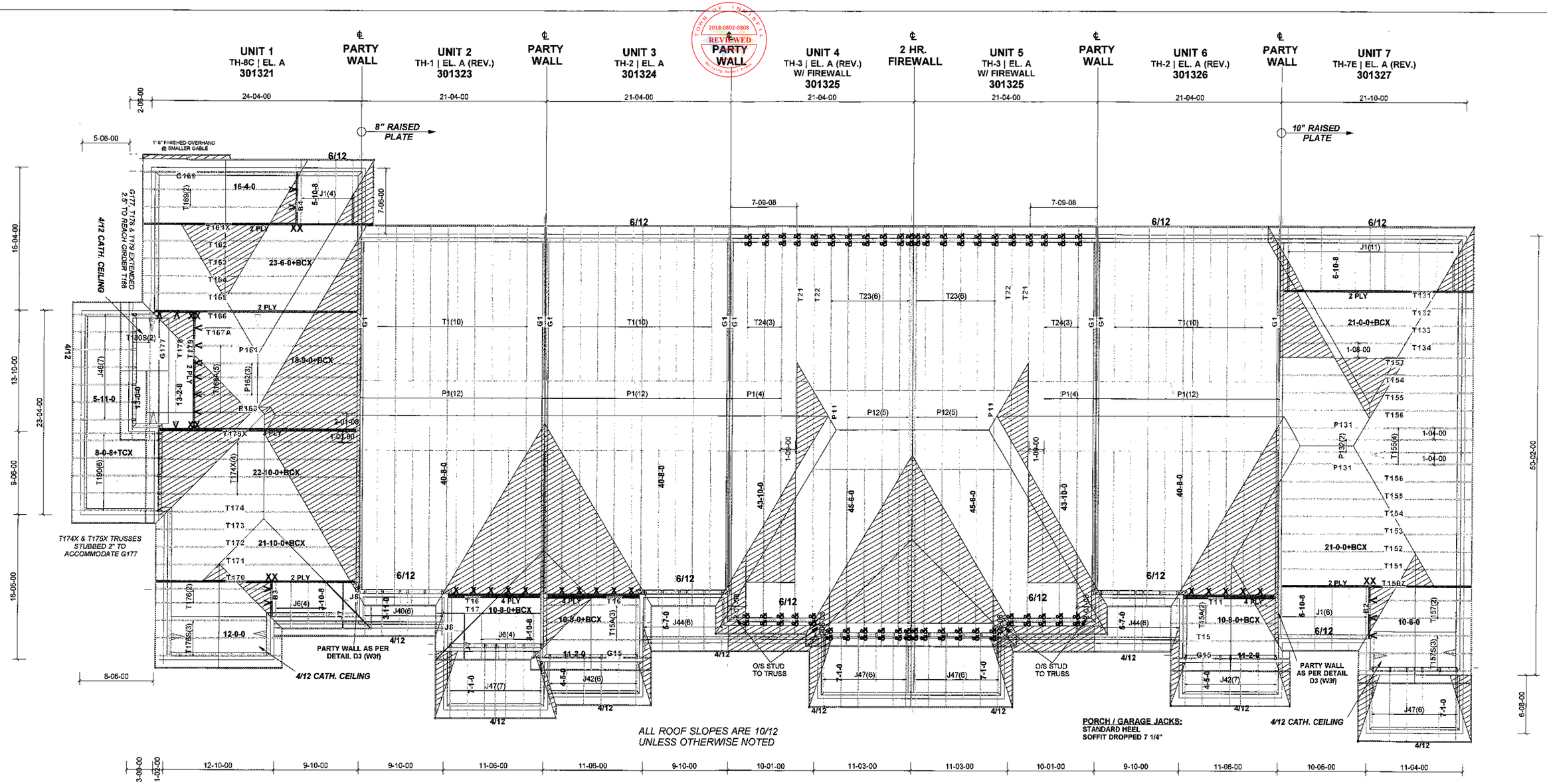

ASPHALT SHINGLES
12" FINISHED O.H.
5" CLADDING ALLOWANCE (BRICK)
2" CLADDING ALLOWANCE (STUCCO)
2x6 EXTERIOR WALLS
2x6 FASCIA BOARD
HEEL: R.T.M.C.

T - 180523

ALL CONV. FRAMING TO CONFORM WITH PART 9 OF O.B.C. 2012 ROOF RAFTERS THAT CROSS OVER OR MEET TRUSSES TO BE 2X4 SPF #2 24" O.C. WITH A VERT.POST TO THE TRUSS UNDERNEATH AT EACH CROSS PT. VERT. POST LONGER THAN 6' TO HAVE LATERAL BRACING SO THAT THE DIST. BETWEEN END PT. & BETWEEN ROWS OF BRACING DOES NOT EXCEED 6'

DESIGN CONFORMS WITH OBC 2012 / 2018
OCCUPANCY: RESIDENTIAL | PART: 9
GROUND SNOW LOAD Ss=54.3psf Sr=8.4psf
DESIGN LOADS
TCDL (6psf)
BCLL (10.5psf)
BCDL (7psf)

DENOTES:
CONVENTIONAL FRAMING

HARDWARE:
LJS26DS - (V)
HGUS26 - (X)
HGUS26-2 - (XX)
TS22 x2 - (##)
TBE6 x2 - (&&)

BEAMS:
B2, B3, B4: 2 - 2x10 SPF #2

M11,897

TAMARACK LUMBER INC.
ALPA LUMBER GROUP

Job Track: 42067	Builder / Location: BAYVIEW WELLINGTON / INNISFIL	Model / Elevation: BLOCK 140 / UNITS 1-7	Mitek ver 7.5.0
Layout ID: 297079	Project: ALCONA SHORES		
Plan Log: 97625	Date: 08/23/18 Designer: colinh		

THESE DRAWINGS CONSTITUTE THE PROPERTY OF TAMARACK ROOF TRUSSES INC., SHALL NOT BE REPRODUCED, PUBLISHED, OR REDISTRIBUTED IN ANY MANNER OR UTILIZED FOR ANY PURPOSE OTHER THAN THE MANUFACTURE OF TRUSSES BY TAMARACK ROOF TRUSSES INC AND WILL BE RETRACTED BY TAMARACK ROOF TRUSSES INC IF UTLILZED FOR ANY OTHER PURPOSE.

TAMARACK LUMBER INC
ALPA LUMBER GROUP

Delivery Shiplist

DATE	08/23/18
SALES REP	Mario

TOWN OF INNISFIL 2018-0802-0808 REVIEWED 3/19/2021 Building Permit Plans

JOB TRACK: 42067 **LAYOUT ID:** 301321 **LOCATION:** INNISFIL
BUILDER: BAYVIEW WELLINGTON/ALCONA SHO **SUB-BUILDER:**
MODEL: TH-8C **ELEVATION:** A

ROOF TRUSSES

ROOF TRUSS SPACING: 24.0 IN. O.C. (TYP.)

PROFILE	QTY / PLY	MARK / TYPE	PITCH TC / BC	SPAN	TRUSS HEIGHT	LUMBER TOP	LUMBER BOT	OVERHANG LEFT / RIGHT	HEEL HEIGHT LEFT / RIGHT	LBS. / BFT.	BUNDLE # / STACK #	LOAD BY: / REMARKS
	1 / 2 Ply	T161X HIP GIRDER	10.00 / 0.00	24-00-00	04-01-04	2 X 4	2 X 6	01-03-08 / 01-03-08	01-07-11 / 01-07-11	237.28 / 151.34		
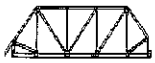	1	T162 HIP	10.00 / 0.00	23-06-00	05-01-04	2 X 4	2 X 6	01-03-08 / 00-00-00	01-07-11 / 00-05-08	114.57 / 71.17		
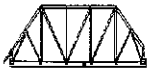	1	T163 HIP	10.00 / 0.00	23-06-00	06-01-04	2 X 4	2 X 6	01-03-08 / 00-00-00	01-07-11 / 00-05-08	125.55 / 80.83		
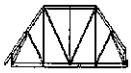	1	T164 HIP	10.00 / 0.00	23-06-00	07-01-04	2 X 4	2 X 6	01-03-08 / 00-00-00	01-07-11 / 00-05-08	126.63 / 79.17		
	1	T165 HIP	10.00 / 0.00	23-06-00	08-01-04	2 X 4	2 X 6	01-03-08 / 00-00-00	01-07-11 / 00-05-08	129.75 / 81.67		
	1 / 2 Ply	T166 HIP GIRDER	10.00 / 0.00	23-06-00	09-01-04	2 X 4	2 X 6	01-03-08 / 00-00-00	01-07-11 / 00-05-08	275.36 / 172.34		
	1	T167A HIP	10.00 / 0.00	18-09-00	10-01-04	2 X 4	2 X 6	00-00-00 / 00-00-00	05-07-03 / 00-05-08	122.13 / 76.83		
	5	T168A PIGGYBACK	10.00 / 0.00	18-09-00	09-01-04	2 X 4	2 X 6	00-00-00 / 00-00-00	05-07-03 / 00-05-08	570.60 / 363.35		
	2	T169 COMMON	10.00 / 0.00	16-04-00	08-05-06	2 X 4	2 X 4	01-03-08 / 01-03-08	01-07-11 / 01-07-11	168.64 / 106.66		
	1	G169 COMMON	10.00 / 0.00	16-04-00	08-05-06	2 X 4	2 X 4	01-03-08 / 01-03-08	01-07-11 / 01-07-11	81.98 / 53.33		
	1 / 2 Ply	T170 HIP GIRDER	10.00 / 0.00	21-10-00	04-10-07	2 X 4	2 X 6	01-03-08 / 00-00-00	01-07-11 / 00-05-08	218.58 / 139.34		
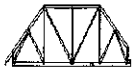	1	T171 HIP	10.00 / 0.00	21-10-00	06-06-07	2 X 4	2 X 6	01-03-08 / 00-00-00	01-07-11 / 00-05-08	114.67 / 73.17		
	1	T172 HIP	10.00 / 0.00	21-10-00	08-02-07	2 X 4	2 X 6	01-03-08 / 00-00-00	01-07-11 / 00-05-08	118.93 / 76.33		
	1	T173 HIP	10.00 / 0.00	21-10-00	09-10-07	2 X 4	2 X 6	01-03-08 / 00-00-00	01-07-11 / 00-05-08	129.69 / 81.67		
	1	T174 COMMON	10.00 / 0.00	21-10-00	10-11-06	2 X 4	2 X 6	01-03-08 / 00-00-00	01-07-11 / 00-05-08	124.27 / 77.33		
	4	T174X COMMON	10.00 / 0.00	22-10-00	10-11-06	2 X 4	2 X 6	00-00-00 / 00-00-00	00-09-11 / 00-05-08	534.12 / 324.00		
	1 / 3 Ply	T175X COMMON	10.00 / 0.00	22-10-00	10-11-06	2 X 6	2 X 6	00-00-00 / 00-00-00	00-09-11 / 00-05-08	436.32 / 270.00		
	2	T176 COMMON	10.00 / 0.00	12-00-00	06-07-11	2 X 4	2 X 4	01-03-08 / 01-03-08	01-07-11 / 01-07-11	116.22 / 74.00		

TAMARACK LUMBER INC
ALPA LUMBER GROUP

Delivery Shiplist

DATE	08/23/18
SALES REP	Mario

TOWN OF INNISFIL 2018-0802-0808 REVIEWED Approved 3/19/2021 Building Permit Plans

JOB TRACK: 42067 LAYOUT ID: 301321 LOCATION: INNISFIL
BUILDER: BAYVIEW WELLINGTON/ALCONA SHO SUB-BUILDER:
MODEL: TH-8C ELEVATION: A

ROOF TRUSSES

ROOF TRUSS SPACING: 24.0 IN. O.C. (TYP.)

PROFILE	QTY / PLY	MARK / TYPE	PITCH TC / BC	SPAN	TRUSS HEIGHT	LUMBER TOP	LUMBER BOT	OVERHANG LEFT / RIGHT	HEEL HEIGHT LEFT / RIGHT	LBS. / BFT.	BUNDLE # / STACK #	LOAD BY: / REMARKS
	3	T176S SCISSOR	10.00 / 4.00	12-00-00	06-07-11	2 X 4	2 X 4	01-03-08 / 01-03-08	01-07-11 / 01-07-11	176.22 / 113.01		
	1	G177 ROOF	10.00 / 4.00	22-08-08	11-00-03	2 X 4	2 X 4	00-00-00 / 01-03-08	01-05-10 / 01-07-11	155.66 / 100.83		
	1	T178 COMMON	10.00 / 0.00	13-02-08	11-00-03	2 X 4	2 X 4	00-00-00 / 00-00-00	01-05-10 / 09-06-11	81.82 / 52.33		
	1 / 2 Ply	T179 COMMON	10.00 / 0.00	13-02-08	11-00-03	2 X 6	2 X 6	00-00-00 / 00-00-00	01-05-10 / 09-06-11	233.26 / 141.00		
	2	T180S SCISSOR	10.00 / 4.00	13-00-00	07-00-11	2 X 4	2 X 4	01-03-08 / 01-03-08	01-07-11 / 01-07-11	125.24 / 80.66		
	6	T190 MONOPITCH	4.00 / 0.00	08-11-00	03-03-10	2 X 4	2 X 4	01-03-08 / 00-00-00	00-03-15 / 03-00-02	184.02 / 121.02		
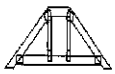	1	P161 PIGGYBACK	10.00 / 0.00	04-09-15	01-10-08	2 X 4	2 X 4	00-00-00 / 00-00-00	00-04-13 / 00-04-13	16.20 / 12.00		
	3	P162 PIGGYBACK	10.00 / 0.00	04-09-15	02-04-15	2 X 4	2 X 4	00-00-00 / 00-00-00	00-04-13 / 00-04-13	47.88 / 29.01		
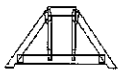	1	P163 PIGGYBACK	10.00 / 0.00	04-09-15	01-09-07	2 X 4	2 X 4	00-00-00 / 00-00-00	00-04-13 / 00-04-13	15.98 / 10.67		
	4	J1 JACK-OPEN	6.00 / 0.00	05-10-08	04-01-04	2 X 4	2 X 4	01-03-08 / 00-00-00	01-02-00 / 04-01-04	67.16 / 42.68		
	4	J6 JACK-OPEN	10.00 / 0.00	03-10-08	04-10-07	2 X 4	2 X 4	01-03-08 / 00-00-00	01-07-11 / 04-10-07	60.92 / 38.68		
	1	J7 JACK-OPEN	10.00 / 0.00	01-09-07	03-01-09	2 X 4	2 X 4	01-03-08 / 02-01-01	01-07-11 / 00-03-08	10.65 / 7.33		
	1	J8 JACK-OPEN	10.00 / 0.00	01-09-07	03-01-09	2 X 4	2 X 4	01-03-08 / 00-01-01	01-07-11 / 00-03-08	8.37 / 6.00		
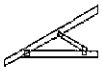	7	J46 JACK-OPEN	4.00 / 0.00	05-11-00	02-03-10	2 X 4	2 X 4	01-03-08 / 00-00-00	00-03-15 / 02-03-02	122.01 / 75.81		

TOTAL # TRUSS= **69.00** TOTAL BFT OF ALL TRUSSES= **3183.56** BFT. TOTAL WEIGHT OF ALL TRUSSES= **5050.68** LBS.

HARDWARE

QTY	ITEM TYPE	MODEL	LENGTH FT-IN-16
13	Hangers	LJS26DS	
4	Hangers	HGUS26-2	

TOTAL # ITEMS= **17.00**

TAMARACK LUMBER INC
ALPA LUMBER GROUP

Delivery Shiplist

DATE	08/23/18
SALES REP	Mario

TOWN OF INNISFIL 2018-0804-0808 REVIEWED Building Permit Plans 3/19/2021

JOB TRACK: 42067 **LAYOUT ID:** 301323 **LOCATION:** INNISFIL
BUILDER: BAYVIEW WELLINGTON/ALCONA SHO **SUB-BUILDER:**
MODEL: TH-1 **ELEVATION:** A

ROOF TRUSSES

ROOF TRUSS SPACING: 24.0 IN. O.C. (TYP.)

PROFILE	QTY / PLY	MARK / TYPE	PITCH TC / BC	SPAN	TRUSS HEIGHT	LUMBER TOP	LUMBER BOT	OVERHANG LEFT / RIGHT	HEEL HEIGHT LEFT / RIGHT	LBS. / BFT.	BUNDLE # / STACK #	LOAD BY: / REMARKS
	10	T1 PIGGYBACK	6.00 / 0.00	40-08-00	09-04-03	2 X 4	2 X 6	01-03-08 / 01-03-08	01-02-00 / 01-02-00	2086.80 / 1263.30		
	2	G1 PIGGYBACK	6.00 / 0.00	40-08-00	09-04-03	2 X 4	2 X 6	01-03-08 / 01-03-08	01-02-00 / 01-02-00	435.38 / 267.00		
	1 / 4 Ply	T16 HALF HIP	10.00 / 0.00	10-08-00	06-04-06	2 X 6	2 X 8	00-00-00 / 00-00-00	01-07-11 / 00-07-04	334.32 / 208.68		
	1	T17 HALF HIP	10.00 / 0.00	10-08-00	04-10-07	2 X 4	2 X 6	01-03-08 / 00-00-00	01-07-11 / 00-05-08	59.89 / 39.67		
	12	P1 PIGGYBACK	6.00 / 0.00	06-00-10	01-10-05	2 X 4	2 X 4	00-00-00 / 00-00-00	00-04-03 / 00-04-03	204.24 / 135.96		
	4	J6 JACK-OPEN	10.00 / 0.00	03-10-08	04-10-07	2 X 4	2 X 4	01-03-08 / 00-00-00	01-07-11 / 04-10-07	60.92 / 38.68		
	1	J7 JACK-OPEN	10.00 / 0.00	01-09-07	03-01-09	2 X 4	2 X 4	01-03-08 / 02-01-01	01-07-11 / 00-03-08	10.65 / 7.33		
	1	J8 JACK-OPEN	10.00 / 0.00	01-09-07	03-01-09	2 X 4	2 X 4	01-03-08 / 00-01-01	01-07-11 / 00-03-08	8.37 / 6.00		
	6	J40 JACK-OPEN	4.00 / 0.00	03-11-00	01-07-10	2 X 4	2 X 4	01-03-08 / 00-00-00	00-03-15 / 01-07-02	65.04 / 40.02		
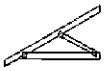	7	J47 JACK-OPEN	4.00 / 0.00	07-01-00	02-08-04	2 X 4	2 X 4	01-03-08 / 00-00-00	00-03-15 / 02-07-12	148.33 / 93.31		

TOTAL # TRUSS= **48.00** TOTAL BFT OF ALL TRUSSES= **2099.95** BFT. TOTAL WEIGHT OF ALL TRUSSES= **3413.94** LBS.

HARDWARE

QTY	ITEM TYPE	MODEL	LENGTH FT-IN-16
5	Hangers	HGUS26	

TOTAL # ITEMS= **5.00**

TAMARACK LUMBER INC
ALPA LUMBER GROUP

Delivery Shiplist

DATE	08/23/18
SALES REP	Mario

TOWN OF INNISFIL 2018-0808-0808 REVIEWED Approved 3/19/2021 Building Permit Plans

JOB TRACK: 42067 **LAYOUT ID:** 301324 **LOCATION:** INNISFIL
BUILDER: BAYVIEW WELLINGTON/ALCONA SHO **SUB-BUILDER:**
MODEL: TH-2 **ELEVATION:** A

ROOF TRUSSES

ROOF TRUSS SPACING: 24.0 IN. O.C. (TYP.)

PROFILE	QTY / PLY	MARK / TYPE	PITCH TC / BC	SPAN	TRUSS HEIGHT	LUMBER TOP	LUMBER BOT	OVERHANG LEFT / RIGHT	HEEL HEIGHT LEFT / RIGHT	LBS. / BFT.	BUNDLE # / STACK #	LOAD BY: / REMARKS
	10	T1 PIGGYBACK	6.00 / 0.00	40-08-00	09-04-03	2 X 4	2 X 6	01-03-08 / 01-03-08	01-02-00 / 01-02-00	2086.80 / 1263.30		
	2	G1 PIGGYBACK	6.00 / 0.00	40-08-00	09-04-03	2 X 4	2 X 6	01-03-08 / 01-03-08	01-02-00 / 01-02-00	435.38 / 267.00		
	1	G15 COMMON	10.00 / 0.00	11-02-00	06-03-08	2 X 4	2 X 4	01-03-08 / 01-03-08	01-07-11 / 01-07-11	54.26 / 37.00		
	3	T15A COMMON	10.00 / 0.00	10-08-00	06-03-08	2 X 4	2 X 4	01-03-08 / 00-00-00	01-07-11 / 00-03-08	157.92 / 105.51		
	1 / 4 Ply	T16 HALF HIP	10.00 / 0.00	10-08-00	06-04-06	2 X 6	2 X 8	00-00-00 / 00-00-00	01-07-11 / 00-07-04	334.32 / 208.68		
	12	P1 PIGGYBACK	6.00 / 0.00	06-00-10	01-10-05	2 X 4	2 X 4	00-00-00 / 00-00-00	00-04-03 / 00-04-03	204.24 / 135.96		
	6	J42 JACK-OPEN	4.00 / 0.00	04-05-00	01-09-10	2 X 4	2 X 4	01-03-08 / 00-00-00	00-03-15 / 01-09-02	72.06 / 48.00		
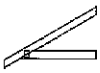	6	J44 JACK-OPEN	4.00 / 0.00	05-07-00	02-02-04	2 X 4	2 X 4	01-03-08 / 00-00-00	00-03-15 / 02-01-12	88.44 / 55.98		

TOTAL # TRUSS= **44.00** TOTAL BFT OF ALL TRUSSES= **2121.43** BFT. TOTAL WEIGHT OF ALL TRUSSES= **3433.42** LBS.

HARDWARE

QTY	ITEM TYPE	MODEL	LENGTH FT-IN-16
5	Hangers	HGUS26	

TOTAL # ITEMS= **5.00**

TAMARACK LUMBER INC
ALPA LUMBER GROUP

Delivery Shiplist

DATE	08/23/18
SALES REP	Mario

TOWN OF INNISFIL 2018-0808-0808 REVIEWED Approved 3/19/2021 Building Permit Plans

JOB TRACK: 42067 **LAYOUT ID:** 301325 **LOCATION:** INNISFIL
BUILDER: BAYVIEW WELLINGTON/ALCONA SHO **SUB-BUILDER:**
MODEL: TH-3 **ELEVATION:** A W/ FIREWALL

ROOF TRUSSES

ROOF TRUSS SPACING: 24.0 IN. O.C. (TYP.)

PROFILE	QTY / PLY	MARK / TYPE	PITCH TC / BC	SPAN	TRUSS HEIGHT	LUMBER TOP	LUMBER BOT	OVERHANG LEFT / RIGHT	HEEL HEIGHT LEFT / RIGHT	LBS. / BFT.	BUNDLE # / STACK #	LOAD BY: / REMARKS
	1	G1 PIGGYBACK	6.00 / 0.00	40-08-00	09-04-03	2 X 4	2 X 6	01-03-08 / 01-03-08	01-02-00 / 01-02-00	217.69 / 133.50		
	1	T21 HIP	6.00 / 0.00	43-10-00	08-02-07	2 X 6	2 X 6	01-03-08 / 01-03-08	01-02-00 / 01-02-00	257.69 / 152.50		
	1	T22 HIP	6.00 / 0.00	43-10-00	09-10-07	2 X 6	2 X 6	01-03-08 / 01-03-08	01-02-00 / 01-02-00	280.49 / 164.83		
	6	T23 PIGGYBACK	6.00 / 0.00	45-06-00	09-10-07	2 X 6	2 X 6	01-03-08 / 01-00-08	01-02-00 / 01-05-03	1758.84 / 1057.02		
	3	T24 PIGGYBACK	6.00 / 0.00	43-10-00	09-04-03	2 X 6	2 X 6	01-03-08 / 01-03-08	01-02-00 / 01-02-00	822.27 / 491.49		
	4	P1 PIGGYBACK	6.00 / 0.00	06-00-10	01-10-05	2 X 4	2 X 4	00-00-00 / 00-00-00	00-04-03 / 00-04-03	68.08 / 45.32		
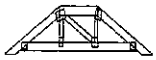	1	P11 PIGGYBACK	6.00 / 0.00	07-01-10	01-06-08	2 X 4	2 X 4	00-00-00 / 00-00-00	00-04-03 / 00-04-03	22.64 / 15.17		
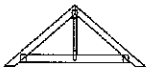	5	P12 PIGGYBACK	6.00 / 0.00	07-01-10	02-01-09	2 X 4	2 X 4	00-00-00 / 00-00-00	00-04-03 / 00-04-03	104.30 / 71.65		
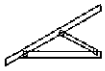	6	J47 JACK-OPEN	4.00 / 0.00	07-01-00	02-08-04	2 X 4	2 X 4	01-03-08 / 00-00-00	00-03-15 / 02-07-12	127.14 / 79.98		

TOTAL # TRUSS= **28.00** TOTAL BFT OF ALL TRUSSES= **2211.46** BFT. TOTAL WEIGHT OF ALL TRUSSES= **3659.14** LBS.

HARDWARE

QTY	ITEM TYPE	MODEL	LENGTH FT-IN-16
44	Hangers	TBE6	

TOTAL # ITEMS= **44.00**

TAMARACK LUMBER INC
ALPA LUMBER GROUP

Delivery Shiplist

DATE	08/23/18
SALES REP	Mario

TOWN OF INNISFIL 2018-0802-0808 REVIEWED Building Permit Plans 3/19/2021

JOB TRACK: 42067 **LAYOUT ID:** 301326 **LOCATION:** INNISFIL
BUILDER: BAYVIEW WELLINGTON/ALCONA SHO **SUB-BUILDER:**
MODEL: TH-2 **ELEVATION:** A

ROOF TRUSSES

ROOF TRUSS SPACING: 24.0 IN. O.C. (TYP.)

PROFILE	QTY / PLY	MARK / TYPE	PITCH TC / BC	SPAN	TRUSS HEIGHT	LUMBER TOP	LUMBER BOT	OVERHANG LEFT / RIGHT	HEEL HEIGHT LEFT / RIGHT	LBS. / BFT.	BUNDLE # / STACK #	LOAD BY: / REMARKS
	10	T1 PIGGYBACK	6.00 / 0.00	40-08-00	09-04-03	2 X 4	2 X 6	01-03-08 / 01-03-08	01-02-00 / 01-02-00	2086.80 / 1263.30		
	2	G1 PIGGYBACK	6.00 / 0.00	40-08-00	09-04-03	2 X 4	2 X 6	01-03-08 / 01-03-08	01-02-00 / 01-02-00	435.38 / 267.00		
	1 / 4 Ply	T11 COMMON	10.00 / 0.00	10-08-00	06-03-08	2 X 6	2 X 8	00-00-00 / 00-00-00	01-07-11 / 00-07-04	332.08 / 208.00		
	1	T15 COMMON	10.00 / 0.00	11-02-00	06-03-08	2 X 4	2 X 4	01-03-08 / 01-03-08	01-07-11 / 01-07-11	54.77 / 37.00		
	1	G15 COMMON	10.00 / 0.00	11-02-00	06-03-08	2 X 4	2 X 4	01-03-08 / 01-03-08	01-07-11 / 01-07-11	54.26 / 37.00		
	2	T15A COMMON	10.00 / 0.00	10-08-00	06-03-08	2 X 4	2 X 4	01-03-08 / 00-00-00	01-07-11 / 00-03-08	105.28 / 70.34		
	12	P1 PIGGYBACK	6.00 / 0.00	06-00-10	01-10-05	2 X 4	2 X 4	00-00-00 / 00-00-00	00-04-03 / 00-04-03	204.24 / 135.96		
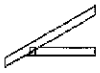	7	J42 JACK-OPEN	4.00 / 0.00	04-05-00	01-09-10	2 X 4	2 X 4	01-03-08 / 00-00-00	00-03-15 / 01-09-02	84.07 / 56.00		
	6	J44 JACK-OPEN	4.00 / 0.00	05-07-00	02-02-04	2 X 4	2 X 4	01-03-08 / 00-00-00	00-03-15 / 02-01-12	88.44 / 55.98		

TOTAL # TRUSS= **45.00** TOTAL BFT OF ALL TRUSSES= **2130.58** BFT. TOTAL WEIGHT OF ALL TRUSSES= **3445.32** LBS.

HARDWARE

QTY	ITEM TYPE	MODEL	LENGTH FT-IN-16
5	Hangers	HGUS26	

TOTAL # ITEMS= **5.00**

TAMARACK LUMBER INC
ALPA LUMBER GROUP

Delivery Shiplist

DATE	08/23/18
SALES REP	Mario

TOWN OF INNISFIL 2018-0802-0808 REVIEWED Inspector 3/19/2021 Building Permit Plans

JOB TRACK: 42067 **LAYOUT ID:** 301327 **LOCATION:** INNISFIL
BUILDER: BAYVIEW WELLINGTON/ALCONA SHO **SUB-BUILDER:**
MODEL: TH-7E **ELEVATION:** A

ROOF TRUSSES

ROOF TRUSS SPACING: 24.0 IN. O.C. (TYP.)

PROFILE	QTY / PLY	MARK / TYPE	PITCH TC / BC	SPAN	TRUSS HEIGHT	LUMBER TOP	LUMBER BOT	OVERHANG LEFT / RIGHT	HEEL HEIGHT LEFT / RIGHT	LBS. / BFT.	BUNDLE # / STACK #	LOAD BY: / REMARKS
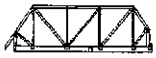	1 / 2 Ply	T131 HIP GIRDER	10.00 / 0.00	21-00-00	04-01-04	2 X 4	2 X 6	01-03-08 / 00-00-00	01-07-11 / 00-05-08	203.62 / 128.00		
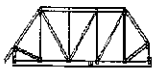	1	T132 HIP	10.00 / 0.00	21-00-00	05-01-04	2 X 4	2 X 6	01-03-08 / 00-00-00	01-07-11 / 00-05-08	105.77 / 66.33		
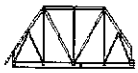	1	T133 HIP	10.00 / 0.00	21-00-00	06-01-04	2 X 4	2 X 6	01-03-08 / 00-00-00	01-07-11 / 00-05-08	109.41 / 69.33		
	1	T134 HIP	10.00 / 0.00	21-00-00	07-01-04	2 X 4	2 X 6	01-03-08 / 00-00-00	01-07-11 / 00-05-08	115.19 / 73.17		
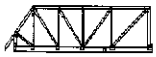	1 / 2 Ply	T150Z HALF HIP	10.00 / 0.00	21-00-00	04-01-04	2 X 4	2 X 6	01-03-08 / 00-00-00	01-07-11 / 00-05-08	209.48 / 132.66		
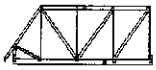	1	T151 HALF HIP	10.00 / 0.00	21-00-00	05-01-04	2 X 4	2 X 6	01-03-08 / 00-00-00	01-07-11 / 00-05-08	103.13 / 64.50		
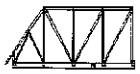	1	T152 HALF HIP	10.00 / 0.00	21-00-00	06-01-04	2 X 4	2 X 6	01-03-08 / 00-00-00	01-07-11 / 00-05-08	111.36 / 70.17		
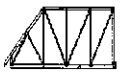	2	T153 HALF HIP	10.00 / 0.00	21-00-00	07-01-04	2 X 4	2 X 6	01-03-08 / 00-00-00	01-07-11 / 00-05-08	235.70 / 147.00		
	2	T154 HALF HIP	10.00 / 0.00	21-00-00	08-01-04	2 X 4	2 X 6	01-03-08 / 00-00-00	01-07-11 / 00-05-08	249.28 / 157.66		
	6	T155 HALF HIP	10.00 / 0.00	21-00-00	09-01-04	2 X 4	2 X 6	01-03-08 / 00-00-00	01-07-11 / 00-05-08	766.92 / 481.02		
	2	T156 HALF HIP	10.00 / 0.00	21-00-00	10-01-04	2 X 4	2 X 6	01-03-08 / 00-00-00	01-07-11 / 00-05-08	279.54 / 172.34		
	2	T157 COMMON	10.00 / 0.00	10-06-00	06-00-03	2 X 4	2 X 4	01-03-08 / 01-03-08	01-07-11 / 01-07-11	94.44 / 60.00		
	3	T157S SCISSOR	10.00 / 4.00	10-06-00	06-00-03	2 X 4	2 X 4	01-03-08 / 01-03-08	01-07-11 / 01-07-11	148.44 / 95.01		
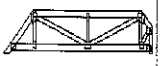	2	P131 PIGGYBACK	10.00 / 0.00	11-04-15	01-10-08	2 X 4	2 X 4	00-00-00 / 00-00-00	00-04-13 / 01-01-15	80.02 / 55.66		
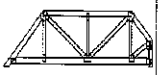	2	P132 PIGGYBACK	10.00 / 0.00	11-04-15	02-06-08	2 X 4	2 X 4	00-00-00 / 00-00-00	00-04-13 / 01-01-15	83.90 / 56.00		
	17	J1 JACK-OPEN	6.00 / 0.00	05-10-08	04-01-04	2 X 4	2 X 4	01-03-08 / 00-00-00	01-02-00 / 04-01-04	285.43 / 181.39		
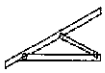	6	J47 JACK-OPEN	4.00 / 0.00	07-01-00	02-08-04	2 X 4	2 X 4	01-03-08 / 00-00-00	00-03-15 / 02-07-12	127.14 / 79.98		

TOTAL # TRUSS= **53.00** TOTAL BFT OF ALL TRUSSES= **2090.22** BFT. TOTAL WEIGHT OF ALL TRUSSES= **3308.77** LBS.

HARDWARE

QTY	ITEM TYPE	MODEL	LENGTH FT-IN-16

TAMARACK LUMBER INC
ALPA LUMBER GROUP

Delivery Shiplist

DATE	08/23/18
SALES REP	Mario

TOWN OF INNISFIL
2018-0802-0808
REVIEWED
3/19/2021
Building Permit Plans

JOB TRACK: 42067 **LAYOUT ID:** 301327 **LOCATION:** INNISFIL
BUILDER: BAYVIEW WELLINGTON/ALCONA SHO **SUB-BUILDER:**
MODEL: TH-7E **ELEVATION:** A

HARDWARE

QTY	ITEM TYPE	MODEL	LENGTH FT-IN-16
3	Hangers	LJS26DS	
1	Hangers	HGUS26-2	

TOTAL # ITEMS= **4.00**

TOWN OF INNISFIL
2018-0802-0808
REVIEWED
jpenfold
3/19/2021
Building Permit Plans

JOB NAME	TRUSS NAME	QUANTITY	PLY	JOB DESC.	DRWG NO.
297078	T1	42	1	TRUSS DESC.	

Tamarack Roof Truss, Burlington

Version 8.210 S May 18 2018 MiTek Industries, Inc. Mon Aug 20 09:58:41 2018 Page 1
ID:P5XmF1xy53I8wCH47R2x3fzNvqf-zfUOMI_c0ipASGdF62hXeycw0WKym7RuHZVSSkym?Z

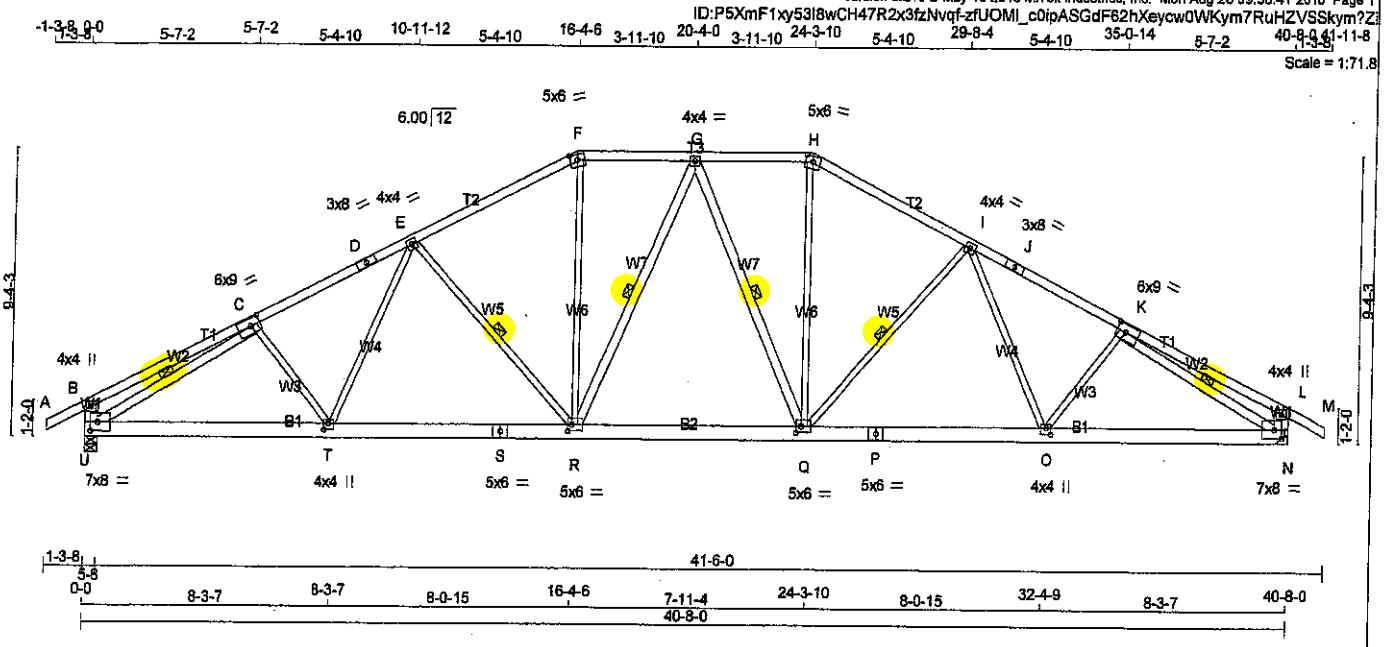

TOTAL WEIGHT = 42 X 209 = 8765 lb
[M][F]

LUMBER
N. L. G. A. RULES

CHORDS	SIZE		LUMBER	DESCR.
A - D	2x4	DRY	No.2	SPF
D - F	2x4	DRY	No.2	SPF
F - H	2x4	DRY	No.2	SPF
H - J	2x4	DRY	No.2	SPF
J - M	2x4	DRY	No.2	SPF
U - B	2x6	DRY	No.2	SPF
N - L	2x6	DRY	No.2	SPF
U - S	2x6	DRY	No.2	SPF
S - P	2x6	DRY	No.2	SPF
P - N	2x6	DRY	No.2	SPF
ALL WEBS EXCEPT	2x3	DRY	No.2	SPF
R - G	2x4	DRY	No.2	SPF
G - Q	2x4	DRY	No.2	SPF
U - C	2x4	DRY	2100F 1.8E	SPF
K - N	2x4	DRY	2100F 1.8E	SPF

DRY: SEASONED LUMBER.

PLATES (table is in inches)

JT	TYPE	PLATES	W	LEN	Y	X
B	TMV+p	MT20	4.0	4.0		
C	TMWW-t	MT20	6.0	9.0	3.00	3.75
D	TS-t	MT20	3.0	8.0		
E, G, I						
E	TMWW-t	MT20	4.0	4.0		
F	TTW-m	MT20	5.0	6.0	2.25	3.00
H	TTW-m	MT20	5.0	6.0	2.25	3.00
J	TS-t	MT20	3.0	8.0		
K	TMWW-t	MT20	6.0	9.0	3.00	3.75
L	TMV+p	MT20	4.0	4.0		
N	BMVW1-t	MT20	7.0	8.0	3.50	3.00
O	BMWW+t	MT20	4.0	4.0	2.50	1.75
P	BS-t	MT20	5.0	6.0		
Q	BMWWW-t	MT20	5.0	6.0	2.50	2.00
R	BMWWW-t	MT20	5.0	6.0	2.50	1.50
S	BS-t	MT20	5.0	6.0		
T	BMWW+t	MT20	4.0	4.0	2.50	1.75
U	BMVW1-t	MT20	7.0	8.0	3.50	3.00

DIMENSIONS, SUPPORTS AND LOADINGS SPECIFIED BY FABRICATOR TO BE VERIFIED BY BUILDING DESIGNER

BEARINGS

JT	FACTORED GROSS REACTION VERT	HORZ	MAXIMUM FACTORED GROSS REACTION DOWN	HORZ	UPLIFT	INPUT BRG IN-SX	REQRD BRG IN-SX
U	3595	0	3595	0	0	5-8	5-8
N	3595	0	3595	0	0	MECHANICAL	

A SUITABLE MECHANICAL CONNECTION IS REQUIRED AT JOINT N.

UNFACTORED REACTIONS

JT	1ST LCASE COMBINED	MAX./MIN. COMPONENT REACTIONS SNOW	LIVE	PERM.LIVE	WIND	DEAD	SOIL
U	2630	1658 / 0	427 / 0	0 / 0	0 / 0	545 / 0	0 / 0
N	2630	1658 / 0	427 / 0	0 / 0	0 / 0	545 / 0	0 / 0

BEARING MATERIAL TO BE SPF NO.2 OR BETTER AT JOINT(S) U

BRACING
TOP CHORD TO BE SHEATHED OR MAX. PURLIN SPACING = 2.43 FT.
MAX. UNBRACED BOTTOM CHORD LENGTH = 10.00 FT OR RIGID CEILING DIRECTLY APPLIED.

ALL PITCH BREAKS AND PERIMETER CORNER JOINTS MUST BE LATERALLY RESTRAINED.

1 LATERAL BRACE(S) AT 1/ 2 LENGTH OF E-R, G-R, G-Q, I-Q, C-U, K-N.

END VERTICAL(S) MUST BE SHEATHED OR HAVE BRACES AS INDICATED IN THE MAX. UNBRACED LENGTH COLUMN OF THE TABLE BELOW

LOADING
TOTAL LOAD CASES: (4)

CHORDS

MEMB. FR-TO	MAX. FACTORED FORCE (LBS)	FACTORED VERT. LOAD (PLF) FROM	TO	LC1	MAX CSI (LC)	MAX. UNBRAC LENGTH
A- B	0 / 39	-129.7	-129.7	0.17 (1)	10.00	
B- C	0 / 28	-129.7	-129.7	0.47 (1)	10.00	
C- D	-5144 / 0	-129.7	-129.7	0.88 (1)	2.43	
D- E	-5144 / 0	-129.7	-129.7	0.88 (1)	2.43	
E- F	-4215 / 0	-129.7	-129.7	0.78 (1)	2.78	
F- G	-3756 / 0	-129.7	-129.7	0.40 (1)	3.31	
G- H	-3756 / 0	-129.7	-129.7	0.40 (1)	3.31	
H- I	-4215 / 0	-129.7	-129.7	0.78 (1)	2.78	
I- J	-5144 / 0	-129.7	-129.7	0.88 (1)	2.43	
J- K	-5144 / 0	-129.7	-129.7	0.88 (1)	2.43	
K- L	0 / 28	-129.7	-129.7	0.47 (1)	10.00	
L- M	0 / 39	-129.7	-129.7	0.17 (1)	10.00	
U- B	-468 / 0	0.0	0.0	0.03 (1)	7.81	
N- L	-468 / 0	0.0	0.0	0.03 (1)	7.81	
U- T	0 / 4661	-38.5	-38.5	0.72 (1)	10.00	
T- S	0 / 4426	-38.5	-38.5	0.65 (1)	10.00	
S- R	0 / 4426	-38.5	-38.5	0.65 (1)	10.00	
R- Q	0 / 3887	-38.5	-38.5	0.59 (1)	10.00	
Q- P	0 / 4426	-38.5	-38.5	0.65 (1)	10.00	
P- O	0 / 4426	-38.5	-38.5	0.65 (1)	10.00	
O- N	0 / 4661	-38.5	-38.5	0.72 (1)	10.00	

WEBS

MEMB. FR-TO	MAX. FACTORED FORCE (LBS)	MAX CSI (LC)
C- T	-95 / 144	0.03 (3)
T- E	0 / 468	0.11 (2)
E- R	-1025 / 0	0.48 (1)
R- F	0 / 1378	0.31 (1)
R- G	-332 / 0	0.16 (1)
G- Q	-332 / 0	0.16 (1)
Q- H	0 / 1378	0.31 (1)
Q- I	-1025 / 0	0.48 (1)
I- O	0 / 468	0.11 (2)
O- K	-95 / 144	0.03 (3)
U- C	-5537 / 0	0.67 (1)
K- N	-5537 / 0	0.67 (1)

DESIGN CRITERIA

SPECIFIED LOADS:

TOP CH.	LL	=	38.2	PSF
	DL	=	6.0	PSF
BOT CH.	LL	=	10.5	PSF
	DL	=	7.0	PSF
TOTAL LOAD		=	61.7	PSF

SPACING = 24.0 IN. C/C

LOADING IN FLAT SECTION BASED ON A SLOPE OF 6.00/12

THIS TRUSS IS DESIGNED FOR RESIDENTIAL OR SMALL BUILDING REQUIREMENTS OF PART 9, NBCC 2010, NBCC 2015

THIS DESIGN COMPLIES WITH:
- PART 9 OF OBC 2012, OBC 2018
- CSA 086-09, CSA 086-14
- TPIC 2011, TPIC 2014

(55 % OF 54.3 P.S.F. G.S.L. PLUS 8.4 P.S.F. RAIN LOAD) EQUALS 38.2 P.S.F. SPECIFIED ROOF LIVE LOAD

ALLOWABLE DEFL.(LL)= L/360 (1.36")
CALCULATED VERT. DEFL.(LL) = L/ 999 (0.25")
ALLOWABLE DEFL.(TL)= L/360 (1.36")
CALCULATED VERT. DEFL.(TL) = L/ 999 (0.42")

CSI: TC=0.88/1.00 (I-K:1) , BC=0.72/1.00 (N-O:1) , WB=0.67/1.00 (C-U:1) , SSI=0.30/1.00 (H-I:1)

DOL LUMBER=1.00 NAIL=1.00 LS BEND=1.10 COMP=1.10 SHEAR=1.10 TENS= 1.10

COMPANION LIVE LOAD FACTOR = 1.00

AUTOSOLVE HEELS OFF

TRUSS PLATE MANUFACTURER IS NOT RESPONSIBLE FOR QUALITY CONTROL IN THE TRUSS MANUFACTURING PLANT .

NAIL VALUES

PLATE	GRIP(DRY) (PSI) MAX	MIN	SHEAR (PLI) MAX	MIN	SECTION (PLI) MAX	MIN
MT20	618	354	1667	788	1987	1656

PLATE PLACEMENT TOL. = 0.250 inches

PLATE ROTATION TOL. = 5.0 Deg.

(SI GRIP= 0.88 (R) (INPUT = 0.90)
(SI METAL= 0.91 (C) (INPUT = 1.00)

LICENSED PROFESSIONAL ENGINEER
09/20/18
H.J.G. ALVES
PROVINCE OF ONTARIO

DWG NO. TAM T1805174
STRUCTURAL
COMPONENT ONLY

JOB NAME	TRUSS NAME	QUANTITY	PLY	JOB DESC.	DRWG NO.
297078	G1	8	1	TRUSS DESC.	

Tamarack Roof Truss, Burlington

Version 8.210 S May 16 2018 MiTek Industries, Inc. Mon Aug 20 09:46:49 2018 Page 1
ID:P5XmF1xy53I8wCH47R2x3fzNvqf-pgTDxrN?hy6B1rBPOWvZno7QqVUExBL5Yo1mS0ym?kq

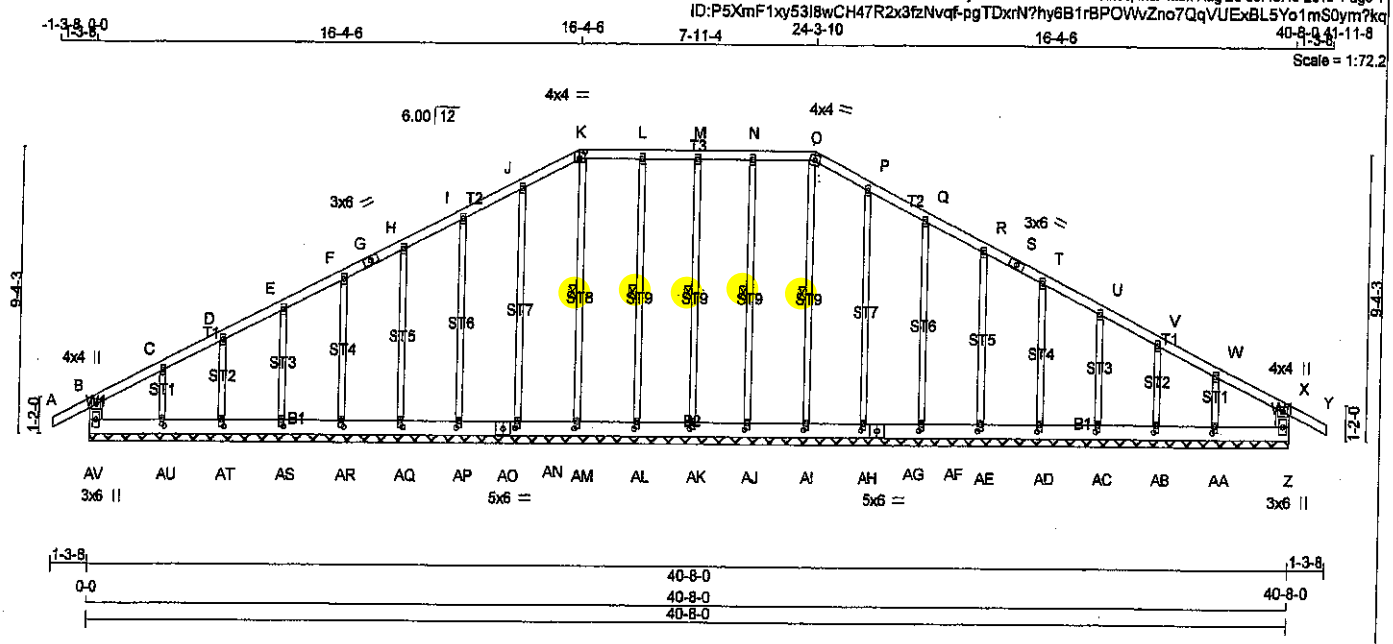

TOTAL WEIGHT = 8 X 218 = 1742 lb
[M]

LUMBER
N. L. G. A. RULES

CHORDS	SIZE		LUMBER	DESCR.
AV- B	2x6	DRY	No.2	SPF
A - G	2x4	DRY	No.2	SPF
G - K	2x4	DRY	No.2	SPF
K - O	2x4	DRY	No.2	SPF
O - S	2x4	DRY	No.2	SPF
S - Y	2x4	DRY	No.2	SPF
Z - X	2x6	DRY	No.2	SPF
AV- AO	2x6	DRY	No.2	SPF
AO- AG	2x6	DRY	No.2	SPF
AG- Z	2x6	DRY	No.2	SPF
ALL WEBS	2x3	DRY	No.2	SPF
ALL GABLE WEBS	2x3	DRY	No.2	SPF

DRY: SEASONED LUMBER.

GABLE STUDS SPACED AT 2-0-0 OC.

PLATES (table is in inches)

JT	TYPE	PLATES	W	LEN	Y	X
B	TMV+p	MT20	4.0	4.0		
C, D, E, F, H, I, J, L, M, N, P, Q, R, T, U, V, W						
C	TMW+w	MT20	2.0	4.0		
G	TS-t	MT20	3.0	6.0		
K	TTW-i	MT20	4.0	4.0	2.50	2.00
O	TTW-m	MT20	4.0	4.0		
S	TS-t	MT20	3.0	6.0		
X	TMV+p	MT20	4.0	4.0		
Z	BMV1+p	MT20	3.0	6.0		
AA, AB, AC, AD, AE, AF, AH, AI, AJ, AK, AL, AM, AN, AP, AQ, AR, AS, AT, AU						
AA	BMW1+w	MT20	2.0	4.0	2.50	1.00
AG	BS-t	MT20	5.0	6.0		
AO	BS-t	MT20	5.0	6.0		
AV	BMV1+p	MT20	3.0	6.0		

LICENSED PROFESSIONAL ENGINEER
08/20/18
H.J.G. ALVES
PROVINCE OF ONTARIO

DIMENSIONS, SUPPORTS AND LOADINGS SPECIFIED BY FABRICATOR TO BE VERIFIED BY BUILDING DESIGNER

BEARINGS

THIS TRUSS DESIGNED FOR CONTINUOUS BEARINGS.

THIS TRUSS REQUIRES RIGID SHEATHING ON EXPOSED FACE.

BEARING MATERIAL TO BE SPF NO.2 OR BETTER AT JOINT(S)

BRACING
TOP CHORD TO BE SHEATHED OR MAX. PURLIN SPACING = 6.25 FT.
MAX. UNBRACED BOTTOM CHORD LENGTH = 10.00 FT OR RIGID CEILING DIRECTLY APPLIED.

ALL PITCH BREAKS AND PERIMETER CORNER JOINTS MUST BE LATERALLY RESTRAINED.

1 LATERAL BRACE(S) AT 1/2 LENGTH OF O-AI, N-AJ, M-AK, L-AL, K-AM.

END VERTICAL(S) MUST BE SHEATHED OR HAVE BRACES AS INDICATED IN THE MAX. UNBRACED LENGTH COLUMN OF THE TABLE BELOW

LOADING
TOTAL LOAD CASES: (4)

CHORDS

MEMB. FR-TO	MAX. FACTORED FORCE (LBS)	FACTORED VERT. LOAD LC1 (PLF) FROM	TO	MAX CSI (LC)	MAX. UNBRAC LENGTH
AV- B	-367 / 0	0.0	0.0	0.02 (1)	7.81
A- B	0 / 39	-129.7	-129.7	0.17 (1)	10.00
B- C	-66 / 0	-129.7	-129.7	0.09 (1)	6.25
C- D	-54 / 0	-129.7	-129.7	0.07 (1)	6.25
D- E	-45 / 0	-129.7	-129.7	0.06 (1)	6.25
E- F	-41 / 0	-129.7	-129.7	0.06 (1)	6.25
F- G	-37 / 0	-129.7	-129.7	0.05 (1)	6.25
G- H	-37 / 0	-129.7	-129.7	0.06 (1)	6.25
H- I	-34 / 0	-129.7	-129.7	0.06 (1)	6.25
I- J	-32 / 0	-129.7	-129.7	0.06 (1)	6.25
J- K	-28 / 0	-129.7	-129.7	0.06 (1)	6.25
K- L	-23 / 0	-129.7	-129.7	0.06 (1)	6.25
L- M	-23 / 0	-129.7	-129.7	0.06 (1)	6.25
M- N	-23 / 0	-129.7	-129.7	0.06 (1)	6.25
N- O	-23 / 0	-129.7	-129.7	0.06 (1)	6.25
O- P	-28 / 0	-129.7	-129.7	0.06 (1)	6.25
P- Q	-32 / 0	-129.7	-129.7	0.06 (1)	6.25
Q- R	-34 / 0	-129.7	-129.7	0.06 (1)	6.25
R- S	-37 / 0	-129.7	-129.7	0.06 (1)	6.25
S- T	-37 / 0	-129.7	-129.7	0.06 (1)	6.25
T- U	-41 / 0	-129.7	-129.7	0.06 (1)	6.25
U- V	-45 / 0	-129.7	-129.7	0.06 (1)	6.25
V- W	-54 / 0	-129.7	-129.7	0.07 (1)	6.25
W- X	-66 / 0	-129.7	-129.7	0.09 (1)	6.25
X- Y	0 / 39	-129.7	-129.7	0.17 (1)	10.00
Z- X	-367 / 0	0.0	0.0	0.02 (1)	7.81
AV-AU	0 / 56	-38.5	-38.5	0.02 (1)	10.00
AU-AT	0 / 46	-38.5	-38.5	0.02 (2)	10.00
AT-AS	0 / 41	-38.5	-38.5	0.01 (2)	10.00
AS-AR	0 / 37	-38.5	-38.5	0.01 (2)	10.00
AR-AQ	0 / 33	-38.5	-38.5	0.01 (2)	10.00
AQ-AP	0 / 31	-38.5	-38.5	0.01 (2)	10.00
AP-AO	0 / 28	-38.5	-38.5	0.01 (2)	10.00
AO-AN	0 / 28	-38.5	-38.5	0.01 (2)	10.00
AN-AM	0 / 26	-38.5	-38.5	0.01 (2)	10.00
AM-AL	0 / 23	-38.5	-38.5	0.01 (2)	10.00
AL-AK	0 / 23	-38.5	-38.5	0.01 (2)	10.00
AK-AJ	0 / 23	-38.5	-38.5	0.01 (2)	10.00
AJ-AI	0 / 23	-38.5	-38.5	0.01 (2)	10.00
AI-AH	0 / 26	-38.5	-38.5	0.01 (2)	10.00
AH-AG	0 / 28	-38.5	-38.5	0.01 (2)	10.00
AG-AF	0 / 28	-38.5	-38.5	0.01 (2)	10.00

WEBS

MEMB. FR-TO	MAX. FACTORED FORCE (LBS)	MAX CSI (LC)
AI- O	-253 / 0	0.14 (1)
AJ- N	-259 / 0	0.14 (1)
AK- M	-235 / 0	0.13 (1)
AL- L	-259 / 0	0.14 (1)
AM- K	-253 / 0	0.14 (1)
AN- J	-253 / 0	0.34 (1)
AP- I	-259 / 0	0.24 (1)
AQ- H	-258 / 0	0.16 (1)
AR- F	-257 / 0	0.11 (1)
AS- E	-259 / 0	0.07 (1)
AT- D	-250 / 0	0.05 (1)
AU- C	-279 / 0	0.04 (1)
AH- P	-253 / 0	0.34 (1)
AF- Q	-259 / 0	0.24 (1)
AE- R	-258 / 0	0.16 (1)
AD- T	-257 / 0	0.11 (1)
AC- U	-259 / 0	0.07 (1)
AB- V	-250 / 0	0.05 (1)
AA- W	-279 / 0	0.04 (1)

DESIGN CRITERIA

SPECIFIED LOADS:

TOP CH.	LL	=	38.2	PSF
	DL	=	6.0	PSF
BOT CH.	LL	=	10.5	PSF
	DL	=	7.0	PSF
TOTAL LOAD		=	61.7	PSF

SPACING = 24.0 IN. C/C

LOADING IN FLAT SECTION BASED ON A SLOPE OF 6.00/12

THIS TRUSS IS DESIGNED FOR RESIDENTIAL OR SMALL BUILDING REQUIREMENTS OF PART 9, NBCC 2010, NBCC 2015

THIS DESIGN COMPLIES WITH:
- PART 9 OF OBC 2012, OBC 2018
- CSA 086-09, CSA 086-14
- TPIC 2011, TPIC 2014

DESIGN ASSUMPTIONS
-OVERHANG NOT TO BE ALTERED OR CUT OFF.

(55 % OF 54.3 P.S.F. G.S.L. PLUS 8.4 P.S.F. RAIN LOAD) EQUALS 38.2 P.S.F. SPECIFIED ROOF LIVE LOAD

CSI: TC=0.17/1.00 (X-Y:1) , BC=0.02/1.00 (Z-AA:1) , WB=0.34/1.00 (J-AN:1) , SSI=0.12/1.00 (X-Y:1)

DOL LUMBER=1.00 NAIL=1.00 LS BEND=1.10 COMP=1.10 SHEAR=1.10 TENS= 1.10

COMPANION LIVE LOAD FACTOR = 1.00

AUTOSOLVE HEELS OFF

TRUSS PLATE MANUFACTURER IS NOT RESPONSIBLE FOR QUALITY CONTROL IN THE TRUSS MANUFACTURING PLANT.

NAIL VALUES

PLATE	GRIP(DRY) (PSI) MAX	MIN	SHEAR (PLI) MAX	MIN	SECTION (PLI) MAX	MIN
MT20	618	354	1667	788	1987	1656

PLATE PLACEMENT TOL. = 0.250 inches

PLATE ROTATION TOL. = 5.0 Deg.

JSI GRIP= 0.60 (O) (INPUT = 0.90)
JSI METAL= 0.12 (W) (INPUT = 1.00)

DWG NO. TAM 71805165
STRUCTURAL
COMPONENT ONLY 1/2

CONTINUED ON PAGE 2

TOWN OF INNISFIL
2018-0802-0808
REVIEWED
jpenfold
3/19/2021
Building Permit Plans

JOB NAME	TRUSS NAME	QUANTITY	PLY	JOB DESC.	DRWG NO.
297078	G1	8	1	TRUSS DESC.	

Tamarack Roof Truss, Burlington

ID:P5XmF1xy53I8wCH47R2x3fzNvqf-pgTDxrN?hy6B1rBPOWvZno7QqVUExBL5Yo1mS0ym?kq

TOWN OF INNISFIL
2018-0802-0808
REVIEWED
jpenfold
3/19/2021
Building Permit Plans

LOADING
TOTAL LOAD CASES: (4)

CHORDS

MEMB. FR-TO	MAX. FACTORED FORCE (LBS)	FACTORED VERT. LOAD (PLF) FROM	TO	LC1 MAX CSI (LC)	MAX. UNBRAC LENGTH
AF-AE	0 / 31	-38.5	-38.5	0.01 (2)	10.00
AE-AD	0 / 33	-38.5	-38.5	0.01 (2)	10.00
AD-AC	0 / 37	-38.5	-38.5	0.01 (2)	10.00
AC-AB	0 / 41	-38.5	-38.5	0.01 (2)	10.00
AB-AA	0 / 46	-38.5	-38.5	0.02 (2)	10.00
AA- Z	0 / 56	-38.5	-38.5	0.02 (1)	10.00

WEBS

MEMB. FR-TO	MAX. FACTORED FORCE (LBS)	MAX CSI (LC)

LICENSED PROFESSIONAL ENGINEER
02/20/18
H.J.G. ALVES
PROVINCE OF ONTARIO

DWG NO. TAM T18051 65
STRUCTURAL
COMPONENT ONLY 2/2

TOWN OF INNISFIL
2018-0802-0808
REVIEWED
Building Permit Plans
3/19/2021

JOB NAME	TRUSS NAME	QUANTITY	PLY	JOB DESC.	DRWG NO.
297078	T11	2	4	TRUSS DESC.	

Tamarack Roof Truss, Burlington

Version 8.210 S May 18 2018 MiTek Industries, Inc. Mon Aug 20 09:47:27 2018 Page 1
ID:P5XmF1xy53i8wCH47R2x3fzNvqf-i_mbvqqrfduobh5idVbTJphuhqHMrN1hHiEnopym?kE

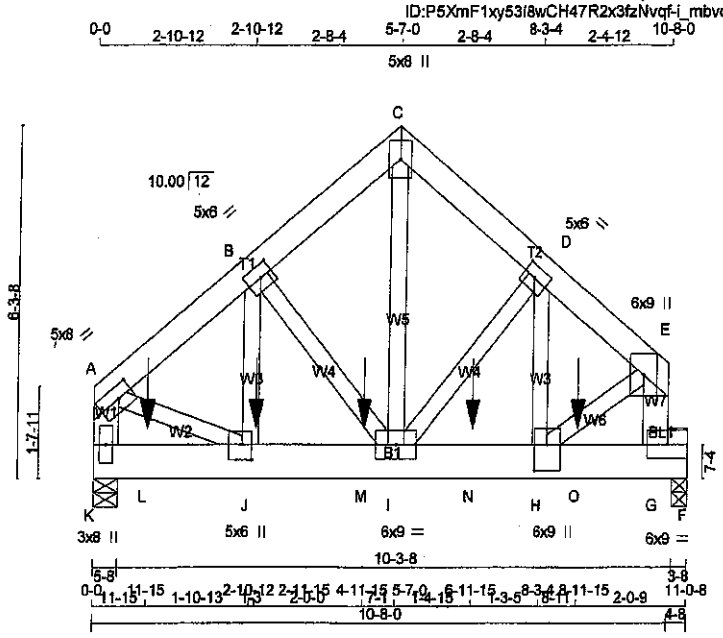

TOTAL WEIGHT = 8 X 83 = 664 lb [M]

LUMBER

N. L. G. A. RULES

CHORDS	SIZE		LUMBER	DESCR.
A - C	2x6	DRY	No.2	SPF
C - E	2x6	DRY	No.2	SPF
K - A	2x6	DRY	No.2	SPF
G - E	2x6	DRY	No.2	SPF
K - F	2x8	DRY	No.2	SPF
BEARING BLOCKS				
BL1	2x4	DRY	No.2	SPF
ALL WEBS EXCEPT	2x4	DRY	No.2	SPF

DRY: SEASONED LUMBER.

DESIGN CONSISTS OF 4 TRUSSES BUILT SEPARATELY THEN FASTENED TOGETHER AS FOLLOWS:

CHORDS	#ROWS	SURFACE SPACING (IN)	LOAD(PLF)
TOP CHORDS : (0.122"X3") SPIRAL NAILS			
A- C	2	12	TOP
C- E	2	12	TOP
K- A	2	12	TOP
G- E	2	12	TOP
BOTTOM CHORDS : (0.122"X3") SPIRAL NAILS			
K- F	3	4	SIDE(1801.1)
WEBS : (0.122"X3") SPIRAL NAILS			
2x4	1	6	

STAGGER NAILS BY HALF THE SURFACE SPACING IN ADJACENT PLIES.

IN ADDITION, PRE-DRILL ONE 0.56" DIAM. HOLE IN EACH CHORD PANEL AND INSTALL 0.50" DIAM. ASTM A307 BOLTS WITH WASHERS, BOTH SIDES. FOR OTHER BOLT TYPES SEE CSAO86 3.3.2.

GIRDER NAILING ASSUMES NAILED HANGERS ARE FASTENED WITH MIN. 3-0 INCH NAILS.

TOP - COMPONENTS ARE LOADED FROM THE TOP AND MUST BE PLACED ON TOP EDGE OF ALL PLIES FOR THE LOAD TO BE TRANSFERRED TO EACH PLY.

SIDE - PLF SHOWN IS THE EQUIVALENT UDL APPLIED TO ONE SIDE THAT THE CORRESPONDING NAILING PATTERN SHALL BE CAPABLE OF TRANSFERING. REMAINING PLF MUST BE APPLIED ON THE OPPOSITE SIDE OR ON THE TOP.

PLATES (table is in inches)

JT	TYPE	PLATES	W	LEN	Y	X
A	TMWW-t	MT20	5.0	8.0	2.50	3.25
B	TMWW-t	MT20	5.0	6.0	2.50	2.75
C	TTW+p	MT20	5.0	8.0		
D	TMWW-t	MT20	5.0	6.0	2.50	2.75
E	TMWW+p	MT20	6.0	9.0		
G	BMWK-t	MT20	6.0	9.0		
H	BMWW+t	MT20	6.0	9.0	5.50	3.00
I	BMWWW-t	MT20	6.0	9.0		
J	BMWW+t	MT20	5.0	6.0	3.25	2.00
K	BMV1+p	MT20	3.0	8.0		

HANGERS NOTES

1)

DIMENSIONS, SUPPORTS AND LOADINGS SPECIFIED BY FABRICATOR TO BE VERIFIED BY BUILDING DESIGNER

BEARINGS

JT	FACTORED GROSS REACTION VERT	HORZ	MAXIMUM FACTORED GROSS REACTION DOWN	HORZ	UPLIFT	INPUT BRG IN-SX	REQRD BRG IN-SX
K	10661	0	10661	0	0	5-8	5-8
F	8937	0	8937	0	0	3-8	3-8

UNFACTORED REACTIONS

MAX./MIN. COMPONENT REACTIONS

JT	1ST LCASE COMBINED	SNOW	LIVE	PERM.LIVE	WIND	DEAD	SOIL
K	7779	4977 / 0	1231 / 0	0 / 0	0 / 0	1571 / 0	0 / 0
F	6521	4174 / 0	1031 / 0	0 / 0	0 / 0	1316 / 0	0 / 0

BEARING MATERIAL TO BE SPF NO.2 OR BETTER AT JOINT(S) K, F

BRACING

TOP CHORD TO BE SHEATHED OR MAX. PURLIN SPACING = 5.20 FT.
MAX. UNBRACED BOTTOM CHORD LENGTH = 6.25 FT OR RIGID CEILING DIRECTLY APPLIED.

ALL PITCH BREAKS AND PERIMETER CORNER JOINTS MUST BE LATERALLY RESTRAINED.

LOADING

TOTAL LOAD CASES: (4)

CHORDS

MEMB. FR-TO	MAX. FACTORED FORCE (LBS)	FACTORED VERT. LOAD (PLF) FROM	TO	LC1 CSI (LC)	MAX. UNBRAC LENGTH
A- B	-8809 / 0	-129.7	-129.7	0.09 (1)	5.20
B- C	-6803 / 0	-129.7	-129.7	0.06 (1)	5.75
C- D	-6790 / 0	-129.7	-129.7	0.09 (1)	5.74
D- E	-8529 / 0	-129.7	-129.7	0.10 (1)	5.26
K- A	-8300 / 0	0.0	0.0	0.15 (1)	6.75
G- E	-10795 / 0	0.0	0.0	0.20 (1)	6.07
K- L	0 / 0	-38.5	-38.5	0.31 (1)	10.00
L- J	0 / 0	-38.5	-38.5	0.31 (1)	10.00
J- M	0 / 6717	-38.5	-38.5	0.31 (1)	10.00
M- I	0 / 6717	-38.5	-38.5	0.31 (1)	10.00
I- N	0 / 6480	-38.5	-38.5	0.34 (1)	10.00
N- H	0 / 6480	-38.5	-38.5	0.34 (1)	10.00
H- O	-1677 / 0	-38.5	-38.5	0.71 (1)	6.25
O- G	-1677 / 0	-38.5	-38.5	0.71 (1)	6.25
G- F	0 / 0	-168.2	-168.2	0.51 (1)	10.00

WEBS

MEMB. FR-TO	MAX. FACTORED FORCE (LBS)	MAX CSI (LC)
J- B	0 / 2893	0.12 (1)
B- I	-2338 / 0	0.12 (1)
I- C	0 / 8210	0.33 (1)
I- D	-1952 / 0	0.10 (1)
H- D	0 / 2490	0.10 (1)
A- J	0 / 7137	0.29 (1)
H- E	0 / 9547	0.38 (1)

SPECIFIED CONCENTRATED LOADS (LBS)

JT	LOC.	LC1	MAX-	MAX+	FACE	DIR.	TYPE
J	2-11-15	-2583	-2583	—	BACK	VERT	TOTAL
L	11-15	-2583	-2583	—	BACK	VERT	TOTAL
M	4-11-15	-2585	-2585	—	BACK	VERT	TOTAL
N	6-11-15	-2583	-2583	—	BACK	VERT	TOTAL
O	8-11-15	-2583	-2583	—	BACK	VERT	TOTAL

DESIGN CRITERIA

SPECIFIED LOADS:

TOP CH.	LL	=	38.2	PSF
	DL	=	6.0	PSF
BOT CH.	LL	=	10.5	PSF
	DL	=	7.0	PSF
TOTAL LOAD		=	61.7	PSF

SPACING = 24.0 IN. C/C

THIS TRUSS IS DESIGNED FOR RESIDENTIAL OR SMALL BUILDING REQUIREMENTS OF PART 9, NBCC 2010, NBCC 2015

THIS DESIGN COMPLIES WITH:
- PART 9 OF OBC 2012, OBC 2016
- CSA 086-09, CSA 086-14
- TPIC 2011, TPIC 2014

(55 % OF 54.3 P.S.F. G.S.L. PLUS 8.4 P.S.F. RAIN LOAD) EQUALS 38.2 P.S.F. SPECIFIED ROOF LIVE LOAD

ALLOWABLE DEFL.(LL)= L/360 (0.37")
CALCULATED VERT. DEFL.(LL) = L/ 999 (0.03")
ALLOWABLE DEFL.(TL)= L/360 (0.37")
CALCULATED VERT. DEFL.(TL) = L/ 999 (0.05")

CSI: TC=0.20/1.00 (E-G:1) , BC=0.71/1.00 (G-H:1) , WB=0.38/1.00 (E-H:1) , SSI=0.85/1.00 (F-G:1)

DOL LUMBER=1.00 NAIL=1.00 LS BEND=1.10 COMP=1.10 SHEAR=1.10 TENS= 1.10

COMPANION LIVE LOAD FACTOR = 1.00

AUTOSOLVE HEELS OFF

TRUSS PLATE MANUFACTURER IS NOT RESPONSIBLE FOR QUALITY CONTROL IN THE TRUSS MANUFACTURING PLANT .

NAIL VALUES

PLATE	GRIP(DRY) (PSI) MAX	MIN	SHEAR (PLI) MAX	MIN	SECTION (PLI) MAX	MIN
MT20	618	354	1667	788	1987	1656

PLATE PLACEMENT TOL. = 0.250 inches

PLATE ROTATION TOL. = 5.0 Deg.

JSI GRIP= 0.87 (J) (INPUT = 0.90)
JSI METAL= 0.61 (H) (INPUT = 1.00)

LICENSED PROFESSIONAL ENGINEER
08/20/18
H.J.G. ALVES
PROVINCE OF ONTARIO

DWG NO. TAM 17805175
STRUCTURAL COMPONENT ONLY
1/2

CONTINUED ON PAGE 2

TOWN OF INNISFIL
2018-0802-0808
REVIEWED
3/19/2021
Building Permit Plans

JOB NAME	TRUSS NAME	QUANTITY	PLY	JOB DESC.	DRWG NO.
297078	T11	2	4	TRUSS DESC.	

HANGERS NOTES

1) -SPECIAL HANGER(S) OR CONNECTION(S) REQUIRED TO SUPPORT CONCENTRATED LOAD(S) 3541.8 lbs FACTORED DOWN AT 11-15, 3541.7 lbs FACTORED DOWN AT 2-11-15, 3544.8 lbs FACTORED DOWN AT 4-11-15, AND 3541.7 lbs FACTORED DOWN AT 6-11-15, AND 3541.7 lbs FACTORED DOWN AT 8-11-15 ON BOTTOM CHORD. DESIGN FOR UNSPECIFIED CONNECTION(S) IS DELEGATED TO THE BUILDING DESIGNER.

LICENSED PROFESSIONAL ENGINEER
08/20/18
H.J.G. AIMES
PROVINCE OF ONTARIO

DWG NO. TAM 11805175
STRUCTURAL
COMPONENT ONLY 2/2

TOWN OF INNISFIL
2018-0802-0808
REVIEWED
jpenfold
Building Permit Plans

JOB NAME	TRUSS NAME	QUANTITY	PLY	JOB DESC.	DRWG NO.
297079	T15	1	1	TRUSS DESC.	

Tamarack Roof Truss, Burlington

Version 8.210 S May 18 2018 MiTek Industries, Inc. Mon Aug 20 11:46:10 2018 Page 1
ID:4u167_apsj?wvBfJKDwJbPzNv7w-7Qvk2TU7?1R62nlIQ91_NDAhDWQ_OAQnp3GYWUylzz3

Scale = 1:39.4

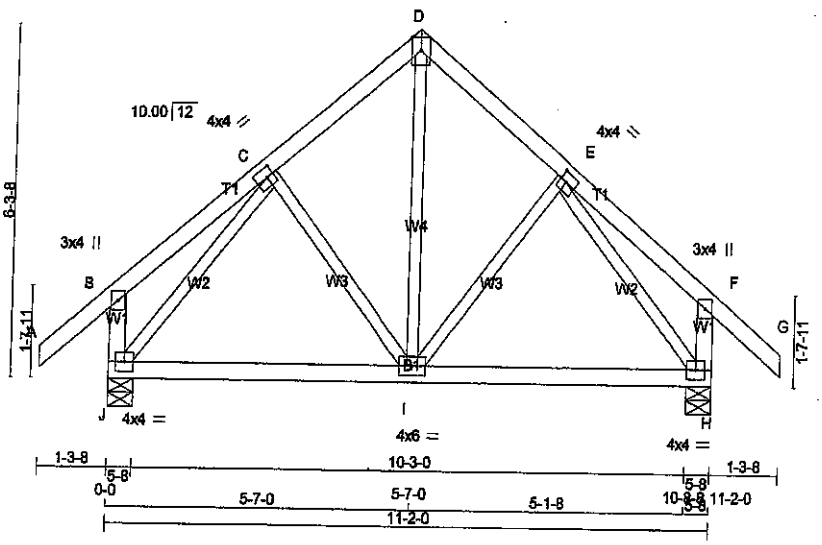

TOTAL WEIGHT = 55 lb
[M][F]

LUMBER
N. L. G. A. RULES

CHORDS	SIZE		LUMBER	DESCR.
A - D	2x4	DRY	No.2	SPF
D - G	2x4	DRY	No.2	SPF
J - B	2x4	DRY	No.2	SPF
H - F	2x4	DRY	No.2	SPF
J - H	2x4	DRY	No.2	SPF
ALL WEBS EXCEPT	2x3	DRY	No.2	SPF

DRY: SEASONED LUMBER.

PLATES (table is in inches)

JT	TYPE	PLATES	W	LEN	Y	X
B	TMV+p	MT20	3.0	4.0		
C	TMWW-t	MT20	4.0	4.0	2.00	1.50
D	TTW+p	MT20	4.0	6.0	Edge	
E	TMWW-t	MT20	4.0	4.0	2.00	1.50
F	TMV+p	MT20	3.0	4.0		
H	BMVW1-t	MT20	4.0	4.0		
I	BMWWW-t	MT20	4.0	6.0		
J	BMVW1-t	MT20	4.0	4.0		

Edge - INDICATES REFERENCE CORNER OF PLATE TOUCHES EDGE OF CHORD.

DIMENSIONS, SUPPORTS AND LOADINGS SPECIFIED BY FABRICATOR TO BE VERIFIED BY BUILDING DESIGNER

BEARINGS

JT	FACTORED GROSS REACTION VERT	HORZ	MAXIMUM FACTORED GROSS REACTION DOWN	HORZ	UPLIFT	INPUT BRG IN-SX	REQRD BRG IN-SX
J	1118	0	1118	0	0	5-8	5-8
H	1118	0	1118	0	0	5-8	5-8

UNFACTORED REACTIONS

JT	1ST LCASE COMBINED	MAX./MIN. COMPONENT REACTIONS SNOW	LIVE	PERM.LIVE	WIND	DEAD	SOIL
J	812	533 / 0	117 / 0	0 / 0	0 / 0	162 / 0	0 / 0
H	812	533 / 0	117 / 0	0 / 0	0 / 0	162 / 0	0 / 0

BEARING MATERIAL TO BE SPF NO.2 OR BETTER AT JOINT(S) J, H

BRACING
TOP CHORD TO BE SHEATHED OR MAX. PURLIN SPACING = 6.25 FT.
MAX. UNBRACED BOTTOM CHORD LENGTH = 10.00 FT OR RIGID CEILING DIRECTLY APPLIED.

ALL PITCH BREAKS AND PERIMETER CORNER JOINTS MUST BE LATERALLY RESTRAINED.

LOADING
TOTAL LOAD CASES: (4)

CHORDS

MEMB. FR-TO	MAX. FACTORED FORCE (LBS)	FACTORED VERT. LOAD (PLF) FROM	TO	LC1	MAX CSI (LC)	MAX. UNBRAC LENGTH
A- B	0 / 57	-129.7	-129.7	0.18 (1)	10.00	
B- C	0 / 25	-129.7	-129.7	0.15 (1)	10.00	
C- D	-628 / 0	-129.7	-129.7	0.12 (1)	6.25	
D- E	-628 / 0	-129.7	-129.7	0.12 (1)	6.25	
E- F	0 / 25	-129.7	-129.7	0.15 (1)	10.00	
F- G	0 / 57	-129.7	-129.7	0.18 (1)	10.00	
J- B	-319 / 0	0.0	0.0	0.03 (1)	7.81	
H- F	-319 / 0	0.0	0.0	0.03 (1)	7.81	
J- I	0 / 549	-38.5	-38.5	0.32 (2)	10.00	
I- H	0 / 549	-38.5	-38.5	0.32 (2)	10.00	

WEBS

MEMB. FR-TO	MAX. FACTORED FORCE (LBS)	MAX CSI (LC)
I- D	0 / 484	0.11 (1)
I- E	-139 / 29	0.05 (1)
C- I	-139 / 29	0.05 (1)
J- C	-903 / 0	0.30 (1)
E- H	-903 / 0	0.30 (1)

LICENSED PROFESSIONAL ENGINEER
00/20/18
H.J.G. ALVES
PROVINCE OF ONTARIO

DESIGN CRITERIA

SPECIFIED LOADS:

TOP CH.	LL	=	38.2	PSF
	DL	=	6.0	PSF
BOT CH.	LL	=	10.5	PSF
	DL	=	7.0	PSF
TOTAL LOAD		=	61.7	PSF

SPACING = 24.0 IN. C/C

THIS TRUSS IS DESIGNED FOR RESIDENTIAL OR SMALL BUILDING REQUIREMENTS OF PART 9, NBCC 2010, NBCC 2015

THIS DESIGN COMPLIES WITH:
- PART 9 OF OBC 2012, OBC 2018
- CSA 086-09, CSA 086-14
- TPIC 2011, TPIC 2014

(65 % OF 54.3 P.S.F. G.S.L. PLUS 8.4 P.S.F. RAIN LOAD) EQUALS 38.2 P.S.F.. SPECIFIED ROOF LIVE LOAD

ALLOWABLE DEFL.(LL)= L/360 (0.37")
CALCULATED VERT. DEFL.(LL) = L/ 999 (0.03")
ALLOWABLE DEFL.(TL)= L/360 (0.37")
CALCULATED VERT. DEFL.(TL) = L/ 999 (0.05")

CSI: TC=0.18/1.00 (F-G:1) , BC=0.32/1.00 (I-J:2) , WB=0.30/1.00 (C-J:1) , SSI=0.14/1.00 (I-J:3)

DOL LUMBER=1.00 NAIL=1.00 LS BEND=1.10 COMP=1.10 SHEAR=1.10 TENS= 1.10

COMPANION LIVE LOAD FACTOR = 1.00

TRUSS PLATE MANUFACTURER IS NOT RESPONSIBLE FOR QUALITY CONTROL IN THE TRUSS MANUFACTURING PLANT .

NAIL VALUES

PLATE	GRIP(DRY) (PSI) MAX	MIN	SHEAR (PLI) MAX	MIN	SECTION (PLI) MAX	MIN
MT20	618	354	1667	788	1987	1656

PLATE PLACEMENT TOL. = 0.250 inches

PLATE ROTATION TOL. = 5.0 Deg.

JSI GRIP= 0.80 (C) (INPUT = 0.90)
JSI METAL= 0.33 (E) (INPUT = 1.00)

DWG NO. TAM T1805222
STRUCTURAL
COMPONENT ONLY

JOB NAME	TRUSS NAME	QUANTITY	PLY	JOB DESC.	DRWG NO.
297079	G15	2	1	TRUSS DESC.	

Tamarack Roof Truss, Burlington

Version 8.210 S May 16 2018 MiTek Industries, Inc. Tue Aug 21 15:26:20 2018 Page 1

ID:4u167_apsj?wvBfJKDwJbPzNv7w-Qr6mc3x6_CFXohkAc9s_POlpYYHc3R1rVlW7RvylbgX

Scale = 1:48.8

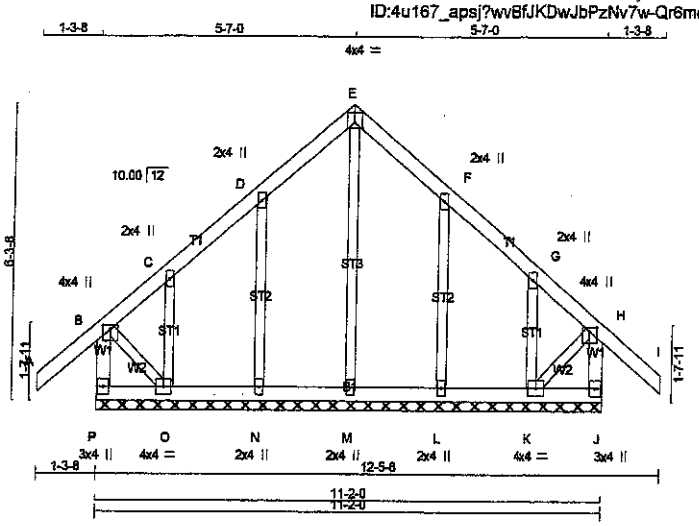

TOTAL WEIGHT = 2 X 54 = 109 lb

[M]

LUMBER

N. L. G. A. RULES

CHORDS	SIZE		LUMBER	DESCR.
P - B	2x4	DRY	No.2	SPF
A - E	2x4	DRY	No.2	SPF
E - I	2x4	DRY	No.2	SPF
J - H	2x4	DRY	No.2	SPF
P - J	2x4	DRY	No.2	SPF
ALL WEBS	2x3	DRY	No.2	SPF
ALL GABLE WEBS	2x3	DRY	No.2	SPF

DRY: SEASONED LUMBER.

GABLE STUDS SPACED AT 2-0-0 OC.

PLATES (table is in inches)

JT	TYPE	PLATES	W	LEN	Y	X
B	TMVW+p	MT20	4.0	4.0	1.00	2.00
C, D, F, G						
C	TMW+w	MT20	2.0	4.0		
E	TTW-p	MT20	4.0	4.0	1.50	2.00
H	TMVW+p	MT20	4.0	4.0	1.00	2.00
J	BMV1+p	MT20	3.0	4.0		
K	BMWW1-t	MT20	4.0	4.0		
L, M, N						
L	BMW1+w	MT20	2.0	4.0		
O	BMWW1-t	MT20	4.0	4.0		
P	BMV1+p	MT20	3.0	4.0		

DIMENSIONS, SUPPORTS AND LOADINGS SPECIFIED BY FABRICATOR TO BE VERIFIED BY BUILDING DESIGNER

BEARINGS

THIS TRUSS DESIGNED FOR CONTINUOUS BEARINGS.

THIS TRUSS REQUIRES RIGID SHEATHING ON EXPOSED FACE.

BEARING MATERIAL TO BE SPF NO.2 OR BETTER AT JOINT(S)

BRACING

TOP CHORD TO BE SHEATHED OR MAX. PURLIN SPACING = 6.25 FT.
MAX. UNBRACED BOTTOM CHORD LENGTH = 10.00 FT OR RIGID CEILING DIRECTLY APPLIED.

ALL PITCH BREAKS AND PERIMETER CORNER JOINTS MUST BE LATERALLY RESTRAINED.

LOADING

TOTAL LOAD CASES: (4)

CHORDS

MEMB. FR-TO	MAX. FACTORED FORCE (LBS)	FACTORED VERT. LOAD (PLF) FROM	TO	LC1 MAX CSI (LC)	MAX. UNBRAC LENGTH
P- B	-389 / 0	0.0	0.0	0.04 (1)	7.81
A- B	0 / 57	-129.7	-129.7	0.18 (1)	10.00
B- C	-78 / 0	-129.7	-129.7	0.17 (1)	6.25
C- D	-8 / 0	-129.7	-129.7	0.08 (1)	10.00
D- E	-33 / 0	-129.7	-129.7	0.08 (1)	6.25
E- F	-33 / 0	-129.7	-129.7	0.08 (1)	6.25
F- G	-8 / 0	-129.7	-129.7	0.08 (1)	10.00
G- H	-78 / 0	-129.7	-129.7	0.17 (1)	6.25
H- I	0 / 57	-129.7	-129.7	0.18 (1)	10.00
J- H	-389 / 0	0.0	0.0	0.04 (1)	7.81
P- O	0 / 0	-38.5	-38.5	0.02 (3)	10.00
O- N	0 / 18	-38.5	-38.5	0.02 (3)	10.00
N- M	0 / 11	-38.5	-38.5	0.02 (3)	10.00
M- L	0 / 11	-38.5	-38.5	0.02 (3)	10.00
L- K	0 / 18	-38.5	-38.5	0.02 (3)	10.00
K- J	0 / 0	-38.5	-38.5	0.02 (3)	10.00

WEBS

MEMB. FR-TO	MAX. FACTORED FORCE (LBS)	MAX CSI (LC)
M- E	-194 / 0	0.12 (1)
N- D	-314 / 0	0.10 (1)
O- C	-122 / 0	0.02 (1)
L- F	-314 / 0	0.10 (1)
K- G	-122 / 0	0.02 (1)
B- O	0 / 29	0.01 (1)
K- H	0 / 29	0.01 (1)

DESIGN CRITERIA

SPECIFIED LOADS:

TOP CH.	LL	=	38.2	PSF
	DL	=	6.0	PSF
BOT CH.	LL	=	10.5	PSF
	DL	=	7.0	PSF
TOTAL LOAD		=	61.7	PSF

SPACING = 24.0 IN. C/C

THIS TRUSS IS DESIGNED FOR RESIDENTIAL OR SMALL BUILDING REQUIREMENTS OF PART 9, NBCC 2010, NBCC 2015

THIS DESIGN COMPLIES WITH:
- PART 9 OF OBC 2012, OBC 2018
- CSA 086-09, CSA 086-14
- TPIC 2011, TPIC 2014

DESIGN ASSUMPTIONS
-OVERHANG NOT TO BE ALTERED OR CUT OFF.

(55 % OF 54.3 P.S.F. G.S.L. PLUS 8.4 P.S.F. RAIN LOAD) EQUALS 38.2 P.S.F. SPECIFIED ROOF LIVE LOAD

CSI: TC=0.18/1.00 (A-B:1) , BC=0.02/1.00 (K-L:3) , WB=0.12/1.00 (E-M:1) , SSI=0.11/1.00 (A-B:1)

DOL LUMBER=1.00 NAIL=1.00 LS BEND=1.10 COMP=1.10 SHEAR=1.10 TENS= 1.10

COMPANION LIVE LOAD FACTOR = 1.00

TRUSS PLATE MANUFACTURER IS NOT RESPONSIBLE FOR QUALITY CONTROL IN THE TRUSS MANUFACTURING PLANT .

NAIL VALUES

PLATE	GRIP(DRY) (PSI) MAX	MIN	SHEAR (PLI) MAX	MIN	SECTION (PLI) MAX	MIN
MT20	618	354	1667	788	1987	1656

PLATE PLACEMENT TOL. = 0.250 inches

PLATE ROTATION TOL. = 5.0 Deg.

JSI GRIP= 0.32 (E) (INPUT = 0.90)
JSI METAL= 0.17 (D) (INPUT = 1.00)

LICENSED PROFESSIONAL ENGINEER
08/21/18
H.J.G. ALVES
PROVINCE OF ONTARIO

DWG NO. TAM 17805545
STRUCTURAL COMPONENT ONLY

TOWN OF INNISFIL
2018-0802-0808
REVIEWED
jpenfold
3/19/2021

TOWN OF INNISFIL
2018-0802-0808
REVIEWED
jpenfold
Building Permit Plans

JOB NAME	TRUSS NAME	QUANTITY	PLY	JOB DESC.	DRWG NO.
297079	T15A	5	1	TRUSS DESC.	

Tamarack Roof Truss, Burlington

Version 8.210 S May 18 2018 MiTek Industries, Inc. Mon Aug 20 11:48:14 2018 Page 1
ID:4u167_apsj?wvBfJKDwJbPzNv7w-0B9FuqXd3GxXWOcWf?6wX3LNC8h5K_NNkhEmgGylzz?

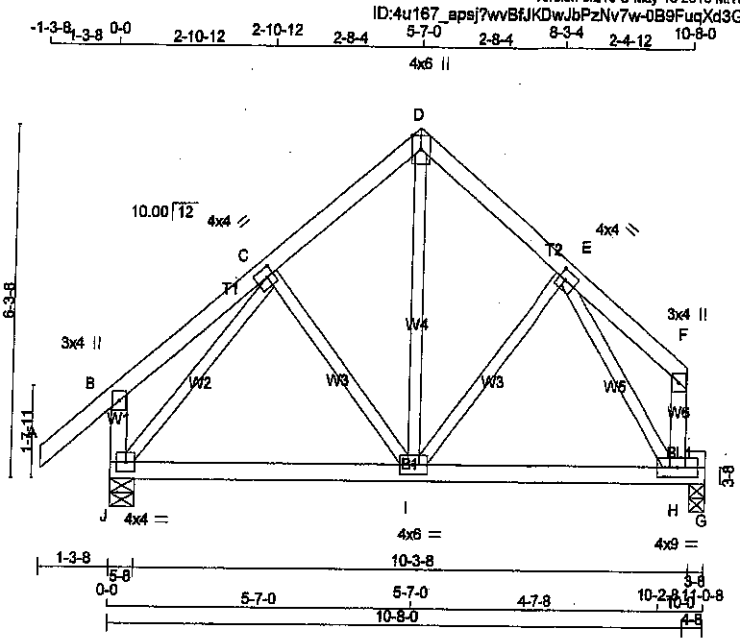

TOTAL WEIGHT = 5 X 53 = 263 lb
[M]

LUMBER
N. L. G. A. RULES

CHORDS	SIZE		LUMBER	DESCR.
A - D	2x4	DRY	No.2	SPF
D - F	2x4	DRY	No.2	SPF
J - B	2x4	DRY	No.2	SPF
H - F	2x4	DRY	No.2	SPF
J - G	2x4	DRY	No.2	SPF
BEARING BLOCKS				
BL1	2x4	DRY	No.2	SPF
ALL WEBS EXCEPT	2x3	DRY	No.2	SPF

DRY: SEASONED LUMBER.

PLATES (table is in inches)

JT	TYPE	PLATES	W	LEN	Y	X
B	TMV+p	MT20	3.0	4.0		
C	TMWW-t	MT20	4.0	4.0	2.00	1.50
D	TTW+p	MT20	4.0	6.0	Edge	
E	TMWW-t	MT20	4.0	4.0	2.00	1.50
F	TMV+p	MT20	3.0	4.0		
H	BMVWK-t	MT20	4.0	9.0		
I	BMWWW-t	MT20	4.0	6.0		
J	BMVW1-t	MT20	4.0	4.0		

Edge - INDICATES REFERENCE CORNER OF PLATE TOUCHES EDGE OF CHORD.

DIMENSIONS, SUPPORTS AND LOADINGS SPECIFIED BY FABRICATOR TO BE VERIFIED BY BUILDING DESIGNER

BEARINGS

JT	FACTORED GROSS REACTION VERT	HORZ	MAXIMUM FACTORED GROSS REACTION DOWN	HORZ	UPLIFT	INPUT BRG IN-SX	REQRD BRG IN-SX
G	881	0	881	0	0	3-8	3-8
J	1107	0	1107	0	0	5-8	5-8

UNFACTORED REACTIONS

JT	1ST LCASE COMBINED	MAX./MIN. COMPONENT REACTIONS SNOW	LIVE	PERM.LIVE	WIND	DEAD	SOIL
G	649	394 / 0	116 / 0	0 / 0	0 / 0	139 / 0	0 / 0
J	803	527 / 0	116 / 0	0 / 0	0 / 0	160 / 0	0 / 0

BEARING MATERIAL TO BE SPF NO.2 OR BETTER AT JOINT(S) G, J

BRACING
TOP CHORD TO BE SHEATHED OR MAX. PURLIN SPACING = 6.25 FT.
MAX. UNBRACED BOTTOM CHORD LENGTH = 10.00 FT OR RIGID CEILING DIRECTLY APPLIED.

ALL PITCH BREAKS AND PERIMETER CORNER JOINTS MUST BE LATERALLY RESTRAINED.

LOADING
TOTAL LOAD CASES: (4)

CHORDS

MEMB. FR-TO	MAX. FACTORED FORCE (LBS)	FACTORED VERT. LOAD (PLF) FROM	TO	LC1 MAX CSI (LC)	MAX. UNBRAC LENGTH
A- B	0 / 57	-129.7	-129.7	0.18 (1)	10.00
B- C	0 / 25	-129.7	-129.7	0.15 (1)	10.00
C- D	-634 / 0	-129.7	-129.7	0.16 (1)	6.25
D- E	-630 / 0	-129.7	-129.7	0.13 (1)	6.25
E- F	0 / 37	-129.7	-129.7	0.13 (1)	10.00
J- B	-319 / 0	0.0	0.0	0.03 (1)	7.81
H- F	-103 / 0	0.0	0.0	0.01 (1)	7.81
J- I	0 / 553	-38.5	-38.5	0.41 (2)	10.00
I- H	0 / 466	-38.5	-38.5	0.69 (1)	10.00
H- G	0 / 0	-38.5	-38.5	0.28 (1)	10.00

WEBS

MEMB. FR-TO	MAX. FACTORED FORCE (LBS)	MAX CSI (LC)
C- I	-138 / 29	0.05 (1)
I- D	0 / 468	0.11 (1)
I- E	0 / 70	0.02 (3)
J- C	-909 / 0	0.30 (1)
E- H	-931 / 0	0.27 (1)

LICENSED PROFESSIONAL ENGINEER
08/20/18
H.J.G. ALVES
PROVINCE OF ONTARIO

DESIGN CRITERIA

SPECIFIED LOADS:

TOP CH.	LL	=	38.2	PSF
	DL	=	6.0	PSF
BOT CH.	LL	=	10.5	PSF
	DL	=	7.0	PSF
TOTAL LOAD		=	61.7	PSF

SPACING = 24.0 IN. C/C

THIS TRUSS IS DESIGNED FOR RESIDENTIAL OR SMALL BUILDING REQUIREMENTS OF PART 9, NBCC 2010, NBCC 2015

THIS DESIGN COMPLIES WITH:
- PART 9 OF OBC 2012, OBC 2018
- CSA 086-09, CSA 086-14
- TPIC 2011, TPIC 2014

(55 % OF 54.3 P.S.F. G.S.L. PLUS 8.4 P.S.F. RAIN LOAD) EQUALS 38.2 P.S.F. SPECIFIED ROOF LIVE LOAD

ALLOWABLE DEFL.(LL)= L/360 (0.37")
CALCULATED VERT. DEFL.(LL) = L/ 999 (0.12")
ALLOWABLE DEFL.(TL)= L/360 (0.37")
CALCULATED VERT. DEFL.(TL) = L/ 685 (0.19")

CSI: TC=0.18/1.00 (A-B:1) , BC=0.69/1.00 (H-I:1) , WB=0.30/1.00 (C-J:1) , SSI=0.34/1.00 (G-H:1)

DOL LUMBER=1.00 NAIL=1.00 LS BEND=1.10 COMP=1.10 SHEAR=1.10 TENS= 1.10

COMPANION LIVE LOAD FACTOR = 1.00

TRUSS PLATE MANUFACTURER IS NOT RESPONSIBLE FOR QUALITY CONTROL IN THE TRUSS MANUFACTURING PLANT .

NAIL VALUES

PLATE	GRIP(DRY) (PSI) MAX	MIN	SHEAR (PLI) MAX	MIN	SECTION (PLI) MAX	MIN
MT20	618	354	1667	788	1987	1656

PLATE PLACEMENT TOL. = 0.250 inches

PLATE ROTATION TOL. = 5.0 Deg.

JSI GRIP= 0.82 (H) (INPUT = 0.90)
JSI METAL= 0.33 (C) (INPUT = 1.00)

DWG NO. TAM 11605223
STRUCTURAL
COMPONENT ONLY

TOWN OF INNISFIL
2018-0802-0808
REVIEWED
jpenfold
Building Permit Plans

JOB NAME	TRUSS NAME	QUANTITY	PLY	JOB DESC.	DRWG NO.
297079	T16	2	4	TRUSS DESC.	

Tamarack Roof Truss, Burlington

Version 8.210 S May 18 2018 MiTek Industries, Inc. Mon Aug 20 11:46:18 2018 Page 1
ID:4u167_apsj?wvBfJKDwJbPzNv7w-uyOmkCb87VSz??wIurAsivW2mi6tGlOzfJCzo1ylzyx

Scale = 1:37.7

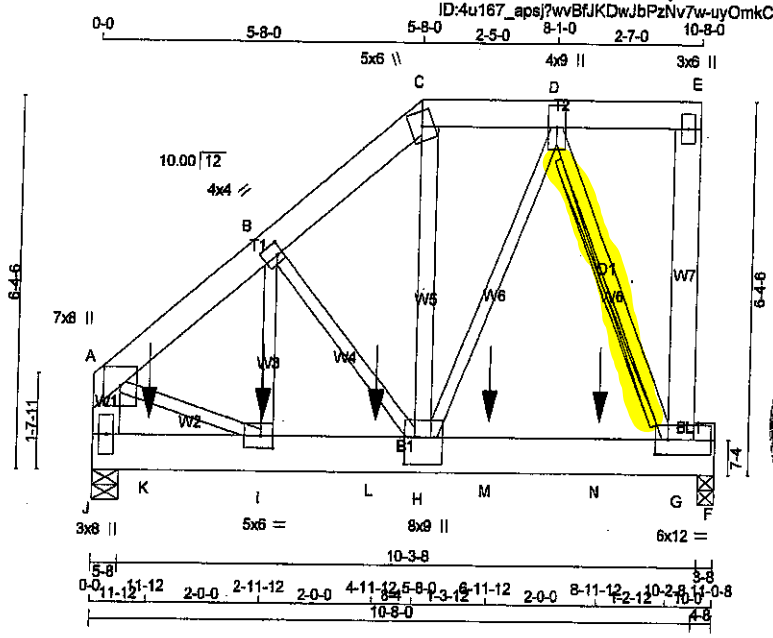

TOTAL WEIGHT = 8 X 84 = 669 lb

[M]

LUMBER

N. L. G. A. RULES

CHORDS	SIZE		LUMBER	DESCR.
A - C	2x6	DRY	No.2	SPF
C - E	2x6	DRY	No.2	SPF
G - E	2x6	DRY	No.2	SPF
J - A	2x6	DRY	No.2	SPF
J - F	2x6	DRY	1950F 1.7E	SPF
BEARING BLOCKS				
BL1	2x4	DRY	No.2	SPF
ALL WEBS EXCEPT	2x3	DRY	No.2	SPF
H - C	2x4	DRY	No.2	SPF

DRY: SEASONED LUMBER.

DESIGN CONSISTS OF 4 TRUSSES BUILT SEPARATELY THEN FASTENED TOGETHER AS FOLLOWS:

CHORDS	#ROWS	SURFACE SPACING (IN)	LOAD(PLF)
TOP CHORDS : (0.122"X3") SPIRAL NAILS			
A- C	2	12	TOP
C- E	2	12	TOP
E- G	2	12	TOP
J- A	2	12	TOP
BOTTOM CHORDS : (0.122"X3") SPIRAL NAILS			
J- F	3	4	SIDE(1989.7)
WEBS : (0.122"X3") SPIRAL NAILS			
2x3	1	6	
2x4	1	6	

STAGGER NAILS BY HALF THE SURFACE SPACING IN ADJACENT PLIES.

IN ADDITION, PRE-DRILL ONE 0.56" DIAM. HOLE IN EACH CHORD PANEL AND INSTALL 0.50" DIAM. ASTM A307 BOLTS WITH WASHERS, BOTH SIDES. FOR OTHER BOLT TYPES SEE CSAO86 3.3.2.

GIRDER NAILING ASSUMES NAILED HANGERS ARE FASTENED WITH MIN. 3-0 INCH NAILS.

TOP - COMPONENTS ARE LOADED FROM THE TOP AND MUST BE PLACED ON TOP EDGE OF ALL PLIES FOR THE LOAD TO BE TRANSFERRED TO EACH PLY.

SIDE - PLF SHOWN IS THE EQUIVALENT UDL APPLIED TO ONE SIDE THAT THE CORRESPONDING NAILING PATTERN SHALL BE CAPABLE OF TRANSFERING. REMAINING PLF MUST BE APPLIED ON THE OPPOSITE SIDE OR ON THE TOP.

PLATES (table is in inches)

JT	TYPE	PLATES	W	LEN	Y	X
A	TMVW+p	MT20	7.0	8.0		
B	TMWW-t	MT20	4.0	4.0	2.50	1.25
C	TTW+m	MT20	5.0	6.0		
D	TMWW+t	MT20	4.0	9.0		
E	TMV+p	MT20	3.0	6.0		
G	BMVWK-t	MT20	6.0	12.0	3.00	2.75
H	BMWWW+t	MT20	8.0	9.0	5.50	2.00
I	BMWW-t	MT20	5.0	6.0	2.50	2.50
J	BMV1+p	MT20	3.0	8.0		

HANGERS NOTES

DIMENSIONS, SUPPORTS AND LOADINGS SPECIFIED BY FABRICATOR TO BE VERIFIED BY BUILDING DESIGNER

BEARINGS

JT	FACTORED GROSS REACTION VERT	HORZ	MAXIMUM FACTORED GROSS REACTION DOWN	HORZ	UPLIFT	INPUT BRG IN-SX	REQRD BRG IN-SX
J	10628	0	10628	0	0	5-8	5-8
F	8970	0	8970	0	0	3-8	3-8

UNFACTORED REACTIONS

JT	1ST LCASE COMBINED	MAX./MIN. COMPONENT REACTIONS SNOW	LIVE	PERM.LIVE	WIND	DEAD	SOIL
J	7755	4962 / 0	1228 / 0	0 / 0	0 / 0	1566 / 0	0 / 0
F	6545	4190 / 0	1034 / 0	0 / 0	0 / 0	1321 / 0	0 / 0

BEARING MATERIAL TO BE SPF NO.2 OR BETTER AT JOINT(S) J, F

BRACING

TOP CHORD TO BE SHEATHED OR MAX. PURLIN SPACING = 5.28 FT.
MAX. UNBRACED BOTTOM CHORD LENGTH = 10.00 FT OR RIGID CEILING DIRECTLY APPLIED.

ALL PITCH BREAKS AND PERIMETER CORNER JOINTS MUST BE LATERALLY RESTRAINED.

2x8 DRY SPF No.2 T-BRACE AT D-G

FASTEN T AND I-BRACES TO NARROW EDGE OF WEB WITH ONE ROW PER PLY OF 3" COMMON WIRE NAILS @ 6" O.C. WITH 3" MINIMUM END DISTANCE. BRACE MUST COVER 90% OF WEB LENGTH.

END VERTICAL(S) MUST BE SHEATHED OR HAVE BRACES AS INDICATED IN THE MAX. UNBRACED LENGTH COLUMN OF THE TABLE BELOW

LOADING

TOTAL LOAD CASES: (4)

CHORDS

MEMB. FR-TO	MAX. FACTORED FORCE (LBS)	FACTORED VERT. LOAD (PLF) FROM	TO	LC1 MAX CSI (LC)	MAX. UNBRAC LENGTH
A- B	-8531 / 0	-129.7	-129.7	0.08 (1)	5.28
B- C	-7409 / 0	-129.7	-129.7	0.07 (1)	5.58
C- D	-5804 / 0	-129.7	-129.7	0.04 (1)	6.15
D- E	0 / 8	-129.7	-129.7	0.03 (1)	10.00
G- E	-194 / 0	0.0	0.0	0.02 (1)	7.81
J- A	-7916 / 0	0.0	0.0	0.14 (1)	6.88
J- K	0 / 0	-38.5	-38.5	0.17 (1)	10.00
K- I	0 / 0	-38.5	-38.5	0.17 (1)	10.00
I- L	0 / 6520	-38.5	-38.5	0.38 (1)	10.00
L- H	0 / 6520	-38.5	-38.5	0.38 (1)	10.00
H- M	0 / 2987	-38.5	-38.5	0.51 (1)	10.00
M- N	0 / 2987	-38.5	-38.5	0.51 (1)	10.00
N- G	0 / 2987	-38.5	-38.5	0.51 (1)	10.00
G- F	0 / 0	-168.2	-168.2	0.26 (1)	10.00

WEBS

MEMB. FR-TO	MAX. FACTORED FORCE (LBS)	MAX CSI (LC)
H- C	0 / 4305	0.17 (1)
I- B	0 / 1472	0.06 (1)
B- H	-1356 / 0	0.10 (1)
A- I	0 / 6885	0.39 (1)
H- D	0 / 7761	0.44 (1)
D- G	-8001 / 0	0.49 (1)

SPECIFIED CONCENTRATED LOADS (LBS)

JT	LOC.	LC1	MAX-	MAX+	FACE	DIR.	TYPE
I	2-11-12	-2583	-2583	—	FRONT	VERT	TOTAL
K	11-12	-2583	-2583	—	FRONT	VERT	TOTAL
L	4-11-12	-2585	-2585	---	FRONT	VERT	TOTAL
M	6-11-12	-2583	-2583	---	FRONT	VERT	TOTAL
N	8-11-12	-2583	-2583	---	FRONT	VERT	TOTAL

DESIGN CRITERIA

SPECIFIED LOADS:

TOP CH.	LL	=	38.2	PSF
	DL	=	6.0	PSF
BOT CH.	LL	=	10.5	PSF
	DL	=	7.0	PSF
TOTAL LOAD		=	61.7	PSF

SPACING = 24.0 IN. C/C

LOADING IN FLAT SECTION BASED ON A SLOPE OF 6.00/12

THIS TRUSS IS DESIGNED FOR RESIDENTIAL OR SMALL BUILDING REQUIREMENTS OF PART 9, NBCC 2010, NBCC 2015

THIS DESIGN COMPLIES WITH:
- PART 9 OF OBC 2012, OBC 2018
- CSA 086-09, CSA 086-14
- TPIC 2011, TPIC 2014

(55 % OF 54.3 P.S.F. G.S.L. PLUS 8.4 P.S.F. RAIN LOAD) EQUALS 38.2 P.S.F. SPECIFIED ROOF LIVE LOAD

ALLOWABLE DEFL.(LL)= L/360 (0.37")
CALCULATED VERT. DEFL.(LL) = L/ 999 (0.07")
ALLOWABLE DEFL.(TL)= L/360 (0.37")
CALCULATED VERT. DEFL.(TL) = L/ 999 (0.11")

CSI: TC=0.14/1.00 (A-J:1) , BC=0.51/1.00 (G-H:1) , WB=0.49/1.00 (D-G:1) , SSI=0.87/1.00 (G-H:1)

DOL LUMBER=1.00 NAIL=1.00 LS BEND=1.10 COMP=1.10 SHEAR=1.10 TENS= 1.10

COMPANION LIVE LOAD FACTOR = 1.00

AUTOSOLVE RIGHT HEEL ONLY

TRUSS PLATE MANUFACTURER IS NOT RESPONSIBLE FOR QUALITY CONTROL IN THE TRUSS MANUFACTURING PLANT .

NAIL VALUES

PLATE	GRIP(DRY) (PSI) MAX	MIN	SHEAR (PLI) MAX	MIN	SECTION (PLI) MAX	MIN
MT20	618	354	1667	788	1987	1656

PLATE PLACEMENT TOL. = 0.250 inches

PLATE ROTATION TOL. = 5.0 Deg.

JSI GRIP= 0.85 (G) (INPUT = 0.90)
JSI METAL= 0.65 (D) (INPUT = 1.00)

LICENSED PROFESSIONAL ENGINEER
08/20/18
H.J.G. ALVES
PROVINCE OF ONTARIO

DWG NO. TAM 71805224
STRUCTURAL
COMPONENT ONLY 1/2

CONTINUED ON PAGE 2

TOWN OF INNISFIL
2018-0802-0808
REVIEWED
jpenfold
Building Permit Plans

JOB NAME	TRUSS NAME	QUANTITY	PLY	JOB DESC.	DRWG NO.
297079	T16	2	4	TRUSS DESC.	

Tamarack Roof Truss, Burlington

Version 8.210 S May 16 2018 MiTek Industries, Inc. Mon Aug 20 11:48:18 2018 Page 2
ID:4u167_apsj?wvBfJKDwJbPzNv7w-uyOmkCb87VSz??wIurAsivW2mI6tGlOzfJCzo1yIzyx

HANGERS NOTES

1) SPECIAL HANGER(S) OR CONNECTION(S) REQUIRED TO SUPPORT CONCENTRATED LOAD(S) 3542.3 lbs FACTORED DOWN AT 11-12, 3541.7 lbs FACTORED DOWN AT 2-11-12, 3544.0 lbs FACTORED DOWN AT 4-11-12, AND 3541.7 lbs FACTORED DOWN AT 6-11-12, AND 3541.7 lbs FACTORED DOWN AT 8-11-12 ON BOTTOM CHORD. DESIGN FOR UNSPECIFIED CONNECTION(S) IS DELEGATED TO THE BUILDING DESIGNER.

LICENSED PROFESSIONAL ENGINEER
08/20/18
H.J.G. ALVES
PROVINCE OF ONTARIO

DWG NO. TAM T1805224
STRUCTURAL
COMPONENT ONLY 2/2

TOWN OF INNISFIL
2018-0802-0808
REVIEWED
jpenfold
Building Permit Plans

JOB NAME	TRUSS NAME	QUANTITY	PLY	JOB DESC.	DRWG NO.
297079	T17	1	1	TRUSS DESC.	

Tamarack Roof Truss, Burlington

Version 8.210 S May 18 2018 MiTek Industries, Inc. Mon Aug 20 11:48:22 2018 Page 1
ID:4u167_apsj?wvBfJKDwJbPzNv7w-njeHaZeeBjyPUdD37hFosIgeQMSkCbCZaxABxoylzyt

Scale = 1:29.3

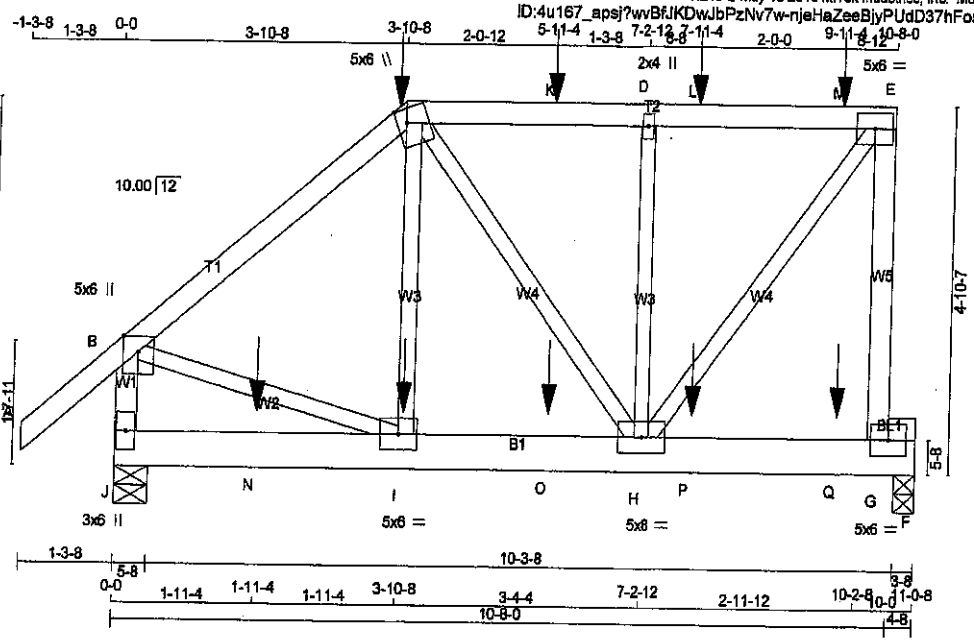

TOTAL WEIGHT = 60 lb
[M]

LUMBER

N. L. G. A. RULES

CHORDS	SIZE		LUMBER	DESCR.
A - C	2x4	DRY	No.2	SPF
C - E	2x4	DRY	No.2	SPF
G - E	2x4	DRY	No.2	SPF
J - B	2x4	DRY	No.2	SPF
J - F	2x6	DRY	No.2	SPF
BEARING BLOCKS				
BL1	2x4	DRY	No.2	SPF
ALL WEBS EXCEPT	2x3	DRY	No.2	SPF

DRY: SEASONED LUMBER.

PLATES (table is in inches)

JT	TYPE	PLATES	W	LEN	Y	X
B	TMWW+p	MT20	5.0	6.0	Edge	
C	TTWW+m	MT20	5.0	6.0	2.25	1.50
D	TMW+w	MT20	2.0	4.0		
E	TMWW-t	MT20	5.0	6.0		
G	BMVK-t	MT20	5.0	6.0		
H	BMWWW-t	MT20	5.0	8.0		
I	BMWW-t	MT20	5.0	6.0		
J	BMV1+p	MT20	3.0	6.0		

Edge - INDICATES REFERENCE CORNER OF PLATE TOUCHES EDGE OF CHORD.

HANGERS NOTES

1) SPECIAL HANGER(S) OR CONNECTION(S) REQUIRED TO SUPPORT CONCENTRATED LOAD(S) 281.9 lbs FACTORED DOWN AT 3-10-8, 121.6 lbs FACTORED DOWN AT 5-11-4, AND 121.6 lbs FACTORED DOWN AT 7-11-4, AND 139.1 lbs FACTORED DOWN AT 9-11-4 ON TOP CHORD, AND 36.3 lbs FACTORED DOWN AT 1-11-4, 45.9 lbs FACTORED DOWN AT 3-11-4, 45.9 lbs FACTORED DOWN AT 5-11-4, AND 45.9 lbs FACTORED DOWN AT 7-11-4, AND 45.9 lbs FACTORED DOWN AT 9-11-4 ON BOTTOM CHORD. DESIGN FOR UNSPECIFIED CONNECTION(S) IS DELEGATED TO THE BUILDING DESIGNER.

LICENSED PROFESSIONAL ENGINEER
08/20/18
H.J.G. AUBS
PROVINCE OF ONTARIO

DIMENSIONS, SUPPORTS AND LOADINGS SPECIFIED BY FABRICATOR TO BE VERIFIED BY BUILDING DESIGNER

BEARINGS

JT	FACTORED GROSS REACTION VERT	HORZ	MAXIMUM FACTORED GROSS REACTION DOWN	HORZ	UPLIFT	INPUT BRG IN-SX	REQRD BRG IN-SX
J	1466	0	1466	0	0	5-8	5-8
F	1352	0	1352	0	0	3-8	3-8

UNFACTORED REACTIONS

JT	1ST LCASE COMBINED	MAX./MIN. COMPONENT REACTIONS SNOW	LIVE	PERM.LIVE	WIND	DEAD	SOIL
J	1067	669 / 0	161 / 0	0 / 0	0 / 0	217 / 0	0 / 0
F	993	613 / 0	170 / 0	0 / 0	0 / 0	210 / 0	0 / 0

BEARING MATERIAL TO BE SPF NO.2 OR BETTER AT JOINT(S) J, F

BRACING

TOP CHORD TO BE SHEATHED OR MAX. PURLIN SPACING = 5.48 FT.
MAX. UNBRACED BOTTOM CHORD LENGTH = 6.25 FT OR RIGID CEILING DIRECTLY APPLIED.

ALL PITCH BREAKS AND PERIMETER CORNER JOINTS MUST BE LATERALLY RESTRAINED.

LOADING

TOTAL LOAD CASES: (4)

CHORDS

MEMB. FR-TO	MAX. FACTORED FORCE (LBS)	FACTORED VERT. LOAD LC1 (PLF) FROM	TO	MAX CSI (LC)	MAX. UNBRAC LENGTH
A- B	0 / 57	-129.7	-129.7	0.20 (1)	10.00
B- C	-1083 / 0	-129.7	-129.7	0.40 (1)	5.48
C- K	-872 / 0	-129.7	-129.7	0.40 (1)	5.93
K- D	-872 / 0	-129.7	-129.7	0.40 (1)	5.93
D- L	-872 / 0	-129.7	-129.7	0.40 (1)	5.93
L- M	-872 / 0	-129.7	-129.7	0.40 (1)	5.93
M- E	-872 / 0	-129.7	-129.7	0.40 (1)	5.93
G- E	-1488 / 0	0.0	0.0	0.55 (1)	6.68
J- B	-1362 / 0	0.0	0.0	0.16 (1)	6.88
J- N	0 / 0	-38.5	-38.5	0.08 (2)	10.00
N- I	0 / 0	-38.5	-38.5	0.08 (2)	10.00
I- O	0 / 828	-38.5	-38.5	0.21 (1)	10.00
O- H	0 / 828	-38.5	-38.5	0.21 (1)	10.00
H- P	-48 / 0	-38.5	-38.5	0.51 (1)	6.25
P- Q	-48 / 0	-38.5	-38.5	0.51 (1)	6.25
Q- G	-48 / 0	-38.5	-38.5	0.51 (1)	6.25
G- F	0 / 0	-38.5	-38.5	0.32 (1)	10.00

WEBS

MEMB. FR-TO	MAX. FACTORED FORCE (LBS)	MAX CSI (LC)
I- C	-90 / 161	0.04 (3)
C- H	0 / 74	0.02 (1)
H- D	-785 / 0	0.27 (1)
H- E	0 / 1516	0.38 (1)
B- I	0 / 868	0.21 (1)

SPECIFIED CONCENTRATED LOADS (LBS)

JT	LOC.	LC1	MAX-	MAX+	FACE	DIR.	TYPE
C	3-10-8	-195	-195	—	FRONT	VERT	TOTAL
I	3-11-4	-33	-33	—	FRONT	VERT	TOTAL
K	5-11-4	-83	-83	—	FRONT	VERT	TOTAL
L	7-11-4	-83	-83	—	FRONT	VERT	TOTAL
M	9-11-4	-95	-95	—	FRONT	VERT	TOTAL
N	1-11-4	-22	-26	—	FRONT	VERT	TOTAL
O	5-11-4	-33	-33	—	FRONT	VERT	TOTAL
P	7-11-4	-33	-33	—	FRONT	VERT	TOTAL
Q	9-11-4	-33	-33	—	FRONT	VERT	TOTAL

DESIGN CRITERIA

SPECIFIED LOADS:

TOP CH.	LL	=	38.2	PSF
	DL	=	6.0	PSF
BOT CH.	LL	=	10.5	PSF
	DL	=	7.0	PSF
TOTAL LOAD		=	61.7	PSF

SPACING = 24.0 IN. C/C

LOADING IN FLAT SECTION BASED ON A SLOPE OF 6.00/12

THIS TRUSS IS DESIGNED FOR RESIDENTIAL OR SMALL BUILDING REQUIREMENTS OF PART 9, NBCC 2010, NBCC 2015

THIS DESIGN COMPLIES WITH:
- PART 9 OF OBC 2012, OBC 2018
- CSA 086-09, CSA 086-14
- TPIC 2011, TPIC 2014

(55 % OF 54.3 P.S.F. G.S.L. PLUS 8.4 P.S.F. RAIN LOAD) EQUALS 38.2 P.S.F. SPECIFIED ROOF LIVE LOAD

ALLOWABLE DEFL.(LL)= L/360 (0.37")
CALCULATED VERT. DEFL.(LL) = L/ 999 (0.04")
ALLOWABLE DEFL.(TL)= L/360 (0.37")
CALCULATED VERT. DEFL.(TL) = L/ 999 (0.06")

CSI: TC=0.55/1.00 (E-G:1) , BC=0.51/1.00 (G-H:1) , WB=0.38/1.00 (E-H:1) , SSI=0.55/1.00 (F-G:1)

DOL LUMBER=1.00 NAIL=1.00 LS BEND=1.00 COMP=1.00 SHEAR=1.00 TENS= 1.00

COMPANION LIVE LOAD FACTOR = 1.00

TRUSS PLATE MANUFACTURER IS NOT RESPONSIBLE FOR QUALITY CONTROL IN THE TRUSS MANUFACTURING PLANT .

NAIL VALUES

PLATE	GRIP(DRY) (PSI) MAX	MIN	SHEAR (PLI) MAX	MIN	SECTION (PLI) MAX	MIN
MT20	618	354	1667	788	1987	1656

PLATE PLACEMENT TOL. = 0.250 inches

PLATE ROTATION TOL. = 5.0 Deg.

JSI GRIP= 0.90 (H) (INPUT = 0.90)
JSI METAL= 0.45 (B) (INPUT = 1.00)

DWG NO. TAM T1805225
STRUCTURAL
COMPONENT ONLY

TOWN OF INNISFIL
2018-0802-0808
REVIEWED
jpenfold
3/19/2021
Building Permit Plans

JOB NAME	TRUSS NAME	QUANTITY	PLY	JOB DESC.	DRWG NO.
297079	T21	2	1	TRUSS DESC.	

Tamarack Roof Truss, Burlington

Version 8.210 S May 18 2018 MiTek Industries, Inc. Mon Aug 20 11:48:26 2018 Page 1
ID:4u167_apsj?wv8fJKDwJbPzNv7w-fVtnPxh9EySqyEXqMWKk0brlwzsk8Ke8VZ8O4Zylzyp

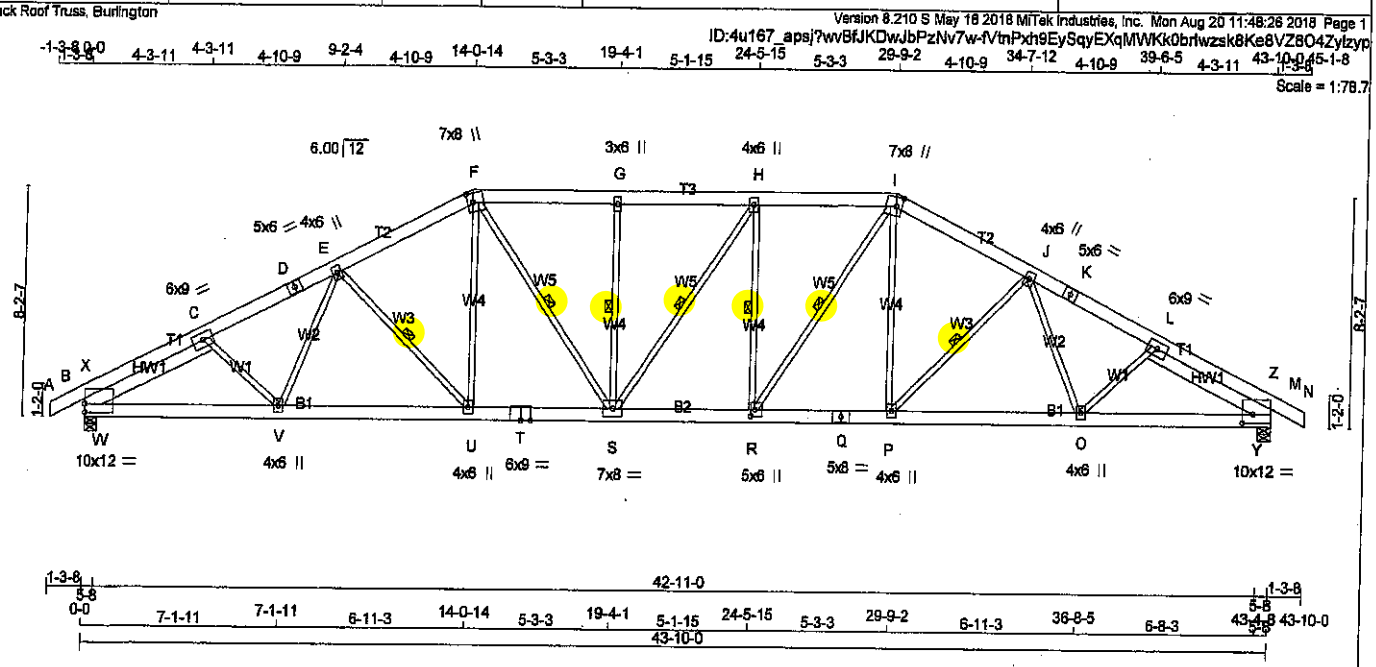

TOTAL WEIGHT = 2 X 258 = 516 lb

LUMBER
N. L. G. A. RULES

CHORDS	SIZE		LUMBER	DESCR.
A - D	2x6	DRY	No.2	SPF
D - F	2x6	DRY	No.2	SPF
F - I	2x6	DRY	No.2	SPF
I - K	2x6	DRY	No.2	SPF
K - N	2x6	DRY	No.2	SPF
B - T	2x6	DRY	2100F 1.8E	SPF
T - Q	2x6	DRY	2100F 1.8E	SPF
Q - M	2x6	DRY	2100F 1.8E	SPF
REINFORCING MEMBERS				
HW1	2x6	DRY	No.2	SPF
HW2	2x6	DRY	No.2	SPF
ALL WEBS	2x3	DRY	No.2	SPF

DRY: SEASONED LUMBER.

PLATES (table is in inches)

JT	TYPE	PLATES	W	LEN	Y	X
B	TMBMW1-I	MT20	10.0	12.0	3.75	
C	TMWW-t	MT20	6.0	9.0		
D	TS-t	MT20	5.0	6.0		
E, H, J						
E	TMWW+t	MT20	4.0	6.0		
F	TTWW+m	MT20	7.0	8.0	4.00	2.50
G	TMW+w	MT20	3.0	6.0		
I	TTWW+m	MT20	7.0	8.0	4.00	2.50
K	TS-t	MT20	5.0	6.0		
L	TMWW-t	MT20	6.0	9.0		
M	TMBMW1-I	MT20	10.0	12.0	3.75	4.50
O, P, U, V						
O	BMWW+t	MT20	4.0	6.0		
Q	BS-t	MT20	5.0	8.0		
R	BMWW+t	MT20	5.0	6.0	3.00	1.75
S	BMWWW-t	MT20	7.0	8.0		
T	BS-t	MT20	6.0	9.0		

DIMENSIONS, SUPPORTS AND LOADINGS SPECIFIED BY FABRICATOR TO BE VERIFIED BY BUILDING DESIGNER

BEARINGS

JT	FACTORED GROSS REACTION VERT	HORZ	MAXIMUM GROSS REACTION DOWN	HORZ	UPLIFT	FACTORED BRG IN-SX	INPUT BRG IN-SX	REQRD BRG IN-SX
B	4816	0	5151	217	-1063	5-8	5-8	5-8 - 2TBEC
M	4816	0	5151	0	-1063	5-8	5-8	2TBEC

PROVIDE ANCHORAGE AT BEARING JOINT B FOR 1063 LBS FACTORED UPLIFT
PROVIDE ANCHORAGE AT BEARING JOINT M FOR 1063 LBS FACTORED UPLIFT

NOTE: ANCHORAGE REQUIRED FOR LARGE UPLIFT FORCES. SHALL BE PROVIDED BY BUILDG. DESIGNER

PROVIDE FOR 217 LBS FACTORED HORIZONTAL REACTION AT JOINT B OK

UNFACTORED REACTIONS

JT	1ST LCASE COMBINED	MAX./MIN. COMPONENT REACTIONS SNOW	LIVE	PERM.LIVE	WIND	DEAD	SOIL
B	3462	2638 / 0	460 / 0	0 / 0	183 / -1136	587 / 0	0 / 0
M	3462	2638 / 0	460 / 0	0 / 0	66 / -1136	587 / 0	0 / 0
HORIZONTAL REACTIONS							
B	—	0 / 0	0 / 0	0 / 0	155 / -155	0 / 0	0 /0

BEARING MATERIAL TO BE SPF NO.2 OR BETTER AT JOINT(S) B, M

BRACING
MAX. UNBRACED TOP CHORD LENGTH = 2.71 FT.
MAX. UNBRACED BOTTOM CHORD LENGTH = 6.25 FT OR RIGID CEILING DIRECTLY APPLIED.

ALL PITCH BREAKS AND PERIMETER CORNER JOINTS MUST BE LATERALLY RESTRAINED.

1 LATERAL BRACE(S) AT 1/2 LENGTH OF E-U, J-P, I-R, F-S, H-R, G-S, H-S.

LOADING
TOTAL LOAD CASES: (18)

CHORDS

MEMB. FR-TO	MAX. FACTORED FORCE (LBS)	FACTORED VERT. LOAD (PLF) FROM	TO	LC1 MAX CSI (LC)	MAX. UNBRAC LENGTH
A- B	0 / 2	-170.4	-170.4	0.13 (2)	10.00
B- X	-5626 / 1026	-170.4	-170.4	0.39 (2)	3.38
X- C	-3263 / 745	-170.4	-170.4	0.30 (2)	4.42
C- D	-7437 / 1649	-170.4	-170.4	0.64 (2)	2.71
D- E	-7437 / 1649	-170.4	-170.4	0.64 (2)	2.71
E- F	-6504 / 1549	-170.4	-170.4	0.58 (2)	2.98
F- G	-6433 / 1597	-170.4	-170.4	0.57 (2)	3.01
G- H	-6433 / 1597	-170.4	-170.4	0.57 (2)	3.00
H- I	-6447 / 1602	-170.4	-170.4	0.58 (3)	2.99
I- J	-6502 / 1548	-170.4	-170.4	0.58 (3)	2.98
J- K	-7438 / 1650	-170.4	-170.4	0.64 (3)	2.71
K- L	-7438 / 1650	-170.4	-170.4	0.64 (3)	2.71
L- Z	-3261 / 746	-170.4	-170.4	0.30 (3)	4.42
Z- M	-5623 / 1026	-170.4	-170.4	0.39 (3)	3.38
M- N	0 / 2	-170.4	-170.4	0.13 (3)	10.00
B- W	-743 / 2892	-38.5	-38.5	0.14 (2)	6.25
W- V	-1493 / 6579	-38.5	-38.5	0.38 (2)	6.25
V- U	-1413 / 6631	-38.5	-38.5	0.38 (2)	6.25
U- T	-1117 / 5789	-38.5	-38.5	0.33 (2)	6.25
T- S	-1117 / 5789	-38.5	-38.5	0.33 (2)	6.25
S- R	-1200 / 6447	-38.5	-38.5	0.35 (3)	6.25
R- Q	-950 / 5787	-38.5	-38.5	0.33 (3)	6.25
Q- P	-950 / 5787	-38.5	-38.5	0.33 (3)	6.25
P- O	-1197 / 6631	-38.5	-38.5	0.38 (3)	6.25
O- Y	-1278 / 6579	-38.5	-38.5	0.38 (3)	6.25
Y- M	-527 / 2891	-38.5	-38.5	0.14 (3)	6.25

WEBS

MEMB. FR-TO	MAX. FACTORED FORCE (LBS)	MAX CSI (LC)
C- V	0 / 605	0.14 (3)
V- E	-296 / 229	0.14 (10)
E- U	-1216 / 425	0.43 (2)
U- F	-235 / 1153	0.27 (13)
P- I	-229 / 1135	0.26 (14)
P- J	-1219 / 426	0.43 (3)
J- O	-284 / 238	0.14 (9)
O- L	0 / 606	0.14 (2)
R- I	-444 / 2097	0.47 (2)
F- S	-433 / 2065	0.46 (3)
R- H	-1548 / 427	0.60 (2)
S- G	-1143 / 343	0.44 (2)
S- H	-543 / 484	0.32 (3)
W- X	-392 / 2890	0.00 (1)
W- C	-4585 / 934	0.89 (2)
L- Y	-4586 / 934	0.89 (3)
Y- Z	-394 / 2887	0.00 (1)

DWG NO. TAM 71805226
STRUCTURAL
COMPONEMT ONLY

LICENSED PROFESSIONAL ENGINEER
08/20/18
H.J.G. ALVES
PROVINCE OF ONTARIO

(M)

DESIGN CRITERIA

SPECIFIED LOADS:

TOP CH.	LL	=	51.8	PSF
	DL	=	6.0	PSF
BOT CH.	LL	=	10.5	PSF
	DL	=	7.0	PSF
TOTAL LOAD		=	75.3	PSF

SPACING = 24.0 IN. C/C

LOADING IN FLAT SECTION BASED ON A SLOPE OF 6.00/12

THIS TRUSS IS DESIGNED FOR COMMERCIAL OR INDUSTRIAL BUILDING REQUIREMENTS OF PART 4, NBCC 2010, NBCC 2015

THIS DESIGN COMPLIES WITH:
- PART 4 OF OBC 2012, OBC 2018
- CSA 086-09, CSA 086-14
- TPIC 2011, TPIC 2014

DESIGN ASSUMPTIONS
- SLOPE REDUCTION FACTOR NOT USED

(60 % OF 54.3 P.S.F. G.S.L. PLUS 8.4 P.S.F. RAIN LOAD) TIMES IMPORTANCE FACTOR EQUALS 51.8 P.S.F. SPECIFIED ROOF LIVE LOAD

ALLOWABLE DEFL.(LL)= L/360 (1.46")
CALCULATED VERT. DEFL.(LL) = L/ 999 (0.28")
ALLOWABLE DEFL.(TL)= L/180 (2.92")
CALCULATED VERT. DEFL.(TL) = L/ 999 (0.35")

CSI: TC=0.64/1.00 (J-L:3) , BC=0.38/1.00 (V-W:2) , WB=0.89/1.00 (L-Y:3) , SSI=0.38/1.00 (H-I:3)

DOL LUMBER=1.00 NAIL=1.00 LS BEND=1.10 COMP=1.10 SHEAR=1.10 TENS= 1.10

SNOW LOAD IMPORTANCE FACTOR = 1.00
WIND LOAD IMPORTANCE FACTOR = 1.00
LIVE LOAD IMPORTANCE FACTOR = 1.00
COMPANION LIVE LOAD FACTOR = 1.00

AUTOSOLVE HEELS OFF

TRUSS PLATE MANUFACTURER IS NOT RESPONSIBLE FOR QUALITY CONTROL IN THE TRUSS MANUFACTURING PLANT .

NAIL VALUES

PLATE	GRIP(DRY) (PSI) MAX	MIN	SHEAR (PLI) MAX	MIN	SECTION (PLI) MAX	MIN
MT20	618	354	1667	768	1987	1656

PLATE PLACEMENT TOL. = 0.250 inches

PLATE ROTATION TOL. = 5.0 Deg.

JSI GRIP= 0.89 (R) (INPUT = 0.90)
JSI METAL= 0.99 (Q) (INPUT = 1.00)

1/2

CONTINUED ON PAGE 2

TOWN OF INNISFIL
2018-0802-0808
REVIEWED
jpenfold
Building Permit Plans

JOB NAME	TRUSS NAME	QUANTITY	PLY	JOB DESC.	DRWG NO.
297079	T21	2	1	TRUSS DESC.	

Tamarack Roof Truss, Burlington

TRUSS HAS BEEN CHECKED FOR UNBALANCED LOADING
AS PER NBCC 4.1.6.2.(8)

WIND LOAD APPLIED IS DERIVED FROM REFERENCE VELOCITY PRESSURE OF { 9.6} PSF AT {40-0-0} FT-IN-SX REFERENCE HEIGHT ABOVE GRADE AND USING EXTERNAL PEAK COEFFICIENTS, CpCg, BASED ON THE {MAIN WIND FORCE RESISTING SYSTEM}.INTERNAL WIND PRESSURE IS BASED ON DESIGN {CATEGORY 2}. BUILDING MAY BE LOCATED ON {OPEN TERRAIN}, AND TRUSS IS DESIGNED TO BE LOCATED AT LEAST {0-0} FT-IN-SX AWAY FROM EAVE.

LICENSED PROFESSIONAL ENGINEER
08/20/18
H.J.G. AHGS
PROVINCE OF ONTARIO

DWG NO. TAM 11805226
STRUCTURAL
COMPONENT ONLY 2/2

JOB NAME	TRUSS NAME	QUANTITY	PLY	JOB DESC.	DRWG NO.
297079	T22	2	1	TRUSS DESC.	

Tamarack Roof Truss, Burlington

Version 8.210 S May 18 2018 MiTek Industries, Inc. Mon Aug 20 11:48:30 2018 Pa
ID:4u167_apsj?wvBfJKDwJbPzNv7w-YG7IFJkfIAyGRrqbbMOgBR?xiaEs47OkPB6cDK

Scale = 1:

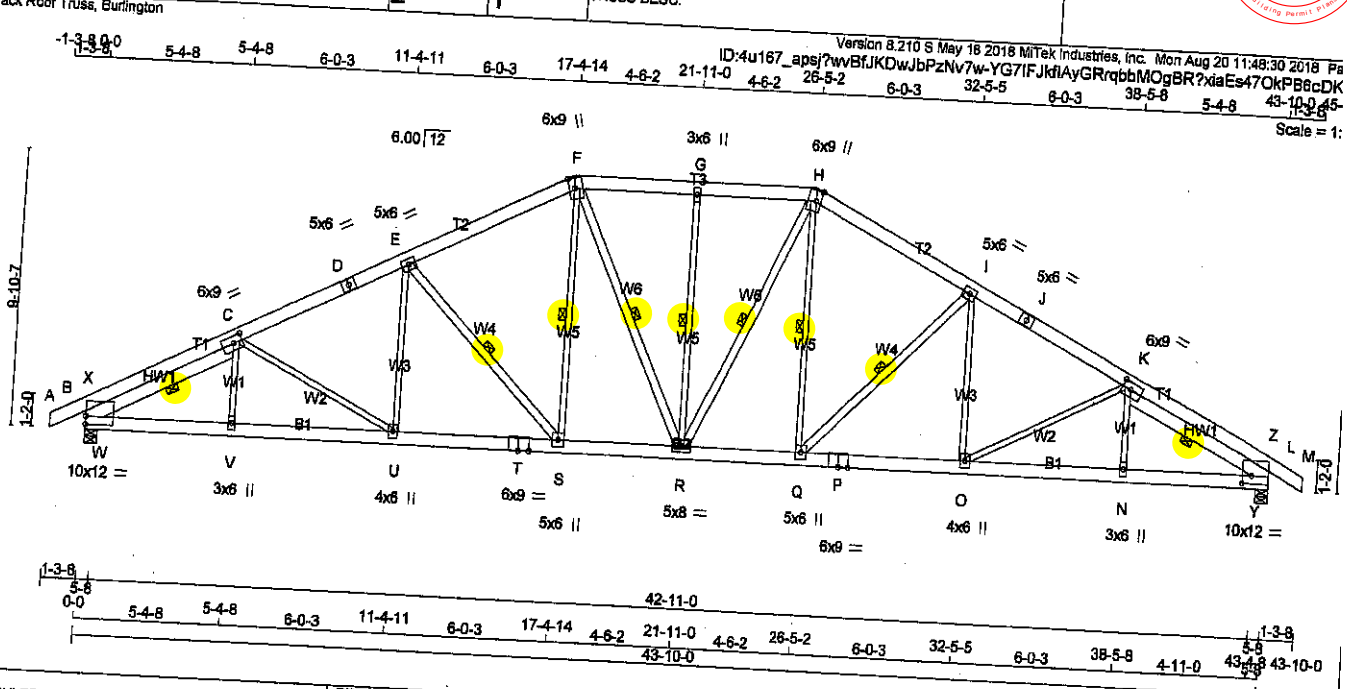

LUMBER

N. L. G. A. RULES

CHORDS	SIZE		LUMBER	DESCR.
A - D	2x6	DRY	No.2	SPF
D - F	2x6	DRY	No.2	SPF
F - H	2x6	DRY	No.2	SPF
H - J	2x6	DRY	No.2	SPF
J - M	2x6	DRY	No.2	SPF
B - T	2x6	DRY	2100F 1.8E	SPF
T - P	2x6	DRY	2100F 1.8E	SPF
P - L	2x6	DRY	2100F 1.8E	SPF
REINFORCING MEMBERS				
HW1	2x6	DRY	No.2	SPF
HW2	2x6	DRY	No.2	SPF
ALL WEBS EXCEPT	2x3	DRY	No.2	SPF
E - S	2x4	DRY	No.2	SPF
F - R	2x4	DRY	No.2	SPF
R - H	2x4	DRY	No.2	SPF
Q - I	2x4	DRY	No.2	SPF

DRY: SEASONED LUMBER.

PLATES (table is in inches)

JT	TYPE	PLATES	W	LEN	Y	X
B	TMBMW1-I	MT20	10.0	12.0	3.50	
C	TMWWW-t	MT20	6.0	9.0	3.00	4.00
D	TS-t	MT20	5.0	6.0		
E	TMWW-t	MT20	5.0	6.0		
F	TTWW+m	MT20	6.0	9.0	Edge 2.25	
G	TMW+w	MT20	3.0	6.0		
H	TTWW+m	MT20	6.0	9.0	Edge 2.25	
I	TMWW-t	MT20	5.0	6.0		
J	TS-t	MT20	5.0	6.0		
K	TMWWW-t	MT20	6.0	9.0	3.00	4.00
L	TMBMW1-I	MT20	10.0	12.0	3.50	4.50
N	BMW+w	MT20	3.0	6.0		
O	BMWW+t	MT20	4.0	6.0		
P	BS-t	MT20	6.0	9.0		
Q	BMWW+t	MT20	5.0	6.0		
R	BMWWW-t	MT20	5.0	8.0		
S	BMWW+t	MT20	5.0	6.0		
T	BS-t	MT20	6.0	9.0		
U	BMWW+t	MT20	4.0	6.0		
V	BMW+w	MT20	3.0	6.0		

Edge - INDICATES REFERENCE CORNER OF PLATE TOUCHES EDGE OF CHORD

LICENSED PROFESSIONAL ENGINEER
08/20/18
H.J.G. ALVES
PROVINCE OF ONTARIO

DIMENSIONS, SUPPORTS AND LOADINGS SPECIFIED BY FABRICATOR TO BE VERIFIED BY BUILDING DESIGNER

TOTAL WEIGHT = 2 X 260 = 561 lb [M]

BEARINGS

JT	FACTORED GROSS REACTION VERT	HORZ	MAXIMUM FACTORED GROSS REACTION DOWN	HORZ	UPLIFT	INPUT BRG IN-SX	REQRD BRG IN-SX
B	4816	0	4926	263	-1020	5-8	5-8 - 2TBE6
L	4816	0	4926	0	-1020	5-8	5-8 - 2TBE6

PROVIDE ANCHORAGE AT BEARING JOINT B FOR 1020 LBS FACTORED UPLIFT
PROVIDE ANCHORAGE AT BEARING JOINT L FOR 1020 LBS FACTORED UPLIFT

NOTE: ANCHORAGE REQUIRED FOR LARGE UPLIFT FORCES. SHALL BE PROVIDED BY BUILDG. DESIGNER

PROVIDE FOR 263 LBS FACTORED HORIZONTAL REACTION AT JOINT B

UNFACTORED REACTIONS

JT	1ST LCASE COMBINED	SNOW	MAX./MIN. COMPONENT REACTIONS LIVE	PERM.LIVE	WIND	DEAD	SOIL
B	3462	2488 / 0	460 / 0	0 / 0	160 / -1106	587 / 0	0 / 0
L	3462	2488 / 0	460 / 0	0 / 0	93 / -1106	587 / 0	0 / 0
HORIZONTAL REACTIONS							
B	—	0 / 0	0 / 0	0 / 0	188 / -188	0 / 0	0 /0

BEARING MATERIAL TO BE SPF NO.2 OR BETTER AT JOINT(S) B, L

BRACING

MAX. UNBRACED TOP CHORD LENGTH = 2.81 FT.
MAX. UNBRACED BOTTOM CHORD LENGTH = 6.25 FT OR RIGID CEILING DIRECTLY APPLIED.

ALL PITCH BREAKS AND PERIMETER CORNER JOINTS MUST BE LATERALLY RESTRAINED.

1 LATERAL BRACE(S) AT 1/2 LENGTH OF E-S, F-S, F-R, G-R, H-R, H-Q, I-Q, C-W, K-Y.

LOADING

TOTAL LOAD CASES: (18)

CHORDS

MEMB. FR-TO	MAX. FACTORED FORCE (LBS)	FACTORED VERT. LOAD LC1 (PLF) FROM	TO	MAX CSI (LC)	MAX. UNBRAC LENGTH
A- B	0 / 2	-170.4	-170.4	0.13 (2)	10.00
B- X	-5468 / 1037	-170.4	-170.4	0.46 (2)	3.34
X- C	-3263 / 804	-170.4	-170.4	0.38 (2)	4.32
C- D	-6862 / 1521	-170.4	-170.4	0.85 (2)	2.61
D- E	-6862 / 1521	-170.4	-170.4	0.85 (2)	2.61
E- F	-5759 / 1366	-170.4	-170.4	0.74 (2)	3.07
F- G	-5374 / 1322	-170.4	-170.4	0.38 (3)	3.49
G- H	-5374 / 1322	-170.4	-170.4	0.38 (3)	3.49
H- I	-5759 / 1366	-170.4	-170.4	0.74 (3)	3.07
I- J	-6862 / 1521	-170.4	-170.4	0.85 (3)	2.61
J- K	-6862 / 1521	-170.4	-170.4	0.85 (3)	2.61
K- Z	-3263 / 804	-170.4	-170.4	0.38 (3)	4.32
Z- L	-5468 / 1037	-170.4	-170.4	0.46 (3)	3.34
L- M	0 / 2	-170.4	-170.4	0.13 (3)	10.00
B- W	-826 / 2908	-38.5	-38.5	0.15 (1)	6.25
W- V	-1483 / 6472	-38.5	-38.5	0.36 (2)	6.25
V- U	-1484 / 6469	-38.5	-38.5	0.37 (1)	6.25
U- T	-1276 / 6163	-38.5	-38.5	0.34 (1)	6.25
T- S	-1276 / 6163	-38.5	-38.5	0.34 (1)	6.25
S- R	-893 / 5119	-38.5	-38.5	0.27 (1)	6.25
R- Q	-774 / 5119	-38.5	-38.5	0.27 (1)	6.25
Q- P	-1013 / 6163	-38.5	-38.5	0.34 (1)	6.25
P- O	-1013 / 6163	-38.5	-38.5	0.34 (1)	6.25
O- N	-1223 / 6469	-38.5	-38.5	0.37 (1)	6.25
N- Y	-1221 / 6472	-38.5	-38.5	0.36 (3)	6.25
Y- L	-563 / 2908	-38.5	-38.5	0.15 (1)	6.25

WEBS

MEMB. FR-TO	MAX. FACTORED FORCE (LBS)	MAX CSI (LC)
V- C	0 / 257	0.06 (17)
C- U	-560 / 275	0.49 (2)
U- E	-41 / 539	0.12 (2)
E- S	-1635 / 559	0.68 (2)
S- F	-334 / 1522	0.34 (2)
F- R	-293 / 1392	0.22 (3)
R- G	-1094 / 327	0.64 (2)
R- H	-293 / 1392	0.22 (2)
Q- H	-334 / 1521	0.34 (3)
Q- I	-1635 / 559	0.68 (3)
O- I	-42 / 539	0.12 (3)
O- K	-560 / 268	0.49 (3)
N- K	0 / 257	0.06 (17)
W- X	-334 / 2703	0.00 (1)
W- C	-4393 / 796	0.56 (1)
K- Y	-4393 / 798	0.56 (1)
Y- Z	-334 / 2703	0.00 (1)

DESIGN CRITERIA

SPECIFIED LOADS:

TOP CH.	LL	=	51.8	PSF
	DL	=	6.0	PSF
BOT CH.	LL	=	10.5	PSF
	DL	=	7.0	PSF
TOTAL LOAD		=	75.3	PSF

SPACING = 24.0 IN. C/C

LOADING IN FLAT SECTION BASED ON A SLOPE OF 6.00/12

THIS TRUSS IS DESIGNED FOR COMMERCIAL OR INDUSTRIAL BUILDING REQUIREMENTS OF PART 4, NBCC 2010, NBCC 2015

THIS DESIGN COMPLIES WITH:
- PART 4 OF OBC 2012, OBC 2018
- CSA 086-09, CSA 086-14
- TPIC 2011, TPIC 2014

DESIGN ASSUMPTIONS
- SLOPE REDUCTION FACTOR NOT USED

(80 % OF 54.3 P.S.F. G.S.L. PLUS 8.4 P.S.F. RAIN LOAD) TIMES IMPORTANCE FACTOR EQUALS 51.8 P.S.F. SPECIFIED ROOF LIVE LOAD

ALLOWABLE DEFL.(LL)= L/360 (1.46")
CALCULATED VERT. DEFL.(LL) = L/ 999 (0.24")
ALLOWABLE DEFL.(TL)= L/180 (2.92")
CALCULATED VERT. DEFL.(TL) = L/ 999 (0.31")

CSI: TC=0.85/1.00 (I-K:3) , BC=0.37/1.00 (U-V:1) , WB=0.68/0.90 (I-Q:3) , SSI=0.40/1.00 (H-I:3)

DOL LUMBER=1.00 NAIL=1.00 LS BEND=1.10 COMP=1.10 SHEAR=1.10 TENS= 1.10

SNOW LOAD IMPORTANCE FACTOR = 1.00
WIND LOAD IMPORTANCE FACTOR = 1.00
LIVE LOAD IMPORTANCE FACTOR = 1.00
COMPANION LIVE LOAD FACTOR = 1.00

AUTOSOLVE HEELS OFF

TRUSS PLATE MANUFACTURER IS NOT RESPONSIBLE FOR QUALITY CONTROL IN THE TRUSS MANUFACTURING PLANT .

NAIL VALUES

PLATE	GRIP(DRY) (PSI) MAX	MIN	SHEAR (PLI) MAX	MIN	SECTION (PLI) MAX	MIN
MT20	618	354	1667	788	1987	1656

PLATE PLACEMENT TOL. = 0.250 inches

PLATE ROTATION TOL. = 5.0 Deg.

JSI GRIP= 0.88 (C) (INPUT = 0.90)
JSI METAL= 0.91 (T) (INPUT = 1.00)

DWG NO. TAM 11805227 1/2
STRUCTURAL COMPONENT ONLY

CONTINUED ON PAGE 2

TOWN OF INNISFIL
2018-0802-0808
REVIEWED
jpenfold
Building Permit Plans

TOWN OF INNISFIL
2018-0802-0808
REVIEWED
jpenfold
Building Permit Plans

JOB NAME	TRUSS NAME	QUANTITY	PLY	JOB DESC.	DRWG NO.
297079	T22	2	1	TRUSS DESC.	

Tamarack Roof Truss, Burlington

TRUSS HAS BEEN CHECKED FOR UNBALANCED LOADING
AS PER NBCC 4.1.6.2.(8)

WIND LOAD APPLIED IS DERIVED FROM REFERENCE VELOCITY PRESSURE OF { 9.6} PSF AT {40-0-0} FT-IN-SX REFERENCE HEIGHT ABOVE GRADE AND USING EXTERNAL PEAK COEFFICIENTS, CpCg, BASED ON THE {MAIN WIND FORCE RESISTING SYSTEM}.INTERNAL WIND PRESSURE IS BASED ON DESIGN {CATEGORY 2}. BUILDING MAY BE LOCATED ON {OPEN TERRAIN}, AND TRUSS IS DESIGNED TO BE LOCATED AT LEAST {0-0} FT-IN-SX AWAY FROM EAVE.

LICENSED PROFESSIONAL ENGINEER
08/20/18
H.J.G. ALVES
PROVINCE OF ONTARIO

DWG NO. TAM 11805227
STRUCTURAL
COMPONENT ONLY 2/2

TOWN OF INNISFIL
2018-0802-0808
REVIEWED
jpenfold
3/19/2021
Building Permit Plans

JOB NAME	TRUSS NAME	QUANTITY	PLY	JOB DESC.	DRWG NO.
297079	T23	12	1	TRUSS DESC.	

Tamarack Roof Truss, Burlington

Version 8.210 S May 18 2018 MiTek Industries, Inc. Mon Aug 20 11:48:34 2018 Page 1
ID:4u167_apsj?wvBfJKDwJbPzNv7w-Q1Mp5gnAMPTlwT8NqCTcLHAcOCYvOvjKKo4pM5ylzyh

Scale = 1:83.7

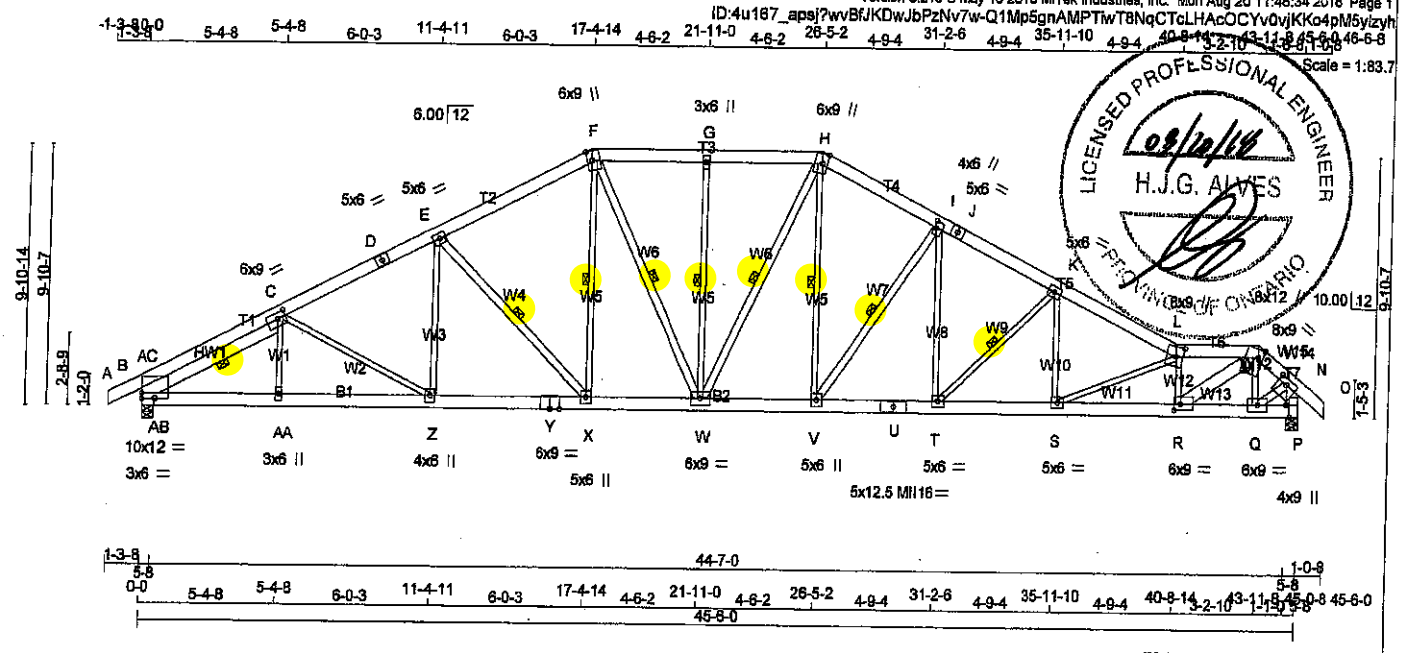

TOTAL WEIGHT = 12 X 293 = 3518 lb

LUMBER
N. L. G. A. RULES

CHORDS	SIZE		LUMBER	DESCR.
A - D	2x6	DRY	No.2	SPF
D - F	2x6	DRY	No.2	SPF
F - H	2x6	DRY	No.2	SPF
H - J	2x6	DRY	No.2	SPF
J - L	2x6	DRY	No.2	SPF
L - M	2x6	DRY	No.2	SPF
M - O	2x6	DRY	No.2	SPF
P - N	2x6	DRY	No.2	SPF
B - Y	2x6	DRY	2100F 1.8E	SPF
Y - U	2x6	DRY	2100F 1.8E	SPF
U - P	2x6	DRY	2100F 1.8E	SPF
REINFORCING MEMBERS				
HW1	2x6	DRY	No.2	SPF
ALL WEBS EXCEPT	2x3	DRY	No.2	SPF
E - X	2x4	DRY	No.2	SPF
F - W	2x4	DRY	No.2	SPF
W - H	2x4	DRY	No.2	SPF
V - I	2x4	DRY	No.2	SPF
R - M	2x6	DRY	No.2	SPF
Q - N	2x4	DRY	No.2	SPF

DRY: SEASONED LUMBER.

PLATES (table is in inches)

JT	TYPE	PLATES	W	LEN	Y	X
B	TMBMW1-I	MT20	10.0	12.0	2.50	
B	TP-t	MT20	3.0	6.0	2.50	6.00
C	TMWWW-t	MT20	6.0	9.0	2.75	4.00
D	TS-t	MT20	5.0	6.0		
E	TMWW-t	MT20	5.0	6.0		
F	TTWW+m	MT20	6.0	9.0	Edge 2.25	
G	TMW+w	MT20	3.0	6.0		
H	TTWW+m	MT20	6.0	9.0	Edge 2.25	
I	TMWW+t	MT20	4.0	6.0	3.00	1.25
J	TS-t	MT20	5.0	6.0		
K	TMWW-t	MT20	5.0	6.0		
L	TTWW+m	MT20	8.0	9.0	4.50	3.25
M	TTWW+m	MT20	8.0	12.0	Edge 2.25	
N	TMWW-t	MT20	8.0	9.0	2.50	4.25
P	BMV1+p	MT20	4.0	9.0	Edge 1.50	
Q	BMWW-t	MT20	6.0	9.0		
R	BMWW-t	MT20	6.0	9.0	2.75	3.00
S	BMWW-t	MT20	5.0	6.0		
T	BMWW-t	MT20	5.0	6.0		
U	BS-t	MII16	5.0	12.5		
V	BMWW+t	MT20	5.0	6.0		
W	BMWWW-t	MT20	6.0	9.0		
X	BMWW+t	MT20	5.0	6.0		
Y	BS-t	MT20	6.0	9.0		
Z	BMWW+t	MT20	4.0	6.0		
AA	BMW+w	MT20	3.0	6.0		

Edge - INDICATES REFERENCE CORNER OF PLATE TOUCHES EDGE OF CHORD.

DWG NO. TAM T1805228
STRUCTURAL
COMPONENT ONLY
1/2

DIMENSIONS, SUPPORTS AND LOADINGS SPECIFIED BY FABRICATOR TO BE VERIFIED BY BUILDING DESIGNER

BEARINGS

JT	FACTORED GROSS REACTION VERT	HORZ	MAXIMUM FACTORED GROSS REACTION DOWN	HORZ	UPLIFT	INPUT BRG IN-SX	REQRD BRG IN-SX
B	4987	0	5025	-290	-1047	5-8	5-8 - 2 TBE6
P	4957	0	5112	0	-1057	5-8	5-8 - 2 TBE6

PROVIDE ANCHORAGE AT BEARING JOINT B FOR 1047 LBS FACTORED UPLIFT
PROVIDE ANCHORAGE AT BEARING JOINT P FOR 1057 LBS FACTORED UPLIFT

NOTE: ANCHORAGE REQUIRED FOR LARGE UPLIFT FORCES, SHALL BE PROVIDED BY BUILDG. DESIGNER

PROVIDE FOR 290 LBS FACTORED HORIZONTAL REACTION AT JOINT B

UNFACTORED REACTIONS

JT	1ST LCASE COMBINED	MAX./MIN. COMPONENT REACTIONS SNOW	LIVE	PERM.LIVE	WIND	DEAD	SOIL
B	3585	2525 / 0	478 / 0	0 / 0	162 / -1139	608 / 0	0 / 0
P	3565	2584 / 0	478 / 0	0 / 0	154 / -1144	608 / 0	0 / 0
HORIZONTAL REACTIONS							
B	—	0 / 0	0 / 0	0 / 0	202 / -207	0 / 0	0 /0

BEARING MATERIAL TO BE SPF NO.2 OR BETTER AT JOINT(S) B, P

BRACING
MAX. UNBRACED TOP CHORD LENGTH = 2.46 FT.
MAX. UNBRACED BOTTOM CHORD LENGTH = 6.25 FT OR RIGID CEILING DIRECTLY APPLIED.

ALL PITCH BREAKS AND PERIMETER CORNER JOINTS MUST BE LATERALLY RESTRAINED.

1 LATERAL BRACE(S) AT 1/2 LENGTH OF E-X, F-X, F-W, G-W, H-W, H-V, I-V, K-T, C-AB.

END VERTICAL(S) MUST BE SHEATHED OR HAVE BRACES AS INDICATED IN THE MAX. UNBRACED LENGTH COLUMN OF THE TABLE BELOW

LOADING
TOTAL LOAD CASES: (18)

CHORDS

MEMB. FR-TO	MAX. FACTORED FORCE (LBS)	FACTORED VERT. LOAD LC1 (PLF) FROM	TO	MAX CSI (LC)	MAX. UNBRAC LENGTH
A- B	0 / 2	-170.4	-170.4	0.13 (2)	10.00
B-AC	-5620 / 1069	-170.4	-170.4	0.47 (2)	3.30
AC- C	-3329 / 822	-170.4	-170.4	0.39 (2)	4.28
C- D	-7204 / 1574	-170.4	-170.4	0.87 (2)	2.55
D- E	-7204 / 1574	-170.4	-170.4	0.87 (2)	2.55
E- F	-6114 / 1422	-170.4	-170.4	0.75 (2)	2.95
F- G	-5775 / 1406	-170.4	-170.4	0.39 (3)	3.36
G- H	-5775 / 1406	-170.4	-170.4	0.39 (3)	3.36
H- I	-6277 / 1498	-170.4	-170.4	0.47 (3)	3.19
I- J	-7478 / 1689	-170.4	-170.4	0.57 (3)	2.84
J- K	-7478 / 1689	-170.4	-170.4	0.57 (3)	2.84
K- L	-8688 / 1871	-170.4	-170.4	0.70 (3)	2.46
L- M	-8715 / 1864	-170.4	-170.4	0.60 (3)	2.58
M- N	-4465 / 976	-170.4	-170.4	0.18 (3)	3.99
N- O	0 / 77	-170.4	-170.4	0.10 (3)	10.00
P- N	-5193 / 1088	0.0	0.0	0.34 (3)	4.51
B-AB	-818 / 2966	-38.5	-38.5	0.16 (1)	6.25
AB-AA	-1501 / 6742	-38.5	-38.5	0.37 (1)	6.25
AA- Z	-1502 / 6739	-38.5	-38.5	0.39 (1)	6.25
Z- Y	-1300 / 6468	-38.5	-38.5	0.35 (1)	6.25
Y- X	-1300 / 6468	-38.5	-38.5	0.35 (1)	6.25
X- W	-918 / 5436	-38.5	-38.5	0.30 (1)	6.25
W- V	-826 / 5599	-38.5	-38.5	0.30 (1)	6.25

WEBS

MEMB. FR-TO	MAX. FACTORED FORCE (LBS)	MAX CSI (LC)
AA- C	0 / 256	0.06 (17)
C- Z	-536 / 312	0.47 (2)
Z- E	-43 / 527	0.12 (2)
E- X	-1825 / 557	0.68 (2)
X- F	-332 / 1512	0.34 (2)
F- W	-332 / 1588	0.26 (3)
W- G	-1091 / 327	0.64 (2)
W- H	-260 / 1288	0.21 (2)
V- H	-459 / 2020	0.45 (3)
V- I	-2243 / 632	0.77 (3)
T- I	-275 / 1404	0.32 (3)
T- K	-1769 / 488	0.52 (3)
S- K	-96 / 811	0.18 (3)
S- L	-1290 / 336	0.60 (3)
R- L	-3979 / 900	0.62 (3)
R- M	-1359 / 6675	0.79 (3)
Q- M	-1458 / 292	0.23 (3)
Q- N	-685 / 3818	0.61 (3)
AB-AC	-354 / 2827	0.00 (1)
AB- C	-4598 / 828	0.59 (1)

[M]

DESIGN CRITERIA

SPECIFIED LOADS:

TOP CH.	LL	=	51.8	PSF
	DL	=	8.0	PSF
BOT CH.	LL	=	10.5	PSF
	DL	=	7.0	PSF
TOTAL LOAD		=	75.3	PSF

SPACING = 24.0 IN. C/C

LOADING IN ALL FLAT SECTIONS BASED ON A SLOPE OF 6.00/12

THIS TRUSS IS DESIGNED FOR COMMERCIAL OR INDUSTRIAL BUILDING REQUIREMENTS OF PART 4, NBCC 2010, NBCC 2015

THIS DESIGN COMPLIES WITH:
- PART 4 OF OBC 2012, OBC 2018
- CSA 086-09, CSA 086-14
- TPIC 2011, TPIC 2014

DESIGN ASSUMPTIONS
- SLOPE REDUCTION FACTOR NOT USED
- OVERHANG NOT TO BE ALTERED OR CUT OFF.

(60 % OF 54.3 P.S.F. G.S.L. PLUS 8.4 P.S.F. RAIN LOAD) TIMES IMPORTANCE FACTOR EQUALS 51.8 P.S.F. SPECIFIED ROOF LIVE LOAD

ALLOWABLE DEFL.(LL)= L/360 (1.52")
CALCULATED VERT. DEFL.(LL) = L/ 999 (0.34")
ALLOWABLE DEFL.(TL)= L/180 (3.03")
CALCULATED VERT. DEFL.(TL) = L/ 999 (0.43")

CSI: TC=0.87/1.00 (C-E:2) , BC=0.56/1.00 (R-S:3) , WB=0.79/0.90 (M-R:3) , SSI=0.40/1.00 (E-F:2)

DOL LUMBER=1.00 NAIL=1.00 LS BEND=1.10 COMP=1.10 SHEAR=1.10 TENS= 1.10

SNOW LOAD IMPORTANCE FACTOR = 1.00
WIND LOAD IMPORTANCE FACTOR = 1.00
LIVE LOAD IMPORTANCE FACTOR = 1.00
COMPANION LIVE LOAD FACTOR = 1.00

AUTOSOLVE HEELS OFF

TRUSS PLATE MANUFACTURER IS NOT RESPONSIBLE FOR QUALITY CONTROL IN THE TRUSS MANUFACTURING PLANT .

NAIL VALUES

PLATE	GRIP(DRY) (PSI) MAX	MIN	SHEAR (PLI) MAX	MIN	SECTION (PLI) MAX	MIN
MT20	618	354	1667	788	1987	1656
MII16	438	276	2341	1245	4283	1656

PLATE PLACEMENT TOL. = 0.250 inches

PLATE ROTATION TOL. = 5.0 Deg.

CONTINUED ON PAGE 2

LICENSED PROFESSIONAL ENGINEER
08/20/18
H.J.G. ALVES
PROVINCE OF ONTARIO

TOWN OF INNISFIL
2018-0802-0808
REVIEWED
jpenfold
3/19/2021
Building Permit Plans

JOB NAME	TRUSS NAME	QUANTITY	PLY	JOB DESC.	DRWG NO.
297079	T23	12	1	TRUSS DESC.	

Tamarack Roof Truss, Burlington

LOADING
TOTAL LOAD CASES: (18)

JSI GRIP= 0.90 (T) (INPUT = 0.90)
JSI METAL= 0.96 (Y) (INPUT = 1.00)

CHORDS

MEMB. FR-TO	MAX. FACTORED FORCE (LBS)	FACTORED VERT. LOAD LC1 (PLF) FROM	TO	MAX CSI (LC)	MAX. UNBRAC LENGTH
V- U	-1061 / 6693	-38.5	-38.5	0.36 (1)	6.25
U- T	-1061 / 6693	-38.5	-38.5	0.36 (1)	6.25
T- S	-1412 / 7803	-38.5	-38.5	0.41 (1)	6.25
S- R	-1716 / 8899	-38.5	-38.5	0.58 (3)	6.25
R- Q	-587 / 3278	-38.5	-38.5	0.29 (3)	6.25
Q- P	-9 / 19	-38.5	-38.5	0.07 (3)	10.00

WEBS

MEMB. FR-TO	MAX. FACTORED FORCE (LBS)	MAX CSI (LC)

TRUSS HAS BEEN CHECKED FOR UNBALANCED LOADING AS PER NBCC 4.1.6.2.(8)

WIND LOAD APPLIED IS DERIVED FROM REFERENCE VELOCITY PRESSURE OF {9.6} PSF AT {40-0-0} FT-IN-SX REFERENCE HEIGHT ABOVE GRADE AND USING EXTERNAL PEAK COEFFICIENTS, CpCg, BASED ON THE {MAIN WIND FORCE RESISTING SYSTEM}.INTERNAL WIND PRESSURE IS BASED ON DESIGN {CATEGORY 2}. BUILDING MAY BE LOCATED ON {OPEN TERRAIN}, AND TRUSS IS DESIGNED TO BE LOCATED AT LEAST {0-0} FT-IN-SX AWAY FROM EAVE.

LICENSED PROFESSIONAL ENGINEER
08/20/18
H.J.G. ALVES
PROVINCE OF ONTARIO

DWG NO. TAM 17805228
STRUCTURAL
COMPONENT ONLY 2/2

TOWN OF INNISFIL
2018-0802-0808
REVIEWED
jpenfold
3/19/2021
Building Permit Plans

JOB NAME	TRUSS NAME	QUANTITY	PLY	JOB DESC.	DRWG NO.
297079	T24	6	1	TRUSS DESC.	

Tamarack Roof Truss, Burlington

Version 8.210 S May 18 2018 MiTek Industries, Inc. Mon Aug 20,11:48:39 2018 Page 1
ID:4u167_apsj?wvBfJKDwJbPzNv7w-n?9I8OrJAx5_0E0Kdf3n2KtVGDEehBe3U4oa1JyIzyc

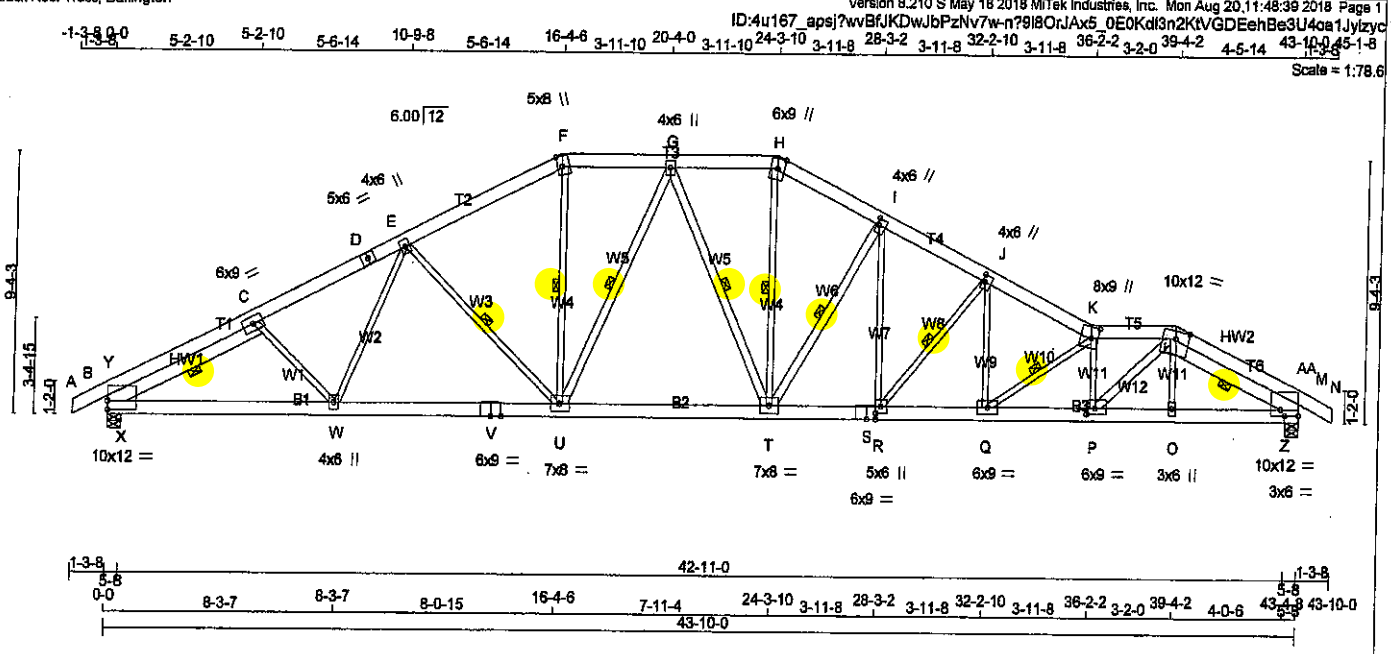

TOTAL WEIGHT = 6 X 274 = 1644 lb [M]

LUMBER
N. L. G. A. RULES

CHORDS	SIZE		LUMBER	DESCR.
A - D	2x6	DRY	No.2	SPF
D - F	2x6	DRY	No.2	SPF
F - H	2x6	DRY	No.2	SPF
H - K	2x6	DRY	No.2	SPF
K - L	2x6	DRY	No.2	SPF
L - N	2x6	DRY	No.2	SPF
B - V	2x6	DRY	2100F 1.8E	SPF
V - S	2x6	DRY	2100F 1.8E	SPF
S - M	2x6	DRY	2100F 1.8E	SPF
REINFORCING MEMBERS				
HW1	2x6	DRY	No.2	SPF
HW2	2x6	DRY	No.2	SPF
ALL WEBS	2x3	DRY	No.2	SPF
EXCEPT				
U - G	2x4	DRY	No.2	SPF
G - T	2x4	DRY	No.2	SPF
T - I	2x4	DRY	No.2	SPF
P - L	2x4	DRY	No.2	SPF

DRY: SEASONED LUMBER.

PLATES (table is in inches)

JT	TYPE	PLATES	W	LEN	Y	X
B	TMBMW1-I	MT20	10.0	12.0	3.75	
C	TMWW-t	MT20	5.0	9.0		
D	TS-t	MT20	5.0	6.0		
E	TMWW+t	MT20	4.0	6.0		
F	TTW+m	MT20	5.0	8.0	4.50	2.00
G	TMWW+t	MT20	4.0	6.0		
H	TTW+m	MT20	6.0	9.0	Edge	
I	TMWW+t	MT20	4.0	6.0	2.75	1.00
J	TMWW+t	MT20	4.0	6.0	3.00	1.00
K	TTWW+m	MT20	8.0	9.0	4.75	3.25
L	TTWWW-m	MT20	10.0	12.0	3.25	6.00
M	TMBMW1-I	MT20	10.0	12.0	2.50	Edge
M	TP-t	MT20	3.0	6.0	2.50	1.50
O	BMW+w	MT20	3.0	6.0		
P	BMWW-t	MT20	6.0	9.0	2.50	4.00
Q	BMWW-t	MT20	6.0	9.0		
R	BMWW+t	MT20	5.0	6.0	3.00	2.25
S	BS-t	MT20	6.0	9.0		4.00
T	BMWWW-t	MT20	7.0	8.0		
U	BMWWW-t	MT20	7.0	8.0		
V	BS-t	MT20	6.0	9.0		
W	BMWW+t	MT20	4.0	6.0		

Edge - INDICATES REFERENCE CORNER OF PLATE TOUCHES EDGE OF CHORD.

LICENSED PROFESSIONAL ENGINEER
09/20/19
H.J.G. ALVES
PROVINCE OF ONTARIO

DIMENSIONS, SUPPORTS AND LOADINGS SPECIFIED BY FABRICATOR TO BE VERIFIED BY BUILDING DESIGNER

BEARINGS

JT	FACTORED GROSS REACTION VERT	HORZ	MAXIMUM FACTORED GROSS REACTION DOWN	HORZ	UPLIFT	INPUT BRG IN-SX	REQRD BRG IN-SX
B	4816	0	4816	249	-998	5-8	5-8
M	4816	0	5001	0	-1034	5-8	5-8

PROVIDE ANCHORAGE AT BEARING JOINT B FOR 998 LBS FACTORED UPLIFT
PROVIDE ANCHORAGE AT BEARING JOINT M FOR 1034 LBS FACTORED UPLIFT

NOTE: ANCHORAGE REQUIRED FOR LARGE UPLIFT FORCES. SHALL BE PROVIDED BY BUILDG. DESIGNER

PROVIDE FOR 249 LBS FACTORED HORIZONTAL REACTION AT JOINT B OK

UNFACTORED REACTIONS

JT	1ST LCASE COMBINED	MAX./MIN. COMPONENT REACTIONS SNOW	LIVE	PERM.LIVE	WIND	DEAD	SOIL
B	3462	2415 / 0	460 / 0	0 / 0	149 / -1090	587 / 0	0 / 0
M	3462	2538 / 0	460 / 0	0 / 0	113 / -1116	587 / 0	0 / 0
HORIZONTAL REACTIONS							
B	—	0 / 0	0 / 0	0 / 0	178 / -178	0 / 0	0 /0

BEARING MATERIAL TO BE SPF NO.2 OR BETTER AT JOINT(S) B, M

BRACING
MAX. UNBRACED TOP CHORD LENGTH = 2.36 FT.
MAX. UNBRACED BOTTOM CHORD LENGTH = 6.25 FT OR RIGID CEILING DIRECTLY APPLIED.

ALL PITCH BREAKS AND PERIMETER CORNER JOINTS MUST BE LATERALLY RESTRAINED.

1 LATERAL BRACE(S) AT 1/2 LENGTH OF E-U, F-U, G-U, G-T, H-T, I-T, J-R, K-Q, L-Z, C-X.

LOADING
TOTAL LOAD CASES: (18)

CHORDS

MEMB. FR-TO	MAX. FACTORED FORCE (LBS)	FACTORED VERT. LOAD LC1 (PLF) FROM	TO	MAX CSI (LC)	MAX. UNBRAC LENGTH
A- B	0 / 2	-170.4	-170.4	0.13 (2)	10.00
B- Y	-5496 / 934	-170.4	-170.4	0.43 (2)	3.39
Y- C	-3228 / 751	-170.4	-170.4	0.36 (2)	4.39
C- D	-7074 / 1534	-170.4	-170.4	0.73 (2)	2.77
D- E	-7074 / 1534	-170.4	-170.4	0.73 (2)	2.77
E- F	-5971 / 1346	-170.4	-170.4	0.64 (2)	3.11
F- G	-5322 / 1294	-170.4	-170.4	0.30 (1)	3.56
G- H	-5605 / 1394	-170.4	-170.4	0.32 (3)	3.47
H- I	-6269 / 1486	-170.4	-170.4	0.36 (1)	3.27
I- J	-7483 / 1695	-170.4	-170.4	0.44 (3)	2.95
J- K	-8898 / 1930	-170.4	-170.4	0.59 (3)	2.53
K- L	-9659 / 2089	-170.4	-170.4	0.56 (3)	2.36
L-AA	-3182 / 785	-170.4	-170.4	0.34 (3)	4.40
AA- M	-5295 / 1006	-170.4	-170.4	0.40 (3)	3.44
M- N	0 / 2	-170.4	-170.4	0.13 (3)	10.00
B- X	-765 / 2869	-38.5	-38.5	0.17 (1)	6.25
X- W	-1446 / 6398	-38.5	-38.5	0.38 (1)	6.25
W- V	-1266 / 6211	-38.5	-38.5	0.37 (1)	6.25
V- U	-1266 / 6211	-38.5	-38.5	0.37 (1)	6.25
U- T	-928 / 5619	-38.5	-38.5	0.34 (1)	6.25
T- S	-1088 / 6697	-38.5	-38.5	0.38 (1)	6.25
S- R	-1088 / 6697	-38.5	-38.5	0.38 (1)	6.25
R- Q	-1452 / 7986	-38.5	-38.5	0.43 (1)	6.25
Q- P	-1900 / 9771	-38.5	-38.5	0.58 (3)	6.25
P- O	-1209 / 6412	-38.5	-38.5	0.42 (3)	6.25
O- Z	-1209 / 6401	-38.5	-38.5	0.34 (3)	6.25
Z- M	-546 / 2799	-38.5	-38.5	0.16 (3)	6.25

WEBS

MEMB. FR-TO	MAX. FACTORED FORCE (LBS)	MAX CSI (LC)
C- W	-314 / 417	0.10 (9)
W- E	-132 / 534	0.12 (2)
E- U	-1613 / 536	0.75 (2)
U- F	-402 / 1946	0.44 (1)
U- G	-1522 / 363	0.71 (3)
G- T	-978 / 553	0.45 (2)
T- H	-461 / 2204	0.50 (1)
T- I	-2489 / 681	0.74 (3)
R- I	-406 / 1872	0.42 (3)
R- J	-2276 / 580	0.61 (3)
Q- J	-289 / 1619	0.36 (3)
Q- K	-2359 / 558	0.47 (3)
P- K	-3236 / 727	0.59 (1)
P- L	-922 / 4587	0.74 (1)
O- L	-5 / 308	0.07 (3)
L- Z	-4464 / 822	0.45 (3)
X- Y	-267 / 2779	0.00 (1)
X- C	-4294 / 829	0.52 (1)
Z-AA	-313 / 2576	0.00 (1)

DWG NO. TAM 18052291
STRUCTURAL COMPONENT ONLY
1/2

DESIGN CRITERIA

SPECIFIED LOADS:

TOP CH.	LL	=	51.8	PSF
	DL	=	6.0	PSF
BOT CH.	LL	=	10.5	PSF
	DL	=	7.0	PSF
TOTAL LOAD		=	75.3	PSF

SPACING = 24.0 IN. C/C

LOADING IN ALL FLAT SECTIONS BASED ON A SLOPE OF 6.00/12

THIS TRUSS IS DESIGNED FOR COMMERCIAL OR INDUSTRIAL BUILDING REQUIREMENTS OF PART 4, NBCC 2010, NBCC 2015

THIS DESIGN COMPLIES WITH:
- PART 4 OF OBC 2012, OBC 2018
- CSA 086-09, CSA 086-14
- TPIC 2011, TPIC 2014

DESIGN ASSUMPTIONS
- SLOPE REDUCTION FACTOR NOT USED

(60 % OF 54.3 P.S.F. G.S.L. PLUS 8.4 P.S.F. RAIN LOAD) TIMES IMPORTANCE FACTOR EQUALS 51.8 P.S.F. SPECIFIED ROOF LIVE LOAD

ALLOWABLE DEFL.(LL)= L/360 (1.46")
CALCULATED VERT. DEFL.(LL) = L/ 999 (0.37")
ALLOWABLE DEFL.(TL)= L/180 (2.92")
CALCULATED VERT. DEFL.(TL) = L/ 999 (0.47")

CSI: TC=0.73/1.00 (C-E:2) , BC=0.58/1.00 (P-Q:3) , WB=0.75/0.90 (E-U:2) , SSI=0.37/1.00 (E-F:2)

DOL LUMBER=1.00 NAIL=1.00 LS BEND=1.10 COMP=1.10 SHEAR=1.10 TENS= 1.10

SNOW LOAD IMPORTANCE FACTOR = 1.00
WIND LOAD IMPORTANCE FACTOR = 1.00
LIVE LOAD IMPORTANCE FACTOR = 1.00
COMPANION LIVE LOAD FACTOR = 1.00

AUTOSOLVE HEELS OFF

TRUSS PLATE MANUFACTURER IS NOT RESPONSIBLE FOR QUALITY CONTROL IN THE TRUSS MANUFACTURING PLANT .

NAIL VALUES

PLATE	GRIP(DRY) (PSI) MAX	MIN	SHEAR (PLI) MAX	MIN	SECTION (PLI) MAX	MIN
MT20	618	354	1667	788	1987	1656

PLATE PLACEMENT TOL. = 0.250 inches

PLATE ROTATION TOL. = 5.0 Deg.

JSI GRIP= 0.90 (T) (INPUT = 0.90)
JSI METAL= 0.99 (S) (INPUT = 1.00)

CONTINUED ON PAGE 2

TOWN OF INNISFIL
2018-0802-0808
REVIEWED
jpenfold
Building Permit Plans

JOB NAME	TRUSS NAME	QUANTITY	PLY	JOB DESC.	DRWG NO.
297079	T24	6	1	TRUSS DESC.	

Tamarack Roof Truss, Burlington

TRUSS HAS BEEN CHECKED FOR UNBALANCED LOADING
AS PER NBCC 4.1.6.2.(8)

WIND LOAD APPLIED IS DERIVED FROM REFERENCE VELOCITY PRESSURE OF { 9.6} PSF AT {40-0-0} FT-IN-SX REFERENCE HEIGHT ABOVE GRADE AND USING EXTERNAL PEAK COEFFICIENTS, CpCg, BASED ON THE {MAIN WIND FORCE RESISTING SYSTEM}.INTERNAL WIND PRESSURE IS BASED ON DESIGN {CATEGORY 2}. BUILDING MAY BE LOCATED ON {OPEN TERRAIN}, AND TRUSS IS DESIGNED TO BE LOCATED AT LEAST {0-0} FT-IN-SX AWAY FROM EAVE.

LICENSED PROFESSIONAL ENGINEER
08/20/18
H.J.G. ALVES
PROVINCE OF ONTARIO

DWG NO. TAM 71805229
STRUCTURAL
COMPONENT ONLY 2/2

JOB NAME	TRUSS NAME	QUANTITY	PLY	JOB DESC.	DRWG NO.
297078	T131	1	2	TRUSS DESC.	

TOWN OF INNISFIL 2018-0802-0808 REVIEWED Building Permit Plans

Tamarack Roof Truss, Burlington

Version 8.210 S May 18 2018 MiTek Industries, Inc. Mon Aug 20 09:46:04 2018 Page 1

ID:P5XmF1xy53I8wCH47R2x3fzNvqf-65VagUH21_ZYXNQplmI9Jcj82kwZ05m7oyiEb9ym?jf

Scale = 1:37.7

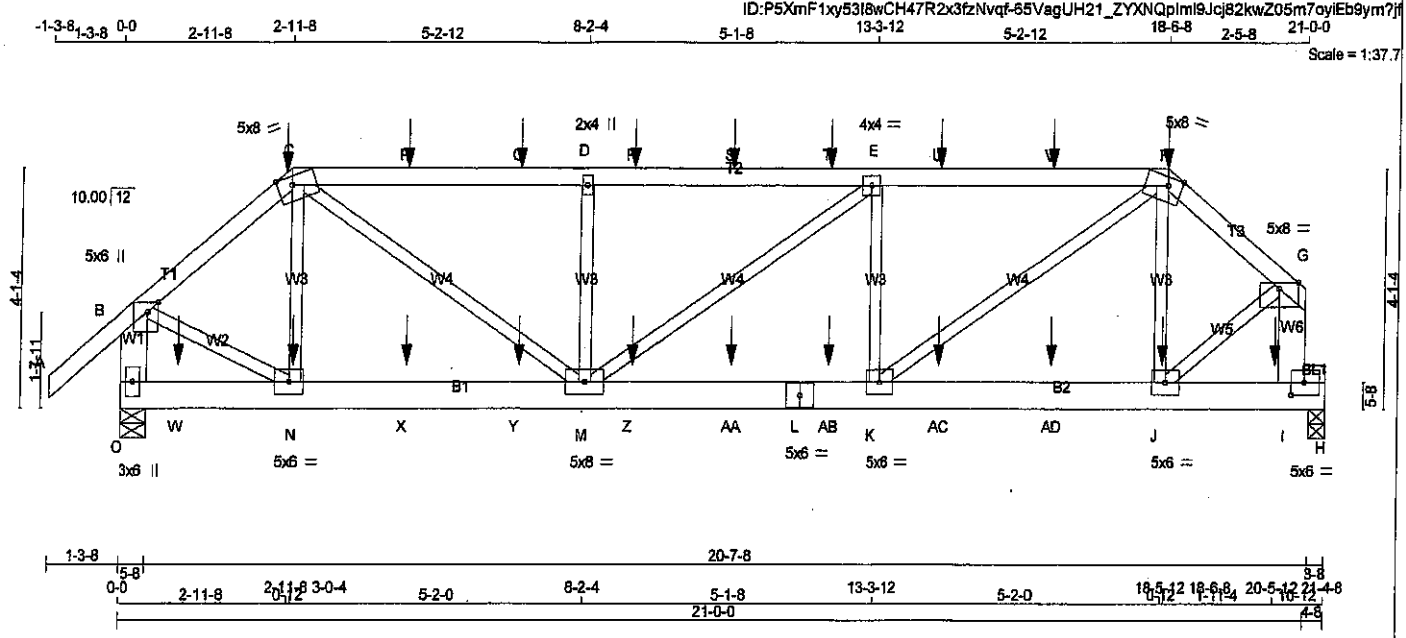

TOTAL WEIGHT = 2 X 102 = 204 lb

[M]

LUMBER

N. L. G. A. RULES

CHORDS	SIZE		LUMBER	DESCR.
A - C	2x4	DRY	No.2	SPF
C - F	2x4	DRY	No.2	SPF
F - G	2x4	DRY	No.2	SPF
O - B	2x6	DRY	No.2	SPF
I - G	2x6	DRY	No.2	SPF
O - L	2x6	DRY	No.2	SPF
L - H	2x6	DRY	No.2	SPF
BEARING BLOCKS				
BL1	2x4	DRY	No.2	SPF
ALL WEBS EXCEPT	2x3	DRY	No.2	SPF

DRY: SEASONED LUMBER.

DESIGN CONSISTS OF 2 TRUSSES BUILT SEPARATELY THEN FASTENED TOGETHER AS FOLLOWS:

CHORDS	#ROWS	SURFACE SPACING (IN)	LOAD(PLF)
TOP CHORDS : (0.122"X3") SPIRAL NAILS			
A- C	1	12	SIDE(61.0)
C- F	1	12	SIDE(61.0)
F- G	1	12	SIDE(61.0)
O- B	2	12	TOP
I- G	2	12	TOP
BOTTOM CHORDS : (0.122"X3") SPIRAL NAILS			
O- L	2	12	SIDE(183.1)
L- H	2	12	SIDE(183.1)
WEBS : (0.122"X3") SPIRAL NAILS			
2x3	1	6	
2x4	1	6	

NAILS TO BE DRIVEN FROM ONE SIDE ONLY.

GIRDER NAILING ASSUMES NAILED HANGERS ARE FASTENED WITH MIN. 3-0 INCH NAILS.

TOP - COMPONENTS ARE LOADED FROM THE TOP AND MUST BE PLACED ON TOP EDGE OF ALL PLIES FOR THE LOAD TO BE TRANSFERRED TO EACH PLY.

SIDE - PLF SHOWN IS THE EQUIVALENT UDL APPLIED TO ONE SIDE THAT THE CORRESPONDING NAILING PATTERN SHALL BE CAPABLE OF TRANSFERING. REMAINING PLF MUST BE APPLIED ON THE OPPOSITE SIDE OR ON THE TOP.

PLATES (table is in inches)

JT	TYPE	PLATES	W	LEN	Y	X
B	TMVW+p	MT20	5.0	6.0	2.00	2.25
C	TTWW-m	MT20	5.0	8.0	Edge	3.00
D	TMW+w	MT20	2.0	4.0		
E	TMWW-t	MT20	4.0	4.0		
F	TTWW-m	MT20	5.0	8.0	Edge	3.00
G	TMVW-p	MT20	5.0	8.0	Edge	
I	BMVK-t	MT20	5.0	6.0	2.50	2.75
J, K, N						
J	BMWW-t	MT20	5.0	6.0		
L	BS-t	MT20	5.0	6.0		
M	BMWWW-t	MT20	5.0	8.0		
O	BMV1+p	MT20	3.0	6.0		

Edge - INDICATES REFERENCE CORNER OF PLATE TOUCHES EDGE OF CHORD.

DIMENSIONS, SUPPORTS AND LOADINGS SPECIFIED BY FABRICATOR TO BE VERIFIED BY BUILDING DESIGNER

BEARINGS

JT	FACTORED GROSS REACTION VERT	HORZ	MAXIMUM FACTORED GROSS REACTION DOWN	HORZ	UPLIFT	INPUT BRG IN-SX	REQRD BRG IN-SX
O	3251	0	3251	0	0	5-8	5-8
H	3082	0	3082	0	0	3-8	3-8

UNFACTORED REACTIONS

JT	1ST LCASE COMBINED	MAX./MIN. COMPONENT REACTIONS SNOW	LIVE	PERM.LIVE	WIND	DEAD	SOIL
O	2370	1541 / 0	368 / 0	0 / 0	0 / 0	442 / 0	0 / 0
H	2257	1432 / 0	392 / 0	0 / 0	0 / 0	433 / 0	0 / 0

BEARING MATERIAL TO BE SPF NO.2 OR BETTER AT JOINT(S) O, H

BRACING

TOP CHORD TO BE SHEATHED OR MAX. PURLIN SPACING = 3.99 FT.
MAX. UNBRACED BOTTOM CHORD LENGTH = 6.25 FT OR RIGID CEILING DIRECTLY APPLIED.

ALL PITCH BREAKS AND PERIMETER CORNER JOINTS MUST BE LATERALLY RESTRAINED.

LOADING

TOTAL LOAD CASES: (4)

CHORDS

MEMB. FR-TO	MAX. FACTORED FORCE (LBS)	FACTORED VERT. LOAD (PLF) FROM	TO	LC1	MAX CSI (LC)	MAX. UNBRAC LENGTH
A- B	0 / 57	-129.7	-129.7	0.10 (1)	10.00	
B- C	-2968 / 0	-129.7	-129.7	0.14 (1)	5.20	
C- P	-4285 / 0	-129.7	-129.7	0.53 (1)	4.02	
P- Q	-4285 / 0	-129.7	-129.7	0.53 (1)	4.02	
Q- D	-4285 / 0	-129.7	-129.7	0.53 (1)	4.02	
D- R	-4285 / 0	-129.7	-129.7	0.54 (1)	3.99	
R- S	-4285 / 0	-129.7	-129.7	0.54 (1)	3.99	
S- T	-4285 / 0	-129.7	-129.7	0.54 (1)	3.99	
T- E	-4285 / 0	-129.7	-129.7	0.54 (1)	3.99	
E- U	-4245 / 0	-129.7	-129.7	0.54 (1)	4.01	
U- V	-4245 / 0	-129.7	-129.7	0.54 (1)	4.01	
V- F	-4245 / 0	-129.7	-129.7	0.54 (1)	4.01	
F- G	-2946 / 0	-129.7	-129.7	0.10 (1)	5.27	
O- B	-3207 / 0	0.0	0.0	0.12 (1)	7.73	
I- G	-3860 / 0	0.0	0.0	0.15 (1)	7.19	
O- W	0 / 0	-38.5	-38.5	0.05 (2)	10.00	
W- N	0 / 0	-38.5	-38.5	0.05 (2)	10.00	
N- X	0 / 2270	-38.5	-38.5	0.19 (1)	10.00	
X- Y	0 / 2270	-38.5	-38.5	0.19 (1)	10.00	
Y- M	0 / 2270	-38.5	-38.5	0.19 (1)	10.00	
M- Z	0 / 4246	-38.5	-38.5	0.36 (1)	10.00	
Z-AA	0 / 4246	-38.5	-38.5	0.36 (1)	10.00	
AA- L	0 / 4246	-38.5	-38.5	0.36 (1)	10.00	
L-AB	0 / 4246	-38.5	-38.5	0.36 (1)	10.00	
AB- K	0 / 4246	-38.5	-38.5	0.36 (1)	10.00	
K-AC	0 / 2238	-38.5	-38.5	0.29 (1)	10.00	
AC-AD	0 / 2238	-38.5	-38.5	0.29 (1)	10.00	
AD- J	0 / 2238	-38.5	-38.5	0.29 (1)	10.00	
J- I	-538 / 0	-38.5	-38.5	0.67 (1)	6.25	
I- H	0 / 0	-168.2	-168.2	0.42 (1)	10.00	

WEBS

MEMB. FR-TO	MAX. FACTORED FORCE (LBS)	MAX CSI (LC)
N- C	-596 / 39	0.08 (1)
C- M	0 / 2470	0.31 (1)
M- D	-1171 / 0	0.15 (1)
M- E	0 / 49	0.01 (1)
K- E	-1208 / 0	0.15 (1)
K- F	0 / 2460	0.30 (1)
J- F	-527 / 47	0.07 (1)
B- N	0 / 2463	0.33 (1)
J- G	0 / 3248	0.41 (1)

SPECIFIED CONCENTRATED LOADS (LBS)

JT	LOC.	LC1	MAX-	MAX+	FACE	DIR.	TYPE
C	2-11-8	-28	-28	—	FRONT	VERT	DEAD
C	2-11-8	-148	-148	—	BACK	VERT	TOTAL
C	2-11-8	-176	-176	—	FRONT	VERT	SNOW
F	18-6-8	-28	-28	—	FRONT	VERT	DEAD
F	18-6-8	-112	-112	—	BACK	VERT	TOTAL
F	18-6-8	-176	-176	—	FRONT	VERT	SNOW
I	20-5-12	-43	-43	—	BACK	VERT	TOTAL

LICENSED PROFESSIONAL ENGINEER 08/20/18 H.J.G. ALVES PROVINCE OF ONTARIO

DWG NO. TAM T1805184

STRUCTURAL COMPONENT ONLY

1/2

DESIGN CRITERIA

*** SPECIAL LOADS ANALYSIS ***
GEOMETRY AND/OR BASIC LOADS CHANGED BY USER.
LOADS WERE DERIVED FROM USER INPUT
NO FURTHER MODIFICATIONS WERE MADE

SPECIFIED LOADS:

TOP CH.	LL	=	38.2	PSF
	DL	=	6.0	PSF
BOT CH.	LL	=	10.5	PSF
	DL	=	7.0	PSF
TOTAL LOAD		=	61.7	PSF

SPACING = 24.0 IN. C/C

LOADING IN FLAT SECTION BASED ON A SLOPE OF 6.00/12

*** NON STANDARD GIRDER ***
ADDT'L USER-DEFINED LOADS APPLIED TO ALL LOAD CASES.

THIS TRUSS IS DESIGNED FOR RESIDENTIAL OR SMALL BUILDING REQUIREMENTS OF PART 9, NBCC 2010, NBCC 2015

THIS DESIGN COMPLIES WITH:
- PART 9 OF OBC 2012, OBC 2018
- CSA 086-09, CSA 086-14
- TPIC 2011, TPIC 2014

(55 % OF 54.3 P.S.F. G.S.L. PLUS 8.4 P.S.F. RAIN LOAD) EQUALS 38.2 P.S.F. SPECIFIED ROOF LIVE LOAD

ALLOWABLE DEFL.(LL)= L/360 (0.71")
CALCULATED VERT. DEFL.(LL) = L/ 999 (0.09")
ALLOWABLE DEFL.(TL)= L/360 (0.71")
CALCULATED VERT. DEFL.(TL) = L/ 999 (0.13")

CSI: TC=0.54/1.00 (E-F:1) , BC=0.67/1.00 (I-J:1) , WB=0.41/1.00 (G-J:1) , SSI=0.62/1.00 (H-I:1)

DOL LUMBER=1.00 NAIL=1.00 LS BEND=1.00 COMP=1.00 SHEAR=1.00 TENS= 1.00

COMPANION LIVE LOAD FACTOR = 1.00

AUTOSOLVE HEELS OFF

TRUSS PLATE MANUFACTURER IS NOT RESPONSIBLE FOR QUALITY CONTROL IN THE TRUSS MANUFACTURING PLANT.

NAIL VALUES

PLATE	GRIP(DRY) (PSI) MAX	MIN	SHEAR (PLI) MAX	MIN	SECTION (PLI) MAX	MIN
MT20	618	354	1667	768	1987	1656

PLATE PLACEMENT TOL. = 0.250 inches

PLATE ROTATION TOL. = 5.0 Deg.

JSI GRIP= 0.87 (B) (INPUT = 0.90)
JSI METAL= 0.44 (L) (INPUT = 1.00)

CONTINUED ON PAGE 2

JOB NAME	TRUSS NAME	QUANTITY	PLY	JOB DESC.	DRWG NO.
297078	T131	1	2	TRUSS DESC.	

Tamarack Roof Truss, Burlington

ID:P5XmF1xy53I8wCH47R2x3fzNvgf-85VagUH21_ZYXNQpfmI9Jcj82kwZ05m7oyiEb9ym?jf

TOWN OF INNISFIL
2018-0802-0808
REVIEWED
jpenfold
3/19/2021
Building Permit Plans

HANGERS NOTES

1) SPECIAL HANGER(S) OR CONNECTION(S) REQUIRED TO SUPPORT CONCENTRATED LOAD(S) 299.0 lbs FACTORED DOWN AT 18-6-8, 299.0 lbs FACTORED DOWN AT 2-11-8, 216.8 lbs FACTORED DOWN AT 2-11-8, 156.1 lbs FACTORED DOWN AT 5-0-4, 156.1 lbs FACTORED DOWN AT 7-0-4, 156.1 lbs FACTORED DOWN AT 9-0-4, 156.1 lbs FACTORED DOWN AT 10-9-0, 156.1 lbs FACTORED DOWN AT 12-5-12, 156.1 lbs FACTORED DOWN AT 14-5-12, AND 156.1 lbs FACTORED DOWN AT 16-5-12, AND 163.1 lbs FACTORED DOWN AT 18-6-8 ON TOP CHORD, AND 54.9 lbs FACTORED DOWN AT 1-0-4, 61.9 lbs FACTORED DOWN AT 3-0-4, 54.9 lbs FACTORED DOWN AT 5-0-4, 54.9 lbs FACTORED DOWN AT 7-0-4, 54.9 lbs FACTORED DOWN AT 9-0-4, 54.9 lbs FACTORED DOWN AT 10-9-0, 54.9 lbs FACTORED DOWN AT 12-5-12, 54.9 lbs FACTORED DOWN AT 14-5-12, 54.9 lbs FACTORED DOWN AT 16-5-12, AND 61.9 lbs FACTORED DOWN AT 18-5-12, AND 61.1 lbs FACTORED DOWN AT 20-5-12 ON BOTTOM CHORD. DESIGN FOR UNSPECIFIED CONNECTION(S) IS DELEGATED TO THE BUILDING DESIGNER.

SPECIFIED CONCENTRATED LOADS (LBS)

JT	LOC.	LC1	MAX-	MAX+	FACE	DIR.	TYPE
J	18-5-12	-44	-44	—	BACK	VERT	TOTAL
N	3-0-4	-44	-44	—	BACK	VERT	TOTAL
P	5-0-4	-106	-106	—	BACK	VERT	TOTAL
Q	7-0-4	-106	-106	—	BACK	VERT	TOTAL
R	9-0-4	-106	-106	—	BACK	VERT	TOTAL
S	10-9-0	-106	-106	—	BACK	VERT	TOTAL
T	12-5-12	-106	-106	—	BACK	VERT	TOTAL
U	14-5-12	-106	-106	—	BACK	VERT	TOTAL
V	16-5-12	-106	-106	—	BACK	VERT	TOTAL
W	1-0-4	-38	-38	—	BACK	VERT	TOTAL
X	5-0-4	-38	-38	—	BACK	VERT	TOTAL
Y	7-0-4	-38	-38	—	BACK	VERT	TOTAL
Z	9-0-4	-38	-38	—	BACK	VERT	TOTAL
AA	10-9-0	-38	-38	—	BACK	VERT	TOTAL
AB	12-5-12	-38	-38	—	BACK	VERT	TOTAL
AC	14-5-12	-38	-38	—	BACK	VERT	TOTAL
AD	16-5-12	-38	-38	—	BACK	VERT	TOTAL

LICENSED PROFESSIONAL ENGINEER
06/20/18
H.J.G. ALVES
PROVINCE OF ONTARIO

DWG NO. TAM 17805184
STRUCTURAL
COMPONENT ONLY
2/2

JOB NAME	TRUSS NAME	QUANTITY	PLY	JOB DESC.	DRWG NO.
297078	T133	1	1	TRUSS DESC.	

Tamarack Roof Truss, Burlington

Version 8.210 S May 18 2018 MiTek Industries, Inc. Mon Aug 20 09:48:11 2018 Page 1
ID:P5XmF1xy53IBwCH47R2x3fzNvqf-PSQD8tNRN8RZfRSACkNo65WHQZIL9DW9PYu6LFym?jY

Scale = 1:40.8

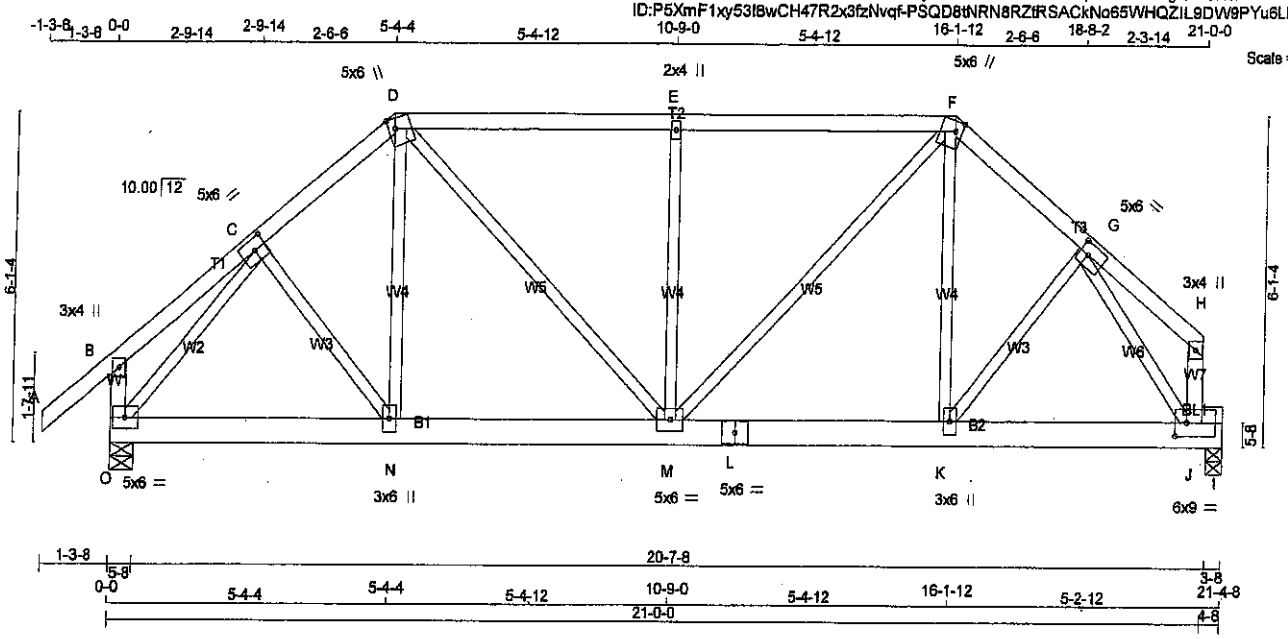

TOTAL WEIGHT = 109 lb

LUMBER
N. L. G. A. RULES

CHORDS	SIZE		LUMBER	DESCR.
A - D	2x4	DRY	No.2	SPF
D - F	2x4	DRY	No.2	SPF
F - H	2x4	DRY	No.2	SPF
O - B	2x4	DRY	No.2	SPF
J - H	2x4	DRY	No.2	SPF
O - L	2x6	DRY	No.2	SPF
L - I	2x6	DRY	No.2	SPF
BEARING BLOCKS				
BL1	2x4	DRY	No.2	SPF
ALL WEBS EXCEPT	2x3	DRY	No.2	SPF

DRY: SEASONED LUMBER.

PLATES (table is in inches)

JT	TYPE	PLATES	W	LEN	Y	X
B	TMV+p	MT20	3.0	4.0		
C	TMWW-t	MT20	5.0	6.0	2.50	2.75
D	TTWW+m	MT20	5.0	6.0	2.25	1.50
E	TMW+w	MT20	2.0	4.0		
F	TTWW+m	MT20	5.0	6.0	2.25	1.50
G	TMWW-t	MT20	5.0	6.0	2.50	2.00
H	TMV+p	MT20	3.0	4.0		
J	BMVWK-t	MT20	6.0	9.0	3.00	2.50
K	BMWW+t	MT20	3.0	6.0		
L	BS-t	MT20	5.0	6.0		
M	BMWWW-t	MT20	5.0	6.0		
N	BMWW+t	MT20	3.0	6.0		
O	BMVW1-t	MT20	5.0	6.0		

DIMENSIONS, SUPPORTS AND LOADINGS SPECIFIED BY FABRICATOR TO BE VERIFIED BY BUILDING DESIGNER

BEARINGS

JT	FACTORED GROSS REACTION VERT	HORZ	MAXIMUM FACTORED GROSS REACTION DOWN	HORZ	UPLIFT	INPUT BRG IN-SX	REQRD BRG IN-SX
I	1749	0	1749	0	0	3-8	3-8
O	1976	0	1976	0	0	5-8	5-8

UNFACTORED REACTIONS

JT	1ST LCASE COMBINED	MAX./MIN. COMPONENT REACTIONS SNOW	LIVE	PERM.LIVE	WIND	DEAD	SOIL
I	1286	789 / 0	224 / 0	0 / 0	0 / 0	273 / 0	0 / 0
O	1441	923 / 0	224 / 0	0 / 0	0 / 0	294 / 0	0 / 0

BEARING MATERIAL TO BE SPF NO.2 OR BETTER AT JOINT(S) I, O

BRACING
TOP CHORD TO BE SHEATHED OR MAX. PURLIN SPACING = 3.98 FT.
MAX. UNBRACED BOTTOM CHORD LENGTH = 10.00 FT OR RIGID CEILING DIRECTLY APPLIED.

ALL PITCH BREAKS AND PERIMETER CORNER JOINTS MUST BE LATERALLY RESTRAINED.

LOADING
TOTAL LOAD CASES: (4)

CHORDS

MEMB. FR-TO	MAX. FACTORED FORCE (LBS)	FACTORED VERT. LOAD (PLF) FROM	TO	LC1	MAX CSI (LC)	MAX. UNBRAC LENGTH
A- B	0 / 57	-129.7	-129.7	0.18 (1)	10.00	
B- C	0 / 22	-129.7	-129.7	0.13 (1)	10.00	
C- D	-1698 / 0	-129.7	-129.7	0.16 (1)	4.95	
D- E	-1750 / 0	-129.7	-129.7	0.73 (1)	3.98	
E- F	-1750 / 0	-129.7	-129.7	0.73 (1)	3.98	
F- G	-1713 / 0	-129.7	-129.7	0.15 (1)	4.95	
G- H	0 / 33	-129.7	-129.7	0.11 (1)	10.00	
O- B	-320 / 0	0.0	0.0	0.03 (1)	7.81	
J- H	-101 / 0	0.0	0.0	0.01 (1)	7.81	
O- N	0 / 1221	-38.5	-38.5	0.22 (1)	10.00	
N- M	0 / 1286	-38.5	-38.5	0.23 (1)	10.00	
M- L	0 / 1301	-38.5	-38.5	0.36 (1)	10.00	
L- K	0 / 1301	-38.5	-38.5	0.36 (1)	10.00	
K- J	0 / 1046	-38.5	-38.5	0.73 (1)	10.00	
J- I	0 / 0	-38.5	-38.5	0.38 (1)	10.00	

WEBS

MEMB. FR-TO	MAX. FACTORED FORCE (LBS)	MAX CSI (LC)
N- D	0 / 219	0.05 (3)
D- M	0 / 677	0.15 (1)
M- E	-853 / 0	0.47 (1)
M- F	0 / 655	0.15 (1)
K- F	0 / 235	0.05 (2)
C- N	0 / 121	0.03 (3)
O- C	-1990 / 0	0.60 (1)
K- G	0 / 401	0.09 (1)
G- J	-2076 / 0	0.56 (1)

DESIGN CRITERIA

SPECIFIED LOADS:

TOP CH.	LL	=	38.2	PSF
	DL	=	6.0	PSF
BOT CH.	LL	=	10.5	PSF
	DL	=	7.0	PSF
TOTAL LOAD		=	61.7	PSF

SPACING = 24.0 IN. C/C

LOADING IN FLAT SECTION BASED ON A SLOPE OF 6.00/12

THIS TRUSS IS DESIGNED FOR RESIDENTIAL OR SMALL BUILDING REQUIREMENTS OF PART 9, NBCC 2010, NBCC 2015

THIS DESIGN COMPLIES WITH:
- PART 9 OF OBC 2012, OBC 2018
- CSA 086-09, CSA 086-14
- TPIC 2011, TPIC 2014

(55 % OF 54.3 P.S.F. G.S.L. PLUS 8.4 P.S.F. RAIN LOAD) EQUALS 38.2 P.S.F. SPECIFIED ROOF LIVE LOAD

ALLOWABLE DEFL.(LL)= L/360 (0.71")
CALCULATED VERT. DEFL.(LL) = L/ 999 (0.07")
ALLOWABLE DEFL.(TL)= L/360 (0.71")
CALCULATED VERT. DEFL.(TL) = L/ 999 (0.12")

CSI: TC=0.73/1.00 (D-E:1), BC=0.73/1.00 (J-K:1), WB=0.60/1.00 (C-O:1), SSI=0.64/1.00 (I-J:1)

DOL LUMBER=1.00 NAIL=1.00 LS BEND=1.10 COMP=1.10 SHEAR=1.10 TENS= 1.10

COMPANION LIVE LOAD FACTOR = 1.00

AUTOSOLVE HEELS OFF

TRUSS PLATE MANUFACTURER IS NOT RESPONSIBLE FOR QUALITY CONTROL IN THE TRUSS MANUFACTURING PLANT.

NAIL VALUES

PLATE	GRIP(DRY) (PSI) MAX	MIN	SHEAR (PLI) MAX	MIN	SECTION (PLI) MAX	MIN
MT20	618	354	1667	788	1967	1656

PLATE PLACEMENT TOL. = 0.250 inches

PLATE ROTATION TOL. = 5.0 Deg.

JSI GRIP= 0.88 (J) (INPUT = 0.90)
JSI METAL= 0.49 (G) (INPUT = 1.00)

LICENSED PROFESSIONAL ENGINEER
08/20/18
H.J.G. ALVES
PROVINCE OF ONTARIO

DWG NO. TAM 17805166
STRUCTURAL
COMPONENT ONLY

TOWN OF INNISFIL
2018-0802-0808
REVIEWED
jperold
3/19/2021
Building Permit Plans

JOB NAME	TRUSS NAME	QUANTITY	PLY	JOB DESC.	DRWG NO.
297078	T132	1	1	TRUSS DESC.	

TOWN OF INNISFIL
2018-0802-0808
REVIEWED
jpenfold
3/10/2021
Building Permit Plans

Tamarack Roof Truss, Burlington

Version 8.210 S May 18 2018 MiTek Industries, Inc. Mon Aug 20 09:48:07 2018 Page 1

ID:P5XmF1xy53I8wCH47R2x3fzNvqf-XgAlIWJwKvx7Oq9OzvJsxFLgYyzKDTEZUwwvCUym?jc

-1-3-8 1-3-8 0-0 4-1-14 4-1-14 4-5-3 8-7-1 4-3-15 12-10-15 4-5-3 17-4-2 3-7-14 21-0-0

Scale = 1:37.3

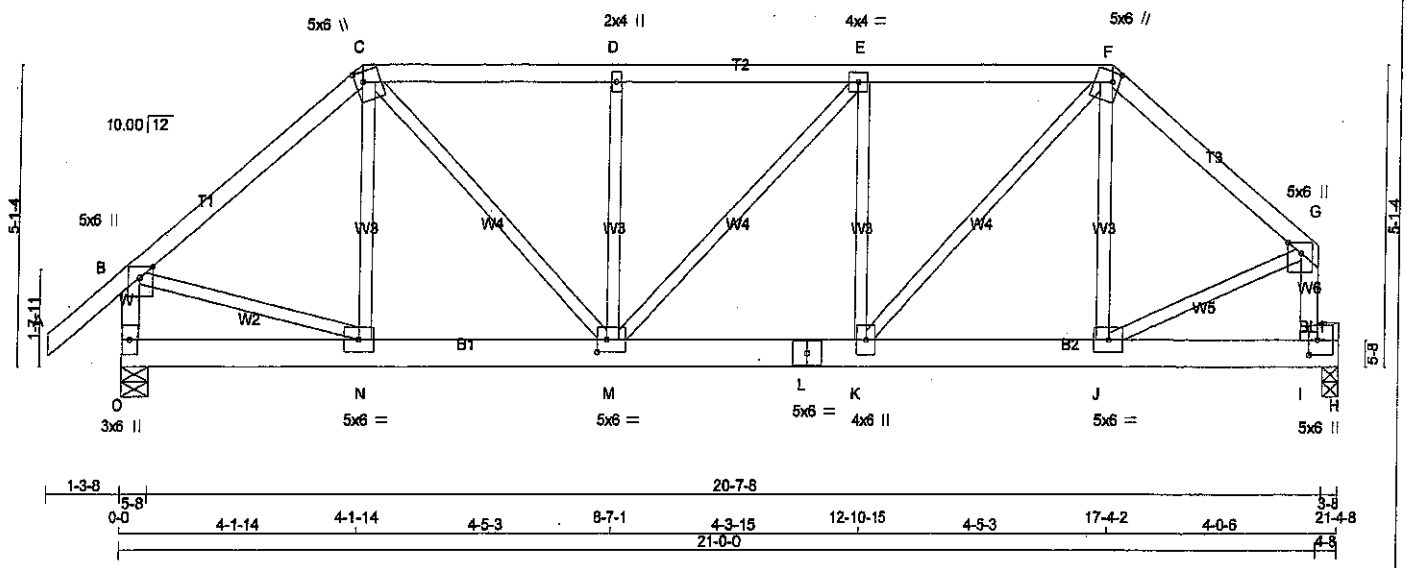

1-3-8 5-8 20-7-8 3-8

0-0 4-1-14 4-1-14 4-5-3 8-7-1 4-3-15 12-10-15 4-5-3 17-4-2 4-0-6 21-4-8

21-0-0 4-8

TOTAL WEIGHT = 106 lb

[M]

LUMBER

N. L. G. A. RULES

CHORDS	SIZE		LUMBER	DESCR.
A - C	2x4	DRY	No.2	SPF
C - F	2x4	DRY	No.2	SPF
F - G	2x4	DRY	No.2	SPF
O - B	2x4	DRY	No.2	SPF
I - G	2x4	DRY	No.2	SPF
O - L	2x6	DRY	No.2	SPF
L - H	2x6	DRY	No.2	SPF
BEARING BLOCKS				
BL1	2x4	DRY	No.2	SPF
ALL WEBS EXCEPT	2x3	DRY	No.2	SPF

DRY: SEASONED LUMBER.

PLATES (table is in inches)

JT	TYPE	PLATES	W	LEN	Y	X
B	TMVW+p	MT20	5.0	6.0	Edge	2.75
C	TTWW+m	MT20	5.0	6.0	2.00	1.50
D	TMW+w	MT20	2.0	4.0		
E	TMWW-t	MT20	4.0	4.0		
F	TTWW+m	MT20	5.0	6.0	2.00	1.50
G	TMVW+p	MT20	5.0	6.0	Edge	2.75
I	BMVK+p	MT20	5.0	6.0	3.00	1.75
J	BMWW-t	MT20	5.0	6.0		
K	BMWW+t	MT20	4.0	6.0		
L	BS-t	MT20	5.0	6.0		
M	BMWWW-t	MT20	5.0	6.0	2.50	2.00
N	BMWW-t	MT20	5.0	6.0		
O	BMV1+p	MT20	3.0	6.0		

Edge - INDICATES REFERENCE CORNER OF PLATE TOUCHES EDGE OF CHORD.

DIMENSIONS, SUPPORTS AND LOADINGS SPECIFIED BY FABRICATOR TO BE VERIFIED BY BUILDING DESIGNER

BEARINGS

JT	FACTORED GROSS REACTION VERT	HORZ	MAXIMUM FACTORED GROSS REACTION DOWN	HORZ	UPLIFT	INPUT BRG IN-SX	REQRD BRG IN-SX
O	1976	0	1976	0	0	5-8	5-8
H	1749	0	1749	0	0	3-8	3-8

UNFACTORED REACTIONS

JT	1ST LCASE COMBINED	MAX./MIN. COMPONENT REACTIONS SNOW	LIVE	PERM.LIVE	WIND	DEAD	SOIL
O	1441	923 / 0	224 / 0	0 / 0	0 / 0	294 / 0	0 / 0
H	1286	789 / 0	224 / 0	0 / 0	0 / 0	273 / 0	0 / 0

BEARING MATERIAL TO BE SPF NO.2 OR BETTER AT JOINT(S) O, H

BRACING

TOP CHORD TO BE SHEATHED OR MAX. PURLIN SPACING = 4.33 FT.
MAX. UNBRACED BOTTOM CHORD LENGTH = 6.25 FT OR RIGID CEILING DIRECTLY APPLIED.

ALL PITCH BREAKS AND PERIMETER CORNER JOINTS MUST BE LATERALLY RESTRAINED.

LOADING

TOTAL LOAD CASES: (4)

CHORDS

MEMB. FR-TO	MAX. FACTORED FORCE (LBS)	FACTORED VERT. LOAD LC1 (PLF) FROM	TO	MAX CSI (LC)	MAX. UNBRAC LENGTH
A- B	0 / 57	-129.7	-129.7	0.18 (1)	10.00
B- C	-1694 / 0	-129.7	-129.7	0.46 (1)	4.56
C- D	-2001 / 0	-129.7	-129.7	0.39 (1)	4.35
D- E	-2001 / 0	-129.7	-129.7	0.40 (1)	4.33
E- F	-1987 / 0	-129.7	-129.7	0.40 (1)	4.35
F- G	-1707 / 0	-129.7	-129.7	0.36 (1)	4.69
O- B	-1910 / 0	0.0	0.0	0.20 (1)	6.08
I- G	-1969 / 0	0.0	0.0	0.22 (1)	5.98
O- N	0 / 0	-38.5	-38.5	0.06 (3)	10.00
N- M	0 / 1294	-38.5	-38.5	0.20 (1)	10.00
M- L	0 / 1987	-38.5	-38.5	0.30 (1)	10.00
L- K	0 / 1987	-38.5	-38.5	0.30 (1)	10.00
K- J	0 / 1305	-38.5	-38.5	0.33 (1)	10.00
J- I	-176 / 0	-38.5	-38.5	0.61 (1)	6.25
I- H	0 / 0	-38.5	-38.5	0.38 (1)	10.00

WEBS

MEMB. FR-TO	MAX. FACTORED FORCE (LBS)	MAX CSI (LC)
N- C	-177 / 92	0.06 (1)
J- F	-107 / 107	0.04 (1)
B- N	0 / 1351	0.30 (1)
J- G	0 / 1618	0.36 (1)
K- F	0 / 995	0.22 (1)
C- M	0 / 1031	0.23 (1)
K- E	-629 / 0	0.23 (1)
M- D	-608 / 0	0.22 (1)
M- E	0 / 20	0.00 (1)

LICENSED PROFESSIONAL ENGINEER
08/20/18
H.J.G. ALVES
PROVINCE OF ONTARIO

DESIGN CRITERIA

SPECIFIED LOADS:

TOP CH.	LL =	38.2	PSF
	DL =	6.0	PSF
BOT CH.	LL =	10.5	PSF
	DL =	7.0	PSF
TOTAL LOAD	=	61.7	PSF

SPACING = 24.0 IN. C/C

LOADING IN FLAT SECTION BASED ON A SLOPE OF 6.00/12

THIS TRUSS IS DESIGNED FOR RESIDENTIAL OR SMALL BUILDING REQUIREMENTS OF PART 9, NBCC 2010, NBCC 2015

THIS DESIGN COMPLIES WITH:
- PART 9 OF OBC 2012, OBC 2018
- CSA 086-09, CSA 086-14
- TPIC 2011, TPIC 2014

(55 % OF 54.3 P.S.F. G.S.L. PLUS 8.4 P.S.F. RAIN LOAD) EQUALS 38.2 P.S.F. SPECIFIED ROOF LIVE LOAD

ALLOWABLE DEFL.(LL)= L/360 (0.71")
CALCULATED VERT. DEFL.(LL) = L/ 999 (0.07")
ALLOWABLE DEFL.(TL)= L/360 (0.71")
CALCULATED VERT. DEFL.(TL) = L/ 999 (0.11")

CSI: TC=0.46/1.00 (B-C:1) , BC=0.61/1.00 (I-J:1) , WB=0.36/1.00 (G-J:1) , SSI=0.64/1.00 (H-I:1)

DOL LUMBER=1.00 NAIL=1.00 LS BEND=1.10 COMP=1.10 SHEAR=1.10 TENS= 1.10

COMPANION LIVE LOAD FACTOR = 1.00

TRUSS PLATE MANUFACTURER IS NOT RESPONSIBLE FOR QUALITY CONTROL IN THE TRUSS MANUFACTURING PLANT .

NAIL VALUES

PLATE	GRIP(DRY) (PSI) MAX	MIN	SHEAR (PLI) MAX	MIN	SECTION (PLI) MAX	MIN
MT20	616	354	1667	788	1987	1656

PLATE PLACEMENT TOL. = 0.250 inches

PLATE ROTATION TOL. = 5.0 Deg.

JSI GRIP= 0.87 (C) (INPUT = 0.90)
JSI METAL= 0.41 (L) (INPUT = 1.00)

DWG NO. TAM 17805185
STRUCTURAL COMPONENT ONLY

TOWN OF INNISFIL
2018-0802-0808
REVIEWED
jpenfold
3/19/2021
Building Permit Plans

JOB NAME	TRUSS NAME	QUANTITY	PLY	JOB DESC.	DRWG NO.
297078	T134	1	1	TRUSS DESC.	

Tamarack Roof Truss, Burlington

Version 8.210 S May 18 2018 MiTek Industries, Inc. Mon Aug 20 09:46:14 2018 Page 1
ID:P5XmF1xy53I8wCH47R2x3fzNvqf-q15MmvPJg3p8kvBkttxVjj8fmNVMX4b5W7myaym?jV

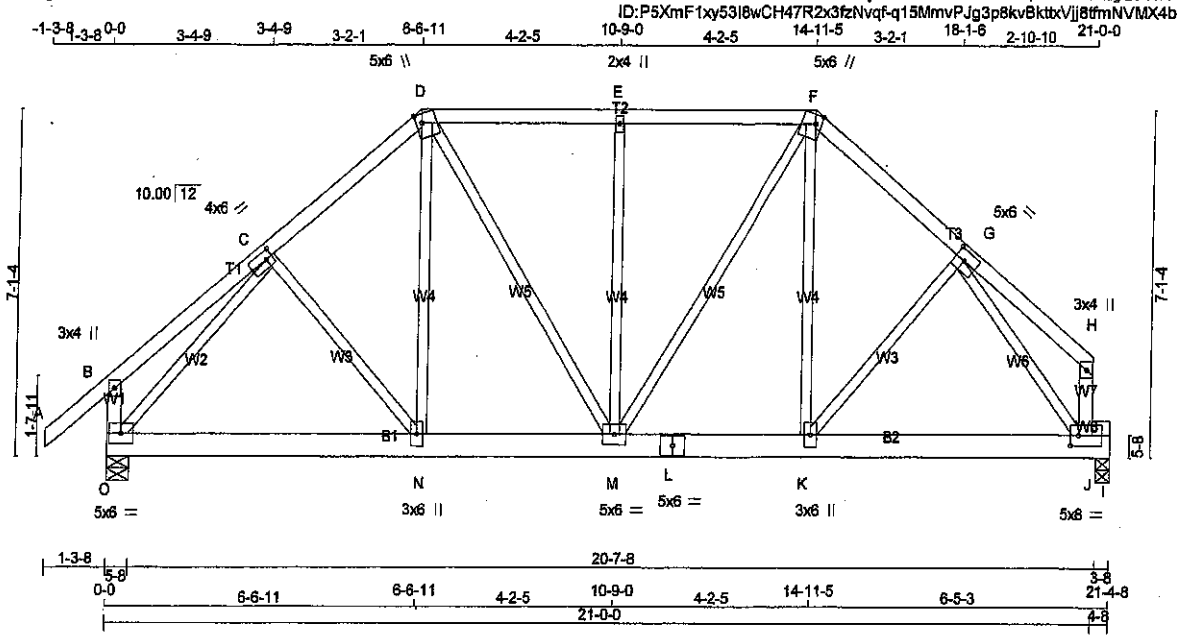

TOTAL WEIGHT = 115 lb

[M]

LUMBER

N. L. G. A. RULES

CHORDS	SIZE		LUMBER	DESCR.
A - D	2x4	DRY	No.2	SPF
D - F	2x4	DRY	No.2	SPF
F - H	2x4	DRY	No.2	SPF
O - B	2x4	DRY	No.2	SPF
J - H	2x4	DRY	No.2	SPF
O - L	2x6	DRY	No.2	SPF
L - I	2x6	DRY	No.2	SPF
J - I	2x4	DRY	No.2	SPF
ALL WEBS EXCEPT	2x3	DRY	No.2	SPF

DRY: SEASONED LUMBER.

PLATES (table is in inches)

JT	TYPE	PLATES	W	LEN	Y	X
B	TMV+p	MT20	3.0	4.0		
C	TMWW-t	MT20	4.0	6.0	2.00	1.75
D	TTWW+m	MT20	5.0	6.0	2.25	1.50
E	TMW+w	MT20	2.0	4.0		
F	TTWW+m	MT20	5.0	6.0	2.25	1.50
G	TMWW-t	MT20	5.0	6.0	2.50	2.50
H	TMV+p	MT20	3.0	4.0		
J	BMWWW-t	MT20	5.0	8.0	2.50	2.00
K	BMWW+t	MT20	3.0	6.0		
L	BS-t	MT20	5.0	6.0		
M	BMWWW-t	MT20	5.0	6.0		
N	BMWW+t	MT20	3.0	6.0		
O	BMVW1-t	MT20	5.0	6.0		

DIMENSIONS, SUPPORTS AND LOADINGS SPECIFIED BY FABRICATOR TO BE VERIFIED BY BUILDING DESIGNER

BEARINGS

JT	FACTORED GROSS REACTION VERT	HORZ	MAXIMUM FACTORED GROSS REACTION DOWN	HORZ	UPLIFT	INPUT BRG IN-SX	REQRD BRG IN-SX
O	1976	0	1976	0	0	5-8	5-8
I	1749	0	1749	0	0	3-8	3-8

UNFACTORED REACTIONS

JT	1ST LCASE COMBINED	MAX./MIN. COMPONENT REACTIONS SNOW	LIVE	PERM.LIVE	WIND	DEAD	SOIL
O	1441	923 / 0	224 / 0	0 / 0	0 / 0	294 / 0	0 / 0
I	1286	789 / 0	224 / 0	0 / 0	0 / 0	273 / 0	0 / 0

BEARING MATERIAL TO BE SPF NO.2 OR BETTER AT JOINT(S) O, I

BRACING

TOP CHORD TO BE SHEATHED OR MAX. PURLIN SPACING = 4.90 FT.
MAX. UNBRACED BOTTOM CHORD LENGTH = 10.00 FT OR RIGID CEILING DIRECTLY APPLIED.

ALL PITCH BREAKS AND PERIMETER CORNER JOINTS MUST BE LATERALLY RESTRAINED.

LOADING

TOTAL LOAD CASES: (4)

CHORDS

MEMB. FR-TO	MAX. FACTORED FORCE (LBS)	FACTORED VERT. LOAD (PLF) FROM	TO	LC1	MAX CSI (LC)	MAX. UNBRAC LENGTH
A- B	0 / 57	-129.7	-129.7	0.18 (1)	10.00	
B- C	0 / 30	-129.7	-129.7	0.21 (1)	10.00	
C- D	-1642 / 0	-129.7	-129.7	0.25 (1)	4.91	
D- E	-1457 / 0	-129.7	-129.7	0.41 (1)	4.90	
E- F	-1457 / 0	-129.7	-129.7	0.41 (1)	4.90	
F- G	-1654 / 0	-129.7	-129.7	0.22 (1)	4.93	
G- H	0 / 30	-129.7	-129.7	0.18 (1)	10.00	
O- B	-344 / 0	0.0	0.0	0.04 (1)	7.81	
J- H	-132 / 0	0.0	0.0	0.01 (1)	7.81	
O- N	0 / 1261	-38.5	-38.5	0.25 (1)	10.00	
N- M	0 / 1240	-38.5	-38.5	0.24 (2)	10.00	
M- L	0 / 1253	-38.5	-38.5	0.36 (1)	10.00	
L- K	0 / 1253	-38.5	-38.5	0.36 (1)	10.00	
K- J	0 / 1148	-38.5	-38.5	0.57 (1)	10.00	
J- I	0 / 0	-38.5	-38.5	0.27 (1)	10.00	

WEBS

MEMB. FR-TO	MAX. FACTORED FORCE (LBS)	MAX CSI (LC)
C- N	-40 / 80	0.02 (3)
N- D	0 / 334	0.08 (2)
D- M	0 / 410	0.09 (1)
M- E	-656 / 0	0.54 (1)
M- F	0 / 386	0.09 (1)
K- F	0 / 352	0.08 (2)
K- G	0 / 167	0.04 (2)
O- C	-1979 / 0	0.81 (1)
G- J	-2003 / 0	0.72 (1)

DESIGN CRITERIA

SPECIFIED LOADS:

TOP CH.	LL	=	38.2	PSF
	DL	=	6.0	PSF
BOT CH.	LL	=	10.5	PSF
	DL	=	7.0	PSF
TOTAL LOAD		=	61.7	PSF

SPACING = 24.0 IN. C/C

LOADING IN FLAT SECTION BASED ON A SLOPE OF 6.00/12

THIS TRUSS IS DESIGNED FOR RESIDENTIAL OR SMALL BUILDING REQUIREMENTS OF PART 9, NBCC 2010, NBCC 2015

THIS DESIGN COMPLIES WITH:
- PART 9 OF OBC 2012, OBC 2018
- CSA 086-09, CSA 086-14
- TPIC 2011, TPIC 2014

(55 % OF 54.3 P.S.F. G.S.L. PLUS 8.4 P.S.F. RAIN LOAD) EQUALS 38.2 P.S.F. SPECIFIED ROOF LIVE LOAD

ALLOWABLE DEFL.(LL)= L/360 (0.71")
CALCULATED VERT. DEFL.(LL) = L/ 999 (0.07")
ALLOWABLE DEFL.(TL)= L/360 (0.71")
CALCULATED VERT. DEFL.(TL) = L/ 999 (0.12")

CSI: TC=0.41/1.00 (E-F:1) , BC=0.57/1.00 (J-K:1) , WB=0.81/1.00 (C-O:1) , SSI=0.64/1.00 (I-J:1)

DOL LUMBER=1.00 NAIL=1.00 LS BEND=1.10 COMP=1.10 SHEAR=1.10 TENS= 1.10

COMPANION LIVE LOAD FACTOR = 1.00

TRUSS PLATE MANUFACTURER IS NOT RESPONSIBLE FOR QUALITY CONTROL IN THE TRUSS MANUFACTURING PLANT .

NAIL VALUES

PLATE	GRIP(DRY) (PSI) MAX	MIN	SHEAR (PLI) MAX	MIN	SECTION (PLI) MAX	MIN
MT20	616	354	1667	788	1987	1656

PLATE PLACEMENT TOL. = 0.250 inches

PLATE ROTATION TOL. = 5.0 Deg.

JSI GRIP= 0.88 (C) (INPUT = 0.90)
JSI METAL= 0.49 (C) (INPUT = 1.00)

LICENSED PROFESSIONAL ENGINEER
08/20/18
H.J.G. ALVES
PROVINCE OF ONTARIO

DWG NO. TAM 71805187
STRUCTURAL
COMPONENT ONLY

TOWN OF INNISFIL
2018-0802-0808
REVIEWED
jpenfold
3/19/2021
Building Permit Plans

JOB NAME	TRUSS NAME	QUANTITY	PLY	JOB DESC.	DRWG NO.
297079	T150Z	1	2	TRUSS DESC.	

Tamarack Roof Truss, Burlington

Version 8.210 S May 18 2018 MiTek Industries, Inc. Mon Aug 20 11:48:43 2018 Page 1
ID:4u167_apsj?wvBfJKDwJbPzNv7w-fmPD_lupEAbQVrK5sb7jCA2CIqZNd_sePimoA4ylzyY

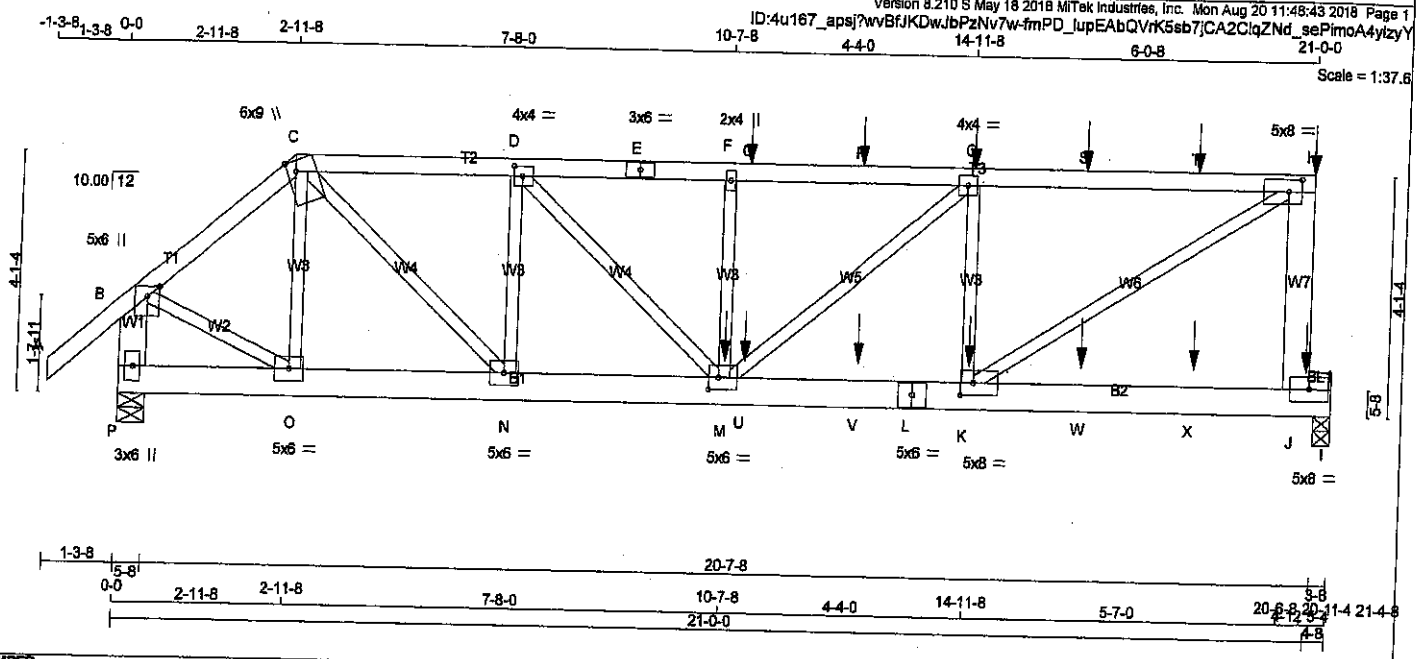

TOTAL WEIGHT = 2 X 105 = 209 lb

LUMBER

N. L. G. A. RULES

CHORDS	SIZE		LUMBER	DESCR.
A - C	2x4	DRY	No.2	SPF
C - E	2x4	DRY	No.2	SPF
E - H	2x4	DRY	No.2	SPF
J - H	2x6	DRY	No.2	SPF
P - B	2x6	DRY	No.2	SPF
P - L	2x6	DRY	No.2	SPF
L - I	2x6	DRY	No.2	SPF
BEARING BLOCKS				
BL1	2x4	DRY	No.2	SPF
ALL WEBS EXCEPT	2x3	DRY	No.2	SPF

DRY: SEASONED LUMBER.

DESIGN CONSISTS OF 2 TRUSSES BUILT SEPARATELY THEN FASTENED TOGETHER AS FOLLOWS:

CHORDS	#ROWS	SURFACE SPACING (IN)	LOAD(PLF)
TOP CHORDS : (0.122"X3") SPIRAL NAILS			
A- C	1	12	TOP
C- E	1	12	TOP
E- H	1	12	SIDE(61.0)
H- J	2	12	TOP
P- B	2	12	TOP
BOTTOM CHORDS : (0.122"X3") SPIRAL NAILS			
P- L	2	12	SIDE(183.1)
L- I	2	12	SIDE(183.1)
WEBS : (0.122"X3") SPIRAL NAILS			
F- M	1	6	SIDE(240.6)
2x3	1	6	
2x4	1	6	

NAILS TO BE DRIVEN FROM ONE SIDE ONLY.

GIRDER NAILING ASSUMES NAILED HANGERS ARE FASTENED WITH MIN. 3-0 INCH NAILS.

TOP - COMPONENTS ARE LOADED FROM THE TOP AND MUST BE PLACED ON TOP EDGE OF ALL PLIES FOR THE LOAD TO BE TRANSFERRED TO EACH PLY.

SIDE - PLF SHOWN IS THE EQUIVALENT UDL APPLIED TO ONE SIDE THAT THE CORRESPONDING NAILING PATTERN SHALL BE CAPABLE OF TRANSFERING. REMAINING PLF MUST BE APPLIED ON THE OPPOSITE SIDE OR ON THE TOP.

PLATES (table is in inches)

JT	TYPE	PLATES	W	LEN	Y	X
B	TMWW+p	MT20	5.0	6.0	2.00	2.25
C	TTWW+m	MT20	6.0	9.0	Edge	1.75
D	TMWW-t	MT20	4.0	4.0	2.00	1.75
E	TS-t	MT20	3.0	6.0		
F	TMW+w	MT20	2.0	4.0		
G	TMWW-t	MT20	4.0	4.0		
H	TMVW-t	MT20	5.0	8.0	2.50	2.75
J	BMVK-t	MT20	5.0	8.0		
K	BMWW-t	MT20	5.0	8.0	2.50	2.75
L	BS-t	MT20	5.0	6.0		
M	BMWWW-t	MT20	5.0	6.0	2.50	2.00
N	BMWW-t	MT20	5.0	6.0		
O	BMWW-t	MT20	5.0	6.0		
P	BMV1+p	MT20	3.0	6.0		

DIMENSIONS, SUPPORTS AND LOADINGS SPECIFIED BY FABRICATOR TO BE VERIFIED BY BUILDING DESIGNER

BEARINGS

JT	FACTORED GROSS REACTION VERT	HORZ	MAXIMUM FACTORED GROSS REACTION DOWN	HORZ	UPLIFT	INPUT BRG IN-SX	REQRD BRG IN-SX
P	3093	0	3093	0	0	5-8	5-8
I	3589	0	3589	0	0	3-8	3-8

UNFACTORED REACTIONS

JT	1ST LCASE COMBINED	MAX./MIN. COMPONENT REACTIONS SNOW	LIVE	PERM.LIVE	WIND	DEAD	SOIL
P	2249	1471 / 0	343 / 0	0 / 0	0 / 0	435 / 0	0 / 0
I	2822	1685 / 0	436 / 0	0 / 0	0 / 0	501 / 0	0 / 0

BEARING MATERIAL TO BE SPF NO.2 OR BETTER AT JOINT(S) P, I

BRACING

TOP CHORD TO BE SHEATHED OR MAX. PURLIN SPACING = 3.30 FT.
MAX. UNBRACED BOTTOM CHORD LENGTH = 6.25 FT OR RIGID CEILING DIRECTLY APPLIED.

ALL PITCH BREAKS AND PERIMETER CORNER JOINTS MUST BE LATERALLY RESTRAINED.

LOADING

TOTAL LOAD CASES: (4)

CHORDS

MEMB. FR-TO	MAX. FACTORED FORCE (LBS)	FACTORED VERT. LOAD (PLF) FROM	TO	LC1	MAX CSI (LC)	MAX. UNBRAC LENGTH
A- B	0 / 57	-129.7	-129.7	0.10 (1)	10.00	
B- C	-2829 / 0	-129.7	-129.7	0.14 (1)	5.32	
C- D	-4350 / 0	-129.7	-129.7	0.22 (1)	4.40	
D- E	-5686 / 0	-129.7	-129.7	0.27 (1)	3.87	
E- F	-5686 / 0	-129.7	-129.7	0.27 (1)	3.87	
F- Q	-5686 / 0	-129.7	-129.7	0.66 (1)	3.30	
Q- R	-5686 / 0	-129.7	-129.7	0.66 (1)	3.30	
R- G	-5686 / 0	-129.7	-129.7	0.66 (1)	3.30	
G- S	-4793 / 0	-129.7	-129.7	0.70 (1)	3.64	
S- T	-4793 / 0	-129.7	-129.7	0.70 (1)	3.64	
T- H	-4793 / 0	-129.7	-129.7	0.70 (1)	3.64	
J- H	-3766 / 0	0.0	0.0	0.30 (1)	7.27	
P- B	-3056 / 0	0.0	0.0	0.11 (1)	7.81	
P- O	0 / 0	-38.5	-38.5	0.03 (2)	10.00	
O- N	0 / 2145	-38.5	-38.5	0.16 (1)	10.00	
N- M	0 / 4350	-38.5	-38.5	0.41 (1)	10.00	
M- U	0 / 4793	-38.5	-38.5	0.56 (1)	10.00	
U- V	0 / 4793	-38.5	-38.5	0.56 (1)	10.00	
V- L	0 / 4793	-38.5	-38.5	0.56 (1)	10.00	
L- K	0 / 4793	-38.5	-38.5	0.56 (1)	10.00	
K- W	-231 / 0	-38.5	-38.5	0.79 (1)	6.25	
W- X	-231 / 0	-38.5	-38.5	0.79 (1)	6.25	
X- J	-231 / 0	-38.5	-38.5	0.79 (1)	6.25	
J- I	0 / 0	-168.2	-168.2	0.49 (1)	10.00	

WEBS

MEMB. FR-TO	MAX. FACTORED FORCE (LBS)	MAX CSI (LC)
O- C	-704 / 0	0.09 (1)
M- F	-587 / 0	0.07 (1)
M- G	0 / 1176	0.15 (1)
K- G	-2086 / 0	0.26 (1)
K- H	0 / 5904	0.73 (1)
B- O	0 / 2331	0.29 (1)
N- D	-1862 / 0	0.24 (1)
C- N	0 / 3047	0.38 (1)
D- M	0 / 1876	0.23 (1)

SPECIFIED CONCENTRATED LOADS (LBS)

JT	LOC.	LC1	MAX-	MAX+	FACE	DIR.	TYPE
G	14-11-12	-106	-106	—	BACK	VERT	TOTAL
H	21-0-0	-148	-148	—	BACK	VERT	TOTAL
J	20-11-4	-53	-53	—	BACK	VERT	TOTAL
K	14-11-12	-38	-38	—	BACK	VERT	TOTAL
M	10-7-8	-1166	-1166	—	BACK	VERT	TOTAL
Q	10-11-12	-106	-106	—	BACK	VERT	TOTAL
R	12-11-12	-106	-106	—	BACK	VERT	TOTAL
S	16-11-12	-106	-106	—	BACK	VERT	TOTAL
T	18-11-12	-106	-106	—	BACK	VERT	TOTAL
U	10-11-12	-38	-38	—	BACK	VERT	TOTAL
V	12-11-12	-38	-38	—	BACK	VERT	TOTAL
W	16-11-12	-38	-38	—	BACK	VERT	TOTAL
X	18-11-12	-38	-38	—	BACK	VERT	TOTAL

DESIGN CRITERIA

SPECIFIED LOADS:

TOP CH.	LL	=	38.2	PSF
	DL	=	8.0	PSF
BOT CH.	LL	=	10.5	PSF
	DL	=	7.0	PSF
TOTAL LOAD		=	61.7	PSF

SPACING = 24.0 IN C/C

LOADING IN FLAT SECTION BASED ON A SLOPE OF 6.00/12

THIS TRUSS IS DESIGNED FOR RESIDENTIAL OR SMALL BUILDING REQUIREMENTS OF PART 9, NBCC 2010, NBCC 2015

THIS DESIGN COMPLIES WITH:
- PART 9 OF OBC 2012, OBC 2018
- CSA 086-09, CSA 086-14
- TPIC 2011, TPIC 2014

(55 % OF 54.3 P.S.F. G.S.L. PLUS 8.4 P.S.F. RAIN LOAD) EQUALS 38.2 P.S.F. SPECIFIED ROOF LIVE LOAD

ALLOWABLE DEFL.(LL)= L/360 (0.71")
CALCULATED VERT. DEFL.(LL) = L/ 999 (0.15")
ALLOWABLE DEFL.(TL)= L/360 (0.71")
CALCULATED VERT. DEFL.(TL) = L/ 999 (0.23")

CSI: TC=0.70/1.00 (G-H:1) , BC=0.79/1.00 (J-K:1) , WB=0.73/1.00 (H-K:1) , SSI=0.73/1.00 (I-J:1)

DOL LUMBER=1.00 NAIL=1.00 LS BEND=1.00 COMP=1.00 SHEAR=1.00 TENS= 1.00

COMPANION LIVE LOAD FACTOR = 1.00

AUTOSOLVE RIGHT HEEL ONLY

TRUSS PLATE MANUFACTURER IS NOT RESPONSIBLE FOR QUALITY CONTROL IN THE TRUSS MANUFACTURING PLANT .

NAIL VALUES

PLATE	GRIP(DRY) (PSI) MAX	MIN	SHEAR (PLI) MAX	MIN	SECTION (PLI) MAX	MIN
MT20	818	354	1667	788	1987	1656

PLATE PLACEMENT TOL. = 0.250 inches

PLATE ROTATION TOL. = 5.0 Deg.

JSI GRIP= 0.89 (H) (INPUT = 0.90)
JSI METAL= 0.57 (L) (INPUT = 1.00)

LICENSED PROFESSIONAL ENGINEER
09/20/18
H.J.G. ALVES
PROVINCE OF ONTARIO

DWG NO. TAM T1805230
STRUCTURAL
COMPONENT ONLY 1/2

CONTINUED ON PAGE 2

JOB NAME	TRUSS NAME	QUANTITY	PLY	JOB DESC.	DRWG NO.
297079	T150Z	1	2	TRUSS DESC.	

Tamarack Roof Truss, Burlington

TOWN OF INNISFIL
2018-0802-0808
REVIEWED
jpenfold
3/19/2021
Building Permit Plans

Edge - INDICATES REFERENCE CORNER OF PLATE TOUCHES EDGE OF CHORD.

HANGERS NOTES

1) SPECIAL HANGER(S) OR CONNECTION(S) REQUIRED TO SUPPORT CONCENTRATED LOAD(S) 156.1 lbs FACTORED DOWN AT 10-11-12, 156.1 lbs FACTORED DOWN AT 12-11-12, 156.1 lbs FACTORED DOWN AT 14-11-12, 156.1 lbs FACTORED DOWN AT 16-11-12, AND 156.1 lbs FACTORED DOWN AT 18-11-12, AND 216.8 lbs FACTORED DOWN AT 21-0-0 ON TOP CHORD, AND 1624.2 lbs FACTORED DOWN AT 10-7-8, 54.9 lbs FACTORED DOWN AT 10-11-12, 54.9 lbs FACTORED DOWN AT 12-11-12, 54.9 lbs FACTORED DOWN AT 14-11-12, 54.9 lbs FACTORED DOWN AT 16-11-12, AND 54.9 lbs FACTORED DOWN AT 18-11-12, AND 75.7 lbs FACTORED DOWN AT 20-11-4 ON BOTTOM CHORD. DESIGN FOR UNSPECIFIED CONNECTION(S) IS DELEGATED TO THE BUILDING DESIGNER.

LICENSED PROFESSIONAL ENGINEER
08/20/18
H.J.G. AMES
PROVINCE OF ONTARIO

DWG NO. TAM 17605230
STRUCTURAL
COMPONENT ONLY 2/2

TOWN OF INNISFIL
2018-0802-0808
REVIEWED
jpenfold
3/19/2021
Building Permit Plans

JOB NAME	TRUSS NAME	QUANTITY	PLY	JOB DESC.	DRWG NO.
297079	T151	1	1	TRUSS DESC.	

Tamarack Roof Truss, Burlington

Version 8.210 S May 18 2018 MiTek Industries, Inc. Mon Aug 20 11:48:46 2018 Page 1
ID:4u167_apsj?wvBfJKDwJbPzNv7w-4L4LcnwiX5z?MJ3gXjhQapgiH1dwqOW55g_SnPylzyV

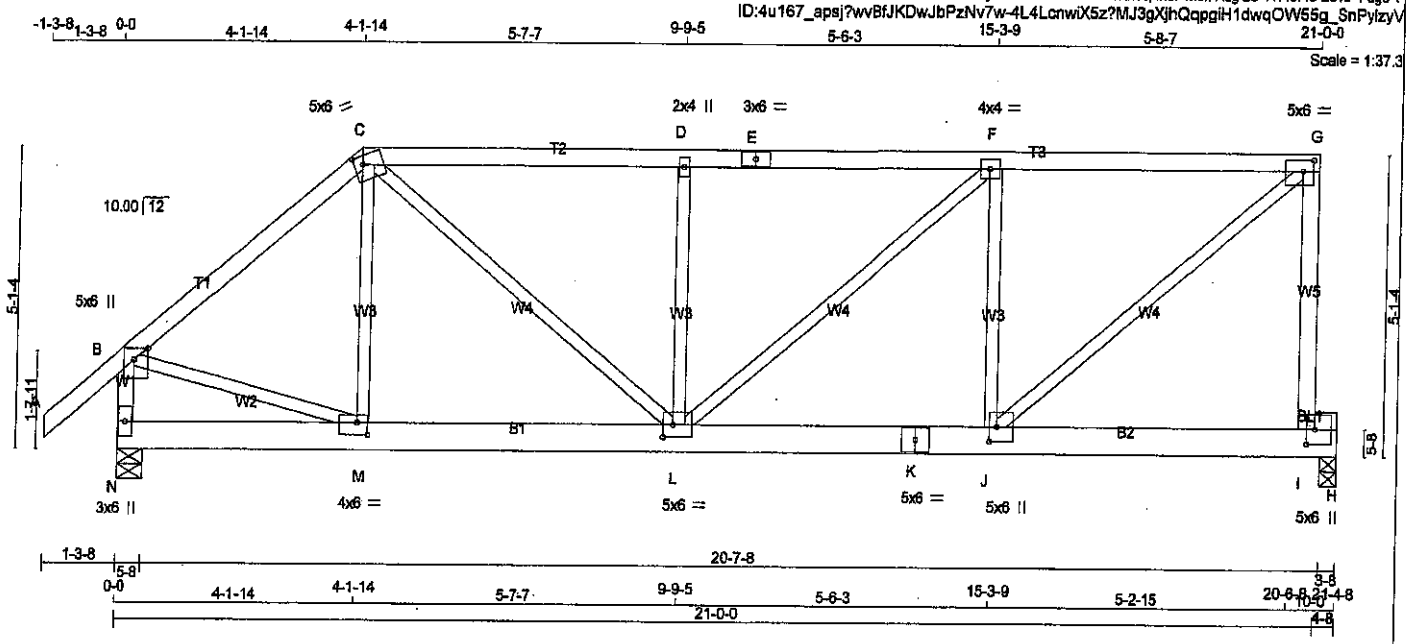

TOTAL WEIGHT = 103 lb [M]

LUMBER
N. L. G. A. RULES

CHORDS	SIZE		LUMBER	DESCR.
A - C	2x4	DRY	No.2	SPF
C - E	2x4	DRY	No.2	SPF
E - G	2x4	DRY	No.2	SPF
I - G	2x4	DRY	No.2	SPF
N - B	2x4	DRY	No.2	SPF
N - K	2x6	DRY	No.2	SPF
K - H	2x6	DRY	No.2	SPF
BEARING BLOCKS				
BL1	2x4	DRY	No.2	SPF
ALL WEBS EXCEPT	2x3	DRY	No.2	SPF

DRY: SEASONED LUMBER.

PLATES (table is in inches)

JT	TYPE	PLATES	W	LEN	Y	X
B	TMVW+p	MT20	5.0	6.0	Edge	2.75
C	TTWW-m	MT20	5.0	6.0	1.75	1.75
D	TMW+w	MT20	2.0	4.0		
E	TS-t	MT20	3.0	6.0		
F	TMWW-t	MT20	4.0	4.0		
G	TMVW-t	MT20	5.0	6.0	2.25	2.25
I	BMVK+p	MT20	5.0	6.0	3.00	1.75
J	BMWW+t	MT20	5.0	6.0	3.00	1.50
K	BS-t	MT20	5.0	6.0		
L	BMWWW-t	MT20	5.0	6.0	2.50	2.00
M	BMWW-t	MT20	4.0	6.0	2.50	2.25
N	BMV1+p	MT20	3.0	6.0		

Edge - INDICATES REFERENCE CORNER OF PLATE TOUCHES EDGE OF CHORD.

DIMENSIONS, SUPPORTS AND LOADINGS SPECIFIED BY FABRICATOR TO BE VERIFIED BY BUILDING DESIGNER

BEARINGS

JT	FACTORED GROSS REACTION VERT	HORZ	MAXIMUM FACTORED GROSS REACTION DOWN	HORZ	UPLIFT	INPUT BRG IN-SX	REQRD BRG IN-SX
N	1976	0	1976	0	0	5-8	5-8
H	1749	0	1749	0	0	3-8	3-8

UNFACTORED REACTIONS

JT	1ST LCASE COMBINED	MAX./MIN. COMPONENT REACTIONS SNOW	LIVE	PERM.LIVE	WIND	DEAD	SOIL
N	1441	923 / 0	224 / 0	0 / 0	0 / 0	294 / 0	0 / 0
H	1286	769 / 0	224 / 0	0 / 0	0 / 0	273 / 0	0 / 0

BEARING MATERIAL TO BE SPF NO.2 OR BETTER AT JOINT(S) N, H

BRACING
TOP CHORD TO BE SHEATHED OR MAX. PURLIN SPACING = 3.83 FT.
MAX. UNBRACED BOTTOM CHORD LENGTH = 6.25 FT OR RIGID CEILING DIRECTLY APPLIED.

ALL PITCH BREAKS AND PERIMETER CORNER JOINTS MUST BE LATERALLY RESTRAINED.

LOADING
TOTAL LOAD CASES: (4)

CHORDS

MEMB. FR-TO	MAX. FACTORED FORCE (LBS)	FACTORED VERT. LOAD LC1 (PLF) FROM	TO	MAX CSI (LC)	MAX. UNBRAC LENGTH
A- B	0 / 57	-129.7	-129.7	0.18 (1)	10.00
B- C	-1706 / 0	-129.7	-129.7	0.46 (1)	4.55
C- D	-2089 / 0	-129.7	-129.7	0.67 (1)	3.86
D- E	-2089 / 0	-129.7	-129.7	0.68 (1)	3.83
E- F	-2089 / 0	-129.7	-129.7	0.68 (1)	3.83
F- G	-1802 / 0	-129.7	-129.7	0.66 (1)	4.11
I- G	-1842 / 0	0.0	0.0	0.75 (1)	6.17
N- B	-1920 / 0	0.0	0.0	0.20 (1)	6.07
N- M	0 / 0	-38.5	-38.5	0.09 (2)	10.00
M- L	0 / 1304	-38.5	-38.5	0.23 (1)	10.00
L- K	0 / 1802	-38.5	-38.5	0.42 (1)	10.00
K- J	0 / 1802	-38.5	-38.5	0.42 (1)	10.00
J- I	-57 / 0	-38.5	-38.5	0.61 (1)	6.25
I- H	0 / 0	-38.5	-38.5	0.38 (1)	10.00

WEBS

MEMB. FR-TO	MAX. FACTORED FORCE (LBS)	MAX CSI (LC)
M- C	-135 / 129	0.05 (1)
B- M	0 / 1360	0.31 (1)
J- G	0 / 2414	0.54 (1)
C- L	0 / 1024	0.23 (1)
J- F	-1046 / 0	0.37 (1)
L- D	-780 / 0	0.28 (1)
L- F	0 / 378	0.09 (1)

DESIGN CRITERIA

SPECIFIED LOADS:

TOP CH.	LL	=	38.2	PSF
	DL	=	6.0	PSF
BOT CH.	LL	=	10.5	PSF
	DL	=	7.0	PSF
TOTAL LOAD		=	61.7	PSF

SPACING = 24.0 IN. C/C

LOADING IN FLAT SECTION BASED ON A SLOPE OF 6.00/12

THIS TRUSS IS DESIGNED FOR RESIDENTIAL OR SMALL BUILDING REQUIREMENTS OF PART 9, NBCC 2010, NBCC 2015

THIS DESIGN COMPLIES WITH:
- PART 9 OF OBC 2012, OBC 2018
- CSA 086-09, CSA 086-14
- TPIC 2011, TPIC 2014

(55 % OF 54.3 P.S.F. G.S.L. PLUS 8.4 P.S.F. RAIN LOAD) EQUALS 38.2 P.S.F. SPECIFIED ROOF LIVE LOAD

ALLOWABLE DEFL.(LL)= L/360 (0.71")
CALCULATED VERT. DEFL.(LL) = L/ 999 (0.10")
ALLOWABLE DEFL.(TL)= L/360 (0.71")
CALCULATED VERT. DEFL.(TL) = L/ 999 (0.17")

CSI: TC=0.75/1.00 (G-I:1) , BC=0.61/1.00 (I-J:1) , WB=0.54/1.00 (G-J:1) , SSI=0.64/1.00 (H-I:1)

DOL LUMBER=1.00 NAIL=1.00 LS BEND=1.10 COMP=1.10 SHEAR=1.10 TENS= 1.10

COMPANION LIVE LOAD FACTOR = 1.00

TRUSS PLATE MANUFACTURER IS NOT RESPONSIBLE FOR QUALITY CONTROL IN THE TRUSS MANUFACTURING PLANT .

NAIL VALUES

PLATE	GRIP(DRY) (PSI) MAX	MIN	SHEAR (PLI) MAX	MIN	SECTION (PLI) MAX	MIN
MT20	618	354	1667	788	1987	1656

PLATE PLACEMENT TOL. = 0.250 inches

PLATE ROTATION TOL. = 5.0 Deg.

JSI GRIP= 0.89 (G) (INPUT = 0.90)
JSI METAL= 0.67 (J) (INPUT = 1.00)

LICENSED PROFESSIONAL ENGINEER
08/20/18
H.J.G. ALVES
PROVINCE OF ONTARIO

DWG NO. TAM 17805231
STRUCTURAL
COMPONENT ONLY

JOB NAME	TRUSS NAME	QUANTITY	PLY	JOB DESC.	DRWG NO.
297079	T152	1	1	TRUSS DESC.	

Tamarack Roof Truss, Burlington

Version 8.210 S May 18 2018 MiTek Industries, Inc. Mon Aug 20 11:48:50 2018 Page 1

ID:4u167_apsj?wvBfJKDwJbPzNv7w-y6KsS8zCbKUQrwMRmZIM?fqQEe?rmBcg0IygwAylzyR

Scale = 1:39.4

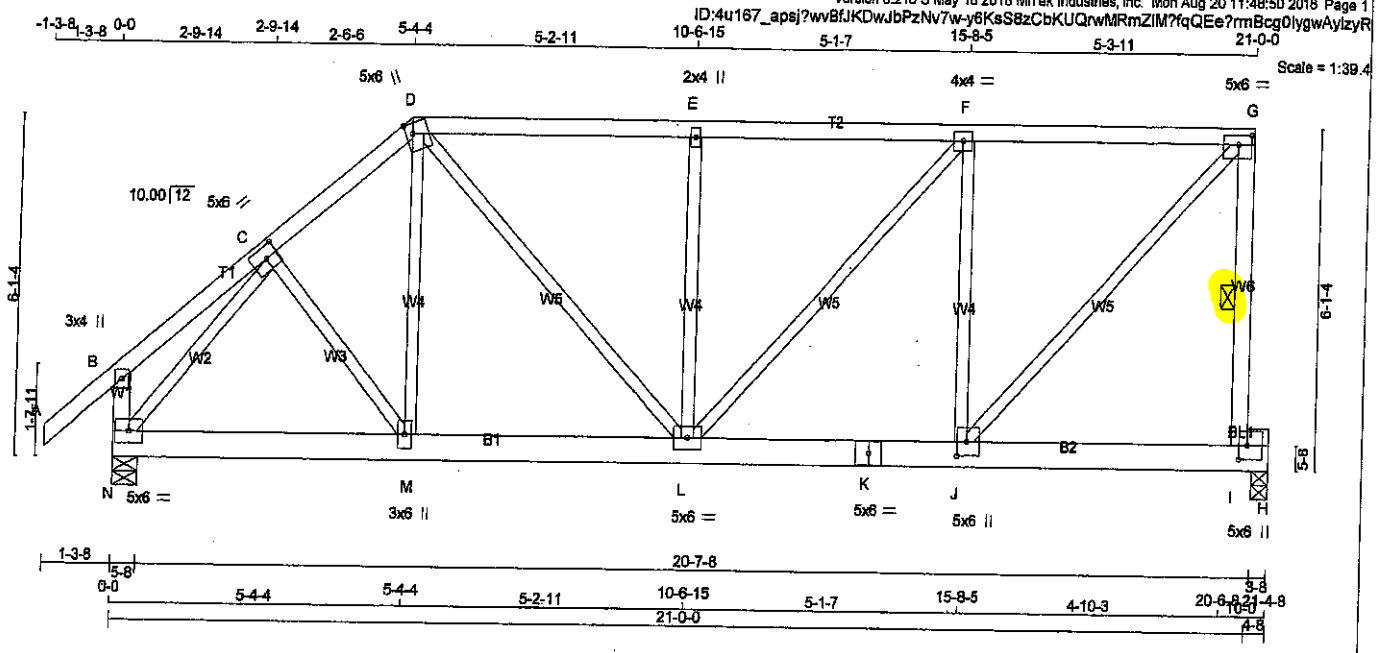

TOTAL WEIGHT = 111 lb

[M]

LUMBER

N. L. G. A. RULES

CHORDS	SIZE		LUMBER	DESCR.
A - D	2x4	DRY	No.2	SPF
D - G	2x4	DRY	No.2	SPF
I - G	2x4	DRY	No.2	SPF
N - B	2x4	DRY	No.2	SPF
N - K	2x6	DRY	No.2	SPF
K - H	2x6	DRY	No.2	SPF
BEARING BLOCKS				
BL1	2x4	DRY	No.2	SPF
ALL WEBS EXCEPT	2x3	DRY	No.2	SPF

DRY: SEASONED LUMBER.

PLATES (table is in inches)

JT	TYPE	PLATES	W	LEN	Y	X
B	TMV+p	MT20	3.0	4.0		
C	TMWW-t	MT20	5.0	6.0	2.50	2.75
D	TTWW+m	MT20	5.0	6.0	2.25	1.50
E	TMW+w	MT20	2.0	4.0		
F	TMWW-t	MT20	4.0	4.0		
G	TMVW-t	MT20	5.0	6.0	2.00	2.75
I	BMVK+p	MT20	5.0	6.0	3.00	1.75
J	BMWW+t	MT20	5.0	6.0	3.00	2.00
K	BS-t	MT20	5.0	6.0		
L	BMWWW-t	MT20	5.0	6.0		
M	BMWW+t	MT20	3.0	6.0		
N	BMVW1-t	MT20	5.0	6.0		

DIMENSIONS, SUPPORTS AND LOADINGS SPECIFIED BY FABRICATOR TO BE VERIFIED BY BUILDING DESIGNER

BEARINGS

JT	FACTORED GROSS REACTION VERT	HORZ	MAXIMUM FACTORED GROSS REACTION DOWN	HORZ	UPLIFT	INPUT BRG IN-SX	REQRD BRG IN-SX
H	1749	0	1749	0	0	3-8	3-8
N	1976	0	1976	0	0	5-8	5-8

UNFACTORED REACTIONS

JT	1ST LCASE COMBINED	MAX./MIN. COMPONENT REACTIONS SNOW	LIVE	PERM.LIVE	WIND	DEAD	SOIL
H	1286	769 / 0	224 / 0	0 / 0	0 / 0	273 / 0	0 / 0
N	1441	923 / 0	224 / 0	0 / 0	0 / 0	294 / 0	0 / 0

BEARING MATERIAL TO BE SPF NO.2 OR BETTER AT JOINT(S) H, N

BRACING

TOP CHORD TO BE SHEATHED OR MAX. PURLIN SPACING = 4.36 FT.
MAX. UNBRACED BOTTOM CHORD LENGTH = 6.25 FT OR RIGID CEILING DIRECTLY APPLIED.

ALL PITCH BREAKS AND PERIMETER CORNER JOINTS MUST BE LATERALLY RESTRAINED.

1 LATERAL BRACE(S) AT 1/2 LENGTH OF G-I.

END VERTICAL(S) MUST BE SHEATHED OR HAVE BRACES AS INDICATED IN THE MAX. UNBRACED LENGTH COLUMN OF THE TABLE BELOW

LOADING

TOTAL LOAD CASES: (4)

CHORDS

MEMB. FR-TO	MAX. FACTORED FORCE (LBS)	FACTORED VERT. LOAD LC1 (PLF) FROM	TO	MAX CSI (LC)	MAX. UNBRAC LENGTH
A- B	0 / 57	-129.7	-129.7	0.18 (1)	10.00
B- C	0 / 22	-129.7	-129.7	0.13 (1)	10.00
C- D	-1698 / 0	-129.7	-129.7	0.16 (1)	4.95
D- E	-1726 / 0	-129.7	-129.7	0.54 (1)	4.39
E- F	-1726 / 0	-129.7	-129.7	0.56 (1)	4.36
F- G	-1420 / 0	-129.7	-129.7	0.54 (1)	4.74
I- G	-1665 / 0	0.0	0.0	0.32 (1)	4.91
N- B	-320 / 0	0.0	0.0	0.03 (1)	7.81
N- M	0 / 1221	-38.5	-38.5	0.22 (1)	10.00
M- L	0 / 1286	-38.5	-38.5	0.23 (1)	10.00
L- K	0 / 1420	-38.5	-38.5	0.37 (1)	10.00
K- J	0 / 1420	-38.5	-38.5	0.37 (1)	10.00
J- I	-47 / 0	-38.5	-38.5	0.61 (1)	6.25
I- H	0 / 0	-38.5	-38.5	0.38 (1)	10.00

WEBS

MEMB. FR-TO	MAX. FACTORED FORCE (LBS)	MAX CSI (LC)
M- D	0 / 219	0.05 (3)
J- G	0 / 2160	0.49 (1)
D- L	0 / 852	0.15 (1)
J- F	-1085 / 0	0.59 (1)
L- E	-724 / 0	0.40 (1)
L- F	0 / 459	0.10 (1)
C- M	0 / 121	0.03 (3)
N- C	-1990 / 0	0.60 (1)

DESIGN CRITERIA

SPECIFIED LOADS:

TOP CH.	LL =	38.2	PSF
	DL =	6.0	PSF
BOT CH.	LL =	10.5	PSF
	DL =	7.0	PSF
TOTAL LOAD	=	61.7	PSF

SPACING = 24.0 IN. C/C

LOADING IN FLAT SECTION BASED ON A SLOPE OF 6.00/12

THIS TRUSS IS DESIGNED FOR RESIDENTIAL OR SMALL BUILDING REQUIREMENTS OF PART 9, NBCC 2010, NBCC 2015

THIS DESIGN COMPLIES WITH:
- PART 9 OF OBC 2012, OBC 2018
- CSA 086-09, CSA 086-14
- TPIC 2011, TPIC 2014

(55 % OF 54.3 P.S.F. G.S.L. PLUS 8.4 P.S.F. RAIN LOAD) EQUALS 38.2 P.S.F. SPECIFIED ROOF LIVE LOAD

ALLOWABLE DEFL.(LL)= L/360 (0.71")
CALCULATED VERT. DEFL.(LL) = L/ 999 (0.09")
ALLOWABLE DEFL.(TL)= L/360 (0.71")
CALCULATED VERT. DEFL.(TL) = L/ 999 (0.14")

CSI: TC=0.56/1.00 (E-F:1) , BC=0.61/1.00 (I-J:1) , WB=0.60/1.00 (C-N:1) , SSI=0.64/1.00 (H-I:1)

DOL LUMBER=1.00 NAIL=1.00 LS BEND=1.10 COMP=1.10 SHEAR=1.10 TENS= 1.10

COMPANION LIVE LOAD FACTOR = 1.00

AUTOSOLVE RIGHT HEEL ONLY

TRUSS PLATE MANUFACTURER IS NOT RESPONSIBLE FOR QUALITY CONTROL IN THE TRUSS MANUFACTURING PLANT .

NAIL VALUES

PLATE	GRIP(DRY) (PSI) MAX	MIN	SHEAR (PLI) MAX	MIN	SECTION (PLI) MAX	MIN
MT20	618	354	1667	788	1987	1656

PLATE PLACEMENT TOL. = 0.250 inches

PLATE ROTATION TOL. = 5.0 Deg.

JSI GRIP= 0.90 (J) (INPUT = 0.90)
JSI METAL= 0.53 (J) (INPUT = 1.00)

LICENSED PROFESSIONAL ENGINEER
08/20/18
H.J.G. MYERS
PROVINCE OF ONTARIO

DWG NO. TAM T1805232
STRUCTURAL
COMPONENT ONLY

TOWN OF INNISFIL
2018-0802-0808
REVIEWED
jpenfold
Building Permit Plans

JOB NAME	TRUSS NAME	QUANTITY	PLY	JOB DESC.	DRWG NO.
297079	T153	2	1	TRUSS DESC.	

Tamarack Roof Truss, Burlington

Version 8.210 S May 18 2018 MiTek Industries, Inc. Mon Aug 20 11:48:53 2018 Page 1
ID:4u167_apsj?wvBfJKDwJbPzNv7w-Mh0?4A05tFs?iO50RhJ3cHSy5s0YzTO7iGBKXVylzyO

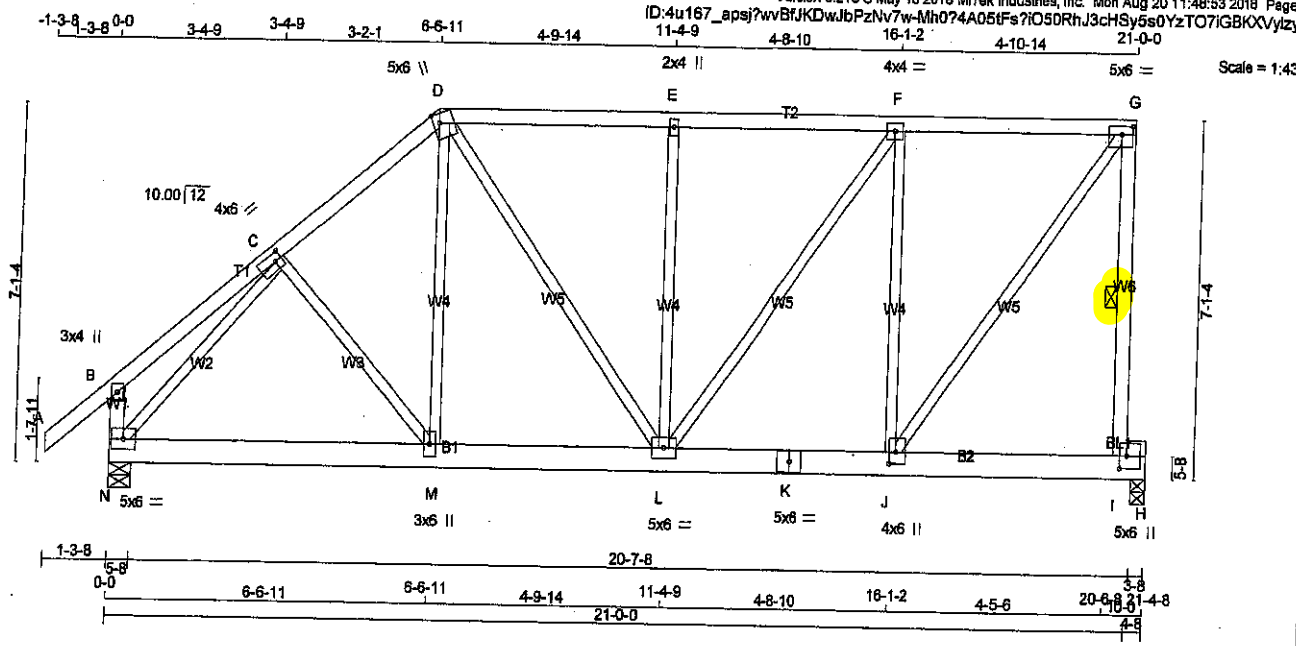

TOTAL WEIGHT = 2 X 118 = 236 lb [M]

LUMBER

N. L. G. A. RULES

CHORDS	SIZE		LUMBER	DESCR.
A - D	2x4	DRY	No.2	SPF
D - G	2x4	DRY	No.2	SPF
I - G	2x4	DRY	No.2	SPF
N - B	2x4	DRY	No.2	SPF
N - K	2x6	DRY	No.2	SPF
K - H	2x6	DRY	No.2	SPF
BEARING BLOCKS				
BL1	2x4	DRY	No.2	SPF
ALL WEBS EXCEPT	2x3	DRY	No.2	SPF

DRY: SEASONED LUMBER.

PLATES (table is in inches)

JT	TYPE	PLATES	W	LEN	Y	X
B	TMV+p	MT20	3.0	4.0		
C	TMWW-t	MT20	4.0	6.0	2.00	1.75
D	TTWW+m	MT20	5.0	6.0	2.25	1.50
E	TMW+w	MT20	2.0	4.0		
F	TMWW-t	MT20	4.0	4.0		
G	TMVW-t	MT20	5.0	6.0	2.00	2.75
I	BMVK+p	MT20	5.0	6.0	3.00	1.75
J	BMWW+t	MT20	4.0	6.0	2.75	1.50
K	BS-t	MT20	5.0	6.0		
L	BMWWW-t	MT20	5.0	6.0		
M	BMWW+t	MT20	3.0	6.0		
N	BMVW1-t	MT20	5.0	6.0		

DIMENSIONS, SUPPORTS AND LOADINGS SPECIFIED BY FABRICATOR TO BE VERIFIED BY BUILDING DESIGNER

BEARINGS

JT	FACTORED GROSS REACTION VERT	HORZ	MAXIMUM FACTORED GROSS REACTION DOWN	HORZ	UPLIFT	INPUT BRG IN-SX	REQRD BRG IN-SX
N	1978	0	1976	0	0	5-8	5-8
H	1749	0	1749	0	0	3-8	3-8

UNFACTORED REACTIONS

JT	1ST LCASE COMBINED	MAX./MIN. COMPONENT REACTIONS SNOW	LIVE	PERM.LIVE	WIND	DEAD	SOIL
N	1441	923 / 0	224 / 0	0 / 0	0 / 0	294 / 0	0 / 0
H	1286	789 / 0	224 / 0	0 / 0	0 / 0	273 / 0	0 / 0

BEARING MATERIAL TO BE SPF NO.2 OR BETTER AT JOINT(S) N, H

BRACING

TOP CHORD TO BE SHEATHED OR MAX. PURLIN SPACING = 4.83 FT.
MAX. UNBRACED BOTTOM CHORD LENGTH = 6.25 FT OR RIGID CEILING DIRECTLY APPLIED.

ALL PITCH BREAKS AND PERIMETER CORNER JOINTS MUST BE LATERALLY RESTRAINED.

1 LATERAL BRACE(S) AT 1/2 LENGTH OF G-I.

END VERTICAL(S) MUST BE SHEATHED OR HAVE BRACES AS INDICATED IN THE MAX. UNBRACED LENGTH COLUMN OF THE TABLE BELOW

LOADING

TOTAL LOAD CASES: (4)

CHORDS

MEMB. FR-TO	MAX. FACTORED FORCE (LBS)	FACTORED VERT. LOAD LC1 (PLF) FROM	TO	MAX CSI (LC)	MAX. UNBRAC LENGTH
A- B	0 / 57	-129.7	-129.7	0.18 (1)	10.00
B- C	0 / 30	-129.7	-129.7	0.21 (1)	10.00
C- D	-1644 / 0	-129.7	-129.7	0.25 (1)	4.90
D- E	-1453 / 0	-129.7	-129.7	0.44 (1)	4.86
E- F	-1454 / 0	-129.7	-129.7	0.45 (1)	4.83
F- G	-1148 / 0	-129.7	-129.7	0.44 (1)	5.32
I- G	-1890 / 0	0.0	0.0	0.41 (1)	4.88
N- B	-344 / 0	0.0	0.0	0.04 (1)	7.81
N- M	0 / 1262	-38.5	-38.5	0.25 (1)	10.00
M- L	0 / 1241	-38.5	-38.5	0.25 (2)	10.00
L- K	0 / 1148	-38.5	-38.5	0.33 (1)	10.00
K- J	0 / 1148	-38.5	-38.5	0.33 (1)	10.00
J- I	-41 / 0	-38.5	-38.5	0.61 (1)	8.25
I- H	0 / 0	-38.5	-38.5	0.38 (1)	10.00

WEBS

MEMB. FR-TO	MAX. FACTORED FORCE (LBS)	MAX CSI (LC)
C- M	-39 / 81	0.02 (3)
M- D	0 / 341	0.08 (2)
N- C	-1980 / 0	0.81 (1)
J- G	0 / 2019	0.45 (1)
D- L	0 / 354	0.08 (1)
J- F	-1122 / 0	0.92 (1)
L- E	-667 / 0	0.55 (1)
L- F	0 / 532	0.12 (1)

DESIGN CRITERIA

SPECIFIED LOADS:

TOP CH.	LL	=	38.2	PSF
	DL	=	6.0	PSF
BOT CH.	LL	=	10.5	PSF
	DL	=	7.0	PSF
TOTAL LOAD		=	61.7	PSF

SPACING = 24.0 IN. C/C

LOADING IN FLAT SECTION BASED ON A SLOPE OF 6.00/12

THIS TRUSS IS DESIGNED FOR RESIDENTIAL OR SMALL BUILDING REQUIREMENTS OF PART 9, NBCC 2010, NBCC 2015

THIS DESIGN COMPLIES WITH:
- PART 9 OF OBC 2012, OBC 2018
- CSA 086-09, CSA 086-14
- TPIC 2011, TPIC 2014

(55 % OF 54.3 P.S.F. G.S.L. PLUS 8.4 P.S.F. RAIN LOAD) EQUALS 38.2 P.S.F. SPECIFIED ROOF LIVE LOAD

ALLOWABLE DEFL.(LL)= L/360 (0.71")
CALCULATED VERT. DEFL.(LL) = L/ 999 (0.08")
ALLOWABLE DEFL.(TL)= L/360 (0.71")
CALCULATED VERT. DEFL.(TL) = L/ 999 (0.12")

CSI: TC=0.45/1.00 (E-F:1) , BC=0.61/1.00 (I-J:1) , WB=0.92/1.00 (F-J:1) , SSI=0.64/1.00 (H-I:1)

DOL LUMBER=1.00 NAIL=1.00 LS BEND=1.10 COMP=1.10 SHEAR=1.10 TENS= 1.10

COMPANION LIVE LOAD FACTOR = 1.00

TRUSS PLATE MANUFACTURER IS NOT RESPONSIBLE FOR QUALITY CONTROL IN THE TRUSS MANUFACTURING PLANT .

NAIL VALUES

PLATE	GRIP(DRY) (PSI) MAX	MIN	SHEAR (PLI) MAX	MIN	SECTION (PLI) MAX	MIN
MT20	618	354	1667	788	1987	1658

PLATE PLACEMENT TOL. = 0.250 inches

PLATE ROTATION TOL. = 5.0 Deg.

USI GRIP= 0.89 (J) (INPUT = 0.90)
USI METAL= 0.54 (J) (INPUT = 1.00)

LICENSED PROFESSIONAL ENGINEER
08/20/18
H.J.G. ALVES
PROVINCE OF ONTARIO

DWG NO. TAM T1805233
STRUCTURAL
COMPONENT ONLY

TOWN OF INNISFIL
2018-0802-0808
REVIEWED
jpenfold
3/19/2021
Building Permit Plans

JOB NAME	TRUSS NAME	QUANTITY	PLY	JOB DESC.	DRWG NO.
297079	T154	2	1	TRUSS DESC.	

Tamarack Roof Truss, Burlington

Version 8.210 S May 18 2018 MiTek Industries, Inc. Mon Aug 20 11:48:57 2018 Page 1
ID:4u167_apsj?wvBfJKDwJbPzNv7w-FSFVwX3bxTMRA?OngXN?n7ddfTOUvKMidt9XgGylzyK

Scale: 1/4"=1'

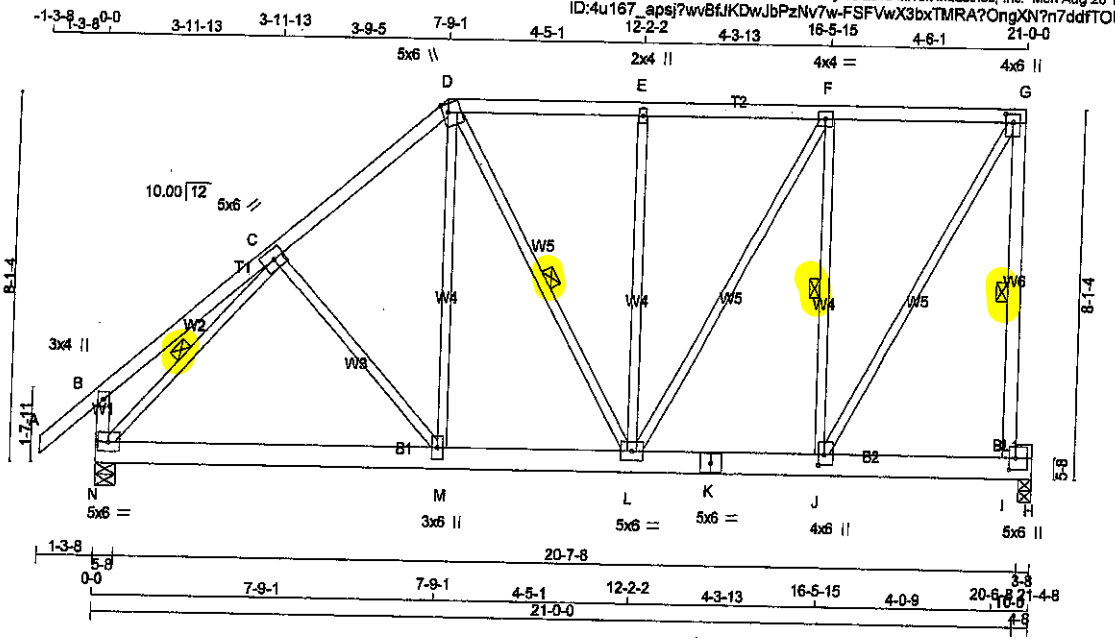

TOTAL WEIGHT = 2 X 125 = 249 lb [M]

LUMBER

N. L. G. A. RULES

CHORDS	SIZE		LUMBER	DESCR.
A - D	2x4	DRY	No.2	SPF
D - G	2x4	DRY	No.2	SPF
I - G	2x4	DRY	No.2	SPF
N - B	2x4	DRY	No.2	SPF
N - K	2x6	DRY	No.2	SPF
K - H	2x6	DRY	No.2	SPF
BEARING BLOCKS				
BL1	2x4	DRY	No.2	SPF
ALL WEBS EXCEPT	2x3	DRY	No.2	SPF

DRY: SEASONED LUMBER.

PLATES (table is in inches)

JT	TYPE	PLATES	W	LEN	Y	X
B	TMV+p	MT20	3.0	4.0		
C	TMWW-t	MT20	5.0	6.0		
D	TTWW+m	MT20	5.0	6.0	2.25	1.50
E	TMW+w	MT20	2.0	4.0		
F	TMWW-t	MT20	4.0	4.0		
G	TMVW+p	MT20	4.0	6.0	2.25	2.00
I	BMVK+p	MT20	5.0	6.0	3.00	1.75
J	BMWW+t	MT20	4.0	6.0	2.75	1.50
K	BS-t	MT20	5.0	6.0		
L	BMWWW-t	MT20	5.0	6.0		
M	BMWW+t	MT20	3.0	6.0		
N	BMVW1-t	MT20	5.0	6.0		

DIMENSIONS, SUPPORTS AND LOADINGS SPECIFIED BY FABRICATOR TO BE VERIFIED BY BUILDING DESIGNER

BEARINGS

JT	FACTORED GROSS REACTION VERT	HORZ	MAXIMUM FACTORED GROSS REACTION DOWN	HORZ	UPLIFT	INPUT BRG	REQRD BRG
N	1976	0	1976	0	0	IN-SX	IN-SX
H	1749	0	1749	0	0	5-8	5-8
						3-8	3-8

UNFACTORED REACTIONS

JT	1ST LCASE COMBINED	MAX./MIN. COMPONENT REACTIONS SNOW	LIVE	PERM.LIVE	WIND	DEAD	SOIL
N	1441	923 / 0	224 / 0	0 / 0	0 / 0	294 / 0	0 / 0
H	1286	789 / 0	224 / 0	0 / 0	0 / 0	273 / 0	0 / 0

BEARING MATERIAL TO BE SPF NO.2 OR BETTER AT JOINT(S) N, H

BRACING

TOP CHORD TO BE SHEATHED OR MAX. PURLIN SPACING = 4.85 FT.
MAX. UNBRACED BOTTOM CHORD LENGTH = 6.25 FT OR RIGID CEILING DIRECTLY APPLIED.

ALL PITCH BREAKS AND PERIMETER CORNER JOINTS MUST BE LATERALLY RESTRAINED.

1 LATERAL BRACE(S) AT 1/2 LENGTH OF G-I, C-N, D-L, F-J.

END VERTICAL(S) MUST BE SHEATHED OR HAVE BRACES AS INDICATED IN THE MAX. UNBRACED LENGTH COLUMN OF THE TABLE BELOW

LOADING

TOTAL LOAD CASES: (4)

CHORDS

MEMB. FR-TO	MAX. FACTORED FORCE (LBS)	FACTORED VERT. LOAD (PLF) FROM	TO	LC1	MAX CSI (LC)	MAX. UNBRAC LENGTH
A- B	0 / 57	-129.7	-129.7	0.18 (1)	10.00	
B- C	0 / 37	-129.7	-129.7	0.31 (1)	10.00	
C- D	-1568 / 0	-129.7	-129.7	0.36 (1)	4.85	
D- E	-1237 / 0	-129.7	-129.7	0.35 (1)	5.32	
E- F	-1237 / 0	-129.7	-129.7	0.36 (1)	5.29	
F- G	-943 / 0	-129.7	-129.7	0.35 (1)	5.88	
I- G	-1918 / 0	0.0	0.0	0.54 (1)	4.86	
N- B	-371 / 0	0.0	0.0	0.04 (1)	7.81	
N- M	0 / 1285	-38.5	-38.5	0.30 (2)	10.00	
M- L	0 / 1179	-38.5	-38.5	0.29 (2)	10.00	
L- K	0 / 943	-38.5	-38.5	0.30 (1)	10.00	
K- J	0 / 943	-38.5	-38.5	0.30 (1)	10.00	
J- I	-36 / 0	-38.5	-38.5	0.61 (1)	6.25	
I- H	0 / 0	-38.5	-38.5	0.38 (1)	10.00	

WEBS

MEMB. FR-TO	MAX. FACTORED FORCE (LBS)	MAX CSI (LC)
C- M	-167 / 51	0.10 (1)
M- D	0 / 465	0.10 (2)
N- C	-1959 / 0	0.48 (1)
J- G	0 / 1944	0.44 (1)
D- L	-18 / 116	0.03 (1)
J- F	-1155 / 0	0.46 (1)
L- E	-611 / 0	0.73 (1)
L- F	0 / 604	0.14 (1)

DESIGN CRITERIA

SPECIFIED LOADS:

TOP CH.	LL	=	38.2	PSF
	DL	=	6.0	PSF
BOT CH.	LL	=	10.5	PSF
	DL	=	7.0	PSF
TOTAL LOAD		=	61.7	PSF

SPACING = 24.0 IN. C/C

LOADING IN FLAT SECTION BASED ON A SLOPE OF 6.00/12

THIS TRUSS IS DESIGNED FOR RESIDENTIAL OR SMALL BUILDING REQUIREMENTS OF PART 9, NBCC 2010, NBCC 2015

THIS DESIGN COMPLIES WITH:
- PART 9 OF OBC 2012, OBC 2018
- CSA 086-09, CSA 086-14
- TPIC 2011, TPIC 2014

(55 % OF 54.3 P.S.F. G.S.L. PLUS 8.4 P.S.F. RAIN LOAD) EQUALS 38.2 P.S.F. SPECIFIED ROOF LIVE LOAD

ALLOWABLE DEFL.(LL)= L/360 (0.71")
CALCULATED VERT. DEFL.(LL) = L/ 999 (0.07")
ALLOWABLE DEFL.(TL)= L/360 (0.71")
CALCULATED VERT. DEFL.(TL) = L/ 999 (0.11")

CSI: TC=0.54/1.00 (G-I:1) , BC=0.61/1.00 (I-J:1) , WB=0.73/1.00 (E-L:1) , SSI=0.64/1.00 (H-I:1)

DOL LUMBER=1.00 NAIL=1.00 LS BEND=1.10 COMP=1.10 SHEAR=1.10 TENS= 1.10

COMPANION LIVE LOAD FACTOR = 1.00

TRUSS PLATE MANUFACTURER IS NOT RESPONSIBLE FOR QUALITY CONTROL IN THE TRUSS MANUFACTURING PLANT .

NAIL VALUES

PLATE	GRIP(DRY) (PSI) MAX	MIN	SHEAR (PLI) MAX	MIN	SECTION (PLI) MAX	MIN
MT20	618	354	1667	788	1987	1656

PLATE PLACEMENT TOL. = 0.250 inches

PLATE ROTATION TOL. = 5.0 Deg.

CSI GRIP= 0.89 (G) (INPUT = 0.90)
CSI METAL= 0.48 (C) (INPUT = 1.00)

LICENSED PROFESSIONAL ENGINEER
8/20/18
H.J.G. ALVES
PROVINCE OF ONTARIO

DWG NO. TAM T1605234
STRUCTURAL
COMPONENT ONLY

TOWN OF INNISFIL
2018-0802-0808
REVIEWED
jpenfold
3/19/2021
Building Permit Plans

TOWN OF INNISFIL
2018-0802-0808
REVIEWED
openfold
3/19/2021
Building Permit Plans

JOB NAME	TRUSS NAME	QUANTITY	PLY	JOB DESC.	DRWG NO.
297079	T155	6	1	TRUSS DESC.	

Tamarack Roof Truss, Burlington

Version 8.210 S May 18 2018 MiTek Industries, Inc. Mon Aug 20 11:49:01 2018 Page 1
ID:4u167_apsj?wvBfJKOwJbPzNv7w-7EU0lv66?istfciZvNSxozoEh4IQrARIYV7lp1ylzyG

Scale = 1:56.1

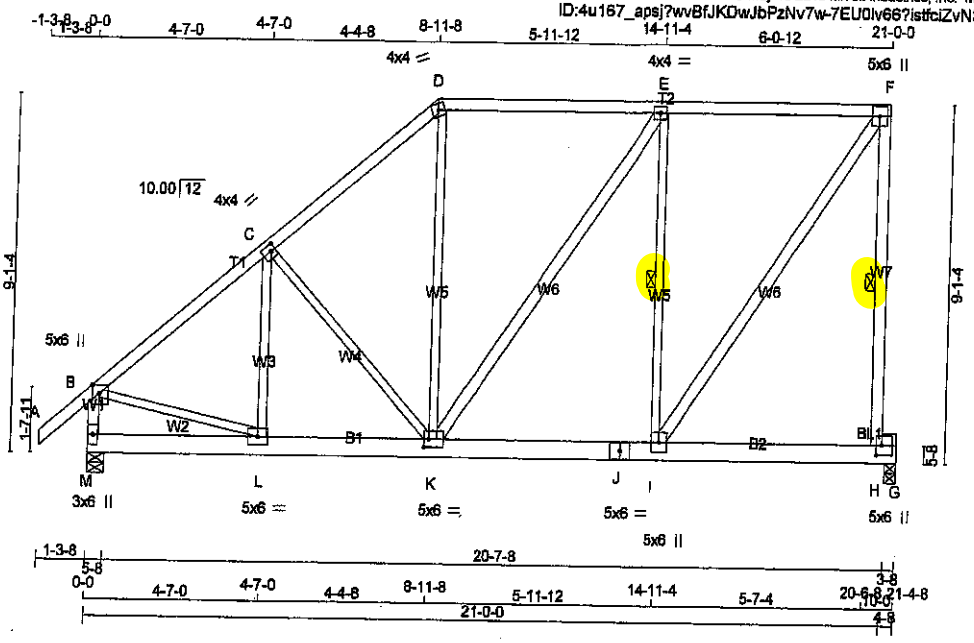

TOTAL WEIGHT = 8 X 128 = 767 lb [M]

LUMBER

N. L. G. A. RULES

CHORDS	SIZE		LUMBER	DESCR.
A - D	2x4	DRY	No.2	SPF
D - F	2x4	DRY	No.2	SPF
H - F	2x4	DRY	No.2	SPF
M - B	2x4	DRY	No.2	SPF
M - J	2x6	DRY	No.2	SPF
J - G	2x6	DRY	No.2	SPF
BEARING BLOCKS				
BL1	2x4	DRY	No.2	SPF
ALL WEBS EXCEPT	2x3	DRY	No.2	SPF
K - E	2x4	DRY	No.2	SPF
I - F	2x4	DRY	No.2	SPF

DRY: SEASONED LUMBER.

PLATES (table is in inches)

JT	TYPE	PLATES	W	LEN	Y	X
B	TMWW+p	MT20	5.0	6.0	2.50	2.25
C	TMWW-t	MT20	4.0	4.0	2.00	1.25
D	TTW-m	MT20	4.0	4.0		
E	TMWW-t	MT20	4.0	4.0		
F	TMWW+p	MT20	5.0	6.0		
H	BMVK+p	MT20	5.0	6.0	3.00	1.75
I	BMWW+t	MT20	5.0	6.0		
J	BS-t	MT20	5.0	6.0		
K	BMWWW-t	MT20	5.0	6.0	2.50	1.50
L	BMWW-t	MT20	5.0	6.0		
M	BMV1+p	MT20	3.0	6.0		

DIMENSIONS, SUPPORTS AND LOADINGS SPECIFIED BY FABRICATOR TO BE VERIFIED BY BUILDING DESIGNER

BEARINGS

JT	FACTORED GROSS REACTION VERT	HORZ	MAXIMUM FACTORED GROSS REACTION DOWN	HORZ	UPLIFT	INPUT BRG IN-SX	REQRD BRG IN-SX
M	1976	0	1976	0	0	5-8	5-8
G	1749	0	1749	0	0	3-8	3-8

UNFACTORED REACTIONS

JT	1ST LCASE COMBINED	MAX./MIN. COMPONENT REACTIONS SNOW	LIVE	PERM.LIVE	WIND	DEAD	SOIL
M	1441	923 / 0	224 / 0	0 / 0	0 / 0	294 / 0	0 / 0
G	1286	769 / 0	224 / 0	0 / 0	0 / 0	273 / 0	0 / 0

BEARING MATERIAL TO BE SPF NO.2 OR BETTER AT JOINT(S) M, G

BRACING

TOP CHORD TO BE SHEATHED OR MAX. PURLIN SPACING = 4.30 FT.
MAX. UNBRACED BOTTOM CHORD LENGTH = 6.25 FT OR RIGID CEILING DIRECTLY APPLIED.

ALL PITCH BREAKS AND PERIMETER CORNER JOINTS MUST BE LATERALLY RESTRAINED.

1 LATERAL BRACE(S) AT 1/ 2 LENGTH OF F-H, E-I.

END VERTICAL(S) MUST BE SHEATHED OR HAVE BRACES AS INDICATED IN THE MAX. UNBRACED LENGTH COLUMN OF THE TABLE BELOW

LOADING

TOTAL LOAD CASES: (4)

CHORDS

MEMB. FR-TO	MAX. FACTORED FORCE (LBS)	FACTORED VERT. LOAD (PLF) FROM	TO	LC1	MAX CSI (LC)	MAX. UNBRAC LENGTH
A- B	0 / 57	-129.7	-129.7	0.18 (1)	10.00	
B- C	-1718 / 0	-129.7	-129.7	0.53 (1)	4.46	
C- D	-1439 / 0	-129.7	-129.7	0.50 (1)	4.80	
D- E	-1072 / 0	-129.7	-129.7	0.86 (1)	4.30	
E- F	-1032 / 0	-129.7	-129.7	0.85 (1)	4.37	
H- F	-1829 / 0	0.0	0.0	0.67 (1)	4.95	
M- B	-1897 / 0	0.0	0.0	0.20 (1)	6.10	
M- L	0 / 0	-38.5	-38.5	0.07 (2)	10.00	
L- K	0 / 1353	-38.5	-38.5	0.21 (1)	10.00	
K- J	0 / 1032	-38.5	-38.5	0.36 (1)	10.00	
J- I	0 / 1032	-38.5	-38.5	0.36 (1)	10.00	
I- H	-31 / 0	-38.5	-38.5	0.61 (1)	6.25	
H- G	0 / 0	-38.5	-38.5	0.38 (1)	10.00	

WEBS

MEMB. FR-TO	MAX. FACTORED FORCE (LBS)	MAX CSI (LC)
L- C	-167 / 106	0.07 (1)
C- K	-430 / 0	0.35 (1)
K- D	0 / 392	0.09 (2)
K- E	0 / 72	0.01 (1)
I- E	-1027 / 0	0.53 (1)
I- F	0 / 1863	0.30 (1)
B- L	0 / 1401	0.32 (1)

LICENSED PROFESSIONAL ENGINEER
08/20/18
H.J.G. ALVES
PROVINCE OF ONTARIO

DESIGN CRITERIA

SPECIFIED LOADS:

TOP CH.	LL	=	38.2	PSF
	DL	=	6.0	PSF
BOT CH.	LL	=	10.5	PSF
	DL	=	7.0	PSF
TOTAL LOAD		=	61.7	PSF

SPACING = 24.0 IN. C/C

LOADING IN FLAT SECTION BASED ON A SLOPE OF 6.00/12

THIS TRUSS IS DESIGNED FOR RESIDENTIAL OR SMALL BUILDING REQUIREMENTS OF PART 9, NBCC 2010, NBCC 2015

THIS DESIGN COMPLIES WITH:
- PART 9 OF OBC 2012, OBC 2018
- CSA 086-09, CSA 086-14
- TPIC 2011, TPIC 2014

(55 % OF 54.3 P.S.F. G.S.L. PLUS 8.4 P.S.F. RAIN LOAD) EQUALS 38.2 P.S.F. SPECIFIED ROOF LIVE LOAD

ALLOWABLE DEFL.(LL)= L/360 (0.71")
CALCULATED VERT. DEFL.(LL) = L/ 999 (0.10")
ALLOWABLE DEFL.(TL)= L/360 (0.71")
CALCULATED VERT. DEFL.(TL) = L/ 999 (0.16")

CSI: TC=0.86/1.00 (D-E:1) , BC=0.61/1.00 (H-I:1) , WB=0.53/1.00 (E-I:1) , SSI=0.64/1.00 (G-H:1)

DOL LUMBER=1.00 NAIL=1.00 LS BEND=1.10 COMP=1.10 SHEAR=1.10 TENS= 1.10

COMPANION LIVE LOAD FACTOR = 1.00

TRUSS PLATE MANUFACTURER IS NOT RESPONSIBLE FOR QUALITY CONTROL IN THE TRUSS MANUFACTURING PLANT .

NAIL VALUES

PLATE	GRIP(DRY) (PSI) MAX	MIN	SHEAR (PLI) MAX	MIN	SECTION (PLI) MAX	MIN
MT20	618	354	1667	788	1987	1656

PLATE PLACEMENT TOL. = 0.250 inches

PLATE ROTATION TOL. = 5.0 Deg.

JSI GRIP= 0.80 (B) (INPUT = 0.90)
JSI METAL= 0.39 (I) (INPUT = 1.00)

DWG NO. TAM T1805235
STRUCTURAL
COMPONENT ONLY

TOWN OF INNISFIL
2018-0802-0808
REVIEWED
jpenfold
3/19/2021
Building Permit Plans

JOB NAME	TRUSS NAME	QUANTITY	PLY	JOB DESC.	DRWG NO.
297079	T156	2	1	TRUSS DESC.	

Tamarack Roof Truss, Burlington

Version 8.210 S May 18 2018 MiTek Industries, Inc. Mon Aug 20 11:49:04 2018 Page 1
ID:4u167_apsj?wvBfJKDwJbPzNv7w-YpA9Ox8_fdFRW4R8bV?eZcPiVlm72WskETLPQMylzyD

Scale = 1:59.5

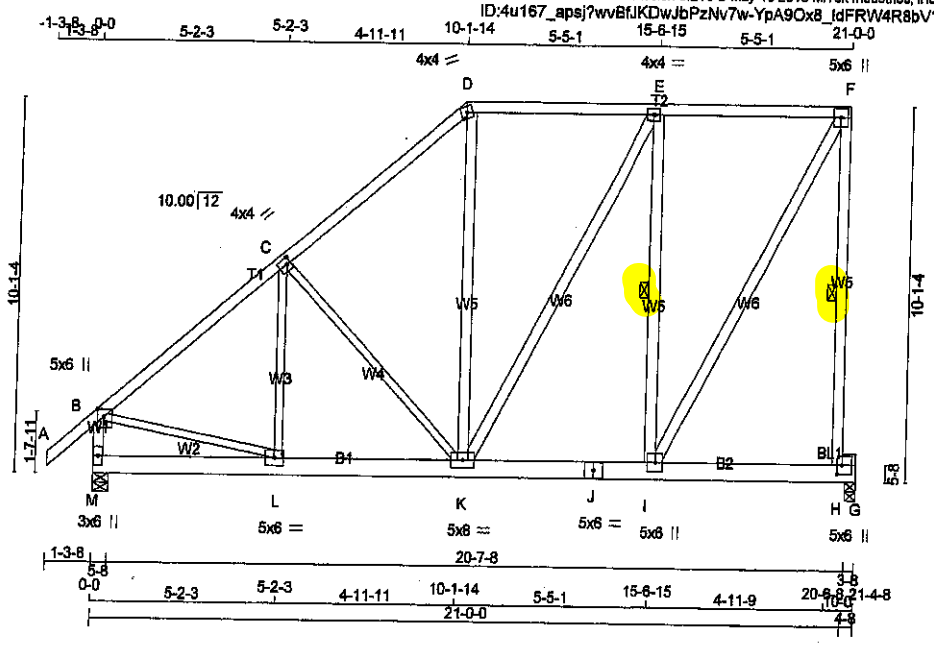

TOTAL WEIGHT = 2 X 140 = 280 lb [M]

LUMBER

N. L. G. A. RULES

CHORDS	SIZE		LUMBER	DESCR.
A - D	2x4	DRY	No.2	SPF
D - F	2x4	DRY	No.2	SPF
H - F	2x4	DRY	No.2	SPF
M - B	2x4	DRY	No.2	SPF
M - J	2x6	DRY	No.2	SPF
J - G	2x6	DRY	No.2	SPF
BEARING BLOCKS				
BL1	2x4	DRY	No.2	SPF
ALL WEBS EXCEPT	2x4	DRY	No.2	SPF
L - C	2x3	DRY	No.2	SPF
C - K	2x3	DRY	No.2	SPF
B - L	2x3	DRY	No.2	SPF

DRY: SEASONED LUMBER.

PLATES (table is in inches)

JT	TYPE	PLATES	W	LEN	Y	X
B	TMVW+p	MT20	5.0	6.0	2.50	2.25
C	TMWW-t	MT20	4.0	4.0	2.00	1.25
D	TTW-m	MT20	4.0	4.0		
E	TMWW-t	MT20	4.0	4.0		
F	TMVW+p	MT20	5.0	6.0		
H	BMVK+p	MT20	5.0	6.0	3.00	1.75
I	BMWW+t	MT20	5.0	6.0		
J	BS-t	MT20	5.0	6.0		
K	BMWWW-t	MT20	5.0	8.0		
L	BMWW-t	MT20	5.0	6.0		
M	BMV1+p	MT20	3.0	6.0		

DIMENSIONS, SUPPORTS AND LOADINGS SPECIFIED BY FABRICATOR TO BE VERIFIED BY BUILDING DESIGNER

BEARINGS

JT	FACTORED GROSS REACTION VERT	HORZ	MAXIMUM FACTORED GROSS REACTION DOWN	HORZ	UPLIFT	INPUT BRG IN-SX	REQRD BRG IN-SX
M	1976	0	1976	0	0	5-8	5-8
G	1749	0	1749	0	0	3-8	3-8

UNFACTORED REACTIONS

JT	1ST LCASE COMBINED	MAX./MIN. COMPONENT REACTIONS SNOW	LIVE	PERM.LIVE	WIND	DEAD	SOIL
M	1441	923 / 0	224 / 0	0 / 0	0 / 0	294 / 0	0 / 0
G	1286	789 / 0	224 / 0	0 / 0	0 / 0	273 / 0	0 / 0

BEARING MATERIAL TO BE SPF NO.2 OR BETTER AT JOINT(S) M, G

BRACING

TOP CHORD TO BE SHEATHED OR MAX. PURLIN SPACING = 4.17 FT.
MAX. UNBRACED BOTTOM CHORD LENGTH = 6.25 FT OR RIGID CEILING DIRECTLY APPLIED.

ALL PITCH BREAKS AND PERIMETER CORNER JOINTS MUST BE LATERALLY RESTRAINED.

1 LATERAL BRACE(S) AT 1/ 2 LENGTH OF F-H, E-I.

END VERTICAL(S) MUST BE SHEATHED OR HAVE BRACES AS INDICATED IN THE MAX. UNBRACED LENGTH COLUMN OF THE TABLE BELOW

LOADING

TOTAL LOAD CASES: (4)

CHORDS

MEMB. FR-TO	MAX. FACTORED FORCE (LBS)	FACTORED VERT. LOAD LC1 (PLF) FROM	TO	MAX CSI (LC)	MAX. UNBRAC LENGTH
A- B	0 / 57	-129.7	-129.7	0.18 (1)	10.00
B- C	-1719 / 0	-129.7	-129.7	0.71 (1)	4.17
C- D	-1330 / 0	-129.7	-129.7	0.65 (1)	4.68
D- E	-984 / 0	-129.7	-129.7	0.68 (1)	5.07
E- F	-859 / 0	-129.7	-129.7	0.67 (1)	5.36
H- F	-1859 / 0	0.0	0.0	0.89 (1)	4.92
M- B	-1860 / 0	0.0	0.0	0.20 (1)	6.10
M- L	0 / 0	-38.5	-38.5	0.08 (3)	10.00
L- K	0 / 1359	-38.5	-38.5	0.22 (1)	10.00
K- J	0 / 859	-38.5	-38.5	0.31 (1)	10.00
J- I	0 / 859	-38.5	-38.5	0.31 (1)	10.00
I- H	-28 / 0	-38.5	-38.5	0.61 (1)	6.25
H- G	0 / 0	-38.5	-38.5	0.38 (1)	10.00

WEBS

MEMB. FR-TO	MAX. FACTORED FORCE (LBS)	MAX CSI (LC)
L- C	-96 / 163	0.05 (1)
C- K	-559 / 0	0.82 (1)
K- D	0 / 326	0.05 (2)
K- E	0 / 261	0.04 (1)
I- E	-1099 / 0	0.53 (1)
I- F	0 / 1823	0.29 (1)
B- L	0 / 1398	0.31 (1)

DESIGN CRITERIA

SPECIFIED LOADS:

TOP CH.	LL	=	38.2	PSF
	DL	=	6.0	PSF
BOT CH.	LL	=	10.5	PSF
	DL	=	7.0	PSF
TOTAL LOAD		=	61.7	PSF

SPACING = 24.0 IN. C/C

LOADING IN FLAT SECTION BASED ON A SLOPE OF 6.00/12

THIS TRUSS IS DESIGNED FOR RESIDENTIAL OR SMALL BUILDING REQUIREMENTS OF PART 9, NBCC 2010, NBCC 2015

THIS DESIGN COMPLIES WITH:
- PART 9 OF OBC 2012, OBC 2018
- CSA 086-09, CSA 086-14
- TPIC 2011, TPIC 2014

(55 % OF 54.3 P.S.F. G.S.L. PLUS 8.4 P.S.F. RAIN LOAD) EQUALS 38.2 P.S.F. SPECIFIED ROOF LIVE LOAD

ALLOWABLE DEFL.(LL)= L/360 (0.71")
CALCULATED VERT. DEFL.(LL) = L/ 999 (0.08")
ALLOWABLE DEFL.(TL)= L/360 (0.71")
CALCULATED VERT. DEFL.(TL) = L/ 999 (0.14")

CSI: TC=0.89/1.00 (F-H:1) , BC=0.61/1.00 (H-I:1) , WB=0.62/1.00 (C-K:1) , SSI=0.64/1.00 (G-H:1)

DOL LUMBER=1.00 NAIL=1.00 LS BEND=1.10 COMP=1.10 SHEAR=1.10 TENS= 1.10

COMPANION LIVE LOAD FACTOR = 1.00

TRUSS PLATE MANUFACTURER IS NOT RESPONSIBLE FOR QUALITY CONTROL IN THE TRUSS MANUFACTURING PLANT .

NAIL VALUES

PLATE	GRIP(DRY) (PSI) MAX	MIN	SHEAR (PLI) MAX	MIN	SECTION (PLI) MAX	MIN
MT20	618	354	1667	788	1987	1656

PLATE PLACEMENT TOL. = 0.250 inches

PLATE ROTATION TOL. = 5.0 Deg.

JSI GRIP= 0.89 (B) (INPUT = 0.90)
JSI METAL= 0.37 (F) (INPUT = 1.00)

LICENSED PROFESSIONAL ENGINEER
08/20/18
H.J.G. ALVES
PROVINCE OF ONTARIO

DWG NO. TAM 17805236
STRUCTURAL
COMPONENT ONLY

TOWN OF INNISFIL
2018-0802-0808
REVIEWED
3/19/2021
Building Permit Plans

JOB NAME	TRUSS NAME	QUANTITY	PLY	JOB DESC.	DRWG NO.
297079	T157	2	1	TRUSS DESC.	

Tamarack Roof Truss, Burlington

Version 8.210 S May 18 2018 MiTek Industries, Inc. Mon Aug 20 11:49:08 2018 Page 1
ID:4u167_apsj?wvBfJKDwJbPzNv7w-QaQgDIBVLslt?hkvqL4ajSaW8vEmzSvK95JcZ7ylzy9

Scale = 1:37.8

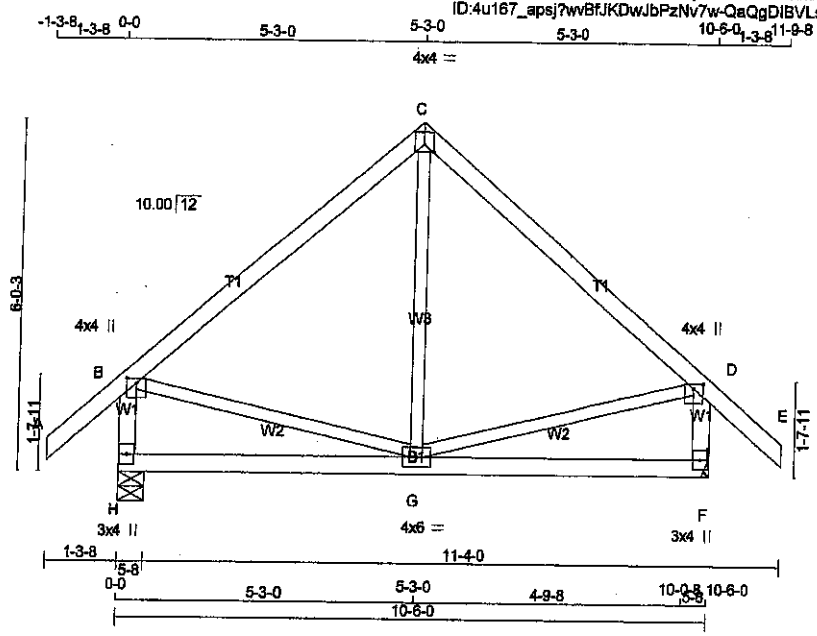

TOTAL WEIGHT = 2 X 47 = 94 lb

[M][F]

LUMBER

N. L. G. A. RULES

CHORDS	SIZE		LUMBER	DESCR.
A - C	2x4	DRY	No.2	SPF
C - E	2x4	DRY	No.2	SPF
H - B	2x4	DRY	No.2	SPF
F - D	2x4	DRY	No.2	SPF
H - F	2x4	DRY	No.2	SPF
ALL WEBS EXCEPT	2x3	DRY	No.2	SPF

DRY: SEASONED LUMBER.

PLATES (table is in inches)

JT	TYPE	PLATES	W	LEN	Y	X
B	TMVW+p	MT20	4.0	4.0	1.00	2.00
C	TTW-p	MT20	4.0	4.0	1.50	2.00
D	TMVW+p	MT20	4.0	4.0	1.00	2.00
F	BMV1+p	MT20	3.0	4.0		
G	BMWWW-t	MT20	4.0	6.0		
H	BMV1+p	MT20	3.0	4.0		

DIMENSIONS, SUPPORTS AND LOADINGS SPECIFIED BY FABRICATOR TO BE VERIFIED BY BUILDING DESIGNER

BEARINGS

JT	FACTORED GROSS REACTION VERT	HORZ	MAXIMUM FACTORED GROSS REACTION DOWN	HORZ	UPLIFT	INPUT BRG IN-SX	REQRD BRG IN-SX
H	1062	0	1062	0	0	5-8	5-8
F	1062	0	1062	0	0	MECHANICAL	

A SUITABLE MECHANICAL CONNECTION IS REQUIRED AT JOINT F.

UNFACTORED REACTIONS

JT	1ST LCASE COMBINED	MAX./MIN. COMPONENT REACTIONS SNOW	LIVE	PERM.LIVE	WIND	DEAD	SOIL
H	771	507 / 0	110 / 0	0 / 0	0 / 0	153 / 0	0 / 0
F	771	507 / 0	110 / 0	0 / 0	0 / 0	153 / 0	0 / 0

BEARING MATERIAL TO BE SPF NO.2 OR BETTER AT JOINT(S) H

BRACING

TOP CHORD TO BE SHEATHED OR MAX. PURLIN SPACING = 6.25 FT.
MAX. UNBRACED BOTTOM CHORD LENGTH = 10.00 FT OR RIGID CEILING DIRECTLY APPLIED.

ALL PITCH BREAKS AND PERIMETER CORNER JOINTS MUST BE LATERALLY RESTRAINED.

LOADING

TOTAL LOAD CASES: (4)

CHORDS

MEMB. FR-TO	MAX. FACTORED FORCE (LBS)	FACTORED VERT. LOAD LC1 (PLF) FROM	TO	MAX CSI (LC)	MAX. UNBRAC LENGTH
A- B	0 / 57	-129.7	-129.7	0.18 (1)	10.00
B- C	-560 / 0	-129.7	-129.7	0.46 (1)	6.25
C- D	-560 / 0	-129.7	-129.7	0.46 (1)	6.25
D- E	0 / 57	-129.7	-129.7	0.18 (1)	10.00
H- B	-985 / 0	0.0	0.0	0.10 (1)	7.81
F- D	-985 / 0	0.0	0.0	0.10 (1)	7.81
H- G	0 / 0	-38.5	-38.5	0.24 (3)	10.00
G- F	0 / 0	-38.5	-38.5	0.24 (3)	10.00

WEBS

MEMB. FR-TO	MAX. FACTORED FORCE (LBS)	MAX CSI (LC)
G- C	0 / 228	0.06 (3)
B- G	0 / 443	0.10 (1)
G- D	0 / 443	0.10 (1)

DESIGN CRITERIA

SPECIFIED LOADS:

TOP CH.	LL	=	38.2	PSF
	DL	=	6.0	PSF
BOT CH.	LL	=	10.5	PSF
	DL	=	7.0	PSF
TOTAL LOAD		=	61.7	PSF

SPACING = 24.0 IN. C/C

THIS TRUSS IS DESIGNED FOR RESIDENTIAL OR SMALL BUILDING REQUIREMENTS OF PART 9, NBCC 2010, NBCC 2015

THIS DESIGN COMPLIES WITH:
- PART 9 OF OBC 2012, OBC 2018
- CSA 086-09, CSA 086-14
- TPIC 2011, TPIC 2014

(55 % OF 54.3 P.S.F. G.S.L. PLUS 8.4 P.S.F. RAIN LOAD) EQUALS 38.2 P.S.F. SPECIFIED ROOF LIVE LOAD

ALLOWABLE DEFL.(LL)= L/360 (0.35")
CALCULATED VERT. DEFL.(LL) = L/ 999 (0.02")
ALLOWABLE DEFL.(TL)= L/360 (0.35")
CALCULATED VERT. DEFL.(TL) = L/ 999 (0.04")

CSI: TC=0.46/1.00 (B-C:1) , BC=0.24/1.00 (G-H:3) , WB=0.10/1.00 (D-G:1) , SSI=0.20/1.00 (B-C:1)

DOL LUMBER=1.00 NAIL=1.00 LS BEND=1.10 COMP=1.10 SHEAR=1.10 TENS= 1.10

COMPANION LIVE LOAD FACTOR = 1.00

TRUSS PLATE MANUFACTURER IS NOT RESPONSIBLE FOR QUALITY CONTROL IN THE TRUSS MANUFACTURING PLANT .

NAIL VALUES

PLATE	GRIP(DRY) (PSI) MAX	MIN	SHEAR (PLI) MAX	MIN	SECTION (PLI) MAX	MIN
MT20	618	354	1667	788	1987	1656

PLATE PLACEMENT TOL. = 0.250 inches

PLATE ROTATION TOL. = 5.0 Deg.

SI GRIP= 0.87 (D) (INPUT = 0.90)
SI METAL= 0.24 (D) (INPUT = 1.00)

LICENSED PROFESSIONAL ENGINEER
08/20/18
H.J.G. ALVES
PROVINCE OF ONTARIO

DWG NO. TAM 17605237
STRUCTURAL COMPONENT ONLY

TOWN OF INNISFIL
2018-0802-0808
REVIEWED
3/19/2021
Building Permit Plans

JOB NAME	TRUSS NAME	QUANTITY	PLY	JOB DESC.	DRWG NO.
297079	T157S	3	1	TRUSS DESC.	

Tamarack Roof Truss, Burlington

Version 8.210 S May 18 2018 MiTek Industries, Inc. Mon Aug 20 11:49:11 2018 Page 1
ID:4u167_apsj?wvBfJKDwJbPzNv7w-r95osKENen7Ss9TUVTdHL4C1J6FOAoCmr3YH9Sylzy6

Scale = 1:37.9

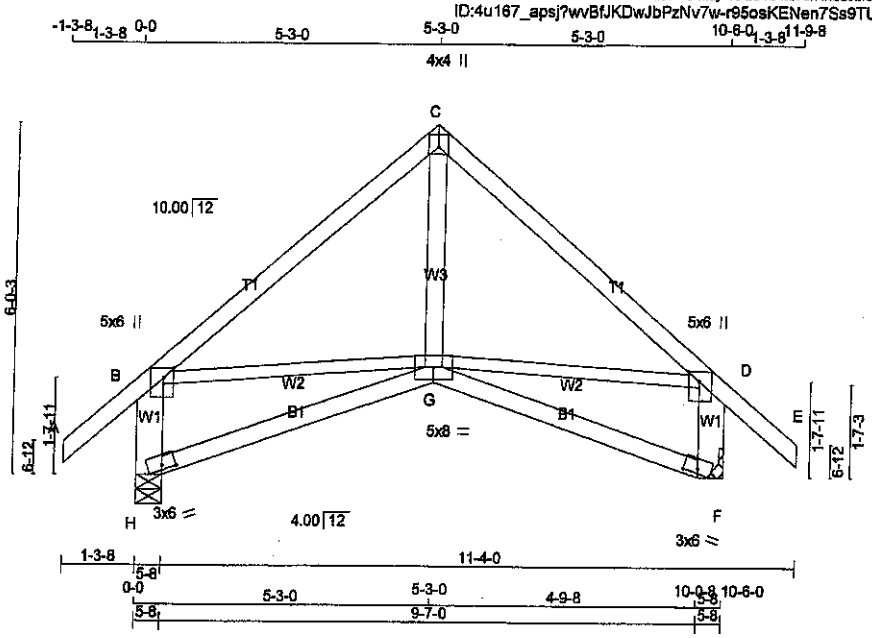

TOTAL WEIGHT = 3 X 49 = 148 lb

[M][F]

LUMBER
N. L. G. A. RULES

CHORDS	SIZE		LUMBER	DESCR.
A - C	2x4	DRY	No.2	SPF
C - E	2x4	DRY	No.2	SPF
H - B	2x6	DRY	No.2	SPF
F - D	2x6	DRY	No.2	SPF
H - G	2x4	DRY	No.2	SPF
G - F	2x4	DRY	No.2	SPF
ALL WEBS EXCEPT	2x3	DRY	No.2	SPF
G - C	2x4	DRY	No.2	SPF

DRY: SEASONED LUMBER.

PLATES (table is in inches)

JT	TYPE	PLATES	W	LEN	Y	X
B	TMVW+p	MT20	5.0	6.0	2.00	2.25
C	TTW+p	MT20	4.0	4.0	1.50	2.00
D	TMVW+p	MT20	5.0	6.0	2.00	2.25
F	BVM1-I	MT20	3.0	6.0	1.00	3.00
G	BBWWW-p	MT20	5.0	8.0		
H	BVM1-I	MT20	3.0	6.0	1.00	3.00

DIMENSIONS, SUPPORTS AND LOADINGS SPECIFIED BY FABRICATOR TO BE VERIFIED BY BUILDING DESIGNER

BEARINGS

JT	FACTORED GROSS REACTION VERT	HORZ	MAXIMUM FACTORED GROSS REACTION DOWN	HORZ	UPLIFT	INPUT BRG IN-SX	REQRD BRG IN-SX
H	1062	0	1062	0	0	5-8	5-8
F	1062	0	1062	0	0	MECHANICAL	~ LSS 26 DS

A SUITABLE MECHANICAL CONNECTION IS REQUIRED AT JOINT F.

UNFACTORED REACTIONS

JT	1ST LCASE COMBINED	MAX./MIN. COMPONENT REACTIONS SNOW	LIVE	PERM.LIVE	WIND	DEAD	SOIL
H	771	507 / 0	110 / 0	0 / 0	0 / 0	153 / 0	0 / 0
F	771	507 / 0	110 / 0	0 / 0	0 / 0	153 / 0	0 / 0

BEARING MATERIAL TO BE SPF NO.2 OR BETTER AT JOINT(S) H

BRACING
TOP CHORD TO BE SHEATHED OR MAX. PURLIN SPACING = 6.25 FT.
MAX. UNBRACED BOTTOM CHORD LENGTH = 10.00 FT OR RIGID CEILING DIRECTLY APPLIED.

ALL PITCH BREAKS AND PERIMETER CORNER JOINTS MUST BE LATERALLY RESTRAINED.

LOADING
TOTAL LOAD CASES: (4)

CHORDS

MEMB. FR-TO	MAX. FACTORED FORCE (LBS)	FACTORED VERT. LOAD LC1 (PLF) FROM	TO	MAX CSI (LC)	MAX. UNBRAC LENGTH
A- B	0 / 57	-129.7	-129.7	0.18 (1)	10.00
B- C	-740 / 0	-129.7	-129.7	0.47 (1)	6.25
C- D	-740 / 0	-129.7	-129.7	0.47 (1)	6.25
D- E	0 / 57	-129.7	-129.7	0.18 (1)	10.00
H- B	-961 / 0	0.0	0.0	0.07 (1)	7.81
F- D	-961 / 0	0.0	0.0	0.07 (1)	7.81
H- G	0 / 0	-38.5	-38.5	0.25 (3)	10.00
G- F	0 / 0	-38.5	-38.5	0.25 (3)	10.00

WEBS

MEMB. FR-TO	MAX. FACTORED FORCE (LBS)	MAX CSI (LC)
G- C	0 / 312	0.05 (2)
B- G	0 / 570	0.13 (1)
G- D	0 / 570	0.13 (1)

LICENSED PROFESSIONAL ENGINEER
08/20/18
H.J.G. ALVES
PROVINCE OF ONTARIO

DESIGN CRITERIA

SPECIFIED LOADS:

TOP CH.	LL	=	38.2	PSF
	DL	=	6.0	PSF
BOT CH.	LL	=	10.5	PSF
	DL	=	7.0	PSF
TOTAL LOAD		=	61.7	PSF

SPACING = 24.0 IN. C/C

THIS TRUSS IS DESIGNED FOR RESIDENTIAL OR SMALL BUILDING REQUIREMENTS OF PART 9, NBCC 2010, NBCC 2015

THIS DESIGN COMPLIES WITH:
- PART 9 OF OBC 2012, OBC 2018
- CSA 086-09, CSA 086-14
- TPIC 2011, TPIC 2014

(55 % OF 54.3 P.S.F. G.S.L. PLUS 8.4 P.S.F. RAIN LOAD) EQUALS 38.2 P.S.F. SPECIFIED ROOF LIVE LOAD

ALLOWABLE DEFL.(LL)= L/360 (0.35")
CALCULATED VERT. DEFL.(LL) = L/ 999 (0.06")
ALLOWABLE DEFL.(TL)= L/360 (0.35")
CALCULATED VERT. DEFL.(TL) = L/ 999 (0.09")

CSI: TC=0.47/1.00 (B-C:1) , BC=0.25/1.00 (F-G:3) , WB=0.13/1.00 (B-G:1) , SSI=0.20/1.00 (B-C:1)

DOL LUMBER=1.00 NAIL=1.00 LS BEND=1.10 COMP=1.10 SHEAR=1.10 TENS= 1.10

COMPANION LIVE LOAD FACTOR = 1.00

AUTOSOLVE HEELS OFF

TRUSS PLATE MANUFACTURER IS NOT RESPONSIBLE FOR QUALITY CONTROL IN THE TRUSS MANUFACTURING PLANT .

NAIL VALUES

PLATE	GRIP(DRY) (PSI) MAX	MIN	SHEAR (PLI) MAX	MIN	SECTION (PLI) MAX	MIN
MT20	618	354	1667	788	1987	1656

PLATE PLACEMENT TOL. = 0.250 inches

PLATE ROTATION TOL. = 5.0 Deg.

JSI GRIP= 0.83 (C) (INPUT = 0.90)
JSI METAL= 0.18 (B) (INPUT = 1.00)

DWG NO. TAM 17805238
STRUCTURAL
COMPONENT

TOWN OF INNISFIL
2018-0802-0808
REVIEWED
jpenfold
3/19/2021
Building Permit Plans

JOB NAME	TRUSS NAME	QUANTITY	PLY	JOB DESC.	DRWG NO.
297079	T161X	1	2	TRUSS DESC.	

Tamarack Roof Truss, Burlington

Version 6.210 S May 18 2018 MiTek Industries, Inc. Mon Aug 20 11:49:15 2018 Page 1

ID:4u167_apsj?wvBfJKDwJbPzNv7w-jwLJhhHui?dtLmmFkJiEVwNjdjZU6WAMmhWUIDyIzy2

Scale = 1:43.3

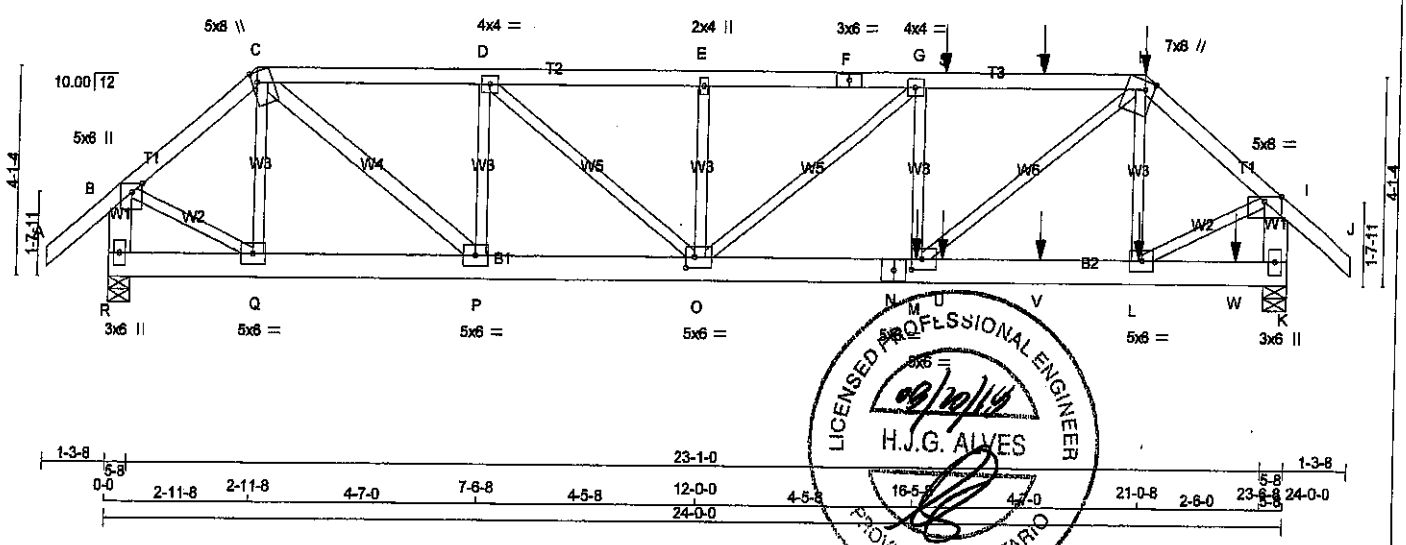

TOTAL WEIGHT = 2 X 119 = 237 lb

[M]

LUMBER

N. L. G. A. RULES

CHORDS	SIZE		LUMBER	DESCR.
A - C	2x4	DRY	No.2	SPF
C - F	2x4	DRY	No.2	SPF
F - H	2x4	DRY	No.2	SPF
H - J	2x4	DRY	No.2	SPF
R - B	2x6	DRY	No.2	SPF
K - I	2x6	DRY	No.2	SPF
R - N	2x6	DRY	No.2	SPF
N - K	2x6	DRY	No.2	SPF
ALL WEBS EXCEPT	2x3	DRY	No.2	SPF
C - P	2x4	DRY	No.2	SPF

DRY: SEASONED LUMBER.

DESIGN CONSISTS OF 2 TRUSSES BUILT SEPARATELY THEN FASTENED TOGETHER AS FOLLOWS:

CHORDS	#ROWS	SURFACE SPACING (IN)	LOAD(PLF)
TOP CHORDS : (0.122"X3") SPIRAL NAILS			
A- C	1	12	TOP
C- F	1	12	TOP
F- H	1	12	SIDE(61.0)
H- J	1	12	SIDE(61.0)
R- B	2	12	TOP
K- I	2	12	TOP
BOTTOM CHORDS : (0.122"X3") SPIRAL NAILS			
R- N	2	12	SIDE(0.1)
N- K	2	12	SIDE(183.1)
WEBS : (0.122"X3") SPIRAL NAILS			
2x3	1	6	
G- M	1	4	SIDE(408.8)
2x4	1	6	

NAILS TO BE DRIVEN FROM ONE SIDE ONLY.

GIRDER NAILING ASSUMES NAILED HANGERS ARE FASTENED WITH MIN. 3-0 INCH NAILS.

TOP - COMPONENTS ARE LOADED FROM THE TOP AND MUST BE PLACED ON TOP EDGE OF ALL PLIES FOR THE LOAD TO BE TRANSFERRED TO EACH PLY.

SIDE - PLF SHOWN IS THE EQUIVALENT UDL APPLIED TO ONE SIDE THAT THE CORRESPONDING NAILING PATTERN SHALL BE CAPABLE OF TRANSFERING. REMAINING PLF MUST BE APPLIED ON THE OPPOSITE SIDE OR ON THE TOP.

PLATES (table is in inches)

JT	TYPE	PLATES	W	LEN	Y	X
B	TMVW+p	MT20	5.0	6.0	2.00	2.25
C	TTWW+m	MT20	5.0	8.0	Edge	1.25
D	TMWW-t	MT20	4.0	4.0		
E	TMW+w	MT20	2.0	4.0		
F	TS-t	MT20	3.0	6.0		
G	TMWW-t	MT20	4.0	4.0		
H	TTWW+m	MT20	7.0	8.0	Edge	2.25
I	TMVW-p	MT20	5.0	8.0	Edge	
K	BMV1+p	MT20	3.0	6.0		
L, P, Q						
L	BMWW-t	MT20	5.0	6.0		
M	BMWW-t	MT20	5.0	6.0	2.50	2.50
N	BS-t	MT20	5.0	6.0		
O	BMWWW-t	MT20	5.0	6.0	2.50	2.00
R	BMV1+p	MT20	3.0	6.0		

DIMENSIONS, SUPPORTS AND LOADINGS SPECIFIED BY FABRICATOR TO BE VERIFIED BY BUILDING DESIGNER

BEARINGS

JT	FACTORED GROSS REACTION VERT	HORZ	MAXIMUM FACTORED GROSS REACTION DOWN	HORZ	UPLIFT	INPUT BRG IN-SX	REQRD BRG IN-SX
R	3009	0	3009	0	0	5-8	5-8
K	4415	0	4415	0	0	5-8	5-8

UNFACTORED REACTIONS

JT	1ST LCASE COMBINED	MAX./MIN. COMPONENT REACTIONS SNOW	LIVE	PERM.LIVE	WIND	DEAD	SOIL
R	2192	1412 / 0	334 / 0	0 / 0	0 / 0	445 / 0	0 / 0
K	3215	2072 / 0	487 / 0	0 / 0	0 / 0	655 / 0	0 / 0

BEARING MATERIAL TO BE SPF NO.2 OR BETTER AT JOINT(S) R, K

BRACING

TOP CHORD TO BE SHEATHED OR MAX. PURLIN SPACING = 3.40 FT.
MAX. UNBRACED BOTTOM CHORD LENGTH = 10.00 FT OR RIGID CEILING DIRECTLY APPLIED.

ALL PITCH BREAKS AND PERIMETER CORNER JOINTS MUST BE LATERALLY RESTRAINED.

LOADING

TOTAL LOAD CASES: (4)

CHORDS

MEMB. FR-TO	MAX. FACTORED FORCE (LBS)	FACTORED VERT. LOAD (PLF) FROM	TO	LC1	MAX CSI (LC)	MAX. UNBRAC LENGTH
A- B	0 / 57	-129.7	-129.7	0.10 (1)	10.00	
B- C	-2739 / 0	-129.7	-129.7	0.14 (1)	5.39	
C- D	-4515 / 0	-129.7	-129.7	0.31 (1)	4.24	
D- E	-5878 / 0	-129.7	-129.7	0.37 (1)	3.72	
E- F	-5878 / 0	-129.7	-129.7	0.42 (1)	3.65	
F- G	-5878 / 0	-129.7	-129.7	0.42 (1)	3.65	
G- S	-6428 / 0	-129.7	-129.7	0.51 (1)	3.40	
S- T	-6428 / 0	-129.7	-129.7	0.51 (1)	3.40	
T- H	-6428 / 0	-129.7	-129.7	0.51 (1)	3.40	
H- I	-4219 / 0	-129.7	-129.7	0.17 (1)	4.50	
I- J	0 / 57	-129.7	-129.7	0.10 (1)	10.00	
R- B	-2971 / 0	0.0	0.0	0.11 (1)	7.81	
K- I	-4376 / 0	0.0	0.0	0.16 (1)	6.86	
R- Q	0 / 0	-38.5	-38.5	0.03 (2)	10.00	
Q- P	0 / 2078	-38.5	-38.5	0.16 (1)	10.00	
P- O	0 / 4515	-38.5	-38.5	0.34 (1)	10.00	
O- N	0 / 6429	-38.5	-38.5	0.49 (1)	10.00	
N- M	0 / 6429	-38.5	-38.5	0.49 (1)	10.00	
M- U	0 / 3204	-38.5	-38.5	0.28 (1)	10.00	
U- V	0 / 3204	-38.5	-38.5	0.28 (1)	10.00	
V- L	0 / 3204	-38.5	-38.5	0.28 (1)	10.00	
L- W	0 / 0	-38.5	-38.5	0.07 (2)	10.00	
W- K	0 / 0	-38.5	-38.5	0.07 (2)	10.00	

WEBS

MEMB. FR-TO	MAX. FACTORED FORCE (LBS)	MAX CSI (LC)
Q- C	-659 / 0	0.08 (1)
C- P	0 / 3134	0.28 (1)
P- D	-1797 / 0	0.23 (1)
D- O	0 / 1777	0.22 (1)
O- E	-498 / 0	0.06 (1)
O- G	-718 / 0	0.21 (1)
M- G	-424 / 40	0.05 (1)
M- H	0 / 4147	0.51 (1)
L- H	-904 / 0	0.11 (1)
B- Q	0 / 2257	0.28 (1)
L- I	0 / 3477	0.43 (1)

DWG NO. TAM T1805239
STRUCTURAL
COMPONENT ONLY 1/2

SPECIFIED CONCENTRATED LOADS (LBS)

JT	LOC.	LC1	MAX-	MAX+	FACE	DIR.	TYPE
H	21-0-8	-28	-28	—	FRONT	VERT	DEAD
H	21-0-8	-112	-112	—	BACK	VERT	TOTAL
H	21-0-8	-176	-176	—	FRONT	VERT	SNOW
L	20-11-12	-50	-50	—	BACK	VERT	TOTAL
M	16-5-8	-1470	-1470	—	BACK	VERT	TOTAL
S	16-11-12	-106	-106	—	BACK	VERT	TOTAL
T	18-11-12	-106	-106	—	BACK	VERT	TOTAL
U	16-11-12	-50	-50	—	BACK	VERT	TOTAL
V	18-11-12	-50	-50	—	BACK	VERT	TOTAL
W	22-11-12	-50	-50	—	BACK	VERT	TOTAL

DESIGN CRITERIA

*** SPECIAL LOADS ANALYSIS ***
GEOMETRY AND/OR BASIC LOADS CHANGED BY USER.
LOADS WERE DERIVED FROM USER INPUT
NO FURTHER MODIFICATIONS WERE MADE

SPECIFIED LOADS:

TOP CH.	LL	=	38.2	PSF
	DL	=	6.0	PSF
BOT CH.	LL	=	10.5	PSF
	DL	=	7.0	PSF
TOTAL LOAD		=	61.7	PSF

SPACING = 24.0 IN. C/C

LOADING IN FLAT SECTION BASED ON A SLOPE OF 6.00/12

*** NON STANDARD GIRDER ***
ADDT'L USER-DEFINED LOADS APPLIED TO ALL LOAD CASES.

THIS TRUSS IS DESIGNED FOR RESIDENTIAL OR SMALL BUILDING REQUIREMENTS OF PART 9, NBCC 2010, NBCC 2015

THIS DESIGN COMPLIES WITH:
- PART 9 OF OBC 2012, OBC 2018
- CSA 086-09, CSA 086-14
- TPIC 2011, TPIC 2014

(55 % OF 54.3 P.S.F. G.S.L. PLUS 8.4 P.S.F. RAIN LOAD) EQUALS 38.2 P.S.F. SPECIFIED ROOF LIVE LOAD

ALLOWABLE DEFL.(LL)= L/360 (0.80")
CALCULATED VERT. DEFL.(LL) = L/ 999 (0.11")
ALLOWABLE DEFL.(TL)= L/360 (0.80")
CALCULATED VERT. DEFL.(TL) = L/ 999 (0.18")

CSI: TC=0.51/1.00 (G-H:1) , BC=0.49/1.00 (M-O:1) , WB=0.51/1.00 (H-M:1) , SSI=0.25/1.00 (G-H:1)

DOL LUMBER=1.00 NAIL=1.00 LS BEND=1.00 COMP=1.00 SHEAR=1.00 TENS= 1.00

COMPANION LIVE LOAD FACTOR = 1.00

AUTOSOLVE HEELS OFF

TRUSS PLATE MANUFACTURER IS NOT RESPONSIBLE FOR QUALITY CONTROL IN THE TRUSS MANUFACTURING PLANT .

NAIL VALUES

PLATE	GRIP(DRY) (PSI) MAX	MIN	SHEAR (PLI) MAX	MIN	SECTION (PLI) MAX	MIN
MT20	618	354	1667	788	1987	1656

PLATE PLACEMENT TOL. = 0.250 inches

PLATE ROTATION TOL. = 5.0 Deg.

JSI GRIP= 0.90 (D) (INPUT = 0.90)
JSI METAL= 0.63 (N) (INPUT = 1.00)

CONTINUED ON PAGE 2

LICENSED PROFESSIONAL ENGINEER
09/20/18
H.J.G. ALVES
PROVINCE OF ONTARIO

JOB NAME	TRUSS NAME	QUANTITY	PLY	JOB DESC.	DRWG NO.
297079	T161X	1	2	TRUSS DESC.	

Tamarack Roof Truss, Burlington

ID:4u167_apsj?wvBfJKDwJbPzNv7w-jwLJhhHuI?dtLmmFkJiEVwNjdlZU6WAMmhWUIDylzy2

Edge - INDICATES REFERENCE CORNER OF PLATE TOUCHES EDGE OF CHORD.

HANGERS NOTES

1) SPECIAL HANGER(S) OR CONNECTION(S) REQUIRED TO SUPPORT CONCENTRATED LOAD(S) 299.0 lbs FACTORED DOWN AT 21-0-8, 156.1 lbs FACTORED DOWN AT 16-11-12, AND 156.1 lbs FACTORED DOWN AT 18-11-12, AND 163.1 lbs FACTORED DOWN AT 21-0-8 ON TOP CHORD, AND 2034.6 lbs FACTORED DOWN AT 16-5-8, 69.9 lbs FACTORED DOWN AT 16-11-12, 69.9 lbs FACTORED DOWN AT 18-11-12, AND 69.9 lbs FACTORED DOWN AT 20-11-12, AND 69.9 lbs FACTORED DOWN AT 22-11-12 ON BOTTOM CHORD. DESIGN FOR UNSPECIFIED CONNECTION(S) IS DELEGATED TO THE BUILDING DESIGNER.

TOWN OF INNISFIL
2018-0802-0808
REVIEWED
openfold
3/19/2021
Building Permit Plans

LICENSED PROFESSIONAL ENGINEER
08/20/18
H.J.G. ALVES
PROVINCE OF ONTARIO

DWG NO. TAM 71805239
STRUCTURAL
COMPONENT ONLY 2/2

TOWN OF INNISFIL
2018-0802-0808
REVIEWED
Building Permit Plans

JOB NAME	TRUSS NAME	QUANTITY	PLY	JOB DESC.	DRWG NO.
297079	T162	1	1	TRUSS DESC.	

Tamarack Roof Truss, Burlington

Version 8.210 S May 18 2018 MiTek Industries, Inc. Mon Aug 20 11:49:19 2018 Page 1
ID:82TzEwrlebruLmbXiL_F9GzNTA6-chaqX3KPIE8JpN40z9mAgmXNqLtU2MhxgJUiS?ylzy_

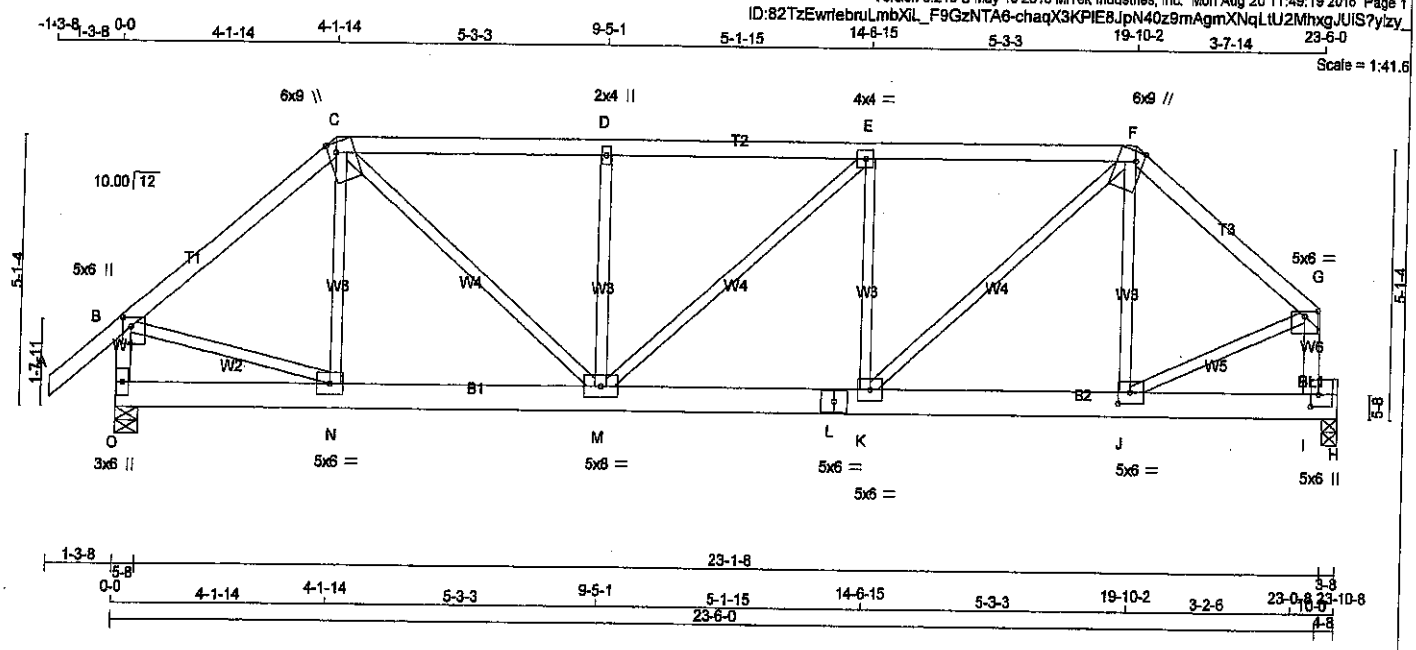

TOTAL WEIGHT = 115 lb [M]

LUMBER
N. L. G. A. RULES

CHORDS	SIZE		LUMBER	DESCR.
A - C	2x4	DRY	No.2	SPF
C - F	2x4	DRY	No.2	SPF
F - G	2x4	DRY	No.2	SPF
O - B	2x4	DRY	No.2	SPF
I - G	2x4	DRY	No.2	SPF
O - L	2x6	DRY	No.2	SPF
L - H	2x6	DRY	No.2	SPF
BEARING BLOCKS				
BL1	2x4	DRY	No.2	SPF
ALL WEBS EXCEPT	2x3	DRY	No.2	SPF

DRY: SEASONED LUMBER.

PLATES (table is in inches)

JT	TYPE	PLATES	W	LEN	Y	X
B	TMVW+p	MT20	5.0	6.0	2.00	2.00
C	TTWW+m	MT20	6.0	9.0	Edge	1.75
D	TMW+w	MT20	2.0	4.0		
E	TMWW-t	MT20	4.0	4.0		
F	TTWW+m	MT20	6.0	9.0	Edge	1.75
G	TMVW-p	MT20	5.0	6.0	1.25	3.00
I	BMVK+p	MT20	5.0	6.0	2.75	1.75
J	BMWW-t	MT20	5.0	6.0	2.50	2.75
K	BMWW-t	MT20	5.0	6.0		
L	BS-t	MT20	5.0	6.0		
M	BMWWW-t	MT20	5.0	8.0		
N	BMWW-t	MT20	5.0	6.0		
O	BMV1+p	MT20	3.0	6.0		

Edge - INDICATES REFERENCE CORNER OF PLATE TOUCHES EDGE OF CHORD.

DIMENSIONS, SUPPORTS AND LOADINGS SPECIFIED BY FABRICATOR TO BE VERIFIED BY BUILDING DESIGNER

BEARINGS

JT	FACTORED GROSS REACTION VERT	HORZ	MAXIMUM FACTORED GROSS REACTION DOWN	HORZ	UPLIFT	INPUT BRG IN-SX	REQRD BRG IN-SX
O	2187	0	2187	0	0	5-8	5-8
H	1959	0	1959	0	0	3-8	3-8

UNFACTORED REACTIONS

JT	1ST LCASE COMBINED	MAX./MIN. COMPONENT REACTIONS SNOW	LIVE	PERM.LIVE	WIND	DEAD	SOIL
O	1596	1018 / 0	251 / 0	0 / 0	0 / 0	327 / 0	0 / 0
H	1441	884 / 0	251 / 0	0 / 0	0 / 0	306 / 0	0 / 0

BEARING MATERIAL TO BE SPF NO.2 OR BETTER AT JOINT(S) O, H

BRACING
TOP CHORD TO BE SHEATHED OR MAX. PURLIN SPACING = 3.66 FT.
MAX. UNBRACED BOTTOM CHORD LENGTH = 6.25 FT OR RIGID CEILING DIRECTLY APPLIED.

ALL PITCH BREAKS AND PERIMETER CORNER JOINTS MUST BE LATERALLY RESTRAINED.

LOADING
TOTAL LOAD CASES: (4)

CHORDS

MEMB. FR-TO	MAX. FACTORED FORCE (LBS)	FACTORED VERT. LOAD LC1 (PLF) FROM	TO	MAX CSI (LC)	MAX. UNBRAC LENGTH
A- B	0 / 57	-129.7	-129.7	0.18 (1)	10.00
B- C	-1943 / 0	-129.7	-129.7	0.48 (1)	4.30
C- D	-2495 / 0	-129.7	-129.7	0.61 (1)	3.69
D- E	-2496 / 0	-129.7	-129.7	0.62 (1)	3.66
E- F	-2479 / 0	-129.7	-129.7	0.63 (1)	3.67
F- G	-1951 / 0	-129.7	-129.7	0.37 (1)	4.43
O- B	-2124 / 0	0.0	0.0	0.22 (1)	5.81
I- G	-2236 / 0	0.0	0.0	0.25 (1)	5.69
O- N	0 / 0	-38.5	-38.5	0.07 (3)	10.00
N- M	0 / 1484	-38.5	-38.5	0.23 (1)	10.00
M- L	0 / 2479	-38.5	-38.5	0.37 (1)	10.00
L- K	0 / 2479	-38.5	-38.5	0.37 (1)	10.00
K- J	0 / 1491	-38.5	-38.5	0.37 (1)	10.00
J- I	-198 / 0	-38.5	-38.5	0.68 (1)	6.25
I- H	0 / 0	-38.5	-38.5	0.42 (1)	10.00

WEBS

MEMB. FR-TO	MAX. FACTORED FORCE (LBS)	MAX CSI (LC)
N- C	-214 / 91	0.08 (1)
C- M	0 / 1357	0.31 (1)
M- D	-727 / 0	0.26 (1)
M- E	0 / 23	0.01 (1)
K- E	-747 / 0	0.27 (1)
K- F	0 / 1325	0.30 (1)
J- F	-153 / 104	0.05 (1)
B- N	0 / 1549	0.35 (1)
J- G	0 / 1846	0.42 (1)

LICENSED PROFESSIONAL ENGINEER
08/20/18
H.J.G. ALVES
PROVINCE OF ONTARIO

DESIGN CRITERIA

SPECIFIED LOADS:

TOP CH.	LL	=	38.2	PSF
	DL	=	6.0	PSF
BOT CH.	LL	=	10.5	PSF
	DL	=	7.0	PSF
TOTAL LOAD		=	61.7	PSF

SPACING = 24.0 IN. C/C

LOADING IN FLAT SECTION BASED ON A SLOPE OF 6.00/12

THIS TRUSS IS DESIGNED FOR RESIDENTIAL OR SMALL BUILDING REQUIREMENTS OF PART 9, NBCC 2010, NBCC 2015

THIS DESIGN COMPLIES WITH:
- PART 9 OF OBC 2012, OBC 2018
- CSA 086-09, CSA 086-14
- TPIC 2011, TPIC 2014

(55 % OF 54.3 P.S.F. G.S.L. PLUS 8.4 P.S.F. RAIN LOAD) EQUALS 38.2 P.S.F. SPECIFIED ROOF LIVE LOAD

ALLOWABLE DEFL.(LL)= L/360 (0.80")
CALCULATED VERT. DEFL.(LL) = L/ 999 (0.10")
ALLOWABLE DEFL.(TL)= L/360 (0.80")
CALCULATED VERT. DEFL.(TL) = L/ 999 (0.16")

CSI: TC=0.63/1.00 (E-F:1) , BC=0.68/1.00 (I-J:1) , WB=0.42/1.00 (G-J:1) , SSI=0.72/1.00 (H-I:1)

DOL LUMBER=1.00 NAIL=1.00 LS BEND=1.10 COMP=1.10 SHEAR=1.10 TENS= 1.10

COMPANION LIVE LOAD FACTOR = 1.00

TRUSS PLATE MANUFACTURER IS NOT RESPONSIBLE FOR QUALITY CONTROL IN THE TRUSS MANUFACTURING PLANT .

NAIL VALUES

PLATE	GRIP(DRY) (PSI) MAX	MIN	SHEAR (PLI) MAX	MIN	SECTION (PLI) MAX	MIN
MT20	618	354	1667	788	1987	1656

PLATE PLACEMENT TOL. = 0.250 inches

PLATE ROTATION TOL. = 5.0 Deg.

JSI GRIP= 0.90 (B) (INPUT = 0.90)
JSI METAL= 0.47 (L) (INPUT = 1.00)

DWG NO. TAM 71805240
STRUCTURAL
COMPONENT ONLY

TOWN OF INNISFIL
2018-0802-0808
REVIEWED
3/19/2021
Building Permit Plans

JOB NAME	TRUSS NAME	QUANTITY	PLY	JOB DESC.	DRWG NO.
297079	T163	1	1	TRUSS DESC.	

Tamarack Roof Truss, Burlington

Version 8.210 S May 18 2018 MiTek Industries, Inc. Mon Aug 20 11:49:22 2018 Page 1
ID:82TzEwrtebruLmbXiL_F9GzNTA6-0GGy95MH29WugrpbeHKtlO9wMYt0FeYONGlM1Jylzoc

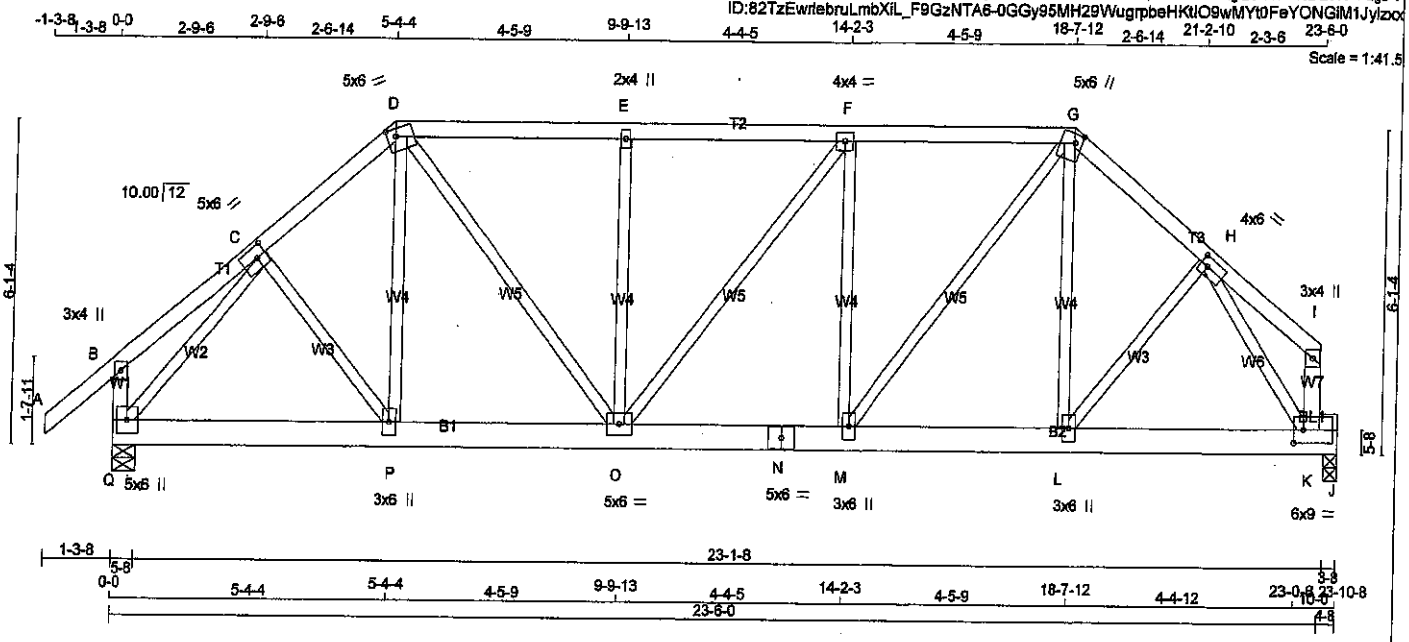

TOTAL WEIGHT = 126 lb

[M]

LUMBER

N. L. G. A. RULES

CHORDS	SIZE		LUMBER	DESCR.
A - D	2x4	DRY	No.2	SPF
D - G	2x4	DRY	No.2	SPF
G - I	2x4	DRY	No.2	SPF
Q - B	2x4	DRY	No.2	SPF
K - I	2x4	DRY	No.2	SPF
Q - N	2x6	DRY	No.2	SPF
N - J	2x6	DRY	No.2	SPF
BEARING BLOCKS				
BL1	2x4	DRY	No.2	SPF
ALL WEBS EXCEPT	2x3	DRY	No.2	SPF

DRY: SEASONED LUMBER.

PLATES (table is in inches)

JT	TYPE	PLATES	W	LEN	Y	X
B	TMV+p	MT20	3.0	4.0		
C	TMWW-t	MT20	5.0	6.0	2.50	2.25
D	TTWW-m	MT20	5.0	6.0	1.75	2.00
E	TMW+w	MT20	2.0	4.0		
F	TMWW-t	MT20	4.0	4.0		
G	TTWW+m	MT20	5.0	6.0	2.00	1.75
H	TMWW-t	MT20	4.0	6.0	2.00	1.75
I	TMV+p	MT20	3.0	4.0		
K	BMVWK-t	MT20	6.0	9.0	3.00	2.25
L, M, P						
L	BMWW+t	MT20	3.0	6.0		
N	BS-t	MT20	5.0	6.0		
O	BMWWW-t	MT20	5.0	6.0		
Q	BMVW1+p	MT20	5.0	6.0		

DIMENSIONS, SUPPORTS AND LOADINGS SPECIFIED BY FABRICATOR TO BE VERIFIED BY BUILDING DESIGNER

BEARINGS

JT	FACTORED GROSS REACTION VERT	HORZ	MAXIMUM FACTORED GROSS REACTION DOWN	HORZ	UPLIFT	INPUT BRG IN-SX	REQRD BRG IN-SX
Q	2187	0	2187	0	0	5-8	5-8
J	1959	0	1959	0	0	3-8	3-8

UNFACTORED REACTIONS

JT	1ST LCASE COMBINED	MAX./MIN. COMPONENT REACTIONS SNOW	LIVE	PERM.LIVE	WIND	DEAD	SOIL
Q	1596	1018 / 0	251 / 0	0 / 0	0 / 0	327 / 0	0 / 0
J	1441	884 / 0	251 / 0	0 / 0	0 / 0	306 / 0	0 / 0

BEARING MATERIAL TO BE SPF NO.2 OR BETTER AT JOINT(S) Q, J

BRACING

TOP CHORD TO BE SHEATHED OR MAX. PURLIN SPACING = 4.25 FT.
MAX. UNBRACED BOTTOM CHORD LENGTH = 10.00 FT OR RIGID CEILING DIRECTLY APPLIED.

ALL PITCH BREAKS AND PERIMETER CORNER JOINTS MUST BE LATERALLY RESTRAINED.

LOADING

TOTAL LOAD CASES: (4)

CHORDS

MEMB. FR-TO	MAX. FACTORED FORCE (LBS)	FACTORED VERT. LOAD (PLF) FROM	TO	LC1	MAX CSI (LC)	MAX. UNBRAC LENGTH
A- B	0 / 57	-129.7	-129.7	0.18 (1)	10.00	
B- C	0 / 21	-129.7	-129.7	0.12 (1)	10.00	
C- D	-1951 / 0	-129.7	-129.7	0.17 (1)	4.68	
D- E	-2068 / 0	-129.7	-129.7	0.40 (1)	4.28	
E- F	-2068 / 0	-129.7	-129.7	0.41 (1)	4.25	
F- G	-2054 / 0	-129.7	-129.7	0.41 (1)	4.27	
G- H	-1972 / 0	-129.7	-129.7	0.16 (1)	4.67	
H- I	0 / 33	-129.7	-129.7	0.10 (1)	10.00	
Q- B	-318 / 0	0.0	0.0	0.03 (1)	7.81	
K- I	-102 / 0	0.0	0.0	0.01 (1)	7.81	
Q- P	0 / 1375	-38.5	-38.5	0.23 (1)	10.00	
P- O	0 / 1478	-38.5	-38.5	0.23 (1)	10.00	
O- N	0 / 2054	-38.5	-38.5	0.31 (1)	10.00	
N- M	0 / 2054	-38.5	-38.5	0.31 (1)	10.00	
M- L	0 / 1496	-38.5	-38.5	0.40 (1)	10.00	
L- K	0 / 1187	-38.5	-38.5	0.82 (1)	10.00	
K- J	0 / 0	-38.5	-38.5	0.42 (1)	10.00	

WEBS

MEMB. FR-TO	MAX. FACTORED FORCE (LBS)	MAX CSI (LC)
C- P	0 / 171	0.04 (2)
P- D	0 / 173	0.04 (3)
L- G	0 / 196	0.05 (3)
L- H	0 / 494	0.11 (1)
Q- C	-2249 / 0	0.66 (1)
H- K	-2353 / 0	0.62 (1)
M- G	0 / 902	0.20 (1)
D- O	0 / 957	0.22 (1)
M- F	-637 / 0	0.35 (1)
O- E	-612 / 0	0.33 (1)
O- F	0 / 23	0.01 (1)

LICENSED PROFESSIONAL ENGINEER
08/20/18
H.J.G. ALVES
PROVINCE OF ONTARIO

DESIGN CRITERIA

SPECIFIED LOADS:

TOP CH.	LL	=	36.2	PSF
	DL	=	6.0	PSF
BOT CH.	LL	=	10.5	PSF
	DL	=	7.0	PSF
TOTAL LOAD		=	61.7	PSF

SPACING = 24.0 IN. C/C

LOADING IN FLAT SECTION BASED ON A SLOPE OF 6.00/12

THIS TRUSS IS DESIGNED FOR RESIDENTIAL OR SMALL BUILDING REQUIREMENTS OF PART 9, NBCC 2010, NBCC 2015

THIS DESIGN COMPLIES WITH:
- PART 9 OF OBC 2012, OBC 2018
- CSA 086-09, CSA 086-14
- TPIC 2011, TPIC 2014

(55 % OF 54.3 P.S.F. G.S.L. PLUS 8.4 P.S.F. RAIN LOAD) EQUALS 38.2 P.S.F. SPECIFIED ROOF LIVE LOAD

ALLOWABLE DEFL.(LL)= L/360 (0.60")
CALCULATED VERT. DEFL.(LL) = L/ 999 (0.08")
ALLOWABLE DEFL.(TL)= L/360 (0.60")
CALCULATED VERT. DEFL.(TL) = L/ 999 (0.13")

CSI: TC=0.41/1.00 (F-G:1) , BC=0.82/1.00 (K-L:1) , WB=0.66/1.00 (C-Q:1) , SSI=0.72/1.00 (J-K:1)

DOL LUMBER=1.00 NAIL=1.00 LS BEND=1.10 COMP=1.10 SHEAR=1.10 TENS= 1.10

COMPANION LIVE LOAD FACTOR = 1.00

TRUSS PLATE MANUFACTURER IS NOT RESPONSIBLE FOR QUALITY CONTROL IN THE TRUSS MANUFACTURING PLANT .

NAIL VALUES

PLATE	GRIP(DRY) (PSI) MAX	MIN	SHEAR (PLI) MAX	MIN	SECTION (PLI) MAX	MIN
MT20	618	354	1667	788	1987	1656

PLATE PLACEMENT TOL. = 0.250 inches

PLATE ROTATION TOL. = 5.0 Deg.

JSI GRIP= 0.90 (Q) (INPUT = 0.90)
JSI METAL= 0.55 (H) (INPUT = 1.00)

DWG NO. TAM T1805241
STRUCTURAL
COMPONENT ONLY

JOB NAME	TRUSS NAME	QUANTITY	PLY	JOB DESC.	DRWG NO.
297079	T164	1	1	TRUSS DESC.	

Tamarack Roof Truss, Burlington

Version 8.210 S May 18 2018 MiTek Industries, Inc. Mon Aug 20 11:49:26 2018 Page 1

ID:82TzEwrlebruLmbXiL_F9GzNTA6-v1VT?SPo6O0K9S6Mt7OpSEKX49EoBRuzfugZA5ylzxt

Scale = 1:44.9

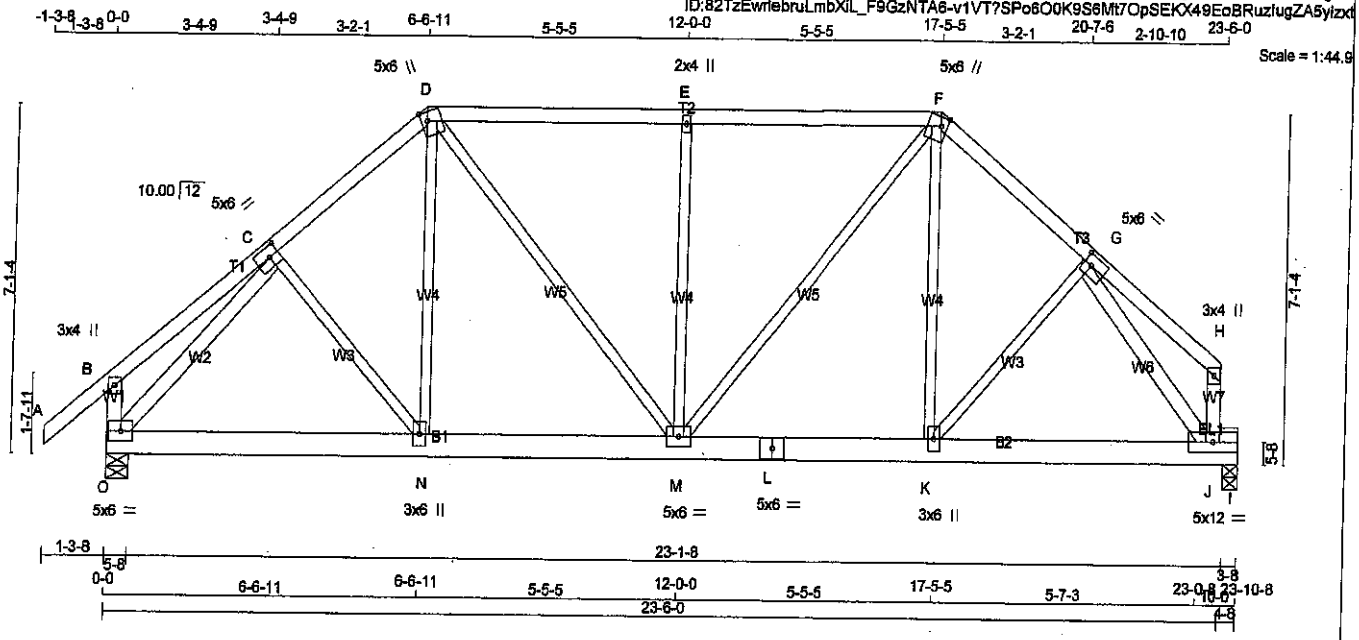

TOTAL WEIGHT = 127 lb

[M]

LUMBER

N. L. G. A. RULES

CHORDS	SIZE		LUMBER	DESCR.
A - D	2x4	DRY	No.2	SPF
D - F	2x4	DRY	No.2	SPF
F - H	2x4	DRY	No.2	SPF
O - B	2x4	DRY	No.2	SPF
J - H	2x4	DRY	No.2	SPF
O - L	2x6	DRY	No.2	SPF
L - I	2x6	DRY	No.2	SPF
BEARING BLOCKS				
BL1	2x4	DRY	No.2	SPF
ALL WEBS EXCEPT	2x3	DRY	No.2	SPF
O - C	2x4	DRY	No.2	SPF
G - J	2x4	DRY	No.2	SPF

DRY: SEASONED LUMBER.

PLATES (table is in inches)

JT	TYPE	PLATES	W	LEN	Y	X
B	TMV+p	MT20	3.0	4.0		
C	TMWW-t	MT20	5.0	6.0	2.50	2.50
D	TTWW+m	MT20	5.0	6.0	2.25	1.50
E	TMW+w	MT20	2.0	4.0		
F	TTWW+m	MT20	5.0	6.0	2.25	1.50
G	TMWW-t	MT20	5.0	6.0	2.50	2.00
H	TMV+p	MT20	3.0	4.0		
J	BMVWK-t	MT20	5.0	12.0		
K	BMWW+t	MT20	3.0	6.0		
L	BS-t	MT20	5.0	6.0		
M	BMWWW-t	MT20	5.0	6.0		
N	BMWW+t	MT20	3.0	6.0		
O	BMVW1-t	MT20	5.0	6.0		

DIMENSIONS, SUPPORTS AND LOADINGS SPECIFIED BY FABRICATOR TO BE VERIFIED BY BUILDING DESIGNER

BEARINGS

JT	FACTORED GROSS REACTION VERT	HORZ	MAXIMUM FACTORED GROSS REACTION DOWN	HORZ	UPLIFT	INPUT BRG IN-SX	REQRD BRG IN-SX
O	2187	0	2187	0	0	5-8	5-8
I	1959	0	1959	0	0	3-8	3-8

UNFACTORED REACTIONS

JT	1ST LCASE COMBINED	MAX./MIN. COMPONENT REACTIONS SNOW	LIVE	PERM.LIVE	WIND	DEAD	SOIL
O	1596	1018 / 0	251 / 0	0 / 0	0 / 0	327 / 0	0 / 0
I	1441	864 / 0	251 / 0	0 / 0	0 / 0	306 / 0	0 / 0

BEARING MATERIAL TO BE SPF NO.2 OR BETTER AT JOINT(S) O, I

BRACING

TOP CHORD TO BE SHEATHED OR MAX. PURLIN SPACING = 3.85 FT.
MAX. UNBRACED BOTTOM CHORD LENGTH = 10.00 FT OR RIGID CEILING DIRECTLY APPLIED.

ALL PITCH BREAKS AND PERIMETER CORNER JOINTS MUST BE LATERALLY RESTRAINED.

LOADING

TOTAL LOAD CASES: (4)

CHORDS

MEMB. FR-TO	MAX. FACTORED FORCE (LBS)	FACTORED VERT. LOAD (PLF) FROM	TO	LC1	MAX CSI (LC)	MAX. UNBRAC LENGTH
A- B	0 / 57	-129.7	-129.7	0.18 (1)	10.00	
B- C	0 / 30	-129.7	-129.7	0.21 (1)	10.00	
C- D	-1916 / 0	-129.7	-129.7	0.27 (1)	4.60	
D- E	-1841 / 0	-129.7	-129.7	0.75 (1)	3.85	
E- F	-1841 / 0	-129.7	-129.7	0.75 (1)	3.85	
F- G	-1937 / 0	-129.7	-129.7	0.24 (1)	4.61	
G- H	0 / 45	-129.7	-129.7	0.19 (1)	10.00	
O- B	-343 / 0	0.0	0.0	0.04 (1)	7.81	
J- H	-121 / 0	0.0	0.0	0.01 (1)	7.81	
O- N	0 / 1438	-38.5	-38.5	0.28 (1)	10.00	
N- M	0 / 1449	-38.5	-38.5	0.28 (2)	10.00	
M- L	0 / 1469	-38.5	-38.5	0.44 (1)	10.00	
L- K	0 / 1469	-38.5	-38.5	0.44 (1)	10.00	
K- J	0 / 1273	-38.5	-38.5	0.83 (1)	10.00	
J- I	0 / 0	-38.5	-38.5	0.42 (1)	10.00	

WEBS

MEMB. FR-TO	MAX. FACTORED FORCE (LBS)	MAX CSI (LC)
C- N	0 / 100	0.02 (3)
N- D	0 / 322	0.07 (2)
D- M	0 / 623	0.14 (1)
M- E	-861 / 0	0.71 (1)
M- F	0 / 592	0.13 (1)
K- F	0 / 348	0.08 (2)
K- G	0 / 290	0.07 (1)
C- C	-2257 / 0	0.86 (1)
G- J	-2325 / 0	0.59 (1)

DESIGN CRITERIA

SPECIFIED LOADS:

TOP CH.	LL	=	38.2	PSF
	DL	=	6.0	PSF
BOT CH.	LL	=	10.5	PSF
	DL	=	7.0	PSF
TOTAL LOAD		=	61.7	PSF

SPACING = 24.0 IN. C/C

LOADING IN FLAT SECTION BASED ON A SLOPE OF 6.00/12

THIS TRUSS IS DESIGNED FOR RESIDENTIAL OR SMALL BUILDING REQUIREMENTS OF PART 9, NBCC 2010, NBCC 2015

THIS DESIGN COMPLIES WITH:
- PART 9 OF OBC 2012, OBC 2016
- CSA 086-09, CSA 086-14
- TPIC 2011, TPIC 2014

(55 % OF 54.3 P.S.F. G.S.L. PLUS 8.4 P.S.F. RAIN LOAD) EQUALS 38.2 P.S.F. SPECIFIED ROOF LIVE LOAD

ALLOWABLE DEFL.(LL)= L/360 (0.80")
CALCULATED VERT. DEFL.(LL) = L/ 999 (0.11")
ALLOWABLE DEFL.(TL)= L/360 (0.80")
CALCULATED VERT. DEFL.(TL) = L/ 999 (0.16")

CSI: TC=0.75/1.00 (D-E:1) , BC=0.83/1.00 (J-K:1) , WB=0.71/1.00 (E-M:1) , SSI=0.72/1.00 (I-J:1)

DOL LUMBER=1.00 NAIL=1.00 LS BEND=1.10 COMP=1.10 SHEAR=1.10 TENS= 1.10

COMPANION LIVE LOAD FACTOR = 1.00

AUTOSOLVE HEELS OFF

TRUSS PLATE MANUFACTURER IS NOT RESPONSIBLE FOR QUALITY CONTROL IN THE TRUSS MANUFACTURING PLANT .

NAIL VALUES

PLATE	GRIP(DRY) (PSI) MAX	MIN	SHEAR (PLI) MAX	MIN	SECTION (PLI) MAX	MIN
MT20	618	354	1667	788	1987	1656

PLATE PLACEMENT TOL. = 0.250 inches

PLATE ROTATION TOL. = 5.0 Deg.

JSI GRIP= 0.89 (F) (INPUT = 0.90)
JSI METAL= 0.56 (G) (INPUT = 1.00)

LICENSED PROFESSIONAL ENGINEER
08/20/18
H.J.G. AMES
PROVINCE OF ONTARIO

DWG NO. TAM 11805242
STRUCTURAL
COMPONENT ONLY

TOWN OF INNISFIL
2018-0802-0808
REVIEWED
Openfield
3/19/2021
Building Permit Plans

TOWN OF INNISFIL
2018-0802-0808
REVIEWED
Signature
3/19/2021
Building Permit Plans

JOB NAME	TRUSS NAME	QUANTITY	PLY	JOB DESC.	DRWG NO.
297079	T165	1	1	TRUSS DESC.	

Tamarack Roof Truss, Burlington

Version 8.210 S May 18 2018 MiTek Industries, Inc. Mon Aug 20 11:49:29 2018 Page 1
ID:82TzEwrlebruLmbXiL_F9GzNTA6-JcBcdUSgPJOu0wrxYFyW4fy7SMENOnJQ_svEnPylzxq

Scale = 1:49.6

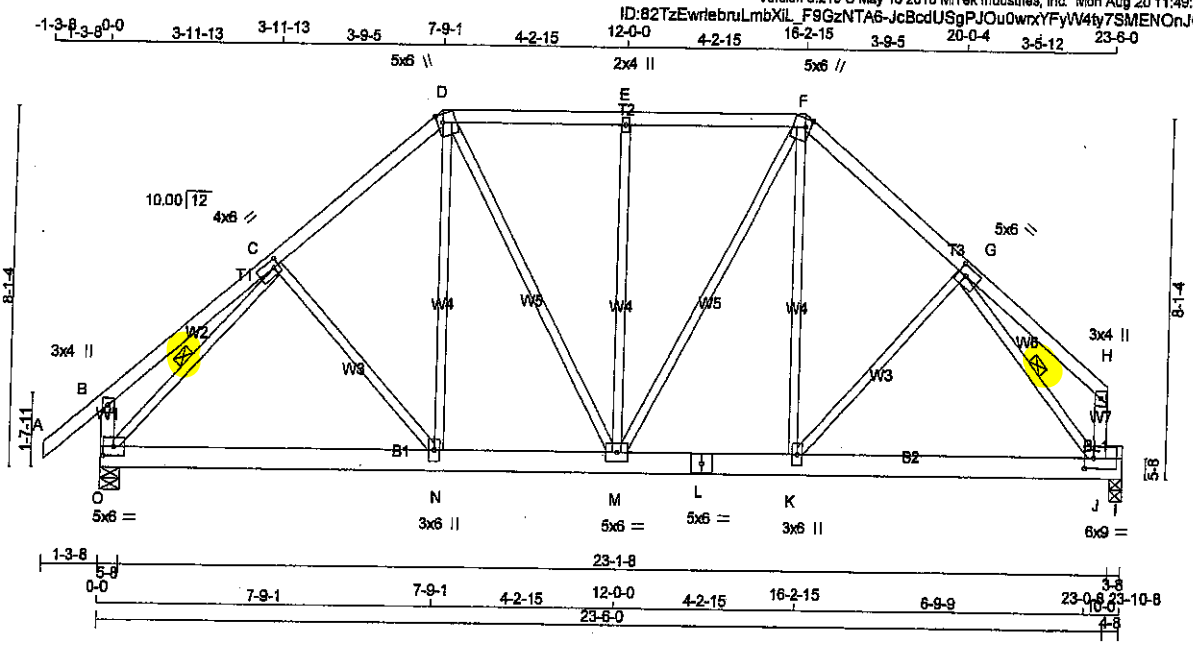

TOTAL WEIGHT = 130 lb
[M]

LUMBER

N. L. G. A. RULES

CHORDS	SIZE		LUMBER	DESCR.
A - D	2x4	DRY	No.2	SPF
D - F	2x4	DRY	No.2	SPF
F - H	2x4	DRY	No.2	SPF
O - B	2x4	DRY	No.2	SPF
J - H	2x4	DRY	No.2	SPF
O - L	2x6	DRY	No.2	SPF
L - I	2x6	DRY	No.2	SPF

BEARING BLOCKS

BL1	2x4	DRY	No.2	SPF

ALL WEBS EXCEPT	2x3	DRY	No.2	SPF

DRY: SEASONED LUMBER.

PLATES (table is in inches)

JT	TYPE	PLATES	W	LEN	Y	X
B	TMV+p	MT20	3.0	4.0		
C	TMWW-t	MT20	4.0	8.0	2.00	1.50
D	TTWW+m	MT20	5.0	6.0	2.25	1.50
E	TMW+w	MT20	2.0	4.0		
F	TTWW+m	MT20	5.0	6.0	2.25	1.50
G	TMWW-t	MT20	5.0	6.0	2.50	2.25
H	TMV+p	MT20	3.0	4.0		
J	BMVWK-t	MT20	6.0	9.0	2.75	2.50
K	BMWW+t	MT20	3.0	6.0		
L	BS-t	MT20	5.0	6.0		
M	BMWWW-t	MT20	5.0	6.0		
N	BMWW+t	MT20	3.0	6.0		
O	BMVW1-t	MT20	5.0	6.0	2.50	2.75

DIMENSIONS, SUPPORTS AND LOADINGS SPECIFIED BY FABRICATOR TO BE VERIFIED BY BUILDING DESIGNER

BEARINGS

JT	FACTORED GROSS REACTION VERT	HORZ	MAXIMUM FACTORED GROSS REACTION DOWN	HORZ	UPLIFT	INPUT BRG IN-SX	REQRD BRG IN-SX
O	2187	0	2187	0	0	5-8	5-8
I	1959	0	1959	0	0	3-8	3-8

UNFACTORED REACTIONS

JT	1ST LCASE COMBINED	MAX./MIN. COMPONENT REACTIONS SNOW	LIVE	PERM.LIVE	WIND	DEAD	SOIL
O	1596	1018 / 0	251 / 0	0 / 0	0 / 0	327 / 0	0 / 0
I	1441	884 / 0	251 / 0	0 / 0	0 / 0	306 / 0	0 / 0

BEARING MATERIAL TO BE SPF NO.2 OR BETTER AT JOINT(S) O, I

BRACING

TOP CHORD TO BE SHEATHED OR MAX. PURLIN SPACING = 4.53 FT.
MAX. UNBRACED BOTTOM CHORD LENGTH = 10.00 FT OR RIGID CEILING DIRECTLY APPLIED.

ALL PITCH BREAKS AND PERIMETER CORNER JOINTS MUST BE LATERALLY RESTRAINED.

1 LATERAL BRACE(S) AT 1/ 2 LENGTH OF C-O, G-J.

END VERTICAL(S) MUST BE SHEATHED OR HAVE BRACES AS INDICATED IN THE MAX. UNBRACED LENGTH COLUMN OF THE TABLE BELOW

LOADING

TOTAL LOAD CASES: (4)

CHORDS

MEMB. FR-TO	MAX. FACTORED FORCE (LBS)	FACTORED VERT. LOAD (PLF) FROM	TO	LC1 CSI (LC)	MAX UNBRAC LENGTH
A- B	0 / 57	-129.7	-129.7	0.18 (1)	10.00
B- C	0 / 37	-129.7	-129.7	0.31 (1)	10.00
C- D	-1845 / 0	-129.7	-129.7	0.38 (1)	4.53
D- E	-1571 / 0	-129.7	-129.7	0.42 (1)	4.72
E- F	-1571 / 0	-129.7	-129.7	0.42 (1)	4.72
F- G	-1874 / 0	-129.7	-129.7	0.34 (1)	4.55
G- H	0 / 54	-129.7	-129.7	0.27 (1)	10.00
O- B	-372 / 0	0.0	0.0	0.04 (1)	7.81
J- H	-148 / 0	0.0	0.0	0.02 (1)	7.81
O- N	0 / 1468	-38.5	-38.5	0.32 (2)	10.00
N- M	0 / 1391	-38.5	-38.5	0.31 (2)	10.00
M- L	0 / 1417	-38.5	-38.5	0.49 (1)	10.00
L- K	0 / 1417	-38.5	-38.5	0.49 (1)	10.00
K- J	0 / 1332	-38.5	-38.5	0.84 (1)	10.00
J- I	0 / 0	-38.5	-38.5	0.42 (1)	10.00

WEBS

MEMB. FR-TO	MAX. FACTORED FORCE (LBS)	MAX CSI (LC)
C- N	-122 / 68	0.07 (1)
N- D	0 / 445	0.10 (2)
D- M	0 / 373	0.08 (1)
M- E	-663 / 0	0.79 (1)
M- F	0 / 319	0.07 (1)
K- F	0 / 492	0.11 (2)
K- G	0 / 147	0.03 (3)
O- C	-2237 / 0	0.54 (1)
G- J	-2296 / 0	0.52 (1)

LICENSED PROFESSIONAL ENGINEER
08/20/18
H.J.G. ALVES
PROVINCE OF ONTARIO

DESIGN CRITERIA

SPECIFIED LOADS:

TOP CH.	LL	=	38.2	PSF
	DL	=	6.0	PSF
BOT CH.	LL	=	10.5	PSF
	DL	=	7.0	PSF
TOTAL LOAD		=	61.7	PSF

SPACING = 24.0 IN. C/C

LOADING IN FLAT SECTION BASED ON A SLOPE OF 6.00/12

THIS TRUSS IS DESIGNED FOR RESIDENTIAL OR SMALL BUILDING REQUIREMENTS OF PART 9, NBCC 2010, NBCC 2015

THIS DESIGN COMPLIES WITH:
- PART 9 OF OBC 2012, OBC 2018
- CSA 086-09, CSA 086-14
- TPIC 2011, TPIC 2014

(55 % OF 54.3 P.S.F. G.S.L. PLUS 8.4 P.S.F. RAIN LOAD) EQUALS 38.2 P.S.F. SPECIFIED ROOF LIVE LOAD

ALLOWABLE DEFL.(LL)= L/360 (0.80")
CALCULATED VERT. DEFL.(LL) = L/ 999 (0.14")
ALLOWABLE DEFL.(TL)= L/360 (0.80")
CALCULATED VERT. DEFL.(TL) = L/ 999 (0.24")

CSI: TC=0.42/1.00 (D-E:1) , BC=0.84/1.00 (J-K:1) , WB=0.79/1.00 (E-M:1) , SSI=0.72/1.00 (I-J:1)

DOL LUMBER=1.00 NAIL=1.00 LS BEND=1.10 COMP=1.10 SHEAR=1.10 TENS= 1.10

COMPANION LIVE LOAD FACTOR = 1.00

TRUSS PLATE MANUFACTURER IS NOT RESPONSIBLE FOR QUALITY CONTROL IN THE TRUSS MANUFACTURING PLANT .

NAIL VALUES

PLATE	GRIP(DRY) (PSI) MAX	MIN	SHEAR (PLI) MAX	MIN	SECTION (PLI) MAX	MIN
MT20	618	354	1667	788	1987	1656

PLATE PLACEMENT TOL. = 0.250 inches

PLATE ROTATION TOL. = 5.0 Deg.

JSI GRIP= 0.90 (J) (INPUT = 0.90)
JSI METAL= 0.56 (G) (INPUT = 1.00)

DWG NO. TAM 17805243
STRUCTURAL
COMPONENT ONLY

JOB NAME	TRUSS NAME	QUANTITY	PLY	JOB DESC.	DRWG NO.
297079	T166	1	2	TRUSS DESC.	

Tamarack Roof Truss, Burlington

Version 8.210 S May 18 2018 MiTek Industries, Inc. Mon Aug 20 11:49:33 2018 Page 1
ID:82TzEwrlebruLmbXiL_F9GzNTA6-COQ6TrVBSXuKVX8in51SEj6mY_chKb_?vUtRwBylzxm

Scale = 1:56.1

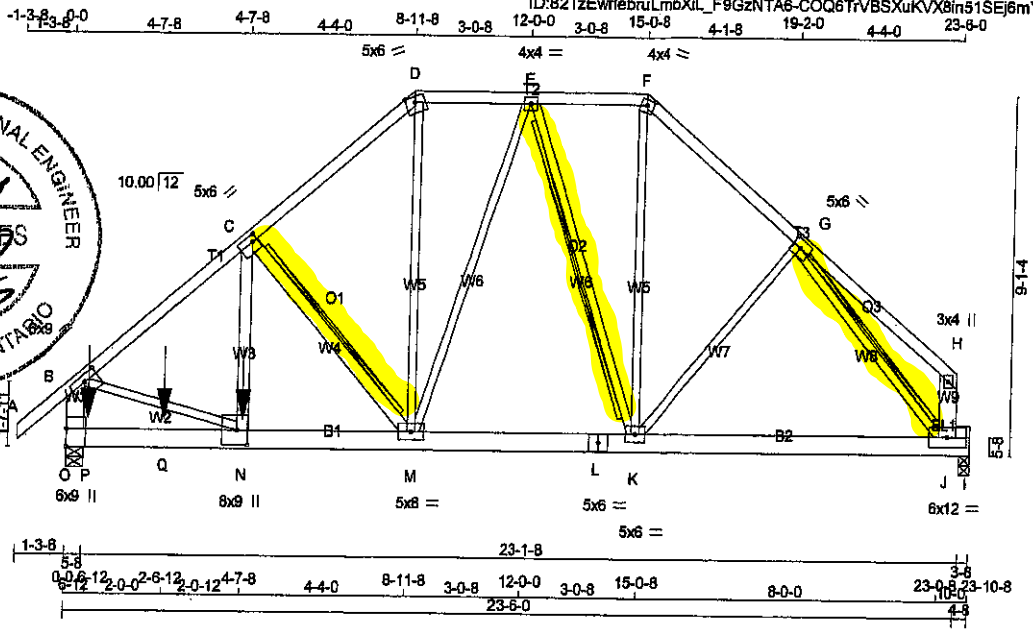

TOTAL WEIGHT = 2 X 138 = 275 lb

[M]

LUMBER

N. L. G. A. RULES

CHORDS	SIZE		LUMBER	DESCR.
A - D	2x4	DRY	No.2	SPF
D - F	2x4	DRY	No.2	SPF
F - H	2x4	DRY	No.2	SPF
O - B	2x6	DRY	No.2	SPF
J - H	2x6	DRY	No.2	SPF
O - L	2x6	DRY	No.2	SPF
L - I	2x6	DRY	No.2	SPF
BEARING BLOCKS				
BL1	2x4	DRY	No.2	SPF
ALL WEBS EXCEPT	2x3	DRY	No.2	SPF
N - C	2x4	DRY	No.2	SPF
C - M	2x4	DRY	No.2	SPF

DRY: SEASONED LUMBER.

DESIGN CONSISTS OF 2 TRUSSES BUILT SEPARATELY THEN FASTENED TOGETHER AS FOLLOWS:

CHORDS	#ROWS	SURFACE SPACING (IN)	LOAD(PLF)
TOP CHORDS : (0.122"X3") SPIRAL NAILS			
A- D	1	12	TOP
D- F	1	12	TOP
F- H	1	12	TOP
O- B	2	3	SIDE(80.6)
J- H	2	12	TOP
BOTTOM CHORDS : (0.122"X3") SPIRAL NAILS			
O- L	2	12	SIDE(183.1)
L- I	2	12	TOP
WEBS : (0.122"X3") SPIRAL NAILS			
2x3	1	6	
C- N	1	2	SIDE(1314.2)
2x4	1	6	

NAILS TO BE DRIVEN FROM ONE SIDE ONLY.

GIRDER NAILING ASSUMES NAILED HANGERS ARE FASTENED WITH MIN. 3-0 INCH NAILS.

TOP - COMPONENTS ARE LOADED FROM THE TOP AND MUST BE PLACED ON TOP EDGE OF ALL PLIES FOR THE LOAD TO BE TRANSFERRED TO EACH PLY.

SIDE - PLF SHOWN IS THE EQUIVALENT UDL APPLIED TO ONE SIDE THAT THE CORRESPONDING NAILING PATTERN SHALL BE CAPABLE OF TRANSFERING. REMAINING PLF MUST BE APPLIED ON THE OPPOSITE SIDE OR ON THE TOP.

PLATES (table is in inches)

JT	TYPE	PLATES	W	LEN	Y	X
B	TMVW-t	MT20	6.0	9.0	2.00	4.25
C	TMWW-t	MT20	5.0	6.0	2.00	1.50
D	TTW-m	MT20	5.0	6.0	Edge	
E	TMWW-t	MT20	4.0	4.0		
F	TTW-m	MT20	4.0	4.0	1.75	2.00
G	TMWW-t	MT20	5.0	6.0	2.50	2.75
H	TMV+p	MT20	3.0	4.0		
J	BMVWK-t	MT20	6.0	12.0		
K	BMWWW-t	MT20	5.0	6.0		
L	BS-t	MT20	5.0	6.0		
M	BMWWW-t	MT20	5.0	8.0		
N	BMWW+t	MT20	8.0	9.0	4.50	3.25
O	BMV1+t	MT20	6.0	9.0	5.50	

DIMENSIONS, SUPPORTS AND LOADINGS SPECIFIED BY FABRICATOR TO BE VERIFIED BY BUILDING DESIGNER

BEARINGS

JT	FACTORED GROSS REACTION VERT	HORZ	MAXIMUM FACTORED GROSS REACTION DOWN	HORZ	UPLIFT	INPUT BRG IN-SX	REQRD BRG IN-SX
O	8746	0	8746	0	0	5-8	5-8
I	3286	0	3286	0	0	3-8	3-8

UNFACTORED REACTIONS

JT	1ST LCASE COMBINED	MAX./MIN. COMPONENT REACTIONS SNOW	LIVE	PERM.LIVE	WIND	DEAD	SOIL
O	6375	4103 / 0	996 / 0	0 / 0	0 / 0	1276 / 0	0 / 0
I	2404	1515 / 0	393 / 0	0 / 0	0 / 0	496 / 0	0 / 0

BEARING MATERIAL TO BE SPF NO.2 OR BETTER AT JOINT(S) O, I

BRACING

TOP CHORD TO BE SHEATHED OR MAX. PURLIN SPACING = 3.05 FT.
MAX. UNBRACED BOTTOM CHORD LENGTH = 10.00 FT OR RIGID CEILING DIRECTLY APPLIED.

ALL PITCH BREAKS AND PERIMETER CORNER JOINTS MUST BE LATERALLY RESTRAINED.

2x4 DRY SPF No.2 T-BRACE AT C-M, G-J, E-K

FASTEN T AND I-BRACES TO NARROW EDGE OF WEB WITH ONE ROW PER PLY OF 3" COMMON WIRE NAILS @ 6" O.C. WITH 3" MINIMUM END DISTANCE. BRACE MUST COVER 90% OF WEB LENGTH.

END VERTICAL(S) MUST BE SHEATHED OR HAVE BRACES AS INDICATED IN THE MAX. UNBRACED LENGTH COLUMN OF THE TABLE BELOW

LOADING

TOTAL LOAD CASES: (4)

CHORDS

MEMB. FR-TO	MAX. FACTORED FORCE (LBS)	FACTORED VERT. LOAD (PLF) FROM	TO	LC1	MAX CSI (LC)	MAX. UNBRAC LENGTH
A- B	0 / 57	-129.7	-129.7	0.10 (1)	10.00	
B- C	-8208 / 0	-129.7	-129.7	0.61 (1)	3.06	
C- D	-4434 / 0	-129.7	-129.7	0.32 (1)	4.28	
D- E	-3397 / 0	-129.7	-129.7	0.12 (1)	4.96	
E- F	-2665 / 0	-129.7	-129.7	0.11 (1)	5.47	
F- G	-3488 / 0	-129.7	-129.7	0.27 (1)	4.77	
G- H	0 / 73	-129.7	-129.7	0.20 (1)	10.00	
O- B	-7374 / 0	0.0	0.0	0.27 (1)	5.52	
J- H	-192 / 0	0.0	0.0	0.01 (1)	7.81	
O- P	0 / 0	-38.5	-38.5	0.50 (1)	10.00	
P- Q	0 / 0	-38.5	-38.5	0.50 (1)	10.00	
Q- N	0 / 0	-38.5	-38.5	0.50 (1)	10.00	
N- M	0 / 6333	-38.5	-38.5	0.54 (1)	10.00	
M- L	0 / 3099	-38.5	-38.5	0.51 (1)	10.00	
L- K	0 / 3099	-38.5	-38.5	0.51 (1)	10.00	
K- J	0 / 2422	-38.5	-38.5	0.88 (1)	10.00	
J- I	0 / 0	-168.2	-168.2	0.45 (1)	10.00	

WEBS

MEMB. FR-TO	MAX. FACTORED FORCE (LBS)	MAX CSI (LC)
N- C	0 / 5150	0.46 (1)
C- M	-4506 / 0	0.79 (1)
M- D	0 / 2408	0.30 (1)
K- F	0 / 1810	0.22 (1)
K- G	0 / 343	0.04 (1)
B- N	0 / 6550	0.81 (1)
G- J	-4004 / 0	0.80 (1)
M- E	0 / 934	0.12 (1)
E- K	-1359 / 0	0.81 (1)

SPECIFIED CONCENTRATED LOADS (LBS)

JT	LOC.	LC1	MAX-	MAX+	FACE	DIR.	TYPE
N	4-7-8	-4185	-4185	—	FRONT	VERT	TOTAL
P	6-12	-736	-736	—	FRONT	VERT	TOTAL
Q	2-8-12	-768	-768	—	FRONT	VERT	TOTAL

DESIGN CRITERIA

SPECIFIED LOADS:

TOP CH.	LL	=	38.2	PSF
	DL	=	6.0	PSF
BOT CH.	LL	=	10.5	PSF
	DL	=	7.0	PSF
TOTAL LOAD		=	61.7	PSF

SPACING = 24.0 IN. C/C

LOADING IN FLAT SECTION BASED ON A SLOPE OF 6.00/12

THIS TRUSS IS DESIGNED FOR RESIDENTIAL OR SMALL BUILDING REQUIREMENTS OF PART 9, NBCC 2010, NBCC 2015

THIS DESIGN COMPLIES WITH:
- PART 9 OF OBC 2012, OBC 2018
- CSA 086-09, CSA 086-14
- TPIC 2011, TPIC 2014

(55 % OF 54.3 P.S.F. G.S.L. PLUS 8.4 P.S.F. RAIN LOAD) EQUALS 38.2 P.S.F. SPECIFIED ROOF LIVE LOAD

ALLOWABLE DEFL.(LL)= L/360 (0.80")
CALCULATED VERT. DEFL.(LL) = L/ 999 (0.16")
ALLOWABLE DEFL.(TL)= L/360 (0.80")
CALCULATED VERT. DEFL.(TL) = L/ 984 (0.29")

CSI: TC=0.61/1.00 (B-C:1) , BC=0.66/1.00 (J-K:1) , WB=0.81/1.00 (B-N:1) , SSI=0.67/1.00 (I-J:1)

DOL LUMBER=1.00 NAIL=1.00 LS BEND=1.00 COMP=1.00 SHEAR=1.00 TENS= 1.00

COMPANION LIVE LOAD FACTOR = 1.00

AUTOSOLVE HEELS OFF

TRUSS PLATE MANUFACTURER IS NOT RESPONSIBLE FOR QUALITY CONTROL IN THE TRUSS MANUFACTURING PLANT .

NAIL VALUES

PLATE	GRIP(DRY) (PSI) MAX	MIN	SHEAR (PLI) MAX	MIN	SECTION (PLI) MAX	MIN
MT20	618	354	1667	788	1987	1656

PLATE PLACEMENT TOL. = 0.250 inches

PLATE ROTATION TOL. = 5.0 Deg.

JSI GRIP= 0.88 (B) (INPUT = 0.90)
JSI METAL= 0.71 (N) (INPUT = 1.00)

DWG NO. TAM 7605244
STRUCTURAL
COMPONENT ONLY
1/2

CONTINUED ON PAGE 2

LICENSED PROFESSIONAL ENGINEER
08/20/18
H.J.G. ALVES
PROVINCE OF ONTARIO

TOWN OF INNISFIL
2018-0802-0808
REVIEWED
Building Permit Plans

JOB NAME	TRUSS NAME	QUANTITY	PLY	JOB DESC.	DRWG NO.
297079	T166	1	2	TRUSS DESC.	

Tamarack Roof Truss, Burlington

Version 8.210 S May 18 2018 MiTek Industries, Inc. Mon Aug 20 11:49:33 2018 Page 2
ID:82TzEwrlebruLmbXiL_F9GzNTA6-COQ6TrVBSXuKVX8in51SEj6mY_chKb_?vUfRwBylzxm

Edge - INDICATES REFERENCE CORNER OF PLATE TOUCHES EDGE OF CHORD.

HANGERS NOTES

1) SPECIAL HANGER(S) OR CONNECTION(S) REQUIRED TO SUPPORT CONCENTRATED LOAD(S) 1010.7 lbs FACTORED DOWN AT 6-12, AND 1057.1 lbs FACTORED DOWN AT 2-6-12, AND 5739.6 lbs FACTORED DOWN AT 4-7-8 ON BOTTOM CHORD. DESIGN FOR UNSPECIFIED CONNECTION(S) IS DELEGATED TO THE BUILDING DESIGNER.

TOWN OF INNISFIL
2018-0802-0808
REVIEWED
Ipenfeld
3/19/2021
Building Permit Plans

LICENSED PROFESSIONAL ENGINEER
03/20/18
H.J.G. ALLEN
PROVINCE OF ONTARIO

DWG NO. TAM 17805244
STRUCTURAL
COMPONENT ONLY

2/2

JOB NAME	TRUSS NAME	QUANTITY	PLY	JOB DESC.	DRWG NO.
297079	T167A	1	1	TRUSS DESC.	

Tamarack Roof Truss, Burlington

Version 8.210 S May 18 2018 MiTek Industries, Inc. Mon Aug 20 11:49:37 2018 Page 1
ID:82TzEwrlebruLmbXIL_F9GzNTA6-49gdJDYhWmPm_8ST0x5OPZHRab2tGR1bp6rf3yylzxt

Scale = 1:60.1

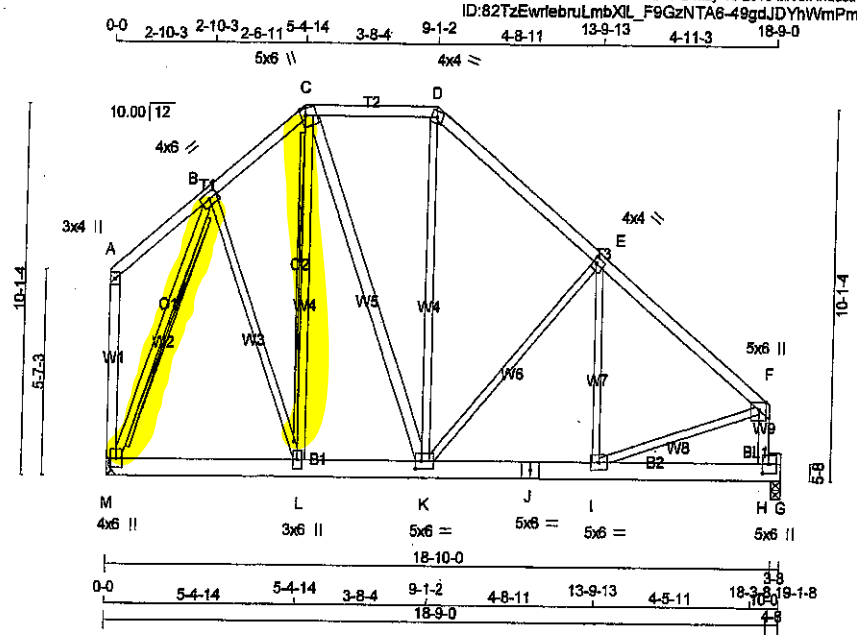

TOTAL WEIGHT = 122 lb

[M]

LUMBER

N. L. G. A. RULES

CHORDS	SIZE		LUMBER	DESCR.
A - C	2x4	DRY	No.2	SPF
C - D	2x4	DRY	No.2	SPF
D - F	2x4	DRY	No.2	SPF
M - A	2x4	DRY	No.2	SPF
H - F	2x4	DRY	No.2	SPF
M - J	2x6	DRY	No.2	SPF
J - G	2x6	DRY	No.2	SPF
BEARING BLOCKS				
BL1	2x4	DRY	No.2	SPF
ALL WEBS EXCEPT	2x3	DRY	No.2	SPF
C - K	2x4	DRY	No.2	SPF

DRY: SEASONED LUMBER.

PLATES (table is in inches)

JT	TYPE	PLATES	W	LEN	Y	X
A	TMV+p	MT20	3.0	4.0		
B	TMWW-t	MT20	4.0	6.0		
C	TTWW+m	MT20	5.0	6.0	2.25	1.50
D	TTW-m	MT20	4.0	4.0		
E	TMWW-t	MT20	4.0	4.0	2.00	1.25
F	TMVW+p	MT20	5.0	6.0	2.50	2.25
H	BMVK+p	MT20	5.0	6.0	3.00	2.00
I	BMWW-t	MT20	5.0	6.0		
J	BS-t	MT20	5.0	6.0		
K	BMWWW-t	MT20	5.0	6.0	2.50	2.00
L	BMWW+t	MT20	3.0	6.0		
M	BMVW1+p	MT20	4.0	6.0		

DIMENSIONS, SUPPORTS AND LOADINGS SPECIFIED BY FABRICATOR TO BE VERIFIED BY BUILDING DESIGNER

BEARINGS

JT	FACTORED GROSS REACTION VERT	HORZ	MAXIMUM FACTORED GROSS REACTION DOWN	HORZ	UPLIFT	INPUT BRG IN-SX	REQRD BRG IN-SX
G	1560	0	1560	0	0	3-8	3-8
M	1608	0	1608	0	0	MECHANICAL	→ LSS26DS

A SUITABLE MECHANICAL CONNECTION IS REQUIRED AT JOINT M.

UNFACTORED REACTIONS

JT	1ST LCASE COMBINED	MAX./MIN. COMPONENT REACTIONS SNOW	LIVE	PERM.LIVE	WIND	DEAD	SOIL
G	1148	703 / 0	201 / 0	0 / 0	0 / 0	244 / 0	0 / 0
M	1180	731 / 0	201 / 0	0 / 0	0 / 0	249 / 0	0 / 0

BEARING MATERIAL TO BE SPF NO.2 OR BETTER AT JOINT(S) G

BRACING

TOP CHORD TO BE SHEATHED OR MAX. PURLIN SPACING = 4.58 FT.
MAX. UNBRACED BOTTOM CHORD LENGTH = 6.25 FT OR RIGID CEILING DIRECTLY APPLIED.

ALL PITCH BREAKS AND PERIMETER CORNER JOINTS MUST BE LATERALLY RESTRAINED.

2x4 DRY SPF No.2 T-BRACE AT C-L, B-M

FASTEN T AND I-BRACES TO NARROW EDGE OF WEB WITH ONE ROW PER PLY OF 3" COMMON WIRE NAILS @ 6" O.C. WITH 3" MINIMUM END DISTANCE. BRACE MUST COVER 90% OF WEB LENGTH.

END VERTICAL(S) MUST BE SHEATHED OR HAVE BRACES AS INDICATED IN THE MAX. UNBRACED LENGTH COLUMN OF THE TABLE BELOW

LOADING

TOTAL LOAD CASES: (4)

CHORDS

MEMB. FR-TO	MAX. FACTORED FORCE (LBS)	FACTORED VERT. LOAD LC1 (PLF) FROM	TO	MAX CSI (LC)	MAX. UNBRAC LENGTH
A- B	0 / 24	-129.7	-129.7	0.15 (1)	10.00
B- C	-882 / 0	-129.7	-129.7	0.16 (1)	6.25
C- D	-784 / 0	-129.7	-129.7	0.31 (1)	6.25
D- E	-1070 / 0	-129.7	-129.7	0.56 (1)	5.25
E- F	-1488 / 0	-129.7	-129.7	0.61 (1)	4.58
M- A	-143 / 0	0.0	0.0	0.08 (1)	7.81
H- F	-1677 / 0	0.0	0.0	0.19 (1)	6.41
M- L	0 / 512	-38.5	-38.5	0.14 (2)	10.00
L- K	0 / 653	-38.5	-38.5	0.15 (2)	10.00
K- J	0 / 1180	-38.5	-38.5	0.31 (1)	10.00
J- I	0 / 1180	-38.5	-38.5	0.31 (1)	10.00
I- H	-149 / 0	-38.5	-38.5	0.54 (1)	6.25
H- G	0 / 0	-38.5	-38.5	0.34 (1)	10.00

WEBS

MEMB. FR-TO	MAX. FACTORED FORCE (LBS)	MAX CSI (LC)
L- C	-169 / 51	0.13 (1)
C- K	0 / 376	0.06 (1)
K- D	0 / 218	0.05 (2)
K- E	-620 / 0	0.66 (1)
I- E	0 / 204	0.05 (3)
I- F	0 / 1400	0.32 (1)
B- L	0 / 420	0.09 (1)
M- B	-1468 / 0	0.67 (1)

DESIGN CRITERIA

SPECIFIED LOADS:

TOP CH.	LL =	38.2	PSF
	DL =	6.0	PSF
BOT CH.	LL =	10.5	PSF
	DL =	7.0	PSF
TOTAL LOAD	=	61.7	PSF

SPACING = 24.0 IN. C/C

LOADING IN FLAT SECTION BASED ON A SLOPE OF 6.00/12

THIS TRUSS IS DESIGNED FOR RESIDENTIAL OR SMALL BUILDING REQUIREMENTS OF PART 9, NBCC 2010, NBCC 2015

THIS DESIGN COMPLIES WITH:
- PART 9 OF OBC 2012, OBC 2018
- CSA 086-09, CSA 086-14
- TPIC 2011, TPIC 2014

(55 % OF 54.3 P.S.F. G.S.L. PLUS 8.4 P.S.F. RAIN LOAD) EQUALS 38.2 P.S.F. SPECIFIED ROOF LIVE LOAD

ALLOWABLE DEFL.(LL)= L/360 (0.64")
CALCULATED VERT. DEFL.(LL) = L/ 999 (0.07")
ALLOWABLE DEFL.(TL)= L/360 (0.64")
CALCULATED VERT. DEFL.(TL) = L/ 999 (0.11")

CSI: TC=0.61/1.00 (E-F:1) , BC=0.54/1.00 (H-I:1) , WB=0.66/1.00 (E-K:1) , SSI=0.57/1.00 (G-H:1)

DOL LUMBER=1.00 NAIL=1.00 LS BEND=1.10 COMP=1.10 SHEAR=1.10 TENS= 1.10

COMPANION LIVE LOAD FACTOR = 1.00

AUTOSOLVE RIGHT HEEL ONLY

TRUSS PLATE MANUFACTURER IS NOT RESPONSIBLE FOR QUALITY CONTROL IN THE TRUSS MANUFACTURING PLANT .

NAIL VALUES

PLATE	GRIP(DRY) (PSI) MAX	MIN	SHEAR (PLI) MAX	MIN	SECTION (PLI) MAX	MIN
MT20	618	354	1667	788	1987	1656

PLATE PLACEMENT TOL. = 0.250 inches

PLATE ROTATION TOL. = 5.0 Deg.

JSI GRIP= 0.67 (I) (INPUT = 0.90)
JSI METAL= 0.33 (I) (INPUT = 1.00)

LICENSED PROFESSIONAL ENGINEER
08/20/18
H.J.G. MYERS
PROVINCE OF ONTARIO

DWG NO. TAM 17805245
STRUCTURAL
COMPONENT ONLY

TOWN OF INNISFIL
2018-0802-0808
REVIEWED
jpenfold
3/19/2021
Building Permit Plans

TOWN OF INNISFIL
2018-0802-0808
REVIEWED
jpenfold
3/19/2021
Building Permit Plans

JOB NAME	TRUSS NAME	QUANTITY	PLY	JOB DESC.	DRWG NO.
297079	T168A	5	1	TRUSS DESC.	

Tamarack Roof Truss, Burlington

Version 8.210 S May 18 2018 MiTek Industries, Inc. Mon Aug 20 11:49:41 2018 Page 1
ID:82TzEwrlebruLmbXiL_F9GzNTA6-zwv89abCa?vBSmmFFmAKZPS3QCQpCITBkkpsCjylzxe

Scale = 1:53.4

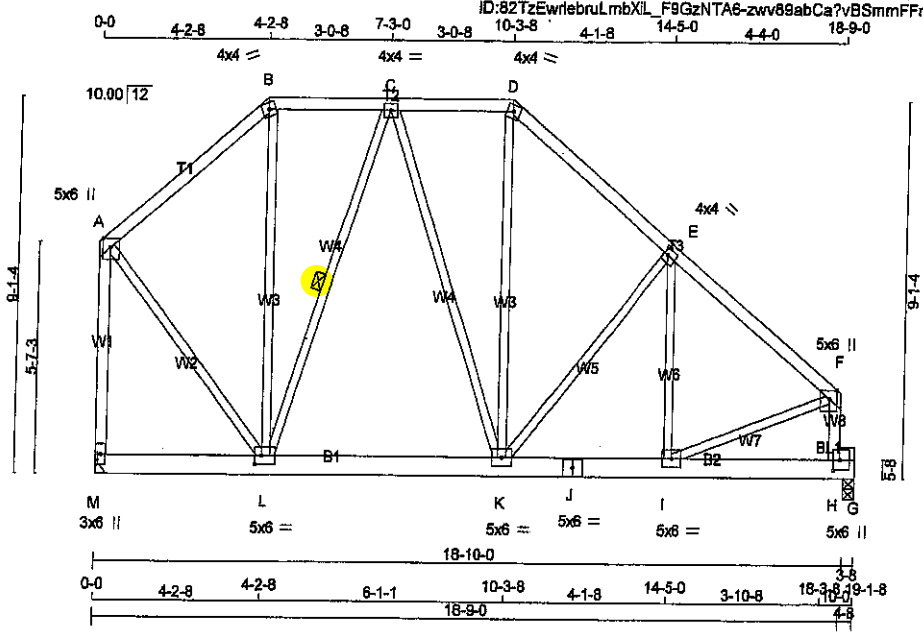

TOTAL WEIGHT = 5 X 114 = 571 lb

LUMBER

N. L. G. A. RULES

CHORDS	SIZE		LUMBER	DESCR.
A - B	2x4	DRY	No.2	SPF
B - D	2x4	DRY	No.2	SPF
D - F	2x4	DRY	No.2	SPF
M - A	2x4	DRY	No.2	SPF
H - F	2x4	DRY	No.2	SPF
M - J	2x6	DRY	No.2	SPF
J - G	2x6	DRY	No.2	SPF
BEARING BLOCKS				
BL1	2x4	DRY	No.2	SPF
ALL WEBS EXCEPT	2x3	DRY	No.2	SPF

DRY: SEASONED LUMBER.

PLATES (table is in inches)

JT	TYPE	PLATES	W	LEN	Y	X
A	TMWW+p	MT20	5.0	6.0	Edge	
B	TTW-m	MT20	4.0	4.0		
C	TMWW-t	MT20	4.0	4.0		
D	TTW-m	MT20	4.0	4.0		
E	TMWW-t	MT20	4.0	4.0	2.00	1.25
F	TMVW+p	MT20	5.0	6.0	2.50	2.25
H	BMVK+p	MT20	5.0	6.0	3.00	2.00
I	BMWW-t	MT20	5.0	6.0		
J	BS-t	MT20	5.0	6.0		
K	BMWWW-t	MT20	5.0	6.0		
L	BMWWW-t	MT20	5.0	6.0	2.50	2.00
M	BMV1+p	MT20	3.0	6.0		

Edge - INDICATES REFERENCE CORNER OF PLATE TOUCHES EDGE OF CHORD.

DIMENSIONS, SUPPORTS AND LOADINGS SPECIFIED BY FABRICATOR TO BE VERIFIED BY BUILDING DESIGNER

BEARINGS

JT	FACTORED GROSS REACTION VERT	HORZ	MAXIMUM FACTORED GROSS REACTION DOWN	HORZ	UPLIFT	INPUT BRG IN-SX	REQRD BRG IN-SX
M	1608	0	1608	0	0	MECHANICAL	~ LSS26DS
G	1560	0	1560	0	0	3-8	3-8

A SUITABLE MECHANICAL CONNECTION IS REQUIRED AT JOINT M.

UNFACTORED REACTIONS

JT	1ST LCASE COMBINED	MAX./MIN. COMPONENT REACTIONS SNOW	LIVE	PERM.LIVE	WIND	DEAD	SOIL
M	1180	731 / 0	201 / 0	0 / 0	0 / 0	249 / 0	0 / 0
G	1148	703 / 0	201 / 0	0 / 0	0 / 0	244 / 0	0 / 0

BEARING MATERIAL TO BE SPF NO.2 OR BETTER AT JOINT(S) G

BRACING

TOP CHORD TO BE SHEATHED OR MAX. PURLIN SPACING = 4.82 FT.
MAX. UNBRACED BOTTOM CHORD LENGTH = 6.25 FT OR RIGID CEILING DIRECTLY APPLIED.

ALL PITCH BREAKS AND PERIMETER CORNER JOINTS MUST BE LATERALLY RESTRAINED.

1 LATERAL BRACE(S) AT 1/2 LENGTH OF C-L.

END VERTICAL(S) MUST BE SHEATHED OR HAVE BRACES AS INDICATED IN THE MAX. UNBRACED LENGTH COLUMN OF THE TABLE BELOW

LOADING

TOTAL LOAD CASES: (4)

CHORDS

MEMB. FR-TO	MAX. FACTORED FORCE (LBS)	FACTORED VERT. LOAD LC1 (PLF) FROM	TO	MAX CSI (LC)	MAX. UNBRAC LENGTH
A- B	-816 / 0	-129.7	-129.7	0.42 (1)	6.09
B- C	-626 / 0	-129.7	-129.7	0.19 (1)	6.25
C- D	-881 / 0	-129.7	-129.7	0.19 (1)	6.25
D- E	-1187 / 0	-129.7	-129.7	0.42 (1)	5.29
E- F	-1494 / 0	-129.7	-129.7	0.45 (1)	4.82
M- A	-1548 / 0	0.0	0.0	0.87 (1)	6.61
H- F	-1709 / 0	0.0	0.0	0.19 (1)	6.36
M- L	0 / 0	-38.5	-38.5	0.09 (3)	10.00
L- K	0 / 833	-38.5	-38.5	0.17 (2)	10.00
K- J	0 / 1179	-38.5	-38.5	0.28 (1)	10.00
J- I	0 / 1179	-38.5	-38.5	0.28 (1)	10.00
I- H	-152 / 0	-38.5	-38.5	0.54 (1)	6.25
H- G	0 / 0	-38.5	-38.5	0.34 (1)	10.00

WEBS

MEMB. FR-TO	MAX. FACTORED FORCE (LBS)	MAX CSI (LC)
L- B	0 / 155	0.04 (3)
L- C	-648 / 0	0.36 (1)
C- K	0 / 158	0.04 (2)
K- D	0 / 375	0.08 (1)
K- E	-483 / 0	0.39 (1)
I- E	-56 / 133	0.03 (3)
A- L	0 / 977	0.22 (1)
I- F	0 / 1423	0.32 (1)

LICENSED PROFESSIONAL ENGINEER
08/20/18
H.J.G. ALBES
PROVINCE OF ONTARIO

DESIGN CRITERIA

SPECIFIED LOADS:

TOP CH.	LL	=	38.2	PSF
	DL	=	6.0	PSF
BOT CH.	LL	=	10.5	PSF
	DL	=	7.0	PSF
TOTAL LOAD		=	61.7	PSF

SPACING = 24.0 IN. C/C

LOADING IN FLAT SECTION BASED ON A SLOPE OF 6.00/12

THIS TRUSS IS DESIGNED FOR RESIDENTIAL OR SMALL BUILDING REQUIREMENTS OF PART 9, NBCC 2010, NBCC 2015

THIS DESIGN COMPLIES WITH:
- PART 9 OF OBC 2012, OBC 2018
- CSA 086-09, CSA 086-14
- TPIC 2011, TPIC 2014

(55 % OF 54.3 P.S.F. G.S.L. PLUS 8.4 P.S.F. RAIN LOAD) EQUALS 38.2 P.S.F. SPECIFIED ROOF LIVE LOAD

ALLOWABLE DEFL.(LL)= L/360 (0.64")
CALCULATED VERT. DEFL.(LL) = L/ 999 (0.06")
ALLOWABLE DEFL.(TL)= L/360 (0.64")
CALCULATED VERT. DEFL.(TL) = L/ 999 (0.09")

CSI: TC=0.87/1.00 (A-M:1) , BC=0.54/1.00 (H-I:1) , WB=0.39/1.00 (E-K:1) , SSI=0.57/1.00 (G-H:1)

DOL LUMBER=1.00 NAIL=1.00 LS BEND=1.10 COMP=1.10 SHEAR=1.10 TENS= 1.10

COMPANION LIVE LOAD FACTOR = 1.00

TRUSS PLATE MANUFACTURER IS NOT RESPONSIBLE FOR QUALITY CONTROL IN THE TRUSS MANUFACTURING PLANT .

NAIL VALUES

PLATE	GRIP(DRY) (PSI) MAX	MIN	SHEAR (PLI) MAX	MIN	SECTION (PLI) MAX	MIN
MT20	618	354	1667	788	1987	1656

PLATE PLACEMENT TOL. = 0.250 inches

PLATE ROTATION TOL. = 5.0 Deg.

JSI GRIP= 0.86 (H) (INPUT = 0.90)
JSI METAL= 0.33 (I) (INPUT = 1.00)

DWG NO. TAM T1805246
STRUCTURAL
COMPONENTS ONLY

TOWN OF INNISFIL
2018-0802-0808
REVIEWED
Jlenfold
3/30/2021
Building Permit Plans

JOB NAME	TRUSS NAME	QUANTITY	PLY	JOB DESC.	DRWG NO.
297079	T169	2	1	TRUSS DESC.	

Tamarack Roof Truss, Burlington

Version 8.210 S May 16 2018 MiTek Industries, Inc. Mon Aug 20 11:49:44 2018 Page 1
ID:82TzEwrlebruLmbXiL_F9GzNTA6-NVbHncd4twHmJDUqxvj1B13ipPV4PbrdQh1Wp2ylzxb

Scale = 1:53.8

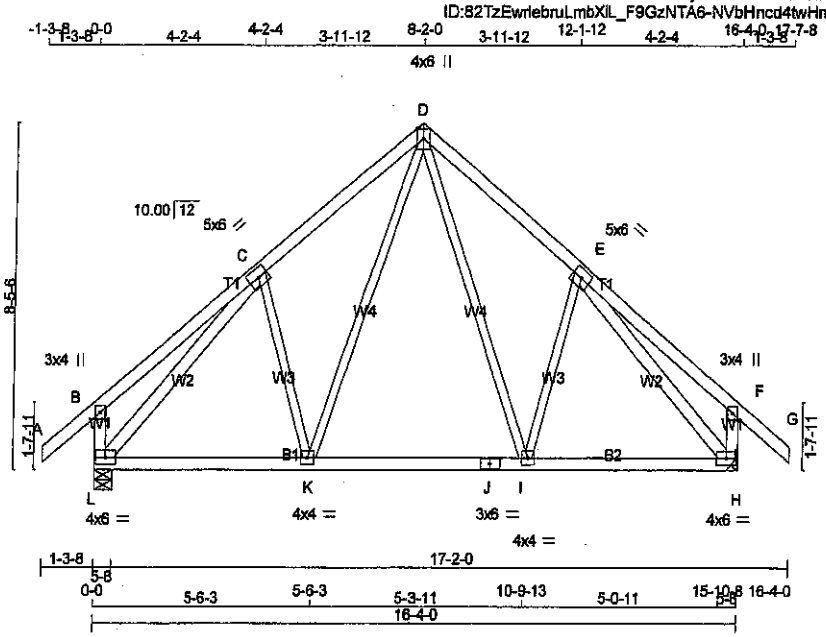

TOTAL WEIGHT = 2 X 84 = 169 lb

[M][F]

LUMBER

N. L. G. A. RULES

CHORDS	SIZE		LUMBER	DESCR.
A - D	2x4	DRY	No.2	SPF
D - G	2x4	DRY	No.2	SPF
L - B	2x4	DRY	No.2	SPF
H - F	2x4	DRY	No.2	SPF
L - J	2x4	DRY	No.2	SPF
J - H	2x4	DRY	No.2	SPF
ALL WEBS EXCEPT	2x3	DRY	No.2	SPF
L - C	2x4	DRY	No.2	SPF
E - H	2x4	DRY	No.2	SPF

DRY: SEASONED LUMBER.

PLATES (table is in inches)

JT	TYPE	PLATES	W	LEN	Y	X
B	TMV+p	MT20	3.0	4.0		
C	TMWW-t	MT20	5.0	6.0		
D	TTWW+p	MT20	4.0	6.0	Edge	
E	TMWW-t	MT20	5.0	6.0		
F	TMV+p	MT20	3.0	4.0		
H	BMVW1-t	MT20	4.0	6.0		
I	BMWW-t	MT20	4.0	4.0		
J	BS-t	MT20	3.0	6.0		
K	BMWW-t	MT20	4.0	4.0		
L	BMVW1-t	MT20	4.0	6.0		

Edge - INDICATES REFERENCE CORNER OF PLATE TOUCHES EDGE OF CHORD.

DIMENSIONS, SUPPORTS AND LOADINGS SPECIFIED BY FABRICATOR TO BE VERIFIED BY BUILDING DESIGNER

BEARINGS

JT	FACTORED GROSS REACTION VERT	HORZ	MAXIMUM FACTORED GROSS REACTION DOWN	HORZ	UPLIFT	INPUT BRG	REQRD BRG
L	1553	0	1553	0	0	5-8	5-8
H	1553	0	1553	0	0	MECHANICAL	IN-SX

-LSS26DS

A SUITABLE MECHANICAL CONNECTION IS REQUIRED AT JOINT H.

UNFACTORED REACTIONS

JT	1ST LCASE COMBINED	MAX./MIN. COMPONENT REACTIONS SNOW	LIVE	PERM.LIVE	WIND	DEAD	SOIL
L	1131	730 / 0	172 / 0	0 / 0	0 / 0	229 / 0	0 / 0
H	1131	730 / 0	172 / 0	0 / 0	0 / 0	229 / 0	0 / 0

BEARING MATERIAL TO BE SPF NO.2 OR BETTER AT JOINT(S) L

BRACING

TOP CHORD TO BE SHEATHED OR MAX. PURLIN SPACING = 5.58 FT.
MAX. UNBRACED BOTTOM CHORD LENGTH = 10.00 FT OR RIGID CEILING DIRECTLY APPLIED.

ALL PITCH BREAKS AND PERIMETER CORNER JOINTS MUST BE LATERALLY RESTRAINED.

LOADING

TOTAL LOAD CASES: (4)

CHORDS

MEMB. FR-TO	MAX. FACTORED FORCE (LBS)	FACTORED VERT. LOAD LC1 (PLF) FROM	TO	MAX CSI (LC)	MAX. UNBRAC LENGTH
A- B	0 / 57	-129.7	-129.7	0.18 (1)	10.00
B- C	0 / 39	-129.7	-129.7	0.35 (1)	10.00
C- D	-1160 / 0	-129.7	-129.7	0.28 (1)	5.58
D- E	-1160 / 0	-129.7	-129.7	0.28 (1)	5.58
E- F	0 / 39	-129.7	-129.7	0.35 (1)	10.00
F- G	0 / 57	-129.7	-129.7	0.18 (1)	10.00
L- B	-387 / 0	0.0	0.0	0.04 (1)	7.81
H- F	-387 / 0	0.0	0.0	0.04 (1)	7.81
L- K	0 / 940	-38.5	-38.5	0.31 (2)	10.00
K- J	0 / 687	-38.5	-38.5	0.28 (2)	10.00
J- I	0 / 687	-38.5	-38.5	0.28 (2)	10.00
I- H	0 / 940	-38.5	-38.5	0.31 (2)	10.00

WEBS

MEMB. FR-TO	MAX. FACTORED FORCE (LBS)	MAX CSI (LC)
D- I	0 / 547	0.12 (1)
I- E	-301 / 28	0.12 (1)
K- D	0 / 547	0.12 (1)
C- K	-301 / 28	0.12 (1)
L- C	-1432 / 0	0.67 (1)
E- H	-1432 / 0	0.67 (1)

DESIGN CRITERIA

SPECIFIED LOADS:

TOP CH.	LL	=	38.2	PSF
	DL	=	6.0	PSF
BOT CH.	LL	=	10.5	PSF
	DL	=	7.0	PSF
TOTAL LOAD		=	61.7	PSF

SPACING = 24.0 IN. C/C

THIS TRUSS IS DESIGNED FOR RESIDENTIAL OR SMALL BUILDING REQUIREMENTS OF PART 9, NBCC 2010, NBCC 2015

THIS DESIGN COMPLIES WITH:
- PART 9 OF OBC 2012, OBC 2018
- CSA 086-09, CSA 086-14
- TPIC 2011, TPIC 2014

(55 % OF 54.3 P.S.F. G.S.L. PLUS 8.4 P.S.F. RAIN LOAD) EQUALS 38.2 P.S.F. SPECIFIED ROOF LIVE LOAD

ALLOWABLE DEFL.(LL)= L/360 (0.54")
CALCULATED VERT. DEFL.(LL) = L/ 999 (0.04")
ALLOWABLE DEFL.(TL)= L/360 (0.54")
CALCULATED VERT. DEFL.(TL) = L/ 999 (0.07")

CSI: TC=0.35/1.00 (E-F:1) , BC=0.31/1.00 (K-L:2) , WB=0.67/1.00 (E-H:1) , SSI=0.20/1.00 (E-F:1)

DOL LUMBER=1.00 NAIL=1.00 LS BEND=1.10 COMP=1.10 SHEAR=1.10 TENS= 1.10

COMPANION LIVE LOAD FACTOR = 1.00

AUTOSOLVE HEELS OFF

TRUSS PLATE MANUFACTURER IS NOT RESPONSIBLE FOR QUALITY CONTROL IN THE TRUSS MANUFACTURING PLANT .

NAIL VALUES

PLATE	GRIP(DRY) (PSI) MAX	MIN	SHEAR (PLI) MAX	MIN	SECTION (PLI) MAX	MIN
MT20	616	354	1667	786	1987	1656

PLATE PLACEMENT TOL. = 0.250 Inches

PLATE ROTATION TOL. = 5.0 Deg.

JSI GRIP= 0.89 (C) (INPUT = 0.90)
JSI METAL= 0.38 (C) (INPUT = 1.00)

LICENSED PROFESSIONAL ENGINEER
08/20/18
H.J.G. ALDES
PROVINCE OF ONTARIO

DWG NO. TAM T180 5247
STRUCTURAL
COMPONENT ONLY

JOB NAME	TRUSS NAME	QUANTITY	PLY	JOB DESC.	DRWG NO.
297079	G169	1	1	TRUSS DESC.	

TOWN OF INNISFIL 2018-0802-0808 REVIEWED jpenfold 3/19/2021

Tamarack Roof Truss, Burlington

Version 8.210 S May 18 2018 MiTek Industries, Inc. Tue Aug 21 15:26:20 2018 Page 1

ID:dQRJcissEbKAe0Zf5XnL8YzNr43-Qr6mc3x6_CFXohkAc9s_POlpYYHR3P5rVlW7RvylbgX

Scale = 1:54.7

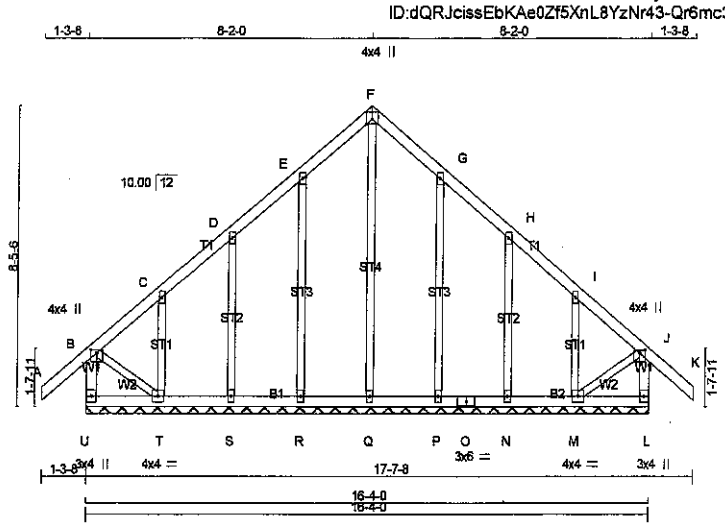

TOTAL WEIGHT = 82 lb

[M]

LUMBER

N. L. G. A. RULES

CHORDS	SIZE		LUMBER	DESCR.
U - B	2x4	DRY	No.2	SPF
A - F	2x4	DRY	No.2	SPF
F - K	2x4	DRY	No.2	SPF
L - J	2x4	DRY	No.2	SPF
U - O	2x4	DRY	No.2	SPF
O - L	2x4	DRY	No.2	SPF
ALL WEBS	2x3	DRY	No.2	SPF
ALL GABLE WEBS	2x3	DRY	No.2	SPF

DRY: SEASONED LUMBER.

GABLE STUDS SPACED AT 2-0-0 OC.

PLATES (table is in inches)

JT	TYPE	PLATES	W	LEN	Y	X
B	TMVW+p	MT20	4.0	4.0	1.00	2.00
C, D, E, G, H, I						
C	TMW+w	MT20	2.0	4.0		
F	TTW+p	MT20	4.0	4.0	1.50	2.00
J	TMVW+p	MT20	4.0	4.0	1.00	2.00
L	BMV1+p	MT20	3.0	4.0		
M	BMWW1-t	MT20	4.0	4.0		
N, P, Q, R, S						
N	BMW1+w	MT20	2.0	4.0		
O	BS-t	MT20	3.0	6.0		
T	BMWW1-t	MT20	4.0	4.0		
U	BMV1+p	MT20	3.0	4.0		

DIMENSIONS, SUPPORTS AND LOADINGS SPECIFIED BY FABRICATOR TO BE VERIFIED BY BUILDING DESIGNER

BEARINGS

THIS TRUSS DESIGNED FOR CONTINUOUS BEARINGS.

THIS TRUSS REQUIRES RIGID SHEATHING ON EXPOSED FACE.

BEARING MATERIAL TO BE SPF NO.2 OR BETTER AT JOINT(S)

BRACING

TOP CHORD TO BE SHEATHED OR MAX. PURLIN SPACING = 6.25 FT.
MAX. UNBRACED BOTTOM CHORD LENGTH = 10.00 FT OR RIGID CEILING DIRECTLY APPLIED.

ALL PITCH BREAKS AND PERIMETER CORNER JOINTS MUST BE LATERALLY RESTRAINED.

LOADING

TOTAL LOAD CASES: (4)

CHORDS

MEMB. FR-TO	MAX. FACTORED FORCE (LBS)	FACTORED VERT. LOAD (PLF) FROM	TO	LC1 CSI (LC)	MAX UNBRAC LENGTH
U- B	-350 / 0	0.0	0.0	0.04 (1)	7.81
A- B	0 / 57	-129.7	-129.7	0.18 (1)	10.00
B- C	-40 / 0	-129.7	-129.7	0.08 (1)	6.25
C- D	-52 / 0	-129.7	-129.7	0.08 (1)	6.25
D- E	-34 / 0	-129.7	-129.7	0.08 (1)	6.25
E- F	-51 / 0	-129.7	-129.7	0.08 (1)	6.25
F- G	-51 / 0	-129.7	-129.7	0.08 (1)	6.25
G- H	-34 / 0	-129.7	-129.7	0.08 (1)	6.25
H- I	-52 / 0	-129.7	-129.7	0.08 (1)	6.25
I- J	-40 / 0	-129.7	-129.7	0.08 (1)	6.25
J- K	0 / 57	-129.7	-129.7	0.18 (1)	10.00
L- J	-350 / 0	0.0	0.0	0.04 (1)	7.81
U- T	0 / 0	-38.5	-38.5	0.03 (3)	10.00
T- S	0 / 35	-38.5	-38.5	0.04 (2)	10.00
S- R	0 / 30	-38.5	-38.5	0.03 (2)	10.00
R- Q	0 / 26	-38.5	-38.5	0.03 (2)	10.00
Q- P	0 / 26	-38.5	-38.5	0.03 (2)	10.00
P- O	0 / 30	-38.5	-38.5	0.03 (2)	10.00
O- N	0 / 30	-38.5	-38.5	0.03 (2)	10.00
N- M	0 / 35	-38.5	-38.5	0.04 (2)	10.00
M- L	0 / 0	-38.5	-38.5	0.03 (3)	10.00

WEBS

MEMB. FR-TO	MAX. FACTORED FORCE (LBS)	MAX CSI (LC)
Q- F	-175 / 0	0.24 (1)
R- E	-297 / 0	0.23 (1)
S- D	-238 / 0	0.09 (1)
T- C	-293 / 0	0.06 (1)
P- G	-297 / 0	0.23 (1)
N- H	-238 / 0	0.09 (1)
M- I	-293 / 0	0.06 (1)
B- T	0 / 51	0.01 (1)
M- J	0 / 51	0.01 (1)

DESIGN CRITERIA

SPECIFIED LOADS:

TOP CH.	LL	=	38.2	PSF
	DL	=	6.0	PSF
BOT CH.	LL	=	10.5	PSF
	DL	=	7.0	PSF
TOTAL LOAD		=	61.7	PSF

SPACING = 24.0 IN. C/C

THIS TRUSS IS DESIGNED FOR RESIDENTIAL OR SMALL BUILDING REQUIREMENTS OF PART 9, NBCC 2010, NBCC 2015

THIS DESIGN COMPLIES WITH:
- PART 9 OF OBC 2012, OBC 2018
- CSA 086-09, CSA 086-14
- TPIC 2011, TPIC 2014

(55 % OF 54.3 P.S.F. G.S.L. PLUS 8.4 P.S.F. RAIN LOAD) EQUALS 38.2 P.S.F. SPECIFIED ROOF LIVE LOAD

CSI: TC=0.18/1.00 (J-K:1) , BC=0.04/1.00 (M-N:2) , WB=0.24/1.00 (F-Q:1) , SSI=0.11/1.00 (J-K:1)

DOL LUMBER=1.00 NAIL=1.00 LS BEND=1.10 COMP=1.10 SHEAR=1.10 TENS= 1.10

COMPANION LIVE LOAD FACTOR = 1.00

TRUSS PLATE MANUFACTURER IS NOT RESPONSIBLE FOR QUALITY CONTROL IN THE TRUSS MANUFACTURING PLANT .

NAIL VALUES

PLATE	GRIP(DRY) (PSI) MAX	MIN	SHEAR (PLI) MAX	MIN	SECTION (PLI) MAX	MIN
MT20	618	354	1667	788	1987	1656

PLATE PLACEMENT TOL. = 0.250 inches

PLATE ROTATION TOL. = 5.0 Deg.

JSI GRIP= 0.72 (F) (INPUT = 0.90)
JSI METAL= 0.16 (E) (INPUT = 1.00)

LICENSED PROFESSIONAL ENGINEER
08/21/18
H.J.G. ALVES
PROVINCE OF ONTARIO

DWG NO. TAM F1805546
STRUCTURAL
COMPONENT ONLY

TOWN OF INNISFIL
2018-0802-0808
REVIEWED
Permitted
3/19/2021
Building Permit Plans

JOB NAME	TRUSS NAME	QUANTITY	PLY	JOB DESC.	DRWG NO.
297079	T170	1	2	TRUSS DESC.	

Tamarack Roof Truss, Burlington

Version 8.210 S May 18 2018 MiTek Industries, Inc. Mon Aug 20 11:49:48 2018 Page 1
ID:4u167_apsj?wvBfJKDwJbPzNv7w-FGqnd_gbw8nCoqobAkozLtEld1mOLTUDLJ?kypylzxX

Scale = 1:38.7

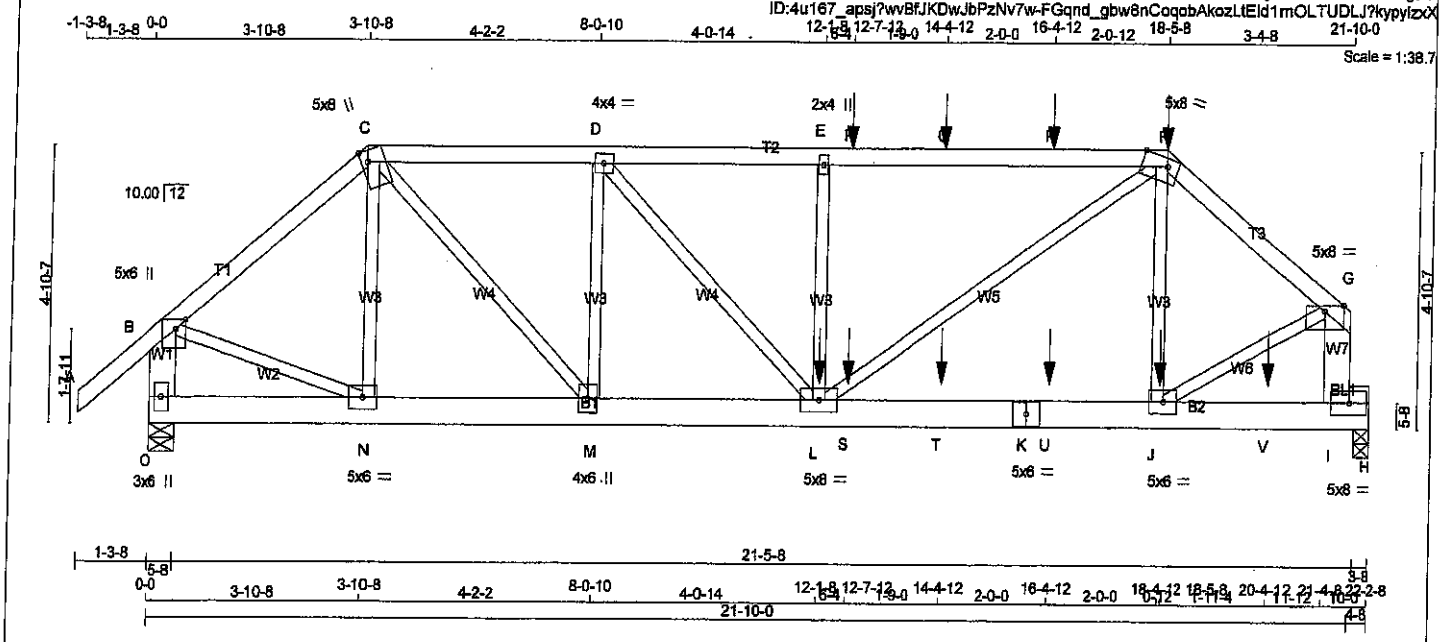

TOTAL WEIGHT = 2 X 109 = 219 lb

[M]

LUMBER

N. L. G. A. RULES

CHORDS	SIZE		LUMBER	DESCR.
A - C	2x4	DRY	No.2	SPF
C - F	2x4	DRY	No.2	SPF
F - G	2x4	DRY	No.2	SPF
O - B	2x6	DRY	No.2	SPF
I - G	2x6	DRY	No.2	SPF
O - K	2x6	DRY	No.2	SPF
K - H	2x6	DRY	No.2	SPF
BEARING BLOCKS				
BL1	2x4	DRY	No.2	SPF
ALL WEBS EXCEPT	2x3	DRY	No.2	SPF

DRY: SEASONED LUMBER.

DESIGN CONSISTS OF 2 TRUSSES BUILT SEPARATELY THEN FASTENED TOGETHER AS FOLLOWS:

CHORDS	#ROWS	SURFACE SPACING (IN)	LOAD(PLF)
TOP CHORDS : (0.122"X3") SPIRAL NAILS			
A- C	1	12	TOP
C- F	1	12	SIDE(61.0)
F- G	1	12	SIDE(61.0)
O- B	2	12	TOP
I- G	2	12	TOP
BOTTOM CHORDS : (0.122"X3") SPIRAL NAILS			
O- K	2	12	SIDE(183.1)
K- H	2	12	SIDE(183.1)
WEBS : (0.122"X3") SPIRAL NAILS			
2x3	1	6	
E- L	1	6	SIDE(253.6)
2x4	1	6	

NAILS TO BE DRIVEN FROM ONE SIDE ONLY.

GIRDER NAILING ASSUMES NAILED HANGERS ARE FASTENED WITH MIN. 3-0 INCH NAILS.

TOP - COMPONENTS ARE LOADED FROM THE TOP AND MUST BE PLACED ON TOP EDGE OF ALL PLIES FOR THE LOAD TO BE TRANSFERRED TO EACH PLY.

SIDE - PLF SHOWN IS THE EQUIVALENT UDL APPLIED TO ONE SIDE THAT THE CORRESPONDING NAILING PATTERN SHALL BE CAPABLE OF TRANSFERING. REMAINING PLF MUST BE APPLIED ON THE OPPOSITE SIDE OR ON THE TOP.

PLATES (table is in inches)

JT	TYPE	PLATES	W	LEN	Y	X
B	TMVW+p	MT20	5.0	6.0	2.00	2.25
C	TTWW+m	MT20	5.0	8.0	Edge	1.25
D	TMWW-t	MT20	4.0	4.0		
E	TMW+w	MT20	2.0	4.0		
F	TTWW-m	MT20	5.0	8.0	Edge	5.50
G	TMVW-p	MT20	5.0	8.0	Edge	
I	BMVK-t	MT20	5.0	8.0		
J	BMWW-t	MT20	5.0	6.0		
K	BS-t	MT20	5.0	6.0		
L	BMWWW-t	MT20	5.0	8.0		
M	BMWW+t	MT20	4.0	6.0		
N	BMWW-t	MT20	5.0	6.0		
O	BMV1+p	MT20	3.0	6.0		

Edge - INDICATES REFERENCE CORNER OF PLATE TOUCHES EDGE OF CHORD.

DIMENSIONS, SUPPORTS AND LOADINGS SPECIFIED BY FABRICATOR TO BE VERIFIED BY BUILDING DESIGNER

BEARINGS

JT	FACTORED GROSS REACTION VERT	HORZ	MAXIMUM FACTORED GROSS REACTION DOWN	HORZ	UPLIFT	INPUT BRG IN-SX	REQRD BRG IN-SX
O	3010	0	3010	0	0	5-8	5-8
H	3355	0	3355	0	0	3-8	3-8

UNFACTORED REACTIONS

MAX./MIN. COMPONENT REACTIONS

JT	1ST LCASE COMBINED	SNOW	LIVE	PERM.LIVE	WIND	DEAD	SOIL
O	2186	1435 / 0	327 / 0	0 / 0	0 / 0	424 / 0	0 / 0
H	2444	1590 / 0	388 / 0	0 / 0	0 / 0	466 / 0	0 / 0

BEARING MATERIAL TO BE SPF NO.2 OR BETTER AT JOINT(S) O, H

BRACING

TOP CHORD TO BE SHEATHED OR MAX. PURLIN SPACING = 3.53 FT.
MAX. UNBRACED BOTTOM CHORD LENGTH = 6.25 FT OR RIGID CEILING DIRECTLY APPLIED.

ALL PITCH BREAKS AND PERIMETER CORNER JOINTS MUST BE LATERALLY RESTRAINED.

LOADING

TOTAL LOAD CASES: (4)

CHORDS

MEMB. FR-TO	MAX. FACTORED FORCE (LBS)	FACTORED VERT. LOAD (PLF) FROM	TO	LC1	MAX CSI (LC)	MAX. UNBRAC LENGTH
A- B	0 / 57	-129.7	-129.7	0.10 (1)	10.00	
B- C	-2867 / 0	-129.7	-129.7	0.23 (1)	5.16	
C- D	-3691 / 0	-129.7	-129.7	0.24 (1)	4.57	
D- E	-4973 / 0	-129.7	-129.7	0.59 (1)	3.61	
E- P	-4972 / 0	-129.7	-129.7	0.75 (1)	3.53	
P- Q	-4972 / 0	-129.7	-129.7	0.75 (1)	3.53	
Q- R	-4972 / 0	-129.7	-129.7	0.75 (1)	3.53	
R- F	-4972 / 0	-129.7	-129.7	0.75 (1)	3.53	
F- G	-3476 / 0	-129.7	-129.7	0.19 (1)	4.85	
O- B	-2948 / 0	0.0	0.0	0.11 (1)	7.81	
I- G	-4009 / 0	0.0	0.0	0.16 (1)	7.10	
O- N	0 / 0	-38.5	-38.5	0.03 (3)	10.00	
N- M	0 / 2185	-38.5	-38.5	0.16 (1)	10.00	
M- L	0 / 3891	-38.5	-38.5	0.33 (1)	10.00	
L- S	0 / 2653	-38.5	-38.5	0.38 (1)	10.00	
S- T	0 / 2653	-38.5	-38.5	0.38 (1)	10.00	
T- K	0 / 2653	-38.5	-38.5	0.38 (1)	10.00	
K- U	0 / 2653	-38.5	-38.5	0.38 (1)	10.00	
U- J	0 / 2653	-38.5	-38.5	0.38 (1)	10.00	
J- V	-555 / 0	-38.5	-38.5	0.74 (1)	6.25	
V- I	-555 / 0	-38.5	-38.5	0.74 (1)	6.25	
I- H	0 / 0	-168.2	-168.2	0.46 (1)	10.00	

WEBS

MEMB. FR-TO	MAX. FACTORED FORCE (LBS)	MAX CSI (LC)
N- C	-503 / 0	0.09 (1)
C- M	0 / 2500	0.31 (1)
M- D	-1606 / 0	0.27 (1)
D- L	0 / 1611	0.20 (1)
L- E	-1110 / 0	0.19 (1)
L- F	0 / 2839	0.35 (1)
J- F	-369 / 133	0.06 (1)
B- N	0 / 2298	0.28 (1)
J- G	0 / 3556	0.44 (1)

SPECIFIED CONCENTRATED LOADS (LBS)

JT	LOC.	LC1	MAX-	MAX+	FACE	DIR.	TYPE
F	18-5-8	-195	-195	—	FRONT	VERT	TOTAL
J	18-4-12	-26	-26	—	FRONT	VERT	TOTAL
L	12-1-8	-1202	-1202	—	FRONT	VERT	TOTAL
P	12-7-12	-83	-83	—	FRONT	VERT	TOTAL
Q	14-4-12	-83	-83	—	FRONT	VERT	TOTAL
R	16-4-12	-83	-83	—	FRONT	VERT	TOTAL
S	12-7-12	-21	-21	—	FRONT	VERT	TOTAL
T	14-4-12	-21	-21	—	FRONT	VERT	TOTAL
U	16-4-12	-21	-21	—	FRONT	VERT	TOTAL
V	20-4-12	-11	-16	—	FRONT	VERT	TOTAL

DESIGN CRITERIA

SPECIFIED LOADS:

TOP CH.	LL	=	38.2	PSF
	DL	=	6.0	PSF
BOT CH.	LL	=	10.5	PSF
	DL	=	7.0	PSF
TOTAL LOAD		=	61.7	PSF

SPACING = 24.0 IN. C/C

LOADING IN FLAT SECTION BASED ON A SLOPE OF 6.00/12

THIS TRUSS IS DESIGNED FOR RESIDENTIAL OR SMALL BUILDING REQUIREMENTS OF PART 9, NBCC 2010, NBCC 2015

THIS DESIGN COMPLIES WITH:
- PART 9 OF OBC 2012, OBC 2018
- CSA 086-09, CSA 086-14
- TPIC 2011, TPIC 2014

(55 % OF 54.3 P.S.F. G.S.L. PLUS 8.4 P.S.F. RAIN LOAD) EQUALS 38.2 P.S.F. SPECIFIED ROOF LIVE LOAD

ALLOWABLE DEFL.(LL)= L/360 (0.74")
CALCULATED VERT. DEFL.(LL) = L/ 999 (0.09")
ALLOWABLE DEFL.(TL)= L/360 (0.74")
CALCULATED VERT. DEFL.(TL) = L/ 999 (0.15")

CSI: TC=0.75/1.00 (E-F:1) , BC=0.74/1.00 (I-J:1) , WB=0.44/1.00 (G-J:1) , SSI=0.68/1.00 (H-I:1)

DOL LUMBER=1.00 NAIL=1.00 LS BEND=1.00 COMP=1.00 SHEAR=1.00 TENS= 1.00

COMPANION LIVE LOAD FACTOR = 1.00

AUTOSOLVE HEELS OFF

TRUSS PLATE MANUFACTURER IS NOT RESPONSIBLE FOR QUALITY CONTROL IN THE TRUSS MANUFACTURING PLANT .

NAIL VALUES

PLATE	GRIP(DRY) (PSI) MAX	MIN	SHEAR (PLI) MAX	MIN	SECTION (PLI) MAX	MIN
MT20	618	354	1667	788	1987	1656

PLATE PLACEMENT TOL. = 0.250 inches

PLATE ROTATION TOL. = 5.0 Deg.

JSI GRIP= 0.90 (F) (INPUT = 0.90)
JSI METAL= 0.40 (J) (INPUT = 1.00)

LICENSED PROFESSIONAL ENGINEER
09/20/18
H.J.G. ALVES
PROVINCE OF ONTARIO

DWG NO. TAM T180524B
STRUCTURAL
COMPONENT ONLY
1/2

CONTINUED ON PAGE 2

JOB NAME	TRUSS NAME	QUANTITY	PLY	JOB DESC.	DRWG NO.
297079	T170	1	2	TRUSS DESC.	

Tamarack Roof Truss, Burlington

Version 8.210 S May 18 2018 MiTek Industries, Inc. Mon Aug 20 11:49:48 2018 Page 2
ID:4u167_apsj?wvBfJKDwJbPzNv7w-FGqnd_gbw8nCogobAkozLtEld1mOLTUDLJ?kypylzxX

HANGERS NOTES

1) SPECIAL HANGER(S) OR CONNECTION(S) REQUIRED TO SUPPORT CONCENTRATED LOAD(S) 121.6 lbs FACTORED DOWN AT 12-7-12, 121.6 lbs FACTORED DOWN AT 14-4-12, AND 121.6 lbs FACTORED DOWN AT 16-4-12, AND 281.9 lbs FACTORED DOWN AT 18-5-8 ON TOP CHORD, AND 1674.1 lbs FACTORED DOWN AT 12-1-8, 30.9 lbs FACTORED DOWN AT 12-7-12, 30.9 lbs FACTORED DOWN AT 14-4-12, 30.9 lbs FACTORED DOWN AT 16-4-12, AND 38.0 lbs FACTORED DOWN AT 18-4-12, AND 23.7 lbs FACTORED DOWN AT 20-4-12 ON BOTTOM CHORD. DESIGN FOR UNSPECIFIED CONNECTION(S) IS DELEGATED TO THE BUILDING DESIGNER.

LICENSED PROFESSIONAL ENGINEER
08/20/18
H.J.G. ALVES
PROVINCE OF ONTARIO

DWG NO. TAM T1805248
STRUCTURAL
COMPONENT ONLY
2/2

TOWN OF INNISFIL
2018-0802-0808
REVIEWED
Approved
3/19/2021
Building Permit Plans

JOB NAME	TRUSS NAME	QUANTITY	PLY	JOB DESC.	DRWG NO.
297079	T171	1	1	TRUSS DESC.	

Tamarack Roof Truss, Burlington

Version 8.210 S May 18 2018 MiTek Industries, Inc. Mon Aug 20 11:49:52 2018 Page 1
ID:4u167_apsj?wvBfJKDwJbPzNv7w-824ISLj5_NldHS5MPasvVjP?Oe7uHDMoGxzx5aylzxT

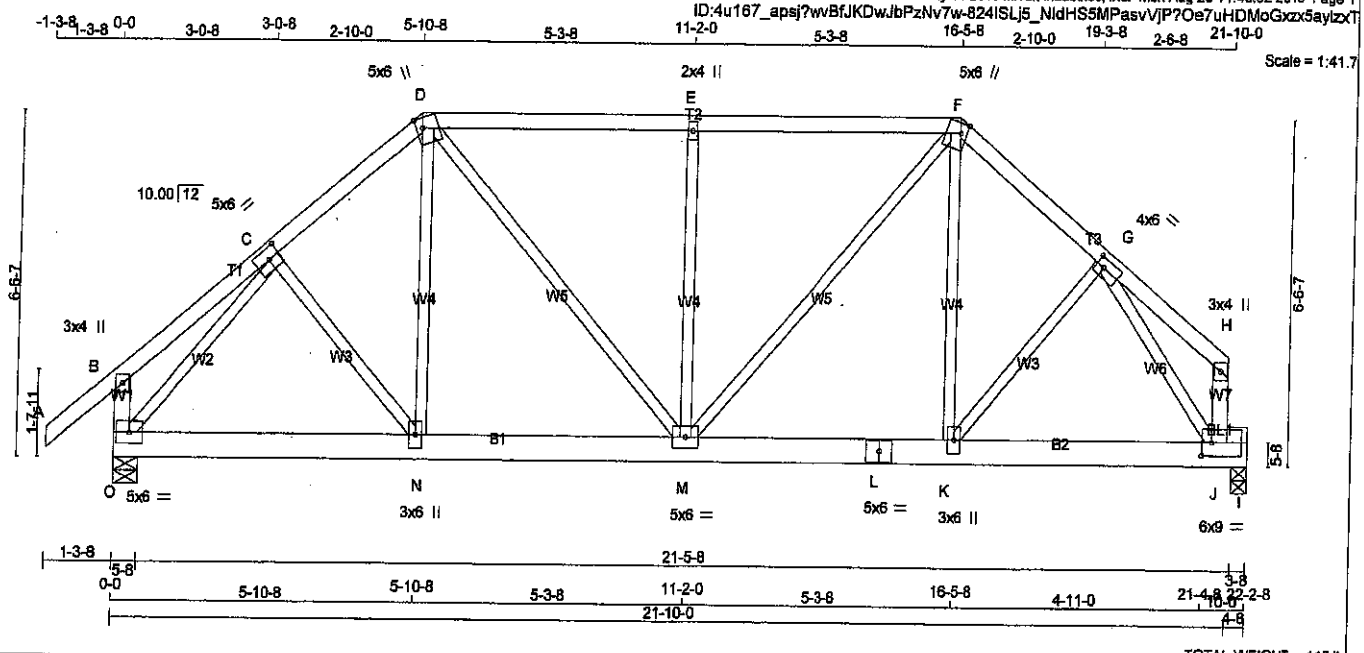

TOTAL WEIGHT = 115 lb

[M]

LUMBER

N. L. G. A. RULES

CHORDS	SIZE		LUMBER	DESCR.
A - D	2x4	DRY	No.2	SPF
D - F	2x4	DRY	No.2	SPF
F - H	2x4	DRY	No.2	SPF
O - B	2x4	DRY	No.2	SPF
J - H	2x4	DRY	No.2	SPF
O - L	2x6	DRY	No.2	SPF
L - I	2x6	DRY	No.2	SPF
BEARING BLOCKS				
BL1	2x4	DRY	No.2	SPF
ALL WEBS EXCEPT	2x3	DRY	No.2	SPF

DRY: SEASONED LUMBER.

PLATES (table is in inches)

JT	TYPE	PLATES	W	LEN	Y	X
B	TMV+p	MT20	3.0	4.0		
C	TMWW-t	MT20	5.0	6.0	2.50	2.75
D	TTWW+m	MT20	5.0	6.0	2.25	1.50
E	TMW+w	MT20	2.0	4.0		
F	TTWW+m	MT20	5.0	6.0	2.25	1.50
G	TMWW-t	MT20	4.0	6.0	2.00	2.00
H	TMV+p	MT20	3.0	4.0		
J	BMVWK-t	MT20	6.0	9.0	3.00	2.25
K	BMWW+t	MT20	3.0	6.0		
L	BS-t	MT20	5.0	6.0		
M	BMWWW-t	MT20	5.0	6.0		
N	BMWW+t	MT20	3.0	6.0		
O	BMVW1-t	MT20	5.0	6.0		

DIMENSIONS, SUPPORTS AND LOADINGS SPECIFIED BY FABRICATOR TO BE VERIFIED BY BUILDING DESIGNER

BEARINGS

JT	FACTORED GROSS REACTION VERT	HORZ	MAXIMUM FACTORED GROSS REACTION DOWN	HORZ	UPLIFT	INPUT BRG IN-SX	REQRD BRG IN-SX
O	2046	0	2046	0	0	5-8	5-8
I	1819	0	1819	0	0	3-8	3-8

UNFACTORED REACTIONS

JT	1ST LCASE COMBINED	MAX./MIN. COMPONENT REACTIONS SNOW	LIVE	PERM.LIVE	WIND	DEAD	SOIL
O	1493	954 / 0	233 / 0	0 / 0	0 / 0	305 / 0	0 / 0
I	1338	820 / 0	233 / 0	0 / 0	0 / 0	284 / 0	0 / 0

BEARING MATERIAL TO BE SPF NO.2 OR BETTER AT JOINT(S) O, I

BRACING

TOP CHORD TO BE SHEATHED OR MAX. PURLIN SPACING = 4.04 FT.
MAX. UNBRACED BOTTOM CHORD LENGTH = 10.00 FT OR RIGID CEILING DIRECTLY APPLIED.

ALL PITCH BREAKS AND PERIMETER CORNER JOINTS MUST BE LATERALLY RESTRAINED.

LOADING

TOTAL LOAD CASES: (4)

CHORDS

MEMB. FR-TO	MAX. FACTORED FORCE (LBS)	FACTORED VERT. LOAD LC1 (PLF) FROM	TO	MAX CSI (LC)	MAX. UNBRAC LENGTH
A- B	0 / 57	-129.7	-129.7	0.18 (1)	10.00
B- C	0 / 25	-129.7	-129.7	0.16 (1)	10.00
C- D	-1766 / 0	-129.7	-129.7	0.20 (1)	4.83
D- E	-1747 / 0	-129.7	-129.7	0.70 (1)	4.04
E- F	-1747 / 0	-129.7	-129.7	0.70 (1)	4.04
F- G	-1764 / 0	-129.7	-129.7	0.17 (1)	4.84
G- H	0 / 38	-129.7	-129.7	0.14 (1)	10.00
O- B	-329 / 0	0.0	0.0	0.03 (1)	7.81
J- H	-112 / 0	0.0	0.0	0.01 (1)	7.81
O- N	0 / 1296	-38.5	-38.5	0.24 (1)	10.00
N- M	0 / 1337	-38.5	-38.5	0.24 (1)	10.00
M- L	0 / 1354	-38.5	-38.5	0.39 (1)	10.00
L- K	0 / 1354	-38.5	-38.5	0.39 (1)	10.00
K- J	0 / 1133	-38.5	-38.5	0.76 (1)	10.00
J- I	0 / 0	-38.5	-38.5	0.39 (1)	10.00

WEBS

MEMB. FR-TO	MAX. FACTORED FORCE (LBS)	MAX CSI (LC)
C- N	0 / 107	0.03 (3)
N- D	0 / 262	0.06 (2)
D- M	0 / 629	0.14 (1)
M- E	-636 / 0	0.55 (1)
M- F	0 / 602	0.14 (1)
K- F	0 / 286	0.06 (2)
K- G	0 / 341	0.08 (1)
O- C	-2077 / 0	0.70 (1)
G- J	-2154 / 0	0.65 (1)

DESIGN CRITERIA

SPECIFIED LOADS:

TOP CH.	LL	=	38.2	PSF
	DL	=	6.0	PSF
BOT CH.	LL	=	10.5	PSF
	DL	=	7.0	PSF
TOTAL LOAD		=	61.7	PSF

SPACING = 24.0 IN. C/C

LOADING IN FLAT SECTION BASED ON A SLOPE OF 6.00/12

THIS TRUSS IS DESIGNED FOR RESIDENTIAL OR SMALL BUILDING REQUIREMENTS OF PART 9, NBCC 2010, NBCC 2015

THIS DESIGN COMPLIES WITH:
- PART 9 OF OBC 2012, OBC 2018
- CSA 086-09, CSA 086-14
- TPIC 2011, TPIC 2014

(55 % OF 54.3 P.S.F. G.S.L. PLUS 8.4 P.S.F. RAIN LOAD) EQUALS 38.2 P.S.F. SPECIFIED ROOF LIVE LOAD

ALLOWABLE DEFL.(LL)= L/360 (0.74")
CALCULATED VERT. DEFL.(LL) = L/ 999 (0.09")
ALLOWABLE DEFL.(TL)= L/360 (0.74")
CALCULATED VERT. DEFL.(TL) = L/ 999 (0.14")

CSI: TC=0.70/1.00 (D-E:1) , BC=0.76/1.00 (J-K:1) , WB=0.70/1.00 (C-O:1) , SSI=0.67/1.00 (I-J:1)

DOL LUMBER=1.00 NAIL=1.00 LS BEND=1.10 COMP=1.10 SHEAR=1.10 TENS= 1.10

COMPANION LIVE LOAD FACTOR = 1.00

TRUSS PLATE MANUFACTURER IS NOT RESPONSIBLE FOR QUALITY CONTROL IN THE TRUSS MANUFACTURING PLANT .

NAIL VALUES

PLATE	GRIP(DRY) (PSI) MAX	MIN	SHEAR (PLI) MAX	MIN	SECTION (PLI) MAX	MIN
MT20	618	354	1667	788	1987	1656

PLATE PLACEMENT TOL. = 0.250 inches

PLATE ROTATION TOL. = 5.0 Deg.

JSI GRIP= 0.89 (C) (INPUT = 0.90)
JSI METAL= 0.51 (G) (INPUT = 1.00)

LICENSED PROFESSIONAL ENGINEER
08/20/18
H.J.G. ALVES
PROVINCE OF ONTARIO

DWG NO. TAM T1805249
STRUCTURAL
COMPONENT ONLY

TOWN OF INNISFIL
2018-0802-0808
REVIEWED
jpenlon
3/19/2021
Building Permit Plans

TOWN OF INNISFIL
2018-0802-0808
REVIEWED
jpeifold
3/19/2021
Building Permit Plans

JOB NAME	TRUSS NAME	QUANTITY	PLY	JOB DESC.	DRWG NO.
297079	T172	1	1	TRUSS DESC.	

Tamarack Roof Truss, Burlington

Version 8.210 S May 18 2018 MiTek Industries, Inc. Mon Aug 20 11:49:55 2018 Page 1
ID:82TzEwnlebruLmbXiL_F9GzNTA6-YdlR5Nm_HlgC8vqx4jQc7M1abr7RUdDFyvCcivylzxQ

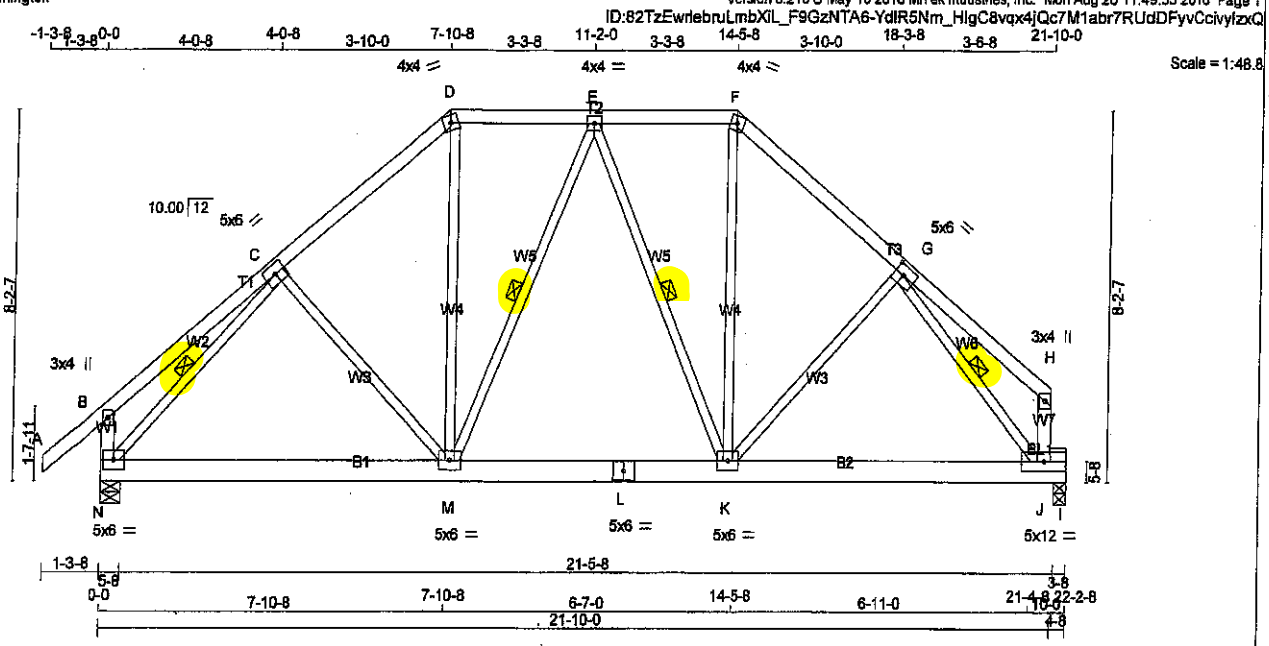

TOTAL WEIGHT = 119 lb
[M]

LUMBER
N. L. G. A. RULES

CHORDS	SIZE		LUMBER	DESCR.
A - D	2x4	DRY	No.2	SPF
D - F	2x4	DRY	No.2	SPF
F - H	2x4	DRY	No.2	SPF
N - B	2x4	DRY	No.2	SPF
J - H	2x4	DRY	No.2	SPF
N - L	2x6	DRY	No.2	SPF
L - I	2x6	DRY	No.2	SPF
BEARING BLOCKS				
BL1	2x4	DRY	No.2	SPF
ALL WEBS EXCEPT	2x3	DRY	No.2	SPF

DRY: SEASONED LUMBER.

PLATES (table is in inches)

JT	TYPE	PLATES	W	LEN	Y	X
B	TMV+p	MT20	3.0	4.0		
C	TMWW-t	MT20	5.0	6.0		
D	TTW-m	MT20	4.0	4.0		
E	TMWW-t	MT20	4.0	4.0		
F	TTW-m	MT20	4.0	4.0		
G	TMWW-t	MT20	5.0	6.0	2.50	2.50
H	TMV+p	MT20	3.0	4.0		
J	BMVWK-t	MT20	5.0	12.0		
K	BMWWW-t	MT20	5.0	6.0		
L	BS-t	MT20	5.0	6.0		
M	BMWWW-t	MT20	5.0	6.0		
N	BMVW1-t	MT20	5.0	6.0		

DIMENSIONS, SUPPORTS AND LOADINGS SPECIFIED BY FABRICATOR TO BE VERIFIED BY BUILDING DESIGNER

BEARINGS

JT	FACTORED GROSS REACTION VERT	HORZ	MAXIMUM FACTORED GROSS REACTION DOWN	HORZ	UPLIFT	INPUT BRG IN-SX	REQRD BRG IN-SX
N	2046	0	2046	0	0	5-8	5-8
I	1819	0	1819	0	0	3-8	3-8

UNFACTORED REACTIONS

JT	1ST LCASE COMBINED	MAX./MIN. COMPONENT REACTIONS SNOW	LIVE	PERM.LIVE	WIND	DEAD	SOIL
N	1493	954 / 0	233 / 0	0 / 0	0 / 0	305 / 0	0 / 0
I	1338	820 / 0	233 / 0	0 / 0	0 / 0	284 / 0	0 / 0

BEARING MATERIAL TO BE SPF NO.2 OR BETTER AT JOINT(S) N, I

BRACING
TOP CHORD TO BE SHEATHED OR MAX. PURLIN SPACING = 4.75 FT.
MAX. UNBRACED BOTTOM CHORD LENGTH = 10.00 FT OR RIGID CEILING DIRECTLY APPLIED.

ALL PITCH BREAKS AND PERIMETER CORNER JOINTS MUST BE LATERALLY RESTRAINED.

1 LATERAL BRACE(S) AT 1/ 2 LENGTH OF E-M, E-K, C-N, G-J.

END VERTICAL(S) MUST BE SHEATHED OR HAVE BRACES AS INDICATED IN THE MAX. UNBRACED LENGTH COLUMN OF THE TABLE BELOW

LOADING
TOTAL LOAD CASES: (4)

CHORDS

MEMB. FR-TO	MAX. FACTORED FORCE (LBS)	FACTORED VERT. LOAD LC1 (PLF) FROM	TO	MAX CSI (LC)	MAX. UNBRAC LENGTH
A- B	0 / 57	-129.7	-129.7	0.18 (1)	10.00
B- C	0 / 37	-129.7	-129.7	0.32 (1)	10.00
C- D	-1640 / 0	-129.7	-129.7	0.38 (1)	4.75
D- E	-1236 / 0	-129.7	-129.7	0.23 (1)	5.49
E- F	-1264 / 0	-129.7	-129.7	0.23 (1)	5.44
F- G	-1671 / 0	-129.7	-129.7	0.34 (1)	4.77
G- H	0 / 55	-129.7	-129.7	0.28 (1)	10.00
N- B	-375 / 0	0.0	0.0	0.04 (1)	7.81
J- H	-151 / 0	0.0	0.0	0.02 (1)	7.81
N- M	0 / 1339	-38.5	-38.5	0.33 (2)	10.00
M- L	0 / 1353	-38.5	-38.5	0.44 (1)	10.00
L- K	0 / 1353	-38.5	-38.5	0.44 (1)	10.00
K- J	0 / 1219	-38.5	-38.5	0.77 (1)	10.00
J- I	0 / 0	-38.5	-38.5	0.39 (1)	10.00

WEBS

MEMB. FR-TO	MAX. FACTORED FORCE (LBS)	MAX CSI (LC)
C- M	-166 / 54	0.10 (1)
M- D	0 / 656	0.15 (1)
M- E	-306 / 0	0.15 (1)
E- K	-235 / 0	0.11 (1)
K- F	0 / 671	0.15 (1)
K- G	0 / 121	0.03 (3)
N- C	-2037 / 0	0.50 (1)
G- J	-2094 / 0	0.48 (1)

LICENSED PROFESSIONAL ENGINEER
08/20/18
H.J.G. AWES
PROVINCE OF ONTARIO

DESIGN CRITERIA

SPECIFIED LOADS:

TOP CH.	LL	=	38.2	PSF
	DL	=	6.0	PSF
BOT CH.	LL	=	10.5	PSF
	DL	=	7.0	PSF
TOTAL LOAD		=	61.7	PSF

SPACING = 24.0 IN. C/C

LOADING IN FLAT SECTION BASED ON A SLOPE OF 6.00/12

THIS TRUSS IS DESIGNED FOR RESIDENTIAL OR SMALL BUILDING REQUIREMENTS OF PART 9, NBCC 2010, NBCC 2015

THIS DESIGN COMPLIES WITH:
- PART 9 OF OBC 2012, OBC 2018
- CSA 086-09, CSA 086-14
- TPIC 2011, TPIC 2014

(55 % OF 54.3 P.S.F. G.S.L. PLUS 8.4 P.S.F. RAIN LOAD) EQUALS 38.2 P.S.F. SPECIFIED ROOF LIVE LOAD

ALLOWABLE DEFL.(LL)= L/360 (0.74")
CALCULATED VERT. DEFL.(LL) = L/ 999 (0.14")
ALLOWABLE DEFL.(TL)= L/360 (0.74")
CALCULATED VERT. DEFL.(TL) = L/ 999 (0.24")

CSI: TC=0.38/1.00 (C-D:1) , BC=0.77/1.00 (J-K:1) , WB=0.50/1.00 (C-N:1) , SSI=0.67/1.00 (I-J:1)

DOL LUMBER=1.00 NAIL=1.00 LS BEND=1.10 COMP=1.10 SHEAR=1.10 TENS= 1.10

COMPANION LIVE LOAD FACTOR = 1.00

TRUSS PLATE MANUFACTURER IS NOT RESPONSIBLE FOR QUALITY CONTROL IN THE TRUSS MANUFACTURING PLANT .

NAIL VALUES

PLATE	GRIP(DRY) (PSI) MAX	MIN	SHEAR (PLI) MAX	MIN	SECTION (PLI) MAX	MIN
MT20	618	354	1667	788	1987	1656

PLATE PLACEMENT TOL. = 0.250 inches

PLATE ROTATION TOL. = 5.0 Deg.

JSI GRIP= 0.89 (C) (INPUT = 0.90)
JSI METAL= 0.51 (G) (INPUT = 1.00)

DWG NO. TAM 17805250
STRUCTURAL
COMPONENT ONLY

JOB NAME	TRUSS NAME	QUANTITY	PLY	JOB DESC.	DRWG NO.
297079	T173	1	1	TRUSS DESC.	

Tamarack Roof Truss, Burlington

Version 8.210 S May 18 2018 MiTek Industries, Inc. Mon Aug 20 11:49:59 2018 Page 1
ID:82TzEwrfebruLmbXiL_F9GzNTA6-RO?ywkpULXAedX8iJYUYICBB_SYcQPhqtXAprgylzxM

Scale = 1:60.5

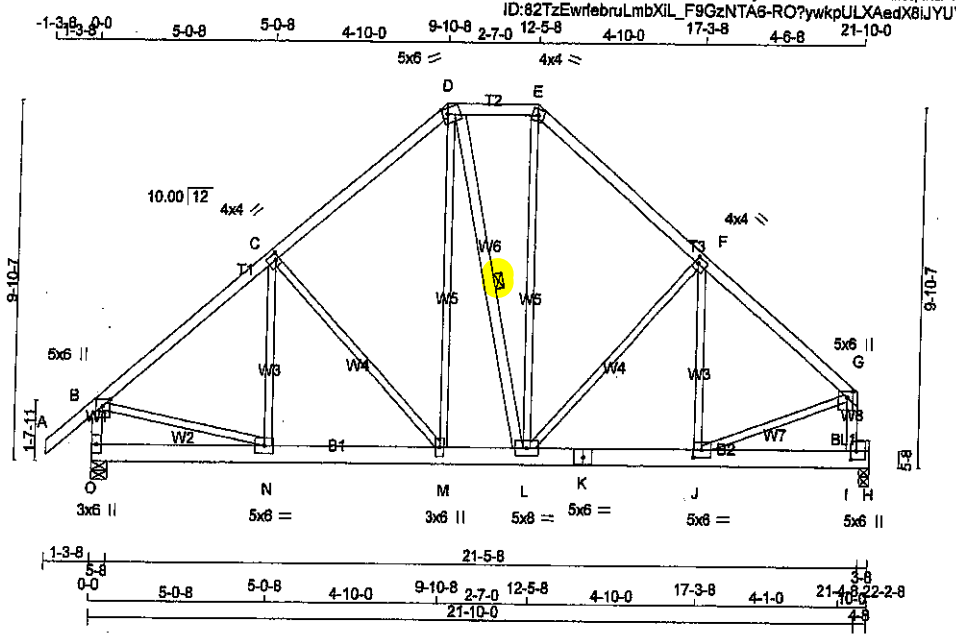

TOTAL WEIGHT = 130 lb
[M]

LUMBER
N. L. G. A. RULES

CHORDS	SIZE		LUMBER	DESCR.
A - D	2x4	DRY	No.2	SPF
D - E	2x4	DRY	No.2	SPF
E - G	2x4	DRY	No.2	SPF
O - B	2x4	DRY	No.2	SPF
I - G	2x4	DRY	No.2	SPF
O - K	2x6	DRY	No.2	SPF
K - H	2x6	DRY	No.2	SPF
BEARING BLOCKS				
BL1	2x4	DRY	No.2	SPF
ALL WEBS EXCEPT	2x3	DRY	No.2	SPF
D - L	2x4	DRY	No.2	SPF

DRY: SEASONED LUMBER.

PLATES (table is in inches)

JT	TYPE	PLATES	W	LEN	Y	X
B	TMWW+p	MT20	5.0	6.0	Edge	2.75
C	TMWW-t	MT20	4.0	4.0	2.00	1.25
D	TTWW-m	MT20	5.0	6.0	2.00	1.75
E	TTW-m	MT20	4.0	4.0		
F	TMWW-t	MT20	4.0	4.0	2.00	1.25
G	TMWW+p	MT20	5.0	6.0	2.00	2.00
I	BMVK+p	MT20	5.0	6.0	2.75	1.75
J	BMWW-t	MT20	5.0	6.0	2.50	2.75
K	BS-t	MT20	5.0	6.0		
L	BMWWW-t	MT20	5.0	8.0		
M	BMWW+t	MT20	3.0	6.0		
N	BMWW-t	MT20	5.0	6.0		
O	BMV1+p	MT20	3.0	6.0		

Edge - INDICATES REFERENCE CORNER OF PLATE TOUCHES EDGE OF CHORD.

DIMENSIONS, SUPPORTS AND LOADINGS SPECIFIED BY FABRICATOR TO BE VERIFIED BY BUILDING DESIGNER

BEARINGS

JT	FACTORED GROSS REACTION VERT	HORZ	MAXIMUM FACTORED GROSS REACTION DOWN	HORZ	UPLIFT	INPUT BRG IN-SX	REQRD BRG IN-SX
O	2046	0	2046	0	0	5-8	5-8
H	1819	0	1819	0	0	3-8	3-8

UNFACTORED REACTIONS

JT	1ST LCASE COMBINED	MAX /MIN. COMPONENT REACTIONS SNOW	LIVE	PERM.LIVE	WIND	DEAD	SOIL
O	1493	954 / 0	233 / 0	0 / 0	0 / 0	305 / 0	0 / 0
H	1338	820 / 0	233 / 0	0 / 0	0 / 0	264 / 0	0 / 0

BEARING MATERIAL TO BE SPF NO.2 OR BETTER AT JOINT(S) O, H

BRACING
TOP CHORD TO BE SHEATHED OR MAX. PURLIN SPACING = 4.16 FT.
MAX. UNBRACED BOTTOM CHORD LENGTH = 6.25 FT OR RIGID CEILING DIRECTLY APPLIED.

ALL PITCH BREAKS AND PERIMETER CORNER JOINTS MUST BE LATERALLY RESTRAINED.

1 LATERAL BRACE(S) AT 1/2 LENGTH OF D-L.

END VERTICAL(S) MUST BE SHEATHED OR HAVE BRACES AS INDICATED IN THE MAX. UNBRACED LENGTH COLUMN OF THE TABLE BELOW

LOADING
TOTAL LOAD CASES: (4)

CHORDS

MEMB. FR-TO	MAX. FACTORED FORCE (LBS)	FACTORED VERT. LOAD (PLF) FROM	TO	LC1	MAX CSI (LC)	MAX. UNBRAC LENGTH
A- B	0 / 57	-129.7	-129.7	0.18 (1)	10.00	
B- C	-1803 / 0	-129.7	-129.7	0.87 (1)	4.16	
C- D	-1456 / 0	-129.7	-129.7	0.62 (1)	4.58	
D- E	-1080 / 0	-129.7	-129.7	0.16 (1)	5.88	
E- F	-1448 / 0	-129.7	-129.7	0.56 (1)	4.71	
F- G	-1809 / 0	-129.7	-129.7	0.58 (1)	4.27	
O- B	-1960 / 0	0.0	0.0	0.20 (1)	6.01	
I- G	-1994 / 0	0.0	0.0	0.22 (1)	5.97	
O- N	0 / 0	-38.5	-38.5	0.08 (3)	10.00	
N- M	0 / 1422	-38.5	-38.5	0.22 (1)	10.00	
M- L	0 / 1083	-38.5	-38.5	0.14 (1)	10.00	
L- K	0 / 1427	-38.5	-38.5	0.34 (1)	10.00	
K- J	0 / 1427	-38.5	-38.5	0.34 (1)	10.00	
J- I	-177 / 0	-38.5	-38.5	0.63 (1)	6.25	
I- H	0 / 0	-38.5	-38.5	0.39 (1)	10.00	

WEBS

MEMB. FR-TO	MAX. FACTORED FORCE (LBS)	MAX CSI (LC)
N- C	-134 / 152	0.07 (1)
C- M	-512 / 0	0.53 (1)
M- D	0 / 512	0.12 (1)
D- L	-12 / 5	0.01 (1)
L- E	0 / 491	0.11 (1)
L- F	-523 / 0	0.54 (1)
J- F	-79 / 156	0.04 (1)
B- N	0 / 1463	0.33 (1)
J- G	0 / 1705	0.38 (1)

DESIGN CRITERIA

SPECIFIED LOADS:

TOP CH.	LL	=	38.2	PSF
	DL	=	6.0	PSF
BOT CH.	LL	=	10.5	PSF
	DL	=	7.0	PSF
TOTAL LOAD		=	61.7	PSF

SPACING = 24.0 IN. C/C

LOADING IN FLAT SECTION BASED ON A SLOPE OF 6.00/12

THIS TRUSS IS DESIGNED FOR RESIDENTIAL OR SMALL BUILDING REQUIREMENTS OF PART 9, NBCC 2010, NBCC 2015

THIS DESIGN COMPLIES WITH:
- PART 9 OF OBC 2012, OBC 2018
- CSA 086-09, CSA 086-14
- TPIC 2011, TPIC 2014

(55 % OF 54.3 P.S.F. G.S.L. PLUS 8.4 P.S.F. RAIN LOAD) EQUALS 38.2 P.S.F. SPECIFIED ROOF LIVE LOAD

ALLOWABLE DEFL.(LL)= L/360 (0.74")
CALCULATED VERT. DEFL.(LL) = L/ 999 (0.07")
ALLOWABLE DEFL.(TL)= L/360 (0.74")
CALCULATED VERT. DEFL.(TL) = L/ 999 (0.11")

CSI: TC=0.67/1.00 (B-C:1) , BC=0.63/1.00 (I-J:1) , WB=0.54/1.00 (F-L:1) , SSI=0.67/1.00 (H-I:1)

DOL LUMBER=1.00 NAIL=1.00 LS BEND=1.10 COMP=1.10 SHEAR=1.10 TENS= 1.10

COMPANION LIVE LOAD FACTOR = 1.00

TRUSS PLATE MANUFACTURER IS NOT RESPONSIBLE FOR QUALITY CONTROL IN THE TRUSS MANUFACTURING PLANT .

NAIL VALUES

PLATE	GRIP(DRY) (PSI) MAX	MIN	SHEAR (PLI) MAX	MIN	SECTION (PLI) MAX	MIN
MT20	618	354	1667	786	1987	1656

PLATE PLACEMENT TOL. = 0.250 inches

PLATE ROTATION TOL. = 5.0 Deg.

USI GRIP= 0.89 (J) (INPUT = 0.90)
USI METAL= 0.40 (J) (INPUT = 1.00)

LICENSED PROFESSIONAL ENGINEER
08/20/18
H.J.G. ALDES
PROVINCE OF ONTARIO

DWG NO. TAM T1805251
STRUCTURAL
COMPONENTS ONTARIO

TOWN OF INNISFIL
2018-0802-0808
REVIEWED
jpenfold
3/19/2021
Building Permit Plans

JOB NAME	TRUSS NAME	QUANTITY	PLY	JOB DESC.	DRWG NO.
297079	T174	1	1	TRUSS DESC.	

Tamarack Roof Truss, Burlington

Version 8.210 S May 18 2018 MiTek Industries, Inc. Mon Aug 20 11:50:02 2018 Page 1

ID:82TzEwrlebruLmbXiL_F9GzNTA6-rzg4ZmrNdSYDU_sH_h2FvqpfDgWvqdhLHZVOTS?ylzxJ

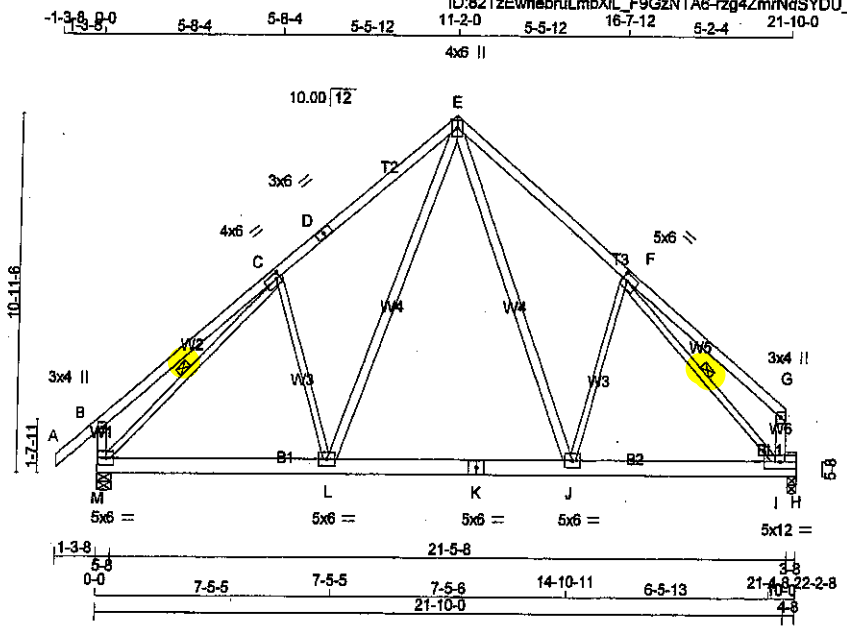

TOTAL WEIGHT = 124 lb

[M]

LUMBER

N. L. G. A. RULES

CHORDS	SIZE		LUMBER	DESCR.
A - D	2x4	DRY	No.2	SPF
D - E	2x4	DRY	No.2	SPF
E - G	2x4	DRY	No.2	SPF
M - B	2x4	DRY	No.2	SPF
I - G	2x4	DRY	No.2	SPF
M - K	2x6	DRY	No.2	SPF
K - H	2x6	DRY	No.2	SPF
BEARING BLOCKS				
BL1	2x4	DRY	No.2	SPF
ALL WEBS EXCEPT	2x3	DRY	No.2	SPF
L - E	2x4	DRY	No.2	SPF
E - J	2x4	DRY	No.2	SPF

DRY: SEASONED LUMBER.

PLATES (table is in inches)

JT	TYPE	PLATES	W	LEN	Y	X
B	TMV+p	MT20	3.0	4.0		
C	TMWW-t	MT20	4.0	6.0	2.00	1.50
D	TS-t	MT20	3.0	6.0		
E	TTWW+p	MT20	4.0	6.0	Edge	
F	TMWW-t	MT20	5.0	6.0	2.50	2.00
G	TMV+p	MT20	3.0	4.0		
I	BMVWK-t	MT20	5.0	12.0		
J	BMWW-t	MT20	5.0	6.0		
K	BS-t	MT20	5.0	6.0		
L	BMWW-t	MT20	5.0	6.0		
M	BMVW1-t	MT20	5.0	6.0		

Edge - INDICATES REFERENCE CORNER OF PLATE TOUCHES EDGE OF CHORD.

DIMENSIONS, SUPPORTS AND LOADINGS SPECIFIED BY FABRICATOR TO BE VERIFIED BY BUILDING DESIGNER

BEARINGS

JT	FACTORED GROSS REACTION VERT	HORZ	MAXIMUM FACTORED GROSS REACTION DOWN	HORZ	UPLIFT	INPUT BRG IN-SX	REQRD BRG IN-SX
M	2046	0	2046	0	0	5-8	5-8
H	1819	0	1819	0	0	3-8	3-8

UNFACTORED REACTIONS

JT	1ST LCASE COMBINED	MAX./MIN. COMPONENT REACTIONS SNOW	LIVE	PERM.LIVE	WIND	DEAD	SOIL
M	1493	954 / 0	233 / 0	0 / 0	0 / 0	305 / 0	0 / 0
H	1338	820 / 0	233 / 0	0 / 0	0 / 0	284 / 0	0 / 0

BEARING MATERIAL TO BE SPF NO.2 OR BETTER AT JOINT(S) M, H

BRACING

TOP CHORD TO BE SHEATHED OR MAX. PURLIN SPACING = 3.92 FT.
MAX. UNBRACED BOTTOM CHORD LENGTH = 10.00 FT OR RIGID CEILING DIRECTLY APPLIED.

ALL PITCH BREAKS AND PERIMETER CORNER JOINTS MUST BE LATERALLY RESTRAINED.

1 LATERAL BRACE(S) AT 1/ 2 LENGTH OF C-M, F-I.

END VERTICAL(S) MUST BE SHEATHED OR HAVE BRACES AS INDICATED IN THE MAX. UNBRACED LENGTH COLUMN OF THE TABLE BELOW

LOADING

TOTAL LOAD CASES: (4)

CHORDS

MEMB. FR-TO	MAX. FACTORED FORCE (LBS)	FACTORED VERT. LOAD LC1 (PLF) FROM	TO	MAX CSI (LC)	MAX. UNBRAC LENGTH
A- B	0 / 57	-129.7	-129.7	0.18 (1)	10.00
B- C	0 / 56	-129.7	-129.7	0.67 (1)	10.00
C- D	-1682 / 0	-129.7	-129.7	0.67 (1)	3.92
D- E	-1682 / 0	-129.7	-129.7	0.87 (1)	3.92
E- F	-1704 / 0	-129.7	-129.7	0.80 (1)	4.05
F- G	0 / 82	-129.7	-129.7	0.62 (1)	10.00
M- B	-451 / 0	0.0	0.0	0.05 (1)	7.81
I- G	-222 / 0	0.0	0.0	0.02 (1)	7.81
M- L	0 / 1396	-38.5	-38.5	0.30 (1)	10.00
L- K	0 / 982	-38.5	-38.5	0.37 (1)	10.00
K- J	0 / 982	-38.5	-38.5	0.37 (1)	10.00
J- I	0 / 1360	-38.5	-38.5	0.79 (1)	10.00
I- H	0 / 0	-38.5	-38.5	0.39 (1)	10.00

WEBS

MEMB. FR-TO	MAX. FACTORED FORCE (LBS)	MAX CSI (LC)
C- L	-491 / 8	0.32 (1)
L- E	0 / 766	0.13 (1)
E- J	0 / 847	0.14 (1)
J- F	-302 / 67	0.20 (1)
M- C	-2026 / 0	0.86 (1)
F- I	-2148 / 0	0.84 (1)

DESIGN CRITERIA

SPECIFIED LOADS:

TOP CH.	LL	=	38.2	PSF
	DL	=	6.0	PSF
BOT CH.	LL	=	10.5	PSF
	DL	=	7.0	PSF
TOTAL LOAD		=	61.7	PSF

SPACING = 24.0 IN. C/C

THIS TRUSS IS DESIGNED FOR RESIDENTIAL OR SMALL BUILDING REQUIREMENTS OF PART 9, NBCC 2010, NBCC 2015

THIS DESIGN COMPLIES WITH:
- PART 9 OF OBC 2012, OBC 2018
- CSA 086-09, CSA 086-14
- TPIC 2011, TPIC 2014

(55 % OF 54.3 P.S.F. G.S.L. PLUS 8.4 P.S.F. RAIN LOAD) EQUALS 38.2 P.S.F. SPECIFIED ROOF LIVE LOAD

ALLOWABLE DEFL.(LL)= L/360 (0.74")
CALCULATED VERT. DEFL.(LL) = L/ 999 (0.13")
ALLOWABLE DEFL.(TL)= L/360 (0.74")
CALCULATED VERT. DEFL.(TL) = L/ 999 (0.22")

CSI: TC=0.87/1.00 (C-E:1) , BC=0.79/1.00 (I-J:1) , WE=0.86/1.00 (C-M:1) , SSI=0.67/1.00 (H-I:1)

DOL LUMBER=1.00 NAIL=1.00 LS BEND=1.10 COMP=1.10 SHEAR=1.10 TENS= 1.10

COMPANION LIVE LOAD FACTOR = 1.00

AUTOSOLVE HEELS OFF

TRUSS PLATE MANUFACTURER IS NOT RESPONSIBLE FOR QUALITY CONTROL IN THE TRUSS MANUFACTURING PLANT .

NAIL VALUES

PLATE	GRIP(DRY) (PSI) MAX	MIN	SHEAR (PLI) MAX	MIN	SECTION (PLI) MAX	MIN
MT20	618	354	1667	788	1987	1656

PLATE PLACEMENT TOL. = 0.250 inches

PLATE ROTATION TOL. = 5.0 Deg.

JSI GRIP= 0.86 (C) (INPUT = 0.90)
JSI METAL= 0.56 (F) (INPUT = 1.00)

LICENSED PROFESSIONAL ENGINEER
08/20/18
H.J.G. ALLES
PROVINCE OF ONTARIO

DWG NO. TAM T1805252
STRUCTURAL
COMPONENT ONLY

TOWN OF INNISFIL
2018-0802-0808
REVIEWED
Building Permit Plans

TOWN OF INNISFIL
2018-0802-0808
REVIEWED
Building Permit Plans

JOB NAME	TRUSS NAME	QUANTITY	PLY	JOB DESC.	DRWG NO.
297079	T174X	4	1	TRUSS DESC.	

Tamarack Roof Truss, Burlington

Version 8.210 S May 18 2018 MiTek Industries, Inc. Mon Aug 20 11:50:06 2018 Page 1
ID:82TzEwrfebruLmbXiL_F9GzNTA6-kkwbO7uthg2eycA2DW6B4g_KBHu8ZV3sU6MhbmyfzxF

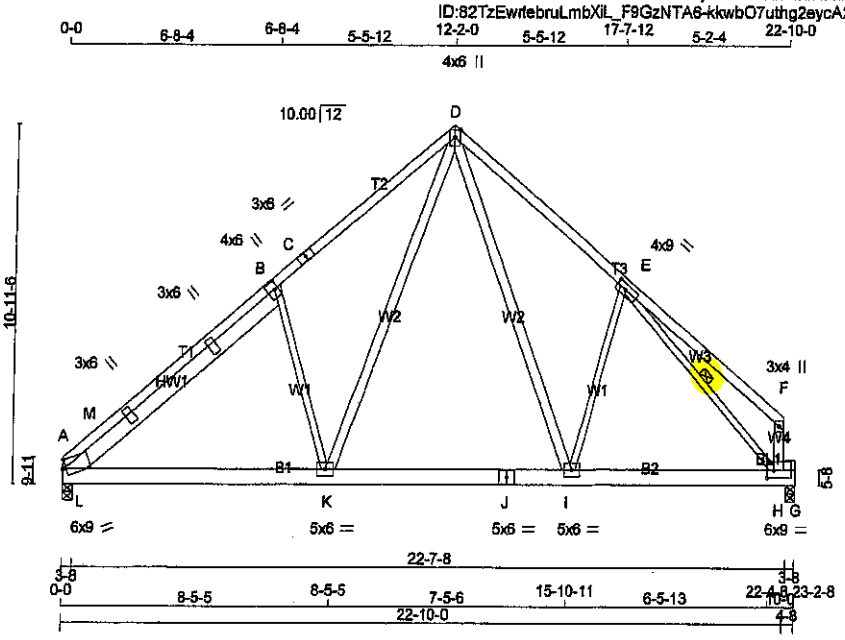

TOTAL WEIGHT = 4 X 134 = 534 lb

LUMBER

N. L. G. A. RULES

CHORDS	SIZE		LUMBER	DESCR.
A - C	2x4	DRY	No.2	SPF
C - D	2x4	DRY	No.2	SPF
D - F	2x4	DRY	No.2	SPF
H - F	2x4	DRY	No.2	SPF
A - J	2x6	DRY	No.2	SPF
J - G	2x6	DRY	No.2	SPF
REINFORCING MEMBERS				
HW1	2x6	DRY	No.2	SPF
BEARING BLOCKS				
BL1	2x4	DRY	No.2	SPF
ALL WEBS EXCEPT	2x3	DRY	No.2	SPF
K - D	2x4	DRY	No.2	SPF
D - I	2x4	DRY	No.2	SPF

DRY: SEASONED LUMBER.

PLATES (table is in inches)

JT	TYPE	PLATES	W	LEN	Y	X
A	TMBW1-m	MT20	6.0	9.0	3.00	0.75
A	TP-m	MT20	3.0	6.0	0.50	
A	TP-m	MT20	3.0	6.0	0.50	
B	TMWW+t	MT20	4.0	6.0	3.00	1.25
C	TS-t	MT20	3.0	6.0		
D	TTWW+p	MT20	4.0	6.0	Edge	
E	TMWW-t	MT20	4.0	9.0	2.00	4.00
F	TMV+p	MT20	3.0	4.0		
H	BMWWK-t	MT20	6.0	9.0	2.75	2.50
I	BMWW-t	MT20	5.0	6.0		
J	BS-t	MT20	5.0	6.0		
K	BMWW-t	MT20	5.0	6.0		

Edge - INDICATES REFERENCE CORNER OF PLATE TOUCHES EDGE OF CHORD.

DIMENSIONS, SUPPORTS AND LOADINGS SPECIFIED BY FABRICATOR TO BE VERIFIED BY BUILDING DESIGNER

BEARINGS

JT	FACTORED GROSS REACTION VERT	HORZ	MAXIMUM FACTORED GROSS REACTION DOWN	HORZ	UPLIFT	INPUT BRG IN-SX	REQRD BRG IN-SX
A	1951	0	1951	0	0	3-8	3-8
G	1903	0	1903	0	0	3-8	3-8

UNFACTORED REACTIONS

JT	1ST LCASE COMBINED	MAX./MIN. COMPONENT REACTIONS SNOW	LIVE	PERM.LIVE	WIND	DEAD	SOIL
A	1432	867 / 0	244 / 0	0 / 0	0 / 0	302 / 0	0 / 0
G	1400	859 / 0	244 / 0	0 / 0	0 / 0	297 / 0	0 / 0

BEARING MATERIAL TO BE SPF NO.2 OR BETTER AT JOINT(S) A, G

BRACING

TOP CHORD TO BE SHEATHED OR MAX. PURLIN SPACING = 3.75 FT.
MAX. UNBRACED BOTTOM CHORD LENGTH = 10.00 FT OR RIGID CEILING DIRECTLY APPLIED.

ALL PITCH BREAKS AND PERIMETER CORNER JOINTS MUST BE LATERALLY RESTRAINED.

1 LATERAL BRACE(S) AT 1/2 LENGTH OF E-H.

END VERTICAL(S) MUST BE SHEATHED OR HAVE BRACES AS INDICATED IN THE MAX. UNBRACED LENGTH COLUMN OF THE TABLE BELOW

LOADING

TOTAL LOAD CASES: (4)

CHORDS

MEMB. FR-TO	MAX. FACTORED FORCE (LBS)	FACTORED VERT. LOAD (PLF) FROM	TO	LC1 MAX CSI (LC)	MAX. UNBRAC LENGTH
A- M	-2269 / 0	-129.7	-129.7	0.43 (1)	4.01
M- B	-1893 / 0	-129.7	-129.7	0.93 (1)	3.77
B- C	-1918 / 0	-129.7	-129.7	0.86 (1)	3.75
C- D	-1918 / 0	-129.7	-129.7	0.86 (1)	3.75
D- E	-1817 / 0	-129.7	-129.7	0.81 (1)	3.94
E- F	0 / 82	-129.7	-129.7	0.62 (1)	10.00
H- F	-231 / 0	0.0	0.0	0.03 (1)	7.81
A- L	0 / 1469	-38.5	-38.5	0.23 (1)	10.00
L- K	0 / 1624	-38.5	-38.5	0.37 (1)	10.00
K- J	0 / 1073	-38.5	-38.5	0.38 (1)	10.00
J- I	0 / 1073	-38.5	-38.5	0.38 (1)	10.00
I- H	0 / 1437	-38.5	-38.5	0.83 (1)	10.00
H- G	0 / 0	-38.5	-38.5	0.41 (1)	10.00

WEBS

MEMB. FR-TO	MAX. FACTORED FORCE (LBS)	MAX CSI (LC)
B- K	-713 / 0	0.47 (1)
K- D	0 / 1055	0.17 (1)
D- I	0 / 833	0.13 (1)
I- E	-289 / 74	0.19 (1)
E- H	-2260 / 0	0.88 (1)
L- M	0 / 358	0.00 (1)
L- B	-216 / 22	0.18 (1)

LICENSED PROFESSIONAL ENGINEER
08/20/18
H.J.G. ALVES
PROVINCE OF ONTARIO

DESIGN CRITERIA

SPECIFIED LOADS:

TOP CH.	LL =	38.2	PSF
	DL =	8.0	PSF
BOT CH.	LL =	10.5	PSF
	DL =	7.0	PSF
TOTAL LOAD	=	61.7	PSF

SPACING = 24.0 IN C/C

THIS TRUSS IS DESIGNED FOR RESIDENTIAL OR SMALL BUILDING REQUIREMENTS OF PART 9, NBCC 2010, NBCC 2015

THIS DESIGN COMPLIES WITH:
- PART 9 OF OBC 2012, OBC 2018
- CSA 088-09, CSA 086-14
- TPIC 2011, TPIC 2014

(55 % OF 54.3 P.S.F. G.S.L. PLUS 8.4 P.S.F. RAIN LOAD) EQUALS 38.2 P.S.F. SPECIFIED ROOF LIVE LOAD

ALLOWABLE DEFL.(LL)= L/360 (0.77")
CALCULATED VERT. DEFL.(LL) = L/ 999 (0.14")
ALLOWABLE DEFL.(TL)= L/360 (0.77")
CALCULATED VERT. DEFL.(TL) = L/ 999 (0.23")

CSI: TC=0.93/1.00 (B-M:1) , BC=0.83/1.00 (H-I:1) , WB=0.88/1.00 (E-H:1) , SSI=0.70/1.00 (G-H:1)

DOL LUMBER=1.00 NAIL=1.00 LS BEND=1.10 COMP=1.10 SHEAR=1.10 TENS= 1.10

COMPANION LIVE LOAD FACTOR = 1.00

AUTOSOLVE RIGHT HEEL ONLY

TRUSS PLATE MANUFACTURER IS NOT RESPONSIBLE FOR QUALITY CONTROL IN THE TRUSS MANUFACTURING PLANT .

NAIL VALUES

PLATE	GRIP(DRY) (PSI) MAX	MIN	SHEAR (PLI) MAX	MIN	SECTION (PLI) MAX	MIN
MT20	618	354	1667	788	1987	1656

PLATE PLACEMENT TOL. = 0.250 inches

PLATE ROTATION TOL. = 5.0 Deg.

JSI GRIP= 0.87 (H) (INPUT = 0.90)
JSI METAL= 0.42 (A) (INPUT = 1.00)

DWG NO. TAM T1805253
STRUCTURAL
COMPONENT ONLY

JOB NAME	TRUSS NAME	QUANTITY	PLY	JOB DESC.	DRWG NO.
297079	T175X	1	3	TRUSS DESC.	

Tamarack Roof Truss, Burlington

Version 8.210 S May 16 2018 MiTek Industries, Inc. Mon Aug 20 12:16:40 2018 Page 1
ID:82TzEwrlebruLmbXIL_F9GzNTA6-YUUZ7Ce02I?Sb?CTdVs7Y7zQOC0f9nY9dnZOlQyizWT

Scale = 1:69.5

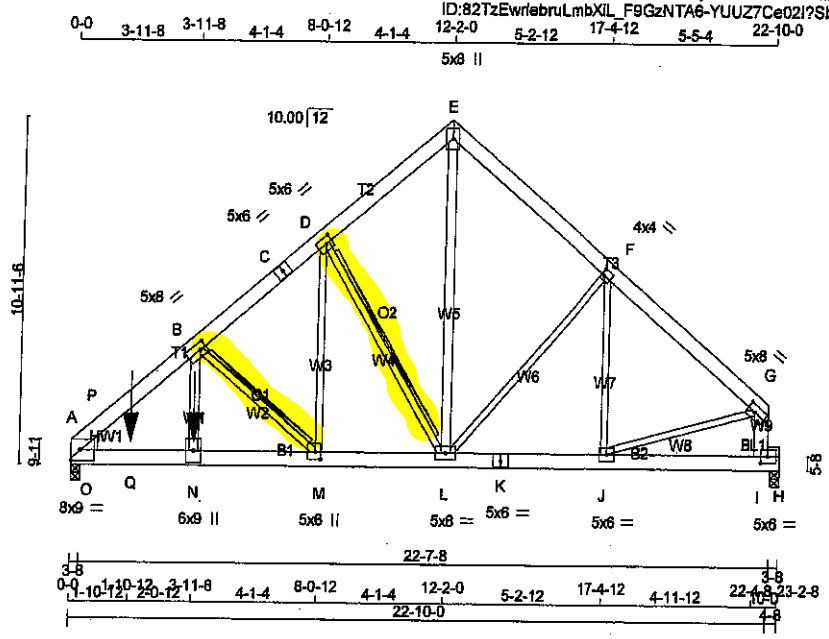

TOTAL WEIGHT = 3 X 145 = 436 lb

LUMBER

N. L. G. A. RULES

CHORDS	SIZE		LUMBER	DESCR.
A - C	2x6	DRY	No.2	SPF
C - E	2x6	DRY	No.2	SPF
E - G	2x6	DRY	No.2	SPF
I - G	2x6	DRY	No.2	SPF
A - K	2x6	DRY	2100F 1.8E	SPF
K - H	2x6	DRY	2100F 1.8E	SPF
BEARING BLOCKS				
BL1	2x4	DRY	No.2	SPF
ALL WEBS EXCEPT	2x3	DRY	No.2	SPF
N - B	2x4	DRY	No.2	SPF
L - E	2x4	DRY	No.2	SPF

DRY: SEASONED LUMBER.

DESIGN CONSISTS OF 3 TRUSSES BUILT SEPARATELY THEN FASTENED TOGETHER AS FOLLOWS:

CHORDS	#ROWS	SURFACE SPACING (IN)	LOAD(PLF)
TOP CHORDS : (0.122"X3") SPIRAL NAILS			
A- C	2	12	TOP
C- E	2	12	TOP
E- G	2	12	TOP
I- G	2	12	TOP
BOTTOM CHORDS : (0.122"X3") SPIRAL NAILS			
A- K	2	5	SIDE(890.1)
K- H	2	12	TOP
WEBS : (0.122"X3") SPIRAL NAILS			
2x3	1	6	
B- N	2	4	SIDE(826.7)
2x4	1	8	

STAGGER NAILS BY HALF THE SURFACE SPACING IN ADJACENT PLIES.

GIRDER NAILING ASSUMES NAILED HANGERS ARE FASTENED WITH MIN. 3-0 INCH NAILS.

TOP - COMPONENTS ARE LOADED FROM THE TOP AND MUST BE PLACED ON TOP EDGE OF ALL PLIES FOR THE LOAD TO BE TRANSFERRED TO EACH PLY.

SIDE - PLF SHOWN IS THE EQUIVALENT UDL APPLIED TO ONE SIDE THAT THE CORRESPONDING NAILING PATTERN SHALL BE CAPABLE OF TRANSFERING. REMAINING PLF MUST BE APPLIED ON THE OPPOSITE SIDE OR ON THE TOP.

PLATES (table is in inches)

JT	TYPE	PLATES	W	LEN	Y	X
A	TMBH1-I	MT20	8.0	9.0		Edge
B	TMWW-t	MT20	5.0	8.0	2.50	2.50
C	TS-t	MT20	5.0	6.0		
D	TMWW-t	MT20	5.0	6.0	2.50	2.25
E	TTW+p	MT20	5.0	8.0		
F	TMWW-t	MT20	4.0	4.0	2.50	1.25
G	TMVW-t	MT20	5.0	8.0	2.50	3.25
I	BMVK-t	MT20	5.0	6.0	2.50	2.75
J	BMWW-t	MT20	5.0	6.0		
K	BS-t	MT20	5.0	6.0		
L	BMWWW-t	MT20	5.0	8.0		
M	BMWW+t	MT20	5.0	6.0	2.75	2.00
N	BMW+w	MT20	6.0	9.0		

DIMENSIONS, SUPPORTS AND LOADINGS SPECIFIED BY FABRICATOR TO BE VERIFIED BY BUILDING DESIGNER

BEARINGS

JT	FACTORED GROSS REACTION VERT	HORZ	MAXIMUM FACTORED GROSS REACTION DOWN	HORZ	UPLIFT	INPUT BRG IN-SX	REQRD BRG IN-SX	HEEL WEDGE
A	7724	0	7724	0	0	3-8	3-8	2x6 L
H	3054	0	3054	0	0	3-8	3-8	

UNFACTORED REACTIONS

1ST LCASE MAX./MIN. COMPONENT REACTIONS

JT	COMBINED	SNOW	LIVE	PERM.LIVE	WIND	DEAD	SOIL
A	5640	3597 / 0	899 / 0	0 / 0	0 / 0	1143 / 0	0 / 0
H	2235	1407 / 0	366 / 0	0 / 0	0 / 0	462 / 0	0 / 0

BEARING MATERIAL TO BE SPF NO.2 OR BETTER AT JOINT(S) A, H

BRACING

TOP CHORD TO BE SHEATHED OR MAX. PURLIN SPACING = 4.21 FT.
MAX. UNBRACED BOTTOM CHORD LENGTH = 6.25 FT OR RIGID CEILING DIRECTLY APPLIED.

ALL PITCH BREAKS AND PERIMETER CORNER JOINTS MUST BE LATERALLY RESTRAINED.

2x4 DRY SPF No.2 T-BRACE AT B-M
2x6 DRY SPF No.2 T-BRACE AT D-L

FASTEN T AND I-BRACES TO NARROW EDGE OF WEB WITH ONE ROW PER PLY OF 3" COMMON WIRE NAILS @ 6" O.C. WITH 3" MINIMUM END DISTANCE. BRACE MUST COVER 90% OF WEB LENGTH.

END VERTICAL(S) MUST BE SHEATHED OR HAVE BRACES AS INDICATED IN THE MAX. UNBRACED LENGTH COLUMN OF THE TABLE BELOW

LOADING

TOTAL LOAD CASES: (4)

CHORDS

MEMB. FR-TO	MAX. FACTORED FORCE (LBS)	FACTORED VERT. LOAD (PLF) FROM	TO	LC1	MAX CSI (LC)	MAX. UNBRAC LENGTH
A- P	-11933 / 0	-129.7	-129.7	0.18 (1)	4.21	
P- B	-9710 / 0	-129.7	-129.7	0.16 (1)	4.60	
B- C	-4898 / 0	-129.7	-129.7	0.09 (1)	6.07	
C- D	-4898 / 0	-129.7	-129.7	0.09 (1)	6.07	
D- E	-2942 / 0	-129.7	-129.7	0.06 (1)	6.25	
E- F	-2946 / 0	-129.7	-129.7	0.09 (1)	6.25	
F- G	-3301 / 0	-129.7	-129.7	0.09 (1)	6.25	
I- G	-3324 / 0	0.0	0.0	0.08 (1)	7.81	
A- O	0 / 7354	-38.5	-38.5	0.22 (1)	10.00	
O- Q	0 / 7354	-38.5	-38.5	0.22 (1)	10.00	
Q- N	0 / 7354	-38.5	-38.5	0.22 (1)	10.00	
N- M	0 / 7354	-38.5	-38.5	0.17 (1)	10.00	
M- L	0 / 3828	-38.5	-38.5	0.07 (1)	10.00	
L- K	0 / 2569	-38.5	-38.5	0.10 (1)	10.00	
K- J	0 / 2569	-38.5	-38.5	0.10 (1)	10.00	
J- I	-492 / 0	-38.5	-38.5	0.22 (1)	6.25	
I- H	0 / 0	-168.2	-168.2	0.14 (1)	10.00	

WEBS

MEMB. FR-TO	MAX. FACTORED FORCE (LBS)	MAX CSI (LC)
N- B	0 / 5869	0.31 (1)
B- M	-4678 / 0	0.49 (1)
M- D	0 / 3331	0.25 (1)
D- L	-3161 / 0	0.41 (1)
L- E	0 / 3243	0.17 (1)
L- F	-520 / 0	0.22 (1)
J- F	-151 / 154	0.03 (1)
J- G	0 / 3180	0.24 (1)
O- P	0 / 2814	0.00 (1)

SPECIFIED CONCENTRATED LOADS (LBS)

JT	LOC.	LC1	MAX-	MAX+	FACE	DIR.
N	3-11-8	-4221	-4221	—	BACK	VERT
Q	1-10-12	-768	-768	—	BACK	VERT
TYPE						
TOTAL						

DESIGN CRITERIA

SPECIFIED LOADS:

TOP CH.	LL	=	38.2	PSF
	DL	=	6.0	PSF
BOT CH.	LL	=	10.5	PSF
	DL	=	7.0	PSF
TOTAL LOAD		=	61.7	PSF

SPACING = 24.0 IN. C/C

THIS TRUSS IS DESIGNED FOR RESIDENTIAL OR SMALL BUILDING REQUIREMENTS OF PART 9, NBCC 2010, NBCC 2015

THIS DESIGN COMPLIES WITH:
- PART 9 OF OBC 2012, OBC 2018
- CSA 086-09, CSA 086-14
- TPIC 2011, TPIC 2014

(55 % OF 54.3 P.S.F. G.S.L. PLUS 8.4 P.S.F. RAIN LOAD) EQUALS 38.2 P.S.F. SPECIFIED ROOF LIVE LOAD

ALLOWABLE DEFL.(LL)= L/360 (0.77")
CALCULATED VERT. DEFL.(LL) = L/ 999 (0.06")
ALLOWABLE DEFL.(TL)= L/360 (0.77")
CALCULATED VERT. DEFL.(TL) = L/ 999 (0.10")

CSI: TC=0.18/1.00 (A-P:1) , BC=0.22/1.00 (I-J:1) , WB=0.49/1.00 (B-M:1) , SSI=0.38/1.00 (H-I:1)

DOL LUMBER=1.00 NAIL=1.00 LS BEND=1.10 COMP=1.10 SHEAR=1.10 TENS= 1.10

COMPANION LIVE LOAD FACTOR = 1.00

AUTOSOLVE LEFT HEEL ONLY

TRUSS PLATE MANUFACTURER IS NOT RESPONSIBLE FOR QUALITY CONTROL IN THE TRUSS MANUFACTURING PLANT .

NAIL VALUES

PLATE	GRIP(DRY) (PSI) MAX	MIN	SHEAR (PLI) MAX	MIN	SECTION (PLI) MAX	MIN
MT20	618	354	1667	786	1987	1656

PLATE PLACEMENT TOL. = 0.250 inches

PLATE ROTATION TOL. = 5.0 Deg.

JSI GRIP= 0.80 (F) (INPUT = 0.90)
JSI METAL= 0.43 (N) (INPUT = 1.00)

LICENSED PROFESSIONAL ENGINEER
08/20/18
H.J.G. ALVES
PROVINCE OF ONTARIO

DWG NO. TAM 17805254
STRUCTURAL COMPONENT ONLY
1/2

CONTINUED ON PAGE 2

TOWN OF INNISFIL
2018-0802-0808
REVIEWED
jpenfold
3/19/2020
Building Permit Plans

JOB NAME	TRUSS NAME	QUANTITY	PLY	JOB DESC.	DRWG NO.
297079	T175X	1	3	TRUSS DESC.	

Tamarack Roof Truss, Burlington

Version 8.210 S May 18 2018 MiTek Industries, Inc. Mon Aug 20 12:18:40 2018 Page 2
ID:82TzEwrlebruLmbXiL_F9GzNTA6-YUUZ7Ce02I?Sb?CTdVs7Y7zQOC0f9nY9dnZOlQylzWT

Edge - INDICATES REFERENCE CORNER OF PLATE TOUCHES EDGE OF CHORD.

HANGERS NOTES

1) SPECIAL HANGER(S) OR CONNECTION(S) REQUIRED TO SUPPORT CONCENTRATED LOAD(S) 1057.1 lbs FACTORED DOWN AT 1-10-12, AND 5788.9 lbs FACTORED DOWN AT 3-11-8 ON BOTTOM CHORD. DESIGN FOR UNSPECIFIED CONNECTION(S) IS DELEGATED TO THE BUILDING DESIGNER.

LICENSED PROFESSIONAL ENGINEER
08/20/18
H.J.G. ALVES
PROVINCE OF ONTARIO

DWG NO. TAM T8805254
STRUCTURAL
COMPONENT ONLY 2/2

TOWN OF INNISFIL
2018-0802-0808
REVIEWED
jpenfold
3/19/2021
Building Permit Plans

JOB NAME	TRUSS NAME	QUANTITY	PLY	JOB DESC.	DRWG NO.
297079	T176	2	1	TRUSS DESC.	

Tamarack Roof Truss, Burlington

Version 8.210 S May 16 2018 MiTek Industries, Inc. Mon Aug 20 11:50:13 2018 Page 1
ID:82TzEwrlebruLmbXiL_F9GzNTA6-14rEsX_G2qxfigCO7Ukqs9mi96O0iotu5iZZLsylzx6

Scale = 1:41.4

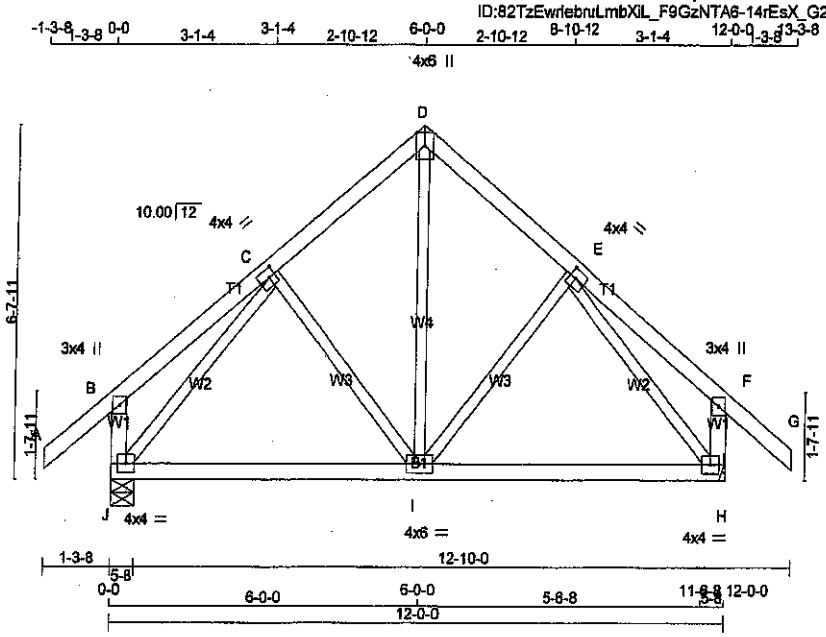

TOTAL WEIGHT = 2 X 58 = 116 lb

[M][F]

LUMBER

N. L. G. A. RULES

CHORDS	SIZE		LUMBER	DESCR.
A - D	2x4	DRY	No.2	SPF
D - G	2x4	DRY	No.2	SPF
J - B	2x4	DRY	No.2	SPF
H - F	2x4	DRY	No.2	SPF
J - H	2x4	DRY	No.2	SPF
ALL WEBS EXCEPT	2x3	DRY	No.2	SPF

DRY: SEASONED LUMBER.

PLATES (table is in inches)

JT	TYPE	PLATES	W	LEN	Y	X
B	TMV+p	MT20	3.0	4.0		
C	TMWW-t	MT20	4.0	4.0	2.00	1.50
D	TTW+p	MT20	4.0	6.0	Edge	
E	TMWW-t	MT20	4.0	4.0	2.00	1.50
F	TMV+p	MT20	3.0	4.0		
H	BMVW1-t	MT20	4.0	4.0		
I	BMWWW-t	MT20	4.0	6.0		
J	BMVW1-t	MT20	4.0	4.0		

Edge - INDICATES REFERENCE CORNER OF PLATE TOUCHES EDGE OF CHORD.

DIMENSIONS, SUPPORTS AND LOADINGS SPECIFIED BY FABRICATOR TO BE VERIFIED BY BUILDING DESIGNER

BEARINGS

JT	FACTORED GROSS REACTION VERT	HORZ	MAXIMUM FACTORED GROSS REACTION DOWN	HORZ	UPLIFT	INPUT BRG	REQRD BRG
						IN-SX	IN-SX
J	1189	0	1189	0	0	5-8	5-8
H	1189	0	1189	0	0	MECHANICAL	— LS526D5

A SUITABLE MECHANICAL CONNECTION IS REQUIRED AT JOINT H.

UNFACTORED REACTIONS

JT	1ST LCASE COMBINED	MAX./MIN. COMPONENT REACTIONS SNOW	LIVE	PERM.LIVE	WIND	DEAD	SOIL
J	863	565 / 0	126 / 0	0 / 0	0 / 0	173 / 0	0 / 0
H	863	565 / 0	126 / 0	0 / 0	0 / 0	173 / 0	0 / 0

BEARING MATERIAL TO BE SPF NO.2 OR BETTER AT JOINT(S) J

BRACING

TOP CHORD TO BE SHEATHED OR MAX. PURLIN SPACING = 6.25 FT.
MAX. UNBRACED BOTTOM CHORD LENGTH = 10.00 FT OR RIGID CEILING DIRECTLY APPLIED.

ALL PITCH BREAKS AND PERIMETER CORNER JOINTS MUST BE LATERALLY RESTRAINED.

LOADING

TOTAL LOAD CASES: (4)

CHORDS

MEMB. FR-TO	MAX. FACTORED FORCE (LBS)	FACTORED VERT. LOAD (PLF) FROM	TO	LC1 MAX CSI (LC)	MAX. UNBRAC LENGTH
A- B	0 / 57	-129.7	-129.7	0.16 (1)	10.00
B- C	0 / 28	-129.7	-129.7	0.18 (1)	10.00
C- D	-686 / 0	-129.7	-129.7	0.14 (1)	6.25
D- E	-686 / 0	-129.7	-129.7	0.14 (1)	6.25
E- F	0 / 28	-129.7	-129.7	0.18 (1)	10.00
F- G	0 / 57	-129.7	-129.7	0.16 (1)	10.00
J- B	-329 / 0	0.0	0.0	0.03 (1)	7.81
H- F	-329 / 0	0.0	0.0	0.03 (1)	7.81
J- I	0 / 606	-38.5	-38.5	0.37 (2)	10.00
I- H	0 / 606	-38.5	-38.5	0.37 (2)	10.00

WEBS

MEMB. FR-TO	MAX. FACTORED FORCE (LBS)	MAX CSI (LC)
I- D	0 / 535	0.12 (1)
I- E	-160 / 27	0.06 (1)
C- I	-160 / 27	0.06 (1)
J- C	-981 / 0	0.36 (1)
E- H	-981 / 0	0.36 (1)

DESIGN CRITERIA

SPECIFIED LOADS:

TOP CH.	LL	=	38.2	PSF
	DL	=	6.0	PSF
BOT CH.	LL	=	10.5	PSF
	DL	=	7.0	PSF
TOTAL LOAD		=	61.7	PSF

SPACING = 24.0 IN. C/C

THIS TRUSS IS DESIGNED FOR RESIDENTIAL OR SMALL BUILDING REQUIREMENTS OF PART 9, NBCC 2010, NBCC 2015

THIS DESIGN COMPLIES WITH:
- PART 9 OF OBC 2012, OBC 2018
- CSA 086-09, CSA 086-14
- TPIC 2011, TPIC 2014

(55 % OF 54.3 P.S.F. G.S.L. PLUS 8.4 P.S.F. RAIN LOAD) EQUALS 38.2 P.S.F. SPECIFIED ROOF LIVE LOAD

ALLOWABLE DEFL.(LL)= L/360 (0.40")
CALCULATED VERT. DEFL.(LL) = L/ 999 (0.04")
ALLOWABLE DEFL.(TL)= L/360 (0.40")
CALCULATED VERT. DEFL.(TL) = L/ 999 (0.07")

CSI: TC=0.18/1.00 (B-C:1) , BC=0.37/1.00 (H-I:2) , WB=0.36/1.00 (C-J:1) , SSI=0.15/1.00 (I-J:3)

DOL LUMBER=1.00 NAIL=1.00 LS BEND=1.10 COMP=1.10 SHEAR=1.10 TENS= 1.10

COMPANION LIVE LOAD FACTOR = 1.00

TRUSS PLATE MANUFACTURER IS NOT RESPONSIBLE FOR QUALITY CONTROL IN THE TRUSS MANUFACTURING PLANT .

NAIL VALUES

PLATE	GRIP(DRY) (PSI) MAX	MIN	SHEAR (PLI) MAX	MIN	SECTION (PLI) MAX	MIN
MT20	618	354	1667	788	1987	1656

PLATE PLACEMENT TOL. = 0.250 inches

PLATE ROTATION TOL. = 5.0 Deg.

JSI GRIP= 0.65 (E) (INPUT = 0.90)
JSI METAL= 0.36 (E) (INPUT = 1.00)

LICENSED PROFESSIONAL ENGINEER
09/10/18
H.J.G. ALKES
PROVINCE OF ONTARIO

DWG NO. TAM T18005255
STRUCTURAL
COMPONENT ONLY

TOWN OF INNISFIL
2018-0802-0808
REVIEWED
jpetifold
3/8/2021
Building Permit Plans

JOB NAME	TRUSS NAME	QUANTITY	PLY	JOB DESC.	DRWG NO.
297079	T176S	3	1	TRUSS DESC.	

TOWN OF INNISFIL
2018-0802-0808
REVIEWED
Building Permit Plans

Tamarack Roof Truss, Burlington

Version 8.210 S May 18 2018 MiTek Industries, Inc. Mon Aug 20 11:50:17 2018 Page 1
ID:82TzEwrlebruLmbXiL_F9GzNTA6-vr4liu1n53R4nlW9MKpm0?xOAjkQeaeU0KXmUdylzx4

Scale = 1:41.9

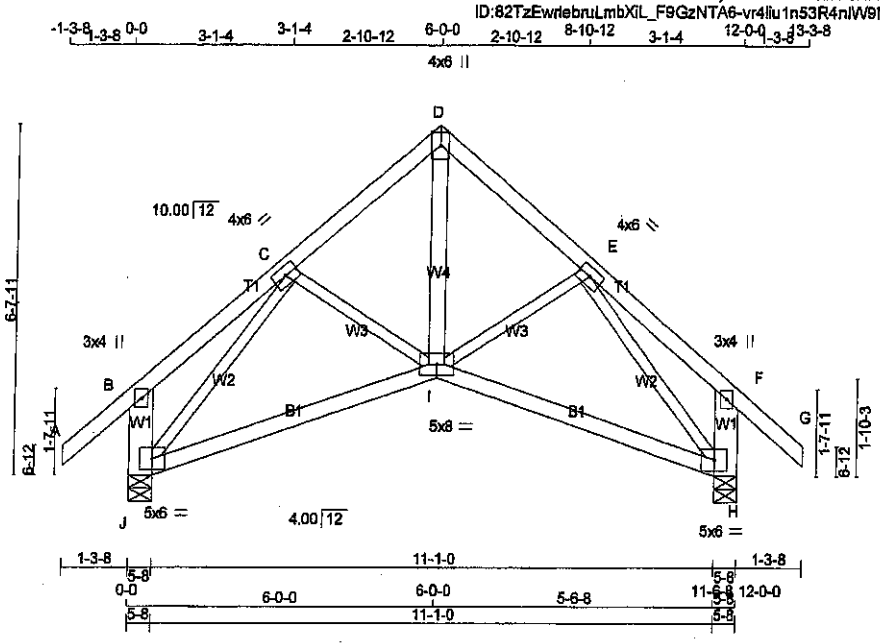

TOTAL WEIGHT = 3 X 59 = 176 lb

LUMBER

N. L. G. A. RULES

CHORDS	SIZE		LUMBER	DESCR.
A - D	2x4	DRY	No.2	SPF
D - G	2x4	DRY	No.2	SPF
J - B	2x6	DRY	No.2	SPF
H - F	2x6	DRY	No.2	SPF
J - I	2x4	DRY	No.2	SPF
I - H	2x4	DRY	No.2	SPF
ALL WEBS	2x3	DRY	No.2	SPF
EXCEPT				
I - D	2x4	DRY	No.2	SPF

DRY: SEASONED LUMBER.

PLATES (table is in inches)

JT	TYPE	PLATES	W	LEN	Y	X
B	TMV+p	MT20	3.0	4.0		
C	TMWW-t	MT20	4.0	6.0		
D	TTW+p	MT20	4.0	6.0	Edge	
E	TMWW-t	MT20	4.0	6.0		
F	TMV+p	MT20	3.0	4.0		
H	BVMW1-p	MT20	5.0	8.0		
I	BBWWW-p	MT20	5.0	8.0		
J	BVMW1-p	MT20	5.0	6.0		

Edge - INDICATES REFERENCE CORNER OF PLATE TOUCHES EDGE OF CHORD.

DIMENSIONS, SUPPORTS AND LOADINGS SPECIFIED BY FABRICATOR TO BE VERIFIED BY BUILDING DESIGNER

BEARINGS

JT	FACTORED GROSS REACTION VERT	HORZ	MAXIMUM FACTORED GROSS REACTION DOWN	HORZ	UPLIFT	INPUT BRG IN-SX	REQRD BRG IN-SX
J	1189	0	1189	0	0	5-8	5-8
H	1189	0	1189	0	0	5-8	5-8

UNFACTORED REACTIONS

JT	1ST LCASE COMBINED	MAX./MIN. COMPONENT REACTIONS SNOW	LIVE	PERM.LIVE	WIND	DEAD	SOIL
J	863	565 / 0	126 / 0	0 / 0	0 / 0	173 / 0	0 / 0
H	863	565 / 0	126 / 0	0 / 0	0 / 0	173 / 0	0 / 0

BEARING MATERIAL TO BE SPF NO.2 OR BETTER AT JOINT(S) J, H

BRACING

TOP CHORD TO BE SHEATHED OR MAX. PURLIN SPACING = 6.25 FT.
MAX. UNBRACED BOTTOM CHORD LENGTH = 10.00 FT OR RIGID CEILING DIRECTLY APPLIED.

ALL PITCH BREAKS AND PERIMETER CORNER JOINTS MUST BE LATERALLY RESTRAINED.

LOADING

TOTAL LOAD CASES: (4)

CHORDS

MEMB. FR-TO	MAX. FACTORED FORCE (LBS)	FACTORED VERT. LOAD LC1 (PLF) FROM	TO	MAX CSI (LC)	MAX. UNBRAC LENGTH
A- B	0 / 57	-129.7	-129.7	0.18 (1)	10.00
B- C	0 / 26	-129.7	-129.7	0.17 (1)	10.00
C- D	-911 / 0	-129.7	-129.7	0.14 (1)	6.25
D- E	-911 / 0	-129.7	-129.7	0.14 (1)	6.25
E- F	0 / 26	-129.7	-129.7	0.17 (1)	10.00
F- G	0 / 57	-129.7	-129.7	0.18 (1)	10.00
J- B	-332 / 0	0.0	0.0	0.02 (1)	7.81
H- F	-332 / 0	0.0	0.0	0.02 (1)	7.81
J- I	0 / 792	-38.5	-38.5	0.40 (2)	10.00
I- H	0 / 792	-38.5	-38.5	0.40 (2)	10.00

WEBS

MEMB. FR-TO	MAX. FACTORED FORCE (LBS)	MAX CSI (LC)
I- D	0 / 824	0.13 (1)
I- E	-85 / 45	0.02 (1)
C- I	-85 / 45	0.02 (1)
J- C	-1244 / 0	0.44 (1)
E- H	-1244 / 0	0.44 (1)

DESIGN CRITERIA

SPECIFIED LOADS:

TOP CH.	LL	=	38.2	PSF
	DL	=	6.0	PSF
BOT CH.	LL	=	10.5	PSF
	DL	=	7.0	PSF
TOTAL LOAD		=	61.7	PSF

SPACING = 24.0 IN. C/C

THIS TRUSS IS DESIGNED FOR RESIDENTIAL OR SMALL BUILDING REQUIREMENTS OF PART 9, NBCC 2010, NBCC 2015

THIS DESIGN COMPLIES WITH:
- PART 9 OF OBC 2012, OBC 2018
- CSA 086-09, CSA 086-14
- TPIC 2011, TPIC 2014

(55 % OF 54.3 P.S.F. G.S.L. PLUS 8.4 P.S.F. RAIN LOAD) EQUALS 38.2 P.S.F. SPECIFIED ROOF LIVE LOAD

ALLOWABLE DEFL.(LL)= L/360 (0.40")
CALCULATED VERT. DEFL.(LL) = L/ 999 (0.10")
ALLOWABLE DEFL.(TL)= L/360 (0.40")
CALCULATED VERT. DEFL.(TL) = L/ 899 (0.16")

CSI: TC=0.18/1.00 (A-B:1) , BC=0.40/1.00 (I-J:2) , WB=0.44/1.00 (C-J:1) , SSI=0.14/1.00 (C-D:1)

DOL LUMBER=1.00 NAIL=1.00 LS BEND=1.10 COMP=1.10 SHEAR=1.10 TENS= 1.10

COMPANION LIVE LOAD FACTOR = 1.00

AUTOSOLVE HEELS OFF

TRUSS PLATE MANUFACTURER IS NOT RESPONSIBLE FOR QUALITY CONTROL IN THE TRUSS MANUFACTURING PLANT .

NAIL VALUES

PLATE	GRIP(DRY) (PSI) MAX	MIN	SHEAR (PLI) MAX	MIN	SECTION (PLI) MAX	MIN
MT20	618	354	1667	788	1987	1656

PLATE PLACEMENT TOL. = 0.250 inches

PLATE ROTATION TOL. = 5.0 Deg.

JSI GRIP= 0.71 (H) (INPUT = 0.90)
JSI METAL= 0.30 (H) (INPUT = 1.00)

LICENSED PROFESSIONAL ENGINEER
08/20/18
H.J.G. AIMES
PROVINCE OF ONTARIO

DWG NO. TAM T1805256
STRUCTURAL
COMPONENT ONLY

JOB NAME	TRUSS NAME	QUANTITY	PLY	JOB DESC.	DRWG NO.
297079	G177	1	1	TRUSS DESC.	

Tamarack Roof Truss, Burlington

Version 8.210 S May 18 2018 MiTek Industries, Inc. Tue Aug 21 15:26:21 2018 Page 1
ID:82TzEwrlebruLmbXiL_F9GzNTA6-u2g8pPykIVNNQrJMAsNDxcl_lybZoiY?kPFg_LylbgW

Scale = 1:84.8

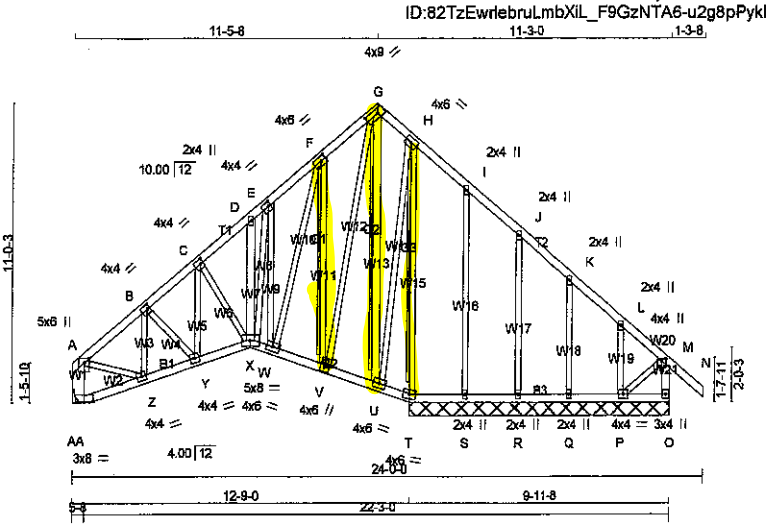

TOTAL WEIGHT = 156 lb

[M]

LUMBER

N. L. G. A. RULES

CHORDS	SIZE		LUMBER	DESCR.
A - G	2x4	DRY	No.2	SPF
G - N	2x4	DRY	No.2	SPF
AA- A	2x6	DRY	No.2	SPF
O - M	2x4	DRY	No.2	SPF
AA- X	2x4	DRY	No.2	SPF
X - T	2x4	DRY	No.2	SPF
T - O	2x4	DRY	No.2	SPF
ALL WEBS	2x3	DRY	No.2	SPF
EXCEPT				
U - G	2x4	DRY	No.2	SPF
X - D	2x4	DRY	No.2	SPF

DRY: SEASONED LUMBER.

GABLE STUDS SPACED AT 2-0-0 OC.

PLATES (table is in inches)

JT	TYPE	PLATES	W	LEN	Y	X
A	TMVW+p	MT20	5.0	6.0	2.00	2.25
B	TMWW-t	MT20	4.0	4.0	2.00	1.25
C	TMWW-t	MT20	4.0	4.0	2.00	1.25
D, I, J, K, L						
D	TMW+w	MT20	2.0	4.0		
E	TMWW-t	MT20	4.0	4.0	2.00	1.00
F	TMWW-t	MT20	4.0	6.0	2.00	2.25
G	TTWW-h	MT20	4.0	9.0	2.00	5.75
H	TMWW-t	MT20	4.0	6.0		
M	TMVW+p	MT20	4.0	4.0	1.00	2.00
O	BMV1+p	MT20	3.0	4.0		
P	BMWW1-t	MT20	4.0	4.0		
Q, R, S						
Q	BMW1+w	MT20	2.0	4.0		
T	BBW1-m	MT20	4.0	6.0		
U	BMWW-t	MT20	4.0	6.0		
V	BMWW+t	MT20	4.0	6.0		
W	BMWW-t	MT20	4.0	6.0		
X	BBWWW-p	MT20	5.0	8.0		
Y	BMWW-t	MT20	4.0	4.0		
Z	BMWW-t	MT20	4.0	4.0		
AA	BVM1-p	MT20	3.0	8.0	Edge	

Edge - INDICATES REFERENCE CORNER OF PLATE TOUCHES EDGE OF CHORD.

DIMENSIONS, SUPPORTS AND LOADINGS SPECIFIED BY FABRICATOR TO BE VERIFIED BY BUILDING DESIGNER

BEARINGS

JT	FACTORED GROSS REACTION VERT	HORZ	MAXIMUM FACTORED GROSS REACTION DOWN	HORZ	UPLIFT	INPUT BRG IN-SX	REQRD BRG IN-SX
AA	1056	0	1056	0	0	MECHANICAL	LSS26DS
T	1282	0	1282	0	0	9-11-8	9-11-8
O	390	0	390	0	0	9-11-8	9-11-8
S	363	0	363	0	0	9-11-8	9-11-8
R	313	0	313	0	0	9-11-8	9-11-8
Q	352	0	352	0	0	9-11-8	9-11-8
P	243	0	243	0	0	9-11-8	9-11-8

A SUITABLE MECHANICAL CONNECTION IS REQUIRED AT JOINT AA.

UNFACTORED REACTIONS

JT	1ST LCASE COMBINED	MAX./MIN. COMPONENT REACTIONS SNOW	LIVE	PERM.LIVE	WIND	DEAD	SOIL
AA	775	479 / 0	132 / 0	0 / 0	0 / 0	163 / 0	0 / 0
T	940	587 / 0	156 / 0	0 / 0	0 / 0	196 / 0	0 / 0
O	271	216 / 0	13 / 0	0 / 0	0 / 0	42 / 0	0 / 0
S	268	161 / 0	48 / 0	0 / 0	0 / 0	58 / 0	0 / 0
R	230	142 / 0	39 / 0	0 / 0	0 / 0	48 / 0	0 / 0
Q	258	162 / 0	42 / 0	0 / 0	0 / 0	53 / 0	0 / 0
P	185	93 / 0	46 / 0	0 / 0	0 / 0	46 / 0	0 / 0

BEARING MATERIAL TO BE SPF NO.2 OR BETTER AT JOINT(S) T, O, S, R, Q, P

BRACING

TOP CHORD TO BE SHEATHED OR MAX. PURLIN SPACING = 5.87 FT.
MAX. UNBRACED BOTTOM CHORD LENGTH = 6.25 FT OR RIGID CEILING DIRECTLY APPLIED.

ALL PITCH BREAKS AND PERIMETER CORNER JOINTS MUST BE LATERALLY RESTRAINED.

2x4 DRY SPF No.2 T-BRACE AT H-T, G-U, F-V

FASTEN T AND I-BRACES TO NARROW EDGE OF WEB WITH ONE ROW PER PLY OF 3" COMMON WIRE NAILS @ 6" O.C. WITH 3" MINIMUM END DISTANCE. BRACE MUST COVER 90% OF WEB LENGTH.

END VERTICAL(S) MUST BE SHEATHED OR HAVE BRACES AS INDICATED IN THE MAX. UNBRACED LENGTH COLUMN OF THE TABLE BELOW

LOADING

TOTAL LOAD CASES: (4)

CHORDS

MEMB. FR-TO	MAX. FACTORED FORCE (LBS)	FACTORED VERT. LOAD LC1 (PLF) FROM	TO	MAX CSI (LC)	MAX. UNBRAC LENGTH
A- B	-1106 / 0	-129.7	-129.7	0.13 (1)	5.87
B- C	-1117 / 0	-129.7	-129.7	0.11 (1)	5.87
C- D	-933 / 0	-129.7	-129.7	0.09 (1)	6.25
D- E	-834 / 0	-129.7	-129.7	0.06 (1)	6.25
E- F	-758 / 0	-129.7	-129.7	0.07 (1)	6.25
F- G	-391 / 0	-129.7	-129.7	0.07 (1)	6.25
G- H	-150 / 0	-129.7	-129.7	0.13 (1)	6.25
H- I	0 / 26	-129.7	-129.7	0.13 (1)	10.00
I- J	0 / 20	-129.7	-129.7	0.09 (1)	10.00
J- K	0 / 5	-129.7	-129.7	0.07 (1)	10.00
K- L	0 / 11	-129.7	-129.7	0.07 (1)	10.00
L- M	-45 / 0	-129.7	-129.7	0.17 (1)	6.25
M- N	0 / 57	-129.7	-129.7	0.18 (1)	10.00
AA- A	-1009 / 0	0.0	0.0	0.07 (1)	7.81
O- M	-362 / 0	0.0	0.0	0.04 (1)	7.81
AA- Z	0 / 3	-38.5	-38.5	0.05 (2)	10.00
Z- Y	0 / 907	-38.5	-38.5	0.17 (1)	10.00
Y- X	0 / 898	-38.5	-38.5	0.17 (1)	10.00
X- W	0 / 635	-38.5	-38.5	0.15 (1)	10.00
W- V	0 / 337	-38.5	-38.5	0.10 (1)	10.00
V- U	0 / 113	-38.5	-38.5	0.11 (1)	10.00
U- T	-24 / 0	-38.5	-38.5	0.09 (1)	6.25
T- S	-13 / 0	-38.5	-38.5	0.03 (3)	6.25
S- R	-10 / 0	-38.5	-38.5	0.03 (3)	10.00
R- Q	-6 / 0	-38.5	-38.5	0.02 (3)	10.00

WEBS

MEMB. FR-TO	MAX. FACTORED FORCE (LBS)	MAX CSI (LC)
T- H	-1166 / 0	0.87 (1)
S- I	-273 / 0	0.36 (1)
R- J	-239 / 0	0.17 (1)
Q- K	-276 / 0	0.10 (1)
P- L	-163 / 0	0.03 (1)
P- M	-3 / 6	0.00 (1)
U- G	-845 / 0	0.62 (1)
U- H	0 / 779	0.18 (1)
W- E	-946 / 0	0.52 (1)
X- D	-11 / 30	0.01 (3)
V- F	-1008 / 0	0.49 (1)
Y- C	0 / 103	0.02 (3)
Z- B	-325 / 0	0.06 (1)
A- Z	0 / 874	0.20 (1)
B- Y	-16 / 0	0.00 (1)
C- X	-283 / 0	0.07 (1)
X- E	0 / 747	0.17 (1)
W- F	0 / 999	0.22 (1)
V- G	0 / 1055	0.24 (1)

DESIGN CRITERIA

SPECIFIED LOADS:

TOP CH.	LL	=	38.2	PSF
	DL	=	6.0	PSF
BOT CH.	LL	=	10.5	PSF
	DL	=	7.0	PSF
TOTAL LOAD		=	61.7	PSF

SPACING = 24.0 IN. C/C

THIS TRUSS IS DESIGNED FOR RESIDENTIAL OR SMALL BUILDING REQUIREMENTS OF PART 9, NBCC 2010, NBCC 2015

THIS DESIGN COMPLIES WITH:
- PART 9 OF OBC 2012, OBC 2018
- CSA 086-09, CSA 086-14
- TPIC 2011, TPIC 2014

DESIGN ASSUMPTIONS
-OVERHANG NOT TO BE ALTERED OR CUT OFF.

(55 % OF 54.3 P.S.F. G.S.L. PLUS 8.4 P.S.F. RAIN LOAD) EQUALS 38.2 P.S.F. SPECIFIED ROOF LIVE LOAD

ALLOWABLE DEFL.(LL)= L/360 (0.43")
CALCULATED VERT. DEFL.(LL) = L/ 999 (0.07")
ALLOWABLE DEFL.(TL)= L/360 (0.43")
CALCULATED VERT. DEFL.(TL) = L/ 999 (0.11")

CSI: TC=0.18/1.00 (M-N:1) , BC=0.17/1.00 (X-Y:1) , WB=0.87/1.00 (H-T:1) , SSI=0.12/1.00 (A-B:1)

DOL LUMBER=1.00 NAIL=1.00 LS BEND=1.10 COMP=1.10 SHEAR=1.10 TENS= 1.10

COMPANION LIVE LOAD FACTOR = 1.00

AUTOSOLVE HEELS OFF

TRUSS PLATE MANUFACTURER IS NOT RESPONSIBLE FOR QUALITY CONTROL IN THE TRUSS MANUFACTURING PLANT .

NAIL VALUES

PLATE	GRIP(DRY) (PSI) MAX	MIN	SHEAR (PLI) MAX	MIN	SECTION (PLI) MAX	MIN
MT20	618	354	1667	788	1987	1656

PLATE PLACEMENT TOL. = 0.250 inches

PLATE ROTATION TOL. = 5.0 Deg.

JSI GRIP= 0.88 (W) (INPUT = 0.90)
JSI METAL= 0.33 (Z) (INPUT = 1.00)

LICENSED PROFESSIONAL ENGINEER
06/21/18
H.J.G. ALVES
PROVINCE OF ONTARIO

DWG NO. TAM T1805547
STRUCTURAL COMPONENT ONLY
1/2

CONTINUED ON PAGE 2

TOWN OF INNISFIL 2018-0802-0808 REVIEWED jpenfold 3/19/2021

JOB NAME	TRUSS NAME	QUANTITY	PLY	JOB DESC.	DRWG NO.
297079	G177	1	1	TRUSS DESC.	

Tamarack Roof Truss, Burlington

Version 8.210 S May 18 2018 MiTek Industries, Inc. Tue Aug 21 15:26:22 2018 Page 2
ID:82TzEwriebruLmbXiL_F9GzNTA6-MEEW0lzMWpWE1?uZjZuSUpq92LwoX9o8z3?EWnylbgV

TOWN OF INNISFIL
2018-0802-0808
REVIEWED
jpenfold
3/19/2021

LOADING
TOTAL LOAD CASES: (4)

CHORDS

MEMB. FR-TO	MAX. FACTORED FORCE (LBS)	FACTORED VERT. LOAD LC1 (PLF) FROM	TO	MAX CSI (LC)
Q- P	-3 / 0	-38.5	-38.5	0.03 (3)
P- O	0 / 0	-38.5	-38.5	0.03 (3)

WEBS

MAX, UNBRAC LENGTH	MEMB. FR-TO	MAX. FACTORED FORCE (LBS)	MAX CSI (LC)
10.00			
10.00			

LICENSED PROFESSIONAL ENGINEER
09/21/18
H.J.G. ALVES
PROVINCE OF ONTARIO

DWG NO. TAM 7805547
STRUCTURAL
COMPONENT ONLY
2/2

JOB NAME	TRUSS NAME	QUANTITY	PLY	JOB DESC.	DRWG NO.
297079	T178	1	1	TRUSS DESC.	

Tamarack Roof Truss, Burlington

Version 8.210 S May 18 2018 MiTek Industries, Inc. Mon Aug 20 11:50:21 2018 Page 1
ID:82TzEwrtebruLmbXiL_F9GzNTA6-odKGYG4I9HxWFvpxbAuiBr6yuK6MaGX4xyV_dPylzx0

Scale = 1:70.8

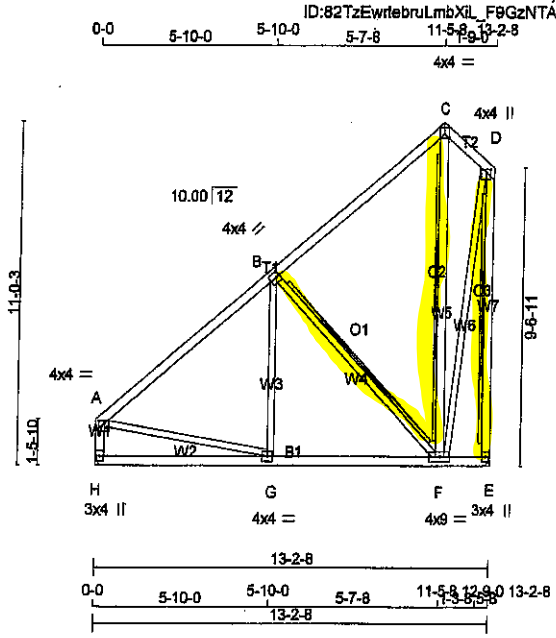

TOTAL WEIGHT = 82 lb
(M)[F]

LUMBER
N. L. G. A. RULES

CHORDS	SIZE		LUMBER	DESCR.
A - C	2x4	DRY	No.2	SPF
C - D	2x4	DRY	No.2	SPF
H - A	2x4	DRY	No.2	SPF
E - D	2x4	DRY	No.2	SPF
H - E	2x4	DRY	No.2	SPF
ALL WEBS EXCEPT	2x3	DRY	No.2	SPF
F - C	2x4	DRY	No.2	SPF

DRY: SEASONED LUMBER.

PLATES (table is in inches)

JT	TYPE	PLATES	W	LEN	Y	X
A	TMWW-p	MT20	4.0	4.0	1.00	2.25
B	TMWW-t	MT20	4.0	4.0	2.00	1.25
C	TTW-p	MT20	4.0	4.0	1.50	2.00
D	TMWW+p	MT20	4.0	4.0	1.00	2.00
E	BMV1+p	MT20	3.0	4.0		
F	BMWWW-t	MT20	4.0	9.0		
G	BMWW-t	MT20	4.0	4.0		
H	BMV1+p	MT20	3.0	4.0		

DIMENSIONS, SUPPORTS AND LOADINGS SPECIFIED BY FABRICATOR TO BE VERIFIED BY BUILDING DESIGNER

BEARINGS

JT	FACTORED GROSS REACTION VERT	HORZ	MAXIMUM FACTORED GROSS REACTION DOWN	HORZ	UPLIFT	INPUT BRG IN-SX	REQRD BRG IN-SX
H	1111	0	1111	0	0	MECHANICAL	
E	1111	0	1111	0	0	MECHANICAL	

JLS 26DS

A SUITABLE MECHANICAL CONNECTION IS REQUIRED AT JOINT H, E.

UNFACTORED REACTIONS

JT	1ST LCASE COMBINED	MAX./MIN. COMPONENT REACTIONS SNOW	LIVE	PERM.LIVE	WIND	DEAD	SOIL
H	815	505 / 0	139 / 0	0 / 0	0 / 0	172 / 0	0 / 0
E	815	505 / 0	139 / 0	0 / 0	0 / 0	172 / 0	0 / 0

BRACING
TOP CHORD TO BE SHEATHED OR MAX. PURLIN SPACING = 5.65 FT.
MAX. UNBRACED BOTTOM CHORD LENGTH = 10.00 FT OR RIGID CEILING DIRECTLY APPLIED.

ALL PITCH BREAKS AND PERIMETER CORNER JOINTS MUST BE LATERALLY RESTRAINED.

2x3 DRY SPF No.2 T-BRACE AT B-F
2x4 DRY SPF No.2 T-BRACE AT C-F, D-E

FASTEN T AND I-BRACES TO NARROW EDGE OF WEB WITH ONE ROW PER PLY OF 3" COMMON WIRE NAILS @ 6" O.C. WITH 3" MINIMUM END DISTANCE. BRACE MUST COVER 90% OF WEB LENGTH.

END VERTICAL(S) MUST BE SHEATHED OR HAVE BRACES AS INDICATED IN THE MAX. UNBRACED LENGTH COLUMN OF THE TABLE BELOW

LOADING
TOTAL LOAD CASES: (4)

CHORDS

MEMB. FR-TO	MAX. FACTORED FORCE (LBS)	FACTORED VERT. LOAD (PLF) FROM	TO	LC1	MAX CSI (LC)	MAX. UNBRAC LENGTH
A- B	-872 / 0	-129.7	-129.7	0.58 (1)	5.65	
B- C	-270 / 0	-129.7	-129.7	0.55 (1)	6.25	
C- D	-210 / 0	-129.7	-129.7	0.05 (1)	6.25	
H- A	-1022 / 0	0.0	0.0	0.11 (1)	7.75	
E- D	-1098 / 0	0.0	0.0	0.64 (1)	7.81	
H- G	0 / 0	-38.5	-38.5	0.26 (3)	10.00	
G- F	0 / 714	-38.5	-38.5	0.34 (2)	10.00	
F- E	0 / 0	-38.5	-38.5	0.10 (3)	10.00	

WEBS

MEMB. FR-TO	MAX. FACTORED FORCE (LBS)	MAX CSI (LC)
G- B	0 / 278	0.07 (3)
B- F	-808 / 0	0.90 (1)
F- C	-116 / 67	0.09 (1)
A- G	0 / 728	0.16 (1)
F- D	0 / 866	0.19 (1)

DESIGN CRITERIA

SPECIFIED LOADS:

TOP CH.	LL	=	38.2	PSF
	DL	=	6.0	PSF
BOT CH.	LL	=	10.5	PSF
	DL	=	7.0	PSF
TOTAL LOAD		=	61.7	PSF

SPACING = 24.0 IN. C/C

THIS TRUSS IS DESIGNED FOR RESIDENTIAL OR SMALL BUILDING REQUIREMENTS OF PART 9, NBCC 2010, NBCC 2015

THIS DESIGN COMPLIES WITH:
- PART 9 OF OBC 2012, OBC 2016
- CSA 086-09, CSA 086-14
- TPIC 2011, TPIC 2014

(55 % OF 54.3 P.S.F. G.S.L. PLUS 8.4 P.S.F. RAIN LOAD) EQUALS 38.2 P.S.F. SPECIFIED ROOF LIVE LOAD

ALLOWABLE DEFL.(LL)= L/360 (0.44")
CALCULATED VERT. DEFL.(LL) = L/ 999 (0.04")
ALLOWABLE DEFL.(TL)= L/360 (0.44")
CALCULATED VERT. DEFL.(TL) = L/ 999 (0.07")

CSI: TC=0.64/1.00 (D-E:1) , BC=0.34/1.00 (F-G:2) , WB=0.90/1.00 (B-F:1) , SSI=0.28/1.00 (A-B:1)

DOL LUMBER=1.00 NAIL=1.00 LS BEND=1.10 COMP=1.10 SHEAR=1.10 TENS= 1.10

COMPANION LIVE LOAD FACTOR = 1.00

TRUSS PLATE MANUFACTURER IS NOT RESPONSIBLE FOR QUALITY CONTROL IN THE TRUSS MANUFACTURING PLANT .

NAIL VALUES

PLATE	GRIP(DRY) (PSI) MAX	MIN	SHEAR (PLI) MAX	MIN	SECTION (PLI) MAX	MIN
MT20	618	354	1667	788	1987	1656

PLATE PLACEMENT TOL. = 0.250 inches

PLATE ROTATION TOL. = 5.0 Deg.

JSI GRIP= 0.87 (A) (INPUT = 0.90)
JSI METAL= 0.28 (A) (INPUT = 1.00)

LICENSED PROFESSIONAL ENGINEER
08/20/18
H.J.G. ALVES
PROVINCE OF ONTARIO

DWG NO. TAM 71805257
STRUCTURAL
COMPONENT ONLY

TOWN OF INNISFIL
2018-0802-0808
REVIEWED
jpenfold
3/19/2021
Building Permit Plans

JOB NAME	TRUSS NAME	QUANTITY	PLY	JOB DESC.	DRWG NO.
297079	T179	1	2	TRUSS DESC.	

Tamarack Roof Truss, Burlington

Version 8.210 S May 18 2018 MiTek Industries, Inc. Mon Aug 20 11:50:24 2018 Page 1
ID:82TzEwrlebruLmbXiL_F9GzNTA6-CC?OAH6ASCK56NYWHIRPoTkUYX4OniJWdwjeDjylzwz

Scale = 1:70.8

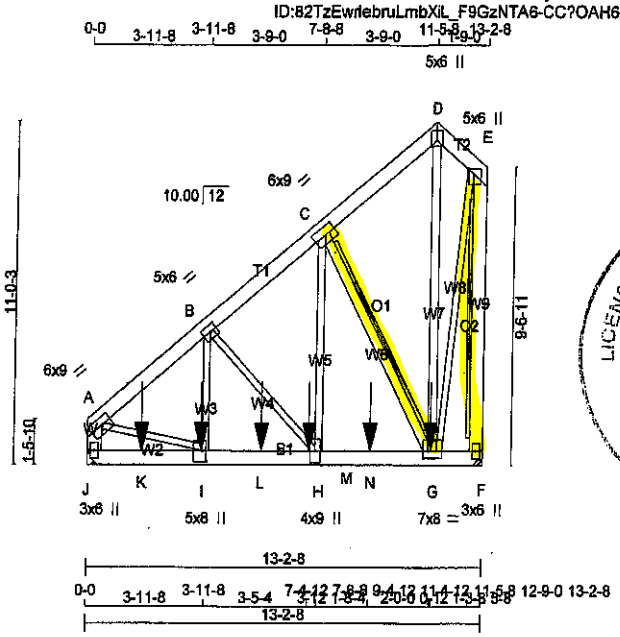

TOTAL WEIGHT = 2 X 117 = 233 lb

LUMBER

N. L. G. A. RULES

CHORDS	SIZE		LUMBER	DESCR.
A - D	2x6	DRY	No.2	SPF
D - E	2x6	DRY	No.2	SPF
J - A	2x6	DRY	No.2	SPF
F - E	2x6	DRY	No.2	SPF
J - F	2x6	DRY	No.2	SPF
ALL WEBS EXCEPT	2x3	DRY	No.2	SPF
C - G	2x4	DRY	No.2	SPF
G - D	2x4	DRY	No.2	SPF

DRY: SEASONED LUMBER.

DESIGN CONSISTS OF 2 TRUSSES BUILT SEPARATELY THEN FASTENED TOGETHER AS FOLLOWS:

CHORDS	#ROWS	SURFACE SPACING (IN)	LOAD(PLF)
TOP CHORDS : (0.122"X3") SPIRAL NAILS			
A- D	2	12	TOP
D- E	2	12	TOP
J- A	2	12	TOP
F- E	2	12	TOP
BOTTOM CHORDS : (0.122"X3") SPIRAL NAILS			
J- F	2	12	SIDE(183.1)
WEBS : (0.122"X3") SPIRAL NAILS			
B- I	1	6	SIDE(226.2)
G- E	1	6	SIDE(107.4)
C- H	1	6	SIDE(226.2)
2x3	1	6	
G- D	1	6	SIDE(118.9)
2x4	1	6	

NAILS TO BE DRIVEN FROM ONE SIDE ONLY.

GIRDER NAILING ASSUMES NAILED HANGERS ARE FASTENED WITH MIN. 3-0 INCH NAILS.

TOP - COMPONENTS ARE LOADED FROM THE TOP AND MUST BE PLACED ON TOP EDGE OF ALL PLIES FOR THE LOAD TO BE TRANSFERRED TO EACH PLY.

SIDE - PLF SHOWN IS THE EQUIVALENT UDL APPLIED TO ONE SIDE THAT THE CORRESPONDING NAILING PATTERN SHALL BE CAPABLE OF TRANSFERING. REMAINING PLF MUST BE APPLIED ON THE OPPOSITE SIDE OR ON THE TOP.

PLATES (table is in inches)

JT	TYPE	PLATES	W	LEN	Y	X
A	TMWW-t	MT20	6.0	9.0	2.75	4.25
B	TMWW-t	MT20	5.0	6.0	2.50	2.75
C	TMWW-t	MT20	6.0	9.0	3.00	4.25
D	TTW+p	MT20	5.0	6.0	3.75	2.50
E	TMWW+p	MT20	5.0	6.0	2.00	2.00
F	BMV1+p	MT20	3.0	6.0		
G	BMWWW-t	MT20	7.0	8.0	2.75	2.00
H	BMWW+t	MT20	4.0	9.0		
I	BMWW+t	MT20	5.0	8.0	4.25	1.50
J	BMV1+p	MT20	3.0	6.0		

HANGERS NOTES

1)

DIMENSIONS, SUPPORTS AND LOADINGS SPECIFIED BY FABRICATOR TO BE VERIFIED BY BUILDING DESIGNER

BEARINGS

JT	FACTORED GROSS REACTION VERT	HORZ	MAXIMUM FACTORED GROSS REACTION DOWN	HORZ	UPLIFT	INPUT BRG IN-SX	REQRD BRG IN-SX
J	5793	0	5793	0	0	MECHANICAL	
F	5842	0	5842	0	0	MECHANICAL	

HDU526-2

A SUITABLE MECHANICAL CONNECTION IS REQUIRED AT JOINT J, F.

UNFACTORED REACTIONS

JT	1ST LCASE COMBINED	MAX./MIN. COMPONENT REACTIONS SNOW	LIVE	PERM.LIVE	WIND	DEAD	SOIL
J	4232	2665 / 0	675 / 0	0 / 0	0 / 0	872 / 0	0 / 0
F	4268	2708 / 0	681 / 0	0 / 0	0 / 0	879 / 0	0 / 0

BRACING

TOP CHORD TO BE SHEATHED OR MAX. PURLIN SPACING = 4.76 FT.
MAX. UNBRACED BOTTOM CHORD LENGTH = 10.00 FT OR RIGID CEILING DIRECTLY APPLIED.

ALL PITCH BREAKS AND PERIMETER CORNER JOINTS MUST BE LATERALLY RESTRAINED.

2x6 DRY SPF No.2 T-BRACE AT C-G, E-F

FASTEN T AND I-BRACES TO NARROW EDGE OF WEB WITH ONE ROW PER PLY OF 3" COMMON WIRE NAILS @ 6" O.C. WITH 3" MINIMUM END DISTANCE. BRACE MUST COVER 90% OF WEB LENGTH.

END VERTICAL(S) MUST BE SHEATHED OR HAVE BRACES AS INDICATED IN THE MAX. UNBRACED LENGTH COLUMN OF THE TABLE BELOW

LOADING

TOTAL LOAD CASES: (4)

CHORDS

MEMB. FR-TO	MAX. FACTORED FORCE (LBS)	FACTORED VERT. LOAD LC1 (PLF) FROM	TO	MAX CSI (LC)	MAX. UNBRAC LENGTH
A- B	-5831 / 0	-129.7	-129.7	0.17 (1)	4.76
B- C	-3871 / 0	-129.7	-129.7	0.10 (1)	5.66
C- D	-1270 / 0	-129.7	-129.7	0.08 (1)	6.25
D- E	-1235 / 0	-129.7	-129.7	0.02 (1)	6.25
J- A	-5063 / 0	0.0	0.0	0.18 (1)	6.47
F- E	-5798 / 0	0.0	0.0	0.62 (1)	7.81
J- K	0 / 0	-38.5	-38.5	0.46 (1)	10.00
K- I	0 / 0	-38.5	-38.5	0.46 (1)	10.00
I- L	0 / 4470	-38.5	-38.5	0.64 (1)	10.00
L- M	0 / 4470	-38.5	-38.5	0.64 (1)	10.00
M- H	0 / 4470	-38.5	-38.5	0.64 (1)	10.00
H- N	0 / 3012	-38.5	-38.5	0.58 (1)	10.00
N- G	0 / 3012	-38.5	-38.5	0.58 (1)	10.00
G- F	0 / 0	-38.5	-38.5	0.01 (3)	10.00

WEBS

MEMB. FR-TO	MAX. FACTORED FORCE (LBS)	MAX CSI (LC)
I- B	0 / 2462	0.30 (1)
B- H	-2200 / 0	0.58 (1)
H- C	0 / 5151	0.84 (1)
C- G	-4548 / 0	0.50 (1)
G- D	0 / 1260	0.11 (1)
A- I	0 / 4594	0.57 (1)
G- E	0 / 4985	0.62 (1)

SPECIFIED CONCENTRATED LOADS (LBS)

JT	LOC.	LC1	MAX-	MAX+	FACE	DIR.	TYPE
G	11-4-12	-1145	-1145	—	BACK	VERT	TOTAL
I	3-9-12	-1145	-1145	—	BACK	VERT	TOTAL
K	1-9-12	-1145	-1145	—	BACK	VERT	TOTAL
L	5-9-12	-1145	-1145	—	BACK	VERT	TOTAL
M	7-4-12	-1145	-1145	—	BACK	VERT	TOTAL
N	9-4-12	-1145	-1145	—	BACK	VERT	TOTAL

DESIGN CRITERIA

SPECIFIED LOADS:

TOP	CH.	LL	=	38.2	PSF
		DL	=	6.0	PSF
BOT	CH.	LL	=	10.5	PSF
		DL	=	7.0	PSF
TOTAL	LOAD		=	61.7	PSF

SPACING = 24.0 IN. C/C

THIS TRUSS IS DESIGNED FOR RESIDENTIAL OR SMALL BUILDING REQUIREMENTS OF PART 9, NBCC 2010, NBCC 2015

THIS DESIGN COMPLIES WITH:
- PART 9 OF OBC 2012, OBC 2016
- CSA 086-09, CSA 086-14
- TPIC 2011, TPIC 2014

(55 % OF 54.3 P.S.F. G.S.L. PLUS 8.4 P.S.F. RAIN LOAD) EQUALS 38.2 P.S.F. SPECIFIED ROOF LIVE LOAD

ALLOWABLE DEFL.(LL)= L/360 (0.44")
CALCULATED VERT. DEFL.(LL) = L/ 999 (0.08")
ALLOWABLE DEFL.(TL)= L/360 (0.44")
CALCULATED VERT. DEFL.(TL) = L/ 999 (0.12")

CSI: TC=0.62/1.00 (E-F:1) , BC=0.64/1.00 (H-I:1) , WB=0.64/1.00 (C-H:1) , SSI=0.77/1.00 (H-I:1)

DOL LUMBER=1.00 NAIL=1.00 LS BEND=1.00 COMP=1.00 SHEAR=1.00 TENS= 1.00

COMPANION LIVE LOAD FACTOR = 1.00

AUTOSOLVE HEELS OFF

TRUSS PLATE MANUFACTURER IS NOT RESPONSIBLE FOR QUALITY CONTROL IN THE TRUSS MANUFACTURING PLANT .

NAIL VALUES

PLATE	GRIP(DRY) (PSI) MAX	MIN	SHEAR (PLI) MAX	MIN	SECTION (PLI) MAX	MIN
MT20	618	354	1667	788	1987	1656

PLATE PLACEMENT TOL. = 0.250 inches

PLATE ROTATION TOL. = 5.0 Deg.

JSI GRIP= 0.89 (G) (INPUT = 0.90)
JSI METAL= 0.81 (I) (INPUT = 1.00)

DWG NO. TAM T1805258
STRUCTURAL COMPONENT ONLY
1/2

CONTINUED ON PAGE 2

TOWN OF INNISFIL
2018-0802-0808
REVIEWED
jperold
3/19/2021
Building Permit Plans

LICENSED PROFESSIONAL ENGINEER
08/20/18
H.J.G. ALVES
PROVINCE OF ONTARIO

JOB NAME	TRUSS NAME	QUANTITY	PLY	JOB DESC.	DRWG NO.
297079	T179	1	2	TRUSS DESC.	

Tamarack Roof Truss, Burlington

Version 8.210 S May 18 2018 MiTek Industries, Inc. Mon Aug 20 11:50:24 2018 Page 2
ID:82TzEwrlebruLmbXiL_F9GzNTA6-CC?OAH6ASCK56NYWHIRPoTkUYX4OniJWdwieDjylzwz

TOWN OF INNISFIL
2018-0802-0808
REVIEWED
jperold
3/19/2021
Building Permit Plans

HANGERS NOTES

1) SPECIAL HANGER(S) OR CONNECTION(S) REQUIRED TO SUPPORT CONCENTRATED LOAD(S) 1569.1 lbs FACTORED DOWN AT 1-9-12, 1569.1 lbs FACTORED DOWN AT 3-9-12, 1569.1 lbs FACTORED DOWN AT 5-9-12, 1569.1 lbs FACTORED DOWN AT 7-4-12, AND 1569.1 lbs FACTORED DOWN AT 9-4-12, AND 1569.1 lbs FACTORED DOWN AT 11-4-12 ON BOTTOM CHORD. DESIGN FOR UNSPECIFIED CONNECTION(S) IS DELEGATED TO THE BUILDING DESIGNER.

LICENSED PROFESSIONAL ENGINEER
08/20/18
H.J.G. [illegible]
PROVINCE OF ONTARIO

DWG NO. TAM T1605258
STRUCTURAL
COMPONENT ONLY
2/2

JOB NAME	TRUSS NAME	QUANTITY	PLY	JOB DESC.	DRWG NO.
297079	T180S	2	1	TRUSS DESC.	

TOWN OF INNISFIL
2018-0802-0808
REVIEWED
jpeebold
3/19/2021
Building Permit Plans

Tamarack Roof Truss, Burlington

Version 6.210 S May 18 2018 MiTek Industries, Inc. Mon Aug 20 11:50:28 2018 Page 1

ID:82TzEwrlebruLmbXiL_F9GzNTA6-4zFv0f9hVRqXb_sHW8WLzJuF_9T_jXW5YYhrMVylzwv

Scale = 1:44.2

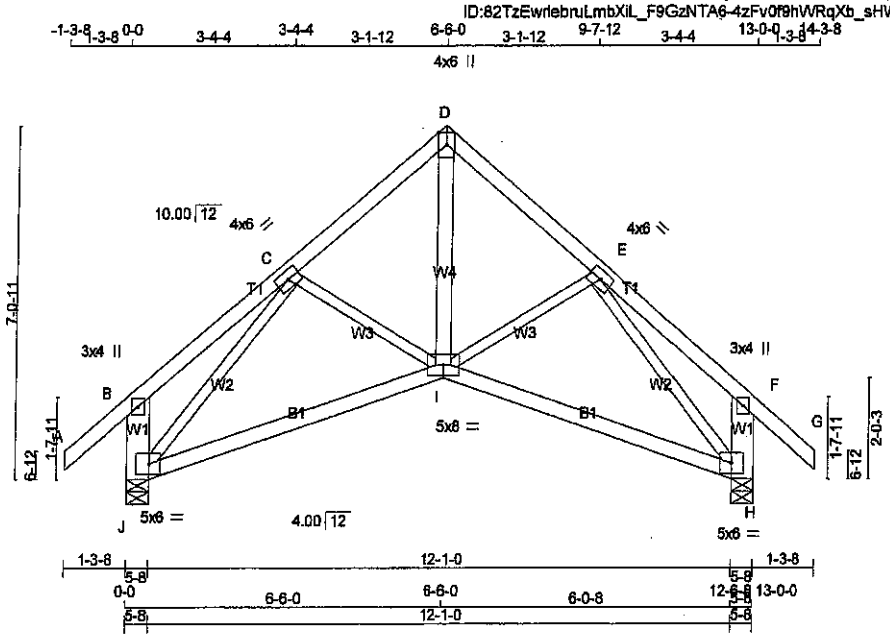

TOTAL WEIGHT = 2 X 63 = 125 lb

[M][F]

LUMBER

N. L. G. A. RULES

CHORDS	SIZE		LUMBER	DESCR.
A - D	2x4	DRY	No.2	SPF
D - G	2x4	DRY	No.2	SPF
J - B	2x6	DRY	No.2	SPF
H - F	2x6	DRY	No.2	SPF
J - I	2x4	DRY	No.2	SPF
I - H	2x4	DRY	No.2	SPF
ALL WEBS EXCEPT	2x3	DRY	No.2	SPF
I - D	2x4	DRY	No.2	SPF

DRY: SEASONED LUMBER.

PLATES (table is in inches)

JT	TYPE	PLATES	W	LEN	Y	X
B	TMV+p	MT20	3.0	4.0		
C	TMWW-t	MT20	4.0	6.0		
D	TTW+p	MT20	4.0	6.0	Edge	
E	TMWW-t	MT20	4.0	6.0		
F	TMV+p	MT20	3.0	4.0		
H	BVMW1-p	MT20	5.0	6.0		
I	BBWWW-p	MT20	5.0	8.0		
J	BVMW1-p	MT20	5.0	6.0		

Edge - INDICATES REFERENCE CORNER OF PLATE TOUCHES EDGE OF CHORD.

DIMENSIONS, SUPPORTS AND LOADINGS SPECIFIED BY FABRICATOR TO BE VERIFIED BY BUILDING DESIGNER

BEARINGS

JT	FACTORED GROSS REACTION VERT	HORZ	MAXIMUM FACTORED GROSS REACTION DOWN	HORZ	UPLIFT	INPUT BRG IN-SX	REQRD BRG IN-SX
J	1273	0	1273	0	0	5-8	5-8
H	1273	0	1273	0	0	5-8	5-8

UNFACTORED REACTIONS

JT	1ST LCASE COMBINED	MAX./MIN. COMPONENT REACTIONS SNOW	LIVE	PERM.LIVE	WIND	DEAD	SOIL
J	925	603 / 0	136 / 0	0 / 0	0 / 0	186 / 0	0 / 0
H	925	603 / 0	136 / 0	0 / 0	0 / 0	186 / 0	0 / 0

BEARING MATERIAL TO BE SPF NO.2 OR BETTER AT JOINT(S) J, H

BRACING

TOP CHORD TO BE SHEATHED OR MAX. PURLIN SPACING = 6.04 FT.
MAX. UNBRACED BOTTOM CHORD LENGTH = 10.00 FT OR RIGID CEILING DIRECTLY APPLIED.

ALL PITCH BREAKS AND PERIMETER CORNER JOINTS MUST BE LATERALLY RESTRAINED.

LOADING

TOTAL LOAD CASES: (4)

CHORDS

MEMB. FR-TO	MAX. FACTORED FORCE (LBS)	FACTORED VERT. LOAD (PLF) FROM	TO	LC1	MAX CSI (LC)	MAX. UNBRAC LENGTH
A- B	0 / 57	-129.7	-129.7	0.18 (1)	10.00	
B- C	0 / 29	-129.7	-129.7	0.20 (1)	10.00	
C- D	-1013 / 0	-129.7	-129.7	0.17 (1)	6.04	
D- E	-1013 / 0	-129.7	-129.7	0.17 (1)	6.04	
E- F	0 / 29	-129.7	-129.7	0.20 (1)	10.00	
F- G	0 / 57	-129.7	-129.7	0.18 (1)	10.00	
J- B	-344 / 0	0.0	0.0	0.03 (1)	7.81	
H- F	-344 / 0	0.0	0.0	0.03 (1)	7.81	
J- I	0 / 893	-38.5	-38.5	0.47 (2)	10.00	
I- H	0 / 893	-38.5	-38.5	0.47 (2)	10.00	

WEBS

MEMB. FR-TO	MAX. FACTORED FORCE (LBS)	MAX CSI (LC)
I- D	0 / 927	0.15 (1)
I- E	-107 / 45	0.03 (1)
C- I	-107 / 45	0.03 (1)
J- C	-1377 / 0	0.56 (1)
E- H	-1377 / 0	0.56 (1)

DESIGN CRITERIA

SPECIFIED LOADS:

TOP CH.	LL	=	38.2	PSF
	DL	=	6.0	PSF
BOT CH.	LL	=	10.5	PSF
	DL	=	7.0	PSF
TOTAL LOAD		=	61.7	PSF

SPACING = 24.0 IN. C/C

THIS TRUSS IS DESIGNED FOR RESIDENTIAL OR SMALL BUILDING REQUIREMENTS OF PART 9, NBCC 2010, NBCC 2015

THIS DESIGN COMPLIES WITH:
- PART 9 OF OBC 2012, OBC 2018
- CSA 086-09, CSA 086-14
- TPIC 2011, TPIC 2014

(55 % OF 54.3 P.S.F. G.S.L. PLUS 8.4 P.S.F. RAIN LOAD) EQUALS 38.2 P.S.F. SPECIFIED ROOF LIVE LOAD

ALLOWABLE DEFL.(LL)= L/360 (0.43")
CALCULATED VERT. DEFL.(LL) = L/ 999 (0.13")
ALLOWABLE DEFL.(TL)= L/360 (0.43")
CALCULATED VERT. DEFL.(TL) = L/ 715 (0.22")

CSI: TC=0.20/1.00 (B-C:1) , BC=0.47/1.00 (H-I:2) , WB=0.56/1.00 (C-J:1) , SSI=0.15/1.00 (C-D:1)

DOL LUMBER=1.00 NAIL=1.00 LS BEND=1.10 COMP=1.10 SHEAR=1.10 TENS= 1.10

COMPANION LIVE LOAD FACTOR = 1.00

AUTOSOLVE HEELS OFF

TRUSS PLATE MANUFACTURER IS NOT RESPONSIBLE FOR QUALITY CONTROL IN THE TRUSS MANUFACTURING PLANT .

NAIL VALUES

PLATE	GRIP(DRY) (PSI) MAX	MIN	SHEAR (PLI) MAX	MIN	SECTION (PLI) MAX	MIN
MT20	618	354	1667	788	1967	1656

PLATE PLACEMENT TOL. = 0.250 inches

PLATE ROTATION TOL. = 5.0 Deg.

JSI GRIP= 0.77 (H) (INPUT = 0.90)
JSI METAL= 0.33 (H) (INPUT = 1.00)

LICENSED PROFESSIONAL ENGINEER
08/20/18
H.J.G. ALVES
PROVINCE OF ONTARIO

DWG NO. TAM T1805259
STRUCTURAL
COMPONENT ONLY

TOWN OF INNISFIL
2018-0802-0808
REVIEWED
jpenold
3/19/2021
Building Permit Plans

JOB NAME	TRUSS NAME	QUANTITY	PLY	JOB DESC.	DRWG NO.
297079	T190	6	1	TRUSS DESC.	

Tamarack Roof Truss, Burlington

Version 8.210 S May 18 2018 MiTek Industries, Inc. Mon Aug 20 12:24:48 2018 Page 1
ID:4u167_apsj?wvBfJKDwJbPzNv7w-mHjgM25rNNMEkZKBBnTQSkDl3Ya7NGeJF1lsf5yizQj

Scale = 1:19.3

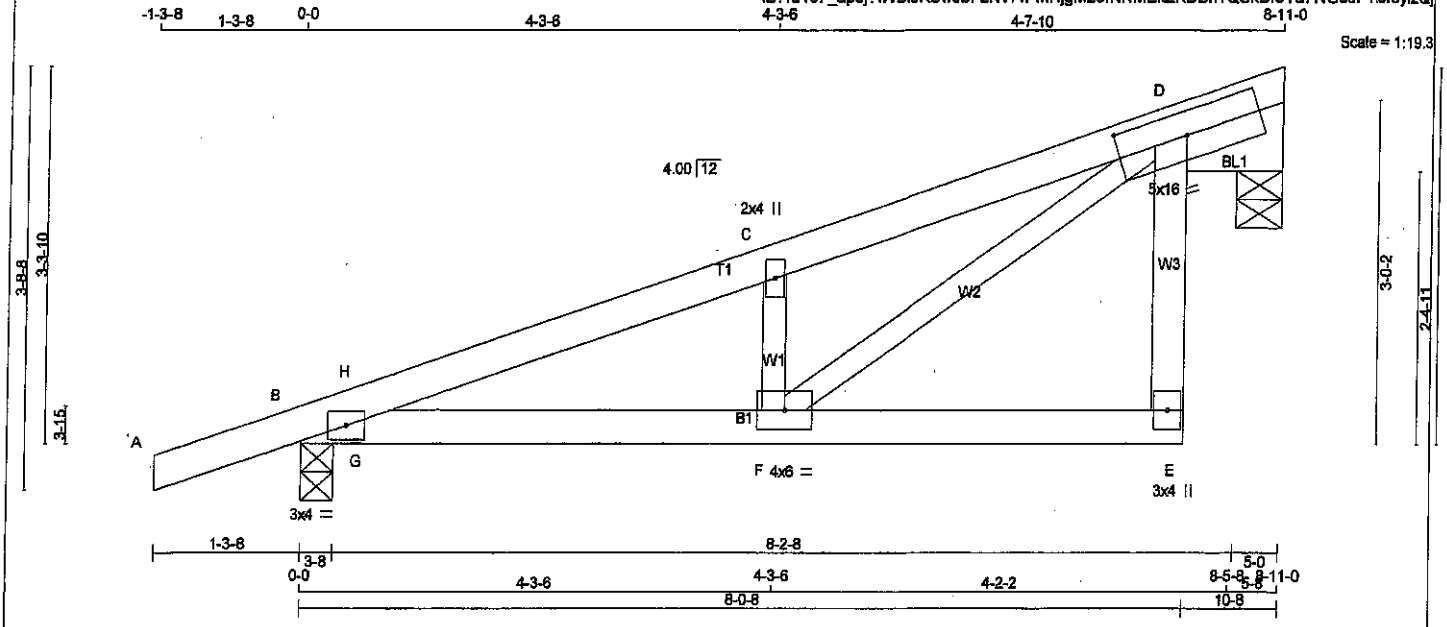

TOTAL WEIGHT = 6 X 31 = 184 lb
[M][F]

LUMBER
N. L. G. A. RULES

CHORDS	SIZE		LUMBER	DESCR.
A - D	2x4	DRY	No.2	SPF
E - D	2x4	DRY	No.2	SPF
B - E	2x4	DRY	No.2	SPF
BEARING BLOCKS				
BL1	2x8	DRY	No.2	SPF
ALL WEBS	2x3	DRY	No.2	SPF

DRY: SEASONED LUMBER.

BEARING NOTE: GAP BETWEEN INSIDE OF TOP CHORD BEARING AND FIRST DIAGONAL OR VERTICAL WEB SHALL NOT EXCEED 0.5 INCHES.

PLATES (table is in inches)

JT	TYPE	PLATES	W	LEN	Y	X
B	TMB1-I	MT20	3.0	4.0		
C	TMW+w	MT20	2.0	4.0		
D	TMVWK1-t	MT20	5.0	16.0	2.50	7.75
E	BMV+p	MT20	3.0	4.0		
F	BMWW-t	MT20	4.0	6.0		

DIMENSIONS, SUPPORTS AND LOADINGS SPECIFIED BY FABRICATOR TO BE VERIFIED BY BUILDING DESIGNER

BEARINGS

JT	FACTORED GROSS REACTION VERT	HORZ	MAXIMUM FACTORED GROSS REACTION DOWN	HORZ	UPLIFT	INPUT BRG IN-SX	REQRD BRG IN-SX	
D	670	0	670	0	0	5-0	5-0	
B	837	0	837	0	0	3-8	3-8	(** SEE "BEARING NOTE" **)

BEVELED PLATE OR SHIM REQUIRED TO PROVIDE FULL BEARING SURFACE WITH TRUSS CHORD AT JT(S): D

UNFACTORED REACTIONS

JT	1ST LCASE COMBINED	MAX./MIN. COMPONENT REACTIONS SNOW	LIVE	PERM.LIVE	WIND	DEAD	SOIL
D	492	302 / 0	86 / 0	0 / 0	0 / 0	105 / 0	0 / 0
B	606	404 / 0	83 / 0	0 / 0	0 / 0	119 / 0	0 / 0

BEARING MATERIAL TO BE SPF NO.2 OR BETTER AT JOINT(S) D, B

BRACING
TOP CHORD TO BE SHEATHED OR MAX. PURLIN SPACING = 5.76 FT.
MAX. UNBRACED BOTTOM CHORD LENGTH = 10.00 FT OR RIGID CEILING DIRECTLY APPLIED.

ALL PITCH BREAKS AND PERIMETER CORNER JOINTS MUST BE LATERALLY RESTRAINED.

LOADING
TOTAL LOAD CASES: (4)

CHORDS

MEMB. FR-TO	MAX. FACTORED FORCE (LBS)	FACTORED VERT. LOAD (PLF) FROM	TO	LC1 MAX CSI (LC)	MAX. UNBRAC LENGTH
A- B	0 / 26	-129.7	-129.7	0.16 (1)	10.00
B- H	-1156 / 0	-129.7	-129.7	0.04 (2)	5.90
H- C	-1108 / 0	-129.7	-129.7	0.21 (1)	5.78
C- D	-1123 / 0	-129.7	-129.7	0.21 (1)	5.76
E- D	0 / 73	0.0	0.0	0.01 (3)	10.00
B- G	0 / 1068	-38.5	-38.5	0.31 (1)	10.00
G- F	0 / 1068	-38.5	-38.5	0.32 (1)	10.00
F- E	-4 / 0	-38.5	-38.5	0.08 (3)	10.00

WEBS

MEMB. FR-TO	MAX. FACTORED FORCE (LBS)	MAX CSI (LC)
F- C	-574 / 0	0.08 (1)
F- D	0 / 1308	0.29 (1)
G- H	-129 / 62	0.00 (1)

DESIGN CRITERIA

SPECIFIED LOADS:

TOP CH.	LL	=	38.2	PSF
	DL	=	6.0	PSF
BOT CH.	LL	=	10.5	PSF
	DL	=	7.0	PSF
TOTAL LOAD		=	61.7	PSF

SPACING = 24.0 IN. C/C

THIS TRUSS IS DESIGNED FOR RESIDENTIAL OR SMALL BUILDING REQUIREMENTS OF PART 9, NBCC 2010, NBCC 2015

THIS DESIGN COMPLIES WITH:
- PART 9 OF OBC 2012, OBC 2018
- CSA 086-09, CSA 086-14
- TPIC 2011, TPIC 2014

(55 % OF 54.3 P.S.F. G.S.L. PLUS 8.4 P.S.F. RAIN LOAD) EQUALS 38.2 P.S.F. SPECIFIED ROOF LIVE LOAD

ALLOWABLE DEFL.(LL)= L/360 (0.26")
CALCULATED VERT. DEFL.(LL) = L/ 999 (0.04")
ALLOWABLE DEFL.(TL)= L/360 (0.26")
CALCULATED VERT. DEFL.(TL) = L/ 999 (0.06")

CSI: TC=0.21/1.00 (C-D:1) , BC=0.32/1.00 (F-G:1) , WB=0.29/1.00 (D-F:1) , SSI=0.22/1.00 (C-H:1)

DOL LUMBER=1.00 NAIL=1.00 LS BEND=1.10 COMP=1.10 SHEAR=1.10 TENS= 1.10

COMPANION LIVE LOAD FACTOR = 1.00

TRUSS PLATE MANUFACTURER IS NOT RESPONSIBLE FOR QUALITY CONTROL IN THE TRUSS MANUFACTURING PLANT .

NAIL VALUES

PLATE	GRIP(DRY) (PSI) MAX	MIN	SHEAR (PLI) MAX	MIN	SECTION (PLI) MAX	MIN
MT20	618	354	1667	788	1987	1656

PLATE PLACEMENT TOL. = 0.250 Inches

PLATE ROTATION TOL. = 5.0 Deg.

JSI GRIP= 0.78 (F) (INPUT = 0.90)
JSI METAL= 0.46 (B) (INPUT = 1.00)

LICENSED PROFESSIONAL ENGINEER
08/20/18
H.J.G. ADYS
PROVINCE OF ONTARIO

DWG NO. PAR T1805260
STRUCTURAL
COMPONENT ONLY

JOB NAME	TRUSS NAME	QUANTITY	PLY	JOB DESC.	DRWG NO.
297078	P1	56	1	TRUSS DESC.	

TOWN OF INNISFIL
2018-0802-0808
REVIEWED
jpenfold
3/11/2021
Building Permit Plans

Tamarack Roof Truss, Burlington

Version 8.210 S May 18 2018 MiTek Industries, Inc. Mon Aug 20 09:47:04 2018 Page 1

ID:P5XmF1xy53I8wCH47R2x3fzNvqf-tZtu4zZP9Z?3K8qHnAg4uzEz2YZQy2KI?dA3Ueym?kb

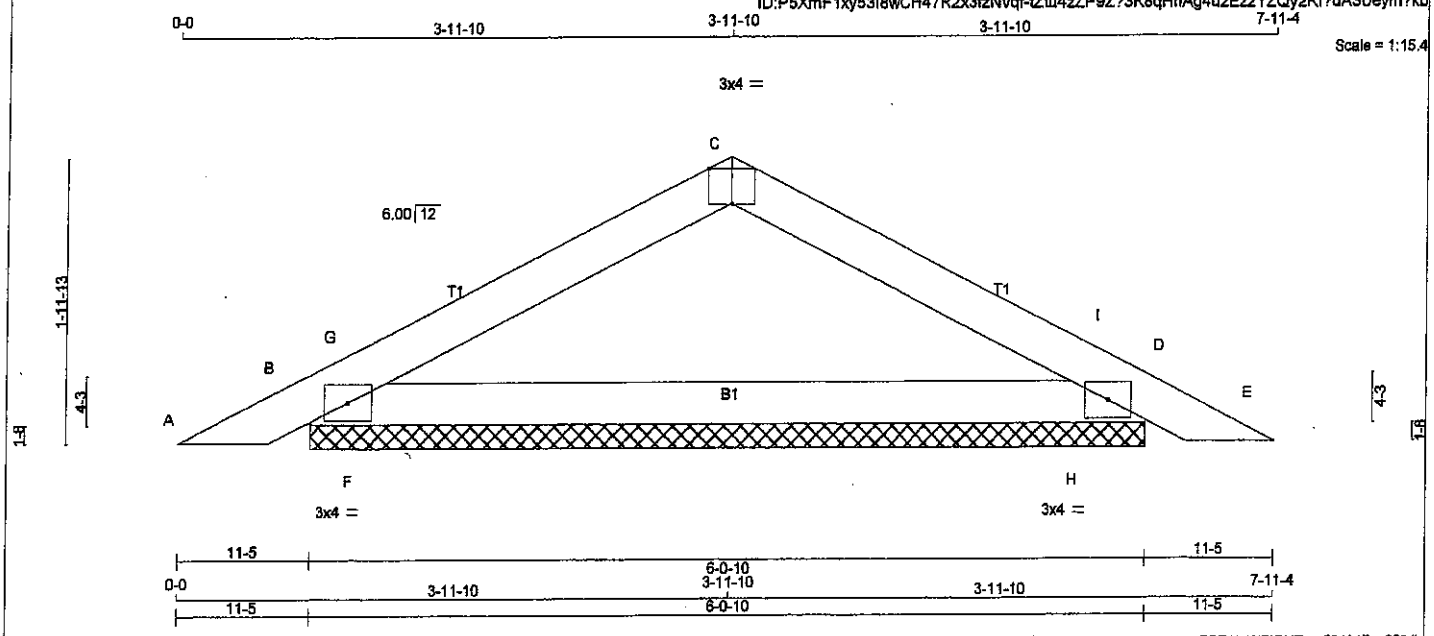

TOTAL WEIGHT = 56 X 17 = 953 lb [M]

LUMBER

N. L. G. A. RULES

CHORDS	SIZE		LUMBER	DESCR.
A - C	2x4	DRY	No.2	SPF
C - E	2x4	DRY	No.2	SPF
B - D	2x4	DRY	No.2	SPF

DRY: SEASONED LUMBER.

PLATES (table is in inches)

JT	TYPE	PLATES	W	LEN	Y	X
B	TMB1-I	MT20	3.0	4.0		
C	TT-p	MT20	3.0	4.0	Edge	2.00
D	TMB1-I	MT20	3.0	4.0		

Edge - INDICATES REFERENCE CORNER OF PLATE TOUCHES EDGE OF CHORD.

DIMENSIONS, SUPPORTS AND LOADINGS SPECIFIED BY FABRICATOR TO BE VERIFIED BY BUILDING DESIGNER

BEARINGS

JT	FACTORED GROSS REACTION VERT	HORZ	MAXIMUM FACTORED GROSS REACTION DOWN	HORZ	UPLIFT	INPUT BRG IN-SX	REQRD BRG IN-SX
B	623	0	623	0	0	6-0-10	6-0-10
D	623	0	623	0	0	6-0-10	6-0-10

UNFACTORED REACTIONS

JT	1ST LCASE COMBINED	MAX./MIN. COMPONENT REACTIONS SNOW	LIVE	PERM.LIVE	WIND	DEAD	SOIL
B	451	298 / 0	64 / 0	0 / 0	0 / 0	89 / 0	0 / 0
D	451	298 / 0	64 / 0	0 / 0	0 / 0	89 / 0	0 / 0

BEARING MATERIAL TO BE SPF NO.2 OR BETTER AT JOINT(S) B, D

BRACING

TOP CHORD TO BE SHEATHED OR MAX. PURLIN SPACING = 6.25 FT.
MAX. UNBRACED BOTTOM CHORD LENGTH = 10.00 FT OR RIGID CEILING DIRECTLY APPLIED.

ALL PITCH BREAKS AND PERIMETER CORNER JOINTS MUST BE LATERALLY RESTRAINED.

LOADING

TOTAL LOAD CASES: (4)

CHORDS

MEMB. FR-TO	MAX. FACTORED FORCE (LBS)	FACTORED VERT. LOAD (PLF) FROM	TO	LC1	MAX CSI (LC)	MAX. UNBRAC LENGTH
A- B	0 / 24	-129.7	-129.7	0.07 (1)	10.00	
B- G	-613 / 0	-129.7	-129.7	0.16 (2)	6.25	
G- C	-449 / 0	-129.7	-129.7	0.23 (1)	6.25	
C- I	-449 / 0	-129.7	-129.7	0.23 (1)	6.25	
I- D	-613 / 0	-129.7	-129.7	0.16 (2)	6.25	
D- E	0 / 24	-129.7	-129.7	0.07 (1)	10.00	
B- F	0 / 417	-38.5	-38.5	0.11 (3)	10.00	
F- H	0 / 417	-38.5	-38.5	0.23 (1)	10.00	
H- D	0 / 417	-38.5	-38.5	0.11 (3)	10.00	

WEBS

MEMB. FR-TO	MAX. FACTORED FORCE (LBS)	MAX CSI (LC)
F- G	0 / 294	0.00 (1)
H- I	0 / 294	0.00 (1)

DESIGN CRITERIA

SPECIFIED LOADS:

TOP CH.	LL =	38.2	PSF
	DL =	6.0	PSF
BOT CH.	LL =	10.5	PSF
	DL =	7.0	PSF
TOTAL LOAD	=	61.7	PSF

SPACING = 24.0 IN. C/C

THIS TRUSS IS DESIGNED FOR RESIDENTIAL OR SMALL BUILDING REQUIREMENTS OF PART 9, NBCC 2010, NBCC 2015

THIS DESIGN COMPLIES WITH:
- PART 9 OF OBC 2012, OBC 2018
- CSA 086-09, CSA 086-14
- TPIC 2011, TPIC 2014

(55 % OF 54.3 P.S.F. G.S.L. PLUS 8.4 P.S.F. RAIN LOAD) EQUALS 38.2 P.S.F. SPECIFIED ROOF LIVE LOAD

CSI: TC=0.23/1.00 (C-I:1) , BC=0.23/1.00 (F-H:1) , WB=0.00/1.00 (F-G:1) , SSI=0.21/1.00 (B-G:2)

DOL LUMBER=1.00 NAIL=1.00 LS BEND=1.10 COMP=1.10 SHEAR=1.10 TENS= 1.10

COMPANION LIVE LOAD FACTOR = 1.00

TRUSS PLATE MANUFACTURER IS NOT RESPONSIBLE FOR QUALITY CONTROL IN THE TRUSS MANUFACTURING PLANT .

NAIL VALUES

PLATE	GRIP(DRY) (PSI) MAX	MIN	SHEAR (PLI) MAX	MIN	SECTION (PLI) MAX	MIN
MT20	618	354	1667	788	1987	1656

PLATE PLACEMENT TOL. = 0.250 inches .

PLATE ROTATION TOL. = 5.0 Deg.

JSI GRIP= 0.45 (D) (INPUT = 0.90)
JSI METAL= 0.17 (D) (INPUT = 1.00)

LICENSED PROFESSIONAL ENGINEER
08/20/18
H.J.G. ALVES
PROVINCE OF ONTARIO

DWG NO. TAM 17805169
STRUCTURAL
COMPONENT ONLY

JOB NAME	TRUSS NAME	QUANTITY	PLY	JOB DESC.	DRWG NO.
297079	P11	2	1	TRUSS DESC.	

Tamarack Roof Truss, Burlington

Version 8.210 S May 18 2018 MiTek Industries, Inc. Mon Aug 20 11:47:46 2018 Page 1

ID:4u167_apsj?wvBfJKDwJbPzNv7w-qoSg0GC3ffQW95T807cMP9Bb9rHxmObFIKSHgtylzzR

TOWN OF INNISFIL 2018-0802-0808 REVIEWED jpenfold 3/19/2021 BUILDING DEPT. PLANS

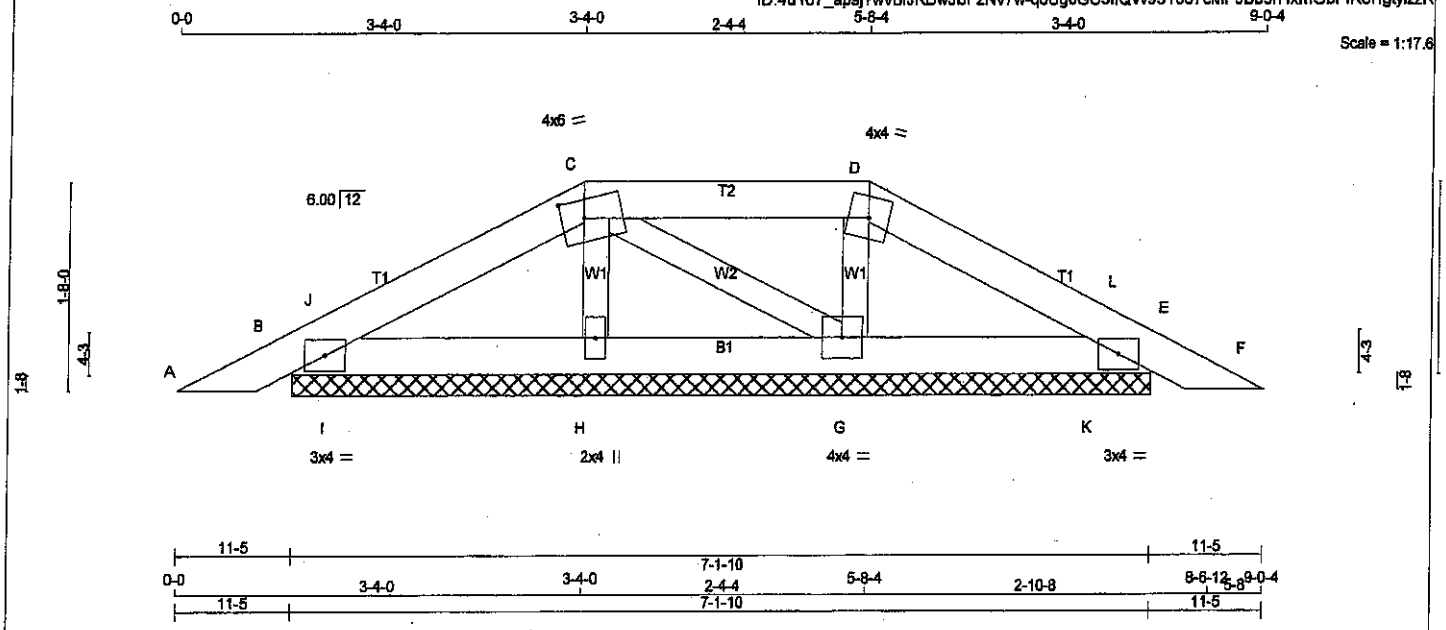

TOTAL WEIGHT = 2 X 23 = 45 lb

LUMBER

N. L. G. A. RULES

CHORDS	SIZE		LUMBER	DESCR.
A - C	2x4	DRY	No.2	SPF
C - D	2x4	DRY	No.2	SPF
D - F	2x4	DRY	No.2	SPF
B - E	2x4	DRY	No.2	SPF
ALL WEBS	2x3	DRY	No.2	SPF

DRY: SEASONED LUMBER.

PLATES (table is in inches)

JT	TYPE	PLATES	W	LEN	Y	X
B	TMB1-I	MT20	3.0	4.0		
C	TTWW-m	MT20	4.0	6.0	1.75	2.25
D	TTW-m	MT20	4.0	4.0		
E	TMB1-I	MT20	3.0	4.0		
G	BMWW1-t	MT20	4.0	4.0		
H	BMW1+w	MT20	2.0	4.0		

DIMENSIONS, SUPPORTS AND LOADINGS SPECIFIED BY FABRICATOR TO BE VERIFIED BY BUILDING DESIGNER

BEARINGS

JT	FACTORED GROSS REACTION VERT	HORZ	MAXIMUM FACTORED GROSS REACTION DOWN	HORZ	UPLIFT	INPUT BRG IN-SX	REQRD BRG IN-SX
B	341	0	341	0	0	7-1-10	7-1-10
E	329	0	329	0	0	7-1-10	7-1-10
H	358	0	358	0	0	7-1-10	7-1-10
G	399	0	399	0	0	7-1-10	7-1-10

UNFACTORED REACTIONS

JT	1ST LCASE COMBINED	MAX./MIN. COMPONENT REACTIONS SNOW	LIVE	PERM.LIVE	WIND	DEAD	SOIL
B	243	176 / 0	24 / 0	0 / 0	0 / 0	43 / 0	0 / 0
E	234	169 / 0	23 / 0	0 / 0	0 / 0	42 / 0	0 / 0
H	265	156 / 0	51 / 0	0 / 0	0 / 0	59 / 0	0 / 0
G	294	180 / 0	52 / 0	0 / 0	0 / 0	63 / 0	0 / 0

BEARING MATERIAL TO BE SPF NO.2 OR BETTER AT JOINT(S) B, E, H, G

BRACING

TOP CHORD TO BE SHEATHED OR MAX. PURLIN SPACING = 6.25 FT.
MAX. UNBRACED BOTTOM CHORD LENGTH = 10.00 FT OR RIGID CEILING DIRECTLY APPLIED.

ALL PITCH BREAKS AND PERIMETER CORNER JOINTS MUST BE LATERALLY RESTRAINED.

LOADING

TOTAL LOAD CASES: (4)

CHORDS

MEMB. FR-TO	MAX. FACTORED FORCE (LBS)	FACTORED VERT. LOAD LC1 (PLF) FROM	TO	MAX CSI (LC)	MAX. UNBRAC LENGTH
A- B	0 / 24	-129.7	-129.7	0.07 (1)	10.00
B- J	-87 / 0	-129.7	-129.7	0.02 (3)	6.25
J- C	-79 / 0	-129.7	-129.7	0.09 (1)	6.25
C- D	-26 / 0	-129.7	-129.7	0.12 (1)	6.25
D- L	-52 / 0	-129.7	-129.7	0.09 (1)	6.25
L- E	-60 / 0	-129.7	-129.7	0.02 (3)	6.25
E- F	0 / 24	-129.7	-129.7	0.07 (1)	10.00
B- I	0 / 71	-38.5	-38.5	0.09 (1)	10.00
I- H	0 / 71	-38.5	-38.5	0.09 (1)	10.00
H- G	0 / 52	-38.5	-38.5	0.05 (1)	10.00
G- K	0 / 48	-38.5	-38.5	0.09 (1)	10.00
K- E	0 / 48	-38.5	-38.5	0.09 (1)	10.00

WEBS

MEMB. FR-TO	MAX. FACTORED FORCE (LBS)	MAX CSI (LC)
H- C	-234 / 0	0.03 (1)
C- G	-30 / 0	0.00 (1)
G- D	-260 / 0	0.04 (1)
I- J	-138 / 22	0.00 (1)
K- L	-139 / 22	0.00 (1)

DESIGN CRITERIA

SPECIFIED LOADS:

TOP CH.	LL	=	38.2	PSF
	DL	=	6.0	PSF
BOT CH.	LL	=	10.5	PSF
	DL	=	7.0	PSF
TOTAL LOAD		=	61.7	PSF

SPACING = 24.0 IN. C/C

LOADING IN FLAT SECTION BASED ON A SLOPE OF 6.00/12

THIS TRUSS IS DESIGNED FOR RESIDENTIAL OR SMALL BUILDING REQUIREMENTS OF PART 9, NBCC 2010, NBCC 2015

THIS DESIGN COMPLIES WITH:
- PART 9 OF OBC 2012, OBC 2018
- CSA 086-09, CSA 086-14
- TPIC 2011, TPIC 2014

(55 % OF 54.3 P.S.F. G.S.L. PLUS 8.4 P.S.F. RAIN LOAD) EQUALS 38.2 P.S.F. SPECIFIED ROOF LIVE LOAD

CSI: TC=0.12/1.00 (C-D:1) , BC=0.09/1.00 (B-I:1) , WB=0.04/1.00 (D-G:1) , SSI=0.12/1.00 (C-D:1)

DOL LUMBER=1.00 NAIL=1.00 LS BEND=1.10 COMP=1.10 SHEAR=1.10 TENS= 1.10

COMPANION LIVE LOAD FACTOR = 1.00

TRUSS PLATE MANUFACTURER IS NOT RESPONSIBLE FOR QUALITY CONTROL IN THE TRUSS MANUFACTURING PLANT .

NAIL VALUES

PLATE	GRIP(DRY) (PSI) MAX	MIN	SHEAR (PLI) MAX	MIN	SECTION (PLI) MAX	MIN
MT20	618	354	1667	788	1987	1656

PLATE PLACEMENT TOL. = 0.250 Inches

PLATE ROTATION TOL. = 5.0 Deg.

JSI GRIP= 0.25 (B) (INPUT = 0.90)
JSI METAL= 0.06 (D) (INPUT = 1.00)

LICENSED PROFESSIONAL ENGINEER
08/20/18
H.J.G. ALVES
PROVINCE OF ONTARIO

DWG NO. TAM T1805215
STRUCTURAL
COMPONENT ONLY

TOWN OF INNISFIL
2018-0802-0808
REVIEWED
jpenfold
7/9/2021
Building Permit Plan

JOB NAME	TRUSS NAME	QUANTITY	PLY	JOB DESC.	DRWG NO.
297079	P12	10	1	TRUSS DESC.	

Tamarack Roof Truss, Burlington

Version 8.210 S May 18 2018 MiTek Industries, Inc. Mon Aug 20 11:47:50 2018 Page 1
ID:4u167_apsj?wvBfJKDwJbPzNv7w-jZiAsdFajuwxeinvFygIZ?LF0ScFiBXrDyQUpfylzzN

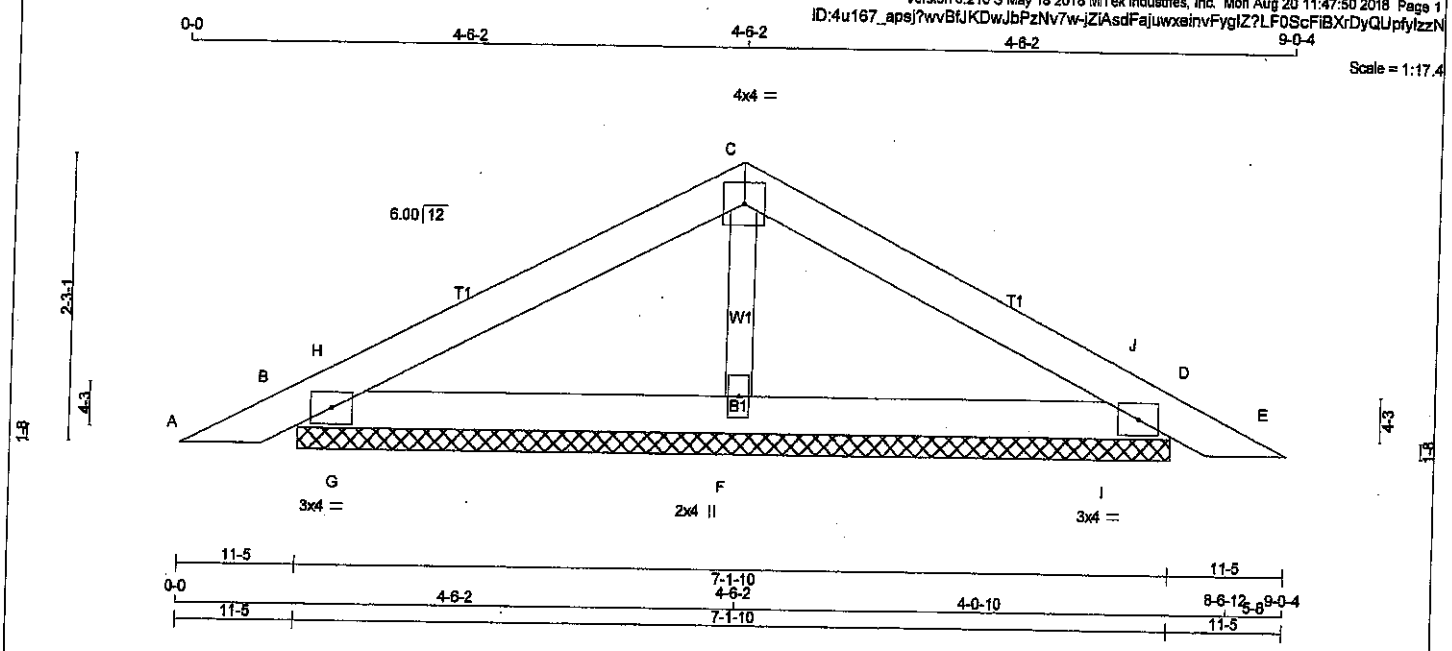

TOTAL WEIGHT = 10 X 21 = 209 lb [M]

LUMBER
N. L. G. A. RULES

CHORDS	SIZE		LUMBER	DESCR.
A - C	2x4	DRY	No.2	SPF
C - E	2x4	DRY	No.2	SPF
B - D	2x4	DRY	No.2	SPF
ALL WEBS	2x3	DRY	No.2	SPF

DRY: SEASONED LUMBER.

PLATES (table is in inches)

JT	TYPE	PLATES	W	LEN Y	X
B	TMB1-I	MT20	3.0	4.0	
C	TTW-p	MT20	4.0	4.0	
D	TMB1-I	MT20	3.0	4.0	
F	BMW1+w	MT20	2.0	4.0	

DIMENSIONS, SUPPORTS AND LOADINGS SPECIFIED BY FABRICATOR TO BE VERIFIED BY BUILDING DESIGNER

BEARINGS

JT	FACTORED GROSS REACTION VERT	HORZ	MAXIMUM FACTORED GROSS REACTION DOWN	HORZ	UPLIFT	INPUT BRG IN-SX	REQRD BRG IN-SX
B	438	0	438	0	0	7-1-10	7-1-10
D	438	0	438	0	0	7-1-10	7-1-10
F	552	0	552	0	0	7-1-10	7-1-10

UNFACTORED REACTIONS

JT	1ST LCASE COMBINED	MAX./MIN. COMPONENT REACTIONS SNOW	LIVE	PERM.LIVE	WIND	DEAD	SOIL
B	312	222 / 0	33 / 0	0 / 0	0 / 0	57 / 0	0 / 0
D	312	222 / 0	33 / 0	0 / 0	0 / 0	57 / 0	0 / 0
F	411	235 / 0	83 / 0	0 / 0	0 / 0	92 / 0	0 / 0

BEARING MATERIAL TO BE SPF NO.2 OR BETTER AT JOINT(S) B, D, F

BRACING
TOP CHORD TO BE SHEATHED OR MAX. PURLIN SPACING = 6.25 FT.
MAX. UNBRACED BOTTOM CHORD LENGTH = 10.00 FT OR RIGID CEILING DIRECTLY APPLIED.

ALL PITCH BREAKS AND PERIMETER CORNER JOINTS MUST BE LATERALLY RESTRAINED.

LOADING
TOTAL LOAD CASES: (4)

CHORDS

MEMB. FR-TO	MAX. FACTORED FORCE (LBS)	FACTORED VERT. LOAD LC1 (PLF) FROM	TO	MAX CSI (LC)	MAX. UNBRAC LENGTH
A- B	0 / 24	-129.7	-129.7	0.07 (1)	10.00
B- H	-85 / 0	-129.7	-129.7	0.05 (1)	6.25
H- C	-136 / 0	-129.7	-129.7	0.19 (1)	6.25
C- J	-136 / 0	-129.7	-129.7	0.19 (1)	6.25
J- D	-85 / 0	-129.7	-129.7	0.05 (1)	6.25
D- E	0 / 24	-129.7	-129.7	0.07 (1)	10.00
B- G	0 / 117	-38.5	-38.5	0.19 (1)	10.00
G- F	0 / 117	-38.5	-38.5	0.19 (1)	10.00
F- I	0 / 117	-38.5	-38.5	0.19 (1)	10.00
I- D	0 / 117	-38.5	-38.5	0.19 (1)	10.00

WEBS

MEMB. FR-TO	MAX. FACTORED FORCE (LBS)	MAX CSI (LC)
F- C	-268 / 0	0.04 (1)
G- H	-331 / 21	0.00 (1)
I- J	-331 / 21	0.00 (1)

DESIGN CRITERIA

SPECIFIED LOADS:

TOP CH.	LL	=	38.2	PSF
	DL	=	6.0	PSF
BOT CH.	LL	=	10.5	PSF
	DL	=	7.0	PSF
TOTAL LOAD		=	61.7	PSF

SPACING = 24.0 IN. C/C

THIS TRUSS IS DESIGNED FOR RESIDENTIAL OR SMALL BUILDING REQUIREMENTS OF PART 9, NBCC 2010, NBCC 2015

THIS DESIGN COMPLIES WITH:
- PART 9 OF OBC 2012, OBC 2018
- CSA 086-09, CSA 086-14
- TPIC 2011, TPIC 2014

(55 % OF 54.3 P.S.F. G.S.L. PLUS 8.4 P.S.F. RAIN LOAD) EQUALS 38.2 P.S.F. SPECIFIED ROOF LIVE LOAD

CSI: TC=0.19/1.00 (C-H:1) , BC=0.19/1.00 (F-G:1) , WB=0.04/1.00 (C-F:1) , SSI=0.25/1.00 (D-I:1)

DOL LUMBER=1.00 NAIL=1.00 LS BEND=1.10 COMP=1.10 SHEAR=1.10 TENS= 1.10

COMPANION LIVE LOAD FACTOR = 1.00

TRUSS PLATE MANUFACTURER IS NOT RESPONSIBLE FOR QUALITY CONTROL IN THE TRUSS MANUFACTURING PLANT .

NAIL VALUES

PLATE	GRIP(DRY) (PSI) MAX	MIN	SHEAR (PLI) MAX	MIN	SECTION (PLI) MAX	MIN
MT20	618	354	1667	788	1987	1656

PLATE PLACEMENT TOL. = 0.250 inches

PLATE ROTATION TOL. = 5.0 Deg.

JSI GRIP= 0.36 (D) (INPUT = 0.90)
JSI METAL= 0.08 (B) (INPUT = 1.00)

LICENSED PROFESSIONAL ENGINEER
08/20/18
H.J.G. ALVES
PROVINCE OF ONTARIO

DWG NO. TAM T1805216
STRUCTURAL
COMPONENT ONLY

TOWN OF INNISFIL
2018-0802-0808
REVIEWED
jpenfold
Building Permit Plans

JOB NAME	TRUSS NAME	QUANTITY	PLY	JOB DESC.	DRWG NO.
297079	P131	2	1	TRUSS DESC.	

Tamarack Roof Truss, Burlington

Version 8.210 S May 18 2018 MiTek Industries, Inc. Mon Aug 20 11:47:53 2018 Page 1
ID:4u167_apsj?wv8fJKDwJbPzNv7w-78OJUfHS0plWV9VUx5E?BdzjdgG3vXHHvwe8Q_ylzzK

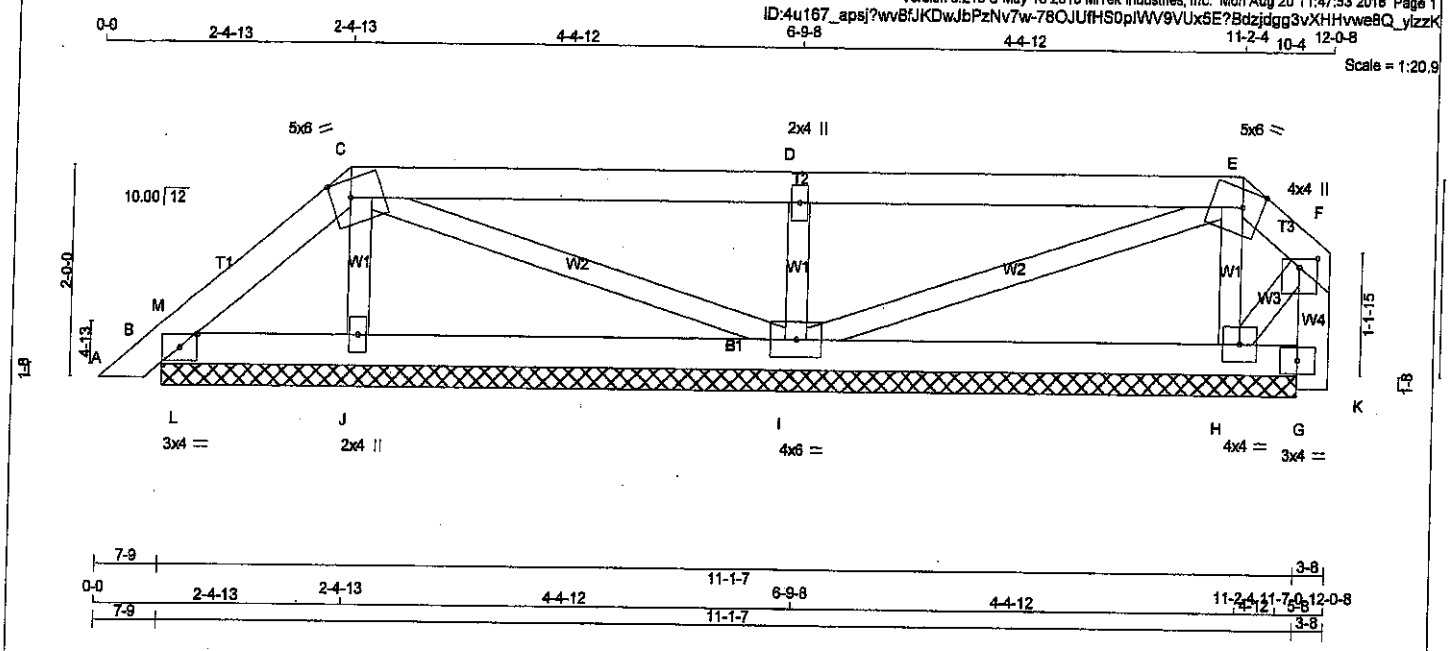

TOTAL WEIGHT = 2 X 40 = 80 lb

LUMBER
N. L. G. A. RULES

CHORDS	SIZE		LUMBER	DESCR.
A - C	2x4	DRY	No.2	SPF
C - E	2x4	DRY	No.2	SPF
E - F	2x4	DRY	No.2	SPF
K - F	2x4	DRY	No.2	SPF
B - G	2x4	DRY	No.2	SPF
ALL WEBS	2x3	DRY	No.2	SPF

DRY: SEASONED LUMBER.

PLATES (table is in inches)

JT	TYPE	PLATES	W	LEN	Y	X
B	TMB1-I	MT20	3.0	4.0	1.50	2.00
C	TTWW-m	MT20	5.0	6.0	2.00	2.25
D	TMW+w	MT20	2.0	4.0		
E	TTWW-m	MT20	5.0	6.0	2.00	2.25
F	TMWW+p	MT20	4.0	4.0	1.00	2.00
G	BVM-I	MT20	3.0	4.0		
H	BMWW1-t	MT20	4.0	4.0		
I	BMWWW1-t	MT20	4.0	6.0		
J	BMW1+w	MT20	2.0	4.0		

DIMENSIONS, SUPPORTS AND LOADINGS SPECIFIED BY FABRICATOR TO BE VERIFIED BY BUILDING DESIGNER

BEARINGS

JT	FACTORED GROSS REACTION VERT	HORZ	MAXIMUM FACTORED GROSS REACTION DOWN	HORZ	UPLIFT	INPUT BRG IN-SX	REQRD BRG IN-SX
B	236	0	236	0	0	11-1-7	11-1-7
J	412	0	412	0	0	11-1-7	11-1-7
I	895	0	895	0	0	11-1-7	11-1-7
H	446	0	446	0	0	11-1-7	11-1-7

UNFACTORED REACTIONS

JT	1ST LCASE COMBINED	MAX./MIN. COMPONENT REACTIONS SNOW	LIVE	PERM.LIVE	WIND	DEAD	SOIL
B	164	131 / 0	8 / 0	0 / 0	0 / 0	26 / 0	0 / 0
J	312	162 / 0	75 / 0	0 / 0	0 / 0	75 / 0	0 / 0
I	651	423 / 0	97 / 0	0 / 0	0 / 0	131 / 0	0 / 0
H	329	198 / 0	60 / 0	0 / 0	0 / 0	71 / 0	0 / 0

BEARING MATERIAL TO BE SPF NO.2 OR BETTER AT JOINT(S) B, J, I, H

BRACING
TOP CHORD TO BE SHEATHED OR MAX. PURLIN SPACING = 6.25 FT.
MAX. UNBRACED BOTTOM CHORD LENGTH = 6.25 FT OR RIGID CEILING DIRECTLY APPLIED.

ALL PITCH BREAKS AND PERIMETER CORNER JOINTS MUST BE LATERALLY RESTRAINED.

LOADING
TOTAL LOAD CASES: (4)

CHORDS

MEMB. FR-TO	MAX. FACTORED FORCE (LBS)	FACTORED VERT. LOAD (PLF) FROM	TO	LC1 MAX CSI (LC)	MAX. UNBRAC LENGTH
A- B	0 / 20	-129.7	-129.7	0.03 (1)	10.00
B- M	-30 / 3	-129.7	-129.7	0.02 (1)	6.25
M- C	-67 / 0	-129.7	-129.7	0.04 (1)	6.25
C- D	-6 / 18	-129.7	-129.7	0.43 (1)	10.00
D- E	-6 / 18	-129.7	-129.7	0.43 (1)	10.00
E- F	-23 / 17	-129.7	-129.7	0.02 (1)	6.25
K- G	0 / 0	0.0	0.0	0.00 (1)	10.00
G- F	-40 / 0	0.0	0.0	0.00 (2)	7.81
B- L	0 / 47	-38.5	-38.5	0.06 (1)	10.00
L- J	0 / 47	-38.5	-38.5	0.09 (2)	10.00
J- I	0 / 30	-38.5	-38.5	0.12 (3)	10.00
I- H	-32 / 17	-38.5	-38.5	0.12 (3)	6.25
H- G	0 / 0	-38.5	-38.5	0.08 (3)	10.00

WEBS

MEMB. FR-TO	MAX. FACTORED FORCE (LBS)	MAX CSI (LC)
J- C	-248 / 0	0.04 (1)
C- I	-51 / 0	0.02 (1)
I- D	-712 / 0	0.10 (1)
I- E	-12 / 15	0.00 (3)
H- E	-286 / 0	0.04 (1)
H- F	-17 / 23	0.01 (3)
L- M	-165 / 0	0.00 (1)

LICENSED PROFESSIONAL ENGINEER
08/20/18
H.J.G. ALVES
PROVINCE OF ONTARIO

DESIGN CRITERIA

SPECIFIED LOADS:

TOP CH.	LL	=	38.2	PSF
	DL	=	6.0	PSF
BOT CH.	LL	=	10.5	PSF
	DL	=	7.0	PSF
TOTAL LOAD		=	61.7	PSF

SPACING = 24.0 IN. C/C

LOADING IN FLAT SECTION BASED ON A SLOPE OF 6.00/12

THIS TRUSS IS DESIGNED FOR RESIDENTIAL OR SMALL BUILDING REQUIREMENTS OF PART 9, NBCC 2010, NBCC 2015

THIS DESIGN COMPLIES WITH:
- PART 9 OF OBC 2012, OBC 2018
- CSA 086-09, CSA 086-14
- TPIC 2011, TPIC 2014

DESIGN ASSUMPTIONS
-OVERHANG NOT TO BE ALTERED OR CUT OFF.

(55 % OF 54.3 P.S.F. G.S.L. PLUS 8.4 P.S.F. RAIN LOAD) EQUALS 38.2 P.S.F. SPECIFIED ROOF LIVE LOAD

CSI: TC=0.43/1.00 (C-D:1) , BC=0.12/1.00 (H-I:3) , WB=0.10/1.00 (D-I:1) , SSI=0.28/1.00 (C-D:1)

DOL LUMBER=1.00 NAIL=1.00 LS BEND=1.10 COMP=1.10 SHEAR=1.10 TENS= 1.10

COMPANION LIVE LOAD FACTOR = 1.00

TRUSS PLATE MANUFACTURER IS NOT RESPONSIBLE FOR QUALITY CONTROL IN THE TRUSS MANUFACTURING PLANT .

NAIL VALUES

PLATE	GRIP(DRY) (PSI) MAX	MIN	SHEAR (PLI) MAX	MIN	SECTION (PLI) MAX	MIN
MT20	618	354	1667	788	1987	1656

PLATE PLACEMENT TOL. = 0.250 inches

PLATE ROTATION TOL. = 5.0 Deg.

JSI GRIP= 0.37 (D) (INPUT = 0.90)
JSI METAL= 0.15 (D) (INPUT = 1.00)

DWG NO. TAM T1005217
STRUCTURAL
COMPONENT ONLY

TOWN OF INNISFIL
2018-0802-0808
REVIEWED
jpenfold
Building Permit Plans

JOB NAME	TRUSS NAME	QUANTITY	PLY	JOB DESC.	DRWG NO.
297079	P132	2	1	TRUSS DESC.	

Tamarack Roof Truss, Burlington

Version 8.210 S May 18 2018 MiTek Industries, Inc. Mon Aug 20 11:47:57 2018 Page 1
ID:4u167_apsj?wvBfJKDwJbPzNv7w-?wdqK0Kz32oy_npFAwlxLT8RhH1QrLRtqYcMZlylzzG

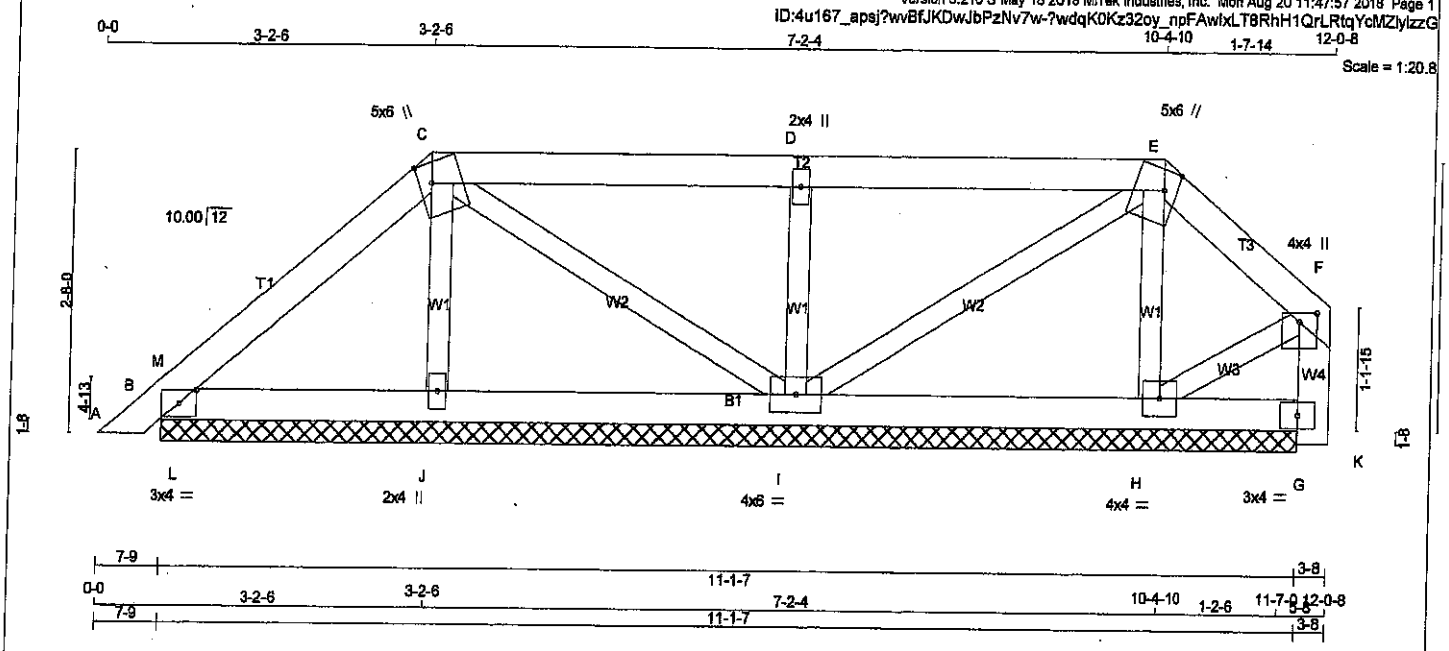

TOTAL WEIGHT = 2 X 42 = 84 lb [M]

LUMBER
N. L. G. A. RULES

CHORDS	SIZE		LUMBER	DESCR.
A - C	2x4	DRY	No.2	SPF
C - E	2x4	DRY	No.2	SPF
E - F	2x4	DRY	No.2	SPF
K - F	2x4	DRY	No.2	SPF
B - G	2x4	DRY	No.2	SPF
ALL WEBS	2x3	DRY	No.2	SPF

DRY: SEASONED LUMBER.

PLATES (table is in inches)

JT	TYPE	PLATES	W	LEN	Y	X
B	TMB1-I	MT20	3.0	4.0	1.50	2.00
C	TTWW+m	MT20	5.0	6.0	2.25	1.50
D	TMW+w	MT20	2.0	4.0		
E	TTWW+m	MT20	5.0	6.0	2.25	1.50
F	TMWW+p	MT20	4.0	4.0	1.00	2.00
G	BVM-I	MT20	3.0	4.0		
H	BMWW1-t	MT20	4.0	4.0		
I	BMWWW1-t	MT20	4.0	6.0		
J	BMW1+w	MT20	2.0	4.0		

DIMENSIONS, SUPPORTS AND LOADINGS SPECIFIED BY FABRICATOR TO BE VERIFIED BY BUILDING DESIGNER

BEARINGS

JT	FACTORED GROSS REACTION VERT	HORZ	MAXIMUM FACTORED GROSS REACTION DOWN	HORZ	UPLIFT	INPUT BRG IN-SX	REQRD BRG IN-SX
B	309	0	309	0	0	11-1-7	11-1-7
J	375	0	375	0	0	11-1-7	11-1-7
H	546	0	546	0	0	11-1-7	11-1-7
I	759	0	759	0	0	11-1-7	11-1-7

UNFACTORED REACTIONS

JT	1ST LCASE COMBINED	MAX./MIN. COMPONENT REACTIONS SNOW	LIVE	PERM.LIVE	WIND	DEAD	SOIL
B	220	159 / 0	21 / 0	0 / 0	0 / 0	39 / 0	0 / 0
J	284	147 / 0	66 / 0	0 / 0	0 / 0	66 / 0	0 / 0
H	403	242 / 0	74 / 0	0 / 0	0 / 0	87 / 0	0 / 0
I	549	365 / 0	76 / 0	0 / 0	0 / 0	108 / 0	0 / 0

BEARING MATERIAL TO BE SPF NO.2 OR BETTER AT JOINT(S) B, J, H, I

BRACING
TOP CHORD TO BE SHEATHED OR MAX. PURLIN SPACING = 6.25 FT.
MAX. UNBRACED BOTTOM CHORD LENGTH = 6.25 FT OR RIGID CEILING DIRECTLY APPLIED.

ALL PITCH BREAKS AND PERIMETER CORNER JOINTS MUST BE LATERALLY RESTRAINED.

LOADING
TOTAL LOAD CASES: (4)

CHORDS

MEMB. FR-TO	MAX. FACTORED FORCE (LBS)	FACTORED VERT. LOAD (PLF) FROM	TO	LC1	MAX CSI (LC)	MAX. UNBRAC LENGTH
A- B	0 / 20	-129.7	-129.7	0.03 (1)	10.00	
B- M	-28 / 6	-129.7	-129.7	0.03 (1)	6.25	
M- C	-66 / 0	-129.7	-129.7	0.10 (1)	6.25	
C- D	0 / 75	-129.7	-129.7	0.29 (1)	10.00	
D- E	0 / 75	-129.7	-129.7	0.29 (1)	10.00	
E- F	0 / 120	-129.7	-129.7	0.08 (1)	10.00	
K- G	0 / 0	0.0	0.0	0.00 (1)	10.00	
G- F	0 / 21	0.0	0.0	0.00 (3)	10.00	
B- L	0 / 46	-38.5	-38.5	0.10 (1)	10.00	
L- J	0 / 46	-38.5	-38.5	0.10 (1)	10.00	
J- I	0 / 36	-38.5	-38.5	0.08 (2)	10.00	
I- H	-109 / 0	-38.5	-38.5	0.08 (3)	6.25	
H- G	0 / 0	-38.5	-38.5	0.06 (2)	10.00	

WEBS

MEMB. FR-TO	MAX. FACTORED FORCE (LBS)	MAX CSI (LC)
J- C	-208 / 0	0.03 (1)
H- E	-381 / 0	0.08 (1)
H- F	-101 / 0	0.02 (1)
I- D	-583 / 0	0.09 (1)
C- I	-130 / 0	0.04 (1)
I- E	0 / 41	0.01 (1)
L- M	-265 / 11	0.00 (1)

LICENSED PROFESSIONAL ENGINEER
08/20/18
H.J.G. ALVES
PROVINCE OF ONTARIO

DESIGN CRITERIA

SPECIFIED LOADS:

TOP CH.	LL	=	38.2	PSF
	DL	=	6.0	PSF
BOT CH.	LL	=	10.5	PSF
	DL	=	7.0	PSF
TOTAL LOAD		=	61.7	PSF

SPACING = 24.0 IN. C/C

LOADING IN FLAT SECTION BASED ON A SLOPE OF 6.00/12

THIS TRUSS IS DESIGNED FOR RESIDENTIAL OR SMALL BUILDING REQUIREMENTS OF PART 9, NBCC 2010, NBCC 2015

THIS DESIGN COMPLIES WITH:
- PART 9 OF OBC 2012, OBC 2018
- CSA 086-09, CSA 086-14
- TPIC 2011, TPIC 2014

DESIGN ASSUMPTIONS
-OVERHANG NOT TO BE ALTERED OR CUT OFF.

(55 % OF 54.3 P.S.F. G.S.L. PLUS 8.4 P.S.F. RAIN LOAD) EQUALS 38.2 P.S.F. SPECIFIED ROOF LIVE LOAD

CSI: TC=0.29/1.00 (D-E:1) , BC=0.10/1.00 (B-L:1) , WB=0.09/1.00 (D-I:1) , SSI=0.23/1.00 (C-D:1)

DOL LUMBER=1.00 NAIL=1.00 LS BEND=1.10 COMP=1.10 SHEAR=1.10 TENS= 1.10

COMPANION LIVE LOAD FACTOR = 1.00

TRUSS PLATE MANUFACTURER IS NOT RESPONSIBLE FOR QUALITY CONTROL IN THE TRUSS MANUFACTURING PLANT .

NAIL VALUES

PLATE	GRIP(DRY) (PSI) MAX	MIN	SHEAR (PLI) MAX	MIN	SECTION (PLI) MAX	MIN
MT20	818	354	1667	788	1987	1656

PLATE PLACEMENT TOL. = 0.250 inches

PLATE ROTATION TOL. = 5.0 Deg.

JSI GRIP= 0.30 (D) (INPUT = 0.90)
JSI METAL= 0.12 (D) (INPUT = 1.00)

DWG NO. TAM T7805218
STRUCTURAL
COMPONENT ONLY

TOWN OF INNISFIL
2018-0802-0808
REVIEWED
jpenfold
Building Permit Plans

JOB NAME	TRUSS NAME	QUANTITY	PLY	JOB DESC.	DRWG NO.
297079	P161	1	1	TRUSS DESC.	

Tamarack Roof Truss, Burlington

Version 8.210 S May 18 2018 MiTek Industries, Inc. Mon Aug 20 11:48:00 2018 Page 1
ID:82TzEwrlebruLmbXiL_F9GzNTA6-QVJyy2NrMzBXrEXqr3sez6m0mU3p2jLJWWr0A4ylzzD

Scale = 1:13.3

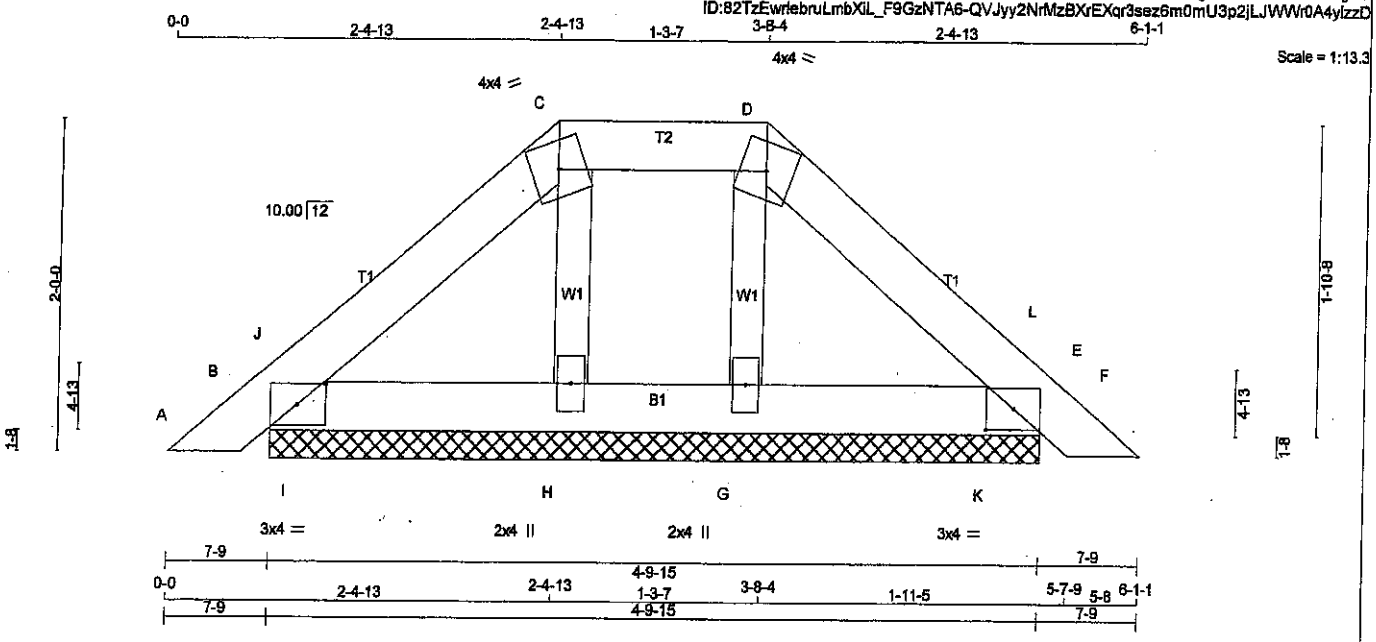

TOTAL WEIGHT = 16 lb
[M]

LUMBER
N. L. G. A. RULES

CHORDS	SIZE		LUMBER	DESCR.
A - C	2x4	DRY	No.2	SPF
C - D	2x4	DRY	No.2	SPF
D - F	2x4	DRY	No.2	SPF
B - E	2x4	DRY	No.2	SPF
ALL WEBS	2x3	DRY	No.2	SPF

DRY: SEASONED LUMBER.

PLATES (table is in inches)

JT	TYPE	PLATES	W	LEN	Y	X
B	TMB1-I	MT20	3.0	4.0	1.50	2.00
C	TTW-m	MT20	4.0	4.0		
D	TTW-m	MT20	4.0	4.0		
E	TMB1-I	MT20	3.0	4.0	1.50	2.00
G	BMW1+w	MT20	2.0	4.0		
H	BMW1+w	MT20	2.0	4.0		

DIMENSIONS, SUPPORTS AND LOADINGS SPECIFIED BY FABRICATOR TO BE VERIFIED BY BUILDING DESIGNER

BEARINGS

JT	FACTORED GROSS REACTION VERT	HORZ	MAXIMUM FACTORED GROSS REACTION DOWN	HORZ	UPLIFT	INPUT BRG IN-SX	REQRD BRG IN-SX
B	262	0	262	0	0	4-9-15	4-9-15
E	262	0	262	0	0	4-9-15	4-9-15
H	213	0	213	0	0	4-9-15	4-9-15
G	213	0	213	0	0	4-9-15	4-9-15

UNFACTORED REACTIONS

JT	1ST LCASE COMBINED	MAX./MIN. COMPONENT REACTIONS SNOW	LIVE	PERM.LIVE	WIND	DEAD	SOIL
B	187	134 / 0	19 / 0	0 / 0	0 / 0	34 / 0	0 / 0
E	187	134 / 0	19 / 0	0 / 0	0 / 0	34 / 0	0 / 0
H	158	91 / 0	32 / 0	0 / 0	0 / 0	35 / 0	0 / 0
G	158	91 / 0	32 / 0	0 / 0	0 / 0	35 / 0	0 / 0

BEARING MATERIAL TO BE SPF NO.2 OR BETTER AT JOINT(S) B, E, H, G

BRACING
TOP CHORD TO BE SHEATHED OR MAX. PURLIN SPACING = 6.25 FT.
MAX. UNBRACED BOTTOM CHORD LENGTH = 10.00 FT OR RIGID CEILING DIRECTLY APPLIED.

ALL PITCH BREAKS AND PERIMETER CORNER JOINTS MUST BE LATERALLY RESTRAINED.

LOADING
TOTAL LOAD CASES: (4)

CHORDS

MEMB. FR-TO	MAX. FACTORED FORCE (LBS)	FACTORED VERT. LOAD (PLF) FROM	TO	LC1	MAX CSI (LC)	MAX. UNBRAC LENGTH
A- B	0 / 20	-129.7	-129.7		0.03 (1)	10.00
B- J	-71 / 0	-129.7	-129.7		0.01 (3)	6.25
J- C	-78 / 0	-129.7	-129.7		0.05 (1)	6.25
C- D	-49 / 0	-129.7	-129.7		0.04 (1)	6.25
D- L	-78 / 0	-129.7	-129.7		0.05 (1)	6.25
L- E	-71 / 0	-129.7	-129.7		0.01 (3)	6.25
E- F	0 / 20	-129.7	-129.7		0.03 (1)	10.00
B- I	0 / 58	-38.5	-38.5		0.05 (1)	10.00
I- H	0 / 58	-38.5	-38.5		0.05 (1)	10.00
H- G	0 / 49	-38.5	-38.5		0.03 (1)	10.00
G- K	0 / 58	-38.5	-38.5		0.05 (1)	10.00
K- E	0 / 58	-38.5	-38.5		0.05 (1)	10.00

WEBS

MEMB. FR-TO	MAX. FACTORED FORCE (LBS)	MAX CSI (LC)
H- C	-130 / 0	0.02 (1)
G- D	-130 / 0	0.02 (1)
I- J	-124 / 18	0.00 (1)
K- L	-124 / 18	0.00 (1)

LICENSED PROFESSIONAL ENGINEER
08/30/18
H.J.G. ALVES
PROVINCE OF ONTARIO

DESIGN CRITERIA

SPECIFIED LOADS:

TOP CH.	LL	=	38.2	PSF
	DL	=	6.0	PSF
BOT CH.	LL	=	10.5	PSF
	DL	=	7.0	PSF
TOTAL LOAD		=	61.7	PSF

SPACING = 24.0 IN. C/C

LOADING IN FLAT SECTION BASED ON A SLOPE OF 6.00/12

THIS TRUSS IS DESIGNED FOR RESIDENTIAL OR SMALL BUILDING REQUIREMENTS OF PART 9, NBCC 2010, NBCC 2015

THIS DESIGN COMPLIES WITH:
- PART 9 OF OBC 2012, OBC 2018
- CSA 086-09, CSA 086-14
- TPIC 2011, TPIC 2014

(55 % OF 54.3 P.S.F. G.S.L. PLUS 8.4 P.S.F. RAIN LOAD) EQUALS 38.2 P.S.F. SPECIFIED ROOF LIVE LOAD

CSI: TC=0.05/1.00 (C-J:1) , BC=0.05/1.00 (H-I:1) , WB=0.02/1.00 (C-H:1) , SSI=0.10/1.00 (B-I:1)

DOL LUMBER=1.00 NAIL=1.00 LS BEND=1.10 COMP=1.10 SHEAR=1.10 TENS= 1.10

COMPANION LIVE LOAD FACTOR = 1.00

TRUSS PLATE MANUFACTURER IS NOT RESPONSIBLE FOR QUALITY CONTROL IN THE TRUSS MANUFACTURING PLANT .

NAIL VALUES

PLATE	GRIP(DRY) (PSI) MAX	MIN	SHEAR (PLI) MAX	MIN	SECTION (PLI) MAX	MIN
MT20	618	354	1667	788	1987	1656

PLATE PLACEMENT TOL. = 0.250 Inches

PLATE ROTATION TOL. = 5.0 Deg.

JSI GRIP= 0.20 (E) (INPUT = 0.90)
JSI METAL= 0.05 (E) (INPUT = 1.00)

DWG NO. TAM 7805219
STRUCTURAL
COMPONENT ONLY

TOWN OF INNISFIL
2018-0802-0808
REVIEWED
jpenfold
Building Permit Plans

JOB NAME	TRUSS NAME	QUANTITY	PLY	JOB DESC.	DRWG NO.
297079	P162	3	1	TRUSS DESC.	

Tamarack Roof Truss, Burlington

Version 8.210 S May 18 2018 MiTek Industries, Inc. Mon Aug 20 11:48:04 2018 Page 1
ID:82TzEwrlebruLmbXiL_F9GzNTA6-IGYToQQMQBhyKsrb4vwa7ywg96Q5_XKvR8pEJrylzz9

Scale = 1:17.3

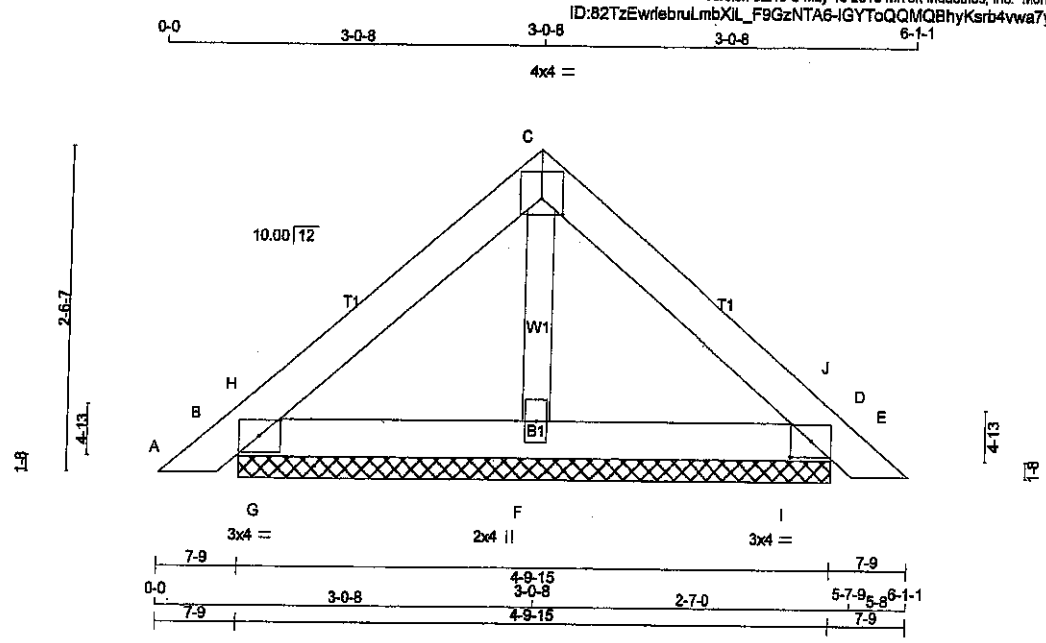

TOTAL WEIGHT = 3 X 16 = 48 lb [M]

LUMBER
N. L. G. A. RULES

CHORDS	SIZE		LUMBER	DESCR.
A - C	2x4	DRY	No.2	SPF
C - E	2x4	DRY	No.2	SPF
B - D	2x4	DRY	No.2	SPF
ALL WEBS	2x3	DRY	No.2	SPF

DRY: SEASONED LUMBER.

PLATES (table is in inches)

JT	TYPE	PLATES	W	LEN	Y	X
B	TMB1-I	MT20	3.0	4.0	1.50	2.00
C	TTW-p	MT20	4.0	4.0	1.50	2.00
D	TMB1-I	MT20	3.0	4.0	1.50	2.00
F	BMW1+w	MT20	2.0	4.0		

DIMENSIONS, SUPPORTS AND LOADINGS SPECIFIED BY FABRICATOR TO BE VERIFIED BY BUILDING DESIGNER

BEARINGS

JT	FACTORED GROSS REACTION VERT	HORZ	MAXIMUM FACTORED GROSS REACTION DOWN	HORZ	UPLIFT	INPUT BRG IN-SX	REQRD BRG IN-SX
B	321	0	321	0	0	4-9-15	4-9-15
D	321	0	321	0	0	4-9-15	4-9-15
F	310	0	310	0	0	4-9-15	4-9-15

UNFACTORED REACTIONS

JT	1ST LCASE COMBINED	MAX./MIN. COMPONENT REACTIONS SNOW	LIVE	PERM.LIVE	WIND	DEAD	SOIL
B	228	164 / 0	23 / 0	0 / 0	0 / 0	41 / 0	0 / 0
D	228	164 / 0	23 / 0	0 / 0	0 / 0	41 / 0	0 / 0
F	234	123 / 0	56 / 0	0 / 0	0 / 0	56 / 0	0 / 0

BEARING MATERIAL TO BE SPF NO.2 OR BETTER AT JOINT(S) B, D, F

BRACING
TOP CHORD TO BE SHEATHED OR MAX. PURLIN SPACING = 6.25 FT.
MAX. UNBRACED BOTTOM CHORD LENGTH = 10.00 FT OR RIGID CEILING DIRECTLY APPLIED.

ALL PITCH BREAKS AND PERIMETER CORNER JOINTS MUST BE LATERALLY RESTRAINED.

LOADING
TOTAL LOAD CASES: (4)

CHORDS

MEMB. FR-TO	MAX. FACTORED FORCE (LBS)	FACTORED VERT. LOAD LC1 (PLF) FROM	TO	MAX CSI (LC)	MAX. UNBRAC LENGTH
A- B	0 / 20	-129.7	-129.7	0.03 (1)	10.00
B- H	-50 / 0	-129.7	-129.7	0.04 (1)	6.25
H- C	-117 / 0	-129.7	-129.7	0.09 (1)	6.25
C- J	-117 / 0	-129.7	-129.7	0.09 (1)	6.25
J- D	-50 / 0	-129.7	-129.7	0.04 (1)	6.25
D- E	0 / 20	-129.7	-129.7	0.03 (1)	10.00
B- G	0 / 84	-38.5	-38.5	0.09 (1)	10.00
G- F	0 / 84	-38.5	-38.5	0.09 (1)	10.00
F- I	0 / 84	-38.5	-38.5	0.09 (1)	10.00
I- D	0 / 84	-38.5	-38.5	0.09 (1)	10.00

WEBS

MEMB. FR-TO	MAX. FACTORED FORCE (LBS)	MAX CSI (LC)
F- C	-118 / 0	0.02 (1)
G- H	-252 / 10	0.00 (1)
I- J	-252 / 10	0.00 (1)

DESIGN CRITERIA

SPECIFIED LOADS:

TOP CH.	LL =	38.2	PSF
	DL =	6.0	PSF
BOT CH.	LL =	10.5	PSF
	DL =	7.0	PSF
TOTAL LOAD	=	61.7	PSF

SPACING = 24.0 IN. C/C

THIS TRUSS IS DESIGNED FOR RESIDENTIAL OR SMALL BUILDING REQUIREMENTS OF PART 9, NBCC 2010, NBCC 2015

THIS DESIGN COMPLIES WITH:
- PART 9 OF OBC 2012, OBC 2018
- CSA 086-09, CSA 086-14
- TPIC 2011, TPIC 2014

(55 % OF 54.3 P.S.F. G.S.L. PLUS 8.4 P.S.F. RAIN LOAD) EQUALS 38.2 P.S.F. SPECIFIED ROOF LIVE LOAD

CSI: TC=0.09/1.00 (C-J:1) , BC=0.09/1.00 (F-I:1) , WB=0.02/1.00 (C-F:1) , SSI=0.19/1.00 (D-I:1)

DOL LUMBER=1.00 NAIL=1.00 LS BEND=1.10 COMP=1.10 SHEAR=1.10 TENS= 1.10

COMPANION LIVE LOAD FACTOR = 1.00

TRUSS PLATE MANUFACTURER IS NOT RESPONSIBLE FOR QUALITY CONTROL IN THE TRUSS MANUFACTURING PLANT .

NAIL VALUES

PLATE	GRIP(DRY) (PSI) MAX	MIN	SHEAR (PLI) MAX	MIN	SECTION (PLI) MAX	MIN
MT20	618	354	1667	788	1987	1656

PLATE PLACEMENT TOL. = 0.250 inches

PLATE ROTATION TOL. = 5.0 Deg.

JSI GRIP= 0.26 (D) (INPUT = 0.90)
JSI METAL= 0.06 (B) (INPUT = 1.00)

LICENSED PROFESSIONAL ENGINEER
08/20/18
H.J.G. ALVES
PROVINCE OF ONTARIO

DWG NO. TAM T1805220
STRUCTURAL
COMPONENT ONLY

TOWN OF INNISFIL
2018-0802-0808
REVIEWED
jpenfold
Building Permit Plans

JOB NAME	TRUSS NAME	QUANTITY	PLY	JOB DESC.	DRWG NO.
297079	P163	1	1	TRUSS DESC.	

Tamarack Roof Truss, Burlington

Version 8.210 S May 18 2018 MiTek Industries, Inc. Mon Aug 20 11:48:07 2018 Page 1
ID:82TzEwrlebruLmbXiL_F9GzNTA6-jrEcQRSEj63XBJaAI1UHlaYC_JSXBt2L762uwAyjzz6

Scale = 1:12.9

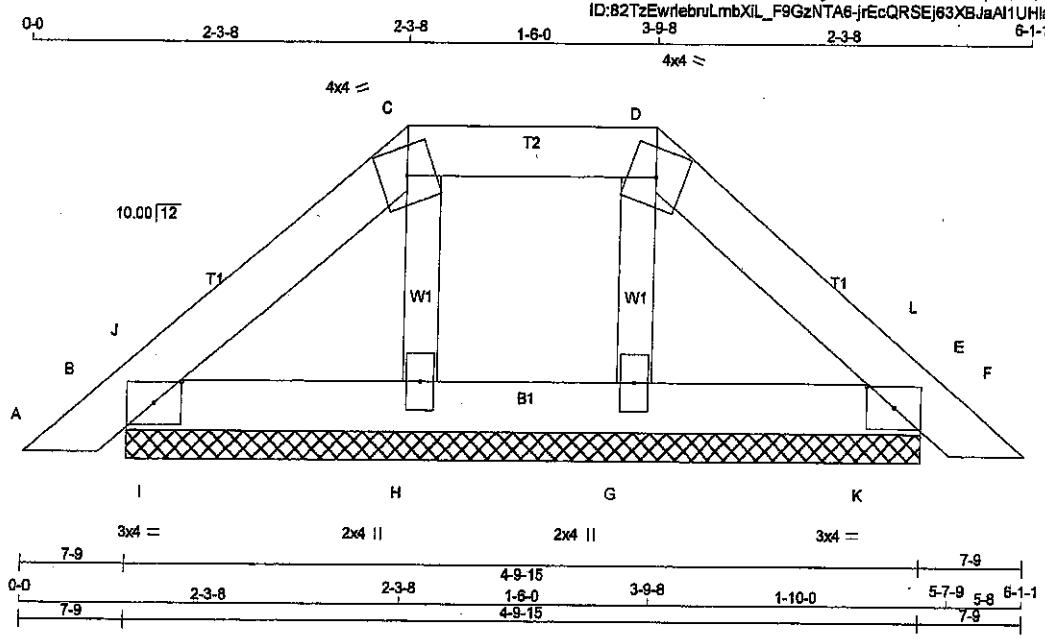

TOTAL WEIGHT = 16 lb

LUMBER
N. L. G. A. RULES

CHORDS	SIZE		LUMBER	DESCR.
A - C	2x4	DRY	No.2	SPF
C - D	2x4	DRY	No.2	SPF
D - F	2x4	DRY	No.2	SPF
B - E	2x4	DRY	No.2	SPF
ALL WEBS	2x3	DRY	No.2	SPF

DRY: SEASONED LUMBER.

PLATES (table is in inches)

JT	TYPE	PLATES	W	LEN	Y	X
B	TMB1-I	MT20	3.0	4.0	1.50	2.00
C	TTW-m	MT20	4.0	4.0		
D	TTW-m	MT20	4.0	4.0		
E	TMB1-I	MT20	3.0	4.0	1.50	2.00
G	BMW1+w	MT20	2.0	4.0		
H	BMW1+w	MT20	2.0	4.0		

DIMENSIONS, SUPPORTS AND LOADINGS SPECIFIED BY FABRICATOR TO BE VERIFIED BY BUILDING DESIGNER

BEARINGS

JT	FACTORED GROSS REACTION VERT	HORZ	MAXIMUM FACTORED GROSS REACTION DOWN	HORZ	UPLIFT	INPUT BRG IN-SX	REQRD BRG IN-SX
B	253	0	253	0	0	4-9-15	4-9-15
E	253	0	253	0	0	4-9-15	4-9-15
H	223	0	223	0	0	4-9-15	4-9-15
G	223	0	223	0	0	4-9-15	4-9-15

UNFACTORED REACTIONS

JT	1ST LCASE COMBINED	MAX./MIN. COMPONENT REACTIONS SNOW	LIVE	PERM.LIVE	WIND	DEAD	SOIL
B	180	130 / 0	18 / 0	0 / 0	0 / 0	32 / 0	0 / 0
E	180	130 / 0	18 / 0	0 / 0	0 / 0	32 / 0	0 / 0
H	166	96 / 0	33 / 0	0 / 0	0 / 0	37 / 0	0 / 0
G	166	96 / 0	33 / 0	0 / 0	0 / 0	37 / 0	0 / 0

BEARING MATERIAL TO BE SPF NO.2 OR BETTER AT JOINT(S) B, E, H, G

BRACING
TOP CHORD TO BE SHEATHED OR MAX. PURLIN SPACING = 6.25 FT.
MAX. UNBRACED BOTTOM CHORD LENGTH = 10.00 FT OR RIGID CEILING DIRECTLY APPLIED.

ALL PITCH BREAKS AND PERIMETER CORNER JOINTS MUST BE LATERALLY RESTRAINED.

LOADING
TOTAL LOAD CASES: (4)

CHORDS

MEMB. FR-TO	MAX. FACTORED FORCE (LBS)	FACTORED VERT. LOAD (PLF) FROM	TO	LC1 MAX CSI (LC)	MAX. UNBRAC LENGTH
A- B	0 / 20	-129.7	-129.7	0.03 (1)	10.00
B- J	-72 / 0	-129.7	-129.7	0.01 (3)	6.25
J- C	-75 / 0	-129.7	-129.7	0.04 (1)	6.25
C- D	-46 / 0	-129.7	-129.7	0.05 (1)	6.25
D- L	-75 / 0	-129.7	-129.7	0.04 (1)	6.25
L- E	-72 / 0	-129.7	-129.7	0.01 (3)	6.25
E- F	0 / 20	-129.7	-129.7	0.03 (1)	10.00
B- I	0 / 56	-38.5	-38.5	0.05 (1)	10.00
I- H	0 / 56	-38.5	-38.5	0.05 (1)	10.00
H- G	0 / 46	-38.5	-38.5	0.03 (1)	10.00
G- K	0 / 56	-38.5	-38.5	0.05 (1)	10.00
K- E	0 / 56	-38.5	-38.5	0.05 (1)	10.00

WEBS

MEMB. FR-TO	MAX. FACTORED FORCE (LBS)	MAX CSI (LC)
H- C	-140 / 0	0.02 (1)
G- D	-140 / 0	0.02 (1)
I- J	-111 / 16	0.00 (1)
K- L	-111 / 16	0.00 (1)

LICENSED PROFESSIONAL ENGINEER
08/20/18
H.J.G. ALVES
PROVINCE OF ONTARIO

DESIGN CRITERIA

SPECIFIED LOADS:

TOP CH.	LL	=	38.2	PSF
	DL	=	6.0	PSF
BOT CH.	LL	=	10.5	PSF
	DL	=	7.0	PSF
TOTAL LOAD		=	61.7	PSF

SPACING = 24.0 IN. C/C

LOADING IN FLAT SECTION BASED ON A SLOPE OF 6.00/12

THIS TRUSS IS DESIGNED FOR RESIDENTIAL OR SMALL BUILDING REQUIREMENTS OF PART 9, NBCC 2010, NBCC 2015

THIS DESIGN COMPLIES WITH:
- PART 9 OF OBC 2012, OBC 2018
- CSA 086-09, CSA 086-14
- TPIC 2011, TPIC 2014

(55 % OF 54.3 P.S.F. G.S.L. PLUS 8.4 P.S.F. RAIN LOAD) EQUALS 38.2 P.S.F. SPECIFIED ROOF LIVE LOAD

CSI: TC=0.05/1.00 (C-D:1) , BC=0.05/1.00 (G-K:1) , WB=0.02/1.00 (D-G:1) , SSI=0.09/1.00 (E-K:1)

DOL LUMBER=1.00 NAIL=1.00 LS BEND=1.10 COMP=1.10 SHEAR=1.10 TENS= 1.10

COMPANION LIVE LOAD FACTOR = 1.00

TRUSS PLATE MANUFACTURER IS NOT RESPONSIBLE FOR QUALITY CONTROL IN THE TRUSS MANUFACTURING PLANT .

NAIL VALUES

PLATE	GRIP(DRY) (PSI) MAX	MIN	SHEAR (PLI) MAX	MIN	SECTION (PLI) MAX	MIN
MT20	616	354	1667	788	1987	1656

PLATE PLACEMENT TOL. = 0.250 inches

PLATE ROTATION TOL. = 5.0 Deg.

JSI GRIP= 0.19 (E) (INPUT = 0.90)
JSI METAL= 0.04 (B) (INPUT = 1.00)

DWG NO. TAM T1805221
STRUCTURAL
COMPONENT ONLY

TOWN OF INNISFIL
2018-0802-0808
REVIEWED
openfold
Building Permit Plans

LUL/LUS/LJS/HUS/HHUS/HGUS

SIMPSON Strong-Tie®

LICENSED PROFESSIONAL ENGINEER
1/15/18
B. D. BUNTING
PROVINCE OF ONTARIO

HHUS/HGUS

See Hanger Options Information on pp. 125–127.

HHUS — Sloped and/or Skewed Seat

- HHUS hangers can be skewed to a maximum of 45° and/or sloped to a maximum of 45°
- For skew only, maximum factored down resistance is 0.85 of the table value
- For sloped only or sloped and skewed hangers, the maximum factored down resistance is 0.72 of the table value
- Uplift resistances for sloped/skewed conditions are 0.62 of the table value
- The joist must be bevel-cut to allow for double-shear nailing

HGUS — Skewed Seat

- HGUS hangers can be skewed only to a maximum of 45°. Factored resistances are:

HGUS Seat Width	Joist	Down Resistance	Uplift
W < 2"	Bevel or square cut	0.62 of table value	0.46 of table value
2" < W < 6"	Bevel cut	0.67 of table value	0.41 of table value
2" < W < 6"	Square cut	0.46 of table value	0.41 of table value
W > 6"	Bevel cut	0.75 of table value	0.41 of table value

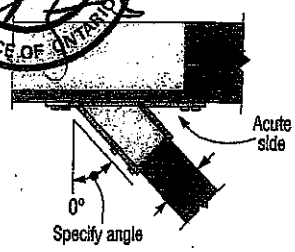

Top View HHUS Hanger Skewed Right
(joist must be bevel cut)
All joist nails installed on the outside angle *(non-acute side)*.

Standard and Double-Shear Joist Hangers (cont.)

These products are available with additional corrosion protection. For more information, see p. 24.

These products are approved for installation with the Strong-Drive® SD Connector screw. See pp. 32–34 for more information.

Model No.	Ga.	Dimensions (in.) W	H	B	d_e[3]	Fasteners Header	Joist	Factored Resistance S-P-F Down (Kd = 1.5) lb. / kN	S-P-F Uplift (Kd = 1.15) lb. / kN	S-P-F Uplift (Kn = 1.15) lb. / kN	S-P-F Normal (Kn = 1.00) lb. / kN
Single 2x Sizes											
LUS24	18	1⅝	3⅛	1¾	2¼	(4) 10d	(2) 10d	710 / 3.16	1625 / 7.23	645 / 2.87	1155 / 5.14
LU24L	22	1⅝	3	1⅝	2 11/16	(4) 10d	(2) 10d x 1½"	360 / 1.60	1020 / 4.54	320 / 1.42	725 / 3.22
LU26L	22	1⅝	5	1⅝	4⅝	(6) 10d	(4) 10d x 1½"	720 / 3.20	1605 / 7.14	645 / 2.87	1140 / 5.07
LUS26	18	1⅝	4¾	1¾	3¾	(4) 10d	(4) 10d	1420 / 6.32	2170 / 9.65	1290 / 5.74	1630 / 7.25
HUS26	16	1⅝	5⅝	3	3 15/16	(14) 16d	(6) 16d	2705 / 12.0	4940 / 22.0	2065 / 9.20	3875 / 17.24
LJS26DS	18	1⅝	5	3½	4⅝	(16) 16d	(6) 16d	2055 / 9.15	4265 / 18.97	1460 / 6.49	4115 / 18.31
HGUS26	12	1⅝	5⅝	5	4⅞	(20) 16d	(8) 16d	2685 / 11.94	6625 / 29.5	2685 / 11.96	5700 / 25.35
LU28L	20	1⅝	6¾	1⅝	5⅞	(8) 10d	(6) 10d x 1½"	1140 / 5.07	2185 / 9.72	1020 / 4.54	1550 / 6.89
LUS28	18	1⅝	6⅝	1¾	3¾	(6) 10d	(4) 10d	1420 / 6.32	2520 / 11.2	1290 / 5.74	1790 / 7.96
HUS28	16	1⅝	7 1/16	3	6 1/16	(22) 16d	(8) 16d	3605 / 16.0	5365 / 23.9	2675 / 11.90	4345 / 19.33
HGUS28	12	1⅝	7⅛	5	6⅛	(36) 16d	(12) 16d	3310 / 14.7	7675 / 34.1	3310 / 14.74	6900 / 30.73
LU210L	20	1⅝	8	1⅝	7⅝	(10) 10d	(6) 10d x 1½"	1140 / 5.07	2495 / 11.10	1020 / 4.54	1770 / 7.87
LUS210	18	1⅝	7 13/16	1¾	3⅞	(8) 10d	(4) 10d	1420 / 6.32	2785 / 12.39	1290 / 5.74	2210 / 9.83

1. Factored uplift resistances have been increased 15% for wind or earthquake loading; no further increase is allowed.
2. Designer must ensure that hanger is compatible with truss when reduced heel height is used.
3. d_e is the distance from the bearing seat to the top joist nail.
4. Resistances shown require a minimum 2-ply girder truss. For fastening to single-ply truss request technical bulletin T-C-N10TRSSCN and/or see installation notes.
5. Nails: 16d = 0.162" dia. x 3½" long. See pp. 27–28 for other nail sizes and information.

C-C-CAN2018 ©2017 SIMPSON STRONG-TIE COMPANY INC.

TOWN OF INNISFIL
2018-0802-0808
REVIEWED
jpenfold
3/19/2021
Building Permit Plans

SIMPSON Strong-Tie®

Face-Mount Hangers

These products are available with additional corrosion protection. For more information, see p. 24.

These products are approved for installation with the Strong-Drive® SD Connector screw. See pp. 32–34 for more information.

Model No.	Ga.	Dimensions (in.) W	H	B	d_e[3]	Fasteners Header	Joist	Factored Resistance D.Fir-L Uplift (Kp = 1.15) lb. kN	D.Fir-L Normal (Kp = 1.00) lb. kN	S-P-F Uplift (Kp = 1.15) lb. kN	S-P-F Normal (Kp = 1.00) lb. kN
Double 2x Sizes											
LUS24-2	18	3⅛	3⅛	2	1½	(4) 16d	(2) 16d	835	2020	590	1435
								3.71	8.98	2.62	6.38
LUS26-2	18	3⅛	4⅞	2	4	(4) 16d	(4) 16d	1720	2595	1545	1920
								7.65	11.54	6.87	8.54
HHUS26-2	14	3⁵⁄₁₆	5⅜	3	3¹⁵⁄₁₆	(14) 16d	(6) 16d	2850	7335	2065	5205
								12.68	32.63	9.20	23.15
HGUS26-2	12	3⁵⁄₁₆	5⁷⁄₁₆	4	4⅛	(20) 16d	(8) 16d	4385	8950	3110	6355
								19.51	39.81	13.83	28.27
LUS28-2	18	3⅛	7	2	4	(6) 16d	(4) 16d	1720	3325	1545	2575
								7.65	14.79	6.87	11.45
HHUS28-2	14	3⁵⁄₁₆	7⁵⁄₁₆	3	6⅛	(22) 16d	(8) 16d	3765	8940	2675	6345
								16.75	39.77	11.90	28.22
HGUS28-2	12	3⁵⁄₁₆	7⁵⁄₁₆	4	6⅛	(36) 16d	(12) 16d	6070	12980	4310	9215
								27.00	57.74	19.17	40.99
LUS210-2	18	3⅛	9	2	6	(8) 16d	(6) 16d	2580	4500	2320	3195
								11.48	20.02	10.32	14.21
HHUS210-2	14	3⁵⁄₁₆	9⁵⁄₁₆	3	8	(30) 16d	(10) 16d	4670	9660	4235	7000
								20.77	42.96	18.84	31.14
HGUS210-2	12	3⁵⁄₁₆	9⁵⁄₁₆	4	8⅛	(46) 16d	(16) 16d	6840	14015	4855	10270
								30.43	62.34	21.60	45.69
Triple 2x Sizes											
HGUS26-3	12	4¹⁵⁄₁₆	5½	4	4⅛	(20) 16d	(8) 16d	4385	8950	3110	6355
								19.51	39.81	13.83	28.27
HGUS28-3	12	4¹⁵⁄₁₆	7¼	4	6⅛	(36) 16d	(12) 16d	6070	12980	4310	9215
								27.00	57.74	19.17	40.99
HHUS210-3	14	4¹⁵⁄₁₆	9	3	7⁹⁄₁₆	(30) 16d	(10) 16d	4670	9670	4235	6865
								20.77	43.02	18.84	30.54
HGUS210-3	12	4¹⁵⁄₁₆	9¼	4	8⅛	(46) 16d	(16) 16d	6840	14645	4855	10400
								30.43	65.14	21.60	46.26
Quadruple 2x Sizes											
HGUS26-4	12	6⁹⁄₁₆	5⁷⁄₁₆	4	4⅛	(20) 16d	(8) 16d	4385	8950	3110	6355
								19.51	39.81	13.83	28.27
HGUS28-4	12	6⁹⁄₁₆	7⁹⁄₁₆	4	6⅛	(36) 16d	(12) 16d	6070	12980	4310	9215
								27.00	57.74	19.17	40.99
HHUS210-4	14	6⅛	8⅞	3	7⁹⁄₁₆	(30) 16d	(10) 16d	4670	10155	4235	7210
								20.77	45.17	18.84	32.07
HGUS210-4	12	6⁹⁄₁₆	9¼	4	8⅛	(46) 16d	(16) 16d	6840	14645	4855	10400
								30.43	65.14	21.60	46.26
HGUS212-4	12	6⁹⁄₁₆	10⅝	4	10⅛	(56) 16d	(20) 16d	7640	14995	5425	10645
								33.98	66.70	24.13	47.35
HGUS214-4	12	6⁹⁄₁₆	12⅝	4	11⅛	(66) 16d	(22) 16d	10130	16400	7195	11645
								45.06	72.95	32.00	51.80
4x Sizes											
LUS46	18	3⁹⁄₁₆	4¾	2	3⅞	(4) 16d	(4) 16d	1720	2595	1545	1920
								7.65	11.54	6.87	8.54
HHUS46	14	3⅝	5¼	3	3¹⁵⁄₁₆	(14) 16d	(6) 16d	2540	7335	2065	5205
								11.29	32.63	9.20	23.15
HGUS46	12	3⅝	5¼	4	4⅛	(20) 16d	(8) 16d	4385	8950	3110	6355
								19.51	39.81	13.83	28.27
LUS48	18	3⁹⁄₁₆	6¾	2	3⅞	(6) 16d	(4) 16d	1720	3325	1545	2575
								7.65	14.79	6.87	11.45
HHUS48	14	3⅝	7⅛	3	6⅛	(22) 16d	(8) 16d	3765	8940	2675	6345
								16.75	39.77	11.90	28.22
HGUS48	12	3⅝	7¹⁄₁₆	4	6¹⁄₁₆	(36) 16d	(12) 16d	6070	12980	4310	9215
								27.00	57.74	19.17	40.99
LUS410	18	3⁹⁄₁₆	8¾	2	5⁹⁄₁₆	(8) 16d	(6) 16d	2580	4500	2320	3195
								11.48	20.02	10.32	14.21
HGUS410	12	3⅝	9	4	8¹⁄₁₆	(46) 16d	(16) 16d	6840	14015	4855	10270
								30.43	62.34	21.60	45.69
HGUS412	12	3⅝	10⅞	4	10¹⁄₁₆	(56) 16d	(20) 16d	7640	14995	5425	10645
								33.98	66.70	24.13	47.35
HGUS414	12	3⅝	12⅞	4	11¹⁄₁₆	(66) 16d	(22) 16d	10130	16400	7195	11645
								45.06	72.95	32.00	51.80

See footnotes on p. 258.

LICENSED PROFESSIONAL ENGINEER
1/15/18
B. D. BUNTING
PROVINCE OF ONTARIO

Plated Truss Connectors

C-C-CAN2018 ©2017 SIMPSON STRONG-TIE COMPANY INC.

TOWN OF INNISFIL
2018-0802-0808
REVIEWED
jpenfold
3/19/2021
Building Permit Plans

TECHNICAL BULLETIN

TBE – Truss Bearing Enhancers

SIMPSON Strong-Tie®

One size works with any number of girder plys. The TBE transfers load from the truss or girder to plates for bearing-limited conditions, and provides exceptional uplift capacity. Replaces nail-on scabs that provide lower load transfer, or in some cases, an additional ply when needed for bearing. The table lists factored resistances for TBE4 used on 2x4 and TBE6 used on 2x6 top plates. The tables give the different resistances calculated for TBE with and without wood bearing.

Material: 18 gauge

Finish: G90 galvanized

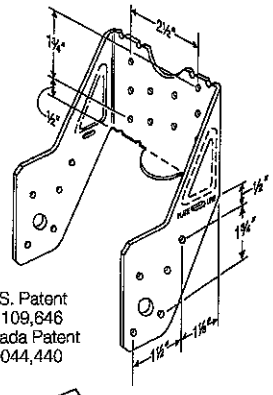

TBE4
(TBE6 similar)

U.S. Patent 5,109,646
Canada Patent 2,044,440

Design:

- Factored resistances are in accordance with CSA 086-14.
- Factored uplift resistances have been increased 15% for short term load duration with no further increase allowed; reduce resistances by 15% for standard term load duration.
- Factored resistances are determined by nail shear calculations or tests of the metal connectors. The attached wood members must be designed to with stand the loads imposed by the nails.

Installation:

- Use all specified fasteners.
- Nails: 10d = 0.148" dia x 3" long common wire, 10d x 1½" = 0.148" dia x 1½" long.
- TBE must be installed in pairs.
- Top plate size is 2x4 for TBE4, 2x6 for TBE6. Use alternate installation for TBE4 and TBE6 on larger plates or pre-sheathed walls.
- Do not use TBEs in end-grain-bearing applications.
- See current catalogue for alternate installations.

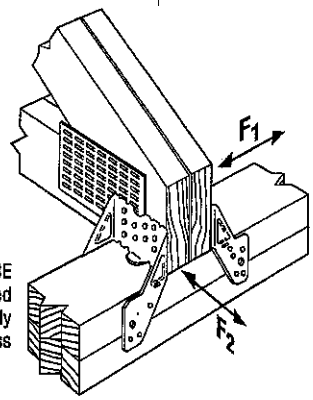

Two TBE installed with two ply girder truss

Model No.	No. of Plies	Fasteners: Truss	Fasteners: Plate	TBE Only Factored Resistance: Uplift (K_D = 1.15)	TBE Only Factored Resistance: Normal (K_D = 1.00)	TBE Only Factored Resistance: Lateral (K_D = 1.15) F_1	TBE Only Factored Resistance: Lateral (K_D = 1.15) F_2	Combined TBE and Wood Bearing Factored Resistance: Normal[2] (K_D = 1.00)	Combined TBE and Wood Bearing Factored Resistance: TBL[4]
				lb.	lb.	lb.	lb.	lb.	in.
D.Fir-L									
TBE4	1	(20) 10d x 1½"	(20) 10d x 1½"	1605	3540	655	1415	7820	6.44
	2	(20) 10d	(20) 10d	1605	3660	655	1415	12180	5.00
	3	(20) 10d	(20) 10d	1605	3660	655	1415	16445	4.50
	4	(20) 10d	(20) 10d	1605	3660	655	1415	20705	4.25
TBE6	1	(20) 10d x 1½"	(20) 10d x 1½"	1760	3540	490	1745	10235	8.41
	2	(20) 10d	(20) 10d	1760	3860	490	1745	17250	7.09
	3	(20) 10d	(20) 10d	1760	3860	490	1745	23945	6.56
	4	(20) 10d	(20) 10d	1760	3860	490	1745	30640	6.29
S-P-F									
TBE4	1	(20) 10d x 1½"	(20) 10d x 1½"	1605	3220	615	1415	6445	6.99
	2	(20) 10d	(20) 10d	1605	3440	615	1415	9890	5.37
	3	(20) 10d	(20) 10d	1605	3440	615	1415	13120	4.74
	4	(20) 10d	(20) 10d	1605	3440	615	1415	16345	4.43
TBE6	1	(20) 10d x 1½"	(20) 10d x 1½"	1760	3220	490	1585	8290	8.99
	2	(20) 10d	(20) 10d	1760	3440	490	1585	13680	7.42
	3	(20) 10d	(20) 10d	1760	3440	490	1585	18750	6.78
	4	(20) 10d	(20) 10d	1760	3440	490	1585	23820	6.46

1. Factored resistances are for two TBEs only. Wood factored bearing resistance may be added as shown in the table.
2. Factored bearing resistances shown assume Q_r'/A_b' and Q_r'/A_b' = 812 psi (5.60 MPa) for D.Fir-L and 614 psi (4.24 MPa) for S-P-F. See clauses 6.5.4 and 7.5.9 TPIC 2014 for required bearing reinforcement when compression loads are applied to both sides of truss member.
3. Use lower of top plate or wood truss species.
4. Total bearing length, TBL, equals the plate width plus simulated bearing length provided by the TBE. TBE4 = 3½" plate width; TBE6 = 5½" plate width.

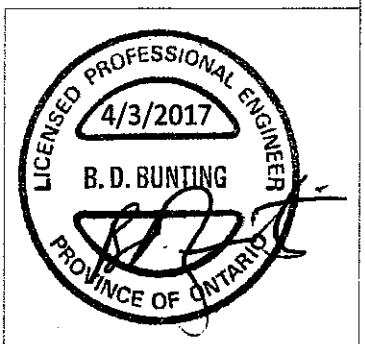

UNITED STATES DESIGN

This technical bulletin is effective until June 30, 2019, and reflects information available as of March 1, 2017. This information is updated periodically and should not be relied upon after June 30, 2019. Contact Simpson Strong-Tie for current information and limited warranty or see strongtie.com.

© 2017 Simpson Strong-Tie Company Inc.

T-SPECTBE17 3/17 exp. 6/19

(800) 999-5099
strongtie.com

TOWN OF INNISFIL
2018-0802-0808
REVIEWED
jpenfold
3/19/2021
Building Permit Plans

TS/LTS/MTS/HTS

SIMPSON Strong-Tie®

Twist Straps

Twist straps provide a tension connection between two wood members. They resist uplift at the heel of a truss economically. The 3"-bend section eliminates interference at the transition points between wood members. TS twist straps come with an equal number of left and right hand units in each carton.

Material: LTS — 18 gauge; MTS/TS — 16 gauge; HTS — 14 gauge

Finish: Galvanized. Some products available in stainless steel and ZMAX® coating; see Corrosion Information, pp. 20–24.

Installation:

- Use all specified fasteners; see General Notes
- TS should be installed in pairs to reduce eccentricity
- When LTS/MTS is installed as truss-to-top plate tie, install (3) 10d x 1½" nails to the underside of the plate and (3) 10d x 1½" nails into the edge of the double top plate
- LTS, MTS and HTS are available with the bend reversed. Specify "-REV" after model number, such as MTS16-REV

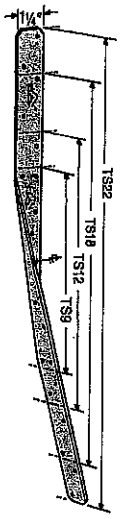

TS

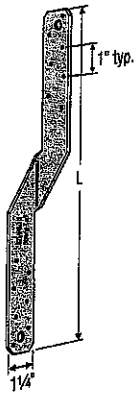

LTS12
(MTS and HTS similar)

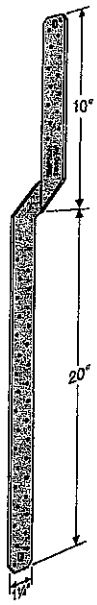

MTS30
(HTS30 similar)

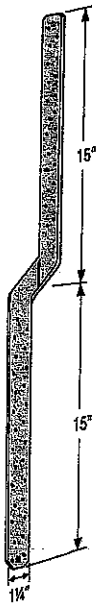

HTS30C
(MTS30C similar)

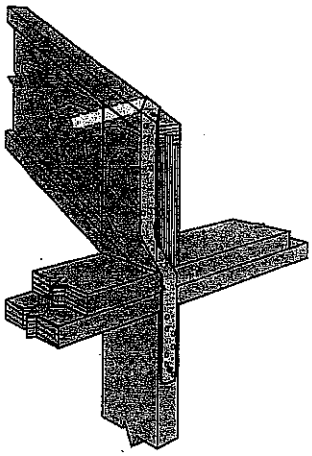

MTS30 Installation with I-Joist Rafter

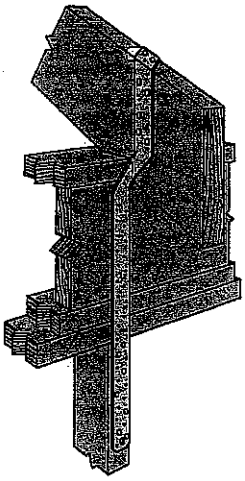

Typical MTS30 Installation

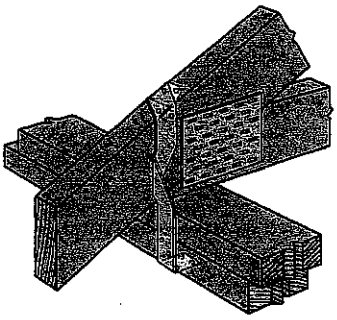

MTS Installation as a Truss-to-Top Plate Tie

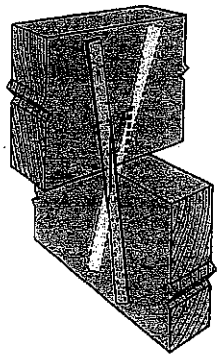

Typical TS Installation

Straps and Ties

C-C-CAN2018 ©2017 SIMPSON STRONG-TIE COMPANY INC.

TOWN OF INNISFIL
2018-0802-0808
REVIEWED
jpenfold
3/19/2021
Building Permit Plans

SIMPSON Strong-Tie®

TS/LTS/MTS/HTS

Twist Straps (cont.)

These products are available with additional corrosion protection. For more information, see p. 24.

These products are approved for installation with the Strong-Drive® SD Connector screw. See pp. 32–34 for more information.

Model No.	L (in.)	Fasteners (Total)	Factored Resistance (K_D = 1.15) D.Fir-L lb. kN	Factored Resistance (K_D = 1.15) S-P-F lb. kN
TS9	9	(8) 16d	1125	1040
			5.00	4.63
TS12	11⅝	(10) 16d	1410	1300
			6.27	5.78
TS18	17¾	(14) 16d	1970	1820
			8.76	8.10
TS22	21⅝	(18) 16d	2125	2125
			9.45	9.45
SS LTS12	12	(12) 10d x 1½"	1015	720
			4.52	3.20
LTS16	16	(12) 10d x 1½"	1015	720
			4.52	3.20
SS LTS18	18	(12) 10d x 1½"	1015	720
			4.52	3.20
LTS20	20	(12) 10d x 1½"	1015	720
			4.52	3.20
MTS12	12	(14) 10d x 1½"	1570	1180
			6.98	5.25
MTS16	16	(14) 10d x 1½"	1570	1180
			6.98	5.25
MTS18	18	(14) 10d x 1½"	1570	1180
			6.98	5.25
SS MTS20	20	(14) 10d x 1½"	1570	1180
			6.98	5.25
MTS30	30	(14) 10d x 1½"	1570	1180
			6.98	5.25
MTS24C	24	(14) 10d x 1½"	1570	1180
			6.98	5.25
MTS30C	30	(14) 10d x 1½"	1570	1180
			6.98	5.25
HTS16	16	(16) 10d x 1½"	2050	1455
			9.12	6.47
HTS20	20	(24) 10d x 1½"	2050	1455
			9.12	6.47
HTS24	24	(24) 10d x 1½"	2050	1455
			9.12	6.47
HTS28	28	(24) 10d x 1½"	2050	1455
			9.12	6.47
HTS30	30	(24) 10d x 1½"	2050	1455
			9.12	6.47
HTS30C	30	(24) 10d x 1½"	2050	1455
			9.12	6.47

1. LTS12 through LTS20, MTS16 through MTS30, HTS24 through HTS30C (except HTS30) have additional nail holes.
2. Install half of the fasteners on each end of strap to achieve maximum factored resistance.
3. Factored resistances have been increased 15% for earthquake or wind loading. No further increase allowed; reduce where other loads govern.
4. All straps except the MTS30 and HTS30 have the twist in the centre of the strap.
5. Twist straps do not have to be wrapped over the truss to achieve the load.
6. Optional nail holes are provided on some straps.
7. When used as a truss-to-top plate tie multiply the tabulated values by 0.95 for LTS and 0.74 for MTS. HTS cannot be used in this application.
8. Nails: 10d = 0.148" dia. x 3" long, 10d x 1½" = 0.148" dia. x 1½" long. See pp. 27–28 for other nail sizes and information.

C-C-CAN2018 ©2017 SIMPSON STRONG-TIE COMPANY INC.

TOWN OF INNISFIL
2018-0802-0808
REVIEWED
jpenfold
3/19/2021
Building Permit Plan

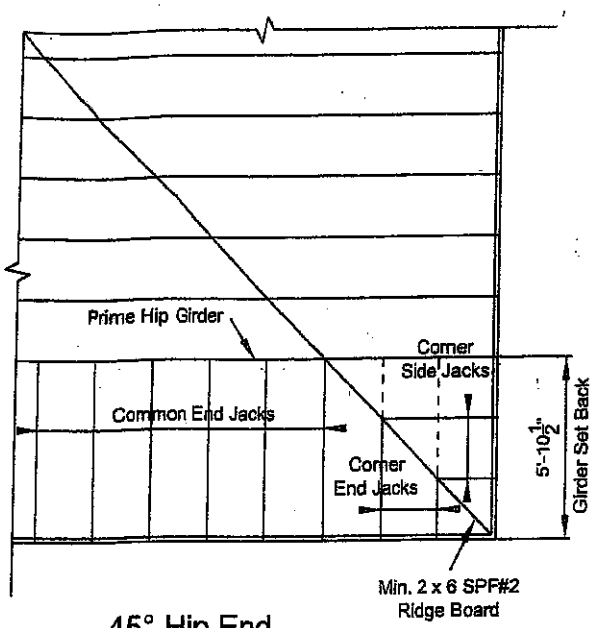

45° Hip End

LUMBER SPECIFICATION

TOP CHORD	:	2 x 4 SPF#2
BOTTOM CHORD	:	2 x 4 SPF#2
WEBS	:	2 x 3 SPF#2

UNLESS OTHERWISE SHOWN

DESIGN LOAD

TOP CHORD SNOW LOAD	:	40.5 P.S.F.
TOP CHORD DEAD LOAD	:	3.0 P.S.F.
BOTTOM CHORD LIVE LOAD	:	0.0 P.S.F.
BOTTOM CHORD DEAD LOAD	:	7.0 P.S.F.
TOTAL LOAD	:	50.5 P.S.F

LICENSED PROFESSIONAL ENGINEER
06/11/18
H.J.G. ALVES
PROVINCE OF ONTARIO

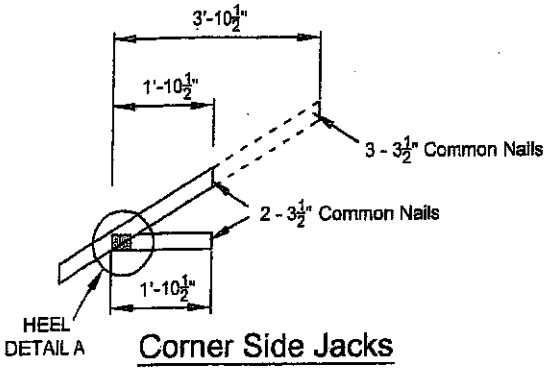

Corner Side Jacks

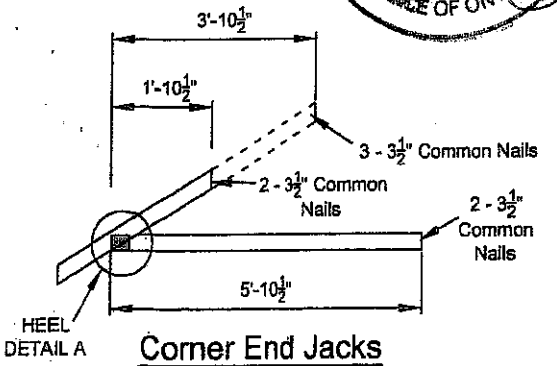

Corner End Jacks

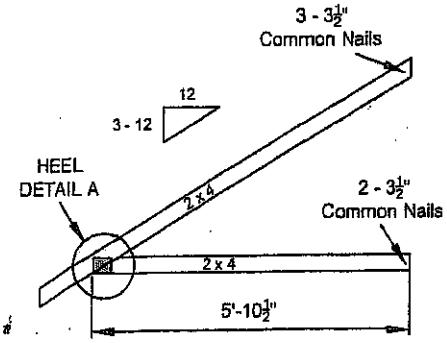

Common End Jacks

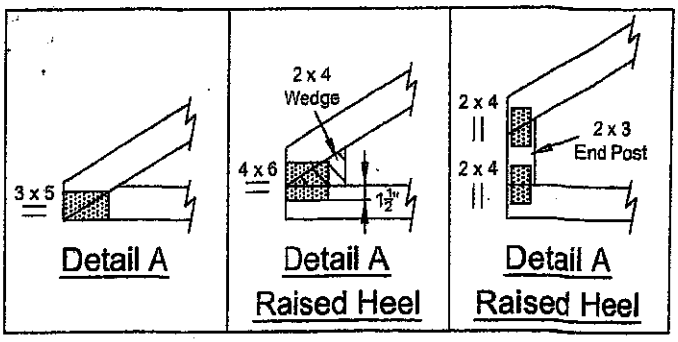

Detail A | Detail A Raised Heel | Detail A Raised Heel

NOTE: DESIGN CONFORMS TO PART 9, O.B.C. 2012 (L.S.D. DESIGN)

T-1800216

TOWN OF INNISFIL
2018-0802-0808
REVIEWED
jpenfold
3/19/2021
Building Permit Plan

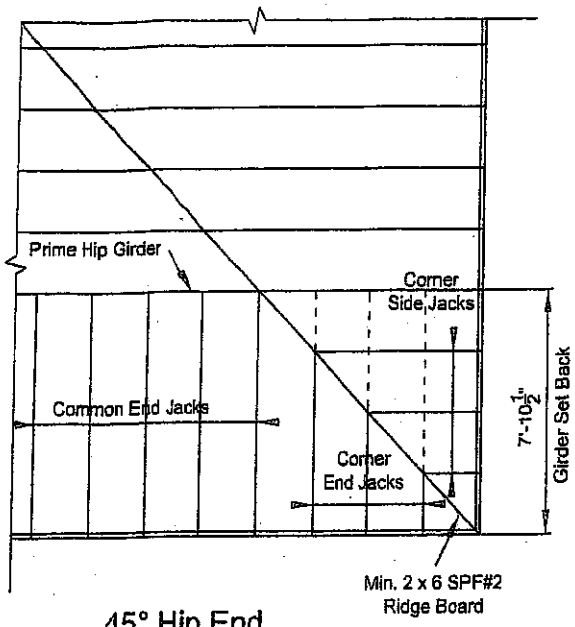

45° Hip End

LUMBER SPECIFICATION

TOP CHORD : 2 x 4 SPF#2
BOTTOM CHORD : 2 x 4 SPF#2
WEBS : 2 x 3 SPF#2
UNLESS OTHERWISE SHOWN

DESIGN LOAD

TOP CHORD SNOW LOAD	:	40.5 P.S.F.
TOP CHORD DEAD LOAD	:	3.0 P.S.F.
BOTTOM CHORD LIVE LOAD	:	0.0 P.S.F.
BOTTOM CHORD DEAD LOAD	:	7.0 P.S.F.
TOTAL LOAD		50.5 P.S.F

LICENSED PROFESSIONAL ENGINEER
06/11/2018
H.J.G. ALVES
PROVINCE OF ONTARIO

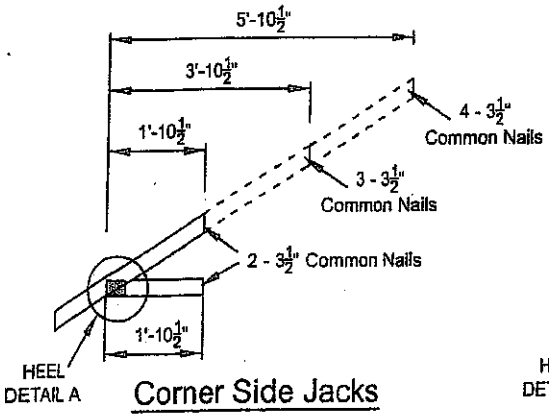

Corner Side Jacks

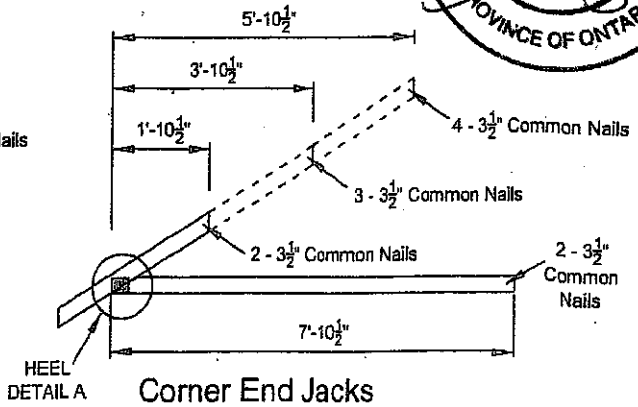

Corner End Jacks

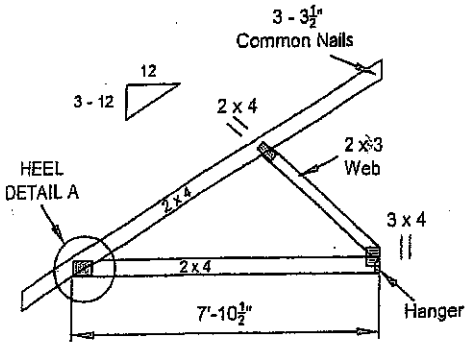

Common End Jacks

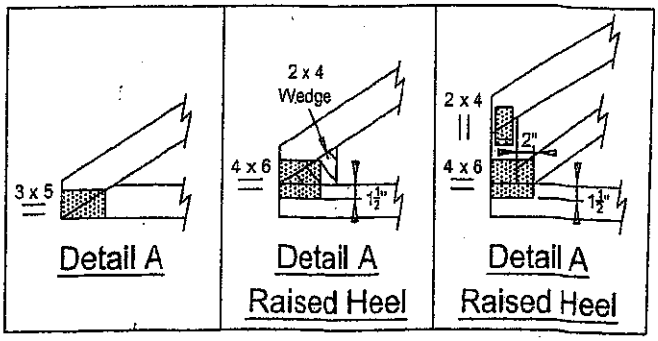

NOTE: DESIGN CONFORMS TO PART 9, O.B.C. 2012 (L.S.D. DESIGN)

T-1800217

TOWN OF INNISFIL
2018-0802-0808
REVIEWED
jpenfold
3/19/2021
Building Permit Plans

ONTARIO WOOD TRUSS FABRICATORS ASSOCIATION

TECH-NOTES

TN 15-001
Piggyback Bracing

Overview:

Where piggybacks are connected overtop of base trusses, 2x4 purlins must be first added to the flat portion of the base truss at a spacing no more than 24" o/c. These purlins not only provide support for the piggyback trusses above, but are required to laterally support the top chord of the base truss which will not have the sheathing directly connected to the flat portion of the base truss. This ensures the top chord, most often in compression, will not buckle laterally.

Further, the purlins in the plane of the flat portion require diagonal bracing to prevent lateral displacement of the purlins themselves where under certain conditions, the trusses may in fact all buckle in the same direction if this additional bracing is not added in the plane of the purlins.

Detail:

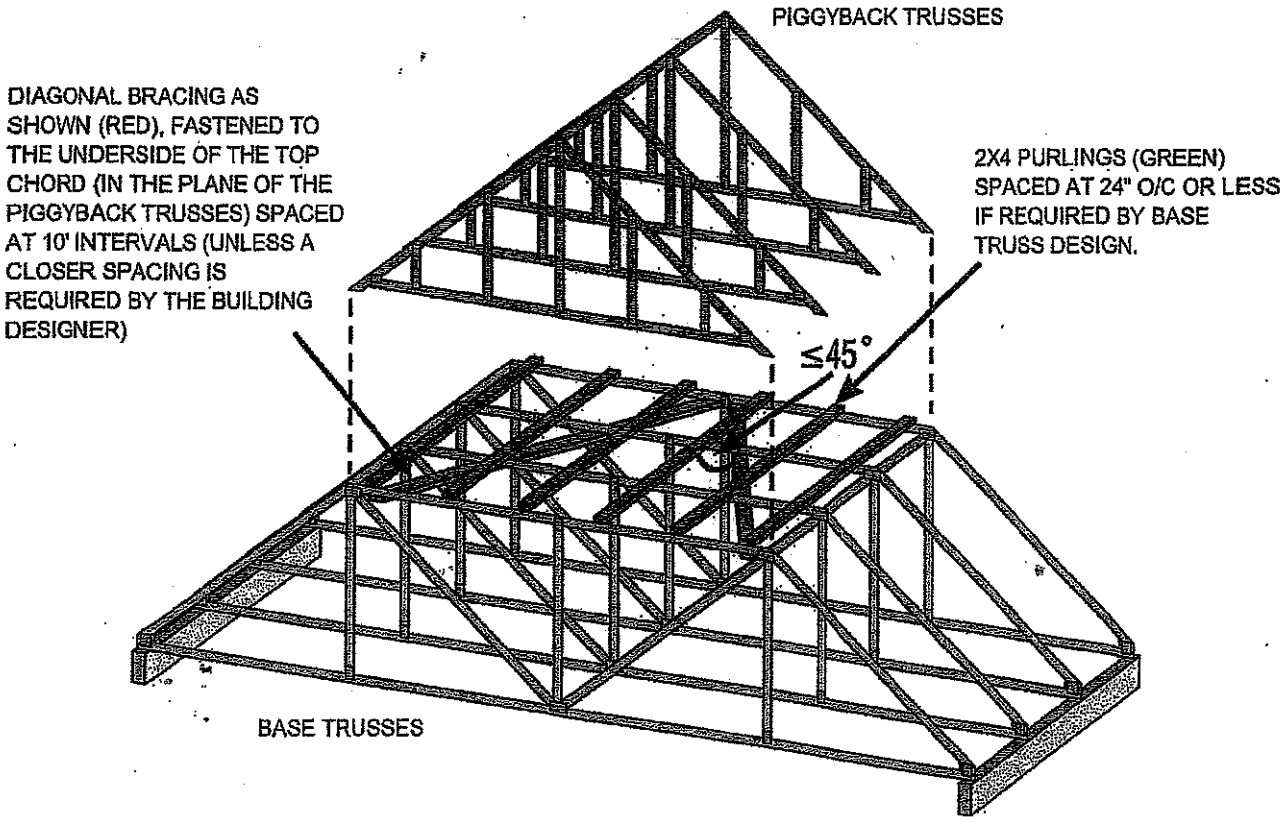

NOTE: THE SLOPED PORTION OF THE TOP CHORD OF THE BASE TRUSS AND PIGGYBACK TRUSS IN THIS SKETCH IS ASSUMED TO BE SHEATHED IN ACCORDANCE WITH THE OBC.

SKETCH FROM BCSI-CANADA 2013

Disclaimer:

OWTFA Tech Notes are intended to provide guidance to the design community both within the membership as well as to third party designers who might benefit from the information. The details have been developed by the OWTFA technical committee and although there may be professional engineers involved in development, the information contained in the tech-note are not intended to be used without having a professional engineer review the information for a specific application. The OWTFA takes no responsibility with respect to the information provided but has developed this tech-note to offer guidance where it is not currently readily available.

TOWN OF INNISFIL
2018-0802-0808
REVIEWED
jpenfold
3/19/2021
Building Permit Plans

MICRO CITY
ENGINEERING SERVICES INC.
TEL: (519) 287 - 2242
R.R. #1, P.O. BOX 61, GLENCOE, ONTARIO, N0L 1M0

CONVENTIONAL VALLEY FRAMING DETAIL

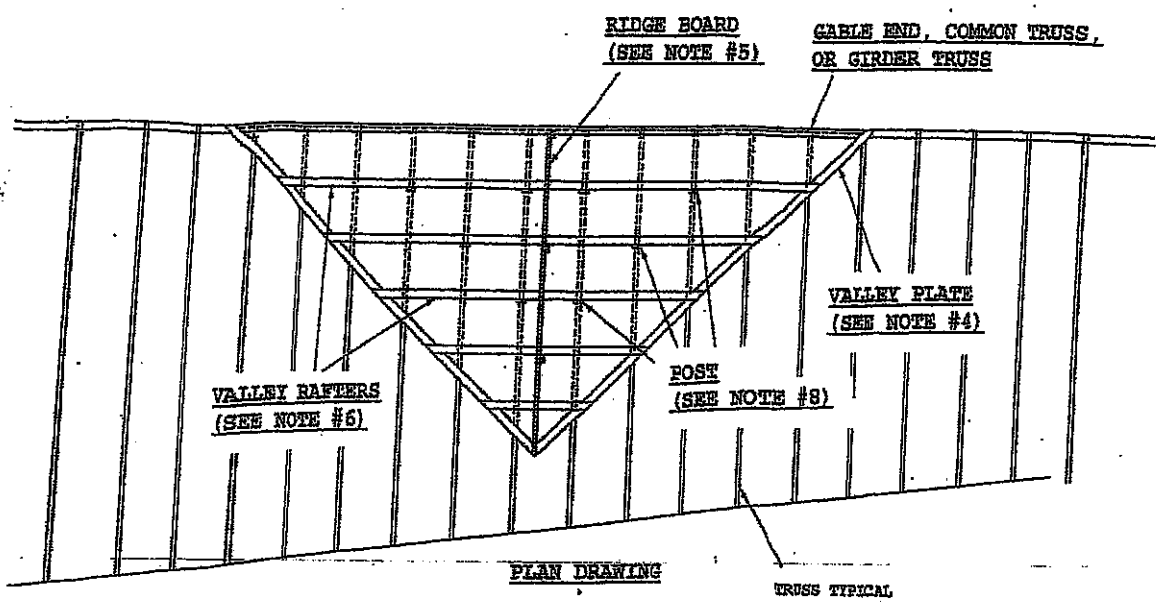

PLAN DRAWING

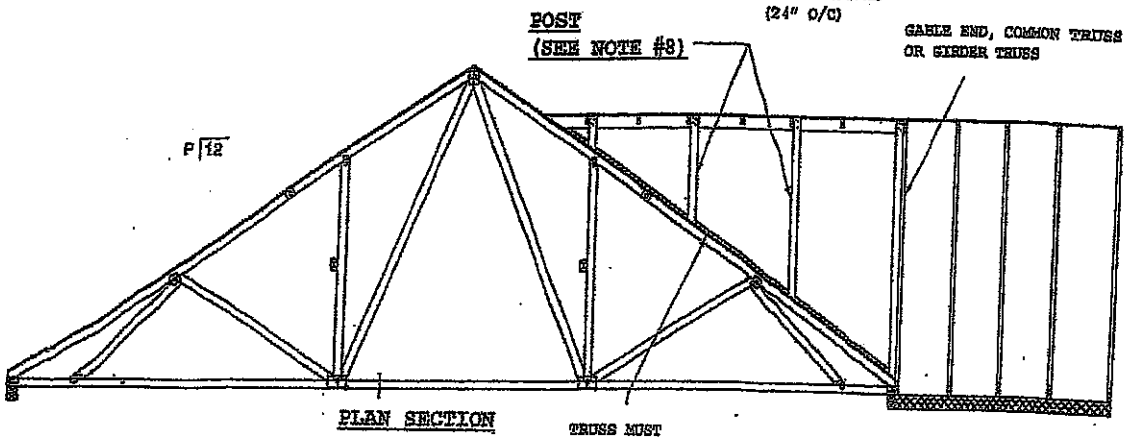

PLAN SECTION

GENERAL SPECIFICATIONS:

(1) WITH THE BASE TRUSSES ERECTED (INSTALLED), APPLY SHEATHING TOP CHORD OF SUPPORTING (BASE) TRUSSES.
(2) BRACE BOTTOM CHORD AND WEB MEMBERS AS PER PRE-ENGINEERED TRUSS DESIGNS.
(3) DEFINE VALLEY RIDGE BY RUNNING A LEVEL STRING FROM THE INTERSECTING RIDGE OF THE (a) GABLE END, (b) GIRDER TRUSS OR (c) COMMON TRUSS TO THE ROOF SHEATHING.
(4) INSTALL 2 X 6 VALLEY PLATES ON FLAT. FASTEN TO EACH SUPPORTING TRUSS WITH (2) 16d (3.5" X 0.131") NAILS.
(5) SET A 2 X 6 #2 RIDGE BOARD (MAX. 10'-0" RIDGE) OR 2 X 8 #2 SPF RIDGE BOARD (MAX. 20'-0" RIDGE). SUPPORT RIDGE BOARD WITH 2 X 4 POSTS SPACED 48" O/C. BEVEL BOTTOM OF POST TO SET EVENLY ON THE SHEATHING. FASTEN POST TO RIDGE WITH (4) 10d (3" X 0.131") NAILS. FASTEN POST TO ROOF SHEATHING WITH (3) 10d (3" X 0.131") TOE-NAILS.
(6) FRAME VALLEY RAFTERS FROM VALLEY PLATE TO RIDGE BOARD. MAXIMUM RAFTER SPACING IS 24" O/C. FASTEN VALLEY RAFTER TO RIDGE BEAM WITH (3) 16d (3.5" X 0.131") TOE-NAILS. FASTEN VALLEY RAFTER TO VALLEY PLATE WITH (3) 16d (3.5" X 0.131") TOE-NAILS.
(7) SUPPORT THE VALLEY RAFTERS WITH 2 X 4 POSTS AT 48" O/C (OR LESS) ALONG EACH RAFTER. INSTALL POSTS IN A STAGGERED PATTERN AS SHOWN ON PLAN DRAWING. ALIGN POSTS WITH TRUSSES BELOW. FASTEN VALLEY RAFTER TO POST WITH (4) 10d (3" X 0.131") NAILS. FASTEN POST THROUGH SHEATHING TO SUPPORTING TRUSSES WITH (2) 16d (3.5" X 0.131") NAILS.
(8) POSTS SHALL BE 2 X 4 #2 SPF OR BETTER. POSTS EXCEEDING 75" IN HEIGHT SHALL BE INCREASED TO 4 X 4 #2 SPF, OR BETTER, OR BE PRE-ASSEMBLED TWO (2) PLY 2 X 4 #2 SPF OR BETTER FASTENED TOGETHER WITH 2 ROWS OF 10d (3" X 0.131") NAILS AT 6" O/C.
(9) MAINTAIN A MINIMUM 3/4" LUMBER EDGE DISTANCE WHEN NAILING. NAIL SPACING SHOULD APPROXIMATE A MINIMUM 1-3/4" O/C OR MORE UNLESS NOTED OTHERWISE. ALL CONSTRUCTION TO CONFORM TO ONTARIO BUILDING CODE (CURRENT ADDITION) AT ALL TIMES.

NOTES:

(10) 48" O/C (MAXIMUM POST SPACING.
(11) ROOF LIVE LOAD = 34.8 PSF (MAX.)
(12) ROOF DEAD LOAD = 10.0 PSF (MAX.)
(13) PART 9 APPLICATION ONLY (ONTARIO BUILDING CODE)
(14) PART 4 APPLICATION ONLY (ONTARIO BUILDING CODE) WITH APPROVED REVIEW BY LICENSED PROFESSIONAL ENGINEER.
(15) BASE TRUSS SPACING (24" O/C MAX.)
(16) ALL PRE-ENGINEERED BASE TRUSS COMPONENTS TO BE SEALED BY LICENSED PROFESSIONAL ENGINEER AND THIS DETAIL TO BE VERIFIED AND APPROVED BY SAME WHEN RIDGE BOARD LENGTH EXCEEDS 12'-0".
(17) ALL BASE TRUSSES: P = 4 (4/12) - MINIMUM.
(18) ALL VALLEY RAFTERS: P = 4 (4/12) - MINIMUM.

LICENSED PROFESSIONAL ENGINEER
3-5-14
S. KATSOULAKOS
PROVINCE OF ONTARIO

DWG NO TAM 6305.14
STRUCTURAL
COMPONENT ONLY

TOWN OF INNISFIL
2018-0802-0808
REVIEWED
jpatfield
3/30/2021

Symbols

PLATE LOCATION AND ORIENTATION

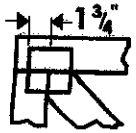

Center plate on joint unless x, y offsets are indicated. Dimensions are in ft-in-sixteenths or mm. Apply plates to both sides of truss and fully embed teeth.

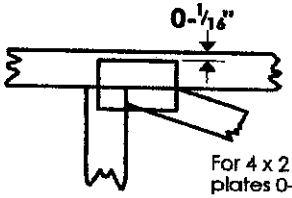

For 4 x 2 orientation, locate plates 0-1/16" from outside edge of truss.

This symbol indicates the required direction of slots in connector plates.

*Plate location details available in MiTek software or upon request.

PLATE SIZE

4 x 4

The first dimension is the plate width measured perpendicular to slots. Second dimension is the length parallel to slots.

LATERAL BRACING LOCATION

Indicated by symbol shown and/or by text in the bracing section of the output. Use T, I or Eliminator bracing if indicated.

BEARING

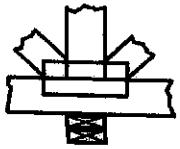

Indicates location where bearings (supports) occur. Icons vary but reaction section indicates joint number where bearings occur.

Industry Standards:

TPIC: Truss Design Procedures and Specifications for Light Metal Plate Connected Wood Trusses
DSB-89: Design Standard for Bracing.
BCSI: Building Component Safety Information, Guide to Good Practice for Handling, Installing & Bracing of Metal Plate Connected Wood Trusses.

Numbering System

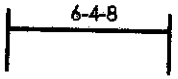

dimensions shown in ft-in-sixteenths or mm (Drawings not to scale)

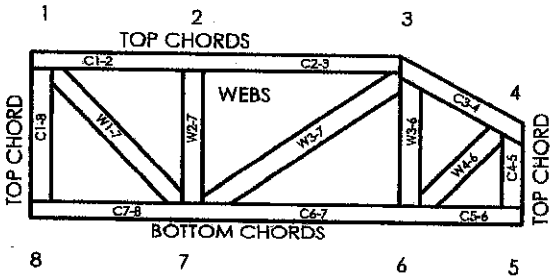

JOINTS ARE GENERALLY NUMBERED/LETTERED CLOCKWISE AROUND THE TRUSS STARTING AT THE JOINT FARTHEST TO THE LEFT.

CHORDS AND WEBS ARE IDENTIFIED BY END JOINT NUMBERS/LETTERS.

PRODUCT CODE APPROVALS

CCMC Reports:

11996-L, 10319-L, 13270-L, 12691-R

© 2007 MiTek® All Rights Reserved

MiTek®
POWER TO PERFORM.™

MiTek Engineering Reference Sheet: MII-7473C rev. 10-'08

General Safety Notes

Failure to Follow Could Cause Property Damage or Personal Injury

1. Additional stability bracing for truss system, e.g. diagonal or X-bracing, is always required. See BCSI.
2. Truss bracing must be designed by an engineer. For wide truss spacing, individual lateral braces themselves may require bracing, or alternative T, I, or Eliminator bracing should be considered.
3. Never exceed the design loading shown and never stack materials on inadequately braced trusses.
4. Provide copies of this truss design to the building designer, erection supervisor, property owner and all other interested parties.
5. Cut members to bear tightly against each other.
6. Place plates on each face of truss at each joint and embed fully. Knots and wane at joint locations are regulated by TPIC.
7. Design assumes trusses will be suitably protected from the environment in accord with TPIC.
8. Unless otherwise noted, moisture content of lumber shall not exceed 19% at time of fabrication.
9. Unless expressly noted, this design is not applicable for use with fire retardant, preservative treated, or green lumber.
10. Camber is a non-structural consideration and is the responsibility of truss fabricator. General practice is to camber for dead load deflection.
11. Plate type, size, orientation and location dimensions indicated are minimum plating requirements.
12. Lumber used shall be of the species and size, and in all respects, equal to or better than that specified.
13. Top chords must be sheathed or purlins provided at spacing indicated on design.
14. Bottom chords require lateral bracing at 10 ft. spacing, or less, if no ceiling is installed, unless otherwise noted.
15. Connections not shown are the responsibility of others.
16. Do not cut or alter truss member or plate without prior approval of an engineer.
17. Install and load vertically unless indicated otherwise.
18. Use of green or treated lumber may pose unacceptable environmental, health or performance risks. Consult with project engineer before use.
19. Review all portions of this design (front, back, words and pictures) before use. Reviewing pictures alone is not sufficient.
20. Design assumes manufacture in accordance with TPIC Quality Criteria.

TOWN OF INNISFIL
2018-0802-0808
REVIEWED
jpenfold
3/19/2021
Building Permit Plans

LICENSED PROFESSIONAL ENGINEER
06/11/18
H.J.G. ALVES
PROVINCE OF ONTARIO

Alves Engineering Services Inc.
5208 Easton road
Burlington, Ontario L7L 6N6
(289) 259 5455

RESPONSABILITIES

1-Alves Engineering Services Inc. is responsible for the design of trusses as individual components

2-It is the responsibility of others to ascertain that the design loads utilized on this drawing meet or exceed the actual dead load imposed by the structure and the live load imposed by the local building code or the authorities having jurisdictions.

3- All dimensions are to be verified by owner, contractor, architect or other authority before manufacture.

4- Alves Engineering Services Inc. bears no responsibility for the erection of the trusses. Persons erecting trusses are cautioned to seek professional advice regarding temporary and permanent bracing system. Bracing shown on Alves Engineering Services Inc. drawings is specified for the truss as a single component and forms an integral part of the truss design, but is not meant to represent the only required bracing for that truss when trusses are installed in a series of trusses forming a roof truss system.

5- It is the manufactures responsibility to ensure that the trusses are manufactured in conformance with Alves Engineering Services Inc. specifications outlined below.

SPECIFICATIONS

1-Truss components sealed by Alves Engineering Services Inc. conform to the relevant sections of the current Building Code of Ontario and Canada (part 4 or part 9) or the current Canadian code for Farm Buildings in accordance with the application specified on the sealed truss component drawing. All truss component design procedures must conform to the current design standard issued by the truss plate institute of Canada (TPIC). All lumber and nailing stresses to conform to the current CSA wood design standard identified on the current Building Code and TPIC.

2- Lumber is to be the sizes and grade specified on the truss drawing.

3- Moist content of lumber is not to exceed 19% in service unless otherwise specified.

4- Plates shall be applied to both faces of the each truss joint and shall be positioned as shown on the truss drawings

5- Lumber used on manufacture of trusses is not to be treated with chemicals unless otherwise specified on the truss drawings.

6- The top chord is assumed to be continuously laterally braced by the roof sheathing or purlins at intervals specified on the truss drawing but not exceeding 24" c/c for (part 9) and not exceeding 48" for (part 4 or farm design)

7- When rigid ceiling is not attached directly to the bottom chord, lateral bracing is required and it should not exceed more than 3m or 10' intervals.

8-Refer to Mitek sheet MII7473C REV.10-08 attached for information on symbols, numbering system and General Safety notes.

T-1800213 Feb 09, 2018