ASPHALT SHINGLES
FINISHED OVERHANG: 12"
2x6 EXTERIOR WALLS
2x6 FASCIA BOARD
HEEL: R.T.M.C.

BEAMS:
B1 = 2 - 2x10 SPF #2

All conventional framing to conform with Part 9 of O.B.C. 2012 (2019 amendment). Roof rafters that cross over or meet trusses to be min. 2x4 SPF #2 @ 24" o/c with a vertical post to the truss at each cross point. Vertical posts longer than 6' to have lateral bracing so that the distance between the post end points and lateral bracing does not exceed 6'.

DESIGN CONFORMS WITH OBC 2012 (2019 amendment) OCCUPANCY: RESIDENTIAL | PART: 9
Ss = 43.8 psf | Sr = 8.4 psf

DESIGN LOADS:
TCSL = 32.5 psf
TCDL = 6.0 psf
BCLL = 0.0 psf
BCDL = 7.4 psf

HARDWARE:
LUS24 - (**O**)
LJS26DS - (**V**)
HGUS26-2 - (**XX**)

DENOTES:
CONVENTIONAL FRAMING

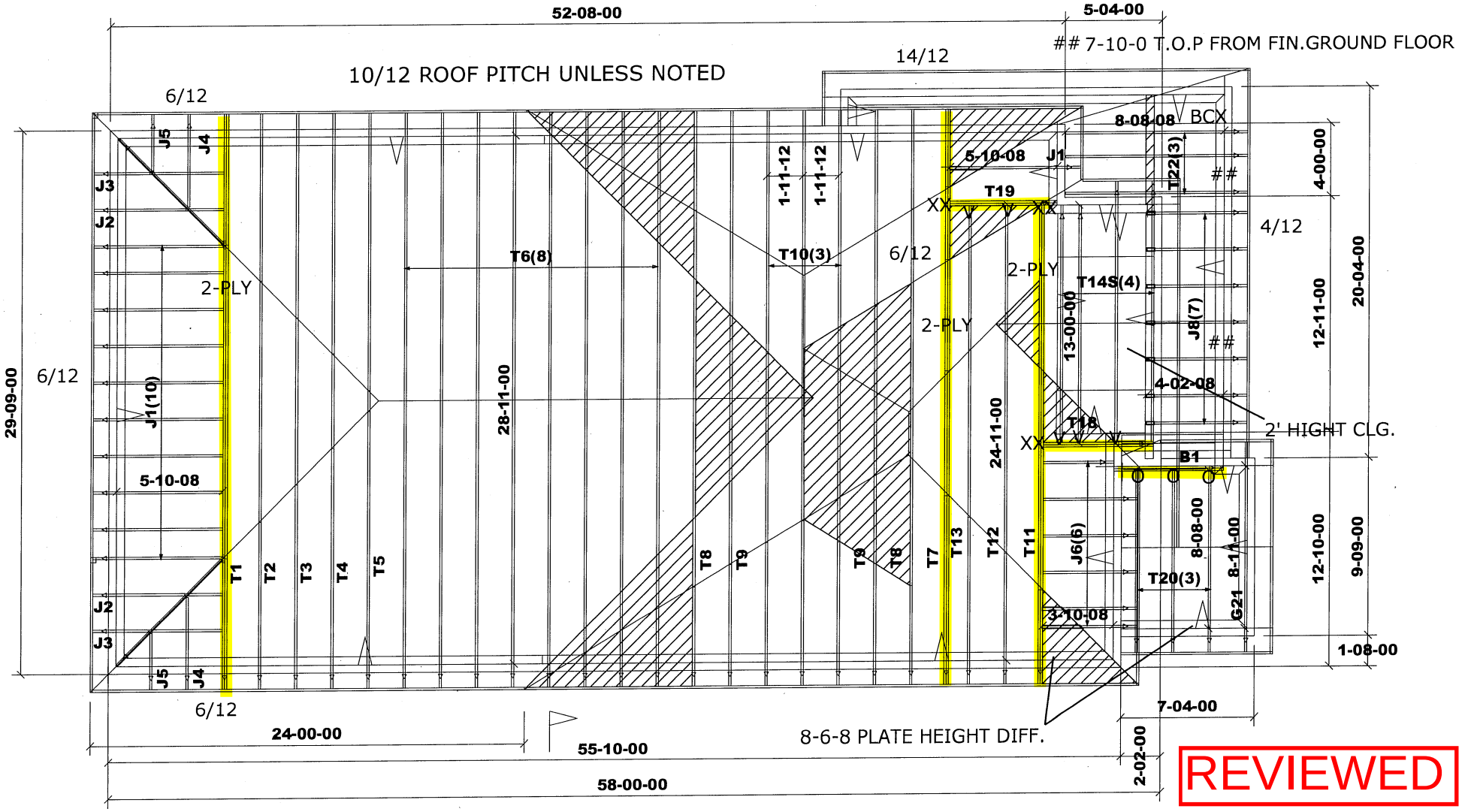

REVIEWED

TAMARACK ROOF TRUSSES INC.	Job Track: **50465**	Builder / Location: **BAYVIEW WELLINGTON / BRADFORD**	Model / Elevation: **S38-19 / A**
	Plan Log: **205562**	Project: **GREEN VALLEY EAST**	
	Layout ID: **423532**	Date: 2022-06-27 Sales: Rick DiCiano Designer: JG	

THESE DRAWINGS CONSTITUTE THE PROPERTY OF TAMARACK ROOF TRUSSES INC., SHALL NOT BE REPRODUCED, PUBLISHED, OR REDISTRIBUTED IN ANY MANNER OR UTILIZED FOR ANY PURPOSE OTHER THAN THE MANUFACTURE OF TRUSSES BY TAMARACK ROOF TRUSSES INC AND WILL BE RETRACTED BY TAMARACK ROOF TRUSSES INC IF UTLILZED FOR ANY OTHER PURPOSE.

Mitek ver 8.5.3.233

ASPHALT SHINGLES
FINISHED OVERHANG: 12"
2x6 EXTERIOR WALLS
2x6 FASCIA BOARD
HEEL: R.T.M.C.

BEAMS:
B1 = 2 - 2x10 SPF #2

All conventional framing to conform with Part 9 of O.B.C. 2012 (2019 amendment). Roof rafters that cross over or meet trusses to be min. 2x4 SPF #2 @ 24" o/c with a vertical post to the truss at each cross point. Vertical posts longer than 6' to have lateral bracing so that the distance between the post end points and lateral bracing does not exceed 6'.

DESIGN CONFORMS WITH OBC 2012 (2019 amendment) OCCUPANCY: RESIDENTIAL | PART: 9
Ss = 43.8 psf | Sr = 8.4 psf

DESIGN LOADS:
TCSL = 32.5 psf
TCDL = 6.0 psf
BCLL = 0.0 psf
BCDL = 7.4 psf

HARDWARE:
LUS24 - (**O**)
LJS26DS - (**V**)
HGUS26-2 - (**XX**)

DENOTES:
CONVENTIONAL FRAMING

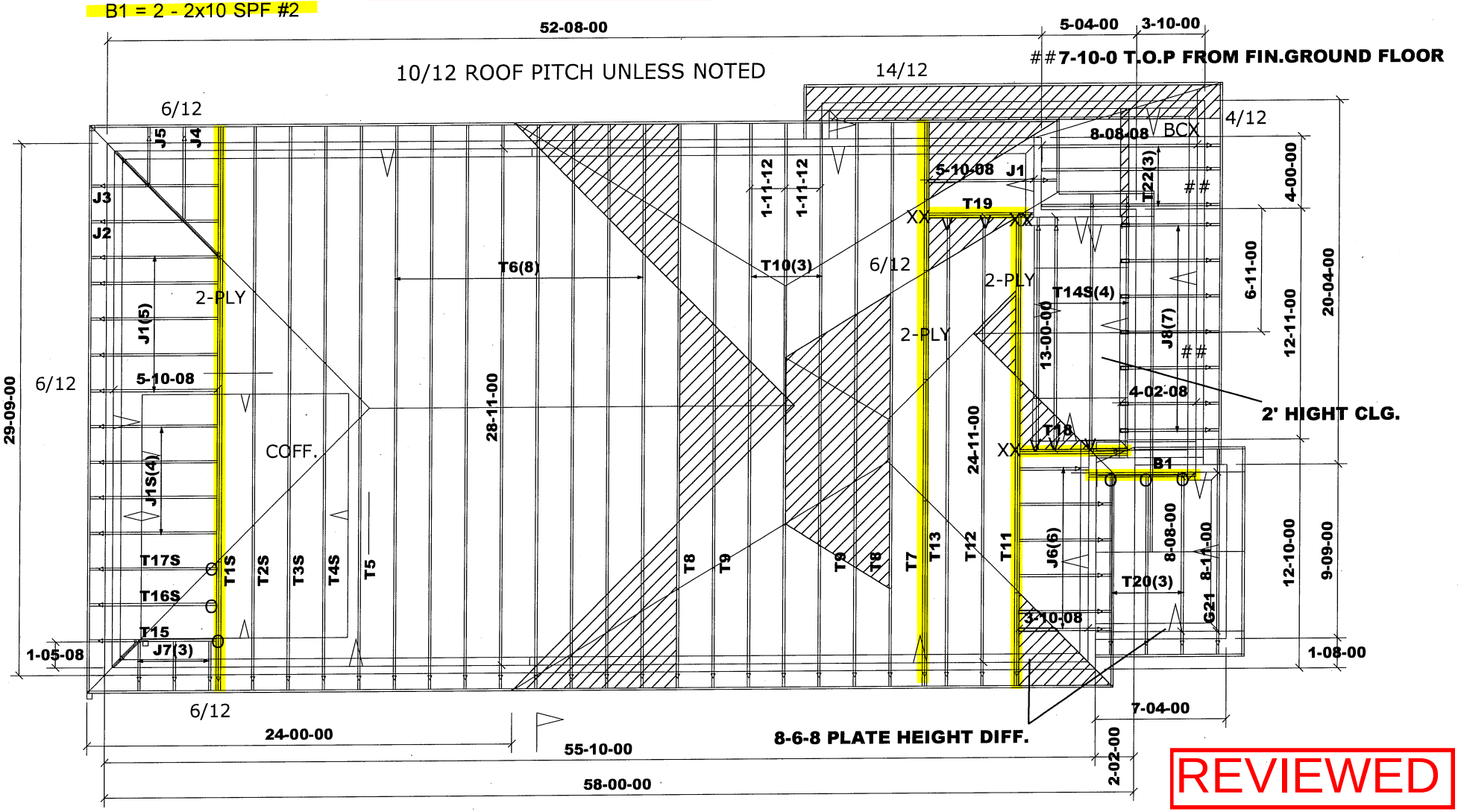

REVIEWED

TAMARACK ROOF TRUSSES INC.	Job Track: **50465**	Builder / Location: **BAYVIEW WELLINGTON / BRADFORD**	Model / Elevation: **S38-19 / A-OPT.WITH COFF.**
	Plan Log: **205562**	Project: **GREEN VALLEY EAST**	
	Layout ID: **423531**	Date: **2022-06-27** Sales: Rick DiCiano Designer: JG	

THESE DRAWINGS CONSTITUTE THE PROPERTY OF TAMARACK ROOF TRUSSES INC., SHALL NOT BE REPRODUCED, PUBLISHED, OR REDISTRIBUTED IN ANY MANNER OR UTILIZED FOR ANY PURPOSE OTHER THAN THE MANUFACTURE OF TRUSSES BY TAMARACK ROOF TRUSSES INC AND WILL BE RETRACTED BY TAMARACK ROOF TRUSSES INC IF UTLILZED FOR ANY OTHER PURPOSE.

Mitek ver 8.5.3.233

ASPHALT SHINGLES
FINISHED OVERHANG: 12"
2x6 EXTERIOR WALLS
2x6 FASCIA BOARD
HEEL: R.T.M.C.

BEAMS:
B1 = 2 - 2x10 SPF #2

All conventional framing to conform with Part 9 of O.B.C. 2012 (2019 amendment). Roof rafters that cross over or meet trusses to be min. 2x4 SPF #2 @ 24" o/c with a vertical post to the truss at each cross point. Vertical posts longer than 6' to have lateral bracing so that the distance between the post end points and lateral bracing does not exceed 6'.

DESIGN CONFORMS WITH OBC 2012 (2019 amendment) OCCUPANCY: RESIDENTIAL | PART: 9
Ss = 43.8 psf | Sr = 8.4 psf

DESIGN LOADS:
TCSL = 32.5 psf
TCDL = 6.0 psf
BCLL = 0.0 psf
BCDL = 7.4 psf

HARDWARE:
LUS24 - (**O**)
LJS26DS - (**V**)
HGUS26-2 - (**XX**)
VTCR- (R)

DENOTES:
CONVENTIONAL FRAMING

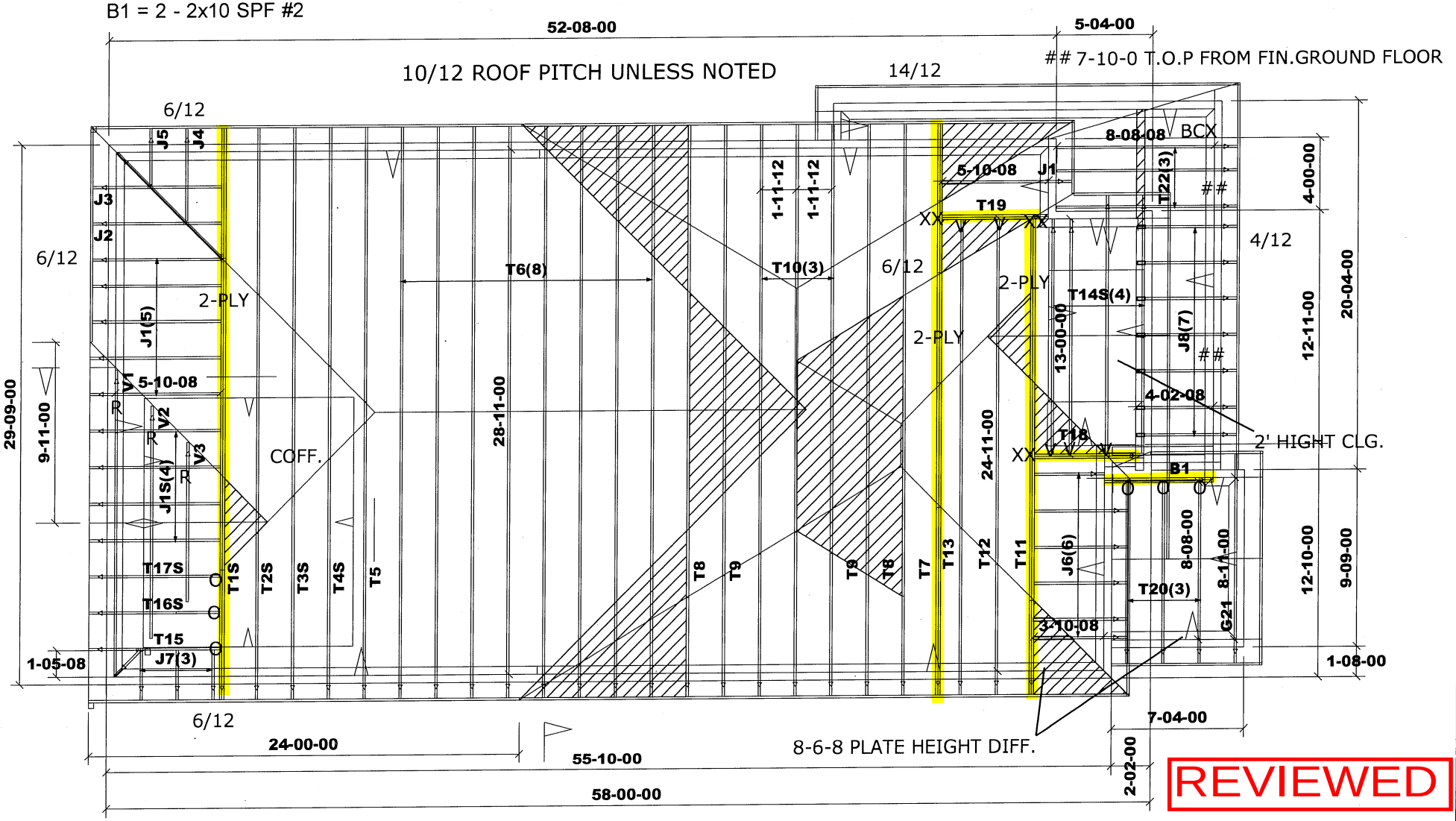

REVIEWED

TAMARACK ROOF TRUSSES INC.	Job Track: **50465**	Builder / Location: **BAYVIEW WELLINGTON / BRADFORD**	Model / Elevation: **S38-19 / A-OPT. COFF WITH REAR UPGRADE**
	Plan Log: **205562**	Project: **GREEN VALLEY EAST**	THESE DRAWINGS CONSTITUTE THE PROPERTY OF TAMARACK ROOF TRUSSES INC., SHALL NOT BE REPRODUCED, PUBLISHED, OR REDISTRIBUTED IN ANY MANNER OR UTILIZED FOR ANY PURPOSE OTHER THAN THE MANUFACTURE OF TRUSSES BY TAMARACK ROOF TRUSSES INC AND WILL BE RETRACTED BY TAMARACK ROOF TRUSSES INC IF UTLILZED FOR ANY OTHER PURPOSE.
	Layout ID: **423533**	Date: **2022-06-27** Sales: Rick DiCiano Designer: JG	Mitek ver 8.5.3.233

ASPHALT SHINGLES
FINISHED OVERHANG: 12"
2x6 EXTERIOR WALLS
2x6 FASCIA BOARD
HEEL: R.T.M.C.

BEAMS:
B1 = 2 - 2x10 SPF #2

All conventional framing to conform with Part 9 of O.B.C. 2012 (2019 amendment). Roof rafters that cross over or meet trusses to be min. 2x4 SPF #2 @ 24" o/c with a vertical post to the truss at each cross point. Vertical posts longer than 6' to have lateral bracing so that the distance between the post end points and lateral bracing does not exceed 6'.

DESIGN CONFORMS WITH OBC 2012 (2019 amendment) OCCUPANCY: RESIDENTIAL | PART: 9
Ss = 43.8 psf | Sr = 8.4 psf

DESIGN LOADS:
TCSL = 32.5 psf
TCDL = 6.0 psf
BCLL = 0.0 psf
BCDL = 7.4 psf

HARDWARE:
LUS24 - (**O**)
LJS26DS - (**V**)
HGUS26-2 - (**XX**)
HUC26-2- (CC)
LUS26-2- (VV)

7-10-0 T.O.P FROM FIN.GROUND FLOOR

DENOTES: CONVENTIONAL FRAMING

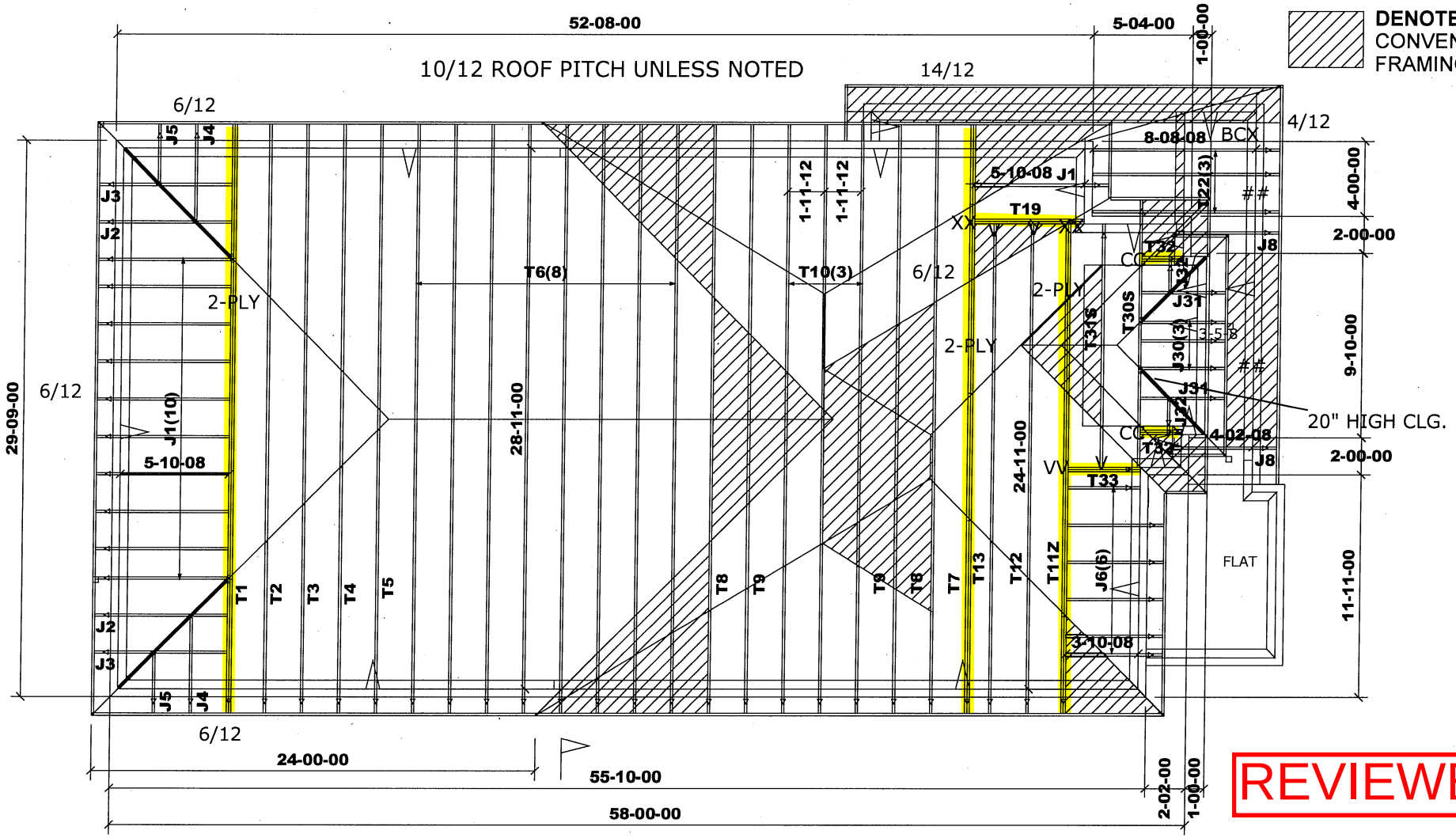

REVIEWED

TAMARACK ROOF TRUSSES INC.	Job Track: **50465**	Builder / Location: **BAYVIEW WELLINGTON / BRADFORD**	Model / Elevation: **S38-19 / B**
	Plan Log: **205562**	Project: **GREEN VALLEY EAST**	
	Layout ID: **423535**	Date: **2022-06-27** Sales: Rick DiCiano Designer: JG	

THESE DRAWINGS CONSTITUTE THE PROPERTY OF TAMARACK ROOF TRUSSES INC., SHALL NOT BE REPRODUCED, PUBLISHED, OR REDISTRIBUTED IN ANY MANNER OR UTILIZED FOR ANY PURPOSE OTHER THAN THE MANUFACTURE OF TRUSSES BY TAMARACK ROOF TRUSSES INC AND WILL BE RETRACTED BY TAMARACK ROOF TRUSSES INC IF UTLILZED FOR ANY OTHER PURPOSE.

Mitek ver 8.5.3.233

ASPHALT SHINGLES
FINISHED OVERHANG: 12"
2x6 EXTERIOR WALLS
2x6 FASCIA BOARD
HEEL: R.T.M.C.

BEAMS:
B1 = 2 - 2x10 SPF #2

All conventional framing to conform with Part 9 of O.B.C. 2012 (2019 amendment). Roof rafters that cross over or meet trusses to be min. 2x4 SPF #2 @ 24" o/c with a vertical post to the truss at each cross point. Vertical posts longer than 6' to have lateral bracing so that the distance between the post end points and lateral bracing does not exceed 6'.

DESIGN CONFORMS WITH OBC 2012 (2019 amendment) OCCUPANCY: RESIDENTIAL | PART: 9
Ss = 43.8 psf | Sr = 8.4 psf

DESIGN LOADS:
TCSL = 32.5 psf
TCDL = 6.0 psf
BCLL = 0.0 psf
BCDL = 7.4 psf

HARDWARE:
LUS24 - (**O**)
LJS26DS - (**V**)
HGUS26-2 - (**XX**)
HUC26-2- (CC)

7-10-0 T.O.P FROM FIN.GROUND FLOOR

DENOTES: CONVENTIONAL FRAMING

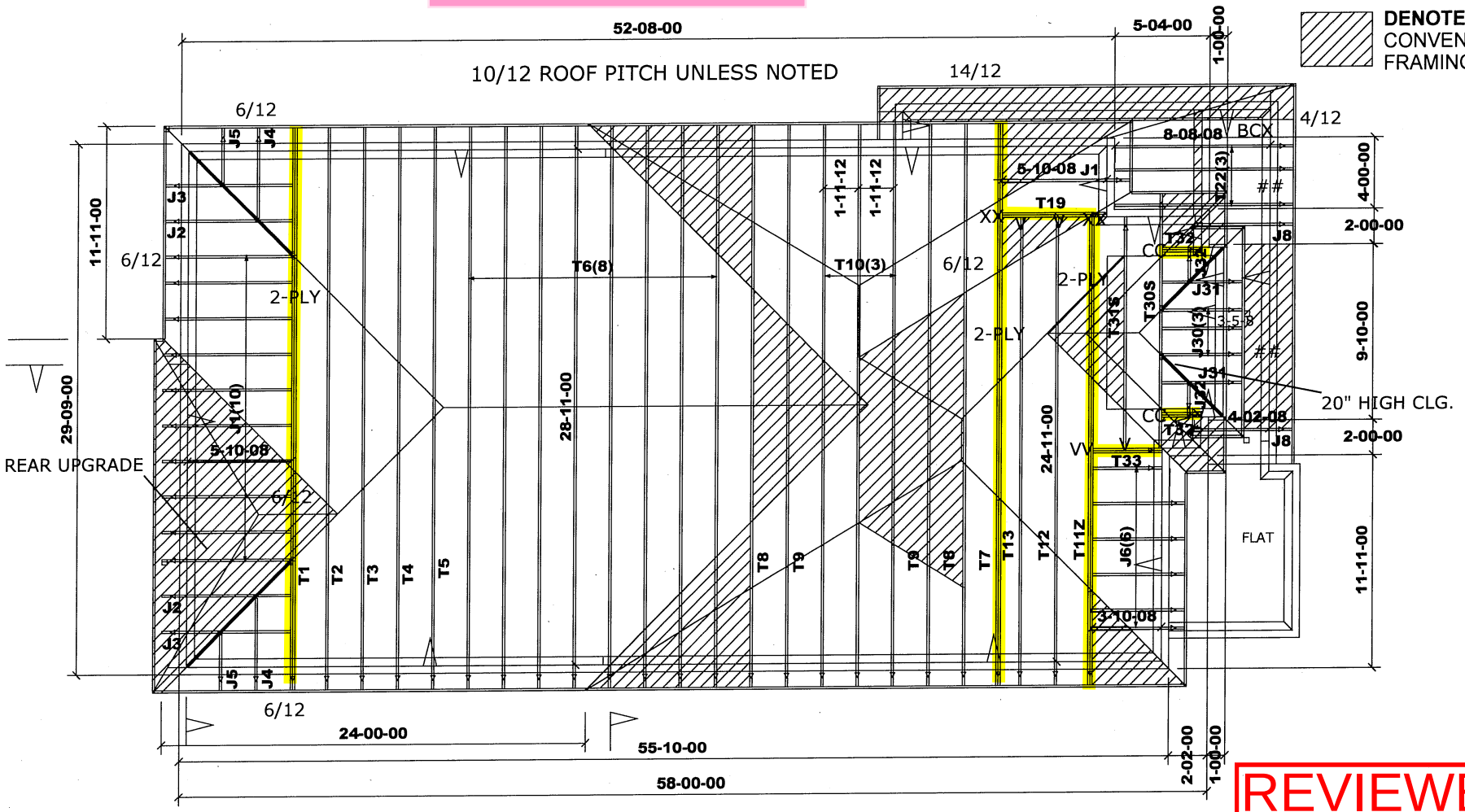

REVIEWED

TAMARACK ROOF TRUSSES INC.	Job Track: **50465**	Builder / Location: **BAYVIEW WELLINGTON / BRADFORD**	Model / Elevation: **S38-19 / B-REAR UPGRADE**
	Plan Log: **205562**	Project: **GREEN VALLEY EAST**	
	Layout ID: **423535**	Date: 2022-06-27 Sales: Rick DiCiano Designer: JG	

THESE DRAWINGS CONSTITUTE THE PROPERTY OF TAMARACK ROOF TRUSSES INC., SHALL NOT BE REPRODUCED, PUBLISHED, OR REDISTRIBUTED IN ANY MANNER OR UTILIZED FOR ANY PURPOSE OTHER THAN THE MANUFACTURE OF TRUSSES BY TAMARACK ROOF TRUSSES INC AND WILL BE RETRACTED BY TAMARACK ROOF TRUSSES INC IF UTLILZED FOR ANY OTHER PURPOSE.

Mitek ver 8.5.3.233

ASPHALT SHINGLES
FINISHED OVERHANG: 12"
2x6 EXTERIOR WALLS
2x6 FASCIA BOARD
HEEL: R.T.M.C.

All conventional framing to conform with Part 9 of O.B.C. 2012 (2019 amendment). Roof rafters that cross over or meet trusses to be min. 2x4 SPF #2 @ 24" o/c with a vertical post to the truss at each cross point. Vertical posts longer than 6' to have lateral bracing so that the distance between the post end points and lateral bracing does not exceed 6'.

DESIGN CONFORMS WITH OBC 2012
(2019 amendment) OCCUPANCY:
RESIDENTIAL | PART: 9
Ss = 43.8 psf | Sr = 8.4 psf

DESIGN LOADS:
TCSL = 32.5 psf
TCDL = 6.0 psf
BCLL = 0.0 psf
BCDL = 7.4 psf

HARDWARE:
LUS24 - (**O**)
LJS26DS - (**V**)
HGUS26-2 - (**XX**)
HUC26-2- (CC)
LUC26-2- (VV)

7-10-0 T.O.P FROM FIN.GROUND FLOOR

DENOTES: CONVENTIONAL FRAMING

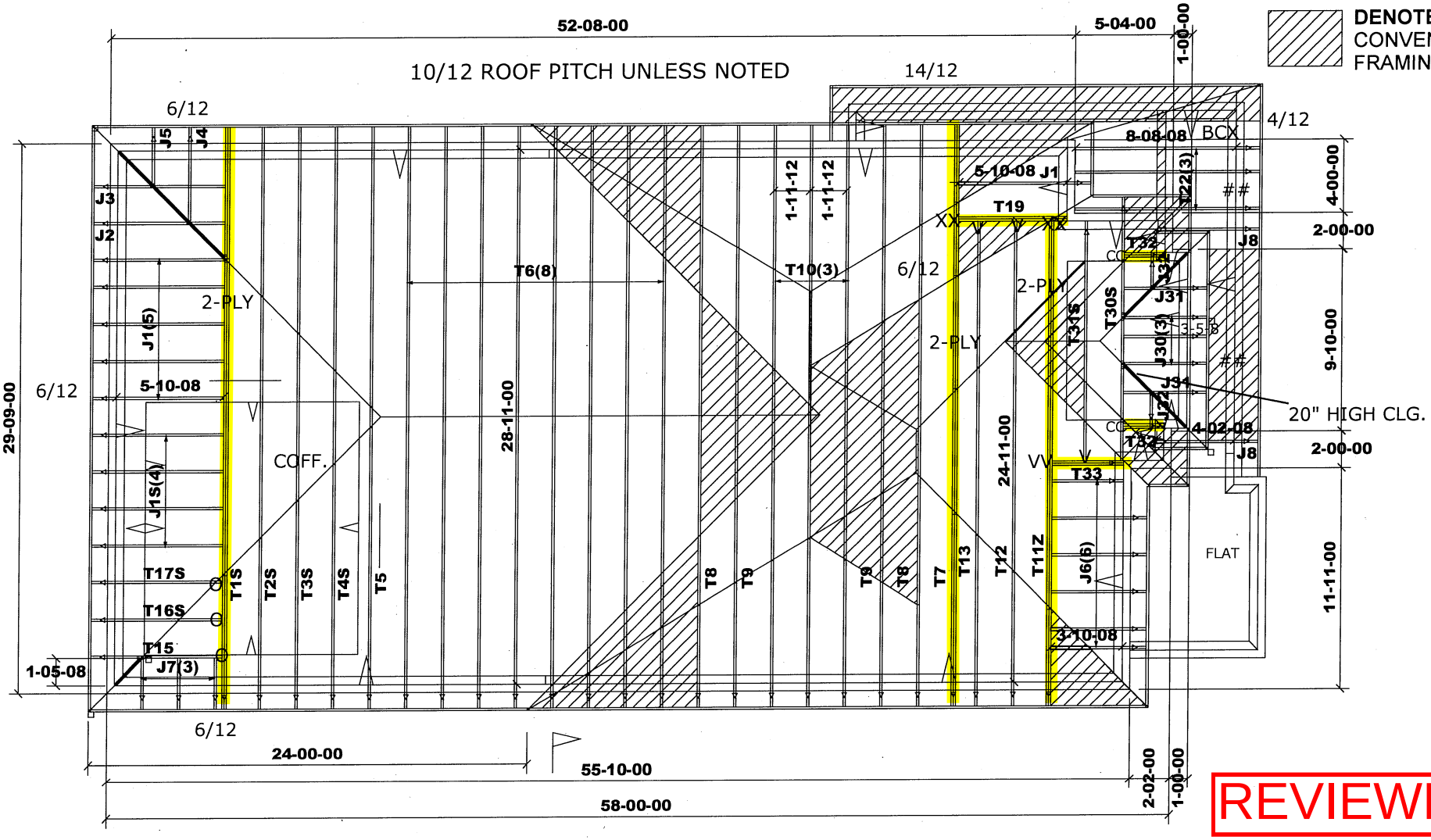

REVIEWED

TAMARACK ROOF TRUSSES INC.	Job Track: **50465**	Builder / Location: **BAYVIEW WELLINGTON / BRADFORD**	Model / Elevation: **S38-19 / B-OPT.WITH COFF.**
	Plan Log: **205562**	Project: **GREEN VALLEY EAST**	
	Layout ID: **423534**	Date: **2022-06-27** Sales: Rick DiCiano Designer: JG	

THESE DRAWINGS CONSTITUTE THE PROPERTY OF TAMARACK ROOF TRUSSES INC., SHALL NOT BE REPRODUCED, PUBLISHED, OR REDISTRIBUTED IN ANY MANNER OR UTILIZED FOR ANY PURPOSE OTHER THAN THE MANUFACTURE OF TRUSSES BY TAMARACK ROOF TRUSSES INC AND WILL BE RETRACTED BY TAMARACK ROOF TRUSSES INC IF UTLILZED FOR ANY OTHER PURPOSE.

Mitek ver 8.5.3.233

ASPHALT SHINGLES
FINISHED OVERHANG: 12"
2x6 EXTERIOR WALLS
2x6 FASCIA BOARD
HEEL: R.T.M.C.

BEAMS:
B1 = 2 - 2x10 SPF #2

All conventional framing to conform with Part 9 of O.B.C. 2012 (2019 amendment). Roof rafters that cross over or meet trusses to be min. 2x4 SPF #2 @ 24" o/c with a vertical post to the truss at each cross point. Vertical posts longer than 6' to have lateral bracing so that the distance between the post end points and lateral bracing does not exceed 6'.

DESIGN CONFORMS WITH OBC 2012 (2019 amendment) OCCUPANCY: RESIDENTIAL | PART: 9
Ss = 43.8 psf | Sr = 8.4 psf

DESIGN LOADS:
TCSL = 32.5 psf
TCDL = 6.0 psf
BCLL = 0.0 psf
BCDL = 7.4 psf

HARDWARE:
LUS24 - (**O**)
LJS26DS - (**V**)
HGUS26-2 - (**XX**)

7-10-0 T.O.P FROM FIN.GROUND FLOOR

DENOTES: CONVENTIONAL FRAMING

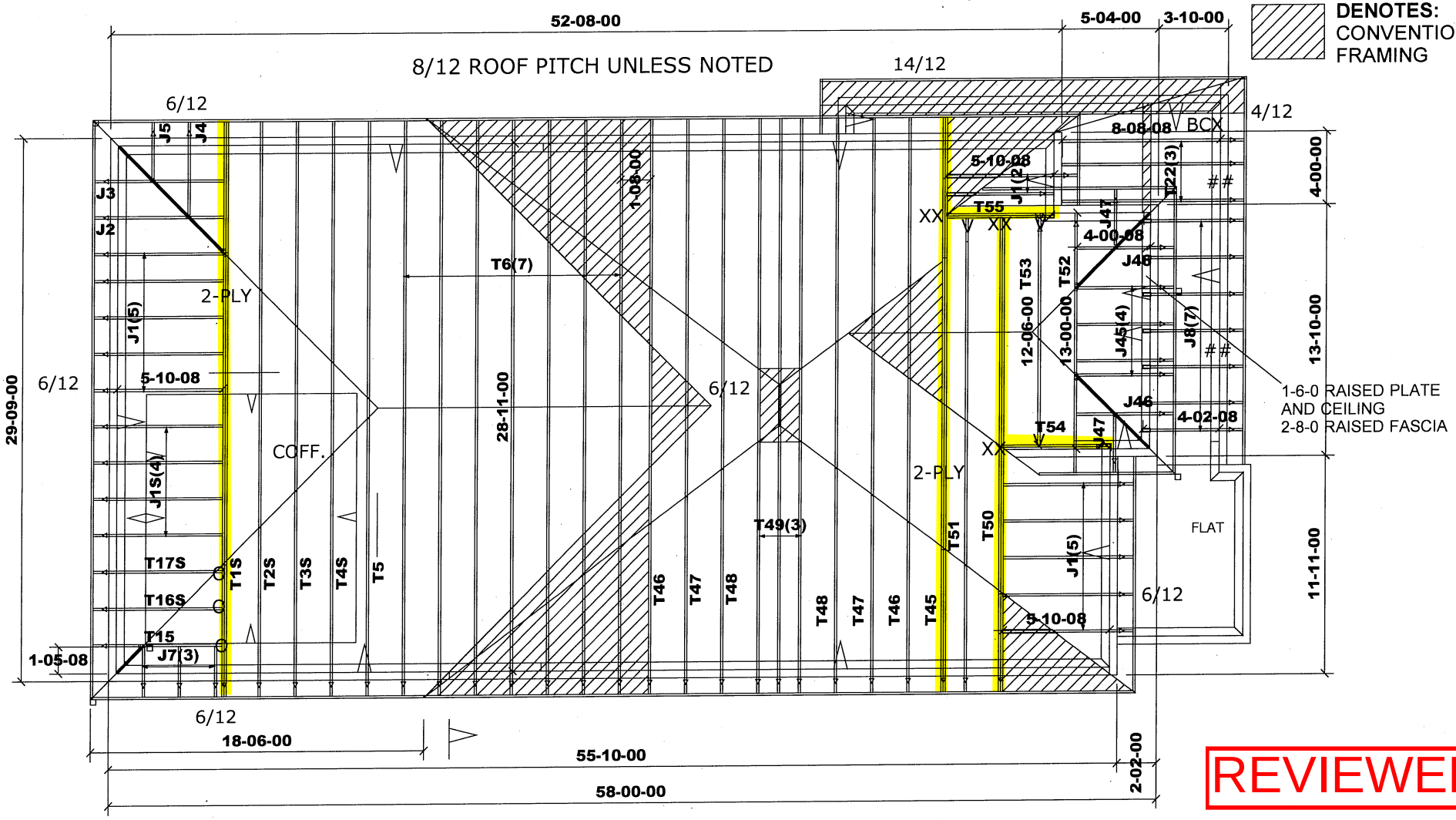

REVIEWED

TAMARACK ROOF TRUSSES INC.	Job Track: **50465**	Builder / Location: **BAYVIEW WELLINGTON / BRADFORD**	Model / Elevation: **S38-19 / C-OPT.WITH COFF.**
	Plan Log: **205562**	Project: **GREEN VALLEY EAST**	
	Layout ID: **423537**	Date: **2022-06-27** Sales: Rick DiCiano Designer: JG	

THESE DRAWINGS CONSTITUTE THE PROPERTY OF TAMARACK ROOF TRUSSES INC., SHALL NOT BE REPRODUCED, PUBLISHED, OR REDISTRIBUTED IN ANY MANNER OR UTILIZED FOR ANY PURPOSE OTHER THAN THE MANUFACTURE OF TRUSSES BY TAMARACK ROOF TRUSSES INC AND WILL BE RETRACTED BY TAMARACK ROOF TRUSSES INC IF UTLILZED FOR ANY OTHER PURPOSE.

Mitek ver 8.5.3.233

ASPHALT SHINGLES
FINISHED OVERHANG: 12"
2x6 EXTERIOR WALLS
2x6 FASCIA BOARD
HEEL: R.T.M.C.

BEAMS:
B1 = 2 - 2x10 SPF #2

All conventional framing to conform with Part 9 of O.B.C. 2012 (2019 amendment). Roof rafters that cross over or meet trusses to be min. 2x4 SPF #2 @ 24" o/c with a vertical post to the truss at each cross point. Vertical posts longer than 6' to have lateral bracing so that the distance between the post end points and lateral bracing does not exceed 6'.

DESIGN CONFORMS WITH OBC 2012
(2019 amendment) OCCUPANCY:
RESIDENTIAL | PART: 9
Ss = 43.8 psf | Sr = 8.4 psf

DESIGN LOADS:
TCSL = 32.5 psf
TCDL = 6.0 psf
BCLL = 0.0 psf
BCDL = 7.4 psf

HARDWARE:
LUS24 - (**O**)
LJS26DS - (**V**)
HGUS26-2 - (**XX**)

7-10-0 T.O.P FROM FIN.GROUND FLOOR

DENOTES:
CONVENTIONAL FRAMING

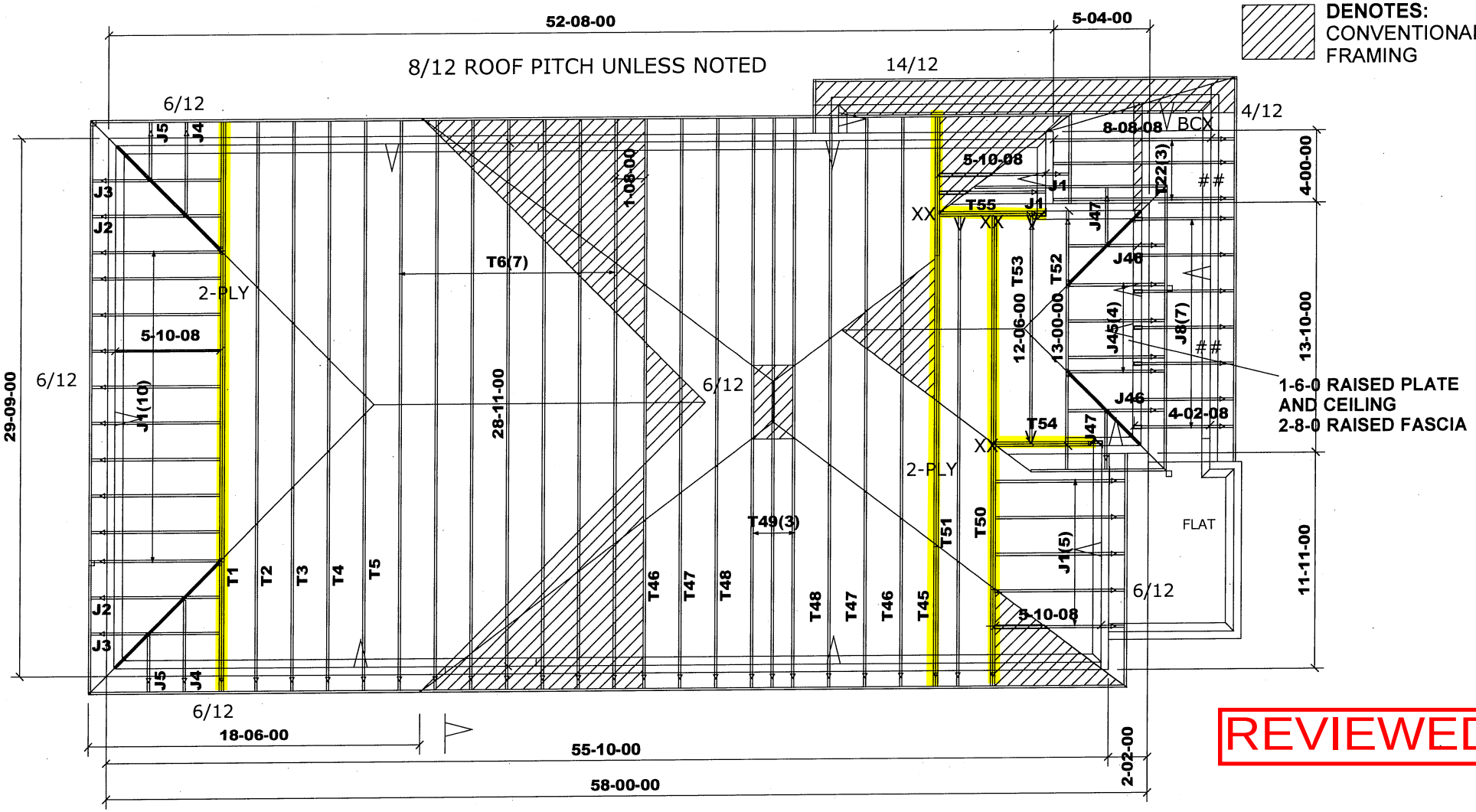

REVIEWED

TAMARACK ROOF TRUSSES INC.	Job Track: **50465**	Builder / Location: **BAYVIEW WELLINGTON / BRADFORD**	Model / Elevation: **S38-19 / C**
	Plan Log: **205562**	Project: **GREEN VALLEY EAST**	
	Layout ID: **423538**	Date: **2022-06-27** Sales: Rick DiCiano Designer: JG	

THESE DRAWINGS CONSTITUTE THE PROPERTY OF TAMARACK ROOF TRUSSES INC., SHALL NOT BE REPRODUCED, PUBLISHED, OR REDISTRIBUTED IN ANY MANNER OR UTILIZED FOR ANY PURPOSE OTHER THAN THE MANUFACTURE OF TRUSSES BY TAMARACK ROOF TRUSSES INC AND WILL BE RETRACTED BY TAMARACK ROOF TRUSSES INC IF UTLILZED FOR ANY OTHER PURPOSE.

Mitek ver 8.5.3.233

ASPHALT SHINGLES
FINISHED OVERHANG: 12"
2x6 EXTERIOR WALLS
2x6 FASCIA BOARD
HEEL: R.T.M.C.

BEAMS:
B1 = 2 - 2x10 SPF #2

All conventional framing to conform with Part 9 of O.B.C. 2012 (2019 amendment). Roof rafters that cross over or meet trusses to be min. 2x4 SPF #2 @ 24" o/c with a vertical post to the truss at each cross point. Vertical posts longer than 6' to have lateral bracing so that the distance between the post end points and lateral bracing does not exceed 6'.

DESIGN CONFORMS WITH OBC 2012 (2019 amendment) OCCUPANCY: RESIDENTIAL | PART: 9
Ss = 43.8 psf | Sr = 8.4 psf

DESIGN LOADS:
TCSL = 32.5 psf
TCDL = 6.0 psf
BCLL = 0.0 psf
BCDL = 7.4 psf

HARDWARE:
LUS24 - (**O**)
LJS26DS - (**V**)
HGUS26-2 - (**XX**)
HUC26-2- (CC)

7-10-0 T.O.P FROM FIN.GROUND FLOOR

DENOTES:
CONVENTIONAL FRAMING

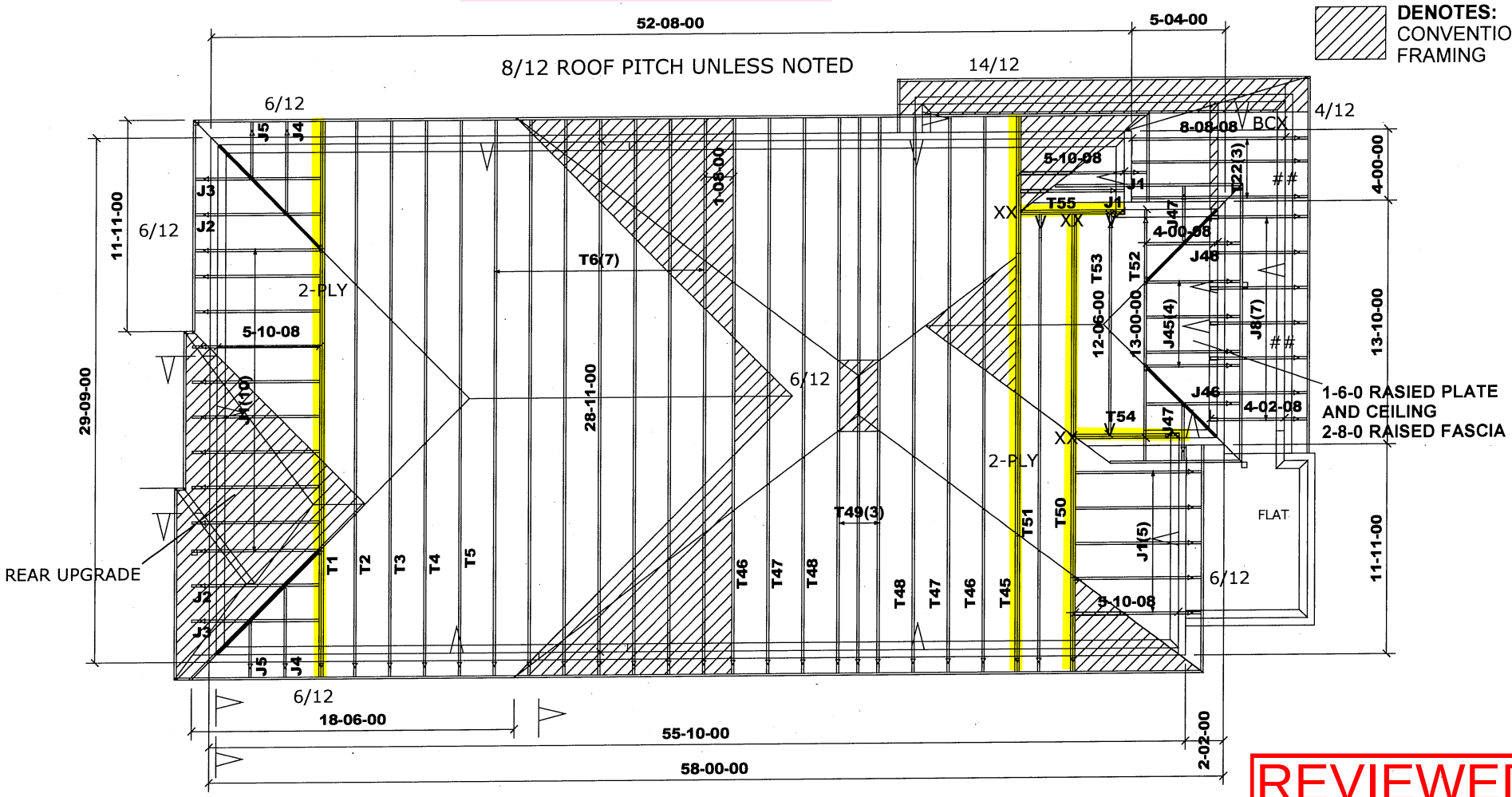

REVIEWED

TAMARACK ROOF TRUSSES INC.	Job Track: **50465**	Builder / Location: **BAYVIEW WELLINGTON / BRADFORD**	Model / Elevation: **S38-19 / C-REAR UPGRADE**
	Plan Log: **205562**	Project: **GREEN VALLEY EAST**	THESE DRAWINGS CONSTITUTE THE PROPERTY OF TAMARACK ROOF TRUSSES INC., SHALL NOT BE REPRODUCED, PUBLISHED, OR REDISTRIBUTED IN ANY MANNER OR UTILIZED FOR ANY PURPOSE OTHER THAN THE MANUFACTURE OF TRUSSES BY TAMARACK ROOF TRUSSES INC AND WILL BE RETRACTED BY TAMARACK ROOF TRUSSES INC IF UTLILZED FOR ANY OTHER PURPOSE.
	Layout ID: **423538**	Date: **2022-06-27** Sales: Rick DiCiano Designer: JG	Mitek ver 8.5.3.233

DELIVERY SHIPLIST

TAMARACK ROOF TRUSSES INC.
ALPA LUMBER GROUP

Lumber Yard:	TAMARACK LUMBER	Job Track:	50465
Builder:	BAYVIEW WELLINGTON	PlanLog:	205562
Project:	GREEN VALLEY EAST	Layout ID:	423532
Location:	BRADFORD	Ref #	
Model:	S38-19	Page:	1 of 3
Lot #:		Date:	06-27-2022
Elevation:	A	Designer:	
		Sales Rep:	Rick DiCiano

Roof Trusses

PROFILE	QTY PLY	MARK TYPE	PITCH	SPAN	HEIGHT	LUMBER	OVERHANG LEFT RIGHT	HEEL HEIGHT LEFT RIGHT	LBS. BFT.	BUNDLE # STACK #	LOAD BY REMARKS
	1 2-ply	T1 Hip Girder	6 /12	**28-11-00**	4-01-04	2 x 4 2 x 6	1-03-08 1-03-08	1-02-00 1-02-00	255.24 161.00		
	1	T2 Hip	6 /12	**28-11-00**	5-01-04	2 x 4	1-03-08 1-03-08	1-02-00 1-02-00	114.66 72.17		
	1	T3 Hip	6 /12	**28-11-00**	6-01-04	2 x 4	1-03-08 1-03-08	1-02-00 1-02-00	120.64 75.67		
	1	T4 Hip	6 /12	**28-11-00**	7-01-04	2 x 4	1-03-08 1-03-08	1-02-00 1-02-00	117.75 73.17		
	1	T5 Hip	6 /12	**28-11-00**	8-01-04	2 x 4	1-03-08 1-03-08	1-02-00 1-02-00	118.15 75.00		
	8	T6 Common	6 /12	**28-11-00**	8-04-12	2 x 4	1-03-08 1-03-08	1-02-00 1-02-00	942.69 581.33		
	1 2-ply	T7 Roof Special Girder	10 /12	**28-11-00**	9-02-02	2 x 4 2 x 6	1-03-08 1-03-08	1-07-11 1-07-11	367.79 228.00		
	2	T8 Hip	10 /12	**28-11-00**	5-01-04	2 x 4	1-03-08 1-03-08	1-07-11 1-07-11	245.33 156.33		
	2	T9 Hip	10 /12	**28-11-00**	6-01-04	2 x 4	1-03-08 1-03-08	1-07-11 1-07-11	245.61 153.33		
	3	T10 Hip	10 /12	**28-11-00**	7-01-04	2 x 4	1-03-08 1-03-08	1-07-11 1-07-11	404.3 254.50		
	1 2-ply	T11 Hip Girder	10 /12	**24-11-00**	4-10-07	2 x 4 2 x 6	1-03-08 1-03-08	1-07-11 1-07-11	251.62 159.67		
	1	T12 Hip	10 /12	**24-11-00**	6-06-07	2 x 4	1-03-08 1-03-08	1-07-11 1-07-11	119.53 76.00		
	1	T13 Hip	10 /12	**24-11-00**	8-02-07	2 x 4	1-03-08 1-03-08	1-07-11 1-07-11	124.52 78.33		
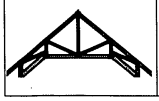	4	T14S Roof Special	10 /12 10 /12	**13-00-00**	7-00-11	2 x 4 2 x 6	1-03-08 1-03-08	1-07-11 1-07-11	261.87 168.67		

REVIEWED

DELIVERY SHIPLIST

TAMARACK ROOF TRUSSES INC.
ALPA LUMBER GROUP

Lumber Yard:	TAMARACK LUMBER	Job Track:	50465
Builder:	BAYVIEW WELLINGTON	PlanLog:	205562
Project:	GREEN VALLEY EAST	Layout ID:	423532
Location:	BRADFORD	Ref #	
Model:	S38-19	Page:	2 of 3
Lot #:		Date:	06-27-2022
Elevation:	A	Designer:	
		Sales Rep:	Rick DiCiano

Roof Trusses

PROFILE	QTY PLY	MARK TYPE	PITCH	SPAN	HEIGHT	LUMBER	OVERHANG LEFT RIGHT	HEEL HEIGHT LEFT RIGHT	LBS. BFT.	BUNDLE # STACK #	LOAD BY REMARKS
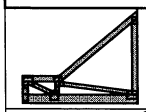	1 2-ply	T18 Roof Special Girder	10 /12	**6-00-08**	4-10-07	2 x 4 2 x 6		1-05-03 4-10-07	59.56 39.67		
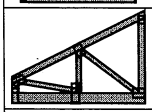	1 2-ply	T19 Jack-Closed Girder	6 /12	**5-10-08**	4-01-04	2 x 4 2 x 6		1-02-00 4-01-04	57.64 37.00		
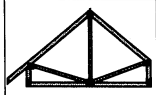	3	T20 Common	10 /12	**8-08-00**	5-04-04	2 x 4	1-03-08	1-07-11 1-10-03	116.41 76.50		
	1	G21 GABLE	10 /12	**8-11-00**	5-04-04	2 x 4	1-03-08 1-03-08	1-07-11 1-07-11	43.33 28.83		
	3	T22 Monopitch	4 /12	**8-08-08**	3-10-00	2 x 4	1-03-08	11-03 3-10-00	133.04 90.00		
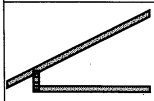	11	J1 Jack-Open	6 /12	**5-10-08**	4-01-04	2 x 4	1-03-08	1-02-00 4-01-04	184.74 117.33		
	2	J2 Jack-Open	6 /12	**3-09-07**	3-00-12	2 x 4	1-03-08 2-01-01	1-02-00 3-00-12	28.26 17.33		
	2	J3 Jack-Open	6 /12	**1-09-07**	2-00-12	2 x 4	1-03-08 4-01-01	1-02-00 2-00-12	23.16 14.67		
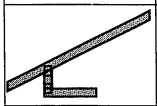	2	J4 Jack-Open	6 /12	**1-10-08**	3-00-12	2 x 4	1-03-08 1-10-15	1-02-00 2-01-04	19.14 12.00		
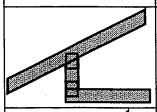	2	J5 Jack-Open	6 /12	**1-09-07**	2-00-12	2 x 4	1-03-08 1-01	1-02-00 2-00-12	14.04 9.33		
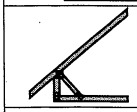	6	J6 Jack-Open	10 /12	**3-10-08**	4-10-07	2 x 4	1-03-08	1-07-11 4-10-07	90.83 58.00		
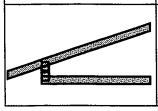	7	J8 Jack-Open	4 /12	**4-02-08**	2-04-00	2 x 4	1-03-08	11-03 2-04-00	84.08 56.00		

TOTAL # TRUSS= **74** TOTAL BFT OF ALL TRUSSES= **2869.83** BFT. TOTAL WEIGHT OF ALL TRSSES **4543.94** LBS

HARDWARE

QTY	TYPE	MODEL	LENGTH
3	Hardware	HGUS26-2	
5	Hardware	LJS26DS	

3. LUS24

REVIEWED

DELIVERY SHIPLIST

Lumber Yard:	TAMARACK LUMBER	Job Track:	50465
Builder:	BAYVIEW WELLINGTON	PlanLog:	205562
Project:	GREEN VALLEY EAST	Layout ID:	423532
Location:	BRADFORD	Ref #	
Model:	S38-19	Page:	3 of 3
Lot #:		Date:	06-27-2022
Elevation:	A	Designer:	
		Sales Rep:	Rick DiCiano

HARDWARE

QTY	TYPE	MODEL	LENGTH

TOTAL NUMBER OF ITEMS= **8**

REVIEWED

DELIVERY SHIPLIST

TAMARACK ROOF TRUSSES INC.
ALPA LUMBER GROUP

Lumber Yard:	TAMARACK LUMBER	Job Track:	50465
Builder:	BAYVIEW WELLINGTON	PlanLog:	205562
Project:	GREEN VALLEY EAST	Layout ID:	423531
Location:	BRADFORD	Ref #	
Model:	S38-19	Page:	1 of 3
Lot #:		Date:	06-27-2022
Elevation:	A-OPT.WITH COFF.	Designer:	
		Sales Rep:	Rick DiCiano

Roof Trusses

PROFILE	QTY PLY	MARK TYPE	PITCH	SPAN	HEIGHT	LUMBER	OVERHANG LEFT RIGHT	HEEL HEIGHT LEFT RIGHT	LBS. BFT.	BUNDLE # STACK #	LOAD BY REMARKS
	1 2-ply	T1S Hip Girder	6 /12	**28-11-00**	4-01-04	2 x 4	1-03-08 1-03-08	1-02-00 1-02-00	303.43 191.67		
	1	T2S Hip	6 /12	**28-11-00**	5-01-04	2 x 4	1-03-08 1-03-08	1-02-00 1-02-00	125.24 81.50		
	1	T3S Hip	6 /12	**28-11-00**	6-01-04	2 x 4	1-03-08 1-03-08	1-02-00 1-02-00	127.12 81.83		
	1	T4S Hip	6 /12	**28-11-00**	7-01-04	2 x 4	1-03-08 1-03-08	1-02-00 1-02-00	129.95 82.83		
	1	T5 Hip	6 /12	**28-11-00**	8-01-04	2 x 4	1-03-08 1-03-08	1-02-00 1-02-00	118.15 75.00		
	8	T6 Common	6 /12	**28-11-00**	8-04-12	2 x 4	1-03-08 1-03-08	1-02-00 1-02-00	942.69 581.33		
	1 2-ply	T7 Roof Special Girder	10 /12	**28-11-00**	9-02-02	2 x 4 2 x 6	1-03-08 1-03-08	1-07-11 1-07-11	367.79 228.00		
	2	T8 Hip	10 /12	**28-11-00**	5-01-04	2 x 4	1-03-08 1-03-08	1-07-11 1-07-11	245.33 156.33		
	2	T9 Hip	10 /12	**28-11-00**	6-01-04	2 x 4	1-03-08 1-03-08	1-07-11 1-07-11	245.61 153.33		
	3	T10 Hip	10 /12	**28-11-00**	7-01-04	2 x 4	1-03-08 1-03-08	1-07-11 1-07-11	404.3 254.50		
	1 2-ply	T11 Hip Girder	10 /12	**24-11-00**	4-10-07	2 x 4 2 x 6	1-03-08 1-03-08	1-07-11 1-07-11	251.62 159.67		
	1	T12 Hip	10 /12	**24-11-00**	6-06-07	2 x 4	1-03-08 1-03-08	1-07-11 1-07-11	119.53 76.00		
	1	T13 Hip	10 /12	**24-11-00**	8-02-07	2 x 4	1-03-08 1-03-08	1-07-11 1-07-11	124.52 78.33		
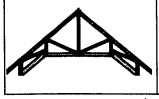	4	T14S Roof Special	10 /12 10 /12	**13-00-00**	7-00-11	2 x 4	1-03-08 1-03-08	1-07-11 1-07-11	261.87 168.67		

REVIEWED

DELIVERY SHIPLIST

TAMARACK ROOF TRUSSES INC.
ALPA LUMBER GROUP

Lumber Yard:	TAMARACK LUMBER	Job Track:	50465
Builder:	BAYVIEW WELLINGTON	PlanLog:	205562
Project:	GREEN VALLEY EAST	Layout ID:	423531
Location:	BRADFORD	Ref #	
Model:	S38-19	Page:	2 of 3
Lot #:		Date:	06-27-2022
Elevation:	A-OPT.WITH COFF.	Designer:	
		Sales Rep:	Rick DiCiano

Roof Trusses

PROFILE	QTY PLY	MARK TYPE	PITCH	SPAN	HEIGHT	LUMBER	OVERHANG LEFT RIGHT	HEEL HEIGHT LEFT RIGHT	LBS. BFT.	BUNDLE # STACK #	LOAD BY REMARKS
	1	T15 Half Hip Girder	6 /12	**5-10-08**	1-10-12	2 x 4	1-03-08	1-02-00 1-10-12	23.24 16.50		
	1	T16S Half Hip	6 /12	**5-10-08**	2-10-12	2 x 4	1-03-08	1-02-00 1-10-12	25.02 18.50		
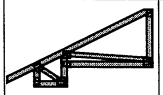	1	T17S Half Hip	6 /12	**5-10-08**	3-10-12	2 x 4	1-03-08	1-02-00 2-10-12	25.33 17.67		
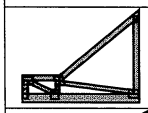	1 2-ply	T18 Roof Special Girder	10 /12	**6-00-08**	4-10-07	2 x 4 2 x 6		1-05-03 4-10-07	59.56 39.67		
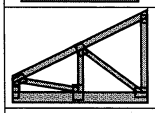	1 2-ply	T19 Jack-Closed Girder	6 /12	**5-10-08**	4-01-04	2 x 4 2 x 6		1-02-00 4-01-04	57.64 37.00		
	3	T20 Common	10 /12	**8-08-00**	5-04-04	2 x 4	1-03-08	1-07-11 1-10-03	116.41 76.50		
	1	G21 GABLE	10 /12	**8-11-00**	5-04-04	2 x 4	1-03-08 1-03-08	1-07-11 1-07-11	43.33 28.83		
	3	T22 Monopitch	4 /12	**8-08-08**	3-10-00	2 x 4	1-03-08	11-03 3-10-00	133.04 90.00		
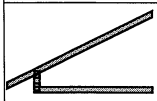	6	J1 Jack-Open	6 /12	**5-10-08**	4-01-04	2 x 4	1-03-08	1-02-00 4-01-04	100.77 64.00		
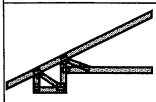	4	J1S Jack-Open	6 /12	**5-10-08**	4-01-04	2 x 4	1-03-08	1-02-00 3-01-04	81.56 58.67		
	1	J2 Jack-Open	6 /12	**3-09-07**	3-00-12	2 x 4	1-03-08 2-01-01	1-02-00 3-00-12	14.13 8.67		
	1	J3 Jack-Open	6 /12	**1-09-07**	2-00-12	2 x 4	1-03-08 4-01-01	1-02-00 2-00-12	11.58 7.33		
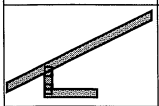	1	J4 Jack-Open	6 /12	**1-10-08**	3-00-12	2 x 4	1-03-08 1-10-15	1-02-00 2-01-04	9.57 6.00		
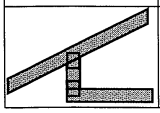	1	J5 Jack-Open	6 /12	**1-09-07**	2-00-12	2 x 4	1-03-08 1-01	1-02-00 2-00-12	7.02 4.67		

REVIEWED

DELIVERY SHIPLIST

TAMARACK ROOF TRUSSES INC.
ALPA LUMBER GROUP

Lumber Yard:	TAMARACK LUMBER	Job Track:	50465
Builder:	BAYVIEW WELLINGTON	PlanLog:	205562
Project:	GREEN VALLEY EAST	Layout ID:	423531
Location:	BRADFORD	Ref #	
Model:	S38-19	Page:	3 of 3
Lot #:		Date:	06-27-2022
Elevation:	A-OPT.WITH COFF.	Designer:	
		Sales Rep:	Rick DiCiano

Roof Trusses

PROFILE	QTY PLY	MARK TYPE	PITCH	SPAN	HEIGHT	LUMBER	OVERHANG LEFT RIGHT	HEEL HEIGHT LEFT RIGHT	LBS. BFT.	BUNDLE # STACK #	LOAD BY REMARKS
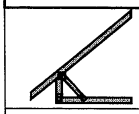	6	J6 Jack-Open	10 /12	**3-10-08**	4-10-07	2 x 4	1-03-08	1-07-11 4-10-07	90.83 58.00		
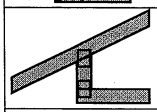	3	J7 Jack-Open	6 /12	**1-05-08**	1-10-12	2 x 4	1-03-08	1-02-00 1-10-12	18.38 14.00		
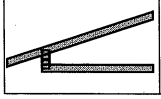	7	J8 Jack-Open	4 /12	**4-02-08**	2-04-00	2 x 4	1-03-08	11-03 2-04-00	84.08 56.00		

TOTAL # TRUSS= **75** TOTAL BFT OF ALL TRUSSES= **2971** BFT. TOTAL WEIGHT OF ALL TRSSES **4668.64** LBS

HARDWARE

QTY	TYPE	MODEL	LENGTH
3	Hardware	HGUS26-2	
5	Hardware	LJS26DS	

TOTAL NUMBER OF ITEMS= **8**

3 LUS24.

REVIEWED

DELIVERY SHIPLIST

TAMARACK ROOF TRUSSES INC.
ALPA LUMBER GROUP

Lumber Yard:	TAMARACK LUMBER	Job Track:	50465
Builder:	BAYVIEW WELLINGTON	PlanLog:	205562
Project:	GREEN VALLEY EAST	Layout ID:	423533
Location:	BRADFORD	Ref #	
Model:	S38-19	Page:	1 of 3
Lot #:		Date:	06-27-2022
Elevation:	A-COFF. WITH REAR UPGRADE	Designer:	
		Sales Rep:	Rick DiCiano

Roof Trusses

PROFILE	QTY PLY	MARK TYPE	PITCH	SPAN	HEIGHT	LUMBER	OVERHANG LEFT RIGHT	HEEL HEIGHT LEFT RIGHT	LBS. BFT.	BUNDLE # STACK #	LOAD BY REMARKS
	1 2-ply	T1S Hip Girder	6 /12	**28-11-00**	4-01-04	2 x 4	1-03-08 1-03-08	1-02-00 1-02-00	303.35 191.67		
	1	T2S Hip	6 /12	**28-11-00**	5-01-04	2 x 4	1-03-08 1-03-08	1-02-00 1-02-00	125.02 81.50		
	1	T3S Hip	6 /12	**28-11-00**	6-01-04	2 x 4	1-03-08 1-03-08	1-02-00 1-02-00	127.09 81.67		
	1	T4S Hip	6 /12	**28-11-00**	7-01-04	2 x 4	1-03-08 1-03-08	1-02-00 1-02-00	130.01 82.83		
	1	T5 Hip	6 /12	**28-11-00**	8-01-04	2 x 4	1-03-08 1-03-08	1-02-00 1-02-00	118.15 75.00		
	8	T6 Common	6 /12	**28-11-00**	8-04-12	2 x 4	1-03-08 1-03-08	1-02-00 1-02-00	971.43 597.33		
	1 2-ply	T7 Roof Special Girder	10 /12	**28-11-00**	9-02-02	2 x 4 2 x 6	1-03-08 1-03-08	1-07-11 1-07-11	367.79 228.00		
	2	T8 Hip	10 /12	**28-11-00**	5-01-04	2 x 4	1-03-08 1-03-08	1-07-11 1-07-11	245.33 156.33		
	2	T9 Hip	10 /12	**28-11-00**	6-01-04	2 x 4	1-03-08 1-03-08	1-07-11 1-07-11	245.61 153.33		
	3	T10 Hip	10 /12	**28-11-00**	7-01-04	2 x 4	1-03-08 1-03-08	1-07-11 1-07-11	404.3 254.50		
	1 2-ply	T11 Hip Girder	10 /12	**24-11-00**	4-10-07	2 x 4 2 x 6	1-03-08 1-03-08	1-07-11 1-07-11	251.62 159.67		
	1	T12 Hip	10 /12	**24-11-00**	6-06-07	2 x 4	1-03-08 1-03-08	1-07-11 1-07-11	119.53 76.00		
	1	T13 Hip	10 /12	**24-11-00**	8-02-07	2 x 4	1-03-08 1-03-08	1-07-11 1-07-11	124.52 78.33		
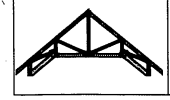	4	T14S Roof Special	10 /12 10 /12	**13-00-00**	7-00-11	2 x 4 2 x 6	1-03-08 1-03-08	1-07-11 1-07-11	261.87 168.67		

REVIEWED

DELIVERY SHIPLIST

TAMARACK ROOF TRUSSES INC.
ALPA LUMBER GROUP

Lumber Yard:	TAMARACK LUMBER	Job Track:	50465
Builder:	BAYVIEW WELLINGTON	PlanLog:	205562
Project:	GREEN VALLEY EAST	Layout ID:	423533
Location:	BRADFORD	Ref #	
Model:	S38-19	Page:	2 of 3
Lot #:		Date:	06-27-2022
Elevation:	A-COFF. WITH REAR UPGRADE	Designer:	
		Sales Rep:	Rick DiCiano

Roof Trusses

PROFILE	QTY PLY	MARK TYPE	PITCH	SPAN	HEIGHT	LUMBER	OVERHANG LEFT RIGHT	HEEL HEIGHT LEFT RIGHT	LBS. BFT.	BUNDLE # STACK #	LOAD BY REMARKS
	1	T15 Half Hip Girder	6 /12	**5-10-08**	1-10-12	2 x 4	1-03-08	1-02-00 1-10-12	23.24 16.50		
	1	T16S Half Hip	6 /12	**5-10-08**	2-10-12	2 x 4	1-03-08	1-02-00 1-10-12	26.14 19.50		
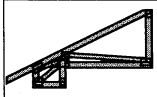	1	T17S Half Hip	6 /12	**5-10-08**	3-10-12	2 x 4	1-03-08	1-02-00 2-10-12	26.41 18.67		
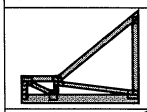	1 2-ply	T18 Roof Special Girder	10 /12	**6-00-08**	4-10-07	2 x 4 2 x 6		1-05-03 4-10-07	59.56 39.67		
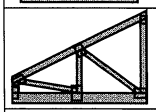	1 2-ply	T19 Jack-Closed Girder	6 /12	**5-10-08**	4-01-04	2 x 4 2 x 6		1-02-00 4-01-04	57.64 37.00		
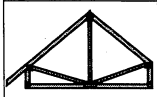	3	T20 Common	10 /12	**8-08-00**	5-04-04	2 x 4	1-03-08	1-07-11 1-10-03	116.41 76.50		
	1	G21 GABLE	10 /12	**8-11-00**	5-04-04	2 x 4	1-03-08 1-03-08	1-07-11 1-07-11	43.33 28.83		
	3	T22 Monopitch	4 /12	**8-08-08**	3-10-00	2 x 4	1-03-08	11-03 3-10-00	133.04 90.00		
	1	V1 Valley	6 /12	**16-09-00**	4-02-04	2 x 4			48.6 30.33		
	1	V2 Valley	6 /12	**12-09-00**	3-02-04	2 x 4			33.04 21.50		
	1	V3 Valley	6 /12	**8-09-00**	2-02-04	2 x 4			20.73 13.67		
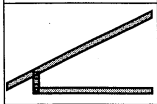	6	J1 Jack-Open	6 /12	**5-10-08**	4-01-04	2 x 4	1-03-08	1-02-00 4-01-04	100.77 64.00		
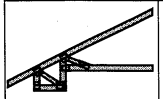	4	J1S Jack-Open	6 /12	**5-10-08**	4-01-04	2 x 4	1-03-08	1-02-00 3-01-04	81.56 58.67		
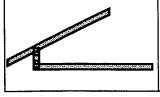	1	J2 Jack-Open	6 /12	**3-09-07**	3-00-12	2 x 4	1-03-08 2-01-01	1-02-00 3-00-12	14.11 8.67		

REVIEWED

DELIVERY SHIPLIST

TAMARACK ROOF TRUSSES INC.
ALPA LUMBER GROUP

Lumber Yard:	TAMARACK LUMBER	Job Track:	50465
Builder:	BAYVIEW WELLINGTON	PlanLog:	205562
Project:	GREEN VALLEY EAST	Layout ID:	423533
Location:	BRADFORD	Ref #	
Model:	S38-19	Page:	3 of 3
Lot #:		Date:	06-27-2022
Elevation:	A-COFF. WITH REAR UPGRADE	Designer:	
		Sales Rep:	Rick DiCiano

Roof Trusses

PROFILE	QTY PLY	MARK TYPE	PITCH	SPAN	HEIGHT	LUMBER	OVERHANG LEFT RIGHT	HEEL HEIGHT LEFT RIGHT	LBS. BFT.	BUNDLE # STACK #	LOAD BY REMARKS
	1	J3 Jack-Open	6 /12	**1-09-07**	2-00-12	2 x 4	1-03-08 4-01-01	1-02-00 2-00-12	11.58 7.33		
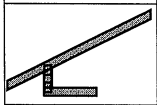	1	J4 Jack-Open	6 /12	**1-10-08**	3-00-12	2 x 4	1-03-08 1-10-15	1-02-00 2-01-04	9.57 6.00		
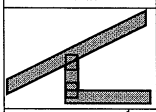	1	J5 Jack-Open	6 /12	**1-09-07**	2-00-12	2 x 4	1-03-08 1-01	1-02-00 2-00-12	7.02 4.67		
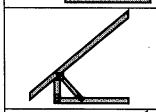	6	J6 Jack-Open	10 /12	**3-10-08**	4-10-07	2 x 4	1-03-08	1-07-11 4-10-07	90.83 58.00		
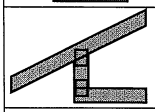	3	J7 Jack-Open	6 /12	**1-05-08**	1-10-12	2 x 4	1-03-08	1-02-00 1-10-12	18.38 14.00		
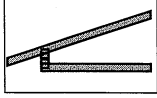	7	J8 Jack-Open	4 /12	**4-02-08**	2-04-00	2 x 4	1-03-08	11-03 2-04-00	84.08 56.00		

TOTAL # TRUSS= **78** TOTAL BFT OF ALL TRUSSES= **3054.34** BFT. TOTAL WEIGHT OF ALL TRSSES **4801.68** LBS

HARDWARE

QTY	TYPE	MODEL	LENGTH
3	Hardware	HGUS26-2	
5	Hardware	LJS26DS	
3	Hardware	LUS24	

TOTAL NUMBER OF ITEMS= **11**

REVIEWED

DELIVERY SHIPLIST

TAMARACK ROOF TRUSSES INC.
ALPA LUMBER GROUP

Lumber Yard:	TAMARACK LUMBER	Job Track:	50465
Builder:	BAYVIEW WELLINGTON	PlanLog:	205562
Project:	GREEN VALLEY EAST	Layout ID:	423535
Location:	BRADFORD	Ref #	
Model:	S38-19	Page:	1 of 3
Lot #:		Date:	06-27-2022
Elevation:	B	Designer:	
		Sales Rep:	Rick DiCiano

Roof Trusses

PROFILE	QTY PLY	MARK TYPE	PITCH	SPAN	HEIGHT	LUMBER	OVERHANG LEFT RIGHT	HEEL HEIGHT LEFT RIGHT	LBS. BFT.	BUNDLE # STACK #	LOAD BY REMARKS
	1 2-ply	T1 Hip Girder	6 /12	**28-11-00**	4-01-04	2 x 4 2 x 6	1-03-08 1-03-08	1-02-00 1-02-00	263.62 168.00		
	1	T2 Hip	6 /12	**28-11-00**	5-01-04	2 x 4	1-03-08 1-03-08	1-02-00 1-02-00	114.66 72.17		
	1	T3 Hip	6 /12	**28-11-00**	6-01-04	2 x 4	1-03-08 1-03-08	1-02-00 1-02-00	120.64 75.67		
	1	T4 Hip	6 /12	**28-11-00**	7-01-04	2 x 4	1-03-08 1-03-08	1-02-00 1-02-00	117.75 73.17		
	1	T5 Hip	6 /12	**28-11-00**	8-01-04	2 x 4	1-03-08 1-03-08	1-02-00 1-02-00	118.15 75.00		
	8	T6 Common	6 /12	**28-11-00**	8-04-12	2 x 4	1-03-08 1-03-08	1-02-00 1-02-00	942.69 581.33		
	1 2-ply	T7 Roof Special Girder	10 /12	**28-11-00**	9-02-02	2 x 4 2 x 6	1-03-08 1-03-08	1-07-11 1-07-11	367.79 228.00		
	2	T8 Hip	10 /12	**28-11-00**	5-01-04	2 x 4	1-03-08 1-03-08	1-07-11 1-07-11	245.33 156.33		
	2	T9 Hip	10 /12	**28-11-00**	6-01-04	2 x 4	1-03-08 1-03-08	1-07-11 1-07-11	245.61 153.33		
	3	T10 Hip	10 /12	**28-11-00**	7-01-04	2 x 4	1-03-08 1-03-08	1-07-11 1-07-11	404.3 254.50		
	1 2-ply	T11Z Hip Girder	10 /12	**24-11-00**	4-10-07	2 x 4 2 x 6	1-03-08 1-03-08	1-07-11 1-07-11	251.62 159.67		
	1	T12 Hip	10 /12	**24-11-00**	6-06-07	2 x 4	1-03-08 1-03-08	1-07-11 1-07-11	119.53 76.00		
	1	T13 Hip	10 /12	**24-11-00**	8-02-07	2 x 4	1-03-08 1-03-08	1-07-11 1-07-11	124.52 78.33		
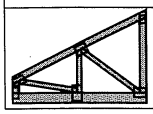	1 2-ply	T19 Jack-Closed Girder	6 /12	**5-10-08**	4-01-04	2 x 4 2 x 6		1-02-00 4-01-04	57.64 37.00		

REVIEWED

DELIVERY SHIPLIST

TAMARACK ROOF TRUSSES INC.
ALPA LUMBER GROUP

Lumber Yard:	TAMARACK LUMBER	Job Track:	50465
Builder:	BAYVIEW WELLINGTON	PlanLog:	205562
Project:	GREEN VALLEY EAST	Layout ID:	423535
Location:	BRADFORD	Ref #	
Model:	S38-19	Page:	2 of 3
Lot #:		Date:	06-27-2022
Elevation:	B	Designer:	
		Sales Rep:	Rick DiCiano

Roof Trusses

PROFILE	QTY PLY	MARK TYPE	PITCH	SPAN	HEIGHT	LUMBER	OVERHANG LEFT RIGHT	HEEL HEIGHT LEFT RIGHT	LBS. BFT.	BUNDLE # STACK #	LOAD BY REMARKS
	3	T22 Monopitch	4 /12	**8-08-08**	3-10-00	2 x 4	1-03-08	11-03 3-10-00	133.04 90.00		
	1	T30S Hip Girder	10 /12	**13-00-00**	5-11-12	2 x 4 2 x 6	1-03-08 1-03-08	1-07-11 1-07-11	76.93 53.17		
	1	T31S Roof Special	10 /12	**13-00-00**	7-00-11	2 x 4		1-07-11 1-07-11	63.17 42.17		
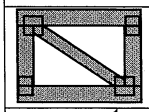	2 2-ply	T32 Flat	0 /12	**2-02-08**	1-08-00	2 x 4		1-08-00 1-08-00	36.39 30.67		
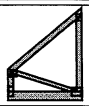	1 2-ply	T33 Jack-Closed Girder	10 /12	**3-10-08**	4-10-07	2 x 4 2 x 6		1-07-11 4-10-07	43.15 29.33		
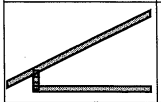	11	J1 Jack-Open	6 /12	**5-10-08**	4-01-04	2 x 4	1-03-08	1-02-00 4-01-04	184.74 117.33		
	2	J2 Jack-Open	6 /12	**3-09-07**	3-00-12	2 x 4	1-03-08 2-01-01	1-02-00 3-00-12	28.26 17.33		
	2	J3 Jack-Open	6 /12	**1-09-07**	2-00-12	2 x 4	1-03-08 4-01-01	1-02-00 2-00-12	23.16 14.67		
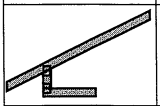	2	J4 Jack-Open	6 /12	**1-10-08**	3-00-12	2 x 4	1-03-08 1-10-15	1-02-00 2-01-04	19.14 12.00		
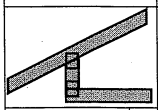	2	J5 Jack-Open	6 /12	**1-09-07**	2-00-12	2 x 4	1-03-08 1-01	1-02-00 2-00-12	14.04 9.33		
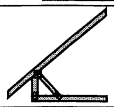	6	J6 Jack-Open	10 /12	**3-10-08**	4-10-07	2 x 4	1-03-08	1-07-11 4-10-07	90.83 58.00		
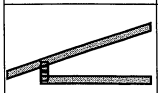	2	J8 Jack-Open	4 /12	**4-02-08**	2-04-00	2 x 4	1-03-08	11-03 2-04-00	24.02 16.00		
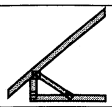	3	J30 Jack-Open	10 /12	**3-05-08**	4-03-12	2 x 4	1-00-08	1-05-03 4-03-12	40.97 29.00		
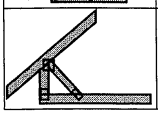	2	J31 Jack-Open	10 /12	**1-09-07**	2-11-01	2 x 4	1-00-08 1-08-01	1-05-03 2-11-01	21.47 15.33		

REVIEWED

DELIVERY SHIPLIST

Lumber Yard:	TAMARACK LUMBER	Job Track:	50465
Builder:	BAYVIEW WELLINGTON	PlanLog:	205562
Project:	GREEN VALLEY EAST	Layout ID:	423535
Location:	BRADFORD	Ref #	
Model:	S38-19	Page:	3 of 3
Lot #:		Date:	06-27-2022
Elevation:	B	Designer:	
		Sales Rep:	Rick DiCiano

Roof Trusses

PROFILE	QTY PLY	MARK TYPE	PITCH	SPAN	HEIGHT	LUMBER	OVERHANG LEFT RIGHT	HEEL HEIGHT LEFT RIGHT	LBS. BFT.	BUNDLE # STACK #	LOAD BY REMARKS
	2	**J32** **Jack-Open**	10 /12	**1-10-08**	2-11-01	2 x 4		1-05-03 2-11-15	14.87 11.33		

TOTAL # TRUSS= **74** TOTAL BFT OF ALL TRUSSES= **2734.16** BFT. TOTAL WEIGHT OF ALL TRSSES **4308.06** LBS

HARDWARE

QTY	TYPE	MODEL	LENGTH
2	Hardware	HGUS26-2	
2		HUC26-2	
3	Hardware	LJS26DS	
1	Hardware	LUS26-2	

TOTAL NUMBER OF ITEMS= **8**

REVIEWED

DELIVERY SHIPLIST

TAMARACK ROOF TRUSSES INC.
ALPA LUMBER GROUP

Lumber Yard:	TAMARACK LUMBER	Job Track:	50465
Builder:	BAYVIEW WELLINGTON	PlanLog:	205562
Project:	GREEN VALLEY EAST	Layout ID:	423534
Location:	BRADFORD	Ref #	
Model:	S38-19	Page:	1 of 3
Lot #:		Date:	06-27-2022
Elevation:	B-OPT.WITH COFF.	Designer:	
		Sales Rep:	Rick DiCiano

Roof Trusses

PROFILE	QTY PLY	MARK TYPE	PITCH	SPAN	HEIGHT	LUMBER	OVERHANG LEFT RIGHT	HEEL HEIGHT LEFT RIGHT	LBS. BFT.	BUNDLE # STACK #	LOAD BY REMARKS
	1 2-ply	T1S Hip Girder	6 /12	**28-11-00**	4-01-04	2 x 4	1-03-08 1-03-08	1-02-00 1-02-00	303.43 191.67		
	1	T2S Hip	6 /12	**28-11-00**	5-01-04	2 x 4	1-03-08 1-03-08	1-02-00 1-02-00	125.02 81.50		
	1	T3S Hip	6 /12	**28-11-00**	6-01-04	2 x 4	1-03-08 1-03-08	1-02-00 1-02-00	126.63 81.33		
	1	T4S Hip	6 /12	**28-11-00**	7-01-04	2 x 4	1-03-08 1-03-08	1-02-00 1-02-00	129.86 82.83		
	1	T5 Hip	6 /12	**28-11-00**	8-01-04	2 x 4	1-03-08 1-03-08	1-02-00 1-02-00	118.15 75.00		
	8	T6 Common	6 /12	**28-11-00**	8-04-12	2 x 4	1-03-08 1-03-08	1-02-00 1-02-00	942.69 581.33		
	1 2-ply	T7 Roof Special Girder	10 /12	**28-11-00**	9-02-02	2 x 4 2 x 6	1-03-08 1-03-08	1-07-11 1-07-11	367.79 228.00		
	2	T8 Hip	10 /12	**28-11-00**	5-01-04	2 x 4	1-03-08 1-03-08	1-07-11 1-07-11	245.33 156.33		
	2	T9 Hip	10 /12	**28-11-00**	6-01-04	2 x 4	1-03-08 1-03-08	1-07-11 1-07-11	245.61 153.33		
	3	T10 Hip	10 /12	**28-11-00**	7-01-04	2 x 4	1-03-08 1-03-08	1-07-11 1-07-11	404.3 254.50		
	1 2-ply	T11Z Hip Girder	10 /12	**24-11-00**	4-10-07	2 x 4 2 x 6	1-03-08 1-03-08	1-07-11 1-07-11	251.62 159.67		
	1	T12 Hip	10 /12	**24-11-00**	6-06-07	2 x 4	1-03-08 1-03-08	1-07-11 1-07-11	119.53 76.00		
	1	T13 Hip	10 /12	**24-11-00**	8-02-07	2 x 4	1-03-08 1-03-08	1-07-11 1-07-11	124.52 78.33		
	1	T15 Half Hip Girder	6 /12	**5-10-08**	1-10-12	2 x 4	1-03-08	1-02-00 1-10-12	23.24 16.50		

REVIEWED

DELIVERY SHIPLIST

TAMARACK ROOF TRUSSES INC.
ALPA LUMBER GROUP

Lumber Yard:	TAMARACK LUMBER	Job Track:	50465
Builder:	BAYVIEW WELLINGTON	PlanLog:	205562
Project:	GREEN VALLEY EAST	Layout ID:	423534
Location:	BRADFORD	Ref #	
Model:	S38-19	Page:	2 of 3
Lot #:		Date:	06-27-2022
Elevation:	B-OPT.WITH COFF.	Designer:	
		Sales Rep:	Rick DiCiano

Roof Trusses

PROFILE	QTY PLY	MARK TYPE	PITCH	SPAN	HEIGHT	LUMBER	OVERHANG LEFT RIGHT	HEEL HEIGHT LEFT RIGHT	LBS. BFT.	BUNDLE # STACK #	LOAD BY REMARKS
	1	T16S Half Hip	6 /12	**5-10-08**	2-10-12	2 x 4	1-03-08	1-02-00 1-10-12	25.02 18.50		
	1	T17S Half Hip	6 /12	**5-10-08**	3-10-12	2 x 4	1-03-08	1-02-00 2-10-12	25.33 17.67		
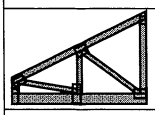	1 2-ply	T19 Jack-Closed Girder	6 /12	**5-10-08**	4-01-04	2 x 4 2 x 6		1-02-00 4-01-04	57.64 37.00		
	3	T22 Monopitch	4 /12	**8-08-08**	3-10-00	2 x 4	1-03-08	11-03 3-10-00	133.04 90.00		
	1	T30S Hip Girder	10 /12	**13-00-00**	5-11-12	2 x 4 2 x 6	1-03-08 1-03-08	1-07-11 1-07-11	76.93 53.17		
	1	T31S Roof Special	10 /12	**13-00-00**	7-00-11	2 x 4		1-07-11 1-07-11	61.38 41.17		
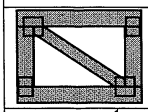	2 2-ply	T32 Flat	0 /12	**2-02-08**	1-08-00	2 x 4		1-08-00 1-08-00	36.39 30.67		
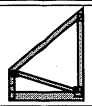	1 2-ply	T33 Jack-Closed Girder	10 /12	**3-10-08**	4-10-07	2 x 4 2 x 6		1-07-11 4-10-07	43.15 29.33		
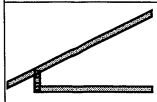	6	J1 Jack-Open	6 /12	**5-10-08**	4-01-04	2 x 4	1-03-08	1-02-00 4-01-04	100.77 64.00		
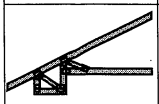	4	J1S Jack-Open	6 /12	**5-10-08**	4-01-04	2 x 4	1-03-08	1-02-00 3-01-04	81.56 58.67		
	1	J2 Jack-Open	6 /12	**3-09-07**	3-00-12	2 x 4	1-03-08 2-01-01	1-02-00 3-00-12	14.13 8.67		
	1	J3 Jack-Open	6 /12	**1-09-07**	2-00-12	2 x 4	1-03-08 4-01-01	1-02-00 2-00-12	11.58 7.33		
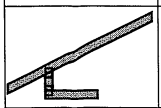	1	J4 Jack-Open	6 /12	**1-10-08**	3-00-12	2 x 4	1-03-08 1-10-15	1-02-00 2-01-04	9.57 6.00		
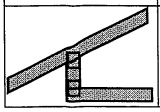	1	J5 Jack-Open	6 /12	**1-09-07**	2-00-12	2 x 4	1-03-08 1-01	1-02-00 2-00-12	7.02 4.67		

REVIEWED

DELIVERY SHIPLIST

TAMARACK ROOF TRUSSES INC.
ALPA LUMBER GROUP

Lumber Yard:	TAMARACK LUMBER	Job Track:	50465
Builder:	BAYVIEW WELLINGTON	PlanLog:	205562
Project:	GREEN VALLEY EAST	Layout ID:	423534
Location:	BRADFORD	Ref #	
Model:	S38-19	Page:	3 of 3
Lot #:		Date:	06-27-2022
Elevation:	B-OPT.WITH COFF.	Designer:	
		Sales Rep:	Rick DiCiano

Roof Trusses

PROFILE	QTY PLY	MARK TYPE	PITCH	SPAN	HEIGHT	LUMBER	OVERHANG LEFT RIGHT	HEEL HEIGHT LEFT RIGHT	LBS. BFT.	BUNDLE # STACK #	LOAD BY REMARKS
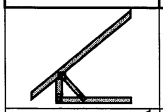	6	J6 Jack-Open	10 /12	**3-10-08**	4-10-07	2 x 4	1-03-08	1-07-11 4-10-07	90.83 58.00		
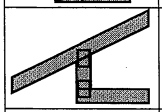	3	J7 Jack-Open	6 /12	**1-05-08**	1-10-12	2 x 4	1-03-08	1-02-00 1-10-12	18.38 14.00		
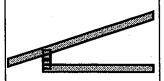	2	J8 Jack-Open	4 /12	**4-02-08**	2-04-00	2 x 4	1-03-08	11-03 2-04-00	24.02 16.00		
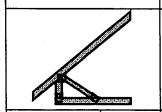	3	J30 Jack-Open	10 /12	**3-05-08**	4-03-12	2 x 4	1-00-08	1-05-03 4-03-12	40.97 29.00		
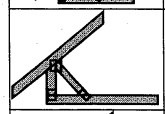	2	J31 Jack-Open	10 /12	**1-09-07**	2-11-01	2 x 4	1-00-08 1-08-01	1-05-03 2-11-01	21.47 15.33		
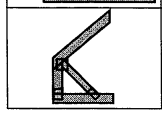	2	J32 Jack-Open	10 /12	**1-10-08**	2-11-01	2 x 4		1-05-03 2-11-15	14.87 11.33		

TOTAL # TRUSS= **75** TOTAL BFT OF ALL TRUSSES= **2826.83** BFT. TOTAL WEIGHT OF ALL TRSSES **4421.78** LBS

HARDWARE

QTY	TYPE	MODEL	LENGTH
2	Hardware	HGUS26-2	
3	Hardware	LJS26DS	
2		HUC26-2	
1	Hardware	LUS26-2	

TOTAL NUMBER OF ITEMS= **8**

REVIEWED

DELIVERY SHIPLIST

TAMARACK ROOF TRUSSES INC.
ALPA LUMBER GROUP

Lumber Yard:	TAMARACK LUMBER	Job Track:	50465
Builder:	BAYVIEW WELLINGTON	PlanLog:	205562
Project:	GREEN VALLEY EAST	Layout ID:	423538
Location:	BRADFORD	Ref #	
Model:	S38-19	Page:	1 of 3
Lot #:		Date:	06-27-2022
Elevation:	C	Designer:	
		Sales Rep:	Rick DiCiano

Roof Trusses

PROFILE	QTY PLY	MARK TYPE	PITCH	SPAN	HEIGHT	LUMBER	OVERHANG LEFT RIGHT	HEEL HEIGHT LEFT RIGHT	LBS. BFT.	BUNDLE # STACK #	LOAD BY REMARKS
	1 2-ply	T1 Hip Girder	6 /12	**28-11-00**	4-01-04	2 x 4 2 x 6	1-03-08 1-03-08	1-02-00 1-02-00	263.62 168.00		
	1	T2 Hip	6 /12	**28-11-00**	5-01-04	2 x 4	1-03-08 1-03-08	1-02-00 1-02-00	114.91 71.83		
	1	T3 Hip	6 /12	**28-11-00**	6-01-04	2 x 4	1-03-08 1-03-08	1-02-00 1-02-00	120.64 75.67		
	1	T4 Hip	6 /12	**28-11-00**	7-01-04	2 x 4	1-03-08 1-03-08	1-02-00 1-02-00	117.75 73.17		
	1	T5 Hip	6 /12	**28-11-00**	8-01-04	2 x 4	1-03-08 1-03-08	1-02-00 1-02-00	118.15 75.00		
	7	T6 Common	6 /12	**28-11-00**	8-04-12	2 x 4	1-03-08 1-03-08	1-02-00 1-02-00	824.85 508.67		
	3	T22 Monopitch	4 /12	**8-08-08**	3-10-00	2 x 4	1-03-08	11-03 3-10-00	133.04 90.00		
	1 2-ply	T45 Hip Girder	8 /12	**28-11-00**	5-08-06	2 x 6	1-03-08 1-03-08	1-04-13 1-04-13	322.74 199.00		
	2	T46 Hip	8 /12	**28-11-00**	6-08-04	2 x 4	1-03-08 1-03-08	1-04-13 1-04-13	249.8 159.00		
	2	T47 Hip	8 /12	**28-11-00**	7-08-04	2 x 4	1-03-08 1-03-08	1-04-13 1-04-13	263.02 169.33		
	2	T48 Hip	8 /12	**28-11-00**	8-08-04	2 x 4	1-03-08 1-03-08	1-04-13 1-04-13	263.78 164.00		
	3	T49 Hip	8 /12	**28-11-00**	9-08-04	2 x 4	1-03-08 1-03-08	1-04-13 1-04-13	394.21 245.00		
	1 2-ply	T50 Half Hip Girder	8 /12	**24-08-00**	4-01-06	2 x 6	1-03-08	1-04-13 4-01-04	253.37 157.33		
	1	T51 Hip	8 /12	**24-08-00**	5-01-04	2 x 4	1-03-08	1-04-13 4-02-13	105.49 66.33		

REVIEWED

DELIVERY SHIPLIST

TAMARACK ROOF TRUSSES INC.
ALPA LUMBER GROUP

Lumber Yard:	TAMARACK LUMBER	Job Track:	50465
Builder:	BAYVIEW WELLINGTON	PlanLog:	205562
Project:	GREEN VALLEY EAST	Layout ID:	423538
Location:	BRADFORD	Ref #	
Model:	S38-19	Page:	2 of 3
Lot #:		Date:	06-27-2022
Elevation:	C	Designer:	
		Sales Rep:	Rick DiCiano

Roof Trusses

PROFILE	QTY PLY	MARK TYPE	PITCH	SPAN	HEIGHT	LUMBER	OVERHANG LEFT RIGHT	HEEL HEIGHT LEFT RIGHT	LBS. BFT.	BUNDLE # STACK #	LOAD BY REMARKS
	1	T52 Hip Girder	8 /12	**13-00-00**	5-03-02	2 x 4 2 x 6	1-03-08 1-03-08	2-06-13 2-06-13	70.64 46.17		
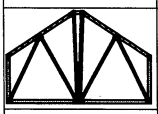	1	T53 Hip	8 /12	**12-06-00**	8-01-02	2 x 4		4-02-13 4-02-13	72.87 47.33		
	1 2-ply	T54 Flat Girder	0 /12	**5-10-08**	1-06-00	2 x 6		1-06-00 1-06-00	54.19 33.67		
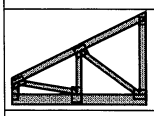	1 2-ply	T55 Jack-Closed Girder	6 /12	**5-10-08**	4-01-04	2 x 4 2 x 6		1-02-00 4-01-04	57.64 37.00		
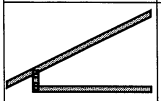	17	J1 Jack-Open	6 /12	**5-10-08**	4-01-04	2 x 4	1-03-08	1-02-00 4-01-04	285.51 181.33		
	2	J2 Jack-Open	6 /12	**3-09-07**	3-00-12	2 x 4	1-03-08 2-01-01	1-02-00 3-00-12	28.26 17.33		
	2	J3 Jack-Open	6 /12	**1-09-07**	2-00-12	2 x 4	1-03-08 4-01-01	1-02-00 2-00-12	23.16 14.67		
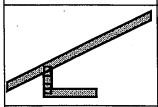	2	J4 Jack-Open	6 /12	**1-10-08**	3-00-12	2 x 4	1-03-08 1-10-15	1-02-00 2-01-04	19.14 12.00		
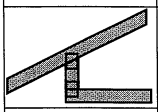	2	J5 Jack-Open	6 /12	**1-09-07**	2-00-12	2 x 4	1-03-08 1-01	1-02-00 2-00-12	14.04 9.33		
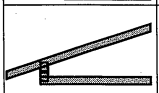	7	J8 Jack-Open	4 /12	**4-02-08**	2-04-00	2 x 4	1-03-08	11-03 2-04-00	84.08 56.00		
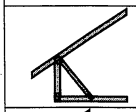	4	J45 Jack-Open	8 /12	**4-00-08**	5-03-02	2 x 4	1-03-08	2-06-13 5-03-02	67.37 46.00		
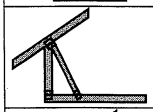	2	J46 Jack-Open	8 /12	**1-09-07**	3-09-02	2 x 4	1-03-08 2-03-01	2-06-13 3-09-02	26.88 19.00		
	2	J47 Jack-Open	8 /12	**1-09-07**	3-09-02	2 x 4	1-03-08 1-01	2-06-13 3-09-02	21.94 15.00		

TOTAL # TRUSS= **76** TOTAL BFT OF ALL TRUSSES= **2757.16** BFT. TOTAL WEIGHT OF ALL TRSSES **4371.15** LBS

REVIEWED

DELIVERY SHIPLIST

Lumber Yard:	TAMARACK LUMBER	Job Track:	50465
Builder:	BAYVIEW WELLINGTON	PlanLog:	205562
Project:	GREEN VALLEY EAST	Layout ID:	423538
Location:	BRADFORD	Ref #	
Model:	S38-19	Page:	3 of 3
Lot #:		Date:	06-27-2022
Elevation:	C	Designer:	
		Sales Rep:	Rick DiCiano

HARDWARE

QTY	TYPE	MODEL	LENGTH
3	Hardware	HGUS26-2	
3	Hardware	LJS26DS	

TOTAL NUMBER OF ITEMS= **6**

REVIEWED

DELIVERY SHIPLIST

TAMARACK ROOF TRUSSES INC.
ALPA LUMBER GROUP

Lumber Yard:	TAMARACK LUMBER	Job Track:	50465
Builder:	BAYVIEW WELLINGTON	PlanLog:	205562
Project:	GREEN VALLEY EAST	Layout ID:	423537
Location:	BRADFORD	Ref #	
Model:	S38-19	Page:	1 of 3
Lot #:		Date:	06-27-2022
Elevation:	C-OPT.WITH COFF.	Designer:	
		Sales Rep:	Rick DiCiano

Roof Trusses

PROFILE	QTY PLY	MARK TYPE	PITCH	SPAN	HEIGHT	LUMBER	OVERHANG LEFT RIGHT	HEEL HEIGHT LEFT RIGHT	LBS. BFT.	BUNDLE # STACK #	LOAD BY REMARKS
	1 2-ply	T1S Hip Girder	6 /12	**28-11-00**	4-01-04	2 x 4	1-03-08 1-03-08	1-02-00 1-02-00	302.8 191.00		
	1	T2S Hip	6 /12	**28-11-00**	5-01-04	2 x 4	1-03-08 1-03-08	1-02-00 1-02-00	125.02 81.50		
	1	T3S Hip	6 /12	**28-11-00**	6-01-04	2 x 4	1-03-08 1-03-08	1-02-00 1-02-00	126.63 81.33		
	1	T4S Hip	6 /12	**28-11-00**	7-01-04	2 x 4	1-03-08 1-03-08	1-02-00 1-02-00	129.8 82.83		
	1	T5 Hip	6 /12	**28-11-00**	8-01-04	2 x 4	1-03-08 1-03-08	1-02-00 1-02-00	118.15 75.00		
	7	T6 Common	6 /12	**28-11-00**	8-04-12	2 x 4	1-03-08 1-03-08	1-02-00 1-02-00	850 522.67		
	1	T15 Half Hip Girder	6 /12	**5-10-08**	1-10-12	2 x 4	1-03-08	1-02-00 1-10-12	23.24 16.50		
	1	T16S Half Hip	6 /12	**5-10-08**	2-10-12	2 x 4	1-03-08	1-02-00 1-10-12	25.02 18.50		
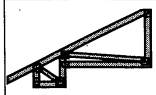	1	T17S Half Hip	6 /12	**5-10-08**	3-10-12	2 x 4	1-03-08	1-02-00 2-10-12	25.33 17.67		
	3	T22 Monopitch	4 /12	**8-08-08**	3-10-00	2 x 4	1-03-08	11-03 3-10-00	133.04 90.00		
	1 2-ply	T45 Hip Girder	8 /12	**28-11-00**	5-08-06	2 x 6	1-03-08 1-03-08	1-04-13 1-04-13	322.74 199.00		
	2	T46 Hip	8 /12	**28-11-00**	6-08-04	2 x 4	1-03-08 1-03-08	1-04-13 1-04-13	249.8 159.00		
	2	T47 Hip	8 /12	**28-11-00**	7-08-04	2 x 4	1-03-08 1-03-08	1-04-13 1-04-13	263.02 169.33		
	2	T48 Hip	8 /12	**28-11-00**	8-08-04	2 x 4	1-03-08 1-03-08	1-04-13 1-04-13	263.73 164.00		

REVIEWED

DELIVERY SHIPLIST

TAMARACK ROOF TRUSSES INC.
ALPA LUMBER GROUP

Lumber Yard:	TAMARACK LUMBER	Job Track:	50465
Builder:	BAYVIEW WELLINGTON	PlanLog:	205562
Project:	GREEN VALLEY EAST	Layout ID:	423537
Location:	BRADFORD	Ref #	
Model:	S38-19	Page:	2 of 3
Lot #:		Date:	06-27-2022
Elevation:	C-OPT.WITH COFF.	Designer:	
		Sales Rep:	Rick DiCiano

Roof Trusses

PROFILE	QTY PLY	MARK TYPE	PITCH	SPAN	HEIGHT	LUMBER	OVERHANG LEFT RIGHT	HEEL HEIGHT LEFT RIGHT	LBS. BFT.	BUNDLE # STACK #	LOAD BY REMARKS
	3	T49 Hip	8 /12	**28-11-00**	9-08-04	2 x 4	1-03-08 1-03-08	1-04-13 1-04-13	394.21 245.00		
	1 2-ply	T50 Half Hip Girder	8 /12	**24-08-00**	4-01-06	2 x 6	1-03-08	1-04-13 4-01-04	253.37 157.33		
	1	T51 Hip	8 /12	**24-08-00**	5-01-04	2 x 4	1-03-08	1-04-13 4-02-13	105.49 66.33		
	1	T52 Hip Girder	8 /12	**13-00-00**	5-03-02	2 x 4 2 x 6	1-03-08 1-03-08	2-06-13 2-06-13	70.64 46.17		
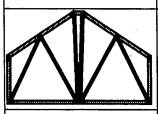	1	T53 Hip	8 /12	**12-06-00**	8-01-02	2 x 4		4-02-13 4-02-13	72.87 47.33		
	1 2-ply	T54 Flat Girder	0 /12	**5-10-08**	1-06-00	2 x 6		1-06-00 1-06-00	54.19 33.67		
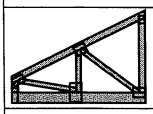	1 2-ply	T55 Jack-Closed Girder	6 /12	**5-10-08**	4-01-04	2 x 4 2 x 6		1-02-00 4-01-04	57.64 37.00		
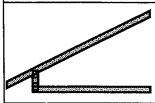	12	J1 Jack-Open	6 /12	**5-10-08**	4-01-04	2 x 4	1-03-08	1-02-00 4-01-04	201.53 128.00		
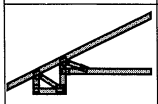	4	J1S Jack-Open	6 /12	**5-10-08**	4-01-04	2 x 4	1-03-08	1-02-00 3-01-04	81.56 58.67		
	1	J2 Jack-Open	6 /12	**3-09-07**	3-00-12	2 x 4	1-03-08 2-01-01	1-02-00 3-00-12	14.13 8.67		
	1	J3 Jack-Open	6 /12	**1-09-07**	2-00-12	2 x 4	1-03-08 4-01-01	1-02-00 2-00-12	11.58 7.33		
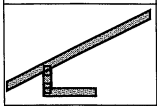	1	J4 Jack-Open	6 /12	**1-10-08**	3-00-12	2 x 4	1-03-08 1-10-15	1-02-00 2-01-04	9.57 6.00		
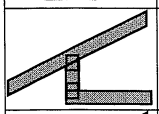	1	J5 Jack-Open	6 /12	**1-09-07**	2-00-12	2 x 4	1-03-08 1-01	1-02-00 2-00-12	7.02 4.67		
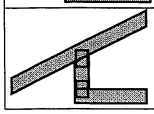	3	J7 Jack-Open	6 /12	**1-05-08**	1-10-12	2 x 4	1-03-08	1-02-00 1-10-12	18.38 14.00		

REVIEWED

DELIVERY SHIPLIST

TAMARACK ROOF TRUSSES INC.
ALPA LUMBER GROUP

Lumber Yard:	TAMARACK LUMBER	Job Track:	50465
Builder:	BAYVIEW WELLINGTON	PlanLog:	205562
Project:	GREEN VALLEY EAST	Layout ID:	423537
Location:	BRADFORD	Ref #	
Model:	S38-19	Page:	3 of 3
Lot #:		Date:	06-27-2022
Elevation:	C-OPT.WITH COFF.	Designer:	
		Sales Rep:	Rick DiCiano

Roof Trusses

PROFILE	QTY PLY	MARK TYPE	PITCH	SPAN	HEIGHT	LUMBER	OVERHANG LEFT RIGHT	HEEL HEIGHT LEFT RIGHT	LBS. BFT.	BUNDLE # STACK #	LOAD BY REMARKS
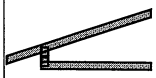	7	J8 Jack-Open	4 /12	**4-02-08**	2-04-00	2 x 4	1-03-08	11-03 2-04-00	84.08 56.00		
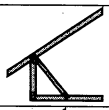	4	J45 Jack-Open	8 /12	**4-00-08**	5-03-02	2 x 4	1-03-08	2-06-13 5-03-02	67.37 46.00		
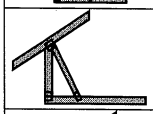	2	J46 Jack-Open	8 /12	**1-09-07**	3-09-02	2 x 4	1-03-08 2-03-01	2-06-13 3-09-02	26.88 19.00		
	2	J47 Jack-Open	8 /12	**1-09-07**	3-09-02	2 x 4	1-03-08 1-01	2-06-13 3-09-02	21.94 15.00		

TOTAL # TRUSS= **77** TOTAL BFT OF ALL TRUSSES= **2864.5** BFT. TOTAL WEIGHT OF ALL TRSSES **4510.88** LBS

HARDWARE

QTY	TYPE	MODEL	LENGTH
3	Hardware	HGUS26-2	
3	Hardware	LJS26DS	

TOTAL NUMBER OF ITEMS= **6**

REVIEWED

JOB NAME	TRUSS NAME	QUANTITY	PLY	JOB DESC.	DRWG NO.
423532	T1	1	2	BAYVIEW WELLINGTON TRUSS DESC.	

Tamarack Roof Truss, Burlington

Version 8.530 S Feb 23 2022 MiTek Industries, Inc. Fri Jun 24 08:14:53 2022 Page 1
ID:c3jyj23uDijq_8pvRKbkZpy75XW-_o4nBCy0MjupbSileRUn5JwC9pPPwXBOUgQLMUz38X0

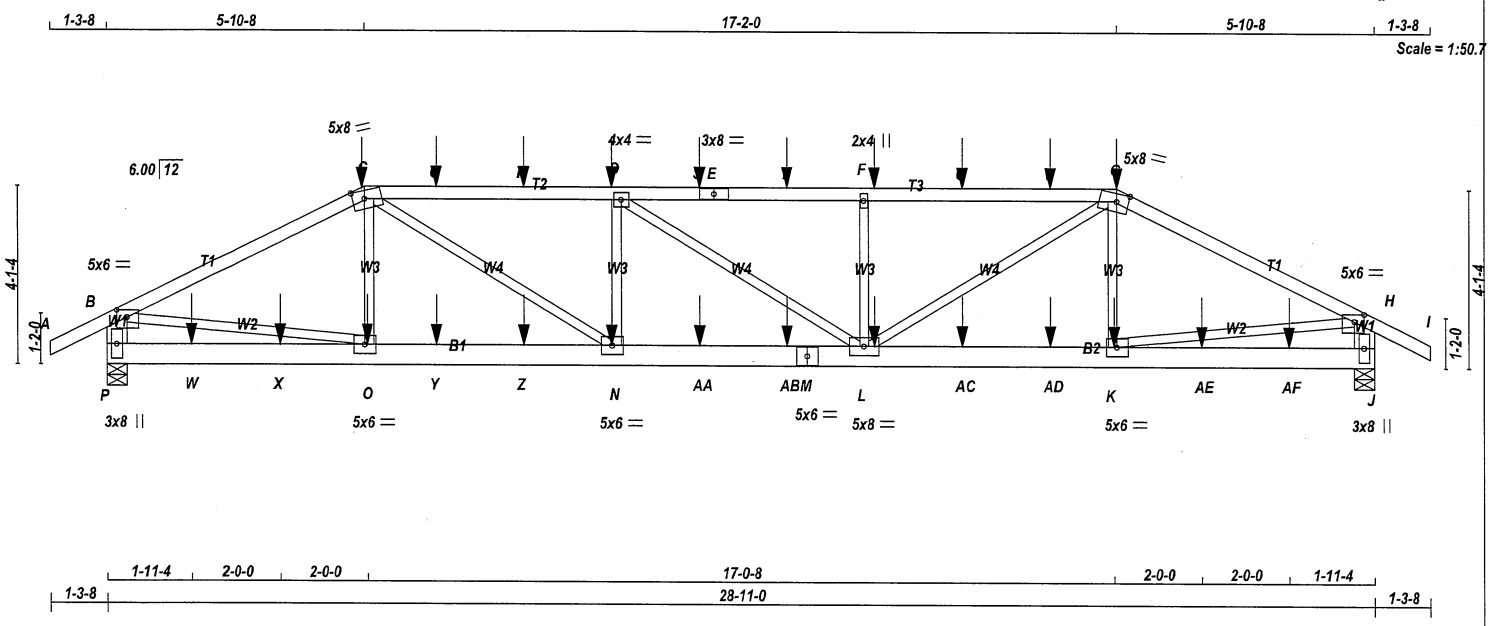

TOTAL WEIGHT = 2 X 128 = 255 lb

[M]

LUMBER

N. L. G. A. RULES

CHORDS	SIZE		LUMBER	DESCR.
A - C	2x4	DRY	No.2	SPF
C - E	2x4	DRY	No.2	SPF
E - G	2x4	DRY	No.2	SPF
G - I	2x4	DRY	No.2	SPF
P - B	2x6	DRY	No.2	SPF
J - H	2x6	DRY	No.2	SPF
P - M	2x6	DRY	No.2	SPF
M - J	2x6	DRY	No.2	SPF
ALL WEBS EXCEPT	2x3	DRY	No.2	SPF

DRY: SEASONED LUMBER.

DESIGN CONSISTS OF 2 TRUSSES BUILT SEPARATELY THEN FASTENED TOGETHER AS FOLLOWS:

CHORDS	#ROWS	SURFACE SPACING (IN)	LOAD(PLF)
TOP CHORDS : (0.122"X3") SPIRAL NAILS			
A- C	1	12	SIDE(61.0)
C- E	1	12	SIDE(61.0)
E- G	1	12	SIDE(61.0)
G- I	1	12	SIDE(61.0)
P- B	2	12	TOP
J- H	2	12	TOP
BOTTOM CHORDS : (0.122"X3") SPIRAL NAILS			
P- M	2	12	SIDE(183.1)
M- J	2	12	SIDE(183.1)
WEBS : (0.122"X3") SPIRAL NAILS			
2x3	1	6	

NAILS TO BE DRIVEN FROM ONE SIDE ONLY.

GIRDER NAILING ASSUMES NAILED HANGERS ARE FASTENED WITH MIN. 3-0 INCH NAILS.

TOP - COMPONENTS ARE LOADED FROM THE TOP AND MUST BE PLACED ON TOP EDGE OF ALL PLIES FOR THE LOAD TO BE TRANSFERRED TO EACH PLY.

LICENSED PROFESSIONAL ENGINEER
06-24-22
H. J. G. ALVES
100009024
PROVINCE OF ONTARIO

Structural component only
DWG# T-2215147

DIMENSIONS, SUPPORTS AND LOADINGS SPECIFIED BY FABRICATOR TO BE VERIFIED BY BUILDING DESIGNER

BEARINGS

JT	FACTORED GROSS REACTION VERT	HORZ	MAXIMUM FACTORED GROSS REACTION DOWN	HORZ	UPLIFT	INPUT BRG IN-SX	REQRD BRG IN-SX
P	3215	0	3215	0	0	5-8	5-8
J	3219	0	3219	0	0	5-8	5-8

UNFACTORED REACTIONS

JT	1ST LCASE COMBINED	MAX./MIN. COMPONENT REACTIONS SNOW	LIVE	PERM.LIVE	WIND	DEAD	SOIL
P	2254	1589 / 0	0 / 0	0 / 0	0 / 0	665 / 0	0 / 0
J	2257	1591 / 0	0 / 0	0 / 0	0 / 0	666 / 0	0 / 0

BEARING MATERIAL TO BE SPF NO.2 OR BETTER AT JOINT(S) P, J

BRACING

TOP CHORD TO BE SHEATHED OR MAX. PURLIN SPACING = 3.30 FT.
MAX. UNBRACED BOTTOM CHORD LENGTH = 10.00 FT OR RIGID CEILING DIRECTLY APPLIED.

ALL PITCH BREAKS AND PERIMETER CORNER JOINTS MUST BE LATERALLY RESTRAINED.

LOADING

TOTAL LOAD CASES: (4)

CHORDS

MEMB. FR-TO	MAX. FACTORED FORCE (LBS)	FACTORED VERT. LOAD (PLF) FROM	TO	LC1	MAX CSI (LC)	MAX. UNBRAC LENGTH
A- B	0 / 34	-112.4	-112.4	0.08 (1)	10.00	
B- C	-4709 / 0	-112.4	-112.4	0.58 (1)	3.91	
C- Q	-6195 / 0	-112.4	-112.4	0.69 (1)	3.30	
Q- R	-6195 / 0	-112.4	-112.4	0.69 (1)	3.30	
R- D	-6195 / 0	-112.4	-112.4	0.69 (1)	3.30	
D- S	-6179 / 0	-112.4	-112.4	0.68 (1)	3.30	
S- E	-6179 / 0	-112.4	-112.4	0.68 (1)	3.30	
E- T	-6179 / 0	-112.4	-112.4	0.68 (1)	3.30	
T- F	-6179 / 0	-112.4	-112.4	0.68 (1)	3.30	
F- U	-6179 / 0	-112.4	-112.4	0.67 (1)	3.32	
U- V	-6179 / 0	-112.4	-112.4	0.67 (1)	3.32	
V- G	-6179 / 0	-112.4	-112.4	0.67 (1)	3.32	
G- H	-4720 / 0	-112.4	-112.4	0.58 (1)	3.90	
H- I	0 / 34	-112.4	-112.4	0.08 (1)	10.00	
P- B	-3139 / 0	0.0	0.0	0.11 (1)	7.79	
J- H	-3145 / 0	0.0	0.0	0.11 (1)	7.78	
P- W	0 / 0	-18.5	-18.5	0.06 (4)	10.00	
W- X	0 / 0	-18.5	-18.5	0.06 (4)	10.00	
X- O	0 / 0	-18.5	-18.5	0.06 (4)	10.00	
O- Y	0 / 4200	-18.5	-18.5	0.32 (1)	10.00	
Y- Z	0 / 4200	-18.5	-18.5	0.32 (1)	10.00	
Z- N	0 / 4200	-18.5	-18.5	0.32 (1)	10.00	
N-AA	0 / 6195	-18.5	-18.5	0.47 (1)	10.00	
AA-AB	0 / 6195	-18.5	-18.5	0.47 (1)	10.00	
AB- M	0 / 6195	-18.5	-18.5	0.47 (1)	10.00	
M- L	0 / 6195	-18.5	-18.5	0.47 (1)	10.00	
L-AC	0 / 4210	-18.5	-18.5	0.33 (1)	10.00	
AC-AD	0 / 4210	-18.5	-18.5	0.33 (1)	10.00	
AD- K	0 / 4210	-18.5	-18.5	0.33 (1)	10.00	
K-AE	0 / 0	-18.5	-18.5	0.06 (4)	10.00	
AE-AF	0 / 0	-18.5	-18.5	0.06 (4)	10.00	
AF- J	0 / 0	-18.5	-18.5	0.06 (4)	10.00	

WEBS

MEMB. FR-TO	MAX. FACTORED FORCE (LBS)	MAX CSI (LC)
O- C	-343 / 76	0.04 (1)
C- N	0 / 2376	0.29 (1)
N- D	-1109 / 0	0.14 (1)
D- L	-20 / 0	0.01 (1)
L- F	-1112 / 0	0.14 (1)
L- G	0 / 2344	0.29 (1)
K- G	-329 / 80	0.04 (1)
B- O	0 / 4245	0.53 (1)
K- H	0 / 4255	0.53 (1)

SPECIFIED CONCENTRATED LOADS (LBS)

JT	LOC.	LC1	MAX-	MAX+	FACE	DIR.	TYPE	HEEL	CONN.
C	5-10-8	-308	-308	---	BACK	VERT	TOTAL	---	C1
D	11-6-4	-93	-93	---	BACK	VERT	TOTAL	---	C1
F	17-6-4	-93	-93	---	BACK	VERT	TOTAL	---	C1
G	23-0-8	-308	-308	---	BACK	VERT	TOTAL	---	C1
K	22-11-12	-21	-21	---	BACK	VERT	TOTAL	---	C1
L	17-6-4	-21	-21	---	BACK	VERT	TOTAL	---	C1

DESIGN CRITERIA

SPECIFIED LOADS:

TOP CH.	LL	=	32.5	PSF
	DL	=	6.0	PSF
BOT CH.	LL	=	0.0	PSF
	DL	=	7.4	PSF
TOTAL LOAD		=	45.9	PSF

SPACING = 24.0 IN. C/C

LOADING IN FLAT SECTION BASED ON A SLOPE OF 6.00/12

THIS TRUSS IS DESIGNED FOR RESIDENTIAL OR SMALL BUILDING REQUIREMENTS OF PART 9, NBCC 2015

THIS DESIGN COMPLIES WITH:
- PART 9 OF BCBC 2018 , ABC 2019
- PART 9 OF OBC 2012 (2019 AMENDMENT)
- CSA 086-14
- TPIC 2014

(55 % OF 43.9 P.S.F. G.S.L. PLUS 8.4 P.S.F. RAIN LOAD) EQUALS 32.5 P.S.F. SPECIFIED ROOF LIVE LOAD

ALLOWABLE DEFL.(LL)= L/360 (0.96")
CALCULATED VERT. DEFL.(LL) = L/ 999 (0.16")
ALLOWABLE DEFL.(TL)= L/360 (0.96")
CALCULATED VERT. DEFL.(TL) = L/ 999 (0.29")

CSI: TC=0.69/1.00 (C-D:1) , BC=0.47/1.00 (L-N:1) , WB=0.53/1.00 (H-K:1) , SSI=0.23/1.00 (C-D:1)

DOL LUMBER=1.00 NAIL=1.00 LS BEND=1.00 COMP=1.00 SHEAR=1.00 TENS= 1.00

COMPANION LIVE LOAD FACTOR = 1.00

AUTOSOLVE HEELS OFF

TRUSS PLATE MANUFACTURER IS NOT RESPONSIBLE FOR QUALITY CONTROL IN THE TRUSS MANUFACTURING PLANT .

NAIL VALUES

PLATE	GRIP(DRY) (PSI) MAX	MIN	SHEAR (PLI) MAX	MIN	SECTION (PLI) MAX	MIN
MT20	650	371	1747	788	1987	1873

PLATE PLACEMENT TOL. = 0.250 inches

PLATE ROTATION TOL. = 5.0 Deg.

JSI GRIP= 0.89 (C) (INPUT = 0.90)
JSI METAL= 0.59 (M) (INPUT = 1.00)

REVIEWED

CONTINUED ON PAGE 2

JOB NAME	TRUSS NAME	QUANTITY	PLY	JOB DESC.	DRWG NO.
423532	T1	1	2	BAYVIEW WELLINGTON TRUSS DESC.	

Tamarack Roof Truss, Burlington

ID:c3jyj23uDijq_8pvRKbkZpy75XW-_o4nBCy0MjupbSileRUn5JwC9pPPwXBOUgQLMUz38X0

PLATES (table is in inches)

JT	TYPE	PLATES	W	LEN	Y	X
B	TMVW-p	MT20	5.0	6.0	2.00	2.75
C	TTWW-m	MT20	5.0	8.0	2.25	3.25
D	TMWW-t	MT20	4.0	4.0		
E	TS-t	MT20	3.0	8.0		
F	TMW+w	MT20	2.0	4.0		
G	TTWW-m	MT20	5.0	8.0	2.25	3.25
H	TMVW-p	MT20	5.0	6.0	2.00	2.75
J	BMV1+p	MT20	3.0	8.0		
K, N, O						
K	BMWW-t	MT20	5.0	6.0		
L	BMWWW-t	MT20	5.0	8.0		
M	BS-t	MT20	5.0	6.0		
P	BMV1+p	MT20	3.0	8.0		

NOTES- (1)

1) Lateral braces to be a minimum of 2X4 SPF #2.

SPECIFIED CONCENTRATED LOADS (LBS)

JT	LOC.	LC1	MAX-	MAX+	FACE	DIR.	TYPE	HEEL	CONN.
N	11-6-4	-21	-21	---	BACK	VERT	TOTAL	---	C1
O	5-11-4	-21	-21	---	BACK	VERT	TOTAL	---	C1
Q	7-6-4	-93	-93	---	BACK	VERT	TOTAL	---	C1
R	9-6-4	-93	-93	---	BACK	VERT	TOTAL	---	C1
S	13-6-4	-93	-93	---	BACK	VERT	TOTAL	---	C1
T	15-6-4	-93	-93	---	BACK	VERT	TOTAL	---	C1
U	19-6-4	-93	-93	---	BACK	VERT	TOTAL	---	C1
V	21-6-4	-93	-93	---	BACK	VERT	TOTAL	---	C1
W	1-11-4	-20	-20	---	BACK	VERT	TOTAL	---	C1
X	3-11-4	-21	-21	---	BACK	VERT	TOTAL	---	C1
Y	7-6-4	-21	-21	---	BACK	VERT	TOTAL	---	C1
Z	9-6-4	-21	-21	---	BACK	VERT	TOTAL	---	C1
AA	13-6-4	-21	-21	---	BACK	VERT	TOTAL	---	C1
AB	15-6-4	-21	-21	---	BACK	VERT	TOTAL	---	C1
AC	19-6-4	-21	-21	---	BACK	VERT	TOTAL	---	C1
AD	21-6-4	-21	-21	---	BACK	VERT	TOTAL	---	C1
AE	24-11-12	-21	-21	---	BACK	VERT	TOTAL	---	C1
AF	26-11-12	-20	-20	---	BACK	VERT	TOTAL	---	C1

CONNECTION REQUIREMENTS

1) **C1:** A SUITABLE HANGER/MECHANICAL CONNECTION IS REQUIRED.

LICENSED PROFESSIONAL ENGINEER
06-24-22
H. J. G. ALVES
100009024
PROVINCE OF ONTARIO

Structural component only
DWG# T-2215147

REVIEWED

JOB NAME	TRUSS NAME	QUANTITY	PLY	JOB DESC.	DRWG NO.
423533	T1S	1	2	BAYVIEW WELLINGTON TRUSS DESC.	

Tamarack Roof Truss, Burlington

Version 8.530 S Feb 23 2022 MiTek Industries, Inc. Fri Jun 24 08:09:59 2022 Page 1
ID:c3jyj23uDijq_8pvRKbkZpy75XW-bEKeUgObcOrXKGEFQhCrBJlzUI0P1Uu6twCo1Wz38bc

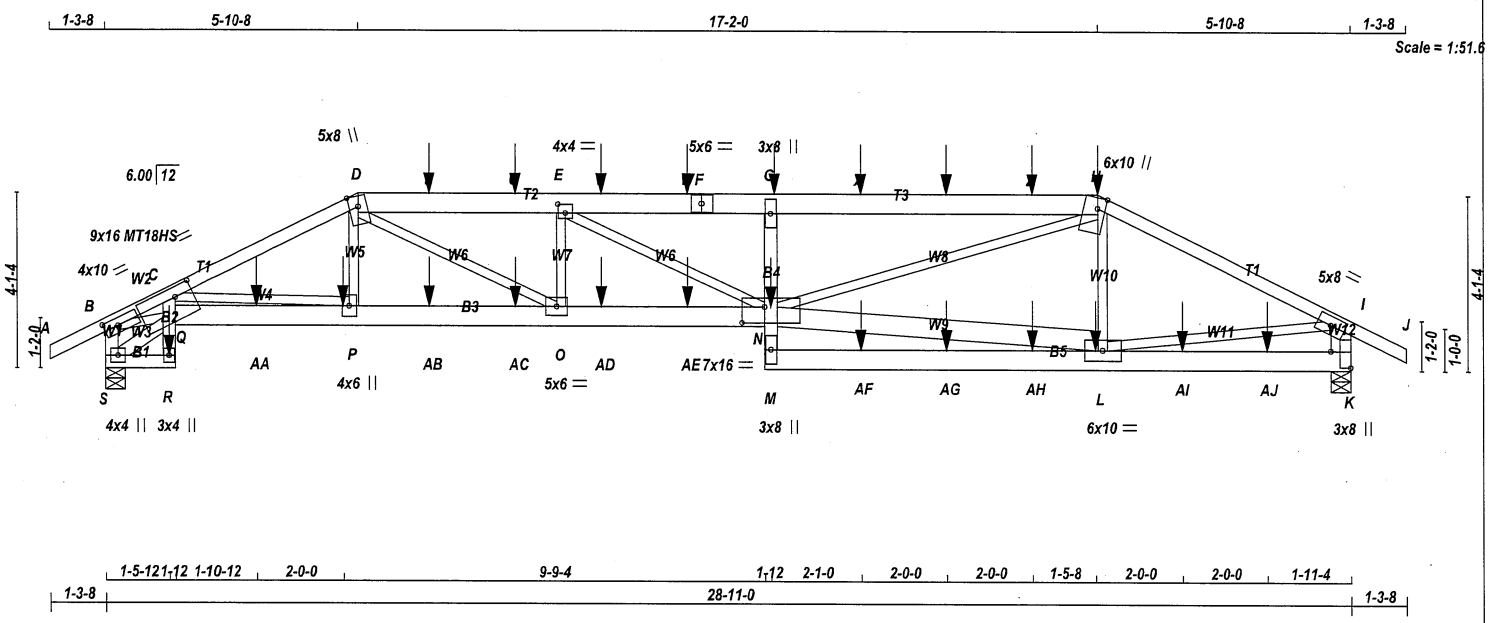

TOTAL WEIGHT = 2 X 152 = 303 lb

LUMBER

N. L. G. A. RULES

CHORDS	SIZE		LUMBER	DESCR.
A - D	2x4	DRY	No.2	SPF
D - F	2x6	DRY	No.2	SPF
F - H	2x6	DRY	No.2	SPF
H - J	2x4	DRY	No.2	SPF
S - B	2x4	DRY	No.2	SPF
K - I	2x6	DRY	No.2	SPF
S - R	2x4	DRY	No.2	SPF
R - C	2x4	DRY	No.2	SPF
Q - N	2x6	DRY	No.2	SPF
M - G	2x4	DRY	No.2	SPF
M - K	2x6	DRY	No.2	SPF
ALL WEBS EXCEPT	2x3	DRY	No.2	SPF
N - L	2x6	DRY	No.2	SPF
S - Q	2x4	DRY	No.2	SPF

DRY: SEASONED LUMBER.

DESIGN CONSISTS OF 2 TRUSSES BUILT SEPARATELY THEN FASTENED TOGETHER AS FOLLOWS:

CHORDS	#ROWS	SURFACE SPACING (IN)	LOAD(PLF)
TOP CHORDS : (0.122"X3") SPIRAL NAILS			
A- D	1	12	TOP
H- J	1	12	SIDE(61.0)
S- B	1	12	TOP
D- F	2	12	SIDE(0.0)
F- H	2	12	SIDE(183.1)
K- I	2	12	TOP
BOTTOM CHORDS : (0.122"X3") SPIRAL NAILS			
S- R	1	12	SIDE(61.0)
R- C	1	12	SIDE(26.3)
G- M	1	12	TOP
Q- N	2	12	SIDE(183.1)
M- K	2	12	SIDE(183.1)
WEBS : (0.122"X3") SPIRAL NAILS			
2x3	1	6	
2x4	1	6	
2x6	2	6	

NAILS TO BE DRIVEN FROM ONE SIDE ONLY.

LICENSED PROFESSIONAL ENGINEER
06-24-22
H. J. G. ALVES
100009024
PROVINCE OF ONTARIO

Structural component only
DWG# T-2215123

DIMENSIONS, SUPPORTS AND LOADINGS SPECIFIED BY FABRICATOR TO BE VERIFIED BY BUILDING DESIGNER

BEARINGS

JT	FACTORED GROSS REACTION VERT	HORZ	MAXIMUM FACTORED GROSS REACTION DOWN	HORZ	UPLIFT	INPUT BRG	REQRD BRG
K	3356	0	3356	0	0	5-8	5-8
S	3891	0	3891	0	0	5-8	5-8

UNFACTORED REACTIONS

JT	1ST LCASE COMBINED	MAX./MIN. COMPONENT REACTIONS SNOW	LIVE	PERM.LIVE	WIND	DEAD	SOIL
K	2353	1659 / 0	0 / 0	0 / 0	0 / 0	694 / 0	0 / 0
S	2723	1948 / 0	0 / 0	0 / 0	0 / 0	775 / 0	0 / 0

BEARING MATERIAL TO BE SPF NO.2 OR BETTER AT JOINT(S) K, S

BRACING

TOP CHORD TO BE SHEATHED OR MAX. PURLIN SPACING = 3.23 FT.
MAX. UNBRACED BOTTOM CHORD LENGTH = 7.81 FT OR RIGID CEILING DIRECTLY APPLIED.

ALL PITCH BREAKS AND PERIMETER CORNER JOINTS MUST BE LATERALLY RESTRAINED.

LOADING

TOTAL LOAD CASES: (4)

CHORDS

MEMB. FR-TO	MAX. FACTORED FORCE (LBS)	FACTORED VERT. LOAD (PLF) FROM	TO	LC1 CSI (LC)	MAX. UNBRAC LENGTH
A- B	0 / 34	-112.4	-112.4	0.08 (1)	10.00
B- C	-7994 / 0	-112.4	-112.4	0.28 (1)	3.27
C- D	-7289 / 0	-112.4	-112.4	0.51 (1)	3.23
D- T	-9085 / 0	-112.4	-112.4	0.30 (1)	3.82
T- U	-9085 / 0	-112.4	-112.4	0.30 (1)	3.82
U- E	-9085 / 0	-112.4	-112.4	0.30 (1)	3.82
E- V	-9731 / 0	-112.4	-112.4	0.37 (1)	3.63
V- W	-9731 / 0	-112.4	-112.4	0.37 (1)	3.63
W- F	-9731 / 0	-112.4	-112.4	0.37 (1)	3.63
F- G	-9731 / 0	-112.4	-112.4	0.37 (1)	3.63
G- X	-9596 / 0	-112.4	-112.4	0.61 (1)	3.41
X- Y	-9596 / 0	-112.4	-112.4	0.61 (1)	3.41
Y- Z	-9596 / 0	-112.4	-112.4	0.61 (1)	3.41
Z- H	-9596 / 0	-112.4	-112.4	0.61 (1)	3.41
H- I	-5004 / 0	-112.4	-112.4	0.60 (1)	3.78
I- J	0 / 34	-112.4	-112.4	0.08 (1)	10.00
S- B	-3468 / 0	0.0	0.0	0.19 (1)	6.28
K- I	-3303 / 0	0.0	0.0	0.12 (1)	7.64
S- R	0 / 634	-18.5	-18.5	0.06 (1)	10.00
R- Q	0 / 348	0.0	0.0	0.48 (1)	10.00
Q- C	0 / 338	0.0	0.0	0.48 (1)	10.00
Q-AA	0 / 8036	-18.5	-18.5	0.65 (1)	10.00
AA- P	0 / 8036	-18.5	-18.5	0.65 (1)	10.00
P-AB	0 / 6503	-18.5	-18.5	0.49 (1)	10.00
AB-AC	0 / 6503	-18.5	-18.5	0.49 (1)	10.00
AC- O	0 / 6503	-18.5	-18.5	0.49 (1)	10.00
O-AD	0 / 9084	-18.5	-18.5	0.67 (1)	10.00
AD-AE	0 / 9084	-18.5	-18.5	0.67 (1)	10.00
AE- N	0 / 9084	-18.5	-18.5	0.67 (1)	10.00
M- N	0 / 97	0.0	0.0	0.28 (1)	10.00
N- G	-1342 / 0	0.0	0.0	0.29 (1)	7.81
M-AF	0 / 359	-18.5	-18.5	0.12 (4)	10.00
AF-AG	0 / 359	-18.5	-18.5	0.12 (4)	10.00
AG-AH	0 / 359	-18.5	-18.5	0.12 (4)	10.00
AH- L	0 / 359	-18.5	-18.5	0.12 (4)	10.00
L-AI	0 / 0	-18.5	-18.5	0.11 (4)	10.00
AI-AJ	0 / 0	-18.5	-18.5	0.11 (4)	10.00
AJ- K	0 / 0	-18.5	-18.5	0.11 (4)	10.00

WEBS

MEMB. FR-TO	MAX. FACTORED FORCE (LBS)	MAX CSI (LC)
C- P	-1493 / 0	0.25 (1)
P- D	0 / 1192	0.15 (1)
D- O	0 / 2970	0.37 (1)
O- E	-1205 / 0	0.11 (1)
E- N	0 / 737	0.09 (1)
N- L	0 / 4187	0.27 (1)
N- H	0 / 5391	0.67 (1)
L- H	-880 / 0	0.11 (1)
L- I	0 / 4526	0.56 (1)
S- Q	-755 / 0	0.04 (1)
B- Q	0 / 7107	0.88 (1)

DESIGN CRITERIA

SPECIFIED LOADS:

TOP CH.	LL	=	32.5	PSF
	DL	=	6.0	PSF
BOT CH.	LL	=	0.0	PSF
	DL	=	7.4	PSF
TOTAL LOAD		=	45.9	PSF

SPACING = 24.0 IN. C/C

LOADING IN FLAT SECTION BASED ON A SLOPE OF 6.00/12

THIS TRUSS IS DESIGNED FOR RESIDENTIAL OR SMALL BUILDING REQUIREMENTS OF PART 9, NBCC 2015

THIS DESIGN COMPLIES WITH:
- PART 9 OF BCBC 2018 , ABC 2019
- PART 9 OF OBC 2012 (2019 AMENDMENT)
- CSA 086-14
- TPIC 2014

DESIGN ASSUMPTIONS
-OVERHANG NOT TO BE ALTERED OR CUT OFF.

(55 % OF 43.9 P.S.F. G.S.L. PLUS 8.4 P.S.F. RAIN LOAD) EQUALS 32.5 P.S.F. SPECIFIED ROOF LIVE LOAD

ALLOWABLE DEFL.(LL)= L/360 (0.96")
CALCULATED VERT. DEFL.(LL) = L/ 999 (0.27")
ALLOWABLE DEFL.(TL)= L/360 (0.96")
CALCULATED VERT. DEFL.(TL) = L/ 729 (0.48")

CSI: TC=0.61/1.00 (G-H:1) , BC=0.67/1.00 (N-O:1) , WB=0.88/1.00 (B-Q:1) , SSI=0.40/1.00 (C-Q:1)

DOL LUMBER=1.00 NAIL=1.00 LS BEND=1.00 COMP=1.00 SHEAR=1.00 TENS= 1.00

COMPANION LIVE LOAD FACTOR = 1.00

AUTOSOLVE HEELS OFF

TRUSS PLATE MANUFACTURER IS NOT RESPONSIBLE FOR QUALITY CONTROL IN THE TRUSS MANUFACTURING PLANT .

NAIL VALUES

PLATE	GRIP(DRY) (PSI) MAX	MIN	SHEAR (PLI) MAX	MIN	SECTION (PLI) MAX	MIN
MT20	650	371	1747	788	1987	1873
MT18HS	586	403	2455	1382	3163	3004

PLATE PLACEMENT TOL. = 0.250 inches

PLATE ROTATION TOL. = 5.0 Deg.

JSI GRIP= 0.90 (C) (INPUT = 0.90)
JSI METAL= 0.58 (N) (INPUT = 1.00)

REVIEWED

CONTINUED ON PAGE 2

GIRDER NAILING ASSUMES NAILED HANGERS ARE FASTENED WITH MIN. 3-0 INCH NAILS.

PLATES (table is in inches)

JT	TYPE	PLATES	W	LEN	Y	X
B	TMVW-t	MT20	4.0	10.0	2.00	4.00
C						
C	TMBVWWW*-t	MT18HS	9.0	16.0	2.75	5.00
D	TTWW+m	MT20	5.0	8.0	Edge	
E	TMWW-t	MT20	4.0	4.0	2.50	2.00
F	TS-t	MT20	5.0	6.0		
G	TMV+p	MT20	3.0	8.0		
H	TTWW+m	MT20	6.0	10.0	Edge	2.00
I	TMVW-t	MT20	5.0	8.0		
K	BMV1+p	MT20	3.0	8.0	4.50	Edge
L	BMWWW-t	MT20	6.0	10.0		
M	BMV+p	MT20	3.0	8.0		
N	BVMWWW-l	MT20	7.0	16.0	4.50	6.25
O	BMWW-t	MT20	5.0	6.0		
P	BMWW+t	MT20	4.0	6.0		
Q						
R	BMV+p	MT20	3.0	4.0		
S	BMVW1+p	MT20	4.0	4.0		

Edge - INDICATES REFERENCE CORNER OF PLATE TOUCHES EDGE OF CHORD.

NOTES- (1)
1) Lateral braces to be a minimum of 2X4 SPF #2.

SPECIFIED CONCENTRATED LOADS (LBS)

JT	LOC.	LC1	MAX-	MAX+	FACE	DIR.	TYPE	HEEL	CONN.
G	15-6-4	-93	-93	---	BACK	VERT	TOTAL	---	C1
H	23-0-8	-308	-308	---	BACK	VERT	TOTAL	---	C1
L	22-11-12	-21	-21	---	BACK	VERT	TOTAL	---	C1
N	15-5-4	-28	-28	---	BACK	VERT	TOTAL	---	C1
P	5-6-4	-243	-243	---	BACK	VERT	TOTAL	---	C1
R	1-5-12	-235	-235	---	BACK	VERT	TOTAL	---	C1
T	7-6-4	-94	-94	---	BACK	VERT	TOTAL	---	C1
U	9-6-4	-94	-94	---	BACK	VERT	TOTAL	---	C1
V	11-6-4	-94	-94	---	BACK	VERT	TOTAL	---	C1
W	13-6-4	-94	-94	---	BACK	VERT	TOTAL	---	C1
X	17-6-4	-93	-93	---	BACK	VERT	TOTAL	---	C1
Y	19-6-4	-93	-93	---	BACK	VERT	TOTAL	---	C1
Z	21-6-4	-93	-93	---	BACK	VERT	TOTAL	---	C1
AA	3-6-4	-243	-243	---	BACK	VERT	TOTAL	---	C1
AB	7-6-4	-72	-72	---	BACK	VERT	TOTAL	---	C1
AC	9-6-4	-72	-72	---	BACK	VERT	TOTAL	---	C1
AD	11-6-4	-72	-72	---	BACK	VERT	TOTAL	---	C1
AE	13-6-4	-72	-72	---	BACK	VERT	TOTAL	---	C1
AF	17-6-4	-21	-21	---	BACK	VERT	TOTAL	---	C1
AG	19-6-4	-21	-21	---	BACK	VERT	TOTAL	---	C1
AH	21-6-4	-21	-21	---	BACK	VERT	TOTAL	---	C1
AI	24-11-12	-21	-21	---	BACK	VERT	TOTAL	---	C1
AJ	26-11-12	-20	-20	---	BACK	VERT	TOTAL	---	C1

CONNECTION REQUIREMENTS

1) **C1:** A SUITABLE HANGER/MECHANICAL CONNECTION IS REQUIRED.

LICENSED PROFESSIONAL ENGINEER
06-24-22
H. J. G. ALVES
100009024
PROVINCE OF ONTARIO

Structural component only
DWG# T-2215123

REVIEWED

JOB NAME	TRUSS NAME	QUANTITY	PLY	JOB DESC.	DRWG NO.
423532	T2	1	1	BAYVIEW WELLINGTON TRUSS DESC.	

Tamarack Roof Truss, Burlington

Version 8.530 S Feb 23 2022 MiTek Industries, Inc. Fri Jun 24 08:14:54 2022 Page 1
ID:c3jyj23uDijq_8pvRKbkZpy75XW-S_eAPYze710gDcHxC8?0eWTLGDlxf_DXiK9vvwz38X?

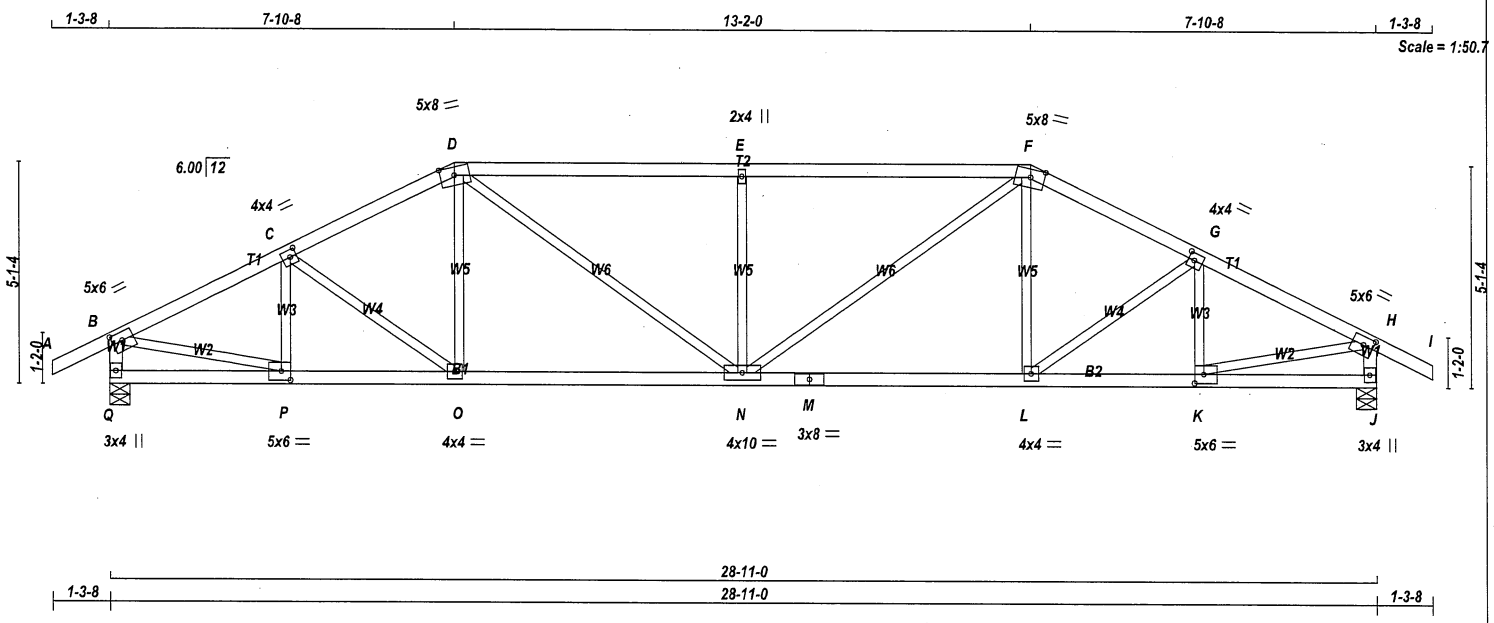

TOTAL WEIGHT = 115 lb

LUMBER
N. L. G. A. RULES

CHORDS	SIZE		LUMBER	DESCR.
A - D	2x4	DRY	No.2	SPF
D - F	2x4	DRY	No.2	SPF
F - I	2x4	DRY	No.2	SPF
Q - B	2x4	DRY	No.2	SPF
J - H	2x4	DRY	No.2	SPF
Q - M	2x4	DRY	No.2	SPF
M - J	2x4	DRY	No.2	SPF
ALL WEBS EXCEPT	2x3	DRY	No.2	SPF

DRY: SEASONED LUMBER.

PLATES (table is in inches)

JT	TYPE	PLATES	W	LEN	Y	X
B	TMVW-t	MT20	5.0	6.0	2.25	2.75
C	TMWW-t	MT20	4.0	4.0	2.00	1.75
D	TTWW-m	MT20	5.0	8.0	2.25	3.75
E	TMW+w	MT20	2.0	4.0		
F	TTWW-m	MT20	5.0	8.0	2.25	3.75
G	TMWW-t	MT20	4.0	4.0	2.00	1.75
H	TMVW-t	MT20	5.0	6.0	2.25	2.75
J	BMV1+p	MT20	3.0	4.0		
K	BMWW-t	MT20	5.0	6.0	2.50	2.50
L	BMWW-t	MT20	4.0	4.0		
M	BS-t	MT20	3.0	8.0		
N	BMWWW-t	MT20	4.0	10.0		
O	BMWW-t	MT20	4.0	4.0		
P	BMWW-t	MT20	5.0	6.0	2.50	2.50
Q	BMV1+p	MT20	3.0	4.0		

NOTES- (1)
1) Lateral braces to be a minimum of 2X4 SPF #2.

DIMENSIONS, SUPPORTS AND LOADINGS SPECIFIED BY FABRICATOR TO BE VERIFIED BY BUILDING DESIGNER

BEARINGS

JT	FACTORED GROSS REACTION VERT	HORZ	MAXIMUM FACTORED GROSS REACTION DOWN	HORZ	UPLIFT	INPUT BRG IN-SX	REQRD BRG IN-SX
Q	2046	0	2046	0	0	5-8	5-8
J	2046	0	2046	0	0	5-8	5-8

UNFACTORED REACTIONS

JT	1ST LCASE COMBINED	MAX./MIN. COMPONENT REACTIONS SNOW	LIVE	PERM.LIVE	WIND	DEAD	SOIL
Q	1431	1027 / 0	0 / 0	0 / 0	0 / 0	404 / 0	0 / 0
J	1431	1027 / 0	0 / 0	0 / 0	0 / 0	404 / 0	0 / 0

BEARING MATERIAL TO BE SPF NO.2 OR BETTER AT JOINT(S) Q, J

BRACING
TOP CHORD TO BE SHEATHED OR MAX. PURLIN SPACING = 3.11 FT.
MAX. UNBRACED BOTTOM CHORD LENGTH = 10.00 FT OR RIGID CEILING DIRECTLY APPLIED.

ALL PITCH BREAKS AND PERIMETER CORNER JOINTS MUST BE LATERALLY RESTRAINED.

LOADING
TOTAL LOAD CASES: (4)

CHORDS

MEMB. FR-TO	MAX. FACTORED FORCE (LBS)	FACTORED VERT. LOAD LC1 (PLF) FROM	TO	MAX CSI (LC)	MAX. UNBRAC LENGTH
A- B	0 / 34	-112.4	-112.4	0.15 (1)	10.00
B- C	-2604 / 0	-112.4	-112.4	0.28 (1)	4.05
C- D	-2558 / 0	-112.4	-112.4	0.28 (1)	4.09
D- E	-2975 / 0	-112.4	-112.4	0.79 (1)	3.11
E- F	-2975 / 0	-112.4	-112.4	0.79 (1)	3.11
F- G	-2558 / 0	-112.4	-112.4	0.28 (1)	4.09
G- H	-2604 / 0	-112.4	-112.4	0.28 (1)	4.05
H- I	0 / 34	-112.4	-112.4	0.15 (1)	10.00
Q- B	-2006 / 0	0.0	0.0	0.20 (1)	5.96
J- H	-2006 / 0	0.0	0.0	0.20 (1)	5.96
Q- P	0 / 0	-18.5	-18.5	0.07 (4)	10.00
P- O	0 / 2348	-18.5	-18.5	0.45 (1)	10.00
O- N	0 / 2270	-18.5	-18.5	0.44 (1)	10.00
N- M	0 / 2270	-18.5	-18.5	0.44 (1)	10.00
M- L	0 / 2270	-18.5	-18.5	0.44 (1)	10.00
L- K	0 / 2348	-18.5	-18.5	0.45 (1)	10.00
K- J	0 / 0	-18.5	-18.5	0.07 (4)	10.00

WEBS

MEMB. FR-TO	MAX. FACTORED FORCE (LBS)	MAX CSI (LC)
P- C	-443 / 0	0.08 (1)
C- O	-100 / 0	0.04 (1)
O- D	0 / 172	0.04 (4)
D- N	0 / 873	0.20 (1)
N- E	-910 / 0	0.35 (1)
N- F	0 / 873	0.20 (1)
L- F	0 / 172	0.04 (4)
L- G	-100 / 0	0.04 (1)
K- G	-443 / 0	0.08 (1)
B- P	0 / 2400	0.54 (1)
K- H	0 / 2400	0.54 (1)

[M][F]

DESIGN CRITERIA

SPECIFIED LOADS:

TOP CH.	LL	=	32.5	PSF
	DL	=	6.0	PSF
BOT CH.	LL	=	0.0	PSF
	DL	=	7.4	PSF
TOTAL LOAD		=	45.9	PSF

SPACING = 24.0 IN. C/C

LOADING IN FLAT SECTION BASED ON A SLOPE OF 6.00/12

THIS TRUSS IS DESIGNED FOR RESIDENTIAL OR SMALL BUILDING REQUIREMENTS OF PART 9, NBCC 2015

THIS DESIGN COMPLIES WITH:
- PART 9 OF BCBC 2018 , ABC 2019
- PART 9 OF OBC 2012 (2019 AMENDMENT)
- CSA 086-14
- TPIC 2014

(55 % OF 43.9 P.S.F. G.S.L. PLUS 8.4 P.S.F. RAIN LOAD) EQUALS 32.5 P.S.F. SPECIFIED ROOF LIVE LOAD

ALLOWABLE DEFL.(LL)= L/360 (0.96")
CALCULATED VERT. DEFL.(LL) = L/ 999 (0.14")
ALLOWABLE DEFL.(TL)= L/360 (0.96")
CALCULATED VERT. DEFL.(TL) = L/ 999 (0.25")

CSI: TC=0.79/1.00 (E-F:1) , BC=0.45/1.00 (K-L:1) , WB=0.54/1.00 (H-K:1) , SSI=0.36/1.00 (E-F:1)

DOL LUMBER=1.00 NAIL=1.00 LS BEND=1.10 COMP=1.10 SHEAR=1.10 TENS= 1.10

COMPANION LIVE LOAD FACTOR = 1.00

TRUSS PLATE MANUFACTURER IS NOT RESPONSIBLE FOR QUALITY CONTROL IN THE TRUSS MANUFACTURING PLANT .

NAIL VALUES

PLATE	GRIP(DRY) (PSI) MAX	MIN	SHEAR (PLI) MAX	MIN	SECTION (PLI) MAX	MIN
MT20	650	371	1747	788	1987	1873

PLATE PLACEMENT TOL. = 0.250 inches

PLATE ROTATION TOL. = 5.0 Deg.

JSI GRIP= 0.90 (P) (INPUT = 0.90)
JSI METAL= 0.69 (M) (INPUT = 1.00)

LICENSED PROFESSIONAL ENGINEER
06-24-22
H. J. G. ALVES
100009024
PROVINCE OF ONTARIO

Structural component only
DWG# T-2215148

REVIEWED

JOB NAME	TRUSS NAME	QUANTITY	PLY	JOB DESC.	DRWG NO.
423533	T2S	1	1	BAYVIEW WELLINGTON TRUSS DESC.	

Tamarack Roof Truss, Burlington

Version 8.530 S Feb 23 2022 MiTek Industries, Inc. Fri Jun 24 08:10:00 2022 Page 1
ID:c3jyj23uDijq_8pvRKbkZpy75XW-3Qt0i0PDNizOyQpR_Oj4jWI88iMdmyqG6axLazz38bb

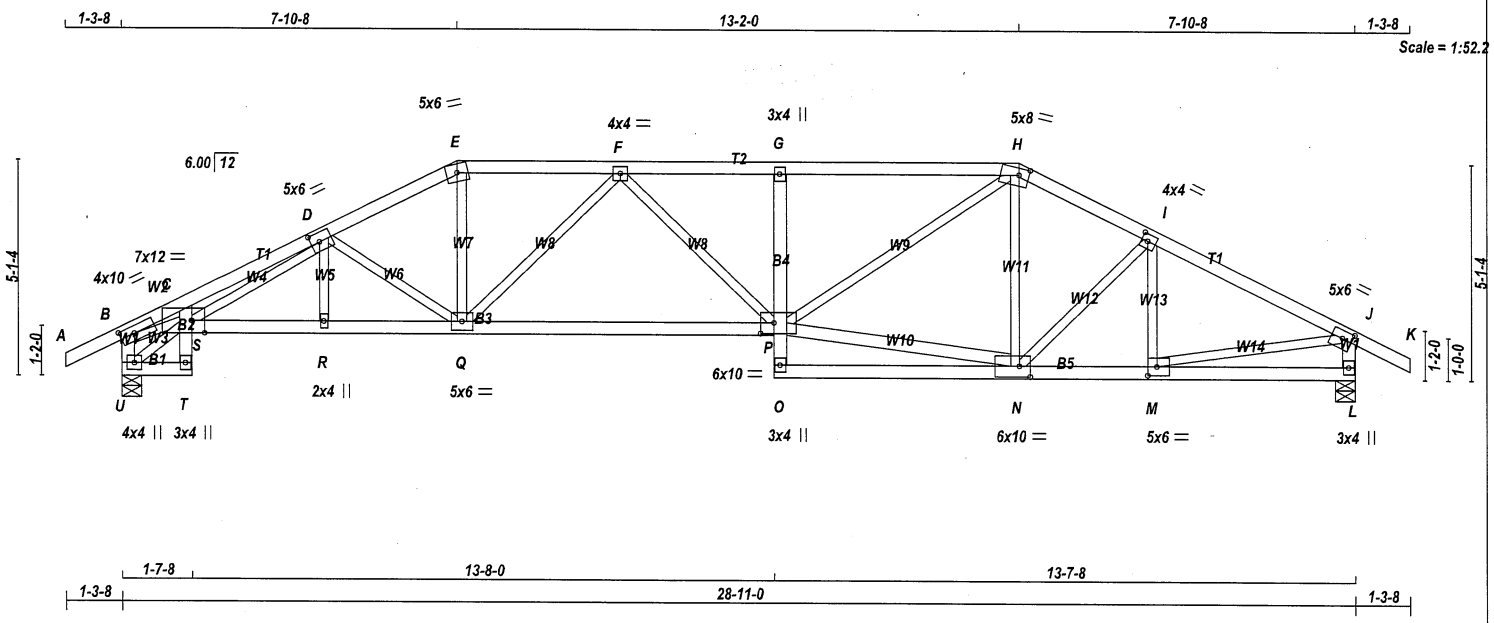

TOTAL WEIGHT = 125 lb

[M][F]

LUMBER

N. L. G. A. RULES

CHORDS	SIZE		LUMBER	DESCR.
A - E	2x4	DRY	No.2	SPF
E - H	2x4	DRY	No.2	SPF
H - K	2x4	DRY	No.2	SPF
U - B	2x4	DRY	No.2	SPF
L - J	2x4	DRY	No.2	SPF
U - T	2x4	DRY	No.2	SPF
T - C	2x4	DRY	No.2	SPF
S - P	2x4	DRY	No.2	SPF
O - G	2x4	DRY	No.2	SPF
O - L	2x4	DRY	No.2	SPF
ALL WEBS EXCEPT	2x3	DRY	No.2	SPF
P - N	2x4	DRY	No.2	SPF

DRY: SEASONED LUMBER.

PLATES (table is in inches)

JT	TYPE	PLATES	W	LEN	Y	X
B	TMVW-t	MT20	4.0	10.0	2.00	4.00
C						
C	TMBVWWW*-I	MT20	7.0	12.0	Edge	3.75
D	TMWWW-t	MT20	5.0	6.0	2.50	2.25
E	TTW-m	MT20	5.0	6.0		
F	TMWW-t	MT20	4.0	4.0		
G	TMV+p	MT20	3.0	4.0		
H	TTWW-m	MT20	5.0	8.0	2.00	2.75
I	TMWW-t	MT20	4.0	4.0	2.00	1.75
J	TMVW-t	MT20	5.0	6.0	2.25	2.75
L	BMV1+p	MT20	3.0	4.0		
M	BMWW-t	MT20	5.0	6.0	2.50	2.50
N	BMWWW-t	MT20	6.0	10.0	3.00	3.00
O	BMV+p	MT20	3.0	4.0		
P	BVMWWW-I	MT20	6.0	10.0	3.00	3.75
Q	BMWWW-t	MT20	5.0	6.0		
R	BMV+w	MT20	2.0	4.0		
S						
T	BMV+p	MT20	3.0	4.0		
U	BMVW1+p	MT20	4.0	4.0		

Edge - INDICATES REFERENCE CORNER OF PLATE TOUCHES EDGE OF CHORD.

LICENSED PROFESSIONAL ENGINEER
06-24-22
H. J. G. ALVES
100009024
PROVINCE OF ONTARIO

Structural component only
DWG# T-2215124

DIMENSIONS, SUPPORTS AND LOADINGS SPECIFIED BY FABRICATOR TO BE VERIFIED BY BUILDING DESIGNER

BEARINGS

JT	FACTORED GROSS REACTION VERT	HORZ	MAXIMUM FACTORED GROSS REACTION DOWN	HORZ	UPLIFT	INPUT BRG IN-SX	REQRD BRG IN-SX
L	2042	0	2042	0	0	5-8	5-8
U	2049	0	2049	0	0	5-8	5-8

UNFACTORED REACTIONS

JT	1ST LCASE COMBINED	MAX./MIN. COMPONENT REACTIONS SNOW	LIVE	PERM.LIVE	WIND	DEAD	SOIL
L	1429	1025 / 0	0 / 0	0 / 0	0 / 0	403 / 0	0 / 0
U	1433	1029 / 0	0 / 0	0 / 0	0 / 0	404 / 0	0 / 0

BEARING MATERIAL TO BE SPF NO.2 OR BETTER AT JOINT(S) L, U

BRACING

TOP CHORD TO BE SHEATHED OR MAX. PURLIN SPACING = 2.89 FT.
MAX. UNBRACED BOTTOM CHORD LENGTH = 7.81 FT OR RIGID CEILING DIRECTLY APPLIED.

ALL PITCH BREAKS AND PERIMETER CORNER JOINTS MUST BE LATERALLY RESTRAINED.

LOADING

TOTAL LOAD CASES: (4)

CHORDS

MEMB. FR-TO	MAX. FACTORED FORCE (LBS)	FACTORED VERT. LOAD LC1 (PLF) FROM	TO	MAX CSI (LC)	MAX. UNBRAC LENGTH
A- B	0 / 34	-112.4	-112.4	0.15 (1)	10.00
B- C	-3906 / 0	-112.4	-112.4	0.37 (1)	3.26
C- D	-4349 / 0	-112.4	-112.4	0.55 (1)	2.89
D- E	-3205 / 0	-112.4	-112.4	0.29 (1)	3.69
E- F	-2873 / 0	-112.4	-112.4	0.29 (1)	3.87
F- G	-3636 / 0	-112.4	-112.4	0.45 (1)	3.29
G- H	-3610 / 0	-112.4	-112.4	0.62 (1)	3.14
H- I	-2563 / 0	-112.4	-112.4	0.30 (1)	4.05
I- J	-2646 / 0	-112.4	-112.4	0.39 (1)	3.91
J- K	0 / 34	-112.4	-112.4	0.15 (1)	10.00
U- B	-1825 / 0	0.0	0.0	0.18 (1)	6.20
L- J	-1997 / 0	0.0	0.0	0.20 (1)	5.97
U- T	0 / 311	-18.5	-18.5	0.06 (1)	10.00
T- S	0 / 15	0.0	0.0	0.43 (1)	10.00
S- C	-140 / 0	0.0	0.0	0.33 (1)	7.81
S- R	0 / 3389	-18.5	-18.5	0.60 (1)	10.00
R- Q	0 / 3389	-18.5	-18.5	0.66 (1)	10.00
Q- P	0 / 3446	-18.5	-18.5	0.68 (1)	10.00
O- P	0 / 48	0.0	0.0	0.14 (1)	10.00
P- G	-621 / 0	0.0	0.0	0.15 (1)	7.81
O- N	0 / 99	-18.5	-18.5	0.12 (4)	10.00
N- M	0 / 2385	-18.5	-18.5	0.46 (1)	10.00
M- L	0 / 0	-18.5	-18.5	0.10 (4)	10.00

WEBS

MEMB. FR-TO	MAX. FACTORED FORCE (LBS)	MAX CSI (LC)
R- D	0 / 30	0.01 (4)
D- Q	-664 / 0	0.18 (1)
Q- E	0 / 1112	0.25 (1)
Q- F	-822 / 0	0.39 (1)
F- P	0 / 270	0.06 (1)
P- N	0 / 2196	0.35 (1)
P- H	0 / 1630	0.37 (1)
N- H	-154 / 22	0.06 (1)
N- I	-176 / 0	0.06 (1)
M- I	-376 / 0	0.08 (1)
M- J	0 / 2423	0.55 (1)
U- S	-375 / 0	0.06 (1)
B- S	0 / 3422	0.77 (1)
S- D	0 / 659	0.15 (1)

DESIGN CRITERIA

SPECIFIED LOADS:

TOP CH.	LL	=	32.5	PSF
	DL	=	6.0	PSF
BOT CH.	LL	=	0.0	PSF
	DL	=	7.4	PSF
TOTAL LOAD		=	45.9	PSF

SPACING = 24.0 IN. C/C

LOADING IN FLAT SECTION BASED ON A SLOPE OF 6.00/12

THIS TRUSS IS DESIGNED FOR RESIDENTIAL OR SMALL BUILDING REQUIREMENTS OF PART 9, NBCC 2015

THIS DESIGN COMPLIES WITH:
- PART 9 OF BCBC 2018 , ABC 2019
- PART 9 OF OBC 2012 (2019 AMENDMENT)
- CSA 086-14
- TPIC 2014

DESIGN ASSUMPTIONS
-OVERHANG NOT TO BE ALTERED OR CUT OFF.

(55 % OF 43.9 P.S.F. G.S.L. PLUS 8.4 P.S.F. RAIN LOAD) EQUALS 32.5 P.S.F. SPECIFIED ROOF LIVE LOAD

ALLOWABLE DEFL.(LL)= L/360 (0.96")
CALCULATED VERT. DEFL.(LL) = L/ 999 (0.22")
ALLOWABLE DEFL.(TL)= L/360 (0.96")
CALCULATED VERT. DEFL.(TL) = L/ 782 (0.44")

CSI: TC=0.62/1.00 (G-H:1) , BC=0.68/1.00 (P-Q:1) , WB=0.77/1.00 (B-S:1) , SSI=0.43/1.00 (C-S:1)

DOL LUMBER=1.00 NAIL=1.00 LS BEND=1.10 COMP=1.10 SHEAR=1.10 TENS= 1.10

COMPANION LIVE LOAD FACTOR = 1.00

AUTOSOLVE RIGHT HEEL ONLY

TRUSS PLATE MANUFACTURER IS NOT RESPONSIBLE FOR QUALITY CONTROL IN THE TRUSS MANUFACTURING PLANT .

NAIL VALUES

PLATE	GRIP(DRY) (PSI) MAX	MIN	SHEAR (PLI) MAX	MIN	SECTION (PLI) MAX	MIN
MT20	650	371	1747	788	1987	1873

PLATE PLACEMENT TOL. = 0.250 inches

PLATE ROTATION TOL. = 5.0 Deg.

JSI GRIP= 0.89 (J) (INPUT = 0.90)
JSI METAL= 0.64 (J) (INPUT = 1.00)

REVIEWED

CONTINUED ON PAGE 2

JOB NAME	TRUSS NAME	QUANTITY	PLY	JOB DESC. BAYVIEW WELLINGTON	DRWG NO.
423533	T2S	1	1	TRUSS DESC.	

Tamarack Roof Truss, Burlington

Version 8.530 S Feb 23 2022 MiTek Industries, Inc. Fri Jun 24 08:10:00 2022 Page 2
ID:c3jyj23uDijq_8pvRKbkZpy75XW-3Qt0i0PDNizOyQpR_Oj4jWI88iMdmyqG6axLazz38bb

NOTES- (1)
1) Lateral braces to be a minimum of 2X4 SPF #2.

LICENSED PROFESSIONAL ENGINEER
06-24-22
H. J. G. ALVES
100009024
PROVINCE OF ONTARIO

Structural component only
DWG# T-2215124

REVIEWED

JOB NAME	TRUSS NAME	QUANTITY	PLY	JOB DESC.	DRWG NO.
423532	T3	1	1	BAYVIEW WELLINGTON TRUSS DESC.	

Tamarack Roof Truss, Burlington

Version 8.530 S Feb 23 2022 MiTek Industries, Inc. Fri Jun 24 08:14:55 2022 Page 1
ID:c3jyj23uDijq_8pvRKbkZpy75XW-wACYct_GuK8Xrms8mrWFAk0cQc6KOREhx_vSRMz38X_

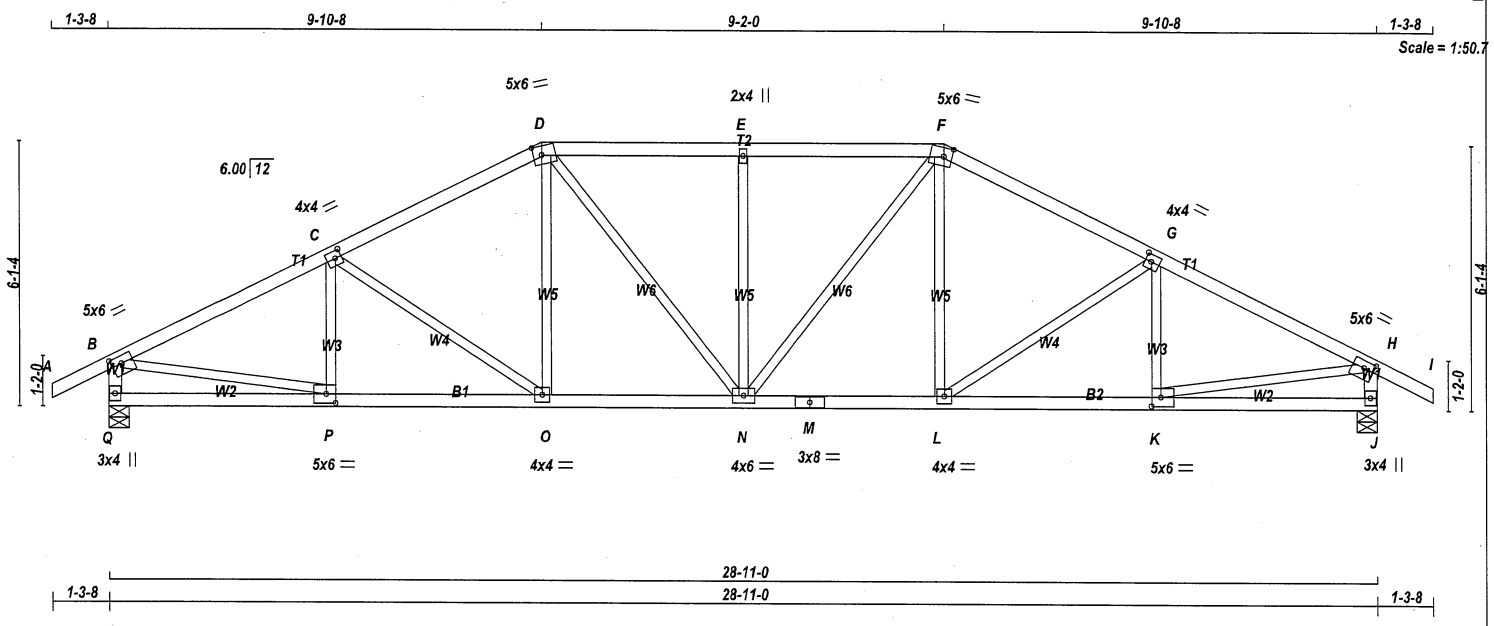

TOTAL WEIGHT = 121 lb

[M][F]

LUMBER

N. L. G. A. RULES

CHORDS	SIZE		LUMBER	DESCR.
A - D	2x4	DRY	No.2	SPF
D - F	2x4	DRY	No.2	SPF
F - I	2x4	DRY	No.2	SPF
Q - B	2x4	DRY	No.2	SPF
J - H	2x4	DRY	No.2	SPF
Q - M	2x4	DRY	No.2	SPF
M - J	2x4	DRY	No.2	SPF
ALL WEBS EXCEPT	2x3	DRY	No.2	SPF

DRY: SEASONED LUMBER.

PLATES (table is in inches)

JT	TYPE	PLATES	W	LEN	Y	X
B	TMVW-t	MT20	5.0	6.0	2.00	2.75
C	TMWW-t	MT20	4.0	4.0	2.00	1.75
D	TTWW-m	MT20	5.0	6.0	2.50	2.25
E	TMW+w	MT20	2.0	4.0		
F	TTWW-m	MT20	5.0	6.0	2.50	2.25
G	TMWW-t	MT20	4.0	4.0	2.00	1.75
H	TMVW-t	MT20	5.0	6.0	2.00	2.75
J	BMV1+p	MT20	3.0	4.0		
K	BMWW-t	MT20	5.0	6.0	2.50	2.50
L	BMWW-t	MT20	4.0	4.0		
M	BS-t	MT20	3.0	8.0		
N	BMWWW-t	MT20	4.0	6.0		
O	BMWW-t	MT20	4.0	4.0		
P	BMWW-t	MT20	5.0	6.0	2.50	2.50
Q	BMV1+p	MT20	3.0	4.0		

NOTES- (1)
1) Lateral braces to be a minimum of 2X4 SPF #2.

DIMENSIONS, SUPPORTS AND LOADINGS SPECIFIED BY FABRICATOR TO BE VERIFIED BY BUILDING DESIGNER

BEARINGS

JT	FACTORED GROSS REACTION VERT	HORZ	MAXIMUM FACTORED GROSS REACTION DOWN	HORZ	UPLIFT	INPUT BRG IN-SX	REQRD BRG IN-SX
Q	2046	0	2046	0	0	5-8	5-8
J	2046	0	2046	0	0	5-8	5-8

UNFACTORED REACTIONS

JT	1ST LCASE COMBINED	MAX./MIN. COMPONENT REACTIONS SNOW	LIVE	PERM.LIVE	WIND	DEAD	SOIL
Q	1431	1027 / 0	0 / 0	0 / 0	0 / 0	404 / 0	0 / 0
J	1431	1027 / 0	0 / 0	0 / 0	0 / 0	404 / 0	0 / 0

BEARING MATERIAL TO BE SPF NO.2 OR BETTER AT JOINT(S) Q, J

BRACING

TOP CHORD TO BE SHEATHED OR MAX. PURLIN SPACING = 3.82 FT.
MAX. UNBRACED BOTTOM CHORD LENGTH = 10.00 FT OR RIGID CEILING DIRECTLY APPLIED.

ALL PITCH BREAKS AND PERIMETER CORNER JOINTS MUST BE LATERALLY RESTRAINED.

LOADING

TOTAL LOAD CASES: (4)

CHORDS

MEMB. FR-TO	MAX. FACTORED FORCE (LBS)	FACTORED VERT. LOAD LC1 (PLF) FROM	TO	MAX CSI (LC)	MAX. UNBRAC LENGTH
A- B	0 / 34	-112.4	-112.4	0.15 (1)	10.00
B- C	-2689 / 0	-112.4	-112.4	0.44 (1)	3.82
C- D	-2404 / 0	-112.4	-112.4	0.42 (1)	4.03
D- E	-2404 / 0	-112.4	-112.4	0.36 (1)	4.09
E- F	-2404 / 0	-112.4	-112.4	0.36 (1)	4.09
F- G	-2404 / 0	-112.4	-112.4	0.42 (1)	4.03
G- H	-2689 / 0	-112.4	-112.4	0.44 (1)	3.82
H- I	0 / 34	-112.4	-112.4	0.15 (1)	10.00
Q- B	-2002 / 0	0.0	0.0	0.20 (1)	5.97
J- H	-2002 / 0	0.0	0.0	0.20 (1)	5.97
Q- P	0 / 0	-18.5	-18.5	0.10 (4)	10.00
P- O	0 / 2430	-18.5	-18.5	0.44 (1)	10.00
O- N	0 / 2128	-18.5	-18.5	0.39 (1)	10.00
N- M	0 / 2128	-18.5	-18.5	0.39 (1)	10.00
M- L	0 / 2128	-18.5	-18.5	0.39 (1)	10.00
L- K	0 / 2430	-18.5	-18.5	0.44 (1)	10.00
K- J	0 / 0	-18.5	-18.5	0.10 (4)	10.00

WEBS

MEMB. FR-TO	MAX. FACTORED FORCE (LBS)	MAX CSI (LC)
P- C	-322 / 0	0.07 (1)
C- O	-373 / 0	0.23 (1)
O- D	0 / 306	0.07 (1)
D- N	0 / 446	0.10 (1)
N- E	-626 / 0	0.37 (1)
N- F	0 / 446	0.10 (1)
L- F	0 / 306	0.07 (1)
L- G	-373 / 0	0.23 (1)
K- G	-322 / 0	0.07 (1)
B- P	0 / 2465	0.55 (1)
K- H	0 / 2465	0.55 (1)

DESIGN CRITERIA

SPECIFIED LOADS:

TOP CH.	LL	=	32.5	PSF
	DL	=	6.0	PSF
BOT CH.	LL	=	0.0	PSF
	DL	=	7.4	PSF
TOTAL LOAD		=	45.9	PSF

SPACING = 24.0 IN. C/C

LOADING IN FLAT SECTION BASED ON A SLOPE OF 6.00/12

THIS TRUSS IS DESIGNED FOR RESIDENTIAL OR SMALL BUILDING REQUIREMENTS OF PART 9, NBCC 2015

THIS DESIGN COMPLIES WITH:
- PART 9 OF BCBC 2018 , ABC 2019
- PART 9 OF OBC 2012 (2019 AMENDMENT)
- CSA 086-14
- TPIC 2014

(55 % OF 43.9 P.S.F. G.S.L. PLUS 8.4 P.S.F. RAIN LOAD) EQUALS 32.5 P.S.F. SPECIFIED ROOF LIVE LOAD

ALLOWABLE DEFL.(LL)= L/360 (0.96")
CALCULATED VERT. DEFL.(LL) = L/ 999 (0.12")
ALLOWABLE DEFL.(TL)= L/360 (0.96")
CALCULATED VERT. DEFL.(TL) = L/ 999 (0.21")

CSI: TC=0.44/1.00 (G-H:1) , BC=0.44/1.00 (K-L:1) , WB=0.55/1.00 (H-K:1) , SSI=0.25/1.00 (E-F:1)

DOL LUMBER=1.00 NAIL=1.00 LS BEND=1.10 COMP=1.10 SHEAR=1.10 TENS= 1.10

COMPANION LIVE LOAD FACTOR = 1.00

TRUSS PLATE MANUFACTURER IS NOT RESPONSIBLE FOR QUALITY CONTROL IN THE TRUSS MANUFACTURING PLANT .

NAIL VALUES

PLATE	GRIP(DRY) (PSI) MAX	MIN	SHEAR (PLI) MAX	MIN	SECTION (PLI) MAX	MIN
MT20	650	371	1747	788	1987	1873

PLATE PLACEMENT TOL. = 0.250 inches

PLATE ROTATION TOL. = 5.0 Deg.

JSI GRIP= 0.88 (K) (INPUT = 0.90)
JSI METAL= 0.66 (B) (INPUT = 1.00)

LICENSED PROFESSIONAL ENGINEER
06-24-22
H. J. G. ALVES
100009024
PROVINCE OF ONTARIO

Structural component only
DWG# T-2215149

REVIEWED

JOB NAME	TRUSS NAME	QUANTITY	PLY	JOB DESC.	DRWG NO.
423533	T3S	1	1	BAYVIEW WELLINGTON TRUSS DESC.	

Tamarack Roof Truss, Burlington

Version 8.530 S Feb 23 2022 MiTek Industries, Inc. Fri Jun 24 08:10:01 2022 Page 1
ID:c3jyj23uDijq_8pvRKbkZpy75XW-XcRPvMQr7?5FZaOdX6FJGkqJM5jEVT9PKEhu6Pz38ba

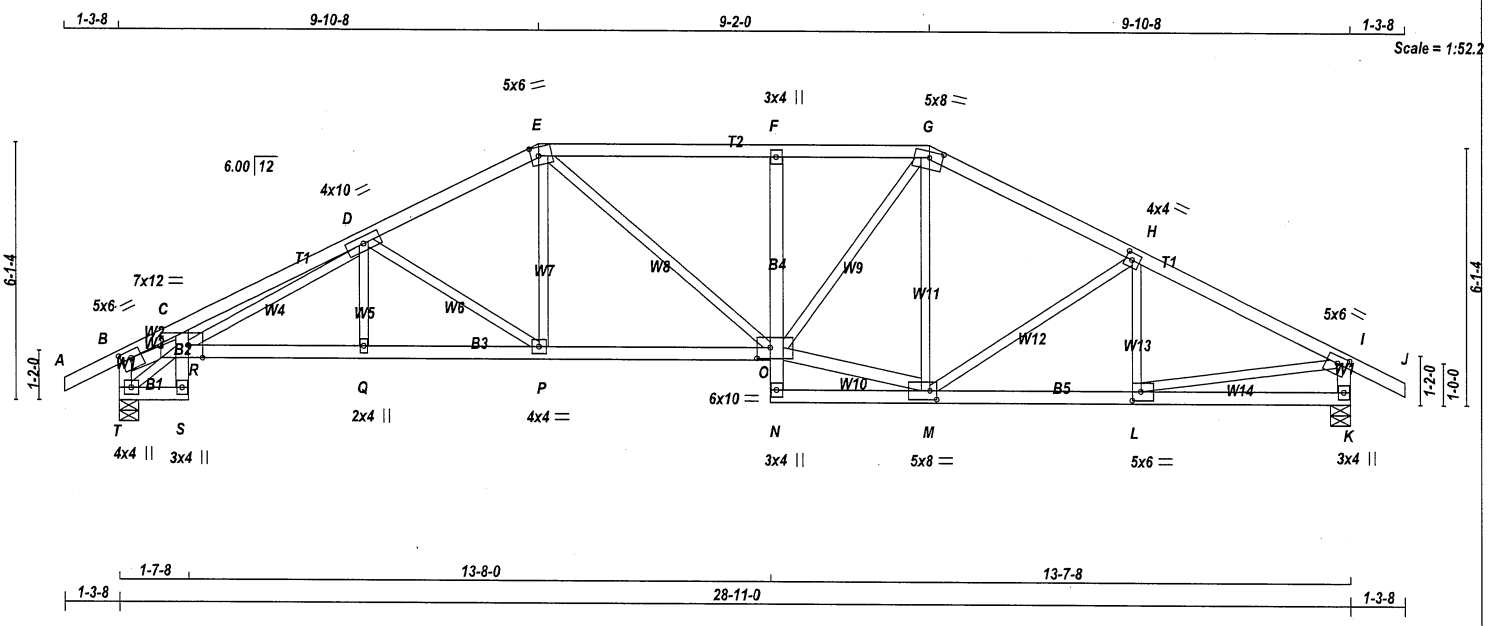

TOTAL WEIGHT = 127 lb

[M][F]

LUMBER

N. L. G. A. RULES

CHORDS	SIZE		LUMBER	DESCR.
A - E	2x4	DRY	No.2	SPF
E - G	2x4	DRY	No.2	SPF
G - J	2x4	DRY	No.2	SPF
T - B	2x4	DRY	No.2	SPF
K - I	2x4	DRY	No.2	SPF
T - S	2x4	DRY	No.2	SPF
S - C	2x4	DRY	No.2	SPF
R - O	2x4	DRY	No.2	SPF
N - F	2x4	DRY	No.2	SPF
N - K	2x4	DRY	No.2	SPF
ALL WEBS	2x3	DRY	No.2	SPF
EXCEPT				
O - M	2x4	DRY	No.2	SPF
B - R	2x4	DRY	No.2	SPF

DRY: SEASONED LUMBER.

PLATES (table is in inches)

JT	TYPE	PLATES	W	LEN	Y	X
B	TMVW-t	MT20	5.0	6.0	2.00	3.00
C						
C	TMBVWWW*-I	MT20	7.0	12.0	Edge	4.25
D	TMWWW-t	MT20	4.0	10.0		
E	TTWW-m	MT20	5.0	6.0	2.50	2.25
F	TMV+p	MT20	3.0	4.0		
G	TTWW-m	MT20	5.0	8.0	1.75	3.75
H	TMWW-t	MT20	4.0	4.0	2.00	1.75
I	TMVW-t	MT20	5.0	6.0	2.00	2.75
K	BMV1+p	MT20	3.0	4.0		
L	BMWW-t	MT20	5.0	6.0	2.50	2.50
M	BMWWW-t	MT20	5.0	8.0	2.50	2.00
N	BMV+p	MT20	3.0	4.0		
O	BVMWWW-I	MT20	6.0	10.0	3.00	3.75
P	BMWW-t	MT20	4.0	4.0		
Q	BMW+w	MT20	2.0	4.0		
R						
S	BMV+p	MT20	3.0	4.0		
T	BMVW1+p	MT20	4.0	4.0		

Edge - INDICATES REFERENCE CORNER OF PLATE TOUCHES EDGE OF CHORD.

LICENSED PROFESSIONAL ENGINEER
06-24-22
H. J. G. ALVES
100009024
PROVINCE OF ONTARIO

Structural component only
DWG# T-2215125

DIMENSIONS, SUPPORTS AND LOADINGS SPECIFIED BY FABRICATOR TO BE VERIFIED BY BUILDING DESIGNER

BEARINGS

JT	FACTORED GROSS REACTION VERT	HORZ	MAXIMUM FACTORED GROSS REACTION DOWN	HORZ	UPLIFT	INPUT BRG IN-SX	REQRD BRG IN-SX
K	2042	0	2042	0	0	5-8	5-8
T	2049	0	2049	0	0	5-8	5-8

UNFACTORED REACTIONS

JT	1ST LCASE COMBINED	MAX./MIN. COMPONENT REACTIONS SNOW	LIVE	PERM.LIVE	WIND	DEAD	SOIL
K	1429	1025 / 0	0 / 0	0 / 0	0 / 0	403 / 0	0 / 0
T	1433	1029 / 0	0 / 0	0 / 0	0 / 0	404 / 0	0 / 0

BEARING MATERIAL TO BE SPF NO.2 OR BETTER AT JOINT(S) K, T

BRACING

TOP CHORD TO BE SHEATHED OR MAX. PURLIN SPACING = 2.86 FT.
MAX. UNBRACED BOTTOM CHORD LENGTH = 7.81 FT OR RIGID CEILING DIRECTLY APPLIED.

ALL PITCH BREAKS AND PERIMETER CORNER JOINTS MUST BE LATERALLY RESTRAINED.

LOADING

TOTAL LOAD CASES: (4)

CHORDS

MEMB. FR-TO	MAX. FACTORED FORCE (LBS)	FACTORED VERT. LOAD LC1 (PLF) FROM	TO	MAX CSI (LC)	MAX. UNBRAC LENGTH
A- B	0 / 34	-112.4	-112.4	0.15 (1)	10.00
B- C	-4051 / 0	-112.4	-112.4	0.33 (1)	3.25
C- D	-4440 / 0	-112.4	-112.4	0.59 (1)	2.86
D- E	-2879 / 0	-112.4	-112.4	0.39 (1)	3.76
E- F	-2885 / 0	-112.4	-112.4	0.52 (1)	3.60
F- G	-2873 / 0	-112.4	-112.4	0.42 (1)	3.70
G- H	-2403 / 0	-112.4	-112.4	0.42 (1)	4.03
H- I	-2683 / 0	-112.4	-112.4	0.45 (1)	3.83
I- J	0 / 34	-112.4	-112.4	0.15 (1)	10.00
T- B	-1848 / 0	0.0	0.0	0.19 (1)	6.16
K- I	-1998 / 0	0.0	0.0	0.20 (1)	5.97
T- S	0 / 278	-18.5	-18.5	0.05 (1)	10.00
S- R	0 / 15	0.0	0.0	0.38 (1)	10.00
R- C	-219 / 0	0.0	0.0	0.29 (1)	7.81
R- Q	0 / 3262	-18.5	-18.5	0.58 (1)	10.00
Q- P	0 / 3262	-18.5	-18.5	0.59 (1)	10.00
P- O	0 / 2559	-18.5	-18.5	0.48 (1)	10.00
N- O	0 / 27	0.0	0.0	0.08 (1)	10.00
O- F	-645 / 0	0.0	0.0	0.17 (1)	7.81
N- M	0 / 53	-18.5	-18.5	0.08 (4)	10.00
M- L	0 / 2425	-18.5	-18.5	0.44 (1)	10.00
L- K	0 / 0	-18.5	-18.5	0.09 (4)	10.00

WEBS

MEMB. FR-TO	MAX. FACTORED FORCE (LBS)	MAX CSI (LC)
Q- D	0 / 87	0.03 (4)
D- P	-850 / 0	0.36 (1)
P- E	0 / 568	0.13 (1)
E- O	0 / 430	0.10 (1)
O- M	0 / 2146	0.34 (1)
O- G	0 / 1254	0.28 (1)
M- G	-269 / 0	0.16 (1)
M- H	-370 / 0	0.23 (1)
L- H	-323 / 0	0.07 (1)
L- I	0 / 2460	0.55 (1)
T- R	-335 / 0	0.05 (1)
B- R	0 / 3567	0.57 (1)
R- D	0 / 889	0.20 (1)

DESIGN CRITERIA

SPECIFIED LOADS:

TOP CH.	LL	=	32.5	PSF
	DL	=	6.0	PSF
BOT CH.	LL	=	0.0	PSF
	DL	=	7.4	PSF
TOTAL LOAD		=	45.9	PSF

SPACING = 24.0 IN. C/C

LOADING IN FLAT SECTION BASED ON A SLOPE OF 6.00/12

THIS TRUSS IS DESIGNED FOR RESIDENTIAL OR SMALL BUILDING REQUIREMENTS OF PART 9, NBCC 2015

THIS DESIGN COMPLIES WITH:
- PART 9 OF BCBC 2018 , ABC 2019
- PART 9 OF OBC 2012 (2019 AMENDMENT)
- CSA 086-14
- TPIC 2014

DESIGN ASSUMPTIONS
-OVERHANG NOT TO BE ALTERED OR CUT OFF.

(55 % OF 43.9 P.S.F. G.S.L. PLUS 8.4 P.S.F. RAIN LOAD) EQUALS 32.5 P.S.F. SPECIFIED ROOF LIVE LOAD

ALLOWABLE DEFL.(LL)= L/360 (0.96")
CALCULATED VERT. DEFL.(LL) = L/ 999 (0.17")
ALLOWABLE DEFL.(TL)= L/360 (0.96")
CALCULATED VERT. DEFL.(TL) = L/ 999 (0.33")

CSI: TC=0.59/1.00 (C-D:1) , BC=0.59/1.00 (P-Q:1) , WB=0.57/1.00 (B-R:1) , SSI=0.38/1.00 (C-R:1)

DOL LUMBER=1.00 NAIL=1.00 LS BEND=1.10 COMP=1.10 SHEAR=1.10 TENS= 1.10

COMPANION LIVE LOAD FACTOR = 1.00

AUTOSOLVE RIGHT HEEL ONLY

TRUSS PLATE MANUFACTURER IS NOT RESPONSIBLE FOR QUALITY CONTROL IN THE TRUSS MANUFACTURING PLANT .

NAIL VALUES

PLATE	GRIP(DRY) (PSI) MAX	MIN	SHEAR (PLI) MAX	MIN	SECTION (PLI) MAX	MIN
MT20	650	371	1747	788	1987	1873

PLATE PLACEMENT TOL. = 0.250 inches

PLATE ROTATION TOL. = 5.0 Deg.

JSI GRIP= 0.88 (L) (INPUT = 0.90)
JSI METAL= 0.94 (B) (INPUT = 1.00)

REVIEWED

CONTINUED ON PAGE 2

JOB NAME	TRUSS NAME	QUANTITY	PLY	JOB DESC. BAYVIEW WELLINGTON	DRWG NO.
423533	T3S	1	1	TRUSS DESC.	

Tamarack Roof Truss, Burlington

Version 8.530 S Feb 23 2022 MiTek Industries, Inc. Fri Jun 24 08:10:01 2022 Page 2
ID:c3jyj23uDijq_8pvRKbkZpy75XW-XcRPvMQr7?5FZaOdX6FJGkqJM5jEVT9PKEhu6Pz38ba

NOTES- (1)
1) Lateral braces to be a minimum of 2X4 SPF #2.

LICENSED PROFESSIONAL ENGINEER
06-24-22
H. J. G. ALVES
100009024
PROVINCE OF ONTARIO

Structural component only
DWG# T-2215125

REVIEWED

JOB NAME	TRUSS NAME	QUANTITY	PLY	JOB DESC.	DRWG NO.
423532	T4	1	1	BAYVIEW WELLINGTON TRUSS DESC.	

Tamarack Roof Truss, Burlington

Version 8.530 S Feb 23 2022 MiTek Industries, Inc. Fri Jun 24 08:14:55 2022 Page 1
ID:c3jyj23uDijq_8pvRKbkZpy75XW-wACYct_GuK8Xrms8mrWFAk0Y7c52OQahx_vSRMz38X_

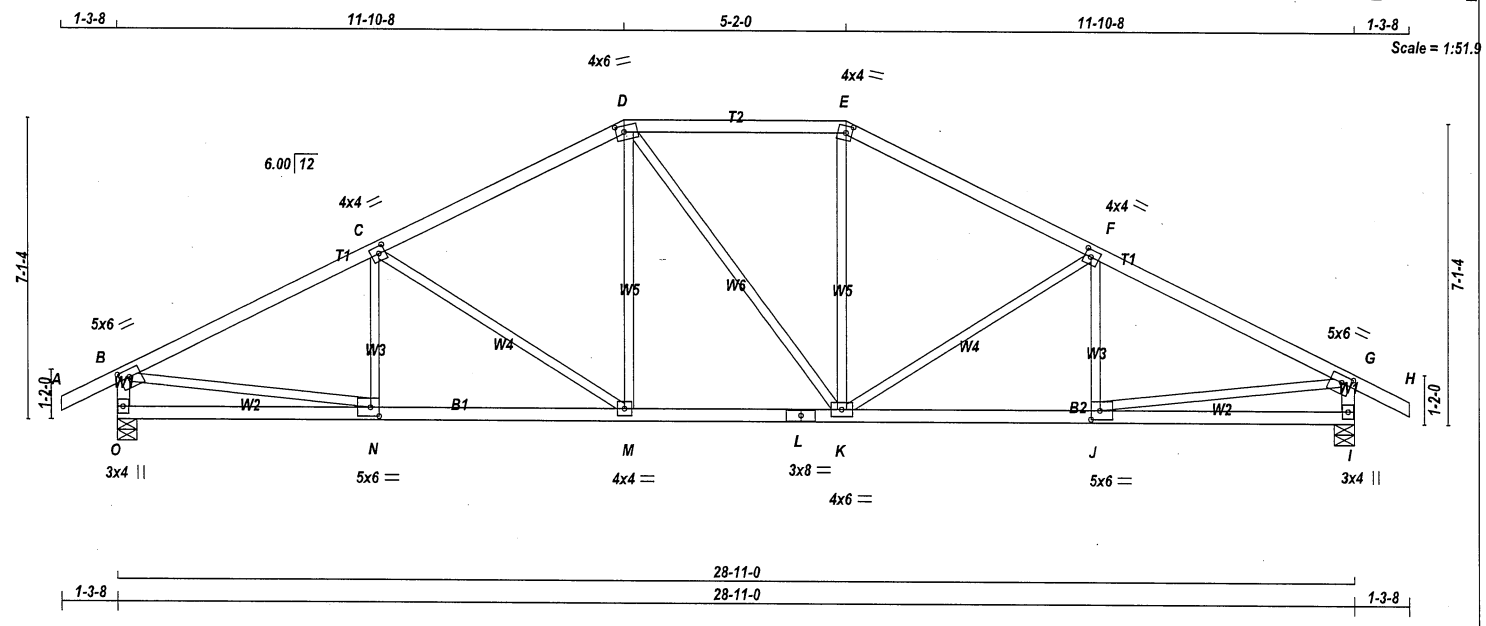

TOTAL WEIGHT = 118 lb

LUMBER

N. L. G. A. RULES

CHORDS	SIZE		LUMBER	DESCR.
A - D	2x4	DRY	No.2	SPF
D - E	2x4	DRY	No.2	SPF
E - H	2x4	DRY	No.2	SPF
O - B	2x4	DRY	No.2	SPF
I - G	2x4	DRY	No.2	SPF
O - L	2x4	DRY	No.2	SPF
L - I	2x4	DRY	No.2	SPF
ALL WEBS EXCEPT	2x3	DRY	No.2	SPF

DRY: SEASONED LUMBER.

PLATES (table is in inches)

JT	TYPE	PLATES	W	LEN	Y	X
B	TMWW-t	MT20	5.0	6.0	2.00	2.75
C	TMWW-t	MT20	4.0	4.0	2.00	1.75
D	TTWW-m	MT20	4.0	6.0	1.75	2.25
E	TTW-m	MT20	4.0	4.0	2.00	1.75
F	TMWW-t	MT20	4.0	4.0	2.00	1.75
G	TMVW-t	MT20	5.0	6.0	2.00	2.75
I	BMV1+p	MT20	3.0	4.0		
J	BMWW-t	MT20	5.0	6.0	2.50	2.50
K	BMWWW-t	MT20	4.0	6.0		
L	BS-t	MT20	3.0	8.0		
M	BMWW-t	MT20	4.0	4.0		
N	BMWW-t	MT20	5.0	6.0	2.50	2.50
O	BMV1+p	MT20	3.0	4.0		

NOTES- (1)
1) Lateral braces to be a minimum of 2X4 SPF #2.

DIMENSIONS, SUPPORTS AND LOADINGS SPECIFIED BY FABRICATOR TO BE VERIFIED BY BUILDING DESIGNER

BEARINGS

JT	FACTORED GROSS REACTION VERT	HORZ	MAXIMUM FACTORED GROSS REACTION DOWN	HORZ	UPLIFT	INPUT BRG IN-SX	REQRD BRG IN-SX
O	2046	0	2046	0	0	5-8	5-8
I	2046	0	2046	0	0	5-8	5-8

UNFACTORED REACTIONS

JT	1ST LCASE COMBINED	MAX./MIN. COMPONENT REACTIONS SNOW	LIVE	PERM.LIVE	WIND	DEAD	SOIL
O	1431	1027 / 0	0 / 0	0 / 0	0 / 0	404 / 0	0 / 0
I	1431	1027 / 0	0 / 0	0 / 0	0 / 0	404 / 0	0 / 0

BEARING MATERIAL TO BE SPF NO.2 OR BETTER AT JOINT(S) O, I

BRACING

TOP CHORD TO BE SHEATHED OR MAX. PURLIN SPACING = 3.53 FT.
MAX. UNBRACED BOTTOM CHORD LENGTH = 10.00 FT OR RIGID CEILING DIRECTLY APPLIED.

ALL PITCH BREAKS AND PERIMETER CORNER JOINTS MUST BE LATERALLY RESTRAINED.

LOADING

TOTAL LOAD CASES: (4)

CHORDS

MEMB. FR-TO	MAX. FACTORED FORCE (LBS)	FACTORED VERT. LOAD LC1 (PLF) FROM	TO	MAX CSI (LC)	MAX. UNBRAC LENGTH
A- B	0 / 34	-112.4	-112.4	0.15 (1)	10.00
B- C	-2721 / 0	-112.4	-112.4	0.66 (1)	3.53
C- D	-2214 / 0	-112.4	-112.4	0.59 (1)	3.93
D- E	-1954 / 0	-112.4	-112.4	0.44 (1)	4.35
E- F	-2215 / 0	-112.4	-112.4	0.59 (1)	3.93
F- G	-2721 / 0	-112.4	-112.4	0.66 (1)	3.53
G- H	0 / 34	-112.4	-112.4	0.15 (1)	10.00
O- B	-1997 / 0	0.0	0.0	0.20 (1)	5.97
I- G	-1997 / 0	0.0	0.0	0.20 (1)	5.97
O- N	0 / 0	-18.5	-18.5	0.15 (4)	10.00
N- M	0 / 2465	-18.5	-18.5	0.46 (1)	10.00
M- L	0 / 1954	-18.5	-18.5	0.37 (1)	10.00
L- K	0 / 1954	-18.5	-18.5	0.37 (1)	10.00
K- J	0 / 2465	-18.5	-18.5	0.46 (1)	10.00
J- I	0 / 0	-18.5	-18.5	0.15 (4)	10.00

WEBS

MEMB. FR-TO	MAX. FACTORED FORCE (LBS)	MAX CSI (LC)
N- C	-231 / 41	0.06 (1)
C- M	-618 / 0	0.60 (1)
M- D	0 / 437	0.10 (1)
D- K	0 / 1	0.00 (1)
K- E	0 / 439	0.10 (1)
K- F	-617 / 0	0.60 (1)
J- F	-232 / 40	0.06 (1)
B- N	0 / 2490	0.56 (1)
J- G	0 / 2489	0.56 (1)

[M][F]

DESIGN CRITERIA

SPECIFIED LOADS:

TOP CH.	LL	=	32.5	PSF
	DL	=	6.0	PSF
BOT CH.	LL	=	0.0	PSF
	DL	=	7.4	PSF
TOTAL LOAD		=	45.9	PSF

SPACING = 24.0 IN. C/C

LOADING IN FLAT SECTION BASED ON A SLOPE OF 6.00/12

THIS TRUSS IS DESIGNED FOR RESIDENTIAL OR SMALL BUILDING REQUIREMENTS OF PART 9, NBCC 2015

THIS DESIGN COMPLIES WITH:
- PART 9 OF BCBC 2018 , ABC 2019
- PART 9 OF OBC 2012 (2019 AMENDMENT)
- CSA 086-14
- TPIC 2014

(55 % OF 43.9 P.S.F. G.S.L. PLUS 8.4 P.S.F. RAIN LOAD) EQUALS 32.5 P.S.F. SPECIFIED ROOF LIVE LOAD

ALLOWABLE DEFL.(LL)= L/360 (0.96")
CALCULATED VERT. DEFL.(LL) = L/ 999 (0.11")
ALLOWABLE DEFL.(TL)= L/360 (0.96")
CALCULATED VERT. DEFL.(TL) = L/ 999 (0.21")

CSI: TC=0.66/1.00 (B-C:1) , BC=0.46/1.00 (J-K:1) , WB=0.60/1.00 (C-M:1) , SSI=0.29/1.00 (F-G:1)

DOL LUMBER=1.00 NAIL=1.00 LS BEND=1.10 COMP=1.10 SHEAR=1.10 TENS= 1.10

COMPANION LIVE LOAD FACTOR = 1.00

TRUSS PLATE MANUFACTURER IS NOT RESPONSIBLE FOR QUALITY CONTROL IN THE TRUSS MANUFACTURING PLANT .

NAIL VALUES

PLATE	GRIP(DRY) (PSI) MAX	MIN	SHEAR (PLI) MAX	MIN	SECTION (PLI) MAX	MIN
MT20	650	371	1747	788	1987	1873

PLATE PLACEMENT TOL. = 0.250 inches

PLATE ROTATION TOL. = 5.0 Deg.

JSI GRIP= 0.88 (B) (INPUT = 0.90)
JSI METAL= 0.67 (B) (INPUT = 1.00)

LICENSED PROFESSIONAL ENGINEER
06-24-22
H. J. G. ALVES
100009024
PROVINCE OF ONTARIO

Structural component only
DWG# T-2215150

REVIEWED

JOB NAME	TRUSS NAME	QUANTITY	PLY	JOB DESC.	DRWG NO.
423533	T4S	1	1	BAYVIEW WELLINGTON TRUSS DESC.	

Tamarack Roof Truss, Burlington

Version 8.530 S Feb 23 2022 MiTek Industries, Inc. Fri Jun 24 08:10:02 2022 Page 1
ID:c3jyj23uDijq_8pvRKbkZpy75XW-?p?n7hRTuJD5Bkzq5pmYoxNT0V3kErGZZuQSerz38bZ

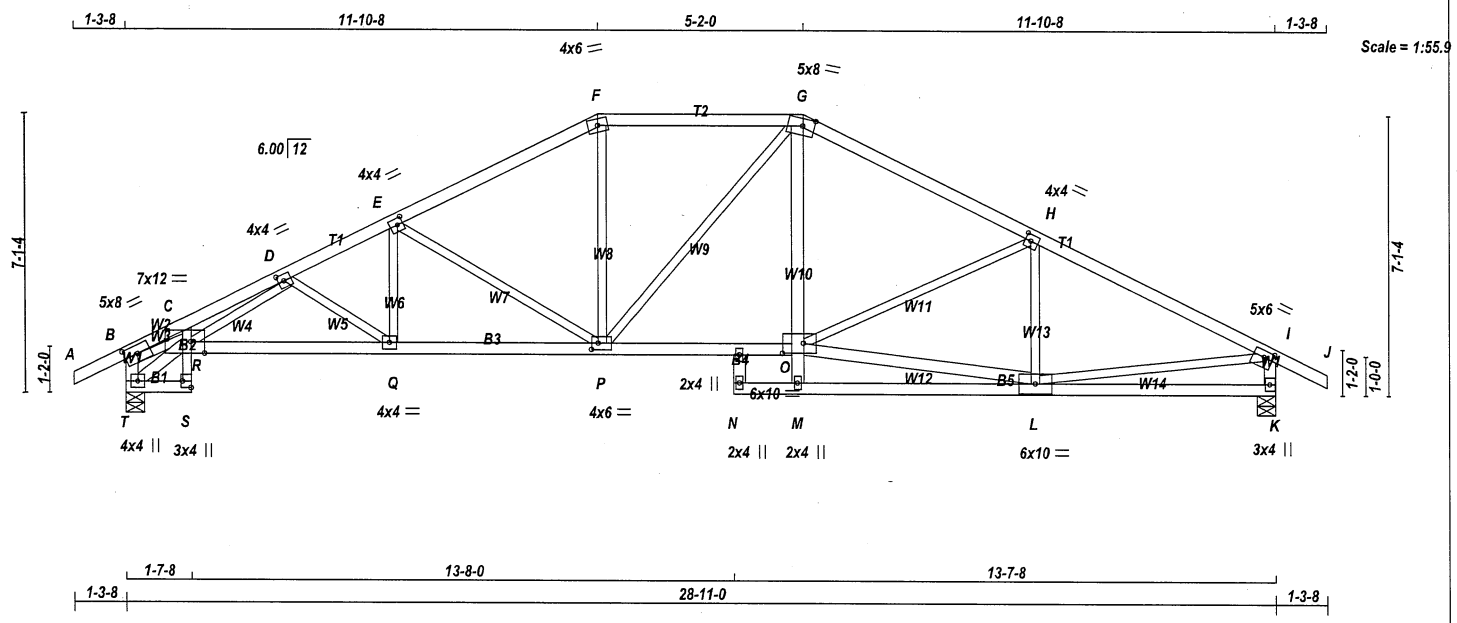

TOTAL WEIGHT = 130 lb

LUMBER

N. L. G. A. RULES

CHORDS	SIZE		LUMBER	DESCR.
A - F	2x4	DRY	No.2	SPF
F - G	2x4	DRY	No.2	SPF
G - J	2x4	DRY	No.2	SPF
T - B	2x4	DRY	No.2	SPF
K - I	2x4	DRY	No.2	SPF
T - S	2x4	DRY	No.2	SPF
S - C	2x3	DRY	No.2	SPF
R - O	2x4	DRY	No.2	SPF
N - K	2x4	DRY	No.2	SPF
ALL WEBS EXCEPT	2x3	DRY	No.2	SPF
M - G	2x4	DRY	No.2	SPF
O - L	2x4	DRY	No.2	SPF
T - R	2x4	DRY	No.2	SPF

DRY: SEASONED LUMBER.

PLATES (table is in inches)

JT	TYPE	PLATES	W	LEN	Y	X
B	TMVW-t	MT20	5.0	8.0	2.50	4.00
C						
C	TMBVWWW*-I	MT20	7.0	12.0	Edge	4.25
D, E, H						
D	TMWW-t	MT20	4.0	4.0	2.00	1.75
F	TTW-m	MT20	4.0	6.0		
G	TTWW-m	MT20	5.0	8.0	2.25	3.50
I	TMVW-t	MT20	5.0	6.0	2.00	2.75
K	BMV1+p	MT20	3.0	4.0		
L	BMWWW-t	MT20	6.0	10.0		
M	BMW+w	MT20	2.0	4.0		
N	NP+w	MT20	2.0	4.0		
O	BWMWW*-I	MT20	6.0	10.0	3.00	6.25
P	BMWWW-t	MT20	4.0	6.0	2.00	2.00
Q	BMWW-t	MT20	4.0	4.0		
R						
S	BMV+p	MT20	3.0	4.0	2.00	Edge
T	BMVW1+p	MT20	4.0	4.0		
U	NP+w	MT20	2.0	4.0		

Edge - INDICATES REFERENCE CORNER OF PLATE TOUCHES EDGE OF CHORD.

LICENSED PROFESSIONAL ENGINEER
06-24-22
H. J. G. ALVES
100009024
PROVINCE OF ONTARIO

Structural component only
DWG# T-2215126

DIMENSIONS, SUPPORTS AND LOADINGS SPECIFIED BY FABRICATOR TO BE VERIFIED BY BUILDING DESIGNER

BEARINGS

JT	FACTORED GROSS REACTION VERT	HORZ	MAXIMUM GROSS REACTION DOWN	HORZ	FACTORED UPLIFT	INPUT BRG IN-SX	REQRD BRG IN-SX
K	2059	0	2059	0	0	5-8	5-8
T	2061	0	2061	0	0	5-8	5-8

UNFACTORED REACTIONS

JT	1ST LCASE COMBINED	MAX./MIN. COMPONENT REACTIONS SNOW	LIVE	PERM.LIVE	WIND	DEAD	SOIL
K	1442	1025 / 0	0 / 0	0 / 0	0 / 0	417 / 0	0 / 0
T	1443	1029 / 0	0 / 0	0 / 0	0 / 0	414 / 0	0 / 0

BEARING MATERIAL TO BE SPF NO.2 OR BETTER AT JOINT(S) K, T

BRACING

TOP CHORD TO BE SHEATHED OR MAX. PURLIN SPACING = 2.92 FT.
MAX. UNBRACED BOTTOM CHORD LENGTH = 10.00 FT OR RIGID CEILING DIRECTLY APPLIED.

MAX. UNBRACED INTERIOR CHORD LENGTH = 10.00 FT

ALL PITCH BREAKS AND PERIMETER CORNER JOINTS MUST BE LATERALLY RESTRAINED.

LOADING

TOTAL LOAD CASES: (4)

CHORDS

MEMB. FR-TO	MAX. FACTORED FORCE (LBS)	FACTORED VERT. LOAD LC1 (PLF) FROM	TO	MAX CSI (LC)	MAX. UNBRAC LENGTH
A- B	0 / 34	-112.4	-112.4	0.15 (1)	10.00
B- C	-4248 / 0	-112.4	-112.4	0.41 (1)	3.08
C- D	-4344 / 0	-112.4	-112.4	0.51 (1)	2.92
D- E	-3448 / 0	-112.4	-112.4	0.38 (1)	3.45
E- F	-2590 / 0	-112.4	-112.4	0.46 (1)	3.87
F- G	-2307 / 0	-112.4	-112.4	0.46 (1)	4.03
G- H	-2603 / 0	-112.4	-112.4	0.63 (1)	3.63
H- I	-2749 / 0	-112.4	-112.4	0.66 (1)	3.50
I- J	0 / 34	-112.4	-112.4	0.15 (1)	10.00
T- B	-1964 / 0	0.0	0.0	0.20 (1)	6.01
K- I	-2013 / 0	0.0	0.0	0.20 (1)	5.95
T- S	0 / 127	-18.5	-18.5	0.03 (1)	10.00
S- R	0 / 16	0.0	0.0	0.34 (1)	10.00
R- C	0 / 33	0.0	0.0	0.34 (1)	10.00
R- Q	0 / 3486	-18.5	-18.5	0.63 (1)	10.00
Q- P	0 / 3111	-18.5	-18.5	0.57 (1)	10.00
P- O	0 / 2320	-18.5	-18.5	0.44 (1)	10.00
N- M	0 / 0	-18.5	-18.5	0.06 (4)	10.00
M- L	0 / 56	-18.5	-18.5	0.18 (4)	10.00
L- K	0 / 0	-18.5	-18.5	0.18 (4)	10.00

WEBS

MEMB. FR-TO	MAX. FACTORED FORCE (LBS)	MAX CSI (LC)
Q- E	0 / 350	0.08 (1)
E- P	-959 / 0	0.64 (1)
P- F	0 / 620	0.14 (1)
P- G	-20 / 0	0.02 (1)
M- O	0 / 81	0.09 (1)
O- G	0 / 629	0.18 (1)
L- H	-638 / 0	0.17 (1)
L- I	0 / 2515	0.57 (1)
O- L	0 / 2469	0.40 (1)
O- H	-217 / 0	0.17 (1)
T- R	-152 / 0	0.02 (1)
B- R	0 / 3728	0.84 (1)
D- Q	-453 / 0	0.10 (1)
R- D	0 / 552	0.12 (1)

[M][F]

DESIGN CRITERIA

SPECIFIED LOADS:

TOP CH.	LL	=	32.5	PSF
	DL	=	6.0	PSF
BOT CH.	LL	=	0.0	PSF
	DL	=	7.4	PSF
TOTAL LOAD		=	45.9	PSF

SPACING = 24.0 IN. C/C

LOADING IN FLAT SECTION BASED ON A SLOPE OF 6.00/12

THIS TRUSS IS DESIGNED FOR RESIDENTIAL OR SMALL BUILDING REQUIREMENTS OF PART 9, NBCC 2015

THIS DESIGN COMPLIES WITH:
- PART 9 OF BCBC 2018 , ABC 2019
- PART 9 OF OBC 2012 (2019 AMENDMENT)
- CSA 086-14
- TPIC 2014

DESIGN ASSUMPTIONS
-OVERHANG NOT TO BE ALTERED OR CUT OFF.

(55 % OF 43.9 P.S.F. G.S.L. PLUS 8.4 P.S.F. RAIN LOAD) EQUALS 32.5 P.S.F. SPECIFIED ROOF LIVE LOAD

ALLOWABLE DEFL.(LL)= L/360 (0.96")
CALCULATED VERT. DEFL.(LL) = L/ 999 (0.17")
ALLOWABLE DEFL.(TL)= L/360 (0.96")
CALCULATED VERT. DEFL.(TL) = L/ 999 (0.30")

CSI: TC=0.66/1.00 (H-I:1) , BC=0.63/1.00 (Q-R:1) , WB=0.84/1.00 (B-R:1) , SSI=0.29/1.00 (H-I:1)

DOL LUMBER=1.00 NAIL=1.00 LS BEND=1.10 COMP=1.10 SHEAR=1.10 TENS= 1.10

COMPANION LIVE LOAD FACTOR = 1.00

AUTOSOLVE RIGHT HEEL ONLY

TRUSS PLATE MANUFACTURER IS NOT RESPONSIBLE FOR QUALITY CONTROL IN THE TRUSS MANUFACTURING PLANT .

NAIL VALUES

PLATE	GRIP(DRY) (PSI) MAX	MIN	SHEAR (PLI) MAX	MIN	SECTION (PLI) MAX	MIN
MT20	650	371	1747	788	1987	1873

PLATE PLACEMENT TOL. = 0.250 inches

PLATE ROTATION TOL. = 5.0 Deg.

JSI GRIP= 0.90 (T) (INPUT = 0.90)
JSI METAL= 0.78 (B) (INPUT = 1.00)

REVIEWED

CONTINUED ON PAGE 2

JOB NAME	TRUSS NAME	QUANTITY	PLY	JOB DESC. BAYVIEW WELLINGTON	DRWG NO.
423533	T4S	1	1	TRUSS DESC.	

Tamarack Roof Truss, Burlington

ID:c3jyj23uDijq_8pvRKbkZpy75XW-?p?n7hRTuJD5Bkzq5pmYoxNT0V3kErGZZuQSerz38bZ

NOTES- (1)
1) Lateral braces to be a minimum of 2X4 SPF #2.

LICENSED PROFESSIONAL ENGINEER
06-24-22
H. J. G. ALVES
100009024
PROVINCE OF ONTARIO

Structural component only
DWG# T-2215126

REVIEWED

JOB NAME	TRUSS NAME	QUANTITY	PLY	JOB DESC.	DRWG NO.
423533	T5	1	1	BAYVIEW WELLINGTON TRUSS DESC.	

Tamarack Roof Truss, Burlington

Version 8.530 S Feb 23 2022 MiTek Industries, Inc. Fri Jun 24 08:10:03 2022 Page 1
ID:c3jyj23uDijq_8pvRKbkZpy75XW-T?Z9K1R6fcLypuY0fXHnL9waXvQpzNtioYA?Alz38bY

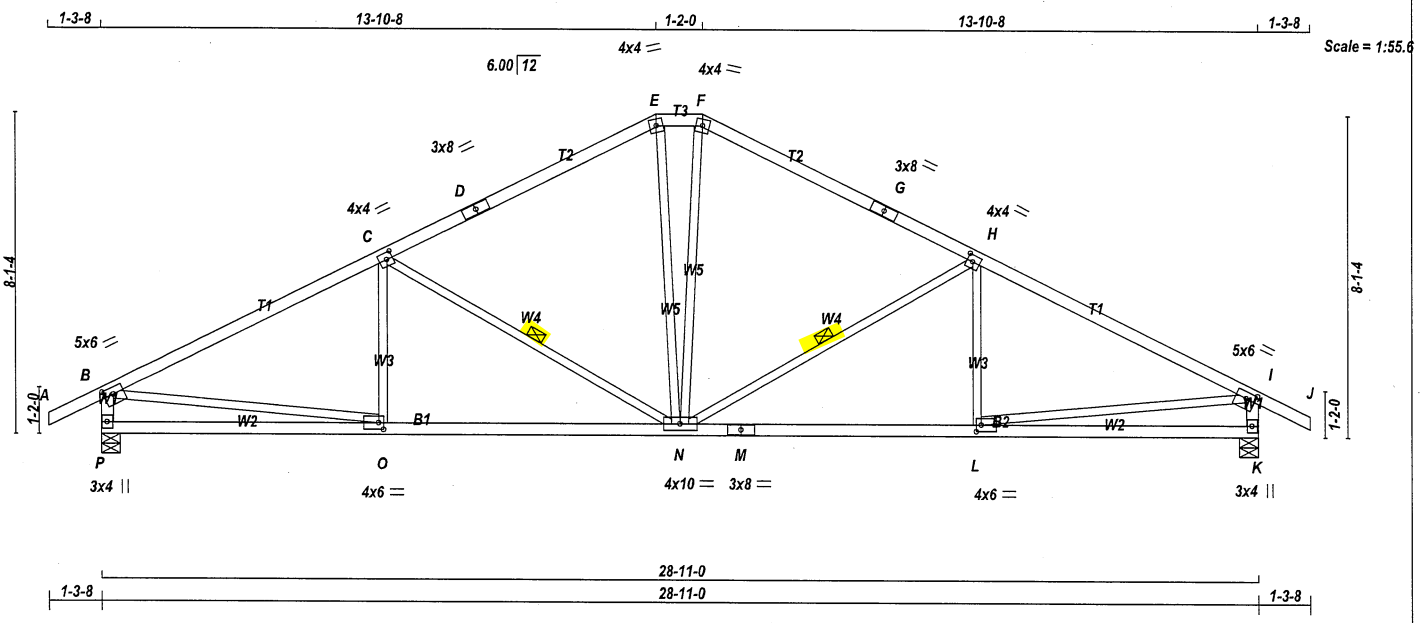

TOTAL WEIGHT = 118 lb

LUMBER
N. L. G. A. RULES

CHORDS	SIZE		LUMBER	DESCR.
A - D	2x4	DRY	No.2	SPF
D - E	2x4	DRY	No.2	SPF
E - F	2x4	DRY	No.2	SPF
F - G	2x4	DRY	No.2	SPF
G - J	2x4	DRY	No.2	SPF
P - B	2x4	DRY	No.2	SPF
K - I	2x4	DRY	No.2	SPF
P - M	2x4	DRY	No.2	SPF
M - K	2x4	DRY	No.2	SPF
ALL WEBS EXCEPT	2x3	DRY	No.2	SPF

DRY: SEASONED LUMBER.

PLATES (table is in inches)

JT	TYPE	PLATES	W	LEN	Y	X
B	TMVW-t	MT20	5.0	6.0	2.00	2.75
C	TMWW-t	MT20	4.0	4.0	2.00	1.75
D	TS-t	MT20	3.0	8.0		
E	TTW-m	MT20	4.0	4.0		
F	TTW-m	MT20	4.0	4.0		
G	TS-t	MT20	3.0	8.0		
H	TMWW-t	MT20	4.0	4.0	2.00	1.75
I	TMVW-t	MT20	5.0	6.0	2.00	2.75
K	BMV1+p	MT20	3.0	4.0		
L	BMWW-t	MT20	4.0	6.0	2.00	1.50
M	BS-t	MT20	3.0	8.0		
N	BMWWWW*-I	MT20	4.0	10.0		
O	BMWW-t	MT20	4.0	6.0	2.00	1.50
P	BMV1+p	MT20	3.0	4.0		

NOTES- (1)
1) Lateral braces to be a minimum of 2X4 SPF #2.

DIMENSIONS, SUPPORTS AND LOADINGS SPECIFIED BY FABRICATOR TO BE VERIFIED BY BUILDING DESIGNER

BEARINGS

JT	FACTORED GROSS REACTION VERT	HORZ	MAXIMUM FACTORED GROSS REACTION DOWN	HORZ	UPLIFT	INPUT BRG IN-SX	REQRD BRG IN-SX
P	2046	0	2046	0	0	5-8	5-8
K	2046	0	2046	0	0	5-8	5-8

UNFACTORED REACTIONS

JT	1ST LCASE COMBINED	MAX./MIN. COMPONENT REACTIONS SNOW	LIVE	PERM.LIVE	WIND	DEAD	SOIL
P	1431	1027 / 0	0 / 0	0 / 0	0 / 0	404 / 0	0 / 0
K	1431	1027 / 0	0 / 0	0 / 0	0 / 0	404 / 0	0 / 0

BEARING MATERIAL TO BE SPF NO.2 OR BETTER AT JOINT(S) P, K

BRACING
TOP CHORD TO BE SHEATHED OR MAX. PURLIN SPACING = 3.03 FT.
MAX. UNBRACED BOTTOM CHORD LENGTH = 10.00 FT OR RIGID CEILING DIRECTLY APPLIED.

ALL PITCH BREAKS AND PERIMETER CORNER JOINTS MUST BE LATERALLY RESTRAINED.

1 LATERAL BRACE(S) AT 1/ 2 LENGTH OF C-N, H-N.

END VERTICAL(S) MUST BE SHEATHED OR HAVE BRACES AS INDICATED IN THE MAX. UNBRACED LENGTH COLUMN OF THE TABLE BELOW

LOADING
TOTAL LOAD CASES: (4)

CHORDS

MEMB. FR-TO	MAX. FACTORED FORCE (LBS)	FACTORED VERT. LOAD (PLF) FROM	TO	LC1	MAX CSI (LC)	MAX. UNBRAC LENGTH
A- B	0 / 34	-112.4	-112.4	0.15 (1)	10.00	
B- C	-2719 / 0	-112.4	-112.4	0.93 (1)	3.03	
C- D	-1971 / 0	-112.4	-112.4	0.80 (1)	3.69	
D- E	-1971 / 0	-112.4	-112.4	0.80 (1)	3.69	
E- F	-1762 / 0	-112.4	-112.4	0.05 (1)	5.00	
F- G	-1971 / 0	-112.4	-112.4	0.80 (1)	3.69	
G- H	-1971 / 0	-112.4	-112.4	0.80 (1)	3.69	
H- I	-2719 / 0	-112.4	-112.4	0.93 (1)	3.03	
I- J	0 / 34	-112.4	-112.4	0.15 (1)	10.00	
P- B	-1991 / 0	0.0	0.0	0.20 (1)	5.98	
K- I	-1991 / 0	0.0	0.0	0.20 (1)	5.98	
P- O	0 / 0	-18.5	-18.5	0.22 (4)	10.00	
O- N	0 / 2469	-18.5	-18.5	0.52 (1)	10.00	
N- M	0 / 2469	-18.5	-18.5	0.52 (1)	10.00	
M- L	0 / 2469	-18.5	-18.5	0.52 (1)	10.00	
L- K	0 / 0	-18.5	-18.5	0.22 (4)	10.00	

WEBS

MEMB. FR-TO	MAX. FACTORED FORCE (LBS)	MAX CSI (LC)
O- C	-159 / 81	0.05 (1)
C- N	-865 / 0	0.43 (1)
N- H	-865 / 0	0.43 (1)
L- H	-159 / 81	0.05 (1)
B- O	0 / 2487	0.56 (1)
L- I	0 / 2487	0.56 (1)
E- N	0 / 512	0.12 (1)
N- F	0 / 512	0.12 (1)

DESIGN CRITERIA

SPECIFIED LOADS:

TOP CH.	LL	=	32.5	PSF	
	DL	=	6.0	PSF	
BOT CH.	LL	=	0.0	PSF	
	DL	=	7.4	PSF	
TOTAL LOAD		=	45.9	PSF	

SPACING = 24.0 IN. C/C

LOADING IN FLAT SECTION BASED ON A SLOPE OF 6.00/12

THIS TRUSS IS DESIGNED FOR RESIDENTIAL OR SMALL BUILDING REQUIREMENTS OF PART 9, NBCC 2015

THIS DESIGN COMPLIES WITH:
- PART 9 OF BCBC 2018 , ABC 2019
- PART 9 OF OBC 2012 (2019 AMENDMENT)
- CSA 086-14
- TPIC 2014

(55 % OF 43.9 P.S.F. G.S.L. PLUS 8.4 P.S.F. RAIN LOAD) EQUALS 32.5 P.S.F. SPECIFIED ROOF LIVE LOAD

ALLOWABLE DEFL.(LL)= L/360 (0.96")
CALCULATED VERT. DEFL.(LL) = L/ 999 (0.12")
ALLOWABLE DEFL.(TL)= L/360 (0.96")
CALCULATED VERT. DEFL.(TL) = L/ 999 (0.24")

CSI: TC=0.93/1.00 (H-I:1) , BC=0.52/1.00 (L-N:1) , WB=0.56/1.00 (I-L:1) , SSI=0.34/1.00 (H-I:1)

DOL LUMBER=1.00 NAIL=1.00 LS BEND=1.10 COMP=1.10 SHEAR=1.10 TENS= 1.10

COMPANION LIVE LOAD FACTOR = 1.00

TRUSS PLATE MANUFACTURER IS NOT RESPONSIBLE FOR QUALITY CONTROL IN THE TRUSS MANUFACTURING PLANT .

NAIL VALUES

PLATE	GRIP(DRY) (PSI) MAX	MIN	SHEAR (PLI) MAX	MIN	SECTION (PLI) MAX	MIN
MT20	650	371	1747	788	1987	1873

PLATE PLACEMENT TOL. = 0.250 inches

PLATE ROTATION TOL. = 5.0 Deg.

JSI GRIP= 0.89 (I) (INPUT = 0.90)
JSI METAL= 0.69 (M) (INPUT = 1.00)

[M][F]

LICENSED PROFESSIONAL ENGINEER
06-24-22
H. J. G. ALVES
100009024
PROVINCE OF ONTARIO

Structural component only
DWG# T-2215127

REVIEWED

JOB NAME	TRUSS NAME	QUANTITY	PLY	JOB DESC.	DRWG NO.
423533	T6	8	1	BAYVIEW WELLINGTON TRUSS DESC.	

Tamarack Roof Truss, Burlington

Version 8.530 S Feb 23 2022 MiTek Industries, Inc. Fri Jun 24 08:10:04 2022 Page 1
ID:c3jyj23uDijq_8pvRKbkZpy75XW-yB7XXNSkQwTpQ17CDEo0uMSu8JmHim7r0CvZjkz38bX

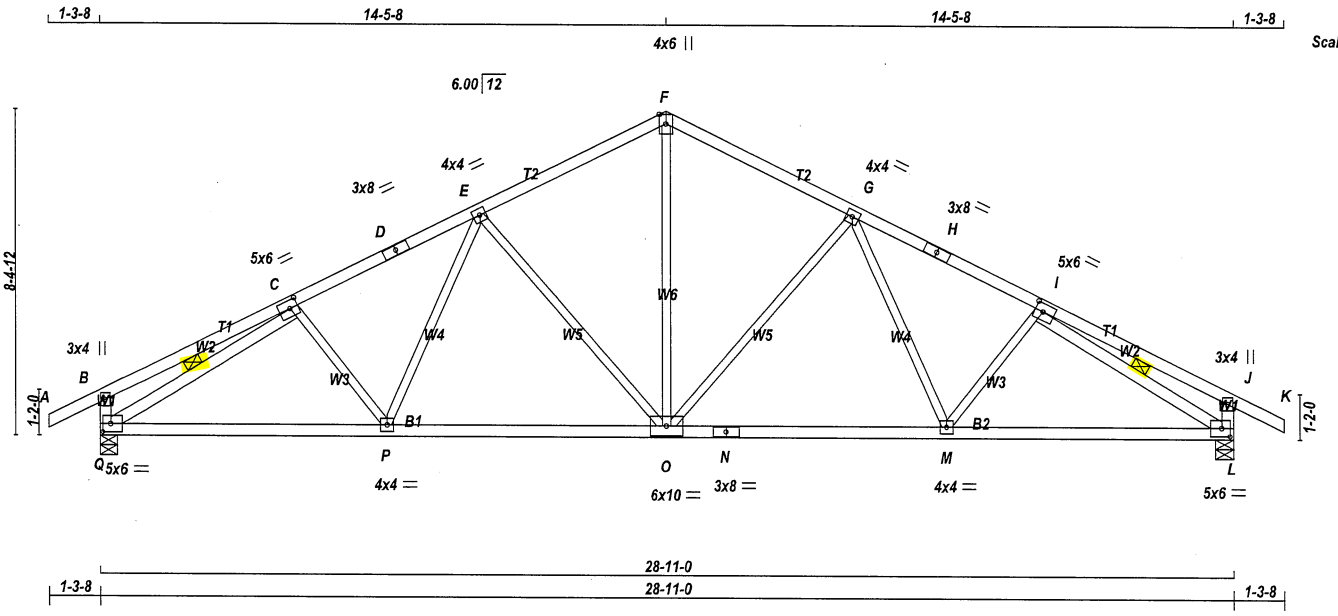

TOTAL WEIGHT = 8 X 121 = 971 lb

LUMBER

N. L. G. A. RULES

CHORDS	SIZE		LUMBER	DESCR.
A - D	2x4	DRY	No.2	SPF
D - F	2x4	DRY	No.2	SPF
F - H	2x4	DRY	No.2	SPF
H - K	2x4	DRY	No.2	SPF
Q - B	2x4	DRY	No.2	SPF
L - J	2x4	DRY	No.2	SPF
Q - N	2x4	DRY	No.2	SPF
N - L	2x4	DRY	No.2	SPF
ALL WEBS	2x3	DRY	No.2	SPF
EXCEPT				
Q - C	2x4	DRY	No.2	SPF
I - L	2x4	DRY	No.2	SPF

DRY: SEASONED LUMBER.

PLATES (table is in inches)

JT	TYPE	PLATES	W	LEN	Y	X
B	TMV+p	MT20	3.0	4.0		
C	TMWW-t	MT20	5.0	6.0	2.50	2.50
D	TS-t	MT20	3.0	8.0		
E	TMWW-t	MT20	4.0	4.0		
F	TTW+p	MT20	4.0	6.0	Edge	
G	TMWW-t	MT20	4.0	4.0		
H	TS-t	MT20	3.0	8.0		
I	TMWW-t	MT20	5.0	6.0	2.50	2.50
J	TMV+p	MT20	3.0	4.0		
L	BMVW1-t	MT20	5.0	6.0	2.50	2.50
M	BMWW-t	MT20	4.0	4.0		
N	BS-t	MT20	3.0	8.0		
O	BMWWW-t	MT20	6.0	10.0		
P	BMWW-t	MT20	4.0	4.0		
Q	BMVW1-t	MT20	5.0	6.0	2.50	2.50

Edge - INDICATES REFERENCE CORNER OF PLATE TOUCHES EDGE OF CHORD.

NOTES- (1)
1) Lateral braces to be a minimum of 2X4 SPF #2.

Structural component only
DWG# T-2215128

DIMENSIONS, SUPPORTS AND LOADINGS SPECIFIED BY FABRICATOR TO BE VERIFIED BY BUILDING DESIGNER

BEARINGS

JT	FACTORED GROSS REACTION VERT	HORZ	MAXIMUM FACTORED GROSS REACTION DOWN	HORZ	UPLIFT	INPUT BRG IN-SX	REQRD BRG IN-SX
Q	2046	0	2046	0	0	5-8	5-8
L	2046	0	2046	0	0	5-8	5-8

UNFACTORED REACTIONS

JT	1ST LCASE COMBINED	MAX./MIN. COMPONENT REACTIONS SNOW	LIVE	PERM.LIVE	WIND	DEAD	SOIL
Q	1431	1027 / 0	0 / 0	0 / 0	0 / 0	404 / 0	0 / 0
L	1431	1027 / 0	0 / 0	0 / 0	0 / 0	404 / 0	0 / 0

BEARING MATERIAL TO BE SPF NO.2 OR BETTER AT JOINT(S) Q, L

BRACING

TOP CHORD TO BE SHEATHED OR MAX. PURLIN SPACING = 4.01 FT.
MAX. UNBRACED BOTTOM CHORD LENGTH = 10.00 FT OR RIGID CEILING DIRECTLY APPLIED.

ALL PITCH BREAKS AND PERIMETER CORNER JOINTS MUST BE LATERALLY RESTRAINED.

1 LATERAL BRACE(S) AT 1/ 2 LENGTH OF C-Q, I-L.

END VERTICAL(S) MUST BE SHEATHED OR HAVE BRACES AS INDICATED IN THE MAX. UNBRACED LENGTH COLUMN OF THE TABLE BELOW

LOADING

TOTAL LOAD CASES: (4)

CHORDS

MEMB. FR-TO	MAX. FACTORED FORCE (LBS)	FACTORED VERT. LOAD LC1 (PLF) FROM	TO	MAX CSI (LC)	MAX. UNBRAC LENGTH
A- B	0 / 34	-112.4	-112.4	0.15 (1)	10.00
B- C	0 / 22	-112.4	-112.4	0.33 (1)	10.00
C- D	-2558 / 0	-112.4	-112.4	0.36 (1)	4.01
D- E	-2558 / 0	-112.4	-112.4	0.36 (1)	4.01
E- F	-1925 / 0	-112.4	-112.4	0.34 (1)	4.53
F- G	-1925 / 0	-112.4	-112.4	0.34 (1)	4.53
G- H	-2558 / 0	-112.4	-112.4	0.36 (1)	4.01
H- I	-2558 / 0	-112.4	-112.4	0.36 (1)	4.01
I- J	0 / 22	-112.4	-112.4	0.33 (1)	10.00
J- K	0 / 34	-112.4	-112.4	0.15 (1)	10.00
Q- B	-376 / 0	0.0	0.0	0.04 (1)	7.81
L- J	-376 / 0	0.0	0.0	0.04 (1)	7.81
Q- P	0 / 2383	-18.5	-18.5	0.50 (1)	10.00
P- O	0 / 2176	-18.5	-18.5	0.46 (1)	10.00
O- N	0 / 2176	-18.5	-18.5	0.46 (1)	10.00
N- M	0 / 2176	-18.5	-18.5	0.46 (1)	10.00
M- L	0 / 2383	-18.5	-18.5	0.50 (1)	10.00

WEBS

MEMB. FR-TO	MAX. FACTORED FORCE (LBS)	MAX CSI (LC)
O- F	0 / 1271	0.29 (1)
O- G	-743 / 0	0.82 (1)
G- M	0 / 293	0.07 (1)
M- I	-156 / 27	0.05 (1)
E- O	-743 / 0	0.82 (1)
P- E	0 / 293	0.07 (1)
C- P	-156 / 27	0.05 (1)
Q- C	-2878 / 0	0.51 (1)
I- L	-2878 / 0	0.51 (1)

DESIGN CRITERIA

SPECIFIED LOADS:

TOP CH.	LL	=	32.5	PSF
	DL	=	6.0	PSF
BOT CH.	LL	=	0.0	PSF
	DL	=	7.4	PSF
TOTAL LOAD		=	45.9	PSF

SPACING = 24.0 IN. C/C

THIS TRUSS IS DESIGNED FOR RESIDENTIAL OR SMALL BUILDING REQUIREMENTS OF PART 9, NBCC 2015

THIS DESIGN COMPLIES WITH:
- PART 9 OF BCBC 2018 , ABC 2019
- PART 9 OF OBC 2012 (2019 AMENDMENT)
- CSA 086-14
- TPIC 2014

(55 % OF 43.9 P.S.F. G.S.L. PLUS 8.4 P.S.F. RAIN LOAD) EQUALS 32.5 P.S.F. SPECIFIED ROOF LIVE LOAD

ALLOWABLE DEFL.(LL)= L/360 (0.96")
CALCULATED VERT. DEFL.(LL) = L/ 999 (0.11")
ALLOWABLE DEFL.(TL)= L/360 (0.96")
CALCULATED VERT. DEFL.(TL) = L/ 999 (0.22")

CSI: TC=0.36/1.00 (G-I:1) , BC=0.50/1.00 (L-M:1) , WB=0.82/1.00 (G-O:1) , SSI=0.22/1.00 (I-J:1)

DOL LUMBER=1.00 NAIL=1.00 LS BEND=1.10 COMP=1.10 SHEAR=1.10 TENS= 1.10

COMPANION LIVE LOAD FACTOR = 1.00

AUTOSOLVE HEELS OFF

TRUSS PLATE MANUFACTURER IS NOT RESPONSIBLE FOR QUALITY CONTROL IN THE TRUSS MANUFACTURING PLANT .

NAIL VALUES

PLATE	GRIP(DRY) (PSI) MAX	MIN	SHEAR (PLI) MAX	MIN	SECTION (PLI) MAX	MIN
MT20	650	371	1747	788	1987	1873

PLATE PLACEMENT TOL. = 0.250 inches

PLATE ROTATION TOL. = 5.0 Deg.

JSI GRIP= 0.86 (I) (INPUT = 0.90)
JSI METAL= 0.64 (I) (INPUT = 1.00)

[M][F]

REVIEWED

JOB NAME	TRUSS NAME	QUANTITY	PLY	JOB DESC.	DRWG NO.
423533	T7	1	2	BAYVIEW WELLINGTON TRUSS DESC.	

Tamarack Roof Truss, Burlington

Version 8.530 S Feb 23 2022 MiTek Industries, Inc. Fri Jun 24 08:10:05 2022 Page 1
ID:c3iyj23uDijq_8pvRKbkZpy75XW-QOhvljTMBEbg2BhPmyJFQa??Tj6KREM?Fsf6FAz38bW

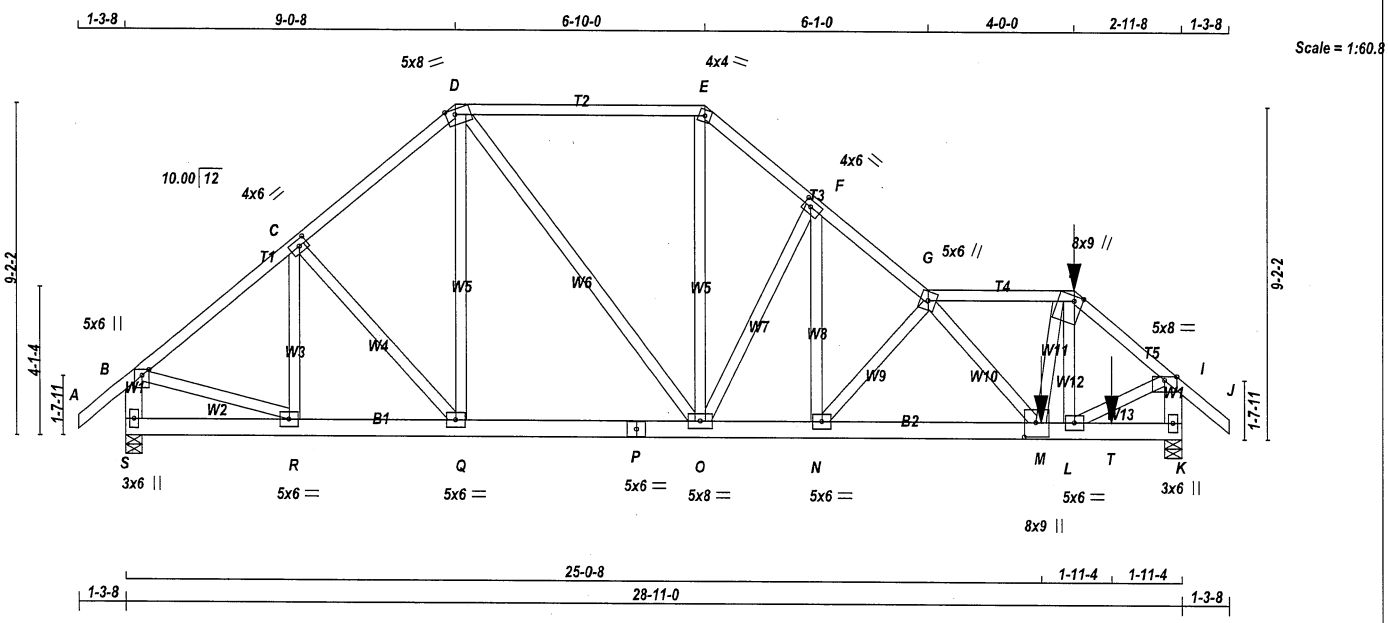

TOTAL WEIGHT = 2 X 184 = 368 lb

[M]

LUMBER

N. L. G. A. RULES

CHORDS	SIZE		LUMBER	DESCR.
A - D	2x4	DRY	No.2	SPF
D - E	2x4	DRY	No.2	SPF
E - G	2x4	DRY	No.2	SPF
G - H	2x4	DRY	No.2	SPF
H - J	2x4	DRY	No.2	SPF
S - B	2x6	DRY	No.2	SPF
K - I	2x6	DRY	No.2	SPF
S - P	2x6	DRY	No.2	SPF
P - K	2x6	DRY	No.2	SPF
ALL WEBS EXCEPT	2x4	DRY	No.2	SPF

DRY: SEASONED LUMBER.

DESIGN CONSISTS OF 2 TRUSSES BUILT SEPARATELY THEN FASTENED TOGETHER AS FOLLOWS:

CHORDS	#ROWS	SURFACE SPACING (IN)	LOAD(PLF)
TOP CHORDS : (0.122"X3") SPIRAL NAILS			
A- D	1	12	TOP
D- E	1	12	TOP
E- G	1	12	TOP
G- H	1	12	SIDE(61.0)
H- J	1	12	SIDE(61.0)
S- B	2	12	TOP
K- I	2	12	TOP
BOTTOM CHORDS : (0.122"X3") SPIRAL NAILS			
S- P	2	12	TOP
P- K	2	12	SIDE(183.1)
WEBS : (0.122"X3") SPIRAL NAILS			
2x4	1	6	
H- M	1	3	SIDE(628.1)

NAILS TO BE DRIVEN FROM ONE SIDE ONLY.

GIRDER NAILING ASSUMES NAILED HANGERS ARE FASTENED WITH MIN. 3-0 INCH NAILS.

TOP - COMPONENTS ARE LOADED FROM THE TOP AND MUST BE PLACED ON TOP EDGE OF ALL PLIES FOR THE LOAD TO BE TRANSFERRED TO EACH PLY.

LICENSED PROFESSIONAL ENGINEER
06-24-22
H. J. G. ALVES
100009024
PROVINCE OF ONTARIO

Structural component only
DWG# T-2215129

DIMENSIONS, SUPPORTS AND LOADINGS SPECIFIED BY FABRICATOR TO BE VERIFIED BY BUILDING DESIGNER

BEARINGS

JT	FACTORED GROSS REACTION VERT	HORZ	MAXIMUM FACTORED GROSS REACTION DOWN	HORZ	UPLIFT	INPUT BRG IN-SX	REQRD BRG IN-SX
S	2499	0	2499	0	0	5-8	5-8
K	5011	0	5011	0	0	5-8	5-8

UNFACTORED REACTIONS

JT	1ST LCASE COMBINED	MAX./MIN. COMPONENT REACTIONS SNOW	LIVE	PERM.LIVE	WIND	DEAD	SOIL
S	1747	1260 / 0	0 / 0	0 / 0	0 / 0	487 / 0	0 / 0
K	3500	2544 / 0	0 / 0	0 / 0	0 / 0	955 / 0	0 / 0

BEARING MATERIAL TO BE SPF NO.2 OR BETTER AT JOINT(S) S, K

BRACING

TOP CHORD TO BE SHEATHED OR MAX. PURLIN SPACING = 4.18 FT.
MAX. UNBRACED BOTTOM CHORD LENGTH = 10.00 FT OR RIGID CEILING DIRECTLY APPLIED.

ALL PITCH BREAKS AND PERIMETER CORNER JOINTS MUST BE LATERALLY RESTRAINED.

LOADING

TOTAL LOAD CASES: (4)

CHORDS

MEMB. FR-TO	MAX. FACTORED FORCE (LBS)	FACTORED VERT. LOAD LC1 (PLF) FROM	TO	MAX CSI (LC)	MAX. UNBRAC LENGTH
A- B	0 / 50	-112.4	-112.4	0.09 (1)	10.00
B- C	-2447 / 0	-112.4	-112.4	0.25 (1)	5.49
C- D	-2397 / 0	-112.4	-112.4	0.25 (1)	5.54
D- E	-2357 / 0	-112.4	-112.4	0.58 (1)	5.04
E- F	-3071 / 0	-112.4	-112.4	0.12 (1)	5.18
F- G	-4350 / 0	-112.4	-112.4	0.16 (1)	4.47
G- H	-4644 / 0	-112.4	-112.4	0.26 (1)	4.23
H- I	-5005 / 0	-112.4	-112.4	0.19 (1)	4.18
I- J	0 / 50	-112.4	-112.4	0.09 (1)	10.00
S- B	-2451 / 0	0.0	0.0	0.09 (1)	7.81
K- I	-5048 / 0	0.0	0.0	0.19 (1)	6.48
S- R	0 / 0	-18.5	-18.5	0.03 (4)	10.00
R- Q	0 / 1909	-18.5	-18.5	0.14 (1)	10.00
Q- P	0 / 1810	-18.5	-18.5	0.15 (1)	10.00
P- O	0 / 1810	-18.5	-18.5	0.15 (1)	10.00
O- N	0 / 3371	-18.5	-18.5	0.25 (1)	10.00
N- M	0 / 5299	-18.5	-18.5	0.45 (1)	10.00
M- L	0 / 3802	-18.5	-18.5	0.35 (1)	10.00
L- T	0 / 0	-18.5	-18.5	0.09 (1)	10.00
T- K	0 / 0	-18.5	-18.5	0.09 (1)	10.00

WEBS

MEMB. FR-TO	MAX. FACTORED FORCE (LBS)	MAX CSI (LC)
R- C	-439 / 0	0.07 (1)
C- Q	-154 / 0	0.05 (1)
Q- D	0 / 225	0.02 (4)
D- O	0 / 903	0.08 (1)
O- E	0 / 1443	0.13 (1)
O- F	-2276 / 0	0.75 (1)
N- F	0 / 2434	0.22 (1)
N- G	-3038 / 0	0.41 (1)
L- H	-738 / 0	0.07 (1)
B- R	0 / 1974	0.17 (1)
L- I	0 / 4116	0.36 (1)
G- M	-1030 / 0	0.14 (1)
M- H	0 / 3397	0.30 (1)

SPECIFIED CONCENTRATED LOADS (LBS)

JT	LOC.	LC1	MAX-	MAX+	FACE	DIR.	TYPE	HEEL	CONN.
H	25-11-8	-30	-30	---	FRONT	VERT	DEAD	---	C1
H	25-11-8	-159	-159	---	FRONT	VERT	SNOW	---	C1
M	25-0-8	-2170	-2170	---	FRONT	VERT	TOTAL	---	C1
T	26-11-12	-21	-21	---	FRONT	VERT	TOTAL	---	C1

CONNECTION REQUIREMENTS

1) **C1:** A SUITABLE HANGER/MECHANICAL CONNECTION IS REQUIRED.

REVIEWED

DESIGN CRITERIA

*** SPECIAL LOADS ANALYSIS ***
GEOMETRY AND/OR BASIC LOADS CHANGED BY USER.
LOADS WERE DERIVED FROM USER INPUT
NO FURTHER MODIFICATIONS WERE MADE

SPECIFIED LOADS:

TOP	CH.	LL	=	32.5	PSF
		DL	=	6.0	PSF
BOT	CH.	LL	=	0.0	PSF
		DL	=	7.4	PSF
TOTAL	LOAD		=	45.9	PSF

SPACING = 24.0 IN. C/C

LOADING IN ALL FLAT SECTIONS BASED ON A SLOPE OF 6.00/12

*** NON STANDARD GIRDER ***
ADDT'L USER-DEFINED LOADS APPLIED TO ALL LOAD CASES.

THIS TRUSS IS DESIGNED FOR RESIDENTIAL OR SMALL BUILDING REQUIREMENTS OF PART 9, NBCC 2015

THIS DESIGN COMPLIES WITH:
- PART 9 OF BCBC 2018 , ABC 2019
- PART 9 OF OBC 2012 (2019 AMENDMENT)
- CSA 086-14
- TPIC 2014

(55 % OF 43.9 P.S.F. G.S.L. PLUS 8.4 P.S.F. RAIN LOAD) EQUALS 32.5 P.S.F. SPECIFIED ROOF LIVE LOAD

ALLOWABLE DEFL.(LL)= L/360 (0.96")
CALCULATED VERT. DEFL.(LL) = L/ 999 (0.08")
ALLOWABLE DEFL.(TL)= L/360 (0.96")
CALCULATED VERT. DEFL.(TL) = L/ 999 (0.15")

CSI: TC=0.58/1.00 (D-E:1) , BC=0.45/1.00 (M-N:1) , WB=0.75/1.00 (F-O:1) , SSI=0.21/1.00 (L-M:1)

DOL LUMBER=1.00 NAIL=1.00 LS BEND=1.00 COMP=1.00 SHEAR=1.00 TENS= 1.00

COMPANION LIVE LOAD FACTOR = 1.00

AUTOSOLVE HEELS OFF

TRUSS PLATE MANUFACTURER IS NOT RESPONSIBLE FOR QUALITY CONTROL IN THE TRUSS MANUFACTURING PLANT .

NAIL VALUES

PLATE	GRIP(DRY) (PSI) MAX	MIN	SHEAR (PLI) MAX	MIN	SECTION (PLI) MAX	MIN
MT20	650	371	1747	788	1987	1873

PLATE PLACEMENT TOL. = 0.250 inches

PLATE ROTATION TOL. = 5.0 Deg.

JSI GRIP= 0.87 (G) (INPUT = 0.90)
JSI METAL= 0.43 (L) (INPUT = 1.00)

CONTINUED ON PAGE 2

JOB NAME	TRUSS NAME	QUANTITY	PLY	JOB DESC.	DRWG NO.
423533	T7	1	2	BAYVIEW WELLINGTON TRUSS DESC.	

Tamarack Roof Truss, Burlington

Version 8.530 S Feb 23 2022 MiTek Industries, Inc. Fri Jun 24 08:10:05 2022 Page 2
ID:c3jyj23uDijq_8pvRKbkZpy75XW-QOhvljTMBEbg2BhPmyJFQa??Tj6KREM?Fsf6FAz38bW

PLATES (table is in inches)

JT	TYPE	PLATES	W	LEN	Y	X
B	TMVW+p	MT20	5.0	6.0	2.00	2.25
C	TMWW-t	MT20	4.0	6.0	2.00	2.75
D	TTWW-m	MT20	5.0	8.0	Edge	3.00
E	TTW-m	MT20	4.0	4.0		
F	TMWW-t	MT20	4.0	6.0	2.00	2.50
G	TTWW+m	MT20	5.0	6.0		
H	TTWW+m	MT20	8.0	9.0	1.75	2.75
I	TMVW-p	MT20	5.0	8.0	Edge	
K	BMV1+p	MT20	3.0	6.0		
L, N, Q, R						
L	BMWW-t	MT20	5.0	6.0		
M	BMWW+t	MT20	8.0	9.0	4.75	3.75
O	BMWWW-t	MT20	5.0	8.0		
P	BS-t	MT20	5.0	6.0		
S	BMV1+p	MT20	3.0	6.0		

Edge - INDICATES REFERENCE CORNER OF PLATE TOUCHES EDGE OF CHORD.

NOTES- (1)
1) Lateral braces to be a minimum of 2X4 SPF #2.

LICENSED PROFESSIONAL ENGINEER
06-24-22
H. J. G. ALVES
100009024
PROVINCE OF ONTARIO

Structural component only
DWG# T-2215129

REVIEWED

JOB NAME	TRUSS NAME	QUANTITY	PLY	JOB DESC.	DRWG NO.
423533	T8	2	1	BAYVIEW WELLINGTON TRUSS DESC.	

Tamarack Roof Truss, Burlington

Version 8.530 S Feb 23 2022 MiTek Industries, Inc. Fri Jun 24 08:10:06 2022 Page 1
ID:c3jyj23uDijq_8pvRKbkZpy75XW-uaFly3U_yXjXgLGbKfqUznYAi6SQAna8UWOfncz38bV

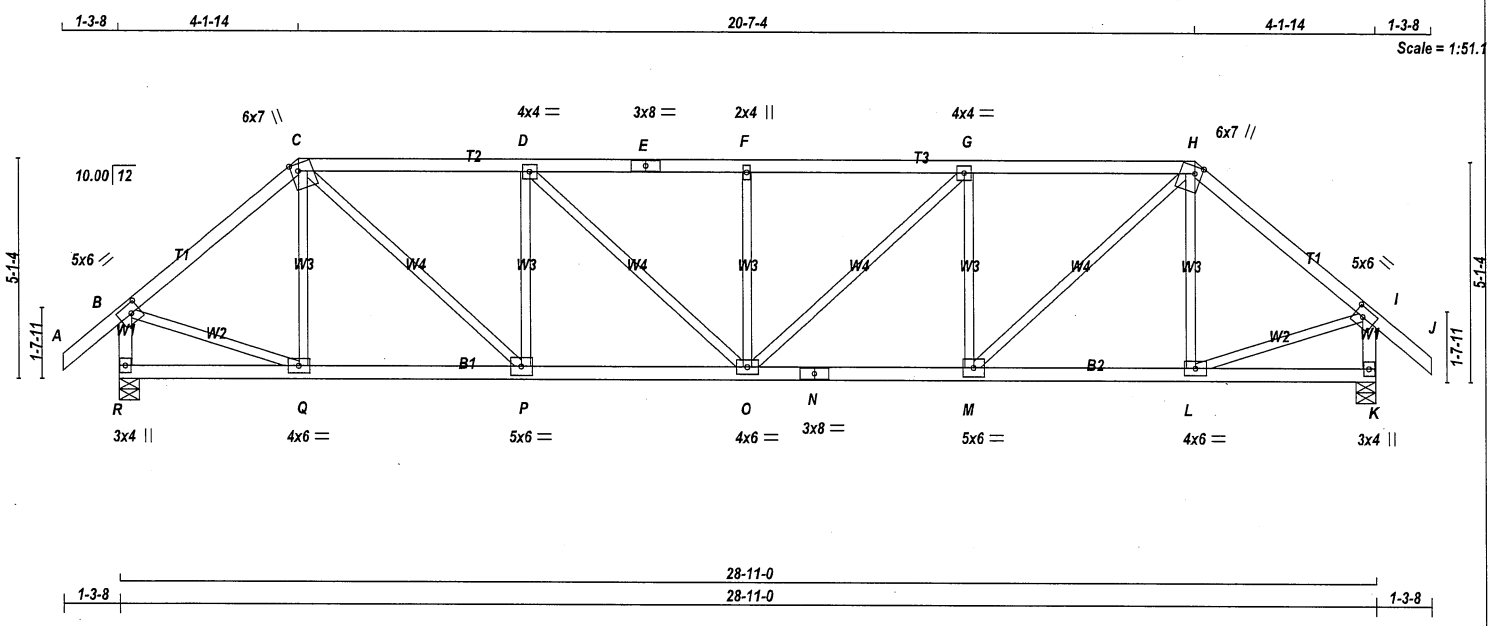

TOTAL WEIGHT = 2 X 123 = 245 lb

LUMBER
N. L. G. A. RULES

CHORDS	SIZE		LUMBER	DESCR.
A - C	2x4	DRY	No.2	SPF
C - E	2x4	DRY	No.2	SPF
E - H	2x4	DRY	No.2	SPF
H - J	2x4	DRY	No.2	SPF
R - B	2x4	DRY	No.2	SPF
K - I	2x4	DRY	No.2	SPF
R - N	2x4	DRY	No.2	SPF
N - K	2x4	DRY	No.2	SPF
ALL WEBS EXCEPT	2x3	DRY	No.2	SPF

DRY: SEASONED LUMBER.

PLATES (table is in inches)

JT	TYPE	PLATES	W	LEN	Y	X
B	TMVW-t	MT20	5.0	6.0	2.50	2.50
C	TTWW+m	MT20	6.0	7.0	2.00	2.00
D	TMWW-t	MT20	4.0	4.0		
E	TS-t	MT20	3.0	8.0		
F	TMW+w	MT20	2.0	4.0		
G	TMWW-t	MT20	4.0	4.0		
H	TTWW+m	MT20	6.0	7.0	2.00	2.00
I	TMVW-t	MT20	5.0	6.0	2.50	2.50
K	BMV1+p	MT20	3.0	4.0		
L	BMWW-t	MT20	4.0	6.0		
M	BMWW-t	MT20	5.0	6.0		
N	BS-t	MT20	3.0	8.0		
O	BMWWW-t	MT20	4.0	6.0		
P	BMWW-t	MT20	5.0	6.0		
Q	BMWW-t	MT20	4.0	6.0		
R	BMV1+p	MT20	3.0	4.0		

NOTES- (1)
1) Lateral braces to be a minimum of 2X4 SPF #2.

DIMENSIONS, SUPPORTS AND LOADINGS SPECIFIED BY FABRICATOR TO BE VERIFIED BY BUILDING DESIGNER

BEARINGS

JT	FACTORED GROSS REACTION VERT	HORZ	MAXIMUM FACTORED GROSS REACTION DOWN	HORZ	UPLIFT	INPUT BRG IN-SX	REQRD BRG IN-SX
R	2049	0	2049	0	0	5-8	5-8
K	2049	0	2049	0	0	5-8	5-8

UNFACTORED REACTIONS

JT	1ST LCASE COMBINED	MAX./MIN. COMPONENT REACTIONS SNOW	LIVE	PERM.LIVE	WIND	DEAD	SOIL
R	1433	1029 / 0	0 / 0	0 / 0	0 / 0	404 / 0	0 / 0
K	1433	1029 / 0	0 / 0	0 / 0	0 / 0	404 / 0	0 / 0

BEARING MATERIAL TO BE SPF NO.2 OR BETTER AT JOINT(S) R, K

BRACING
TOP CHORD TO BE SHEATHED OR MAX. PURLIN SPACING = 3.48 FT.
MAX. UNBRACED BOTTOM CHORD LENGTH = 10.00 FT OR RIGID CEILING DIRECTLY APPLIED.

ALL PITCH BREAKS AND PERIMETER CORNER JOINTS MUST BE LATERALLY RESTRAINED.

LOADING
TOTAL LOAD CASES: (4)

CHORDS

MEMB. FR-TO	MAX. FACTORED FORCE (LBS)	FACTORED VERT. LOAD (PLF) FROM	TO	LC1 CSI (LC)	MAX. UNBRAC LENGTH
A- B	0 / 50	-112.4	-112.4	0.15 (1)	10.00
B- C	-1857 / 0	-112.4	-112.4	0.42 (1)	4.47
C- D	-2559 / 0	-112.4	-112.4	0.58 (1)	3.70
D- E	-2888 / 0	-112.4	-112.4	0.61 (1)	3.48
E- F	-2888 / 0	-112.4	-112.4	0.61 (1)	3.48
F- G	-2888 / 0	-112.4	-112.4	0.61 (1)	3.48
G- H	-2560 / 0	-112.4	-112.4	0.58 (1)	3.70
H- I	-1858 / 0	-112.4	-112.4	0.42 (1)	4.47
I- J	0 / 50	-112.4	-112.4	0.15 (1)	10.00
R- B	-2019 / 0	0.0	0.0	0.21 (1)	5.94
K- I	-2019 / 0	0.0	0.0	0.21 (1)	5.94
R- Q	0 / 0	-18.5	-18.5	0.09 (4)	10.00
Q- P	0 / 1416	-18.5	-18.5	0.28 (1)	10.00
P- O	0 / 2559	-18.5	-18.5	0.46 (1)	10.00
O- N	0 / 2560	-18.5	-18.5	0.46 (1)	10.00
N- M	0 / 2560	-18.5	-18.5	0.46 (1)	10.00
M- L	0 / 1417	-18.5	-18.5	0.28 (1)	10.00
L- K	0 / 0	-18.5	-18.5	0.09 (4)	10.00

WEBS

MEMB. FR-TO	MAX. FACTORED FORCE (LBS)	MAX CSI (LC)
Q- C	-337 / 0	0.13 (1)
C- P	0 / 1555	0.35 (1)
P- D	-960 / 0	0.37 (1)
D- O	0 / 452	0.10 (1)
O- F	-528 / 0	0.20 (1)
O- G	0 / 451	0.10 (1)
M- G	-960 / 0	0.37 (1)
M- H	0 / 1554	0.35 (1)
L- H	-337 / 0	0.13 (1)
B- Q	0 / 1489	0.33 (1)
L- I	0 / 1489	0.34 (1)

DESIGN CRITERIA

SPECIFIED LOADS:

TOP CH.	LL	=	32.5	PSF
	DL	=	6.0	PSF
BOT CH.	LL	=	0.0	PSF
	DL	=	7.4	PSF
TOTAL LOAD		=	45.9	PSF

SPACING = 24.0 IN. C/C

LOADING IN FLAT SECTION BASED ON A SLOPE OF 6.00/12

THIS TRUSS IS DESIGNED FOR RESIDENTIAL OR SMALL BUILDING REQUIREMENTS OF PART 9, NBCC 2015

THIS DESIGN COMPLIES WITH:
- PART 9 OF BCBC 2018 , ABC 2019
- PART 9 OF OBC 2012 (2019 AMENDMENT)
- CSA 086-14
- TPIC 2014

(55 % OF 43.9 P.S.F. G.S.L. PLUS 8.4 P.S.F. RAIN LOAD) EQUALS 32.5 P.S.F. SPECIFIED ROOF LIVE LOAD

ALLOWABLE DEFL.(LL)= L/360 (0.96")
CALCULATED VERT. DEFL.(LL) = L/ 999 (0.13")
ALLOWABLE DEFL.(TL)= L/360 (0.96")
CALCULATED VERT. DEFL.(TL) = L/ 999 (0.23")

CSI: TC=0.61/1.00 (D-F:1) , BC=0.46/1.00 (M-O:1) , WB=0.37/1.00 (D-P:1) , SSI=0.27/1.00 (C-D:1)

DOL LUMBER=1.00 NAIL=1.00 LS BEND=1.10 COMP=1.10 SHEAR=1.10 TENS= 1.10

COMPANION LIVE LOAD FACTOR = 1.00

TRUSS PLATE MANUFACTURER IS NOT RESPONSIBLE FOR QUALITY CONTROL IN THE TRUSS MANUFACTURING PLANT .

NAIL VALUES

PLATE	GRIP(DRY) (PSI) MAX	MIN	SHEAR (PLI) MAX	MIN	SECTION (PLI) MAX	MIN
MT20	650	371	1747	788	1987	1873

PLATE PLACEMENT TOL. = 0.250 inches

PLATE ROTATION TOL. = 5.0 Deg.

JSI GRIP= 0.89 (L) (INPUT = 0.90)
JSI METAL= 0.78 (N) (INPUT = 1.00)

LICENSED PROFESSIONAL ENGINEER
06-24-22
H. J. G. ALVES
100009024
PROVINCE OF ONTARIO

Structural component only
DWG# T-2215130

REVIEWED

JOB NAME	TRUSS NAME	QUANTITY	PLY	JOB DESC.	DRWG NO.
423533	T9	2	1	BAYVIEW WELLINGTON TRUSS DESC.	

Tamarack Roof Truss, Burlington

Version 8.530 S Feb 23 2022 MiTek Industries, Inc. Fri Jun 24 08:10:06 2022 Page 1
ID:c3jyj23uDijq_8pvRKbkZpy75XW-uaFly3U_yXjXgLGbKfqUznY8X6TnAmc8UWOfncz38bV

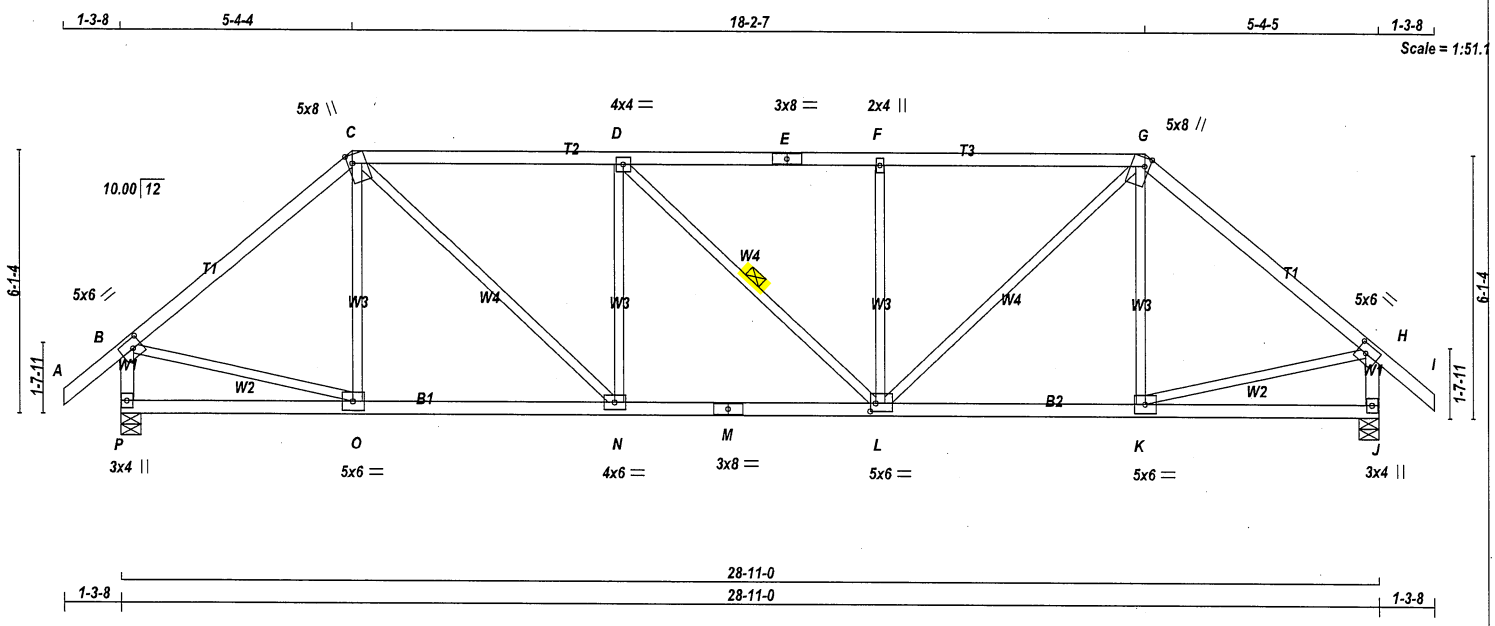

TOTAL WEIGHT = 2 X 123 = 246 lb

[M]

LUMBER

N. L. G. A. RULES

CHORDS	SIZE		LUMBER	DESCR.
A - C	2x4	DRY	No.2	SPF
C - E	2x4	DRY	No.2	SPF
E - G	2x4	DRY	No.2	SPF
G - I	2x4	DRY	No.2	SPF
P - B	2x4	DRY	No.2	SPF
J - H	2x4	DRY	No.2	SPF
P - M	2x4	DRY	No.2	SPF
M - J	2x4	DRY	No.2	SPF
ALL WEBS EXCEPT	2x3	DRY	No.2	SPF

DRY: SEASONED LUMBER.

PLATES (table is in inches)

JT	TYPE	PLATES	W	LEN	Y	X
B	TMVW-t	MT20	5.0	6.0	2.50	2.50
C	TTWW+m	MT20	5.0	8.0	Edge	1.25
D	TMWW-t	MT20	4.0	4.0		
E	TS-t	MT20	3.0	8.0		
F	TMW+w	MT20	2.0	4.0		
G	TTWW+m	MT20	5.0	8.0	Edge	1.25
H	TMVW-t	MT20	5.0	6.0	2.50	2.50
J	BMV1+p	MT20	3.0	4.0		
K	BMWW-t	MT20	5.0	6.0		
L	BMWWW-t	MT20	5.0	6.0	2.25	1.50
M	BS-t	MT20	3.0	8.0		
N	BMWW-t	MT20	4.0	6.0		
O	BMWW-t	MT20	5.0	6.0		
P	BMV1+p	MT20	3.0	4.0		

Edge - INDICATES REFERENCE CORNER OF PLATE TOUCHES EDGE OF CHORD.

NOTES- (1)
1) Lateral braces to be a minimum of 2X4 SPF #2.

DIMENSIONS, SUPPORTS AND LOADINGS SPECIFIED BY FABRICATOR TO BE VERIFIED BY BUILDING DESIGNER

BEARINGS

JT	FACTORED GROSS REACTION VERT	HORZ	MAXIMUM FACTORED GROSS REACTION DOWN	HORZ	UPLIFT	INPUT BRG IN-SX	REQRD BRG IN-SX
P	2049	0	2049	0	0	5-8	5-8
J	2049	0	2049	0	0	5-8	5-8

UNFACTORED REACTIONS

JT	1ST LCASE COMBINED	MAX./MIN. COMPONENT REACTIONS SNOW	LIVE	PERM.LIVE	WIND	DEAD	SOIL
P	1433	1029 / 0	0 / 0	0 / 0	0 / 0	404 / 0	0 / 0
J	1433	1029 / 0	0 / 0	0 / 0	0 / 0	404 / 0	0 / 0

BEARING MATERIAL TO BE SPF NO.2 OR BETTER AT JOINT(S) P, J

BRACING

TOP CHORD TO BE SHEATHED OR MAX. PURLIN SPACING = 3.61 FT.
MAX. UNBRACED BOTTOM CHORD LENGTH = 10.00 FT OR RIGID CEILING DIRECTLY APPLIED.

ALL PITCH BREAKS AND PERIMETER CORNER JOINTS MUST BE LATERALLY RESTRAINED.

1 LATERAL BRACE(S) AT 1/ 2 LENGTH OF D-L.

END VERTICAL(S) MUST BE SHEATHED OR HAVE BRACES AS INDICATED IN THE MAX. UNBRACED LENGTH COLUMN OF THE TABLE BELOW

LOADING

TOTAL LOAD CASES: (4)

CHORDS

MEMB. FR-TO	MAX. FACTORED FORCE (LBS)	FACTORED VERT. LOAD LC1 (PLF) FROM	TO	MAX CSI (LC)	MAX. UNBRAC LENGTH
A- B	0 / 50	-112.4	-112.4	0.15 (1)	10.00
B- C	-1881 / 0	-112.4	-112.4	0.74 (1)	4.02
C- D	-2330 / 0	-112.4	-112.4	0.75 (1)	3.61
D- E	-2328 / 0	-112.4	-112.4	0.75 (1)	3.61
E- F	-2328 / 0	-112.4	-112.4	0.75 (1)	3.61
F- G	-2328 / 0	-112.4	-112.4	0.75 (1)	3.63
G- H	-1882 / 0	-112.4	-112.4	0.74 (1)	4.01
H- I	0 / 50	-112.4	-112.4	0.15 (1)	10.00
P- B	-2009 / 0	0.0	0.0	0.21 (1)	5.95
J- H	-2009 / 0	0.0	0.0	0.21 (1)	5.95
P- O	0 / 0	-18.5	-18.5	0.14 (4)	10.00
O- N	0 / 1438	-18.5	-18.5	0.31 (1)	10.00
N- M	0 / 2330	-18.5	-18.5	0.44 (1)	10.00
M- L	0 / 2330	-18.5	-18.5	0.44 (1)	10.00
L- K	0 / 1439	-18.5	-18.5	0.31 (1)	10.00
K- J	0 / 0	-18.5	-18.5	0.14 (4)	10.00

WEBS

MEMB. FR-TO	MAX. FACTORED FORCE (LBS)	MAX CSI (LC)
O- C	-225 / 32	0.13 (1)
C- N	0 / 1229	0.28 (1)
N- D	-737 / 0	0.43 (1)
D- L	-2 / 0	0.00 (1)
L- F	-736 / 0	0.43 (1)
L- G	0 / 1226	0.28 (1)
K- G	-224 / 33	0.13 (1)
B- O	0 / 1483	0.33 (1)
K- H	0 / 1483	0.33 (1)

DESIGN CRITERIA

SPECIFIED LOADS:

TOP CH.	LL	=	32.5	PSF
	DL	=	6.0	PSF
BOT CH.	LL	=	0.0	PSF
	DL	=	7.4	PSF
TOTAL LOAD		=	45.9	PSF

SPACING = 24.0 IN. C/C

LOADING IN FLAT SECTION BASED ON A SLOPE OF 6.00/12

THIS TRUSS IS DESIGNED FOR RESIDENTIAL OR SMALL BUILDING REQUIREMENTS OF PART 9, NBCC 2015

THIS DESIGN COMPLIES WITH:
- PART 9 OF BCBC 2018 , ABC 2019
- PART 9 OF OBC 2012 (2019 AMENDMENT)
- CSA 086-14
- TPIC 2014

(55 % OF 43.9 P.S.F. G.S.L. PLUS 8.4 P.S.F. RAIN LOAD) EQUALS 32.5 P.S.F. SPECIFIED ROOF LIVE LOAD

ALLOWABLE DEFL.(LL)= L/360 (0.96")
CALCULATED VERT. DEFL.(LL) = L/ 999 (0.10")
ALLOWABLE DEFL.(TL)= L/360 (0.96")
CALCULATED VERT. DEFL.(TL) = L/ 999 (0.19")

CSI: TC=0.75/1.00 (C-D:1) , BC=0.44/1.00 (L-N:1) , WB=0.43/1.00 (D-N:1) , SSI=0.32/1.00 (C-D:1)

DOL LUMBER=1.00 NAIL=1.00 LS BEND=1.10 COMP=1.10 SHEAR=1.10 TENS= 1.10

COMPANION LIVE LOAD FACTOR = 1.00

TRUSS PLATE MANUFACTURER IS NOT RESPONSIBLE FOR QUALITY CONTROL IN THE TRUSS MANUFACTURING PLANT .

NAIL VALUES

PLATE	GRIP(DRY) (PSI) MAX	MIN	SHEAR (PLI) MAX	MIN	SECTION (PLI) MAX	MIN
MT20	650	371	1747	788	1987	1873

PLATE PLACEMENT TOL. = 0.250 inches

PLATE ROTATION TOL. = 5.0 Deg.

JSI GRIP= 0.87 (G) (INPUT = 0.90)
JSI METAL= 0.75 (M) (INPUT = 1.00)

LICENSED PROFESSIONAL ENGINEER
06-24-22
H. J. G. ALVES
100009024
PROVINCE OF ONTARIO

Structural component only
DWG# T-2215131

REVIEWED

JOB NAME	TRUSS NAME	QUANTITY	PLY	JOB DESC.	DRWG NO.
423533	T10	3	1	BAYVIEW WELLINGTON TRUSS DESC.	

Tamarack Roof Truss, Burlington

Version 8.530 S Feb 23 2022 MiTek Industries, Inc. Fri Jun 24 08:10:07 2022 Page 1
ID:c3jyj23uDijq_8pvRKbkZpy75XW-MmogAPVcjrrOHVrnuMLjV?4MwWq2v5wIjA8DK3z38bU

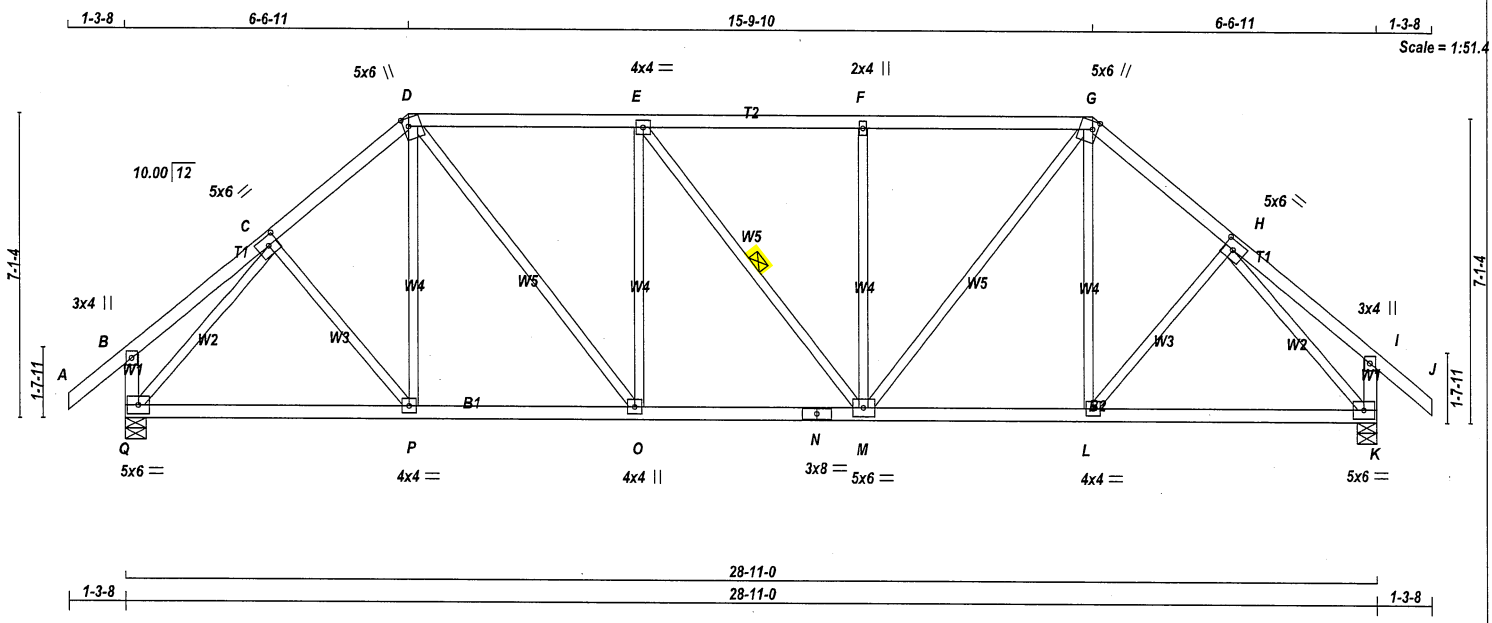

TOTAL WEIGHT = 3 X 135 = 404 lb
[M]

LUMBER
N. L. G. A. RULES

CHORDS	SIZE		LUMBER	DESCR.
A - D	2x4	DRY	No.2	SPF
D - G	2x4	DRY	No.2	SPF
G - J	2x4	DRY	No.2	SPF
Q - B	2x4	DRY	No.2	SPF
K - I	2x4	DRY	No.2	SPF
Q - N	2x4	DRY	No.2	SPF
N - K	2x4	DRY	No.2	SPF
ALL WEBS EXCEPT	2x3	DRY	No.2	SPF

DRY: SEASONED LUMBER.

PLATES (table is in inches)

JT	TYPE	PLATES	W	LEN	Y	X
B	TMV+p	MT20	3.0	4.0		
C	TMWW-t	MT20	5.0	6.0	2.50	2.75
D	TTWW+m	MT20	5.0	6.0	2.25	1.50
E	TMWW-t	MT20	4.0	4.0		
F	TMW+w	MT20	2.0	4.0		
G	TTWW+m	MT20	5.0	6.0	2.25	1.50
H	TMWW-t	MT20	5.0	6.0	2.50	2.75
I	TMV+p	MT20	3.0	4.0		
K	BMVW1-t	MT20	5.0	6.0		
L	BMWW-t	MT20	4.0	4.0		
M	BMWWW-t	MT20	5.0	6.0		
N	BS-t	MT20	3.0	8.0		
O	BMWW+t	MT20	4.0	4.0		
P	BMWW-t	MT20	4.0	4.0		
Q	BMVW1-t	MT20	5.0	6.0		

NOTES- (1)
1) Lateral braces to be a minimum of 2X4 SPF #2.

DIMENSIONS, SUPPORTS AND LOADINGS SPECIFIED BY FABRICATOR TO BE VERIFIED BY BUILDING DESIGNER

BEARINGS

JT	FACTORED GROSS REACTION VERT	HORZ	MAXIMUM FACTORED GROSS REACTION DOWN	HORZ	UPLIFT	INPUT BRG IN-SX	REQRD BRG IN-SX
Q	2049	0	2049	0	0	5-8	5-8
K	2049	0	2049	0	0	5-8	5-8

UNFACTORED REACTIONS

JT	1ST LCASE COMBINED	MAX./MIN. COMPONENT REACTIONS SNOW	LIVE	PERM.LIVE	WIND	DEAD	SOIL
Q	1433	1029 / 0	0 / 0	0 / 0	0 / 0	404 / 0	0 / 0
K	1433	1029 / 0	0 / 0	0 / 0	0 / 0	404 / 0	0 / 0

BEARING MATERIAL TO BE SPF NO.2 OR BETTER AT JOINT(S) Q, K

BRACING
TOP CHORD TO BE SHEATHED OR MAX. PURLIN SPACING = 4.19 FT.
MAX. UNBRACED BOTTOM CHORD LENGTH = 10.00 FT OR RIGID CEILING DIRECTLY APPLIED.

ALL PITCH BREAKS AND PERIMETER CORNER JOINTS MUST BE LATERALLY RESTRAINED.

1 LATERAL BRACE(S) AT 1/ 2 LENGTH OF E-M.

END VERTICAL(S) MUST BE SHEATHED OR HAVE BRACES AS INDICATED IN THE MAX. UNBRACED LENGTH COLUMN OF THE TABLE BELOW

LOADING
TOTAL LOAD CASES: (4)

CHORDS

MEMB. FR-TO	MAX. FACTORED FORCE (LBS)	FACTORED VERT. LOAD (PLF) FROM	TO	LC1 MAX CSI (LC)	MAX. UNBRAC LENGTH
A- B	0 / 50	-112.4	-112.4	0.15 (1)	10.00
B- C	0 / 25	-112.4	-112.4	0.18 (1)	10.00
C- D	-1884 / 0	-112.4	-112.4	0.23 (1)	4.68
D- E	-1992 / 0	-112.4	-112.4	0.52 (1)	4.19
E- F	-1991 / 0	-112.4	-112.4	0.52 (1)	4.19
F- G	-1991 / 0	-112.4	-112.4	0.51 (1)	4.21
G- H	-1884 / 0	-112.4	-112.4	0.23 (1)	4.68
H- I	0 / 25	-112.4	-112.4	0.18 (1)	10.00
I- J	0 / 50	-112.4	-112.4	0.15 (1)	10.00
Q- B	-299 / 0	0.0	0.0	0.03 (1)	7.81
K- I	-300 / 0	0.0	0.0	0.03 (1)	7.81
Q- P	0 / 1375	-18.5	-18.5	0.32 (1)	10.00
P- O	0 / 1425	-18.5	-18.5	0.33 (1)	10.00
O- N	0 / 1993	-18.5	-18.5	0.37 (1)	10.00
N- M	0 / 1993	-18.5	-18.5	0.37 (1)	10.00
M- L	0 / 1425	-18.5	-18.5	0.33 (1)	10.00
L- K	0 / 1376	-18.5	-18.5	0.32 (1)	10.00

WEBS

MEMB. FR-TO	MAX. FACTORED FORCE (LBS)	MAX CSI (LC)
C- P	0 / 75	0.02 (4)
P- D	0 / 96	0.03 (4)
D- O	0 / 923	0.21 (1)
O- E	-638 / 0	0.56 (1)
E- M	-3 / 0	0.00 (1)
M- F	-637 / 0	0.56 (1)
M- G	0 / 919	0.21 (1)
L- G	0 / 96	0.03 (4)
L- H	0 / 74	0.02 (4)
Q- C	-2185 / 0	0.94 (1)
H- K	-2186 / 0	0.94 (1)

DESIGN CRITERIA

SPECIFIED LOADS:

TOP CH.	LL	=	32.5	PSF
	DL	=	6.0	PSF
BOT CH.	LL	=	0.0	PSF
	DL	=	7.4	PSF
TOTAL LOAD		=	45.9	PSF

SPACING = 24.0 IN. C/C

LOADING IN FLAT SECTION BASED ON A SLOPE OF 6.00/12

THIS TRUSS IS DESIGNED FOR RESIDENTIAL OR SMALL BUILDING REQUIREMENTS OF PART 9, NBCC 2015

THIS DESIGN COMPLIES WITH:
- PART 9 OF BCBC 2018 , ABC 2019
- PART 9 OF OBC 2012 (2019 AMENDMENT)
- CSA 086-14
- TPIC 2014

(55 % OF 43.9 P.S.F. G.S.L. PLUS 8.4 P.S.F. RAIN LOAD) EQUALS 32.5 P.S.F. SPECIFIED ROOF LIVE LOAD

ALLOWABLE DEFL.(LL)= L/360 (0.96")
CALCULATED VERT. DEFL.(LL) = L/ 999 (0.08")
ALLOWABLE DEFL.(TL)= L/360 (0.96")
CALCULATED VERT. DEFL.(TL) = L/ 999 (0.15")

CSI: TC=0.52/1.00 (D-E:1) , BC=0.37/1.00 (M-O:1) , WB=0.94/1.00 (H-K:1) , SSI=0.28/1.00 (D-E:1)

DOL LUMBER=1.00 NAIL=1.00 LS BEND=1.10 COMP=1.10 SHEAR=1.10 TENS= 1.10

COMPANION LIVE LOAD FACTOR = 1.00

TRUSS PLATE MANUFACTURER IS NOT RESPONSIBLE FOR QUALITY CONTROL IN THE TRUSS MANUFACTURING PLANT .

NAIL VALUES

PLATE	GRIP(DRY) (PSI) MAX	MIN	SHEAR (PLI) MAX	MIN	SECTION (PLI) MAX	MIN
MT20	650	371	1747	788	1987	1873

PLATE PLACEMENT TOL. = 0.250 inches

PLATE ROTATION TOL. = 5.0 Deg.

JSI GRIP= 0.90 (C) (INPUT = 0.90)
JSI METAL= 0.60 (N) (INPUT = 1.00)

LICENSED PROFESSIONAL ENGINEER
06-24-22
H. J. G. ALVES
100009024
PROVINCE OF ONTARIO

Structural component only
DWG# T-2215132

REVIEWED

JOB NAME	TRUSS NAME	QUANTITY	PLY	JOB DESC.	DRWG NO.
423533	T11	1	2	BAYVIEW WELLINGTON TRUSS DESC.	

Tamarack Roof Truss, Burlington

Version 8.530 S Feb 23 2022 MiTek Industries, Inc. Fri Jun 24 08:10:09 2022 Page 1
ID:c3jyj23uDijq_8pvRKbkZpy75XW-I9wQb5WsFS66Xp?A?nOBbQ9kQKR0N72bAUdJOxz38bS

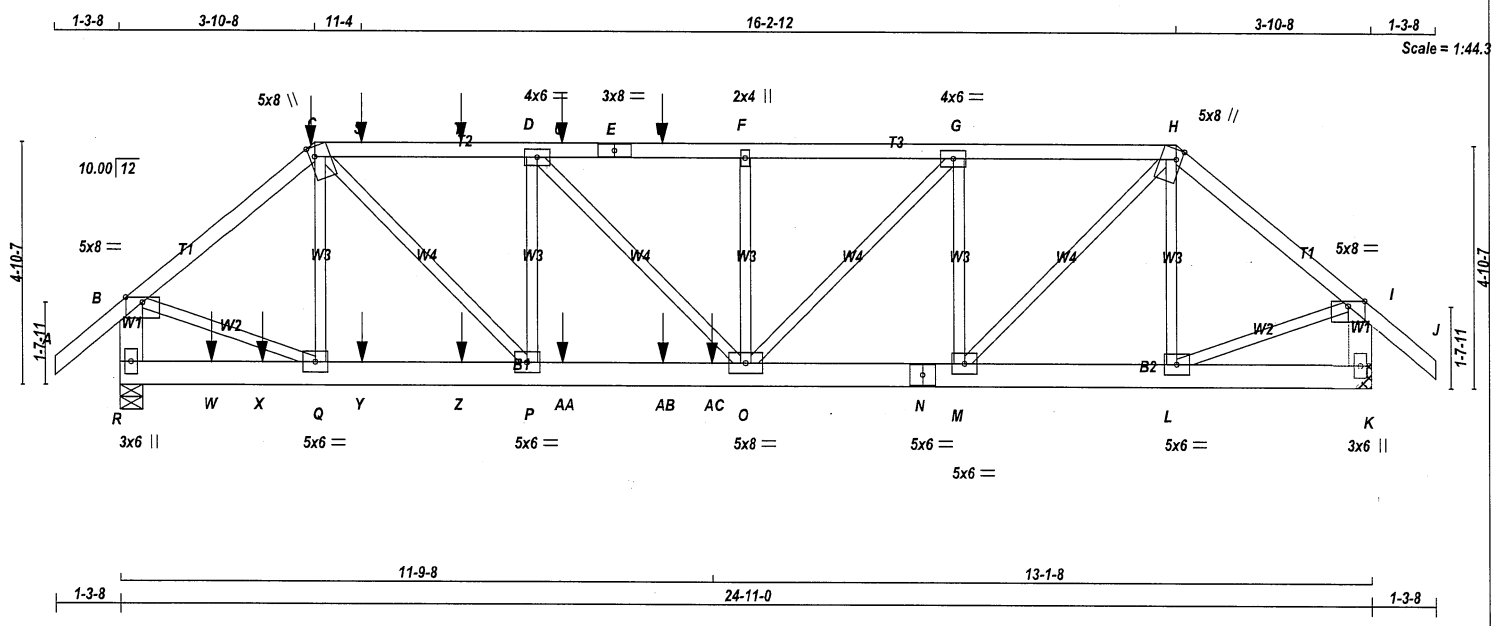

TOTAL WEIGHT = 2 X 126 = 252 lb

[M]

LUMBER

N. L. G. A. RULES

CHORDS	SIZE		LUMBER	DESCR.
A - C	2x4	DRY	No.2	SPF
C - E	2x4	DRY	No.2	SPF
E - H	2x4	DRY	No.2	SPF
H - J	2x4	DRY	No.2	SPF
R - B	2x6	DRY	No.2	SPF
K - I	2x6	DRY	No.2	SPF
R - N	2x6	DRY	No.2	SPF
N - K	2x6	DRY	No.2	SPF
ALL WEBS EXCEPT	2x3	DRY	No.2	SPF

DRY: SEASONED LUMBER.

DESIGN CONSISTS OF 2 TRUSSES BUILT SEPARATELY THEN FASTENED TOGETHER AS FOLLOWS:

CHORDS	#ROWS	SURFACE SPACING (IN)	LOAD(PLF)
TOP CHORDS : (0.122"X3") SPIRAL NAILS			
A- C	1	12	SIDE(61.0)
C- E	1	12	SIDE(61.0)
E- H	1	12	SIDE(0.0)
H- J	1	12	TOP
R- B	2	12	TOP
K- I	2	12	TOP
BOTTOM CHORDS : (0.122"X3") SPIRAL NAILS			
R- N	2	12	SIDE(0.0)
N- K	2	12	TOP
WEBS : (0.122"X3") SPIRAL NAILS			
2x3	1	6	

NAILS TO BE DRIVEN FROM ONE SIDE ONLY.

GIRDER NAILING ASSUMES NAILED HANGERS ARE FASTENED WITH MIN. 3-0 INCH NAILS.

TOP - COMPONENTS ARE LOADED FROM THE TOP AND MUST BE PLACED ON TOP EDGE OF ALL PLIES FOR THE LOAD TO BE TRANSFERRED TO EACH PLY.

LICENSED PROFESSIONAL ENGINEER
06-24-22
H. J. G. ALVES
100009024
PROVINCE OF ONTARIO

Structural component only
DWG# T-2215133

DIMENSIONS, SUPPORTS AND LOADINGS SPECIFIED BY FABRICATOR TO BE VERIFIED BY BUILDING DESIGNER

BEARINGS

JT	FACTORED GROSS REACTION VERT	HORZ	MAXIMUM FACTORED GROSS REACTION DOWN	HORZ	UPLIFT	INPUT BRG IN-SX	REQRD BRG IN-SX
R	3477	0	3477	0	0	5-8	5-8
K	3003	0	3003	0	0	MECHANICAL	

A SUITABLE HANGER/MECHANICAL CONNECTION IS REQUIRED AT JOINT K. MINIMUM BEARING LENGTH AT JOINT K = 4-0.

UNFACTORED REACTIONS

JT	1ST LCASE COMBINED	SNOW	MAX./MIN. COMPONENT REACTIONS LIVE	PERM.LIVE	WIND	DEAD	SOIL
R	2429	1762 / 0	0 / 0	0 / 0	0 / 0	667 / 0	0 / 0
K	2097	1526 / 0	0 / 0	0 / 0	0 / 0	570 / 0	0 / 0

BEARING MATERIAL TO BE SPF NO.2 OR BETTER AT JOINT(S) R

BRACING

TOP CHORD TO BE SHEATHED OR MAX. PURLIN SPACING = 3.72 FT.
MAX. UNBRACED BOTTOM CHORD LENGTH = 10.00 FT OR RIGID CEILING DIRECTLY APPLIED.

ALL PITCH BREAKS AND PERIMETER CORNER JOINTS MUST BE LATERALLY RESTRAINED.

LOADING

TOTAL LOAD CASES: (4)

CHORDS

MEMB. FR-TO	MAX. FACTORED FORCE (LBS)	FACTORED VERT. LOAD (PLF) FROM	TO	LC1	MAX CSI (LC)	MAX. UNBRAC LENGTH
A- B	0 / 50	-112.4	-112.4	0.09 (1)	10.00	
B- C	-3478 / 0	-112.4	-112.4	0.22 (1)	4.82	
C- S	-4826 / 0	-112.4	-112.4	0.35 (1)	4.05	
S- T	-4826 / 0	-112.4	-112.4	0.35 (1)	4.05	
T- D	-4826 / 0	-112.4	-112.4	0.35 (1)	4.05	
D- U	-5732 / 0	-112.4	-112.4	0.39 (1)	3.72	
U- E	-5732 / 0	-112.4	-112.4	0.39 (1)	3.72	
E- V	-5732 / 0	-112.4	-112.4	0.39 (1)	3.72	
V- F	-5732 / 0	-112.4	-112.4	0.39 (1)	3.72	
F- G	-5732 / 0	-112.4	-112.4	0.29 (1)	3.84	
G- H	-4240 / 0	-112.4	-112.4	0.23 (1)	4.43	
H- I	-2973 / 0	-112.4	-112.4	0.21 (1)	5.15	
I- J	0 / 50	-112.4	-112.4	0.09 (1)	10.00	
R- B	-3427 / 0	0.0	0.0	0.13 (1)	7.54	
K- I	-2984 / 0	0.0	0.0	0.11 (1)	7.81	
R- W	0 / 0	-18.5	-18.5	0.03 (4)	10.00	
W- X	0 / 0	-18.5	-18.5	0.03 (4)	10.00	
X- Q	0 / 0	-18.5	-18.5	0.03 (4)	10.00	
Q- Y	0 / 2647	-18.5	-18.5	0.25 (1)	10.00	
Y- Z	0 / 2647	-18.5	-18.5	0.25 (1)	10.00	
Z- P	0 / 2647	-18.5	-18.5	0.25 (1)	10.00	
P-AA	0 / 4827	-18.5	-18.5	0.66 (1)	10.00	
AA-AB	0 / 4827	-18.5	-18.5	0.66 (1)	10.00	
AB-AC	0 / 4827	-18.5	-18.5	0.66 (1)	10.00	
AC- O	0 / 4827	-18.5	-18.5	0.66 (1)	10.00	
O- N	0 / 4240	-18.5	-18.5	0.40 (1)	10.00	
N- M	0 / 4240	-18.5	-18.5	0.40 (1)	10.00	
M- L	0 / 2265	-18.5	-18.5	0.19 (1)	10.00	
L- K	0 / 0	-18.5	-18.5	0.03 (1)	10.00	

WEBS

MEMB. FR-TO	MAX. FACTORED FORCE (LBS)	MAX CSI (LC)
Q- C	-752 / 0	0.13 (1)
C- P	0 / 3129	0.39 (1)
P- D	-1764 / 0	0.30 (1)
D- O	0 / 1319	0.16 (1)
O- F	-492 / 0	0.08 (1)
O- G	0 / 2174	0.27 (1)
M- G	-2107 / 0	0.36 (1)
M- H	0 / 2835	0.35 (1)
L- H	-560 / 0	0.09 (1)
B- Q	0 / 2787	0.34 (1)
L- I	0 / 2383	0.29 (1)

SPECIFIED CONCENTRATED LOADS (LBS)

JT	LOC.	LC1	MAX-	MAX+	FACE	DIR.	TYPE	HEEL	CONN.
C	3-10-8	-23	-23	---	FRONT	VERT	DEAD	---	C1
C	3-10-8	-121	-121	---	FRONT	VERT	SNOW	---	C1
S	4-9-12	-75	-75	---	FRONT	VERT	TOTAL	---	C1
T	6-9-12	-72	-72	---	FRONT	VERT	TOTAL	---	C1
U	8-9-12	-72	-72	---	FRONT	VERT	TOTAL	---	C1

DESIGN CRITERIA

*** SPECIAL LOADS ANALYSIS ***
GEOMETRY AND/OR BASIC LOADS CHANGED BY USER.
LOADS WERE DERIVED FROM USER INPUT
NO FURTHER MODIFICATIONS WERE MADE

SPECIFIED LOADS:

TOP CH.	LL	=	32.5	PSF
	DL	=	6.0	PSF
BOT CH.	LL	=	0.0	PSF
	DL	=	7.4	PSF
TOTAL LOAD		=	45.9	PSF

SPACING = 24.0 IN. C/C

LOADING IN FLAT SECTION BASED ON A SLOPE OF 6.00/12

*** NON STANDARD GIRDER ***
ADDT'L USER-DEFINED LOADS APPLIED TO ALL LOAD CASES.

THIS TRUSS IS DESIGNED FOR RESIDENTIAL OR SMALL BUILDING REQUIREMENTS OF PART 9, NBCC 2015

THIS DESIGN COMPLIES WITH:
- PART 9 OF BCBC 2018 , ABC 2019
- PART 9 OF OBC 2012 (2019 AMENDMENT)
- CSA 086-14
- TPIC 2014

(55 % OF 43.9 P.S.F. G.S.L. PLUS 8.4 P.S.F. RAIN LOAD) EQUALS 32.5 P.S.F. SPECIFIED ROOF LIVE LOAD

ALLOWABLE DEFL.(LL)= L/360 (0.83")
CALCULATED VERT. DEFL.(LL) = L/ 999 (0.11")
ALLOWABLE DEFL.(TL)= L/360 (0.83")
CALCULATED VERT. DEFL.(TL) = L/ 999 (0.19")

CSI: TC=0.39/1.00 (D-F:1) , BC=0.66/1.00 (O-P:1) , WB=0.39/1.00 (C-P:1) , SSI=0.63/1.00 (O-P:1)

DOL LUMBER=1.00 NAIL=1.00 LS BEND=1.00 COMP=1.00 SHEAR=1.00 TENS= 1.00

COMPANION LIVE LOAD FACTOR = 1.00

AUTOSOLVE HEELS OFF

TRUSS PLATE MANUFACTURER IS NOT RESPONSIBLE FOR QUALITY CONTROL IN THE TRUSS MANUFACTURING PLANT .

NAIL VALUES

PLATE	GRIP(DRY) (PSI) MAX	MIN	SHEAR (PLI) MAX	MIN	SECTION (PLI) MAX	MIN
MT20	650	371	1747	788	1987	1873

PLATE PLACEMENT TOL. = 0.250 inches

PLATE ROTATION TOL. = 5.0 Deg.

JSI GRIP= 0.88 (C) (INPUT = 0.90)
JSI METAL= 0.43 (N) (INPUT = 1.00)

CONTINUED ON PAGE 2

REVIEWED

JOB NAME	TRUSS NAME	QUANTITY	PLY	JOB DESC.	DRWG NO.
423533	T11	1	2	BAYVIEW WELLINGTON TRUSS DESC.	

Tamarack Roof Truss, Burlington

ID:c3jyj23uDijg_8pvRKbkZpy75XW-I9wQb5WsFS66Xp?A?nOBbQ9kQKR0N72bAUdJOxz38bS

PLATES (table is in inches)

JT	TYPE	PLATES	W	LEN	Y	X
B	TMVW-p	MT20	5.0	8.0	Edge	
C	TTWW+m	MT20	5.0	8.0	Edge	1.25
D	TMWW-t	MT20	4.0	6.0		
E	TS-t	MT20	3.0	8.0		
F	TMW+w	MT20	2.0	4.0		
G	TMWW-t	MT20	4.0	6.0		
H	TTWW+m	MT20	5.0	8.0	Edge	1.25
I	TMVW-p	MT20	5.0	8.0	Edge	
K	BMV1+p	MT20	3.0	6.0		
L, M, P, Q						
L	BMWW-t	MT20	5.0	6.0		
N	BS-t	MT20	5.0	6.0		
O	BMWWW-t	MT20	5.0	8.0		
R	BMV1+p	MT20	3.0	6.0		

Edge - INDICATES REFERENCE CORNER OF PLATE TOUCHES EDGE OF CHORD.

NOTES- (1)
1) Lateral braces to be a minimum of 2X4 SPF #2.

SPECIFIED CONCENTRATED LOADS (LBS)

JT	LOC.	LC1	MAX-	MAX+	FACE	DIR.	TYPE	HEEL	CONN.
V	10-9-12	-72	-72	---	FRONT	VERT	TOTAL	---	C1
W	1-9-12	-14	-14	---	FRONT	VERT	TOTAL	---	C1
X	2-9-12	-14	-14	---	FRONT	VERT	TOTAL	---	C1
Y	4-9-12	-14	-14	---	FRONT	VERT	TOTAL	---	C1
Z	6-9-12	-14	-14	---	FRONT	VERT	TOTAL	---	C1
AA	8-9-12	-14	-14	---	FRONT	VERT	TOTAL	---	C1
AB	10-9-12	-14	-14	---	FRONT	VERT	TOTAL	---	C1
AC	11-9-8	-1508	-1508	---	FRONT	VERT	TOTAL	---	C1

CONNECTION REQUIREMENTS

1) **C1:** A SUITABLE HANGER/MECHANICAL CONNECTION IS REQUIRED.

LICENSED PROFESSIONAL ENGINEER
06-24-22
H. J. G. ALVES
100009024
PROVINCE OF ONTARIO

Structural component only
DWG# T-2215133

REVIEWED

JOB NAME	TRUSS NAME	QUANTITY	PLY	JOB DESC.	DRWG NO.
423534	T11Z	1	2	BAYVIEW WELLINGTON TRUSS DESC.	

Tamarack Roof Truss, Burlington

Version 8.530 S Feb 23 2022 MiTek Industries, Inc. Fri Jun 24 08:28:56 2022 Page 1
ID:c3jyj23uDijq_8pvRKbkZpy75XW-ozWU7S9ork5CE?fmXz6Tm4LMEd9Yxs4TKK7SR7z38Jr

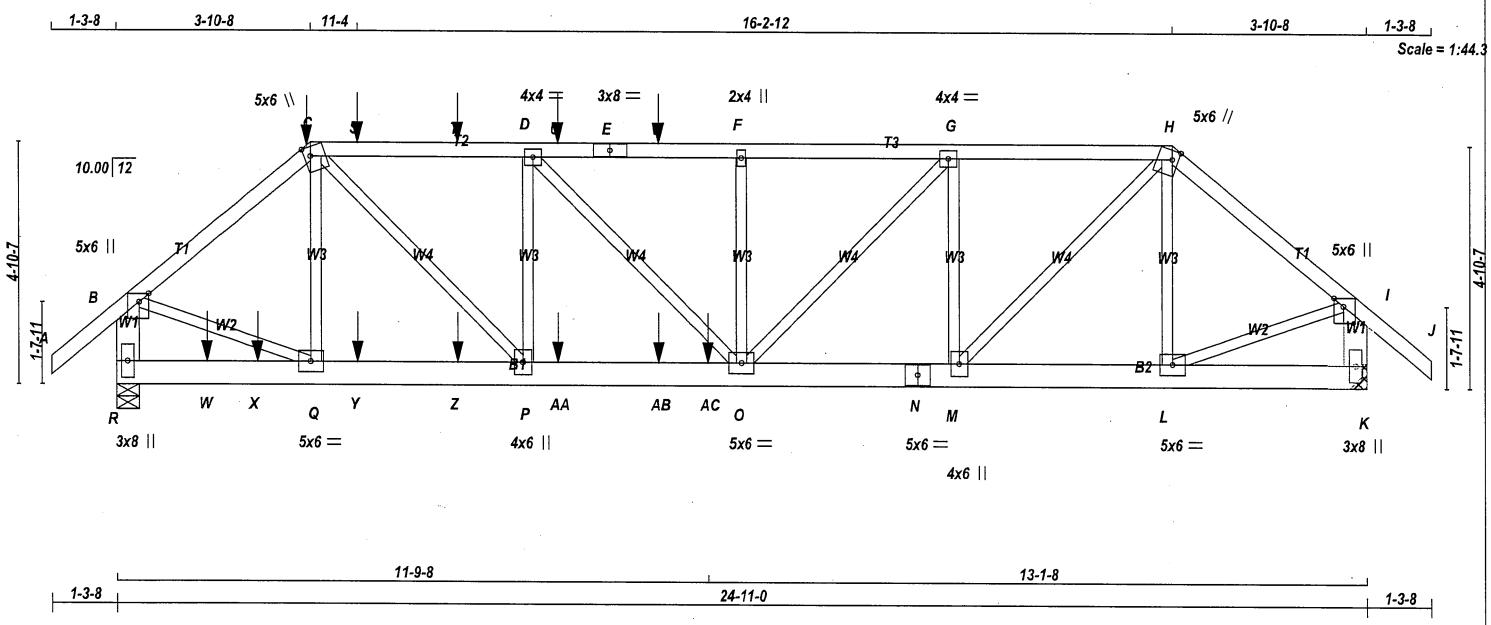

TOTAL WEIGHT = 2 X 126 = 252 lb

[M]

LUMBER

N. L. G. A. RULES

CHORDS	SIZE		LUMBER	DESCR.
A - C	2x4	DRY	No.2	SPF
C - E	2x4	DRY	No.2	SPF
E - H	2x4	DRY	No.2	SPF
H - J	2x4	DRY	No.2	SPF
R - B	2x6	DRY	No.2	SPF
K - I	2x6	DRY	No.2	SPF
R - N	2x6	DRY	No.2	SPF
N - K	2x6	DRY	No.2	SPF
ALL WEBS EXCEPT	2x3	DRY	No.2	SPF

DRY: SEASONED LUMBER.

DESIGN CONSISTS OF 2 TRUSSES BUILT SEPARATELY THEN FASTENED TOGETHER AS FOLLOWS:

CHORDS	#ROWS	SURFACE SPACING (IN)	LOAD(PLF)
TOP CHORDS : (0.122"X3") SPIRAL NAILS			
A- C	1	12	SIDE(61.0)
C- E	1	12	SIDE(61.0)
E- H	1	12	SIDE(0.0)
H- J	1	12	TOP
R- B	2	12	TOP
K- I	2	12	TOP
BOTTOM CHORDS : (0.122"X3") SPIRAL NAILS			
R- N	2	12	SIDE(0.0)
N- K	2	12	TOP
WEBS : (0.122"X3") SPIRAL NAILS			
2x3	1	6	

NAILS TO BE DRIVEN FROM ONE SIDE ONLY.

GIRDER NAILING ASSUMES NAILED HANGERS ARE FASTENED WITH MIN. 3-0 INCH NAILS.

TOP - COMPONENTS ARE LOADED FROM THE TOP AND MUST BE PLACED ON TOP EDGE OF ALL PLIES FOR THE LOAD TO BE TRANSFERRED TO EACH PLY.

LICENSED PROFESSIONAL ENGINEER
06-24-22
H. J. G. ALVES
100009024
PROVINCE OF ONTARIO

Structural component only
DWG# T-2215154

DIMENSIONS, SUPPORTS AND LOADINGS SPECIFIED BY FABRICATOR TO BE VERIFIED BY BUILDING DESIGNER

BEARINGS

JT	FACTORED GROSS REACTION VERT	HORZ	MAXIMUM FACTORED GROSS REACTION DOWN	HORZ	UPLIFT	INPUT BRG	REQRD BRG
R	2698	0	2698	0	0	5-8	5-8
K	2303	0	2303	0	0	MECHANICAL	

A SUITABLE HANGER/MECHANICAL CONNECTION IS REQUIRED AT JOINT K. MINIMUM BEARING LENGTH AT JOINT K = 4-0.

UNFACTORED REACTIONS

JT	1ST LCASE COMBINED	SNOW	LIVE	PERM.LIVE	WIND	DEAD	SOIL
		MAX./MIN. COMPONENT REACTIONS					
R	1887	1357 / 0	0 / 0	0 / 0	0 / 0	530 / 0	0 / 0
K	1610	1163 / 0	0 / 0	0 / 0	0 / 0	447 / 0	0 / 0

BEARING MATERIAL TO BE SPF NO.2 OR BETTER AT JOINT(S) R

BRACING

TOP CHORD TO BE SHEATHED OR MAX. PURLIN SPACING = 4.55 FT.
MAX. UNBRACED BOTTOM CHORD LENGTH = 10.00 FT OR RIGID CEILING DIRECTLY APPLIED.

ALL PITCH BREAKS AND PERIMETER CORNER JOINTS MUST BE LATERALLY RESTRAINED.

LOADING

TOTAL LOAD CASES: (4)

CHORDS

MEMB. FR-TO	MAX. FACTORED FORCE (LBS)	FACTORED VERT. LOAD LC1 (PLF) FROM	TO	MAX CSI (LC)	MAX. UNBRAC LENGTH
A- B	0 / 50	-112.4	-112.4	0.09 (1)	10.00
B- C	-2598 / 0	-112.4	-112.4	0.20 (1)	5.43
C- S	-3368 / 0	-112.4	-112.4	0.30 (1)	4.76
S- T	-3368 / 0	-112.4	-112.4	0.30 (1)	4.76
T- D	-3368 / 0	-112.4	-112.4	0.30 (1)	4.76
D- U	-3739 / 0	-112.4	-112.4	0.31 (1)	4.55
U- E	-3739 / 0	-112.4	-112.4	0.31 (1)	4.55
E- V	-3739 / 0	-112.4	-112.4	0.31 (1)	4.55
V- F	-3739 / 0	-112.4	-112.4	0.31 (1)	4.55
F- G	-3739 / 0	-112.4	-112.4	0.22 (1)	4.68
G- H	-2977 / 0	-112.4	-112.4	0.20 (1)	5.15
H- I	-2169 / 0	-112.4	-112.4	0.19 (1)	5.82
I- J	0 / 50	-112.4	-112.4	0.09 (1)	10.00
R- B	-2655 / 0	0.0	0.0	0.10 (1)	7.81
K- I	-2277 / 0	0.0	0.0	0.08 (1)	7.81
R- W	0 / 0	-18.5	-18.5	0.03 (4)	10.00
W- X	0 / 0	-18.5	-18.5	0.03 (4)	10.00
X- Q	0 / 0	-18.5	-18.5	0.03 (4)	10.00
Q- Y	0 / 1979	-18.5	-18.5	0.15 (1)	10.00
Y- Z	0 / 1979	-18.5	-18.5	0.15 (1)	10.00
Z- P	0 / 1979	-18.5	-18.5	0.15 (1)	10.00
P-AA	0 / 3369	-18.5	-18.5	0.35 (1)	10.00
AA-AB	0 / 3369	-18.5	-18.5	0.35 (1)	10.00
AB-AC	0 / 3369	-18.5	-18.5	0.35 (1)	10.00
AC- O	0 / 3369	-18.5	-18.5	0.35 (1)	10.00
O- N	0 / 2978	-18.5	-18.5	0.22 (1)	10.00
N- M	0 / 2978	-18.5	-18.5	0.22 (1)	10.00
M- L	0 / 1652	-18.5	-18.5	0.13 (1)	10.00
L- K	0 / 0	-18.5	-18.5	0.02 (4)	10.00

WEBS

MEMB. FR-TO	MAX. FACTORED FORCE (LBS)	MAX CSI (LC)
Q- C	-495 / 0	0.08 (1)
C- P	0 / 1995	0.25 (1)
P- D	-1202 / 0	0.20 (1)
D- O	0 / 539	0.07 (1)
O- F	-500 / 0	0.08 (1)
O- G	0 / 1109	0.14 (1)
M- G	-1335 / 0	0.23 (1)
M- H	0 / 1903	0.24 (1)
L- H	-402 / 0	0.07 (1)
B- Q	0 / 2082	0.26 (1)
L- I	0 / 1738	0.22 (1)

SPECIFIED CONCENTRATED LOADS (LBS)

JT	LOC.	LC1	MAX-	MAX+	FACE	DIR.	TYPE	HEEL	CONN.
C	3-10-8	-23	-23	---	FRONT	VERT	DEAD	---	C1
C	3-10-8	-121	-121	---	FRONT	VERT	SNOW	---	C1
S	4-9-12	-75	-75	---	FRONT	VERT	TOTAL	---	C1
T	6-9-12	-72	-72	---	FRONT	VERT	TOTAL	---	C1
U	8-9-12	-72	-72	---	FRONT	VERT	TOTAL	---	C1

DESIGN CRITERIA

*** SPECIAL LOADS ANALYSIS ***
GEOMETRY AND/OR BASIC LOADS CHANGED BY USER.
LOADS WERE DERIVED FROM USER INPUT
NO FURTHER MODIFICATIONS WERE MADE

SPECIFIED LOADS:

TOP CH.	LL	=	32.5	PSF
	DL	=	6.0	PSF
BOT CH.	LL	=	0.0	PSF
	DL	=	7.4	PSF
TOTAL LOAD		=	45.9	PSF

SPACING = 24.0 IN. C/C

LOADING IN FLAT SECTION BASED ON A SLOPE OF 6.00/12

*** NON STANDARD GIRDER ***
ADDT'L USER-DEFINED LOADS APPLIED TO ALL LOAD CASES.

THIS TRUSS IS DESIGNED FOR RESIDENTIAL OR SMALL BUILDING REQUIREMENTS OF PART 9, NBCC 2015

THIS DESIGN COMPLIES WITH:
- PART 9 OF BCBC 2018 , ABC 2019
- PART 9 OF OBC 2012 (2019 AMENDMENT)
- CSA 086-14
- TPIC 2014

(55 % OF 43.9 P.S.F. G.S.L. PLUS 8.4 P.S.F. RAIN LOAD) EQUALS 32.5 P.S.F. SPECIFIED ROOF LIVE LOAD

ALLOWABLE DEFL.(LL)= L/360 (0.83")
CALCULATED VERT. DEFL.(LL) = L/ 999 (0.07")
ALLOWABLE DEFL.(TL)= L/360 (0.83")
CALCULATED VERT. DEFL.(TL) = L/ 999 (0.12")

CSI: TC=0.31/1.00 (D-F:1) , BC=0.35/1.00 (O-P:1) , WB=0.26/1.00 (B-Q:1) , SSI=0.21/1.00 (O-P:1)

DOL LUMBER=1.00 NAIL=1.00 LS BEND=1.00 COMP=1.00 SHEAR=1.00 TENS= 1.00

COMPANION LIVE LOAD FACTOR = 1.00

AUTOSOLVE HEELS OFF

TRUSS PLATE MANUFACTURER IS NOT RESPONSIBLE FOR QUALITY CONTROL IN THE TRUSS MANUFACTURING PLANT .

NAIL VALUES

PLATE	GRIP(DRY) (PSI) MAX	MIN	SHEAR (PLI) MAX	MIN	SECTION (PLI) MAX	MIN
MT20	650	371	1747	788	1987	1873

PLATE PLACEMENT TOL. = 0.250 inches

PLATE ROTATION TOL. = 5.0 Deg.

JSI GRIP= 0.90 (H) (INPUT = 0.90)
JSI METAL= 0.31 (M) (INPUT = 1.00)

CONTINUED ON PAGE 2

REVIEWED

JOB NAME	TRUSS NAME	QUANTITY	PLY	JOB DESC.	DRWG NO.
423534	T11Z	1	2	BAYVIEW WELLINGTON TRUSS DESC.	

PLATES (table is in inches)

JT	TYPE	PLATES	W	LEN	Y	X
B	TMVW+p	MT20	5.0	6.0	2.00	2.25
C	TTWW+m	MT20	5.0	6.0	2.25	1.50
D	TMWW-t	MT20	4.0	4.0		
E	TS-t	MT20	3.0	8.0		
F	TMW+w	MT20	2.0	4.0		
G	TMWW-t	MT20	4.0	4.0		
H	TTWW+m	MT20	5.0	6.0	2.25	1.50
I	TMVW+p	MT20	5.0	6.0	2.00	2.25
K	BMV1+p	MT20	3.0	8.0		
L	BMWW-t	MT20	5.0	6.0		
M	BMWW+t	MT20	4.0	6.0		
N	BS-t	MT20	5.0	6.0		
O	BMWWW-t	MT20	5.0	6.0		
P	BMWW+t	MT20	4.0	6.0		
Q	BMWW-t	MT20	5.0	6.0		
R	BMV1+p	MT20	3.0	8.0		

NOTES- (1)
1) Lateral braces to be a minimum of 2X4 SPF #2.

SPECIFIED CONCENTRATED LOADS (LBS)

JT	LOC.	LC1	MAX-	MAX+	FACE	DIR.	TYPE	HEEL	CONN.
V	10-9-12	-72	-72	---	FRONT	VERT	TOTAL	---	C1
W	1-9-12	-14	-14	---	FRONT	VERT	TOTAL	---	C1
X	2-9-12	-14	-14	---	FRONT	VERT	TOTAL	---	C1
Y	4-9-12	-14	-14	---	FRONT	VERT	TOTAL	---	C1
Z	6-9-12	-14	-14	---	FRONT	VERT	TOTAL	---	C1
AA	8-9-12	-14	-14	---	FRONT	VERT	TOTAL	---	C1
AB	10-9-12	-14	-14	---	FRONT	VERT	TOTAL	---	C1
AC	11-9-8	-479	-479	---	FRONT	VERT	TOTAL	---	C1

CONNECTION REQUIREMENTS

1) **C1:** A SUITABLE HANGER/MECHANICAL CONNECTION IS REQUIRED.

LICENSED PROFESSIONAL ENGINEER
06-24-22
H. J. G. ALVES
100009024
PROVINCE OF ONTARIO

Structural component only
DWG# T-2215154

REVIEWED

JOB NAME	TRUSS NAME	QUANTITY	PLY	JOB DESC.	DRWG NO.
423533	T12	1	1	BAYVIEW WELLINGTON TRUSS DESC.	

Tamarack Roof Truss, Burlington

Version 8.530 S Feb 23 2022 MiTek Industries, Inc. Fri Jun 24 08:10:09 2022 Page 1
ID:c3jyj23uDijq_8pvRKbkZpy75XW-I9wQb5WsFS66Xp?A?nOBbQ9ILKXdN3nbAUdJOxz38bS

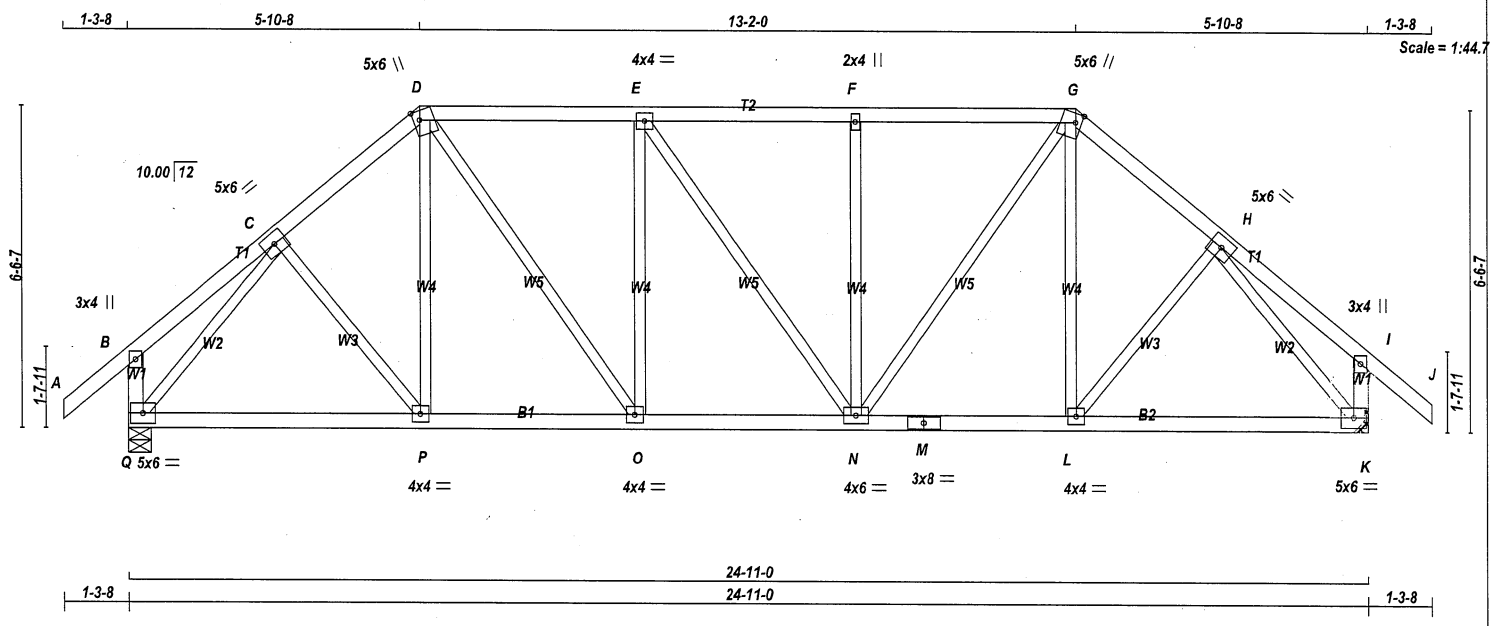

TOTAL WEIGHT = 120 lb
[M]

LUMBER
N. L. G. A. RULES

CHORDS	SIZE		LUMBER	DESCR.
A - D	2x4	DRY	No.2	SPF
D - G	2x4	DRY	No.2	SPF
G - J	2x4	DRY	No.2	SPF
Q - B	2x4	DRY	No.2	SPF
K - I	2x4	DRY	No.2	SPF
Q - M	2x4	DRY	No.2	SPF
M - K	2x4	DRY	No.2	SPF
ALL WEBS EXCEPT	2x3	DRY	No.2	SPF

DRY: SEASONED LUMBER.

PLATES (table is in inches)

JT	TYPE	PLATES	W	LEN	Y	X
B	TMV+p	MT20	3.0	4.0		
C	TMWW-t	MT20	5.0	6.0		
D	TTWW+m	MT20	5.0	6.0	2.25	1.50
E	TMWW-t	MT20	4.0	4.0		
F	TMW+w	MT20	2.0	4.0		
G	TTWW+m	MT20	5.0	6.0	2.25	1.50
H	TMWW-t	MT20	5.0	6.0		
I	TMV+p	MT20	3.0	4.0		
K	BMVW1-t	MT20	5.0	6.0		
L, O, P						
L	BMWW-t	MT20	4.0	4.0		
M	BS-t	MT20	3.0	8.0		
N	BMWWW-t	MT20	4.0	6.0		
Q	BMVW1-t	MT20	5.0	6.0		

NOTES- (1)
1) Lateral braces to be a minimum of 2X4 SPF #2.

DIMENSIONS, SUPPORTS AND LOADINGS SPECIFIED BY FABRICATOR TO BE VERIFIED BY BUILDING DESIGNER

BEARINGS

JT	FACTORED GROSS REACTION VERT	HORZ	MAXIMUM FACTORED GROSS REACTION DOWN	HORZ	UPLIFT	INPUT BRG	REQRD BRG
Q	1787	0	1787	0	0	5-8	5-8
K	1787	0	1787	0	0	MECHANICAL	

A SUITABLE HANGER/MECHANICAL CONNECTION IS REQUIRED AT JOINT K. MINIMUM BEARING LENGTH AT JOINT K = 3-8.

UNFACTORED REACTIONS

JT	1ST LCASE COMBINED	MAX./MIN. COMPONENT REACTIONS SNOW	LIVE	PERM.LIVE	WIND	DEAD	SOIL
Q	1250	899 / 0	0 / 0	0 / 0	0 / 0	351 / 0	0 / 0
K	1250	899 / 0	0 / 0	0 / 0	0 / 0	351 / 0	0 / 0

BEARING MATERIAL TO BE SPF NO.2 OR BETTER AT JOINT(S) Q

BRACING
TOP CHORD TO BE SHEATHED OR MAX. PURLIN SPACING = 4.82 FT.
MAX. UNBRACED BOTTOM CHORD LENGTH = 10.00 FT OR RIGID CEILING DIRECTLY APPLIED.

ALL PITCH BREAKS AND PERIMETER CORNER JOINTS MUST BE LATERALLY RESTRAINED.

LOADING
TOTAL LOAD CASES: (4)

CHORDS

MEMB. FR-TO	MAX. FACTORED FORCE (LBS)	FACTORED VERT. LOAD LC1 FROM (PLF)	TO	MAX CSI (LC)	MAX. UNBRAC LENGTH
A- B	0 / 50	-112.4	-112.4	0.15 (1)	10.00
B- C	0 / 22	-112.4	-112.4	0.14 (1)	10.00
C- D	-1570 / 0	-112.4	-112.4	0.17 (1)	5.10
D- E	-1614 / 0	-112.4	-112.4	0.33 (1)	4.82
E- F	-1612 / 0	-112.4	-112.4	0.33 (1)	4.83
F- G	-1612 / 0	-112.4	-112.4	0.32 (1)	4.84
G- H	-1571 / 0	-112.4	-112.4	0.17 (1)	5.10
H- I	0 / 22	-112.4	-112.4	0.14 (1)	10.00
I- J	0 / 50	-112.4	-112.4	0.15 (1)	10.00
Q- B	-285 / 0	0.0	0.0	0.03 (1)	7.81
K- I	-285 / 0	0.0	0.0	0.03 (1)	7.81
Q- P	0 / 1135	-18.5	-18.5	0.26 (1)	10.00
P- O	0 / 1187	-18.5	-18.5	0.27 (1)	10.00
O- N	0 / 1614	-18.5	-18.5	0.30 (1)	10.00
N- M	0 / 1187	-18.5	-18.5	0.27 (1)	10.00
M- L	0 / 1187	-18.5	-18.5	0.27 (1)	10.00
L- K	0 / 1135	-18.5	-18.5	0.26 (1)	10.00

WEBS

MEMB. FR-TO	MAX. FACTORED FORCE (LBS)	MAX CSI (LC)
C- P	0 / 79	0.02 (4)
P- D	0 / 81	0.03 (4)
D- O	0 / 739	0.17 (1)
O- E	-529 / 0	0.37 (1)
E- N	-4 / 0	0.00 (1)
N- F	-527 / 0	0.37 (1)
N- G	0 / 734	0.17 (1)
L- G	0 / 81	0.03 (4)
L- H	0 / 79	0.02 (4)
Q- C	-1846 / 0	0.66 (1)
H- K	-1846 / 0	0.66 (1)

DESIGN CRITERIA

SPECIFIED LOADS:

TOP CH.	LL	=	32.5	PSF
	DL	=	6.0	PSF
BOT CH.	LL	=	0.0	PSF
	DL	=	7.4	PSF
TOTAL LOAD		=	45.9	PSF

SPACING = 24.0 IN. C/C

LOADING IN FLAT SECTION BASED ON A SLOPE OF 6.00/12

THIS TRUSS IS DESIGNED FOR RESIDENTIAL OR SMALL BUILDING REQUIREMENTS OF PART 9, NBCC 2015

THIS DESIGN COMPLIES WITH:
- PART 9 OF BCBC 2018 , ABC 2019
- PART 9 OF OBC 2012 (2019 AMENDMENT)
- CSA 086-14
- TPIC 2014

(55 % OF 43.9 P.S.F. G.S.L. PLUS 8.4 P.S.F. RAIN LOAD) EQUALS 32.5 P.S.F. SPECIFIED ROOF LIVE LOAD

ALLOWABLE DEFL.(LL)= L/360 (0.83")
CALCULATED VERT. DEFL.(LL) = L/ 999 (0.06")
ALLOWABLE DEFL.(TL)= L/360 (0.83")
CALCULATED VERT. DEFL.(TL) = L/ 999 (0.10")

CSI: TC=0.33/1.00 (D-E:1) , BC=0.30/1.00 (N-O:1) , WB=0.66/1.00 (H-K:1) , SSI=0.23/1.00 (D-E:1)

DOL LUMBER=1.00 NAIL=1.00 LS BEND=1.10 COMP=1.10 SHEAR=1.10 TENS= 1.10

COMPANION LIVE LOAD FACTOR = 1.00

TRUSS PLATE MANUFACTURER IS NOT RESPONSIBLE FOR QUALITY CONTROL IN THE TRUSS MANUFACTURING PLANT .

NAIL VALUES

PLATE	GRIP(DRY) (PSI) MAX	MIN	SHEAR (PLI) MAX	MIN	SECTION (PLI) MAX	MIN
MT20	650	371	1747	788	1987	1873

PLATE PLACEMENT TOL. = 0.250 inches

PLATE ROTATION TOL. = 5.0 Deg.

JSI GRIP= 0.88 (N) (INPUT = 0.90)
JSI METAL= 0.41 (H) (INPUT = 1.00)

LICENSED PROFESSIONAL ENGINEER
06-24-22
H. J. G. ALVES
100009024
PROVINCE OF ONTARIO

Structural component only
DWG# T-2215134

REVIEWED

JOB NAME	TRUSS NAME	QUANTITY	PLY	JOB DESC.	DRWG NO.
423533	T13	1	1	BAYVIEW WELLINGTON TRUSS DESC.	

Tamarack Roof Truss, Burlington

Version 8.530 S Feb 23 2022 MiTek Industries, Inc. Fri Jun 24 08:10:10 2022 Page 1
ID:c3jyj23uDijq_8pvRKbkZpy75XW-mLUooRXV0mEz8zaMZVvQ7dixOkrC6UZkP8MtwOz38bR

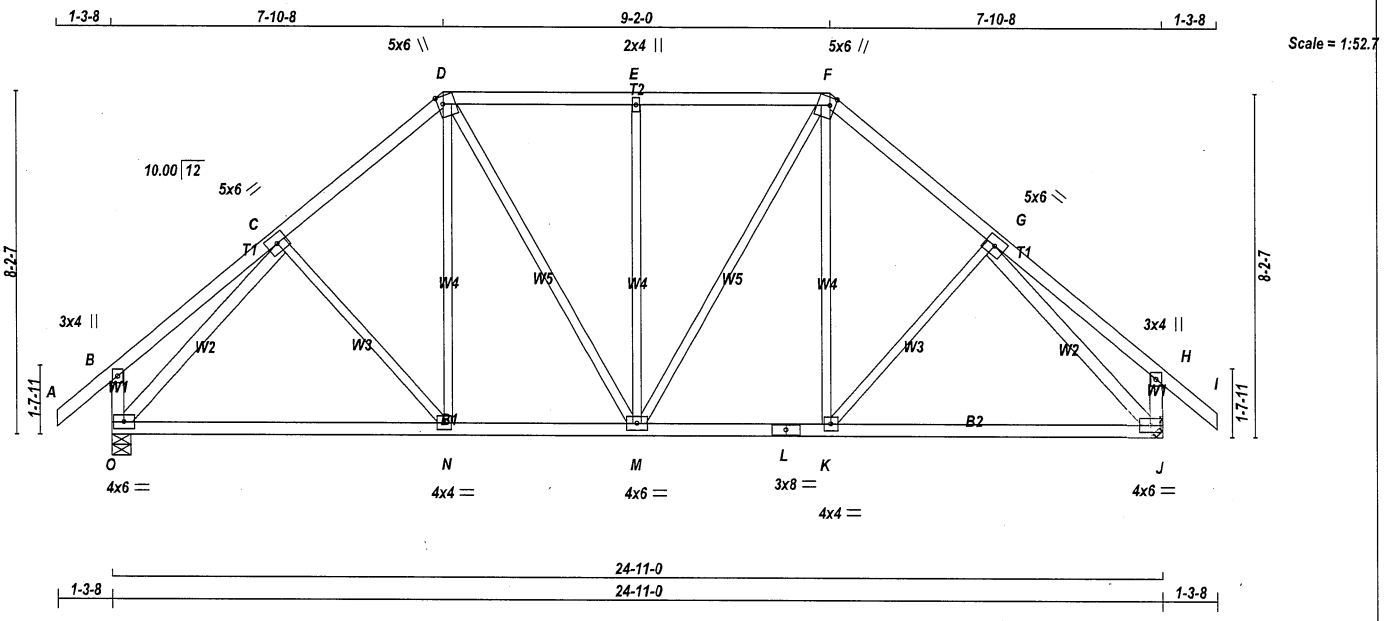

TOTAL WEIGHT = 125 lb

[M][F]

LUMBER

N. L. G. A. RULES

CHORDS	SIZE		LUMBER	DESCR.
A - D	2x4	DRY	No.2	SPF
D - F	2x4	DRY	No.2	SPF
F - I	2x4	DRY	No.2	SPF
O - B	2x4	DRY	No.2	SPF
J - H	2x4	DRY	No.2	SPF
O - L	2x4	DRY	No.2	SPF
L - J	2x4	DRY	No.2	SPF
ALL WEBS EXCEPT	2x3	DRY	No.2	SPF
O - C	2x4	DRY	No.2	SPF
G - J	2x4	DRY	No.2	SPF

DRY: SEASONED LUMBER.

PLATES (table is in inches)

JT	TYPE	PLATES	W	LEN	Y	X
B	TMV+p	MT20	3.0	4.0		
C	TMWW-t	MT20	5.0	6.0		
D	TTWW+m	MT20	5.0	6.0	2.25	1.50
E	TMW+w	MT20	2.0	4.0		
F	TTWW+m	MT20	5.0	6.0	2.25	1.50
G	TMWW-t	MT20	5.0	6.0		
H	TMV+p	MT20	3.0	4.0		
J	BMVW1-t	MT20	4.0	6.0		
K	BMWW-t	MT20	4.0	4.0		
L	BS-t	MT20	3.0	8.0		
M	BMWWW-t	MT20	4.0	6.0		
N	BMWW-t	MT20	4.0	4.0		
O	BMVW1-t	MT20	4.0	6.0		

NOTES- (1)
1) Lateral braces to be a minimum of 2X4 SPF #2.

DIMENSIONS, SUPPORTS AND LOADINGS SPECIFIED BY FABRICATOR TO BE VERIFIED BY BUILDING DESIGNER

BEARINGS

JT	FACTORED GROSS REACTION VERT	HORZ	MAXIMUM FACTORED GROSS REACTION DOWN	HORZ	UPLIFT	INPUT BRG IN-SX	REQRD BRG IN-SX
O	1787	0	1787	0	0	5-8	5-8
J	1787	0	1787	0	0	MECHANICAL	

A SUITABLE HANGER/MECHANICAL CONNECTION IS REQUIRED AT JOINT J. MINIMUM BEARING LENGTH AT JOINT J = 3-8.

UNFACTORED REACTIONS

JT	1ST LCASE COMBINED	MAX./MIN. COMPONENT REACTIONS SNOW	LIVE	PERM.LIVE	WIND	DEAD	SOIL
O	1250	899 / 0	0 / 0	0 / 0	0 / 0	351 / 0	0 / 0
J	1250	899 / 0	0 / 0	0 / 0	0 / 0	351 / 0	0 / 0

BEARING MATERIAL TO BE SPF NO.2 OR BETTER AT JOINT(S) O

BRACING

TOP CHORD TO BE SHEATHED OR MAX. PURLIN SPACING = 5.11 FT.
MAX. UNBRACED BOTTOM CHORD LENGTH = 10.00 FT OR RIGID CEILING DIRECTLY APPLIED.

ALL PITCH BREAKS AND PERIMETER CORNER JOINTS MUST BE LATERALLY RESTRAINED.

LOADING

TOTAL LOAD CASES: (4)

CHORDS

MEMB. FR-TO	MAX. FACTORED FORCE (LBS)	FACTORED VERT. LOAD LC1 (PLF) FROM	TO	MAX CSI (LC)	MAX. UNBRAC LENGTH
A- B	0 / 50	-112.4	-112.4	0.15 (1)	10.00
B- C	0 / 33	-112.4	-112.4	0.28 (1)	10.00
C- D	-1501 / 0	-112.4	-112.4	0.24 (1)	5.11
D- E	-1318 / 0	-112.4	-112.4	0.31 (1)	5.27
E- F	-1318 / 0	-112.4	-112.4	0.31 (1)	5.27
F- G	-1501 / 0	-112.4	-112.4	0.24 (1)	5.11
G- H	0 / 33	-112.4	-112.4	0.28 (1)	10.00
H- I	0 / 50	-112.4	-112.4	0.15 (1)	10.00
O- B	-324 / 0	0.0	0.0	0.03 (1)	7.81
J- H	-324 / 0	0.0	0.0	0.03 (1)	7.81
O- N	0 / 1201	-18.5	-18.5	0.34 (4)	10.00
N- M	0 / 1128	-18.5	-18.5	0.34 (4)	10.00
M- L	0 / 1128	-18.5	-18.5	0.34 (4)	10.00
L- K	0 / 1128	-18.5	-18.5	0.34 (4)	10.00
K- J	0 / 1201	-18.5	-18.5	0.34 (4)	10.00

WEBS

MEMB. FR-TO	MAX. FACTORED FORCE (LBS)	MAX CSI (LC)
C- N	-115 / 19	0.08 (1)
N- D	0 / 241	0.06 (4)
D- M	0 / 378	0.09 (1)
M- E	-624 / 0	0.82 (1)
M- F	0 / 378	0.09 (1)
K- F	0 / 241	0.06 (4)
K- G	-115 / 19	0.08 (1)
O- C	-1847 / 0	0.81 (1)
G- J	-1847 / 0	0.81 (1)

DESIGN CRITERIA

SPECIFIED LOADS:

TOP CH.	LL	=	32.5	PSF
	DL	=	6.0	PSF
BOT CH.	LL	=	0.0	PSF
	DL	=	7.4	PSF
TOTAL LOAD		=	45.9	PSF

SPACING = 24.0 IN. C/C

LOADING IN FLAT SECTION BASED ON A SLOPE OF 6.00/12

THIS TRUSS IS DESIGNED FOR RESIDENTIAL OR SMALL BUILDING REQUIREMENTS OF PART 9, NBCC 2015

THIS DESIGN COMPLIES WITH:
- PART 9 OF BCBC 2018 , ABC 2019
- PART 9 OF OBC 2012 (2019 AMENDMENT)
- CSA 086-14
- TPIC 2014

(55 % OF 43.9 P.S.F. G.S.L. PLUS 8.4 P.S.F. RAIN LOAD) EQUALS 32.5 P.S.F. SPECIFIED ROOF LIVE LOAD

ALLOWABLE DEFL.(LL)= L/360 (0.83")
CALCULATED VERT. DEFL.(LL) = L/ 999 (0.04")
ALLOWABLE DEFL.(TL)= L/360 (0.83")
CALCULATED VERT. DEFL.(TL) = L/ 999 (0.14")

CSI: TC=0.31/1.00 (D-E:1) , BC=0.34/1.00 (K-M:4) , WB=0.82/1.00 (E-M:1) , SSI=0.25/1.00 (D-E:1)

DOL LUMBER=1.00 NAIL=1.00 LS BEND=1.10 COMP=1.10 SHEAR=1.10 TENS= 1.10

COMPANION LIVE LOAD FACTOR = 1.00

AUTOSOLVE HEELS OFF

TRUSS PLATE MANUFACTURER IS NOT RESPONSIBLE FOR QUALITY CONTROL IN THE TRUSS MANUFACTURING PLANT .

NAIL VALUES

PLATE	GRIP(DRY) (PSI) MAX	MIN	SHEAR (PLI) MAX	MIN	SECTION (PLI) MAX	MIN
MT20	650	371	1747	788	1987	1873

PLATE PLACEMENT TOL. = 0.250 inches

PLATE ROTATION TOL. = 5.0 Deg.

JSI GRIP= 0.85 (J) (INPUT = 0.90)
JSI METAL= 0.45 (L) (INPUT = 1.00)

LICENSED PROFESSIONAL ENGINEER
06-24-22
H. J. G. ALVES
100009024
PROVINCE OF ONTARIO

Structural component only
DWG# T-2215135

REVIEWED

JOB NAME	TRUSS NAME	QUANTITY	PLY	JOB DESC.	DRWG NO.
423533	T14S	4	1	BAYVIEW WELLINGTON TRUSS DESC.	

Tamarack Roof Truss, Burlington

Version 8.530 S Feb 23 2022 MiTek Industries, Inc. Fri Jun 24 08:10:11 2022 Page 1
ID:c3jyj23uDijq_8pvRKbkZpy75XW-EY2B?mY7n4Mqm69Y7CQfgrF8S7D8r35tdo6QTqz38bQ

Scale = 1:46.2

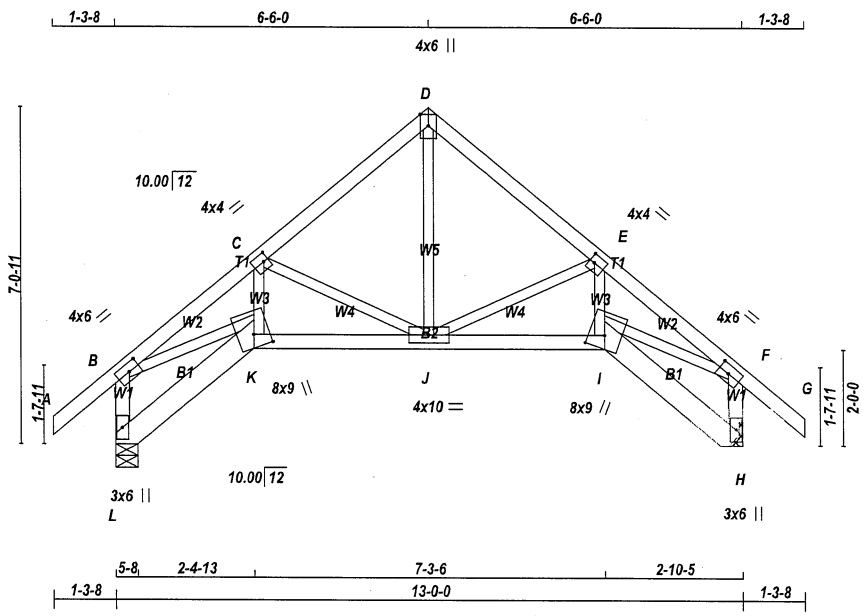

TOTAL WEIGHT = 4 X 65 = 262 lb

[M][F]

LUMBER

N. L. G. A. RULES

CHORDS	SIZE		LUMBER	DESCR.
A - D	2x4	DRY	No.2	SPF
D - G	2x4	DRY	No.2	SPF
L - B	2x4	DRY	No.2	SPF
H - F	2x4	DRY	No.2	SPF
L - K	2x6	DRY	No.2	SPF
K - I	2x4	DRY	No.2	SPF
I - H	2x6	DRY	No.2	SPF
ALL WEBS EXCEPT	2x3	DRY	No.2	SPF

DRY: SEASONED LUMBER.

PLATES (table is in inches)

JT	TYPE	PLATES	W	LEN	Y	X
B	TMVW-t	MT20	4.0	6.0	2.00	2.75
C	TMWW-t	MT20	4.0	4.0	2.00	1.25
D	TTW+p	MT20	4.0	6.0	Edge	
E	TMWW-t	MT20	4.0	4.0	2.00	1.25
F	TMVW-t	MT20	4.0	6.0	2.00	2.75
H	BMV1+p	MT20	3.0	6.0		
I	BBWW+m	MT20	8.0	9.0	3.25	4.00
J	BMWWW-t	MT20	4.0	10.0		
K	BBWW+m	MT20	8.0	9.0	3.25	4.00
L	BMV1+p	MT20	3.0	6.0		

Edge - INDICATES REFERENCE CORNER OF PLATE TOUCHES EDGE OF CHORD.

NOTES- (1)
1) Lateral braces to be a minimum of 2X4 SPF #2.

DIMENSIONS, SUPPORTS AND LOADINGS SPECIFIED BY FABRICATOR TO BE VERIFIED BY BUILDING DESIGNER

BEARINGS

JT	FACTORED GROSS REACTION VERT	HORZ	MAXIMUM FACTORED GROSS REACTION DOWN	HORZ	UPLIFT	INPUT BRG IN-SX	REQRD BRG IN-SX
L	1007	0	1007	0	0	5-8	5-8
H	1007	0	1007	0	0	MECHANICAL	

A SUITABLE HANGER/MECHANICAL CONNECTION IS REQUIRED AT JOINT H. MINIMUM BEARING LENGTH AT JOINT H = 3-8.

UNFACTORED REACTIONS

JT	1ST LCASE COMBINED	MAX./MIN. COMPONENT REACTIONS SNOW	LIVE	PERM.LIVE	WIND	DEAD	SOIL
L	703	512 / 0	0 / 0	0 / 0	0 / 0	191 / 0	0 / 0
H	703	512 / 0	0 / 0	0 / 0	0 / 0	191 / 0	0 / 0

BEARING MATERIAL TO BE SPF NO.2 OR BETTER AT JOINT(S) L

BRACING

TOP CHORD TO BE SHEATHED OR MAX. PURLIN SPACING = 5.11 FT.
MAX. UNBRACED BOTTOM CHORD LENGTH = 10.00 FT OR RIGID CEILING DIRECTLY APPLIED.

ALL PITCH BREAKS AND PERIMETER CORNER JOINTS MUST BE LATERALLY RESTRAINED.

LOADING

TOTAL LOAD CASES: (4)

CHORDS

MEMB. FR-TO	MAX. FACTORED FORCE (LBS)	FACTORED VERT. LOAD (PLF) FROM	TO	LC1 MAX CSI (LC)	MAX. UNBRAC LENGTH
A- B	0 / 50	-112.4	-112.4	0.15 (1)	10.00
B- C	-1586 / 0	-112.4	-112.4	0.15 (1)	5.11
C- D	-791 / 0	-112.4	-112.4	0.17 (1)	6.25
D- E	-791 / 0	-112.4	-112.4	0.17 (1)	6.25
E- F	-1586 / 0	-112.4	-112.4	0.15 (1)	5.11
F- G	0 / 50	-112.4	-112.4	0.15 (1)	10.00
L- B	-980 / 0	0.0	0.0	0.11 (1)	7.81
H- F	-980 / 0	0.0	0.0	0.11 (1)	7.81
L- K	0 / 0	-18.5	-18.5	0.02 (4)	10.00
K- J	0 / 1213	-18.5	-18.5	0.23 (1)	10.00
J- I	0 / 1213	-18.5	-18.5	0.23 (1)	10.00
I- H	0 / 0	-18.5	-18.5	0.02 (4)	10.00

WEBS

MEMB. FR-TO	MAX. FACTORED FORCE (LBS)	MAX CSI (LC)
J- D	0 / 654	0.15 (1)
J- E	-695 / 0	0.19 (1)
I- E	0 / 413	0.09 (1)
C- J	-695 / 0	0.19 (1)
K- C	0 / 413	0.09 (1)
B- K	0 / 1282	0.29 (1)
I- F	0 / 1282	0.29 (1)

DESIGN CRITERIA

SPECIFIED LOADS:

TOP CH.	LL	=	32.5	PSF
	DL	=	6.0	PSF
BOT CH.	LL	=	0.0	PSF
	DL	=	7.4	PSF
TOTAL LOAD		=	45.9	PSF

SPACING = 24.0 IN. C/C

THIS TRUSS IS DESIGNED FOR RESIDENTIAL OR SMALL BUILDING REQUIREMENTS OF PART 9, NBCC 2015

THIS DESIGN COMPLIES WITH:
- PART 9 OF BCBC 2018 , ABC 2019
- PART 9 OF OBC 2012 (2019 AMENDMENT)
- CSA 086-14
- TPIC 2014

(55 % OF 43.9 P.S.F. G.S.L. PLUS 8.4 P.S.F. RAIN LOAD) EQUALS 32.5 P.S.F. SPECIFIED ROOF LIVE LOAD

ALLOWABLE DEFL.(LL)= L/360 (0.43")
CALCULATED VERT. DEFL.(LL) = L/ 999 (0.04")
ALLOWABLE DEFL.(TL)= L/360 (0.43")
CALCULATED VERT. DEFL.(TL) = L/ 999 (0.07")

CSI: TC=0.17/1.00 (C-D:1) , BC=0.23/1.00 (J-K:1) , WB=0.29/1.00 (B-K:1) , SSI=0.14/1.00 (D-E:1)

DOL LUMBER=1.00 NAIL=1.00 LS BEND=1.10 COMP=1.10 SHEAR=1.10 TENS= 1.10

COMPANION LIVE LOAD FACTOR = 1.00

AUTOSOLVE HEELS OFF

TRUSS PLATE MANUFACTURER IS NOT RESPONSIBLE FOR QUALITY CONTROL IN THE TRUSS MANUFACTURING PLANT .

NAIL VALUES

PLATE	GRIP(DRY) (PSI) MAX	MIN	SHEAR (PLI) MAX	MIN	SECTION (PLI) MAX	MIN
MT20	650	371	1747	788	1987	1873

PLATE PLACEMENT TOL. = 0.250 inches

PLATE ROTATION TOL. = 5.0 Deg.

JSI GRIP= 0.79 (F) (INPUT = 0.90)
JSI METAL= 0.44 (K) (INPUT = 1.00)

LICENSED PROFESSIONAL ENGINEER
06-24-22
H. J. G. ALVES
100009024
PROVINCE OF ONTARIO

Structural component only
DWG# T-2215136

REVIEWED

JOB NAME	TRUSS NAME	QUANTITY	PLY	JOB DESC.	DRWG NO.
423533	T15	1	1	BAYVIEW WELLINGTON TRUSS DESC.	

Tamarack Roof Truss, Burlington

Version 8.530 S Feb 23 2022 MiTek Industries, Inc. Fri Jun 24 08:10:12 2022 Page 1
ID:c3jyj23uDijq_8pvRKbkZpy75XW-jkcZD6YlYNUhOGklhwxuC2nFJXboaau1sSr_?Gz38bP

Scale = 1:13.5

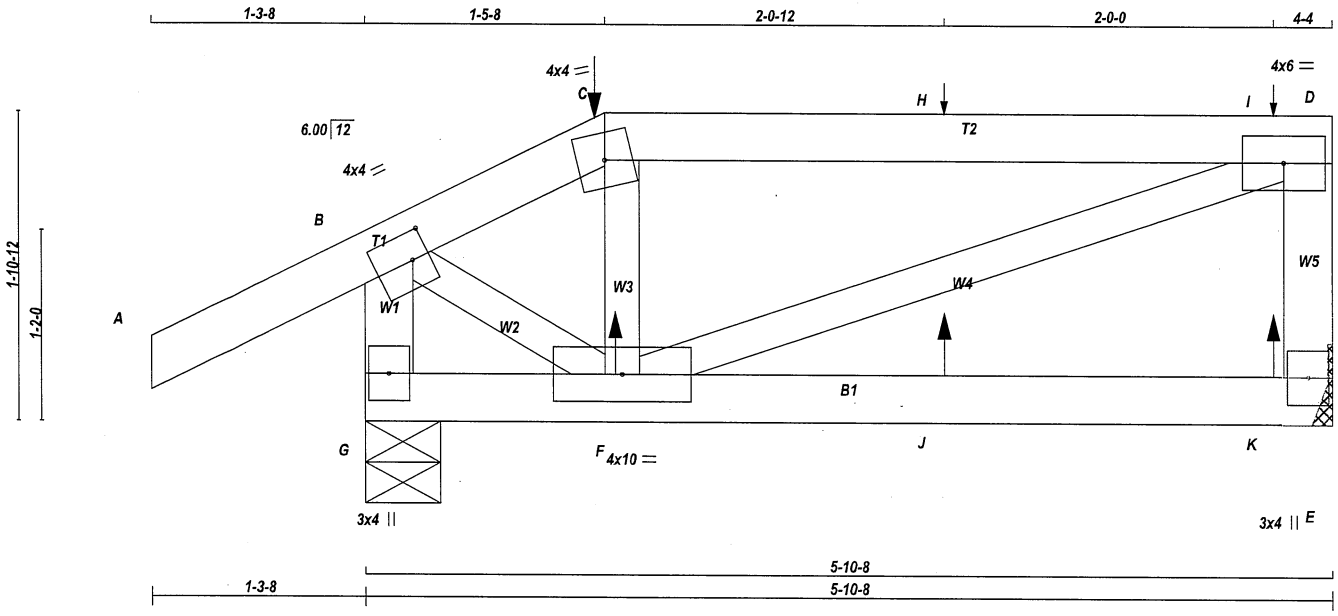

TOTAL WEIGHT = 23 lb
[M]

LUMBER
N. L. G. A. RULES

CHORDS	SIZE		LUMBER	DESCR.
A - C	2x4	DRY	No.2	SPF
C - D	2x4	DRY	No.2	SPF
E - D	2x4	DRY	No.2	SPF
G - B	2x4	DRY	No.2	SPF
G - E	2x4	DRY	No.2	SPF
ALL WEBS EXCEPT	2x3	DRY	No.2	SPF

DRY: SEASONED LUMBER.

PLATES (table is in inches)

JT	TYPE	PLATES	W	LEN	Y	X
B	TMVW-t	MT20	4.0	4.0	2.00	1.25
C	TTW-m	MT20	4.0	4.0		
D	TMVW-t	MT20	4.0	6.0		
E	BMV1+p	MT20	3.0	4.0		
F	BMWWW-t	MT20	4.0	10.0		
G	BMV1+p	MT20	3.0	4.0		

NOTES- (1)
1) Lateral braces to be a minimum of 2X4 SPF #2.

DIMENSIONS, SUPPORTS AND LOADINGS SPECIFIED BY FABRICATOR TO BE VERIFIED BY BUILDING DESIGNER

BEARINGS

JT	FACTORED GROSS REACTION VERT	HORZ	MAXIMUM FACTORED GROSS REACTION DOWN	HORZ	UPLIFT	INPUT BRG IN-SX	REQRD BRG IN-SX
E	344	0	344	0	0	MECHANICAL	
G	542	0	542	0	0	5-8	5-8

A SUITABLE HANGER/MECHANICAL CONNECTION IS REQUIRED AT JOINT E. MINIMUM BEARING LENGTH AT JOINT E = 1-8.

UNFACTORED REACTIONS

JT	1ST LCASE COMBINED	MAX./MIN. COMPONENT REACTIONS SNOW	LIVE	PERM.LIVE	WIND	DEAD	SOIL
E	242	165 / 0	0 / 0	0 / 0	0 / 0	77 / 0	0 / 0
G	377	280 / 0	0 / 0	0 / 0	0 / 0	97 / 0	0 / 0

BEARING MATERIAL TO BE SPF NO.2 OR BETTER AT JOINT(S) G

BRACING
TOP CHORD TO BE SHEATHED OR MAX. PURLIN SPACING = 6.25 FT.
MAX. UNBRACED BOTTOM CHORD LENGTH = 10.00 FT OR RIGID CEILING DIRECTLY APPLIED.

ALL PITCH BREAKS AND PERIMETER CORNER JOINTS MUST BE LATERALLY RESTRAINED.

LOADING
TOTAL LOAD CASES: (7)

CHORDS

MEMB. FR-TO	MAX. FACTORED FORCE (LBS)	FACTORED VERT. LOAD (PLF) FROM	TO	LC1	MAX CSI (LC)	MAX. UNBRAC LENGTH
A- B	0 / 34	-112.4	-112.4	0.16	(1)	10.00
B- C	-277 / 0	-112.4	-112.4	0.16	(1)	6.25
C- H	-209 / 0	-112.4	-112.4	0.41	(1)	6.25
H- I	-209 / 0	-112.4	-112.4	0.41	(1)	6.25
I- D	-209 / 0	-112.4	-112.4	0.41	(1)	6.25
E- D	-326 / 0	0.0	0.0	0.04	(1)	7.81
G- B	-536 / 0	0.0	0.0	0.06	(1)	7.81
G- F	0 / 0	-18.5	-18.5	0.08	(4)	10.00
F- J	0 / 0	-18.5	-18.5	0.08	(4)	10.00
J- K	0 / 0	-18.5	-18.5	0.08	(4)	10.00
K- E	0 / 0	-18.5	-18.5	0.08	(4)	10.00

WEBS

MEMB. FR-TO	MAX. FACTORED FORCE (LBS)	MAX CSI (LC)
F- C	-153 / 6	0.02 (1)
F- D	0 / 223	0.06 (1)
B- F	0 / 250	0.06 (1)

SPECIFIED CONCENTRATED LOADS (LBS)

JT	LOC.	LC1	MAX-	MAX+	FACE	DIR.	TYPE	HEEL	CONN.
C	1-5-8	-2	-2	94	FRONT	VERT	TOTAL	---	C1
F	1-6-4	9	1	12	FRONT	VERT	TOTAL	---	C1
H	3-6-4	1	1	94	FRONT	VERT	TOTAL	---	C1
I	5-6-4	1	1	73	FRONT	VERT	TOTAL	---	C1
J	3-6-4	9	1	12	FRONT	VERT	TOTAL	---	C1
K	5-6-4	9	1	12	FRONT	VERT	TOTAL	---	C1

CONNECTION REQUIREMENTS

1) **C1:** A SUITABLE HANGER/MECHANICAL CONNECTION IS REQUIRED.

DESIGN CRITERIA

SPECIFIED LOADS:

TOP CH.	LL	=	32.5	PSF
	DL	=	6.0	PSF
BOT CH.	LL	=	0.0	PSF
	DL	=	7.4	PSF
TOTAL LOAD		=	45.9	PSF

SPACING = 24.0 IN. C/C

LOADING IN FLAT SECTION BASED ON A SLOPE OF 6.00/12

THIS TRUSS IS DESIGNED FOR RESIDENTIAL OR SMALL BUILDING REQUIREMENTS OF PART 9, NBCC 2015

THIS DESIGN COMPLIES WITH:
- PART 9 OF BCBC 2018 , ABC 2019
- PART 9 OF OBC 2012 (2019 AMENDMENT)
- CSA 086-14
- TPIC 2014

DESIGN ASSUMPTIONS
-OVERHANG NOT TO BE ALTERED OR CUT OFF.

(55 % OF 43.9 P.S.F. G.S.L. PLUS 8.4 P.S.F. RAIN LOAD) EQUALS 32.5 P.S.F. SPECIFIED ROOF LIVE LOAD

ALLOWABLE DEFL.(LL)= L/360 (0.20")
CALCULATED VERT. DEFL.(LL) = L/ 999 (0.00")
ALLOWABLE DEFL.(TL)= L/360 (0.20")
CALCULATED VERT. DEFL.(TL) = L/ 999 (0.01")

CSI: TC=0.41/1.00 (C-D:1) , BC=0.08/1.00 (F-G:4) . WB=0.06/1.00 (B-F:1) , SSI=0.21/1.00 (C-D:1)

DOL LUMBER=1.00 NAIL=1.00 LS BEND=1.00 COMP=1.00 SHEAR=1.00 TENS= 1.00

COMPANION LIVE LOAD FACTOR = 1.00

TRUSS PLATE MANUFACTURER IS NOT RESPONSIBLE FOR QUALITY CONTROL IN THE TRUSS MANUFACTURING PLANT .

NAIL VALUES

PLATE	GRIP(DRY) (PSI) MAX	MIN	SHEAR (PLI) MAX	MIN	SECTION (PLI) MAX	MIN
MT20	650	371	1747	788	1987	1873

PLATE PLACEMENT TOL. = 0.250 inches

PLATE ROTATION TOL. = 5.0 Deg.

JSI GRIP= 0.36 (B) (INPUT = 0.90)
JSI METAL= 0.13 (B) (INPUT = 1.00)

LICENSED PROFESSIONAL ENGINEER
06-24-22
H. J. G. ALVES
100009024
PROVINCE OF ONTARIO

Structural component only
DWG# T-2215137

REVIEWED

JOB NAME	TRUSS NAME	QUANTITY	PLY	JOB DESC.	DRWG NO.
423533	T16S	1	1	BAYVIEW WELLINGTON TRUSS DESC.	

Tamarack Roof Truss, Burlington

Version 8.530 S Feb 23 2022 MiTek Industries, Inc. Fri Jun 24 08:10:13 2022 Page 1
ID:c3jyj23uDijq_8pvRKbkZpy75XW-BwAxQSZNJhcY?QJxEdS7lGKTFxxNJ0DA56bXXiz38bO

Scale = 1:18.8

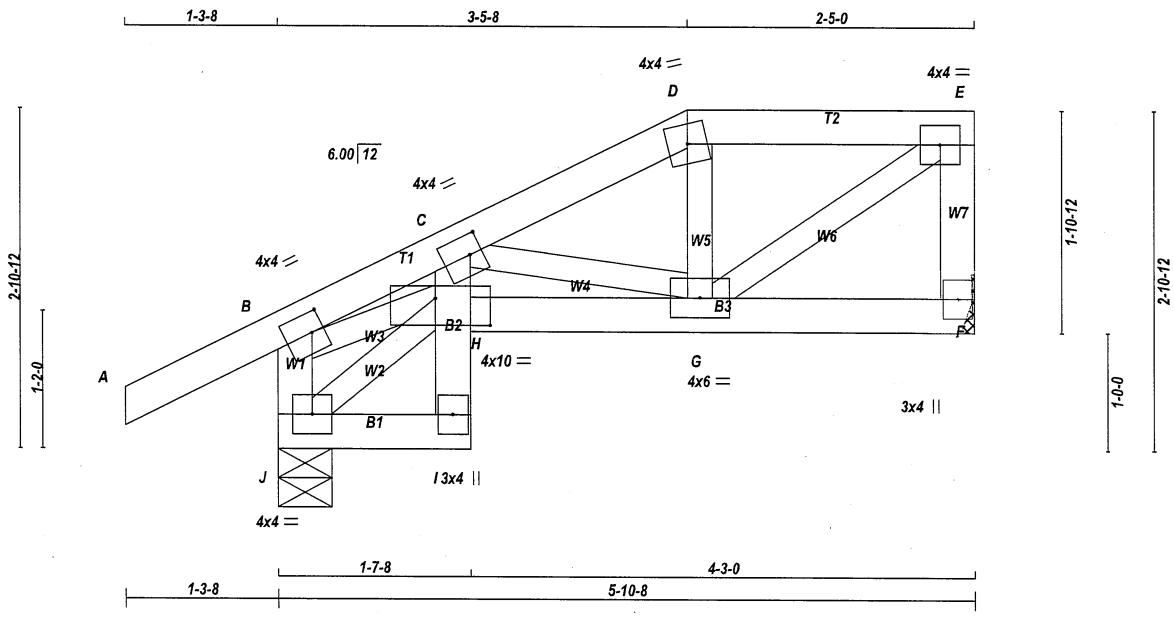

TOTAL WEIGHT = 26 lb
[M]

LUMBER
N. L. G. A. RULES

CHORDS	SIZE		LUMBER	DESCR.
A - D	2x4	DRY	No.2	SPF
D - E	2x4	DRY	No.2	SPF
F - E	2x4	DRY	No.2	SPF
J - B	2x4	DRY	No.2	SPF
J - I	2x4	DRY	No.2	SPF
I - C	2x4	DRY	No.2	SPF
H - F	2x4	DRY	No.2	SPF
ALL WEBS EXCEPT	2x3	DRY	No.2	SPF

DRY: SEASONED LUMBER.

PLATES (table is in inches)

JT	TYPE	PLATES	W	LEN	Y	X
B	TMVW-t	MT20	4.0	4.0	2.00	1.25
C	TMVW-t	MT20	4.0	4.0	2.00	1.25
D	TTW-m	MT20	4.0	4.0		
E	TMVW-t	MT20	4.0	4.0		
F	BMV1+p	MT20	3.0	4.0		
G	BMWWW-t	MT20	4.0	6.0		
H	BVMWW-l	MT20	4.0	10.0	2.75	5.50
I	BMV+p	MT20	3.0	4.0		
J	BMVW1-t	MT20	4.0	4.0		

NOTES- (1)
1) Lateral braces to be a minimum of 2X4 SPF #2.

DIMENSIONS, SUPPORTS AND LOADINGS SPECIFIED BY FABRICATOR TO BE VERIFIED BY BUILDING DESIGNER

BEARINGS

JT	FACTORED GROSS REACTION VERT	HORZ	MAXIMUM FACTORED GROSS REACTION DOWN	HORZ	UPLIFT	INPUT BRG IN-SX	REQRD BRG IN-SX
F	367	0	367	0	0	MECHANICAL	
J	555	0	555	0	0	5-8	5-8

A SUITABLE HANGER/MECHANICAL CONNECTION IS REQUIRED AT JOINT F. MINIMUM BEARING LENGTH AT JOINT F = 1-8.

UNFACTORED REACTIONS

JT	1ST LCASE COMBINED	MAX./MIN. COMPONENT REACTIONS SNOW	LIVE	PERM.LIVE	WIND	DEAD	SOIL
F	257	181 / 0	0 / 0	0 / 0	0 / 0	77 / 0	0 / 0
J	386	289 / 0	0 / 0	0 / 0	0 / 0	97 / 0	0 / 0

BEARING MATERIAL TO BE SPF NO.2 OR BETTER AT JOINT(S) J

BRACING
TOP CHORD TO BE SHEATHED OR MAX. PURLIN SPACING = 6.25 FT.
MAX. UNBRACED BOTTOM CHORD LENGTH = 10.00 FT OR RIGID CEILING DIRECTLY APPLIED.

ALL PITCH BREAKS AND PERIMETER CORNER JOINTS MUST BE LATERALLY RESTRAINED.

LOADING
TOTAL LOAD CASES: (4)

CHORDS

MEMB. FR-TO	MAX. FACTORED FORCE (LBS)	FACTORED VERT. LOAD (PLF) FROM	TO	MAX CSI (LC)	MAX. UNBRAC LENGTH
A- B	0 / 34	-112.4	-112.4	0.15 (1)	10.00
B- C	-627 / 0	-112.4	-112.4	0.15 (1)	6.25
C- D	-339 / 0	-112.4	-112.4	0.10 (1)	6.25
D- E	-296 / 0	-112.4	-112.4	0.11 (1)	6.25
F- E	-348 / 0	0.0	0.0	0.04 (1)	7.81
J- B	-497 / 0	0.0	0.0	0.05 (1)	7.81
J- I	0 / 58	-18.5	-18.5	0.02 (1)	10.00
I- H	0 / 15	0.0	0.0	0.09 (1)	10.00
H- C	0 / 117	0.0	0.0	0.11 (1)	10.00
H- G	0 / 661	-18.5	-18.5	0.12 (1)	10.00
G- F	0 / 0	-18.5	-18.5	0.02 (4)	10.00

WEBS

MEMB. FR-TO	MAX. FACTORED FORCE (LBS)	MAX CSI (LC)
C- G	-364 / 0	0.06 (1)
G- D	-110 / 4	0.02 (1)
G- E	0 / 365	0.08 (1)
B- H	0 / 532	0.12 (1)
J- H	-73 / 0	0.01 (1)

DESIGN CRITERIA

SPECIFIED LOADS:

TOP CH.	LL	=	32.5	PSF
	DL	=	6.0	PSF
BOT CH.	LL	=	0.0	PSF
	DL	=	7.4	PSF
TOTAL LOAD		=	45.9	PSF

SPACING = 24.0 IN. C/C

LOADING IN FLAT SECTION BASED ON A SLOPE OF 6.00/12

THIS TRUSS IS DESIGNED FOR RESIDENTIAL OR SMALL BUILDING REQUIREMENTS OF PART 9, NBCC 2015

THIS DESIGN COMPLIES WITH:
- PART 9 OF BCBC 2018 , ABC 2019
- PART 9 OF OBC 2012 (2019 AMENDMENT)
- CSA 086-14
- TPIC 2014

DESIGN ASSUMPTIONS
-OVERHANG NOT TO BE ALTERED OR CUT OFF.

(55 % OF 43.9 P.S.F. G.S.L. PLUS 8.4 P.S.F. RAIN LOAD) EQUALS 32.5 P.S.F. SPECIFIED ROOF LIVE LOAD

ALLOWABLE DEFL.(LL)= L/360 (0.20")
CALCULATED VERT. DEFL.(LL) = L/ 999 (0.01")
ALLOWABLE DEFL.(TL)= L/360 (0.20")
CALCULATED VERT. DEFL.(TL) = L/ 999 (0.02")

CSI: TC=0.15/1.00 (A-B:1) , BC=0.12/1.00 (G-H:1) , WB=0.12/1.00 (B-H:1) , SSI=0.12/1.00 (B-C:1)

DOL LUMBER=1.00 NAIL=1.00 LS BEND=1.10 COMP=1.10 SHEAR=1.10 TENS= 1.10

COMPANION LIVE LOAD FACTOR = 1.00

AUTOSOLVE RIGHT HEEL ONLY

TRUSS PLATE MANUFACTURER IS NOT RESPONSIBLE FOR QUALITY CONTROL IN THE TRUSS MANUFACTURING PLANT .

NAIL VALUES

PLATE	GRIP(DRY) (PSI) MAX	MIN	SHEAR (PLI) MAX	MIN	SECTION (PLI) MAX	MIN
MT20	650	371	1747	788	1987	1873

PLATE PLACEMENT TOL. = 0.250 inches

PLATE ROTATION TOL. = 5.0 Deg.

JSI GRIP= 0.64 (B) (INPUT = 0.90)
JSI METAL= 0.25 (B) (INPUT = 1.00)

LICENSED PROFESSIONAL ENGINEER
06-24-22
H. J. G. ALVES
100009024
PROVINCE OF ONTARIO

Structural component only
DWG# T-2215138

REVIEWED

JOB NAME	TRUSS NAME	QUANTITY	PLY	JOB DESC.	DRWG NO.
423533	T17S	1	1	BAYVIEW WELLINGTON TRUSS DESC.	

Tamarack Roof Truss, Burlington

Version 8.530 S Feb 23 2022 MiTek Industries, Inc. Fri Jun 24 08:10:14 2022 Page 1
ID:c3jyj23uDijq_8pvRKbkZpy75XW-f7kJeoa?4?kOdat7oKzMlTtccLF62PkKKmK439z38bN

Scale: 1/2"=1'

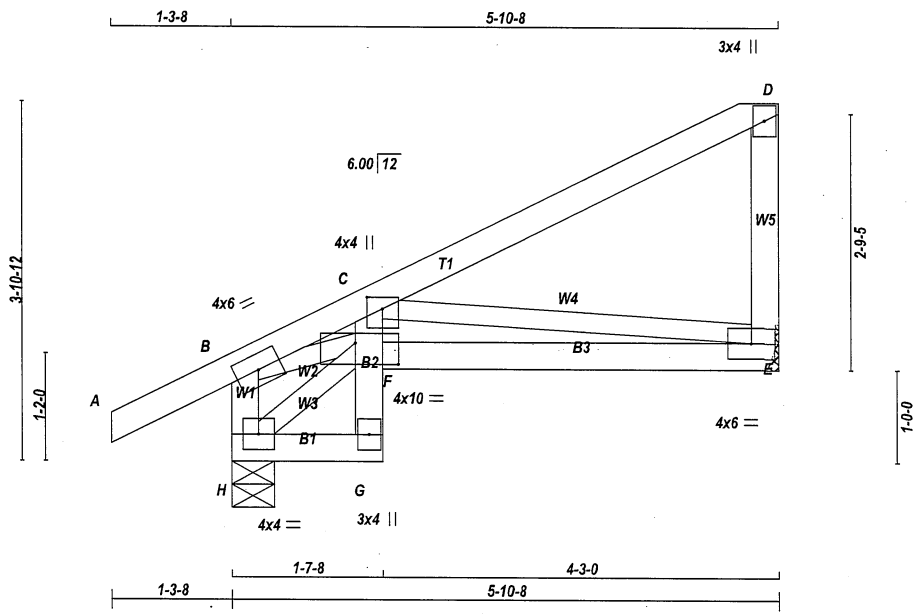

TOTAL WEIGHT = 26 lb
[M]

LUMBER
N. L. G. A. RULES

CHORDS	SIZE		LUMBER	DESCR.
A - D	2x4	DRY	No.2	SPF
E - D	2x4	DRY	No.2	SPF
H - B	2x4	DRY	No.2	SPF
H - G	2x4	DRY	No.2	SPF
G - C	2x4	DRY	No.2	SPF
F - E	2x4	DRY	No.2	SPF
ALL WEBS EXCEPT	2x3	DRY	No.2	SPF

DRY: SEASONED LUMBER.

PLATES (table is in inches)

JT	TYPE	PLATES	W	LEN	Y	X
B	TMVW-t	MT20	4.0	6.0		
C	TMVW+p	MT20	4.0	4.0	1.50	2.00
D	TMV+p	MT20	3.0	4.0		
E	BMVW1-t	MT20	4.0	6.0		
F	BVMWW-t	MT20	4.0	10.0	2.75	5.50
G	BMV+p	MT20	3.0	4.0		
H	BMVW1-t	MT20	4.0	4.0		

NOTES- (1)
1) Lateral braces to be a minimum of 2X4 SPF #2.

DIMENSIONS, SUPPORTS AND LOADINGS SPECIFIED BY FABRICATOR TO BE VERIFIED BY BUILDING DESIGNER

BEARINGS

JT	FACTORED GROSS REACTION VERT	HORZ	MAXIMUM FACTORED GROSS REACTION DOWN	HORZ	UPLIFT	INPUT BRG IN-SX	REQRD BRG IN-SX
E	367	0	367	0	0	MECHANICAL	
H	555	0	555	0	0	5-8	5-8

A SUITABLE HANGER/MECHANICAL CONNECTION IS REQUIRED AT JOINT E. MINIMUM BEARING LENGTH AT JOINT E = 1-8.

UNFACTORED REACTIONS

JT	1ST LCASE COMBINED	MAX./MIN. COMPONENT REACTIONS SNOW	LIVE	PERM.LIVE	WIND	DEAD	SOIL
E	257	181 / 0	0 / 0	0 / 0	0 / 0	77 / 0	0 / 0
H	386	289 / 0	0 / 0	0 / 0	0 / 0	97 / 0	0 / 0

BEARING MATERIAL TO BE SPF NO.2 OR BETTER AT JOINT(S) H

BRACING
TOP CHORD TO BE SHEATHED OR MAX. PURLIN SPACING = 6.25 FT.
MAX. UNBRACED BOTTOM CHORD LENGTH = 10.00 FT OR RIGID CEILING DIRECTLY APPLIED.

ALL PITCH BREAKS AND PERIMETER CORNER JOINTS MUST BE LATERALLY RESTRAINED.

LOADING
TOTAL LOAD CASES: (4)

CHORDS

MEMB. FR-TO	MAX. FACTORED FORCE (LBS)	FACTORED VERT. LOAD (PLF) FROM	TO	LC1	MAX CSI (LC)	MAX. UNBRAC LENGTH
A- B	0 / 34	-112.4	-112.4	0.15 (1)	10.00	
B- C	-856 / 0	-112.4	-112.4	0.16 (1)	6.25	
C- D	-11 / 0	-112.4	-112.4	0.30 (1)	6.25	
E- D	-222 / 0	0.0	0.0	0.03 (1)	7.81	
H- B	-480 / 0	0.0	0.0	0.05 (1)	7.81	
H- G	0 / 80	-18.5	-18.5	0.02 (1)	10.00	
G- F	0 / 15	0.0	0.0	0.12 (1)	10.00	
F- C	0 / 155	0.0	0.0	0.15 (1)	10.00	
F- E	0 / 956	-18.5	-18.5	0.21 (1)	10.00	

WEBS

MEMB. FR-TO	MAX. FACTORED FORCE (LBS)	MAX CSI (LC)
C- E	-964 / 0	0.29 (1)
H- F	-101 / 0	0.01 (1)
B- F	0 / 779	0.18 (1)

DESIGN CRITERIA

SPECIFIED LOADS:

TOP CH.	LL	=	32.5	PSF
	DL	=	6.0	PSF
BOT CH.	LL	=	0.0	PSF
	DL	=	7.4	PSF
TOTAL LOAD		=	45.9	PSF

SPACING = 24.0 IN. C/C

THIS TRUSS IS DESIGNED FOR RESIDENTIAL OR SMALL BUILDING REQUIREMENTS OF PART 9, NBCC 2015

THIS DESIGN COMPLIES WITH:
- PART 9 OF BCBC 2018 , ABC 2019
- PART 9 OF OBC 2012 (2019 AMENDMENT)
- CSA 086-14
- TPIC 2014

DESIGN ASSUMPTIONS
-OVERHANG NOT TO BE ALTERED OR CUT OFF.

(55 % OF 43.9 P.S.F. G.S.L. PLUS 8.4 P.S.F. RAIN LOAD) EQUALS 32.5 P.S.F. SPECIFIED ROOF LIVE LOAD

ALLOWABLE DEFL.(LL)= L/360 (0.20")
CALCULATED VERT. DEFL.(LL) = L/ 999 (0.03")
ALLOWABLE DEFL.(TL)= L/360 (0.20")
CALCULATED VERT. DEFL.(TL) = L/ 999 (0.05")

CSI: TC=0.30/1.00 (C-D:1) , BC=0.21/1.00 (E-F:1) , WB=0.29/1.00 (C-E:1) , SSI=0.19/1.00 (C-D:1)

DOL LUMBER=1.00 NAIL=1.00 LS BEND=1.10 COMP=1.10 SHEAR=1.10 TENS= 1.10

COMPANION LIVE LOAD FACTOR = 1.00

AUTOSOLVE RIGHT HEEL ONLY

TRUSS PLATE MANUFACTURER IS NOT RESPONSIBLE FOR QUALITY CONTROL IN THE TRUSS MANUFACTURING PLANT .

NAIL VALUES

PLATE	GRIP(DRY) (PSI) MAX	MIN	SHEAR (PLI) MAX	MIN	SECTION (PLI) MAX	MIN
MT20	650	371	1747	788	1987	1873

PLATE PLACEMENT TOL. = 0.250 inches

PLATE ROTATION TOL. = 5.0 Deg.

JSI GRIP= 0.73 (C) (INPUT = 0.90)
JSI METAL= 0.32 (C) (INPUT = 1.00)

LICENSED PROFESSIONAL ENGINEER
06-24-22
H. J. G. ALVES
100009024
PROVINCE OF ONTARIO

Structural component only
DWG# T-2215139

REVIEWED

JOB NAME	TRUSS NAME	QUANTITY	PLY	JOB DESC.	DRWG NO.
423533	T18	1	2	BAYVIEW WELLINGTON TRUSS DESC.	

Tamarack Roof Truss, Burlington

Version 8.530 S Feb 23 2022 MiTek Industries, Inc. Fri Jun 24 08:10:15 2022 Page 1
ID:c3jyj23uDijq_8pvRKbkZpy75XW-7JHhr8bdqIsFFkSKM2VbqhPpFITYnqcTYQ4ecbz38bM

Scale = 1:29.6

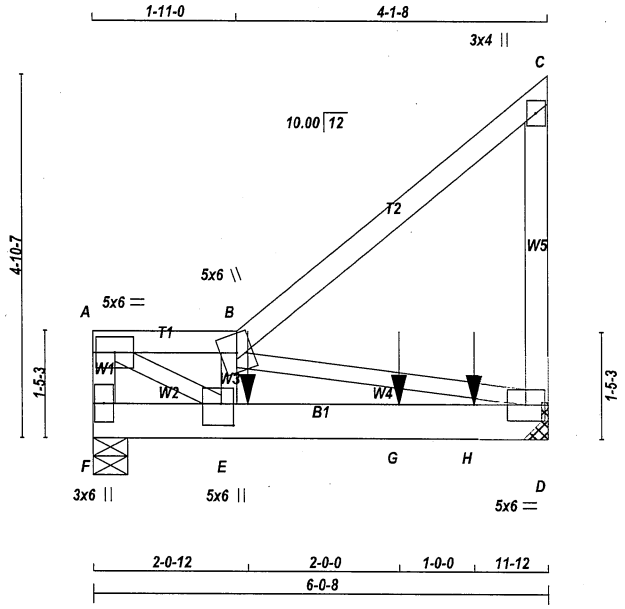

TOTAL WEIGHT = 2 X 30 = 60 lb

[M]

LUMBER

N. L. G. A. RULES

CHORDS	SIZE		LUMBER	DESCR.
F - A	2x4	DRY	No.2	SPF
A - B	2x4	DRY	No.2	SPF
B - C	2x4	DRY	No.2	SPF
D - C	2x4	DRY	No.2	SPF
F - D	2x6	DRY	No.2	SPF
ALL WEBS	2x3	DRY	No.2	SPF

DRY: SEASONED LUMBER.

DESIGN CONSISTS OF 2 TRUSSES BUILT SEPARATELY THEN FASTENED TOGETHER AS FOLLOWS:

CHORDS	#ROWS	SURFACE SPACING (IN)	LOAD(PLF)
TOP CHORDS : (0.122"X3") SPIRAL NAILS			
F- A	1	12	TOP
A- B	1	12	TOP
B- C	1	12	TOP
C- D	1	12	TOP
BOTTOM CHORDS : (0.122"X3") SPIRAL NAILS			
F- D	2	11	SIDE(244.1)
WEBS : (0.122"X3") SPIRAL NAILS			
E- B	1	4	SIDE(13.7)
2x3	1	6	

NAILS TO BE DRIVEN FROM ONE SIDE ONLY.

GIRDER NAILING ASSUMES NAILED HANGERS ARE FASTENED WITH MIN. 3-0 INCH NAILS.

TOP - COMPONENTS ARE LOADED FROM THE TOP AND MUST BE PLACED ON TOP EDGE OF ALL PLIES FOR THE LOAD TO BE TRANSFERRED TO EACH PLY.

SIDE - PLF SHOWN IS THE EQUIVALENT UDL APPLIED TO ONE SIDE THAT THE CORRESPONDING NAILING PATTERN SHALL BE CAPABLE OF TRANSFERING. REMAINING PLF MUST BE APPLIED ON THE OPPOSITE SIDE OR ON THE TOP.

PLATES (table is in inches)

JT	TYPE	PLATES	W	LEN	Y	X
A	TMVW-t	MT20	5.0	6.0		

LICENSED PROFESSIONAL ENGINEER
06-24-22
H. J. G. ALVES
100009024
PROVINCE OF ONTARIO

Structural component only
DWG# T-2215140

DIMENSIONS, SUPPORTS AND LOADINGS SPECIFIED BY FABRICATOR TO BE VERIFIED BY BUILDING DESIGNER

BEARINGS

JT	FACTORED GROSS REACTION VERT	HORZ	MAXIMUM FACTORED GROSS REACTION DOWN	HORZ	UPLIFT	INPUT BRG IN-SX	REQRD BRG IN-SX
F	1571	0	1571	0	0	5-8	5-8
D	2185	0	2185	0	0	MECHANICAL	

A SUITABLE HANGER/MECHANICAL CONNECTION IS REQUIRED AT JOINT D. MINIMUM BEARING LENGTH AT JOINT D = 4-0.

UNFACTORED REACTIONS

JT	1ST LCASE COMBINED	MAX./MIN. COMPONENT REACTIONS SNOW	LIVE	PERM.LIVE	WIND	DEAD	SOIL
F	1096	805 / 0	0 / 0	0 / 0	0 / 0	290 / 0	0 / 0
D	1523	1123 / 0	0 / 0	0 / 0	0 / 0	400 / 0	0 / 0

BEARING MATERIAL TO BE SPF NO.2 OR BETTER AT JOINT(S) F

BRACING

TOP CHORD TO BE SHEATHED OR MAX. PURLIN SPACING = 5.40 FT.
MAX. UNBRACED BOTTOM CHORD LENGTH = 10.00 FT OR RIGID CEILING DIRECTLY APPLIED.

ALL PITCH BREAKS AND PERIMETER CORNER JOINTS MUST BE LATERALLY RESTRAINED.

LOADING

TOTAL LOAD CASES: (4)

CHORDS

MEMB. FR-TO	MAX. FACTORED FORCE (LBS)	FACTORED VERT. LOAD (PLF) FROM	TO	LC1	MAX CSI (LC)	MAX. UNBRAC LENGTH
F- A	-1734 / 0	0.0	0.0	0.10 (1)	7.81	
A- B	-2844 / 0	-112.4	-112.4	0.06 (1)	5.40	
B- C	0 / 0	-112.4	-112.4	0.18 (1)	10.00	
D- C	-232 / 0	0.0	0.0	0.04 (1)	7.81	
F- E	0 / 0	-18.5	-18.5	0.12 (1)	10.00	
E- G	0 / 2810	-18.5	-18.5	0.71 (1)	10.00	
G- H	0 / 2810	-18.5	-18.5	0.71 (1)	10.00	
H- D	0 / 2810	-18.5	-18.5	0.71 (1)	10.00	

WEBS

MEMB. FR-TO	MAX. FACTORED FORCE (LBS)	MAX CSI (LC)
A- E	0 / 3292	0.41 (1)
E- B	0 / 335	0.04 (1)
B- D	-2897 / 0	0.45 (1)

SPECIFIED CONCENTRATED LOADS (LBS)

JT	LOC.	LC1	MAX-	MAX+	FACE	DIR.	TYPE	HEEL	CONN.
E	2-0-12	-688	-688	---	FRONT	VERT	TOTAL	---	C1
G	4-0-12	-688	-688	---	FRONT	VERT	TOTAL	---	C1
H	5-0-12	-688	-688	---	FRONT	VERT	TOTAL	---	C1

CONNECTION REQUIREMENTS

1) **C1:** A SUITABLE HANGER/MECHANICAL CONNECTION IS REQUIRED.

DESIGN CRITERIA

SPECIFIED LOADS:

TOP CH.	LL	=	32.5	PSF
	DL	=	6.0	PSF
BOT CH.	LL	=	0.0	PSF
	DL	=	7.4	PSF
TOTAL LOAD		=	45.9	PSF

SPACING = 24.0 IN. C/C

LOADING IN ALL FLAT SECTIONS BASED ON A SLOPE OF 6.00/12

THIS TRUSS IS DESIGNED FOR RESIDENTIAL OR SMALL BUILDING REQUIREMENTS OF PART 9, NBCC 2015

THIS DESIGN COMPLIES WITH:
- PART 9 OF BCBC 2018 , ABC 2019
- PART 9 OF OBC 2012 (2019 AMENDMENT)
- CSA 086-14
- TPIC 2014

(55 % OF 43.9 P.S.F. G.S.L. PLUS 8.4 P.S.F. RAIN LOAD) EQUALS 32.5 P.S.F. SPECIFIED ROOF LIVE LOAD

ALLOWABLE DEFL.(LL)= L/360 (0.20")
CALCULATED VERT. DEFL.(LL) = L/ 999 (0.05")
ALLOWABLE DEFL.(TL)= L/360 (0.20")
CALCULATED VERT. DEFL.(TL) = L/ 928 (0.08")

CSI: TC=0.18/1.00 (B-C:1) , BC=0.71/1.00 (D-E:1) , WB=0.45/1.00 (B-D:1) , SSI=0.41/1.00 (D-E:1)

DOL LUMBER=1.00 NAIL=1.00 LS BEND=1.00 COMP=1.00 SHEAR=1.00 TENS= 1.00

COMPANION LIVE LOAD FACTOR = 1.00

TRUSS PLATE MANUFACTURER IS NOT RESPONSIBLE FOR QUALITY CONTROL IN THE TRUSS MANUFACTURING PLANT .

NAIL VALUES

PLATE	GRIP(DRY) (PSI) MAX	MIN	SHEAR (PLI) MAX	MIN	SECTION (PLI) MAX	MIN
MT20	650	371	1747	788	1987	1873

PLATE PLACEMENT TOL. = 0.250 inches

PLATE ROTATION TOL. = 5.0 Deg.

JSI GRIP= 0.87 (E) (INPUT = 0.90)
JSI METAL= 0.51 (E) (INPUT = 1.00)

REVIEWED

CONTINUED ON PAGE 2

JOB NAME	TRUSS NAME	QUANTITY	PLY	JOB DESC. BAYVIEW WELLINGTON	DRWG NO.
423533	T18	1	2	TRUSS DESC.	

PLATES (table is in inches)

JT	TYPE	PLATES	W	LEN	Y	X
B	TTWW+m	MT20	5.0	6.0		
C	TMV+p	MT20	3.0	4.0		
D	BMVW1-t	MT20	5.0	6.0		
E	BMWW+t	MT20	5.0	6.0	3.50	2.00
F	BMV1+p	MT20	3.0	6.0		

NOTES- (1)
1) Lateral braces to be a minimum of 2X4 SPF #2.

LICENSED PROFESSIONAL ENGINEER
06-24-22
H. J. G. ALVES
100009024
PROVINCE OF ONTARIO

Structural component only
DWG# T-2215140

REVIEWED

JOB NAME	TRUSS NAME	QUANTITY	PLY	JOB DESC.	DRWG NO.
423533	T19	1	2	BAYVIEW WELLINGTON TRUSS DESC.	

Tamarack Roof Truss, Burlington

Version 8.530 S Feb 23 2022 MiTek Industries, Inc. Fri Jun 24 08:10:15 2022 Page 1
ID:c3jyj23uDijq_8pvRKbkZpy75XW-7JHhr8bdqIsFFkSKM2VbqhPq8lVMnqGTYQ4ecbz38bM

Scale = 1:25.4

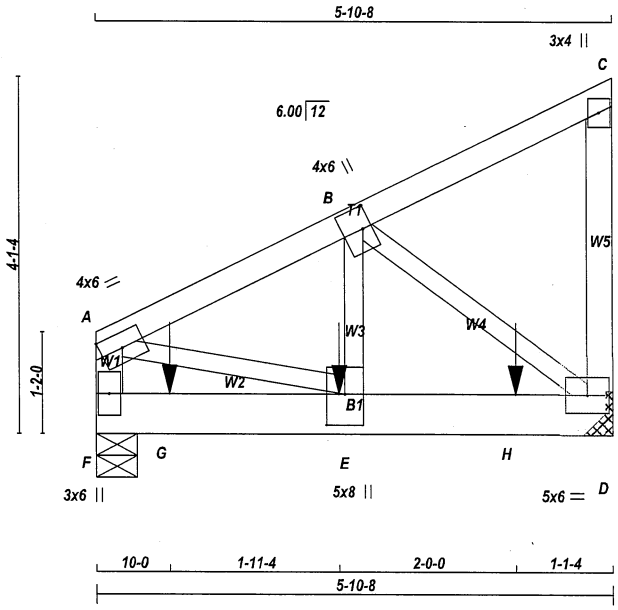

TOTAL WEIGHT = 2 X 29 = 58 lb
[M]

LUMBER
N. L. G. A. RULES

CHORDS	SIZE		LUMBER	DESCR.
F - A	2x4	DRY	No.2	SPF
A - C	2x4	DRY	No.2	SPF
D - C	2x4	DRY	No.2	SPF
F - D	2x6	DRY	No.2	SPF
ALL WEBS	2x3	DRY	No.2	SPF

DRY: SEASONED LUMBER.

DESIGN CONSISTS OF 2 TRUSSES BUILT SEPARATELY THEN FASTENED TOGETHER AS FOLLOWS:

CHORDS #ROWS	SURFACE SPACING (IN)	LOAD(PLF)
TOP CHORDS : (0.122"X3") SPIRAL NAILS		
F- A 1	12	TOP
A- C 1	12	TOP
C- D 1	12	TOP
BOTTOM CHORDS : (0.122"X3") SPIRAL NAILS		
F- D 2	12	SIDE(183.1)
WEBS : (0.122"X3") SPIRAL NAILS		
B- E 1	3	SIDE(278.2)
2x3 1	6	

NAILS TO BE DRIVEN FROM ONE SIDE ONLY.

GIRDER NAILING ASSUMES NAILED HANGERS ARE FASTENED WITH MIN. 3-0 INCH NAILS.

TOP - COMPONENTS ARE LOADED FROM THE TOP AND MUST BE PLACED ON TOP EDGE OF ALL PLIES FOR THE LOAD TO BE TRANSFERRED TO EACH PLY.

SIDE - PLF SHOWN IS THE EQUIVALENT UDL APPLIED TO ONE SIDE THAT THE CORRESPONDING NAILING PATTERN SHALL BE CAPABLE OF TRANSFERING. REMAINING PLF MUST BE APPLIED ON THE OPPOSITE SIDE OR ON THE TOP.

PLATES (table is in inches)

JT	TYPE	PLATES	W	LEN	Y	X
A	TMVW-t	MT20	4.0	6.0		Edge
B	TMVW+t	MT20	4.0	6.0	3.00	1.25
C	TMV+p	MT20	3.0	4.0		

LICENSED PROFESSIONAL ENGINEER
06-24-22
H. J. G. ALVES
100009024
PROVINCE OF ONTARIO

Structural component only
DWG# T-2215141

DIMENSIONS, SUPPORTS AND LOADINGS SPECIFIED BY FABRICATOR TO BE VERIFIED BY BUILDING DESIGNER

BEARINGS

JT	FACTORED GROSS REACTION VERT	HORZ	MAXIMUM FACTORED GROSS REACTION DOWN	HORZ	UPLIFT	INPUT BRG IN-SX	REQRD BRG IN-SX
F	4163	0	4163	0	0	5-8	5-8
D	3128	0	3128	0	0	MECHANICAL	

A SUITABLE HANGER/MECHANICAL CONNECTION IS REQUIRED AT JOINT D. MINIMUM BEARING LENGTH AT JOINT D = 4-0.

UNFACTORED REACTIONS

JT	1ST LCASE COMBINED	SNOW	LIVE	PERM.LIVE	WIND	DEAD	SOIL
		MAX./MIN. COMPONENT REACTIONS					
F	2907	2119 / 0	0 / 0	0 / 0	0 / 0	788 / 0	0 / 0
D	2185	1587 / 0	0 / 0	0 / 0	0 / 0	598 / 0	0 / 0

BEARING MATERIAL TO BE SPF NO.2 OR BETTER AT JOINT(S) F

BRACING
TOP CHORD TO BE SHEATHED OR MAX. PURLIN SPACING = 5.24 FT.
MAX. UNBRACED BOTTOM CHORD LENGTH = 10.00 FT OR RIGID CEILING DIRECTLY APPLIED.

ALL PITCH BREAKS AND PERIMETER CORNER JOINTS MUST BE LATERALLY RESTRAINED.

LOADING
TOTAL LOAD CASES: (4)

CHORDS

MEMB. FR-TO	MAX. FACTORED FORCE (LBS)	FACTORED VERT. LOAD (PLF) FROM	TO	LC1	MAX CSI (LC)	MAX. UNBRAC LENGTH
F- A	-2205 / 0	0.0	0.0	0.12 (1)	7.51	
A- B	-3007 / 0	-112.4	-112.4	0.10 (1)	5.24	
B- C	-9 / 0	-112.4	-112.4	0.07 (1)	10.00	
D- C	-146 / 0	0.0	0.0	0.02 (1)	7.81	
F- G	0 / 0	-18.5	-18.5	0.60 (1)	10.00	
G- E	0 / 0	-18.5	-18.5	0.60 (1)	10.00	
E- H	0 / 2697	-18.5	-18.5	0.55 (1)	10.00	
H- D	0 / 2697	-18.5	-18.5	0.55 (1)	10.00	

WEBS

MEMB. FR-TO	MAX. FACTORED FORCE (LBS)	MAX CSI (LC)
A- E	0 / 2790	0.35 (1)
E- B	0 / 3039	0.38 (1)
B- D	-3394 / 0	0.40 (1)

SPECIFIED CONCENTRATED LOADS (LBS)

JT	LOC.	LC1	MAX-	MAX+	FACE	DIR.	TYPE	HEEL	CONN.
E	2-9-4	-1235	-1235	---	BACK	VERT	TOTAL	---	C1
G	10-0	-2083	-2083	---	BACK	VERT	TOTAL	---	C1
H	4-9-4	-1235	-1235	---	BACK	VERT	TOTAL	---	C1

CONNECTION REQUIREMENTS

1) **C1:** A SUITABLE HANGER/MECHANICAL CONNECTION IS REQUIRED.

DESIGN CRITERIA

SPECIFIED LOADS:

TOP CH.	LL	=	32.5	PSF
	DL	=	6.0	PSF
BOT CH.	LL	=	0.0	PSF
	DL	=	7.4	PSF
TOTAL LOAD		=	45.9	PSF

SPACING = 24.0 IN. C/C

THIS TRUSS IS DESIGNED FOR RESIDENTIAL OR SMALL BUILDING REQUIREMENTS OF PART 9, NBCC 2015

THIS DESIGN COMPLIES WITH:
- PART 9 OF BCBC 2018 , ABC 2019
- PART 9 OF OBC 2012 (2019 AMENDMENT)
- CSA 086-14
- TPIC 2014

(55 % OF 43.9 P.S.F. G.S.L. PLUS 8.4 P.S.F. RAIN LOAD) EQUALS 32.5 P.S.F. SPECIFIED ROOF LIVE LOAD

ALLOWABLE DEFL.(LL)= L/360 (0.20")
CALCULATED VERT. DEFL.(LL) = L/ 999 (0.02")
ALLOWABLE DEFL.(TL)= L/360 (0.20")
CALCULATED VERT. DEFL.(TL) = L/ 999 (0.04")

CSI: TC=0.12/1.00 (A-F:1) , BC=0.60/1.00 (E-F:1) , WB=0.40/1.00 (B-D:1) , SSI=0.65/1.00 (E-F:1)

DOL LUMBER=1.00 NAIL=1.00 LS BEND=1.00 COMP=1.00 SHEAR=1.00 TENS= 1.00

COMPANION LIVE LOAD FACTOR = 1.00

TRUSS PLATE MANUFACTURER IS NOT RESPONSIBLE FOR QUALITY CONTROL IN THE TRUSS MANUFACTURING PLANT .

NAIL VALUES

PLATE	GRIP(DRY) (PSI) MAX	MIN	SHEAR (PLI) MAX	MIN	SECTION (PLI) MAX	MIN
MT20	650	371	1747	788	1987	1873

PLATE PLACEMENT TOL. = 0.250 inches

PLATE ROTATION TOL. = 5.0 Deg.

JSI GRIP= 0.84 (B) (INPUT = 0.90)
JSI METAL= 0.63 (B) (INPUT = 1.00)

REVIEWED

CONTINUED ON PAGE 2

JOB NAME	TRUSS NAME	QUANTITY	PLY	JOB DESC. BAYVIEW WELLINGTON	DRWG NO.
423533	T19	1	2	TRUSS DESC.	

PLATES (table is in inches)

JT	TYPE	PLATES	W	LEN	Y	X
D	BMVW1-t	MT20	5.0	6.0		
E	BMWW+t	MT20	5.0	8.0	4.25	2.50
F	BMV1+p	MT20	3.0	6.0		

Edge - INDICATES REFERENCE CORNER OF PLATE TOUCHES EDGE OF CHORD.

NOTES- (1)
1) Lateral braces to be a minimum of 2X4 SPF #2.

LICENSED PROFESSIONAL ENGINEER
06-24-22
H. J. G. ALVES
100009024
PROVINCE OF ONTARIO

Structural component only
DWG# T-2215141

REVIEWED

JOB NAME	TRUSS NAME	QUANTITY	PLY	JOB DESC.	DRWG NO.
423533	T20	3	1	BAYVIEW WELLINGTON TRUSS DESC.	

Tamarack Roof Truss, Burlington

Version 8.530 S Feb 23 2022 MiTek Industries, Inc. Fri Jun 24 08:10:16 2022 Page 1
ID:c3jyj23uDijq_8pvRKbkZpy75XW-bVr43UbFbc_6su1WwI0qNuyyJ8yOWNucn4pB81z38bL

Scale = 1:34.6

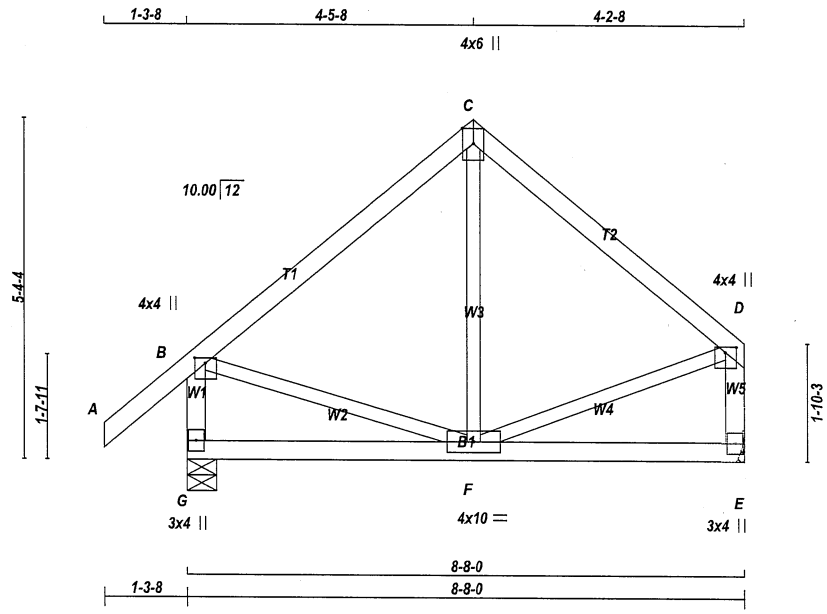

TOTAL WEIGHT = 3 X 39 = 116 lb
[M][F]

LUMBER
N. L. G. A. RULES

CHORDS	SIZE		LUMBER	DESCR.
A - C	2x4	DRY	No.2	SPF
C - D	2x4	DRY	No.2	SPF
G - B	2x4	DRY	No.2	SPF
E - D	2x4	DRY	No.2	SPF
G - E	2x4	DRY	No.2	SPF
ALL WEBS EXCEPT	2x3	DRY	No.2	SPF

DRY: SEASONED LUMBER.

PLATES (table is in inches)

JT	TYPE	PLATES	W	LEN	Y	X
B	TMVW+p	MT20	4.0	4.0	1.00	2.00
C	TTW+p	MT20	4.0	6.0	Edge	
D	TMVW+p	MT20	4.0	4.0	1.00	2.00
E	BMV1+p	MT20	3.0	4.0		
F	BMWWW-t	MT20	4.0	10.0		
G	BMV1+p	MT20	3.0	4.0		

Edge - INDICATES REFERENCE CORNER OF PLATE TOUCHES EDGE OF CHORD.

NOTES- (1)
1) Lateral braces to be a minimum of 2X4 SPF #2.

DIMENSIONS, SUPPORTS AND LOADINGS SPECIFIED BY FABRICATOR TO BE VERIFIED BY BUILDING DESIGNER

BEARINGS

JT	FACTORED GROSS REACTION VERT	HORZ	MAXIMUM FACTORED GROSS REACTION DOWN	HORZ	UPLIFT	INPUT BRG IN-SX	REQRD BRG IN-SX
G	723	0	723	0	0	5-8	5-8
E	567	0	567	0	0	MECHANICAL	

A SUITABLE HANGER/MECHANICAL CONNECTION IS REQUIRED AT JOINT E. MINIMUM BEARING LENGTH AT JOINT E = 1-8.

UNFACTORED REACTIONS

JT	1ST LCASE COMBINED	MAX./MIN. COMPONENT REACTIONS SNOW	LIVE	PERM.LIVE	WIND	DEAD	SOIL
G	504	371 / 0	0 / 0	0 / 0	0 / 0	133 / 0	0 / 0
E	398	281 / 0	0 / 0	0 / 0	0 / 0	116 / 0	0 / 0

BEARING MATERIAL TO BE SPF NO.2 OR BETTER AT JOINT(S) G

BRACING
TOP CHORD TO BE SHEATHED OR MAX. PURLIN SPACING = 6.25 FT.
MAX. UNBRACED BOTTOM CHORD LENGTH = 10.00 FT OR RIGID CEILING DIRECTLY APPLIED.

ALL PITCH BREAKS AND PERIMETER CORNER JOINTS MUST BE LATERALLY RESTRAINED.

LOADING
TOTAL LOAD CASES: (4)

CHORDS

MEMB. FR-TO	MAX. FACTORED FORCE (LBS)	FACTORED VERT. LOAD LC1 (PLF) FROM	TO	MAX CSI (LC)	MAX. UNBRAC LENGTH
A- B	0 / 50	-112.4	-112.4	0.15 (1)	10.00
B- C	-329 / 0	-112.4	-112.4	0.29 (1)	6.25
C- D	-329 / 0	-112.4	-112.4	0.26 (1)	6.25
G- B	-691 / 0	0.0	0.0	0.07 (1)	7.81
E- D	-538 / 0	0.0	0.0	0.06 (1)	7.81
G- F	0 / 0	-18.5	-18.5	0.10 (4)	10.00
F- E	0 / 0	-18.5	-18.5	0.10 (4)	10.00

WEBS

MEMB. FR-TO	MAX. FACTORED FORCE (LBS)	MAX CSI (LC)
F- C	-67 / 60	0.03 (1)
B- F	0 / 263	0.06 (1)
F- D	0 / 268	0.06 (1)

DESIGN CRITERIA

SPECIFIED LOADS:

TOP CH.	LL	=	32.5	PSF
	DL	=	6.0	PSF
BOT CH.	LL	=	0.0	PSF
	DL	=	7.4	PSF
TOTAL LOAD		=	45.9	PSF

SPACING = 24.0 IN. C/C

THIS TRUSS IS DESIGNED FOR RESIDENTIAL OR SMALL BUILDING REQUIREMENTS OF PART 9, NBCC 2015

THIS DESIGN COMPLIES WITH:
- PART 9 OF BCBC 2018 , ABC 2019
- PART 9 OF OBC 2012 (2019 AMENDMENT)
- CSA 086-14
- TPIC 2014

(55 % OF 43.9 P.S.F. G.S.L. PLUS 8.4 P.S.F. RAIN LOAD) EQUALS 32.5 P.S.F. SPECIFIED ROOF LIVE LOAD

ALLOWABLE DEFL.(LL)= L/360 (0.29")
CALCULATED VERT. DEFL.(LL) = L/ 999 (0.00")
ALLOWABLE DEFL.(TL)= L/360 (0.29")
CALCULATED VERT. DEFL.(TL) = L/ 999 (0.01")

CSI: TC=0.29/1.00 (B-C:1) , BC=0.10/1.00 (F-G:4) , WB=0.06/1.00 (D-F:1) , SSI=0.15/1.00 (B-C:1)

DOL LUMBER=1.00 NAIL=1.00 LS BEND=1.10 COMP=1.10 SHEAR=1.10 TENS= 1.10

COMPANION LIVE LOAD FACTOR = 1.00

TRUSS PLATE MANUFACTURER IS NOT RESPONSIBLE FOR QUALITY CONTROL IN THE TRUSS MANUFACTURING PLANT .

NAIL VALUES

PLATE	GRIP(DRY) (PSI) MAX	MIN	SHEAR (PLI) MAX	MIN	SECTION (PLI) MAX	MIN
MT20	650	371	1747	788	1987	1873

PLATE PLACEMENT TOL. = 0.250 inches

PLATE ROTATION TOL. = 5.0 Deg.

JSI GRIP= 0.55 (B) (INPUT = 0.90)
JSI METAL= 0.15 (B) (INPUT = 1.00)

LICENSED PROFESSIONAL ENGINEER
06-24-22
H. J. G. ALVES
100009024
PROVINCE OF ONTARIO

Structural component only
DWG# T-2215142

REVIEWED

JOB NAME	TRUSS NAME	QUANTITY	PLY	JOB DESC.	DRWG NO.
423533	G21	1	1	BAYVIEW WELLINGTON TRUSS DESC.	

Tamarack Roof Truss, Burlington

Version 8.530 S Feb 23 2022 MiTek Industries, Inc. Fri Jun 24 08:09:51 2022 Page 1
ID:c3jyj23uDijq_8pvRKbkZpy75XW-qhrdpxIaUxqfN2diy?3zsdQjg3Rf93cx1hGNl_z38bk

Scale = 1:34.6

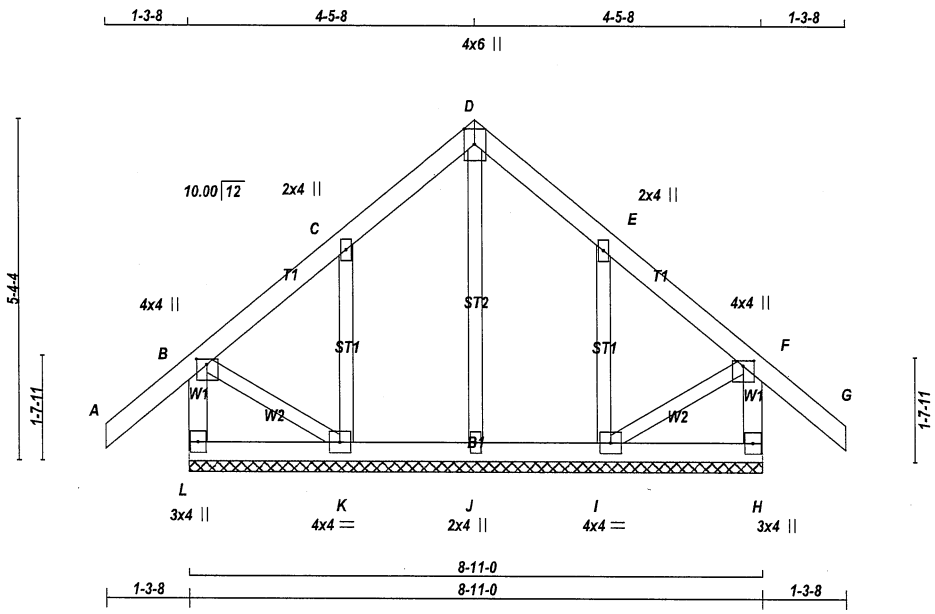

TOTAL WEIGHT = 43 lb
[M]

LUMBER
N. L. G. A. RULES

CHORDS	SIZE		LUMBER	DESCR.
L - B	2x4	DRY	No.2	SPF
A - D	2x4	DRY	No.2	SPF
D - G	2x4	DRY	No.2	SPF
H - F	2x4	DRY	No.2	SPF
L - H	2x4	DRY	No.2	SPF
ALL WEBS	2x3	DRY	No.2	SPF
ALL GABLE WEBS	2x3	DRY	No.2	SPF

DRY: SEASONED LUMBER.

GABLE STUDS SPACED AT 2-0-0 OC.

PLATES (table is in inches)

JT	TYPE	PLATES	W	LEN	Y	X
B	TMVW+p	MT20	4.0	4.0	1.00	2.00
C	TMW+w	MT20	2.0	4.0		
D	TTW+p	MT20	4.0	6.0	Edge	
E	TMW+w	MT20	2.0	4.0		
F	TMVW+p	MT20	4.0	4.0	1.00	2.00
H	BMV1+p	MT20	3.0	4.0		
I	BMWW1-t	MT20	4.0	4.0		
J	BMW1+w	MT20	2.0	4.0		
K	BMWW1-t	MT20	4.0	4.0		
L	BMV1+p	MT20	3.0	4.0		

Edge - INDICATES REFERENCE CORNER OF PLATE TOUCHES EDGE OF CHORD.

NOTES- (1)
1) Lateral braces to be a minimum of 2X4 SPF #2.

DIMENSIONS, SUPPORTS AND LOADINGS SPECIFIED BY FABRICATOR TO BE VERIFIED BY BUILDING DESIGNER

BEARINGS

THIS TRUSS DESIGNED FOR CONTINUOUS BEARINGS.

THIS TRUSS REQUIRES RIGID SHEATHING ON EXPOSED FACE.

BEARING MATERIAL TO BE SPF NO.2 OR BETTER AT JOINT(S)

BRACING
TOP CHORD TO BE SHEATHED OR MAX. PURLIN SPACING = 6.25 FT.
MAX. UNBRACED BOTTOM CHORD LENGTH = 10.00 FT OR RIGID CEILING DIRECTLY APPLIED.

ALL PITCH BREAKS AND PERIMETER CORNER JOINTS MUST BE LATERALLY RESTRAINED.

LOADING
TOTAL LOAD CASES: (4)

CHORDS

MEMB. FR-TO	MAX. FACTORED FORCE (LBS)	FACTORED VERT. LOAD (PLF) FROM	TO	LC1	MAX CSI (LC)	MAX. UNBRAC LENGTH
L- B	-292 / 0	0.0	0.0	0.03 (1)	7.81	
A- B	0 / 50	-112.4	-112.4	0.15 (1)	10.00	
B- C	-12 / 0	-112.4	-112.4	0.09 (1)	6.25	
C- D	-40 / 0	-112.4	-112.4	0.09 (1)	6.25	
D- E	-40 / 0	-112.4	-112.4	0.09 (1)	6.25	
E- F	-12 / 0	-112.4	-112.4	0.09 (1)	6.25	
F- G	0 / 50	-112.4	-112.4	0.15 (1)	10.00	
H- F	-292 / 0	0.0	0.0	0.03 (1)	7.81	
L- K	0 / 0	-18.5	-18.5	0.03 (4)	10.00	
K- J	0 / 15	-18.5	-18.5	0.03 (4)	10.00	
J- I	0 / 15	-18.5	-18.5	0.03 (4)	10.00	
I- H	0 / 0	-18.5	-18.5	0.03 (4)	10.00	

WEBS

MEMB. FR-TO	MAX. FACTORED FORCE (LBS)	MAX CSI (LC)
J- D	-146 / 0	0.06 (1)
K- C	-305 / 0	0.07 (1)
I- E	-305 / 0	0.07 (1)
B- K	0 / 26	0.01 (1)
I- F	0 / 26	0.01 (1)

DESIGN CRITERIA

SPECIFIED LOADS:

TOP CH.	LL	=	32.5	PSF
	DL	=	6.0	PSF
BOT CH.	LL	=	0.0	PSF
	DL	=	7.4	PSF
TOTAL LOAD		=	45.9	PSF

SPACING = 24.0 IN. C/C

THIS TRUSS IS DESIGNED FOR RESIDENTIAL OR SMALL BUILDING REQUIREMENTS OF PART 9, NBCC 2015

THIS DESIGN COMPLIES WITH:
- PART 9 OF BCBC 2018 , ABC 2019
- PART 9 OF OBC 2012 (2019 AMENDMENT)
- CSA 086-14
- TPIC 2014

(55 % OF 43.9 P.S.F. G.S.L. PLUS 8.4 P.S.F. RAIN LOAD) EQUALS 32.5 P.S.F. SPECIFIED ROOF LIVE LOAD

CSI: TC=0.15/1.00 (F-G:1) , BC=0.03/1.00 (J-K:4) , WB=0.07/1.00 (C-K:1) , SSI=0.10/1.00 (B-C:1)

DOL LUMBER=1.00 NAIL=1.00 LS BEND=1.10 COMP=1.10 SHEAR=1.10 TENS= 1.10

COMPANION LIVE LOAD FACTOR = 1.00

TRUSS PLATE MANUFACTURER IS NOT RESPONSIBLE FOR QUALITY CONTROL IN THE TRUSS MANUFACTURING PLANT .

NAIL VALUES

PLATE	GRIP(DRY) (PSI) MAX	MIN	SHEAR (PLI) MAX	MIN	SECTION (PLI) MAX	MIN
MT20	650	371	1747	788	1987	1873

PLATE PLACEMENT TOL. = 0.250 inches

PLATE ROTATION TOL. = 5.0 Deg.

JSI GRIP= 0.22 (E) (INPUT = 0.90)
JSI METAL= 0.16 (C) (INPUT = 1.00)

LICENSED PROFESSIONAL ENGINEER
06-24-22
H. J. G. ALVES
100009024
PROVINCE OF ONTARIO

Structural component only
DWG# T-2215113

REVIEWED

JOB NAME	TRUSS NAME	QUANTITY	PLY	JOB DESC.	DRWG NO.
423533	T22	3	1	BAYVIEW WELLINGTON TRUSS DESC.	

Tamarack Roof Truss, Burlington

Version 8.530 S Feb 23 2022 MiTek Industries, Inc. Fri Jun 24 08:10:17 2022 Page 1
ID:c3jyj23uDijq_8pvRKbkZpy75XW-3hPSGqcuMw6zU1ciTTX3v6V29YAcFIMm0kZlgUz38bK

Scale = 1:22.6

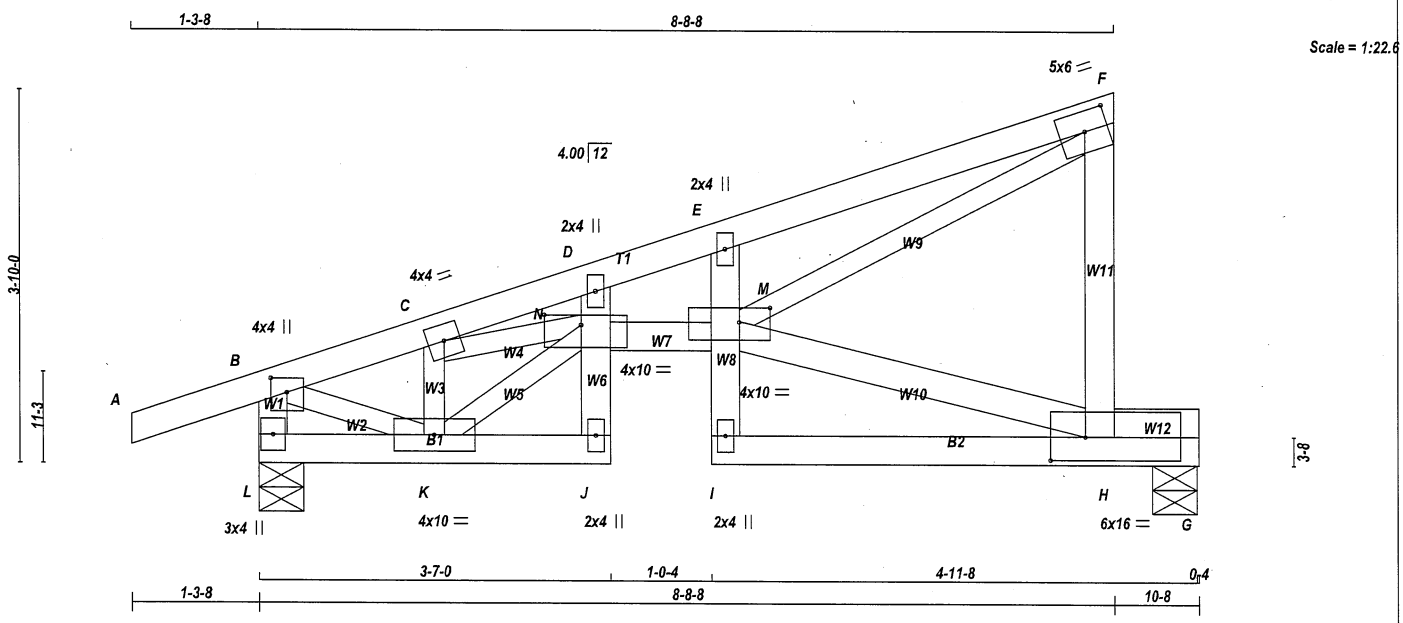

TOTAL WEIGHT = 3 X 44 = 133 lb
[M]

LUMBER
N. L. G. A. RULES

CHORDS	SIZE		LUMBER	DESCR.
A - F	2x4	DRY	No.2	SPF
H - F	2x4	DRY	No.2	SPF
L - B	2x4	DRY	No.2	SPF
L - J	2x4	DRY	No.2	SPF
I - G	2x4	DRY	No.2	SPF
H - G	2x4	DRY	No.2	SPF
ALL WEBS EXCEPT	2x4	DRY	No.2	SPF
M - F	2x3	DRY	No.2	SPF
K - C	2x3	DRY	No.2	SPF
K - N	2x3	DRY	No.2	SPF
C - N	2x3	DRY	No.2	SPF
B - K	2x3	DRY	No.2	SPF

DRY: SEASONED LUMBER.

PLATES (table is in inches)

JT	TYPE	PLATES	W	LEN	Y	X
B	TMVW+p	MT20	4.0	4.0	1.75	2.00
C	TMWW-t	MT20	4.0	4.0		
D	TMW+w	MT20	2.0	4.0		
E	TMW+w	MT20	2.0	4.0		
F	TMVW-t	MT20	5.0	6.0	2.50	2.75
H	BMVWW-t	MT20	6.0	16.0	3.00	4.25
I	BMW+w	MT20	2.0	4.0		
J	BMW+w	MT20	2.0	4.0		
K	BMWWW-t	MT20	4.0	10.0		
L	BMV1+p	MT20	3.0	4.0		
M	WMWWW+t	MT20	4.0	10.0	3.75	1.75
N	WMWWW+t	MT20	4.0	10.0	4.50	1.25

NOTES- (1)
1) Lateral braces to be a minimum of 2X4 SPF #2.

DIMENSIONS, SUPPORTS AND LOADINGS SPECIFIED BY FABRICATOR TO BE VERIFIED BY BUILDING DESIGNER

BEARINGS

JT	FACTORED GROSS REACTION VERT	HORZ	MAXIMUM FACTORED GROSS REACTION DOWN	HORZ	UPLIFT	INPUT BRG IN-SX	REQRD BRG IN-SX
L	769	0	769	0	0	5-8	5-8
G	513	0	513	0	0	5-8	5-8

UNFACTORED REACTIONS

JT	1ST LCASE COMBINED	MAX./MIN. COMPONENT REACTIONS SNOW	LIVE	PERM.LIVE	WIND	DEAD	SOIL
L	535	401 / 0	0 / 0	0 / 0	0 / 0	134 / 0	0 / 0
G	360	251 / 0	0 / 0	0 / 0	0 / 0	109 / 0	0 / 0

BEARING MATERIAL TO BE SPF NO.2 OR BETTER AT JOINT(S) L, G

BRACING
TOP CHORD TO BE SHEATHED OR MAX. PURLIN SPACING = 4.32 FT.
MAX. UNBRACED BOTTOM CHORD LENGTH = 10.00 FT OR RIGID CEILING DIRECTLY APPLIED.

MAX. UNBRACED INTERIOR CHORD LENGTH = 7.81 FT

ALL PITCH BREAKS AND PERIMETER CORNER JOINTS MUST BE LATERALLY RESTRAINED.

LOADING
TOTAL LOAD CASES: (4)

CHORDS

MEMB. FR-TO	MAX. FACTORED FORCE (LBS)	FACTORED VERT. LOAD LC1 (PLF) FROM	TO	MAX CSI (LC)	MAX. UNBRAC LENGTH
A- B	0 / 24	-112.4	-112.4	0.14 (1)	10.00
B- C	-753 / 0	-112.4	-112.4	0.14 (1)	6.25
C- D	-1482 / 0	-112.4	-112.4	0.60 (1)	4.41
D- E	-1550 / 0	-112.4	-112.4	0.60 (1)	4.32
E- F	-1499 / 0	-112.4	-112.4	0.36 (1)	4.92
H- F	-525 / 0	0.0	0.0	0.12 (1)	7.81
L- B	-743 / 0	0.0	0.0	0.07 (1)	7.81
L- K	0 / 0	-18.5	-18.5	0.02 (1)	10.00
K- J	0 / 104	-18.5	-18.5	0.04 (1)	10.00
I- H	0 / 147	-18.5	-18.5	0.61 (1)	10.00
H- G	0 / 0	-18.5	-18.5	0.25 (1)	10.00

WEBS

MEMB. FR-TO	MAX. FACTORED FORCE (LBS)	MAX CSI (LC)
J- N	0 / 25	0.18 (1)
N- D	0 / 559	0.27 (1)
I- M	0 / 146	0.26 (1)
M- E	-792 / 0	0.25 (1)
N- M	0 / 1620	0.26 (1)
M- H	-153 / 0	0.03 (1)
M- F	0 / 1630	0.37 (1)
K- C	-674 / 0	0.10 (1)
K- N	0 / 716	0.16 (1)
C- N	0 / 640	0.14 (1)
B- K	0 / 755	0.17 (1)

DESIGN CRITERIA

SPECIFIED LOADS:

TOP CH.	LL	=	32.5	PSF
	DL	=	6.0	PSF
BOT CH.	LL	=	0.0	PSF
	DL	=	7.4	PSF
TOTAL LOAD		=	45.9	PSF

SPACING = 24.0 IN. C/C

THIS TRUSS IS DESIGNED FOR RESIDENTIAL OR SMALL BUILDING REQUIREMENTS OF PART 9, NBCC 2015

THIS DESIGN COMPLIES WITH:
- PART 9 OF BCBC 2018 , ABC 2019
- PART 9 OF OBC 2012 (2019 AMENDMENT)
- CSA 086-14
- TPIC 2014

DESIGN ASSUMPTIONS
-OVERHANG NOT TO BE ALTERED OR CUT OFF.

(55 % OF 43.9 P.S.F. G.S.L. PLUS 8.4 P.S.F. RAIN LOAD) EQUALS 32.5 P.S.F. SPECIFIED ROOF LIVE LOAD

ALLOWABLE DEFL.(LL)= L/360 (0.32")
CALCULATED VERT. DEFL.(LL) = L/ 817 (0.14")
ALLOWABLE DEFL.(TL)= L/360 (0.32")
CALCULATED VERT. DEFL.(TL) = L/ 443 (0.26")

CSI: TC=0.60/1.00 (D-E:1) , BC=0.61/1.00 (H-I:1) , WB=0.37/1.00 (F-M:1) , SSI=0.42/1.00 (D-E:1)

DOL LUMBER=1.00 NAIL=1.00 LS BEND=1.10 COMP=1.10 SHEAR=1.10 TENS= 1.10

COMPANION LIVE LOAD FACTOR = 1.00

AUTOSOLVE RIGHT HEEL ONLY

TRUSS PLATE MANUFACTURER IS NOT RESPONSIBLE FOR QUALITY CONTROL IN THE TRUSS MANUFACTURING PLANT .

NAIL VALUES

PLATE	GRIP(DRY) (PSI) MAX	MIN	SHEAR (PLI) MAX	MIN	SECTION (PLI) MAX	MIN
MT20	650	371	1747	788	1987	1873

PLATE PLACEMENT TOL. = 0.250 inches

PLATE ROTATION TOL. = 5.0 Deg.

JSI GRIP= 0.85 (F) (INPUT = 0.90)
JSI METAL= 0.40 (M) (INPUT = 1.00)

LICENSED PROFESSIONAL ENGINEER
06-24-22
H. J. G. ALVES
100009024
PROVINCE OF ONTARIO

Structural component only
DWG# T-2215143

REVIEWED

JOB NAME	TRUSS NAME	QUANTITY	PLY	JOB DESC.	DRWG NO.
423534	T30S	1	1	BAYVIEW WELLINGTON TRUSS DESC.	

Tamarack Roof Truss, Burlington

Version 8.530 S Feb 23 2022 MiTek Industries, Inc. Fri Jun 24 08:28:57 2022 Page 1
ID:c3jyj23uDijq_8pvRKbkZpy75XW-GA4sKoAQc1D3s9Ez4hdiJltYG1WYgGSdZ_s0zZz38Jq

Scale = 1:35.5

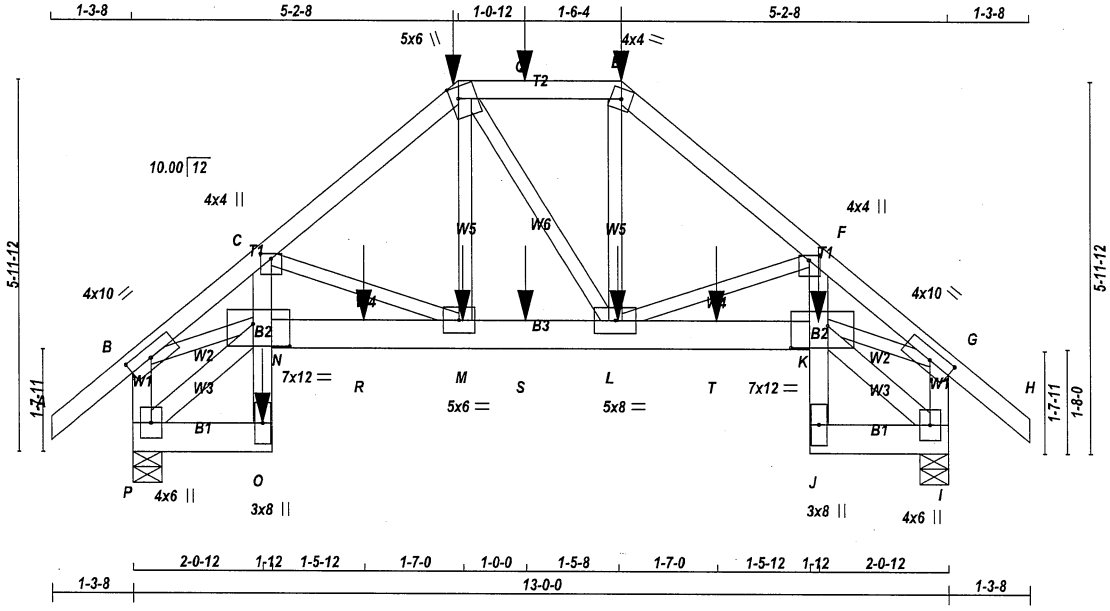

TOTAL WEIGHT = 77 lb
[M]

LUMBER
N. L. G. A. RULES

CHORDS	SIZE		LUMBER	DESCR.
A - D	2x4	DRY	No.2	SPF
D - E	2x4	DRY	No.2	SPF
E - H	2x4	DRY	No.2	SPF
P - B	2x4	DRY	No.2	SPF
I - G	2x4	DRY	No.2	SPF
P - O	2x6	DRY	No.2	SPF
O - C	2x4	DRY	No.2	SPF
N - K	2x6	DRY	No.2	SPF
J - F	2x4	DRY	No.2	SPF
J - I	2x6	DRY	No.2	SPF
ALL WEBS	2x3	DRY	No.2	SPF
EXCEPT				
P - N	2x4	DRY	No.2	SPF
K - I	2x4	DRY	No.2	SPF

DRY: SEASONED LUMBER.

PLATES (table is in inches)

JT	TYPE	PLATES	W	LEN	Y	X
B	TMVW-t	MT20	4.0	10.0	2.00	4.50
C	TMVW+p	MT20	4.0	4.0	1.00	2.00
D	TTWW+m	MT20	5.0	6.0	2.25	1.50
E	TTW-m	MT20	4.0	4.0		
F	TMVW+p	MT20	4.0	4.0	1.00	2.00
G	TMVW-t	MT20	4.0	10.0	2.00	4.50
I	BMVW1+p	MT20	4.0	6.0		
J	BMV+p	MT20	3.0	8.0		
K	BVMWW-I	MT20	7.0	12.0	4.25	7.00
L	BMWWW-t	MT20	5.0	8.0		
M	BMWW-t	MT20	5.0	6.0		
N	BVMWW-I	MT20	7.0	12.0	4.25	7.00
O	BMV+p	MT20	3.0	8.0		
P	BMVW1+p	MT20	4.0	6.0		

NOTES- (1)
1) Lateral braces to be a minimum of 2X4 SPF #2.

LICENSED PROFESSIONAL ENGINEER
06-24-22
H. J. G. ALVES
100009024
PROVINCE OF ONTARIO

Structural component only
DWG# T-2215155

DIMENSIONS, SUPPORTS AND LOADINGS SPECIFIED BY FABRICATOR TO BE VERIFIED BY BUILDING DESIGNER

BEARINGS

JT	FACTORED GROSS REACTION VERT	HORZ	MAXIMUM FACTORED GROSS REACTION DOWN	HORZ	UPLIFT	INPUT BRG IN-SX	REQRD BRG IN-SX
P	1454	0	1454	0	0	5-8	5-8
I	1451	0	1451	0	0	5-8	5-8

UNFACTORED REACTIONS

JT	1ST LCASE COMBINED	MAX./MIN. COMPONENT REACTIONS SNOW	LIVE	PERM.LIVE	WIND	DEAD	SOIL
P	1019	722 / 0	0 / 0	0 / 0	0 / 0	297 / 0	0 / 0
I	1017	721 / 0	0 / 0	0 / 0	0 / 0	296 / 0	0 / 0

BEARING MATERIAL TO BE SPF NO.2 OR BETTER AT JOINT(S) P, I

BRACING
TOP CHORD TO BE SHEATHED OR MAX. PURLIN SPACING = 4.17 FT.
MAX. UNBRACED BOTTOM CHORD LENGTH = 10.00 FT OR RIGID CEILING DIRECTLY APPLIED.

ALL PITCH BREAKS AND PERIMETER CORNER JOINTS MUST BE LATERALLY RESTRAINED.

LOADING
TOTAL LOAD CASES: (4)

CHORDS

MEMB. FR-TO	MAX. FACTORED FORCE (LBS)	FACTORED VERT. LOAD LC1 (PLF) FROM	TO	MAX CSI (LC)	MAX. UNBRAC LENGTH
A- B	0 / 50	-112.4	-112.4	0.17 (1)	10.00
B- C	-2559 / 0	-112.4	-112.4	0.15 (1)	4.17
C- D	-1469 / 0	-112.4	-112.4	0.22 (1)	5.14
D- Q	-1131 / 0	-112.4	-112.4	0.23 (1)	5.65
Q- E	-1131 / 0	-112.4	-112.4	0.23 (1)	5.65
E- F	-1471 / 0	-112.4	-112.4	0.22 (1)	5.13
F- G	-2552 / 0	-112.4	-112.4	0.15 (1)	4.17
G- H	0 / 50	-112.4	-112.4	0.17 (1)	10.00
P- B	-1386 / 0	0.0	0.0	0.16 (1)	6.87
I- G	-1383 / 0	0.0	0.0	0.16 (1)	6.88
P- O	0 / 58	-18.5	-18.5	0.02 (4)	10.00
O- N	0 / 192	0.0	0.0	0.19 (1)	10.00
N- C	0 / 750	0.0	0.0	0.29 (1)	10.00
N- R	0 / 2063	-18.5	-18.5	0.30 (1)	10.00
R- M	0 / 2063	-18.5	-18.5	0.30 (1)	10.00
M- S	0 / 1128	-18.5	-18.5	0.16 (1)	10.00
S- L	0 / 1128	-18.5	-18.5	0.16 (1)	10.00
L- T	0 / 2057	-18.5	-18.5	0.29 (1)	10.00
T- K	0 / 2057	-18.5	-18.5	0.29 (1)	10.00
J- K	0 / 21	0.0	0.0	0.16 (1)	10.00
K- F	0 / 741	0.0	0.0	0.28 (1)	10.00
J- I	0 / 58	-18.5	-18.5	0.02 (4)	10.00

WEBS

MEMB. FR-TO	MAX. FACTORED FORCE (LBS)	MAX CSI (LC)
C- M	-1014 / 0	0.24 (1)
M- D	0 / 381	0.09 (1)
D- L	0 / 5	0.00 (4)
L- E	0 / 401	0.10 (1)
L- F	-1006 / 0	0.24 (1)
P- N	-76 / 0	0.01 (1)
B- N	0 / 2041	0.51 (1)
K- I	-76 / 0	0.01 (1)
K- G	0 / 2035	0.50 (1)

SPECIFIED CONCENTRATED LOADS (LBS)

JT	LOC.	LC1	MAX-	MAX+	FACE	DIR.	TYPE	HEEL	CONN.
D	5-2-8	-136	-136	---	BACK	VERT	TOTAL	---	C1
E	7-9-8	-136	-136	---	BACK	VERT	TOTAL	---	C1
K	10-11-4	-124	-124	---	BACK	VERT	TOTAL	---	C1
L	7-8-12	-11	-11	---	BACK	VERT	TOTAL	---	C1
M	5-3-4	-11	-11	---	BACK	VERT	TOTAL	---	C1
O	2-0-12	-124	-124	---	BACK	VERT	TOTAL	---	C1
Q	6-3-4	-56	-56	---	BACK	VERT	TOTAL	---	C1
R	3-8-4	-11	-11	---	BACK	VERT	TOTAL	---	C1
S	6-3-4	-11	-11	---	BACK	VERT	TOTAL	---	C1
T	9-3-12	-11	-11	---	BACK	VERT	TOTAL	---	C1

CONNECTION REQUIREMENTS

1) **C1:** A SUITABLE HANGER/MECHANICAL CONNECTION IS REQUIRED.

DESIGN CRITERIA

SPECIFIED LOADS:

TOP CH.	LL	=	32.5	PSF
	DL	=	6.0	PSF
BOT CH.	LL	=	0.0	PSF
	DL	=	7.4	PSF
TOTAL LOAD		=	45.9	PSF

SPACING = 24.0 IN. C/C

LOADING IN FLAT SECTION BASED ON A SLOPE OF 6.00/12

THIS TRUSS IS DESIGNED FOR RESIDENTIAL OR SMALL BUILDING REQUIREMENTS OF PART 9, NBCC 2015

THIS DESIGN COMPLIES WITH:
- PART 9 OF BCBC 2018 , ABC 2019
- PART 9 OF OBC 2012 (2019 AMENDMENT)
- CSA 086-14
- TPIC 2014

(55 % OF 43.9 P.S.F. G.S.L. PLUS 8.4 P.S.F. RAIN LOAD) EQUALS 32.5 P.S.F. SPECIFIED ROOF LIVE LOAD

ALLOWABLE DEFL.(LL)= L/360 (0.43")
CALCULATED VERT. DEFL.(LL) = L/ 999 (0.04")
ALLOWABLE DEFL.(TL)= L/360 (0.43")
CALCULATED VERT. DEFL.(TL) = L/ 999 (0.08")

CSI: TC=0.23/1.00 (D-E:1) , BC=0.30/1.00 (M-N:1) , WB=0.51/1.00 (B-N:1) , SSI=0.17/1.00 (D-E:1)

DOL LUMBER=1.00 NAIL=1.00 LS BEND=1.00 COMP=1.00 SHEAR=1.00 TENS= 1.00

COMPANION LIVE LOAD FACTOR = 1.00

AUTOSOLVE HEELS OFF

TRUSS PLATE MANUFACTURER IS NOT RESPONSIBLE FOR QUALITY CONTROL IN THE TRUSS MANUFACTURING PLANT .

NAIL VALUES

PLATE	GRIP(DRY) (PSI) MAX	MIN	SHEAR (PLI) MAX	MIN	SECTION (PLI) MAX	MIN
MT20	650	371	1747	788	1987	1873

PLATE PLACEMENT TOL. = 0.250 inches

PLATE ROTATION TOL. = 5.0 Deg.

JSI GRIP= 0.85 (C) (INPUT = 0.90)
JSI METAL= 0.42 (C) (INPUT = 1.00)

REVIEWED

CONTINUED ON PAGE 2

CONNECTION REQUIREMENTS

1) **C1:** A SUITABLE HANGER/MECHANICAL CONNECTION IS REQUIRED.

LICENSED PROFESSIONAL ENGINEER
06-24-22
H. J. G. ALVES
100009024
PROVINCE OF ONTARIO

Structural component only
DWG# T-2215155

REVIEWED

JOB NAME	TRUSS NAME	QUANTITY	PLY	JOB DESC.	DRWG NO.
423534	T31S	1	1	BAYVIEW WELLINGTON TRUSS DESC.	

Tamarack Roof Truss, Burlington

Version 8.530 S Feb 23 2022 MiTek Industries, Inc. Fri Jun 24 08:28:58 2022 Page 1
ID:c3jyj23uDijq_8pvRKbkZpy75XW-lMeEY8B2NLLwTJp9eO8xrVQiHRr7PmxmndcZW?z38Jp

Scale = 1:43.3

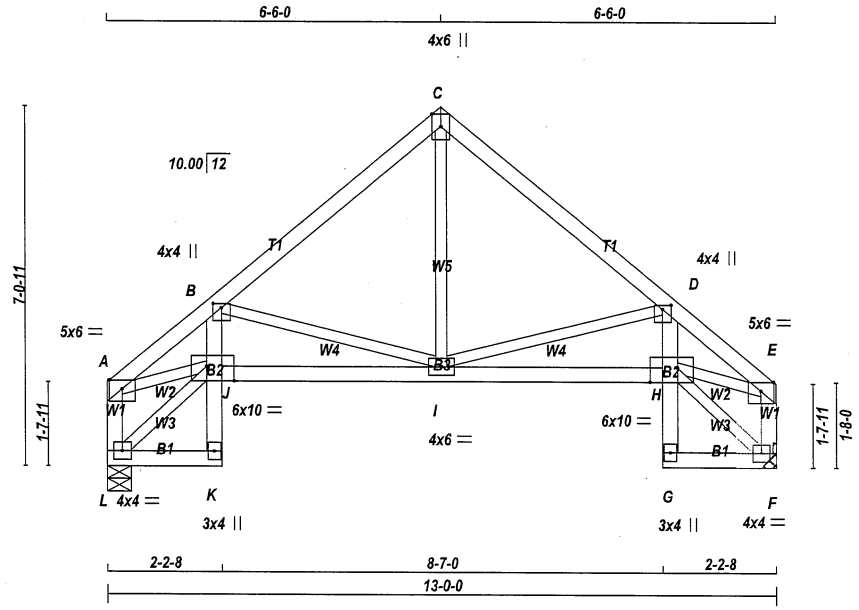

TOTAL WEIGHT = 61 lb

LUMBER
N. L. G. A. RULES

CHORDS	SIZE		LUMBER	DESCR.
A - C	2x4	DRY	No.2	SPF
C - E	2x4	DRY	No.2	SPF
L - A	2x4	DRY	No.2	SPF
F - E	2x4	DRY	No.2	SPF
L - K	2x4	DRY	No.2	SPF
K - B	2x4	DRY	No.2	SPF
J - H	2x4	DRY	No.2	SPF
G - D	2x4	DRY	No.2	SPF
G - F	2x4	DRY	No.2	SPF
ALL WEBS EXCEPT	2x3	DRY	No.2	SPF

DRY: SEASONED LUMBER.

PLATES (table is in inches)

JT	TYPE	PLATES	W	LEN	Y	X
A	TMVW-p	MT20	5.0	6.0	Edge	
B	TMVW+p	MT20	4.0	4.0	1.00	2.00
C	TTW+p	MT20	4.0	6.0	Edge	
D	TMVW+p	MT20	4.0	4.0	1.00	2.00
E	TMVW-p	MT20	5.0	6.0	Edge	
F	BMVW1-t	MT20	4.0	4.0		
G	BMV+p	MT20	3.0	4.0		
H	BVMWW-l	MT20	6.0	10.0	Edge	6.50
I	BMWWW-t	MT20	4.0	6.0		
J	BVMWW-l	MT20	6.0	10.0	Edge	6.50
K	BMV+p	MT20	3.0	4.0		
L	BMVW1-t	MT20	4.0	4.0		

Edge - INDICATES REFERENCE CORNER OF PLATE TOUCHES EDGE OF CHORD.

NOTES- (1)
1) Lateral braces to be a minimum of 2X4 SPF #2.

DIMENSIONS, SUPPORTS AND LOADINGS SPECIFIED BY FABRICATOR TO BE VERIFIED BY BUILDING DESIGNER

BEARINGS

JT	FACTORED GROSS REACTION VERT	HORZ	MAXIMUM FACTORED GROSS REACTION DOWN	HORZ	UPLIFT	INPUT BRG	REQRD BRG
L	851	0	851	0	0	IN-SX	IN-SX
F	851	0	851	0	0	5-8	5-8
						MECHANICAL	

A SUITABLE HANGER/MECHANICAL CONNECTION IS REQUIRED AT JOINT F. MINIMUM BEARING LENGTH AT JOINT F = 3-8.

UNFACTORED REACTIONS

JT	1ST LCASE COMBINED	MAX./MIN. COMPONENT REACTIONS SNOW	LIVE	PERM.LIVE	WIND	DEAD	SOIL
L	596	422 / 0	0 / 0	0 / 0	0 / 0	174 / 0	0 / 0
F	596	422 / 0	0 / 0	0 / 0	0 / 0	174 / 0	0 / 0

BEARING MATERIAL TO BE SPF NO.2 OR BETTER AT JOINT(S) L

BRACING
TOP CHORD TO BE SHEATHED OR MAX. PURLIN SPACING = 5.00 FT.
MAX. UNBRACED BOTTOM CHORD LENGTH = 10.00 FT OR RIGID CEILING DIRECTLY APPLIED.

ALL PITCH BREAKS AND PERIMETER CORNER JOINTS MUST BE LATERALLY RESTRAINED.

LOADING
TOTAL LOAD CASES: (4)

CHORDS

MEMB. FR-TO	MAX. FACTORED FORCE (LBS)	FACTORED VERT. LOAD (PLF) FROM	TO	LC1 MAX CSI (LC)	MAX. UNBRAC LENGTH
A- B	-1629 / 0	-112.4	-112.4	0.20 (1)	5.00
B- C	-747 / 0	-112.4	-112.4	0.28 (1)	6.25
C- D	-747 / 0	-112.4	-112.4	0.28 (1)	6.25
D- E	-1629 / 0	-112.4	-112.4	0.20 (1)	5.00
L- A	-803 / 0	0.0	0.0	0.09 (1)	7.81
F- E	-803 / 0	0.0	0.0	0.09 (1)	7.81
L- K	0 / 34	-18.5	-18.5	0.03 (4)	10.00
K- J	0 / 21	0.0	0.0	0.09 (1)	10.00
J- B	0 / 371	0.0	0.0	0.14 (1)	10.00
J- I	0 / 1340	-18.5	-18.5	0.27 (1)	10.00
I- H	0 / 1340	-18.5	-18.5	0.27 (1)	10.00
G- H	0 / 21	0.0	0.0	0.09 (1)	10.00
H- D	0 / 371	0.0	0.0	0.14 (1)	10.00
G- F	0 / 34	-18.5	-18.5	0.03 (4)	10.00

WEBS

MEMB. FR-TO	MAX. FACTORED FORCE (LBS)	MAX CSI (LC)
I- C	0 / 501	0.11 (1)
I- D	-820 / 0	0.29 (1)
B- I	-820 / 0	0.29 (1)
L- J	-45 / 0	0.01 (1)
A- J	0 / 1327	0.30 (1)
H- F	-45 / 0	0.01 (1)
H- E	0 / 1327	0.30 (1)

DESIGN CRITERIA

SPECIFIED LOADS:

TOP CH.	LL	=	32.5	PSF
	DL	=	6.0	PSF
BOT CH.	LL	=	0.0	PSF
	DL	=	7.4	PSF
TOTAL LOAD		=	45.9	PSF

SPACING = 24.0 IN. C/C

THIS TRUSS IS DESIGNED FOR RESIDENTIAL OR SMALL BUILDING REQUIREMENTS OF PART 9, NBCC 2015

THIS DESIGN COMPLIES WITH:
- PART 9 OF BCBC 2018 , ABC 2019
- PART 9 OF OBC 2012 (2019 AMENDMENT)
- CSA 086-14
- TPIC 2014

(55 % OF 43.9 P.S.F. G.S.L. PLUS 8.4 P.S.F. RAIN LOAD) EQUALS 32.5 P.S.F. SPECIFIED ROOF LIVE LOAD

ALLOWABLE DEFL.(LL)= L/360 (0.43")
CALCULATED VERT. DEFL.(LL) = L/ 999 (0.03")
ALLOWABLE DEFL.(TL)= L/360 (0.43")
CALCULATED VERT. DEFL.(TL) = L/ 999 (0.06")

CSI: TC=0.28/1.00 (C-D:1) , BC=0.27/1.00 (H-I:1) , WB=0.30/1.00 (E-H:1) , SSI=0.17/1.00 (C-D:1)

DOL LUMBER=1.00 NAIL=1.00 LS BEND=1.10 COMP=1.10 SHEAR=1.10 TENS= 1.10

COMPANION LIVE LOAD FACTOR = 1.00

AUTOSOLVE HEELS OFF

TRUSS PLATE MANUFACTURER IS NOT RESPONSIBLE FOR QUALITY CONTROL IN THE TRUSS MANUFACTURING PLANT .

NAIL VALUES

PLATE	GRIP(DRY) (PSI) MAX	MIN	SHEAR (PLI) MAX	MIN	SECTION (PLI) MAX	MIN
MT20	650	371	1747	788	1987	1873

PLATE PLACEMENT TOL. = 0.250 inches

PLATE ROTATION TOL. = 5.0 Deg.

JSI GRIP= 0.66 (I) (INPUT = 0.90)
JSI METAL= 0.31 (B) (INPUT = 1.00)

LICENSED PROFESSIONAL ENGINEER
06-24-22
H. J. G. ALVES
100009024
PROVINCE OF ONTARIO

Structural component only
DWG# T-2215156

REVIEWED

JOB NAME	TRUSS NAME	QUANTITY	PLY	JOB DESC.	DRWG NO.
423534	T32	2	2	BAYVIEW WELLINGTON TRUSS DESC.	

Tamarack Roof Truss, Burlington

Version 8.530 S Feb 23 2022 MiTek Industries, Inc. Fri Jun 24 08:28:59 2022 Page 1
ID:c3jyj23uDijq_8pvRKbkZpy75XW-DYCclTBg7fTn5TOLC6fAOjzxQqF68Hrv0HL72Rz38Jo

Scale = 1:11.2

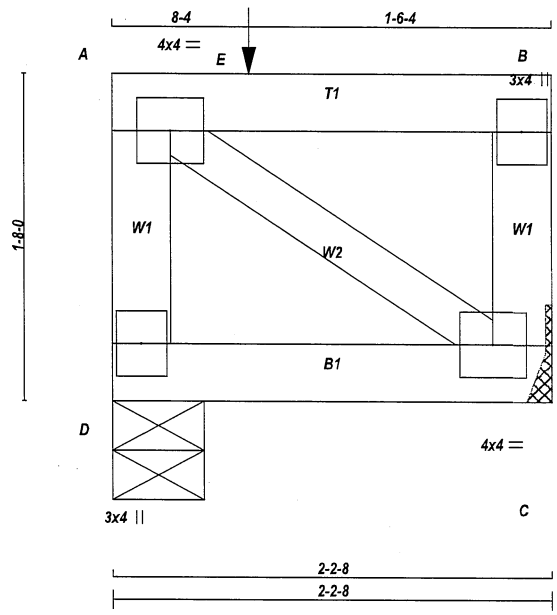

TOTAL WEIGHT = 4 X 9 = 36 lb
[M]

LUMBER
N. L. G. A. RULES

CHORDS	SIZE		LUMBER	DESCR.
D - A	2x4	DRY	No.2	SPF
A - B	2x4	DRY	No.2	SPF
C - B	2x4	DRY	No.2	SPF
D - C	2x4	DRY	No.2	SPF
ALL WEBS	2x3	DRY	No.2	SPF

DRY: SEASONED LUMBER.

DESIGN CONSISTS OF 2 TRUSSES BUILT SEPARATELY THEN FASTENED TOGETHER AS FOLLOWS:

CHORDS #ROWS	SURFACE SPACING (IN)	LOAD(PLF)
TOP CHORDS : (0.122"X3") SPIRAL NAILS		
D- A 1	12	TOP
A- B 1	12	TOP
B- C 1	12	TOP
BOTTOM CHORDS : (0.122"X3") SPIRAL NAILS		
D- C 1	12	SIDE(14.0)
WEBS : (0.122"X3") SPIRAL NAILS		
2x3 1	6	

NAILS TO BE DRIVEN FROM ONE SIDE ONLY.

TOP - COMPONENTS ARE LOADED FROM THE TOP AND MUST BE PLACED ON TOP EDGE OF ALL PLIES FOR THE LOAD TO BE TRANSFERRED TO EACH PLY.

SIDE - PLF SHOWN IS THE EQUIVALENT UDL APPLIED TO ONE SIDE THAT THE CORRESPONDING NAILING PATTERN SHALL BE CAPABLE OF TRANSFERING. REMAINING PLF MUST BE APPLIED ON THE OPPOSITE SIDE OR ON THE TOP.

PLATES (table is in inches)

JT	TYPE	PLATES	W	LEN	Y	X
A	TMVW-t	MT20	4.0	4.0		
B	TMV+p	MT20	3.0	4.0		
C	BMVW1-t	MT20	4.0	4.0		
D	BMV1+p	MT20	3.0	4.0		

NOTES- (1)
1)

Structural component only
DWG# T-2215157

DIMENSIONS, SUPPORTS AND LOADINGS SPECIFIED BY FABRICATOR TO BE VERIFIED BY BUILDING DESIGNER

BEARINGS

JT	FACTORED GROSS REACTION VERT	HORZ	MAXIMUM FACTORED GROSS REACTION DOWN	HORZ	UPLIFT	INPUT BRG IN-SX	REQRD BRG IN-SX
D	198	0	198	0	0	5-8	5-8
C	184	0	184	0	0	MECHANICAL	

A SUITABLE HANGER/MECHANICAL CONNECTION IS REQUIRED AT JOINT C. MINIMUM BEARING LENGTH AT JOINT C = 1-8.

UNFACTORED REACTIONS

JT	1ST LCASE COMBINED	MAX./MIN. COMPONENT REACTIONS SNOW	LIVE	PERM.LIVE	WIND	DEAD	SOIL
D	143	80 / 0	0 / 0	0 / 0	0 / 0	63 / 0	0 / 0
C	132	75 / 0	0 / 0	0 / 0	0 / 0	57 / 0	0 / 0

BEARING MATERIAL TO BE SPF NO.2 OR BETTER AT JOINT(S) D

BRACING
TOP CHORD TO BE SHEATHED OR MAX. PURLIN SPACING = 10.00 FT.
MAX. UNBRACED BOTTOM CHORD LENGTH = 10.00 FT OR RIGID CEILING DIRECTLY APPLIED.

ALL PITCH BREAKS AND PERIMETER CORNER JOINTS MUST BE LATERALLY RESTRAINED.

LOADING
TOTAL LOAD CASES: (4)

CHORDS MEMB. FR-TO	MAX. FACTORED FORCE (LBS)	FACTORED VERT. LOAD (PLF) FROM	TO	LC1	MAX CSI (LC)	MAX. UNBRAC LENGTH	WEBS MEMB. FR-TO	MAX. FACTORED FORCE (LBS)	MAX CSI (LC)
D- A	-150 / 0	0.0	0.0		0.01 (1)	7.81	A- C	0 / 0	0.00 (1)
A- E	0 / 0	-112.4	-112.4		0.06 (1)	10.00			
E- B	0 / 0	-112.4	-112.4		0.06 (1)	10.00			
C- B	-136 / 0	0.0	0.0		0.01 (1)	7.81			
D- C	0 / 0	-43.5	-43.5		0.03 (4)	10.00			

SPECIFIED CONCENTRATED LOADS (LBS)

JT	LOC.	LC1	MAX-	MAX+	FACE	DIR.	TYPE	HEEL	CONN.
E	8-4	-28	-28	---	TOP	VERT	TOTAL	---	C1

CONNECTION REQUIREMENTS

1) **C1:** A SUITABLE HANGER/MECHANICAL CONNECTION IS REQUIRED.

DESIGN CRITERIA

*** SPECIAL LOADS ANALYSIS ***
GEOMETRY AND/OR BASIC LOADS CHANGED BY USER.
LOADS WERE DERIVED FROM USER INPUT
NO FURTHER MODIFICATIONS WERE MADE

SPECIFIED LOADS:

TOP CH.	LL	=	32.5	PSF
	DL	=	6.0	PSF
BOT CH.	LL	=	0.0	PSF
	DL	=	7.4	PSF
TOTAL LOAD		=	45.9	PSF

SPACING = 24.0 IN. C/C

LOADING IN FLAT SECTION BASED ON A SLOPE OF 6.00/12

*** NON STANDARD GIRDER ***
ADDT'L USER-DEFINED LOADS APPLIED TO ALL LOAD CASES.

THIS TRUSS IS DESIGNED FOR RESIDENTIAL OR SMALL BUILDING REQUIREMENTS OF PART 9, NBCC 2015

THIS DESIGN COMPLIES WITH:
- PART 9 OF BCBC 2018 , ABC 2019
- PART 9 OF OBC 2012 (2019 AMENDMENT)
- CSA 086-14
- TPIC 2014

(55 % OF 43.9 P.S.F. G.S.L. PLUS 8.4 P.S.F. RAIN LOAD) EQUALS 32.5 P.S.F. SPECIFIED ROOF LIVE LOAD

ALLOWABLE DEFL.(TL)= L/360 (0.19")
CALCULATED VERT. DEFL.(TL) = L/ 999 (0.00")

CSI: TC=0.06/1.00 (A-B:1) , BC=0.03/1.00 (C-D:4) , WB=0.00/1.00 (A-C:1) , SSI=0.06/1.00 (A-B:1)

DOL LUMBER=1.00 NAIL=1.00 LS BEND=1.00 COMP=1.00 SHEAR=1.00 TENS= 1.00

COMPANION LIVE LOAD FACTOR = 1.00

TRUSS PLATE MANUFACTURER IS NOT RESPONSIBLE FOR QUALITY CONTROL IN THE TRUSS MANUFACTURING PLANT .

NAIL VALUES

PLATE	GRIP(DRY) (PSI) MAX	MIN	SHEAR (PLI) MAX	MIN	SECTION (PLI) MAX	MIN
MT20	650	371	1747	788	1987	1873

PLATE PLACEMENT TOL. = 0.250 inches

PLATE ROTATION TOL. = 5.0 Deg.

JSI GRIP= 0.04 (A) (INPUT = 0.90)
JSI METAL= 0.01 (A) (INPUT = 1.00)

REVIEWED

JOB NAME	TRUSS NAME	QUANTITY	PLY	JOB DESC.	DRWG NO.
423534	T33	1	2	BAYVIEW WELLINGTON TRUSS DESC.	

Tamarack Roof Truss, Burlington

Version 8.530 S Feb 23 2022 MiTek Industries, Inc. Fri Jun 24 08:29:00 2022 Page 1
ID:c3jyj23uDijq_8pvRKbkZpy75XW-hkm_ypCluybdjdzXmpAPwwV4gEX4tk43Fx5gauz38Jn

Scale = 1:27.5

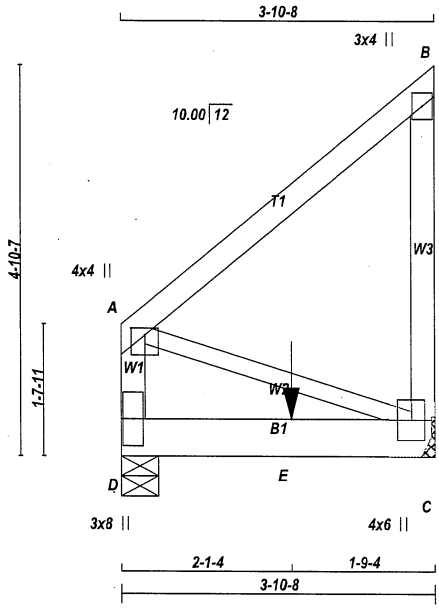

TOTAL WEIGHT = 2 X 22 = 43 lb

LUMBER

N. L. G. A. RULES

CHORDS	SIZE		LUMBER	DESCR.
D - A	2x4	DRY	No.2	SPF
A - B	2x4	DRY	No.2	SPF
C - B	2x4	DRY	No.2	SPF
D - C	2x6	DRY	No.2	SPF
ALL WEBS	2x3	DRY	No.2	SPF

DRY: SEASONED LUMBER.

DESIGN CONSISTS OF 2 TRUSSES BUILT SEPARATELY THEN FASTENED TOGETHER AS FOLLOWS:

CHORDS	#ROWS	SURFACE SPACING (IN)	LOAD(PLF)
TOP CHORDS : (0.122"X3") SPIRAL NAILS			
D- A	1	12	TOP
A- B	1	12	TOP
B- C	1	12	TOP
BOTTOM CHORDS : (0.122"X3") SPIRAL NAILS			
D- C	2	12	SIDE(0.0)
WEBS : (0.122"X3") SPIRAL NAILS			
2x3	1	6	

NAILS TO BE DRIVEN FROM ONE SIDE ONLY.

GIRDER NAILING ASSUMES NAILED HANGERS ARE FASTENED WITH MIN. 3-0 INCH NAILS.

TOP - COMPONENTS ARE LOADED FROM THE TOP AND MUST BE PLACED ON TOP EDGE OF ALL PLIES FOR THE LOAD TO BE TRANSFERRED TO EACH PLY.

SIDE - PLF SHOWN IS THE EQUIVALENT UDL APPLIED TO ONE SIDE THAT THE CORRESPONDING NAILING PATTERN SHALL BE CAPABLE OF TRANSFERING. REMAINING PLF MUST BE APPLIED ON THE OPPOSITE SIDE OR ON THE TOP.

PLATES (table is in inches)

JT	TYPE	PLATES	W	LEN	Y	X
A	TMVW+p	MT20	4.0	4.0	1.00	2.00
B	TMV+p	MT20	3.0	4.0		
C	BMVW1+p	MT20	4.0	6.0		
D	BMV1+p	MT20	3.0	8.0		

Structural only
DWG# T-2215158

DIMENSIONS, SUPPORTS AND LOADINGS SPECIFIED BY FABRICATOR TO BE VERIFIED BY BUILDING DESIGNER

BEARINGS

JT	FACTORED GROSS REACTION VERT	HORZ	MAXIMUM FACTORED GROSS REACTION DOWN	HORZ	UPLIFT	INPUT BRG IN-SX	REQRD BRG IN-SX
D	634	0	634	0	0	5-8	5-8
C	706	0	706	0	0	MECHANICAL	

A SUITABLE HANGER/MECHANICAL CONNECTION IS REQUIRED AT JOINT C. MINIMUM BEARING LENGTH AT JOINT C = 2-0.

UNFACTORED REACTIONS

JT	1ST LCASE COMBINED	MAX./MIN. COMPONENT REACTIONS SNOW	LIVE	PERM.LIVE	WIND	DEAD	SOIL
D	444	319 / 0	0 / 0	0 / 0	0 / 0	125 / 0	0 / 0
C	494	355 / 0	0 / 0	0 / 0	0 / 0	138 / 0	0 / 0

BEARING MATERIAL TO BE SPF NO.2 OR BETTER AT JOINT(S) D

BRACING

TOP CHORD TO BE SHEATHED OR MAX. PURLIN SPACING = 10.00 FT.
MAX. UNBRACED BOTTOM CHORD LENGTH = 10.00 FT OR RIGID CEILING DIRECTLY APPLIED.

ALL PITCH BREAKS AND PERIMETER CORNER JOINTS MUST BE LATERALLY RESTRAINED.

LOADING

TOTAL LOAD CASES: (4)

CHORDS

MEMB. FR-TO	MAX. FACTORED FORCE (LBS)	FACTORED VERT. LOAD (PLF) FROM	TO	LC1 MAX CSI (LC)	MAX. UNBRAC LENGTH
D- A	-218 / 0	0.0	0.0	0.01 (1)	7.81
A- B	0 / 0	-112.4	-112.4	0.16 (1)	10.00
C- B	-218 / 0	0.0	0.0	0.04 (1)	7.81
D- E	0 / 0	-18.5	-18.5	0.31 (1)	10.00
E- C	0 / 0	-18.5	-18.5	0.31 (1)	10.00

WEBS

MEMB. FR-TO	MAX. FACTORED FORCE (LBS)	MAX CSI (LC)
A- C	0 / 0	0.00 (1)

SPECIFIED CONCENTRATED LOADS (LBS)

JT	LOC.	LC1	MAX-	MAX+	FACE	DIR.	TYPE	HEEL	CONN.
E	2-1-4	-582	-582	---	FRONT	VERT	TOTAL	---	C1

CONNECTION REQUIREMENTS

1) **C1:** A SUITABLE HANGER/MECHANICAL CONNECTION IS REQUIRED.

DESIGN CRITERIA

SPECIFIED LOADS:

TOP CH.	LL	=	32.5	PSF
	DL	=	6.0	PSF
BOT CH.	LL	=	0.0	PSF
	DL	=	7.4	PSF
TOTAL LOAD		=	45.9	PSF

SPACING = 24.0 IN. C/C

THIS TRUSS IS DESIGNED FOR RESIDENTIAL OR SMALL BUILDING REQUIREMENTS OF PART 9, NBCC 2015

THIS DESIGN COMPLIES WITH:
- PART 9 OF BCBC 2018 , ABC 2019
- PART 9 OF OBC 2012 (2019 AMENDMENT)
- CSA 086-14
- TPIC 2014

(55 % OF 43.9 P.S.F. G.S.L. PLUS 8.4 P.S.F. RAIN LOAD) EQUALS 32.5 P.S.F. SPECIFIED ROOF LIVE LOAD

ALLOWABLE DEFL.(LL)= L/360 (0.19")
CALCULATED VERT. DEFL.(LL) = L/ 999 (0.02")
ALLOWABLE DEFL.(TL)= L/360 (0.19")
CALCULATED VERT. DEFL.(TL) = L/ 999 (0.03")

CSI: TC=0.16/1.00 (A-B:1) , BC=0.31/1.00 (C-D:1) , WB=0.00/1.00 (A-C:1) , SSI=0.16/1.00 (C-D:1)

DOL LUMBER=1.00 NAIL=1.00 LS BEND=1.00 COMP=1.00 SHEAR=1.00 TENS= 1.00

COMPANION LIVE LOAD FACTOR = 1.00

TRUSS PLATE MANUFACTURER IS NOT RESPONSIBLE FOR QUALITY CONTROL IN THE TRUSS MANUFACTURING PLANT .

NAIL VALUES

PLATE	GRIP(DRY) (PSI) MAX	MIN	SHEAR (PLI) MAX	MIN	SECTION (PLI) MAX	MIN
MT20	650	371	1747	788	1987	1873

PLATE PLACEMENT TOL. = 0.250 inches

PLATE ROTATION TOL. = 5.0 Deg.

JSI GRIP= 0.08 (A) (INPUT = 0.90)
JSI METAL= 0.04 (B) (INPUT = 1.00)

REVIEWED

CONTINUED ON PAGE 2

JOB NAME	TRUSS NAME	QUANTITY	PLY	JOB DESC.	DRWG NO.
423537	T45	1	2	BAYVIEW WELLINGTON TRUSS DESC.	

Tamarack Roof Truss, Burlington

Version 8.530 S Feb 23 2022 MiTek Industries, Inc. Fri Jun 24 09:02:56 2022 Page 1
ID:c3jyj23uDijq_8pvRKbkZpy75XW-4RnhG?rQQW6lzVcr1PisRHqzqzN7vP8kQiIP2tz37pz

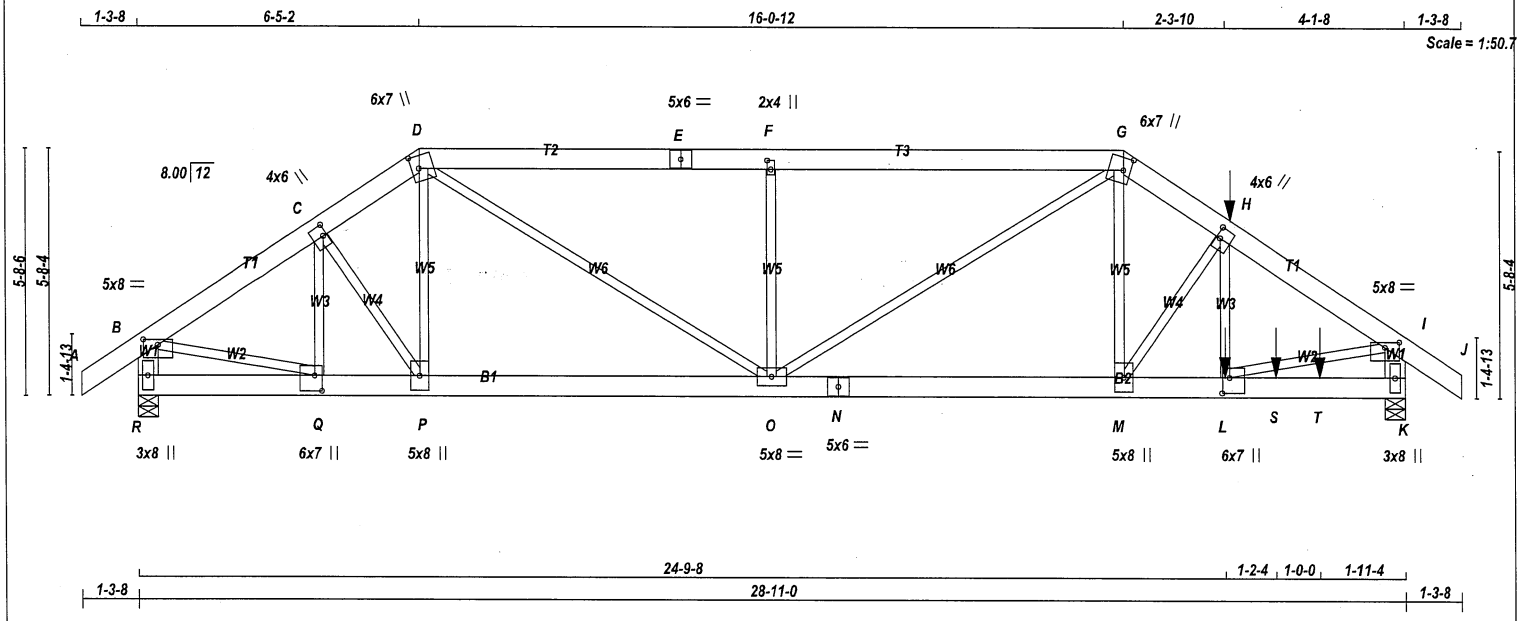

TOTAL WEIGHT = 2 X 161 = 323 lb

[M]

LUMBER

N. L. G. A. RULES

CHORDS	SIZE		LUMBER	DESCR.
A - D	2x6	DRY	No.2	SPF
D - E	2x6	DRY	No.2	SPF
E - G	2x6	DRY	No.2	SPF
G - J	2x6	DRY	No.2	SPF
R - B	2x6	DRY	No.2	SPF
K - I	2x6	DRY	No.2	SPF
R - N	2x6	DRY	No.2	SPF
N - K	2x6	DRY	No.2	SPF
ALL WEBS EXCEPT	2x3	DRY	No.2	SPF

DRY: SEASONED LUMBER.

DESIGN CONSISTS OF 2 TRUSSES BUILT SEPARATELY THEN FASTENED TOGETHER AS FOLLOWS:

CHORDS	#ROWS	SURFACE SPACING (IN)	LOAD(PLF)
TOP CHORDS : (0.122"X3") SPIRAL NAILS			
A- D	2	12	TOP
D- E	2	12	TOP
E- G	2	12	TOP
G- J	2	12	SIDE(183.1)
R- B	2	12	TOP
K- I	2	12	TOP
BOTTOM CHORDS : (0.122"X3") SPIRAL NAILS			
R- N	2	12	TOP
N- K	2	12	SIDE(183.1)
WEBS : (0.122"X3") SPIRAL NAILS			
H- L	1	3	SIDE(609.4)
2x3	1	3	
P- C	1	6	
P- D	1	6	
M- G	1	6	
M- H	1	6	
Q- B	1	6	
L- I	1	6	
O- G	1	6	
O- D	1	6	
O- F	1	6	

NAILS TO BE DRIVEN FROM ONE SIDE ONLY.

LICENSED PROFESSIONAL ENGINEER
06-24-22
H. J. G. ALVES
100009024
PROVINCE OF ONTARIO

Structural component only
DWG# T-2215162

DIMENSIONS, SUPPORTS AND LOADINGS SPECIFIED BY FABRICATOR TO BE VERIFIED BY BUILDING DESIGNER

BEARINGS

JT	FACTORED GROSS REACTION VERT	HORZ	MAXIMUM FACTORED GROSS REACTION DOWN	HORZ	UPLIFT	INPUT BRG IN-SX	REQRD BRG IN-SX
R	2544	0	2544	0	0	5-8	5-8
K	5028	0	5028	0	0	5-8	5-8

UNFACTORED REACTIONS

JT	1ST LCASE COMBINED	MAX./MIN. COMPONENT REACTIONS SNOW	LIVE	PERM.LIVE	WIND	DEAD	SOIL
R	1779	1280 / 0	0 / 0	0 / 0	0 / 0	500 / 0	0 / 0
K	3518	2525 / 0	0 / 0	0 / 0	0 / 0	993 / 0	0 / 0

BEARING MATERIAL TO BE SPF NO.2 OR BETTER AT JOINT(S) R, K

BRACING

TOP CHORD TO BE SHEATHED OR MAX. PURLIN SPACING = 4.68 FT.
MAX. UNBRACED BOTTOM CHORD LENGTH = 10.00 FT OR RIGID CEILING DIRECTLY APPLIED.

ALL PITCH BREAKS AND PERIMETER CORNER JOINTS MUST BE LATERALLY RESTRAINED.

LOADING

TOTAL LOAD CASES: (4)

CHORDS MEMB. FR-TO	MAX. FORCE (LBS)	FACTORED VERT. LOAD (PLF) FROM	TO	LC1 MAX CSI (LC)	MAX. UNBRAC LENGTH	WEBS MEMB. FR-TO	MAX. FORCE (LBS)	MAX CSI (LC)
A- B	0 / 44	-112.4	-112.4	0.04 (1)	10.00	Q- C	-563 / 0	0.07 (1)
B- C	-2867 / 0	-112.4	-112.4	0.08 (1)	6.25	C- P	0 / 96	0.01 (1)
C- D	-2978 / 0	-112.4	-112.4	0.04 (1)	6.25	P- D	0 / 114	0.02 (4)
D- E	-4134 / 0	-112.4	-112.4	0.35 (1)	5.22	M- G	0 / 2008	0.25 (1)
E- F	-4134 / 0	-112.4	-112.4	0.35 (1)	5.22	M- H	-2031 / 0	0.31 (1)
F- G	-4133 / 0	-112.4	-112.4	0.35 (1)	5.22	L- H	0 / 1747	0.22 (1)
G- H	-4715 / 0	-112.4	-112.4	0.08 (1)	5.27	B- Q	0 / 2452	0.30 (1)
H- I	-6084 / 0	-112.4	-112.4	0.17 (1)	4.68	L- I	0 / 5166	0.64 (1)
I- J	0 / 44	-112.4	-112.4	0.04 (1)	10.00	O- G	0 / 194	0.02 (1)
R- B	-2488 / 0	0.0	0.0	0.09 (1)	7.81	D- O	0 / 2005	0.25 (1)
K- I	-4886 / 0	0.0	0.0	0.17 (1)	6.56	O- F	-1081 / 0	0.24 (1)
R- Q	0 / 0	-18.5	-18.5	0.03 (1)	10.00			
Q- P	0 / 2396	-18.5	-18.5	0.20 (1)	10.00			
P- O	0 / 2451	-18.5	-18.5	0.21 (1)	10.00			
O- N	0 / 3970	-18.5	-18.5	0.31 (1)	10.00			
N- M	0 / 3970	-18.5	-18.5	0.31 (1)	10.00			
M- L	0 / 5048	-18.5	-18.5	0.45 (1)	10.00			
L- S	0 / 0	-18.5	-18.5	0.13 (1)	10.00			
S- T	0 / 0	-18.5	-18.5	0.13 (1)	10.00			
T- K	0 / 0	-18.5	-18.5	0.13 (1)	10.00			

SPECIFIED CONCENTRATED LOADS (LBS)

JT	LOC.	LC1	MAX-	MAX+	FACE	DIR.	TYPE	HEEL	CONN.
H	24-9-8	-41	-41	---	FRONT	VERT	DEAD	---	C1
H	24-9-8	-217	-217	---	FRONT	VERT	SNOW	---	C1
L	24-9-8	-2125	-2125	---	FRONT	VERT	TOTAL	---	C1
S	25-11-12	-21	-21	---	FRONT	VERT	TOTAL	---	C1
T	26-11-12	-21	-21	---	FRONT	VERT	TOTAL	---	C1

CONNECTION REQUIREMENTS

1) **C1:** A SUITABLE HANGER/MECHANICAL CONNECTION IS REQUIRED.

REVIEWED

DESIGN CRITERIA

*** SPECIAL LOADS ANALYSIS ***
GEOMETRY AND/OR BASIC LOADS CHANGED BY USER.
LOADS WERE DERIVED FROM USER INPUT
NO FURTHER MODIFICATIONS WERE MADE

SPECIFIED LOADS:

TOP	CH.	LL	=	32.5	PSF
		DL	=	6.0	PSF
BOT	CH.	LL	=	0.0	PSF
		DL	=	7.4	PSF
TOTAL	LOAD		=	45.9	PSF

SPACING = 24.0 IN. C/C

LOADING IN FLAT SECTION BASED ON A SLOPE OF 6.00/12

*** NON STANDARD GIRDER ***
ADDT'L USER-DEFINED LOADS APPLIED TO ALL LOAD CASES.

THIS TRUSS IS DESIGNED FOR RESIDENTIAL OR SMALL BUILDING REQUIREMENTS OF PART 9, NBCC 2015

THIS DESIGN COMPLIES WITH:
- PART 9 OF BCBC 2018 , ABC 2019
- PART 9 OF OBC 2012 (2019 AMENDMENT)
- CSA 086-14
- TPIC 2014

(55 % OF 43.9 P.S.F. G.S.L. PLUS 8.4 P.S.F. RAIN LOAD) EQUALS 32.5 P.S.F. SPECIFIED ROOF LIVE LOAD

ALLOWABLE DEFL.(LL)= L/360 (0.96")
CALCULATED VERT. DEFL.(LL) = L/ 999 (0.07")
ALLOWABLE DEFL.(TL)= L/360 (0.96")
CALCULATED VERT. DEFL.(TL) = L/ 999 (0.12")

CSI: TC=0.35/1.00 (D-F:1) , BC=0.45/1.00 (L-M:1) , WB=0.64/1.00 (I-L:1) , SSI=0.18/1.00 (F-G:1)

DOL LUMBER=1.00 NAIL=1.00 LS BEND=1.00 COMP=1.00 SHEAR=1.00 TENS= 1.00

COMPANION LIVE LOAD FACTOR = 1.00

AUTOSOLVE HEELS OFF

TRUSS PLATE MANUFACTURER IS NOT RESPONSIBLE FOR QUALITY CONTROL IN THE TRUSS MANUFACTURING PLANT .

NAIL VALUES

PLATE	GRIP(DRY) (PSI) MAX	MIN	SHEAR (PLI) MAX	MIN	SECTION (PLI) MAX	MIN
MT20	650	371	1747	788	1987	1873

PLATE PLACEMENT TOL. = 0.250 inches

PLATE ROTATION TOL. = 5.0 Deg.

JSI GRIP= 0.89 (D) (INPUT = 0.90)
JSI METAL= 0.76 (Q) (INPUT = 1.00)

CONTINUED ON PAGE 2

GIRDER NAILING ASSUMES NAILED HANGERS ARE FASTENED WITH MIN. 3-0 INCH NAILS.

PLATES (table is in inches)

JT	TYPE	PLATES	W	LEN	Y	X
B	TMVW-p	MT20	5.0	8.0	1.50	4.00
C	TMWW+t	MT20	4.0	6.0	3.00	1.00
D	TTWW+m	MT20	6.0	7.0	3.50	2.00
E	TS-t	MT20	5.0	6.0		
F	TMW+w	MT20	2.0	4.0	2.50	1.00
G	TTWW+m	MT20	6.0	7.0	3.50	2.00
H	TMWW+t	MT20	4.0	6.0	3.00	1.00
I	TMVW-p	MT20	5.0	8.0	1.50	4.00
K	BMV1+p	MT20	3.0	8.0		
L	BMWW+t	MT20	6.0	7.0	4.25	2.00
M	BMWW+t	MT20	5.0	8.0		
N	BS-t	MT20	5.0	6.0		
O	BMWWW-t	MT20	5.0	8.0		
P	BMWW+t	MT20	5.0	8.0		
Q	BMWW+t	MT20	6.0	7.0	4.25	2.00
R	BMV1+p	MT20	3.0	8.0		

NOTES- (1)
1) Lateral braces to be a minimum of 2X4 SPF #2.

LICENSED PROFESSIONAL ENGINEER
06-24-22
H. J. G. ALVES
100009024
PROVINCE OF ONTARIO

Structural component only
DWG# T-2215162

REVIEWED

JOB NAME	TRUSS NAME	QUANTITY	PLY	JOB DESC.	DRWG NO.
423537	T46	2	1	BAYVIEW WELLINGTON TRUSS DESC.	

Tamarack Roof Truss, Burlington

Version 8.530 S Feb 23 2022 MiTek Industries, Inc. Fri Jun 24 09:02:57 2022 Page 1
ID:c3jyj23uDijq_8pvRKbkZpy75XW-YdL3ULs2BqEcbfB1b7D5_UN2_MkgeoKufM1yaJz37py

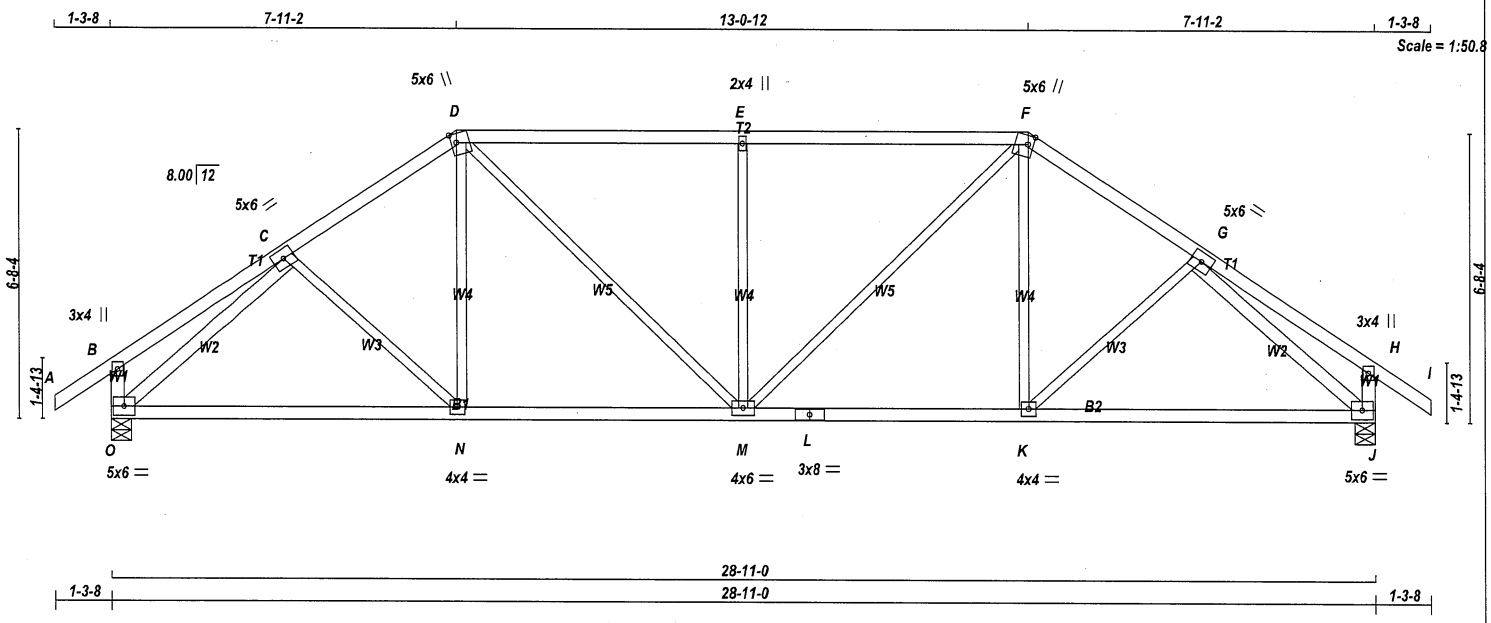

TOTAL WEIGHT = 2 X 125 = 250 lb

[M][F]

LUMBER

N. L. G. A. RULES

CHORDS	SIZE		LUMBER	DESCR.
A - D	2x4	DRY	No.2	SPF
D - F	2x4	DRY	No.2	SPF
F - I	2x4	DRY	No.2	SPF
O - B	2x4	DRY	No.2	SPF
J - H	2x4	DRY	No.2	SPF
O - L	2x4	DRY	No.2	SPF
L - J	2x4	DRY	No.2	SPF
ALL WEBS	2x3	DRY	No.2	SPF
EXCEPT				
O - C	2x4	DRY	No.2	SPF
G - J	2x4	DRY	No.2	SPF

DRY: SEASONED LUMBER.

PLATES (table is in inches)

JT	TYPE	PLATES	W	LEN	Y	X
B	TMV+p	MT20	3.0	4.0		
C	TMWW-t	MT20	5.0	6.0		
D	TTWW+m	MT20	5.0	6.0	2.50	1.50
E	TMW+w	MT20	2.0	4.0		
F	TTWW+m	MT20	5.0	6.0	2.50	1.50
G	TMWW-t	MT20	5.0	6.0		
H	TMV+p	MT20	3.0	4.0		
J	BMVW1-t	MT20	5.0	6.0		
K	BMWW-t	MT20	4.0	4.0		
L	BS-t	MT20	3.0	8.0		
M	BMWWW-t	MT20	4.0	6.0		
N	BMWW-t	MT20	4.0	4.0		
O	BMVW1-t	MT20	5.0	6.0		

NOTES- (1)
1) Lateral braces to be a minimum of 2X4 SPF #2.

DIMENSIONS, SUPPORTS AND LOADINGS SPECIFIED BY FABRICATOR TO BE VERIFIED BY BUILDING DESIGNER

BEARINGS

JT	FACTORED GROSS REACTION VERT	HORZ	MAXIMUM FACTORED GROSS REACTION DOWN	HORZ	UPLIFT	INPUT BRG IN-SX	REQRD BRG IN-SX
O	2047	0	2047	0	0	5-8	5-8
J	2047	0	2047	0	0	5-8	5-8

UNFACTORED REACTIONS

JT	1ST LCASE COMBINED	MAX./MIN. COMPONENT REACTIONS SNOW	LIVE	PERM.LIVE	WIND	DEAD	SOIL
O	1432	1028 / 0	0 / 0	0 / 0	0 / 0	404 / 0	0 / 0
J	1432	1028 / 0	0 / 0	0 / 0	0 / 0	404 / 0	0 / 0

BEARING MATERIAL TO BE SPF NO.2 OR BETTER AT JOINT(S) O, J

BRACING

TOP CHORD TO BE SHEATHED OR MAX. PURLIN SPACING = 3.67 FT.
MAX. UNBRACED BOTTOM CHORD LENGTH = 10.00 FT OR RIGID CEILING DIRECTLY APPLIED.

ALL PITCH BREAKS AND PERIMETER CORNER JOINTS MUST BE LATERALLY RESTRAINED.

LOADING

TOTAL LOAD CASES: (4)

CHORDS

MEMB. FR-TO	MAX. FACTORED FORCE (LBS)	FACTORED VERT. LOAD LC1 (PLF) FROM	TO	MAX CSI (LC)	MAX. UNBRAC LENGTH
A- B	0 / 43	-112.4	-112.4	0.15 (1)	10.00
B- C	0 / 28	-112.4	-112.4	0.27 (1)	10.00
C- D	-2101 / 0	-112.4	-112.4	0.27 (1)	4.45
D- E	-2235 / 0	-112.4	-112.4	0.71 (1)	3.67
E- F	-2235 / 0	-112.4	-112.4	0.71 (1)	3.67
F- G	-2101 / 0	-112.4	-112.4	0.27 (1)	4.45
G- H	0 / 28	-112.4	-112.4	0.27 (1)	10.00
H- I	0 / 43	-112.4	-112.4	0.15 (1)	10.00
O- B	-327 / 0	0.0	0.0	0.03 (1)	7.81
J- H	-327 / 0	0.0	0.0	0.03 (1)	7.81
O- N	0 / 1766	-18.5	-18.5	0.43 (1)	10.00
N- M	0 / 1725	-18.5	-18.5	0.43 (1)	10.00
M- L	0 / 1725	-18.5	-18.5	0.43 (1)	10.00
L- K	0 / 1725	-18.5	-18.5	0.43 (1)	10.00
K- J	0 / 1766	-18.5	-18.5	0.43 (1)	10.00

WEBS

MEMB. FR-TO	MAX. FACTORED FORCE (LBS)	MAX CSI (LC)
C- N	-59 / 42	0.03 (1)
N- D	0 / 200	0.05 (4)
D- M	0 / 712	0.16 (1)
M- E	-902 / 0	0.67 (1)
M- F	0 / 712	0.16 (1)
K- F	0 / 200	0.05 (4)
K- G	-59 / 42	0.03 (1)
O- C	-2423 / 0	0.83 (1)
G- J	-2423 / 0	0.83 (1)

DESIGN CRITERIA

SPECIFIED LOADS:

TOP CH.	LL	=	32.5	PSF
	DL	=	6.0	PSF
BOT CH.	LL	=	0.0	PSF
	DL	=	7.4	PSF
TOTAL LOAD		=	45.9	PSF

SPACING = 24.0 IN. C/C

LOADING IN FLAT SECTION BASED ON A SLOPE OF 6.00/12

THIS TRUSS IS DESIGNED FOR RESIDENTIAL OR SMALL BUILDING REQUIREMENTS OF PART 9, NBCC 2015

THIS DESIGN COMPLIES WITH:
- PART 9 OF BCBC 2018 , ABC 2019
- PART 9 OF OBC 2012 (2019 AMENDMENT)
- CSA 086-14
- TPIC 2014

(55 % OF 43.9 P.S.F. G.S.L. PLUS 8.4 P.S.F. RAIN LOAD) EQUALS 32.5 P.S.F. SPECIFIED ROOF LIVE LOAD

ALLOWABLE DEFL.(LL)= L/360 (0.96")
CALCULATED VERT. DEFL.(LL) = L/ 999 (0.09")
ALLOWABLE DEFL.(TL)= L/360 (0.96")
CALCULATED VERT. DEFL.(TL) = L/ 999 (0.17")

CSI: TC=0.71/1.00 (D-E:1) , BC=0.43/1.00 (J-K:1) , WB=0.83/1.00 (G-J:1) , SSI=0.36/1.00 (D-E:1)

DOL LUMBER=1.00 NAIL=1.00 LS BEND=1.10 COMP=1.10 SHEAR=1.10 TENS= 1.10

COMPANION LIVE LOAD FACTOR = 1.00

AUTOSOLVE HEELS OFF

TRUSS PLATE MANUFACTURER IS NOT RESPONSIBLE FOR QUALITY CONTROL IN THE TRUSS MANUFACTURING PLANT .

NAIL VALUES

PLATE	GRIP(DRY) (PSI) MAX	MIN	SHEAR (PLI) MAX	MIN	SECTION (PLI) MAX	MIN
MT20	650	371	1747	788	1987	1873

PLATE PLACEMENT TOL. = 0.250 inches

PLATE ROTATION TOL. = 5.0 Deg.

JSI GRIP= 0.87 (G) (INPUT = 0.90)
JSI METAL= 0.54 (L) (INPUT = 1.00)

LICENSED PROFESSIONAL ENGINEER
06-24-22
H. J. G. ALVES
100009024
PROVINCE OF ONTARIO

Structural component only
DWG# T-2215163

REVIEWED

JOB NAME	TRUSS NAME	QUANTITY	PLY	JOB DESC.	DRWG NO.
423537	T47	2	1	BAYVIEW WELLINGTON TRUSS DESC.	

Tamarack Roof Truss, Burlington

Version 8.530 S Feb 23 2022 MiTek Industries, Inc. Fri Jun 24 09:02:58 2022 Page 1
ID:c3jyj23uDijq_8pvRKbkZpy75XW-0pvRhhtgx8MTDpmD9qkKXivlTm4INHu1t0nV6mz37px

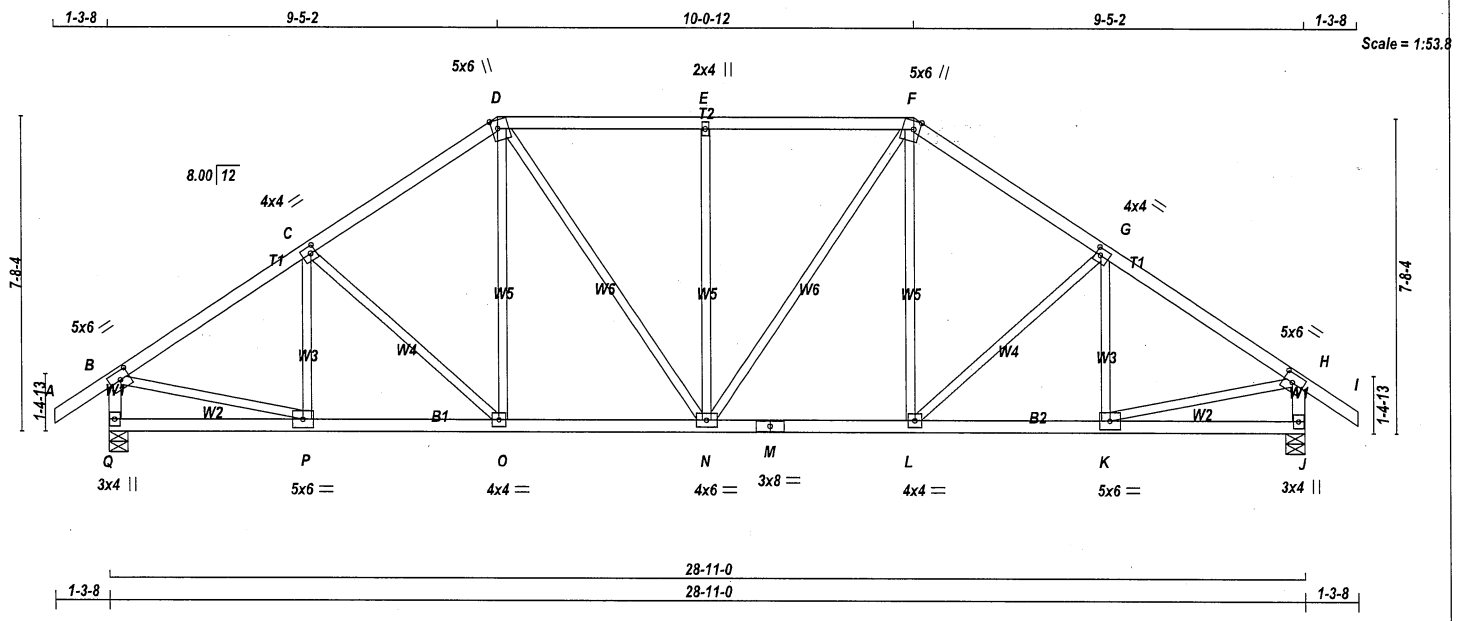

TOTAL WEIGHT = 2 X 132 = 263 lb

[M][F]

LUMBER

N. L. G. A. RULES

CHORDS	SIZE		LUMBER	DESCR.
A - D	2x4	DRY	No.2	SPF
D - F	2x4	DRY	No.2	SPF
F - I	2x4	DRY	No.2	SPF
Q - B	2x4	DRY	No.2	SPF
J - H	2x4	DRY	No.2	SPF
Q - M	2x4	DRY	No.2	SPF
M - J	2x4	DRY	No.2	SPF
ALL WEBS EXCEPT	2x3	DRY	No.2	SPF

DRY: SEASONED LUMBER.

PLATES (table is in inches)

JT	TYPE	PLATES	W	LEN	Y	X
B	TMVW-t	MT20	5.0	6.0	2.50	2.75
C	TMWW-t	MT20	4.0	4.0	2.00	1.50
D	TTWW+m	MT20	5.0	6.0	Edge	1.75
E	TMW+w	MT20	2.0	4.0		
F	TTWW+m	MT20	5.0	6.0	Edge	1.75
G	TMWW-t	MT20	4.0	4.0	2.00	1.50
H	TMVW-t	MT20	5.0	6.0	2.50	2.75
J	BMV1+p	MT20	3.0	4.0		
K	BMWW-t	MT20	5.0	6.0		
L	BMWW-t	MT20	4.0	4.0		
M	BS-t	MT20	3.0	8.0		
N	BMWWW-t	MT20	4.0	6.0		
O	BMWW-t	MT20	4.0	4.0		
P	BMWW-t	MT20	5.0	6.0		
Q	BMV1+p	MT20	3.0	4.0		

Edge - INDICATES REFERENCE CORNER OF PLATE TOUCHES EDGE OF CHORD.

NOTES- (1)
1) Lateral braces to be a minimum of 2X4 SPF #2.

DIMENSIONS, SUPPORTS AND LOADINGS SPECIFIED BY FABRICATOR TO BE VERIFIED BY BUILDING DESIGNER

BEARINGS

JT	FACTORED GROSS REACTION VERT	HORZ	MAXIMUM FACTORED GROSS REACTION DOWN	HORZ	UPLIFT	INPUT BRG IN-SX	REQRD BRG IN-SX
Q	2047	0	2047	0	0	5-8	5-8
J	2047	0	2047	0	0	5-8	5-8

UNFACTORED REACTIONS

JT	1ST LCASE COMBINED	SNOW	MAX./MIN. COMPONENT REACTIONS LIVE	PERM.LIVE	WIND	DEAD	SOIL
Q	1432	1028 / 0	0 / 0	0 / 0	0 / 0	404 / 0	0 / 0
J	1432	1028 / 0	0 / 0	0 / 0	0 / 0	404 / 0	0 / 0

BEARING MATERIAL TO BE SPF NO.2 OR BETTER AT JOINT(S) Q, J

BRACING

TOP CHORD TO BE SHEATHED OR MAX. PURLIN SPACING = 4.25 FT.
MAX. UNBRACED BOTTOM CHORD LENGTH = 10.00 FT OR RIGID CEILING DIRECTLY APPLIED.

ALL PITCH BREAKS AND PERIMETER CORNER JOINTS MUST BE LATERALLY RESTRAINED.

LOADING

TOTAL LOAD CASES: (4)

CHORDS

MEMB. FR-TO	MAX. FACTORED FORCE (LBS)	FACTORED VERT. LOAD LC1 FROM (PLF)	TO	MAX CSI (LC)	MAX. UNBRAC LENGTH
A- B	0 / 43	-112.4	-112.4	0.15 (1)	10.00
B- C	-2182 / 0	-112.4	-112.4	0.39 (1)	4.25
C- D	-1999 / 0	-112.4	-112.4	0.37 (1)	4.42
D- E	-1900 / 0	-112.4	-112.4	0.41 (1)	4.45
E- F	-1900 / 0	-112.4	-112.4	0.41 (1)	4.45
F- G	-1999 / 0	-112.4	-112.4	0.37 (1)	4.42
G- H	-2182 / 0	-112.4	-112.4	0.39 (1)	4.25
H- I	0 / 43	-112.4	-112.4	0.15 (1)	10.00
Q- B	-2008 / 0	0.0	0.0	0.21 (1)	5.96
J- H	-2008 / 0	0.0	0.0	0.21 (1)	5.96
Q- P	0 / 0	-18.5	-18.5	0.09 (4)	10.00
P- O	0 / 1844	-18.5	-18.5	0.34 (1)	10.00
O- N	0 / 1635	-18.5	-18.5	0.31 (1)	10.00
N- M	0 / 1635	-18.5	-18.5	0.31 (1)	10.00
M- L	0 / 1635	-18.5	-18.5	0.31 (1)	10.00
L- K	0 / 1844	-18.5	-18.5	0.34 (1)	10.00
K- J	0 / 0	-18.5	-18.5	0.09 (4)	10.00

WEBS

MEMB. FR-TO	MAX. FACTORED FORCE (LBS)	MAX CSI (LC)
P- C	-324 / 0	0.10 (1)
C- O	-288 / 0	0.21 (1)
O- D	0 / 287	0.06 (1)
D- N	0 / 471	0.11 (1)
N- E	-689 / 0	0.75 (1)
N- F	0 / 471	0.11 (1)
L- F	0 / 287	0.06 (1)
L- G	-288 / 0	0.21 (1)
K- G	-324 / 0	0.10 (1)
B- P	0 / 1890	0.43 (1)
K- H	0 / 1890	0.43 (1)

DESIGN CRITERIA

SPECIFIED LOADS:

TOP CH.	LL	=	32.5	PSF
	DL	=	6.0	PSF
BOT CH.	LL	=	0.0	PSF
	DL	=	7.4	PSF
TOTAL LOAD		=	45.9	PSF

SPACING = 24.0 IN. C/C

LOADING IN FLAT SECTION BASED ON A SLOPE OF 6.00/12

THIS TRUSS IS DESIGNED FOR RESIDENTIAL OR SMALL BUILDING REQUIREMENTS OF PART 9, NBCC 2015

THIS DESIGN COMPLIES WITH:
- PART 9 OF BCBC 2018 , ABC 2019
- PART 9 OF OBC 2012 (2019 AMENDMENT)
- CSA 086-14
- TPIC 2014

(55 % OF 43.9 P.S.F. G.S.L. PLUS 8.4 P.S.F. RAIN LOAD) EQUALS 32.5 P.S.F. SPECIFIED ROOF LIVE LOAD

ALLOWABLE DEFL.(LL)= L/360 (0.96")
CALCULATED VERT. DEFL.(LL) = L/ 999 (0.08")
ALLOWABLE DEFL.(TL)= L/360 (0.96")
CALCULATED VERT. DEFL.(TL) = L/ 999 (0.14")

CSI: TC=0.41/1.00 (D-E:1) , BC=0.34/1.00 (O-P:1) , WB=0.75/1.00 (E-N:1) , SSI=0.27/1.00 (D-E:1)

DOL LUMBER=1.00 NAIL=1.00 LS BEND=1.10 COMP=1.10 SHEAR=1.10 TENS= 1.10

COMPANION LIVE LOAD FACTOR = 1.00

TRUSS PLATE MANUFACTURER IS NOT RESPONSIBLE FOR QUALITY CONTROL IN THE TRUSS MANUFACTURING PLANT .

NAIL VALUES

PLATE	GRIP(DRY) (PSI) MAX	MIN	SHEAR (PLI) MAX	MIN	SECTION (PLI) MAX	MIN
MT20	650	371	1747	788	1987	1873

PLATE PLACEMENT TOL. = 0.250 inches

PLATE ROTATION TOL. = 5.0 Deg.

JSI GRIP= 0.88 (B) (INPUT = 0.90)
JSI METAL= 0.55 (B) (INPUT = 1.00)

LICENSED PROFESSIONAL ENGINEER
06-24-22
H. J. G. ALVES
100009024
PROVINCE OF ONTARIO

Structural component only
DWG# T-2215164

REVIEWED

JOB NAME	TRUSS NAME	QUANTITY	PLY	JOB DESC.	DRWG NO.
423537	T48	2	1	BAYVIEW WELLINGTON TRUSS DESC.	

Tamarack Roof Truss, Burlington

Version 8.530 S Feb 23 2022 MiTek Industries, Inc. Fri Jun 24 09:02:59 2022 Page 1
ID:c3jyj23uDijq_8pvRKbkZpy75XW-U0Tpv0tliRUKqzLQiYFZ3vSQKAQx6osB6gW3eCz37pw

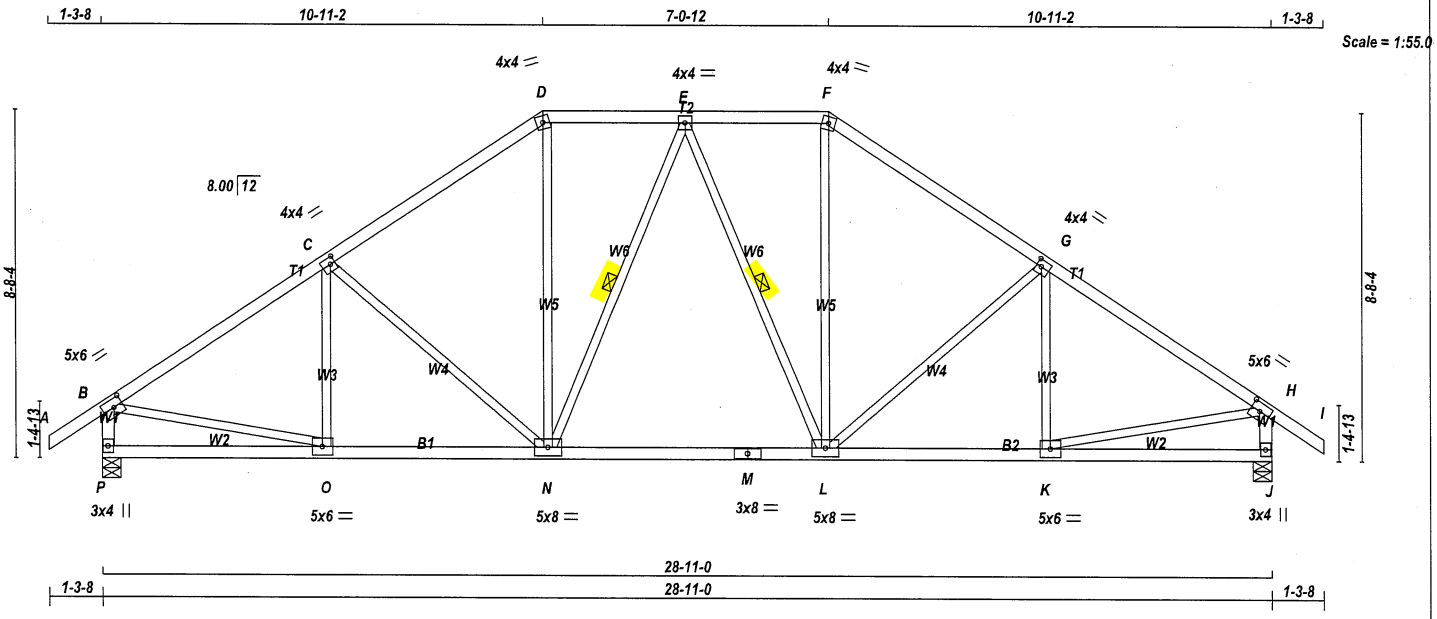

TOTAL WEIGHT = 2 X 132 = 264 lb

LUMBER

N. L. G. A. RULES

CHORDS	SIZE		LUMBER	DESCR.
A - D	2x4	DRY	No.2	SPF
D - F	2x4	DRY	No.2	SPF
F - I	2x4	DRY	No.2	SPF
P - B	2x4	DRY	No.2	SPF
J - H	2x4	DRY	No.2	SPF
P - M	2x4	DRY	No.2	SPF
M - J	2x4	DRY	No.2	SPF
ALL WEBS EXCEPT	2x3	DRY	No.2	SPF

DRY: SEASONED LUMBER.

PLATES (table is in inches)

JT	TYPE	PLATES	W	LEN	Y	X
B	TMVW-t	MT20	5.0	6.0	2.50	2.75
C	TMWW-t	MT20	4.0	4.0	2.00	1.50
D	TTW-m	MT20	4.0	4.0		
E	TMWW-t	MT20	4.0	4.0		
F	TTW-m	MT20	4.0	4.0		
G	TMWW-t	MT20	4.0	4.0	2.00	1.50
H	TMVW-t	MT20	5.0	6.0	2.50	2.75
J	BMV1+p	MT20	3.0	4.0		
K	BMWW-t	MT20	5.0	6.0		
L	BMWWW-t	MT20	5.0	8.0		
M	BS-t	MT20	3.0	8.0		
N	BMWWW-t	MT20	5.0	8.0		
O	BMWW-t	MT20	5.0	6.0		
P	BMV1+p	MT20	3.0	4.0		

NOTES- (1)
1) Lateral braces to be a minimum of 2X4 SPF #2.

DIMENSIONS, SUPPORTS AND LOADINGS SPECIFIED BY FABRICATOR TO BE VERIFIED BY BUILDING DESIGNER

BEARINGS

JT	FACTORED GROSS REACTION VERT	HORZ	MAXIMUM FACTORED GROSS REACTION DOWN	HORZ	UPLIFT	INPUT BRG IN-SX	REQRD BRG IN-SX
P	2047	0	2047	0	0	5-8	5-8
J	2047	0	2047	0	0	5-8	5-8

UNFACTORED REACTIONS

JT	1ST LCASE COMBINED	SNOW	MAX./MIN. COMPONENT REACTIONS LIVE	PERM.LIVE	WIND	DEAD	SOIL
P	1432	1028 / 0	0 / 0	0 / 0	0 / 0	404 / 0	0 / 0
J	1432	1028 / 0	0 / 0	0 / 0	0 / 0	404 / 0	0 / 0

BEARING MATERIAL TO BE SPF NO.2 OR BETTER AT JOINT(S) P, J

BRACING

TOP CHORD TO BE SHEATHED OR MAX. PURLIN SPACING = 4.05 FT.
MAX. UNBRACED BOTTOM CHORD LENGTH = 10.00 FT OR RIGID CEILING DIRECTLY APPLIED.

ALL PITCH BREAKS AND PERIMETER CORNER JOINTS MUST BE LATERALLY RESTRAINED.

1 LATERAL BRACE(S) AT 1/ 2 LENGTH OF E-N, E-L.

END VERTICAL(S) MUST BE SHEATHED OR HAVE BRACES AS INDICATED IN THE MAX. UNBRACED LENGTH COLUMN OF THE TABLE BELOW

LOADING

TOTAL LOAD CASES: (4)

CHORDS MEMB. FR-TO	MAX. FACTORED FORCE (LBS)	FACTORED VERT. LOAD LC1 (PLF) FROM	TO	MAX CSI (LC)	MAX. UNBRAC LENGTH	WEBS MEMB. FR-TO	MAX. FACTORED FORCE (LBS)	MAX CSI (LC)
A- B	0 / 43	-112.4	-112.4	0.15 (1)	10.00	O- C	-259 / 19	0.10 (1)
B- C	-2203 / 0	-112.4	-112.4	0.53 (1)	4.05	C- N	-437 / 0	0.45 (1)
C- D	-1893 / 0	-112.4	-112.4	0.49 (1)	4.35	N- D	0 / 642	0.14 (1)
D- E	-1546 / 0	-112.4	-112.4	0.19 (1)	5.12	N- E	-254 / 0	0.15 (1)
E- F	-1546 / 0	-112.4	-112.4	0.19 (1)	5.12	E- L	-254 / 0	0.15 (1)
F- G	-1893 / 0	-112.4	-112.4	0.49 (1)	4.35	L- F	0 / 642	0.14 (1)
G- H	-2203 / 0	-112.4	-112.4	0.53 (1)	4.05	L- G	-437 / 0	0.45 (1)
H- I	0 / 43	-112.4	-112.4	0.15 (1)	10.00	K- G	-259 / 19	0.10 (1)
P- B	-2002 / 0	0.0	0.0	0.21 (1)	5.97	B- O	0 / 1902	0.43 (1)
J- H	-2002 / 0	0.0	0.0	0.21 (1)	5.97	K- H	0 / 1902	0.43 (1)
P- O	0 / 0	-18.5	-18.5	0.12 (4)	10.00			
O- N	0 / 1867	-18.5	-18.5	0.38 (1)	10.00			
N- M	0 / 1642	-18.5	-18.5	0.35 (1)	10.00			
M- L	0 / 1642	-18.5	-18.5	0.35 (1)	10.00			
L- K	0 / 1867	-18.5	-18.5	0.38 (1)	10.00			
K- J	0 / 0	-18.5	-18.5	0.12 (4)	10.00			

DESIGN CRITERIA [M][F]

SPECIFIED LOADS:

TOP CH.	LL	=	32.5	PSF
	DL	=	6.0	PSF
BOT CH.	LL	=	0.0	PSF
	DL	=	7.4	PSF
TOTAL LOAD		=	45.9	PSF

SPACING = 24.0 IN. C/C

LOADING IN FLAT SECTION BASED ON A SLOPE OF 6.00/12

THIS TRUSS IS DESIGNED FOR RESIDENTIAL OR SMALL BUILDING REQUIREMENTS OF PART 9, NBCC 2015

THIS DESIGN COMPLIES WITH:
- PART 9 OF BCBC 2018 , ABC 2019
- PART 9 OF OBC 2012 (2019 AMENDMENT)
- CSA 086-14
- TPIC 2014

(55 % OF 43.9 P.S.F. G.S.L. PLUS 8.4 P.S.F. RAIN LOAD) EQUALS 32.5 P.S.F. SPECIFIED ROOF LIVE LOAD

ALLOWABLE DEFL.(LL)= L/360 (0.96")
CALCULATED VERT. DEFL.(LL) = L/ 999 (0.08")
ALLOWABLE DEFL.(TL)= L/360 (0.96")
CALCULATED VERT. DEFL.(TL) = L/ 999 (0.17")

CSI: TC=0.53/1.00 (B-C:1) , BC=0.38/1.00 (N-O:1) , WB=0.45/1.00 (C-N:1) , SSI=0.25/1.00 (B-C:1)

DOL LUMBER=1.00 NAIL=1.00 LS BEND=1.10 COMP=1.10 SHEAR=1.10 TENS= 1.10

COMPANION LIVE LOAD FACTOR = 1.00

TRUSS PLATE MANUFACTURER IS NOT RESPONSIBLE FOR QUALITY CONTROL IN THE TRUSS MANUFACTURING PLANT .

NAIL VALUES

PLATE	GRIP(DRY) (PSI) MAX	MIN	SHEAR (PLI) MAX	MIN	SECTION (PLI) MAX	MIN
MT20	650	371	1747	788	1987	1873

PLATE PLACEMENT TOL. = 0.250 inches

PLATE ROTATION TOL. = 5.0 Deg.

JSI GRIP= 0.88 (B) (INPUT = 0.90)
JSI METAL= 0.56 (B) (INPUT = 1.00)

LICENSED PROFESSIONAL ENGINEER
06-24-22
H. J. G. ALVES
100009024
PROVINCE OF ONTARIO

Structural component only
DWG# T-2215165

REVIEWED

JOB NAME	TRUSS NAME	QUANTITY	PLY	JOB DESC.	DRWG NO.
423537	T49	3	1	BAYVIEW WELLINGTON TRUSS DESC.	

Tamarack Roof Truss, Burlington

Version 8.530 S Feb 23 2022 MiTek Industries, Inc. Fri Jun 24 09:03:00 2022 Page 1
ID:c3jyj23uDijq_8pvRKbkZpy75XW-yC1B6MuwTlcBS7wcGFnoc7?ZLal3rGQKLKGcBez37pv

Scale = 1:62.8

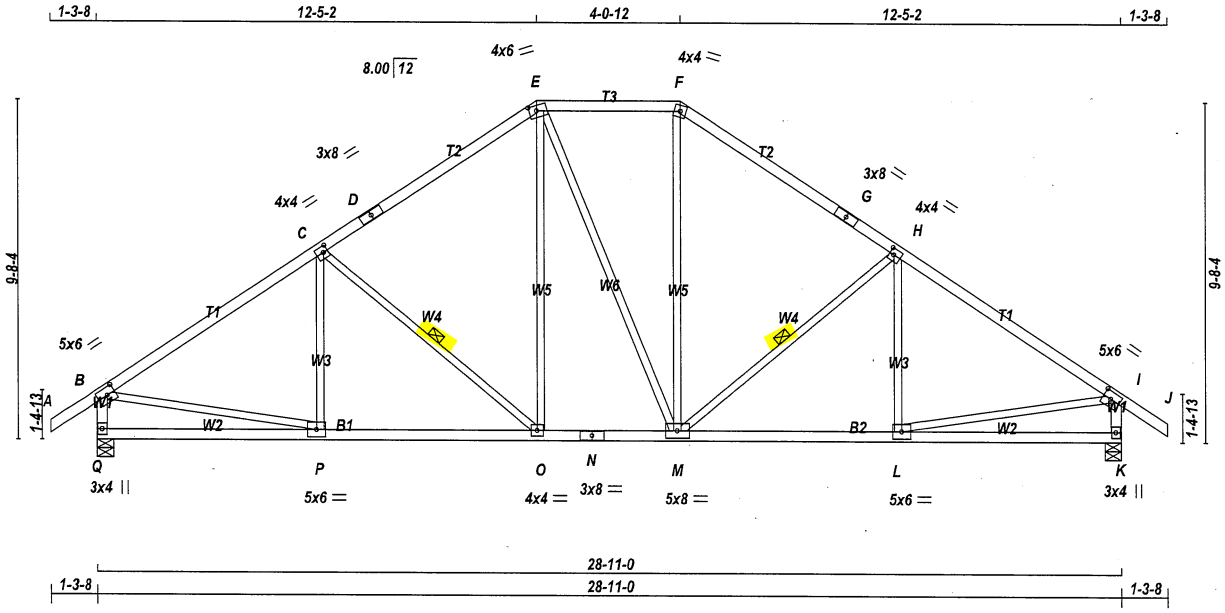

TOTAL WEIGHT = 3 X 131 = 394 lb

[M][F]

LUMBER

N. L. G. A. RULES

CHORDS	SIZE		LUMBER	DESCR.
A - D	2x4	DRY	No.2	SPF
D - E	2x4	DRY	No.2	SPF
E - F	2x4	DRY	No.2	SPF
F - G	2x4	DRY	No.2	SPF
G - J	2x4	DRY	No.2	SPF
Q - B	2x4	DRY	No.2	SPF
K - I	2x4	DRY	No.2	SPF
Q - N	2x4	DRY	No.2	SPF
N - K	2x4	DRY	No.2	SPF
ALL WEBS EXCEPT	2x3	DRY	No.2	SPF

DRY: SEASONED LUMBER.

PLATES (table is in inches)

JT	TYPE	PLATES	W	LEN	Y	X
B	TMVW-t	MT20	5.0	6.0	2.50	2.75
C	TMWW-t	MT20	4.0	4.0	2.00	1.50
D	TS-t	MT20	3.0	8.0		
E	TTWW-m	MT20	4.0	6.0	1.75	2.50
F	TTW-m	MT20	4.0	4.0		
G	TS-t	MT20	3.0	8.0		
H	TMWW-t	MT20	4.0	4.0	2.00	1.50
I	TMVW-t	MT20	5.0	6.0	2.50	2.75
K	BMV1+p	MT20	3.0	4.0		
L	BMWW-t	MT20	5.0	6.0		
M	BMWWW-t	MT20	5.0	8.0		
N	BS-t	MT20	3.0	8.0		
O	BMWW-t	MT20	4.0	4.0		
P	BMWW-t	MT20	5.0	6.0		
Q	BMV1+p	MT20	3.0	4.0		

NOTES- (1)
1) Lateral braces to be a minimum of 2X4 SPF #2.

DIMENSIONS, SUPPORTS AND LOADINGS SPECIFIED BY FABRICATOR TO BE VERIFIED BY BUILDING DESIGNER

BEARINGS

JT	FACTORED GROSS REACTION VERT	HORZ	MAXIMUM FACTORED GROSS REACTION DOWN	HORZ	UPLIFT	INPUT BRG IN-SX	REQRD BRG IN-SX
Q	2047	0	2047	0	0	5-8	5-8
K	2047	0	2047	0	0	5-8	5-8

UNFACTORED REACTIONS

JT	1ST LCASE COMBINED	MAX./MIN. COMPONENT REACTIONS SNOW	LIVE	PERM.LIVE	WIND	DEAD	SOIL
Q	1432	1028 / 0	0 / 0	0 / 0	0 / 0	404 / 0	0 / 0
K	1432	1028 / 0	0 / 0	0 / 0	0 / 0	404 / 0	0 / 0

BEARING MATERIAL TO BE SPF NO.2 OR BETTER AT JOINT(S) Q, K

BRACING

TOP CHORD TO BE SHEATHED OR MAX. PURLIN SPACING = 3.78 FT.
MAX. UNBRACED BOTTOM CHORD LENGTH = 10.00 FT OR RIGID CEILING DIRECTLY APPLIED.

ALL PITCH BREAKS AND PERIMETER CORNER JOINTS MUST BE LATERALLY RESTRAINED.

1 LATERAL BRACE(S) AT 1/ 2 LENGTH OF C-O, H-M.

END VERTICAL(S) MUST BE SHEATHED OR HAVE BRACES AS INDICATED IN THE MAX. UNBRACED LENGTH COLUMN OF THE TABLE BELOW

LOADING

TOTAL LOAD CASES: (4)

CHORDS

MEMB. FR-TO	MAX. FACTORED FORCE (LBS)	FACTORED VERT. LOAD LC1 (PLF) FROM	TO	MAX CSI (LC)	MAX. UNBRAC LENGTH
A- B	0 / 43	-112.4	-112.4	0.15 (1)	10.00
B- C	-2210 / 0	-112.4	-112.4	0.70 (1)	3.78
C- D	-1767 / 0	-112.4	-112.4	0.63 (1)	4.24
D- E	-1767 / 0	-112.4	-112.4	0.63 (1)	4.24
E- F	-1435 / 0	-112.4	-112.4	0.26 (1)	5.18
F- G	-1768 / 0	-112.4	-112.4	0.63 (1)	4.24
G- H	-1768 / 0	-112.4	-112.4	0.63 (1)	4.24
H- I	-2210 / 0	-112.4	-112.4	0.70 (1)	3.78
I- J	0 / 43	-112.4	-112.4	0.15 (1)	10.00
Q- B	-1999 / 0	0.0	0.0	0.21 (1)	5.97
K- I	-1999 / 0	0.0	0.0	0.21 (1)	5.97
Q- P	0 / 0	-18.5	-18.5	0.18 (4)	10.00
P- O	0 / 1878	-18.5	-18.5	0.39 (1)	10.00
O- N	0 / 1434	-18.5	-18.5	0.29 (1)	10.00
N- M	0 / 1434	-18.5	-18.5	0.29 (1)	10.00
M- L	0 / 1877	-18.5	-18.5	0.39 (1)	10.00
L- K	0 / 0	-18.5	-18.5	0.18 (4)	10.00

WEBS

MEMB. FR-TO	MAX. FACTORED FORCE (LBS)	MAX CSI (LC)
P- C	-190 / 59	0.09 (1)
C- O	-590 / 0	0.27 (1)
O- E	0 / 468	0.11 (1)
E- M	0 / 3	0.00 (1)
M- F	0 / 471	0.11 (1)
M- H	-588 / 0	0.27 (1)
L- H	-192 / 58	0.09 (1)
B- P	0 / 1905	0.43 (1)
L- I	0 / 1905	0.43 (1)

DESIGN CRITERIA

SPECIFIED LOADS:

TOP CH.	LL	=	32.5	PSF
	DL	=	6.0	PSF
BOT CH.	LL	=	0.0	PSF
	DL	=	7.4	PSF
TOTAL LOAD		=	45.9	PSF

SPACING = 24.0 IN. C/C

LOADING IN FLAT SECTION BASED ON A SLOPE OF 6.00/12

THIS TRUSS IS DESIGNED FOR RESIDENTIAL OR SMALL BUILDING REQUIREMENTS OF PART 9, NBCC 2015

THIS DESIGN COMPLIES WITH:
- PART 9 OF BCBC 2018 , ABC 2019
- PART 9 OF OBC 2012 (2019 AMENDMENT)
- CSA 086-14
- TPIC 2014

(55 % OF 43.9 P.S.F. G.S.L. PLUS 8.4 P.S.F. RAIN LOAD) EQUALS 32.5 P.S.F. SPECIFIED ROOF LIVE LOAD

ALLOWABLE DEFL.(LL)= L/360 (0.96")
CALCULATED VERT. DEFL.(LL) = L/ 999 (0.08")
ALLOWABLE DEFL.(TL)= L/360 (0.96")
CALCULATED VERT. DEFL.(TL) = L/ 999 (0.15")

CSI: TC=0.70/1.00 (B-C:1) , BC=0.39/1.00 (O-P:1) , WB=0.43/1.00 (B-P:1) , SSI=0.28/1.00 (H-I:1)

DOL LUMBER=1.00 NAIL=1.00 LS BEND=1.10 COMP=1.10 SHEAR=1.10 TENS= 1.10

COMPANION LIVE LOAD FACTOR = 1.00

TRUSS PLATE MANUFACTURER IS NOT RESPONSIBLE FOR QUALITY CONTROL IN THE TRUSS MANUFACTURING PLANT .

NAIL VALUES

PLATE	GRIP(DRY) (PSI) MAX	MIN	SHEAR (PLI) MAX	MIN	SECTION (PLI) MAX	MIN
MT20	650	371	1747	788	1987	1873

PLATE PLACEMENT TOL. = 0.250 inches

PLATE ROTATION TOL. = 5.0 Deg.

JSI GRIP= 0.88 (B) (INPUT = 0.90)
JSI METAL= 0.57 (B) (INPUT = 1.00)

LICENSED PROFESSIONAL ENGINEER
06-24-22
H. J. G. ALVES
100009024
PROVINCE OF ONTARIO

Structural component only
DWG# T-2215166

REVIEWED

JOB NAME	TRUSS NAME	QUANTITY	PLY	JOB DESC.	DRWG NO.
423537	T50	1	2	BAYVIEW WELLINGTON TRUSS DESC.	

Tamarack Roof Truss, Burlington

Version 8.530 S Feb 23 2022 MiTek Industries, Inc. Fri Jun 24 09:03:01 2022 Page 1
ID:c3jyj23uDijq_8pvRKbkZpy75XW-QObaJivYE3k14HUoqzI18KXp4_2lagCUa_?Aj5z37pu

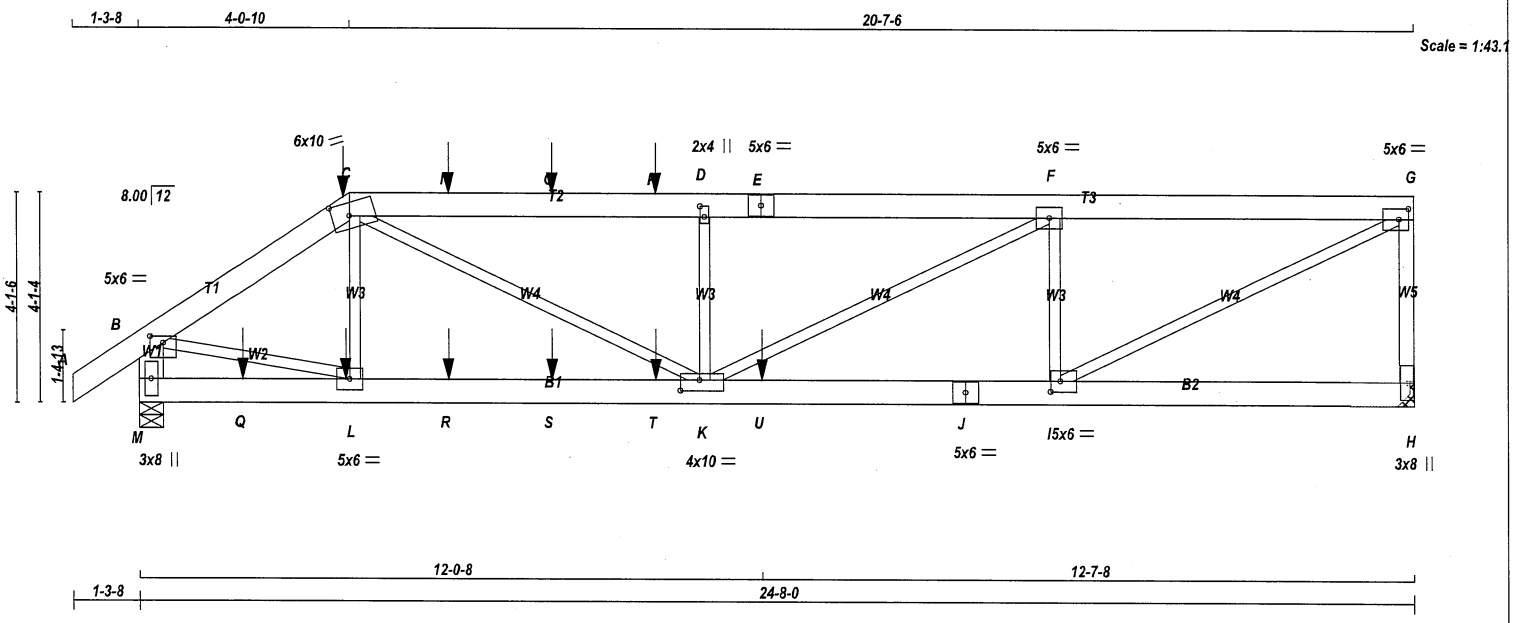

TOTAL WEIGHT = 2 X 127 = 253 lb

[M]

LUMBER

N. L. G. A. RULES

CHORDS	SIZE		LUMBER	DESCR.
A - C	2x6	DRY	No.2	SPF
C - E	2x6	DRY	No.2	SPF
E - G	2x6	DRY	No.2	SPF
H - G	2x4	DRY	No.2	SPF
M - B	2x6	DRY	No.2	SPF
M - J	2x6	DRY	No.2	SPF
J - H	2x6	DRY	No.2	SPF
ALL WEBS EXCEPT	2x3	DRY	No.2	SPF

DRY: SEASONED LUMBER.

DESIGN CONSISTS OF 2 TRUSSES BUILT SEPARATELY THEN FASTENED TOGETHER AS FOLLOWS:

CHORDS	#ROWS	SURFACE SPACING (IN)	LOAD(PLF)
TOP CHORDS : (0.122"X3") SPIRAL NAILS			
A- C	2	12	SIDE(122.0)
C- E	2	12	SIDE(61.0)
E- G	2	12	TOP
M- B	2	12	TOP
G- H	1	12	TOP
BOTTOM CHORDS : (0.122"X3") SPIRAL NAILS			
M- J	2	12	SIDE(183.1)
J- H	2	12	TOP
WEBS : (0.122"X3") SPIRAL NAILS			
2x3	1	6	

NAILS TO BE DRIVEN FROM ONE SIDE ONLY.

GIRDER NAILING ASSUMES NAILED HANGERS ARE FASTENED WITH MIN. 3-0 INCH NAILS.

TOP - COMPONENTS ARE LOADED FROM THE TOP AND MUST BE PLACED ON TOP EDGE OF ALL PLIES FOR THE LOAD TO BE TRANSFERRED TO EACH PLY.

SIDE - PLF SHOWN IS THE EQUIVALENT UDL APPLIED TO ONE SIDE THAT THE CORRESPONDING NAILING PATTERN SHALL BE CAPABLE OF TRANSFERING. REMAINING PLF MUST BE APPLIED ON THE OPPOSITE SIDE OR ON THE TOP.

LICENSED PROFESSIONAL ENGINEER
06-24-22
H. J. G. ALVES
100009024
PROVINCE OF ONTARIO

Structural component only
DWG# T-2215167

DIMENSIONS, SUPPORTS AND LOADINGS SPECIFIED BY FABRICATOR TO BE VERIFIED BY BUILDING DESIGNER

BEARINGS

JT	FACTORED GROSS REACTION VERT	HORZ	MAXIMUM FACTORED GROSS REACTION DOWN	HORZ	UPLIFT	INPUT BRG IN-SX	REQRD BRG IN-SX
H	2559	0	2559	0	0	MECHANICAL	
M	3311	0	3311	0	0	5-8	5-8

A SUITABLE HANGER/MECHANICAL CONNECTION IS REQUIRED AT JOINT H. MINIMUM BEARING LENGTH AT JOINT H = 4-0.

UNFACTORED REACTIONS

JT	1ST LCASE COMBINED	SNOW	MAX./MIN. COMPONENT REACTIONS LIVE	PERM.LIVE	WIND	DEAD	SOIL
H	1795	1261 / 0	0 / 0	0 / 0	0 / 0	534 / 0	0 / 0
M	2319	1650 / 0	0 / 0	0 / 0	0 / 0	669 / 0	0 / 0

BEARING MATERIAL TO BE SPF NO.2 OR BETTER AT JOINT(S) M

BRACING

TOP CHORD TO BE SHEATHED OR MAX. PURLIN SPACING = 4.43 FT.
MAX. UNBRACED BOTTOM CHORD LENGTH = 10.00 FT OR RIGID CEILING DIRECTLY APPLIED.

ALL PITCH BREAKS AND PERIMETER CORNER JOINTS MUST BE LATERALLY RESTRAINED.

LOADING

TOTAL LOAD CASES: (4)

CHORDS

MEMB. FR-TO	MAX. FACTORED FORCE (LBS)	FACTORED VERT. LOAD (PLF) FROM	TO	LC1	MAX CSI (LC)	MAX. UNBRAC LENGTH
A- B	0 / 44	-112.4	-112.4	0.04 (1)	10.00	
B- C	-3886 / 0	-112.4	-112.4	0.11 (1)	5.65	
C- N	-6100 / 0	-112.4	-112.4	0.38 (1)	4.43	
N- O	-6100 / 0	-112.4	-112.4	0.38 (1)	4.43	
O- P	-6100 / 0	-112.4	-112.4	0.38 (1)	4.43	
P- D	-6100 / 0	-112.4	-112.4	0.38 (1)	4.43	
D- E	-6100 / 0	-112.4	-112.4	0.28 (1)	4.56	
E- F	-6100 / 0	-112.4	-112.4	0.28 (1)	4.56	
F- G	-4199 / 0	-112.4	-112.4	0.22 (1)	5.35	
H- G	-2531 / 0	0.0	0.0	0.29 (1)	7.12	
M- B	-3253 / 0	0.0	0.0	0.11 (1)	7.69	
M- Q	0 / 0	-18.5	-18.5	0.04 (4)	10.00	
Q- L	0 / 0	-18.5	-18.5	0.04 (4)	10.00	
L- R	0 / 3208	-18.5	-18.5	0.39 (1)	10.00	
R- S	0 / 3208	-18.5	-18.5	0.39 (1)	10.00	
S- T	0 / 3208	-18.5	-18.5	0.39 (1)	10.00	
T- K	0 / 3208	-18.5	-18.5	0.39 (1)	10.00	
K- U	0 / 4199	-18.5	-18.5	0.62 (1)	10.00	
U- J	0 / 4199	-18.5	-18.5	0.62 (1)	10.00	
J- I	0 / 4199	-18.5	-18.5	0.62 (1)	10.00	
I- H	0 / 0	-18.5	-18.5	0.09 (1)	10.00	

WEBS

MEMB. FR-TO	MAX. FACTORED FORCE (LBS)	MAX CSI (LC)
L- C	-604 / 0	0.07 (1)
B- L	0 / 3300	0.41 (1)
I- G	0 / 4739	0.59 (1)
C- K	0 / 3269	0.40 (1)
I- F	-1835 / 0	0.22 (1)
K- D	-1079 / 0	0.13 (1)
K- F	0 / 2160	0.27 (1)

SPECIFIED CONCENTRATED LOADS (LBS)

JT	LOC.	LC1	MAX-	MAX+	FACE	DIR.	TYPE	HEEL	CONN.
C	4-0-10	-41	-41	---	FRONT	VERT	DEAD	---	C1
C	4-0-10	-98	-98	---	FRONT	VERT	TOTAL	---	C1
C	4-0-10	-217	-217	---	FRONT	VERT	SNOW	---	C1
L	3-11-12	-21	-21	---	FRONT	VERT	TOTAL	---	C1
N	5-11-12	-93	-93	---	FRONT	VERT	TOTAL	---	C1
O	7-11-12	-93	-93	---	FRONT	VERT	TOTAL	---	C1
P	9-11-12	-93	-93	---	FRONT	VERT	TOTAL	---	C1
Q	1-11-12	-21	-21	---	FRONT	VERT	TOTAL	---	C1
R	5-11-12	-21	-21	---	FRONT	VERT	TOTAL	---	C1
S	7-11-12	-21	-21	---	FRONT	VERT	TOTAL	---	C1
T	9-11-12	-21	-21	---	FRONT	VERT	TOTAL	---	C1
U	12-0-8	-1002	-1002	---	FRONT	VERT	TOTAL	---	C1

DESIGN CRITERIA

*** SPECIAL LOADS ANALYSIS ***
GEOMETRY AND/OR BASIC LOADS CHANGED BY USER.
LOADS WERE DERIVED FROM USER INPUT
NO FURTHER MODIFICATIONS WERE MADE

SPECIFIED LOADS:

TOP	CH.	LL	=	32.5	PSF
		DL	=	6.0	PSF
BOT	CH.	LL	=	0.0	PSF
		DL	=	7.4	PSF
TOTAL	LOAD		=	45.9	PSF

SPACING = 24.0 IN. C/C

LOADING IN FLAT SECTION BASED ON A SLOPE OF 6.00/12

*** NON STANDARD GIRDER ***
ADDT'L USER-DEFINED LOADS APPLIED TO ALL LOAD CASES.

THIS TRUSS IS DESIGNED FOR RESIDENTIAL OR SMALL BUILDING REQUIREMENTS OF PART 9, NBCC 2015

THIS DESIGN COMPLIES WITH:
- PART 9 OF BCBC 2018 , ABC 2019
- PART 9 OF OBC 2012 (2019 AMENDMENT)
- CSA 086-14
- TPIC 2014

(55 % OF 43.9 P.S.F. G.S.L. PLUS 8.4 P.S.F. RAIN LOAD) EQUALS 32.5 P.S.F. SPECIFIED ROOF LIVE LOAD

ALLOWABLE DEFL.(LL)= L/360 (0.82")
CALCULATED VERT. DEFL.(LL) = L/ 999 (0.14")
ALLOWABLE DEFL.(TL)= L/360 (0.82")
CALCULATED VERT. DEFL.(TL) = L/ 999 (0.25")

CSI: TC=0.38/1.00 (C-D:1) , BC=0.62/1.00 (I-K:1) , WB=0.59/1.00 (G-I:1) , SSI=0.43/1.00 (I-K:1)

DOL LUMBER=1.00 NAIL=1.00 LS BEND=1.00 COMP=1.00 SHEAR=1.00 TENS= 1.00

COMPANION LIVE LOAD FACTOR = 1.00

AUTOSOLVE RIGHT HEEL ONLY

TRUSS PLATE MANUFACTURER IS NOT RESPONSIBLE FOR QUALITY CONTROL IN THE TRUSS MANUFACTURING PLANT .

NAIL VALUES

PLATE	GRIP(DRY) (PSI) MAX	MIN	SHEAR (PLI) MAX	MIN	SECTION (PLI) MAX	MIN
MT20	650	371	1747	788	1987	1873

PLATE PLACEMENT TOL. = 0.250 inches

PLATE ROTATION TOL. = 5.0 Deg.

JSI GRIP= 0.90 (K) (INPUT = 0.90)
JSI METAL= 0.48 (G) (INPUT = 1.00)

CONTINUED ON PAGE 2

REVIEWED

JOB NAME	TRUSS NAME	QUANTITY	PLY	JOB DESC. BAYVIEW WELLINGTON	DRWG NO.
423537	T50	1	2	TRUSS DESC.	

PLATES (table is in inches)

JT	TYPE	PLATES	W	LEN	Y	X
B	TMVW-p	MT20	5.0	6.0	1.50	3.00
C	TTWW-m	MT20	6.0	10.0	3.00	4.00
D	TMW+w	MT20	2.0	4.0	2.50	1.00
E	TS-t	MT20	5.0	6.0		
F	TMWW-t	MT20	5.0	6.0		
G	TMVW-t	MT20	5.0	6.0	2.50	2.25
H	BMV1+p	MT20	3.0	8.0		
I	BMWW-t	MT20	5.0	6.0	2.50	2.25
J	BS-t	MT20	5.0	6.0		
K	BMWWW-t	MT20	4.0	10.0	2.50	4.50
L	BMWW-t	MT20	5.0	6.0		
M	BMV1+p	MT20	3.0	8.0		

NOTES- (1)
1) Lateral braces to be a minimum of 2X4 SPF #2.

CONNECTION REQUIREMENTS

1) **C1:** A SUITABLE HANGER/MECHANICAL CONNECTION IS REQUIRED.

LICENSED PROFESSIONAL ENGINEER
06-24-22
H. J. G. ALVES
100009024
PROVINCE OF ONTARIO

Structural component only
DWG# T-2215167

REVIEWED

JOB NAME	TRUSS NAME	QUANTITY	PLY	JOB DESC.	DRWG NO.
423537	T51	1	1	BAYVIEW WELLINGTON TRUSS DESC.	

Tamarack Roof Truss, Burlington

Version 8.530 S Feb 23 2022 MiTek Industries, Inc. Fri Jun 24 09:03:02 2022 Page 1
ID:c3jyj23uDijq_8pvRKbkZpy75XW-ub9yX2wA?MtuhQ3?OgpGhY4u0NRLJ9ldoeljFXz37pt

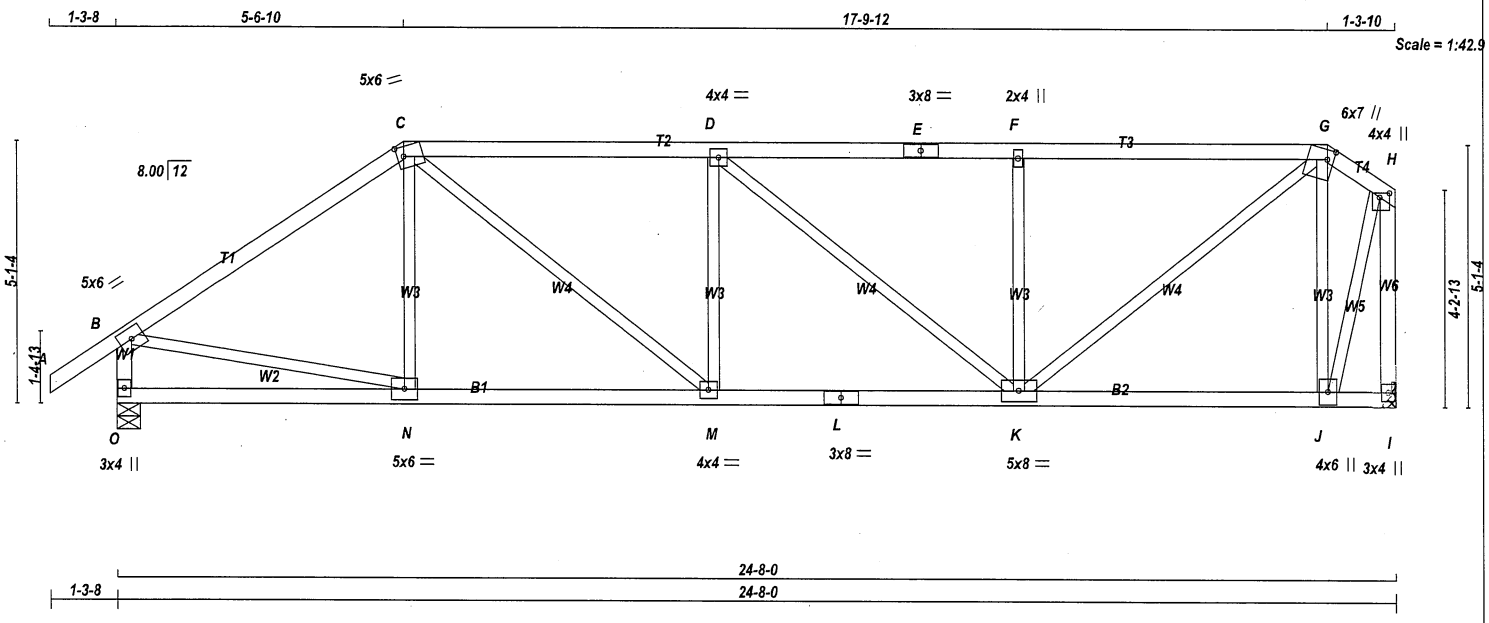

TOTAL WEIGHT = 105 lb
[M]

LUMBER
N. L. G. A. RULES

CHORDS	SIZE		LUMBER	DESCR.
A - C	2x4	DRY	No.2	SPF
C - E	2x4	DRY	No.2	SPF
E - G	2x4	DRY	No.2	SPF
G - H	2x4	DRY	No.2	SPF
O - B	2x4	DRY	No.2	SPF
I - H	2x4	DRY	No.2	SPF
O - L	2x4	DRY	No.2	SPF
L - I	2x4	DRY	No.2	SPF
ALL WEBS EXCEPT	2x3	DRY	No.2	SPF

DRY: SEASONED LUMBER.

PLATES (table is in inches)

JT	TYPE	PLATES	W	LEN	Y	X
B	TMVW-t	MT20	5.0	6.0		
C	TTWW-m	MT20	5.0	6.0	2.25	1.50
D	TMWW-t	MT20	4.0	4.0		
E	TS-t	MT20	3.0	8.0		
F	TMW+w	MT20	2.0	4.0		
G	TTWW+m	MT20	6.0	7.0	2.25	1.50
H	TMVW+p	MT20	4.0	4.0	1.00	2.25
I	BMV1+p	MT20	3.0	4.0		
J	BMWW+t	MT20	4.0	6.0		
K	BMWWW-t	MT20	5.0	8.0		
L	BS-t	MT20	3.0	8.0		
M	BMWW-t	MT20	4.0	4.0		
N	BMWW-t	MT20	5.0	6.0		
O	BMV1+p	MT20	3.0	4.0		

NOTES- (1)
1) Lateral braces to be a minimum of 2X4 SPF #2.

Structural component only
DWG# T-2215168

DIMENSIONS, SUPPORTS AND LOADINGS SPECIFIED BY FABRICATOR TO BE VERIFIED BY BUILDING DESIGNER

BEARINGS

JT	FACTORED GROSS REACTION VERT	HORZ	MAXIMUM FACTORED GROSS REACTION DOWN	HORZ	UPLIFT	INPUT BRG	REQRD BRG
O	1769	0	1769	0	0	5-8	5-8
I	1615	0	1615	0	0	MECHANICAL	

A SUITABLE HANGER/MECHANICAL CONNECTION IS REQUIRED AT JOINT I. MINIMUM BEARING LENGTH AT JOINT I = 3-8.

UNFACTORED REACTIONS

JT	1ST LCASE COMBINED	MAX./MIN. COMPONENT REACTIONS SNOW	LIVE	PERM.LIVE	WIND	DEAD	SOIL
O	1237	890 / 0	0 / 0	0 / 0	0 / 0	347 / 0	0 / 0
I	1132	801 / 0	0 / 0	0 / 0	0 / 0	331 / 0	0 / 0

BEARING MATERIAL TO BE SPF NO.2 OR BETTER AT JOINT(S) O

BRACING
TOP CHORD TO BE SHEATHED OR MAX. PURLIN SPACING = 3.83 FT.
MAX. UNBRACED BOTTOM CHORD LENGTH = 10.00 FT OR RIGID CEILING DIRECTLY APPLIED.

ALL PITCH BREAKS AND PERIMETER CORNER JOINTS MUST BE LATERALLY RESTRAINED.

LOADING
TOTAL LOAD CASES: (4)

CHORDS MEMB. FR-TO	MAX. FACTORED FORCE (LBS)	FACTORED VERT. LOAD (PLF) FROM	TO	LC1 MAX CSI (LC)	MAX. UNBRAC LENGTH	WEBS MEMB. FR-TO	MAX. FACTORED FORCE (LBS)	MAX CSI (LC)
A- B	0 / 43	-112.4	-112.4	0.15 (1)	10.00	N- C	-160 / 52	0.06 (1)
B- C	-1763 / 0	-112.4	-112.4	0.75 (1)	4.03	C- M	0 / 880	0.20 (1)
C- D	-2148 / 0	-112.4	-112.4	0.69 (1)	3.83	M- D	-447 / 0	0.17 (1)
D- E	-1809 / 0	-112.4	-112.4	0.65 (1)	4.15	D- K	-439 / 0	0.50 (1)
E- F	-1809 / 0	-112.4	-112.4	0.65 (1)	4.15	K- F	-724 / 0	0.28 (1)
F- G	-1808 / 0	-112.4	-112.4	0.65 (1)	4.16	K- G	0 / 1775	0.40 (1)
G- H	-544 / 0	-112.4	-112.4	0.04 (1)	6.25	J- G	-1156 / 0	0.44 (1)
O- B	-1727 / 0	0.0	0.0	0.18 (1)	6.33	B- N	0 / 1492	0.34 (1)
I- H	-1631 / 0	0.0	0.0	0.49 (1)	6.48	J- H	0 / 1331	0.30 (1)
O- N	0 / 0	-18.5	-18.5	0.15 (4)	10.00			
N- M	0 / 1461	-18.5	-18.5	0.31 (1)	10.00			
M- L	0 / 2148	-18.5	-18.5	0.40 (1)	10.00			
L- K	0 / 2148	-18.5	-18.5	0.40 (1)	10.00			
K- J	0 / 425	-18.5	-18.5	0.16 (4)	10.00			
J- I	0 / 0	-18.5	-18.5	0.10 (4)	10.00			

DESIGN CRITERIA

SPECIFIED LOADS:

TOP CH.	LL	=	32.5	PSF
	DL	=	6.0	PSF
BOT CH.	LL	=	0.0	PSF
	DL	=	7.4	PSF
TOTAL LOAD		=	45.9	PSF

SPACING = 24.0 IN. C/C

LOADING IN FLAT SECTION BASED ON A SLOPE OF 6.00/12

THIS TRUSS IS DESIGNED FOR RESIDENTIAL OR SMALL BUILDING REQUIREMENTS OF PART 9, NBCC 2015

THIS DESIGN COMPLIES WITH:
- PART 9 OF BCBC 2018 , ABC 2019
- PART 9 OF OBC 2012 (2019 AMENDMENT)
- CSA 086-14
- TPIC 2014

(55 % OF 43.9 P.S.F. G.S.L. PLUS 8.4 P.S.F. RAIN LOAD) EQUALS 32.5 P.S.F. SPECIFIED ROOF LIVE LOAD

ALLOWABLE DEFL.(LL)= L/360 (0.82")
CALCULATED VERT. DEFL.(LL) = L/ 999 (0.09")
ALLOWABLE DEFL.(TL)= L/360 (0.82")
CALCULATED VERT. DEFL.(TL) = L/ 999 (0.16")

CSI: TC=0.75/1.00 (B-C:1) , BC=0.40/1.00 (K-M:1) , WB=0.50/1.00 (D-K:1) , SSI=0.31/1.00 (C-D:1)

DOL LUMBER=1.00 NAIL=1.00 LS BEND=1.10 COMP=1.10 SHEAR=1.10 TENS= 1.10

COMPANION LIVE LOAD FACTOR = 1.00

TRUSS PLATE MANUFACTURER IS NOT RESPONSIBLE FOR QUALITY CONTROL IN THE TRUSS MANUFACTURING PLANT .

NAIL VALUES

PLATE	GRIP(DRY) (PSI) MAX	MIN	SHEAR (PLI) MAX	MIN	SECTION (PLI) MAX	MIN
MT20	650	371	1747	788	1987	1873

PLATE PLACEMENT TOL. = 0.250 inches

PLATE ROTATION TOL. = 5.0 Deg.

JSI GRIP= 0.90 (J) (INPUT = 0.90)
JSI METAL= 0.70 (L) (INPUT = 1.00)

REVIEWED

JOB NAME	TRUSS NAME	QUANTITY	PLY	JOB DESC.	DRWG NO.
423537	T52	1	1	BAYVIEW WELLINGTON TRUSS DESC.	

Tamarack Roof Truss, Burlington

Version 8.530 S Feb 23 2022 MiTek Industries, Inc. Fri Jun 24 09:03:03 2022 Page 1
ID:c3jyj23uDijq_8pvRKbkZpy75XW-MniKkOwpmg?lJaeBxNKVEld2rmrX2g1m1IUGnzz37ps

Scale: 3/8"=1'

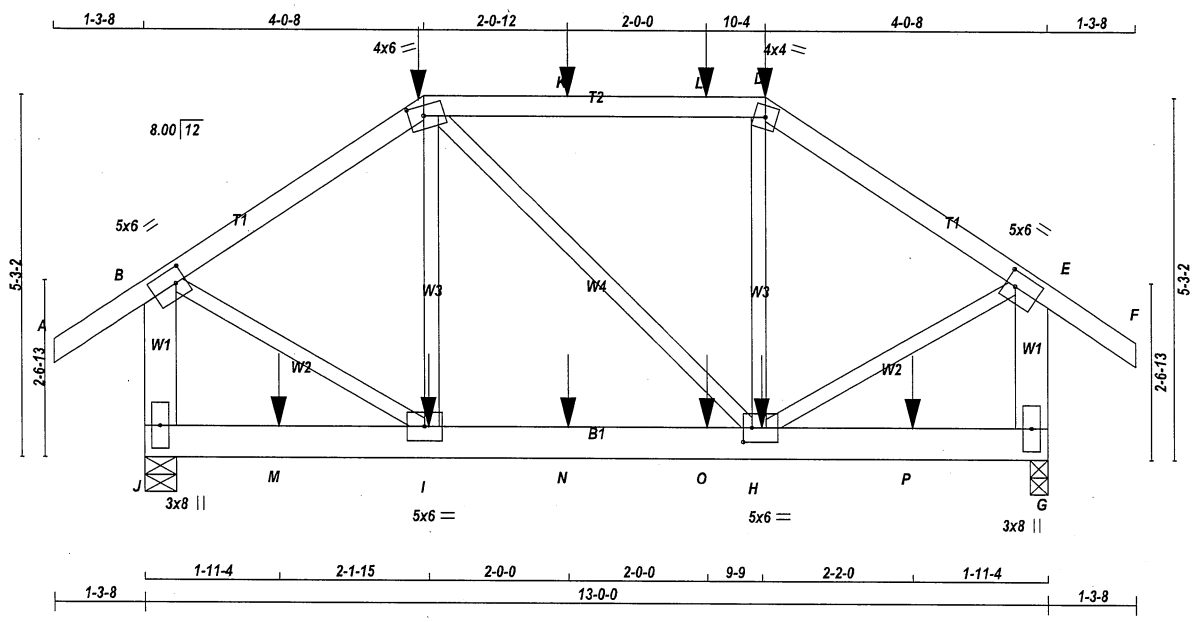

TOTAL WEIGHT = 71 lb

LUMBER

N. L. G. A. RULES

CHORDS	SIZE		LUMBER	DESCR.
A - C	2x4	DRY	No.2	SPF
C - D	2x4	DRY	No.2	SPF
D - F	2x4	DRY	No.2	SPF
J - B	2x6	DRY	No.2	SPF
G - E	2x6	DRY	No.2	SPF
J - G	2x6	DRY	No.2	SPF
ALL WEBS EXCEPT	2x3	DRY	No.2	SPF

DRY: SEASONED LUMBER.

PLATES (table is in inches)

JT	TYPE	PLATES	W	LEN	Y	X
B	TMVW-t	MT20	5.0	6.0	2.50	1.75
C	TTWW-m	MT20	4.0	6.0	1.75	2.50
D	TTW-m	MT20	4.0	4.0		
E	TMVW-t	MT20	5.0	6.0	2.50	1.75
G	BMV1+p	MT20	3.0	8.0		
H	BMWWW-t	MT20	5.0	6.0	2.50	1.50
I	BMWW-t	MT20	5.0	6.0		
J	BMV1+p	MT20	3.0	8.0		

NOTES- (1)
1) Lateral braces to be a minimum of 2X4 SPF #2.

DIMENSIONS, SUPPORTS AND LOADINGS SPECIFIED BY FABRICATOR TO BE VERIFIED BY BUILDING DESIGNER

BEARINGS

JT	FACTORED GROSS REACTION VERT	HORZ	MAXIMUM FACTORED GROSS REACTION DOWN	HORZ	UPLIFT	INPUT BRG IN-SX	REQRD BRG IN-SX
J	1444	0	1444	0	0	5-8	5-8
G	1471	0	1471	0	0	3-0	3-0

UNFACTORED REACTIONS

JT	1ST LCASE COMBINED	MAX./MIN. COMPONENT REACTIONS SNOW	LIVE	PERM.LIVE	WIND	DEAD	SOIL
J	1010	729 / 0	0 / 0	0 / 0	0 / 0	280 / 0	0 / 0
G	1028	743 / 0	0 / 0	0 / 0	0 / 0	286 / 0	0 / 0

BEARING MATERIAL TO BE SPF NO.2 OR BETTER AT JOINT(S) J, G

BRACING

TOP CHORD TO BE SHEATHED OR MAX. PURLIN SPACING = 4.74 FT.
MAX. UNBRACED BOTTOM CHORD LENGTH = 10.00 FT OR RIGID CEILING DIRECTLY APPLIED.

ALL PITCH BREAKS AND PERIMETER CORNER JOINTS MUST BE LATERALLY RESTRAINED.

LOADING

TOTAL LOAD CASES: (4)

CHORDS

MEMB. FR-TO	MAX. FORCE (LBS)	FACTORED VERT. LOAD (PLF) FROM	TO	LC1 MAX CSI (LC)	MAX. UNBRAC LENGTH
A- B	0 / 43	-112.4	-112.4	0.17 (1)	10.00
B- C	-1032 / 0	-112.4	-112.4	0.38 (1)	5.63
C- K	-870 / 0	-112.4	-112.4	0.81 (1)	4.74
K- L	-870 / 0	-112.4	-112.4	0.81 (1)	4.74
L- D	-870 / 0	-112.4	-112.4	0.81 (1)	4.74
D- E	-1056 / 0	-112.4	-112.4	0.38 (1)	5.58
E- F	0 / 43	-112.4	-112.4	0.17 (1)	10.00
J- B	-1404 / 0	0.0	0.0	0.13 (1)	7.81
G- E	-1427 / 0	0.0	0.0	0.13 (1)	7.81
J- M	0 / 0	-18.5	-18.5	0.06 (4)	10.00
M- I	0 / 0	-18.5	-18.5	0.06 (4)	10.00
I- N	0 / 851	-18.5	-18.5	0.15 (1)	10.00
N- O	0 / 851	-18.5	-18.5	0.15 (1)	10.00
O- H	0 / 851	-18.5	-18.5	0.15 (1)	10.00
H- P	0 / 0	-18.5	-18.5	0.06 (4)	10.00
P- G	0 / 0	-18.5	-18.5	0.06 (4)	10.00

WEBS

MEMB. FR-TO	MAX. FORCE (LBS)	MAX CSI (LC)
I- C	-313 / 22	0.12 (1)
C- H	0 / 27	0.01 (1)
H- D	-342 / 23	0.14 (1)
B- I	0 / 968	0.24 (1)
H- E	0 / 989	0.24 (1)

SPECIFIED CONCENTRATED LOADS (LBS)

JT	LOC.	LC1	MAX-	MAX+	FACE	DIR.	TYPE	HEEL	CONN.
C	4-0-8	-190	-190	---	BACK	VERT	TOTAL	---	C1
D	8-11-8	-190	-190	---	BACK	VERT	TOTAL	---	C1
H	8-10-12	-15	-15	---	BACK	VERT	TOTAL	---	C1
I	4-1-3	-15	-15	---	BACK	VERT	TOTAL	---	C1
K	6-1-4	-79	-79	---	BACK	VERT	TOTAL	---	C1
L	8-1-3	-84	-84	---	BACK	VERT	TOTAL	---	C1
M	1-11-4	-15	-15	---	BACK	VERT	TOTAL	---	C1
N	6-1-4	-15	-15	---	BACK	VERT	TOTAL	---	C1
O	8-1-3	-15	-15	---	BACK	VERT	TOTAL	---	C1
P	11-0-12	-15	-15	---	BACK	VERT	TOTAL	---	C1

CONNECTION REQUIREMENTS

1) **C1:** A SUITABLE HANGER/MECHANICAL CONNECTION IS REQUIRED.

DESIGN CRITERIA

SPECIFIED LOADS:

TOP CH.	LL	=	32.5	PSF
	DL	=	6.0	PSF
BOT CH.	LL	=	0.0	PSF
	DL	=	7.4	PSF
TOTAL LOAD		=	45.9	PSF

SPACING = 24.0 IN. C/C

LOADING IN FLAT SECTION BASED ON A SLOPE OF 6.00/12

THIS TRUSS IS DESIGNED FOR RESIDENTIAL OR SMALL BUILDING REQUIREMENTS OF PART 9, NBCC 2015

THIS DESIGN COMPLIES WITH:
- PART 9 OF BCBC 2018 , ABC 2019
- PART 9 OF OBC 2012 (2019 AMENDMENT)
- CSA 086-14
- TPIC 2014

(55 % OF 43.9 P.S.F. G.S.L. PLUS 8.4 P.S.F. RAIN LOAD) EQUALS 32.5 P.S.F. SPECIFIED ROOF LIVE LOAD

ALLOWABLE DEFL.(LL)= L/360 (0.43")
CALCULATED VERT. DEFL.(LL) = L/ 999 (0.01")
ALLOWABLE DEFL.(TL)= L/360 (0.43")
CALCULATED VERT. DEFL.(TL) = L/ 999 (0.03")

CSI: TC=0.81/1.00 (C-D:1) , BC=0.15/1.00 (H-I:1) , WB=0.24/1.00 (E-H:1) , SSI=0.37/1.00 (C-D:1)

DOL LUMBER=1.00 NAIL=1.00 LS BEND=1.00 COMP=1.00 SHEAR=1.00 TENS= 1.00

COMPANION LIVE LOAD FACTOR = 1.00

AUTOSOLVE HEELS OFF

TRUSS PLATE MANUFACTURER IS NOT RESPONSIBLE FOR QUALITY CONTROL IN THE TRUSS MANUFACTURING PLANT .

NAIL VALUES

PLATE	GRIP(DRY) (PSI) MAX	MIN	SHEAR (PLI) MAX	MIN	SECTION (PLI) MAX	MIN
MT20	650	371	1747	788	1987	1873

PLATE PLACEMENT TOL. = 0.250 inches

PLATE ROTATION TOL. = 5.0 Deg.

JSI GRIP= 0.90 (H) (INPUT = 0.90)
JSI METAL= 0.29 (E) (INPUT = 1.00)

LICENSED PROFESSIONAL ENGINEER
06-24-22
H. J. G. ALVES
100009024
PROVINCE OF ONTARIO

Structural component only
DWG# T-2215169

REVIEWED

JOB NAME	TRUSS NAME	QUANTITY	PLY	JOB DESC.	DRWG NO.
423537	T53	1	1	BAYVIEW WELLINGTON TRUSS DESC.	

Tamarack Roof Truss, Burlington

Version 8.530 S Feb 23 2022 MiTek Industries, Inc. Fri Jun 24 09:03:03 2022 Page 1
ID:c3jyj23uDijq_8pvRKbkZpy75XW-MniKkOwpmg?lJaeBxNKVEldCCnqH2bPm1lUGnzz37ps

Scale: 1/4"=1'

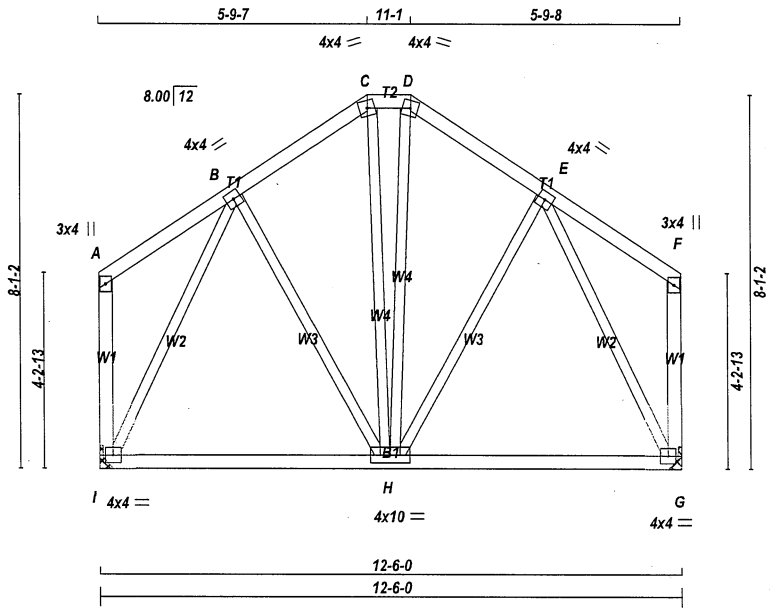

TOTAL WEIGHT = 73 lb

LUMBER

N. L. G. A. RULES

CHORDS	SIZE		LUMBER	DESCR.
A - C	2x4	DRY	No.2	SPF
C - D	2x4	DRY	No.2	SPF
D - F	2x4	DRY	No.2	SPF
I - A	2x4	DRY	No.2	SPF
G - F	2x4	DRY	No.2	SPF
I - G	2x4	DRY	No.2	SPF
ALL WEBS EXCEPT	2x3	DRY	No.2	SPF

DRY: SEASONED LUMBER.

PLATES (table is in inches)

JT	TYPE	PLATES	W	LEN	Y	X
A	TMV+p	MT20	3.0	4.0		
B	TMWW-t	MT20	4.0	4.0		
C	TTW-m	MT20	4.0	4.0		
D	TTW-m	MT20	4.0	4.0		
E	TMWW-t	MT20	4.0	4.0		
F	TMV+p	MT20	3.0	4.0		
G	BMVW1-t	MT20	4.0	4.0		
H	BMWWWW*-I	MT20	4.0	10.0		
I	BMVW1-t	MT20	4.0	4.0		

NOTES- (1)
1) Lateral braces to be a minimum of 2X4 SPF #2.

DIMENSIONS, SUPPORTS AND LOADINGS SPECIFIED BY FABRICATOR TO BE VERIFIED BY BUILDING DESIGNER

BEARINGS

JT	FACTORED GROSS REACTION VERT	HORZ	MAXIMUM FACTORED GROSS REACTION DOWN	HORZ	UPLIFT	INPUT BRG IN-SX	REQRD BRG IN-SX
I	818	0	818	0	0	MECHANICAL	
G	818	0	818	0	0	MECHANICAL	

A SUITABLE HANGER/MECHANICAL CONNECTION IS REQUIRED AT JOINT I, G. MINIMUM BEARING LENGTH AT JOINT I = 3-8, JOINT G = 3-8.

UNFACTORED REACTIONS

JT	1ST LCASE COMBINED	MAX./MIN. COMPONENT REACTIONS SNOW	LIVE	PERM.LIVE	WIND	DEAD	SOIL
I	573	406 / 0	0 / 0	0 / 0	0 / 0	167 / 0	0 / 0
G	573	406 / 0	0 / 0	0 / 0	0 / 0	167 / 0	0 / 0

BRACING

TOP CHORD TO BE SHEATHED OR MAX. PURLIN SPACING = 6.25 FT.
MAX. UNBRACED BOTTOM CHORD LENGTH = 10.00 FT OR RIGID CEILING DIRECTLY APPLIED.

ALL PITCH BREAKS AND PERIMETER CORNER JOINTS MUST BE LATERALLY RESTRAINED.

LOADING

TOTAL LOAD CASES: (4)

CHORDS

MEMB. FR-TO	MAX. FACTORED FORCE (LBS)	FACTORED VERT. LOAD (PLF) FROM	TO	LC1 MAX CSI (LC)	MAX. UNBRAC LENGTH
A- B	0 / 21	-112.4	-112.4	0.15 (1)	10.00
B- C	-424 / 0	-112.4	-112.4	0.12 (1)	6.25
C- D	-338 / 0	-112.4	-112.4	0.01 (1)	6.25
D- E	-424 / 0	-112.4	-112.4	0.12 (1)	6.25
E- F	0 / 21	-112.4	-112.4	0.15 (1)	10.00
I- A	-128 / 0	0.0	0.0	0.04 (1)	7.81
G- F	-128 / 0	0.0	0.0	0.04 (1)	7.81
I- H	0 / 323	-18.5	-18.5	0.23 (4)	10.00
H- G	0 / 323	-18.5	-18.5	0.23 (4)	10.00

WEBS

MEMB. FR-TO	MAX. FACTORED FORCE (LBS)	MAX CSI (LC)
B- H	0 / 43	0.01 (4)
H- E	0 / 43	0.01 (4)
I- B	-723 / 0	0.54 (1)
E- G	-723 / 0	0.54 (1)
C- H	0 / 50	0.02 (4)
H- D	0 / 50	0.02 (4)

DESIGN CRITERIA

SPECIFIED LOADS:

TOP CH.	LL	=	32.5	PSF
	DL	=	6.0	PSF
BOT CH.	LL	=	0.0	PSF
	DL	=	7.4	PSF
TOTAL LOAD		=	45.9	PSF

SPACING = 24.0 IN. C/C

LOADING IN FLAT SECTION BASED ON A SLOPE OF 6.00/12

THIS TRUSS IS DESIGNED FOR RESIDENTIAL OR SMALL BUILDING REQUIREMENTS OF PART 9, NBCC 2015

THIS DESIGN COMPLIES WITH:
- PART 9 OF BCBC 2018 , ABC 2019
- PART 9 OF OBC 2012 (2019 AMENDMENT)
- CSA 086-14
- TPIC 2014

(55 % OF 43.9 P.S.F. G.S.L. PLUS 8.4 P.S.F. RAIN LOAD) EQUALS 32.5 P.S.F. SPECIFIED ROOF LIVE LOAD

ALLOWABLE DEFL.(LL)= L/360 (0.42")
CALCULATED VERT. DEFL.(LL) = L/ 999 (0.01")
ALLOWABLE DEFL.(TL)= L/360 (0.42")
CALCULATED VERT. DEFL.(TL) = L/ 999 (0.04")

CSI: TC=0.15/1.00 (E-F:1) , BC=0.23/1.00 (G-H:4) , WB=0.54/1.00 (B-I:1) , SSI=0.13/1.00 (E-F:1)

DOL LUMBER=1.00 NAIL=1.00 LS BEND=1.10 COMP=1.10 SHEAR=1.10 TENS= 1.10

COMPANION LIVE LOAD FACTOR = 1.00

TRUSS PLATE MANUFACTURER IS NOT RESPONSIBLE FOR QUALITY CONTROL IN THE TRUSS MANUFACTURING PLANT .

NAIL VALUES

PLATE	GRIP(DRY) (PSI) MAX	MIN	SHEAR (PLI) MAX	MIN	SECTION (PLI) MAX	MIN
MT20	650	371	1747	788	1987	1873

PLATE PLACEMENT TOL. = 0.250 inches

PLATE ROTATION TOL. = 5.0 Deg.

JSI GRIP= 0.66 (E) (INPUT = 0.90)
JSI METAL= 0.21 (E) (INPUT = 1.00)

[M][F]

LICENSED PROFESSIONAL ENGINEER
06-24-22
H. J. G. ALVES
100009024
PROVINCE OF ONTARIO

Structural component only
DWG# T-2215170

REVIEWED

JOB NAME	TRUSS NAME	QUANTITY	PLY	JOB DESC.	DRWG NO.
423537	T54	1	2	BAYVIEW WELLINGTON TRUSS DESC.	

Tamarack Roof Truss, Burlington

Version 8.530 S Feb 23 2022 MiTek Industries, Inc. Fri Jun 24 09:03:04 2022 Page 1
ID:c3jyj23uDijq_8pvRKbkZpy75XW-rzGiykxRX_7cxkDNV5rkmz9KSB82n50wGyEqKPz37pr

Scale = 1:11.8

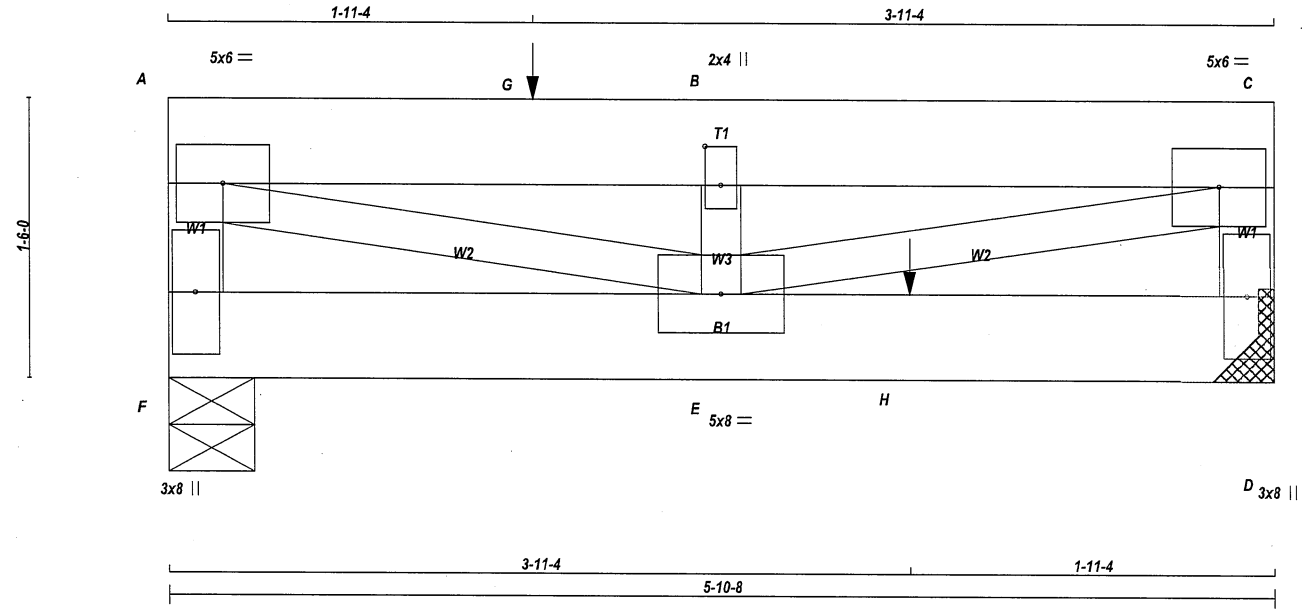

TOTAL WEIGHT = 2 X 27 = 54 lb
[M]

LUMBER

N. L. G. A. RULES

CHORDS	SIZE		LUMBER	DESCR.
F - A	2x4	DRY	No.2	SPF
A - C	2x6	DRY	No.2	SPF
D - C	2x4	DRY	No.2	SPF
F - D	2x6	DRY	No.2	SPF
ALL WEBS	2x3	DRY	No.2	SPF

DRY: SEASONED LUMBER.

DESIGN CONSISTS OF 2 TRUSSES BUILT SEPARATELY THEN FASTENED TOGETHER AS FOLLOWS:

CHORDS	#ROWS	SURFACE SPACING (IN)	LOAD(PLF)
TOP CHORDS : (0.122"X3") SPIRAL NAILS			
F- A	1	12	TOP
C- D	1	12	TOP
A- C	2	12	TOP
BOTTOM CHORDS : (0.122"X3") SPIRAL NAILS			
F- D	2	12	SIDE(14.0)
WEBS : (0.122"X3") SPIRAL NAILS			
2x3	1	6	

NAILS TO BE DRIVEN FROM ONE SIDE ONLY.

GIRDER NAILING ASSUMES NAILED HANGERS ARE FASTENED WITH MIN. 3-0 INCH NAILS.

TOP - COMPONENTS ARE LOADED FROM THE TOP AND MUST BE PLACED ON TOP EDGE OF ALL PLIES FOR THE LOAD TO BE TRANSFERRED TO EACH PLY.

SIDE - PLF SHOWN IS THE EQUIVALENT UDL APPLIED TO ONE SIDE THAT THE CORRESPONDING NAILING PATTERN SHALL BE CAPABLE OF TRANSFERING. REMAINING PLF MUST BE APPLIED ON THE OPPOSITE SIDE OR ON THE TOP.

PLATES (table is in inches)

JT	TYPE	PLATES	W	LEN	Y	X
A	TMVW-t	MT20	5.0	6.0		
B	TMW+w	MT20	2.0	4.0	2.50	1.00
C	TMVW-t	MT20	5.0	6.0		
D	BMV1+p	MT20	3.0	8.0		

LICENSED PROFESSIONAL ENGINEER
06-24-22
H. J. G. ALVES
100009024
PROVINCE OF ONTARIO

Structural component only
DWG# T-2215171

DIMENSIONS, SUPPORTS AND LOADINGS SPECIFIED BY FABRICATOR TO BE VERIFIED BY BUILDING DESIGNER

BEARINGS

JT	FACTORED GROSS REACTION VERT	HORZ	MAXIMUM FACTORED GROSS REACTION DOWN	HORZ	UPLIFT	INPUT BRG IN-SX	REQRD BRG IN-SX
F	1632	0	1632	0	0	5-8	5-8
D	1442	0	1442	0	0	MECHANICAL	

A SUITABLE HANGER/MECHANICAL CONNECTION IS REQUIRED AT JOINT D. MINIMUM BEARING LENGTH AT JOINT D = 4-0.

UNFACTORED REACTIONS

JT	1ST LCASE COMBINED	MAX./MIN. COMPONENT REACTIONS SNOW	LIVE	PERM.LIVE	WIND	DEAD	SOIL
F	1150	779 / 0	0 / 0	0 / 0	0 / 0	371 / 0	0 / 0
D	1017	686 / 0	0 / 0	0 / 0	0 / 0	330 / 0	0 / 0

BEARING MATERIAL TO BE SPF NO.2 OR BETTER AT JOINT(S) F

BRACING

TOP CHORD TO BE SHEATHED OR MAX. PURLIN SPACING = 6.23 FT.
MAX. UNBRACED BOTTOM CHORD LENGTH = 10.00 FT OR RIGID CEILING DIRECTLY APPLIED.

ALL PITCH BREAKS AND PERIMETER CORNER JOINTS MUST BE LATERALLY RESTRAINED.

LOADING

TOTAL LOAD CASES: (4)

CHORDS

MEMB. FR-TO	MAX. FACTORED FORCE (LBS)	FACTORED VERT. LOAD (PLF) FROM	TO	LC1	MAX CSI (LC)	MAX. UNBRAC LENGTH
F- A	-1500 / 0	0.0	0.0	0.08 (1)	7.81	
A- G	-2482 / 0	-112.4	-112.4	0.37 (1)	6.23	
G- B	-2482 / 0	-112.4	-112.4	0.37 (1)	6.23	
B- C	-2482 / 0	-112.4	-112.4	0.05 (1)	6.25	
D- C	-1038 / 0	0.0	0.0	0.06 (1)	7.81	
F- E	0 / 0	-43.5	-43.5	0.07 (1)	10.00	
E- H	0 / 0	-43.5	-43.5	0.26 (1)	10.00	
H- D	0 / 0	-43.5	-43.5	0.26 (1)	10.00	

WEBS

MEMB. FR-TO	MAX. FACTORED FORCE (LBS)	MAX CSI (LC)
A- E	0 / 2633	0.33 (1)
E- B	-1241 / 0	0.10 (1)
E- C	0 / 2633	0.33 (1)

SPECIFIED CONCENTRATED LOADS (LBS)

JT	LOC.	LC1	MAX-	MAX+	FACE	DIR.	TYPE	HEEL	CONN.
G	1-11-4	-951	-951	---	TOP	VERT	TOTAL	---	C1
H	3-11-4	-559	-559	---	FRONT	VERT	TOTAL	---	C1

CONNECTION REQUIREMENTS

1) **C1:** A SUITABLE HANGER/MECHANICAL CONNECTION IS REQUIRED.

REVIEWED

DESIGN CRITERIA

*** SPECIAL LOADS ANALYSIS ***
GEOMETRY AND/OR BASIC LOADS CHANGED BY USER.
LOADS WERE DERIVED FROM USER INPUT
NO FURTHER MODIFICATIONS WERE MADE

SPECIFIED LOADS:

TOP	CH.	LL	=	32.5	PSF
		DL	=	6.0	PSF
BOT	CH.	LL	=	0.0	PSF
		DL	=	7.4	PSF
TOTAL	LOAD		=	45.9	PSF

SPACING = 24.0 IN. C/C

LOADING IN FLAT SECTION BASED ON A SLOPE OF 6.00/12

*** NON STANDARD GIRDER ***
ADDT'L USER-DEFINED LOADS APPLIED TO ALL LOAD CASES.

THIS TRUSS IS DESIGNED FOR RESIDENTIAL OR SMALL BUILDING REQUIREMENTS OF PART 9, NBCC 2015

THIS DESIGN COMPLIES WITH:
- PART 9 OF BCBC 2018 , ABC 2019
- PART 9 OF OBC 2012 (2019 AMENDMENT)
- CSA 086-14
- TPIC 2014

(55 % OF 43.9 P.S.F. G.S.L. PLUS 8.4 P.S.F. RAIN LOAD) EQUALS 32.5 P.S.F. SPECIFIED ROOF LIVE LOAD

ALLOWABLE DEFL.(LL)= L/360 (0.20")
CALCULATED VERT. DEFL.(LL) = L/ 999 (0.02")
ALLOWABLE DEFL.(TL)= L/360 (0.20")
CALCULATED VERT. DEFL.(TL) = L/ 999 (0.04")

CSI: TC=0.37/1.00 (A-B:1) , BC=0.26/1.00 (D-E:1) , WB=0.33/1.00 (A-E:1) , SSI=0.35/1.00 (A-B:1)

DOL LUMBER=1.00 NAIL=1.00 LS BEND=1.00 COMP=1.00 SHEAR=1.00 TENS= 1.00

COMPANION LIVE LOAD FACTOR = 1.00

TRUSS PLATE MANUFACTURER IS NOT RESPONSIBLE FOR QUALITY CONTROL IN THE TRUSS MANUFACTURING PLANT .

NAIL VALUES

PLATE	GRIP(DRY) (PSI) MAX	MIN	SHEAR (PLI) MAX	MIN	SECTION (PLI) MAX	MIN
MT20	650	371	1747	788	1987	1873

PLATE PLACEMENT TOL. = 0.250 inches

PLATE ROTATION TOL. = 5.0 Deg.

JSI GRIP= 0.64 (E) (INPUT = 0.90)
JSI METAL= 0.28 (C) (INPUT = 1.00)

CONTINUED ON PAGE 2

JOB NAME	TRUSS NAME	QUANTITY	PLY	JOB DESC. BAYVIEW WELLINGTON	DRWG NO.
423537	T54	1	2	TRUSS DESC.	

Tamarack Roof Truss, Burlington

Version 8.530 S Feb 23 2022 MiTek Industries, Inc. Fri Jun 24 09:03:04 2022 Page 2
ID:c3jyj23uDijq_8pvRKbkZpy75XW-rzGiykxRX_7cxkDNV5rkmz9KSB82n50wGyEqKPz37pr

PLATES (table is in inches)

JT	TYPE	PLATES	W	LEN	Y	X
E	BMWWW-t	MT20	5.0	8.0		
F	BMV1+p	MT20	3.0	8.0		

NOTES- (1)
1) Lateral braces to be a minimum of 2X4 SPF #2.

LICENSED PROFESSIONAL ENGINEER
06-24-22
H. J. G. ALVES
100009024
PROVINCE OF ONTARIO

Structural component only
DWG# T-2215171

REVIEWED

JOB NAME	TRUSS NAME	QUANTITY	PLY	JOB DESC.	DRWG NO.
423537	T55	1	2	BAYVIEW WELLINGTON TRUSS DESC.	

Tamarack Roof Truss, Burlington

Version 8.530 S Feb 23 2022 MiTek Industries, Inc. Fri Jun 24 09:03:05 2022 Page 1
ID:c3jyj23uDijq_8pvRKbkZpy75XW-JAq494y3IHFTZuoa3oMzJAiZEbQfWYN3UczNssz37pq

Scale = 1:25.4

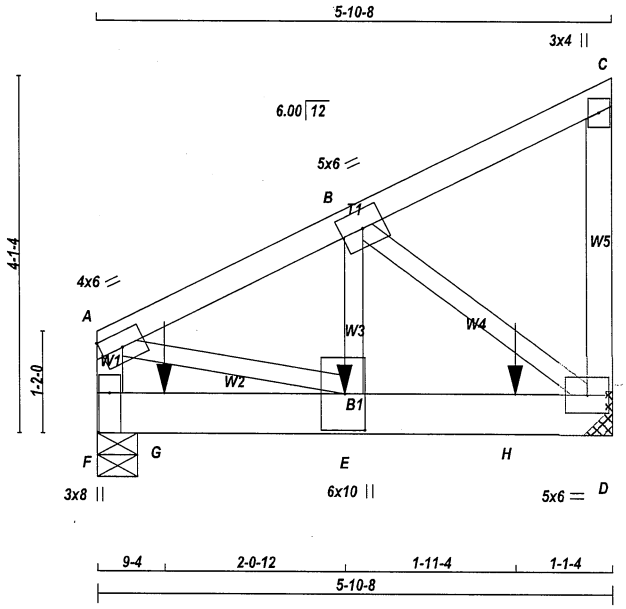

TOTAL WEIGHT = 2 X 29 = 58 lb [M]

LUMBER

N. L. G. A. RULES

CHORDS	SIZE		LUMBER	DESCR.
F - A	2x4	DRY	No.2	SPF
A - C	2x4	DRY	No.2	SPF
D - C	2x4	DRY	No.2	SPF
F - D	2x6	DRY	No.2	SPF
ALL WEBS	2x3	DRY	No.2	SPF

DRY: SEASONED LUMBER.

DESIGN CONSISTS OF 2 TRUSSES BUILT SEPARATELY THEN FASTENED TOGETHER AS FOLLOWS:

CHORDS	#ROWS	SURFACE SPACING (IN)	LOAD(PLF)
TOP CHORDS : (0.122"X3") SPIRAL NAILS			
F- A	1	12	TOP
A- C	1	12	TOP
C- D	1	12	TOP
BOTTOM CHORDS : (0.122"X3") SPIRAL NAILS			
F- D	2	11	SIDE(244.1)
WEBS : (0.122"X3") SPIRAL NAILS			
B- E	1	2	SIDE(418.5)
2x3	1	6	

NAILS TO BE DRIVEN FROM ONE SIDE ONLY.

GIRDER NAILING ASSUMES NAILED HANGERS ARE FASTENED WITH MIN. 3-0 INCH NAILS.

TOP - COMPONENTS ARE LOADED FROM THE TOP AND MUST BE PLACED ON TOP EDGE OF ALL PLIES FOR THE LOAD TO BE TRANSFERRED TO EACH PLY.

SIDE - PLF SHOWN IS THE EQUIVALENT UDL APPLIED TO ONE SIDE THAT THE CORRESPONDING NAILING PATTERN SHALL BE CAPABLE OF TRANSFERING. REMAINING PLF MUST BE APPLIED ON THE OPPOSITE SIDE OR ON THE TOP.

PLATES (table is in inches)

JT	TYPE	PLATES	W	LEN Y	X
A	TMVW-t	MT20	4.0	6.0	Edge
B	TMWW-t	MT20	5.0	6.0	
C	TMV+p	MT20	3.0	4.0	

LICENSED PROFESSIONAL ENGINEER
06-24-22
H. J. G. ALVES
100009024
PROVINCE OF ONTARIO

Structural component only
DWG# T-2215172

DIMENSIONS, SUPPORTS AND LOADINGS SPECIFIED BY FABRICATOR TO BE VERIFIED BY BUILDING DESIGNER

BEARINGS

JT	FACTORED GROSS REACTION VERT	HORZ	MAXIMUM FACTORED GROSS REACTION DOWN	HORZ	UPLIFT	INPUT BRG	REQRD BRG
F	2651	0	2651	0	0	IN-SX	IN-SX
D	3056	0	3056	0	0	5-8	5-8
						MECHANICAL	

A SUITABLE HANGER/MECHANICAL CONNECTION IS REQUIRED AT JOINT D. MINIMUM BEARING LENGTH AT JOINT D = 4-0.

UNFACTORED REACTIONS

JT	1ST LCASE COMBINED	MAX./MIN. COMPONENT REACTIONS SNOW	LIVE	PERM.LIVE	WIND	DEAD	SOIL
F	1856	1324 / 0	0 / 0	0 / 0	0 / 0	532 / 0	0 / 0
D	2140	1525 / 0	0 / 0	0 / 0	0 / 0	615 / 0	0 / 0

BEARING MATERIAL TO BE SPF NO.2 OR BETTER AT JOINT(S) F

BRACING

TOP CHORD TO BE SHEATHED OR MAX. PURLIN SPACING = 5.36 FT.
MAX. UNBRACED BOTTOM CHORD LENGTH = 10.00 FT OR RIGID CEILING DIRECTLY APPLIED.

ALL PITCH BREAKS AND PERIMETER CORNER JOINTS MUST BE LATERALLY RESTRAINED.

LOADING

TOTAL LOAD CASES: (4)

CHORDS

MEMB. FR-TO	MAX. FACTORED FORCE (LBS)	FACTORED VERT. LOAD (PLF) FROM	TO	LC1 CSI (LC)	MAX. UNBRAC LENGTH
F- A	-2089 / 0	0.0	0.0	0.12 (1)	7.66
A- B	-2838 / 0	-112.4	-112.4	0.10 (1)	5.36
B- C	-9 / 0	-112.4	-112.4	0.07 (1)	10.00
D- C	-144 / 0	0.0	0.0	0.02 (1)	7.81
F- G	0 / 0	-18.5	-18.5	0.16 (1)	10.00
G- E	0 / 0	-18.5	-18.5	0.16 (1)	10.00
E- H	0 / 2547	-18.5	-18.5	0.55 (1)	10.00
H- D	0 / 2547	-18.5	-18.5	0.55 (1)	10.00

WEBS

MEMB. FR-TO	MAX. FACTORED FORCE (LBS)	MAX CSI (LC)
A- E	0 / 2634	0.33 (1)
E- B	0 / 2846	0.35 (1)
B- D	-3204 / 0	0.38 (1)

SPECIFIED CONCENTRATED LOADS (LBS)

JT	LOC.	LC1	MAX-	MAX+	FACE	DIR.	TYPE	HEEL	CONN.
E	2-10-0	-1780	-1780	---	BACK	VERT	TOTAL	---	C1
G	9-4	-560	-560	---	BACK	VERT	TOTAL	---	C1
H	4-9-4	-1117	-1117	---	BACK	VERT	TOTAL	---	C1

CONNECTION REQUIREMENTS

1) **C1:** A SUITABLE HANGER/MECHANICAL CONNECTION IS REQUIRED.

DESIGN CRITERIA

SPECIFIED LOADS:

TOP	CH.	LL	=	32.5	PSF
		DL	=	6.0	PSF
BOT	CH.	LL	=	0.0	PSF
		DL	=	7.4	PSF
TOTAL	LOAD		=	45.9	PSF

SPACING = 24.0 IN. C/C

THIS TRUSS IS DESIGNED FOR RESIDENTIAL OR SMALL BUILDING REQUIREMENTS OF PART 9, NBCC 2015

THIS DESIGN COMPLIES WITH:
- PART 9 OF BCBC 2018 , ABC 2019
- PART 9 OF OBC 2012 (2019 AMENDMENT)
- CSA 086-14
- TPIC 2014

(55 % OF 43.9 P.S.F. G.S.L. PLUS 8.4 P.S.F. RAIN LOAD) EQUALS 32.5 P.S.F. SPECIFIED ROOF LIVE LOAD

ALLOWABLE DEFL.(LL)= L/360 (0.20")
CALCULATED VERT. DEFL.(LL) = L/ 999 (0.02")
ALLOWABLE DEFL.(TL)= L/360 (0.20")
CALCULATED VERT. DEFL.(TL) = L/ 999 (0.03")

CSI: TC=0.12/1.00 (A-F:1) , BC=0.55/1.00 (D-E:1) , WB=0.38/1.00 (B-D:1) , SSI=0.32/1.00 (D-E:1)

DOL LUMBER=1.00 NAIL=1.00 LS BEND=1.00 COMP=1.00 SHEAR=1.00 TENS= 1.00

COMPANION LIVE LOAD FACTOR = 1.00

TRUSS PLATE MANUFACTURER IS NOT RESPONSIBLE FOR QUALITY CONTROL IN THE TRUSS MANUFACTURING PLANT .

NAIL VALUES

PLATE	GRIP(DRY) (PSI) MAX	MIN	SHEAR (PLI) MAX	MIN	SECTION (PLI) MAX	MIN
MT20	650	371	1747	788	1987	1873

PLATE PLACEMENT TOL. = 0.250 inches

PLATE ROTATION TOL. = 5.0 Deg.

JSI GRIP= 0.87 (B) (INPUT = 0.90)
JSI METAL= 0.39 (E) (INPUT = 1.00)

REVIEWED

CONTINUED ON PAGE 2

JOB NAME	TRUSS NAME	QUANTITY	PLY	JOB DESC. BAYVIEW WELLINGTON	DRWG NO.
423537	T55	1	2	TRUSS DESC.	

PLATES (table is in inches)

JT	TYPE	PLATES	W	LEN	Y	X
D	BMVW1-t	MT20	5.0	6.0		
E	BMWW+t	MT20	6.0	10.0	5.00	2.75
F	BMV1+p	MT20	3.0	8.0	Edge	1.50

Edge - INDICATES REFERENCE CORNER OF PLATE TOUCHES EDGE OF CHORD.

NOTES- (1)
1) Lateral braces to be a minimum of 2X4 SPF #2.

LICENSED PROFESSIONAL ENGINEER
06-24-22
H. J. G. ALVES
100009024
PROVINCE OF ONTARIO

Structural component only
DWG# T-2215172

REVIEWED

JOB NAME	TRUSS NAME	QUANTITY	PLY	JOB DESC.	DRWG NO.
423533	V1	1	1	BAYVIEW WELLINGTON TRUSS DESC.	

Tamarack Roof Truss, Burlington

Version 8.530 S Feb 23 2022 MiTek Industries, Inc. Fri Jun 24 08:10:18 2022 Page 1
ID:eW?g6bUL04wPT9FNBNyUkjy71IX-XuzqTAdW7DEq6BBv1A2ISJ1Jzyd3_GmvENIICwz38bJ

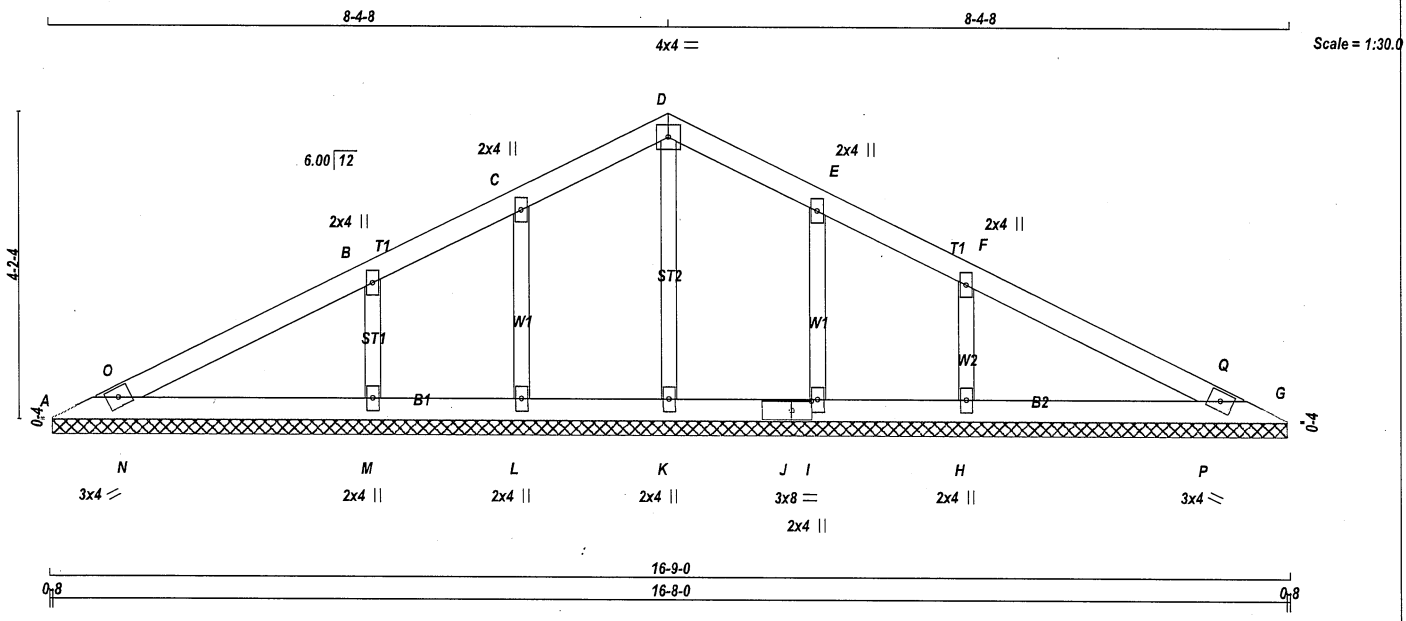

TOTAL WEIGHT = 49 lb

LUMBER
N. L. G. A. RULES

CHORDS	SIZE		LUMBER	DESCR.
A - D	2x4	DRY	No.2	SPF
D - G	2x4	DRY	No.2	SPF
A - J	2x4	DRY	No.2	SPF
J - G	2x4	DRY	No.2	SPF
ALL WEBS	2x3	DRY	No.2	SPF

DRY: SEASONED LUMBER.

PLATES (table is in inches)

JT	TYPE	PLATES	W	LEN	Y	X
A	TBM1-h	MT20	3.0	4.0		
B, C, E, F						
B	TMW+w	MT20	2.0	4.0		
D	TTW-p	MT20	4.0	4.0		
G	TBM1-h	MT20	3.0	4.0		
H, I, K, L, M						
H	BMW1+w	MT20	2.0	4.0		
J	BS-t	MT20	3.0	8.0	1.50	3.25

NOTES- (1)
1) Lateral braces to be a minimum of 2X4 SPF #2.

DIMENSIONS, SUPPORTS AND LOADINGS SPECIFIED BY FABRICATOR TO BE VERIFIED BY BUILDING DESIGNER

BEARINGS

JT	FACTORED GROSS REACTION VERT	HORZ	MAXIMUM FACTORED GROSS REACTION DOWN	HORZ	UPLIFT	INPUT BRG IN-SX	REQRD BRG IN-SX
A	161	0	161	0	0	16-8-0 (9-11-12)	3-8-0
G	161	0	161	0	0	16-8-0 (9-11-12)	3-8-0
K	453	0	453	0	0	16-8-0 (9-11-12)	3-8-0
M	536	0	536	0	0	16-8-0 (9-11-12)	3-8-0
I	168	0	168	0	0	16-8-0 (9-11-12)	3-8-0
H	536	0	536	0	0	16-8-0 (9-11-12)	3-8-0
L	168	0	168	0	0	16-8-0 (9-11-12)	3-8-0

VALUE IN PARENTHESIS INDICATES EFFECTIVE BEARING LENGTH

UNFACTORED REACTIONS

JT	1ST LCASE COMBINED	MAX./MIN. COMPONENT REACTIONS SNOW	LIVE	PERM.LIVE	WIND	DEAD	SOIL
A	113	81 / 0	0 / 0	0 / 0	0 / 0	32 / 0	0 / 0
G	113	81 / 0	0 / 0	0 / 0	0 / 0	32 / 0	0 / 0
K	319	220 / 0	0 / 0	0 / 0	0 / 0	99 / 0	0 / 0
M	376	264 / 0	0 / 0	0 / 0	0 / 0	112 / 0	0 / 0
I	117	87 / 0	0 / 0	0 / 0	0 / 0	30 / 0	0 / 0
H	376	264 / 0	0 / 0	0 / 0	0 / 0	112 / 0	0 / 0
L	117	87 / 0	0 / 0	0 / 0	0 / 0	30 / 0	0 / 0

BEARING MATERIAL TO BE SPF NO.2 OR BETTER AT JOINT(S) A, G, K, M, I, H, L

BRACING
TOP CHORD TO BE SHEATHED OR MAX. PURLIN SPACING = 10.00 FT.
MAX. UNBRACED BOTTOM CHORD LENGTH = 6.25 FT OR RIGID CEILING DIRECTLY APPLIED.

ALL PITCH BREAKS AND PERIMETER CORNER JOINTS MUST BE LATERALLY RESTRAINED.

LOADING
TOTAL LOAD CASES: (4)

CHORDS

MEMB. FR-TO	MAX. FACTORED FORCE (LBS)	FACTORED VERT. LOAD LC1 (PLF) FROM	TO	MAX CSI (LC)	MAX. UNBRAC LENGTH
A- O	0 / 168	-112.4	-112.4	0.07 (1)	10.00
O- B	0 / 206	-112.4	-112.4	0.21 (1)	10.00
B- C	0 / 177	-112.4	-112.4	0.21 (1)	10.00
C- D	0 / 199	-112.4	-112.4	0.09 (1)	10.00
D- E	0 / 199	-112.4	-112.4	0.09 (1)	10.00
E- F	0 / 177	-112.4	-112.4	0.21 (1)	10.00
F- Q	0 / 206	-112.4	-112.4	0.21 (1)	10.00
Q- G	0 / 168	-112.4	-112.4	0.07 (1)	10.00
A- N	-182 / 0	-18.5	-18.5	0.15 (1)	6.25
N- M	-165 / 0	-18.5	-18.5	0.15 (1)	6.25
M- L	-179 / 0	-18.5	-18.5	0.10 (1)	6.25
L- K	-183 / 0	-18.5	-18.5	0.02 (4)	6.25
K- J	-183 / 0	-18.5	-18.5	0.02 (4)	6.25
J- I	-183 / 0	-18.5	-18.5	0.02 (4)	6.25
I- H	-179 / 0	-18.5	-18.5	0.10 (1)	6.25
H- P	-165 / 0	-18.5	-18.5	0.15 (1)	6.25
P- G	-182 / 0	-18.5	-18.5	0.15 (1)	6.25

WEBS

MEMB. FR-TO	MAX. FACTORED FORCE (LBS)	MAX CSI (LC)
K- D	-387 / 0	0.10 (1)
M- B	-387 / 0	0.06 (1)
I- E	-190 / 0	0.04 (1)
H- F	-387 / 0	0.06 (1)
L- C	-190 / 0	0.04 (1)
N- O	-145 / 4	0.00 (1)
P- Q	-145 / 4	0.00 (1)

DESIGN CRITERIA

SPECIFIED LOADS:

TOP CH.	LL	=	32.5	PSF
	DL	=	6.0	PSF
BOT CH.	LL	=	0.0	PSF
	DL	=	7.4	PSF
TOTAL LOAD		=	45.9	PSF

SPACING = 24.0 IN. C/C

THIS TRUSS IS DESIGNED FOR RESIDENTIAL OR SMALL BUILDING REQUIREMENTS OF PART 9, NBCC 2015

THIS DESIGN COMPLIES WITH:
- PART 9 OF BCBC 2018 , ABC 2019
- PART 9 OF OBC 2012 (2019 AMENDMENT)
- CSA 086-14
- TPIC 2014

(55 % OF 43.9 P.S.F. G.S.L. PLUS 8.4 P.S.F. RAIN LOAD) EQUALS 32.5 P.S.F. SPECIFIED ROOF LIVE LOAD

CSI: TC=0.21/1.00 (B-O:1) , BC=0.15/1.00 (M-N:1) , WB=0.10/1.00 (D-K:1) , SSI=0.16/1.00 (B-O:1)

DOL LUMBER=1.00 NAIL=1.00 LS BEND=1.10 COMP=1.10 SHEAR=1.10 TENS= 1.10

COMPANION LIVE LOAD FACTOR = 1.00

TRUSS PLATE MANUFACTURER IS NOT RESPONSIBLE FOR QUALITY CONTROL IN THE TRUSS MANUFACTURING PLANT .

NAIL VALUES

PLATE	GRIP(DRY) (PSI) MAX	MIN	SHEAR (PLI) MAX	MIN	SECTION (PLI) MAX	MIN
MT20	650	371	1747	788	1987	1873

PLATE PLACEMENT TOL. = 0.250 inches

PLATE ROTATION TOL. = 5.0 Deg.

JSI GRIP= 0.22 (F) (INPUT = 0.90)
JSI METAL= 0.16 (F) (INPUT = 1.00)

LICENSED PROFESSIONAL ENGINEER
06-24-22
H. J. G. ALVES
100009024
PROVINCE OF ONTARIO

Structural component only
DWG# T-2215144

REVIEWED

JOB NAME	TRUSS NAME	QUANTITY	PLY	JOB DESC.	DRWG NO.
423533	V2	1	1	BAYVIEW WELLINGTON TRUSS DESC.	

Tamarack Roof Truss, Burlington

Version 8.530 S Feb 23 2022 MiTek Industries, Inc. Fri Jun 24 08:10:19 2022 Page 1
ID:eW?g6bUL04wPT9FNBNyUkjy71IX-?4XChWe8uXMhkLm5buZX?XaVCM_Rjkb3T12rlMz38b

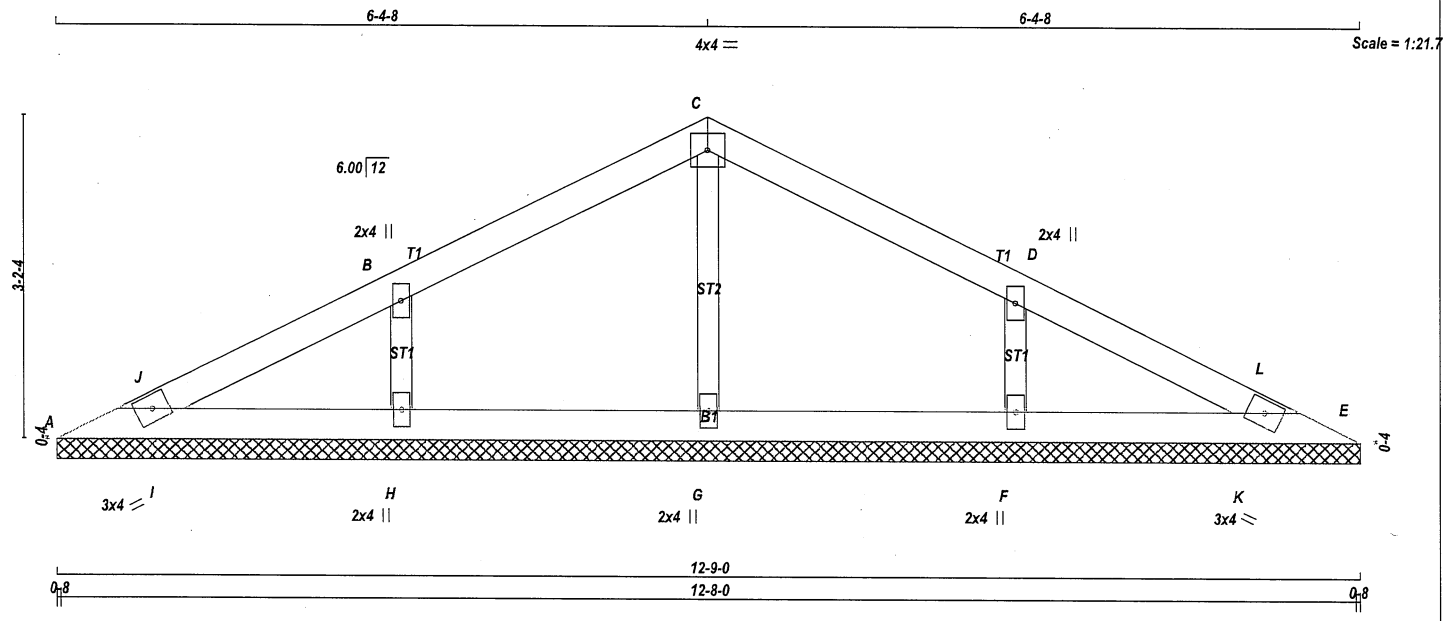

TOTAL WEIGHT = 33 lb
[M]

LUMBER
N. L. G. A. RULES

CHORDS	SIZE		LUMBER	DESCR.
A - C	2x4	DRY	No.2	SPF
C - E	2x4	DRY	No.2	SPF
A - E	2x4	DRY	No.2	SPF
ALL WEBS	2x3	DRY	No.2	SPF

DRY: SEASONED LUMBER.

PLATES (table is in inches)

JT	TYPE	PLATES	W	LEN	Y	X
A	TBM1-h	MT20	3.0	4.0		
B	TMW+w	MT20	2.0	4.0		
C	TTW-p	MT20	4.0	4.0		
D	TMW+w	MT20	2.0	4.0		
E	TBM1-h	MT20	3.0	4.0		
F, G, H						
F	BMW1+w	MT20	2.0	4.0		

NOTES- (1)
1) Lateral braces to be a minimum of 2X4 SPF #2.

DIMENSIONS, SUPPORTS AND LOADINGS SPECIFIED BY FABRICATOR TO BE VERIFIED BY BUILDING DESIGNER

BEARINGS

JT	FACTORED GROSS REACTION VERT	HORZ	MAXIMUM FACTORED GROSS REACTION DOWN	HORZ	UPLIFT	INPUT BRG IN-SX	REQRD BRG IN-SX
A	144	0	144	0	0	12-9-0 (12-8-0	12-9-0
E	144	0	144	0	0	12-9-0 (12-8-0	12-9-0
G	367	0	367	0	0	12-9-0 (12-8-0	12-9-0
H	501	0	501	0	0	12-9-0 (12-8-0	12-9-0
F	501	0	501	0	0	12-9-0 (12-8-0	12-9-0

VALUE IN PARENTHESIS INDICATES EFFECTIVE BEARING LENGTH

UNFACTORED REACTIONS

JT	1ST LCASE COMBINED	MAX./MIN. COMPONENT REACTIONS SNOW	LIVE	PERM.LIVE	WIND	DEAD	SOIL
A	101	73 / 0	0 / 0	0 / 0	0 / 0	28 / 0	0 / 0
E	101	73 / 0	0 / 0	0 / 0	0 / 0	28 / 0	0 / 0
G	259	174 / 0	0 / 0	0 / 0	0 / 0	85 / 0	0 / 0
H	351	252 / 0	0 / 0	0 / 0	0 / 0	99 / 0	0 / 0
F	351	252 / 0	0 / 0	0 / 0	0 / 0	99 / 0	0 / 0

BEARING MATERIAL TO BE SPF NO.2 OR BETTER AT JOINT(S) A, E, G, H, F

BRACING
TOP CHORD TO BE SHEATHED OR MAX. PURLIN SPACING = 10.00 FT.
MAX. UNBRACED BOTTOM CHORD LENGTH = 6.25 FT OR RIGID CEILING DIRECTLY APPLIED.

ALL PITCH BREAKS AND PERIMETER CORNER JOINTS MUST BE LATERALLY RESTRAINED.

LOADING
TOTAL LOAD CASES: (4)

CHORDS

MEMB. FR-TO	MAX. FACTORED FORCE (LBS)	FACTORED VERT. LOAD LC1 (PLF) FROM	TO	MAX CSI (LC)	MAX. UNBRAC LENGTH
A- J	0 / 44	-112.4	-112.4	0.06 (1)	10.00
J- B	0 / 90	-112.4	-112.4	0.18 (1)	10.00
B- C	0 / 62	-112.4	-112.4	0.18 (1)	10.00
C- D	0 / 62	-112.4	-112.4	0.18 (1)	10.00
D- L	0 / 90	-112.4	-112.4	0.18 (1)	10.00
L- E	0 / 44	-112.4	-112.4	0.06 (1)	10.00
A- I	-60 / 0	-18.5	-18.5	0.08 (1)	6.25
I- H	-52 / 0	-18.5	-18.5	0.08 (1)	6.25
H- G	-72 / 0	-18.5	-18.5	0.05 (1)	6.25
G- F	-72 / 0	-18.5	-18.5	0.05 (1)	6.25
F- K	-52 / 0	-18.5	-18.5	0.08 (1)	6.25
K- E	-60 / 0	-18.5	-18.5	0.08 (1)	6.25

WEBS

MEMB. FR-TO	MAX. FACTORED FORCE (LBS)	MAX CSI (LC)
G- C	-337 / 0	0.06 (1)
H- B	-399 / 0	0.06 (1)
F- D	-399 / 0	0.06 (1)
I- J	-72 / 4	0.00 (1)
K- L	-72 / 4	0.00 (1)

DESIGN CRITERIA

SPECIFIED LOADS:

TOP CH.	LL	=	32.5	PSF
	DL	=	6.0	PSF
BOT CH.	LL	=	0.0	PSF
	DL	=	7.4	PSF
TOTAL LOAD		=	45.9	PSF

SPACING = 24.0 IN. C/C

THIS TRUSS IS DESIGNED FOR RESIDENTIAL OR SMALL BUILDING REQUIREMENTS OF PART 9, NBCC 2015

THIS DESIGN COMPLIES WITH:
- PART 9 OF BCBC 2018 , ABC 2019
- PART 9 OF OBC 2012 (2019 AMENDMENT)
- CSA 086-14
- TPIC 2014

(55 % OF 43.9 P.S.F. G.S.L. PLUS 8.4 P.S.F. RAIN LOAD) EQUALS 32.5 P.S.F. SPECIFIED ROOF LIVE LOAD

CSI: TC=0.18/1.00 (B-J:1) , BC=0.08/1.00 (H-I:1) , WB=0.06/1.00 (C-G:1) , SSI=0.15/1.00 (B-C:1)

DOL LUMBER=1.00 NAIL=1.00 LS BEND=1.10 COMP=1.10 SHEAR=1.10 TENS= 1.10

COMPANION LIVE LOAD FACTOR = 1.00

TRUSS PLATE MANUFACTURER IS NOT RESPONSIBLE FOR QUALITY CONTROL IN THE TRUSS MANUFACTURING PLANT .

NAIL VALUES

PLATE	GRIP(DRY) (PSI) MAX	MIN	SHEAR (PLI) MAX	MIN	SECTION (PLI) MAX	MIN
MT20	650	371	1747	788	1987	1873

PLATE PLACEMENT TOL. = 0.250 inches

PLATE ROTATION TOL. = 5.0 Deg.

JSI GRIP= 0.23 (D) (INPUT = 0.90)
JSI METAL= 0.17 (B) (INPUT = 1.00)

LICENSED PROFESSIONAL ENGINEER
06-24-22
H. J. G. ALVES
100009024
PROVINCE OF ONTARIO

Structural component only
DWG# T-2215145

REVIEWED

JOB NAME	TRUSS NAME	QUANTITY	PLY	JOB DESC.	DRWG NO.
423533	V3	1	1	BAYVIEW WELLINGTON TRUSS DESC.	

Tamarack Roof Truss, Burlington

Version 8.530 S Feb 23 2022 MiTek Industries, Inc. Fri Jun 24 08:10:20 2022 Page 1
ID:eW?g6bUL04wPT9FNBNyUkjy71lX-UG5aurfmfrUYLVLH9b4mXk7ekmJvSA6CihnPHoz38bH

Scale: 3/4"=1'

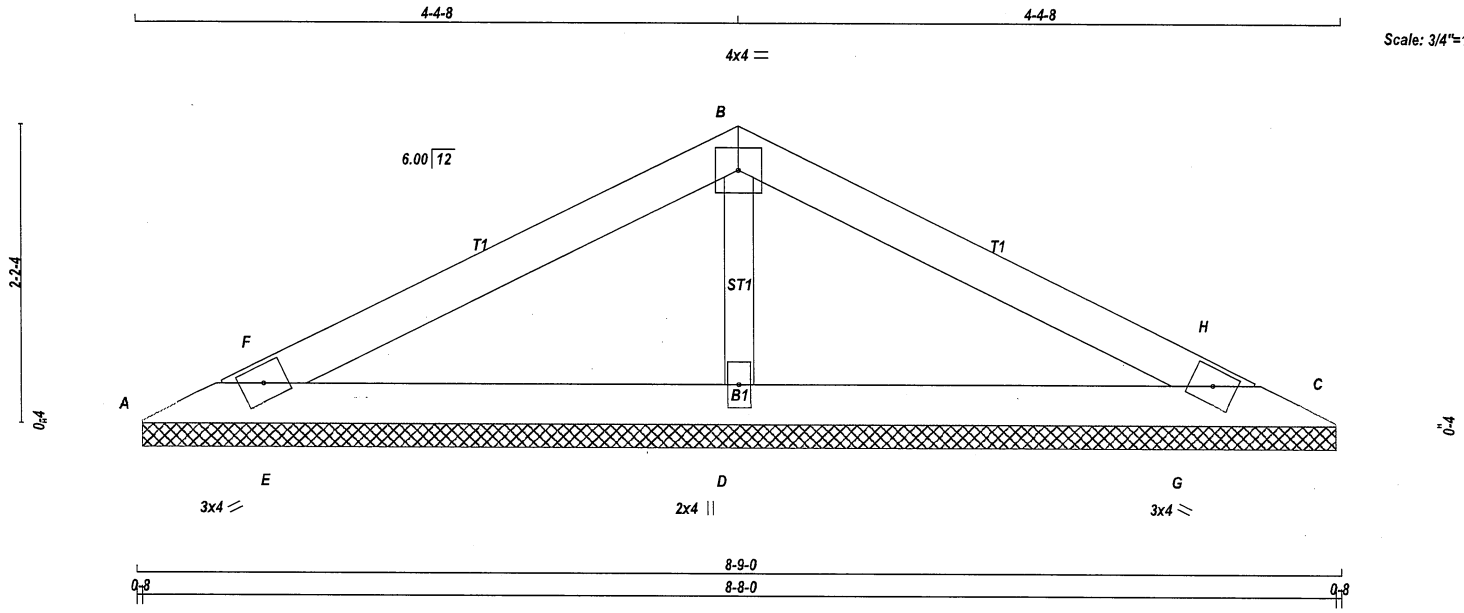

TOTAL WEIGHT = 21 lb
[M]

LUMBER
N. L. G. A. RULES

CHORDS	SIZE		LUMBER	DESCR.
A - B	2x4	DRY	No.2	SPF
B - C	2x4	DRY	No.2	SPF
A - C	2x4	DRY	No.2	SPF
ALL WEBS	2x3	DRY	No.2	SPF

DRY: SEASONED LUMBER.

PLATES (table is in inches)

JT	TYPE	PLATES	W	LEN	Y	X
A	TBM1-h	MT20	3.0	4.0		
B	TTW-p	MT20	4.0	4.0		
C	TBM1-h	MT20	3.0	4.0		
D	BMW1+w	MT20	2.0	4.0		

NOTES- (1)
1) Lateral braces to be a minimum of 2X4 SPF #2.

DIMENSIONS, SUPPORTS AND LOADINGS SPECIFIED BY FABRICATOR TO BE VERIFIED BY BUILDING DESIGNER

BEARINGS

JT	FACTORED GROSS REACTION VERT	HORZ	MAXIMUM FACTORED GROSS REACTION DOWN	HORZ	UPLIFT	INPUT BRG IN-SX	REQRD BRG IN-SX
A	91	0	91	0	0	8-8-0	8-8-0
C	91	0	91	0	0	8-8-0	8-8-0
D	954	0	954	0	0	8-8-0	8-8-0

UNFACTORED REACTIONS

JT	1ST LCASE COMBINED	MAX./MIN. COMPONENT REACTIONS SNOW	LIVE	PERM.LIVE	WIND	DEAD	SOIL
A	64	45 / 0	0 / 0	0 / 0	0 / 0	19 / 0	0 / 0
C	64	45 / 0	0 / 0	0 / 0	0 / 0	19 / 0	0 / 0
D	668	474 / 0	0 / 0	0 / 0	0 / 0	194 / 0	0 / 0

BEARING MATERIAL TO BE SPF NO.2 OR BETTER AT JOINT(S) A, C, D

BRACING
TOP CHORD TO BE SHEATHED OR MAX. PURLIN SPACING = 10.00 FT.
MAX. UNBRACED BOTTOM CHORD LENGTH = 6.25 FT OR RIGID CEILING DIRECTLY APPLIED.

ALL PITCH BREAKS AND PERIMETER CORNER JOINTS MUST BE LATERALLY RESTRAINED.

LOADING
TOTAL LOAD CASES: (4)

CHORDS

MEMB. FR-TO	MAX. FACTORED FORCE (LBS)	FACTORED VERT. LOAD (PLF) FROM	TO	LC1	MAX CSI (LC)	MAX. UNBRAC LENGTH
A- F	0 / 411	-112.4	-112.4		0.10 (1)	10.00
F- B	0 / 419	-112.4	-112.4		0.26 (1)	10.00
B- H	0 / 419	-112.4	-112.4		0.26 (1)	10.00
H- C	0 / 411	-112.4	-112.4		0.10 (1)	10.00
A- E	-400 / 0	-18.5	-18.5		0.19 (1)	6.25
E- D	-378 / 0	-18.5	-18.5		0.19 (1)	6.25
D- G	-378 / 0	-18.5	-18.5		0.19 (1)	6.25
G- C	-400 / 0	-18.5	-18.5		0.19 (1)	6.25

WEBS

MEMB. FR-TO	MAX. FACTORED FORCE (LBS)	MAX CSI (LC)
D- B	-733 / 0	0.11 (1)
E- F	-225 / 0	0.00 (1)
G- H	-225 / 0	0.00 (1)

DESIGN CRITERIA

SPECIFIED LOADS:

TOP CH.	LL	=	32.5	PSF
	DL	=	6.0	PSF
BOT CH.	LL	=	0.0	PSF
	DL	=	7.4	PSF
TOTAL LOAD		=	45.9	PSF

SPACING = 24.0 IN. C/C

THIS TRUSS IS DESIGNED FOR RESIDENTIAL OR SMALL BUILDING REQUIREMENTS OF PART 9, NBCC 2015

THIS DESIGN COMPLIES WITH:
- PART 9 OF BCBC 2018 , ABC 2019
- PART 9 OF OBC 2012 (2019 AMENDMENT)
- CSA 086-14
- TPIC 2014

(55 % OF 43.9 P.S.F. G.S.L. PLUS 8.4 P.S.F. RAIN LOAD) EQUALS 32.5 P.S.F. SPECIFIED ROOF LIVE LOAD

CSI: TC=0.26/1.00 (B-F:1) , BC=0.19/1.00 (D-E:1) , WB=0.11/1.00 (B-D:1) , SSI=0.14/1.00 (B-F:1)

DOL LUMBER=1.00 NAIL=1.00 LS BEND=1.10 COMP=1.10 SHEAR=1.10 TENS= 1.10

COMPANION LIVE LOAD FACTOR = 1.00

TRUSS PLATE MANUFACTURER IS NOT RESPONSIBLE FOR QUALITY CONTROL IN THE TRUSS MANUFACTURING PLANT .

NAIL VALUES

PLATE	GRIP(DRY) (PSI) MAX	MIN	SHEAR (PLI) MAX	MIN	SECTION (PLI) MAX	MIN
MT20	650	371	1747	788	1987	1873

PLATE PLACEMENT TOL. = 0.250 inches

PLATE ROTATION TOL. = 5.0 Deg.

JSI GRIP= 0.39 (B) (INPUT = 0.90)
JSI METAL= 0.22 (B) (INPUT = 1.00)

LICENSED PROFESSIONAL ENGINEER
06-24-22
H. J. G. ALVES
100009024
PROVINCE OF ONTARIO

Structural component only
DWG# T-2215146

REVIEWED

JOB NAME	TRUSS NAME	QUANTITY	PLY	JOB DESC.	DRWG NO.
423533	J1	6	1	BAYVIEW WELLINGTON TRUSS DESC.	

Tamarack Roof Truss, Burlington

Version 8.530 S Feb 23 2022 MiTek Industries, Inc. Fri Jun 24 08:09:52 2022 Page 1
ID:c3jyj23uDijq_8pvRKbkZpy75XW-IuO?0HJCFEzW_BCvWjaCPqymVTlGuXu4GL?wIQz38bj

Scale = 1:23.3

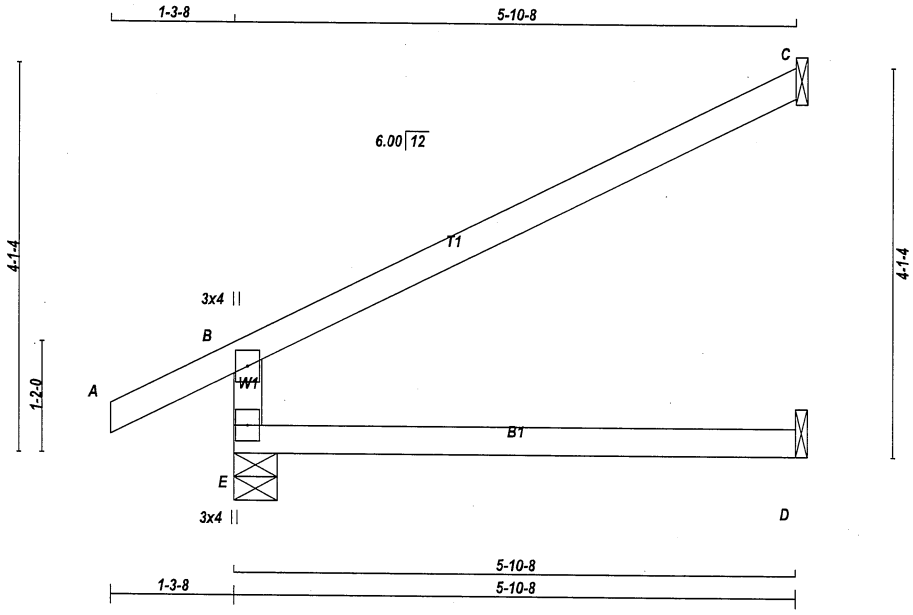

TOTAL WEIGHT = 6 X 17 = 101 lb [M]

LUMBER
N. L. G. A. RULES

CHORDS	SIZE		LUMBER	DESCR.
E - B	2x4	DRY	No.2	SPF
A - C	2x4	DRY	No.2	SPF
E - D	2x4	DRY	No.2	SPF

DRY: SEASONED LUMBER.

PLATES (table is in inches)

JT	TYPE	PLATES	W	LEN Y	X
B	TMV+p	MT20	3.0	4.0	
E	BMV1+p	MT20	3.0	4.0	

NOTES- (1)
1) Lateral braces to be a minimum of 2X4 SPF #2.

DIMENSIONS, SUPPORTS AND LOADINGS SPECIFIED BY FABRICATOR TO BE VERIFIED BY BUILDING DESIGNER

BEARINGS

JT	FACTORED GROSS REACTION VERT	HORZ	MAXIMUM FACTORED GROSS REACTION DOWN	HORZ	UPLIFT	INPUT BRG IN-SX	REQRD BRG IN-SX
E	629	0	629	0	0	5-8	5-8
C	248	0	248	0	0	1-8	1-8
D	45	0	50	0	0	1-8	1-8

SEE MITEK STANDARD DETAIL MSD2015-H FOR CONNECTION TO JOINT(S) C , D

UNFACTORED REACTIONS

JT	1ST LCASE COMBINED	MAX./MIN. COMPONENT REACTIONS SNOW	LIVE	PERM.LIVE	WIND	DEAD	SOIL
E	438	327 / 0	0 / 0	0 / 0	0 / 0	111 / 0	0 / 0
C	170	143 / 0	0 / 0	0 / 0	0 / 0	26 / 0	0 / 0
D	36	0 / 0	0 / 0	0 / 0	0 / 0	36 / 0	0 / 0

BEARING MATERIAL TO BE SPF NO.2 OR BETTER AT JOINT(S) E

BRACING
TOP CHORD TO BE SHEATHED OR MAX. PURLIN SPACING = 6.25 FT.
MAX. UNBRACED BOTTOM CHORD LENGTH = 10.00 FT OR RIGID CEILING DIRECTLY APPLIED.

ALL PITCH BREAKS AND PERIMETER CORNER JOINTS MUST BE LATERALLY RESTRAINED.

LOADING
TOTAL LOAD CASES: (4)

CHORDS

MEMB. FR-TO	MAX. FACTORED FORCE (LBS)	FACTORED VERT. LOAD LC1 (PLF) FROM	TO	MAX CSI (LC)	MAX. UNBRAC LENGTH FR-TO
E- B	-565 / 0	0.0	0.0	0.13 (4)	7.81
A- B	0 / 34	-112.4	-112.4	0.15 (1)	10.00
B- C	-37 / 0	-112.4	-112.4	0.66 (1)	6.25
E- D	0 / 0	-18.5	-18.5	0.13 (4)	10.00

WEBS

MEMB.	MAX. FACTORED FORCE (LBS)	MAX CSI (LC)

DESIGN CRITERIA

SPECIFIED LOADS:

TOP CH.	LL	=	32.5	PSF
	DL	=	6.0	PSF
BOT CH.	LL	=	0.0	PSF
	DL	=	7.4	PSF
TOTAL LOAD		=	45.9	PSF

SPACING = 24.0 IN. C/C

THIS TRUSS IS DESIGNED FOR RESIDENTIAL OR SMALL BUILDING REQUIREMENTS OF PART 9, NBCC 2015

THIS DESIGN COMPLIES WITH:
- PART 9 OF BCBC 2018 , ABC 2019
- PART 9 OF OBC 2012 (2019 AMENDMENT)
- CSA 086-14
- TPIC 2014

DESIGN ASSUMPTIONS
-OVERHANG NOT TO BE ALTERED OR CUT OFF.

(55 % OF 43.9 P.S.F. G.S.L. PLUS 8.4 P.S.F. RAIN LOAD) EQUALS 32.5 P.S.F. SPECIFIED ROOF LIVE LOAD

ALLOWABLE DEFL.(LL)= L/360 (0.20")
CALCULATED VERT. DEFL.(LL) = L/ 999 (0.00")
ALLOWABLE DEFL.(TL)= L/360 (0.20")
CALCULATED VERT. DEFL.(TL) = L/ 999 (0.03")

CSI: TC=0.66/1.00 (B-C:1) , BC=0.13/1.00 (D-E:4) , WB=0.00/1.00 (n/a:0) , SSI=0.29/1.00 (B-C:1)

DOL LUMBER=1.00 NAIL=1.00 LS BEND=1.10 COMP=1.10 SHEAR=1.10 TENS= 1.10

COMPANION LIVE LOAD FACTOR = 1.00

AUTOSOLVE RIGHT HEEL ONLY

TRUSS PLATE MANUFACTURER IS NOT RESPONSIBLE FOR QUALITY CONTROL IN THE TRUSS MANUFACTURING PLANT .

NAIL VALUES

PLATE	GRIP(DRY) (PSI) MAX	MIN	SHEAR (PLI) MAX	MIN	SECTION (PLI) MAX	MIN
MT20	650	371	1747	788	1987	1873

PLATE PLACEMENT TOL. = 0.250 inches

PLATE ROTATION TOL. = 5.0 Deg.

JSI GRIP= 0.23 (E) (INPUT = 0.90)
JSI METAL= 0.16 (B) (INPUT = 1.00)

LICENSED PROFESSIONAL ENGINEER
06-24-22
H. J. G. ALVES
100009024
PROVINCE OF ONTARIO

Structural component only
DWG# T-2215114

REVIEWED

JOB NAME	TRUSS NAME	QUANTITY	PLY	JOB DESC.	DRWG NO.
423533	J1S	4	1	BAYVIEW WELLINGTON .	
				TRUSS DESC.	

Tamarack Roof Truss, Burlington

Version 8.530 S Feb 23 2022 MiTek Industries, Inc. Fri Jun 24 08:09:53 2022 Page 1
ID:c3jyj23uDijq_8pvRKbkZpy75XW-m4yNEdKq0Y5NcLn53Q5Rx2V0lt0udzfEV?lTqtz38bi

Scale = 1:23.3

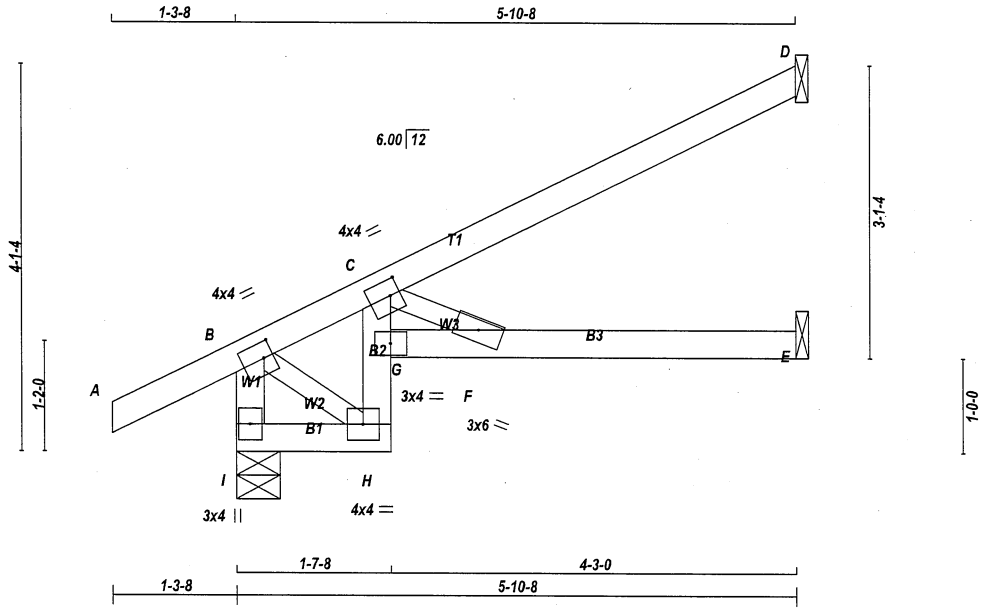

TOTAL WEIGHT = 4 X 20 = 82 lb
[M]

LUMBER
N. L. G. A. RULES

CHORDS	SIZE		LUMBER	DESCR.
I - B	2x4	DRY	No.2	SPF
A - D	2x4	DRY	No.2	SPF
I - H	2x4	DRY	No.2	SPF
H - C	2x4	DRY	No.2	SPF
G - E	2x4	DRY	No.2	SPF
ALL WEBS	2x3	DRY	No.2	SPF

DRY: SEASONED LUMBER.

PLATES (table is in inches)

JT	TYPE	PLATES	W	LEN	Y	X
B	TMVW-t	MT20	4.0	4.0	2.00	1.25
C	TMVW-t	MT20	4.0	4.0	2.00	1.25
F	BMW+w	MT20	3.0	6.0		
G	BVM-I	MT20	3.0	4.0		
H	BMVW-t	MT20	4.0	4.0		
I	BMV1+p	MT20	3.0	4.0		

NOTES- (1)
1) Lateral braces to be a minimum of 2X4 SPF #2.

DIMENSIONS, SUPPORTS AND LOADINGS SPECIFIED BY FABRICATOR TO BE VERIFIED BY BUILDING DESIGNER

BEARINGS

JT	FACTORED GROSS REACTION VERT	HORZ	MAXIMUM FACTORED GROSS REACTION DOWN	HORZ	UPLIFT	INPUT BRG IN-SX	REQRD BRG IN-SX
I	555	0	555	0	0	5-8	5-8
D	248	0	248	0	0	1-8	1-8
E	119	0	119	0	0	1-8	1-8

SEE MITEK STANDARD DETAIL MSD2015-H FOR CONNECTION TO JOINT(S) D , E

UNFACTORED REACTIONS

JT	1ST LCASE COMBINED	MAX./MIN. COMPONENT REACTIONS SNOW	LIVE	PERM.LIVE	WIND	DEAD	SOIL
I	386	289 / 0	0 / 0	0 / 0	0 / 0	97 / 0	0 / 0
D	171	138 / 0	0 / 0	0 / 0	0 / 0	33 / 0	0 / 0
E	86	42 / 0	0 / 0	0 / 0	0 / 0	44 / 0	0 / 0

BEARING MATERIAL TO BE SPF NO.2 OR BETTER AT JOINT(S) I

BRACING
TOP CHORD TO BE SHEATHED OR MAX. PURLIN SPACING = 6.25 FT.
MAX. UNBRACED BOTTOM CHORD LENGTH = 7.81 FT OR RIGID CEILING DIRECTLY APPLIED.

ALL PITCH BREAKS AND PERIMETER CORNER JOINTS MUST BE LATERALLY RESTRAINED.

LOADING
TOTAL LOAD CASES: (4)

CHORDS

MEMB. FR-TO	MAX. FACTORED FORCE (LBS)	FACTORED VERT. LOAD (PLF) FROM	TO	LC1 MAX CSI (LC)	MAX. UNBRAC LENGTH
I- B	-541 / 0	0.0	0.0	0.05 (1)	7.81
A- B	0 / 34	-112.4	-112.4	0.15 (1)	10.00
B- C	-273 / 0	-112.4	-112.4	0.14 (1)	6.25
C- D	0 / 4	-112.4	-112.4	0.37 (1)	10.00
I- H	0 / 0	-18.5	-18.5	0.01 (4)	10.00
H- G	-111 / 0	0.0	0.0	0.29 (1)	7.81
G- C	0 / 173	0.0	0.0	0.32 (1)	10.00
G- F	0 / 574	-18.5	-18.5	0.49 (1)	10.00
F- E	0 / 0	-18.5	-18.5	0.40 (1)	10.00

WEBS

MEMB. FR-TO	MAX. FACTORED FORCE (LBS)	MAX CSI (LC)
B- H	0 / 248	0.06 (1)
C- F	-657 / 0	0.10 (1)

DESIGN CRITERIA

SPECIFIED LOADS:

TOP CH.	LL	=	32.5	PSF
	DL	=	6.0	PSF
BOT CH.	LL	=	0.0	PSF
	DL	=	7.4	PSF
TOTAL LOAD		=	45.9	PSF

SPACING = 24.0 IN. C/C

THIS TRUSS IS DESIGNED FOR RESIDENTIAL OR SMALL BUILDING REQUIREMENTS OF PART 9, NBCC 2015

THIS DESIGN COMPLIES WITH:
- PART 9 OF BCBC 2018 , ABC 2019
- PART 9 OF OBC 2012 (2019 AMENDMENT)
- CSA 086-14
- TPIC 2014

DESIGN ASSUMPTIONS
-OVERHANG NOT TO BE ALTERED OR CUT OFF.

(55 % OF 43.9 P.S.F. G.S.L. PLUS 8.4 P.S.F. RAIN LOAD) EQUALS 32.5 P.S.F. SPECIFIED ROOF LIVE LOAD

ALLOWABLE DEFL.(LL)= L/360 (0.20")
CALCULATED VERT. DEFL.(LL) = L/ 853 (0.08")
ALLOWABLE DEFL.(TL)= L/360 (0.20")
CALCULATED VERT. DEFL.(TL) = L/ 451 (0.16")

CSI: TC=0.37/1.00 (C-D:1) , BC=0.49/1.00 (F-G:1) , WB=0.10/1.00 (C-F:1) , SSI=0.28/1.00 (C-G:1)

DOL LUMBER=1.00 NAIL=1.00 LS BEND=1.10 COMP=1.10 SHEAR=1.10 TENS= 1.10

COMPANION LIVE LOAD FACTOR = 1.00

TRUSS PLATE MANUFACTURER IS NOT RESPONSIBLE FOR QUALITY CONTROL IN THE TRUSS MANUFACTURING PLANT .

NAIL VALUES

PLATE	GRIP(DRY) (PSI) MAX	MIN	SHEAR (PLI) MAX	MIN	SECTION (PLI) MAX	MIN
MT20	650	371	1747	788	1987	1873

PLATE PLACEMENT TOL. = 0.250 inches

PLATE ROTATION TOL. = 5.0 Deg.

JSI GRIP= 0.50 (C) (INPUT = 0.90)
JSI METAL= 0.21 (G) (INPUT = 1.00)

LICENSED PROFESSIONAL ENGINEER
06-24-22
H. J. G. ALVES
100009024
PROVINCE OF ONTARIO

Structural component only
DWG# T-2215115

REVIEWED

JOB NAME	TRUSS NAME	QUANTITY	PLY	JOB DESC.	DRWG NO.
423533	J2	1	1	BAYVIEW WELLINGTON TRUSS DESC.	

Tamarack Roof Truss, Burlington

Version 8.530 S Feb 23 2022 MiTek Industries, Inc. Fri Jun 24 08:09:53 2022 Page 1
ID:c3jyj23uDijq_8pvRKbkZpy75XW-m4yNEdKq0Y5NcLn53Q5Rx2V1Jt5Vd_8EV?lTqtz38bi

Scale = 1:18.2

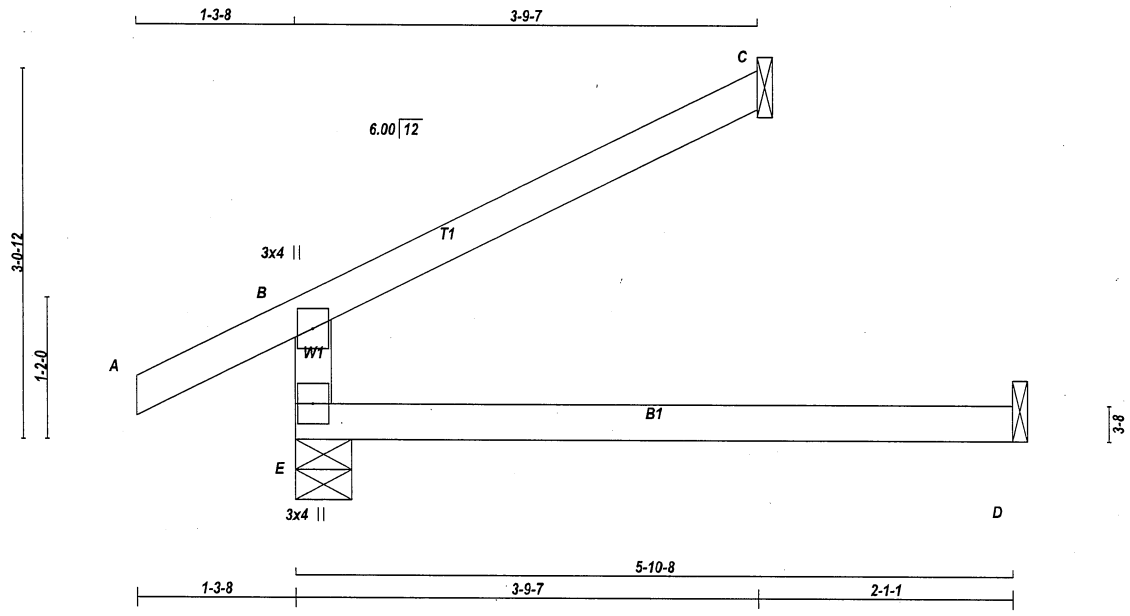

TOTAL WEIGHT = 14 lb
[M]

LUMBER
N. L. G. A. RULES

CHORDS	SIZE		LUMBER	DESCR.
E - B	2x4	DRY	No.2	SPF
A - C	2x4	DRY	No.2	SPF
E - D	2x4	DRY	No.2	SPF

DRY: SEASONED LUMBER.

PLATES (table is in inches)

JT	TYPE	PLATES	W	LEN	Y	X
B	TMV+p	MT20	3.0	4.0		
E	BMV1+p	MT20	3.0	4.0		

NOTES- (1)
1) Lateral braces to be a minimum of 2X4 SPF #2.

DIMENSIONS, SUPPORTS AND LOADINGS SPECIFIED BY FABRICATOR TO BE VERIFIED BY BUILDING DESIGNER

BEARINGS

JT	FACTORED GROSS REACTION VERT	HORZ	MAXIMUM FACTORED GROSS REACTION DOWN	HORZ	UPLIFT	INPUT BRG IN-SX	REQRD BRG IN-SX
E	482	0	482	0	0	5-8	5-8
C	160	0	160	0	0	1-8	1-8
D	45	0	50	0	0	1-8	1-8

SEE MITEK STANDARD DETAIL MSD2015-H FOR CONNECTION TO JOINT(S) C , D

UNFACTORED REACTIONS

JT	1ST LCASE COMBINED	MAX./MIN. COMPONENT REACTIONS SNOW	LIVE	PERM.LIVE	WIND	DEAD	SOIL
E	337	242 / 0	0 / 0	0 / 0	0 / 0	96 / 0	0 / 0
C	109	92 / 0	0 / 0	0 / 0	0 / 0	17 / 0	0 / 0
D	36	0 / 0	0 / 0	0 / 0	0 / 0	36 / 0	0 / 0

BEARING MATERIAL TO BE SPF NO.2 OR BETTER AT JOINT(S) E, C

BRACING
TOP CHORD TO BE SHEATHED OR MAX. PURLIN SPACING = 6.25 FT.
MAX. UNBRACED BOTTOM CHORD LENGTH = 10.00 FT OR RIGID CEILING DIRECTLY APPLIED.

ALL PITCH BREAKS AND PERIMETER CORNER JOINTS MUST BE LATERALLY RESTRAINED.

LOADING
TOTAL LOAD CASES: (4)

CHORDS MEMB. FR-TO	MAX. FACTORED FORCE (LBS)	FACTORED VERT. LOAD (PLF) FROM	TO	LC1	MAX CSI (LC)	MAX. UNBRAC LENGTH	WEBS MEMB. FR-TO	MAX. FACTORED FORCE (LBS)	MAX CSI (LC)
E- B	-418 / 0	0.0	0.0		0.13 (4)	7.81			
A- B	0 / 34	-112.4	-112.4		0.15 (1)	10.00			
B- C	-24 / 0	-112.4	-112.4		0.27 (1)	6.25			
E- D	0 / 0	-18.5	-18.5		0.13 (4)	10.00			

DESIGN CRITERIA

SPECIFIED LOADS:

TOP CH.	LL	=	32.5	PSF
	DL	=	6.0	PSF
BOT CH.	LL	=	0.0	PSF
	DL	=	7.4	PSF
TOTAL LOAD		=	45.9	PSF

SPACING = 24.0 IN. C/C

THIS TRUSS IS DESIGNED FOR RESIDENTIAL OR SMALL BUILDING REQUIREMENTS OF PART 9, NBCC 2015

THIS DESIGN COMPLIES WITH:
- PART 9 OF BCBC 2018 , ABC 2019
- PART 9 OF OBC 2012 (2019 AMENDMENT)
- CSA 086-14
- TPIC 2014

DESIGN ASSUMPTIONS
-OVERHANG NOT TO BE ALTERED OR CUT OFF.

(55 % OF 43.9 P.S.F. G.S.L. PLUS 8.4 P.S.F. RAIN LOAD) EQUALS 32.5 P.S.F. SPECIFIED ROOF LIVE LOAD

ALLOWABLE DEFL.(LL)= L/360 (0.20")
CALCULATED VERT. DEFL.(LL) = L/ 999 (0.00")
ALLOWABLE DEFL.(TL)= L/360 (0.20")
CALCULATED VERT. DEFL.(TL) = L/ 999 (0.03")

CSI: TC=0.27/1.00 (B-C:1) , BC=0.13/1.00 (D-E:4) , WB=0.00/1.00 (n/a:0) , SSI=0.19/1.00 (B-C:1)

DOL LUMBER=1.00 NAIL=1.00 LS BEND=1.10 COMP=1.10 SHEAR=1.10 TENS= 1.10

COMPANION LIVE LOAD FACTOR = 1.00

AUTOSOLVE RIGHT HEEL ONLY

TRUSS PLATE MANUFACTURER IS NOT RESPONSIBLE FOR QUALITY CONTROL IN THE TRUSS MANUFACTURING PLANT .

NAIL VALUES

PLATE	GRIP(DRY) (PSI) MAX	MIN	SHEAR (PLI) MAX	MIN	SECTION (PLI) MAX	MIN
MT20	650	371	1747	788	1987	1873

PLATE PLACEMENT TOL. = 0.250 inches

PLATE ROTATION TOL. = 5.0 Deg.

JSI GRIP= 0.17 (E) (INPUT = 0.90)
JSI METAL= 0.12 (B) (INPUT = 1.00)

LICENSED PROFESSIONAL ENGINEER
06-24-22
H. J. G. ALVES
100009024
PROVINCE OF ONTARIO

Structural component only
DWG# T-2215116

REVIEWED

JOB NAME	TRUSS NAME	QUANTITY	PLY	JOB DESC.	DRWG NO.
423533	J3	1	1	BAYVIEW WELLINGTON TRUSS DESC.	

Tamarack Roof Truss, Burlington

Version 8.530 S Feb 23 2022 MiTek Industries, Inc. Fri Jun 24 08:09:54 2022 Page 1
ID:c3jyj23uDijq_8pvRKbkZpy75XW-EGWlRyKSnsDEEVMHd8cgUF2E2HReMRNNjfU1MJz38bh

Scale = 1:13.6

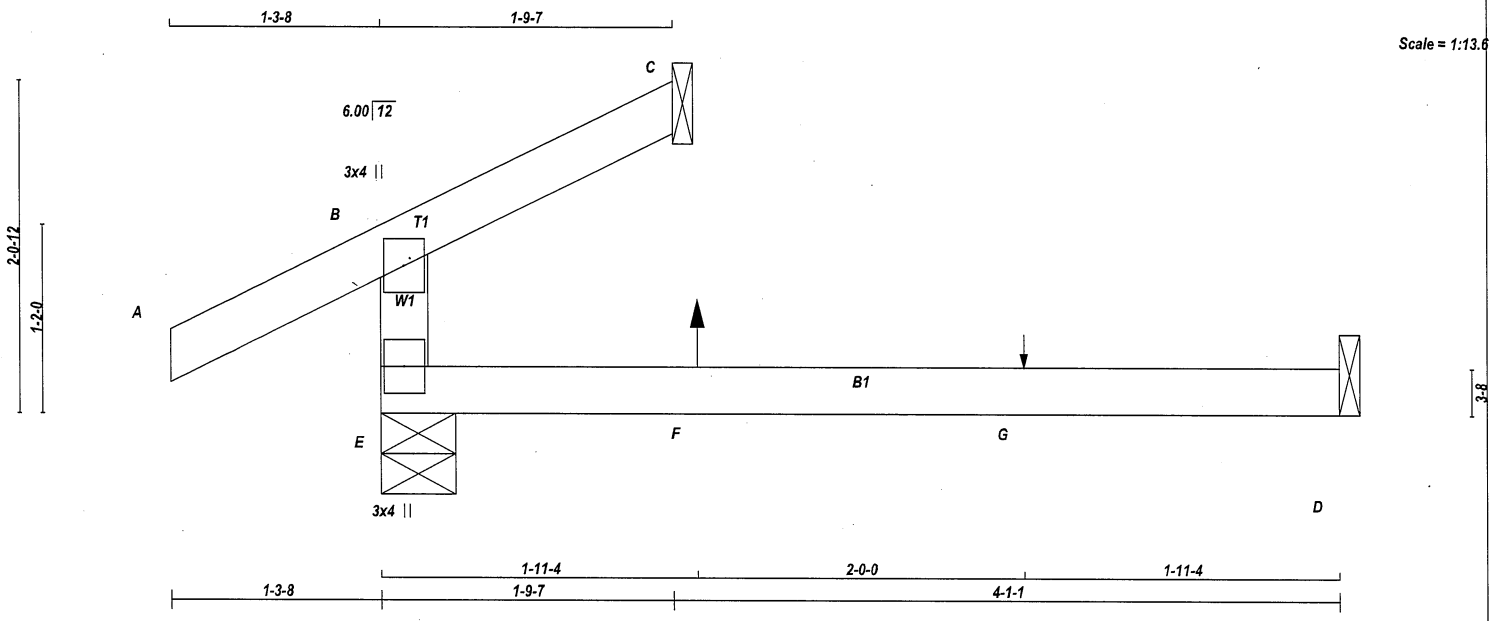

TOTAL WEIGHT = 12 lb
[M]

LUMBER
N. L. G. A. RULES

CHORDS	SIZE		LUMBER	DESCR.
E - B	2x4	DRY	No.2	SPF
A - C	2x4	DRY	No.2	SPF
E - D	2x4	DRY	No.2	SPF

DRY: SEASONED LUMBER.

PLATES (table is in inches)

JT	TYPE	PLATES	W	LEN	Y	X
B	TMV+p	MT20	3.0	4.0		
E	BMV1+p	MT20	3.0	4.0		

NOTES- (1)
1) Lateral braces to be a minimum of 2X4 SPF #2.

DIMENSIONS, SUPPORTS AND LOADINGS SPECIFIED BY FABRICATOR TO BE VERIFIED BY BUILDING DESIGNER

BEARINGS

JT	FACTORED GROSS REACTION VERT	HORZ	MAXIMUM FACTORED GROSS REACTION DOWN	HORZ	UPLIFT	INPUT BRG IN-SX	REQRD BRG IN-SX
E	340	0	340	0	0	5-8	5-8
C	71	0	71	0	0	1-8	1-8
D	43	0	52	0	0	1-8	1-8

SEE MITEK STANDARD DETAIL MSD2015-H FOR CONNECTION TO JOINT(S) C , D

UNFACTORED REACTIONS

JT	1ST LCASE COMBINED	MAX./MIN. COMPONENT REACTIONS SNOW	LIVE	PERM.LIVE	WIND	DEAD	SOIL
E	237	175 / 0	0 / 0	0 / 0	0 / 0	62 / 0	0 / 0
C	52	26 / 0	0 / 0	0 / 0	0 / 0	25 / 0	0 / 0
D	35	0 / -3	0 / 0	0 / 0	0 / 0	37 / 0	0 / 0

BEARING MATERIAL TO BE SPF NO.2 OR BETTER AT JOINT(S) E, C

BRACING
TOP CHORD TO BE SHEATHED OR MAX. PURLIN SPACING = 6.25 FT.
MAX. UNBRACED BOTTOM CHORD LENGTH = 10.00 FT OR RIGID CEILING DIRECTLY APPLIED.

ALL PITCH BREAKS AND PERIMETER CORNER JOINTS MUST BE LATERALLY RESTRAINED.

LOADING
TOTAL LOAD CASES: (7)

CHORDS

MEMB. FR-TO	MAX. FACTORED FORCE (LBS)	FACTORED VERT. LOAD (PLF) FROM	TO	LC1	MAX CSI (LC)	MAX. UNBRAC LENGTH
E- B	-284 / 0	0.0	0.0	0.11 (4)	7.81	
A- B	0 / 34	-112.4	-112.4	0.15 (1)	10.00	
B- C	-14 / 9	-112.4	-112.4	0.08 (4)	6.25	
E- F	0 / 0	-18.5	-18.5	0.14 (4)	10.00	
F- G	0 / 0	-18.5	-18.5	0.14 (4)	10.00	
G- D	0 / 0	-18.5	-18.5	0.14 (4)	10.00	

WEBS

MEMB. FR-TO	MAX. FACTORED FORCE (LBS)	MAX CSI (LC)

SPECIFIED CONCENTRATED LOADS (LBS)

JT	LOC.	LC1	MAX-	MAX+	FACE	DIR.	TYPE	HEEL	CONN.
F	1-11-4	6	1	10	BACK	VERT	TOTAL	---	C1
G	3-11-4	1	1	---	BACK	VERT	TOTAL	---	C1

CONNECTION REQUIREMENTS

1) **C1:** A SUITABLE HANGER/MECHANICAL CONNECTION IS REQUIRED.

DESIGN CRITERIA

SPECIFIED LOADS:

TOP CH.	LL	=	32.5	PSF
	DL	=	6.0	PSF
BOT CH.	LL	=	0.0	PSF
	DL	=	7.4	PSF
TOTAL LOAD		=	45.9	PSF

SPACING = 24.0 IN. C/C

THIS TRUSS IS DESIGNED FOR RESIDENTIAL OR SMALL BUILDING REQUIREMENTS OF PART 9, NBCC 2015

THIS DESIGN COMPLIES WITH:
- PART 9 OF BCBC 2018 , ABC 2019
- PART 9 OF OBC 2012 (2019 AMENDMENT)
- CSA 086-14
- TPIC 2014

DESIGN ASSUMPTIONS
-OVERHANG NOT TO BE ALTERED OR CUT OFF.

(55 % OF 43.9 P.S.F. G.S.L. PLUS 8.4 P.S.F. RAIN LOAD) EQUALS 32.5 P.S.F. SPECIFIED ROOF LIVE LOAD

ALLOWABLE DEFL.(LL)= L/360 (0.20")
CALCULATED VERT. DEFL.(LL) = L/ 999 (0.01")
ALLOWABLE DEFL.(TL)= L/360 (0.20")
CALCULATED VERT. DEFL.(TL) = L/ 999 (0.04")

CSI: TC=0.15/1.00 (A-B:1) , BC=0.14/1.00 (D-E:4) , WB=0.00/1.00 (n/a:0) , SSI=0.11/1.00 (A-B:1)

DOL LUMBER=1.00 NAIL=1.00 LS BEND=1.10 COMP=1.10 SHEAR=1.10 TENS= 1.10

COMPANION LIVE LOAD FACTOR = 1.00

AUTOSOLVE RIGHT HEEL ONLY

TRUSS PLATE MANUFACTURER IS NOT RESPONSIBLE FOR QUALITY CONTROL IN THE TRUSS MANUFACTURING PLANT .

NAIL VALUES

PLATE	GRIP(DRY) (PSI) MAX	MIN	SHEAR (PLI) MAX	MIN	SECTION (PLI) MAX	MIN
MT20	650	371	1747	788	1987	1873

PLATE PLACEMENT TOL. = 0.250 inches

PLATE ROTATION TOL. = 5.0 Deg.

JSI GRIP= 0.11 (E) (INPUT = 0.90)
JSI METAL= 0.08 (B) (INPUT = 1.00)

LICENSED PROFESSIONAL ENGINEER
06-24-22
H. J. G. ALVES
100009024
PROVINCE OF ONTARIO

Structural component only
DWG# T-2215117

REVIEWED

JOB NAME	TRUSS NAME	QUANTITY	PLY	JOB DESC.	DRWG NO.
423533	J4	1	1	BAYVIEW WELLINGTON TRUSS DESC.	

Tamarack Roof Truss, Burlington

Version 8.530 S Feb 23 2022 MiTek Industries, Inc. Fri Jun 24 08:09:55 2022 Page 1
ID:c3jyj23uDijq_8pvRKbkZpy75XW-iT47fIL4Y9L5rfwUBr8v0TaNphpm5udXyIEaulz38bg

Scale = 1:18.4

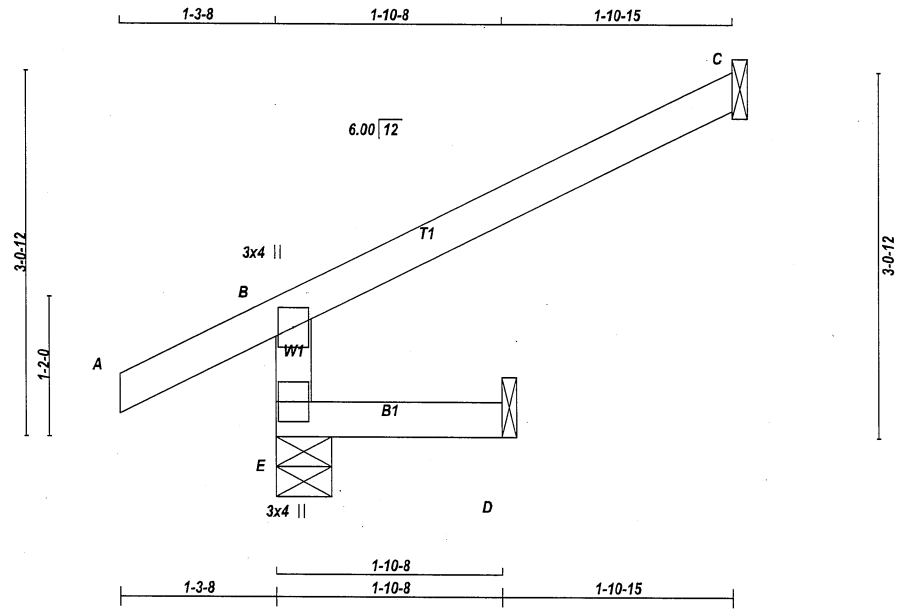

TOTAL WEIGHT = 10 lb
[M]

LUMBER
N. L. G. A. RULES

CHORDS	SIZE		LUMBER	DESCR.
E - B	2x4	DRY	No.2	SPF
A - C	2x4	DRY	No.2	SPF
E - D	2x4	DRY	No.2	SPF

DRY: SEASONED LUMBER.

PLATES (table is in inches)

JT	TYPE	PLATES	W	LEN Y	X
B	TMV+p	MT20	3.0	4.0	
E	BMV1+p	MT20	3.0	4.0	

NOTES- (1)
1) Lateral braces to be a minimum of 2X4 SPF #2.

DIMENSIONS, SUPPORTS AND LOADINGS SPECIFIED BY FABRICATOR TO BE VERIFIED BY BUILDING DESIGNER

BEARINGS

JT	FACTORED GROSS REACTION VERT	HORZ	MAXIMUM FACTORED GROSS REACTION DOWN	HORZ	UPLIFT	INPUT BRG IN-SX	REQRD BRG IN-SX
E	438	0	438	0	0	5-8	5-8
C	160	0	160	0	0	1-8	1-8
D	16	0	17	0	0	1-8	1-8

SEE MITEK STANDARD DETAIL MSD2015-H FOR CONNECTION TO JOINT(S) C , D

UNFACTORED REACTIONS

JT	1ST LCASE COMBINED	MAX./MIN. COMPONENT REACTIONS SNOW	LIVE	PERM.LIVE	WIND	DEAD	SOIL
E	302	242 / 0	0 / 0	0 / 0	0 / 0	60 / 0	0 / 0
C	109	92 / 0	0 / 0	0 / 0	0 / 0	17 / 0	0 / 0
D	12	0 / 0	0 / 0	0 / 0	0 / 0	12 / 0	0 / 0

BEARING MATERIAL TO BE SPF NO.2 OR BETTER AT JOINT(S) E

BRACING
TOP CHORD TO BE SHEATHED OR MAX. PURLIN SPACING = 6.25 FT.
MAX. UNBRACED BOTTOM CHORD LENGTH = 10.00 FT OR RIGID CEILING DIRECTLY APPLIED.

ALL PITCH BREAKS AND PERIMETER CORNER JOINTS MUST BE LATERALLY RESTRAINED.

LOADING
TOTAL LOAD CASES: (5)

CHORDS

MEMB. FR-TO	MAX. FACTORED FORCE (LBS)	FACTORED VERT. LOAD (PLF) FROM	TO	LC1 MAX CSI (LC)	MAX. UNBRAC LENGTH
E- B	-418 / 0	0.0	0.0	0.01 (4)	7.81
A- B	0 / 34	-112.4	-112.4	0.15 (1)	10.00
B- C	-24 / 0	-112.4	-112.4	0.27 (1)	6.25
E- D	0 / 0	-18.5	-18.5	0.02 (4)	10.00

WEBS

MEMB. FR-TO	MAX. FACTORED FORCE (LBS)	MAX CSI (LC)

CANTILEVER ANALYSIS HAS BEEN CONSIDERED IN THIS DESIGN

DESIGN CRITERIA

SPECIFIED LOADS:

TOP CH.	LL	=	32.5	PSF
	DL	=	6.0	PSF
BOT CH.	LL	=	0.0	PSF
	DL	=	7.4	PSF
TOTAL LOAD		=	45.9	PSF

SPACING = 24.0 IN. C/C

THIS TRUSS IS DESIGNED FOR RESIDENTIAL OR SMALL BUILDING REQUIREMENTS OF PART 9, NBCC 2015

THIS DESIGN COMPLIES WITH:
- PART 9 OF BCBC 2018 , ABC 2019
- PART 9 OF OBC 2012 (2019 AMENDMENT)
- CSA 086-14
- TPIC 2014

DESIGN ASSUMPTIONS
-OVERHANG NOT TO BE ALTERED OR CUT OFF.

(55 % OF 43.9 P.S.F. G.S.L. PLUS 8.4 P.S.F. RAIN LOAD) EQUALS 32.5 P.S.F. SPECIFIED ROOF LIVE LOAD

ALLOWABLE DEFL.(LL)= L/360 (0.19")
CALCULATED VERT. DEFL.(LL) = L/ 999 (0.00")
ALLOWABLE DEFL.(TL)= L/360 (0.19")
CALCULATED VERT. DEFL.(TL) = L/ 999 (0.00")

CSI: TC=0.27/1.00 (B-C:1) , BC=0.02/1.00 (D-E:4) , WB=0.00/1.00 (n/a:0) , SSI=0.19/1.00 (B-C:1)

DOL LUMBER=1.00 NAIL=1.00 LS BEND=1.10 COMP=1.10 SHEAR=1.10 TENS= 1.10

COMPANION LIVE LOAD FACTOR = 1.00

AUTOSOLVE RIGHT HEEL ONLY

TRUSS PLATE MANUFACTURER IS NOT RESPONSIBLE FOR QUALITY CONTROL IN THE TRUSS MANUFACTURING PLANT .

NAIL VALUES

PLATE	GRIP(DRY) (PSI) MAX	MIN	SHEAR (PLI) MAX	MIN	SECTION (PLI) MAX	MIN
MT20	650	371	1747	788	1987	1873

PLATE PLACEMENT TOL. = 0.250 inches

PLATE ROTATION TOL. = 5.0 Deg.

JSI GRIP= 0.17 (E) (INPUT = 0.90)
JSI METAL= 0.12 (B) (INPUT = 1.00)

LICENSED PROFESSIONAL ENGINEER
06-24-22
H. J. G. ALVES
100009024
PROVINCE OF ONTARIO

Structural component only
DWG# T-2215118

REVIEWED

JOB NAME	TRUSS NAME	QUANTITY	PLY	JOB DESC.	DRWG NO.
423533	J5	1	1	BAYVIEW WELLINGTON TRUSS DESC.	

Tamarack Roof Truss, Burlington

Version 8.530 S Feb 23 2022 MiTek Industries, Inc. Fri Jun 24 08:09:56 2022 Page 1
ID:c3jyj23uDijq_8pvRKbkZpy75XW-BfeWseMjJTTyTpVglZf8Zg7aY49YqKtgByz7RBz38bf

Scale = 1:13.3

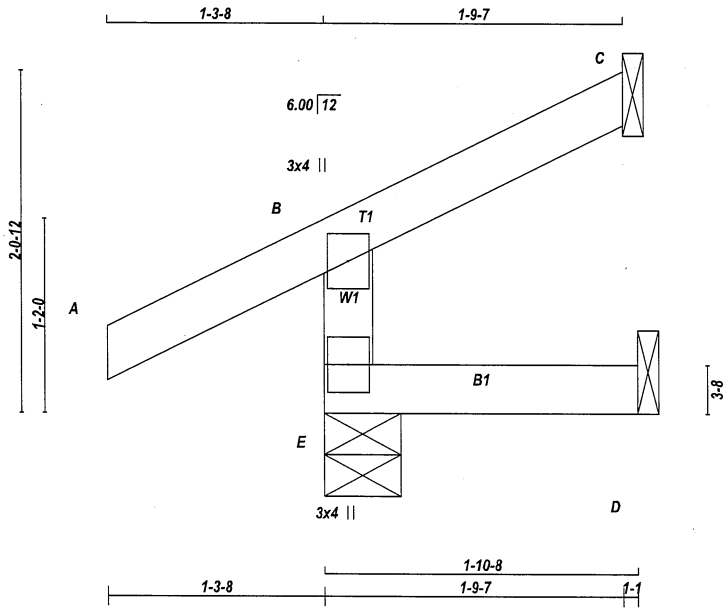

TOTAL WEIGHT = 7 lb
[M]

LUMBER
N. L. G. A. RULES

CHORDS	SIZE		LUMBER	DESCR.
E - B	2x4	DRY	No.2	SPF
A - C	2x4	DRY	No.2	SPF
E - D	2x4	DRY	No.2	SPF

DRY: SEASONED LUMBER.

PLATES (table is in inches)

JT	TYPE	PLATES	W	LEN	Y	X
B	TMV+p	MT20	3.0	4.0		
E	BMV1+p	MT20	3.0	4.0		

NOTES- (1)
1) Lateral braces to be a minimum of 2X4 SPF #2.

DIMENSIONS, SUPPORTS AND LOADINGS SPECIFIED BY FABRICATOR TO BE VERIFIED BY BUILDING DESIGNER

BEARINGS

JT	FACTORED GROSS REACTION VERT	HORZ	MAXIMUM FACTORED GROSS REACTION DOWN	HORZ	UPLIFT	INPUT BRG IN-SX	REQRD BRG IN-SX
E	328	0	328	0	0	5-8	5-8
C	54	0	54	0	-30	1-8	1-8
D	6	0	17	0	-5	1-8	1-8

SEE MITEK STANDARD DETAIL MSD2015-H FOR CONNECTION TO JOINT(S) C , D

PROVIDE ANCHORAGE AT BEARING JOINT C FOR 150 LBS FACTORED UPLIFT
PROVIDE ANCHORAGE AT BEARING JOINT D FOR 150 LBS FACTORED UPLIFT

UNFACTORED REACTIONS

JT	1ST LCASE COMBINED	MAX./MIN. COMPONENT REACTIONS SNOW	LIVE	PERM.LIVE	WIND	DEAD	SOIL
E	226	179 / 0	0 / 0	0 / 0	0 / 0	47 / 0	0 / 0
C	37	31 / -23	0 / 0	0 / 0	0 / 0	7 / 0	0 / 0
D	6	0 / -10	0 / 0	0 / 0	0 / 0	12 / 0	0 / 0

BEARING MATERIAL TO BE SPF NO.2 OR BETTER AT JOINT(S) E, C

BRACING
TOP CHORD TO BE SHEATHED OR MAX. PURLIN SPACING = 6.25 FT.
MAX. UNBRACED BOTTOM CHORD LENGTH = 10.00 FT OR RIGID CEILING DIRECTLY APPLIED.

ALL PITCH BREAKS AND PERIMETER CORNER JOINTS MUST BE LATERALLY RESTRAINED.

LOADING
TOTAL LOAD CASES: (5)

CHORDS MEMB. FR-TO	MAX. FACTORED FORCE (LBS)	FACTORED VERT. LOAD (PLF) FROM	TO	LC1	MAX CSI (LC)	WEBS MEMB. FR-TO	MAX. UNBRAC LENGTH	MAX. FACTORED FORCE (LBS)	MAX CSI (LC)
E- B	-299 / 0	0.0	0.0		0.05 (5)		7.81		
A- B	0 / 34	-112.4	-112.4		0.15 (1)		10.00		
B- C	-21 / 0	-112.4	-112.4		0.11 (1)		6.25		
E- D	0 / 0	-18.5	-18.5		0.04 (5)		10.00		

CANTILEVER ANALYSIS HAS BEEN CONSIDERED IN THIS DESIGN

DESIGN CRITERIA

SPECIFIED LOADS:

TOP CH.	LL	=	32.5	PSF
	DL	=	6.0	PSF
BOT CH.	LL	=	0.0	PSF
	DL	=	7.4	PSF
TOTAL LOAD		=	45.9	PSF

SPACING = 24.0 IN. C/C

THIS TRUSS IS DESIGNED FOR RESIDENTIAL OR SMALL BUILDING REQUIREMENTS OF PART 9, NBCC 2015

THIS DESIGN COMPLIES WITH:
- PART 9 OF BCBC 2018 , ABC 2019
- PART 9 OF OBC 2012 (2019 AMENDMENT)
- CSA 086-14
- TPIC 2014

DESIGN ASSUMPTIONS
-OVERHANG NOT TO BE ALTERED OR CUT OFF.

(55 % OF 43.9 P.S.F. G.S.L. PLUS 8.4 P.S.F. RAIN LOAD) EQUALS 32.5 P.S.F. SPECIFIED ROOF LIVE LOAD

ALLOWABLE DEFL.(LL)= L/360 (0.19")
CALCULATED VERT. DEFL.(LL) = L/ 999 (0.00")
ALLOWABLE DEFL.(TL)= L/360 (0.19")
CALCULATED VERT. DEFL.(TL) = L/ 999 (0.00")

CSI: TC=0.15/1.00 (A-B:1) , BC=0.04/1.00 (D-E:5) , WB=0.00/1.00 (n/a:0) , SSI=0.11/1.00 (A-B:1)

DOL LUMBER=1.00 NAIL=1.00 LS BEND=1.10 COMP=1.10 SHEAR=1.10 TENS= 1.10

COMPANION LIVE LOAD FACTOR = 1.00

AUTOSOLVE RIGHT HEEL ONLY

TRUSS PLATE MANUFACTURER IS NOT RESPONSIBLE FOR QUALITY CONTROL IN THE TRUSS MANUFACTURING PLANT .

NAIL VALUES

PLATE	GRIP(DRY) (PSI) MAX	MIN	SHEAR (PLI) MAX	MIN	SECTION (PLI) MAX	MIN
MT20	650	371	1747	788	1987	1873

PLATE PLACEMENT TOL. = 0.250 inches

PLATE ROTATION TOL. = 5.0 Deg.

JSI GRIP= 0.12 (E) (INPUT = 0.90)
JSI METAL= 0.08 (B) (INPUT = 1.00)

LICENSED PROFESSIONAL ENGINEER
06-24-22
H. J. G. ALVES
100009024
PROVINCE OF ONTARIO

Structural component only
DWG# T-2215119

REVIEWED

JOB NAME	TRUSS NAME	QUANTITY	PLY	JOB DESC.	DRWG NO.
423533	J6	6	1	BAYVIEW WELLINGTON TRUSS DESC.	

Tamarack Roof Truss, Burlington

Version 8.530 S Feb 23 2022 MiTek Industries, Inc. Fri Jun 24 08:09:56 2022 Page 1
ID:c3jyj23uDijq_8pvRKbkZpy75XW-BfeWseMjJTTyTpVglZf8Zg7YL48zqKtgByz7RBz38bf

Scale = 1:27.5

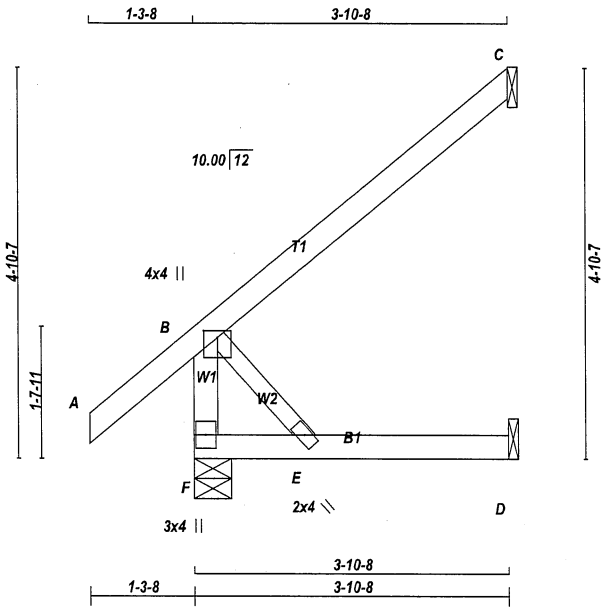

TOTAL WEIGHT = 6 X 15 = 91 lb

LUMBER
N. L. G. A. RULES

CHORDS	SIZE		LUMBER	DESCR.
F - B	2x4	DRY	No.2	SPF
A - C	2x4	DRY	No.2	SPF
F - D	2x4	DRY	No.2	SPF
ALL WEBS	2x3	DRY	No.2	SPF

DRY: SEASONED LUMBER.

PLATES (table is in inches)

JT	TYPE	PLATES	W	LEN	Y	X
B	TMVW+p	MT20	4.0	4.0	1.00	2.00
E	BMW+w	MT20	2.0	4.0		
F	BMV1+p	MT20	3.0	4.0		

NOTES- (1)
1) Lateral braces to be a minimum of 2X4 SPF #2.

DIMENSIONS, SUPPORTS AND LOADINGS SPECIFIED BY FABRICATOR TO BE VERIFIED BY BUILDING DESIGNER

BEARINGS

JT	FACTORED GROSS REACTION VERT	HORZ	MAXIMUM FACTORED GROSS REACTION DOWN	HORZ	UPLIFT	INPUT BRG IN-SX	REQRD BRG IN-SX
F	409	0	409	0	0	5-8	5-8
C	218	0	218	0	0	1-8	1-8
D	36	0	40	0	0	1-8	1-8

SEE MITEK STANDARD DETAIL MSD2015-H FOR CONNECTION TO JOINT(S) C , D

UNFACTORED REACTIONS

JT	1ST LCASE COMBINED	MAX./MIN. COMPONENT REACTIONS SNOW	LIVE	PERM.LIVE	WIND	DEAD	SOIL
F	284	216 / 0	0 / 0	0 / 0	0 / 0	69 / 0	0 / 0
C	149	126 / 0	0 / 0	0 / 0	0 / 0	23 / 0	0 / 0
D	29	0 / 0	0 / 0	0 / 0	0 / 0	29 / 0	0 / 0

BEARING MATERIAL TO BE SPF NO.2 OR BETTER AT JOINT(S) F

BRACING
TOP CHORD TO BE SHEATHED OR MAX. PURLIN SPACING = 10.00 FT.
MAX. UNBRACED BOTTOM CHORD LENGTH = 10.00 FT OR RIGID CEILING DIRECTLY APPLIED.

ALL PITCH BREAKS AND PERIMETER CORNER JOINTS MUST BE LATERALLY RESTRAINED.

LOADING
TOTAL LOAD CASES: (5)

CHORDS

MEMB. FR-TO	MAX. FACTORED FORCE (LBS)	FACTORED VERT. LOAD (PLF) FROM	TO	LC1 MAX CSI (LC)	MAX. UNBRAC LENGTH
F- B	-374 / 0	0.0	0.0	0.04 (1)	7.81
A- B	0 / 50	-112.4	-112.4	0.16 (5)	10.00
B- C	0 / 0	-112.4	-112.4	0.29 (1)	10.00
F- E	0 / 0	-18.5	-18.5	0.07 (4)	10.00
E- D	0 / 0	-18.5	-18.5	0.08 (4)	10.00

WEBS

MEMB. FR-TO	MAX. FACTORED FORCE (LBS)	MAX CSI (LC)
B- E	0 / 0	0.00 (1)

CANTILEVER ANALYSIS HAS BEEN CONSIDERED IN THIS DESIGN

DESIGN CRITERIA

SPECIFIED LOADS:

TOP CH.	LL	=	32.5	PSF
	DL	=	6.0	PSF
BOT CH.	LL	=	0.0	PSF
	DL	=	7.4	PSF
TOTAL LOAD		=	45.9	PSF

SPACING = 24.0 IN. C/C

THIS TRUSS IS DESIGNED FOR RESIDENTIAL OR SMALL BUILDING REQUIREMENTS OF PART 9, NBCC 2015

THIS DESIGN COMPLIES WITH:
- PART 9 OF BCBC 2018 , ABC 2019
- PART 9 OF OBC 2012 (2019 AMENDMENT)
- CSA 086-14
- TPIC 2014

(55 % OF 43.9 P.S.F. G.S.L. PLUS 8.4 P.S.F. RAIN LOAD) EQUALS 32.5 P.S.F. SPECIFIED ROOF LIVE LOAD

ALLOWABLE DEFL.(LL)= L/360 (0.19")
CALCULATED VERT. DEFL.(LL) = L/ 999 (0.00")
ALLOWABLE DEFL.(TL)= L/360 (0.19")
CALCULATED VERT. DEFL.(TL) = L/ 999 (0.01")

CSI: TC=0.29/1.00 (B-C:1) , BC=0.08/1.00 (D-E:4) , WB=0.00/1.00 (B-E:1) , SSI=0.13/1.00 (B-C:1)

DOL LUMBER=1.00 NAIL=1.00 LS BEND=1.10 COMP=1.10 SHEAR=1.10 TENS= 1.10

COMPANION LIVE LOAD FACTOR = 1.00

AUTOSOLVE RIGHT HEEL ONLY

TRUSS PLATE MANUFACTURER IS NOT RESPONSIBLE FOR QUALITY CONTROL IN THE TRUSS MANUFACTURING PLANT .

NAIL VALUES

PLATE	GRIP(DRY) (PSI) MAX	MIN	SHEAR (PLI) MAX	MIN	SECTION (PLI) MAX	MIN
MT20	650	371	1747	788	1987	1873

PLATE PLACEMENT TOL. = 0.250 inches

PLATE ROTATION TOL. = 5.0 Deg.

JSI GRIP= 0.28 (B) (INPUT = 0.90)
JSI METAL= 0.07 (B) (INPUT = 1.00)

LICENSED PROFESSIONAL ENGINEER
06-24-22
H. J. G. ALVES
100009024
PROVINCE OF ONTARIO

Structural component only
DWG# T-2215120

REVIEWED

JOB NAME	TRUSS NAME	QUANTITY	PLY	JOB DESC.	DRWG NO.
423533	J7	3	1	BAYVIEW WELLINGTON TRUSS DESC.	

Tamarack Roof Truss, Burlington

Version 8.530 S Feb 23 2022 MiTek Industries, Inc. Fri Jun 24 08:09:57 2022 Page 1
ID:c3jyj23uDijq_8pvRKbkZpy75XW-frCu3_NL4nbp5z4slGAN6ugklUUqZn7qPcjhzez38be

Scale = 1:12.4

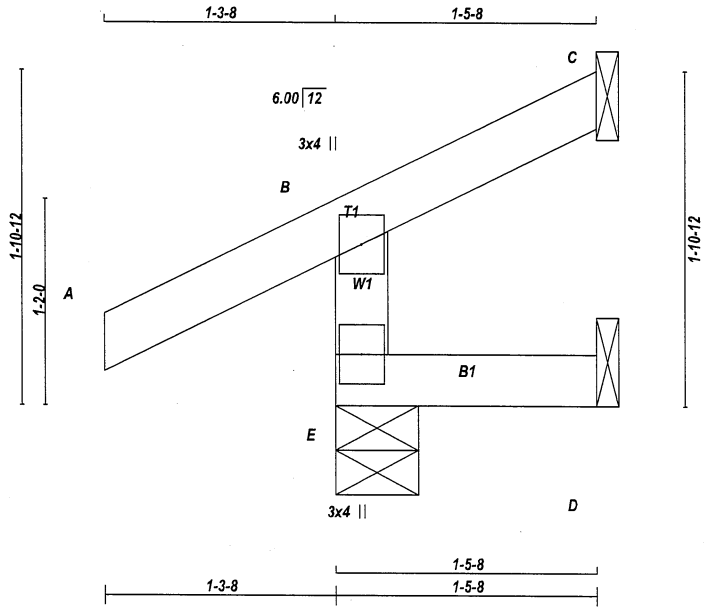

TOTAL WEIGHT = 3 X 6 = 18 lb
[M]

LUMBER
N. L. G. A. RULES

CHORDS	SIZE		LUMBER	DESCR.
E - B	2x4	DRY	No.2	SPF
A - C	2x4	DRY	No.2	SPF
E - D	2x4	DRY	No.2	SPF

DRY: SEASONED LUMBER.

PLATES (table is in inches)

JT	TYPE	PLATES	W	LEN	Y	X
B	TMV+p	MT20	3.0	4.0		
E	BMV1+p	MT20	3.0	4.0		

NOTES- (1)
1) Lateral braces to be a minimum of 2X4 SPF #2.

DIMENSIONS, SUPPORTS AND LOADINGS SPECIFIED BY FABRICATOR TO BE VERIFIED BY BUILDING DESIGNER

BEARINGS

JT	FACTORED GROSS REACTION VERT	HORZ	MAXIMUM FACTORED GROSS REACTION DOWN	HORZ	UPLIFT	INPUT BRG IN-SX	REQRD BRG IN-SX
E	319	0	319	0	0	5-8	5-8
C	27	0	27	0	-42	1-8	1-8
D	-2	0	12	0	-11	1-8	1-8

SEE MITEK STANDARD DETAIL MSD2015-H FOR CONNECTION TO JOINT(S) C , D

PROVIDE ANCHORAGE AT BEARING JOINT C FOR 150 LBS FACTORED UPLIFT
PROVIDE ANCHORAGE AT BEARING JOINT D FOR 150 LBS FACTORED UPLIFT

UNFACTORED REACTIONS

JT	1ST LCASE COMBINED	MAX./MIN. COMPONENT REACTIONS SNOW	LIVE	PERM.LIVE	WIND	DEAD	SOIL
E	220	176 / 0	0 / 0	0 / 0	0 / 0	43 / 0	0 / 0
C	19	15 / -29	0 / 0	0 / 0	0 / 0	3 / 0	0 / 0
D	-0	0 / -12	0 / 0	0 / 0	0 / 0	8 / 0	0 / 0

BEARING MATERIAL TO BE SPF NO.2 OR BETTER AT JOINT(S) E

BRACING
TOP CHORD TO BE SHEATHED OR MAX. PURLIN SPACING = 6.25 FT.
MAX. UNBRACED BOTTOM CHORD LENGTH = 10.00 FT OR RIGID CEILING DIRECTLY APPLIED.

ALL PITCH BREAKS AND PERIMETER CORNER JOINTS MUST BE LATERALLY RESTRAINED.

LOADING
TOTAL LOAD CASES: (5)

CHORDS

MEMB. FR-TO	MAX. FACTORED FORCE (LBS)	FACTORED VERT. LOAD (PLF) FROM	TO	LC1 MAX CSI (LC)	MAX. UNBRAC LENGTH
E- B	-290 / 0	0.0	0.0	0.04 (5)	7.81
A- B	0 / 34	-112.4	-112.4	0.15 (1)	10.00
B- C	-25 / 0	-112.4	-112.4	0.11 (1)	6.25
E- D	0 / 0	-18.5	-18.5	0.04 (5)	10.00

WEBS

MEMB. FR-TO	MAX. FACTORED FORCE (LBS)	MAX CSI (LC)

CANTILEVER ANALYSIS HAS BEEN CONSIDERED IN THIS DESIGN

DESIGN CRITERIA

SPECIFIED LOADS:

TOP CH.	LL =	32.5	PSF
	DL =	6.0	PSF
BOT CH.	LL =	0.0	PSF
	DL =	7.4	PSF
TOTAL LOAD	=	45.9	PSF

SPACING = 24.0 IN. C/C

THIS TRUSS IS DESIGNED FOR RESIDENTIAL OR SMALL BUILDING REQUIREMENTS OF PART 9, NBCC 2015

THIS DESIGN COMPLIES WITH:
- PART 9 OF BCBC 2018 , ABC 2019
- PART 9 OF OBC 2012 (2019 AMENDMENT)
- CSA 086-14
- TPIC 2014

DESIGN ASSUMPTIONS
-OVERHANG NOT TO BE ALTERED OR CUT OFF.

(55 % OF 43.9 P.S.F. G.S.L. PLUS 8.4 P.S.F. RAIN LOAD) EQUALS 32.5 P.S.F. SPECIFIED ROOF LIVE LOAD

ALLOWABLE DEFL.(LL)= L/360 (0.19")
CALCULATED VERT. DEFL.(LL) = L/ 999 (0.00")
ALLOWABLE DEFL.(TL)= L/360 (0.19")
CALCULATED VERT. DEFL.(TL) = L/ 999 (0.00")

CSI: TC=0.15/1.00 (A-B:1) , BC=0.04/1.00 (D-E:5) , WB=0.00/1.00 (n/a:0) , SSI=0.11/1.00 (A-B:1)

DOL LUMBER=1.00 NAIL=1.00 LS BEND=1.10 COMP=1.10 SHEAR=1.10 TENS= 1.10

COMPANION LIVE LOAD FACTOR = 1.00

AUTOSOLVE RIGHT HEEL ONLY

TRUSS PLATE MANUFACTURER IS NOT RESPONSIBLE FOR QUALITY CONTROL IN THE TRUSS MANUFACTURING PLANT .

NAIL VALUES

PLATE	GRIP(DRY) (PSI) MAX	MIN	SHEAR (PLI) MAX	MIN	SECTION (PLI) MAX	MIN
MT20	650	371	1747	788	1987	1873

PLATE PLACEMENT TOL. = 0.250 inches

PLATE ROTATION TOL. = 5.0 Deg.

JSI GRIP= 0.12 (E) (INPUT = 0.90)
JSI METAL= 0.08 (B) (INPUT = 1.00)

LICENSED PROFESSIONAL ENGINEER
06-24-22
H. J. G. ALVES
100009024
PROVINCE OF ONTARIO

Structural component only
DWG# T-2215121

REVIEWED

JOB NAME	TRUSS NAME	QUANTITY	PLY	JOB DESC.	DRWG NO.
423533	J8	7	1	BAYVIEW WELLINGTON TRUSS DESC.	

Tamarack Roof Truss, Burlington

Version 8.530 S Feb 23 2022 MiTek Industries, Inc. Fri Jun 24 08:09:58 2022 Page 1
ID:c3jyj23uDijq_8pvRKbkZpy75XW-72mGHKOzr4jgi6f3szhce5Cs1upgIENzeGSEV4z38bd

Scale = 1:14.5

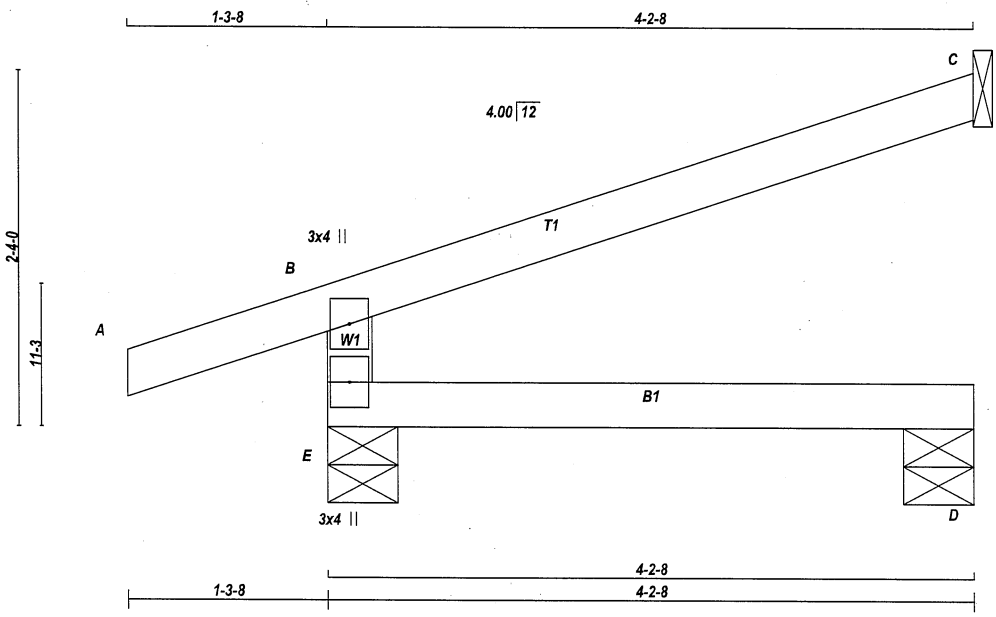

TOTAL WEIGHT = 7 X 12 = 84 lb [M]

LUMBER
N. L. G. A. RULES

CHORDS	SIZE		LUMBER	DESCR.
E - B	2x4	DRY	No.2	SPF
A - C	2x4	DRY	No.2	SPF
E - D	2x4	DRY	No.2	SPF

DRY: SEASONED LUMBER.

PLATES (table is in inches)

JT	TYPE	PLATES	W	LEN Y	X
B	TMV+p	MT20	3.0	4.0	
E	BMV1+p	MT20	3.0	4.0	

NOTES- (1)
1) Lateral braces to be a minimum of 2X4 SPF #2.

DIMENSIONS, SUPPORTS AND LOADINGS SPECIFIED BY FABRICATOR TO BE VERIFIED BY BUILDING DESIGNER

BEARINGS

JT	FACTORED GROSS REACTION VERT	HORZ	MAXIMUM FACTORED GROSS REACTION DOWN	HORZ	UPLIFT	INPUT BRG IN-SX	REQRD BRG IN-SX
E	492	0	492	0	0	5-8	5-8
C	178	0	178	0	0	1-8	1-8
D	32	0	36	0	0	5-8	5-8

SEE MITEK STANDARD DETAIL MSD2015-H FOR CONNECTION TO JOINT(S) C

UNFACTORED REACTIONS

JT	1ST LCASE COMBINED	MAX./MIN. COMPONENT REACTIONS SNOW	LIVE	PERM.LIVE	WIND	DEAD	SOIL
E	342	258 / 0	0 / 0	0 / 0	0 / 0	84 / 0	0 / 0
C	121	103 / 0	0 / 0	0 / 0	0 / 0	19 / 0	0 / 0
D	26	0 / 0	0 / 0	0 / 0	0 / 0	26 / 0	0 / 0

BEARING MATERIAL TO BE SPF NO.2 OR BETTER AT JOINT(S) E, C, D

BRACING
TOP CHORD TO BE SHEATHED OR MAX. PURLIN SPACING = 6.25 FT.
MAX. UNBRACED BOTTOM CHORD LENGTH = 10.00 FT OR RIGID CEILING DIRECTLY APPLIED.

ALL PITCH BREAKS AND PERIMETER CORNER JOINTS MUST BE LATERALLY RESTRAINED.

LOADING
TOTAL LOAD CASES: (4)

CHORDS MEMB. FR-TO	MAX. FACTORED FORCE (LBS)	FACTORED VERT. LOAD (PLF) FROM	TO	LC1 CSI (LC)	MAX UNBRAC LENGTH	WEBS MEMB. FR-TO	MAX. FACTORED FORCE (LBS)	MAX CSI (LC)
E- B	-446 / 0	0.0	0.0	0.07 (4)	7.81			
A- B	0 / 24	-112.4	-112.4	0.14 (1)	10.00			
B- C	-19 / 0	-112.4	-112.4	0.34 (1)	6.25			
E- D	0 / 0	-18.5	-18.5	0.07 (4)	10.00			

DESIGN CRITERIA

SPECIFIED LOADS:

TOP CH.	LL	=	32.5	PSF
	DL	=	6.0	PSF
BOT CH.	LL	=	0.0	PSF
	DL	=	7.4	PSF
TOTAL LOAD		=	45.9	PSF

SPACING = 24.0 IN. C/C

THIS TRUSS IS DESIGNED FOR RESIDENTIAL OR SMALL BUILDING REQUIREMENTS OF PART 9, NBCC 2015

THIS DESIGN COMPLIES WITH:
- PART 9 OF BCBC 2018 , ABC 2019
- PART 9 OF OBC 2012 (2019 AMENDMENT)
- CSA 086-14
- TPIC 2014

DESIGN ASSUMPTIONS
-OVERHANG NOT TO BE ALTERED OR CUT OFF.

(55 % OF 43.9 P.S.F. G.S.L. PLUS 8.4 P.S.F. RAIN LOAD) EQUALS 32.5 P.S.F. SPECIFIED ROOF LIVE LOAD

ALLOWABLE DEFL.(LL)= L/360 (0.19")
CALCULATED VERT. DEFL.(LL) = L/ 999 (0.00")
ALLOWABLE DEFL.(TL)= L/360 (0.19")
CALCULATED VERT. DEFL.(TL) = L/ 999 (0.01")

CSI: TC=0.34/1.00 (B-C:1) , BC=0.07/1.00 (D-E:4) , WB=0.00/1.00 (n/a:0) , SSI=0.22/1.00 (B-C:1)

DOL LUMBER=1.00 NAIL=1.00 LS BEND=1.10 COMP=1.10 SHEAR=1.10 TENS= 1.10

COMPANION LIVE LOAD FACTOR = 1.00

AUTOSOLVE RIGHT HEEL ONLY

TRUSS PLATE MANUFACTURER IS NOT RESPONSIBLE FOR QUALITY CONTROL IN THE TRUSS MANUFACTURING PLANT .

NAIL VALUES

PLATE	GRIP(DRY) (PSI) MAX	MIN	SHEAR (PLI) MAX	MIN	SECTION (PLI) MAX	MIN
MT20	650	371	1747	788	1987	1873

PLATE PLACEMENT TOL. = 0.250 inches

PLATE ROTATION TOL. = 5.0 Deg.

JSI GRIP= 0.18 (E) (INPUT = 0.90)
JSI METAL= 0.09 (B) (INPUT = 1.00)

LICENSED PROFESSIONAL ENGINEER
06-24-22
H. J. G. ALVES
100009024
PROVINCE OF ONTARIO

Structural component only
DWG# T-2215122

REVIEWED

JOB NAME	TRUSS NAME	QUANTITY	PLY	JOB DESC.	DRWG NO.
423534	J30	3	1	BAYVIEW WELLINGTON TRUSS DESC.	

Tamarack Roof Truss, Burlington

Version 8.530 S Feb 23 2022 MiTek Industries, Inc. Fri Jun 24 08:28:53 2022 Page 1
ID:c3jyj23uDijq_8pvRKbkZpy75XW-OOrLUQ7vYpjdNYwBrrYm8SjsKQBEkZM1eMuoqoz38Ju

Scale = 1:24.7

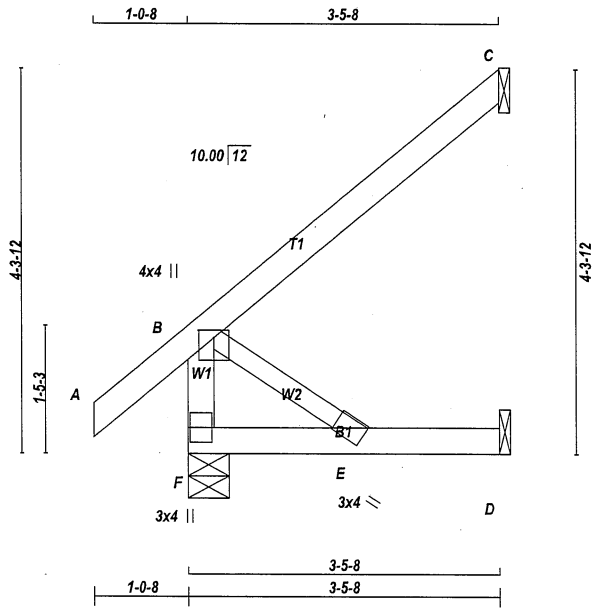

TOTAL WEIGHT = 3 X 14 = 41 lb
[M]

LUMBER
N. L. G. A. RULES

CHORDS	SIZE		LUMBER	DESCR.
F - B	2x4	DRY	No.2	SPF
A - C	2x4	DRY	No.2	SPF
F - D	2x4	DRY	No.2	SPF
ALL WEBS	2x3	DRY	No.2	SPF

DRY: SEASONED LUMBER.

PLATES (table is in inches)

JT	TYPE	PLATES	W	LEN	Y	X
B	TMVW+p	MT20	4.0	4.0	1.00	2.00
E	BMW+w	MT20	3.0	4.0		
F	BMV1+p	MT20	3.0	4.0		

NOTES- (1)
1) Lateral braces to be a minimum of 2X4 SPF #2.

DIMENSIONS, SUPPORTS AND LOADINGS SPECIFIED BY FABRICATOR TO BE VERIFIED BY BUILDING DESIGNER

BEARINGS

JT	FACTORED GROSS REACTION VERT	HORZ	MAXIMUM FACTORED GROSS REACTION DOWN	HORZ	UPLIFT	INPUT BRG IN-SX	REQRD BRG IN-SX
F	354	0	354	0	0	5-8	5-8
C	194	0	194	0	0	1-8	1-8
D	32	0	36	0	0	1-8	1-8

SEE MITEK STANDARD DETAIL MSD2015-H FOR CONNECTION TO JOINT(S) C , D

UNFACTORED REACTIONS

JT	1ST LCASE COMBINED	MAX./MIN. COMPONENT REACTIONS SNOW	LIVE	PERM.LIVE	WIND	DEAD	SOIL
F	246	186 / 0	0 / 0	0 / 0	0 / 0	60 / 0	0 / 0
C	133	112 / 0	0 / 0	0 / 0	0 / 0	21 / 0	0 / 0
D	26	0 / 0	0 / 0	0 / 0	0 / 0	26 / 0	0 / 0

BEARING MATERIAL TO BE SPF NO.2 OR BETTER AT JOINT(S) F

BRACING
TOP CHORD TO BE SHEATHED OR MAX. PURLIN SPACING = 10.00 FT.
MAX. UNBRACED BOTTOM CHORD LENGTH = 10.00 FT OR RIGID CEILING DIRECTLY APPLIED.

ALL PITCH BREAKS AND PERIMETER CORNER JOINTS MUST BE LATERALLY RESTRAINED.

LOADING
TOTAL LOAD CASES: (4)

CHORDS

MEMB. FR-TO	MAX. FACTORED FORCE (LBS)	FACTORED VERT. LOAD (PLF) FROM	TO	LC1	MAX CSI (LC)	MAX. UNBRAC LENGTH
F- B	-322 / 0	0.0	0.0	0.03	(1)	7.81
A- B	0 / 41	-112.4	-112.4	0.11	(1)	10.00
B- C	0 / 0	-112.4	-112.4	0.23	(1)	10.00
F- E	0 / 0	-18.5	-18.5	0.06	(4)	10.00
E- D	0 / 0	-18.5	-18.5	0.06	(4)	10.00

WEBS

MEMB. FR-TO	MAX. FACTORED FORCE (LBS)	MAX CSI (LC)
B- E	0 / 0	0.00 (1)

DESIGN CRITERIA

SPECIFIED LOADS:

TOP CH.	LL	=	32.5	PSF
	DL	=	6.0	PSF
BOT CH.	LL	=	0.0	PSF
	DL	=	7.4	PSF
TOTAL LOAD		=	45.9	PSF

SPACING = 24.0 IN. C/C

THIS TRUSS IS DESIGNED FOR RESIDENTIAL OR SMALL BUILDING REQUIREMENTS OF PART 9, NBCC 2015

THIS DESIGN COMPLIES WITH:
- PART 9 OF BCBC 2018 , ABC 2019
- PART 9 OF OBC 2012 (2019 AMENDMENT)
- CSA 086-14
- TPIC 2014

(55 % OF 43.9 P.S.F. G.S.L. PLUS 8.4 P.S.F. RAIN LOAD) EQUALS 32.5 P.S.F. SPECIFIED ROOF LIVE LOAD

ALLOWABLE DEFL.(LL)= L/360 (0.19")
CALCULATED VERT. DEFL.(LL) = L/ 999 (0.00")
ALLOWABLE DEFL.(TL)= L/360 (0.19")
CALCULATED VERT. DEFL.(TL) = L/ 999 (0.01")

CSI: TC=0.23/1.00 (B-C:1) , BC=0.06/1.00 (E-F:4) , WB=0.00/1.00 (B-E:1) , SSI=0.12/1.00 (B-C:1)

DOL LUMBER=1.00 NAIL=1.00 LS BEND=1.10 COMP=1.10 SHEAR=1.10 TENS= 1.10

COMPANION LIVE LOAD FACTOR = 1.00

AUTOSOLVE RIGHT HEEL ONLY

TRUSS PLATE MANUFACTURER IS NOT RESPONSIBLE FOR QUALITY CONTROL IN THE TRUSS MANUFACTURING PLANT .

NAIL VALUES

PLATE	GRIP(DRY) (PSI) MAX	MIN	SHEAR (PLI) MAX	MIN	SECTION (PLI) MAX	MIN
MT20	650	371	1747	788	1987	1873

PLATE PLACEMENT TOL. = 0.250 inches

PLATE ROTATION TOL. = 5.0 Deg.

JSI GRIP= 0.24 (B) (INPUT = 0.90)
JSI METAL= 0.06 (B) (INPUT = 1.00)

LICENSED PROFESSIONAL ENGINEER
06-24-22
H. J. G. ALVES
100009024
PROVINCE OF ONTARIO

Structural component only
DWG# T-2215151

REVIEWED

JOB NAME	TRUSS NAME	QUANTITY	PLY	JOB DESC.	DRWG NO.
423534	J31	2	1	BAYVIEW WELLINGTON TRUSS DESC.	

Tamarack Roof Truss, Burlington

Version 8.530 S Feb 23 2022 MiTek Industries, Inc. Fri Jun 24 08:28:54 2022 Page 1
ID:c3jyj23uDijq_8pvRKbkZpy75XW-sbPjim7YJ6rU?iVOPZ3?hfF3?qXTT0bAs0eMNEz38Jt

Scale = 1:17.7

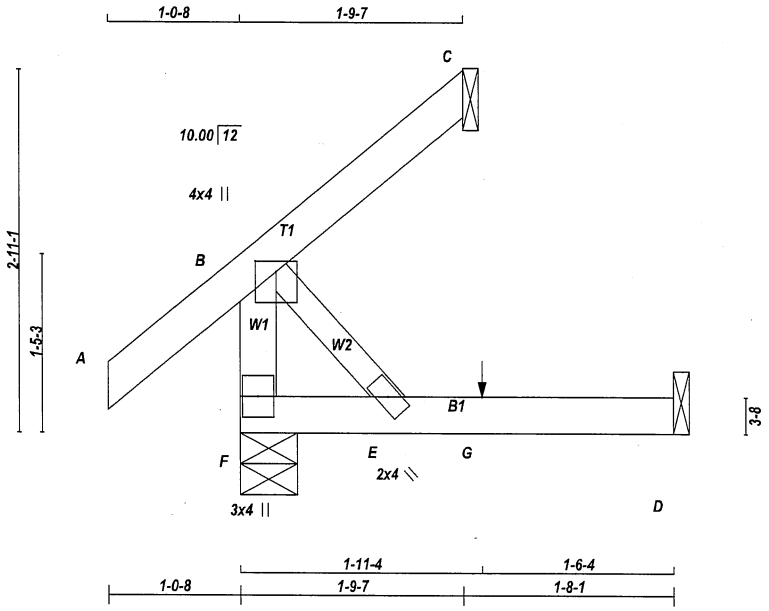

TOTAL WEIGHT = 2 X 11 = 21 lb [M]

LUMBER
N. L. G. A. RULES

CHORDS	SIZE		LUMBER	DESCR.
F - B	2x4	DRY	No.2	SPF
A - C	2x4	DRY	No.2	SPF
F - D	2x4	DRY	No.2	SPF
ALL WEBS	2x3	DRY	No.2	SPF

DRY: SEASONED LUMBER.

PLATES (table is in inches)

JT	TYPE	PLATES	W	LEN	Y	X
B	TMVW+p	MT20	4.0	4.0	1.00	2.00
E	BMW+w	MT20	2.0	4.0		
F	BMV1+p	MT20	3.0	4.0		

NOTES- (1)
1) Lateral braces to be a minimum of 2X4 SPF #2.

DIMENSIONS, SUPPORTS AND LOADINGS SPECIFIED BY FABRICATOR TO BE VERIFIED BY BUILDING DESIGNER

BEARINGS

JT	FACTORED GROSS REACTION VERT	HORZ	MAXIMUM FACTORED GROSS REACTION DOWN	HORZ	UPLIFT	INPUT BRG IN-SX	REQRD BRG IN-SX
F	260	0	260	0	0	5-8	5-8
C	100	0	100	0	0	1-8	1-8
D	32	0	36	0	0	1-8	1-8

SEE MITEK STANDARD DETAIL MSD2015-H FOR CONNECTION TO JOINT(S) C , D

UNFACTORED REACTIONS

JT	1ST LCASE COMBINED	MAX./MIN. COMPONENT REACTIONS SNOW	LIVE	PERM.LIVE	WIND	DEAD	SOIL
F	182	132 / 0	0 / 0	0 / 0	0 / 0	50 / 0	0 / 0
C	69	58 / 0	0 / 0	0 / 0	0 / 0	11 / 0	0 / 0
D	26	0 / 0	0 / 0	0 / 0	0 / 0	26 / 0	0 / 0

BEARING MATERIAL TO BE SPF NO.2 OR BETTER AT JOINT(S) F, C

BRACING
TOP CHORD TO BE SHEATHED OR MAX. PURLIN SPACING = 10.00 FT.
MAX. UNBRACED BOTTOM CHORD LENGTH = 10.00 FT OR RIGID CEILING DIRECTLY APPLIED.

ALL PITCH BREAKS AND PERIMETER CORNER JOINTS MUST BE LATERALLY RESTRAINED.

LOADING
TOTAL LOAD CASES: (4)

CHORDS

MEMB. FR-TO	MAX. FACTORED FORCE (LBS)	FACTORED VERT. LOAD (PLF) FROM	TO	LC1	MAX CSI (LC)	MAX. UNBRAC LENGTH
F- B	-228 / 0	0.0	0.0	0.02 (1)	7.81	
A- B	0 / 41	-112.4	-112.4	0.11 (1)	10.00	
B- C	0 / 0	-112.4	-112.4	0.06 (1)	10.00	
F- E	0 / 0	-18.5	-18.5	0.06 (4)	10.00	
E- G	0 / 0	-18.5	-18.5	0.06 (4)	10.00	
G- D	0 / 0	-18.5	-18.5	0.06 (4)	10.00	

WEBS

MEMB. FR-TO	MAX. FACTORED FORCE (LBS)	MAX CSI (LC)
B- E	0 / 0	0.00 (1)

SPECIFIED CONCENTRATED LOADS (LBS)

JT	LOC.	LC1	MAX-	MAX+	FACE	DIR.	TYPE	HEEL	CONN.
G	1-11-4	1	1	---	FRONT	VERT	TOTAL	---	C1

CONNECTION REQUIREMENTS

1) **C1:** A SUITABLE HANGER/MECHANICAL CONNECTION IS REQUIRED.

DESIGN CRITERIA

SPECIFIED LOADS:

TOP CH.	LL	=	32.5	PSF
	DL	=	6.0	PSF
BOT CH.	LL	=	0.0	PSF
	DL	=	7.4	PSF
TOTAL LOAD		=	45.9	PSF

SPACING = 24.0 IN. C/C

THIS TRUSS IS DESIGNED FOR RESIDENTIAL OR SMALL BUILDING REQUIREMENTS OF PART 9, NBCC 2015

THIS DESIGN COMPLIES WITH:
- PART 9 OF BCBC 2018 , ABC 2019
- PART 9 OF OBC 2012 (2019 AMENDMENT)
- CSA 086-14
- TPIC 2014

(55 % OF 43.9 P.S.F. G.S.L. PLUS 8.4 P.S.F. RAIN LOAD) EQUALS 32.5 P.S.F. SPECIFIED ROOF LIVE LOAD

ALLOWABLE DEFL.(LL)= L/360 (0.19")
CALCULATED VERT. DEFL.(LL) = L/ 999 (0.00")
ALLOWABLE DEFL.(TL)= L/360 (0.19")
CALCULATED VERT. DEFL.(TL) = L/ 999 (0.01")

CSI: TC=0.11/1.00 (A-B:1) , BC=0.06/1.00 (D-E:4) , WB=0.00/1.00 (B-E:1) , SSI=0.08/1.00 (A-B:1)

DOL LUMBER=1.00 NAIL=1.00 LS BEND=1.10 COMP=1.10 SHEAR=1.10 TENS= 1.10

COMPANION LIVE LOAD FACTOR = 1.00

AUTOSOLVE RIGHT HEEL ONLY

TRUSS PLATE MANUFACTURER IS NOT RESPONSIBLE FOR QUALITY CONTROL IN THE TRUSS MANUFACTURING PLANT .

NAIL VALUES

PLATE	GRIP(DRY) (PSI) MAX	MIN	SHEAR (PLI) MAX	MIN	SECTION (PLI) MAX	MIN
MT20	650	371	1747	788	1987	1873

PLATE PLACEMENT TOL. = 0.250 inches

PLATE ROTATION TOL. = 5.0 Deg.

JSI GRIP= 0.17 (B) (INPUT = 0.90)
JSI METAL= 0.05 (B) (INPUT = 1.00)

LICENSED PROFESSIONAL ENGINEER
06-24-22
H. J. G. ALVES
100009024
PROVINCE OF ONTARIO

Structural component only
DWG# T-2215152

REVIEWED

JOB NAME	TRUSS NAME	QUANTITY	PLY	JOB DESC.	DRWG NO.
423534	J32	2	1	BAYVIEW WELLINGTON TRUSS DESC.	

Tamarack Roof Truss, Burlington

Version 8.530 S Feb 23 2022 MiTek Industries, Inc. Fri Jun 24 08:28:55 2022 Page 1
ID:c3jyj23uDijq_8pvRKbkZpy75XW-Knz5v68A4QzLcr4azGbEDtoFQDuPCTrK5gNvvgz38Js

Scale = 1:17.7

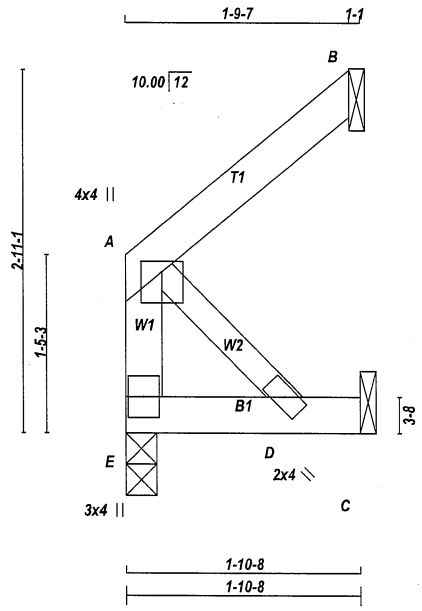

TOTAL WEIGHT = 2 X 7 = 15 lb

[M][F]

LUMBER
N. L. G. A. RULES

CHORDS	SIZE		LUMBER	DESCR.
E - A	2x4	DRY	No.2	SPF
A - B	2x4	DRY	No.2	SPF
E - C	2x4	DRY	No.2	SPF
ALL WEBS	2x3	DRY	No.2	SPF

DRY: SEASONED LUMBER.

PLATES (table is in inches)

JT	TYPE	PLATES	W	LEN	Y	X
A	TMVW+p	MT20	4.0	4.0	1.00	2.00
D	BMW+w	MT20	2.0	4.0		
E	BMV1+p	MT20	3.0	4.0		

NOTES- (1)
1) Lateral braces to be a minimum of 2X4 SPF #2.

DIMENSIONS, SUPPORTS AND LOADINGS SPECIFIED BY FABRICATOR TO BE VERIFIED BY BUILDING DESIGNER

BEARINGS

JT	FACTORED GROSS REACTION VERT	HORZ	MAXIMUM FACTORED GROSS REACTION DOWN	HORZ	UPLIFT	INPUT BRG IN-SX	REQRD BRG IN-SX
E	118	0	118	0	0	3-0	3-0
B	100	0	100	0	0	1-8	1-8
C	17	0	19	0	0	1-8	1-8

SEE MITEK STANDARD DETAIL MSD2015-H FOR CONNECTION TO JOINT(S) B , C

UNFACTORED REACTIONS

JT	1ST LCASE COMBINED	MAX./MIN. COMPONENT REACTIONS SNOW	LIVE	PERM.LIVE	WIND	DEAD	SOIL
E	83	58 / 0	0 / 0	0 / 0	0 / 0	25 / 0	0 / 0
B	69	58 / 0	0 / 0	0 / 0	0 / 0	11 / 0	0 / 0
C	14	0 / 0	0 / 0	0 / 0	0 / 0	14 / 0	0 / 0

BEARING MATERIAL TO BE SPF NO.2 OR BETTER AT JOINT(S) E, B

BRACING
TOP CHORD TO BE SHEATHED OR MAX. PURLIN SPACING = 10.00 FT.
MAX. UNBRACED BOTTOM CHORD LENGTH = 10.00 FT OR RIGID CEILING DIRECTLY APPLIED.

ALL PITCH BREAKS AND PERIMETER CORNER JOINTS MUST BE LATERALLY RESTRAINED.

LOADING
TOTAL LOAD CASES: (4)

CHORDS MEMB. FR-TO	MAX. FACTORED FORCE (LBS)	FACTORED VERT. LOAD (PLF) FROM	TO	LC1 MAX CSI (LC)	WEBS MAX. UNBRAC LENGTH	MEMB. FR-TO	MAX. FACTORED FORCE (LBS)	MAX CSI (LC)
E- A	-100 / 0	0.0	0.0	0.01 (1)	7.81	A- D	0 / 0	0.00 (1)
A- B	0 / 0	-112.4	-112.4	0.06 (1)	10.00			
E- D	0 / 0	-18.5	-18.5	0.02 (4)	10.00			
D- C	0 / 0	-18.5	-18.5	0.02 (4)	10.00			

DESIGN CRITERIA

SPECIFIED LOADS:

TOP CH.	LL	=	32.5	PSF
	DL	=	6.0	PSF
BOT CH.	LL	=	0.0	PSF
	DL	=	7.4	PSF
TOTAL LOAD		=	45.9	PSF

SPACING = 24.0 IN. C/C

THIS TRUSS IS DESIGNED FOR RESIDENTIAL OR SMALL BUILDING REQUIREMENTS OF PART 9, NBCC 2015

THIS DESIGN COMPLIES WITH:
- PART 9 OF BCBC 2018 , ABC 2019
- PART 9 OF OBC 2012 (2019 AMENDMENT)
- CSA 086-14
- TPIC 2014

(55 % OF 43.9 P.S.F. G.S.L. PLUS 8.4 P.S.F. RAIN LOAD) EQUALS 32.5 P.S.F. SPECIFIED ROOF LIVE LOAD

ALLOWABLE DEFL.(LL)= L/360 (0.19")
CALCULATED VERT. DEFL.(LL) = L/ 999 (0.00")
ALLOWABLE DEFL.(TL)= L/360 (0.19")
CALCULATED VERT. DEFL.(TL) = L/ 999 (0.00")

CSI: TC=0.06/1.00 (A-B:1) , BC=0.02/1.00 (D-E:4) , WB=0.00/1.00 (A-D:1) , SSI=0.06/1.00 (A-B:1)

DOL LUMBER=1.00 NAIL=1.00 LS BEND=1.10 COMP=1.10 SHEAR=1.10 TENS= 1.10

COMPANION LIVE LOAD FACTOR = 1.00

TRUSS PLATE MANUFACTURER IS NOT RESPONSIBLE FOR QUALITY CONTROL IN THE TRUSS MANUFACTURING PLANT .

NAIL VALUES

PLATE	GRIP(DRY) (PSI) MAX	MIN	SHEAR (PLI) MAX	MIN	SECTION (PLI) MAX	MIN
MT20	650	371	1747	788	1987	1873

PLATE PLACEMENT TOL. = 0.250 inches

PLATE ROTATION TOL. = 5.0 Deg.

JSI GRIP= 0.07 (A) (INPUT = 0.90)
JSI METAL= 0.02 (A) (INPUT = 1.00)

LICENSED PROFESSIONAL ENGINEER
06-24-22
H. J. G. ALVES
100009024
PROVINCE OF ONTARIO

Structural component only
DWG# T-2215153

REVIEWED

JOB NAME	TRUSS NAME	QUANTITY	PLY	JOB DESC.	DRWG NO.
423537	J45	4	1	BAYVIEW WELLINGTON TRUSS DESC.	

Tamarack Roof Truss, Burlington

Version 8.530 S Feb 23 2022 MiTek Industries, Inc. Fri Jun 24 09:02:54 2022 Page 1
ID:c3jyj23uDijq_8pvRKbkZpy75XW-72gwrJp9uvs1kCSSw?gOMslex9nMRedSzOpl_?z37q?

Scale = 1:29.4

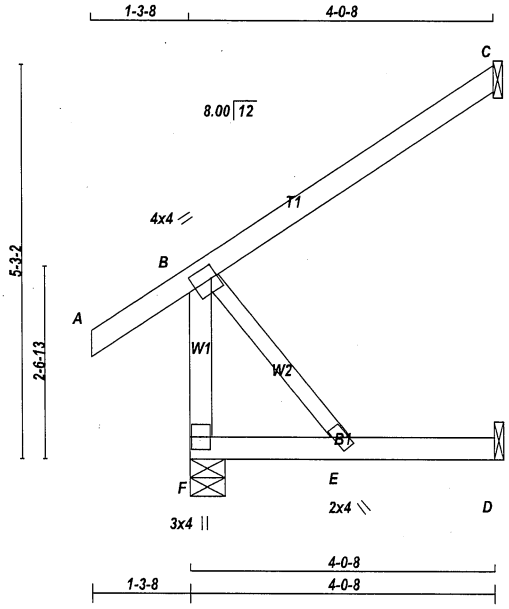

TOTAL WEIGHT = 4 X 17 = 67 lb [M]

LUMBER
N. L. G. A. RULES

CHORDS	SIZE		LUMBER	DESCR.
F - B	2x4	DRY	No.2	SPF
A - C	2x4	DRY	No.2	SPF
F - D	2x4	DRY	No.2	SPF
ALL WEBS	2x3	DRY	No.2	SPF

DRY: SEASONED LUMBER.

PLATES (table is in inches)

JT	TYPE	PLATES	W	LEN	Y	X
B	TMVW-t	MT20	4.0	4.0	2.00	1.00
E	BMW+w	MT20	2.0	4.0		
F	BMV1+p	MT20	3.0	4.0		

NOTES- (1)
1) Lateral braces to be a minimum of 2X4 SPF #2.

DIMENSIONS, SUPPORTS AND LOADINGS SPECIFIED BY FABRICATOR TO BE VERIFIED BY BUILDING DESIGNER

BEARINGS

JT	FACTORED GROSS REACTION VERT	HORZ	MAXIMUM FACTORED GROSS REACTION DOWN	HORZ	UPLIFT	INPUT BRG IN-SX	REQRD BRG IN-SX
F	419	0	419	0	0	5-8	5-8
C	227	0	227	0	0	1-8	1-8
D	37	0	42	0	0	1-8	1-8

SEE MITEK STANDARD DETAIL MSD2015-H FOR CONNECTION TO JOINT(S) C , D

UNFACTORED REACTIONS

JT	1ST LCASE COMBINED	MAX./MIN. COMPONENT REACTIONS SNOW	LIVE	PERM.LIVE	WIND	DEAD	SOIL
F	291	220 / 0	0 / 0	0 / 0	0 / 0	71 / 0	0 / 0
C	156	131 / 0	0 / 0	0 / 0	0 / 0	24 / 0	0 / 0
D	30	0 / 0	0 / 0	0 / 0	0 / 0	30 / 0	0 / 0

BEARING MATERIAL TO BE SPF NO.2 OR BETTER AT JOINT(S) F, C

BRACING
TOP CHORD TO BE SHEATHED OR MAX. PURLIN SPACING = 10.00 FT.
MAX. UNBRACED BOTTOM CHORD LENGTH = 10.00 FT OR RIGID CEILING DIRECTLY APPLIED.

ALL PITCH BREAKS AND PERIMETER CORNER JOINTS MUST BE LATERALLY RESTRAINED.

LOADING
TOTAL LOAD CASES: (4)

CHORDS

MEMB. FR-TO	MAX. FACTORED FORCE (LBS)	FACTORED VERT. LOAD (PLF) FROM	TO	LC1	MAX CSI (LC)	MAX. UNBRAC LENGTH
F- B	-382 / 0	0.0	0.0	0.05 (1)	7.81	
A- B	0 / 43	-112.4	-112.4	0.15 (1)	10.00	
B- C	0 / 0	-112.4	-112.4	0.31 (1)	10.00	
F- E	0 / 0	-18.5	-18.5	0.09 (4)	10.00	
E- D	0 / 0	-18.5	-18.5	0.09 (4)	10.00	

WEBS

MEMB. FR-TO	MAX. FACTORED FORCE (LBS)	MAX CSI (LC)
B- E	0 / 0	0.00 (1)

DESIGN CRITERIA

SPECIFIED LOADS:

TOP CH.	LL	=	32.5	PSF
	DL	=	6.0	PSF
BOT CH.	LL	=	0.0	PSF
	DL	=	7.4	PSF
TOTAL LOAD		=	45.9	PSF

SPACING = 24.0 IN. C/C

THIS TRUSS IS DESIGNED FOR RESIDENTIAL OR SMALL BUILDING REQUIREMENTS OF PART 9, NBCC 2015

THIS DESIGN COMPLIES WITH:
- PART 9 OF BCBC 2018 , ABC 2019
- PART 9 OF OBC 2012 (2019 AMENDMENT)
- CSA 086-14
- TPIC 2014

(55 % OF 43.9 P.S.F. G.S.L. PLUS 8.4 P.S.F. RAIN LOAD) EQUALS 32.5 P.S.F. SPECIFIED ROOF LIVE LOAD

ALLOWABLE DEFL.(LL)= L/360 (0.19")
CALCULATED VERT. DEFL.(LL) = L/ 999 (0.00")
ALLOWABLE DEFL.(TL)= L/360 (0.19")
CALCULATED VERT. DEFL.(TL) = L/ 999 (0.01")

CSI: TC=0.31/1.00 (B-C:1) , BC=0.09/1.00 (D-E:4) , WB=0.00/1.00 (B-E:1) , SSI=0.15/1.00 (B-C:1)

DOL LUMBER=1.00 NAIL=1.00 LS BEND=1.10 COMP=1.10 SHEAR=1.10 TENS= 1.10

COMPANION LIVE LOAD FACTOR = 1.00

TRUSS PLATE MANUFACTURER IS NOT RESPONSIBLE FOR QUALITY CONTROL IN THE TRUSS MANUFACTURING PLANT .

NAIL VALUES

PLATE	GRIP(DRY) (PSI) MAX	MIN	SHEAR (PLI) MAX	MIN	SECTION (PLI) MAX	MIN
MT20	650	371	1747	788	1987	1873

PLATE PLACEMENT TOL. = 0.250 inches

PLATE ROTATION TOL. = 5.0 Deg.

JSI GRIP= 0.23 (B) (INPUT = 0.90)
JSI METAL= 0.07 (B) (INPUT = 1.00)

LICENSED PROFESSIONAL ENGINEER
06-24-22
H. J. G. ALVES
100009024
PROVINCE OF ONTARIO

Structural component only
DWG# T-2215159

REVIEWED

JOB NAME	TRUSS NAME	QUANTITY	PLY	JOB DESC.	DRWG NO.
423537	J46	2	1	BAYVIEW WELLINGTON TRUSS DESC.	

Tamarack Roof Truss, Burlington

Version 8.530 S Feb 23 2022 MiTek Industries, Inc. Fri Jun 24 09:02:55 2022 Page 1
ID:c3jyj23uDijq_8pvRKbkZpy75XW-bFEI3fqnfD_uMM1fTiBdv3IrDZ7bA5tbB2YrWRz37q_

Scale = 1:22.1

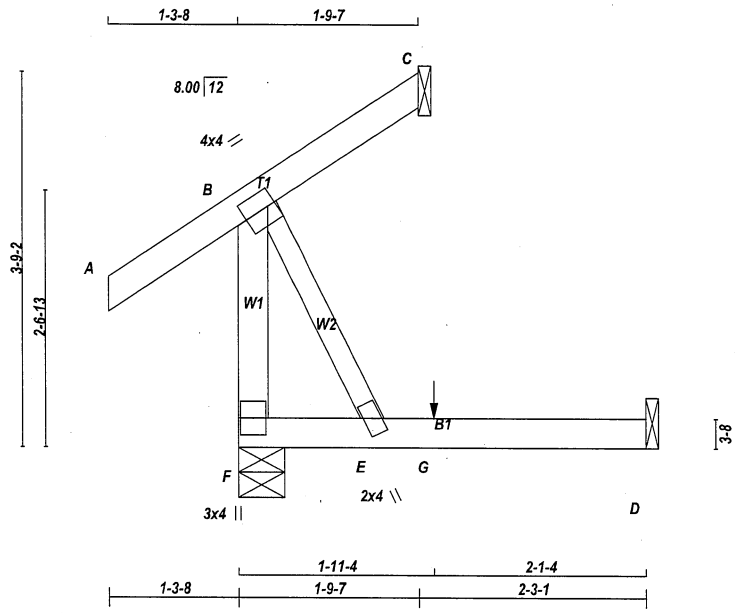

TOTAL WEIGHT = 2 X 13 = 27 lb
[M]

LUMBER
N. L. G. A. RULES

CHORDS	SIZE		LUMBER	-DESCR.
F - B	2x4	DRY	No.2	SPF
A - C	2x4	DRY	No.2	SPF
F - D	2x4	DRY	No.2	SPF
ALL WEBS	2x3	DRY	No.2	SPF

DRY: SEASONED LUMBER.

PLATES (table is in inches)

JT	TYPE	PLATES	W	LEN	Y	X
B	TMVW-t	MT20	4.0	4.0	2.00	1.00
E	BMW+w	MT20	2.0	4.0		
F	BMV1+p	MT20	3.0	4.0		

NOTES- (1)
1) Lateral braces to be a minimum of 2X4 SPF #2.

DIMENSIONS, SUPPORTS AND LOADINGS SPECIFIED BY FABRICATOR TO BE VERIFIED BY BUILDING DESIGNER

BEARINGS

JT	FACTORED GROSS REACTION VERT	HORZ	MAXIMUM FACTORED GROSS REACTION DOWN	HORZ	UPLIFT	INPUT BRG IN-SX	REQRD BRG IN-SX
F	351	0	351	0	0	5-8	5-8
C	41	0	41	0	0	1-8	1-8
D	37	0	42	0	0	1-8	1-8

SEE MITEK STANDARD DETAIL MSD2015-H FOR CONNECTION TO JOINT(S) C , D

UNFACTORED REACTIONS

JT	1ST LCASE COMBINED	MAX./MIN. COMPONENT REACTIONS SNOW	LIVE	PERM.LIVE	WIND	DEAD	SOIL
F	245	181 / 0	0 / 0	0 / 0	0 / 0	63 / 0	0 / 0
C	28	24 / 0	0 / 0	0 / 0	0 / 0	4 / 0	0 / 0
D	30	0 / 0	0 / 0	0 / 0	0 / 0	30 / 0	0 / 0

BEARING MATERIAL TO BE SPF NO.2 OR BETTER AT JOINT(S) F, C

BRACING
TOP CHORD TO BE SHEATHED OR MAX. PURLIN SPACING = 6.25 FT.
MAX. UNBRACED BOTTOM CHORD LENGTH = 10.00 FT OR RIGID CEILING DIRECTLY APPLIED.

ALL PITCH BREAKS AND PERIMETER CORNER JOINTS MUST BE LATERALLY RESTRAINED.

LOADING
TOTAL LOAD CASES: (4)

CHORDS MEMB. FR-TO	MAX. FACTORED FORCE (LBS)	FACTORED VERT. LOAD (PLF) FROM	TO	LC1	MAX CSI (LC)	MAX. UNBRAC LENGTH	WEBS MEMB. FR-TO	MAX. FACTORED FORCE (LBS)	MAX CSI (LC)
F- B	-314 / 0	0.0	0.0		0.04 (1)	7.81	B- E	0 / 0	0.00 (1)
A- B	0 / 43	-112.4	-112.4		0.15 (1)	10.00			
B- C	-33 / 0	-112.4	-112.4		0.14 (1)	6.25			
F- E	0 / 0	-18.5	-18.5		0.08 (4)	10.00			
E- G	0 / 0	-18.5	-18.5		0.09 (4)	10.00			
G- D	0 / 0	-18.5	-18.5		0.09 (4)	10.00			

SPECIFIED CONCENTRATED LOADS (LBS)

JT	LOC.	LC1	MAX-	MAX+	FACE	DIR.	TYPE	HEEL	CONN.
G	1-11-4	1	1	---	BACK	VERT	TOTAL	---	C1

CONNECTION REQUIREMENTS

1) **C1:** A SUITABLE HANGER/MECHANICAL CONNECTION IS REQUIRED.

DESIGN CRITERIA

SPECIFIED LOADS:

TOP CH.	LL	=	32.5	PSF
	DL	=	6.0	PSF
BOT CH.	LL	=	0.0	PSF
	DL	=	7.4	PSF
TOTAL LOAD		=	45.9	PSF

SPACING = 24.0 IN. C/C

THIS TRUSS IS DESIGNED FOR RESIDENTIAL OR SMALL BUILDING REQUIREMENTS OF PART 9, NBCC 2015

THIS DESIGN COMPLIES WITH:
- PART 9 OF BCBC 2018 , ABC 2019
- PART 9 OF OBC 2012 (2019 AMENDMENT)
- CSA 086-14
- TPIC 2014

DESIGN ASSUMPTIONS
-OVERHANG NOT TO BE ALTERED OR CUT OFF.

(55 % OF 43.9 P.S.F. G.S.L. PLUS 8.4 P.S.F. RAIN LOAD) EQUALS 32.5 P.S.F. SPECIFIED ROOF LIVE LOAD

ALLOWABLE DEFL.(LL)= L/360 (0.19")
CALCULATED VERT. DEFL.(LL) = L/ 999 (0.00")
ALLOWABLE DEFL.(TL)= L/360 (0.19")
CALCULATED VERT. DEFL.(TL) = L/ 999 (0.01")

CSI: TC=0.15/1.00 (A-B:1) , BC=0.09/1.00 (D-E:4) , WB=0.00/1.00 (B-E:1) , SSI=0.10/1.00 (B-C:1)

DOL LUMBER=1.00 NAIL=1.00 LS BEND=1.10 COMP=1.10 SHEAR=1.10 TENS= 1.10

COMPANION LIVE LOAD FACTOR = 1.00

TRUSS PLATE MANUFACTURER IS NOT RESPONSIBLE FOR QUALITY CONTROL IN THE TRUSS MANUFACTURING PLANT .

NAIL VALUES

PLATE	GRIP(DRY) (PSI) MAX	MIN	SHEAR (PLI) MAX	MIN	SECTION (PLI) MAX	MIN
MT20	650	371	1747	788	1987	1873

PLATE PLACEMENT TOL. = 0.250 inches

PLATE ROTATION TOL. = 5.0 Deg.

JSI GRIP= 0.19 (B) (INPUT = 0.90)
JSI METAL= 0.06 (B) (INPUT = 1.00)

LICENSED PROFESSIONAL ENGINEER
06-24-22
H. J. G. ALVES
100009024
PROVINCE OF ONTARIO

Structural component only
DWG# T-2215160

REVIEWED

JOB NAME	TRUSS NAME	QUANTITY	PLY	JOB DESC.	DRWG NO.
423537	J47	2	1	BAYVIEW WELLINGTON TRUSS DESC.	

Tamarack Roof Truss, Burlington

Version 8.530 S Feb 23 2022 MiTek Industries, Inc. Fri Jun 24 09:02:55 2022 Page 1
ID:c3jyj23uDijq_8pvRKbkZpy75XW-bFEI3fqnfD_uMM1fTiBdv3IrDZ8gA5tbB2YrWRz37q_

Scale = 1:22.1

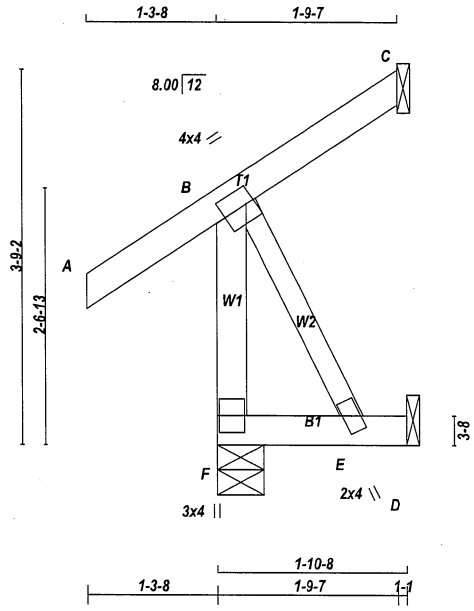

TOTAL WEIGHT = 2 X 11 = 22 lb
[M]

LUMBER
N. L. G. A. RULES

CHORDS	SIZE		LUMBER	DESCR.
F - B	2x4	DRY	No.2	SPF
A - C	2x4	DRY	No.2	SPF
F - D	2x4	DRY	No.2	SPF
ALL WEBS	2x3	DRY	No.2	SPF

DRY: SEASONED LUMBER.

PLATES (table is in inches)

JT	TYPE	PLATES	W	LEN	Y	X
B	TMVW-t	MT20	4.0	4.0	2.00	1.00
E	BMW+w	MT20	2.0	4.0		
F	BMV1+p	MT20	3.0	4.0		

NOTES- (1)
1) Lateral braces to be a minimum of 2X4 SPF #2.

DIMENSIONS, SUPPORTS AND LOADINGS SPECIFIED BY FABRICATOR TO BE VERIFIED BY BUILDING DESIGNER

BEARINGS

JT	FACTORED GROSS REACTION VERT	HORZ	MAXIMUM FACTORED GROSS REACTION DOWN	HORZ	UPLIFT	INPUT BRG IN-SX	REQRD BRG IN-SX
F	331	0	331	0	0	5-8	5-8
C	41	0	41	0	-50	1-8	1-8
D	17	0	19	0	0	1-8	1-8

SEE MITEK STANDARD DETAIL MSD2015-H FOR CONNECTION TO JOINT(S) C , D

PROVIDE ANCHORAGE AT BEARING JOINT C FOR 150 LBS FACTORED UPLIFT

UNFACTORED REACTIONS

JT	1ST LCASE COMBINED	MAX./MIN. COMPONENT REACTIONS SNOW	LIVE	PERM.LIVE	WIND	DEAD	SOIL
F	229	181 / 0	0 / 0	0 / 0	0 / 0	47 / 0	0 / 0
C	28	24 / -34	0 / 0	0 / 0	0 / 0	4 / 0	0 / 0
D	14	0 / 0	0 / 0	0 / 0	0 / 0	14 / 0	0 / 0

BEARING MATERIAL TO BE SPF NO.2 OR BETTER AT JOINT(S) F, C

BRACING
TOP CHORD TO BE SHEATHED OR MAX. PURLIN SPACING = 6.25 FT.
MAX. UNBRACED BOTTOM CHORD LENGTH = 10.00 FT OR RIGID CEILING DIRECTLY APPLIED.

ALL PITCH BREAKS AND PERIMETER CORNER JOINTS MUST BE LATERALLY RESTRAINED.

LOADING
TOTAL LOAD CASES: (5)

CHORDS

MEMB. FR-TO	MAX. FACTORED FORCE (LBS)	FACTORED VERT. LOAD LC1 (PLF) FROM	TO	MAX CSI (LC)	MAX. UNBRAC LENGTH
F- B	-314 / 0	0.0	0.0	0.04 (1)	7.81
A- B	0 / 43	-112.4	-112.4	0.15 (1)	10.00
B- C	-33 / 0	-112.4	-112.4	0.14 (1)	6.25
F- E	0 / 0	-18.5	-18.5	0.02 (4)	10.00
E- D	0 / 0	-18.5	-18.5	0.02 (4)	10.00

WEBS

MEMB. FR-TO	MAX. FACTORED FORCE (LBS)	MAX CSI (LC)
B- E	0 / 0	0.00 (1)

CANTILEVER ANALYSIS HAS BEEN CONSIDERED IN THIS DESIGN

DESIGN CRITERIA

SPECIFIED LOADS:

TOP CH.	LL	=	32.5	PSF
	DL	=	6.0	PSF
BOT CH.	LL	=	0.0	PSF
	DL	=	7.4	PSF
TOTAL LOAD		=	45.9	PSF

SPACING = 24.0 IN. C/C

THIS TRUSS IS DESIGNED FOR RESIDENTIAL OR SMALL BUILDING REQUIREMENTS OF PART 9, NBCC 2015

THIS DESIGN COMPLIES WITH:
- PART 9 OF BCBC 2018 , ABC 2019
- PART 9 OF OBC 2012 (2019 AMENDMENT)
- CSA 086-14
- TPIC 2014

DESIGN ASSUMPTIONS
-OVERHANG NOT TO BE ALTERED OR CUT OFF.

(55 % OF 43.9 P.S.F. G.S.L. PLUS 8.4 P.S.F. RAIN LOAD) EQUALS 32.5 P.S.F. SPECIFIED ROOF LIVE LOAD

ALLOWABLE DEFL.(LL)= L/360 (0.19")
CALCULATED VERT. DEFL.(LL) = L/ 999 (0.00")
ALLOWABLE DEFL.(TL)= L/360 (0.19")
CALCULATED VERT. DEFL.(TL) = L/ 999 (0.00")

CSI: TC=0.15/1.00 (A-B:1) , BC=0.02/1.00 (E-F:4) , WB=0.00/1.00 (B-E:1) , SSI=0.10/1.00 (B-C:1)

DOL LUMBER=1.00 NAIL=1.00 LS BEND=1.10 COMP=1.10 SHEAR=1.10 TENS= 1.10

COMPANION LIVE LOAD FACTOR = 1.00

TRUSS PLATE MANUFACTURER IS NOT RESPONSIBLE FOR QUALITY CONTROL IN THE TRUSS MANUFACTURING PLANT .

NAIL VALUES

PLATE	GRIP(DRY) (PSI) MAX	MIN	SHEAR (PLI) MAX	MIN	SECTION (PLI) MAX	MIN
MT20	650	371	1747	788	1987	1873

PLATE PLACEMENT TOL. = 0.250 inches

PLATE ROTATION TOL. = 5.0 Deg.

JSI GRIP= 0.19 (B) (INPUT = 0.90)
JSI METAL= 0.06 (B) (INPUT = 1.00)

LICENSED PROFESSIONAL ENGINEER
06-24-22
H. J. G. ALVES
100009024
PROVINCE OF ONTARIO

Structural component only
DWG# T-2215161

REVIEWED

Alves Engineering Services Inc.
5208 Easton road
Burlington, Ontario L7L 6N6
(289) 259 5455

LICENSED PROFESSIONAL ENGINEER
06/11/19
H.J.G. ALVES
PROVINCE OF ONTARIO

RESPONSABILITIES

1-Alves Engineering Services Inc. is responsible for the design of trusses as individual components

2-It is the responsibility of others to ascertain that the design loads utilized on this drawing meet or exceed the actual dead load imposed by the structure and the live load imposed by the local building code or the authorities having jurisdictions.

3- All dimensions are to be verified by owner, contractor, architect or other authority before manufacture.

4- Alves Engineering Services Inc. bears no responsibility for the erection of the trusses. Persons erecting trusses are cautioned to seek professional advice regarding temporary and permanent bracing system. Bracing shown on Alves Engineering Services Inc. drawings is specified for the truss as a single component and forms an integral part of the truss design, but is not meant to represent the only required bracing for that truss when trusses are installed in a series of trusses forming a roof truss system.

5- It is the manufactures responsibility to ensure that the trusses are manufactured in conformance with Alves Engineering Services Inc. specifications outlined below.

SPECIFICATIONS

1-Truss components sealed by Alves Engineering Services Inc. conform to the relevant sections of the current Building Code of Ontario and Canada (part 4 or part 9) or the current Canadian code for Farm Buildings in accordance with the application specified on the sealed truss component drawing. All truss component design procedures must conform to the current design standard issued by the truss plate institute of Canada (TPIC). All lumber and nailing stresses to conform to the current CSA wood design standard identified on the current Building Code and TPIC.

2- Lumber is to be the sizes and grade specified on the truss drawing.

3- Moist content of lumber is not to exceed 19% in service unless otherwise specified.

4- Plates shall be applied to both faces of the each truss joint and shall be positioned as shown on the truss drawings

5- Lumber used on manufacture of trusses is not to be treated with chemicals unless otherwise specified on the truss drawings.

6- The top chord is assumed to be continuously laterally braced by the roof sheathing or purlins at intervals specified on the truss drawing but not exceeding 24" c/c for (part 9) and not exceeding 48" for (part 4 or farm design)

7- When rigid ceiling is not attached directly to the bottom chord, lateral bracing is required and it should not exceed more than 3m or 10' intervals.

8-Refer to Mitek sheet MII7473C REV.10-08 attached for information on symbols, numbering ·em and General Safety notes.

T-1800218 Feb 09, 2018

REVIEWED

TOE-NAIL CAPACITY DETAILS

LATERAL AND WITHDRAWAL RESISTANCE OF BEARING ANCHORAGE BY TOE-NAILS

			SPF	D. FIR	SPF	D. FIR
COMMON WIRE	3.00	0.144	122	139	30	42
	3.25	0.144	127	144	32	45
	3.50	0.160	152	173	38	52
COMMON SPIRAL	3.00	0.122	96	108	26	36
	3.25	0.122	97	108	28	40
	3.50	0.152	142	161	36	50
3.25" Gun nail	3.25	0.120	94	105	28	39

Note: If using truss with D. Fir lumber and SPF bearing plate, use tabulated SPF values in table.

Nail type:	**Common wire**	**Common spiral**	**Common wire**	**Common spiral**	**Gun Nail**
Diameter (in.)	0.160	0.152	0.144	0.122	0.120
Length (in.)	3.50	3.50	3.00	3.00	3.25
LUMBER	**MAXIMUM NUMBER OF TOE-NAILS**				
2x4 SPF	2	2	3	3	3
2x6 SPF	4	4	4	5	5
2x4 D. FIR	2	2	2	2	2
2x6 D. FIR	3	3	3	4	4

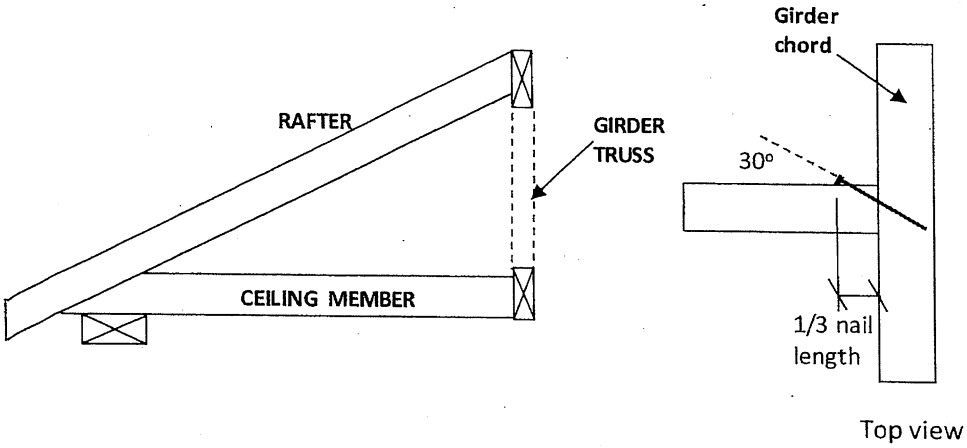

Figure 1: Toe-Nailing Rafter / Ceiling Member to Girder Truss

PEO
Certificate No. 10889485

LICENSED PROFESSIONAL ENGINEER
C. Cordogiannis
90553736
PROVINCE OF ONTARIO

December 21, 2020

REVIEWED

©2020 MiTek Canada Inc., 240 Stirling Crescent, Bradford, Ontario, L3Z 4L5 | (800) 268-3434, www.mitek.ca

TOE-NAIL CAPACITY DETAILS

Figure 2: Toe-Nail Anchorage to Bearing Plate for Uplift

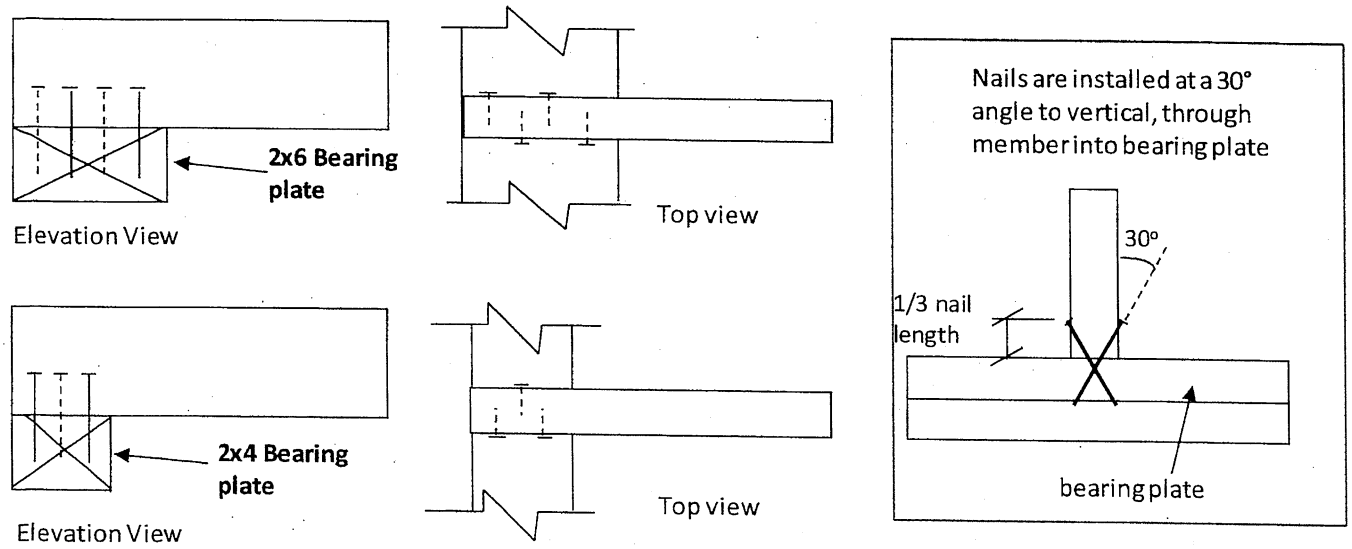

NOTES:

1. Rafter and ceiling members may be connected to top and bottom chords of girder truss by toe-nailing the members into the girder chords (see fig. 1), provided the factored vertical reactions of the supported members do not exceed the lateral resistance of the toe-nails. Mechanical connectors (hangers) are required if factored vertical reactions exceed the toe-nail capacity, or if the connection must resist horizontal loads (loads perpendicular to the face of girder or rafter).

2. Trusses, rafters or ceiling members may be anchored to the bearing plate with toe-nails (see fig. 2), provided that the factored uplift reactions due to **wind or earthquake loads** do not exceed the **withdrawal resistance of the toe-nails.** Mechanical anchors (tie-downs) are required for reactions that exceed the toe-nail withdrawal capacity. Toe-nail anchorage to bearing plates is **NOT** permitted if uplift reactions are generated from gravity loads (snow, floor live, dead).

3. Tabulated toe-nail resistances on page 1 are for **one** toe-nail. Multiply unit values by the number of nails used in the connection. Maximum number of nails in a connection shall not exceed the tabulated limits shown on page 1 for a given lumber size /species.

4. Nail values are based on specific gravity of G = 0.42 (SPF) and G = 0.49 (D. Fir).

5. Toe-nails shall be driven at approximately 1/3 the nail length from the edge of the joist/truss chord and driven at an angle of 30° to the grain of the member.

6. For wind / earthquake loads, tabulated lateral resistances may be multiplied by 1.15 (K_D factor). No increases are permitted for tabulated withdrawal resistances.

7. Lumber must be dry (< 19% moisture content) at the time of nail installation.

8. Nail values in this table comply with CSA O86-19, Clause 12.9.

PEO
Certificate No. 10889485

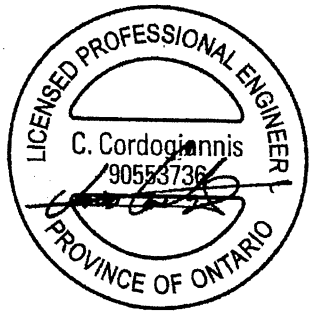

December 21, 2020

REVIEWED

©2020 MiTek Canada Inc., 240 Stirling Crescent, Bradford, Ontario, L3Z 4L5 | (800) 268-3434, www.mitek.ca

LUL/LUS/LJS/HUS/HHUS/HGUS

SIMPSON Strong-Tie®

Standard and Double-Shear Joist Hangers

VALUE ENGINEERED

This product is preferable to similar connectors because of a) easier installation, b) higher capacities, c) lower installed cost, or a combination of these features.

Most hangers in this series have double-shear nailing — an innovation that distributes the load through two points on each joist nail for greater strength. This allows for fewer nails, faster installation, and the use of all common nails for the same connection. (Do not bend or remove tabs)

Double-shear hangers range from the light capacity LUS hangers to the highest capacity HGUS hangers. For medium load truss applications, the HUS offers a lower cost alternative and easier installation than the HGUS hangers, while providing greater load capacity and bearing than the LUS.

Material: See table on pp. 217–218.

Finish: Galvanized. Some products available in stainless steel or ZMAX® coating; see Corrosion Information, pp. 18–20.

Installation:

- Use all specified fasteners; see General Notes.
- Nails must be driven at an angle through the joist or truss into the header to achieve the tabulated resistances (except LUL).
- Where 16d commons are specified, 10d commons may be used at 0.83 of the tabulated factored resistance.
- Not designed for welded or nailer applications.
- With single ply 2x carrying members, use 10d x 1½" nails into the header and 10d commons into the joist, and reduce the resistance to 0.64 of the table value where 16d nails are specified and 0.77 where 10d nails are specified.

Options:

- LUS, LJS, LUL and HUS hangers cannot be modified.
- Other sizes available; consult your Simpson Strong-Tie representative.
- See Hanger Options information on pp. 105–107.

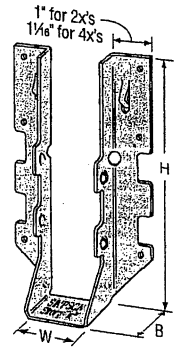

LUS28

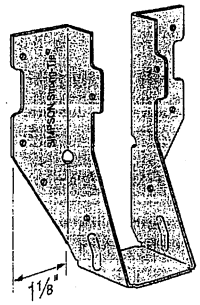

LU26L

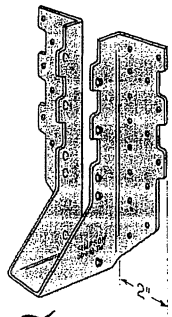

HUS210
(HUS26, HUS28, and HHUS similar)

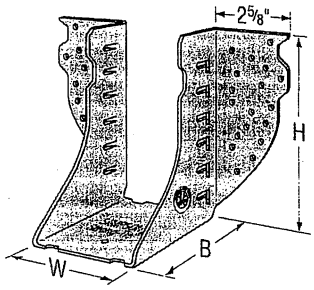

HGUS28-2

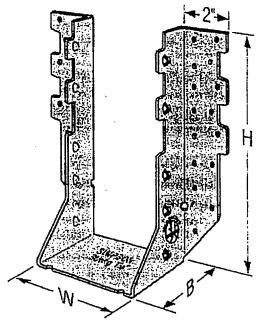

HHUS210-2

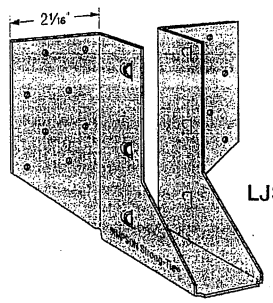

LJS26DS

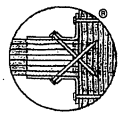

Double-Shear Nailing Top View

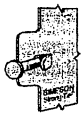

Double-Shear Nailing Side View; Do not bend tab

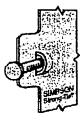

Dome Double-Shear Nailing Side View *(available on some models)*

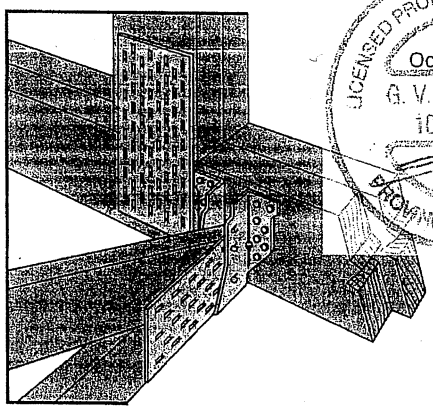

Typical HUS26 Installation with Reduced Heel Height

(Truss Designer to provide fastener quantity for connecting multiple members together)

LICENSED PROFESSIONAL ENGINEER
Oct. 14, 2020
G. V. LUBARSKY
100044463
PROVINCE OF ONTARIO

Plated Truss Connectors

C-C-CAN2020 ©2020 SIMPSON STRONG-TIE COMPANY INC.

REVIEWED

TECHNICAL BULLETIN

LUS – Double Shear Joist Hangers

SIMPSON Strong-Tie®

All LUS hangers have double shear nailing. This patented innovation distributes the load through two points on each joist nail for greater strength. It also allows the use of fewer nails, faster installation and the use of common nails for all connections.

Material: 18 gauge

Finish: G90 galvanized

Design:

- Factored resistances are in accordance with CSA O86-14.
- Uplift resistances have been increased 15%. No further increase is permitted.
- Wood shear is not considered in the factored resistances given. The specifier must ensure that the joist and header capacities are capable of withstanding these loads.

Installation:

- Use all specified fasteners.
- Nails: 16d = 0.162" dia. x 3½" long common wire, 10d = 0.148" x 3" long common wire.
- Double shear nails must be driven at an angle through the joist or truss into the header to achieve the table loads.
- Not designed for welded or nailer applications.

Options:

- These hangers cannot be modified

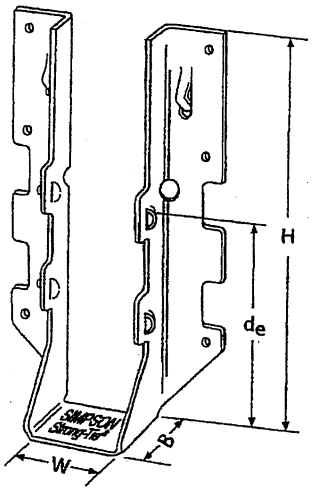

LUS28

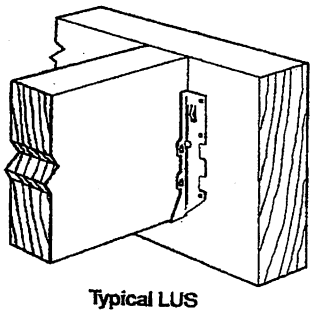

Typical LUS Installation

Model No.	Ga.	Dimensions (in.)				Fasteners		Factored Resistance (lb.)			
								D.Fir-L		S-P-F	
		W	H	B	d_e[1]	Face	Joist	Uplift (K_D=1.15)	Normal (K_D=1.00)	Uplift (K_D=1.15)	Normal (K_D=1.00)
LUS24	18	1 9/16	3 1/8	1 3/4	1 15/16	(4) 10d	(2) 10d	710	1630	645	1155
LUS24-2	18	3 1/8	3 1/8	2	1 13/16	(4) 16d	(2) 16d	835	2020	590	1435
LUS26	18	1 9/16	4 3/4	1 3/4	3 5/8	(4) 10d	(4) 10d	1420	2170	1290	1630
LUS26-2	18	3 1/8	4 7/8	2	4	(4) 16d	(4) 16d	1720	2595	1545	1920
LUS26-3	18	4 5/8	4 3/16	2	3 1/4	(4) 16d	(4) 16d	1720	2595	1545	2340
LUS28	18	1 9/16	6 5/8	1 3/4	3 3/4	(6) 10d	(6) 10d	1420	2520	1290	1790
LUS28-2	18	3 1/8	7	2	4	(6) 16d	(4) 16d	1720	3325	1545	2575
LUS28-3	18	4 5/8	6 1/4	2	3 1/4	(6) 16d	(4) 16d	1720	3325	1545	2375
LUS210	18	1 9/16	7 13/16	1 3/4	3 7/8	(8) 10d	(4) 10d	1420	2785	1290	2210
LUS210-2	18	3 1/8	9	2	6	(8) 16d	(6) 16d	2580	4500	2320	3195
LUS210-3	18	4 5/8	8 3/16	2	5 1/4	(8) 16d	(6) 16d	2580	3345	2320	2375

1. d_e is the distance from the seat of the hanger to the highest joist nail.

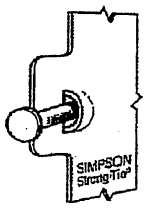

Dome Double Shear Nailing prevents tabs breaking off (available on some models).

U.S. Patent 5,603,580

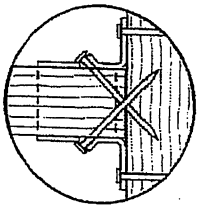

Double Shear Nailing Top View.

LICENSED PROFESSIONAL ENGINEER
04/01/2020
B. D. BUNTING
PROVINCE OF ONTARIO

LIMIT STATES DESIGN

This technical bulletin is effective until June 30, 2022, and reflects information available as of April 1, 2020. This information is updated periodically and should not be relied upon after June 30, 2022. Contact Simpson Strong-Tie for current information and limited warranty or see strongtie.com.

© 2020 Simpson Strong-Tie Company Inc.

T-SPECLUS20 3/20 exp. 6/22

(800) 999-5099
strongtie.com

REVIEWED

TECHNICAL BULLETIN

HUS/LJS – Double Shear Joist Hangers

SIMPSON Strong-Tie®

All hangers have double shear nailing. This patented innovation distributes the load through two points on each joist nail for greater strength. It also allows the use of fewer nails, faster installation and the use of common nails for all connections. Do not bend or remove tabs.

Material: See table

Finish: G90 galvanized

Design:

- Factored resistances are in accordance with CSA O86 -14.
- Uplift resistances have been increased 15%. No further increase is permitted.
- Wood shear is not considered in the factored resistances given. The specifier must ensure that the joist and header capacities are capable of withstanding these loads.

Installation:

- Use all specified fasteners
- Nails: 16d = 0.162" dia. x 3½" long common wire
- Double shear nails must be driven at an angle through the joist or truss into the header to achieve the table loads
- Not designed for welded or nailer applications

Options:

- See current catalogue for options

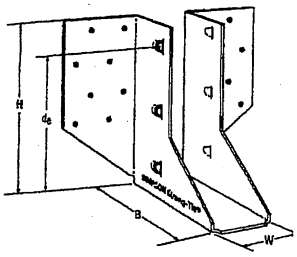

LJS26DS

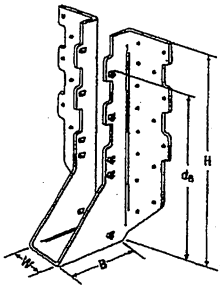

HUS210
(HUS26, HUS28, similar)

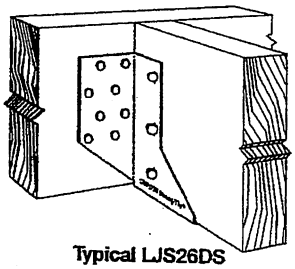

Typical LJS26DS Installation

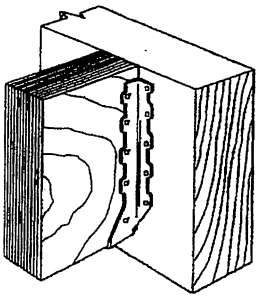

Typical HUS Installation

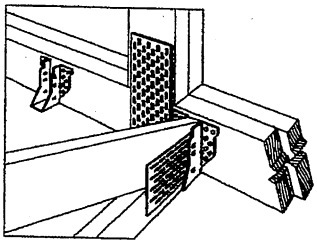

Typical HUS Installation
(Truss Designer to provide fastener quantity for connecting multiple members together)

Model No.	Ga.	Dimensions (in.)				Fasteners		Factored Resistance (lb.)			
								D.Fir-L		S-P-F	
		W	H	B	d_e[1]	Face	Joist	Uplift (K_D=1.15) lb.	Normal (K_D=1.00) lb.	Uplift (K_D=1.15) lb.	Normal (K_D=1.00) lb.
LJS26DS	18	1 9/16	5	3½	4⅝	(16) 16d	(6) 16d	2055	4265	1460	4115
HUS26	16	1⅝	5⅜	3	3 15/16	(14) 16d	(6) 16d	2705	4940	2065	3875
HUS28	16	1⅝	7 3/32	3	6 3/32	(22) 16d	(8) 16d	3605	5365	2675	4345
HUS210	16	1⅝	9 3/32	3	7 31/32	(30) 16d	(10) 16d	4505	5795	4010	4740
HUS1.81/10	16	1 13/16	9	3	8	(30) 16d	(10) 16d	4505	6450	4010	5200

1. d_e is the distance from the seat of the hanger to the highest joist nail.

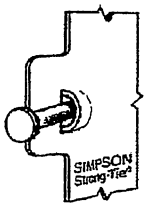

Dome Double Shear Nailing prevents tabs breaking off (available on some models).

U.S. Patent 5,603,580

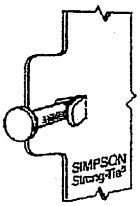

Double Shear Nailing Side View. Do not bend tab back.

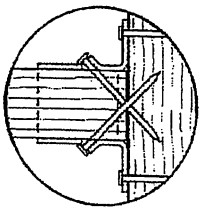

Double Shear Nailing Top View.

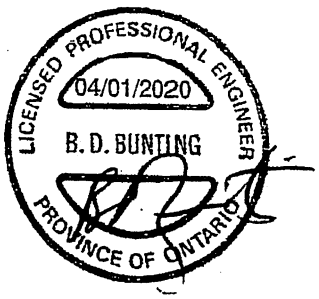

LIMIT STATES DESIGN

This technical bulletin is effective until June 30, 2022, and reflects information available as of April 1, 2020. This information is updated periodically and should not be relied upon after June 30, 2022. Contact Simpson Strong-Tie for current information and limited warranty or see strongtie.com.

© 2020 Simpson Strong-Tie Company Inc.

T-SPECHUS20 3/20 exp. 6/22

(800) 999-5099
strongtie.com

REVIEWED

TECHNICAL BULLETIN

HGUS – Double Shear Joist Hangers

SIMPSON Strong-Tie®

All HGUS hangers have double shear nailing. This patented innovation distributes the load through two points on each joist nail for greater strength. It also allows the use of fewer nails, faster installation and the use of common nails for all connections. Do not bend or remove tabs.

Material: 12 gauge

Finish: G90 galvanized

Design:

- Factored resistances are in accordance with CSA O86-14.
- Uplift resistances have been increased 15%. No further increase is permitted.
- Wood shear is not considered in the factored resistances given. The specifier must ensure that the joist and header capacities are capable of withstanding these loads.

Installation:

- Use all specified fasteners
- Nails: 16d = 0.162" dia x 3½" long common wire
- Double shear nails must be driven at an angle through the joist or truss into the header to achieve the table loads
- Not designed for welded or nailer applications

Options:

- See current catalogue for options

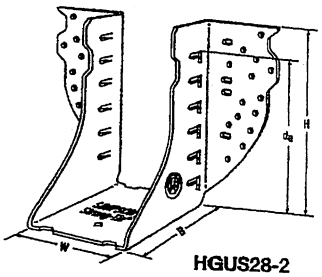

HGUS28-2

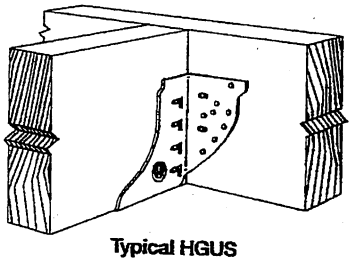

Typical HGUS Installation

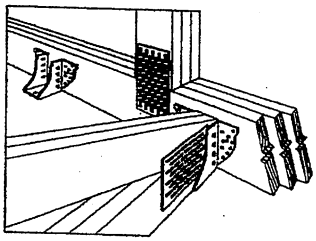

Typical HGUS Installation (Truss Designer to provide fastener quantity for connecting multiple members together)

Model No.	Ga.	Dimensions (in.)				Fasteners		Factored Resistance (lb.)			
								D.Fir-L		S-P-F	
		W	H	B	d_e[1]	Face	Joist	Uplift (K_D=1.15)	Normal (K_D=1.00)	Uplift (K_D=1.15)	Normal (K_D=1.00)
HGUS26	12	1⅝	5⅜	5	4 5/32	(20) 16d	(8) 16d	2685	6625	2685	5700
HGUS26-2	12	3 5/16	5 7/16	4	4⅛	(20) 16d	(8) 16d	4385	8950	3100	6355
HGUS26-3	12	4 15/16	5½	4	4⅛	(20) 16d	(8) 16d	4385	8950	3100	6355
HGUS26-4	12	6 9/16	5 7/16	4	4⅛	(20) 16d	(8) 16d	4385	8950	3100	6355
HGUS28	12	1⅝	7⅛	5	6⅛	(36) 16d	(12) 16d	3310	7675	3100	6900
HGUS28-2	12	3 5/16	7 3/16	4	6⅛	(36) 16d	(12) 16d	6070	12980	4310	9215
HGUS28-3	12	4 15/16	7¼	4	6⅜	(36) 16d	(12) 16d	6070	12980	4310	9215
HGUS28-4	12	6 9/16	7 3/16	4	6⅛	(36) 16d	(12) 16d	6070	12980	4310	9215
HGUS210	12	1⅝	9⅛	5	7⅞	(46) 16d	(16) 16d	3535	11070	2510	8090
HGUS210-2	12	3 5/16	9 3/16	4	8⅛	(46) 16d	(16) 16d	6840	14015	4855	10270
HGUS210-3	12	4 15/16	9¼	4	8⅜	(46) 16d	(16) 16d	6840	14645	4855	10400
HGUS210-4	12	6 9/16	9 3/16	4	8⅛	(46) 16d	(16) 16d	6840	14645	4855	10400
HGUS212-4	12	6 9/16	10⅝	4	10⅛	(56) 16d	(20) 16d	7640	14995	5425	10645
HGUS214-4	12	6 9/16	12⅝	4	11⅛	(66) 16d	(22) 16d	10130	16400	7195	11645

1. d_e is the distance from the seat of the hanger to the highest joist nail.

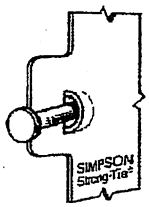

Dome Double Shear Nailing prevents tabs breaking off (available on some models).

U.S. Patent 5,603,580

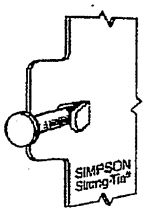

Double Shear Nailing Side View. Do not bend tab back.

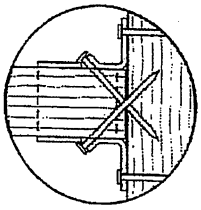

Double Shear Nailing Top View.

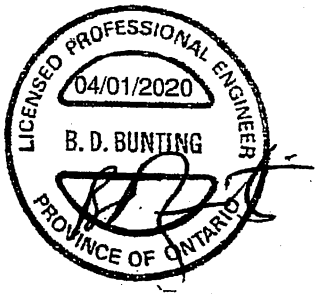

LIMIT STATES DESIGN

This technical bulletin is effective until June 30, 2022, and reflects information available as of April 1, 2020. This information is updated periodically and should not be relied upon after June 30, 2022. Contact Simpson Strong-Tie for current information and limited warranty or see strongtie.com.

© 2020 Simpson Strong-Tie Company Inc.

T-SPECHGUS20 3/20 exp. 6/22

(800) 999-5099
strongtie.com

REVIEWED

TECHNICAL BULLETIN

HHUS – Double Shear Joist Hangers

SIMPSON Strong-Tie®

All HHUS hangers have double shear nailing. This patented innovation distributes the load through two points on each joist nail for greater strength. It also allows the use of fewer nails, faster installation and the use of common nails for all connections. Do not bend or remove tabs.

Material: 14 gauge

Finish: G90 galvanized

Design:

- Factored resistances are in accordance with CSA O86-14.
- Uplift resistances have been increased 15%. No further increase is permitted.
- Wood shear is not considered in the factored resistances given. The specifier must ensure that the joist and header capacities are capable of withstanding these loads.

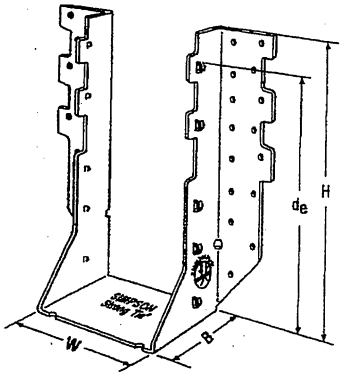

HHUS410

Installation:

- Use all specified fasteners
- Nails: 16d = 0.162" dia. x 3½" long common wire
- Double shear nails must be driven at an angle through the joist or truss into the header to achieve the table loads
- Not designed for welded or nailer applications

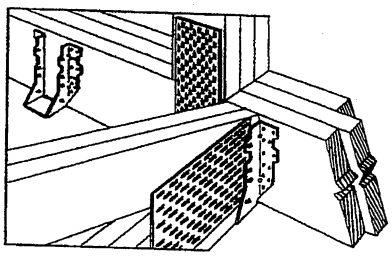

Typical HHUS Installation (Truss Designer to provide fastener quantity for connecting multiple members together)

Options:

- See current catalogue for options

Model No.	Ga.	Dimensions (in.)				Fasteners		Factored Resistance (lb.)			
								D.Fir-L		S-P-F	
		W	H	B	d_e[1]	Face	Joist	Uplift (K_D=1.15)	Normal (K_D=1.00)	Uplift (K_D=1.15)	Normal (K_D=1.00)
HHUS26-2	14	3 5/16	5 13/16	3	3 15/16	(14) 16d	(6) 16d	2850	7335	2065	5205
HHUS28-2	14	3 5/16	7 7/32	3	6 5/32	(22) 16d	(8) 16d	3765	8940	2675	6345
HHUS210-2	14	3 5/16	9 3/32	3	8	(30) 16d	(10) 16d	4670	9660	4235	7000
HHUS210-3	14	4 11/16	9	3	7 15/16	(30) 16d	(10) 16d	4670	9670	4235	6865
HHUS210-4	14	6 1/8	8 29/32	3	7 27/32	(30) 16d	(10) 16d	4670	10155	4235	7210
HHUS46	14	3 5/8	5 13/32	3	3 15/16	(14) 16d	(6) 16d	2540	7335	2065	5205
HHUS48	14	3 5/8	7 1/8	3	6 1/8	(22) 16d	(8) 16d	3765	8940	2675	6345
HHUS410	14	3 5/8	9	3	8	(30) 16d	(10) 16d	4670	9855	4235	7000
HHUS5.50/10	14	5 1/2	9	3	8	(30) 16d	(10) 16d	4670	10155	4235	7210
HHUS7.25/10	14	7 1/4	9	3 5/16	7 29/32	(30) 16d	(10) 16d	4670	10155	3370	7210

1. d_e is the distance from the seat of the hanger to the highest joist nail.

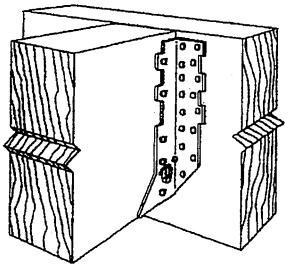

Typical HHUS Installation

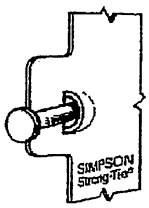

Dome Double Shear Nailing prevents tabs breaking off (available on some models).

U.S. Patent 5,603,580

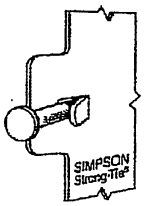

Double Shear Nailing Side View. Do not bend tab back.

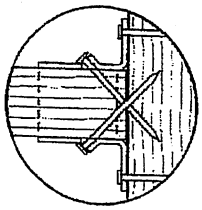

Double Shear Nailing Top View.

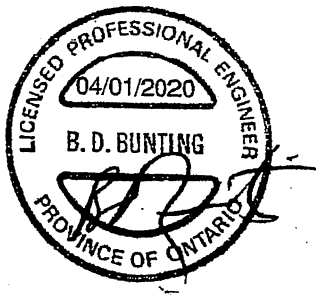

LIMIT STATES DESIGN

This technical bulletin is effective until June 30, 2022, and reflects information available as of April 1, 2020. This information is updated periodically and should not be relied upon after June 30, 2022. Contact Simpson Strong-Tie for current information and limited warranty or see strongtie.com.

© 2020 Simpson Strong-Tie Company Inc.

T-SPECHHUS20 3/20 exp. 6/22

REVIEWED

(800) 999-5099
strongtie.com

H/TSP

Seismic and Hurricane Ties (cont.)

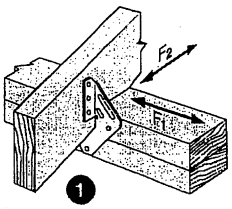

1 H1 Installation

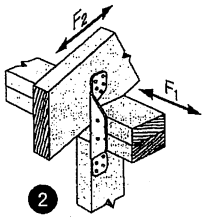

2 H2A Installation

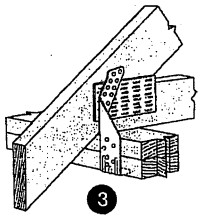

3 TSP Installation

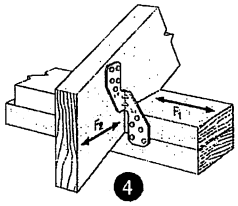

4 H2.5A Installation
(Nails into both top plates)

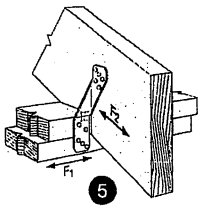

5 H2.5T Installation
(Nails into both top plates)

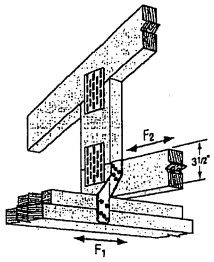

6 H2.5T Installation

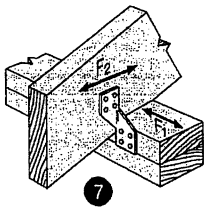

7 H3 Installation
(Nails into upper top plate)

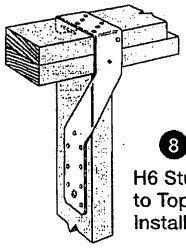

8 H6 Stud to Top Plate Installation

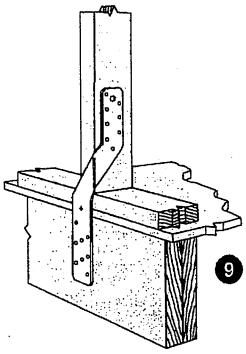

9 H6 Stud to Band Joist Installation

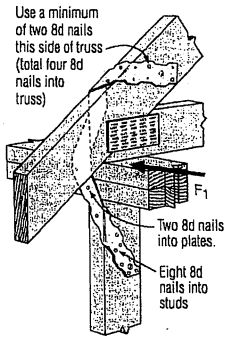

10 H7Z Installation

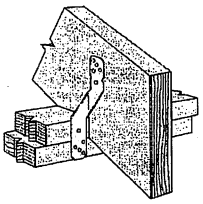

11 H8 Attaching Rafter to Double Top Plates

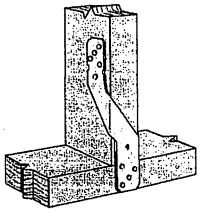

12 H8 attaching Stud to Sill
((4) 8d into plate, (5) 8d into stud)

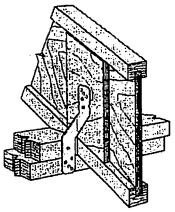

13 H8 attaching I-Joist to Double Top Plates

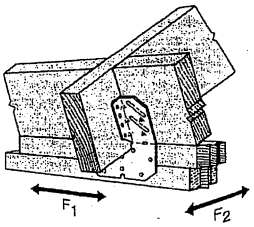

14 H10A Field-Bent Installation

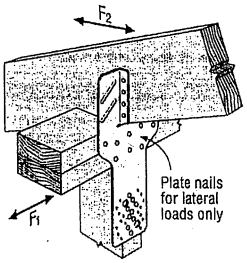

15 H10S Installation

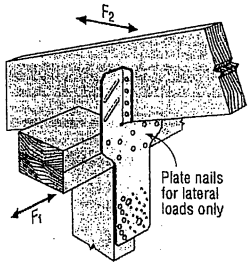

16 H10S Installation with Stud Offset

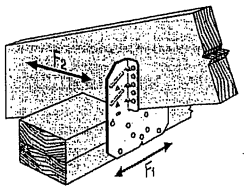

17 H10A Installation

H10A optional positive angle nailing connects shear blocking to rafter. Use 8d common nails. Slot allows maximum field-bending up to a pitch of 6/12, use 75% of the table uplift value; bend one time only.

1

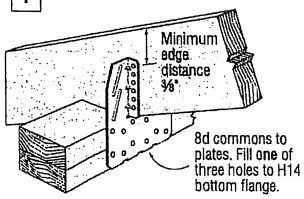

18 H14 Installation to Double Top Plates

2

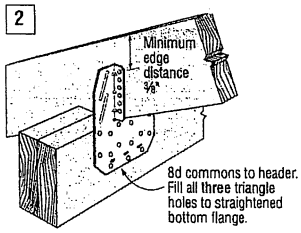

19 H14 Installation to Double 2x Header

Avoid a Misinstallation

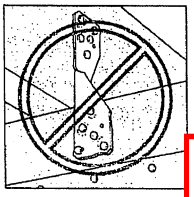

Do not make new holes or overdrive nails.

REVIEWED

C-C-CAN2018 ©2017 SIMPSON STRONG-TIE COMPANY INC.

H/TSP

Seismic and Hurricane Ties

Simpson Strong-Tie® hurricane ties provide a positive connection between truss/rafter and the wall of the structure to resist wind and seismic forces. New additions to the line provide even more options.

- H10AR — The heavy-duty design of the H10A available with a 2" wide throat to accommodate rough lumber
- H10A-2 — The H10A design with a 3" throat for double 2x members
- H2ASS, H2.5ASS and H10ASS — Popular ties now available in stainless steel

Material: See table

Finish: Galvanized. H7Z and H11Z — ZMAX® coating. Some models available in stainless steel or ZMAX; see Corrosion Information, pp. 20–24 or visit **strongtie.com**.

Installation:

- Use all specified fasteners; see General Notes.
- H1 can be installed with flanges facing inward (reverse of H1 installation drawing; number 1).
- H2.5T, H3 and H6 ties are shipped in equal quantities of right and left versions (right versions shown).
- Hurricane ties do not replace solid blocking.
- When installing ties on plated trusses (on the side opposite the truss plate) do not fasten through the truss plate from behind. This can force the truss plate off of the truss and compromise truss performance.
- H10A optional nailing to connect shear blocking, use 8d nails. Slots allow maximum field bending up to a pitch of 6:12, use H10A sloped loads for field bent installation.

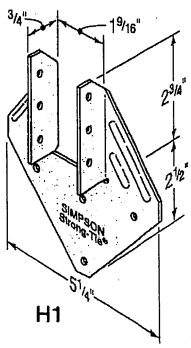
H1

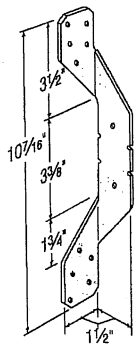
H2A
(H2ASS similar)

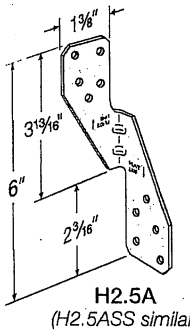
H2.5A
(H2.5ASS similar)

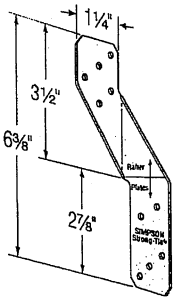
H2.5T

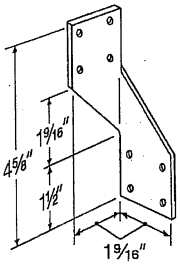
H3

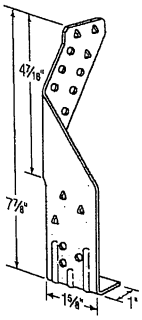
TSP

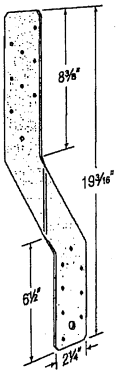
H6

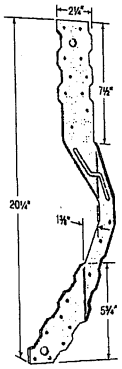
H7Z

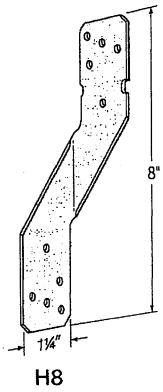
H8

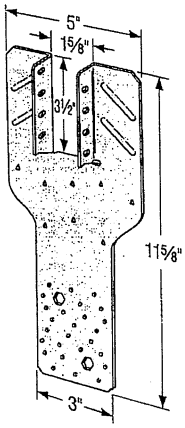
H10S

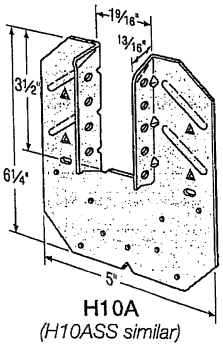
H10A
(H10ASS similar)

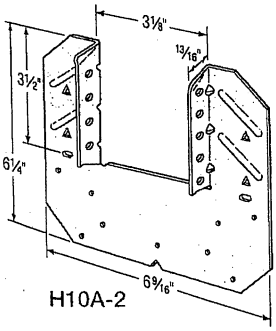
H10A-2

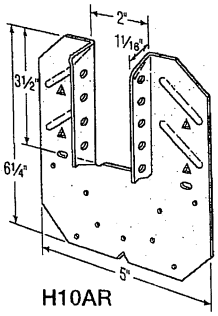
H10AR

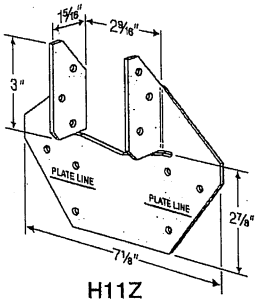
H11Z

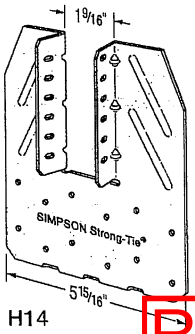
H14

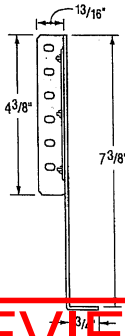
H14
Profile

REVIEWED

C-C-CAN2018 ©2017 SIMPSON STRONG-TIE COMPANY INC.

TECHNICAL BULLETIN

H – Seismic and Hurricane Ties

SIMPSON Strong-Tie®

The H connector series provides wind and seismic ties for trusses and rafters.

Material: 18 gauge **Finish:** G90 galvanized

Design: • Factored resistances are in accordance with CSA O86-14
- Factored resistances have been increased 15%. No further increase is permitted.

Installation: • Use all specified fasteners
- Nails: 8d = 0.131" dia. x 2½" long common wire, 8d x 1½" = 0.131" x 1½ long, 10d x 1½" = 0.146" x 1½" long
- H1 can be installed with flanges facing outwards
- Hurricane ties do not replace solid blocking

Factored resistances for more than one direction for a single connection cannot be added together. A factored load which can be divided into components in the directions given must be evaluated as follows: Factored Shear/Resisting Shear + Factored Tension/Resisting Tension ≤ 1.0.

Hurricane Tie Installations to Achieve Twice the Load (Top View)

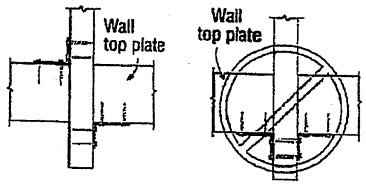

Install diagonally across from each other for minimum 2x truss.

Nailing into both sides of a single ply 2x truss may cause the wood to split.

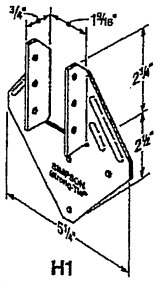

H1

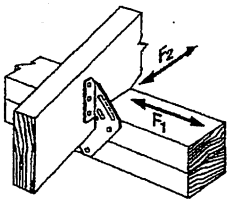

H1 Installation

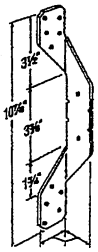

H2A

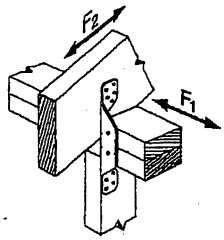

H2A Installation

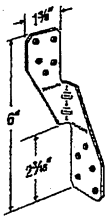

H2.5A

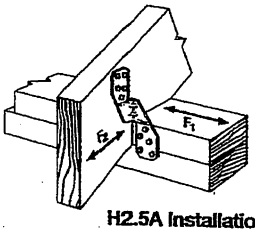

H2.5A Installation

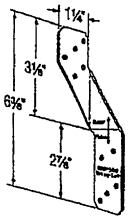

H2.5T

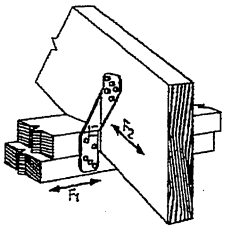

H2.5T Installation (Nails into both top plates)

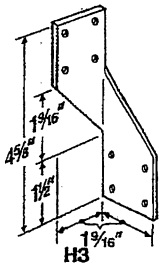

H3

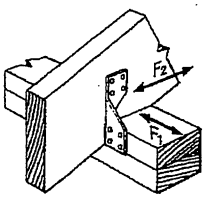

H3 Installation

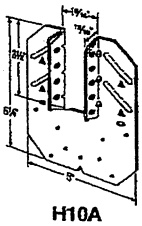

H10A

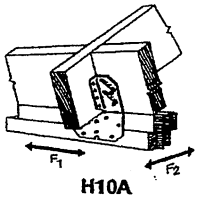

H10A Installation

Model No.	Ga.	Fasteners			Factored Resistance (lb.)					
					D.Fir-L			S-P-F		
		To Rafter	To Plates	To Studs	Uplift	Normal F_1	Normal F_2	Uplift	Normal F_1	Normal F_2
					(K_D=1.15)			(K_D=1.15)		
H1	18	(6) 8d x 1½"	(4) 8d	—	740	685	300	680	485	215
H2A	18	(5) 8d x 1½"	(2) 8d x 1½"	(5) 8d x 1½"	830	220	75	590	155	55
H2.5A	18	(5) 8d	(5) 8d	—	805	160	160	755	160	160
H2.5T	18	(5) 8d	(5) 8d	—	835	175	240	740	160	210
H3	18	(4) 8d	(4) 8d	—	740	180	265	615	125	190
H10A	18	(9) 10d x 1½"	(9) 10d x 1½"	—	1735	795	410	1505	565	290

1. Factored resistances have been increased 15% for earthquake or wind loading with no further increase allowed.
2. Factored resistances are for one anchor. A minimum rafter thickness of 2½" must be used when framing anchors are installed on each side of the joist and on the same side of the plate.
3. When cross-grain bending or cross-grain tension cannot be avoided, mechanical reinforcement to resist such forces should be considered.
4. Hurricane ties are shown installed on the outside of the wall for clarity. Installation on the inside of the wall is acceptable. For a Continuous Load Path, connections must be on same side of the wall.

LICENSED PROFESSIONAL ENGINEER
04/01/2020
B. D. BUNTING
PROVINCE OF ONTARIO

LIMIT STATES DESIGN

This technical bulletin is effective until June 30, 2022, and reflects information available as of April 1, 2020. This information is updated periodically and should not be relied upon after June 30, 2022. Contact Simpson Strong-Tie for current information and limited warranty or see strongtie.com.

© 2020 Simpson Strong-Tie Company Inc.

T-SPECH20 3/20 exp. 6/22

REVIEWED

(800) 999-5099
strongtie.com

TECHNICAL BULLETIN

TC – Truss Connectors

SIMPSON Strong-Tie®

The TC truss connector is an ideal connector for scissor trusses and can allow horizontal movement up to 1¼". The TC also attaches plated trusses to top plates or sill plates to resist uplift forces. Typically used on one or both ends of truss as determined by the building designer.

Material: 16 gauge

Finish: G90 galvanized

Design: Factored resistances are in accordance with CSA 086-14

Installation:

- Use all specified fasteners.
- Nails: 10d = 0.148" dia. x 3" long common wire, 10d x 1½ = 0.148" dia. x 1½" long.
- Drive 10d nails into the truss at the inside end of the slotted holes (inside end is towards the centre of the truss) and clinch on the back side. Do not seat these nails into the truss–allow room under the nail head for movement of the truss with respect to the wall.

Optional TC Installation:

- Bend one flange up 90°. Drive specified nails into the top and face of the top plates or install Titen® screws into the top and face of masonry wall. See optional load tables and installation details.

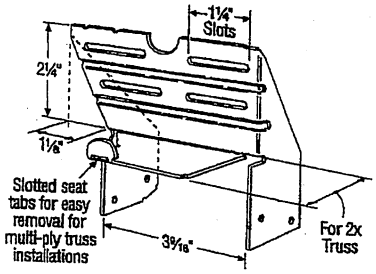

TC24
U.S. Patent 4,932,173

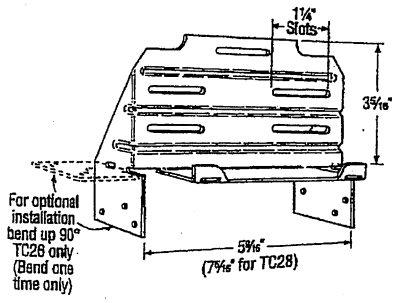

TC26
(TC28 Similiar)

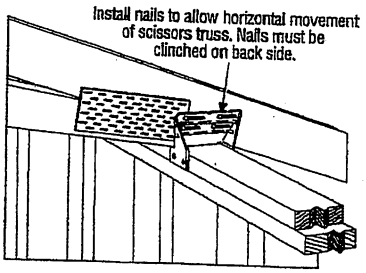

Typical TC24 Installation

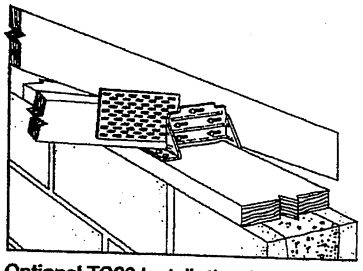

Optional TC26 Installation for Grouted Concrete Block using a Wood Nailer
(8", 10", 12" Wall Installation Similar)

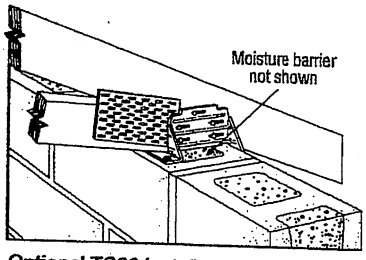

Optional TC26 Installation for Grouted Concrete Block using Titen Screws

Model No.	Fasteners		Factored Resistance	
	Truss	Wall Plates	D.Fir-L	S-P-F
			Uplift (K_D=1.15)	Uplift (K_D=1.15)
			lb.	lb.
TC24	(4) 10d	(4) 10d	605	430
TC26	(5) 10d	(6) 10d	1015	720
TC28	(5) 10d	(6) 10d	1015	720

Optional TC Installation Table

Model No.	Fasteners		Factored Resistance	
	Truss	Wall Plates	D.Fir-L	S-P-F
			Uplift (K_D=1.15)	Uplift (K_D=1.15)
			lb.	lb.
TC26	(5) 10d	(6) 10d x 1½"	810	660
	(5) 10d	(6) 10d	930	660

1. Factored resistances have been increased 15% for earthquake or wind loading; no further increase allowed; reduce where other loads govern.
2. Grout strength is 15 MPa minimum.
3. Optional TC26 installation with 10d nails requires minimum 3" top plate thickness.
4. TC26 fastened to grouted concrete block with (6) – ⅜" x 2¼" Titen screws has a factored uplift resistance of 275 lb.

LICENSED PROFESSIONAL ENGINEER
04/01/2020
B. D. BUNTING
PROVINCE OF ONTARIO

REVIEWED

LIMIT STATES DESIGN

This technical bulletin is effective until June 30, 2022, and reflects information available as of April 1, 2020. This information is updated periodically and should not be relied upon after June 30, 2022. Contact Simpson Strong-Tie for current information and limited warranty or see strongtie.com.

© 2020 Simpson Strong-Tie Company Inc.

(800) 999-5099
strongtie.com

HTU

SIMPSON Strong-Tie®

Face-Mount Truss Hanger (cont.)

These products are approved for installation with the Strong-Drive® SD Connector screw. See pp. 32–34 for more information.

Alternate Installation for (2) 2x4 and (2) 2x6 Headers

Model No.	Min. Heel Height (in.)	Minimum Header Size	Fasteners: Header	Fasteners: Joist	Factored Resistance D.Fir-L Uplift (K_D = 1.15) lb. / kN	D.Fir-L Normal (K_D = 1.00) lb. / kN	S-P-F Uplift (K_D = 1.15) lb. / kN	S-P-F Normal (K_D = 1.00) lb. / kN
HTU26 (Min.)	3⅞	(2) 2x4	(10) 16d	(14) 10d x 1½"	1740 / 7.74	3340 / 14.86	1235 / 5.49	2370 / 10.54
HTU26 (Max.)	5½	(2) 2x4	(10) 16d	(20) 10d x 1½"	2470 / 10.99	4015 / 17.86	1755 / 7.81	2850 / 12.68
HTU28 (Max.)	3⅞	(2) 2x6	(20) 16d	(26) 10d x 1½"	4150 / 18.46	6395 / 28.45	2945 / 13.10	4540 / 20.19
HTU210 (Max.)	7¼	(2) 2x6	(20) 16d	(32) 10d x 1½"	4150 / 18.46	6395 / 28.45	2945 / 13.10	4540 / 20.19

See table footnotes on p. 260.

LICENSED PROFESSIONAL ENGINEER
5/29/19
B. D. BUNTING
PROVINCE OF ONTARIO

Hanger Options

See Hanger Options information on pp. 125–127.

Skewed Seat

- Skewable up to 67½°
- Available in single and 2-ply size
- No bevel cut required

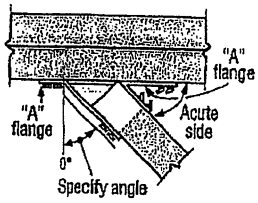

Top View HTU Hanger Skewed Right < 51°

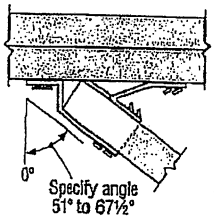

Top View HTU Hanger Skewed Right ≥ 51°

Factored Resistances for Skewed HTU Hangers

Model No.	Skew Angle (Degrees)	Fasteners: Header	Fasteners: Joist	Factored Resistance D.Fir-L Uplift (KD=1.15) lbs / kN	D.Fir-L Normal (KD=1.00) lbs / kN	S-P-F Uplift (KD=1.15) lbs / kN	S-P-F Normal (KD=1.00) lbs / kN
HTU26	< 51	(20) 16d	(14) 10d x 1½"	1835 / 8.16	4110 / 18.28	1300 / 5.78	2905 / 12.92
	51–67½	(20) 16d	(12) 10d x 1½"	1350 / 6.01	3620 / 16.10	955 / 4.25	2560 / 11.39
HTU28	< 51	(26) 16d	(20) 10d x 1½"	2810 / 12.50	4270 / 18.99	1985 / 8.83	3030 / 13.48
	51–67½	(26) 16d	(17) 10d x 1½"	2075 / 9.23	3930 / 17.48	1465 / 6.52	2780 / 12.37
HTU210	< 51	(32) 16d	(26) 10d x 1½"	3785 / 16.84	4430 / 19.71	2675 / 11.90	3135 / 13.95
	51–67½	(32) 16d	(22) 10d x 1½"	2795 / 12.43	4240 / 18.86	1980 / 8.81	3000 / 13.35
HTU26-2	< 51	(20) 16d	(14) 10d	2140 / 9.52	3715 / 16.53	1515 / 6.74	2625 / 11.68
	51–67½	(20) 16d	(12) 10d	1610 / 7.16	3920 / 17.44	1140 / 5.07	2785 / 12.39
HTU28-2	< 51	(26) 16d	(20) 10d	3960 / 17.62	5425 / 24.13	2815 / 12.52	3855 / 17.15
	51–67½	(26) 16d	(17) 10d	2385 / 10.61	5425 / 24.13	1695 / 7.54	3855 / 17.15
HTU210-2	< 51	(32) 16d	(26) 10d	5025 / 22.35	6890 / 30.65	3570 / 15.88	4890 / 21.75
	51–67½	(36) 16d	(22) 10d	3145 / 13.99	6680 / 29.72	2225 / 9.90	4745 / 21.10

1. Factored uplift resistances have been increased 15% for wind or earthquake loading; no further increase is allowed.
2. Reduced heel heights are not permitted for skewed HTU's.
3. Nails: 16d = 0.162" dia. x 3½" long, 10d x 1½" = 0.148" dia. x 1½" long, 10d = 0.148" dia. x 3" long. See pp. 27–28 for other nail sizes and information.

REVIEWED

Plated Truss Connectors

C-C-CAN2018 ©2017 SIMPSON STRONG-TIE COMPANY INC.

ONTARIO WOOD TRUSS
FABRICATORS ASSOCIATION

TECH-NOTES

TN 15-001
Piggyback Bracing

Overview:

Where piggybacks are connected overtop of base trusses, 2x4 purlins must be first added to the flat portion of the base truss at a spacing no more than 24" o/c. These purlins not only provide support for the piggyback trusses above, but are required to laterally support the top chord of the base truss which will not have the sheathing directly connected to the flat portion of the base truss. This ensures the top chord, most often in compression, will not buckle laterally.

Further, the purlins in the plane of the flat portion require diagonal bracing to prevent lateral displacement of the purlins themselves where under certain conditions, the trusses may in fact all buckle in the same direction if this additional bracing is not added in the plane of the purlins.

Detail:

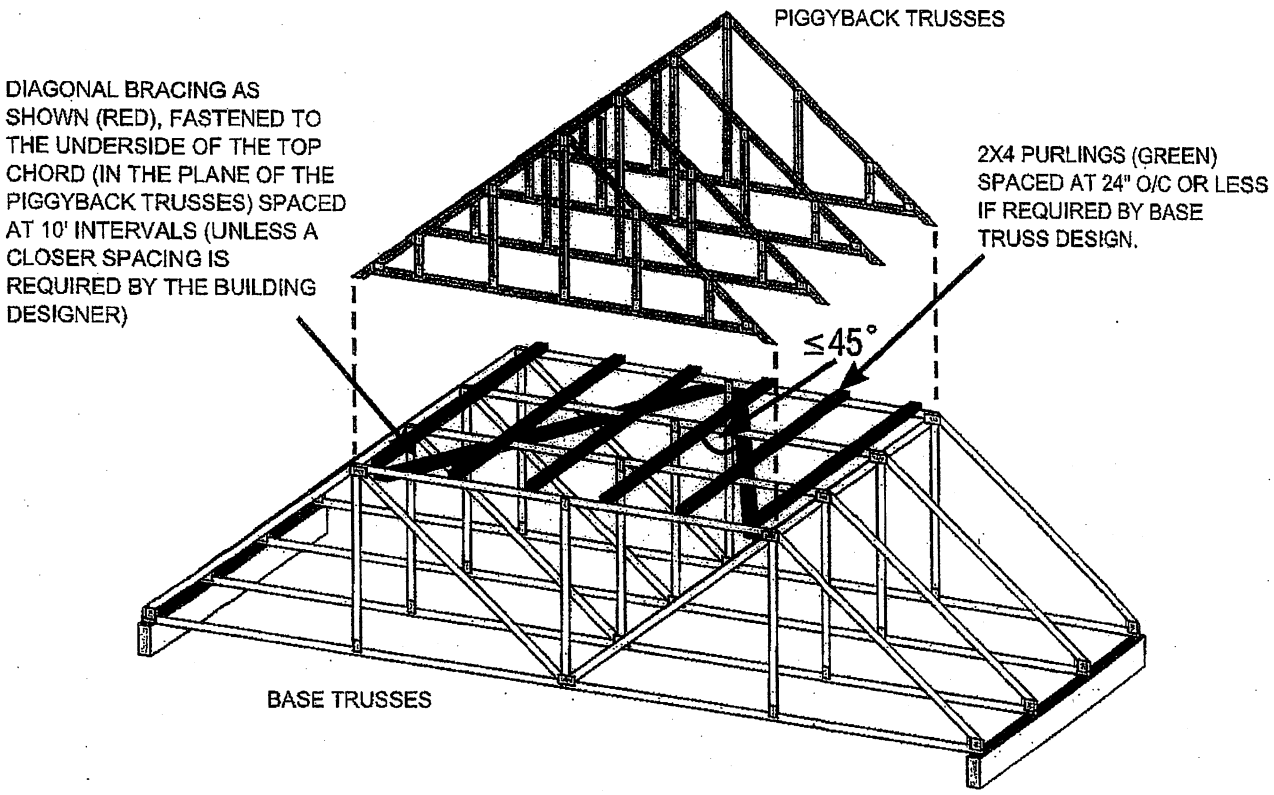

NOTE: THE SLOPED PORTION OF THE TOP CHORD OF THE BASE TRUSS AND PIGGYBACK TRUSS IN THIS SKETCH IS ASSUMED TO BE SHEATHED IN ACCORDANCE WITH THE OBC.

SKETCH FROM BCSI-CANADA 2013

Disclaimer:

OWTFA Tech Notes are intended to provide guidance to the design community both within the membership as well as to third party designers who might benefit from the information. The details have been developed by the OWTFA technical committee and although there may be professional engineers involved in development, the information contained in the tech note are not intended to be used without having a professional engineer review the information for a specific application. The OWTFA takes no responsibility with respect to the information provided but has developed this tech-note to offer guidance where it is not currently readily available.

REVIEWED

HRS/HST/ST/PS/LSTA/LSTI/MST/MSTA/MSTC/MSTI

SIMPSON Strong-Tie®

Strap Ties

Straps are designed to transfer tension loads in a wide variety of applications.

HRS — Heavy strap designed for installation on the edge of 2x members. The HRS416Z installs with Strong-Drive® SDS Heavy-Duty Connector screws.

LSTA and MSTA — Designed for use on the edge of 2x members, with a nailing pattern that reduces the potential for splitting.

LSTI and MSTI — Light and medium straps that are suitable where pneumatic-nailing is necessary through diaphragm decking and wood chord open-web trusses.

MST — High-capacity strap that can be installed with either nails or bolts. Suitable for double 2x member connections or greater.

MSTC — High-capacity strap that utilizes a staggered nail pattern to help minimize wood splitting. Nail slots have been countersunk to provide a lower nail head profile.

Finish: Galvanized. Some products are available in stainless steel, ZMAX® coating or black powder coat (add PC to sku); contact Simpson Strong-Tie. See Corrosion Information, pp. 18–20.

Installation: Use all specified fasteners; see General Notes

Options: Special sizes can be made to order; contact Simpson Strong-Tie for longer lengths

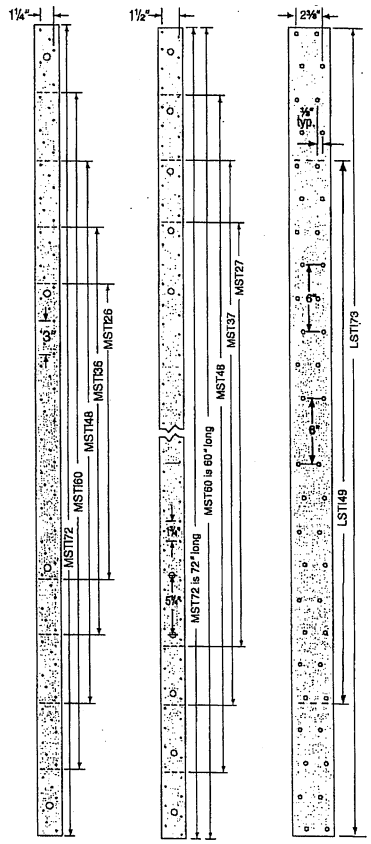

MSTI MST LSTI

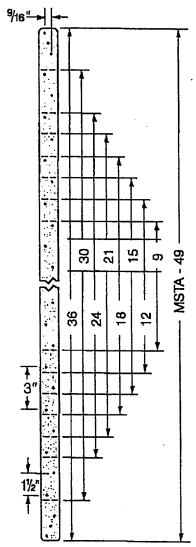

LSTA and MSTA
(Pilot holes not shown)

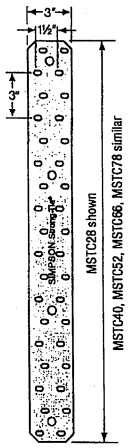

MSTC

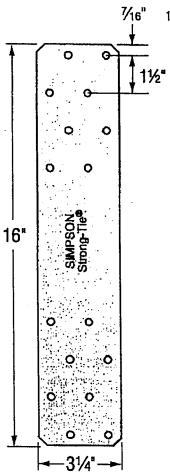

HRS416Z

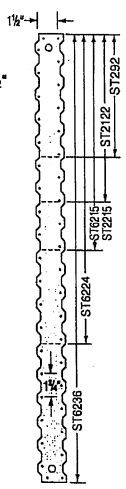

ST

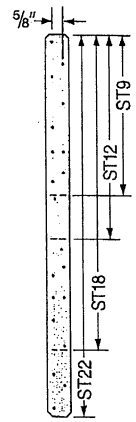

ST9, ST12, ST18, ST22

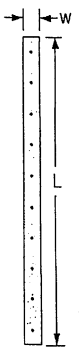

ST2115

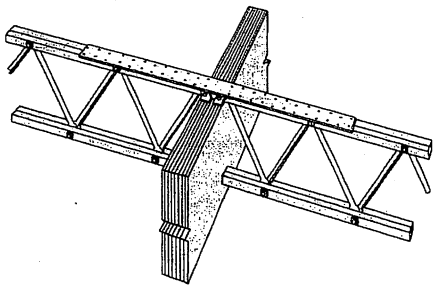

Typical LSTI Installation

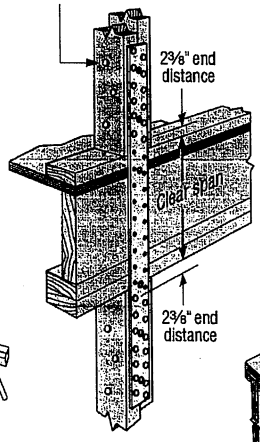

Floor-to-Floor Tie Installation Showing a Clear Span

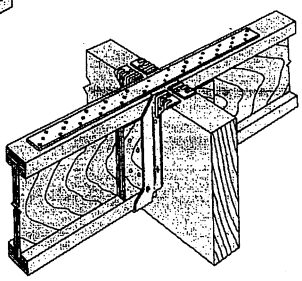

Typical MSTI Installation
(MIT hanger shown)
LSTI similar

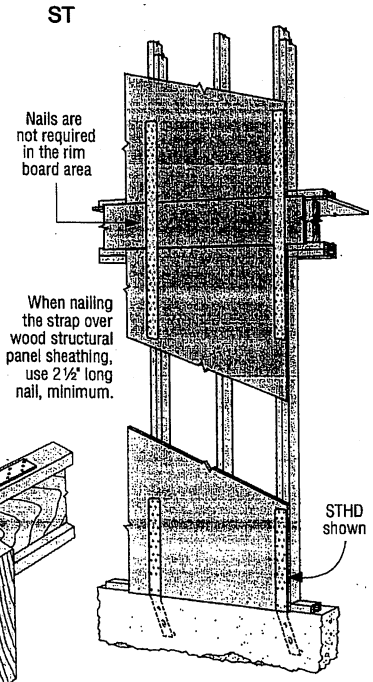

Typical Detail with Strap Installed over Wood Structural Panel Sheathing

C-C-CAN2020 ©2020 SIMPSON STRONG-TIE COMPANY INC.

REVIEWED

HRS/HST/ST/PS/LSTA/LSTI/MST/MSTA/MSTC/MSTI

Strap Ties (cont.)

These products are available with additional corrosion protection. For more information, see p. 20.

SD Many of these products are approved for installation with Strong-Drive® SD Connector screws. See pp. 366–370 for more information.

Model No.	Ga.	Dimensions (in.) W	Dimensions (in.) L	Fasteners (Total)	Factored Tensile Resistance D.Fir–L (K_D = 1.00) lb. / kN	D.Fir–L (K_D = 1.15) lb. / kN	S-P-F (K_D = 1.00) lb. / kN	S-P-F (K_D = 1.15) lb. / kN
LSTA9	20	1¼	9	(6) 10d	600	690	555	635
					2.67	3.07	2.47	2.82
LSTA12		1¼	12	(8) 10d	800	920	735	845
					3.56	4.09	3.27	3.76
LSTA15		1¼	15	(10) 10d	1000	1150	920	1060
					4.45	5.12	4.09	4.72
LSTA18		1¼	18	(12) 10d	1200	1380	1105	1270
					5.34	6.14	4.92	5.65
LSTA21		1¼	21	(14) 10d	1400	1610	1290	1485
					6.23	7.16	5.74	6.61
LSTA24		1¼	24	(16) 10d	1600	1840	1475	1695
					7.12	8.19	6.56	7.54
ST292		2 1/16	9 5/16	(8) 8d	585	675	535	615
					2.60	3.00	2.38	2.74
ST2122		2 1/16	12 13/16	(12) 8d	940	1085	865	995
					4.18	4.83	3.85	4.43
ST2115		¾	16 5/16	(8) 8d	670	770	615	710
					2.98	3.43	2.74	3.16
ST2215		2 1/16	16 5/16	(16) 8d	1335	1540	1235	1420
					5.94	6.85	5.49	6.32
LSTA30	18	1¼	30	(20) 10d	2235	2465	2075	2385
					9.94	10.97	9.23	10.61
LSTA36		1¼	36	(24) 10d	2465	2465	2465	2465
					10.97	10.97	10.97	10.97
LSTI49		3¾	49	(32) 10d x 1½"	3115	3580	2852	3280
					13.86	15.93	12.69	14.59
LSTI73		3¾	73	(48) 10d x 1½"	4670	5370	4280	4920
					20.77	23.89	19.04	21.89
MSTA9		1¼	9	(6) 10d	670	770	625	715
					2.98	3.43	2.78	3.18
SS MSTA12		1¼	12	(8) 10d	895	1030	830	955
					3.98	4.58	3.69	4.25
MSTA15		1¼	15	(10) 10d	1120	1285	1040	1195
					4.98	5.72	4.63	5.32
SS MSTA18		1¼	18	(12) 10d	1340	1545	1245	1430
					5.96	6.87	5.54	6.36
MSTA21		1¼	21	(14) 10d	1565	1800	1455	1670
					6.96	8.01	6.47	7.43
SS MSTA24		1¼	24	(16) 10d	1790	2060	1660	1910
					7.96	9.16	7.38	8.50
MSTA30	16	1¼	30	(20) 10d	2470	2840	2260	2595
					10.99	12.63	10.05	11.54
SS MSTA36		1¼	36	(24) 10d	2965	3070	2710	3070
					13.19	13.66	12.06	13.66
MSTA49		1¼	49	(28) 8d	2725	2725	2545	2725
					12.12	12.12	11.32	12.12
ST6215		2 1/16	16 5/16	(16) 8d	1405	1615	1300	1500
					6.25	7.18	5.78	6.67
ST6224		2 1/16	23 5/16	(24) 8d	2305	2650	2155	2475
					10.25	11.79	9.59	11.01
ST9		1¼	9	(6) 8d	525	605	490	560
					2.34	2.69	2.18	2.49
ST12		1¼	11⅝	(8) 8d	700	805	650	750
					3.11	3.58	2.89	3.34
ST18		1¼	17¾	(12) 8d	1050	1210	975	1125
					4.67	5.38	4.34	5.00
ST22		1¼	21⅝	(18) 8d	1580	1790	1465	1685
					7.03	7.96	6.52	7.50

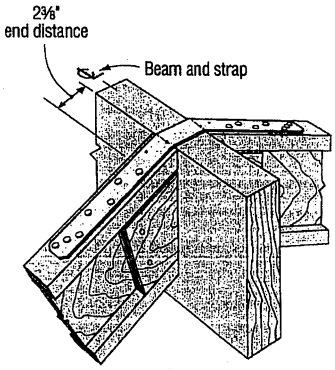

Typical LSTA Installation
(hanger not shown)
Bend strap one time only

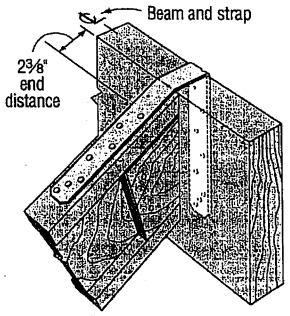

Typical LSTA Installation
(hanger not shown)
Bend strap one time only

1. Factored resistances have been increased 15% for earthquake or wind loading with no further increase allowed.
2. Use half of the nails in each member being connected to achieve the listed resistances.
3. **Nails:** 10d = 0.148" dia. x 3" long, 10d x 1½" = 0.148" dia. x 1½" long, 8d = 0.131" dia. x 2½" long. See pp. 22–23 for other nail sizes and information.

C-C-CAN2020 ©2020 SIMPSON STRONG-TIE COMPANY INC.

REVIEWED

HRS/HST/ST/PS/LSTA/LSTI/MST/MSTA/MSTC/MSTI

SIMPSON Strong-Tie®

Strap Ties (cont.)

These products are available with additional corrosion protection. For more information, see p. 20.

SD Many of these products are approved for installation with Strong-Drive® SD Connector screws. See pp. 366–370 for more information.

Model No.	Ga.	Dimensions (in.) W	Dimensions (in.) L	Fasteners (Total)	Factored Tensile Resistance D.Fir–L (K_D = 1.00) lb. / kN	D.Fir–L (K_D = 1.15) lb. / kN	S-P-F (K_D = 1.00) lb. / kN	S-P-F (K_D = 1.15) lb. / kN
MSTC28	16	3	28¼	(32) 10d	3955	4545	3615	4155
					17.59	20.22	16.08	18.48
MSTC40		3	40¼	(48) 10d	5930	6820	5420	6235
					26.38	30.34	24.11	27.74
MSTC52		3	52¼	(54) 10d	6670	6940	6100	6940
					29.67	30.87	27.14	30.87
MSTC66	14	3	65¾	(66) 10d	8515	8565	7455	8565
					37.88	38.10	33.16	38.10
MSTC78		3	77¾	(66) 10d	8515	8565	7455	8565
					37.88	38.10	33.16	38.10
ST6236		2 1/16	33 13/16	(36) 8d	3735	4295	3270	3760
					16.61	19.11	14.55	16.73
MSTI26	12	2 1/16	26	(22) 10d x 1½"	2825	3250	2475	2850
					12.57	14.46	11.01	12.68
MSTI36		2 1/16	36	(32) 10d x 1½"	4110	4725	3600	4140
					18.28	21.02	16.01	18.42
MSTI48		2 1/16	48	(44) 10d x 1½"	5650	6500	4955	5695
					25.13	28.91	22.04	25.33
MSTI60		2 1/16	60	(56) 10d x 1½"	7195	7360	6305	7250
					32.01	32.74	28.05	32.25
MSTI72		2 1/16	72	(68) 10d x 1½"	7360	7360	7240	7360
					32.74	32.74	32.21	32.74
MST27		2 1/16	27	(26) 8d	2685	3090	2355	2710
					11.94	13.75	10.48	12.06
MST37		2 1/16	37½	(38) 8d	3930	4515	3440	3960
					17.48	20.08	15.30	17.62
MST48		2 1/16	48	(50) 8d	5170	5945	4530	5210
					23.00	26.45	20.15	23.18
HRS416Z		3¼	16	(16) ¼" x 1½" SDS	2400	2760	2120	2440
					10.68	12.28	9.43	10.85
MST60	10	2 1/16	60	(64) 8d	6620	7610	5800	6670
					29.45	33.85	25.80	29.67
MST72		2 1/16	72	(78) 8d	8065	9135	7065	8125
					35.88	40.64	31.43	36.14

1. Factored resistances have been increased 15% for earthquake or wind loading with no further increase allowed.
2. Use half of the nails in each member being connected to achieve the listed resistances.
3. **Nails:** 10d = 0.148" dia. x 3" long, 10d x 1½" = 0.148" dia. x 1½" long, 8d = 0.131" dia. x 2½" long. See pp. 22–23 for other nail sizes and information.

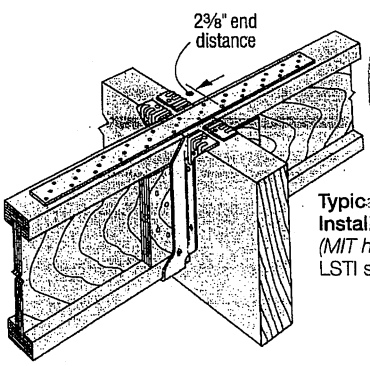

Typical MSTI Installation
(MIT hanger shown)
LSTI similar

LICENSED PROFESSIONAL ENGINEER
Jan. 5, 2021
G. V. LUBARSKY
100044463
PROVINCE OF ONTARIO

REVIEWED

Straps and Ties

C-C-CAN2020 ©2020 SIMPSON STRONG-TIE COMPANY INC.

Symbols

PLATE LOCATION AND ORIENTATION

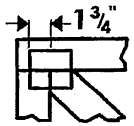

Center plate on joint unless x, y offsets are indicated. Dimensions are in ft-in-sixteenths or mm. Apply plates to both sides of truss and fully embed teeth.

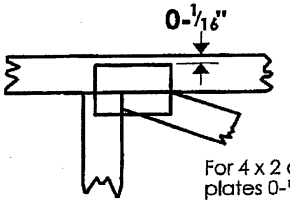

For 4 x 2 orientation, locate plates 0-1/16" from outside edge of truss.

This symbol indicates the required direction of slots in connector plates.

*Plate location details available in MiTek software or upon request.

PLATE SIZE

4 x 4

The first dimension is the plate width measured perpendicular to slots. Second dimension is the length parallel to slots.

LATERAL BRACING LOCATION

Indicated by symbol shown and/or by text in the bracing section of the output. Use T, I or Eliminator bracing if indicated.

BEARING

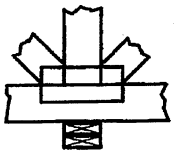

Indicates location where bearings (supports) occur. Icons vary but reaction section indicates joint number where bearings occur.

Industry Standards:

TPIC: Truss Design Procedures and Specifications for Light Metal Plate Connected Wood Trusses

DSB-89: Design Standard for Bracing.

BCSI: Building Component Safety Information, Guide to Good Practice for Handling, Installing & Bracing of Metal Plate Connected Wood Trusses.

Numbering System

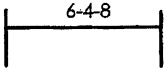

dimensions shown in ft-in-sixteenths or mm (Drawings not to scale)

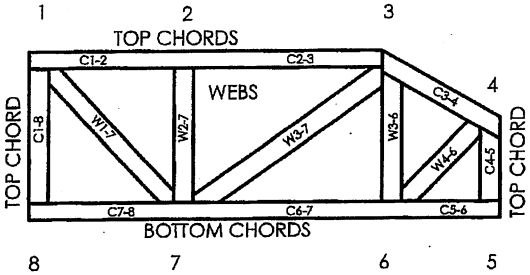

JOINTS ARE GENERALLY NUMBERED/LETTERED CLOCKWISE AROUND THE TRUSS STARTING AT THE JOINT FARTHEST TO THE LEFT.

CHORDS AND WEBS ARE IDENTIFIED BY END JOINT NUMBERS/LETTERS.

PRODUCT CODE APPROVALS

CCMC Reports:

11996-L, 10319-L, 13270-L, 12691-R

© 2007 MiTek® All Rights Reserved

MiTek®

POWER TO PERFORM.™

MiTek Engineering Reference Sheet: MII-7473C rev. 10-'08

General Safety Notes

Failure to Follow Could Cause Property Damage or Personal Injury

1. Additional stability bracing for truss system, e.g. diagonal or X-bracing, is always required. See BCSI.
2. Truss bracing must be designed by an engineer. For wide truss spacing, individual lateral braces themselves may require bracing, or alternative T, I, or Eliminator bracing should be considered.
3. Never exceed the design loading shown and never stack materials on inadequately braced trusses.
4. Provide copies of this truss design to the building designer, erection supervisor, property owner and all other interested parties.
5. Cut members to bear tightly against each other.
6. Place plates on each face of truss at each joint and embed fully. Knots and wane at joint locations are regulated by TPIC.
7. Design assumes trusses will be suitably protected from the environment in accord with TPIC.
8. Unless otherwise noted, moisture content of lumber shall not exceed 19% at time of fabrication.
9. Unless expressly noted, this design is not applicable for use with fire retardant, preservative treated, or green lumber.
10. Camber is a non-structural consideration and is the responsibility of truss fabricator. General practice is to camber for dead load deflection.
11. Plate type, size, orientation and location dimensions indicated are minimum plating requirements.
12. Lumber used shall be of the species and size, and in all respects, equal to or better than that specified.
13. Top chords must be sheathed or purlins provided at spacing indicated on design.
14. Bottom chords require lateral bracing at 10 ft. spacing, or less, if no ceiling is installed, unless otherwise noted.
15. Connections not shown are the responsibility of others.
16. Do not cut or alter truss member or plate without prior approval of an engineer.
17. Install and load vertically unless indicated otherwise.
18. Use of green or treated lumber may pose unacceptable environmental, health or performance risks. Consult with project engineer before use.
19. Review all portions of this design (front, back, words and pictures) before use. Reviewing pictures alone is not sufficient.
20. Design assumes manufacture in accordance with TPIC Quality Criteria.

REVIEWED