= 2 hr F.R.R.

= 1 hr F.R.R.

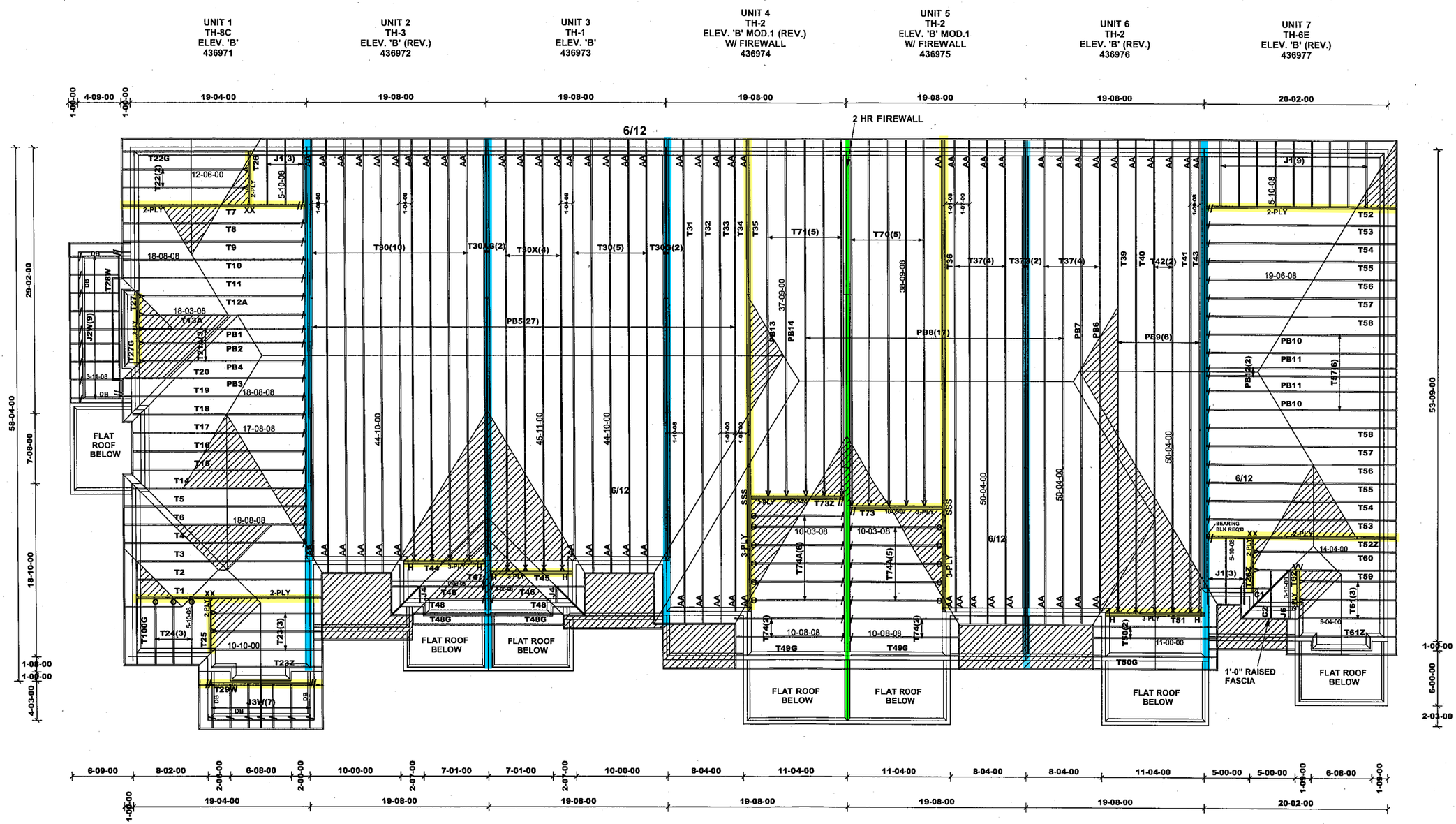

ASPHALT SHINGLES
FINISHED OVERHANG: 12"
2x6 EXTERIOR WALLS
2x6 FASCIA BOARD
HEEL: R.T.M.C.

ROOF PITCHES TO BE 10/12 UNLESS NOTED OTHERWISE

All conventional framing to conform with Part 9 of O.B.C. 2012. Roof rafters that cross over or meet trusses to be min. 2x4 SPF #2 @ 24" o/c with a vertical post to the truss at each cross point. Vertical posts longer than 6' to have lateral bracing so that the distance between the post end points and lateral bracing does not exceed 6'.

DESIGN CONFORMS WITH OBC 2012(2019 AMENDMENT)
OCCUPANCY: RESIDENTIAL | PART: 9
Ss = 43.9 psf | Sr = 8.4 psf

DESIGN LOADS:
TCSL = 32.5 psf
TCDL = 6.0 psf
BCLL = 0.0 psf
BCDL = 7.4 psf

DENOTES: CONVENTIONAL FRAMING

HARDWARE:
LUS24 - (O)
LJS26DS - (V)
HGUS26 - (X)
LUS26-2 - (VV)
HGUS26-2 - (XX)
HGUS28-3 - (SSS)
H2.5T - (/)
H2.5A - (A)
LGT3-SDS2.5 - (H)

DB - DROPPED BEAMS BY OTHERS

M16103

TAMARACK ROOF TRUSSES INC.

Job Track: 53568	Builder / Location: BAYVIEW WELLINGTON / BRADFORD	Model / Elevation: BLOCK 403-1 / UNIT 1-7	Mitek ver 8.6.3.353
Plan Log: 207795	Project: GREEN VALLEY ESTATE (2024)		
Layout ID: 436388	Date: 2024-04-03 Sales: Rick DiCiano Designer:		

THESE DRAWINGS CONSTITUTE THE PROPERTY OF TAMARACK ROOF TRUSSES INC., SHALL NOT BE REPRODUCED, PUBLISHED, OR REDISTRIBUTED IN ANY MANNER OR UTILIZED FOR ANY PURPOSE OTHER THAN THE MANUFACTURE OF TRUSSES BY TAMARACK ROOF TRUSSES INC AND WILL BE RETRACTED BY TAMARACK ROOF TRUSSES INC IF UTLILZED FOR ANY OTHER PURPOSE.

DELIVERY SHIPLIST

TAMARACK ROOF TRUSSES INC.
ALPA LUMBER GROUP

Lumber Yard:	TAMARACK LUMBER	Job Track:	53568
Builder:	BAYVIEW WELLINGTON	PlanLog:	207795
Project:	GREEN VALLEY ESTATE (2024)	Layout ID:	436971
Location:	BRADFORD	Ref #	
Model:	BLOCK 403-1	Page:	1 of 4
Lot #:		Date:	04-03-2024
Elevation:	UNIT 1	Designer:	
		Sales Rep:	Rick DiCiano

Roof Trusses

PROFILE	QTY PLY	MARK TYPE	PITCH	SPAN	HEIGHT	LUMBER	OVERHANG LEFT RIGHT	HEEL HEIGHT LEFT RIGHT	LBS. BFT.	BUNDLE # STACK #	LOAD BY REMARKS
	1 2-ply	T1 Hip Girder	10 /12	**18-10-00**	6-06-07	2 x 4 2 x 6	1-03-08	1-09-06 1-07-11	200.59 125.67		
	1	T2 Hip	10 /12	**18-10-00**	8-02-07	2 x 4	1-03-08	1-09-06 1-07-11	94.89 60.50		
	1	T3 Hip	10 /12	**18-10-00**	8-03-11	2 x 4	1-03-08	1-09-06 1-07-11	95.47 59.83		
	1	T4 Hip	10 /12	**18-08-08**	6-07-11	2 x 4	1-03-08	1-07-11 1-10-10	90.68 57.67		
	1	T5 Roof Special	10 /12	**18-08-08**	9-01-11	2 x 4	1-03-08	1-07-11 1-10-10	95.07 62.00		
	1	T6 Roof Special	10 /12	**18-08-08**	9-01-11	2 x 4	1-03-08	1-07-11 1-10-10	92.37 59.50		
	1 2-ply	T7 Half Hip Girder	10 /12	**18-08-08**	4-01-04	2 x 4 2 x 6	1-03-08	1-07-11 4-01-04	178.16 112.67		
	1	T8 Half Hip	10 /12	**18-08-08**	5-01-04	2 x 4	1-03-08	1-07-11 5-01-04	82.84 53.17		
	1	T9 Half Hip	10 /12	**18-08-08**	6-01-04	2 x 4	1-03-08	1-07-11 6-01-04	88.98 55.83		
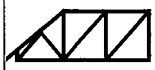	1	T10 Half Hip	10 /12	**18-08-08**	7-01-04	2 x 4	1-03-08	1-07-11 7-01-04	90.17 56.50		
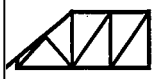	1	T11 Half Hip	10 /12	**18-08-08**	8-01-04	2 x 4	1-03-08	1-07-11 8-01-04	95.55 60.33		
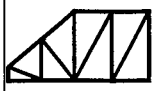	1	T12A Half Hip	10 /12	**18-03-08**	9-01-04	2 x 4		1-11-14 9-01-04	98.89 62.67		
	1	T13A Half Hip	10 /12	**18-03-08**	10-01-04	2 x 4		1-11-14 10-01-04	111.33 69.50		
	1	T14 Half Hip	10 /12	**17-08-08**	5-01-04	2 x 4	1-03-08	1-07-11 5-01-04	79.99 51.83		

DELIVERY SHIPLIST

TAMARACK ROOF TRUSSES INC.
ALPA LUMBER GROUP

Lumber Yard:	TAMARACK LUMBER	Job Track:	53568
Builder:	BAYVIEW WELLINGTON	PlanLog:	207795
Project:	GREEN VALLEY ESTATE (2024)	Layout ID:	436971
Location:	BRADFORD	Ref #	
Model:	BLOCK 403-1	Page:	2 of 4
Lot #:		Date:	04-03-2024
Elevation:	UNIT 1	Designer:	
		Sales Rep:	Rick DiCiano

Roof Trusses

PROFILE	QTY PLY	MARK TYPE	PITCH	SPAN	HEIGHT	LUMBER	OVERHANG LEFT RIGHT	HEEL HEIGHT LEFT RIGHT	LBS. BFT.	BUNDLE # STACK #	LOAD BY REMARKS
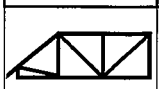	1	T15 Half Hip	10 /12	**17-08-08**	6-01-04	2 x 4	1-03-08	1-07-11 6-01-04	78.4 50.00		
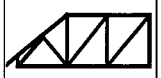	1	T16 Half Hip	10 /12	**17-08-08**	7-01-04	2 x 4	1-03-08	1-07-11 7-01-04	87.37 55.17		
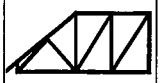	1	T17 Half Hip	10 /12	**17-08-08**	8-01-04	2 x 4	1-03-08	1-07-11 8-01-04	92.82 58.00		
	1	T18 Half Hip	10 /12	**17-08-08**	9-01-04	2 x 4	1-03-08	1-07-11 9-01-04	98.79 62.17		
	1	T19 Roof Special	10 /12	**18-08-08**	10-01-04	2 x 4	1-03-08	1-07-11 10-01-04	120.8 77.00		
	1	T20 Piggyback Base	10 /12	**18-08-08**	9-01-04	2 x 4	1-03-08	1-07-11 9-01-04	115.09 73.17		
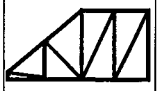	3	T21A Piggyback Base	10 /12	**18-03-08**	9-01-04	2 x 4		1-01-14 9-01-04	293.43 184.50		
	2	T22 Common	10 /12	**12-06-00**	6-10-03	2 x 4	1-03-08 1-03-08	1-07-11 1-07-11	120.2 79.00		
	1	T22G GABLE	10 /12	**12-06-00**	6-10-03	2 x 4	1-03-08 1-03-08	1-07-11 1-07-11	60.87 40.50		
	3	T23 Common	10 /12	**10-10-00**	6-01-14	2 x 4	1-03-08 1-03-08	1-07-11 1-07-11	145.4 93.00		
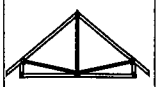	1	T23Z Common	10 /12	**10-10-00**	6-01-14	2 x 4	1-03-08 1-03-08	1-07-11 1-07-11	48.47 31.00		
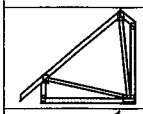	3	T24 Common	10 /12	**5-10-08**	5-09-11	2 x 4	1-03-08	1-07-11 5-00-15	99.12 66.00		
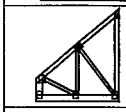	1 2-ply	T25 Monopitch Girder	10 /12	**5-10-08**	6-06-07	2 x 4 2 x 6		1-07-11 6-06-07	72.89 46.67		
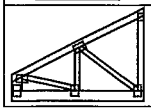	1 2-ply	T26 Monopitch Girder	6 /12	**5-10-08**	4-01-04	2 x 4 2 x 6		1-02-00 4-01-04	58.39 37.67		

DELIVERY SHIPLIST

TAMARACK ROOF TRUSSES INC.
ALPA LUMBER GROUP

Lumber Yard:	TAMARACK LUMBER	Job Track:	53568
Builder:	BAYVIEW WELLINGTON	PlanLog:	207795
Project:	GREEN VALLEY ESTATE (2024)	Layout ID:	436971
Location:	BRADFORD	Ref #	
Model:	BLOCK 403-1	Page:	3 of 4
Lot #:		Date:	04-03-2024
Elevation:	UNIT 1	Designer:	
		Sales Rep:	Rick DiCiano

Roof Trusses

PROFILE	QTY PLY	MARK TYPE	PITCH	SPAN	HEIGHT	LUMBER	OVERHANG LEFT RIGHT	HEEL HEIGHT LEFT RIGHT	LBS. BFT.	BUNDLE # STACK #	LOAD BY REMARKS
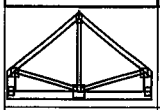	1 2-ply	T27 Common Girder	10 /12	8-04-00	5-01-06	2 x 4 2 x 6		1-07-11 1-07-11	83.52 57.00		
	1	T27G GABLE	10 /12	8-04-00	5-01-06	2 x 4 2 x 6	1-03-08 1-03-08	1-07-11 1-07-11	47.06 32.17		
	1	T28W Flat Girder	0 /12	15-08-00	1-07-12	2 x 4		1-07-12 1-07-12	57.89 37.67		
	1	T29W Flat Girder	0 /12	10-10-00	1-06-02	2 x 4		1-06-02 1-06-02	35.88 22.50		
	1	T100G GABLE	10 /12	10-00-00	5-09-11	2 x 4	1-03-08 1-03-08	1-07-11 1-07-11	49.41 33.33		
	1	PB1 Piggyback	10 /12	8-09-00	1-09-06	2 x 4		1-09-06	27.33 19.00		
	1	PB2 Piggyback	10 /12	8-09-00	2-06-12	2 x 4		2-06-12	28.38 18.00		
	1	PB3 Piggyback	10 /12	8-09-00	2-00-00	2 x 4		2-00-00	27.78 19.67		
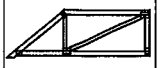	1	PB4 Piggyback	10 /12	8-09-00	2-11-00	2 x 4		2-11-00	29.01 19.83		
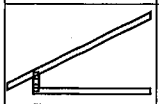	3	J1 Jack-Open	6 /12	5-10-08	4-01-04	2 x 4	1-03-08	1-02-00 4-01-04	50.38 32.00		
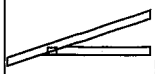	9	J2W Jack-Open	4 /12	3-11-08	2-00-11	2 x 4	1-03-08	3-15 1-07-12	98.42 60.00		
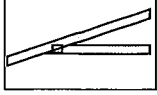	7	J3W Jack-Open	4 /12	3-06-08	1-11-00	2 x 4	1-03-08	3-15 1-06-02	69.71 46.67		

TOTAL # TRUSS= **68** TOTAL BFT OF ALL TRUSSES= **2299.36** BFT. TOTAL WEIGHT OF ALL TRSSES **3591.8** LBS

HARDWARE

QTY	TYPE	MODEL	LENGTH
3	Hardware	LUS24	
9	Hardware	LJS26DS	

DELIVERY SHIPLIST

TAMARACK ROOF TRUSSES INC.
ALPA LUMBER GROUP

Lumber Yard:	TAMARACK LUMBER	Job Track:	53568
Builder:	BAYVIEW WELLINGTON	PlanLog:	207795
Project:	GREEN VALLEY ESTATE (2024)	Layout ID:	436971
Location:	BRADFORD	Ref #	
Model:	BLOCK 403-1	Page:	4 of 4
Lot #:		Date:	04-03-2024
Elevation:	UNIT 1	Designer:	
		Sales Rep:	Rick DiCiano

HARDWARE

QTY	TYPE	MODEL	LENGTH
2	Hardware	HGUS26-2	
45	Hardware	H2.5T	

TOTAL NUMBER OF ITEMS= **59**

DELIVERY SHIPLIST

TAMARACK ROOF TRUSSES INC.
ALPA LUMBER GROUP

Lumber Yard:	TAMARACK LUMBER	Job Track:	53568
Builder:	BAYVIEW WELLINGTON	PlanLog:	207795
Project:	GREEN VALLEY ESTATE (2024)	Layout ID:	436972
Location:	BRADFORD	Ref #	
Model:	BLOCK 403-1	Page:	1 of 1
Lot #:		Date:	04-03-2024
Elevation:	UNIT 2	Designer:	
		Sales Rep:	Rick DiCiano

Roof Trusses

PROFILE	QTY PLY	MARK TYPE	PITCH	SPAN	HEIGHT	LUMBER	OVERHANG LEFT RIGHT	HEEL HEIGHT LEFT RIGHT	LBS. BFT.	BUNDLE # STACK #	LOAD BY REMARKS
	10	**T30 Piggyback Base**	6 /12	**44-10-00**	9-02-15	2 x 6	1-03-08 1-03-08	1-02-00 1-02-00	3043.8 1840.00		
	1	**T30AG GABLE**	6 /12	**44-02-00**	9-02-15	2 x 6	1-03-08	1-02-00 1-02-00	267.92 168.50		
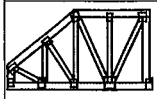	**1 3-ply**	**T44 Half Hip Girder**	10 /12	**9-00-08**	5-01-12	2 x 6		1-07-11 5-01-12	222.91 141.00		
	1	**T46 Half Hip Girder**	10 /12	**9-00-08**	3-00-12	2 x 4	1-03-08	1-07-11 3-00-12	39.92 27.67		
	1	**T47 Half Hip**	10 /12	**9-00-08**	3-07-00	2 x 4	1-03-08	1-07-11 3-07-00	39.84 26.00		
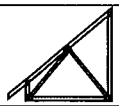	**1**	**T48 Monopitch**	10 /12	**6-08-08**	7-02-12	2 x 4	1-03-08	1-07-11 7-02-12	36.49 23.00		
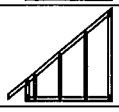	**1**	**T48G GABLE**	10 /12	**6-08-08**	7-02-12	2 x 4	1-03-08	1-07-11 7-02-12	36.76 23.50		
	11	**PB5 Piggyback**	6 /12	**12-06-04**	3-01-09	2 x 4			329.42 199.83		
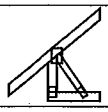	**1**	**J4 Jack-Open**	10 /12	**1-08-08**	3-00-12	2 x 4	1-03-08	1-07-11 3-00-12	9.32 7.00		

TOTAL # TRUSS= **30** TOTAL BFT OF ALL TRUSSES= **2456.5** BFT. TOTAL WEIGHT OF ALL TRSSES **4026.36** LBS

HARDWARE

QTY	TYPE	MODEL	LENGTH
4	Hardware	HGUS26	
3	Hardware	H2.5T	
32	Hardware	H2.5A	
4	Hardware	H8	

TOTAL NUMBER OF ITEMS= **43**

DELIVERY SHIPLIST

TAMARACK ROOF TRUSSES INC.
ALPA LUMBER GROUP

Lumber Yard:	TAMARACK LUMBER	Job Track:	53568
Builder:	BAYVIEW WELLINGTON	PlanLog:	207795
Project:	GREEN VALLEY ESTATE (2024)	Layout ID:	436972
Location:	BRADFORD	Ref #	
Model:	BLOCK 403-1	Page:	1 of 1
Lot #:		Date:	04-03-2024
Elevation:	UNIT 2	Designer:	
		Sales Rep:	Rick DiCiano

Roof Trusses

PROFILE	QTY PLY	MARK TYPE	PITCH	SPAN	HEIGHT	LUMBER	OVERHANG LEFT RIGHT	HEEL HEIGHT LEFT RIGHT	LBS. BFT.	BUNDLE # STACK #	LOAD BY REMARKS
	10	**T30 Piggyback Base**	6 /12	**44-10-00**	9-02-15	2 x 6	1-03-08 1-03-08	1-02-00 1-02-00	3043.8 1840.00		
	1	**T30AG GABLE**	6 /12	**44-02-00**	9-02-15	2 x 6	1-03-08	1-02-00 1-02-00	267.92 168.50		
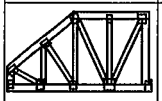	**1 3-ply**	**T44 Half Hip Girder**	10 /12	**9-00-08**	5-01-12	2 x 6		1-07-11 5-01-12	222.91 141.00		
	1	**T46 Half Hip Girder**	10 /12	**9-00-08**	3-00-12	2 x 4	1-03-08	1-07-11 3-00-12	39.92 27.67		
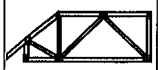	**1**	**T47 Half Hip**	10 /12	**9-00-08**	3-07-00	2 x 4	1-03-08	1-07-11 3-07-00	39.84 26.00		
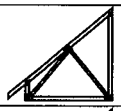	**1**	**T48 Monopitch**	10 /12	**6-08-08**	7-02-12	2 x 4	1-03-08	1-07-11 7-02-12	36.49 23.00		
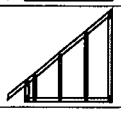	**1**	**T48G GABLE**	10 /12	**6-08-08**	7-02-12	2 x 4	1-03-08	1-07-11 7-02-12	36.76 23.50		
	11	**PB5 Piggyback**	6 /12	**12-06-04**	3-01-09	2 x 4			329.42 199.83		
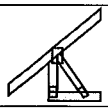	**1**	**J4 Jack-Open**	10 /12	**1-08-08**	3-00-12	2 x 4	1-03-08	1-07-11 3-00-12	9.32 7.00		

TOTAL # TRUSS= **30** TOTAL BFT OF ALL TRUSSES= **2456.5** BFT. TOTAL WEIGHT OF ALL TRSSES **4026.36** LBS

HARDWARE

QTY	TYPE	MODEL	LENGTH
4	Hardware	HGUS26	
3	Hardware	H2.5T	
32	Hardware	H2.5A	
4	Hardware	H8	

TOTAL NUMBER OF ITEMS= **43**

DELIVERY SHIPLIST

TAMARACK ROOF TRUSSES INC.
ALPA LUMBER GROUP

Lumber Yard:	TAMARACK LUMBER	Job Track:	53568
Builder:	BAYVIEW WELLINGTON	PlanLog:	207795
Project:	GREEN VALLEY ESTATE (2024)	Layout ID:	436973
Location:	BRADFORD	Ref #	
Model:	BLOCK 403-1	Page:	1 of 1
Lot #:		Date:	04-03-2024
Elevation:	UNIT 3	Designer:	
		Sales Rep:	Rick DiCiano

Roof Trusses

PROFILE	QTY PLY	MARK TYPE	PITCH	SPAN	HEIGHT	LUMBER	OVERHANG LEFT RIGHT	HEEL HEIGHT LEFT RIGHT	LBS. BFT.	BUNDLE # STACK #	LOAD BY REMARKS
	5	T30 Piggyback Base	6 /12	44-10-00	9-02-15	2 x 6	1-03-08 1-03-08	1-02-00 1-02-00	1521.9 920.00		
	1	T30AG GABLE	6 /12	44-02-00	9-02-15	2 x 6	1-03-08	1-02-00 1-02-00	267.92 168.50		
	1	T30G GABLE	6 /12	44-10-00	9-02-15	2 x 6	1-03-08 1-03-08	1-02-00 1-02-00	272.44 168.50		
	4	T30X Piggyback Base	6 /12	45-11-00	9-02-15	2 x 6	1-03-08	1-02-00 7-08	1226.92 728.00		
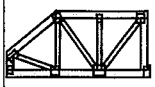	1 3-ply	T45 Half Hip Girder	10 /12	9-00-08	4-02-15	2 x 6		1-07-11 4-02-15	189.59 122.00		
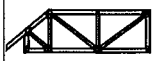	1	T46 Half Hip Girder	10 /12	9-00-08	3-00-12	2 x 4	1-03-08	1-07-11 3-00-12	39.92 27.67		
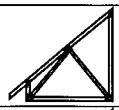	1	T48 Monopitch	10 /12	6-08-08	7-02-12	2 x 4	1-03-08	1-07-11 7-02-12	36.49 23.00		
	1	T48G GABLE	10 /12	6-08-08	7-02-12	2 x 4	1-03-08	1-07-11 7-02-12	36.76 23.50		
	11	PB5 Piggyback	6 /12	12-06-04	3-01-09	2 x 4			329.42 199.83		
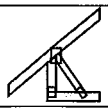	1	J4 Jack-Open	10 /12	1-08-08	3-00-12	2 x 4	1-03-08	1-07-11 3-00-12	9.32 7.00		

TOTAL # TRUSS= **29** TOTAL BFT OF ALL TRUSSES= **2388** BFT. TOTAL WEIGHT OF ALL TRSSES **3930.66** LBS

HARDWARE

QTY	TYPE	MODEL	LENGTH
4	Hardware	HGUS26	
28	Hardware	H2.5A	
2	Hardware	H2.5T	
4	Hardware	H8	

TOTAL NUMBER OF ITEMS= **38**

DELIVERY SHIPLIST

TAMARACK ROOF TRUSSES INC.
ALPA LUMBER GROUP

Lumber Yard:	TAMARACK LUMBER	Job Track:	53568
Builder:	BAYVIEW WELLINGTON	PlanLog:	207795
Project:	GREEN VALLEY ESTATE (2024)	Layout ID:	436974
Location:	BRADFORD	Ref #	
Model:	BLOCK 403-1	Page:	1 of 2
Lot #:		Date:	04-03-2024
Elevation:	UNIT 4	Designer:	
		Sales Rep:	Rick DiCiano

Roof Trusses

PROFILE	QTY PLY	MARK TYPE	PITCH	SPAN	HEIGHT	LUMBER	OVERHANG LEFT RIGHT	HEEL HEIGHT LEFT RIGHT	LBS. BFT.	BUNDLE # STACK #	LOAD BY REMARKS
	1	T30G GABLE	6 /12	**44-10-00**	9-02-15	2 x 6	1-03-08 1-03-08	1-02-00 1-02-00	272.44 168.50		
	1	T31 Piggyback Base	6 /12	**50-04-00**	9-02-15	2 x 6	1-03-08 1-03-08	1-02-00 1-02-00	330.99 201.00		
	1	T32 Piggyback Base	6 /12	**50-04-00**	9-02-15	2 x 6	1-03-08 1-03-08	1-02-00 1-02-00	337.91 203.33		
	1	T33 Piggyback Base	6 /12	**50-04-00**	9-02-15	2 x 6	1-03-08 1-03-08	1-02-00 1-02-00	334.45 200.33		
	1	T34 Piggyback Base	6 /12	**50-04-00**	9-02-15	2 x 6	1-03-08 1-03-08	1-02-00 1-02-00	349.08 209.00		
	1 3-ply	T35 Hip Girder	6 /12	**50-04-00**	9-00-07	2 x 6 2 x 8	1-03-08 1-03-08	1-02-00 1-02-00	1145.76 673.00		
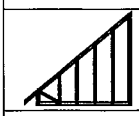	1	T49G GABLE	10 /12	**10-06-00**	10-04-11	2 x 4	1-03-08	1-07-11 10-04-11	62.57 40.00		
	5	T71 Piggyback Base	6 /12	**37-09-00**	9-00-07	2 x 6	1-03-08	1-02-00 7-05-08	1235.21 750.00		
	1 3-ply	T73Z Monopitch Girder	10 /12	**10-02-00**	10-03-07	2 x 6		1-11-14 10-05-08	264.12 167.00		
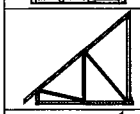	2	T74 Monopitch	10 /12	**10-07-00**	10-03-07	2 x 4	1-03-08	1-07-11 10-05-08	114.2 74.00		
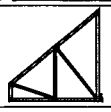	6	T74A Monopitch	10 /12	**10-02-00**	10-03-07	2 x 4		1-11-14 10-05-08	327.43 211.00		
	5	PB5 Piggyback	6 /12	**12-06-04**	3-01-09	2 x 4			149.74 90.83		
	3	PB8 Piggyback	6 /12	**18-10-04**	4-08-09	2 x 4			165.03 102.00		
	1	PB14 Piggyback	6 /12	**18-10-04**	3-06-08	2 x 4			56.83 35.33		

DELIVERY SHIPLIST

TAMARACK ROOF TRUSSES INC.
ALPA LUMBER GROUP

Lumber Yard:	TAMARACK LUMBER	Job Track:	53568
Builder:	BAYVIEW WELLINGTON	PlanLog:	207795
Project:	GREEN VALLEY ESTATE (2024)	Layout ID:	436974
Location:	BRADFORD	Ref #	
Model:	BLOCK 403-1	Page:	2 of 2
Lot #:		Date:	04-03-2024
Elevation:	UNIT 4	Designer:	
		Sales Rep:	Rick DiCiano

Roof Trusses

PROFILE	QTY PLY	MARK TYPE	PITCH	SPAN	HEIGHT	LUMBER	OVERHANG LEFT RIGHT	HEEL HEIGHT LEFT RIGHT	LBS. BFT.	BUNDLE # STACK #	LOAD BY REMARKS

TOTAL # TRUSS= **34** TOTAL BFT OF ALL TRUSSES= **3125.32** BFT. TOTAL WEIGHT OF ALL TRSSES **5145.75** LBS

HARDWARE

QTY	TYPE	MODEL	LENGTH
6	Hardware	LUS24	
5	Hardware	LJS26DS	
1	Hardware	HGUS28-3	
10	Hardware	H2.5T	
20	Hardware	H2.5A	

TOTAL NUMBER OF ITEMS= **42**

DELIVERY SHIPLIST

TAMARACK ROOF TRUSSES INC.
ALPA LUMBER GROUP

Lumber Yard:	TAMARACK LUMBER	Job Track:	53568
Builder:	BAYVIEW WELLINGTON	PlanLog:	207795
Project:	GREEN VALLEY ESTATE (2024)	Layout ID:	436975
Location:	BRADFORD	Ref #	
Model:	BLOCK 403-1	Page:	1 of 1
Lot #:		Date:	04-03-2024
Elevation:	UNIT 5	Designer:	
		Sales Rep:	Rick DiCiano

Roof Trusses

PROFILE	QTY PLY	MARK TYPE	PITCH	SPAN	HEIGHT	LUMBER	OVERHANG LEFT RIGHT	HEEL HEIGHT LEFT RIGHT	LBS. BFT.	BUNDLE # STACK #	LOAD BY REMARKS
	1 3-ply	T36 Piggyback Base Girder	6 /12	**50-04-00**	9-00-07	2 x 6 2 x 8	1-03-08 1-03-08	1-02-00 1-02-00	1136.44 665.00		
	4	T37 Piggyback Base	6 /12	**50-04-00**	9-00-07	2 x 6	1-03-08 1-03-08	1-02-00 1-02-00	1347.49 808.00		
	1	T37G GABLE	6 /12	**50-04-00**	9-00-07	2 x 6	1-03-08 1-03-08	1-02-00 1-02-00	314.86 204.50		
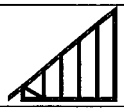	1	T49G GABLE	10 /12	**10-06-00**	10-04-11	2 x 4	1-03-08	1-07-11 10-04-11	62.57 40.00		
	5	T70 Piggyback Base	6 /12	**38-09-08**	9-00-07	2 x 6	1-03-08	1-02-00 6-11-04	1250.27 765.00		
	1 3-ply	T73 Monopitch Girder	10 /12	**10-02-00**	10-03-07	2 x 6		1-11-14 10-05-08	264.12 167.00		
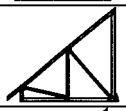	2	T74 Monopitch	10 /12	**10-07-00**	10-03-07	2 x 4	1-03-08	1-07-11 10-05-08	114.2 74.00		
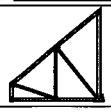	5	T74A Monopitch	10 /12	**10-02-00**	10-03-07	2 x 4		1-11-14 10-05-08	272.86 175.83		
	11	PB8 Piggyback	6 /12	**18-10-04**	4-08-09	2 x 4			605.12 374.00		

TOTAL # TRUSS= **35** TOTAL BFT OF ALL TRUSSES= **3273.33** BFT. TOTAL WEIGHT OF ALL TRSSES **5367.92** LBS

HARDWARE

QTY	TYPE	MODEL	LENGTH
5	Hardware	LUS24	
5	Hardware	LJS26DS	
1	Hardware	HGUS28-3	
9	Hardware	H2.5T	
20	Hardware	H2.5A	

TOTAL NUMBER OF ITEMS= **40**

DELIVERY SHIPLIST

TAMARACK ROOF TRUSSES INC.
ALPA LUMBER GROUP

Lumber Yard:	TAMARACK LUMBER	Job Track:	53568
Builder:	BAYVIEW WELLINGTON	PlanLog:	207795
Project:	GREEN VALLEY ESTATE (2024)	Layout ID:	436976
Location:	BRADFORD	Ref #	
Model:	BLOCK 403-1	Page:	1 of 2
Lot #:		Date:	04-03-2024
Elevation:	UNIT 6	Designer:	
		Sales Rep:	Rick DiCiano

Roof Trusses

PROFILE	QTY PLY	MARK TYPE	PITCH	SPAN	HEIGHT	LUMBER	OVERHANG LEFT RIGHT	HEEL HEIGHT LEFT RIGHT	LBS. BFT.	BUNDLE # STACK #	LOAD BY REMARKS
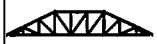	4	T37 Piggyback Base	6 /12	**50-04-00**	9-00-07	2 x 6	1-03-08 1-03-08	1-02-00 1-02-00	1347.49 808.00		
	1	T37G GABLE	6 /12	**50-04-00**	9-00-07	2 x 6	1-03-08 1-03-08	1-02-00 1-02-00	314.86 204.50		
	1	T39 Piggyback Base	6 /12	**50-04-00**	10-00-00	2 x 6	1-03-08	1-02-00 2-09-00	329.03 200.00		
	1	T40 Piggyback Base	6 /12	**50-04-00**	10-00-00	2 x 6	1-03-08	1-02-00 4-05-00	333.82 202.67		
	1	T41 Piggyback Base	6 /12	**50-04-00**	10-00-00	2 x 6	1-03-08	1-02-00 2-11-02	330.21 202.33		
	2	T42 Piggyback Base	6 /12	**50-04-00**	10-00-00	2 x 6	1-03-08	1-02-00 4-07-02	669.67 405.33		
	1	T43 Piggyback Base	6 /12	**50-04-00**	10-00-00	2 x 6	1-03-08	1-02-00 2-00-11	323.38 197.00		
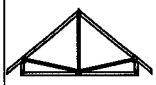	2	T50 Common	10 /12	**11-00-00**	6-02-11	2 x 4	1-03-08 1-03-08	1-07-11 1-07-11	98.18 64.67		
	1	T50G GABLE	10 /12	**11-00-00**	6-02-11	2 x 4	1-03-08 1-03-08	1-07-11 1-07-11	53.45 35.33		
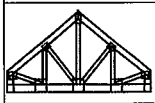	1 3-ply	T51 Common Girder	10 /12	**11-00-00**	6-02-11	2 x 6 2 x 8		1-07-11 1-07-11	247.34 150.00		
	1	PB7 Piggyback	6 /12	**18-10-04**	3-10-11	2 x 4			57.54 36.50		
	3	PB8 Piggyback	6 /12	**18-10-04**	4-08-09	2 x 4			165.03 102.00		
	6	PB9 Piggyback	6 /12	**12-09-00**	3-02-04	2 x 4			210.72 135.00		

TOTAL # TRUSS= **27** TOTAL BFT OF ALL TRUSSES= **2743.33** BFT. TOTAL WEIGHT OF ALL TRSSES **4480.73** LBS

DELIVERY SHIPLIST

TAMARACK ROOF TRUSSES INC.
ALPA LUMBER GROUP

Lumber Yard:	TAMARACK LUMBER	Job Track:	53568
Builder:	BAYVIEW WELLINGTON	PlanLog:	207795
Project:	GREEN VALLEY ESTATE (2024)	Layout ID:	436976
Location:	BRADFORD	Ref #	
Model:	BLOCK 403-1	Page:	2 of 2
Lot #:		Date:	04-03-2024
Elevation:	UNIT 6	Designer:	
		Sales Rep:	Rick DiCiano

HARDWARE

QTY	TYPE	MODEL	LENGTH
6	Hardware	HGUS26	
28	Hardware	H2.5A	

TOTAL NUMBER OF ITEMS= **34**

DELIVERY SHIPLIST

TAMARACK ROOF TRUSSES INC.
ALPA LUMBER GROUP

Lumber Yard:	TAMARACK LUMBER	Job Track:	53568
Builder:	BAYVIEW WELLINGTON	PlanLog:	207795
Project:	GREEN VALLEY ESTATE (2024)	Layout ID:	436977
Location:	BRADFORD	Ref #	
Model:	BLOCK 403-1	Page:	1 of 2
Lot #:		Date:	04-03-2024
Elevation:	UNIT 7	Designer:	
		Sales Rep:	Rick DiCiano

Roof Trusses

PROFILE	QTY PLY	MARK TYPE	PITCH	SPAN	HEIGHT	LUMBER	OVERHANG LEFT RIGHT	HEEL HEIGHT LEFT RIGHT	LBS. BFT.	BUNDLE # STACK #	LOAD BY REMARKS
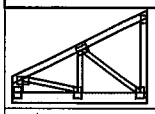	1 2-ply	T26Z Monopitch Girder	6 /12	**5-10-08**	4-01-04	2 x 4 2 x 6		1-02-00 4-01-04	58.39 37.67		
	1 2-ply	T52 Half Hip Girder	10 /12	**19-06-08**	4-01-04	2 x 4 2 x 6	1-03-08	1-07-11 4-01-04	188.32 117.67		
	1 2-ply	T52Z Half Hip Girder	10 /12	**19-06-08**	4-01-04	2 x 4 2 x 6	1-03-08	1-07-11 4-01-04	191.9 118.67		
	2	T53 Half Hip	10 /12	**19-06-08**	5-01-04	2 x 4	1-03-08	1-07-11 5-01-04	170.45 109.00		
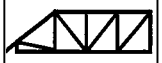	2	T54 Half Hip	10 /12	**19-06-08**	6-01-04	2 x 4	1-03-08	1-07-11 6-01-04	182.6 117.33		
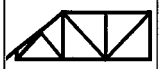	2	T55 Half Hip	10 /12	**19-06-08**	7-01-04	2 x 4	1-03-08	1-07-11 7-01-04	185.05 114.33		
	2	T56 Half Hip	10 /12	**19-06-08**	8-01-04	2 x 4	1-03-08	1-07-11 8-01-04	195.68 123.33		
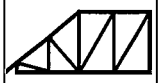	8	T57 Half Hip	10 /12	**19-06-08**	9-01-04	2 x 4	1-03-08	1-07-11 9-01-04	829.31 518.67		
	2	T58 Half Hip	10 /12	**19-06-08**	10-01-04	2 x 4	1-03-08	1-07-11 10-01-04	232.34 145.67		
	1	T59 Hip Girder	10 /12	**14-04-00**	5-10-07	2 x 4 2 x 6	1-03-08	1-07-11 2-07-11	74.95 50.00		
	1	T60 Hip	10 /12	**14-04-00**	7-06-07	2 x 4	1-03-08	1-07-11 2-07-11	72.4 47.00		
	3	T61 Common	10 /12	**9-04-00**	5-06-06	2 x 4	1-03-08 1-03-08	1-07-11 1-07-11	128.52 82.50		
	1	T61Z Common	10 /12	**9-04-00**	5-06-06	2 x 4	1-03-08 1-03-08	1-07-11 1-07-11	42.84 27.50		
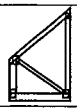	1 2-ply	T62 Monopitch Girder	10 /12	**3-10-08**	5-10-07	2 x 4 2 x 6		2-07-11 5-10-07	51.46 34.00		

DELIVERY SHIPLIST

TAMARACK ROOF TRUSSES INC.
ALPA LUMBER GROUP

Lumber Yard:	TAMARACK LUMBER	Job Track:	53568
Builder:	BAYVIEW WELLINGTON	PlanLog:	207795
Project:	GREEN VALLEY ESTATE (2024)	Layout ID:	436977
Location:	BRADFORD	Ref #	
Model:	BLOCK 403-1	Page:	2 of 2
Lot #:		Date:	04-03-2024
Elevation:	UNIT 7	Designer:	
		Sales Rep:	Rick DiCiano

Roof Trusses

PROFILE	QTY PLY	MARK TYPE	PITCH	SPAN	HEIGHT	LUMBER	OVERHANG LEFT RIGHT	HEEL HEIGHT LEFT RIGHT	LBS. BFT.	BUNDLE # STACK #	LOAD BY REMARKS
	2	**PB10 Piggyback**	10 /12	**10-07-00**	2-00-00	2 x 4		2-00-00	68.49 45.33		
	2	**PB11 Piggyback**	10 /12	**10-07-00**	3-00-00	2 x 4		3-00-00	71.17 44.33		
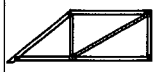	**2**	**PB12 Piggyback**	10 /12	**10-07-00**	3-10-00	2 x 4		3-10-00	72.47 45.67		
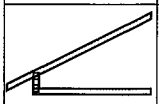	**11**	**J1 Jack-Open**	6 /12	**5-10-08**	4-01-04	2 x 4	1-03-08	1-02-00 4-01-04	184.74 117.33		
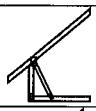	**1**	**J6 Jack-Open**	10 /12	**3-10-08**	5-10-07	2 x 4	1-03-08	2-07-11 5-10-07	16.96 10.83		
	1	**C1 Jack-Open**	10 /12	**1-10-08**	4-01-09	2 x 4	1-03-08	2-07-11 4-02-07	11.58 8.17		
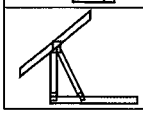	**1**	**C2 Jack-Open**	10 /12	**1-09-07**	4-01-09	2 x 4	1-03-08 2-01-01	2-07-11 4-01-09	13.86 9.50		

TOTAL # TRUSS= **52** TOTAL BFT OF ALL TRUSSES= **1924.5** BFT. TOTAL WEIGHT OF ALL TRSSES **3043.49** LBS

HARDWARE

QTY	TYPE	MODEL	LENGTH
2	Hardware	LUS24	
2	Hardware	LJS26DS	
1	Hardware	LUS26-2	
1	Hardware	HGUS26-2	
22	Hardware	H2.5T	

TOTAL NUMBER OF ITEMS= **28**

JOB NAME	TRUSS NAME	QUANTITY	PLY	JOB DESC.	DRWG NO.
436388	T1	1	2	BAYVIEW WELLINGTON TRUSS DESC.	

Tamarack Roof Truss, Burlington

Version 8.630 S Aug 30 2023 MiTek Industries, Inc. Tue Apr 2 10:53:19 2024 Page 1
ID:GRmvuh1dyQr3nydBfsTFcCy6OGl-zGqaRAz9kb Vs1hAmrxLIZpXD4MMGZGNqC5oB?zUo4U

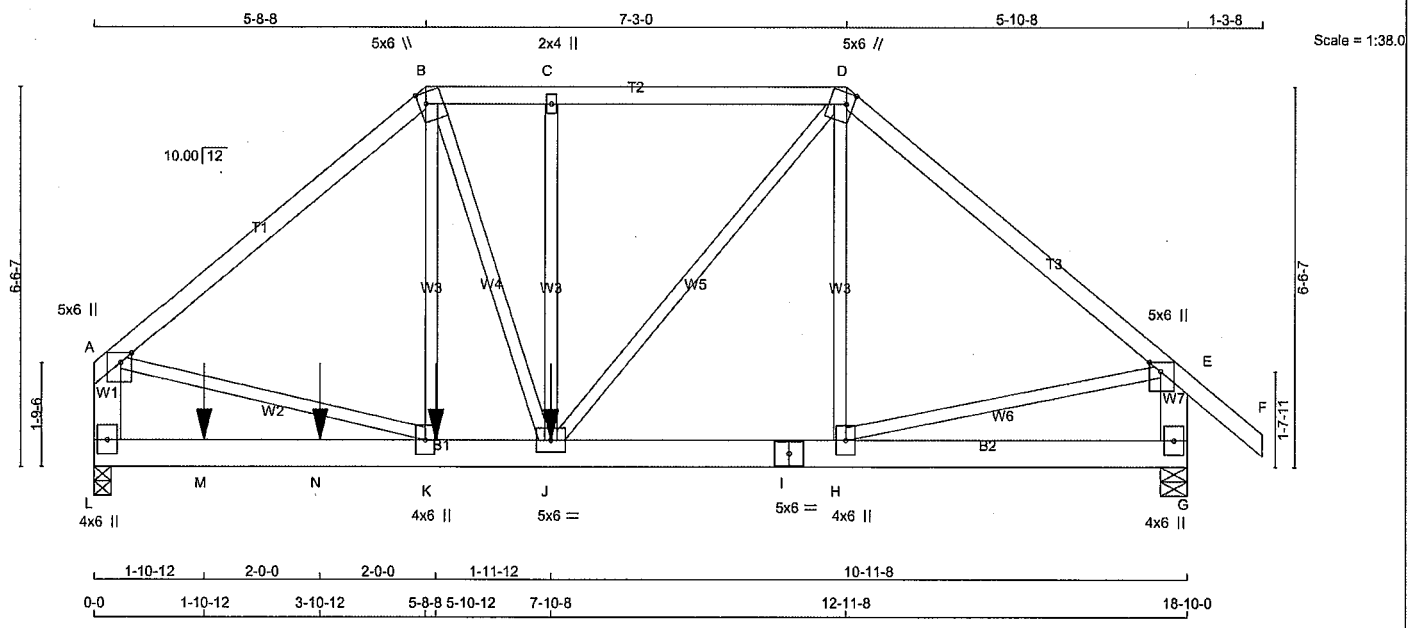

TOTAL WEIGHT = 2 X 100 = 201 lb

LUMBER

N. L. G. A. RULES

CHORDS	SIZE		LUMBER	DESCR.
A - B	2x4	DRY	No.2	SPF
B - D	2x4	DRY	No.2	SPF
D - F	2x4	DRY	No.2	SPF
L - A	2x6	DRY	No.2	SPF
G - E	2x6	DRY	No.2	SPF
L - I	2x6	DRY	No.2	SPF
I - G	2x6	DRY	No.2	SPF
ALL WEBS EXCEPT	2x3	DRY	No.2	SPF

DRY: SEASONED LUMBER.

DESIGN CONSISTS OF 2 TRUSSES BUILT SEPARATELY THEN FASTENED TOGETHER AS FOLLOWS:

CHORDS	#ROWS	SURFACE SPACING (IN)	LOAD(PLF)
TOP CHORDS : (0.122"X3") SPIRAL NAILS			
A- B	1	12	TOP
B- D	1	12	TOP
D- F	1	12	TOP
L- A	2	12	TOP
G- E	2	12	TOP
BOTTOM CHORDS : (0.122"X3") SPIRAL NAILS			
L- I	2	12	SIDE(183.1)
I- G	2	12	TOP
WEBS : (0.122"X3") SPIRAL NAILS			
2x3	1	6	
C- J	1	6	SIDE(161.4)

NAILS TO BE DRIVEN FROM ONE SIDE ONLY.

GIRDER NAILING ASSUMES NAILED HANGERS ARE FASTENED WITH MIN. 3-0 INCH NAILS.

TOP - COMPONENTS ARE LOADED FROM THE TOP AND MUST BE PLACED ON TOP EDGE OF ALL PLIES FOR THE LOAD TO BE TRANSFERRED TO EACH PLY.

LICENSED PROFESSIONAL ENGINEER
4/02/24
C. M. HEYENS
100505065
PROVINCE OF ONTARIO

STRUCTURAL COMPONENT ONLY
DWG # TR24040022

DIMENSIONS, SUPPORTS AND LOADINGS SPECIFIED BY FABRICATOR TO BE VERIFIED BY BUILDING DESIGNER

BEARINGS

JT	FACTORED GROSS REACTION VERT	HORZ	MAXIMUM FACTORED GROSS REACTION DOWN	HORZ	UPLIFT	INPUT BRG IN-SX	REQRD BRG IN-SX
L	2874	0	2874	0	0	3-8	1-9
G	2166	0	2166	0	0	5-8	1-8

UNFACTORED REACTIONS

JT	1ST LCASE COMBINED	MAX./MIN. COMPONENT REACTIONS SNOW	LIVE	PERM.LIVE	WIND	DEAD	SOIL
L	2006	1467 / 0	0 / 0	0 / 0	0 / 0	538 / 0	0 / 0
G	1512	1107 / 0	0 / 0	0 / 0	0 / 0	404 / 0	0 / 0

BEARING MATERIAL TO BE SPF NO.2 OR BETTER AT JOINT(S) L, G

BRACING

TOP CHORD TO BE SHEATHED OR MAX. PURLIN SPACING = 5.05 FT.
MAX. UNBRACED BOTTOM CHORD LENGTH = 10.00 FT OR RIGID CEILING DIRECTLY APPLIED.

ALL PITCH BREAKS AND PERIMETER CORNER JOINTS MUST BE LATERALLY RESTRAINED.

LOADING

TOTAL LOAD CASES: (4)

CHORDS

MEMB. FR-TO	MAX. FACTORED FORCE (LBS)	FACTORED VERT. LOAD (PLF) FROM	TO	LC1 MAX CSI (LC)	MAX. UNBRAC LENGTH
A- B	-2702 / 0	-112.4	-112.4	0.45 (1)	5.05
B- C	-2316 / 0	-112.4	-112.4	0.20 (1)	5.65
C- D	-2316 / 0	-112.4	-112.4	0.22 (1)	5.63
D- E	-2052 / 0	-112.4	-112.4	0.44 (1)	5.60
E- F	0 / 50	-112.4	-112.4	0.09 (1)	10.00
L- A	-2540 / 0	0.0	0.0	0.10 (1)	7.81
G- E	-2125 / 0	0.0	0.0	0.08 (1)	7.81
L- M	0 / 0	-18.5	-18.5	0.22 (1)	10.00
M- N	0 / 0	-18.5	-18.5	0.22 (1)	10.00
N- K	0 / 0	-18.5	-18.5	0.22 (1)	10.00
K- J	0 / 2084	-18.5	-18.5	0.32 (1)	10.00
J- I	0 / 1571	-18.5	-18.5	0.15 (1)	10.00
I- H	0 / 1571	-18.5	-18.5	0.15 (1)	10.00
H- G	0 / 0	-18.5	-18.5	0.04 (4)	10.00

WEBS

MEMB. FR-TO	MAX. FACTORED FORCE (LBS)	MAX CSI (LC)
K- B	0 / 719	0.09 (1)
B- J	0 / 699	0.09 (1)
J- C	-531 / 0	0.18 (1)
J- D	0 / 1169	0.14 (1)
H- D	-163 / 57	0.05 (1)
A- K	0 / 2128	0.26 (1)
H- E	0 / 1606	0.20 (1)

SPECIFIED CONCENTRATED LOADS (LBS)

JT	LOC.	LC1	MAX-	MAX+	FACE	DIR.	TYPE	HEEL	CONN.
J	7-10-8	-919	-919	---	FRONT	VERT	TOTAL	---	C1
K	5-10-12	-255	-255	---	FRONT	VERT	TOTAL	---	C1
M	1-10-12	-255	-255	---	FRONT	VERT	TOTAL	---	C1
N	3-10-12	-255	-255	---	FRONT	VERT	TOTAL	---	C1

CONNECTION REQUIREMENTS

1) **C1:** A SUITABLE HANGER/MECHANICAL CONNECTION IS REQUIRED.

[M]

DESIGN CRITERIA

SPECIFIED LOADS:

TOP CH.	LL	=	32.5	PSF
	DL	=	6.0	PSF
BOT CH.	LL	=	0.0	PSF
	DL	=	7.4	PSF
TOTAL LOAD		=	45.9	PSF

SPACING = 24.0 IN. C/C

LOADING IN FLAT SECTION BASED ON A SLOPE OF 2.00/12 MINIMUM

THIS TRUSS IS DESIGNED FOR RESIDENTIAL OR SMALL BUILDING REQUIREMENTS OF PART 9, NBCC 2015

THIS DESIGN COMPLIES WITH:
- PART 9 OF BCBC 2018 , NBC-2019AE
- PART 9 OF OBC 2012 (2019 AMENDMENT)
- CSA 086-14
- TPIC 2014

(55 % OF 43.9 P.S.F. G.S.L. PLUS 8.4 P.S.F. RAIN LOAD) EQUALS 32.5 P.S.F. SPECIFIED ROOF LIVE LOAD

ALLOWABLE DEFL.(LL)= L/360 (0.63")
CALCULATED VERT. DEFL.(LL) = L/ 999 (0.04")
ALLOWABLE DEFL.(TL)= L/360 (0.63")
CALCULATED VERT. DEFL.(TL) = L/ 999 (0.07")

CSI: TC=0.45/1.00 (A-B:1) , BC=0.32/1.00 (J-K:1) , WB=0.26/1.00 (A-K:1) , SSI=0.17/1.00 (K-L:1)

DOL LUMBER=1.00 NAIL=1.00 LS BEND=1.00 COMP=1.00 SHEAR=1.00 TENS= 1.00

COMPANION LIVE LOAD FACTOR = 1.00

AUTOSOLVE HEELS OFF

TRUSS PLATE MANUFACTURER IS NOT RESPONSIBLE FOR QUALITY CONTROL IN THE TRUSS MANUFACTURING PLANT .

NAIL VALUES

PLATE	GRIP(DRY) (PSI) MAX	MIN	SHEAR (PLI) MAX	MIN	SECTION (PLI) MAX	MIN
MT20	650	371	1747	788	1987	1873

PLATE PLACEMENT TOL. = 0.250 inches

PLATE ROTATION TOL. = 5.0 Deg.

JSI GRIP= 0.84 (K) (INPUT = 0.90)
JSI METAL= 0.47 (K) (INPUT = 0.95)

CONTINUED ON PAGE 2

JOB NAME	TRUSS NAME	QUANTITY	PLY	JOB DESC. BAYVIEW WELLINGTON	DRWG NO.
436388	T1	1	2	TRUSS DESC.	

Tamarack Roof Truss, Burlington

Version 8.630 S Aug 30 2023 MiTek Industries, Inc. Tue Apr 2 10:53:19 2024 Page 2
ID:GRmvuh1dyQr3nydBfsTFcCy6OGl-zGqaRAz9kb_Vs1hAmrxLIZpXD4MMGZGNqC5oB?zUo4U

PLATES (table is in inches)

JT	TYPE	PLATES	W	LEN	Y	X
A	TMVW+p	MT20	5.0	6.0	2.00	2.25
B	TTWW+m	MT20	5.0	6.0	2.25	1.50
C	TMW+w	MT20	2.0	4.0		
D	TTWW+m	MT20	5.0	6.0	2.25	1.50
E	TMVW+p	MT20	5.0	6.0	2.00	2.25
G	BMV1+p	MT20	4.0	6.0		
H	BMWW+t	MT20	4.0	6.0		
I	BS-t	MT20	5.0	6.0		
J	BMWWW-t	MT20	5.0	6.0		
K	BMWW+t	MT20	4.0	6.0		
L	BMV1+p	MT20	4.0	6.0		

NOTES- (1)
1) Lateral braces to be a minimum of 2X4 SPF #2.

LICENSED PROFESSIONAL ENGINEER
4/02/24
C. M. HEYENS
100505065
PROVINCE OF ONTARIO

STRUCTURAL COMPONENT ONLY
DWG # TR24040022

JOB NAME	TRUSS NAME	QUANTITY	PLY	JOB DESC.	DRWG NO.
436388	T2	1	1	BAYVIEW WELLINGTON TRUSS DESC.	

Tamarack Roof Truss, Burlington

Version 8.630 S Aug 30 2023 MiTek Industries, Inc. Tue Apr 2 10:53:20 2024 Page 1
ID:GRmvuh1dyQr3nydBfsTFcCy6OGI-SSNzfW oVu6MUBFNKYSarmLlaUj2?xbW2srMjSzUo4T

Scale: 1/4"=1'

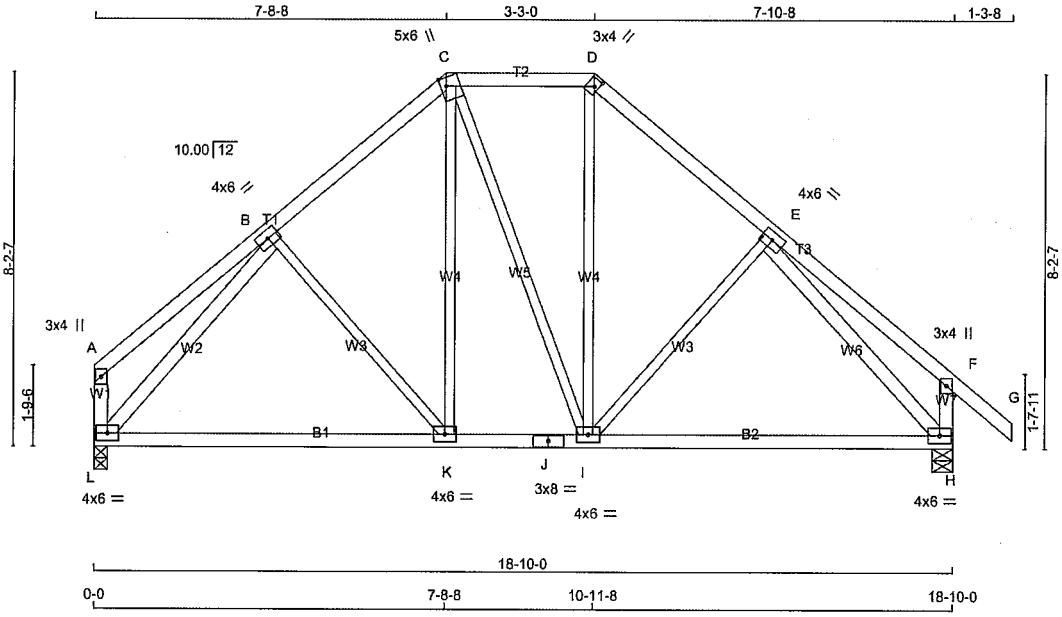

TOTAL WEIGHT = 95 lb

[M][F]

LUMBER
N. L. G. A. RULES

CHORDS	SIZE		LUMBER	DESCR.
A - C	2x4	DRY	No.2	SPF
C - D	2x4	DRY	No.2	SPF
D - G	2x4	DRY	No.2	SPF
L - A	2x4	DRY	No.2	SPF
H - F	2x4	DRY	No.2	SPF
L - J	2x4	DRY	No.2	SPF
J - H	2x4	DRY	No.2	SPF
ALL WEBS	2x3	DRY	No.2	SPF
EXCEPT				
L - B	2x4	DRY	No.2	SPF
E - H	2x4	DRY	No.2	SPF

DRY: SEASONED LUMBER.

PLATES (table is in inches)

JT	TYPE	PLATES	W	LEN	Y	X
A	TMV+p	MT20	3.0	4.0		
B	TMWW-t	MT20	4.0	6.0		
C	TTWW+m	MT20	5.0	6.0	2.25	1.50
D	TTW+h	MT20	3.0	4.0	2.00	1.00
E	TMWW-t	MT20	4.0	6.0		
F	TMV+p	MT20	3.0	4.0		
H	BMVW1-t	MT20	4.0	6.0		
I	BMWWW-t	MT20	4.0	6.0		
J	BS-t	MT20	3.0	8.0		
K	BMWW-t	MT20	4.0	6.0		
L	BMVW1-t	MT20	4.0	6.0		

NOTES- (1)
1) Lateral braces to be a minimum of 2X4 SPF #2.

DIMENSIONS, SUPPORTS AND LOADINGS SPECIFIED BY FABRICATOR TO BE VERIFIED BY BUILDING DESIGNER

BEARINGS

JT	FACTORED GROSS REACTION VERT	HORZ	MAXIMUM FACTORED GROSS REACTION DOWN	HORZ	UPLIFT	INPUT BRG IN-SX	REQRD BRG IN-SX
L	1233	0	1233	0	0	3-8	1-8
H	1389	0	1389	0	0	5-8	1-8

UNFACTORED REACTIONS

JT	1ST LCASE COMBINED	MAX./MIN. COMPONENT REACTIONS SNOW	LIVE	PERM.LIVE	WIND	DEAD	SOIL
L	864	612 / 0	0 / 0	0 / 0	0 / 0	252 / 0	0 / 0
H	971	702 / 0	0 / 0	0 / 0	0 / 0	269 / 0	0 / 0

BEARING MATERIAL TO BE SPF NO.2 OR BETTER AT JOINT(S) L, H

BRACING
TOP CHORD TO BE SHEATHED OR MAX. PURLIN SPACING = 6.02 FT.
MAX. UNBRACED BOTTOM CHORD LENGTH = 10.00 FT OR RIGID CEILING DIRECTLY APPLIED.

ALL PITCH BREAKS AND PERIMETER CORNER JOINTS MUST BE LATERALLY RESTRAINED.

LOADING
TOTAL LOAD CASES: (4)

CHORDS

MEMB. FR-TO	MAX. FACTORED FORCE (LBS)	FACTORED VERT. LOAD LC1 (PLF) FROM	TO	MAX CSI (LC)	MAX. UNBRAC LENGTH
A- B	0 / 34	-112.4	-112.4	0.27 (1)	10.00
B- C	-971 / 0	-112.4	-112.4	0.22 (1)	6.06
C- D	-728 / 0	-112.4	-112.4	0.16 (1)	6.25
D- E	-980 / 0	-112.4	-112.4	0.23 (1)	6.02
E- F	0 / 34	-112.4	-112.4	0.28 (1)	10.00
F- G	0 / 50	-112.4	-112.4	0.15 (1)	10.00
L- A	-157 / 0	0.0	0.0	0.02 (1)	7.81
H- F	-323 / 0	0.0	0.0	0.03 (1)	7.81
L- K	0 / 832	-18.5	-18.5	0.29 (4)	10.00
K- J	0 / 723	-18.5	-18.5	0.29 (4)	10.00
J- I	0 / 723	-18.5	-18.5	0.29 (4)	10.00
I- H	0 / 860	-18.5	-18.5	0.29 (4)	10.00

WEBS

MEMB. FR-TO	MAX. FACTORED FORCE (LBS)	MAX CSI (LC)
B- K	-168 / 2	0.11 (1)
K- C	0 / 233	0.05 (1)
C- I	0 / 15	0.00 (1)
I- D	0 / 254	0.06 (1)
I- E	-203 / 0	0.13 (1)
L- B	-1312 / 0	0.55 (1)
E- H	-1322 / 0	0.58 (1)

DESIGN CRITERIA

SPECIFIED LOADS:

TOP CH.	LL	=	32.5	PSF
	DL	=	6.0	PSF
BOT CH.	LL	=	0.0	PSF
	DL	=	7.4	PSF
TOTAL LOAD		=	45.9	PSF

SPACING = 24.0 IN. C/C

LOADING IN FLAT SECTION BASED ON A SLOPE OF 2.00/12 MINIMUM

THIS TRUSS IS DESIGNED FOR RESIDENTIAL OR SMALL BUILDING REQUIREMENTS OF PART 9, NBCC 2015

THIS DESIGN COMPLIES WITH:
- PART 9 OF BCBC 2018 , NBC-2019AE
- PART 9 OF OBC 2012 (2019 AMENDMENT)
- CSA 086-14
- TPIC 2014

(55 % OF 43.9 P.S.F. G.S.L. PLUS 8.4 P.S.F. RAIN LOAD) EQUALS 32.5 P.S.F. SPECIFIED ROOF LIVE LOAD

ALLOWABLE DEFL.(LL)= L/360 (0.63")
CALCULATED VERT. DEFL.(LL) = L/ 999 (0.02")
ALLOWABLE DEFL.(TL)= L/360 (0.63")
CALCULATED VERT. DEFL.(TL) = L/ 999 (0.13")

CSI: TC=0.28/1.00 (E-F:1) , BC=0.29/1.00 (H-I:4) , WB=0.58/1.00 (E-H:1) , SSI=0.16/1.00 (D-E:1)

DOL LUMBER=1.00 NAIL=1.00 LS BEND=1.10 COMP=1.10 SHEAR=1.10 TENS= 1.10

COMPANION LIVE LOAD FACTOR = 1.00

AUTOSOLVE HEELS OFF

TRUSS PLATE MANUFACTURER IS NOT RESPONSIBLE FOR QUALITY CONTROL IN THE TRUSS MANUFACTURING PLANT .

NAIL VALUES

PLATE	GRIP(DRY) (PSI) MAX	MIN	SHEAR (PLI) MAX	MIN	SECTION (PLI) MAX	MIN
MT20	650	371	1747	788	1987	1873

PLATE PLACEMENT TOL. = 0.250 inches

PLATE ROTATION TOL. = 5.0 Deg.

JSI GRIP= 0.81 (B) (INPUT = 0.90)
JSI METAL= 0.46 (J) (INPUT = 0.95)

LICENSED PROFESSIONAL ENGINEER
4/02/24
C. M. HEYENS
100505065
PROVINCE OF ONTARIO

STRUCTURAL COMPONENT ONLY
DWG # TR24040023

JOB NAME	TRUSS NAME	QUANTITY	PLY	JOB DESC.	DRWG NO.
436388	T3	1	1	BAYVIEW WELLINGTON TRUSS DESC.	

Tamarack Roof Truss, Burlington

Version 8.630 S Aug 30 2023 MiTek Industries, Inc. Tue Apr 2 10:53:21 2024 Page 1
ID:GRmvuh1dyQr3nydBfsTFcCy6OGl-wexLsr?QFCED5LqZuGzpN uwAu3BkOYgHWavFuzUo4S

Scale = 1:49.0

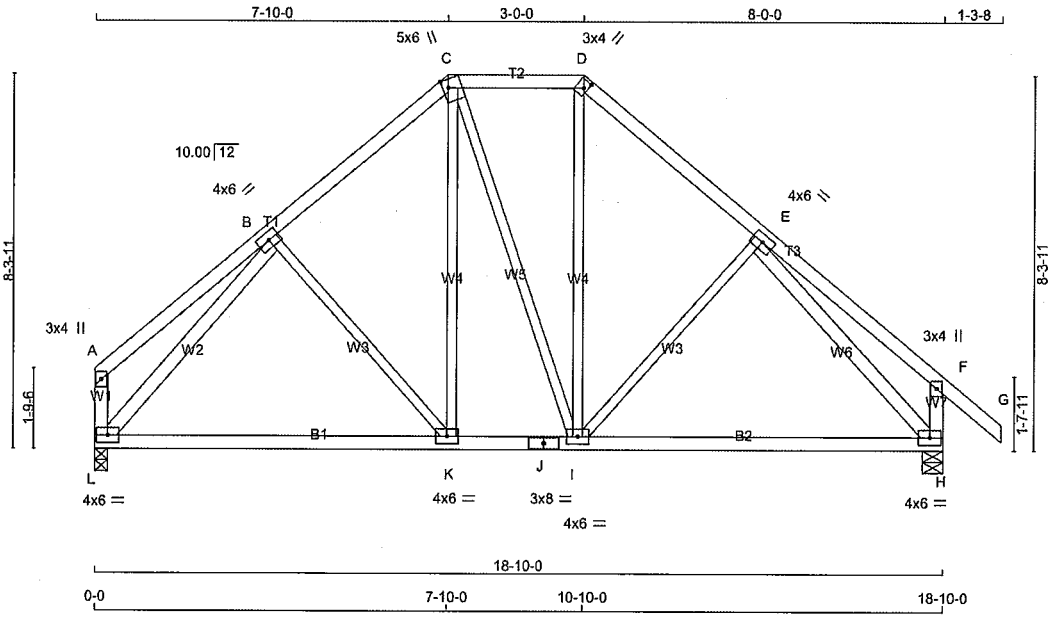

TOTAL WEIGHT = 95 lb

LUMBER
N. L. G. A. RULES

CHORDS	SIZE		LUMBER	DESCR.
A - C	2x4	DRY	No.2	SPF
C - D	2x4	DRY	No.2	SPF
D - G	2x4	DRY	No.2	SPF
L - A	2x4	DRY	No.2	SPF
H - F	2x4	DRY	No.2	SPF
L - J	2x4	DRY	No.2	SPF
J - H	2x4	DRY	No.2	SPF
ALL WEBS EXCEPT	2x3	DRY	No.2	SPF
L - B	2x4	DRY	No.2	SPF
E - H	2x4	DRY	No.2	SPF

DRY: SEASONED LUMBER.

PLATES (table is in inches)

JT	TYPE	PLATES	W	LEN	Y	X
A	TMV+p	MT20	3.0	4.0		
B	TMWW-t	MT20	4.0	6.0		
C	TTWW+m	MT20	5.0	6.0	2.25	1.50
D	TTW+h	MT20	3.0	4.0	2.00	1.00
E	TMWW-t	MT20	4.0	6.0		
F	TMV+p	MT20	3.0	4.0		
H	BMVW1-t	MT20	4.0	6.0		
I	BMWWW-t	MT20	4.0	6.0		
J	BS-t	MT20	3.0	8.0		
K	BMWW-t	MT20	4.0	6.0		
L	BMVW1-t	MT20	4.0	6.0		

NOTES- (1)
1) Lateral braces to be a minimum of 2X4 SPF #2.

DIMENSIONS, SUPPORTS AND LOADINGS SPECIFIED BY FABRICATOR TO BE VERIFIED BY BUILDING DESIGNER

BEARINGS

JT	FACTORED GROSS REACTION VERT	HORZ	MAXIMUM FACTORED GROSS REACTION DOWN	HORZ	UPLIFT	INPUT BRG IN-SX	REQRD BRG IN-SX
L	1233	0	1233	0	0	3-8	1-8
H	1389	0	1389	0	0	5-8	1-8

UNFACTORED REACTIONS

JT	1ST LCASE COMBINED	MAX./MIN. COMPONENT REACTIONS SNOW	LIVE	PERM.LIVE	WIND	DEAD	SOIL
L	864	612 / 0	0 / 0	0 / 0	0 / 0	252 / 0	0 / 0
H	971	702 / 0	0 / 0	0 / 0	0 / 0	269 / 0	0 / 0

BEARING MATERIAL TO BE SPF NO.2 OR BETTER AT JOINT(S) L, H

BRACING
TOP CHORD TO BE SHEATHED OR MAX. PURLIN SPACING = 6.03 FT.
MAX. UNBRACED BOTTOM CHORD LENGTH = 10.00 FT OR RIGID CEILING DIRECTLY APPLIED.

ALL PITCH BREAKS AND PERIMETER CORNER JOINTS MUST BE LATERALLY RESTRAINED.

LOADING
TOTAL LOAD CASES: (4)

CHORDS

MEMB. FR-TO	MAX. FACTORED FORCE (LBS)	FACTORED VERT. LOAD LC1 (PLF) FROM	TO	MAX CSI (LC)	MAX. UNBRAC LENGTH
A- B	0 / 34	-112.4	-112.4	0.28 (1)	10.00
B- C	-965 / 0	-112.4	-112.4	0.23 (1)	6.06
C- D	-723 / 0	-112.4	-112.4	0.13 (1)	6.25
D- E	-973 / 0	-112.4	-112.4	0.24 (1)	6.03
E- F	0 / 34	-112.4	-112.4	0.29 (1)	10.00
F- G	0 / 50	-112.4	-112.4	0.15 (1)	10.00
L- A	-160 / 0	0.0	0.0	0.02 (1)	7.81
H- F	-325 / 0	0.0	0.0	0.03 (1)	7.81
L- K	0 / 833	-18.5	-18.5	0.29 (4)	10.00
K- J	0 / 717	-18.5	-18.5	0.30 (4)	10.00
J- I	0 / 717	-18.5	-18.5	0.30 (4)	10.00
I- H	0 / 861	-18.5	-18.5	0.30 (4)	10.00

WEBS

MEMB. FR-TO	MAX. FACTORED FORCE (LBS)	MAX CSI (LC)
B- K	-178 / 0	0.12 (1)
K- C	0 / 240	0.05 (1)
C- I	0 / 15	0.00 (1)
I- D	0 / 261	0.06 (1)
I- E	-213 / 0	0.14 (1)
L- B	-1310 / 0	0.57 (1)
E- H	-1320 / 0	0.60 (1)

[M][F]

DESIGN CRITERIA

SPECIFIED LOADS:

TOP CH.	LL	=	32.5	PSF
	DL	=	6.0	PSF
BOT CH.	LL	=	0.0	PSF
	DL	=	7.4	PSF
TOTAL LOAD		=	45.9	PSF

SPACING = 24.0 IN. C/C

LOADING IN FLAT SECTION BASED ON A SLOPE OF 2.00/12 MINIMUM

THIS TRUSS IS DESIGNED FOR RESIDENTIAL OR SMALL BUILDING REQUIREMENTS OF PART 9, NBCC 2015

THIS DESIGN COMPLIES WITH:
- PART 9 OF BCBC 2018 , NBC-2019AE
- PART 9 OF OBC 2012 (2019 AMENDMENT)
- CSA 086-14
- TPIC 2014

(55 % OF 43.9 P.S.F. G.S.L. PLUS 8.4 P.S.F. RAIN LOAD) EQUALS 32.5 P.S.F. SPECIFIED ROOF LIVE LOAD

ALLOWABLE DEFL.(LL)= L/360 (0.63")
CALCULATED VERT. DEFL.(LL) = L/ 999 (0.02")
ALLOWABLE DEFL.(TL)= L/360 (0.63")
CALCULATED VERT. DEFL.(TL) = L/ 999 (0.14")

CSI: TC=0.29/1.00 (E-F:1) , BC=0.30/1.00 (H-I:4) , WB=0.60/1.00 (E-H:1) , SSI=0.17/1.00 (D-E:1)

DOL LUMBER=1.00 NAIL=1.00 LS BEND=1.10 COMP=1.10 SHEAR=1.10 TENS= 1.10

COMPANION LIVE LOAD FACTOR = 1.00

AUTOSOLVE HEELS OFF

TRUSS PLATE MANUFACTURER IS NOT RESPONSIBLE FOR QUALITY CONTROL IN THE TRUSS MANUFACTURING PLANT .

NAIL VALUES

PLATE	GRIP(DRY) (PSI) MAX	MIN	SHEAR (PLI) MAX	MIN	SECTION (PLI) MAX	MIN
MT20	650	371	1747	788	1987	1873

PLATE PLACEMENT TOL. = 0.250 inches

PLATE ROTATION TOL. = 5.0 Deg.

JSI GRIP= 0.80 (B) (INPUT = 0.90)
JSI METAL= 0.50 (J) (INPUT = 0.95)

LICENSED PROFESSIONAL ENGINEER
4/02/24
C. M. HEYENS
100505065
PROVINCE OF ONTARIO

STRUCTURAL COMPONENT ONLY
DWG # TR24040024

JOB NAME	TRUSS NAME	QUANTITY	PLY	JOB DESC.	DRWG NO.
436388	T4	1	1	BAYVIEW WELLINGTON TRUSS DESC.	

Tamarack Roof Truss, Burlington

Version 8.630 S Aug 30 2023 MiTek Industries, Inc. Tue Apr 2 10:53:22 2024 Page 1
ID:GRmvuh1dyQr3nydBfsTFcCy6OGI-OrVj4B?20WM4jUPlSzU2wBR6qIPFTvcpWAKToKzUo4R

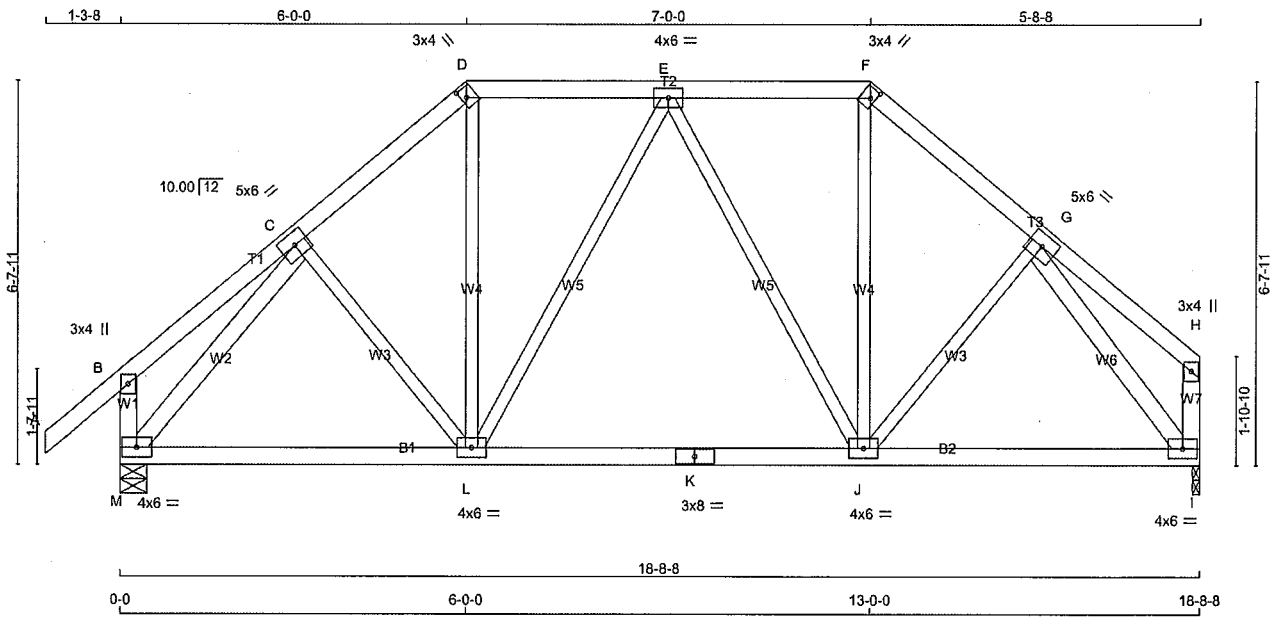

TOTAL WEIGHT = 91 lb

LUMBER
N. L. G. A. RULES

CHORDS	SIZE		LUMBER	DESCR.
A - D	2x4	DRY	No.2	SPF
D - F	2x4	DRY	No.2	SPF
F - H	2x4	DRY	No.2	SPF
M - B	2x4	DRY	No.2	SPF
I - H	2x4	DRY	No.2	SPF
M - K	2x4	DRY	No.2	SPF
K - I	2x4	DRY	No.2	SPF
ALL WEBS	2x3	DRY	No.2	SPF
EXCEPT				
M - C	2x4	DRY	No.2	SPF
G - I	2x4	DRY	No.2	SPF

DRY: SEASONED LUMBER.

PLATES (table is in inches)

JT	TYPE	PLATES	W	LEN	Y	X
B	TMV+p	MT20	3.0	4.0		
C	TMWW-t	MT20	5.0	6.0		
D	TTW+h	MT20	3.0	4.0	2.00	1.00
E	TMWW-t	MT20	4.0	6.0		
F	TTW+h	MT20	3.0	4.0	2.00	1.00
G	TMWW-t	MT20	5.0	6.0		
H	TMV+p	MT20	3.0	4.0		
I	BMVW1-t	MT20	4.0	6.0		
J	BMWWW-t	MT20	4.0	6.0		
K	BS-t	MT20	3.0	8.0		
L	BMWWW-t	MT20	4.0	6.0		
M	BMVW1-t	MT20	4.0	6.0		

NOTES- (1)
1) Lateral braces to be a minimum of 2X4 SPF #2.

DIMENSIONS, SUPPORTS AND LOADINGS SPECIFIED BY FABRICATOR TO BE VERIFIED BY BUILDING DESIGNER

BEARINGS

JT	FACTORED GROSS REACTION VERT	HORZ	MAXIMUM FACTORED GROSS REACTION DOWN	HORZ	UPLIFT	INPUT BRG IN-SX	REQRD BRG IN-SX
M	1380	0	1380	0	0	5-8	1-8
I	1225	0	1225	0	0	1-8	1-8

UNFACTORED REACTIONS

JT	1ST LCASE COMBINED	MAX./MIN. COMPONENT REACTIONS SNOW	LIVE	PERM.LIVE	WIND	DEAD	SOIL
M	965	698 / 0	0 / 0	0 / 0	0 / 0	267 / 0	0 / 0
I	858	608 / 0	0 / 0	0 / 0	0 / 0	251 / 0	0 / 0

BEARING MATERIAL TO BE SPF NO.2 OR BETTER AT JOINT(S) M, I

BRACING
TOP CHORD TO BE SHEATHED OR MAX. PURLIN SPACING = 5.97 FT.
MAX. UNBRACED BOTTOM CHORD LENGTH = 10.00 FT OR RIGID CEILING DIRECTLY APPLIED.

ALL PITCH BREAKS AND PERIMETER CORNER JOINTS MUST BE LATERALLY RESTRAINED.

LOADING
TOTAL LOAD CASES: (4)

CHORDS

MEMB. FR-TO	MAX. FACTORED FORCE (LBS)	FACTORED VERT. LOAD (PLF) FROM	TO	LC1 CSI (LC)	MAX UNBRAC LENGTH
A- B	0 / 50	-112.4	-112.4	0.15 (1)	10.00
B- C	0 / 24	-112.4	-112.4	0.15 (1)	10.00
C- D	-1067 / 0	-112.4	-112.4	0.13 (1)	5.97
D- E	-805 / 0	-112.4	-112.4	0.17 (1)	6.25
E- F	-783 / 0	-112.4	-112.4	0.17 (1)	6.25
F- G	-1037 / 0	-112.4	-112.4	0.12 (1)	6.04
G- H	0 / 24	-112.4	-112.4	0.14 (1)	10.00
M- B	-285 / 0	0.0	0.0	0.03 (1)	7.81
I- H	-113 / 0	0.0	0.0	0.01 (1)	7.81
M- L	0 / 825	-18.5	-18.5	0.23 (4)	10.00
L- K	0 / 921	-18.5	-18.5	0.25 (1)	10.00
K- J	0 / 921	-18.5	-18.5	0.25 (1)	10.00
J- I	0 / 757	-18.5	-18.5	0.22 (4)	10.00

WEBS

MEMB. FR-TO	MAX. FACTORED FORCE (LBS)	MAX CSI (LC)
C- L	-41 / 27	0.02 (1)
L- D	0 / 380	0.09 (1)
L- E	-246 / 0	0.25 (1)
E- J	-291 / 0	0.29 (1)
J- F	0 / 359	0.08 (1)
J- G	0 / 45	0.02 (4)
M- C	-1336 / 0	0.35 (1)
G- I	-1311 / 0	0.32 (1)

[M][F]

DESIGN CRITERIA

SPECIFIED LOADS:

TOP CH.	LL	=	32.5	PSF
	DL	=	6.0	PSF
BOT CH.	LL	=	0.0	PSF
	DL	=	7.4	PSF
TOTAL LOAD		=	45.9	PSF

SPACING = 24.0 IN. C/C

LOADING IN FLAT SECTION BASED ON A SLOPE OF 2.00/12 MINIMUM

THIS TRUSS IS DESIGNED FOR RESIDENTIAL OR SMALL BUILDING REQUIREMENTS OF PART 9, NBCC 2015

THIS DESIGN COMPLIES WITH:
- PART 9 OF BCBC 2018 , NBC-2019AE
- PART 9 OF OBC 2012 (2019 AMENDMENT)
- CSA 086-14
- TPIC 2014

(55 % OF 43.9 P.S.F. G.S.L. PLUS 8.4 P.S.F. RAIN LOAD) EQUALS 32.5 P.S.F. SPECIFIED ROOF LIVE LOAD

ALLOWABLE DEFL.(LL)= L/360 (0.62")
CALCULATED VERT. DEFL.(LL) = L/ 999 (0.02")
ALLOWABLE DEFL.(TL)= L/360 (0.62")
CALCULATED VERT. DEFL.(TL) = L/ 999 (0.06")

CSI: TC=0.17/1.00 (D-E:1) , BC=0.25/1.00 (J-L:1) , WB=0.35/1.00 (C-M:1) , SSI=0.19/1.00 (D-E:1)

DOL LUMBER=1.00 NAIL=1.00 LS BEND=1.10 COMP=1.10 SHEAR=1.10 TENS= 1.10

COMPANION LIVE LOAD FACTOR = 1.00

AUTOSOLVE HEELS OFF

TRUSS PLATE MANUFACTURER IS NOT RESPONSIBLE FOR QUALITY CONTROL IN THE TRUSS MANUFACTURING PLANT .

NAIL VALUES

PLATE	GRIP(DRY) (PSI) MAX	MIN	SHEAR (PLI) MAX	MIN	SECTION (PLI) MAX	MIN
MT20	650	371	1747	788	1987	1873

PLATE PLACEMENT TOL. = 0.250 inches

PLATE ROTATION TOL. = 5.0 Deg.

JSI GRIP= 0.80 (D) (INPUT = 0.90)
JSI METAL= 0.35 (K) (INPUT = 0.95)

LICENSED PROFESSIONAL ENGINEER
4/02/24
C. M. HEYENS
100505065
PROVINCE OF ONTARIO

STRUCTURAL COMPONENT ONLY
DWG # TR24040025

JOB NAME	TRUSS NAME	QUANTITY	PLY	JOB DESC.	DRWG NO.
436388	T5	1	1	BAYVIEW WELLINGTON TRUSS DESC.	

Tamarack Roof Truss, Burlington

Version 8.630 S Aug 30 2023 MiTek Industries, Inc. Tue Apr 2 10:53:23 2024 Page 1
ID:GRmvuh1dyQr3nydBfsTFcCy6OGl-s135HX0gnpUxLe y?h?HTPzFphl CLkylq30KnzUo4Q

Scale = 1:56.4

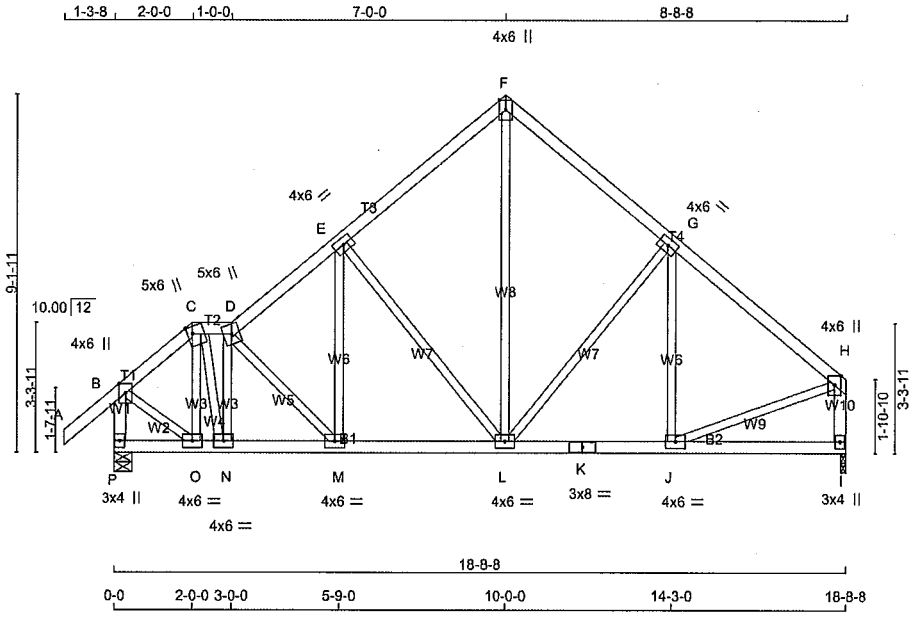

TOTAL WEIGHT = 95 lb

LUMBER
N. L. G. A. RULES

CHORDS	SIZE		LUMBER	DESCR.
A - C	2x4	DRY	No.2	SPF
C - D	2x4	DRY	No.2	SPF
D - F	2x4	DRY	No.2	SPF
F - H	2x4	DRY	No.2	SPF
P - B	2x4	DRY	No.2	SPF
I - H	2x4	DRY	No.2	SPF
P - K	2x4	DRY	No.2	SPF
K - I	2x4	DRY	No.2	SPF
ALL WEBS EXCEPT	2x3	DRY	No.2	SPF

DRY: SEASONED LUMBER.

PLATES (table is in inches)

JT	TYPE	PLATES	W	LEN	Y	X
B	TMVW+p	MT20	4.0	6.0	Edge	
C	TTWW+m	MT20	5.0	6.0	2.25	1.50
D	TTWW+m	MT20	5.0	6.0		
E	TMWW-t	MT20	4.0	6.0		
F	TTW+p	MT20	4.0	6.0	Edge	
G	TMWW-t	MT20	4.0	6.0		
H	TMVW+p	MT20	4.0	6.0	Edge	
I	BMV1+p	MT20	3.0	4.0		
J, M, N, O						
J	BMWW-t	MT20	4.0	6.0		
K	BS-t	MT20	3.0	8.0		
L	BMWWW-t	MT20	4.0	6.0		
P	BMV1+p	MT20	3.0	4.0		

Edge - INDICATES REFERENCE CORNER OF PLATE TOUCHES EDGE OF CHORD.

NOTES- (1)
1) Lateral braces to be a minimum of 2X4 SPF #2.

LICENSED PROFESSIONAL ENGINEER
4/02/24
C. M. HEYENS
100505065
PROVINCE OF ONTARIO

STRUCTURAL COMPONENT ONLY
DWG # TR24040026

DIMENSIONS, SUPPORTS AND LOADINGS SPECIFIED BY FABRICATOR TO BE VERIFIED BY BUILDING DESIGNER

BEARINGS

JT	FACTORED GROSS REACTION VERT	HORZ	MAXIMUM FACTORED GROSS REACTION DOWN	HORZ	UPLIFT	INPUT BRG IN-SX	REQRD BRG IN-SX
P	1380	0	1380	0	0	5-8	1-8
I	1225	0	1225	0	0	1-8	1-8

UNFACTORED REACTIONS

JT	1ST LCASE COMBINED	MAX./MIN. COMPONENT REACTIONS SNOW	LIVE	PERM.LIVE	WIND	DEAD	SOIL
P	965	698 / 0	0 / 0	0 / 0	0 / 0	267 / 0	0 / 0
I	858	608 / 0	0 / 0	0 / 0	0 / 0	251 / 0	0 / 0

BEARING MATERIAL TO BE SPF NO.2 OR BETTER AT JOINT(S) P, I

BRACING
TOP CHORD TO BE SHEATHED OR MAX. PURLIN SPACING = 5.59 FT.
MAX. UNBRACED BOTTOM CHORD LENGTH = 10.00 FT OR RIGID CEILING DIRECTLY APPLIED.

ALL PITCH BREAKS AND PERIMETER CORNER JOINTS MUST BE LATERALLY RESTRAINED.

LOADING
TOTAL LOAD CASES: (4)

CHORDS

MEMB. FR-TO	MAX. FACTORED FORCE (LBS)	FACTORED VERT. LOAD LC1 (PLF) FROM	TO	MAX CSI (LC)	MAX. UNBRAC LENGTH
A- B	0 / 50	-112.4	-112.4	0.15 (1)	10.00
B- C	-993 / 0	-112.4	-112.4	0.07 (1)	6.20
C- D	-988 / 0	-112.4	-112.4	0.02 (1)	6.25
D- E	-1209 / 0	-112.4	-112.4	0.21 (1)	5.59
E- F	-875 / 0	-112.4	-112.4	0.24 (1)	6.25
F- G	-885 / 0	-112.4	-112.4	0.28 (1)	6.18
G- H	-1062 / 0	-112.4	-112.4	0.29 (1)	5.77
P- B	-1380 / 0	0.0	0.0	0.15 (1)	6.92
I- H	-1190 / 0	0.0	0.0	0.13 (1)	7.32
P- O	0 / 0	-18.5	-18.5	0.05 (1)	10.00
O- N	0 / 747	-18.5	-18.5	0.17 (1)	10.00
N- M	0 / 1018	-18.5	-18.5	0.21 (1)	10.00
M- L	0 / 965	-18.5	-18.5	0.19 (1)	10.00
L- K	0 / 844	-18.5	-18.5	0.17 (1)	10.00
K- J	0 / 844	-18.5	-18.5	0.17 (1)	10.00
J- I	0 / 0	-18.5	-18.5	0.08 (4)	10.00

WEBS

MEMB. FR-TO	MAX. FACTORED FORCE (LBS)	MAX CSI (LC)
O- C	-331 / 0	0.06 (1)
C- N	0 / 839	0.19 (1)
N- D	-883 / 0	0.17 (1)
L- F	0 / 710	0.16 (1)
L- G	-308 / 0	0.26 (1)
J- G	-206 / 17	0.10 (1)
B- O	0 / 893	0.20 (1)
J- H	0 / 893	0.20 (1)
E- L	-501 / 0	0.42 (1)
M- E	0 / 140	0.04 (4)
D- M	-79 / 0	0.02 (1)

DESIGN CRITERIA

SPECIFIED LOADS:

TOP CH.	LL	=	32.5	PSF
	DL	=	6.0	PSF
BOT CH.	LL	=	0.0	PSF
	DL	=	7.4	PSF
TOTAL LOAD		=	45.9	PSF

SPACING = 24.0 IN. C/C

LOADING IN ALL FLAT SECTIONS BASED ON A SLOPE OF 2.00/12 MINIMUM

THIS TRUSS IS DESIGNED FOR RESIDENTIAL OR SMALL BUILDING REQUIREMENTS OF PART 9, NBCC 2015

THIS DESIGN COMPLIES WITH:
- PART 9 OF BCBC 2018 , NBC-2019AE
- PART 9 OF OBC 2012 (2019 AMENDMENT)
- CSA 086-14
- TPIC 2014

(55 % OF 43.9 P.S.F. G.S.L. PLUS 8.4 P.S.F. RAIN LOAD) EQUALS 32.5 P.S.F. SPECIFIED ROOF LIVE LOAD

ALLOWABLE DEFL.(LL)= L/360 (0.62")
CALCULATED VERT. DEFL.(LL) = L/ 999 (0.03")
ALLOWABLE DEFL.(TL)= L/360 (0.62")
CALCULATED VERT. DEFL.(TL) = L/ 999 (0.06")

CSI: TC=0.29/1.00 (G-H:1) , BC=0.21/1.00 (M-N:1) , WB=0.42/1.00 (E-L:1) , SSI=0.18/1.00 (G-H:1)

DOL LUMBER=1.00 NAIL=1.00 LS BEND=1.10 COMP=1.10 SHEAR=1.10 TENS= 1.10

COMPANION LIVE LOAD FACTOR = 1.00

TRUSS PLATE MANUFACTURER IS NOT RESPONSIBLE FOR QUALITY CONTROL IN THE TRUSS MANUFACTURING PLANT .

NAIL VALUES

PLATE	GRIP(DRY) (PSI) MAX	MIN	SHEAR (PLI) MAX	MIN	SECTION (PLI) MAX	MIN
MT20	650	371	1747	788	1987	1873

PLATE PLACEMENT TOL. = 0.250 inches

PLATE ROTATION TOL. = 5.0 Deg.

JSI GRIP= 0.86 (B) (INPUT = 0.90)
JSI METAL= 0.51 (H) (INPUT = 0.95)

[M][F]

JOB NAME	TRUSS NAME	QUANTITY	PLY	JOB DESC.	DRWG NO.
436388	T6	1	1	BAYVIEW WELLINGTON TRUSS DESC.	

Tamarack Roof Truss, Burlington

Version 8.630 S Aug 30 2023 MiTek Industries, Inc. Tue Apr 2 10:53:24 2024 Page 1
ID:GRmvuh1dyQr3nydBfsTFcCy6OGl-KDdTVt1IY7cozoZ8ZOXW?cWPB558xps6zUpZsDzUo4P

Scale = 1:56.4

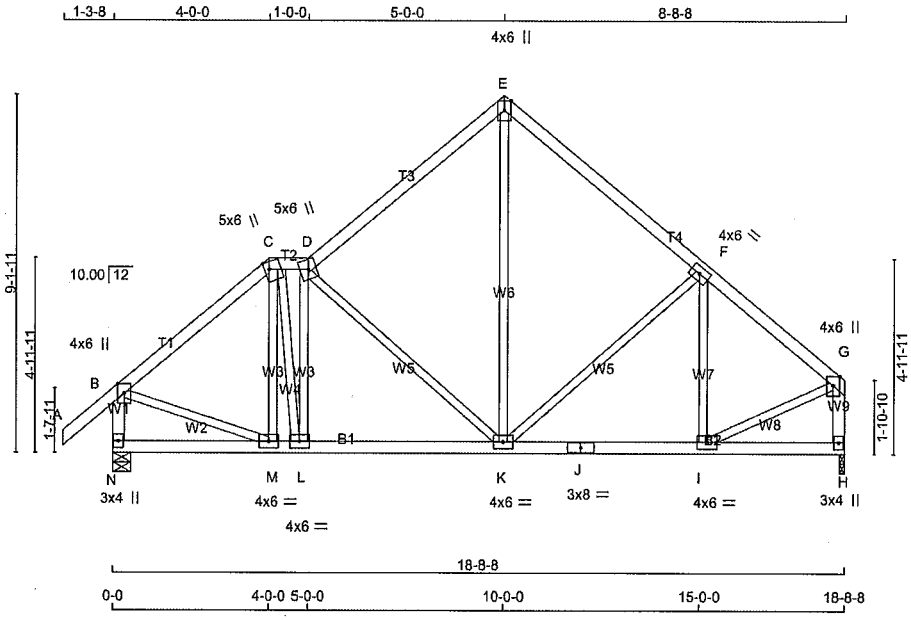

TOTAL WEIGHT = 92 lb

[M][F]

LUMBER

N. L. G. A. RULES

CHORDS	SIZE		LUMBER	DESCR.
A - C	2x4	DRY	No.2	SPF
C - D	2x4	DRY	No.2	SPF
D - E	2x4	DRY	No.2	SPF
E - G	2x4	DRY	No.2	SPF
N - B	2x4	DRY	No.2	SPF
H - G	2x4	DRY	No.2	SPF
N - J	2x4	DRY	No.2	SPF
J - H	2x4	DRY	No.2	SPF
ALL WEBS EXCEPT	2x3	DRY	No.2	SPF

DRY: SEASONED LUMBER.

PLATES (table is in inches)

JT	TYPE	PLATES	W	LEN	Y	X
B	TMVW+p	MT20	4.0	6.0	Edge	
C	TTWW+m	MT20	5.0	6.0	2.25	1.50
D	TTWW+m	MT20	5.0	6.0		
E	TTW+p	MT20	4.0	6.0	Edge	
F	TMWW-t	MT20	4.0	6.0		
G	TMVW+p	MT20	4.0	6.0	Edge	
H	BMV1+p	MT20	3.0	4.0		
I, L, M						
I	BMWW-t	MT20	4.0	6.0		
J	BS-t	MT20	3.0	8.0		
K	BMWWW-t	MT20	4.0	6.0		
N	BMV1+p	MT20	3.0	4.0		

Edge - INDICATES REFERENCE CORNER OF PLATE TOUCHES EDGE OF CHORD.

NOTES- (1)
1) Lateral braces to be a minimum of 2X4 SPF #2.

DIMENSIONS, SUPPORTS AND LOADINGS SPECIFIED BY FABRICATOR TO BE VERIFIED BY BUILDING DESIGNER

BEARINGS

JT	FACTORED GROSS REACTION VERT	HORZ	MAXIMUM FACTORED GROSS REACTION DOWN	HORZ	UPLIFT	INPUT BRG IN-SX	REQRD BRG IN-SX
N	1380	0	1380	0	0	5-8	1-8
H	1225	0	1225	0	0	1-8	1-8

UNFACTORED REACTIONS

JT	1ST LCASE COMBINED	MAX./MIN. COMPONENT REACTIONS SNOW	LIVE	PERM.LIVE	WIND	DEAD	SOIL
N	965	698 / 0	0 / 0	0 / 0	0 / 0	267 / 0	0 / 0
H	858	608 / 0	0 / 0	0 / 0	0 / 0	251 / 0	0 / 0

BEARING MATERIAL TO BE SPF NO.2 OR BETTER AT JOINT(S) N, H

BRACING

TOP CHORD TO BE SHEATHED OR MAX. PURLIN SPACING = 5.74 FT.
MAX. UNBRACED BOTTOM CHORD LENGTH = 10.00 FT OR RIGID CEILING DIRECTLY APPLIED.

ALL PITCH BREAKS AND PERIMETER CORNER JOINTS MUST BE LATERALLY RESTRAINED.

LOADING

TOTAL LOAD CASES: (4)

CHORDS

MEMB. FR-TO	MAX. FACTORED FORCE (LBS)	FACTORED VERT. LOAD LC1 (PLF) FROM	TO	MAX CSI (LC)	MAX. UNBRAC LENGTH
A- B	0 / 50	-112.4	-112.4	0.15 (1)	10.00
B- C	-1098 / 0	-112.4	-112.4	0.25 (1)	5.75
C- D	-949 / 0	-112.4	-112.4	0.02 (1)	6.25
D- E	-848 / 0	-112.4	-112.4	0.37 (1)	6.13
E- F	-885 / 0	-112.4	-112.4	0.35 (1)	6.07
F- G	-1056 / 0	-112.4	-112.4	0.31 (1)	5.74
N- B	-1354 / 0	0.0	0.0	0.14 (1)	6.97
H- G	-1198 / 0	0.0	0.0	0.13 (1)	7.31
N- M	0 / 0	-18.5	-18.5	0.08 (4)	10.00
M- L	0 / 838	-18.5	-18.5	0.20 (1)	10.00
L- K	0 / 962	-18.5	-18.5	0.22 (1)	10.00
K- J	0 / 850	-18.5	-18.5	0.20 (1)	10.00
J- I	0 / 850	-18.5	-18.5	0.20 (1)	10.00
I- H	0 / 0	-18.5	-18.5	0.07 (4)	10.00

WEBS

MEMB. FR-TO	MAX. FACTORED FORCE (LBS)	MAX CSI (LC)
M- C	-152 / 0	0.06 (1)
C- L	0 / 588	0.13 (1)
L- D	-591 / 0	0.21 (1)
D- K	-423 / 0	0.37 (1)
K- E	0 / 572	0.13 (1)
K- F	-264 / 0	0.23 (1)
I- F	-283 / 0	0.10 (1)
B- M	0 / 883	0.20 (1)
I- G	0 / 925	0.21 (1)

DESIGN CRITERIA

SPECIFIED LOADS:

TOP CH.	LL	=	32.5	PSF
	DL	=	6.0	PSF
BOT CH.	LL	=	0.0	PSF
	DL	=	7.4	PSF
TOTAL LOAD		=	45.9	PSF

SPACING = 24.0 IN. C/C

LOADING IN ALL FLAT SECTIONS BASED ON A SLOPE OF 2.00/12 MINIMUM

THIS TRUSS IS DESIGNED FOR RESIDENTIAL OR SMALL BUILDING REQUIREMENTS OF PART 9, NBCC 2015

THIS DESIGN COMPLIES WITH:
- PART 9 OF BCBC 2018 , NBC-2019AE
- PART 9 OF OBC 2012 (2019 AMENDMENT)
- CSA 086-14
- TPIC 2014

(55 % OF 43.9 P.S.F. G.S.L. PLUS 8.4 P.S.F. RAIN LOAD) EQUALS 32.5 P.S.F. SPECIFIED ROOF LIVE LOAD

ALLOWABLE DEFL.(LL)= L/360 (0.62")
CALCULATED VERT. DEFL.(LL) = L/ 999 (0.03")
ALLOWABLE DEFL.(TL)= L/360 (0.62")
CALCULATED VERT. DEFL.(TL) = L/ 999 (0.06")

CSI: TC=0.37/1.00 (D-E:1) , BC=0.22/1.00 (K-L:1) , WB=0.37/1.00 (D-K:1) , SSI=0.20/1.00 (E-F:1)

DOL LUMBER=1.00 NAIL=1.00 LS BEND=1.10 COMP=1.10 SHEAR=1.10 TENS= 1.10

COMPANION LIVE LOAD FACTOR = 1.00

TRUSS PLATE MANUFACTURER IS NOT RESPONSIBLE FOR QUALITY CONTROL IN THE TRUSS MANUFACTURING PLANT .

NAIL VALUES

PLATE	GRIP(DRY) (PSI) MAX	MIN	SHEAR (PLI) MAX	MIN	SECTION (PLI) MAX	MIN
MT20	650	371	1747	788	1987	1873

PLATE PLACEMENT TOL. = 0.250 Inches

PLATE ROTATION TOL. = 5.0 Deg.

JSI GRIP= 0.85 (B) (INPUT = 0.90)
JSI METAL= 0.56 (B) (INPUT = 0.95)

LICENSED PROFESSIONAL ENGINEER
4/02/24
C. M. HEYENS
100505065
PROVINCE OF ONTARIO

STRUCTURAL COMPONENT ONLY
DWG # TR24040027

JOB NAME	TRUSS NAME	QUANTITY	PLY	JOB DESC.	DRWG NO.
436388	T7	1	2	BAYVIEW WELLINGTON TRUSS DESC.	

Tamarack Roof Truss, Burlington

Version 8.630 S Aug 30 2023 MiTek Industries, Inc. Tue Apr 2 10:53:26 2024 Page 1
ID:GRmvuh1dyQr3nydBfsTFcCy6OGl-GclEvZ2Y4ksWC6jWhpZ 41bi5vnnPh PRolgx5zUo4N

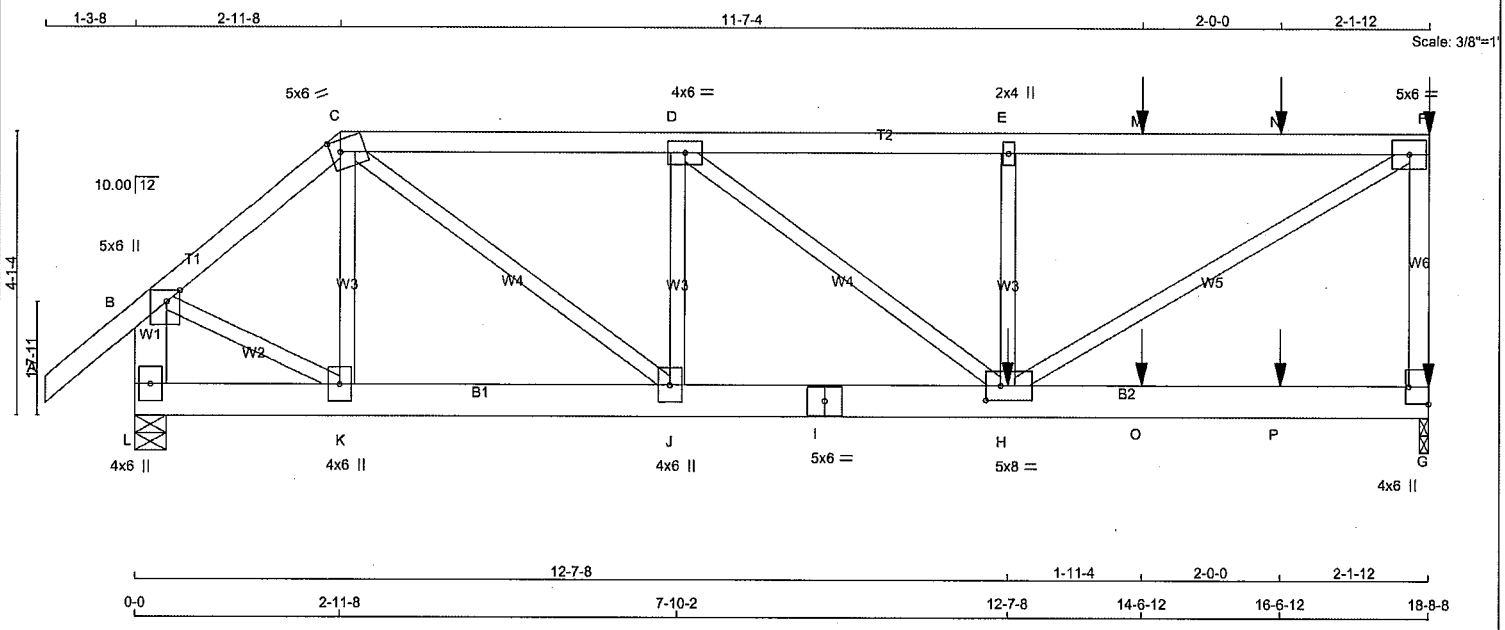

TOTAL WEIGHT = 2 X 89 = 178 lb

[M]

LUMBER

N. L. G. A. RULES

CHORDS	SIZE		LUMBER	DESCR.
A - C	2x4	DRY	No.2	SPF
C - F	2x4	DRY	No.2	SPF
G - F	2x4	DRY	No.2	SPF
L - B	2x6	DRY	No.2	SPF
L - I	2x6	DRY	No.2	SPF
I - G	2x6	DRY	No.2	SPF
ALL WEBS EXCEPT	2x3	DRY	No.2	SPF

DRY: SEASONED LUMBER.

DESIGN CONSISTS OF 2 TRUSSES BUILT SEPARATELY THEN FASTENED TOGETHER AS FOLLOWS:

CHORDS	#ROWS	SURFACE SPACING (IN)	LOAD(PLF)
TOP CHORDS : (0.122"X3") SPIRAL NAILS			
A- C	1	12	TOP
C- F	1	12	SIDE(61.0)
F- G	1	12	TOP
L- B	2	12	TOP
BOTTOM CHORDS : (0.122"X3") SPIRAL NAILS			
L- I	2	12	TOP
I- G	2	12	SIDE(183.1)
WEBS : (0.122"X3") SPIRAL NAILS			
E- H	1	6	SIDE(172.3)
2x3	1	6	

NAILS TO BE DRIVEN FROM ONE SIDE ONLY.

GIRDER NAILING ASSUMES NAILED HANGERS ARE FASTENED WITH MIN. 3-0 INCH NAILS.

TOP - COMPONENTS ARE LOADED FROM THE TOP AND MUST BE PLACED ON TOP EDGE OF ALL PLIES FOR THE LOAD TO BE TRANSFERRED TO EACH PLY.

SIDE - PLF SHOWN IS THE EQUIVALENT UDL APPLIED TO ONE SIDE THAT THE CORRESPONDING NAILING PATTERN SHALL BE CAPABLE OF TRANSFERING. REMAINING PLF MUST BE APPLIED ON THE OPPOSITE SIDE OR ON THE TOP.

LICENSED PROFESSIONAL ENGINEER
4/02/24
C. M. HEYENS
100505065
PROVINCE OF ONTARIO

STRUCTURAL COMPONENT ONLY
DWG # TR24040028

DIMENSIONS, SUPPORTS AND LOADINGS SPECIFIED BY FABRICATOR TO BE VERIFIED BY BUILDING DESIGNER

BEARINGS

JT	FACTORED GROSS REACTION VERT	HORZ	MAXIMUM FACTORED GROSS REACTION DOWN	HORZ	UPLIFT	INPUT BRG IN-SX	REQRD BRG IN-SX
G	2628	0	2628	0	0	1-8	1-8
L	1878	0	1878	0	0	5-8	1-8

UNFACTORED REACTIONS

JT	1ST LCASE COMBINED	MAX./MIN. COMPONENT REACTIONS SNOW	LIVE	PERM.LIVE	WIND	DEAD	SOIL
G	1839	1320 / 0	0 / 0	0 / 0	0 / 0	519 / 0	0 / 0
L	1311	954 / 0	0 / 0	0 / 0	0 / 0	357 / 0	0 / 0

BEARING MATERIAL TO BE SPF NO.2 OR BETTER AT JOINT(S) G, L

BRACING

TOP CHORD TO BE SHEATHED OR MAX. PURLIN SPACING = 4.57 FT.
MAX. UNBRACED BOTTOM CHORD LENGTH = 10.00 FT OR RIGID CEILING DIRECTLY APPLIED.

ALL PITCH BREAKS AND PERIMETER CORNER JOINTS MUST BE LATERALLY RESTRAINED.

LOADING

TOTAL LOAD CASES: (4)

CHORDS

MEMB. FR-TO	MAX. FACTORED FORCE (LBS)	FACTORED VERT. LOAD (PLF) FROM	TO	LC1 CSI (LC)	MAX. UNBRAC LENGTH
A- B	0 / 50	-112.4	-112.4	0.09 (1)	10.00
B- C	-1626 / 0	-112.4	-112.4	0.10 (1)	6.25
C- D	-2591 / 0	-112.4	-112.4	0.23 (1)	5.40
D- E	-3142 / 0	-112.4	-112.4	0.44 (1)	4.69
E- M	-3142 / 0	-112.4	-112.4	0.54 (1)	4.57
M- N	-3142 / 0	-112.4	-112.4	0.54 (1)	4.57
N- F	-3142 / 0	-112.4	-112.4	0.54 (1)	4.57
G- F	-2498 / 0	0.0	0.0	0.31 (1)	7.16
L- B	-1865 / 0	0.0	0.0	0.07 (1)	7.81
L- K	0 / 0	-18.5	-18.5	0.02 (4)	10.00
K- J	0 / 1233	-18.5	-18.5	0.10 (1)	10.00
J- I	0 / 2591	-18.5	-18.5	0.21 (1)	10.00
I- H	0 / 2591	-18.5	-18.5	0.21 (1)	10.00
H- O	0 / 0	-18.5	-18.5	0.07 (4)	10.00
O- P	0 / 0	-18.5	-18.5	0.07 (4)	10.00
P- G	0 / 0	-18.5	-18.5	0.07 (4)	10.00

WEBS

MEMB. FR-TO	MAX. FACTORED FORCE (LBS)	MAX CSI (LC)
K- C	-398 / 0	0.05 (1)
C- J	0 / 1704	0.21 (1)
J- D	-935 / 0	0.12 (1)
D- H	0 / 699	0.09 (1)
H- E	-898 / 0	0.11 (1)
H- F	0 / 3685	0.46 (1)
B- K	0 / 1340	0.17 (1)

SPECIFIED CONCENTRATED LOADS (LBS)

JT	LOC.	LC1	MAX-	MAX+	FACE	DIR.	TYPE	HEEL	CONN.
F	18-8-8	-124	-124	---	BACK	VERT	TOTAL	---	C1
G	18-8-8	-27	-27	---	BACK	VERT	TOTAL	---	C1
H	12-7-8	-948	-948	---	BACK	VERT	TOTAL	---	C1
M	14-6-12	-93	-93	---	BACK	VERT	TOTAL	---	C1
N	16-6-12	-93	-93	---	BACK	VERT	TOTAL	---	C1
O	14-6-12	-21	-21	---	BACK	VERT	TOTAL	---	C1
P	16-6-12	-21	-21	---	BACK	VERT	TOTAL	---	C1

CONNECTION REQUIREMENTS

1) **C1:** A SUITABLE HANGER/MECHANICAL CONNECTION IS REQUIRED.

DESIGN CRITERIA

SPECIFIED LOADS:

TOP CH.	LL	=	32.5	PSF
	DL	=	6.0	PSF
BOT CH.	LL	=	0.0	PSF
	DL	=	7.4	PSF
TOTAL LOAD		=	45.9	PSF

SPACING = 24.0 IN. C/C

LOADING IN FLAT SECTION BASED ON A SLOPE OF 2.00/12 MINIMUM

THIS TRUSS IS DESIGNED FOR RESIDENTIAL OR SMALL BUILDING REQUIREMENTS OF PART 9, NBCC 2015

THIS DESIGN COMPLIES WITH:
- PART 9 OF BCBC 2018 , NBC-2019AE
- PART 9 OF OBC 2012 (2019 AMENDMENT)
- CSA 086-14
- TPIC 2014

(55 % OF 43.9 P.S.F. G.S.L. PLUS 8.4 P.S.F. RAIN LOAD) EQUALS 32.5 P.S.F. SPECIFIED ROOF LIVE LOAD

ALLOWABLE DEFL.(LL)= L/360 (0.62")
CALCULATED VERT. DEFL.(LL) = L/ 999 (0.05")
ALLOWABLE DEFL.(TL)= L/360 (0.62")
CALCULATED VERT. DEFL.(TL) = L/ 999 (0.09")

CSI: TC=0.54/1.00 (E-F:1) , BC=0.21/1.00 (H-J:1) , WB=0.46/1.00 (F-H:1) , SSI=0.24/1.00 (E-F:1)

DOL LUMBER=1.00 NAIL=1.00 LS BEND=1.00 COMP=1.00 SHEAR=1.00 TENS= 1.00

COMPANION LIVE LOAD FACTOR = 1.00

AUTOSOLVE RIGHT HEEL ONLY

TRUSS PLATE MANUFACTURER IS NOT RESPONSIBLE FOR QUALITY CONTROL IN THE TRUSS MANUFACTURING PLANT .

NAIL VALUES

PLATE	GRIP(DRY) (PSI) MAX	MIN	SHEAR (PLI) MAX	MIN	SECTION (PLI) MAX	MIN
MT20	650	371	1747	788	1987	1873

PLATE PLACEMENT TOL. = 0.250 inches

PLATE ROTATION TOL. = 5.0 Deg.

JSI GRIP= 0.84 (H) (INPUT = 0.90)
JSI METAL= 0.36 (H) (INPUT = 0.95)

CONTINUED ON PAGE 2

JOB NAME	TRUSS NAME	QUANTITY	PLY	JOB DESC. BAYVIEW WELLINGTON	DRWG NO.
436388	T7	1	2	TRUSS DESC.	

Tamarack Roof Truss, Burlington

Version 8.630 S Aug 30 2023 MiTek Industries, Inc. Tue Apr 2 10:53:26 2024 Page 2
ID:GRmvuh1dyQr3nydBfsTFcCy6OGl-GclEvZ2Y4ksWC6jWhpZ_41bi5vnnPh_PRolgx5zUo4N

PLATES (table is in inches)

JT	TYPE	PLATES	W	LEN	Y	X
B	TMVW+p	MT20	5.0	6.0	2.00	2.25
C	TTWW-m	MT20	5.0	6.0	2.00	1.75
D	TMWW-t	MT20	4.0	6.0		
E	TMW+w	MT20	2.0	4.0		
F	TMVW-t	MT20	5.0	6.0		
G	BMV1+p	MT20	4.0	6.0	3.00	Edge
H	BMWWW-t	MT20	5.0	8.0	2.50	2.50
I	BS-t	MT20	5.0	6.0		
J	BMWW+t	MT20	4.0	6.0		
K	BMWW+t	MT20	4.0	6.0		
L	BMV1+p	MT20	4.0	6.0		

Edge - INDICATES REFERENCE CORNER OF PLATE TOUCHES EDGE OF CHORD.

NOTES- (1)
1) Lateral braces to be a minimum of 2X4 SPF #2.

LICENSED PROFESSIONAL ENGINEER
4/02/24
C. M. HEYENS
100505065
PROVINCE OF ONTARIO

STRUCTURAL COMPONENT ONLY
DWG # TR24040028

JOB NAME	TRUSS NAME	QUANTITY	PLY	JOB DESC.	DRWG NO.
436388	T8	1	1	BAYVIEW WELLINGTON TRUSS DESC.	

Tamarack Roof Truss, Burlington

Version 8.630 S Aug 30 2023 MiTek Industries, Inc. Tue Apr 2 10:53:27 2024 Page 1
ID:GRmvuh1dyQr3nydBfsTFcCy6OGl-koJc7v3Br2 NqGljEX4DdF8t4J7y8ABYfS1ETYzUo4M

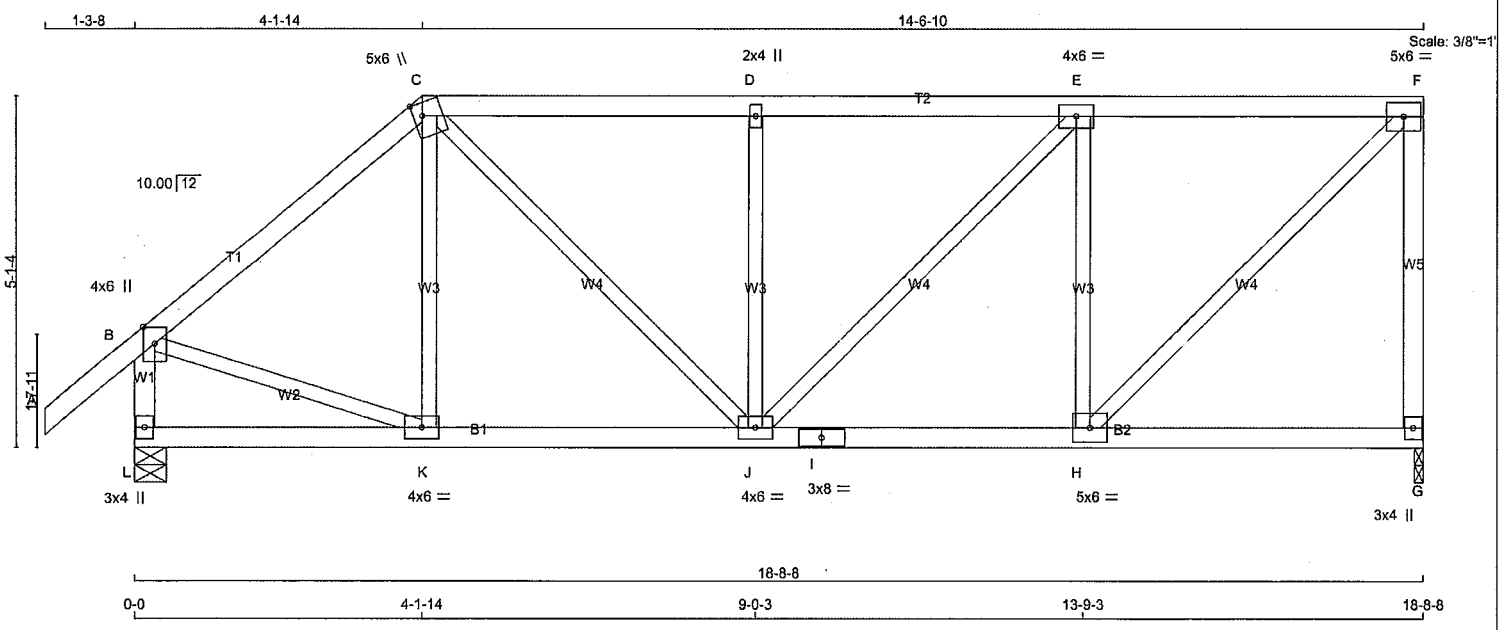

TOTAL WEIGHT = 83 lb

LUMBER
N. L. G. A. RULES

CHORDS	SIZE		LUMBER	DESCR.
A - C	2x4	DRY	No.2	SPF
C - F	2x4	DRY	No.2	SPF
G - F	2x4	DRY	No.2	SPF
L - B	2x4	DRY	No.2	SPF
L - I	2x4	DRY	No.2	SPF
I - G	2x4	DRY	No.2	SPF
ALL WEBS EXCEPT	2x3	DRY	No.2	SPF

DRY: SEASONED LUMBER.

PLATES (table is in inches)

JT	TYPE	PLATES	W	LEN	Y	X
B	TMVW+p	MT20	4.0	6.0	Edge	
C	TTWW+m	MT20	5.0	6.0	2.25	1.50
D	TMW+w	MT20	2.0	4.0		
E	TMWW-t	MT20	4.0	6.0		
F	TMVW-t	MT20	5.0	6.0		
G	BMV1+p	MT20	3.0	4.0		
H	BMWW-t	MT20	5.0	6.0		
I	BS-t	MT20	3.0	8.0		
J	BMWWW-t	MT20	4.0	6.0		
K	BMWW-t	MT20	4.0	6.0		
L	BMV1+p	MT20	3.0	4.0		

Edge - INDICATES REFERENCE CORNER OF PLATE TOUCHES EDGE OF CHORD.

NOTES- (1)
1) Lateral braces to be a minimum of 2X4 SPF #2.

DIMENSIONS, SUPPORTS AND LOADINGS SPECIFIED BY FABRICATOR TO BE VERIFIED BY BUILDING DESIGNER

BEARINGS

JT	FACTORED GROSS REACTION VERT	HORZ	MAXIMUM FACTORED GROSS REACTION DOWN	HORZ	UPLIFT	INPUT BRG IN-SX	REQRD BRG IN-SX
G	1225	0	1225	0	0	1-8	1-8
L	1380	0	1380	0	0	5-8	1-8

UNFACTORED REACTIONS

JT	1ST LCASE COMBINED	MAX./MIN. COMPONENT REACTIONS SNOW	LIVE	PERM.LIVE	WIND	DEAD	SOIL
G	858	608 / 0	0 / 0	0 / 0	0 / 0	251 / 0	0 / 0
L	965	698 / 0	0 / 0	0 / 0	0 / 0	267 / 0	0 / 0

BEARING MATERIAL TO BE SPF NO.2 OR BETTER AT JOINT(S) G, L

BRACING
TOP CHORD TO BE SHEATHED OR MAX. PURLIN SPACING = 5.24 FT.
MAX. UNBRACED BOTTOM CHORD LENGTH = 10.00 FT OR RIGID CEILING DIRECTLY APPLIED.

ALL PITCH BREAKS AND PERIMETER CORNER JOINTS MUST BE LATERALLY RESTRAINED.

LOADING
TOTAL LOAD CASES: (4)

CHORDS

MEMB. FR-TO	MAX. FACTORED FORCE (LBS)	FACTORED VERT. LOAD (PLF) FROM	TO	LC1 CSI (LC)	MAX UNBRAC LENGTH
A- B	0 / 50	-112.4	-112.4	0.15 (1)	10.00
B- C	-1095 / 0	-112.4	-112.4	0.37 (1)	5.55
C- D	-1243 / 0	-112.4	-112.4	0.37 (1)	5.27
D- E	-1244 / 0	-112.4	-112.4	0.39 (1)	5.24
E- F	-987 / 0	-112.4	-112.4	0.38 (1)	5.73
G- F	-1187 / 0	0.0	0.0	0.52 (1)	7.33
L- B	-1350 / 0	0.0	0.0	0.14 (1)	6.98
L- K	0 / 0	-18.5	-18.5	0.09 (4)	10.00
K- J	0 / 836	-18.5	-18.5	0.19 (1)	10.00
J- I	0 / 987	-18.5	-18.5	0.21 (1)	10.00
I- H	0 / 987	-18.5	-18.5	0.21 (1)	10.00
H- G	0 / 0	-18.5	-18.5	0.10 (4)	10.00

WEBS

MEMB. FR-TO	MAX. FACTORED FORCE (LBS)	MAX CSI (LC)
K- C	-161 / 30	0.06 (1)
B- K	0 / 877	0.20 (1)
H- F	0 / 1378	0.31 (1)
C- J	0 / 573	0.13 (1)
H- E	-860 / 0	0.33 (1)
J- D	-582 / 0	0.22 (1)
J- E	0 / 365	0.08 (1)

DESIGN CRITERIA [M]

SPECIFIED LOADS:

TOP CH.	LL	=	32.5	PSF
	DL	=	6.0	PSF
BOT CH.	LL	=	0.0	PSF
	DL	=	7.4	PSF
TOTAL LOAD		=	45.9	PSF

SPACING = 24.0 IN. C/C

LOADING IN FLAT SECTION BASED ON A SLOPE OF 2.00/12 MINIMUM

THIS TRUSS IS DESIGNED FOR RESIDENTIAL OR SMALL BUILDING REQUIREMENTS OF PART 9, NBCC 2015

THIS DESIGN COMPLIES WITH:
- PART 9 OF BCBC 2018 , NBC-2019AE
- PART 9 OF OBC 2012 (2019 AMENDMENT)
- CSA 086-14
- TPIC 2014

(55 % OF 43.9 P.S.F. G.S.L. PLUS 8.4 P.S.F. RAIN LOAD) EQUALS 32.5 P.S.F. SPECIFIED ROOF LIVE LOAD

ALLOWABLE DEFL.(LL)= L/360 (0.62")
CALCULATED VERT. DEFL.(LL) = L/ 999 (0.04")
ALLOWABLE DEFL.(TL)= L/360 (0.62")
CALCULATED VERT. DEFL.(TL) = L/ 999 (0.07")

CSI: TC=0.52/1.00 (F-G:1) , BC=0.21/1.00 (H-J:1) , WB=0.33/1.00 (E-H:1) , SSI=0.26/1.00 (E-F:1)

DOL LUMBER=1.00 NAIL=1.00 LS BEND=1.10 COMP=1.10 SHEAR=1.10 TENS= 1.10

COMPANION LIVE LOAD FACTOR = 1.00

TRUSS PLATE MANUFACTURER IS NOT RESPONSIBLE FOR QUALITY CONTROL IN THE TRUSS MANUFACTURING PLANT .

NAIL VALUES

PLATE	GRIP(DRY) (PSI) MAX	MIN	SHEAR (PLI) MAX	MIN	SECTION (PLI) MAX	MIN
MT20	650	371	1747	788	1987	1873

PLATE PLACEMENT TOL. = 0.250 inches

PLATE ROTATION TOL. = 5.0 Deg.

JSI GRIP= 0.84 (B) (INPUT = 0.90)
JSI METAL= 0.56 (B) (INPUT = 0.95)

LICENSED PROFESSIONAL ENGINEER
4/02/24
C. M. HEYENS
100505065
PROVINCE OF ONTARIO

STRUCTURAL COMPONENT ONLY
DWG # TR24040029

JOB NAME	TRUSS NAME	QUANTITY	PLY	JOB DESC.	DRWG NO.
436388	T9	1	1	BAYVIEW WELLINGTON TRUSS DESC.	

Tamarack Roof Truss, Burlington

Version 8.630 S Aug 30 2023 MiTek Industries, Inc. Tue Apr 2 10:53:28 2024 Page 1
ID:GRmvuh1dyQr3nydBfsTFcCy6OGl-D s KF4pcM6DRPtvoEbSAShzbiSNtaUiu6nn? zUo4L

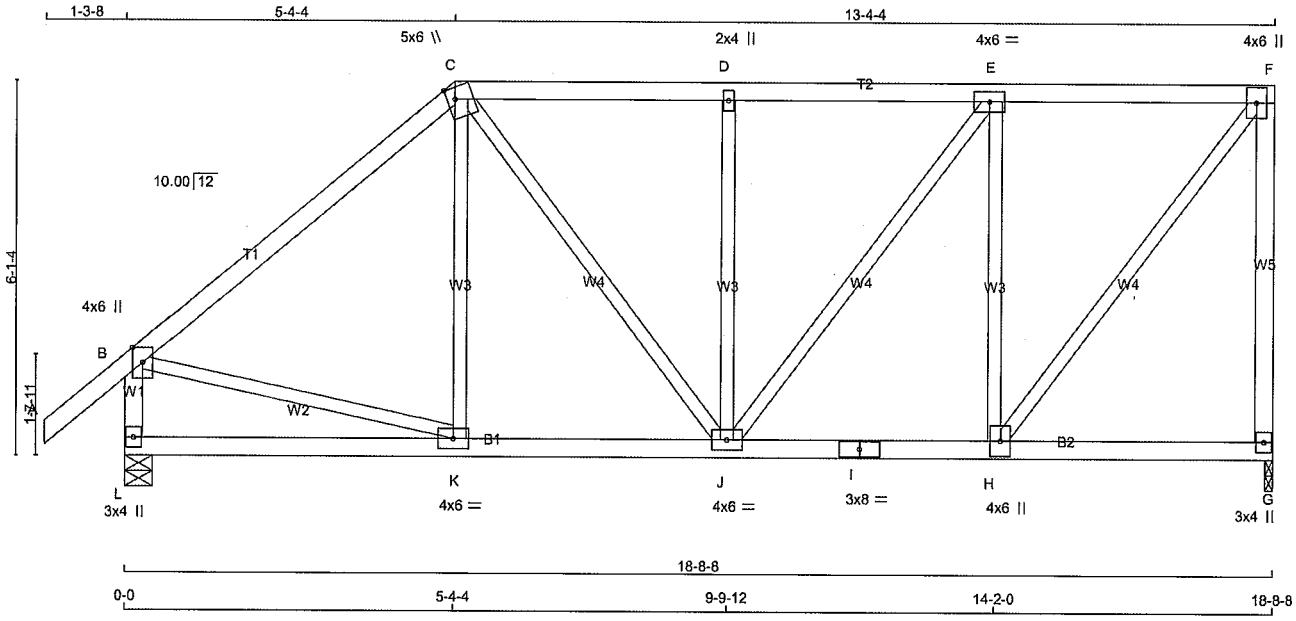

TOTAL WEIGHT = 89 lb

[M]

LUMBER
N. L. G. A. RULES

CHORDS	SIZE		LUMBER	DESCR.
A - C	2x4	DRY	No.2	SPF
C - F	2x4	DRY	No.2	SPF
G - F	2x4	DRY	No.2	SPF
L - B	2x4	DRY	No.2	SPF
L - I	2x4	DRY	No.2	SPF
I - G	2x4	DRY	No.2	SPF
ALL WEBS EXCEPT	2x3	DRY	No.2	SPF

DRY: SEASONED LUMBER.

PLATES (table is in inches)

JT	TYPE	PLATES	W	LEN	Y	X
B	TMVW+p	MT20	4.0	6.0	Edge	
C	TTWW+m	MT20	5.0	6.0	2.25	1.50
D	TMW+w	MT20	2.0	4.0		
E	TMWW-t	MT20	4.0	6.0		
F	TMVW+p	MT20	4.0	6.0		
G	BMV1+p	MT20	3.0	4.0		
H	BMWW+t	MT20	4.0	6.0		
I	BS-t	MT20	3.0	8.0		
J	BMWWW-t	MT20	4.0	6.0		
K	BMWW-t	MT20	4.0	6.0		
L	BMV1+p	MT20	3.0	4.0		

Edge - INDICATES REFERENCE CORNER OF PLATE TOUCHES EDGE OF CHORD.

NOTES- (1)
1) Lateral braces to be a minimum of 2X4 SPF #2.

DIMENSIONS, SUPPORTS AND LOADINGS SPECIFIED BY FABRICATOR TO BE VERIFIED BY BUILDING DESIGNER

BEARINGS

JT	FACTORED GROSS REACTION VERT	HORZ	MAXIMUM FACTORED GROSS REACTION DOWN	HORZ	UPLIFT	INPUT BRG IN-SX	REQRD BRG IN-SX
G	1225	0	1225	0	0	1-8	1-8
L	1380	0	1380	0	0	5-8	1-8

UNFACTORED REACTIONS

JT	1ST LCASE COMBINED	MAX./MIN. COMPONENT REACTIONS SNOW	LIVE	PERM.LIVE	WIND	DEAD	SOIL
G	858	608 / 0	0 / 0	0 / 0	0 / 0	251 / 0	0 / 0
L	965	698 / 0	0 / 0	0 / 0	0 / 0	267 / 0	0 / 0

BEARING MATERIAL TO BE SPF NO.2 OR BETTER AT JOINT(S) G, L

BRACING
TOP CHORD TO BE SHEATHED OR MAX. PURLIN SPACING = 5.13 FT.
MAX. UNBRACED BOTTOM CHORD LENGTH = 10.00 FT OR RIGID CEILING DIRECTLY APPLIED.

ALL PITCH BREAKS AND PERIMETER CORNER JOINTS MUST BE LATERALLY RESTRAINED.

LOADING
TOTAL LOAD CASES: (4)

CHORDS

MEMB. FR-TO	MAX. FORCE (LBS)	FACTORED VERT. LOAD (PLF) FROM	TO	LC1 MAX CSI (LC)	MAX. UNBRAC LENGTH
A- B	0 / 50	-112.4	-112.4	0.15 (1)	10.00
B- C	-1069 / 0	-112.4	-112.4	0.63 (1)	5.13
C- D	-1020 / 0	-112.4	-112.4	0.30 (1)	5.79
D- E	-1020 / 0	-112.4	-112.4	0.32 (1)	5.76
E- F	-768 / 0	-112.4	-112.4	0.31 (1)	6.25
G- F	-1191 / 0	0.0	0.0	0.86 (1)	7.32
L- B	-1339 / 0	0.0	0.0	0.14 (1)	7.00
L- K	0 / 0	-18.5	-18.5	0.12 (4)	10.00
K- J	0 / 818	-18.5	-18.5	0.20 (1)	10.00
J- I	0 / 768	-18.5	-18.5	0.17 (1)	10.00
I- H	0 / 768	-18.5	-18.5	0.17 (1)	10.00
H- G	0 / 0	-18.5	-18.5	0.09 (4)	10.00

WEBS

MEMB. FR-TO	MAX. FORCE (LBS)	MAX CSI (LC)
K- C	-86 / 63	0.05 (1)
B- K	0 / 843	0.19 (1)
H- F	0 / 1248	0.28 (1)
C- J	0 / 331	0.07 (1)
H- E	-887 / 0	0.52 (1)
J- D	-533 / 0	0.31 (1)
J- E	0 / 420	0.09 (1)

DESIGN CRITERIA

SPECIFIED LOADS:

TOP CH.	LL	=	32.5	PSF
	DL	=	6.0	PSF
BOT CH.	LL	=	0.0	PSF
	DL	=	7.4	PSF
TOTAL LOAD		=	45.9	PSF

SPACING = 24.0 IN. C/C

LOADING IN FLAT SECTION BASED ON A SLOPE OF 2.00/12 MINIMUM

THIS TRUSS IS DESIGNED FOR RESIDENTIAL OR SMALL BUILDING REQUIREMENTS OF PART 9, NBCC 2015

THIS DESIGN COMPLIES WITH:
- PART 9 OF BCBC 2018 , NBC-2019AE
- PART 9 OF OBC 2012 (2019 AMENDMENT)
- CSA 086-14
- TPIC 2014

(55 % OF 43.9 P.S.F. G.S.L. PLUS 8.4 P.S.F. RAIN LOAD) EQUALS 32.5 P.S.F. SPECIFIED ROOF LIVE LOAD

ALLOWABLE DEFL.(LL)= L/360 (0.62")
CALCULATED VERT. DEFL.(LL) = L/ 999 (0.03")
ALLOWABLE DEFL.(TL)= L/360 (0.62")
CALCULATED VERT. DEFL.(TL) = L/ 999 (0.06")

CSI: TC=0.86/1.00 (F-G:1) , BC=0.20/1.00 (J-K:1) , WB=0.52/1.00 (E-H:1) , SSI=0.24/1.00 (E-F:1)

DOL LUMBER=1.00 NAIL=1.00 LS BEND=1.10 COMP=1.10 SHEAR=1.10 TENS= 1.10

COMPANION LIVE LOAD FACTOR = 1.00

TRUSS PLATE MANUFACTURER IS NOT RESPONSIBLE FOR QUALITY CONTROL IN THE TRUSS MANUFACTURING PLANT .

NAIL VALUES

PLATE	GRIP(DRY) (PSI) MAX	MIN	SHEAR (PLI) MAX	MIN	SECTION (PLI) MAX	MIN
MT20	650	371	1747	788	1987	1873

PLATE PLACEMENT TOL. = 0.250 Inches

PLATE ROTATION TOL. = 5.0 Deg.

JSI GRIP= 0.84 (B) (INPUT = 0.90)
JSI METAL= 0.57 (B) (INPUT = 0.95)

LICENSED PROFESSIONAL ENGINEER
4/02/24
C. M. HEYENS
100505065
PROVINCE OF ONTARIO

STRUCTURAL COMPONENT ONLY
DWG # TR24040030

JOB NAME	TRUSS NAME	QUANTITY	PLY	JOB DESC.	DRWG NO.
436388	T10	1	1	BAYVIEW WELLINGTON TRUSS DESC.	

Tamarack Roof Truss, Burlington

Version 8.630 S Aug 30 2023 MiTek Industries, Inc. Tue Apr 2 10:53:29 2024 Page 1
ID:GRmvuh1dyQr3nydBfsTFcCy6OGl-hBQMYa5RNfE43ZS5Mx6higDA86o3c?yr7mWKXQzUo4K

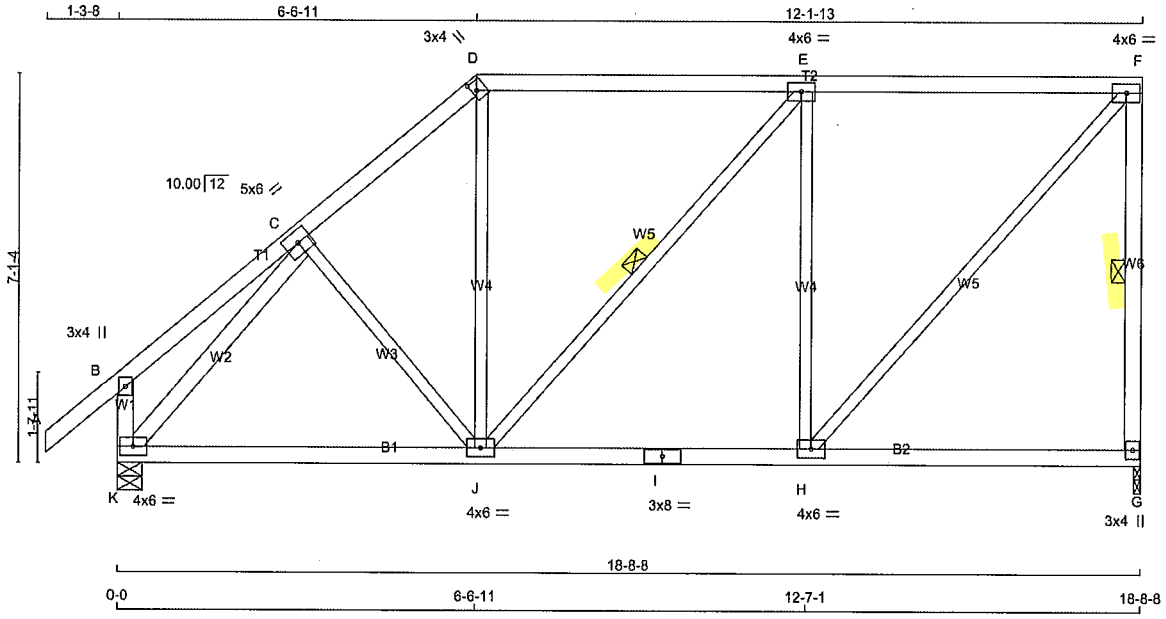

TOTAL WEIGHT = 90 lb

LUMBER
N. L. G. A. RULES

CHORDS	SIZE		LUMBER	DESCR.
A - D	2x4	DRY	No.2	SPF
D - F	2x4	DRY	No.2	SPF
G - F	2x4	DRY	No.2	SPF
K - B	2x4	DRY	No.2	SPF
K - I	2x4	DRY	No.2	SPF
I - G	2x4	DRY	No.2	SPF
ALL WEBS	2x3	DRY	No.2	SPF
EXCEPT				
K - C	2x4	DRY	No.2	SPF

DRY: SEASONED LUMBER.

PLATES (table is in inches)

JT	TYPE	PLATES	W	LEN	Y	X
B	TMV+p	MT20	3.0	4.0		
C	TMWW-t	MT20	5.0	6.0		
D	TTW+h	MT20	3.0	4.0	2.00	1.00
E	TMWW-t	MT20	4.0	6.0		
F	TMVW-t	MT20	4.0	6.0		
G	BMV1+p	MT20	3.0	4.0		
H	BMWW-t	MT20	4.0	6.0		
I	BS-t	MT20	3.0	8.0		
J	BMWWW-t	MT20	4.0	6.0		
K	BMVW1-t	MT20	4.0	6.0		

NOTES- (1)
1) Lateral braces to be a minimum of 2X4 SPF #2.

STRUCTURAL COMPONENT ONLY
DWG # TR24040031

DIMENSIONS, SUPPORTS AND LOADINGS SPECIFIED BY FABRICATOR TO BE VERIFIED BY BUILDING DESIGNER

BEARINGS

JT	FACTORED GROSS REACTION VERT	HORZ	MAXIMUM FACTORED GROSS REACTION DOWN	HORZ	UPLIFT	INPUT BRG IN-SX	REQRD BRG IN-SX
G	1225	0	1225	0	0	1-8	1-8
K	1380	0	1380	0	0	5-8	1-8

UNFACTORED REACTIONS

JT	1ST LCASE COMBINED	MAX./MIN. COMPONENT REACTIONS SNOW	LIVE	PERM.LIVE	WIND	DEAD	SOIL
G	858	608 / 0	0 / 0	0 / 0	0 / 0	251 / 0	0 / 0
K	965	698 / 0	0 / 0	0 / 0	0 / 0	267 / 0	0 / 0

BEARING MATERIAL TO BE SPF NO.2 OR BETTER AT JOINT(S) G, K

BRACING
TOP CHORD TO BE SHEATHED OR MAX. PURLIN SPACING = 5.24 FT.
MAX. UNBRACED BOTTOM CHORD LENGTH = 10.00 FT OR RIGID CEILING DIRECTLY APPLIED.

ALL PITCH BREAKS AND PERIMETER CORNER JOINTS MUST BE LATERALLY RESTRAINED.

1 LATERAL BRACE(S) AT 1/ 2 LENGTH OF F-G, E-J.

END VERTICAL(S) MUST BE SHEATHED OR HAVE BRACES AS INDICATED IN THE MAX. UNBRACED LENGTH COLUMN OF THE TABLE BELOW

LOADING
TOTAL LOAD CASES: (4)

CHORDS

MEMB. FR-TO	MAX. FACTORED FORCE (LBS)	FACTORED VERT. LOAD LC1 (PLF) FROM	TO	MAX CSI (LC)	MAX. UNBRAC LENGTH
A- B	0 / 50	-112.4	-112.4	0.15 (1)	10.00
B- C	0 / 27	-112.4	-112.4	0.19 (1)	10.00
C- D	-1040 / 0	-112.4	-112.4	0.21 (1)	5.90
D- E	-780 / 0	-112.4	-112.4	0.74 (1)	5.35
E- F	-823 / 0	-112.4	-112.4	0.74 (1)	5.24
G- F	-1178 / 0	0.0	0.0	0.27 (1)	5.88
K- B	-296 / 0	0.0	0.0	0.03 (1)	7.81
K- J	0 / 836	-18.5	-18.5	0.23 (4)	10.00
J- I	0 / 823	-18.5	-18.5	0.24 (4)	10.00
I- H	0 / 823	-18.5	-18.5	0.24 (4)	10.00
H- G	0 / 0	-18.5	-18.5	0.15 (4)	10.00

WEBS

MEMB. FR-TO	MAX. FACTORED FORCE (LBS)	MAX CSI (LC)
C- J	-92 / 16	0.04 (1)
J- D	0 / 249	0.06 (1)
J- E	-65 / 0	0.04 (1)
H- E	-798 / 0	0.70 (1)
H- F	0 / 1232	0.28 (1)
K- C	-1330 / 0	0.41 (1)

DESIGN CRITERIA

SPECIFIED LOADS:

TOP CH.	LL	=	32.5	PSF
	DL	=	6.0	PSF
BOT CH.	LL	=	0.0	PSF
	DL	=	7.4	PSF
TOTAL LOAD		=	45.9	PSF

SPACING = 24.0 IN. C/C

LOADING IN FLAT SECTION BASED ON A SLOPE OF 2.00/12 MINIMUM

THIS TRUSS IS DESIGNED FOR RESIDENTIAL OR SMALL BUILDING REQUIREMENTS OF PART 9, NBCC 2015

THIS DESIGN COMPLIES WITH:
- PART 9 OF BCBC 2018 , NBC-2019AE
- PART 9 OF OBC 2012 (2019 AMENDMENT)
- CSA 086-14
- TPIC 2014

(55 % OF 43.9 P.S.F. G.S.L. PLUS 8.4 P.S.F. RAIN LOAD) EQUALS 32.5 P.S.F. SPECIFIED ROOF LIVE LOAD

ALLOWABLE DEFL.(LL)= L/360 (0.62")
CALCULATED VERT. DEFL.(LL) = L/ 999 (0.03")
ALLOWABLE DEFL.(TL)= L/360 (0.62")
CALCULATED VERT. DEFL.(TL) = L/ 999 (0.08")

CSI: TC=0.74/1.00 (E-F:1) , BC=0.24/1.00 (H-J:4) , WB=0.70/1.00 (E-H:1) , SSI=0.33/1.00 (E-F:1)

DOL LUMBER=1.00 NAIL=1.00 LS BEND=1.10 COMP=1.10 SHEAR=1.10 TENS= 1.10

COMPANION LIVE LOAD FACTOR = 1.00

AUTOSOLVE RIGHT HEEL ONLY

TRUSS PLATE MANUFACTURER IS NOT RESPONSIBLE FOR QUALITY CONTROL IN THE TRUSS MANUFACTURING PLANT .

NAIL VALUES

PLATE	GRIP(DRY) (PSI) MAX	MIN	SHEAR (PLI) MAX	MIN	SECTION (PLI) MAX	MIN
MT20	650	371	1747	788	1987	1873

PLATE PLACEMENT TOL. = 0.250 inches

PLATE ROTATION TOL. = 5.0 Deg.

JSI GRIP= 0.89 (F) (INPUT = 0.90)
JSI METAL= 0.30 (C) (INPUT = 0.95)

JOB NAME	TRUSS NAME	QUANTITY	PLY	JOB DESC.	DRWG NO.
436388	T11	1	1	BAYVIEW WELLINGTON TRUSS DESC.	

Tamarack Roof Truss, Burlington

Version 8.630 S Aug 30 2023 MiTek Industries, Inc. Tue Apr 2 10:53:30 2024 Page 1
ID:GRmvuh1dyQr3nydBfsTFcCy6OGl-9N llw638zMxhj0lwfdwFtmNJW7QLTP MQGu4tzUo4J

Scale = 1:45.2

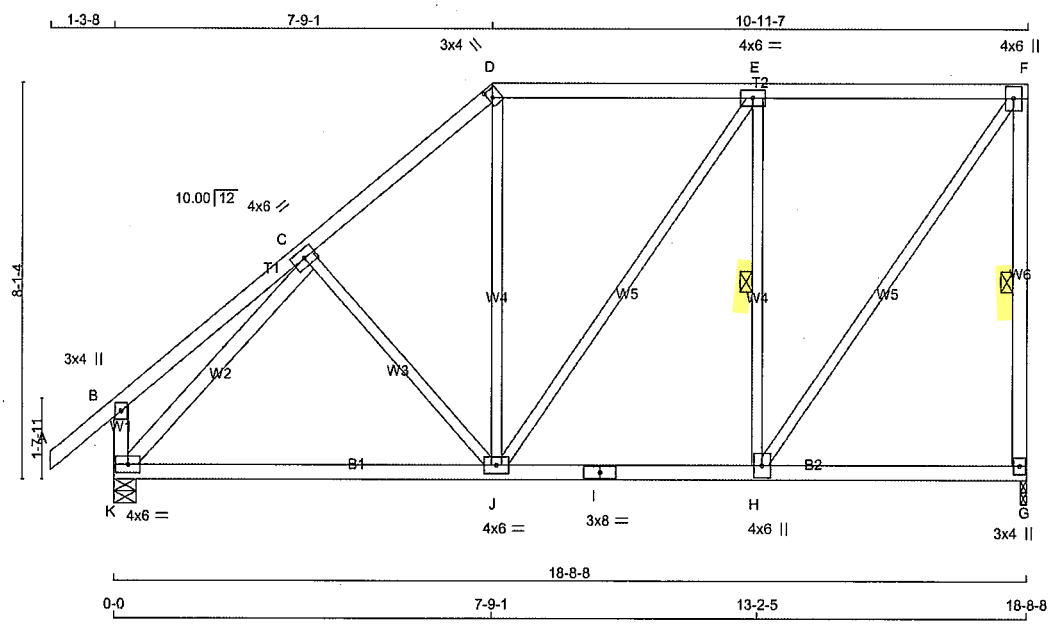

TOTAL WEIGHT = 96 lb

LUMBER
N. L. G. A. RULES

CHORDS	SIZE		LUMBER	DESCR.
A - D	2x4	DRY	No.2	SPF
D - F	2x4	DRY	No.2	SPF
G - F	2x4	DRY	No.2	SPF
K - B	2x4	DRY	No.2	SPF
K - I	2x4	DRY	No.2	SPF
I - G	2x4	DRY	No.2	SPF
ALL WEBS	2x3	DRY	No.2	SPF
EXCEPT				
K - C	2x4	DRY	No.2	SPF

DRY: SEASONED LUMBER.

PLATES (table is in Inches)

JT	TYPE	PLATES	W	LEN	Y	X
B	TMV+p	MT20	3.0	4.0		
C	TMWW-t	MT20	4.0	6.0		
D	TTW+h	MT20	3.0	4.0	2.00	1.00
E	TMWW-t	MT20	4.0	6.0		
F	TMVW+p	MT20	4.0	6.0		
G	BMV1+p	MT20	3.0	4.0		
H	BMWW+t	MT20	4.0	6.0		
I	BS-t	MT20	3.0	8.0		
J	BMWWW-t	MT20	4.0	6.0		
K	BMVW1-t	MT20	4.0	6.0		

NOTES- (1)
1) Lateral braces to be a minimum of 2X4 SPF #2.

LICENSED PROFESSIONAL ENGINEER
4/02/24
C. M. HEYENS
100505065
PROVINCE OF ONTARIO

STRUCTURAL COMPONENT ONLY
DWG # TR24040032

DIMENSIONS, SUPPORTS AND LOADINGS SPECIFIED BY FABRICATOR TO BE VERIFIED BY BUILDING DESIGNER

BEARINGS

JT	FACTORED GROSS REACTION VERT	HORZ	MAXIMUM FACTORED GROSS REACTION DOWN	HORZ	UPLIFT	INPUT BRG IN-SX	REQRD BRG IN-SX
G	1225	0	1225	0	0	1-8	1-8
K	1380	0	1380	0	0	5-8	1-8

UNFACTORED REACTIONS

JT	1ST LCASE COMBINED	MAX./MIN. COMPONENT REACTIONS SNOW	LIVE	PERM.LIVE	WIND	DEAD	SOIL
G	858	608 / 0	0 / 0	0 / 0	0 / 0	251 / 0	0 / 0
K	965	698 / 0	0 / 0	0 / 0	0 / 0	267 / 0	0 / 0

BEARING MATERIAL TO BE SPF NO.2 OR BETTER AT JOINT(S) G, K

BRACING
TOP CHORD TO BE SHEATHED OR MAX. PURLIN SPACING = 5.91 FT.
MAX. UNBRACED BOTTOM CHORD LENGTH = 10.00 FT OR RIGID CEILING DIRECTLY APPLIED.

ALL PITCH BREAKS AND PERIMETER CORNER JOINTS MUST BE LATERALLY RESTRAINED.

1 LATERAL BRACE(S) AT 1/ 2 LENGTH OF F-G, E-H.

END VERTICAL(S) MUST BE SHEATHED OR HAVE BRACES AS INDICATED IN THE MAX. UNBRACED LENGTH COLUMN OF THE TABLE BELOW

LOADING
TOTAL LOAD CASES: (4)

CHORDS

MEMB. FR-TO	MAX. FACTORED FORCE (LBS)	FACTORED VERT. LOAD LC1 (PLF) FROM	TO	MAX CSI (LC)	MAX. UNBRAC LENGTH
A- B	0 / 50	-112.4	-112.4	0.15 (1)	10.00
B- C	0 / 33	-112.4	-112.4	0.28 (1)	10.00
C- D	-976 / 0	-112.4	-112.4	0.30 (1)	5.91
D- E	-725 / 0	-112.4	-112.4	0.59 (1)	5.94
E- F	-667 / 0	-112.4	-112.4	0.59 (1)	6.14
G- F	-1180 / 0	0.0	0.0	0.35 (1)	5.88
K- B	-320 / 0	0.0	0.0	0.03 (1)	7.81
K- J	0 / 852	-18.5	-18.5	0.29 (4)	10.00
J- I	0 / 667	-18.5	-18.5	0.28 (4)	10.00
I- H	0 / 667	-18.5	-18.5	0.28 (4)	10.00
H- G	0 / 0	-18.5	-18.5	0.12 (4)	10.00

WEBS

MEMB. FR-TO	MAX. FACTORED FORCE (LBS)	MAX CSI (LC)
C- J	-195 / 0	0.12 (1)
J- D	0 / 204	0.05 (1)
J- E	0 / 104	0.02 (1)
H- E	-848 / 0	0.35 (1)
H- F	0 / 1156	0.26 (1)
K- C	-1314 / 0	0.56 (1)

[M]

DESIGN CRITERIA

SPECIFIED LOADS:

TOP CH.	LL	=	32.5	PSF
	DL	=	6.0	PSF
BOT CH.	LL	=	0.0	PSF
	DL	=	7.4	PSF
TOTAL LOAD		=	45.9	PSF

SPACING = 24.0 IN. C/C

LOADING IN FLAT SECTION BASED ON A SLOPE OF 2.00/12 MINIMUM

THIS TRUSS IS DESIGNED FOR RESIDENTIAL OR SMALL BUILDING REQUIREMENTS OF PART 9, NBCC 2015

THIS DESIGN COMPLIES WITH:
- PART 9 OF BCBC 2018 , NBC-2019AE
- PART 9 OF OBC 2012 (2019 AMENDMENT)
- CSA 086-14
- TPIC 2014

(55 % OF 43.9 P.S.F. G.S.L. PLUS 8.4 P.S.F. RAIN LOAD) EQUALS 32.5 P.S.F. SPECIFIED ROOF LIVE LOAD

ALLOWABLE DEFL.(LL)= L/360 (0.62")
CALCULATED VERT. DEFL.(LL) = L/ 999 (0.03")
ALLOWABLE DEFL.(TL)= L/360 (0.62")
CALCULATED VERT. DEFL.(TL) = L/ 999 (0.13")

CSI: TC=0.59/1.00 (D-E:1) , BC=0.29/1.00 (J-K:4) , WB=0.56/1.00 (C-K:1) , SSI=0.30/1.00 (E-F:1)

DOL LUMBER=1.00 NAIL=1.00 LS BEND=1.10 COMP=1.10 SHEAR=1.10 TENS= 1.10

COMPANION LIVE LOAD FACTOR = 1.00

AUTOSOLVE RIGHT HEEL ONLY

TRUSS PLATE MANUFACTURER IS NOT RESPONSIBLE FOR QUALITY CONTROL IN THE TRUSS MANUFACTURING PLANT .

NAIL VALUES

PLATE	GRIP(DRY) (PSI) MAX	MIN	SHEAR (PLI) MAX	MIN	SECTION (PLI) MAX	MIN
MT20	650	371	1747	788	1987	1873

PLATE PLACEMENT TOL. = 0.250 inches

PLATE ROTATION TOL. = 5.0 Deg.

JSI GRIP= 0.78 (C) (INPUT = 0.90)
JSI METAL= 0.30 (H) (INPUT = 0.95)

JOB NAME	TRUSS NAME	QUANTITY	PLY	JOB DESC.	DRWG NO.
436388	T12A	1	1	BAYVIEW WELLINGTON TRUSS DESC.	

Tamarack Roof Truss, Burlington

Version 8.630 S Aug 30 2023 MiTek Industries, Inc. Tue Apr 2 10:53:31 2024 Page 1
ID:GRmvuh1dyQr3nydBfsTFcCy6OGI-dZY7zG6hvHVoItbUTM99n5Ja8wVa4xC8a4?RcJzUo4I

Scale = 1:52.8

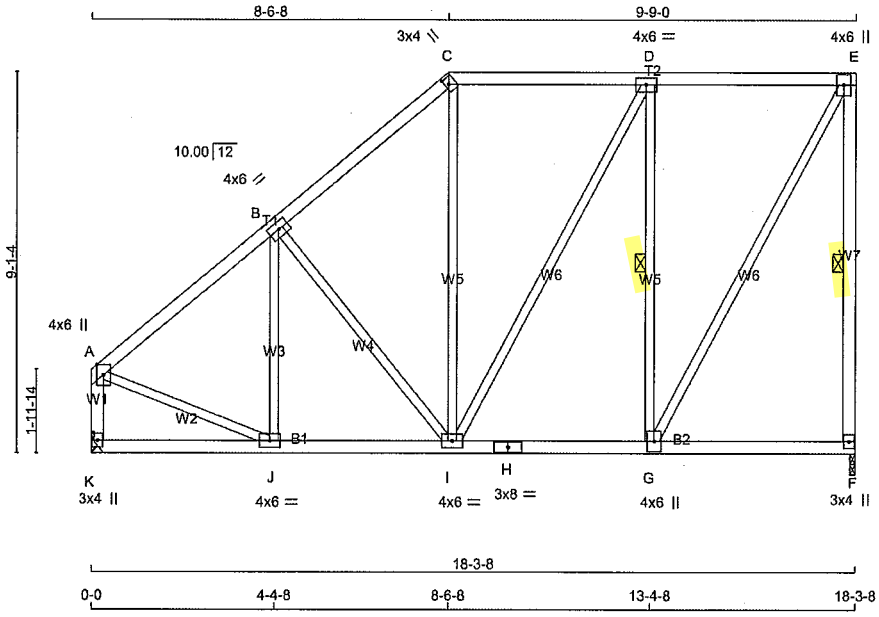

TOTAL WEIGHT = 99 lb

LUMBER
N. L. G. A. RULES

CHORDS	SIZE		LUMBER	DESCR.
A - C	2x4	DRY	No.2	SPF
C - E	2x4	DRY	No.2	SPF
F - E	2x4	DRY	No.2	SPF
K - A	2x4	DRY	No.2	SPF
K - H	2x4	DRY	No.2	SPF
H - F	2x4	DRY	No.2	SPF
ALL WEBS EXCEPT	2x3	DRY	No.2	SPF

DRY: SEASONED LUMBER.

PLATES (table is in inches)

JT	TYPE	PLATES	W	LEN	Y	X
A	TMVW+p	MT20	4.0	6.0	Edge	
B	TMWW-t	MT20	4.0	6.0		
C	TTW+h	MT20	3.0	4.0	2.00	1.00
D	TMWW-t	MT20	4.0	6.0		
E	TMVW+p	MT20	4.0	6.0		
F	BMV1+p	MT20	3.0	4.0		
G	BMWW+t	MT20	4.0	6.0		
H	BS-t	MT20	3.0	8.0		
I	BMWWW-t	MT20	4.0	6.0		
J	BMWW-t	MT20	4.0	6.0		
K	BMV1+p	MT20	3.0	4.0		

Edge - INDICATES REFERENCE CORNER OF PLATE TOUCHES EDGE OF CHORD.

NOTES- (1)
1) Lateral braces to be a minimum of 2X4 SPF #2.

LICENSED PROFESSIONAL ENGINEER
4/02/24
C. M. HEYENS
100505065
PROVINCE OF ONTARIO

STRUCTURAL COMPONENT ONLY
DWG # TR24040033

DIMENSIONS, SUPPORTS AND LOADINGS SPECIFIED BY FABRICATOR TO BE VERIFIED BY BUILDING DESIGNER

BEARINGS

JT	FACTORED GROSS REACTION VERT	HORZ	MAXIMUM FACTORED GROSS REACTION DOWN	HORZ	UPLIFT	INPUT BRG IN-SX	REQRD BRG IN-SX
F	1197	0	1197	0	0	1-8	1-8
K	1197	0	1197	0	0	MECHANICAL	

A SUITABLE HANGER/MECHANICAL CONNECTION IS REQUIRED AT JOINT K. MINIMUM BEARING LENGTH AT JOINT K = 1-8.

UNFACTORED REACTIONS

JT	1ST LCASE COMBINED	MAX./MIN. COMPONENT REACTIONS SNOW	LIVE	PERM.LIVE	WIND	DEAD	SOIL
F	839	594 / 0	0 / 0	0 / 0	0 / 0	245 / 0	0 / 0
K	839	594 / 0	0 / 0	0 / 0	0 / 0	245 / 0	0 / 0

BEARING MATERIAL TO BE SPF NO.2 OR BETTER AT JOINT(S) F

BRACING
TOP CHORD TO BE SHEATHED OR MAX. PURLIN SPACING = 5.71 FT.
MAX. UNBRACED BOTTOM CHORD LENGTH = 10.00 FT OR RIGID CEILING DIRECTLY APPLIED.

ALL PITCH BREAKS AND PERIMETER CORNER JOINTS MUST BE LATERALLY RESTRAINED.

1 LATERAL BRACE(S) AT 1/ 2 LENGTH OF E-F, D-G.

END VERTICAL(S) MUST BE SHEATHED OR HAVE BRACES AS INDICATED IN THE MAX. UNBRACED LENGTH COLUMN OF THE TABLE BELOW

LOADING
TOTAL LOAD CASES: (4)

CHORDS

MEMB. FR-TO	MAX. FACTORED FORCE (LBS)	FACTORED VERT. LOAD LC1 (PLF) FROM	TO	MAX CSI (LC)	MAX. UNBRAC LENGTH
A- B	-1011 / 0	-112.4	-112.4	0.38 (1)	5.71
B- C	-847 / 0	-112.4	-112.4	0.37 (1)	6.11
C- D	-621 / 0	-112.4	-112.4	0.45 (1)	6.25
D- E	-530 / 0	-112.4	-112.4	0.45 (1)	6.25
F- E	-1160 / 0	0.0	0.0	0.45 (1)	5.91
K- A	-1164 / 0	0.0	0.0	0.13 (1)	7.39
K- J	0 / 0	-18.5	-18.5	0.08 (4)	10.00
J- I	0 / 805	-18.5	-18.5	0.17 (1)	10.00
I- H	0 / 530	-18.5	-18.5	0.14 (4)	10.00
H- G	0 / 530	-18.5	-18.5	0.14 (4)	10.00
G- F	0 / 0	-18.5	-18.5	0.11 (4)	10.00

WEBS

MEMB. FR-TO	MAX. FACTORED FORCE (LBS)	MAX CSI (LC)
J- B	-215 / 14	0.10 (1)
B- I	-295 / 0	0.25 (1)
I- C	0 / 137	0.03 (4)
I- D	0 / 193	0.04 (1)
G- D	-847 / 0	0.46 (1)
G- E	0 / 1087	0.24 (1)
A- J	0 / 860	0.19 (1)

[M]

DESIGN CRITERIA

SPECIFIED LOADS:

TOP CH.	LL	=	32.5	PSF
	DL	=	6.0	PSF
BOT CH.	LL	=	0.0	PSF
	DL	=	7.4	PSF
TOTAL LOAD		=	45.9	PSF

SPACING = 24.0 IN. C/C

LOADING IN FLAT SECTION BASED ON A SLOPE OF 2.00/12 MINIMUM

THIS TRUSS IS DESIGNED FOR RESIDENTIAL OR SMALL BUILDING REQUIREMENTS OF PART 9, NBCC 2015

THIS DESIGN COMPLIES WITH:
- PART 9 OF BCBC 2018 , NBC-2019AE
- PART 9 OF OBC 2012 (2019 AMENDMENT)
- CSA 086-14
- TPIC 2014

(55 % OF 43.9 P.S.F. G.S.L. PLUS 8.4 P.S.F. RAIN LOAD) EQUALS 32.5 P.S.F. SPECIFIED ROOF LIVE LOAD

ALLOWABLE DEFL.(LL)= L/360 (0.61")
CALCULATED VERT. DEFL.(LL) = L/ 999 (0.03")
ALLOWABLE DEFL.(TL)= L/360 (0.61")
CALCULATED VERT. DEFL.(TL) = L/ 999 (0.05")

CSI: TC=0.45/1.00 (C-D:1) , BC=0.17/1.00 (I-J:1) , WB=0.46/1.00 (D-G:1) , SSI=0.27/1.00 (D-E:1)

DOL LUMBER=1.00 NAIL=1.00 LS BEND=1.10 COMP=1.10 SHEAR=1.10 TENS= 1.10

COMPANION LIVE LOAD FACTOR = 1.00

TRUSS PLATE MANUFACTURER IS NOT RESPONSIBLE FOR QUALITY CONTROL IN THE TRUSS MANUFACTURING PLANT .

NAIL VALUES

PLATE	GRIP(DRY) (PSI) MAX	MIN	SHEAR (PLI) MAX	MIN	SECTION (PLI) MAX	MIN
MT20	650	371	1747	788	1987	1873

PLATE PLACEMENT TOL. = 0.250 inches

PLATE ROTATION TOL. = 5.0 Deg.

JSI GRIP= 0.76 (A) (INPUT = 0.90)
JSI METAL= 0.49 (A) (INPUT = 0.95)

JOB NAME	TRUSS NAME	QUANTITY	PLY	JOB DESC.	DRWG NO.
436388	T13A	1	1	BAYVIEW WELLINGTON TRUSS DESC.	

Tamarack Roof Truss, Burlington

Version 8.630 S Aug 30 2023 MiTek Industries, Inc. Tue Apr 2 10:53:32 2024 Page 1
ID:GRmvuh1dyQr3nydBfsTFcCy6OGl-5m6VAc7Jqadfw1Aq14qOKIrjwKrWpMvHpkI?8lzUo4H

Scale = 1:56.7

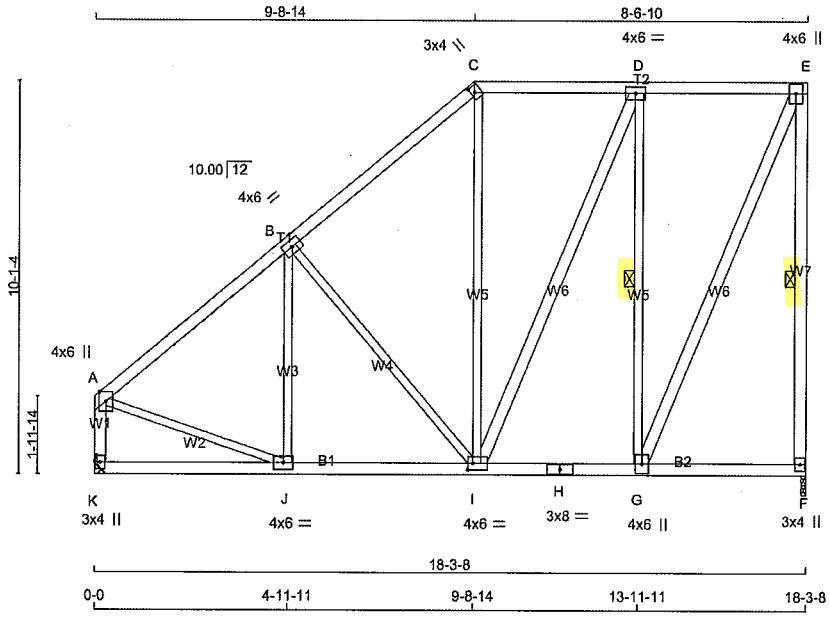

TOTAL WEIGHT = 111 lb

LUMBER
N. L. G. A. RULES

CHORDS	SIZE		LUMBER	DESCR.
A - C	2x4	DRY	No.2	SPF
C - E	2x4	DRY	No.2	SPF
F - E	2x4	DRY	No.2	SPF
K - A	2x4	DRY	No.2	SPF
K - H	2x4	DRY	No.2	SPF
H - F	2x4	DRY	No.2	SPF
ALL WEBS	2x3	DRY	No.2	SPF
EXCEPT				
I - D	2x4	DRY	No.2	SPF
G - E	2x4	DRY	No.2	SPF

DRY: SEASONED LUMBER.

PLATES (table is in inches)

JT	TYPE	PLATES	W	LEN	Y	X
A	TMVW+p	MT20	4.0	6.0	Edge	
B	TMWW-t	MT20	4.0	6.0		
C	TTW+h	MT20	3.0	4.0	2.00	1.00
D	TMWW-t	MT20	4.0	6.0		
E	TMVW+p	MT20	4.0	6.0		
F	BMV1+p	MT20	3.0	4.0		
G	BMWW+t	MT20	4.0	6.0		
H	BS-t	MT20	3.0	8.0		
I	BMWWW-t	MT20	4.0	6.0	2.00	1.50
J	BMWW-t	MT20	4.0	6.0		
K	BMV1+p	MT20	3.0	4.0		

Edge - INDICATES REFERENCE CORNER OF PLATE TOUCHES EDGE OF CHORD.

NOTES- (1)
1) Lateral braces to be a minimum of 2X4 SPF #2.

LICENSED PROFESSIONAL ENGINEER
4/02/24
C. M. HEYENS
100505065
PROVINCE OF ONTARIO

STRUCTURAL COMPONENT ONLY
DWG # TR24040034

DIMENSIONS, SUPPORTS AND LOADINGS SPECIFIED BY FABRICATOR TO BE VERIFIED BY BUILDING DESIGNER

BEARINGS

JT	FACTORED GROSS REACTION VERT	HORZ	MAXIMUM FACTORED GROSS REACTION DOWN	HORZ	UPLIFT	INPUT BRG IN-SX	REQRD BRG IN-SX
F	1197	0	1197	0	0	1-8	1-8
K	1197	0	1197	0	0	MECHANICAL	

A SUITABLE HANGER/MECHANICAL CONNECTION IS REQUIRED AT JOINT K. MINIMUM BEARING LENGTH AT JOINT K = 1-8.

UNFACTORED REACTIONS

JT	1ST LCASE COMBINED	MAX./MIN. COMPONENT REACTIONS SNOW	LIVE	PERM.LIVE	WIND	DEAD	SOIL
F	839	594 / 0	0 / 0	0 / 0	0 / 0	245 / 0	0 / 0
K	839	594 / 0	0 / 0	0 / 0	0 / 0	245 / 0	0 / 0

BEARING MATERIAL TO BE SPF NO.2 OR BETTER AT JOINT(S) F

BRACING
TOP CHORD TO BE SHEATHED OR MAX. PURLIN SPACING = 5.76 FT.
MAX. UNBRACED BOTTOM CHORD LENGTH = 10.00 FT OR RIGID CEILING DIRECTLY APPLIED.

ALL PITCH BREAKS AND PERIMETER CORNER JOINTS MUST BE LATERALLY RESTRAINED.

1 LATERAL BRACE(S) AT 1/ 2 LENGTH OF E-F, D-G.

END VERTICAL(S) MUST BE SHEATHED OR HAVE BRACES AS INDICATED IN THE MAX. UNBRACED LENGTH COLUMN OF THE TABLE BELOW

LOADING
TOTAL LOAD CASES: (4)

CHORDS

MEMB. FR-TO	MAX. FACTORED FORCE (LBS)	FACTORED VERT. LOAD LC1 (PLF) FROM	TO	MAX CSI (LC)	MAX. UNBRAC LENGTH
A- B	-1014 / 0	-112.4	-112.4	0.36 (1)	5.76
B- C	-768 / 0	-112.4	-112.4	0.35 (1)	6.25
C- D	-556 / 0	-112.4	-112.4	0.26 (1)	6.25
D- E	-431 / 0	-112.4	-112.4	0.26 (1)	6.25
F- E	-1165 / 0	0.0	0.0	0.58 (1)	5.91
K- A	-1160 / 0	0.0	0.0	0.13 (1)	7.39
K- J	0 / 0	-18.5	-18.5	0.11 (4)	10.00
J- I	0 / 812	-18.5	-18.5	0.19 (1)	10.00
I- H	0 / 431	-18.5	-18.5	0.11 (1)	10.00
H- G	0 / 431	-18.5	-18.5	0.11 (1)	10.00
G- F	0 / 0	-18.5	-18.5	0.08 (4)	10.00

WEBS

MEMB. FR-TO	MAX. FACTORED FORCE (LBS)	MAX CSI (LC)
J- B	-165 / 41	0.10 (1)
B- I	-399 / 0	0.46 (1)
I- C	0 / 82	0.03 (4)
I- D	0 / 324	0.05 (1)
G- D	-890 / 0	0.62 (1)
G- E	0 / 1069	0.17 (1)
A- J	0 / 855	0.19 (1)

[M][F]

DESIGN CRITERIA

SPECIFIED LOADS:

TOP CH.	LL	=	32.5	PSF
	DL	=	6.0	PSF
BOT CH.	LL	=	0.0	PSF
	DL	=	7.4	PSF
TOTAL LOAD		=	45.9	PSF

SPACING = 24.0 IN. C/C

LOADING IN FLAT SECTION BASED ON A SLOPE OF 2.00/12 MINIMUM

THIS TRUSS IS DESIGNED FOR RESIDENTIAL OR SMALL BUILDING REQUIREMENTS OF PART 9, NBCC 2015

THIS DESIGN COMPLIES WITH:
- PART 9 OF BCBC 2018 , NBC-2019AE
- PART 9 OF OBC 2012 (2019 AMENDMENT)
- CSA 086-14
- TPIC 2014

(55 % OF 43.9 P.S.F. G.S.L. PLUS 8.4 P.S.F. RAIN LOAD) EQUALS 32.5 P.S.F. SPECIFIED ROOF LIVE LOAD

ALLOWABLE DEFL.(LL)= L/360 (0.61")
CALCULATED VERT. DEFL.(LL) = L/ 999 (0.03")
ALLOWABLE DEFL.(TL)= L/360 (0.61")
CALCULATED VERT. DEFL.(TL) = L/ 999 (0.06")

CSI: TC=0.58/1.00 (E-F:1) , BC=0.19/1.00 (I-J:1) , WB=0.62/1.00 (D-G:1) , SSI=0.23/1.00 (D-E:1)

DOL LUMBER=1.00 NAIL=1.00 LS BEND=1.10 COMP=1.10 SHEAR=1.10 TENS= 1.10

COMPANION LIVE LOAD FACTOR = 1.00

TRUSS PLATE MANUFACTURER IS NOT RESPONSIBLE FOR QUALITY CONTROL IN THE TRUSS MANUFACTURING PLANT .

NAIL VALUES

PLATE	GRIP(DRY) (PSI) MAX	MIN	SHEAR (PLI) MAX	MIN	SECTION (PLI) MAX	MIN
MT20	650	371	1747	788	1987	1873

PLATE PLACEMENT TOL. = 0.250 inches

PLATE ROTATION TOL. = 5.0 Deg.

JSI GRIP= 0.78 (A) (INPUT = 0.90)
JSI METAL= 0.50 (A) (INPUT = 0.95)

JOB NAME	TRUSS NAME	QUANTITY	PLY	JOB DESC.	DRWG NO.
436388	T14	1	1	BAYVIEW WELLINGTON TRUSS DESC.	

Tamarack Roof Truss, Burlington

Version 8.630 S Aug 30 2023 MiTek Industries, Inc. Tue Apr 2 10:53:33 2024 Page 1
ID:GRmvuh1dyQr3nydBfsTFcCy6OGl-ZygtNy8xRulWYBltbnBdtWOw?jBlYuxR2OUYgBzUo4G

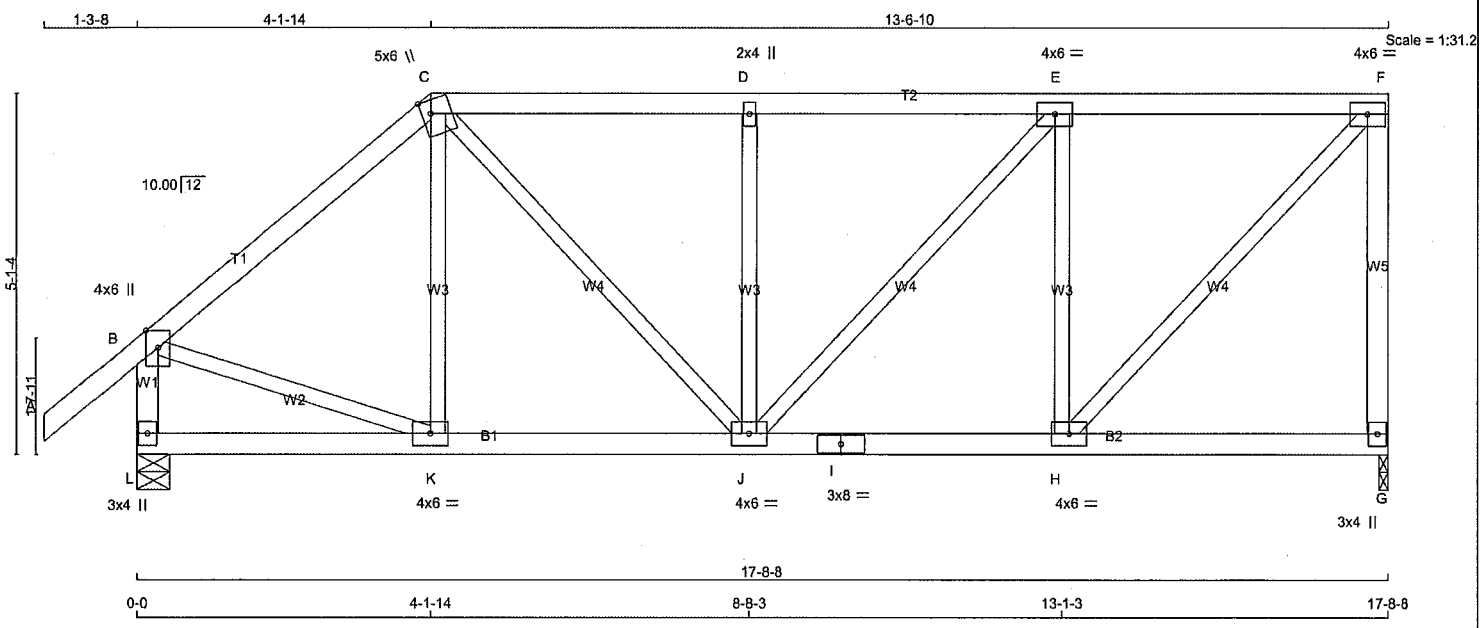

TOTAL WEIGHT = 80 lb

LUMBER
N. L. G. A. RULES

CHORDS	SIZE		LUMBER	DESCR.
A - C	2x4	DRY	No.2	SPF
C - F	2x4	DRY	No.2	SPF
G - F	2x4	DRY	No.2	SPF
L - B	2x4	DRY	No.2	SPF
L - I	2x4	DRY	No.2	SPF
I - G	2x4	DRY	No.2	SPF
ALL WEBS EXCEPT	2x3	DRY	No.2	SPF

DRY: SEASONED LUMBER.

PLATES (table is in inches)

JT	TYPE	PLATES	W	LEN	Y	X
B	TMVW+p	MT20	4.0	6.0	Edge	
C	TTWW+m	MT20	5.0	6.0	2.25	1.50
D	TMW+w	MT20	2.0	4.0		
E	TMWW-t	MT20	4.0	6.0		
F	TMVW-t	MT20	4.0	6.0		
G	BMV1+p	MT20	3.0	4.0		
H	BMWW-t	MT20	4.0	6.0		
I	BS-t	MT20	3.0	8.0		
J	BMWWW-t	MT20	4.0	6.0		
K	BMWW-t	MT20	4.0	6.0		
L	BMV1+p	MT20	3.0	4.0		

Edge - INDICATES REFERENCE CORNER OF PLATE TOUCHES EDGE OF CHORD.

NOTES- (1)
1) Lateral braces to be a minimum of 2X4 SPF #2.

DIMENSIONS, SUPPORTS AND LOADINGS SPECIFIED BY FABRICATOR TO BE VERIFIED BY BUILDING DESIGNER

BEARINGS

JT	FACTORED GROSS REACTION VERT	HORZ	MAXIMUM FACTORED GROSS REACTION DOWN	HORZ	UPLIFT	INPUT BRG IN-SX	REQRD BRG IN-SX
G	1159	0	1159	0	0	1-8	1-8
L	1315	0	1315	0	0	5-8	1-8

UNFACTORED REACTIONS

JT	1ST LCASE COMBINED	MAX./MIN. COMPONENT REACTIONS SNOW	LIVE	PERM.LIVE	WIND	DEAD	SOIL
G	812	575 / 0	0 / 0	0 / 0	0 / 0	237 / 0	0 / 0
L	919	665 / 0	0 / 0	0 / 0	0 / 0	254 / 0	0 / 0

BEARING MATERIAL TO BE SPF NO.2 OR BETTER AT JOINT(S) G, L

BRACING
TOP CHORD TO BE SHEATHED OR MAX. PURLIN SPACING = 5.56 FT.
MAX. UNBRACED BOTTOM CHORD LENGTH = 10.00 FT OR RIGID CEILING DIRECTLY APPLIED.

ALL PITCH BREAKS AND PERIMETER CORNER JOINTS MUST BE LATERALLY RESTRAINED.

LOADING
TOTAL LOAD CASES: (4)

CHORDS

MEMB. FR-TO	MAX. FACTORED FORCE (LBS)	FACTORED VERT. LOAD (PLF) FROM	TO	LC1 MAX CSI (LC)	MAX. UNBRAC LENGTH
A- B	0 / 50	-112.4	-112.4	0.15 (1)	10.00
B- C	-1020 / 0	-112.4	-112.4	0.37 (1)	5.71
C- D	-1113 / 0	-112.4	-112.4	0.32 (1)	5.59
D- E	-1113 / 0	-112.4	-112.4	0.33 (1)	5.56
E- F	-875 / 0	-112.4	-112.4	0.33 (1)	6.09
G- F	-1124 / 0	0.0	0.0	0.50 (1)	7.46
L- B	-1284 / 0	0.0	0.0	0.14 (1)	7.11
L- K	0 / 0	-18.5	-18.5	0.08 (4)	10.00
K- J	0 / 778	-18.5	-18.5	0.17 (1)	10.00
J- I	0 / 875	-18.5	-18.5	0.19 (1)	10.00
I- H	0 / 875	-18.5	-18.5	0.19 (1)	10.00
H- G	0 / 0	-18.5	-18.5	0.09 (4)	10.00

WEBS

MEMB. FR-TO	MAX. FACTORED FORCE (LBS)	MAX CSI (LC)
K- C	-146 / 32	0.06 (1)
B- K	0 / 817	0.18 (1)
H- F	0 / 1265	0.28 (1)
C- J	0 / 487	0.11 (1)
H- E	-818 / 0	0.31 (1)
J- D	-541 / 0	0.21 (1)
J- E	0 / 352	0.08 (1)

DESIGN CRITERIA [M]

SPECIFIED LOADS:

TOP CH.	LL	=	32.5	PSF
	DL	=	6.0	PSF
BOT CH.	LL	=	0.0	PSF
	DL	=	7.4	PSF
TOTAL LOAD		=	45.9	PSF

SPACING = 24.0 IN. C/C

LOADING IN FLAT SECTION BASED ON A SLOPE OF 2.00/12 MINIMUM

THIS TRUSS IS DESIGNED FOR RESIDENTIAL OR SMALL BUILDING REQUIREMENTS OF PART 9, NBCC 2015

THIS DESIGN COMPLIES WITH:
- PART 9 OF BCBC 2018 , NBC-2019AE
- PART 9 OF OBC 2012 (2019 AMENDMENT)
- CSA 086-14
- TPIC 2014

(55 % OF 43.9 P.S.F. G.S.L. PLUS 8.4 P.S.F. RAIN LOAD) EQUALS 32.5 P.S.F. SPECIFIED ROOF LIVE LOAD

ALLOWABLE DEFL.(LL)= L/360 (0.59")
CALCULATED VERT. DEFL.(LL) = L/ 999 (0.03")
ALLOWABLE DEFL.(TL)= L/360 (0.59")
CALCULATED VERT. DEFL.(TL) = L/ 999 (0.06")

CSI: TC=0.50/1.00 (F-G:1) , BC=0.19/1.00 (H-J:1) , WB=0.31/1.00 (E-H:1) , SSI=0.24/1.00 (E-F:1)

DOL LUMBER=1.00 NAIL=1.00 LS BEND=1.10 COMP=1.10 SHEAR=1.10 TENS= 1.10

COMPANION LIVE LOAD FACTOR = 1.00

TRUSS PLATE MANUFACTURER IS NOT RESPONSIBLE FOR QUALITY CONTROL IN THE TRUSS MANUFACTURING PLANT .

NAIL VALUES

PLATE	GRIP(DRY) (PSI) MAX	MIN	SHEAR (PLI) MAX	MIN	SECTION (PLI) MAX	MIN
MT20	650	371	1747	788	1987	1873

PLATE PLACEMENT TOL. = 0.250 inches

PLATE ROTATION TOL. = 5.0 Deg.

JSI GRIP= 0.88 (F) (INPUT = 0.90)
JSI METAL= 0.53 (B) (INPUT = 0.95)

LICENSED PROFESSIONAL ENGINEER
4/02/24
C. M. HEYENS
100505065
PROVINCE OF ONTARIO

STRUCTURAL COMPONENT ONLY
DWG # TR24040035

JOB NAME	TRUSS NAME	QUANTITY	PLY	JOB DESC.	DRWG NO.
436388	T15	1	1	BAYVIEW WELLINGTON TRUSS DESC.	

Tamarack Roof Truss, Burlington

Version 8.630 S Aug 30 2023 MiTek Industries, Inc. Tue Apr 2 10:53:35 2024 Page 1
ID:GRmvuh1dyQr3nydBfsTFcCy6OGI-VLneoe9CyV?EnUvFiCD5yxTBjXri0ITjVlzfi4zUo4E

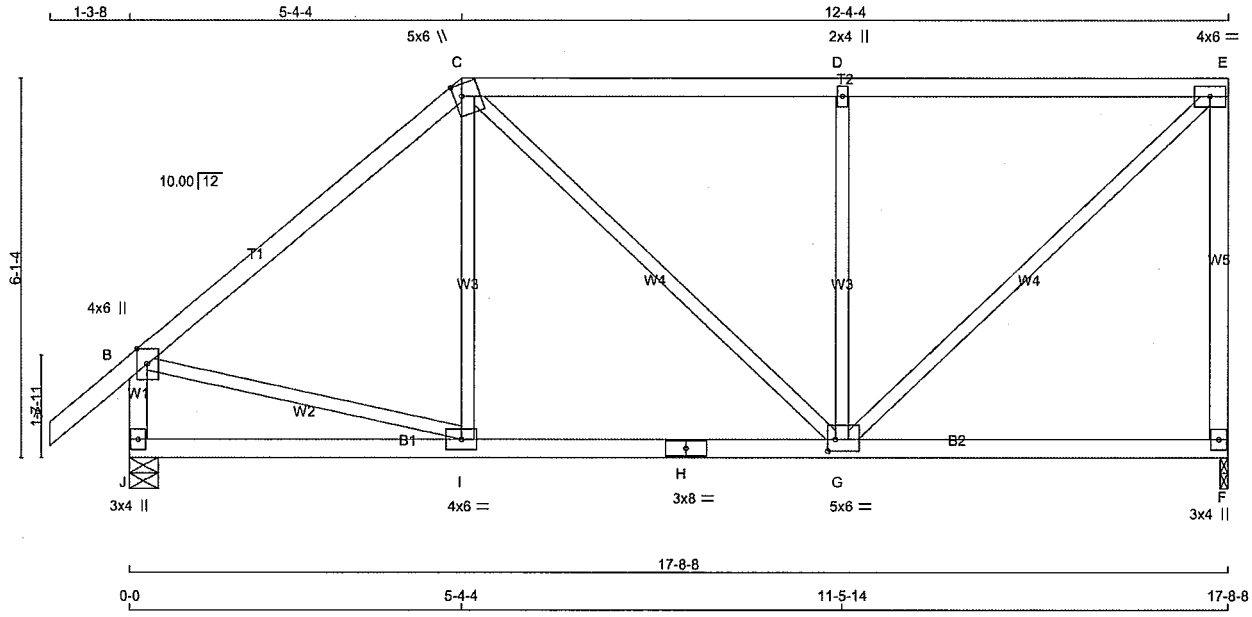

TOTAL WEIGHT = 78 lb

LUMBER
N. L. G. A. RULES

CHORDS	SIZE		LUMBER	DESCR.
A - C	2x4	DRY	No.2	SPF
C - E	2x4	DRY	No.2	SPF
F - E	2x4	DRY	No.2	SPF
J - B	2x4	DRY	No.2	SPF
J - H	2x4	DRY	No.2	SPF
H - F	2x4	DRY	No.2	SPF
ALL WEBS EXCEPT	2x3	DRY	No.2	SPF

DRY: SEASONED LUMBER.

PLATES (table is in inches)

JT	TYPE	PLATES	W	LEN	Y	X
B	TMVW+p	MT20	4.0	6.0	Edge	
C	TTWW+m	MT20	5.0	6.0	2.25	1.50
D	TMW+w	MT20	2.0	4.0		
E	TMVW-t	MT20	4.0	6.0		
F	BMV1+p	MT20	3.0	4.0		
G	BMWWW-t	MT20	5.0	6.0	2.25	1.50
H	BS-t	MT20	3.0	8.0		
I	BMWW-t	MT20	4.0	6.0		
J	BMV1+p	MT20	3.0	4.0		

Edge - INDICATES REFERENCE CORNER OF PLATE TOUCHES EDGE OF CHORD.

NOTES- (1)
1) Lateral braces to be a minimum of 2X4 SPF #2.

DIMENSIONS, SUPPORTS AND LOADINGS SPECIFIED BY FABRICATOR TO BE VERIFIED BY BUILDING DESIGNER

BEARINGS

JT	FACTORED GROSS REACTION VERT	HORZ	MAXIMUM FACTORED GROSS REACTION DOWN	HORZ	UPLIFT	INPUT BRG IN-SX	REQRD BRG IN-SX
F	1159	0	1159	0	0	1-8	1-8
J	1315	0	1315	0	0	5-8	1-8

UNFACTORED REACTIONS

JT	1ST LCASE COMBINED	MAX./MIN. COMPONENT REACTIONS SNOW	LIVE	PERM.LIVE	WIND	DEAD	SOIL
F	812	575 / 0	0 / 0	0 / 0	0 / 0	237 / 0	0 / 0
J	919	665 / 0	0 / 0	0 / 0	0 / 0	254 / 0	0 / 0

BEARING MATERIAL TO BE SPF NO.2 OR BETTER AT JOINT(S) F, J

BRACING
TOP CHORD TO BE SHEATHED OR MAX. PURLIN SPACING = 4.96 FT.
MAX. UNBRACED BOTTOM CHORD LENGTH = 10.00 FT OR RIGID CEILING DIRECTLY APPLIED.

ALL PITCH BREAKS AND PERIMETER CORNER JOINTS MUST BE LATERALLY RESTRAINED.

LOADING
TOTAL LOAD CASES: (4)

CHORDS

MEMB. FR-TO	MAX. FACTORED FORCE (LBS)	FACTORED VERT. LOAD (PLF) FROM	TO	LC1 CSI (LC)	MAX UNBRAC LENGTH
A- B	0 / 50	-112.4	-112.4	0.15 (1)	10.00
B- C	-991 / 0	-112.4	-112.4	0.62 (1)	5.29
C- D	-905 / 0	-112.4	-112.4	0.77 (1)	4.96
D- E	-905 / 0	-112.4	-112.4	0.77 (1)	4.96
F- E	-1112 / 0	0.0	0.0	0.80 (1)	7.51
J- B	-1275 / 0	0.0	0.0	0.14 (1)	7.13
J- I	0 / 0	-18.5	-18.5	0.13 (4)	10.00
I- H	0 / 759	-18.5	-18.5	0.22 (4)	10.00
H- G	0 / 759	-18.5	-18.5	0.22 (4)	10.00
G- F	0 / 0	-18.5	-18.5	0.16 (4)	10.00

WEBS

MEMB. FR-TO	MAX. FACTORED FORCE (LBS)	MAX CSI (LC)
I- C	-66 / 74	0.04 (1)
C- G	0 / 201	0.05 (1)
G- D	-860 / 0	0.50 (1)
G- E	0 / 1239	0.28 (1)
B- I	0 / 781	0.18 (1)

DESIGN CRITERIA [M]

SPECIFIED LOADS:

TOP CH.	LL	=	32.5	PSF
	DL	=	6.0	PSF
BOT CH.	LL	=	0.0	PSF
	DL	=	7.4	PSF
TOTAL LOAD		=	45.9	PSF

SPACING = 24.0 IN. C/C

LOADING IN FLAT SECTION BASED ON A SLOPE OF 2.00/12 MINIMUM

THIS TRUSS IS DESIGNED FOR RESIDENTIAL OR SMALL BUILDING REQUIREMENTS OF PART 9, NBCC 2015

THIS DESIGN COMPLIES WITH:
- PART 9 OF BCBC 2018 , NBC-2019AE
- PART 9 OF OBC 2012 (2019 AMENDMENT)
- CSA 086-14
- TPIC 2014

(55 % OF 43.9 P.S.F. G.S.L. PLUS 8.4 P.S.F. RAIN LOAD) EQUALS 32.5 P.S.F. SPECIFIED ROOF LIVE LOAD

ALLOWABLE DEFL.(LL)= L/360 (0.59")
CALCULATED VERT. DEFL.(LL) = L/ 999 (0.03")
ALLOWABLE DEFL.(TL)= L/360 (0.59")
CALCULATED VERT. DEFL.(TL) = L/ 999 (0.07")

CSI: TC=0.80/1.00 (E-F:1) , BC=0.22/1.00 (G-I:4) , WB=0.50/1.00 (D-G:1) , SSI=0.34/1.00 (D-E:1)

DOL LUMBER=1.00 NAIL=1.00 LS BEND=1.10 COMP=1.10 SHEAR=1.10 TENS= 1.10

COMPANION LIVE LOAD FACTOR = 1.00

TRUSS PLATE MANUFACTURER IS NOT RESPONSIBLE FOR QUALITY CONTROL IN THE TRUSS MANUFACTURING PLANT .

NAIL VALUES

PLATE	GRIP(DRY) (PSI) MAX	MIN	SHEAR (PLI) MAX	MIN	SECTION (PLI) MAX	MIN
MT20	650	371	1747	788	1987	1873

PLATE PLACEMENT TOL. = 0.250 Inches

PLATE ROTATION TOL. = 5.0 Deg.

JSI GRIP= 0.88 (G) (INPUT = 0.90)
JSI METAL= 0.53 (B) (INPUT = 0.95)

LICENSED PROFESSIONAL ENGINEER
4/02/24
C. M. HEYENS
100505065
PROVINCE OF ONTARIO

STRUCTURAL COMPONENT ONLY
DWG # TR24040036

JOB NAME	TRUSS NAME	QUANTITY	PLY	JOB DESC.	DRWG NO.
436388	T16	1	1	BAYVIEW WELLINGTON TRUSS DESC.	

Tamarack Roof Truss, Burlington

Version 8.630 S Aug 30 2023 MiTek Industries, Inc. Tue Apr 2 10:53:36 2024 Page 1
ID:GRmvuh1dyQr3nydBfsTFcCy6OGl- XL00 Aqjp75PeURGvkKU80PQxBul94tkMjCHWzUo4D

Scale = 1:40.3

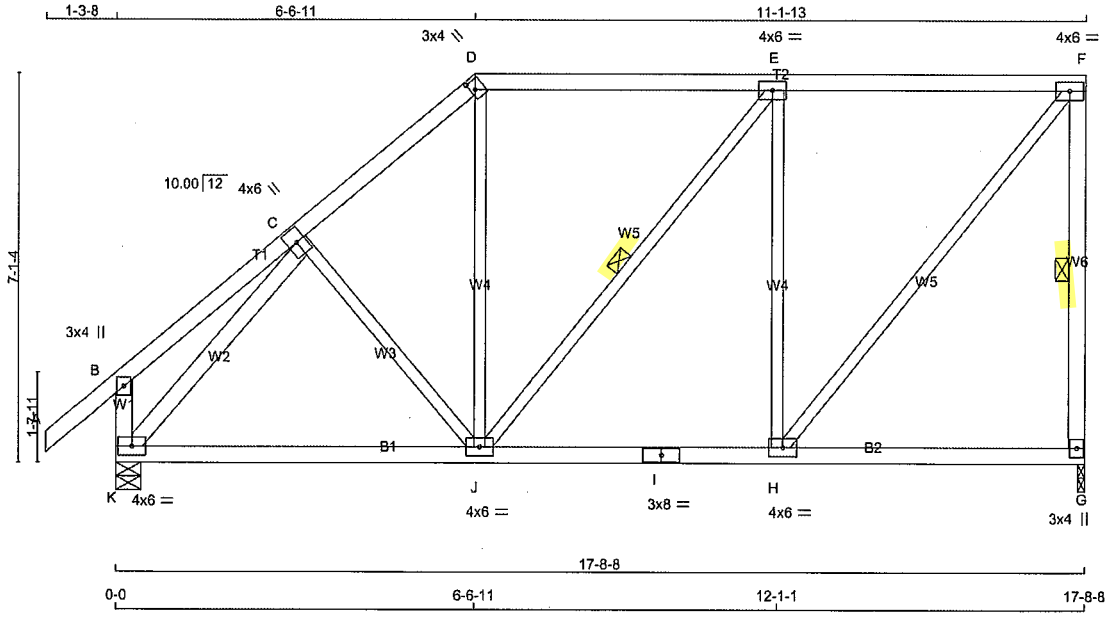

TOTAL WEIGHT = 87 lb

[M]

LUMBER

N. L. G. A. RULES

CHORDS	SIZE		LUMBER	DESCR.
A - D	2x4	DRY	No.2	SPF
D - F	2x4	DRY	No.2	SPF
G - F	2x4	DRY	No.2	SPF
K - B	2x4	DRY	No.2	SPF
K - I	2x4	DRY	No.2	SPF
I - G	2x4	DRY	No.2	SPF
ALL WEBS EXCEPT	2x3	DRY	No.2	SPF
K - C	2x4	DRY	No.2	SPF

DRY: SEASONED LUMBER.

PLATES (table is in inches)

JT	TYPE	PLATES	W	LEN	Y	X
B	TMV+p	MT20	3.0	4.0		
C	TMWW+t	MT20	4.0	6.0		
D	TTW+h	MT20	3.0	4.0	2.00	1.00
E	TMWW-t	MT20	4.0	6.0		
F	TMVW-t	MT20	4.0	6.0		
G	BMV1+p	MT20	3.0	4.0		
H	BMWW-t	MT20	4.0	6.0		
I	BS-t	MT20	3.0	8.0		
J	BMWWW-t	MT20	4.0	6.0		
K	BMVW1-t	MT20	4.0	6.0		

NOTES- (1)
1) Lateral braces to be a minimum of 2X4 SPF #2.

DIMENSIONS, SUPPORTS AND LOADINGS SPECIFIED BY FABRICATOR TO BE VERIFIED BY BUILDING DESIGNER

BEARINGS

JT	FACTORED GROSS REACTION VERT	HORZ	MAXIMUM FACTORED GROSS REACTION DOWN	HORZ	UPLIFT	INPUT BRG IN-SX	REQRD BRG IN-SX
G	1159	0	1159	0	0	1-8	1-8
K	1315	0	1315	0	0	5-8	1-8

UNFACTORED REACTIONS

JT	1ST LCASE COMBINED	MAX./MIN. COMPONENT REACTIONS SNOW	LIVE	PERM.LIVE	WIND	DEAD	SOIL
G	812	575 / 0	0 / 0	0 / 0	0 / 0	237 / 0	0 / 0
K	919	665 / 0	0 / 0	0 / 0	0 / 0	254 / 0	0 / 0

BEARING MATERIAL TO BE SPF NO.2 OR BETTER AT JOINT(S) G, K

BRACING

TOP CHORD TO BE SHEATHED OR MAX. PURLIN SPACING = 5.90 FT.
MAX. UNBRACED BOTTOM CHORD LENGTH = 10.00 FT OR RIGID CEILING DIRECTLY APPLIED.

ALL PITCH BREAKS AND PERIMETER CORNER JOINTS MUST BE LATERALLY RESTRAINED.

1 LATERAL BRACE(S) AT 1/ 2 LENGTH OF F-G, E-J.

END VERTICAL(S) MUST BE SHEATHED OR HAVE BRACES AS INDICATED IN THE MAX. UNBRACED LENGTH COLUMN OF THE TABLE BELOW

LOADING

TOTAL LOAD CASES: (4)

CHORDS

MEMB. FR-TO	MAX. FACTORED FORCE (LBS)	FACTORED VERT. LOAD LC1 (PLF) FROM	TO	MAX CSI (LC)	MAX. UNBRAC LENGTH
A- B	0 / 50	-112.4	-112.4	0.15 (1)	10.00
B- C	0 / 27	-112.4	-112.4	0.19 (1)	10.00
C- D	-957 / 0	-112.4	-112.4	0.20 (1)	6.09
D- E	-716 / 0	-112.4	-112.4	0.61 (1)	5.92
E- F	-722 / 0	-112.4	-112.4	0.61 (1)	5.90
G- F	-1115 / 0	0.0	0.0	0.25 (1)	6.01
K- B	-296 / 0	0.0	0.0	0.03 (1)	7.81
K- J	0 / 783	-18.5	-18.5	0.22 (4)	10.00
J- I	0 / 722	-18.5	-18.5	0.22 (4)	10.00
I- H	0 / 722	-18.5	-18.5	0.22 (4)	10.00
H- G	0 / 0	-18.5	-18.5	0.12 (4)	10.00

WEBS

MEMB. FR-TO	MAX. FACTORED FORCE (LBS)	MAX CSI (LC)
C- J	-109 / 11	0.05 (1)
J- D	0 / 217	0.05 (1)
J- E	-9 / 17	0.01 (4)
H- E	-769 / 0	0.67 (1)
H- F	0 / 1134	0.26 (1)
K- C	-1245 / 0	0.38 (1)

DESIGN CRITERIA

SPECIFIED LOADS:

TOP CH.	LL	=	32.5	PSF
	DL	=	6.0	PSF
BOT CH.	LL	=	0.0	PSF
	DL	=	7.4	PSF
TOTAL LOAD		=	45.9	PSF

SPACING = 24.0 IN. C/C

LOADING IN FLAT SECTION BASED ON A SLOPE OF 2.00/12 MINIMUM

THIS TRUSS IS DESIGNED FOR RESIDENTIAL OR SMALL BUILDING REQUIREMENTS OF PART 9, NBCC 2015

THIS DESIGN COMPLIES WITH:
- PART 9 OF BCBC 2018 , NBC-2019AE
- PART 9 OF OBC 2012 (2019 AMENDMENT)
- CSA 086-14
- TPIC 2014

(55 % OF 43.9 P.S.F. G.S.L. PLUS 8.4 P.S.F. RAIN LOAD) EQUALS 32.5 P.S.F. SPECIFIED ROOF LIVE LOAD

ALLOWABLE DEFL.(LL)= L/360 (0.59")
CALCULATED VERT. DEFL.(LL) = L/ 999 (0.03")
ALLOWABLE DEFL.(TL)= L/360 (0.59")
CALCULATED VERT. DEFL.(TL) = L/ 999 (0.07")

CSI: TC=0.61/1.00 (E-F:1) , BC=0.22/1.00 (J-K:4) , WB=0.67/1.00 (E-H:1) , SSI=0.31/1.00 (E-F:1)

DOL LUMBER=1.00 NAIL=1.00 LS BEND=1.10 COMP=1.10 SHEAR=1.10 TENS= 1.10

COMPANION LIVE LOAD FACTOR = 1.00

AUTOSOLVE RIGHT HEEL ONLY

TRUSS PLATE MANUFACTURER IS NOT RESPONSIBLE FOR QUALITY CONTROL IN THE TRUSS MANUFACTURING PLANT .

NAIL VALUES

PLATE	GRIP(DRY) (PSI) MAX	MIN	SHEAR (PLI) MAX	MIN	SECTION (PLI) MAX	MIN
MT20	650	371	1747	788	1987	1873

PLATE PLACEMENT TOL. = 0.250 inches

PLATE ROTATION TOL. = 5.0 Deg.

JSI GRIP= 0.89 (C) (INPUT = 0.90)
JSI METAL= 0.54 (C) (INPUT = 0.95)

LICENSED PROFESSIONAL ENGINEER
4/02/24
C. M. HEYENS
100505065
PROVINCE OF ONTARIO

STRUCTURAL COMPONENT ONLY
DWG # TR24040037

JOB NAME	TRUSS NAME	QUANTITY	PLY	JOB DESC.	DRWG NO.
436388	T17	1	1	BAYVIEW WELLINGTON TRUSS DESC.	

Tamarack Roof Truss, Burlington

Version 8.630 S Aug 30 2023 MiTek Industries, Inc. Tue Apr 2 10:53:37 2024 Page 1
ID:GRmvuh1dyQr3nydBfsTFcCy6OGl-SjvODKBSU7Fy0o3eqdFZ1MYcHLW7Uei0z?SlqzzUo4C

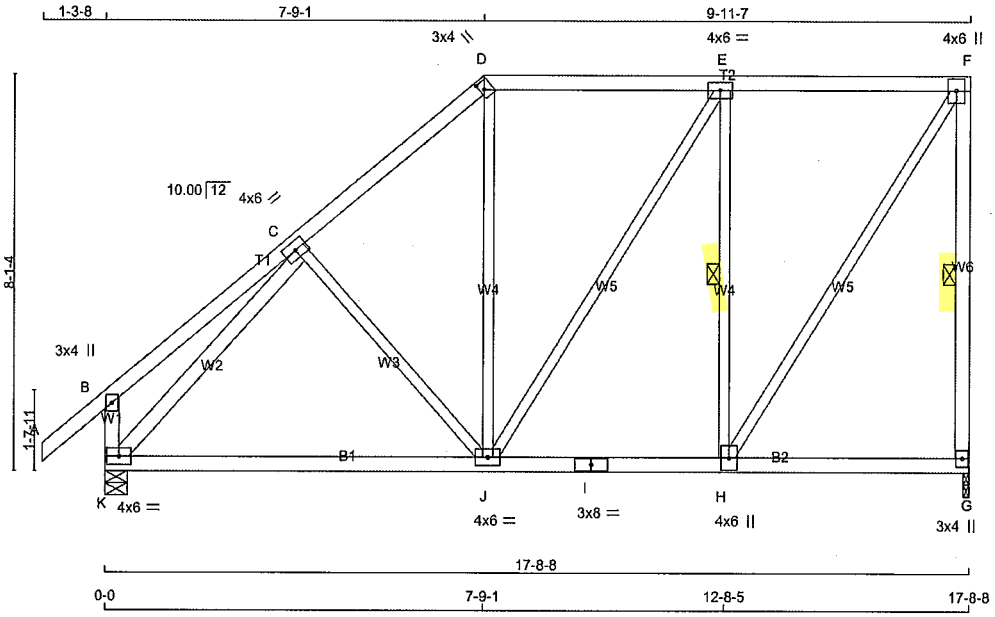

TOTAL WEIGHT = 93 lb

LUMBER
N. L. G. A. RULES

CHORDS	SIZE		LUMBER	DESCR.
A - D	2x4	DRY	No.2	SPF
D - F	2x4	DRY	No.2	SPF
G - F	2x4	DRY	No.2	SPF
K - B	2x4	DRY	No.2	SPF
K - I	2x4	DRY	No.2	SPF
I - G	2x4	DRY	No.2	SPF
ALL WEBS	2x3	DRY	No.2	SPF
EXCEPT				
K - C	2x4	DRY	No.2	SPF

DRY: SEASONED LUMBER.

PLATES (table is in inches)

JT	TYPE	PLATES	W	LEN	Y	X
B	TMV+p	MT20	3.0	4.0		
C	TMWW-t	MT20	4.0	6.0		
D	TTW+h	MT20	3.0	4.0	2.00	1.00
E	TMWW-t	MT20	4.0	6.0		
F	TMVW+p	MT20	4.0	6.0		
G	BMV1+p	MT20	3.0	4.0		
H	BMWW+t	MT20	4.0	6.0		
I	BS-t	MT20	3.0	8.0		
J	BMWWW-t	MT20	4.0	6.0		
K	BMVW1-t	MT20	4.0	6.0		

NOTES- (1)
1) Lateral braces to be a minimum of 2X4 SPF #2.

LICENSED PROFESSIONAL ENGINEER
4/02/24
C. M. HEYENS
100505065
PROVINCE OF ONTARIO

STRUCTURAL COMPONENT ONLY
DWG # TR24040038

DIMENSIONS, SUPPORTS AND LOADINGS SPECIFIED BY FABRICATOR TO BE VERIFIED BY BUILDING DESIGNER

BEARINGS

JT	FACTORED GROSS REACTION VERT	HORZ	MAXIMUM FACTORED GROSS REACTION DOWN	HORZ	UPLIFT	INPUT BRG IN-SX	REQRD BRG IN-SX
G	1159	0	1159	0	0	1-8	1-8
K	1315	0	1315	0	0	5-8	1-8

UNFACTORED REACTIONS

JT	1ST LCASE COMBINED	MAX./MIN. COMPONENT REACTIONS SNOW	LIVE	PERM.LIVE	WIND	DEAD	SOIL
G	812	575 / 0	0 / 0	0 / 0	0 / 0	237 / 0	0 / 0
K	919	665 / 0	0 / 0	0 / 0	0 / 0	254 / 0	0 / 0

BEARING MATERIAL TO BE SPF NO.2 OR BETTER AT JOINT(S) G, K

BRACING
TOP CHORD TO BE SHEATHED OR MAX. PURLIN SPACING = 6.11 FT.
MAX. UNBRACED BOTTOM CHORD LENGTH = 10.00 FT OR RIGID CEILING DIRECTLY APPLIED.

ALL PITCH BREAKS AND PERIMETER CORNER JOINTS MUST BE LATERALLY RESTRAINED.

1 LATERAL BRACE(S) AT 1/ 2 LENGTH OF F-G, E-H.

END VERTICAL(S) MUST BE SHEATHED OR HAVE BRACES AS INDICATED IN THE MAX. UNBRACED LENGTH COLUMN OF THE TABLE BELOW

LOADING
TOTAL LOAD CASES: (4)

CHORDS

MEMB. FR-TO	MAX. FACTORED FORCE (LBS)	FACTORED VERT. LOAD LC1 (PLF) FROM	TO	MAX CSI (LC)	MAX. UNBRAC LENGTH
A- B	0 / 50	-112.4	-112.4	0.15 (1)	10.00
B- C	0 / 33	-112.4	-112.4	0.28 (1)	10.00
C- D	-891 / 0	-112.4	-112.4	0.30 (1)	6.11
D- E	-660 / 0	-112.4	-112.4	0.48 (1)	6.25
E- F	-580 / 0	-112.4	-112.4	0.47 (1)	6.25
G- F	-1118 / 0	0.0	0.0	0.33 (1)	6.00
K- B	-320 / 0	0.0	0.0	0.03 (1)	7.81
K- J	0 / 797	-18.5	-18.5	0.29 (4)	10.00
J- I	0 / 580	-18.5	-18.5	0.28 (4)	10.00
I- H	0 / 580	-18.5	-18.5	0.28 (4)	10.00
H- G	0 / 0	-18.5	-18.5	0.10 (4)	10.00

WEBS

MEMB. FR-TO	MAX. FACTORED FORCE (LBS)	MAX CSI (LC)
C- J	-209 / 0	0.13 (1)
J- D	0 / 171	0.04 (1)
J- E	0 / 152	0.03 (1)
H- E	-821 / 0	0.34 (1)
H- F	0 / 1073	0.24 (1)
K- C	-1228 / 0	0.52 (1)

DESIGN CRITERIA

SPECIFIED LOADS:

TOP CH.	LL	=	32.5	PSF
	DL	=	6.0	PSF
BOT CH.	LL	=	0.0	PSF
	DL	=	7.4	PSF
TOTAL LOAD		=	45.9	PSF

SPACING = 24.0 IN. C/C

LOADING IN FLAT SECTION BASED ON A SLOPE OF 2.00/12 MINIMUM

THIS TRUSS IS DESIGNED FOR RESIDENTIAL OR SMALL BUILDING REQUIREMENTS OF PART 9, NBCC 2015

THIS DESIGN COMPLIES WITH:
- PART 9 OF BCBC 2018 , NBC-2019AE
- PART 9 OF OBC 2012 (2019 AMENDMENT)
- CSA 086-14
- TPIC 2014

(55 % OF 43.9 P.S.F. G.S.L. PLUS 8.4 P.S.F. RAIN LOAD) EQUALS 32.5 P.S.F. SPECIFIED ROOF LIVE LOAD

ALLOWABLE DEFL.(LL)= L/360 (0.59")
CALCULATED VERT. DEFL.(LL) = L/ 999 (0.03")
ALLOWABLE DEFL.(TL)= L/360 (0.59")
CALCULATED VERT. DEFL.(TL) = L/ 999 (0.13")

CSI: TC=0.48/1.00 (D-E:1) , BC=0.29/1.00 (J-K:4) , WB=0.52/1.00 (C-K:1) , SSI=0.27/1.00 (E-F:1)

DOL LUMBER=1.00 NAIL=1.00 LS BEND=1.10 COMP=1.10 SHEAR=1.10 TENS= 1.10

COMPANION LIVE LOAD FACTOR = 1.00

AUTOSOLVE RIGHT HEEL ONLY

TRUSS PLATE MANUFACTURER IS NOT RESPONSIBLE FOR QUALITY CONTROL IN THE TRUSS MANUFACTURING PLANT .

NAIL VALUES

PLATE	GRIP(DRY) (PSI) MAX	MIN	SHEAR (PLI) MAX	MIN	SECTION (PLI) MAX	MIN
MT20	650	371	1747	788	1987	1873

PLATE PLACEMENT TOL. = 0.250 inches

PLATE ROTATION TOL. = 5.0 Deg.

JSI GRIP= 0.74 (D) (INPUT = 0.90)
JSI METAL= 0.27 (C) (INPUT = 0.95)

JOB NAME	TRUSS NAME	QUANTITY	PLY	JOB DESC.	DRWG NO.
436388	T18	1	1	BAYVIEW WELLINGTON TRUSS DESC.	

Tamarack Roof Truss, Burlington

Version 8.630 S Aug 30 2023 MiTek Industries, Inc. Tue Apr 2 10:53:38 2024 Page 1
ID:GRmvuh1dyQr3nydBfsTFcCy6OGl-wwTmRfC4FQNpeyeqOKnoZZ5niku4D6zABfCJMPzUo4B

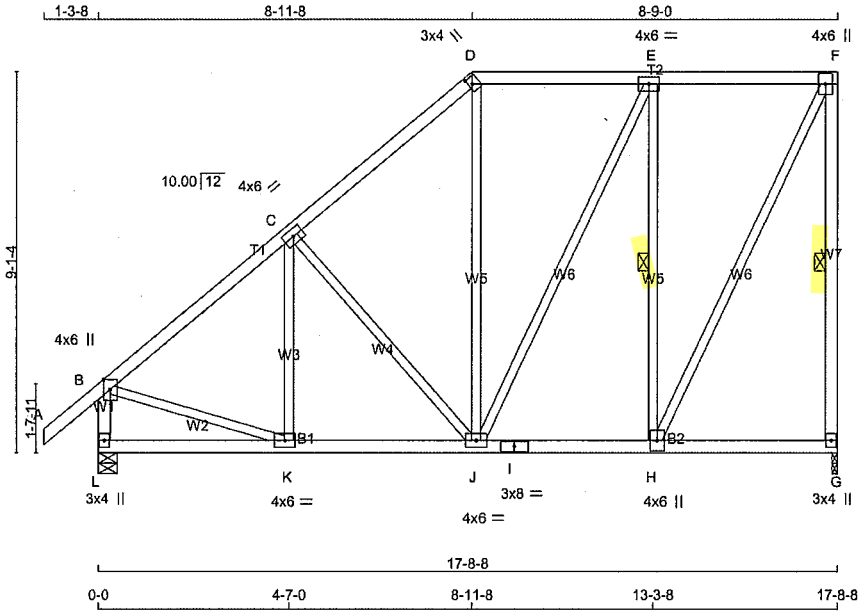

Scale = 1:52.8

TOTAL WEIGHT = 99 lb

LUMBER
N. L. G. A. RULES

CHORDS	SIZE		LUMBER	DESCR.
A - D	2x4	DRY	No.2	SPF
D - F	2x4	DRY	No.2	SPF
G - F	2x4	DRY	No.2	SPF
L - B	2x4	DRY	No.2	SPF
L - I	2x4	DRY	No.2	SPF
I - G	2x4	DRY	No.2	SPF
ALL WEBS EXCEPT	2x3	DRY	No.2	SPF

DRY: SEASONED LUMBER.

PLATES (table is in inches)

JT	TYPE	PLATES	W	LEN	Y	X
B	TMVW+p	MT20	4.0	6.0	Edge	
C	TMWW-t	MT20	4.0	6.0		
D	TTW+h	MT20	3.0	4.0	2.00	1.00
E	TMWW-t	MT20	4.0	6.0		
F	TMVW+p	MT20	4.0	6.0		
G	BMV1+p	MT20	3.0	4.0		
H	BMWW+t	MT20	4.0	6.0		
I	BS-t	MT20	3.0	8.0		
J	BMWWW-t	MT20	4.0	6.0		
K	BMWW-t	MT20	4.0	6.0		
L	BMV1+p	MT20	3.0	4.0		

Edge - INDICATES REFERENCE CORNER OF PLATE TOUCHES EDGE OF CHORD.

NOTES- (1)
1) Lateral braces to be a minimum of 2X4 SPF #2.

LICENSED PROFESSIONAL ENGINEER
4/02/24
C. M. HEYENS
100505065
PROVINCE OF ONTARIO

STRUCTURAL COMPONENT ONLY
DWG # TR24040039

DIMENSIONS, SUPPORTS AND LOADINGS SPECIFIED BY FABRICATOR TO BE VERIFIED BY BUILDING DESIGNER

BEARINGS

JT	FACTORED GROSS REACTION VERT	HORZ	MAXIMUM FACTORED GROSS REACTION DOWN	HORZ	UPLIFT	INPUT BRG IN-SX	REQRD BRG IN-SX
G	1159	0	1159	0	0	1-8	1-8
L	1315	0	1315	0	0	5-8	1-8

UNFACTORED REACTIONS

JT	1ST LCASE COMBINED	MAX./MIN. COMPONENT REACTIONS SNOW	LIVE	PERM.LIVE	WIND	DEAD	SOIL
G	812	575 / 0	0 / 0	0 / 0	0 / 0	237 / 0	0 / 0
L	919	665 / 0	0 / 0	0 / 0	0 / 0	254 / 0	0 / 0

BEARING MATERIAL TO BE SPF NO.2 OR BETTER AT JOINT(S) G, L

BRACING
TOP CHORD TO BE SHEATHED OR MAX. PURLIN SPACING = 5.79 FT.
MAX. UNBRACED BOTTOM CHORD LENGTH = 10.00 FT OR RIGID CEILING DIRECTLY APPLIED.

ALL PITCH BREAKS AND PERIMETER CORNER JOINTS MUST BE LATERALLY RESTRAINED.

1 LATERAL BRACE(S) AT 1/ 2 LENGTH OF F-G, E-H.

END VERTICAL(S) MUST BE SHEATHED OR HAVE BRACES AS INDICATED IN THE MAX. UNBRACED LENGTH COLUMN OF THE TABLE BELOW

LOADING
TOTAL LOAD CASES: (4)

CHORDS

MEMB. FR-TO	MAX. FACTORED FORCE (LBS)	FACTORED VERT. LOAD (PLF) FROM	TO	LC1 MAX CSI (LC)	MAX. UNBRAC LENGTH
A- B	0 / 50	-112.4	-112.4	0.15 (1)	10.00
B- C	-1040 / 0	-112.4	-112.4	0.31 (1)	5.79
C- D	-800 / 0	-112.4	-112.4	0.30 (1)	6.25
D- E	-583 / 0	-112.4	-112.4	0.27 (1)	6.25
E- F	-469 / 0	-112.4	-112.4	0.27 (1)	6.25
G- F	-1126 / 0	0.0	0.0	0.43 (1)	5.98
L- B	-1280 / 0	0.0	0.0	0.14 (1)	7.13
L- K	0 / 0	-18.5	-18.5	0.09 (4)	10.00
K- J	0 / 828	-18.5	-18.5	0.18 (1)	10.00
J- I	0 / 469	-18.5	-18.5	0.12 (1)	10.00
I- H	0 / 469	-18.5	-18.5	0.12 (1)	10.00
H- G	0 / 0	-18.5	-18.5	0.08 (4)	10.00

WEBS

MEMB. FR-TO	MAX. FACTORED FORCE (LBS)	MAX CSI (LC)
K- C	-142 / 40	0.06 (1)
C- J	-374 / 0	0.32 (1)
J- D	0 / 117	0.03 (4)
J- E	0 / 265	0.06 (1)
H- E	-844 / 0	0.46 (1)
H- F	0 / 1046	0.24 (1)
B- K	0 / 861	0.19 (1)

DESIGN CRITERIA

SPECIFIED LOADS:

TOP CH.	LL	=	32.5	PSF
	DL	=	6.0	PSF
BOT CH.	LL	=	0.0	PSF
	DL	=	7.4	PSF
TOTAL LOAD		=	45.9	PSF

SPACING = 24.0 IN. C/C

LOADING IN FLAT SECTION BASED ON A SLOPE OF 2.00/12 MINIMUM

THIS TRUSS IS DESIGNED FOR RESIDENTIAL OR SMALL BUILDING REQUIREMENTS OF PART 9, NBCC 2015

THIS DESIGN COMPLIES WITH:
- PART 9 OF BCBC 2018 , NBC-2019AE
- PART 9 OF OBC 2012 (2019 AMENDMENT)
- CSA 086-14
- TPIC 2014

(55 % OF 43.9 P.S.F. G.S.L. PLUS 8.4 P.S.F. RAIN LOAD) EQUALS 32.5 P.S.F. SPECIFIED ROOF LIVE LOAD

ALLOWABLE DEFL.(LL)= L/360 (0.59")
CALCULATED VERT. DEFL.(LL) = L/ 999 (0.03")
ALLOWABLE DEFL.(TL)= L/360 (0.59")
CALCULATED VERT. DEFL.(TL) = L/ 999 (0.05")

CSI: TC=0.43/1.00 (F-G:1) , BC=0.18/1.00 (J-K:1) , WB=0.46/1.00 (E-H:1) , SSI=0.24/1.00 (E-F:1)

DOL LUMBER=1.00 NAIL=1.00 LS BEND=1.10 COMP=1.10 SHEAR=1.10 TENS= 1.10

COMPANION LIVE LOAD FACTOR = 1.00

TRUSS PLATE MANUFACTURER IS NOT RESPONSIBLE FOR QUALITY CONTROL IN THE TRUSS MANUFACTURING PLANT .

NAIL VALUES

PLATE	GRIP(DRY) (PSI) MAX	MIN	SHEAR (PLI) MAX	MIN	SECTION (PLI) MAX	MIN
MT20	650	371	1747	788	1987	1873

PLATE PLACEMENT TOL. = 0.250 inches

PLATE ROTATION TOL. = 5.0 Deg.

JSI GRIP= 0.81 (B) (INPUT = 0.90)
JSI METAL= 0.54 (B) (INPUT = 0.95)

JOB NAME	TRUSS NAME	QUANTITY	PLY	JOB DESC.	DRWG NO.
436388	T19	1	1	BAYVIEW WELLINGTON TRUSS DESC.	

Tamarack Roof Truss, Burlington

Version 8.630 S Aug 30 2023 MiTek Industries, Inc. Tue Apr 2 10:53:39 2024 Page 1
ID:GRmvuh1dyQr3nydBfsTFcCy6OGI-O618e?Ci0kVgG6C0x2l16nevy8DpyWiJQJxsurzUo4A

Scale = 1:60.0

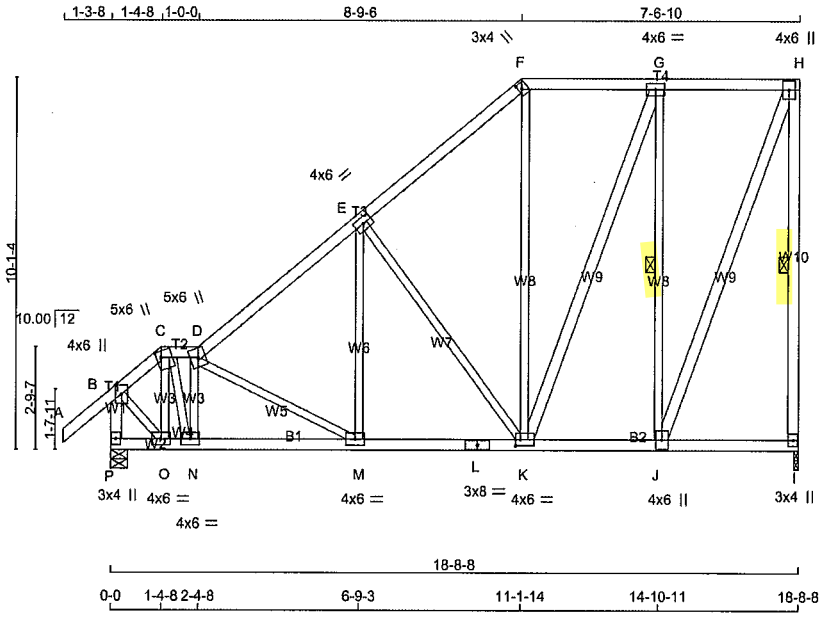

TOTAL WEIGHT = 121 lb
[M][F]

LUMBER
N. L. G. A. RULES

CHORDS	SIZE		LUMBER	DESCR.
A - C	2x4	DRY	No.2	SPF
C - D	2x4	DRY	No.2	SPF
D - F	2x4	DRY	No.2	SPF
F - H	2x4	DRY	No.2	SPF
I - H	2x4	DRY	No.2	SPF
P - B	2x4	DRY	No.2	SPF
P - L	2x4	DRY	No.2	SPF
L - I	2x4	DRY	No.2	SPF
ALL WEBS	2x3	DRY	No.2	SPF
EXCEPT				
K - G	2x4	DRY	No.2	SPF
J - H	2x4	DRY	No.2	SPF

DRY: SEASONED LUMBER.

PLATES (table is in inches)

JT	TYPE	PLATES	W	LEN	Y	X
B	TMVW+p	MT20	4.0	6.0	Edge	
C	TTWW+m	MT20	5.0	6.0	2.00	1.50
D	TTWW+m	MT20	5.0	6.0		
E	TMWW-t	MT20	4.0	6.0		
F	TTW+h	MT20	3.0	4.0	2.00	1.00
G	TMWW-t	MT20	4.0	6.0		
H	TMVW+p	MT20	4.0	6.0		
I	BMV1+p	MT20	3.0	4.0		
J	BMWW+t	MT20	4.0	6.0		
K	BMWWW-t	MT20	4.0	6.0	2.00	1.50
L	BS-t	MT20	3.0	8.0		
M, N, O						
M	BMWW-t	MT20	4.0	6.0		
P	BMV1+p	MT20	3.0	4.0		

Edge - INDICATES REFERENCE CORNER OF PLATE TOUCHES EDGE OF CHORD.

NOTES- (1)
1) Lateral braces to be a minimum of 2X4 SPF #2.

LICENSED PROFESSIONAL ENGINEER
4/02/24
C. M. HEYENS
100505065
PROVINCE OF ONTARIO

STRUCTURAL COMPONENT ONLY
DWG # TR24040040

DIMENSIONS, SUPPORTS AND LOADINGS SPECIFIED BY FABRICATOR TO BE VERIFIED BY BUILDING DESIGNER

BEARINGS

JT	FACTORED GROSS REACTION VERT	HORZ	MAXIMUM FACTORED GROSS REACTION DOWN	HORZ	UPLIFT	INPUT BRG IN-SX	REQRD BRG IN-SX
I	1219	0	1219	0	0	1-8	1-8
P	1386	0	1386	0	0	5-8	1-8

UNFACTORED REACTIONS

JT	1ST LCASE COMBINED	MAX./MIN. COMPONENT REACTIONS SNOW	LIVE	PERM.LIVE	WIND	DEAD	SOIL
I	854	604 / 0	0 / 0	0 / 0	0 / 0	250 / 0	0 / 0
P	969	701 / 0	0 / 0	0 / 0	0 / 0	268 / 0	0 / 0

BEARING MATERIAL TO BE SPF NO.2 OR BETTER AT JOINT(S) I, P

BRACING
TOP CHORD TO BE SHEATHED OR MAX. PURLIN SPACING = 5.62 FT.
MAX. UNBRACED BOTTOM CHORD LENGTH = 10.00 FT OR RIGID CEILING DIRECTLY APPLIED.

ALL PITCH BREAKS AND PERIMETER CORNER JOINTS MUST BE LATERALLY RESTRAINED.

1 LATERAL BRACE(S) AT 1/ 2 LENGTH OF H-I, G-J.

END VERTICAL(S) MUST BE SHEATHED OR HAVE BRACES AS INDICATED IN THE MAX. UNBRACED LENGTH COLUMN OF THE TABLE BELOW

LOADING
TOTAL LOAD CASES: (4)

CHORDS

MEMB. FR-TO	MAX. FACTORED FORCE (LBS)	FACTORED VERT. LOAD LC1 (PLF) FROM	TO	MAX CSI (LC)	MAX. UNBRAC LENGTH
A- B	0 / 50	-112.4	-112.4	0.15 (1)	10.00
B- C	-876 / 0	-112.4	-112.4	0.12 (1)	6.25
C- D	-943 / 0	-112.4	-112.4	0.02 (1)	6.25
D- E	-1135 / 0	-112.4	-112.4	0.30 (1)	5.62
E- F	-763 / 0	-112.4	-112.4	0.29 (1)	6.25
F- G	-556 / 0	-112.4	-112.4	0.20 (1)	6.25
G- H	-398 / 0	-112.4	-112.4	0.19 (1)	6.25
I- H	-1190 / 0	0.0	0.0	0.59 (1)	5.86
P- B	-1400 / 0	0.0	0.0	0.15 (1)	6.88
P- O	0 / 0	-18.5	-18.5	0.06 (1)	10.00
O- N	0 / 610	-18.5	-18.5	0.15 (1)	10.00
N- M	0 / 983	-18.5	-18.5	0.21 (1)	10.00
M- L	0 / 903	-18.5	-18.5	0.19 (1)	10.00
L- K	0 / 903	-18.5	-18.5	0.19 (1)	10.00
K- J	0 / 398	-18.5	-18.5	0.10 (1)	10.00
J- I	0 / 0	-18.5	-18.5	0.06 (4)	10.00

WEBS

MEMB. FR-TO	MAX. FACTORED FORCE (LBS)	MAX CSI (LC)
O- C	-439 / 0	0.07 (1)
C- N	0 / 976	0.22 (1)
N- D	-947 / 0	0.16 (1)
D- M	-91 / 0	0.04 (1)
M- E	0 / 143	0.04 (4)
E- K	-588 / 0	0.68 (1)
K- F	0 / 114	0.03 (4)
B- O	0 / 839	0.19 (1)
K- G	0 / 455	0.07 (1)
J- G	-945 / 0	0.66 (1)
J- H	0 / 1098	0.18 (1)

DESIGN CRITERIA

SPECIFIED LOADS:

TOP CH.	LL	=	32.5	PSF
	DL	=	6.0	PSF
BOT CH.	LL	=	0.0	PSF
	DL	=	7.4	PSF
TOTAL LOAD		=	45.9	PSF

SPACING = 24.0 IN. C/C

LOADING IN ALL FLAT SECTIONS BASED ON A SLOPE OF 2.00/12 MINIMUM

THIS TRUSS IS DESIGNED FOR RESIDENTIAL OR SMALL BUILDING REQUIREMENTS OF PART 9, NBCC 2015

THIS DESIGN COMPLIES WITH:
- PART 9 OF BCBC 2018 , NBC-2019AE
- PART 9 OF OBC 2012 (2019 AMENDMENT)
- CSA 086-14
- TPIC 2014

DESIGN ASSUMPTIONS
-OVERHANG NOT TO BE ALTERED OR CUT OFF.

(55 % OF 43.9 P.S.F. G.S.L. PLUS 8.4 P.S.F. RAIN LOAD) EQUALS 32.5 P.S.F. SPECIFIED ROOF LIVE LOAD

ALLOWABLE DEFL.(LL)= L/360 (0.62")
CALCULATED VERT. DEFL.(LL) = L/ 999 (0.04")
ALLOWABLE DEFL.(TL)= L/360 (0.62")
CALCULATED VERT. DEFL.(TL) = L/ 999 (0.07")

CSI: TC=0.59/1.00 (H-I:1) , BC=0.21/1.00 (M-N:1) , WB=0.68/1.00 (E-K:1) , SSI=0.20/1.00 (G-H:1)

DOL LUMBER=1.00 NAIL=1.00 LS BEND=1.10 COMP=1.10 SHEAR=1.10 TENS= 1.10

COMPANION LIVE LOAD FACTOR = 1.00

TRUSS PLATE MANUFACTURER IS NOT RESPONSIBLE FOR QUALITY CONTROL IN THE TRUSS MANUFACTURING PLANT .

NAIL VALUES

PLATE	GRIP(DRY) (PSI) MAX	MIN	SHEAR (PLI) MAX	MIN	SECTION (PLI) MAX	MIN
MT20	650	371	1747	788	1987	1873

PLATE PLACEMENT TOL. = 0.250 inches

PLATE ROTATION TOL. = 5.0 Deg.

JSI GRIP= 0.87 (B) (INPUT = 0.90)
JSI METAL= 0.43 (B) (INPUT = 0.95)

JOB NAME	TRUSS NAME	QUANTITY	PLY	JOB DESC.	DRWG NO.
436388	T20	1	1	BAYVIEW WELLINGTON TRUSS DESC.	

Tamarack Roof Truss, Burlington

Version 8.630 S Aug 30 2023 MiTek Industries, Inc. Tue Apr 2 10:53:40 2024 Page 1
ID:GRmvuh1dyQr3nydBfsTFcCy6OGI-sIbXrLDLn1dWtFnDVlpGf A6OYZ2h?UTfzhQQHzUo49

Scale = 1:53.5

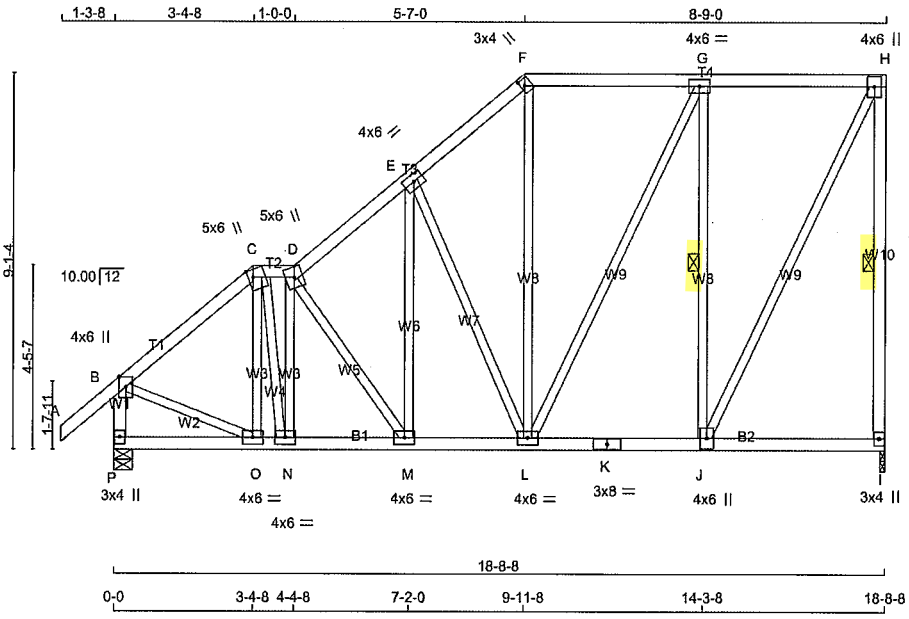

TOTAL WEIGHT = 115 lb [M]

LUMBER
N. L. G. A. RULES

CHORDS	SIZE		LUMBER	DESCR.
A - C	2x4	DRY	No.2	SPF
C - D	2x4	DRY	No.2	SPF
D - F	2x4	DRY	No.2	SPF
F - H	2x4	DRY	No.2	SPF
I - H	2x4	DRY	No.2	SPF
P - B	2x4	DRY	No.2	SPF
P - K	2x4	DRY	No.2	SPF
K - I	2x4	DRY	No.2	SPF
ALL WEBS EXCEPT	2x3	DRY	No.2	SPF

DRY: SEASONED LUMBER.

PLATES (table is in inches)

JT	TYPE	PLATES	W	LEN	Y	X
B	TMVW+p	MT20	4.0	6.0	Edge	
C	TTWW+m	MT20	5.0	6.0	2.25	1.50
D	TTWW+m	MT20	5.0	6.0		
E	TMWW-t	MT20	4.0	6.0		
F	TTW+h	MT20	3.0	4.0	2.00	1.00
G	TMWW-t	MT20	4.0	6.0		
H	TMVW+p	MT20	4.0	6.0		
I	BMV1+p	MT20	3.0	4.0		
J	BMWW+t	MT20	4.0	6.0		
K	BS-t	MT20	3.0	8.0		
L	BMWWW-t	MT20	4.0	6.0		
M, N, O						
M	BMWW-t	MT20	4.0	6.0		
P	BMV1+p	MT20	3.0	4.0		

Edge - INDICATES REFERENCE CORNER OF PLATE TOUCHES EDGE OF CHORD.

NOTES- (1)
1) Lateral braces to be a minimum of 2X4 SPF #2.

LICENSED PROFESSIONAL ENGINEER
4/02/24
C. M. HEYENS
100505065
PROVINCE OF ONTARIO

STRUCTURAL COMPONENT ONLY
DWG # TR24040041

DIMENSIONS, SUPPORTS AND LOADINGS SPECIFIED BY FABRICATOR TO BE VERIFIED BY BUILDING DESIGNER

BEARINGS

JT	FACTORED GROSS REACTION VERT	HORZ	MAXIMUM FACTORED GROSS REACTION DOWN	HORZ	UPLIFT	INPUT BRG IN-SX	REQRD BRG IN-SX
I	1292	0	1292	0	0	1-8	1-8
P	1401	0	1401	0	0	5-8	1-8

UNFACTORED REACTIONS

JT	1ST LCASE COMBINED	MAX./MIN. COMPONENT REACTIONS SNOW	LIVE	PERM.LIVE	WIND	DEAD	SOIL
I	912	608 / 0	0 / 0	0 / 0	0 / 0	304 / 0	0 / 0
P	981	698 / 0	0 / 0	0 / 0	0 / 0	284 / 0	0 / 0

BEARING MATERIAL TO BE SPF NO.2 OR BETTER AT JOINT(S) I, P

BRACING
FOR SECTION F-H, MAX. PURLIN SPACING = 2.00 FT.
FOR OTHER SECTIONS, TOP CHORD TO BE SHEATHED OR MAX. PURLIN SPACING = 5.70 FT.
MAX. UNBRACED BOTTOM CHORD LENGTH = 10.00 FT OR RIGID CEILING DIRECTLY APPLIED.

ALL PITCH BREAKS AND PERIMETER CORNER JOINTS MUST BE LATERALLY RESTRAINED.

1 LATERAL BRACE(S) AT 1/ 2 LENGTH OF H-I, G-J.

END VERTICAL(S) MUST BE SHEATHED OR HAVE BRACES AS INDICATED IN THE MAX. UNBRACED LENGTH COLUMN OF THE TABLE BELOW

LOADING
TOTAL LOAD CASES: (4)

CHORDS

MEMB. FR-TO	MAX. FACTORED FORCE (LBS)	FACTORED VERT. LOAD (PLF) FROM	TO	LC1	MAX CSI (LC)	MAX. UNBRAC LENGTH
A- B	0 / 50	-112.4	-112.4	0.15 (1)	10.00	10.00
B- C	-1113 / 0	-112.4	-112.4	0.24 (1)	5.70	5.70
C- D	-988 / 0	-112.4	-112.4	0.03 (1)	6.25	6.25
D- E	-1117 / 0	-112.4	-112.4	0.15 (1)	5.82	5.82
E- F	-896 / 0	-112.4	-112.4	0.15 (1)	6.25	6.25
F- G	-670 / 0	-122.4	-122.4	0.39 (1)	2.00	2.00
G- H	-527 / 0	-122.4	-122.4	0.39 (1)	2.00	2.00
I- H	-1258 / 0	0.0	0.0	0.49 (1)	5.74	5.74
P- B	-1381 / 0	0.0	0.0	0.15 (1)	6.92	6.92
P- O	0 / 0	-18.5	-18.5	0.06 (4)	10.00	10.00
O- N	0 / 848	-18.5	-18.5	0.19 (1)	10.00	10.00
N- M	0 / 1006	-18.5	-18.5	0.21 (1)	10.00	10.00
M- L	0 / 879	-18.5	-18.5	0.16 (1)	10.00	10.00
L- K	0 / 527	-18.5	-18.5	0.13 (1)	10.00	10.00
K- J	0 / 527	-18.5	-18.5	0.13 (1)	10.00	10.00
J- I	0 / 0	-18.5	-18.5	0.08 (4)	10.00	10.00

WEBS

MEMB. FR-TO	MAX. FACTORED FORCE (LBS)	MAX CSI (LC)
O- C	-180 / 0	0.05 (1)
C- N	0 / 665	0.15 (1)
N- D	-715 / 0	0.21 (1)
L- F	0 / 236	0.05 (1)
L- G	0 / 333	0.07 (1)
J- G	-959 / 0	0.52 (1)
J- H	0 / 1175	0.26 (1)
B- O	0 / 910	0.20 (1)
E- L	-516 / 0	0.50 (1)
M- E	0 / 249	0.06 (1)
D- M	-227 / 0	0.09 (1)

DESIGN CRITERIA

SPECIFIED LOADS:

TOP CH.	LL	=	32.5	PSF
	DL	=	6.0	PSF
BOT CH.	LL	=	0.0	PSF
	DL	=	7.4	PSF
TOTAL LOAD		=	45.9	PSF

SPACING = 24.0 IN. C/C

LOADING IN HIGHEST FLAT SECTION BASED ON PIGGYBACK TRUSS WITH SLOPES OF 6.00/12 AND -6.00/12 AND RESPECTIVE HEEL HEIGHTS OF 0-0 AND 0-0 AND AN ADDITIONAL DEAD LOAD OF 4.0 P.S.F.

LOADING IN OTHER FLAT SECTIONS BASED ON A SLOPE OF 6.00/12

THIS TRUSS IS DESIGNED FOR RESIDENTIAL OR SMALL BUILDING REQUIREMENTS OF PART 9, NBCC 2015

THIS DESIGN COMPLIES WITH:
- PART 9 OF BCBC 2018 , NBC-2019AE
- PART 9 OF OBC 2012 (2019 AMENDMENT)
- CSA 086-14
- TPIC 2014

(55 % OF 43.9 P.S.F. G.S.L. PLUS 8.4 P.S.F. RAIN LOAD) EQUALS 32.5 P.S.F. SPECIFIED ROOF LIVE LOAD

ALLOWABLE DEFL.(LL)= L/360 (0.62")
CALCULATED VERT. DEFL.(LL) = L/ 999 (0.04")
ALLOWABLE DEFL.(TL)= L/360 (0.62")
CALCULATED VERT. DEFL.(TL) = L/ 999 (0.07")

CSI: TC=0.49/1.00 (H-I:1) , BC=0.21/1.00 (M-N:1) , WB=0.52/1.00 (G-J:1) , SSI=0.26/1.00 (G-H:1)

DOL LUMBER=1.00 NAIL=1.00 LS BEND=1.10 COMP=1.10 SHEAR=1.10 TENS= 1.10

COMPANION LIVE LOAD FACTOR = 1.00

TRUSS PLATE MANUFACTURER IS NOT RESPONSIBLE FOR QUALITY CONTROL IN THE TRUSS MANUFACTURING PLANT .

NAIL VALUES

PLATE	GRIP(DRY) (PSI) MAX	MIN	SHEAR (PLI) MAX	MIN	SECTION (PLI) MAX	MIN
MT20	650	371	1747	788	1987	1873

PLATE PLACEMENT TOL. = 0.250 inches

PLATE ROTATION TOL. = 5.0 Deg.

JSI GRIP= 0.86 (B) (INPUT = 0.90)
JSI METAL= 0.55 (B) (INPUT = 0.95)

JOB NAME	TRUSS NAME	QUANTITY	PLY	JOB DESC.	DRWG NO.
436388	T21A	3	1	BAYVIEW WELLINGTON TRUSS DESC.	

Tamarack Roof Truss, Burlington

Version 8.630 S Aug 30 2023 MiTek Industries, Inc. Tue Apr 2 10:53:41 2024 Page 1
ID:GRmvuh1dyQr3nydBfsTFcCy6OGl-KV9v3hEzYLlNVPMP3TKVBCjHJyuMQTyctdQzzkzUo48

Scale = 1:50.6

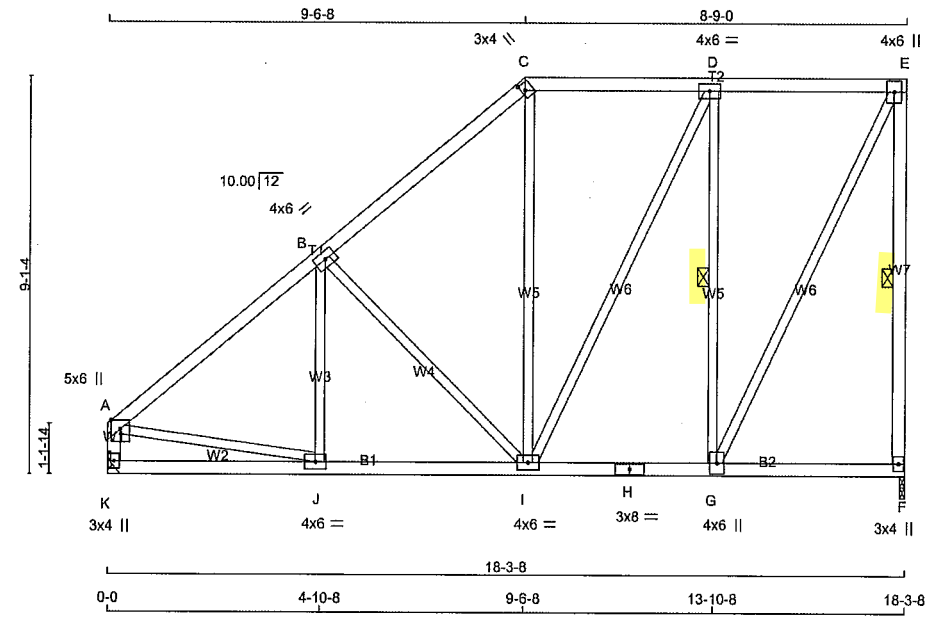

TOTAL WEIGHT = 3 X 98 = 293 lb

LUMBER

N. L. G. A. RULES

CHORDS	SIZE		LUMBER	DESCR.
A - C	2x4	DRY	No.2	SPF
C - E	2x4	DRY	No.2	SPF
F - E	2x4	DRY	No.2	SPF
K - A	2x4	DRY	No.2	SPF
K - H	2x4	DRY	No.2	SPF
H - F	2x4	DRY	No.2	SPF
ALL WEBS EXCEPT	2x3	DRY	No.2	SPF

DRY: SEASONED LUMBER.

PLATES (table is in inches)

JT	TYPE	PLATES	W	LEN	Y	X
A	TMVW+p	MT20	5.0	6.0	Edge	
B	TMWW-t	MT20	4.0	6.0		
C	TTW+h	MT20	3.0	4.0	2.00	1.00
D	TMWW-t	MT20	4.0	6.0		
E	TMVW+p	MT20	4.0	6.0		
F	BMV1+p	MT20	3.0	4.0		
G	BMWW+t	MT20	4.0	6.0		
H	BS-t	MT20	3.0	8.0		
I	BMWWW-t	MT20	4.0	6.0		
J	BMWW-t	MT20	4.0	6.0		
K	BMV1+p	MT20	3.0	4.0		

Edge - INDICATES REFERENCE CORNER OF PLATE TOUCHES EDGE OF CHORD.

NOTES- (1)
1) Lateral braces to be a minimum of 2X4 SPF #2.

LICENSED PROFESSIONAL ENGINEER
4/02/24
C. M. HEYENS
100505065
PROVINCE OF ONTARIO

STRUCTURAL COMPONENT ONLY
DWG # TR24040042

DIMENSIONS, SUPPORTS AND LOADINGS SPECIFIED BY FABRICATOR TO BE VERIFIED BY BUILDING DESIGNER

BEARINGS

JT	FACTORED GROSS REACTION VERT	HORZ	MAXIMUM FACTORED GROSS REACTION DOWN	HORZ	UPLIFT	INPUT BRG IN-SX	REQRD BRG IN-SX
F	1264	0	1264	0	0	1-8	1-8
K	1218	0	1218	0	0	MECHANICAL	

A SUITABLE HANGER/MECHANICAL CONNECTION IS REQUIRED AT JOINT K. MINIMUM BEARING LENGTH AT JOINT K = 1-8.

UNFACTORED REACTIONS

JT	1ST LCASE COMBINED	MAX./MIN. COMPONENT REACTIONS SNOW	LIVE	PERM.LIVE	WIND	DEAD	SOIL
F	892	594 / 0	0 / 0	0 / 0	0 / 0	298 / 0	0 / 0
K	856	594 / 0	0 / 0	0 / 0	0 / 0	262 / 0	0 / 0

BEARING MATERIAL TO BE SPF NO.2 OR BETTER AT JOINT(S) F

BRACING

FOR SECTION C-E, MAX. PURLIN SPACING = 2.00 FT.
FOR OTHER SECTIONS, TOP CHORD TO BE SHEATHED OR MAX. PURLIN SPACING = 5.38 FT.
MAX. UNBRACED BOTTOM CHORD LENGTH = 10.00 FT OR RIGID CEILING DIRECTLY APPLIED.

ALL PITCH BREAKS AND PERIMETER CORNER JOINTS MUST BE LATERALLY RESTRAINED.

1 LATERAL BRACE(S) AT 1/ 2 LENGTH OF E-F, D-G.

END VERTICAL(S) MUST BE SHEATHED OR HAVE BRACES AS INDICATED IN THE MAX. UNBRACED LENGTH COLUMN OF THE TABLE BELOW

LOADING

TOTAL LOAD CASES: (4)

CHORDS

MEMB. FR-TO	MAX. FACTORED FORCE (LBS)	FACTORED VERT. LOAD LC1 (PLF) FROM	TO	MAX CSI (LC)	MAX. UNBRAC LENGTH
A- B	-1221 / 0	-112.4	-112.4	0.35 (1)	5.38
B- C	-881 / 0	-112.4	-112.4	0.34 (1)	6.10
C- D	-644 / 0	-122.4	-122.4	0.30 (1)	2.00
D- E	-513 / 0	-122.4	-122.4	0.29 (1)	2.00
F- E	-1230 / 0	0.0	0.0	0.47 (1)	5.79
K- A	-1181 / 0	0.0	0.0	0.12 (1)	7.35
K- J	0 / 0	-18.5	-18.5	0.10 (4)	10.00
J- I	0 / 969	-18.5	-18.5	0.20 (1)	10.00
I- H	0 / 513	-18.5	-18.5	0.12 (1)	10.00
H- G	0 / 513	-18.5	-18.5	0.12 (1)	10.00
G- F	0 / 0	-18.5	-18.5	0.08 (4)	10.00

WEBS

MEMB. FR-TO	MAX. FACTORED FORCE (LBS)	MAX CSI (LC)
J- B	-63 / 65	0.03 (1)
B- I	-467 / 0	0.41 (1)
I- C	0 / 138	0.03 (4)
I- D	0 / 304	0.07 (1)
G- D	-933 / 0	0.50 (1)
G- E	0 / 1144	0.26 (1)
A- J	0 / 983	0.22 (1)

[M][F]

DESIGN CRITERIA

SPECIFIED LOADS:

TOP CH.	LL	=	32.5	PSF
	DL	=	6.0	PSF
BOT CH.	LL	=	0.0	PSF
	DL	=	7.4	PSF
TOTAL LOAD		=	45.9	PSF

SPACING = 24.0 IN. C/C

LOADING IN FLAT SECTION BASED ON PIGGYBACK TRUSS WITH SLOPES OF 6.00/12 AND -6.00/12 AND RESPECTIVE HEEL HEIGHTS OF 0-0 AND 0-0 AND AN ADDITIONAL DEAD LOAD OF 4.0 P.S.F.

THIS TRUSS IS DESIGNED FOR RESIDENTIAL OR SMALL BUILDING REQUIREMENTS OF PART 9, NBCC 2015

THIS DESIGN COMPLIES WITH:
- PART 9 OF BCBC 2018 , NBC-2019AE
- PART 9 OF OBC 2012 (2019 AMENDMENT)
- CSA 086-14
- TPIC 2014

(55 % OF 43.9 P.S.F. G.S.L. PLUS 8.4 P.S.F. RAIN LOAD) EQUALS 32.5 P.S.F. SPECIFIED ROOF LIVE LOAD

ALLOWABLE DEFL.(LL)= L/360 (0.61")
CALCULATED VERT. DEFL.(LL) = L/ 999 (0.03")
ALLOWABLE DEFL.(TL)= L/360 (0.61")
CALCULATED VERT. DEFL.(TL) = L/ 999 (0.06")

CSI: TC=0.47/1.00 (E-F:1) , BC=0.20/1.00 (I-J:1) , WB=0.50/1.00 (D-G:1) , SSI=0.26/1.00 (D-E:1)

DOL LUMBER=1.00 NAIL=1.00 LS BEND=1.10 COMP=1.10 SHEAR=1.10 TENS= 1.10

COMPANION LIVE LOAD FACTOR = 1.00

TRUSS PLATE MANUFACTURER IS NOT RESPONSIBLE FOR QUALITY CONTROL IN THE TRUSS MANUFACTURING PLANT .

NAIL VALUES

PLATE	GRIP(DRY) (PSI) MAX	MIN	SHEAR (PLI) MAX	MIN	SECTION (PLI) MAX	MIN
MT20	650	371	1747	788	1987	1873

PLATE PLACEMENT TOL. = 0.250 inches

PLATE ROTATION TOL. = 5.0 Deg.

JSI GRIP= 0.74 (C) (INPUT = 0.90)
JSI METAL= 0.46 (A) (INPUT = 0.95)

JOB NAME	TRUSS NAME	QUANTITY	PLY	JOB DESC.	DRWG NO.
436388	T22	2	1	BAYVIEW WELLINGTON TRUSS DESC.	

Tamarack Roof Truss, Burlington

Version 8.630 S Aug 30 2023 MiTek Industries, Inc. Tue Apr 2 10:53:43 2024 Page 1
ID:GRmvuh1dyQr3nydBfsTFcCy6OGl-GtGfUNGD4y?5kjWoAuMzGdoiXlaIuPGvLxv41czUo46

Scale = 1:41.1

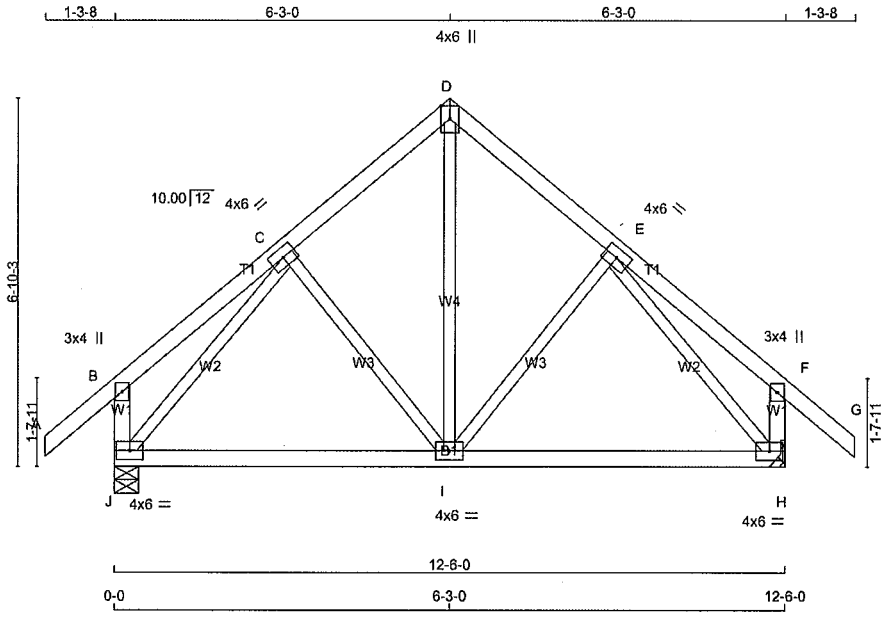

TOTAL WEIGHT = 2 X 60 = 120 lb

LUMBER
N. L. G. A. RULES

CHORDS	SIZE		LUMBER	DESCR.
A - D	2x4	DRY	No.2	SPF
D - G	2x4	DRY	No.2	SPF
J - B	2x4	DRY	No.2	SPF
H - F	2x4	DRY	No.2	SPF
J - H	2x4	DRY	No.2	SPF
ALL WEBS EXCEPT	2x3	DRY	No.2	SPF

DRY: SEASONED LUMBER.

PLATES (table is in inches)

JT	TYPE	PLATES	W	LEN	Y	X
B	TMV+p	MT20	3.0	4.0		
C	TMWW-t	MT20	4.0	6.0		
D	TTW+p	MT20	4.0	6.0	Edge	
E	TMWW-t	MT20	4.0	6.0		
F	TMV+p	MT20	3.0	4.0		
H	BMVW1-t	MT20	4.0	6.0		
I	BMWWW-t	MT20	4.0	6.0		
J	BMVW1-t	MT20	4.0	6.0		

Edge - INDICATES REFERENCE CORNER OF PLATE TOUCHES EDGE OF CHORD.

NOTES- (1)
1) Lateral braces to be a minimum of 2X4 SPF #2.

DIMENSIONS, SUPPORTS AND LOADINGS SPECIFIED BY FABRICATOR TO BE VERIFIED BY BUILDING DESIGNER

BEARINGS

JT	FACTORED GROSS REACTION VERT	HORZ	MAXIMUM FACTORED GROSS REACTION DOWN	HORZ	UPLIFT	INPUT BRG IN-SX	REQRD BRG IN-SX
J	974	0	974	0	0	5-8	1-8
H	974	0	974	0	0	MECHANICAL	

A SUITABLE HANGER/MECHANICAL CONNECTION IS REQUIRED AT JOINT H. MINIMUM BEARING LENGTH AT JOINT H = 1-8.

UNFACTORED REACTIONS

JT	1ST LCASE COMBINED	MAX./MIN. COMPONENT REACTIONS SNOW	LIVE	PERM.LIVE	WIND	DEAD	SOIL
J	680	496 / 0	0 / 0	0 / 0	0 / 0	184 / 0	0 / 0
H	680	496 / 0	0 / 0	0 / 0	0 / 0	184 / 0	0 / 0

BEARING MATERIAL TO BE SPF NO.2 OR BETTER AT JOINT(S) J

BRACING
TOP CHORD TO BE SHEATHED OR MAX. PURLIN SPACING = 6.25 FT.
MAX. UNBRACED BOTTOM CHORD LENGTH = 10.00 FT OR RIGID CEILING DIRECTLY APPLIED.

ALL PITCH BREAKS AND PERIMETER CORNER JOINTS MUST BE LATERALLY RESTRAINED.

LOADING
TOTAL LOAD CASES: (4)

CHORDS

MEMB. FR-TO	MAX. FACTORED FORCE (LBS)	FACTORED VERT. LOAD (PLF) FROM	TO	LC1 MAX CSI (LC)	MAX. UNBRAC LENGTH
A- B	0 / 50	-112.4	-112.4	0.15 (1)	10.00
B- C	0 / 26	-112.4	-112.4	0.17 (1)	10.00
C- D	-553 / 0	-112.4	-112.4	0.13 (1)	6.25
D- E	-553 / 0	-112.4	-112.4	0.13 (1)	6.25
E- F	0 / 26	-112.4	-112.4	0.17 (1)	10.00
F- G	0 / 50	-112.4	-112.4	0.15 (1)	10.00
J- B	-290 / 0	0.0	0.0	0.03 (1)	7.81
H- F	-290 / 0	0.0	0.0	0.03 (1)	7.81
J- I	0 / 510	-18.5	-18.5	0.24 (4)	10.00
I- H	0 / 510	-18.5	-18.5	0.24 (4)	10.00

WEBS

MEMB. FR-TO	MAX. FACTORED FORCE (LBS)	MAX CSI (LC)
I- D	0 / 399	0.09 (1)
I- E	-166 / 0	0.07 (1)
C- I	-166 / 0	0.07 (1)
J- C	-818 / 0	0.32 (1)
E- H	-818 / 0	0.32 (1)

[M][F]

DESIGN CRITERIA

SPECIFIED LOADS:

TOP CH.	LL	=	32.5	PSF
	DL	=	6.0	PSF
BOT CH.	LL	=	0.0	PSF
	DL	=	7.4	PSF
TOTAL LOAD		=	45.9	PSF

SPACING = 24.0 IN. C/C

THIS TRUSS IS DESIGNED FOR RESIDENTIAL OR SMALL BUILDING REQUIREMENTS OF PART 9, NBCC 2015

THIS DESIGN COMPLIES WITH:
- PART 9 OF BCBC 2018 , NBC-2019AE
- PART 9 OF OBC 2012 (2019 AMENDMENT)
- CSA 086-14
- TPIC 2014

(55 % OF 43.9 P.S.F. G.S.L. PLUS 8.4 P.S.F. RAIN LOAD) EQUALS 32.5 P.S.F. SPECIFIED ROOF LIVE LOAD

ALLOWABLE DEFL.(LL)= L/360 (0.42")
CALCULATED VERT. DEFL.(LL) = L/ 999 (0.01")
ALLOWABLE DEFL.(TL)= L/360 (0.42")
CALCULATED VERT. DEFL.(TL) = L/ 999 (0.04")

CSI: TC=0.17/1.00 (B-C:1) , BC=0.24/1.00 (I-J:4) , WB=0.32/1.00 (E-H:1) , SSI=0.13/1.00 (C-D:1)

DOL LUMBER=1.00 NAIL=1.00 LS BEND=1.10 COMP=1.10 SHEAR=1.10 TENS= 1.10

COMPANION LIVE LOAD FACTOR = 1.00

TRUSS PLATE MANUFACTURER IS NOT RESPONSIBLE FOR QUALITY CONTROL IN THE TRUSS MANUFACTURING PLANT .

NAIL VALUES

PLATE	GRIP(DRY) (PSI) MAX	MIN	SHEAR (PLI) MAX	MIN	SECTION (PLI) MAX	MIN
MT20	650	371	1747	788	1987	1873

PLATE PLACEMENT TOL. = 0.250 inches

PLATE ROTATION TOL. = 5.0 Deg.

JSI GRIP= 0.53 (C) (INPUT = 0.90)
JSI METAL= 0.18 (C) (INPUT = 0.95)

LICENSED PROFESSIONAL ENGINEER
4/02/24
C. M. HEYENS
100505065
PROVINCE OF ONTARIO

STRUCTURAL COMPONENT ONLY
DWG # TR24040043

JOB NAME	TRUSS NAME	QUANTITY	PLY	JOB DESC.	DRWG NO.
436388	T22G	1	1	BAYVIEW WELLINGTON TRUSS DESC.	

Tamarack Roof Truss, Burlington

Version 8.630 S Aug 30 2023 MiTek Industries, Inc. Tue Apr 2 10:53:44 2024 Page 1
ID:GRmvuh1dyQr3nydBfsTFcCy6OGl-I3q1hjGrrG7yMt5 kbuCpqLtY9zvdwi2abfdZ3zUo45

Scale = 1:41.1

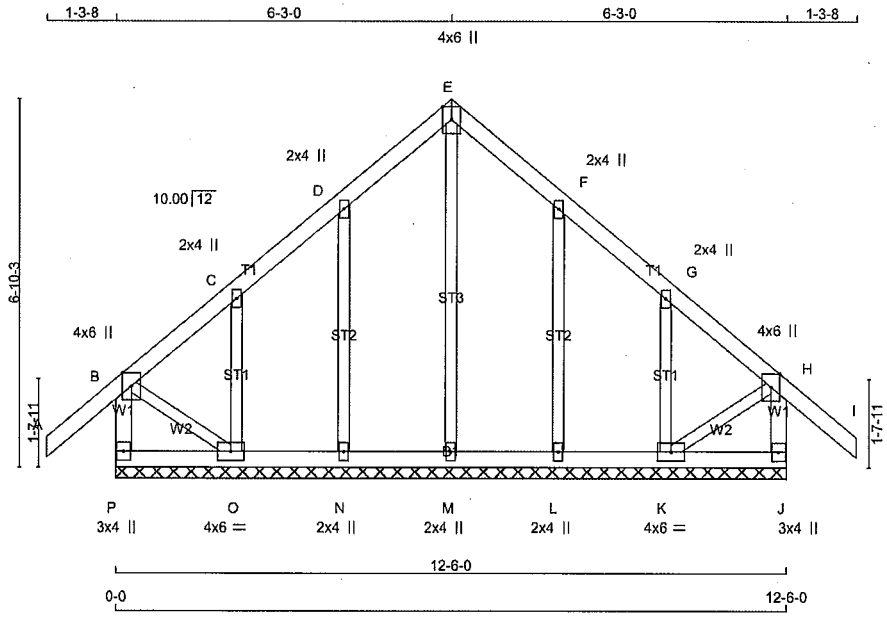

TOTAL WEIGHT = 61 lb

[M]

LUMBER
N. L. G. A. RULES

CHORDS	SIZE		LUMBER	DESCR.
P - B	2x4	DRY	No.2	SPF
A - E	2x4	DRY	No.2	SPF
E - I	2x4	DRY	No.2	SPF
J - H	2x4	DRY	No.2	SPF
P - J	2x4	DRY	No.2	SPF
ALL WEBS	2x3	DRY	No.2	SPF
ALL GABLE WEBS	2x3	DRY	No.2	SPF

DRY: SEASONED LUMBER.

GABLE STUDS SPACED AT 2-0-0 OC.

PLATES (table is in Inches)

JT	TYPE	PLATES	W	LEN	Y	X
B	TMVW+p	MT20	4.0	6.0	Edge	
C, D, F, G						
C	TMW+w	MT20	2.0	4.0		
E	TTW+p	MT20	4.0	6.0	Edge	
H	TMVW+p	MT20	4.0	6.0	Edge	
J	BMV1+p	MT20	3.0	4.0		
K	BMWW1-t	MT20	4.0	6.0		
L, M, N						
L	BMW1+w	MT20	2.0	4.0		
O	BMWW1-t	MT20	4.0	6.0		
P	BMV1+p	MT20	3.0	4.0		

Edge - INDICATES REFERENCE CORNER OF PLATE TOUCHES EDGE OF CHORD.

NOTES- (1)
1) Lateral braces to be a minimum of 2X4 SPF #2.

DIMENSIONS, SUPPORTS AND LOADINGS SPECIFIED BY FABRICATOR TO BE VERIFIED BY BUILDING DESIGNER

BEARINGS

THIS TRUSS DESIGNED FOR CONTINUOUS BEARINGS.

THIS TRUSS REQUIRES RIGID SHEATHING ON EXPOSED FACE.

BEARING MATERIAL TO BE SPF NO.2 OR BETTER AT JOINT(S)

BRACING
TOP CHORD TO BE SHEATHED OR MAX. PURLIN SPACING = 6.25 FT.
MAX. UNBRACED BOTTOM CHORD LENGTH = 10.00 FT OR RIGID CEILING DIRECTLY APPLIED.

ALL PITCH BREAKS AND PERIMETER CORNER JOINTS MUST BE LATERALLY RESTRAINED.

LOADING
TOTAL LOAD CASES: (4)

CHORDS

MEMB. FR-TO	MAX. FACTORED FORCE (LBS)	FACTORED VERT. LOAD LC1 (PLF) FROM	TO	MAX CSI (LC)	MAX. UNBRAC LENGTH
P- B	-302 / 0	0.0	0.0	0.03 (1)	7.81
A- B	0 / 50	-112.4	-112.4	0.15 (1)	10.00
B- C	-29 / 0	-112.4	-112.4	0.07 (1)	6.25
C- D	-35 / 0	-112.4	-112.4	0.07 (1)	6.25
D- E	-42 / 0	-112.4	-112.4	0.06 (1)	6.25
E- F	-42 / 0	-112.4	-112.4	0.06 (1)	6.25
F- G	-35 / 0	-112.4	-112.4	0.07 (1)	6.25
G- H	-29 / 0	-112.4	-112.4	0.07 (1)	6.25
H- I	0 / 50	-112.4	-112.4	0.15 (1)	10.00
J- H	-302 / 0	0.0	0.0	0.03 (1)	7.81
P- O	0 / 0	-18.5	-18.5	0.02 (4)	10.00
O- N	0 / 26	-18.5	-18.5	0.02 (4)	10.00
N- M	0 / 21	-18.5	-18.5	0.02 (4)	10.00
M- L	0 / 21	-18.5	-18.5	0.02 (4)	10.00
L- K	0 / 26	-18.5	-18.5	0.02 (4)	10.00
K- J	0 / 0	-18.5	-18.5	0.02 (4)	10.00

WEBS

MEMB. FR-TO	MAX. FACTORED FORCE (LBS)	MAX CSI (LC)
M- E	-157 / 0	0.12 (1)
N- D	-246 / 0	0.10 (1)
O- C	-253 / 0	0.05 (1)
L- F	-246 / 0	0.10 (1)
K- G	-253 / 0	0.05 (1)
B- O	0 / 39	0.01 (1)
K- H	0 / 39	0.01 (1)

DESIGN CRITERIA

SPECIFIED LOADS:

TOP CH.	LL	=	32.5	PSF
	DL	=	6.0	PSF
BOT CH.	LL	=	0.0	PSF
	DL	=	7.4	PSF
TOTAL LOAD		=	45.9	PSF

SPACING = 24.0 IN. C/C

THIS TRUSS IS DESIGNED FOR RESIDENTIAL OR SMALL BUILDING REQUIREMENTS OF PART 9, NBCC 2015

THIS DESIGN COMPLIES WITH:
- PART 9 OF BCBC 2018 , NBC-2019AE
- PART 9 OF OBC 2012 (2019 AMENDMENT)
- CSA 086-14
- TPIC 2014

(55 % OF 43.9 P.S.F. G.S.L. PLUS 8.4 P.S.F. RAIN LOAD) EQUALS 32.5 P.S.F. SPECIFIED ROOF LIVE LOAD

CSI: TC=0.15/1.00 (H-I:1) , BC=0.02/1.00 (N-O:4) , WB=0.12/1.00 (E-M:1) , SSI=0.09/1.00 (A-B:1)

DOL LUMBER=1.00 NAIL=1.00 LS BEND=1.10 COMP=1.10 SHEAR=1.10 TENS= 1.10

COMPANION LIVE LOAD FACTOR = 1.00

TRUSS PLATE MANUFACTURER IS NOT RESPONSIBLE FOR QUALITY CONTROL IN THE TRUSS MANUFACTURING PLANT .

NAIL VALUES

PLATE	GRIP(DRY) (PSI) MAX	MIN	SHEAR (PLI) MAX	MIN	SECTION (PLI) MAX	MIN
MT20	650	371	1747	788	1987	1873

PLATE PLACEMENT TOL. = 0.250 inches

PLATE ROTATION TOL. = 5.0 Deg.

JSI GRIP= 0.19 (H) (INPUT = 0.90)
JSI METAL= 0.13 (C) (INPUT = 0.95)

LICENSED PROFESSIONAL ENGINEER
4/02/24
C. M. HEYENS
100505065
PROVINCE OF ONTARIO

STRUCTURAL COMPONENT ONLY
DWG # TR24040044

JOB NAME	TRUSS NAME	QUANTITY	PLY	JOB DESC.	DRWG NO.
436388	T23	3	1	BAYVIEW WELLINGTON TRUSS DESC.	

Tamarack Roof Truss, Burlington

Version 8.630 S Aug 30 2023 MiTek Industries, Inc. Tue Apr 2 10:53:45 2024 Page 1
ID:GRmvuh1dyQr3nydBfsTFcCy6OGI-DGOQv3HTcaFp 1gAIIPRM2u 3ZH4MNbCoFOB6VzUo44

Scale = 1:37.1

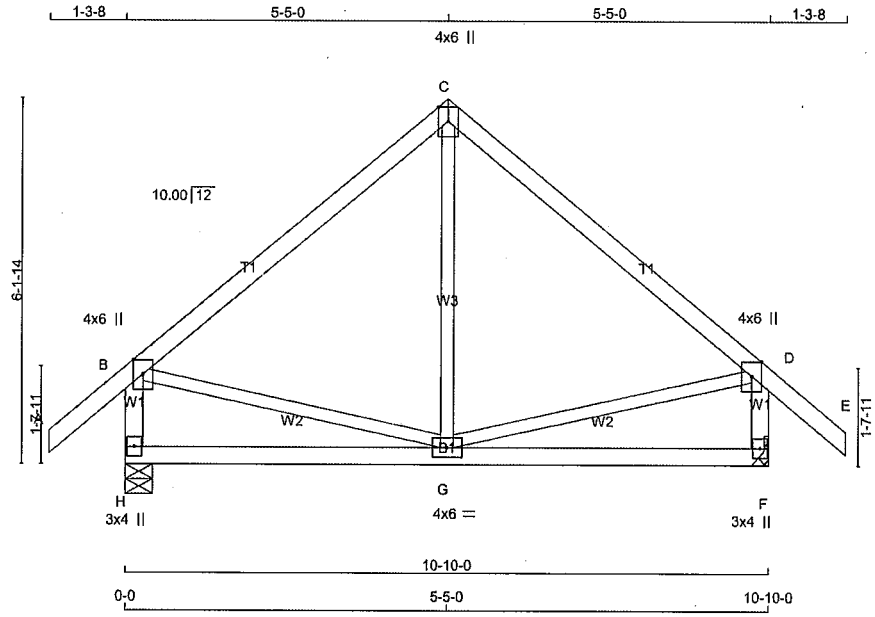

TOTAL WEIGHT = 3 X 48 = 145 lb

[M][F]

LUMBER
N. L. G. A. RULES

CHORDS	SIZE		LUMBER	DESCR.
A - C	2x4	DRY	No.2	SPF
C - E	2x4	DRY	No.2	SPF
H - B	2x4	DRY	No.2	SPF
F - D	2x4	DRY	No.2	SPF
H - F	2x4	DRY	No.2	SPF
ALL WEBS EXCEPT	2x3	DRY	No.2	SPF

DRY: SEASONED LUMBER.

PLATES (table is in inches)

JT	TYPE	PLATES	W	LEN	Y	X
B	TMVW+p	MT20	4.0	6.0	Edge	
C	TTW+p	MT20	4.0	6.0	Edge	
D	TMVW+p	MT20	4.0	6.0	Edge	
F	BMV1+p	MT20	3.0	4.0		
G	BMWWW-t	MT20	4.0	6.0		
H	BMV1+p	MT20	3.0	4.0		

Edge - INDICATES REFERENCE CORNER OF PLATE TOUCHES EDGE OF CHORD.

NOTES- (1)
1) Lateral braces to be a minimum of 2X4 SPF #2.

DIMENSIONS, SUPPORTS AND LOADINGS SPECIFIED BY FABRICATOR TO BE VERIFIED BY BUILDING DESIGNER

BEARINGS

JT	FACTORED GROSS REACTION VERT	HORZ	MAXIMUM FACTORED GROSS REACTION DOWN	HORZ	UPLIFT	INPUT BRG IN-SX	REQRD BRG IN-SX
H	865	0	865	0	0	5-8	1-8
F	865	0	865	0	0	MECHANICAL	

A SUITABLE HANGER/MECHANICAL CONNECTION IS REQUIRED AT JOINT F. MINIMUM BEARING LENGTH AT JOINT F = 1-8.

UNFACTORED REACTIONS

JT	1ST LCASE COMBINED	MAX./MIN. COMPONENT REACTIONS SNOW	LIVE	PERM.LIVE	WIND	DEAD	SOIL
H	604	442 / 0	0 / 0	0 / 0	0 / 0	162 / 0	0 / 0
F	604	442 / 0	0 / 0	0 / 0	0 / 0	162 / 0	0 / 0

BEARING MATERIAL TO BE SPF NO.2 OR BETTER AT JOINT(S) H

BRACING
TOP CHORD TO BE SHEATHED OR MAX. PURLIN SPACING = 6.25 FT.
MAX. UNBRACED BOTTOM CHORD LENGTH = 10.00 FT OR RIGID CEILING DIRECTLY APPLIED.

ALL PITCH BREAKS AND PERIMETER CORNER JOINTS MUST BE LATERALLY RESTRAINED.

LOADING
TOTAL LOAD CASES: (4)

CHORDS MEMB. FR-TO	MAX. FACTORED FORCE (LBS)	FACTORED VERT. LOAD (PLF) FROM	TO	LC1 MAX CSI (LC)	MAX. UNBRAC LENGTH	WEBS MEMB. FR-TO	MAX. FACTORED FORCE (LBS)	MAX CSI (LC)
A- B	0 / 50	-112.4	-112.4	0.15 (1)	10.00	G- C	-41 / 88	0.03 (4)
B- C	-444 / 0	-112.4	-112.4	0.43 (1)	6.25	B- G	0 / 351	0.08 (1)
C- D	-444 / 0	-112.4	-112.4	0.43 (1)	6.25	G- D	0 / 351	0.08 (1)
D- E	0 / 50	-112.4	-112.4	0.15 (1)	10.00			
H- B	-826 / 0	0.0	0.0	0.09 (1)	7.81			
F- D	-826 / 0	0.0	0.0	0.09 (1)	7.81			
H- G	0 / 0	-18.5	-18.5	0.15 (4)	10.00			
G- F	0 / 0	-18.5	-18.5	0.15 (4)	10.00			

DESIGN CRITERIA

SPECIFIED LOADS:

TOP CH.	LL	=	32.5	PSF
	DL	=	6.0	PSF
BOT CH.	LL	=	0.0	PSF
	DL	=	7.4	PSF
TOTAL LOAD		=	45.9	PSF

SPACING = 24.0 IN. C/C

THIS TRUSS IS DESIGNED FOR RESIDENTIAL OR SMALL BUILDING REQUIREMENTS OF PART 9, NBCC 2015

THIS DESIGN COMPLIES WITH:
- PART 9 OF BCBC 2018 , NBC-2019AE
- PART 9 OF OBC 2012 (2019 AMENDMENT)
- CSA 086-14
- TPIC 2014

(55 % OF 43.9 P.S.F. G.S.L. PLUS 8.4 P.S.F. RAIN LOAD) EQUALS 32.5 P.S.F. SPECIFIED ROOF LIVE LOAD

ALLOWABLE DEFL.(LL)= L/360 (0.36")
CALCULATED VERT. DEFL.(LL) = L/ 999 (0.01")
ALLOWABLE DEFL.(TL)= L/360 (0.36")
CALCULATED VERT. DEFL.(TL) = L/ 999 (0.02")

CSI: TC=0.43/1.00 (B-C:1) , BC=0.15/1.00 (F-G:4) , WB=0.08/1.00 (D-G:1) , SSI=0.18/1.00 (B-C:1)

DOL LUMBER=1.00 NAIL=1.00 LS BEND=1.10 COMP=1.10 SHEAR=1.10 TENS= 1.10

COMPANION LIVE LOAD FACTOR = 1.00

TRUSS PLATE MANUFACTURER IS NOT RESPONSIBLE FOR QUALITY CONTROL IN THE TRUSS MANUFACTURING PLANT .

NAIL VALUES

PLATE	GRIP(DRY) (PSI) MAX	MIN	SHEAR (PLI) MAX	MIN	SECTION (PLI) MAX	MIN
MT20	650	371	1747	788	1987	1873

PLATE PLACEMENT TOL. = 0.250 inches

PLATE ROTATION TOL. = 5.0 Deg.

JSI GRIP= 0.52 (B) (INPUT = 0.90)
JSI METAL= 0.31 (B) (INPUT = 0.95)

LICENSED PROFESSIONAL ENGINEER
4/02/24
C. M. HEYENS
100505065
PROVINCE OF ONTARIO

STRUCTURAL COMPONENT ONLY
DWG # TR24040045

JOB NAME	TRUSS NAME	QUANTITY	PLY	JOB DESC.	DRWG NO.
436388	T23Z	1	1	BAYVIEW WELLINGTON TRUSS DESC.	

Tamarack Roof Truss, Burlington

Version 8.630 S Aug 30 2023 MiTek Industries, Inc. Tue Apr 2 10:53:46 2024 Page 1
ID:GRmvuh1dyQr3nydBfsTFcCy6OGl-hSyo6Pl5NtNgbAFMs0wguFQ5 zVf5pXL1v8kexzUo43

Scale = 1:37.1

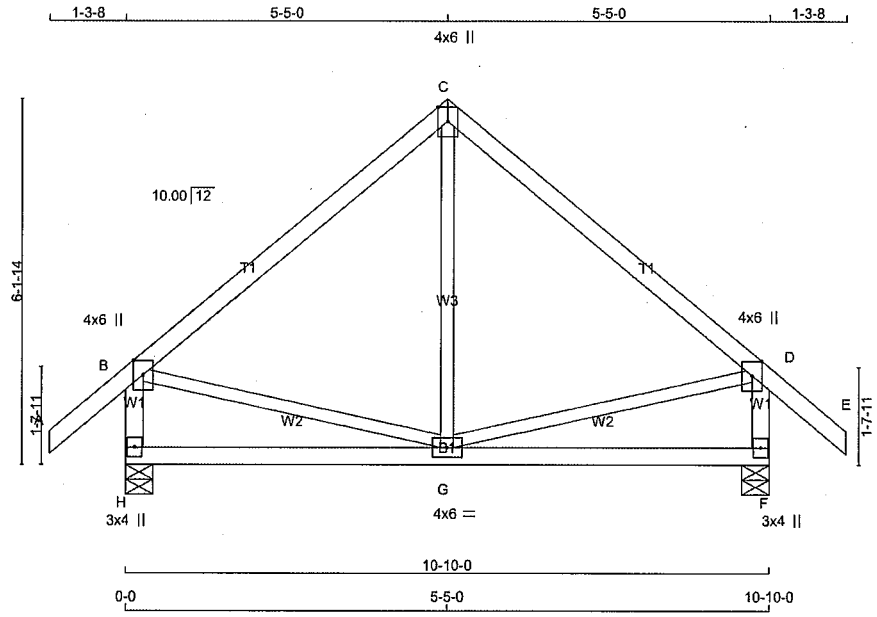

TOTAL WEIGHT = 48 lb

LUMBER
N. L. G. A. RULES

CHORDS	SIZE		LUMBER	DESCR.
A - C	2x4	DRY	No.2	SPF
C - E	2x4	DRY	No.2	SPF
H - B	2x4	DRY	No.2	SPF
F - D	2x4	DRY	No.2	SPF
H - F	2x4	DRY	No.2	SPF
ALL WEBS EXCEPT	2x3	DRY	No.2	SPF

DRY: SEASONED LUMBER.

PLATES (table is in inches)

JT	TYPE	PLATES	W	LEN	Y	X
B	TMVW+p	MT20	4.0	6.0	Edge	
C	TTW+p	MT20	4.0	6.0	Edge	
D	TMVW+p	MT20	4.0	6.0	Edge	
F	BMV1+p	MT20	3.0	4.0		
G	BMWWW-t	MT20	4.0	6.0		
H	BMV1+p	MT20	3.0	4.0		

Edge - INDICATES REFERENCE CORNER OF PLATE TOUCHES EDGE OF CHORD.

NOTES- (1)
1) Lateral braces to be a minimum of 2X4 SPF #2.

DIMENSIONS, SUPPORTS AND LOADINGS SPECIFIED BY FABRICATOR TO BE VERIFIED BY BUILDING DESIGNER

BEARINGS

JT	FACTORED GROSS REACTION VERT	HORZ	MAXIMUM FACTORED GROSS REACTION DOWN	HORZ	UPLIFT	INPUT BRG IN-SX	REQRD BRG IN-SX
H	1132	0	1132	0	0	5-8	1-8
F	1132	0	1132	0	0	5-8	1-8

UNFACTORED REACTIONS

JT	1ST LCASE COMBINED	MAX./MIN. COMPONENT REACTIONS SNOW	LIVE	PERM.LIVE	WIND	DEAD	SOIL
H	818	442 / 0	0 / 0	0 / 0	0 / 0	376 / 0	0 / 0
F	818	442 / 0	0 / 0	0 / 0	0 / 0	376 / 0	0 / 0

BEARING MATERIAL TO BE SPF NO.2 OR BETTER AT JOINT(S) H, F

BRACING
TOP CHORD TO BE SHEATHED OR MAX. PURLIN SPACING = 5.90 FT.
MAX. UNBRACED BOTTOM CHORD LENGTH = 10.00 FT OR RIGID CEILING DIRECTLY APPLIED.

ALL PITCH BREAKS AND PERIMETER CORNER JOINTS MUST BE LATERALLY RESTRAINED.

LOADING
TOTAL LOAD CASES: (4)

CHORDS

MEMB. FR-TO	MAX. FACTORED FORCE (LBS)	FACTORED VERT. LOAD LC1 (PLF) FROM	TO	MAX CSI (LC)	MAX. UNBRAC LENGTH
A- B	0 / 50	-112.4	-112.4	0.17 (1)	10.00
B- C	-678 / 0	-112.4	-112.4	0.67 (1)	5.90
C- D	-678 / 0	-112.4	-112.4	0.67 (1)	5.90
D- E	0 / 50	-112.4	-112.4	0.17 (1)	10.00
H- B	-1019 / 0	0.0	0.0	0.12 (1)	7.74
F- D	-1019 / 0	0.0	0.0	0.12 (1)	7.74
H- G	0 / 0	-39.8	-96.0	0.64 (4)	10.00
G- F	0 / 0	-96.0	-39.8	0.64 (4)	10.00

WEBS

MEMB. FR-TO	MAX. FACTORED FORCE (LBS)	MAX CSI (LC)
G- C	0 / 423	0.16 (4)
B- G	0 / 535	0.13 (1)
G- D	0 / 535	0.13 (1)

DESIGN CRITERIA

*** SPECIAL LOADS ANALYSIS ***
GEOMETRY AND/OR BASIC LOADS CHANGED BY USER.
LOADS WERE DERIVED FROM USER INPUT
NO FURTHER MODIFICATIONS WERE MADE

SPECIFIED LOADS:

TOP CH.	LL	=	32.5	PSF
	DL	=	6.0	PSF
BOT CH.	LL	=	0.0	PSF
	DL	=	7.4	PSF
TOTAL LOAD		=	45.9	PSF

SPACING = 24.0 IN. C/C

*** NON STANDARD GIRDER ***
ADDT'L USER-DEFINED LOADS APPLIED TO ALL LOAD CASES.

THIS TRUSS IS DESIGNED FOR RESIDENTIAL OR SMALL BUILDING REQUIREMENTS OF PART 9, NBCC 2015

THIS DESIGN COMPLIES WITH:
- PART 9 OF BCBC 2018 , NBC-2019AE
- PART 9 OF OBC 2012 (2019 AMENDMENT)
- CSA 086-14
- TPIC 2014

(55 % OF 43.9 P.S.F. G.S.L. PLUS 8.4 P.S.F. RAIN LOAD) EQUALS 32.5 P.S.F. SPECIFIED ROOF LIVE LOAD

ALLOWABLE DEFL.(LL)= L/360 (0.36")
CALCULATED VERT. DEFL.(LL) = L/ 999 (0.01")
ALLOWABLE DEFL.(TL)= L/360 (0.36")
CALCULATED VERT. DEFL.(TL) = L/ 999 (0.07")

CSI: TC=0.67/1.00 (B-C:1) , BC=0.64/1.00 (G-H:4) , WB=0.16/1.00 (C-G:4) , SSI=0.38/1.00 (F-G:4)

DOL LUMBER=1.00 NAIL=1.00 LS BEND=1.00 COMP=1.00 SHEAR=1.00 TENS= 1.00

COMPANION LIVE LOAD FACTOR = 1.00

TRUSS PLATE MANUFACTURER IS NOT RESPONSIBLE FOR QUALITY CONTROL IN THE TRUSS MANUFACTURING PLANT .

NAIL VALUES

PLATE	GRIP(DRY) (PSI) MAX	MIN	SHEAR (PLI) MAX	MIN	SECTION (PLI) MAX	MIN
MT20	650	371	1747	788	1987	1873

PLATE PLACEMENT TOL. = 0.250 inches

PLATE ROTATION TOL. = 5.0 Deg.

JSI GRIP= 0.73 (G) (INPUT = 0.90)
JSI METAL= 0.40 (B) (INPUT = 0.95)

LICENSED PROFESSIONAL ENGINEER
4/02/24
C. M. HEYENS
100505065
PROVINCE OF ONTARIO

STRUCTURAL COMPONENT ONLY
DWG # TR24040046

JOB NAME	TRUSS NAME	QUANTITY	PLY	JOB DESC.	DRWG NO.
436388	T24	3	1	BAYVIEW WELLINGTON TRUSS DESC.	

Tamarack Roof Truss, Burlington

Version 8.630 S Aug 30 2023 MiTek Industries, Inc. Tue Apr 2 10:53:48 2024 Page 1
ID:GRmvuh1dyQr3nydBfsTFcCy6OGl-dr4YX4JMuVeOrUOlzRy8zgWUSmIGZiDeUDdriqzUo41

Scale = 1:36.6

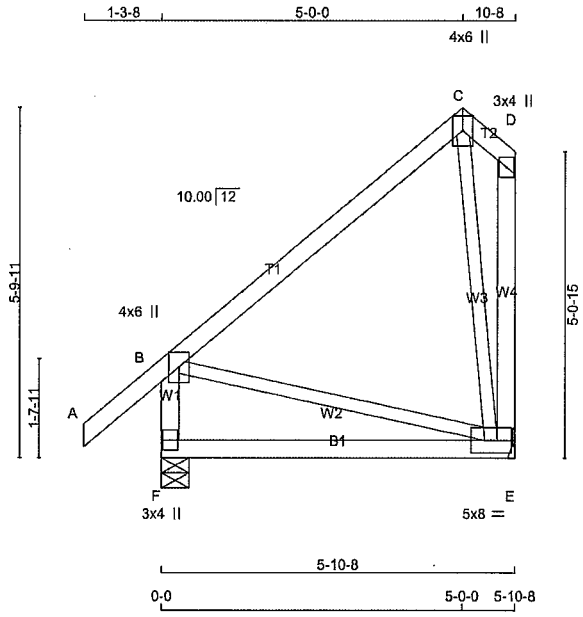

TOTAL WEIGHT = 3 X 33 = 99 lb

[M]

LUMBER
N. L. G. A. RULES

CHORDS	SIZE		LUMBER	DESCR.
A - C	2x4	DRY	No.2	SPF
C - D	2x4	DRY	No.2	SPF
F - B	2x4	DRY	No.2	SPF
E - D	2x4	DRY	No.2	SPF
F - E	2x4	DRY	No.2	SPF
ALL WEBS	2x3	DRY	No.2	SPF

DRY: SEASONED LUMBER.

PLATES (table is in inches)

JT	TYPE	PLATES	W	LEN	Y	X
B	TMVW+p	MT20	4.0	6.0	Edge	
C	TTW+p	MT20	4.0	6.0	Edge	
D	TMV+p	MT20	3.0	4.0		
E	BMVWW1-t	MT20	5.0	8.0		
F	BMV1+p	MT20	3.0	4.0		

Edge - INDICATES REFERENCE CORNER OF PLATE TOUCHES EDGE OF CHORD.

NOTES- (1)
1) Lateral braces to be a minimum of 2X4 SPF #2.

DIMENSIONS, SUPPORTS AND LOADINGS SPECIFIED BY FABRICATOR TO BE VERIFIED BY BUILDING DESIGNER

BEARINGS

JT	FACTORED GROSS REACTION VERT	HORZ	MAXIMUM FACTORED GROSS REACTION DOWN	HORZ	UPLIFT	INPUT BRG IN-SX	REQRD BRG IN-SX
F	540	0	540	0	0	5-8	1-8
E	385	0	385	0	0	MECHANICAL	

A SUITABLE HANGER/MECHANICAL CONNECTION IS REQUIRED AT JOINT E. MINIMUM BEARING LENGTH AT JOINT E = 1-8.

UNFACTORED REACTIONS

JT	1ST LCASE COMBINED	MAX./MIN. COMPONENT REACTIONS SNOW	LIVE	PERM.LIVE	WIND	DEAD	SOIL
F	376	281 / 0	0 / 0	0 / 0	0 / 0	95 / 0	0 / 0
E	270	191 / 0	0 / 0	0 / 0	0 / 0	79 / 0	0 / 0

BEARING MATERIAL TO BE SPF NO.2 OR BETTER AT JOINT(S) F

BRACING
TOP CHORD TO BE SHEATHED OR MAX. PURLIN SPACING = 6.25 FT.
MAX. UNBRACED BOTTOM CHORD LENGTH = 10.00 FT OR RIGID CEILING DIRECTLY APPLIED.

ALL PITCH BREAKS AND PERIMETER CORNER JOINTS MUST BE LATERALLY RESTRAINED.

LOADING
TOTAL LOAD CASES: (4)

CHORDS MEMB. FR-TO	MAX. FACTORED FORCE (LBS)	FACTORED VERT. LOAD (PLF) FROM	TO	LC1 CSI (LC)	MAX UNBRAC LENGTH	WEBS MEMB. FR-TO	MAX. FACTORED FORCE (LBS)	MAX CSI (LC)
A- B	0 / 50	-112.4	-112.4	0.15 (1)	10.00	C- E	-295 / 0	0.15 (1)
B- C	-61 / 0	-112.4	-112.4	0.48 (1)	6.25	B- E	0 / 48	0.01 (1)
C- D	0 / 0	-112.4	-112.4	0.01 (1)	10.00			
F- B	-486 / 0	0.0	0.0	0.05 (1)	7.81			
E- D	-49 / 0	0.0	0.0	0.02 (1)	7.81			
F- E	0 / 0	-18.5	-18.5	0.19 (4)	10.00			

DESIGN CRITERIA

SPECIFIED LOADS:

TOP CH.	LL	=	32.5	PSF
	DL	=	6.0	PSF
BOT CH.	LL	=	0.0	PSF
	DL	=	7.4	PSF
TOTAL LOAD		=	45.9	PSF

SPACING = 24.0 IN. C/C

THIS TRUSS IS DESIGNED FOR RESIDENTIAL OR SMALL BUILDING REQUIREMENTS OF PART 9, NBCC 2015

THIS DESIGN COMPLIES WITH:
- PART 9 OF BCBC 2018 , NBC-2019AE
- PART 9 OF OBC 2012 (2019 AMENDMENT)
- CSA 086-14
- TPIC 2014

(55 % OF 43.9 P.S.F. G.S.L. PLUS 8.4 P.S.F. RAIN LOAD) EQUALS 32.5 P.S.F. SPECIFIED ROOF LIVE LOAD

ALLOWABLE DEFL.(TL)= L/360 (0.20")
CALCULATED VERT. DEFL.(TL) = L/ 999 (0.05")

CSI: TC=0.48/1.00 (B-C:1) , BC=0.19/1.00 (E-F:4) , WB=0.15/1.00 (C-E:1) , SSI=0.17/1.00 (B-C:1)

DOL LUMBER=1.00 NAIL=1.00 LS BEND=1.10 COMP=1.10 SHEAR=1.10 TENS= 1.10

COMPANION LIVE LOAD FACTOR = 1.00

AUTOSOLVE HEELS OFF

TRUSS PLATE MANUFACTURER IS NOT RESPONSIBLE FOR QUALITY CONTROL IN THE TRUSS MANUFACTURING PLANT .

NAIL VALUES

PLATE	GRIP(DRY) (PSI) MAX	MIN	SHEAR (PLI) MAX	MIN	SECTION (PLI) MAX	MIN
MT20	650	371	1747	788	1987	1873

PLATE PLACEMENT TOL. = 0.250 inches

PLATE ROTATION TOL. = 5.0 Deg.

JSI GRIP= 0.30 (B) (INPUT = 0.90)
JSI METAL= 0.14 (B) (INPUT = 0.95)

LICENSED PROFESSIONAL ENGINEER
4/02/24
C. M. HEYENS
100505065
PROVINCE OF ONTARIO

STRUCTURAL COMPONENT ONLY
DWG # TR24040047

JOB NAME	TRUSS NAME	QUANTITY	PLY	JOB DESC.	DRWG NO.
436388	T25	1	2	BAYVIEW WELLINGTON TRUSS DESC.	

Tamarack Roof Truss, Burlington

Version 8.630 S Aug 30 2023 MiTek Industries, Inc. Tue Apr 2 10:53:49 2024 Page 1
ID:GRmvuh1dyQr3nydBfsTFcCy6OGl-51ewkQK fomFSezxX8TNWu2lNAd l8gnjtMOFGzUo40

Scale = 1:37.3

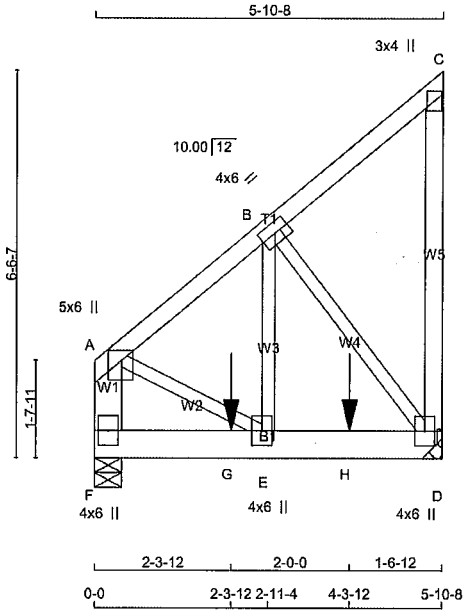

TOTAL WEIGHT = 2 X 36 = 73 lb

[M]

LUMBER

N. L. G. A. RULES

CHORDS	SIZE		LUMBER	DESCR.
A - C	2x4	DRY	No.2	SPF
D - C	2x4	DRY	No.2	SPF
F - A	2x6	DRY	No.2	SPF
F - D	2x6	DRY	No.2	SPF
ALL WEBS EXCEPT	2x3	DRY	No.2	SPF

DRY: SEASONED LUMBER.

DESIGN CONSISTS OF 2 TRUSSES BUILT SEPARATELY THEN FASTENED TOGETHER AS FOLLOWS:

CHORDS	#ROWS	SURFACE SPACING (IN)	LOAD(PLF)
TOP CHORDS : (0.122"X3") SPIRAL NAILS			
A- C	1	12	TOP
C- D	1	12	TOP
F- A	2	12	TOP
BOTTOM CHORDS : (0.122"X3") SPIRAL NAILS			
F- D	2	12	SIDE(0.0)
WEBS : (0.122"X3") SPIRAL NAILS			
2x3	1	6	

NAILS TO BE DRIVEN FROM ONE SIDE ONLY.

GIRDER NAILING ASSUMES NAILED HANGERS ARE FASTENED WITH MIN. 3-0 INCH NAILS.

TOP - COMPONENTS ARE LOADED FROM THE TOP AND MUST BE PLACED ON TOP EDGE OF ALL PLIES FOR THE LOAD TO BE TRANSFERRED TO EACH PLY.

SIDE - PLF SHOWN IS THE EQUIVALENT UDL APPLIED TO ONE SIDE THAT THE CORRESPONDING NAILING PATTERN SHALL BE CAPABLE OF TRANSFERING. REMAINING PLF MUST BE APPLIED ON THE OPPOSITE SIDE OR ON THE TOP.

PLATES (table is in inches)

JT	TYPE	PLATES	W	LEN	Y	X
A	TMVW+p	MT20	5.0	6.0	2.00	2.25
B	TMWW-t	MT20	4.0	6.0		

LICENSED PROFESSIONAL ENGINEER
4/02/24
C. M. HEYENS
100505065
PROVINCE OF ONTARIO

STRUCTURAL COMPONENT ONLY
DWG # TR24040048

DIMENSIONS, SUPPORTS AND LOADINGS SPECIFIED BY FABRICATOR TO BE VERIFIED BY BUILDING DESIGNER

BEARINGS

JT	FACTORED GROSS REACTION VERT	HORZ	MAXIMUM FACTORED GROSS REACTION DOWN	HORZ	UPLIFT	INPUT BRG	REQRD BRG
D	1339	0	1339	0	0	IN-SX	IN-SX
F	1123	0	1123	0	0	MECHANICAL 5-8	1-8

A SUITABLE HANGER/MECHANICAL CONNECTION IS REQUIRED AT JOINT D. MINIMUM BEARING LENGTH AT JOINT D = 1-8.

UNFACTORED REACTIONS

JT	1ST LCASE COMBINED	MAX./MIN. COMPONENT REACTIONS SNOW	LIVE	PERM.LIVE	WIND	DEAD	SOIL
D	933	689 / 0	0 / 0	0 / 0	0 / 0	244 / 0	0 / 0
F	783	576 / 0	0 / 0	0 / 0	0 / 0	207 / 0	0 / 0

BEARING MATERIAL TO BE SPF NO.2 OR BETTER AT JOINT(S) F

BRACING

TOP CHORD TO BE SHEATHED OR MAX. PURLIN SPACING = 6.25 FT.
MAX. UNBRACED BOTTOM CHORD LENGTH = 10.00 FT OR RIGID CEILING DIRECTLY APPLIED.

ALL PITCH BREAKS AND PERIMETER CORNER JOINTS MUST BE LATERALLY RESTRAINED.

LOADING

TOTAL LOAD CASES: (4)

CHORDS MEMB. FR-TO	MAX. FACTORED FORCE (LBS)	FACTORED VERT. LOAD (PLF) FROM	TO	LC1 MAX CSI (LC)	MAX. UNBRAC LENGTH	WEBS MEMB. FR-TO	MAX. FACTORED FORCE (LBS)	MAX CSI (LC)
A- B	-908 / 0	-112.4	-112.4	0.09 (1)	6.25	E- B	0 / 1086	0.13 (1)
B- C	-24 / 0	-112.4	-112.4	0.08 (1)	6.25	B- D	-1145 / 0	0.20 (1)
D- C	-128 / 0	0.0	0.0	0.05 (1)	7.81	A- E	0 / 775	0.10 (1)
F- A	-1022 / 0	0.0	0.0	0.04 (1)	7.81			
F- G	0 / 0	-18.5	-18.5	0.11 (1)	10.00			
G- E	0 / 0	-18.5	-18.5	0.11 (1)	10.00			
E- H	0 / 716	-18.5	-18.5	0.22 (1)	10.00			
H- D	0 / 716	-18.5	-18.5	0.22 (1)	10.00			

SPECIFIED CONCENTRATED LOADS (LBS)

JT	LOC.	LC1	MAX-	MAX+	FACE	DIR.	TYPE	HEEL	CONN.
G	2-3-12	-589	-589	---	FRONT	VERT	TOTAL	---	C1
H	4-3-12	-589	-589	---	FRONT	VERT	TOTAL	---	C1

CONNECTION REQUIREMENTS

1) **C1:** A SUITABLE HANGER/MECHANICAL CONNECTION IS REQUIRED.

DESIGN CRITERIA

SPECIFIED LOADS:

TOP CH.	LL	=	32.5	PSF
	DL	=	6.0	PSF
BOT CH.	LL	=	0.0	PSF
	DL	=	7.4	PSF
TOTAL LOAD		=	45.9	PSF

SPACING = 24.0 IN. C/C

THIS TRUSS IS DESIGNED FOR RESIDENTIAL OR SMALL BUILDING REQUIREMENTS OF PART 9, NBCC 2015

THIS DESIGN COMPLIES WITH:
- PART 9 OF BCBC 2018 , NBC-2019AE
- PART 9 OF OBC 2012 (2019 AMENDMENT)
- CSA 086-14
- TPIC 2014

(55 % OF 43.9 P.S.F. G.S.L. PLUS 8.4 P.S.F. RAIN LOAD) EQUALS 32.5 P.S.F. SPECIFIED ROOF LIVE LOAD

ALLOWABLE DEFL.(LL)= L/360 (0.20")
CALCULATED VERT. DEFL.(LL) = L/ 999 (0.01")
ALLOWABLE DEFL.(TL)= L/360 (0.20")
CALCULATED VERT. DEFL.(TL) = L/ 999 (0.01")

CSI: TC=0.09/1.00 (A-B:1) , BC=0.22/1.00 (D-E:1) , WB=0.20/1.00 (B-D:1) , SSI=0.27/1.00 (E-F:1)

DOL LUMBER=1.00 NAIL=1.00 LS BEND=1.00 COMP=1.00 SHEAR=1.00 TENS= 1.00

COMPANION LIVE LOAD FACTOR = 1.00

AUTOSOLVE RIGHT HEEL ONLY

TRUSS PLATE MANUFACTURER IS NOT RESPONSIBLE FOR QUALITY CONTROL IN THE TRUSS MANUFACTURING PLANT .

NAIL VALUES

PLATE	GRIP(DRY) (PSI) MAX	MIN	SHEAR (PLI) MAX	MIN	SECTION (PLI) MAX	MIN
MT20	650	371	1747	788	1987	1873

PLATE PLACEMENT TOL. = 0.250 inches

PLATE ROTATION TOL. = 5.0 Deg.

JSI GRIP= 0.50 (B) (INPUT = 0.90)
JSI METAL= 0.16 (D) (INPUT = 0.95)

CONTINUED ON PAGE 2

JOB NAME	TRUSS NAME	QUANTITY	PLY	JOB DESC. BAYVIEW WELLINGTON	DRWG NO.
436388	T25	1	2	TRUSS DESC.	

Tamarack Roof Truss, Burlington

Version 8.630 S Aug 30 2023 MiTek Industries, Inc. Tue Apr 2 10:53:49 2024 Page 2
ID:GRmvuh1dyQr3nydBfsTFcCy6OGl-51ewkQK_fomFSezxX8TNWu2lNAd_I8gnjtMOFGzUo40

PLATES (table is in inches)

JT	TYPE	PLATES	W	LEN	Y	X
C	TMV+p	MT20	3.0	4.0		
D	BMVW1+p	MT20	4.0	6.0		
E	BMWW+t	MT20	4.0	6.0		
F	BMV1+p	MT20	4.0	6.0		

NOTES- (1)
1) Lateral braces to be a minimum of 2X4 SPF #2.

LICENSED PROFESSIONAL ENGINEER
4/02/24
C. M. HEYENS
100505065
PROVINCE OF ONTARIO

STRUCTURAL COMPONENT ONLY
DWG # TR24040048

JOB NAME	TRUSS NAME	QUANTITY	PLY	JOB DESC.	DRWG NO.
436388	T26	1	2	BAYVIEW WELLINGTON TRUSS DESC.	

Tamarack Roof Truss, Burlington

Version 8.630 S Aug 30 2023 MiTek Industries, Inc. Tue Apr 2 10:53:50 2024 Page 1
ID:GRmvuh1dyQr3nydBfsTFcCy6OGl-ZDBJymLcQ6u64oY85s d35bwHazi1c3xyX6xnizUo4?

Scale = 1:23.7

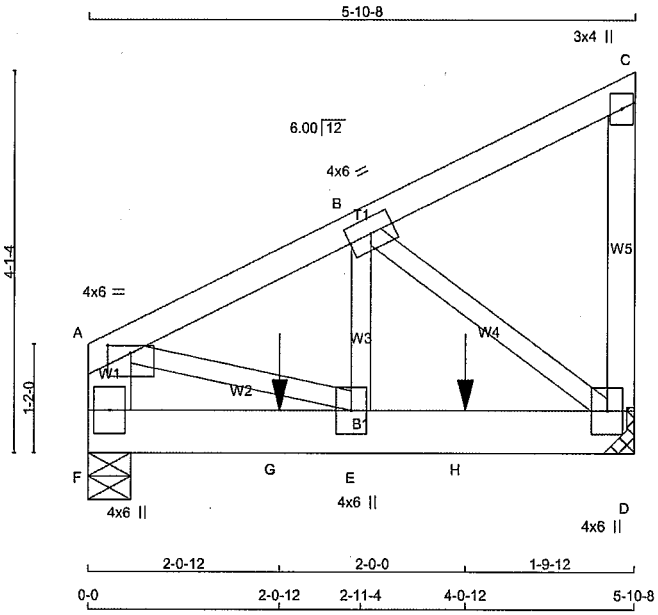

TOTAL WEIGHT = 2 X 29 = 58 lb

[M]

LUMBER

N. L. G. A. RULES

CHORDS	SIZE		LUMBER	DESCR.
A - C	2x4	DRY	No.2	SPF
D - C	2x4	DRY	No.2	SPF
F - A	2x6	DRY	No.2	SPF
F - D	2x6	DRY	No.2	SPF
ALL WEBS EXCEPT	2x3	DRY	No.2	SPF

DRY: SEASONED LUMBER.

DESIGN CONSISTS OF 2 TRUSSES BUILT SEPARATELY THEN FASTENED TOGETHER AS FOLLOWS:

CHORDS	#ROWS	SURFACE SPACING (IN)	LOAD(PLF)
TOP CHORDS : (0.122"X3") SPIRAL NAILS			
A- C	1	12	TOP
C- D	1	12	TOP
F- A	2	12	TOP
BOTTOM CHORDS : (0.122"X3") SPIRAL NAILS			
F- D	2	12	SIDE(0.0)
WEBS : (0.122"X3") SPIRAL NAILS			
2x3	1	6	

NAILS TO BE DRIVEN FROM ONE SIDE ONLY.

GIRDER NAILING ASSUMES NAILED HANGERS ARE FASTENED WITH MIN. 3-0 INCH NAILS.

TOP - COMPONENTS ARE LOADED FROM THE TOP AND MUST BE PLACED ON TOP EDGE OF ALL PLIES FOR THE LOAD TO BE TRANSFERRED TO EACH PLY.

SIDE - PLF SHOWN IS THE EQUIVALENT UDL APPLIED TO ONE SIDE THAT THE CORRESPONDING NAILING PATTERN SHALL BE CAPABLE OF TRANSFERING. REMAINING PLF MUST BE APPLIED ON THE OPPOSITE SIDE OR ON THE TOP.

PLATES (table is in inches)

JT	TYPE	PLATES	W	LEN	Y	X
A	TMVW-p	MT20	4.0	6.0	1.00	3.00
B	TMWW-t	MT20	4.0	6.0		

LICENSED PROFESSIONAL ENGINEER
4/02/24
C. M. HEYENS
100505065
PROVINCE OF ONTARIO

STRUCTURAL COMPONENT ONLY
DWG # TR24040049

DIMENSIONS, SUPPORTS AND LOADINGS SPECIFIED BY FABRICATOR TO BE VERIFIED BY BUILDING DESIGNER

BEARINGS

JT	FACTORED GROSS REACTION VERT	HORZ	MAXIMUM FACTORED GROSS REACTION DOWN	HORZ	UPLIFT	INPUT BRG IN-SX	REQRD BRG IN-SX
D	1381	0	1381	0	0	MECHANICAL	
F	1299	0	1299	0	0	5-8	1-8

A SUITABLE HANGER/MECHANICAL CONNECTION IS REQUIRED AT JOINT D. MINIMUM BEARING LENGTH AT JOINT D = 1-8.

UNFACTORED REACTIONS

JT	1ST LCASE COMBINED	MAX./MIN. COMPONENT REACTIONS SNOW	LIVE	PERM.LIVE	WIND	DEAD	SOIL
D	963	708 / 0	0 / 0	0 / 0	0 / 0	255 / 0	0 / 0
F	906	666 / 0	0 / 0	0 / 0	0 / 0	241 / 0	0 / 0

BEARING MATERIAL TO BE SPF NO.2 OR BETTER AT JOINT(S) F

BRACING

TOP CHORD TO BE SHEATHED OR MAX. PURLIN SPACING = 6.25 FT.
MAX. UNBRACED BOTTOM CHORD LENGTH = 10.00 FT OR RIGID CEILING DIRECTLY APPLIED.

ALL PITCH BREAKS AND PERIMETER CORNER JOINTS MUST BE LATERALLY RESTRAINED.

LOADING

TOTAL LOAD CASES: (4)

CHORDS

MEMB. FR-TO	MAX. FACTORED FORCE (LBS)	FACTORED VERT. LOAD (PLF) FROM	TO	LC1 MAX CSI (LC)	MAX. UNBRAC LENGTH
A- B	-1413 / 0	-112.4	-112.4	0.08 (1)	6.25
B- C	-14 / 0	-112.4	-112.4	0.07 (1)	6.25
D- C	-134 / 0	0.0	0.0	0.02 (1)	7.81
F- A	-1109 / 0	0.0	0.0	0.04 (1)	7.81
F- G	0 / 0	-18.5	-18.5	0.13 (1)	10.00
G- E	0 / 0	-18.5	-18.5	0.13 (1)	10.00
E- H	0 / 1276	-18.5	-18.5	0.25 (1)	10.00
H- D	0 / 1276	-18.5	-18.5	0.25 (1)	10.00

WEBS

MEMB. FR-TO	MAX. FACTORED FORCE (LBS)	MAX CSI (LC)
E- B	0 / 1220	0.15 (1)
B- D	-1606 / 0	0.19 (1)
A- E	0 / 1320	0.16 (1)

SPECIFIED CONCENTRATED LOADS (LBS)

JT	LOC.	LC1	MAX-	MAX+	FACE	DIR.	TYPE	HEEL	CONN.
G	2-0-12	-665	-665	—	FRONT	VERT	TOTAL	---	C1
H	4-0-12	-665	-665	—	FRONT	VERT	TOTAL	---	C1

CONNECTION REQUIREMENTS

1) C1: A SUITABLE HANGER/MECHANICAL CONNECTION IS REQUIRED.

DESIGN CRITERIA

SPECIFIED LOADS:

TOP CH.	LL	=	32.5	PSF
	DL	=	6.0	PSF
BOT CH.	LL	=	0.0	PSF
	DL	=	7.4	PSF
TOTAL LOAD		=	45.9	PSF

SPACING = 24.0 IN. C/C

THIS TRUSS IS DESIGNED FOR RESIDENTIAL OR SMALL BUILDING REQUIREMENTS OF PART 9, NBCC 2015

THIS DESIGN COMPLIES WITH:
- PART 9 OF BCBC 2018 , NBC-2019AE
- PART 9 OF OBC 2012 (2019 AMENDMENT)
- CSA 086-14
- TPIC 2014

(55 % OF 43.9 P.S.F. G.S.L. PLUS 8.4 P.S.F. RAIN LOAD) EQUALS 32.5 P.S.F. SPECIFIED ROOF LIVE LOAD

ALLOWABLE DEFL.(LL)= L/360 (0.20")
CALCULATED VERT. DEFL.(LL) = L/ 999 (0.01")
ALLOWABLE DEFL.(TL)= L/360 (0.20")
CALCULATED VERT. DEFL.(TL) = L/ 999 (0.02")

CSI: TC=0.08/1.00 (A-B:1) , BC=0.25/1.00 (D-E:1) , WB=0.19/1.00 (B-D:1) , SSI=0.27/1.00 (E-F:1)

DOL LUMBER=1.00 NAIL=1.00 LS BEND=1.00 COMP=1.00 SHEAR=1.00 TENS= 1.00

COMPANION LIVE LOAD FACTOR = 1.00

AUTOSOLVE RIGHT HEEL ONLY

TRUSS PLATE MANUFACTURER IS NOT RESPONSIBLE FOR QUALITY CONTROL IN THE TRUSS MANUFACTURING PLANT .

NAIL VALUES

PLATE	GRIP(DRY) (PSI) MAX	MIN	SHEAR (PLI) MAX	MIN	SECTION (PLI) MAX	MIN
MT20	650	371	1747	788	1987	1873

PLATE PLACEMENT TOL. = 0.250 inches

PLATE ROTATION TOL. = 5.0 Deg.

JSI GRIP= 0.60 (D) (INPUT = 0.90)
JSI METAL= 0.29 (D) (INPUT = 0.95)

CONTINUED ON PAGE 2

JOB NAME	TRUSS NAME	QUANTITY	PLY	JOB DESC. BAYVIEW WELLINGTON	DRWG NO.
436388	T26	1	2	TRUSS DESC.	

PLATES (table is in inches)

JT	TYPE	PLATES	W	LEN	Y	X
C	TMV+p	MT20	3.0	4.0		
D	BMVW1+p	MT20	4.0	6.0		
E	BMWW+t	MT20	4.0	6.0		
F	BMV1+p	MT20	4.0	6.0		

NOTES- (1)
1) Lateral braces to be a minimum of 2X4 SPF #2.

LICENSED PROFESSIONAL ENGINEER
4/02/24
C. M. HEYENS
100505065
PROVINCE OF ONTARIO

STRUCTURAL COMPONENT ONLY
DWG # TR24040049

JOB NAME	TRUSS NAME	QUANTITY	PLY	JOB DESC.	DRWG NO.
436388	T26Z	1	2	BAYVIEW WELLINGTON TRUSS DESC.	

Tamarack Roof Truss, Burlington

Version 8.630 S Aug 30 2023 MiTek Industries, Inc. Tue Apr 2 10:53:51 2024 Page 1
ID:GRmvuh1dyQr3nydBfsTFcCy6OGI-2QIh96MEBQ0ziy7KeZWsbJ85 ICm194BBrVJ9zUo4

Scale = 1:24.5

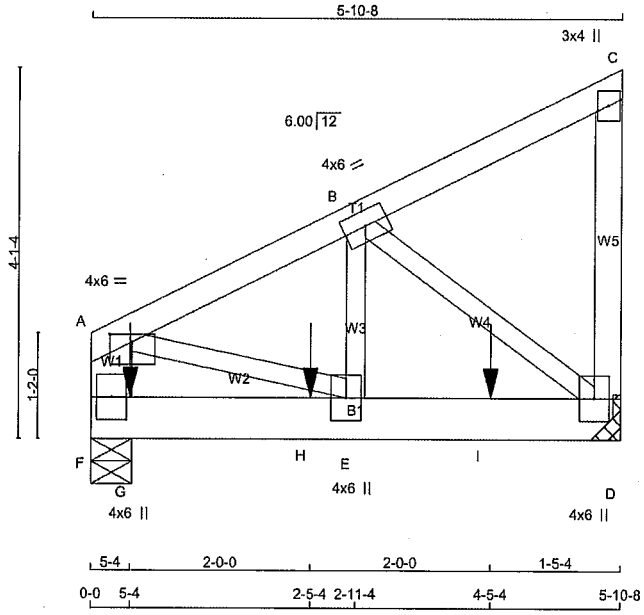

TOTAL WEIGHT = 2 X 29 = 58 lb

LUMBER
N. L. G. A. RULES

CHORDS	SIZE		LUMBER	DESCR.
A - C	2x4	DRY	No.2	SPF
D - C	2x4	DRY	No.2	SPF
F - A	2x6	DRY	No.2	SPF
F - D	2x6	DRY	No.2	SPF
ALL WEBS EXCEPT	2x3	DRY	No.2	SPF

DRY: SEASONED LUMBER.

DESIGN CONSISTS OF 2 TRUSSES BUILT SEPARATELY THEN FASTENED TOGETHER AS FOLLOWS:

CHORDS	#ROWS	SURFACE SPACING (IN)	LOAD(PLF)
TOP CHORDS : (0.122"X3") SPIRAL NAILS			
A- C	1	12	TOP
C- D	1	12	TOP
F- A	2	12	TOP
BOTTOM CHORDS : (0.122"X3") SPIRAL NAILS			
F- D	2	12	SIDE(122.0)
WEBS : (0.122"X3") SPIRAL NAILS			
2x3	1	6	

NAILS TO BE DRIVEN FROM ONE SIDE ONLY.

GIRDER NAILING ASSUMES NAILED HANGERS ARE FASTENED WITH MIN. 3-0 INCH NAILS.

TOP - COMPONENTS ARE LOADED FROM THE TOP AND MUST BE PLACED ON TOP EDGE OF ALL PLIES FOR THE LOAD TO BE TRANSFERRED TO EACH PLY.

SIDE - PLF SHOWN IS THE EQUIVALENT UDL APPLIED TO ONE SIDE THAT THE CORRESPONDING NAILING PATTERN SHALL BE CAPABLE OF TRANSFERING. REMAINING PLF MUST BE APPLIED ON THE OPPOSITE SIDE OR ON THE TOP.

PLATES (table is in inches)

JT	TYPE	PLATES	W	LEN	Y	X
A	TMVW-p	MT20	4.0	6.0	1.00	3.00
B	TMWW-t	MT20	4.0	6.0		

LICENSED PROFESSIONAL ENGINEER
4/02/24
C. M. HEYENS
100505065
PROVINCE OF ONTARIO

STRUCTURAL COMPONENT ONLY
DWG # TR24040050

DIMENSIONS, SUPPORTS AND LOADINGS SPECIFIED BY FABRICATOR TO BE VERIFIED BY BUILDING DESIGNER

BEARINGS

JT	FACTORED GROSS REACTION VERT	HORZ	MAXIMUM FACTORED GROSS REACTION DOWN	HORZ	UPLIFT	INPUT BRG IN-SX	REQRD BRG IN-SX
D	1852	0	1852	0	0	MECHANICAL	
F	1963	0	1963	0	0	5-8	1-8

A SUITABLE HANGER/MECHANICAL CONNECTION IS REQUIRED AT JOINT D. MINIMUM BEARING LENGTH AT JOINT D = 1-8.

UNFACTORED REACTIONS

	1ST LCASE	MAX./MIN. COMPONENT REACTIONS					
JT	COMBINED	SNOW	LIVE	PERM.LIVE	WIND	DEAD	SOIL
D	1293	941 / 0	0 / 0	0 / 0	0 / 0	352 / 0	0 / 0
F	1367	1017 / 0	0 / 0	0 / 0	0 / 0	351 / 0	0 / 0

BEARING MATERIAL TO BE SPF NO.2 OR BETTER AT JOINT(S) F

BRACING
TOP CHORD TO BE SHEATHED OR MAX. PURLIN SPACING = 6.19 FT.
MAX. UNBRACED BOTTOM CHORD LENGTH = 10.00 FT OR RIGID CEILING DIRECTLY APPLIED.

ALL PITCH BREAKS AND PERIMETER CORNER JOINTS MUST BE LATERALLY RESTRAINED.

LOADING
TOTAL LOAD CASES: (4)

CHORDS

MEMB. FR-TO	MAX. FACTORED FORCE (LBS)	FACTORED VERT. LOAD (PLF) FROM	TO	LC1	MAX CSI (LC)	MAX. UNBRAC LENGTH
A- B	-1965 / 0	-112.4	-112.4	0.08 (1)	6.19	
B- C	-12 / 0	-112.4	-112.4	0.06 (1)	6.25	
D- C	-138 / 0	0.0	0.0	0.02 (1)	7.81	
F- A	-1488 / 0	0.0	0.0	0.05 (1)	7.81	
F- G	0 / 0	-18.5	-18.5	0.17 (1)	10.00	
G- H	0 / 0	-18.5	-18.5	0.17 (1)	10.00	
H- E	0 / 0	-18.5	-18.5	0.17 (1)	10.00	
E- I	0 / 1768	-18.5	-18.5	0.30 (1)	10.00	
I- D	0 / 1768	-18.5	-18.5	0.30 (1)	10.00	

WEBS

MEMB. FR-TO	MAX. FACTORED FORCE (LBS)	MAX CSI (LC)
E- B	0 / 1850	0.23 (1)
B- D	-2225 / 0	0.27 (1)
A- E	0 / 1829	0.23 (1)

SPECIFIED CONCENTRATED LOADS (LBS)

JT	LOC.	LC1	MAX-	MAX+	FACE	DIR.	TYPE	HEEL	CONN.
G	5-4	-221	-221	---	FRONT	VERT	TOTAL	---	C1
H	2-5-4	-1258	-1258	---	FRONT	VERT	TOTAL	---	C1
I	4-5-4	-643	-643	---	FRONT	VERT	TOTAL	---	C1

CONNECTION REQUIREMENTS

1) C1: A SUITABLE HANGER/MECHANICAL CONNECTION IS REQUIRED.

[M]

DESIGN CRITERIA

SPECIFIED LOADS:

TOP CH.	LL	=	32.5	PSF
	DL	=	6.0	PSF
BOT CH.	LL	=	0.0	PSF
	DL	=	7.4	PSF
TOTAL LOAD		=	45.9	PSF

SPACING = 24.0 IN. C/C

THIS TRUSS IS DESIGNED FOR RESIDENTIAL OR SMALL BUILDING REQUIREMENTS OF PART 9, NBCC 2015

THIS DESIGN COMPLIES WITH:
- PART 9 OF BCBC 2018 , NBC-2019AE
- PART 9 OF OBC 2012 (2019 AMENDMENT)
- CSA 086-14
- TPIC 2014

(55 % OF 43.9 P.S.F. G.S.L. PLUS 8.4 P.S.F. RAIN LOAD) EQUALS 32.5 P.S.F. SPECIFIED ROOF LIVE LOAD

ALLOWABLE DEFL.(LL)= L/360 (0.20")
CALCULATED VERT. DEFL.(LL) = L/ 999 (0.01")
ALLOWABLE DEFL.(TL)= L/360 (0.20")
CALCULATED VERT. DEFL.(TL) = L/ 999 (0.02")

CSI: TC=0.08/1.00 (A-B:1) , BC=0.30/1.00 (D-E:1) , WB=0.27/1.00 (B-D:1) , SSI=0.57/1.00 (E-F:1)

DOL LUMBER=1.00 NAIL=1.00 LS BEND=1.00 COMP=1.00 SHEAR=1.00 TENS= 1.00

COMPANION LIVE LOAD FACTOR = 1.00

AUTOSOLVE RIGHT HEEL ONLY

TRUSS PLATE MANUFACTURER IS NOT RESPONSIBLE FOR QUALITY CONTROL IN THE TRUSS MANUFACTURING PLANT .

NAIL VALUES

PLATE	GRIP(DRY) (PSI) MAX	MIN	SHEAR (PLI) MAX	MIN	SECTION (PLI) MAX	MIN
MT20	650	371	1747	788	1987	1873

PLATE PLACEMENT TOL. = 0.250 inches

PLATE ROTATION TOL. = 5.0 Deg.

JSI GRIP= 0.84 (D) (INPUT = 0.90)
JSI METAL= 0.40 (D) (INPUT = 0.95)

CONTINUED ON PAGE 2

JOB NAME	TRUSS NAME	QUANTITY	PLY	JOB DESC. BAYVIEW WELLINGTON	DRWG NO.
436388	T26Z	1	2	TRUSS DESC.	

PLATES (table is in inches)

JT	TYPE	PLATES	W	LEN	Y	X
C	TMV+p	MT20	3.0	4.0		
D	BMVW1+p	MT20	4.0	6.0		
E	BMWW+t	MT20	4.0	6.0		
F	BMV1+p	MT20	4.0	6.0		

NOTES- (1)
1) Lateral braces to be a minimum of 2X4 SPF #2.

LICENSED PROFESSIONAL ENGINEER
4/02/24
C. M. HEYENS
100505065
PROVINCE OF ONTARIO

STRUCTURAL COMPONENT ONLY
DWG # TR24040050

JOB NAME	TRUSS NAME	QUANTITY	PLY	JOB DESC.	DRWG NO.
436388	T27	1	2	BAYVIEW WELLINGTON TRUSS DESC.	

Tamarack Roof Truss, Burlington

Version 8.630 S Aug 30 2023 MiTek Industries, Inc. Tue Apr 2 10:53:53 2024 Page 1
ID:GRmvuh1dyQr3nydBfsTFcCy6OGI- otRaoNUj1GgxFHjm YKgkDPFnymExoNeVKcN1zUo3y

Scale = 1:32.4

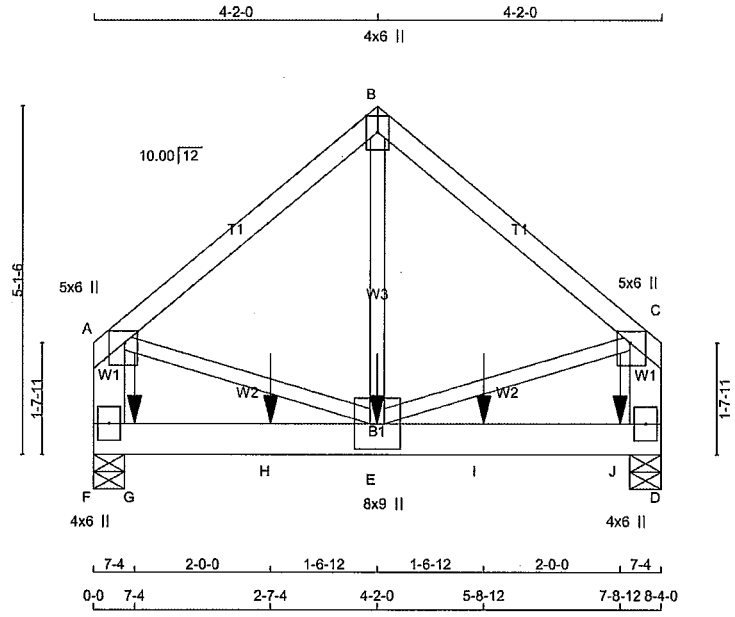

TOTAL WEIGHT = 2 X 42 = 84 lb

[M]

LUMBER

N. L. G. A. RULES

CHORDS	SIZE		LUMBER	DESCR.
A - B	2x4	DRY	No.2	SPF
B - C	2x4	DRY	No.2	SPF
F - A	2x6	DRY	No.2	SPF
D - C	2x6	DRY	No.2	SPF
F - D	2x6	DRY	No.2	SPF
ALL WEBS EXCEPT	2x3	DRY	No.2	SPF

DRY: SEASONED LUMBER.

DESIGN CONSISTS OF 2 TRUSSES BUILT SEPARATELY THEN FASTENED TOGETHER AS FOLLOWS:

CHORDS	#ROWS	SURFACE SPACING (IN)	LOAD(PLF)
TOP CHORDS : (0.122"X3") SPIRAL NAILS			
A- B	1	12	TOP
B- C	1	12	TOP
F- A	2	2	SIDE(125.4)
D- C	2	2	SIDE(130.9)
BOTTOM CHORDS : (0.122"X3") SPIRAL NAILS			
F- D	2	12	SIDE(183.1)
WEBS : (0.122"X3") SPIRAL NAILS			
E- B	1	6	SIDE(129.9)
2x3	1	6	

NAILS TO BE DRIVEN FROM ONE SIDE ONLY.

GIRDER NAILING ASSUMES NAILED HANGERS ARE FASTENED WITH MIN. 3-0 INCH NAILS.

TOP - COMPONENTS ARE LOADED FROM THE TOP AND MUST BE PLACED ON TOP EDGE OF ALL PLIES FOR THE LOAD TO BE TRANSFERRED TO EACH PLY.

SIDE - PLF SHOWN IS THE EQUIVALENT UDL APPLIED TO ONE SIDE THAT THE CORRESPONDING NAILING PATTERN SHALL BE CAPABLE OF TRANSFERING. REMAINING PLF MUST BE APPLIED ON THE OPPOSITE SIDE OR ON THE TOP.

LICENSED PROFESSIONAL ENGINEER
4/02/24
C. M. HEYENS
100505065
PROVINCE OF ONTARIO

STRUCTURAL COMPONENT ONLY
DWG # TR24040051

DIMENSIONS, SUPPORTS AND LOADINGS SPECIFIED BY FABRICATOR TO BE VERIFIED BY BUILDING DESIGNER

BEARINGS

JT	FACTORED GROSS REACTION VERT	HORZ	MAXIMUM FACTORED GROSS REACTION DOWN	HORZ	UPLIFT	INPUT BRG IN-SX	REQRD BRG IN-SX
F	3515	0	3515	0	0	5-8	1-14
D	3541	0	3541	0	0	5-8	1-15

UNFACTORED REACTIONS

JT	1ST LCASE COMBINED	MAX./MIN. COMPONENT REACTIONS SNOW	LIVE	PERM.LIVE	WIND	DEAD	SOIL
F	2461	1756 / 0	0 / 0	0 / 0	0 / 0	705 / 0	0 / 0
D	2482	1756 / 0	0 / 0	0 / 0	0 / 0	726 / 0	0 / 0

BEARING MATERIAL TO BE SPF NO.2 OR BETTER AT JOINT(S) F, D

BRACING

TOP CHORD TO BE SHEATHED OR MAX. PURLIN SPACING = 5.58 FT.
MAX. UNBRACED BOTTOM CHORD LENGTH = 10.00 FT OR RIGID CEILING DIRECTLY APPLIED.

ALL PITCH BREAKS AND PERIMETER CORNER JOINTS MUST BE LATERALLY RESTRAINED.

LOADING

TOTAL LOAD CASES: (4)

CHORDS

MEMB. FR-TO	MAX. FORCE (LBS)	FACTORED VERT. LOAD (PLF) FROM	TO	LC1 CSI (LC)	MAX. UNBRAC LENGTH
A- B	-2385 / 0	-112.4	-112.4	0.22 (1)	5.58
B- C	-2385 / 0	-112.4	-112.4	0.22 (1)	5.58
F- A	-2298 / 0	0.0	0.0	0.08 (1)	7.81
D- C	-2298 / 0	0.0	0.0	0.08 (1)	7.81
F- G	0 / 0	-18.5	-18.5	0.42 (1)	10.00
G- H	0 / 0	-18.5	-18.5	0.42 (1)	10.00
H- E	0 / 0	-18.5	-18.5	0.42 (1)	10.00
E- I	0 / 0	-18.5	-18.5	0.42 (1)	10.00
I- J	0 / 0	-18.5	-18.5	0.42 (1)	10.00
J- D	0 / 0	-18.5	-18.5	0.42 (1)	10.00

WEBS

MEMB. FR-TO	MAX. FORCE (LBS)	MAX CSI (LC)
E- B	0 / 2585	0.32 (1)
A- E	0 / 1909	0.24 (1)
E- C	0 / 1909	0.24 (1)

SPECIFIED CONCENTRATED LOADS (LBS)

JT	LOC.	LC1	MAX-	MAX+	FACE	DIR.	TYPE	HEEL	CONN.
E	4-2-0	-841	-841	---	BACK	VERT	TOTAL	---	C1
G	7-4	-827	-827	---	BACK	VERT	TOTAL	---	C1
H	2-7-4	-824	-824	---	BACK	VERT	TOTAL	---	C1
I	5-8-12	-841	-841	---	BACK	VERT	TOTAL	---	C1
J	7-8-12	-844	-844	---	BACK	VERT	TOTAL	---	C1

CONNECTION REQUIREMENTS

1) **C1:** A SUITABLE HANGER/MECHANICAL CONNECTION IS REQUIRED.

DESIGN CRITERIA

SPECIFIED LOADS:

TOP CH.	LL	=	32.5	PSF
	DL	=	6.0	PSF
BOT CH.	LL	=	0.0	PSF
	DL	=	7.4	PSF
TOTAL LOAD		=	45.9	PSF

SPACING = 24.0 IN. C/C

THIS TRUSS IS DESIGNED FOR RESIDENTIAL OR SMALL BUILDING REQUIREMENTS OF PART 9, NBCC 2015

THIS DESIGN COMPLIES WITH:
- PART 9 OF BCBC 2018 , NBC-2019AE
- PART 9 OF OBC 2012 (2019 AMENDMENT)
- CSA 086-14
- TPIC 2014

(55 % OF 43.9 P.S.F. G.S.L. PLUS 8.4 P.S.F. RAIN LOAD) EQUALS 32.5 P.S.F. SPECIFIED ROOF LIVE LOAD

ALLOWABLE DEFL.(LL)= L/360 (0.28")
CALCULATED VERT. DEFL.(LL) = L/ 999 (0.03")
ALLOWABLE DEFL.(TL)= L/360 (0.28")
CALCULATED VERT. DEFL.(TL) = L/ 999 (0.05")

CSI: TC=0.22/1.00 (A-B:1) , BC=0.42/1.00 (E-F:1) , WB=0.32/1.00 (B-E:1) , SSI=0.41/1.00 (D-E:1)

DOL LUMBER=1.00 NAIL=1.00 LS BEND=1.00 COMP=1.00 SHEAR=1.00 TENS= 1.00

COMPANION LIVE LOAD FACTOR = 1.00

AUTOSOLVE HEELS OFF

TRUSS PLATE MANUFACTURER IS NOT RESPONSIBLE FOR QUALITY CONTROL IN THE TRUSS MANUFACTURING PLANT .

NAIL VALUES

PLATE	GRIP(DRY) (PSI) MAX	MIN	SHEAR (PLI) MAX	MIN	SECTION (PLI) MAX	MIN
MT20	650	371	1747	788	1987	1873

PLATE PLACEMENT TOL. = 0.250 inches

PLATE ROTATION TOL. = 5.0 Deg.

JSI GRIP= 0.72 (C) (INPUT = 0.90)
JSI METAL= 0.31 (B) (INPUT = 0.95)

CONTINUED ON PAGE 2

JOB NAME	TRUSS NAME	QUANTITY	PLY	JOB DESC.	DRWG NO.
436388	T27	1	2	BAYVIEW WELLINGTON TRUSS DESC.	

PLATES (table is in inches)

JT	TYPE	PLATES	W	LEN	Y	X
A	TMVW+p	MT20	5.0	6.0	2.00	2.25
B	TTW+p	MT20	4.0	6.0	Edge	
C	TMVW+p	MT20	5.0	6.0	2.00	2.25
D	BMV1+p	MT20	4.0	6.0		
E	BMWWW+t	MT20	8.0	9.0		
F	BMV1+p	MT20	4.0	6.0		

Edge - INDICATES REFERENCE CORNER OF PLATE TOUCHES EDGE OF CHORD.

NOTES- (1)
1) Lateral braces to be a minimum of 2X4 SPF #2.

LICENSED PROFESSIONAL ENGINEER
4/02/24
C. M. HEYENS
100505065
PROVINCE OF ONTARIO

STRUCTURAL COMPONENT ONLY
DWG # TR24040051

JOB NAME	TRUSS NAME	QUANTITY	PLY	JOB DESC.	DRWG NO.
436388	T27G	1	1	BAYVIEW WELLINGTON TRUSS DESC.	

Tamarack Roof Truss, Burlington

Version 8.630 S Aug 30 2023 MiTek Industries, Inc. Tue Apr 2 10:53:54 2024 Page 1
ID:GRmvuh1dyQr3nydBfsTFcCy6OGl-S?Rpo8O7ULOXZPsvKh3ZDxla1BNQzSBWt949vUzUo3x

Scale: 3/8"=1'

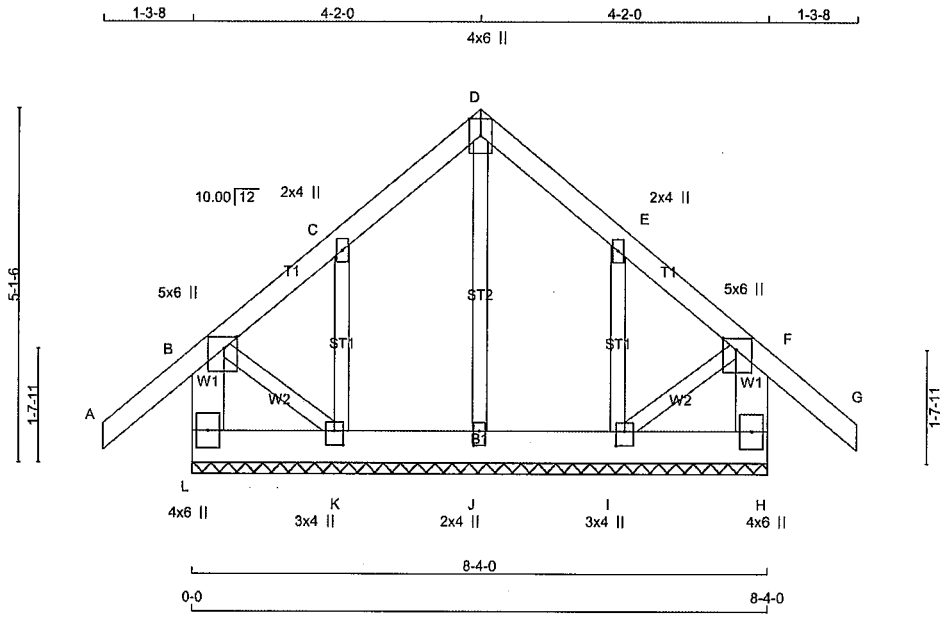

TOTAL WEIGHT = 47 lb [M]

LUMBER
N. L. G. A. RULES

CHORDS	SIZE		LUMBER	DESCR.
L - B	2x6	DRY	No.2	SPF
A - D	2x4	DRY	No.2	SPF
D - G	2x4	DRY	No.2	SPF
H - F	2x6	DRY	No.2	SPF
L - H	2x6	DRY	No.2	SPF
ALL WEBS	2x3	DRY	No.2	SPF
ALL GABLE WEBS	2x3	DRY	No.2	SPF

DRY: SEASONED LUMBER.

GABLE STUDS SPACED AT 2-0-0 OC.

PLATES (table is in inches)

JT	TYPE	PLATES	W	LEN	Y	X
B	TMVW+p	MT20	5.0	6.0	2.00	2.25
C	TMW+w	MT20	2.0	4.0		
D	TTW+p	MT20	4.0	6.0	Edge	
E	TMW+w	MT20	2.0	4.0		
F	TMVW+p	MT20	5.0	6.0	2.00	2.25
H	BMV1+p	MT20	4.0	6.0		
I	BMWW1+t	MT20	3.0	4.0	2.50	1.50
J	BMW1+w	MT20	2.0	4.0	2.50	1.00
K	BMWW1+t	MT20	3.0	4.0	2.50	1.50
L	BMV1+p	MT20	4.0	6.0		

Edge - INDICATES REFERENCE CORNER OF PLATE TOUCHES EDGE OF CHORD.

NOTES- (1)
1) Lateral braces to be a minimum of 2X4 SPF #2.

DIMENSIONS, SUPPORTS AND LOADINGS SPECIFIED BY FABRICATOR TO BE VERIFIED BY BUILDING DESIGNER

BEARINGS

THIS TRUSS DESIGNED FOR CONTINUOUS BEARINGS.

THIS TRUSS REQUIRES RIGID SHEATHING ON EXPOSED FACE.

BEARING MATERIAL TO BE SPF NO.2 OR BETTER AT JOINT(S)

BRACING
TOP CHORD TO BE SHEATHED OR MAX. PURLIN SPACING = 6.25 FT.
MAX. UNBRACED BOTTOM CHORD LENGTH = 10.00 FT OR RIGID CEILING DIRECTLY APPLIED.

ALL PITCH BREAKS AND PERIMETER CORNER JOINTS MUST BE LATERALLY RESTRAINED.

LOADING
TOTAL LOAD CASES: (4)

CHORDS

MEMB. FR-TO	MAX. FACTORED FORCE (LBS)	FACTORED VERT. LOAD LC1 (PLF) FROM	TO	MAX CSI (LC)	MAX. UNBRAC LENGTH
L- B	-290 / 0	0.0	0.0	0.02 (1)	7.81
A- B	0 / 50	-112.4	-112.4	0.15 (1)	10.00
B- C	-25 / 0	-112.4	-112.4	0.08 (1)	6.25
C- D	-49 / 0	-112.4	-112.4	0.08 (1)	6.25
D- E	-49 / 0	-112.4	-112.4	0.08 (1)	6.25
E- F	-25 / 0	-112.4	-112.4	0.08 (1)	6.25
F- G	0 / 50	-112.4	-112.4	0.15 (1)	10.00
H- F	-290 / 0	0.0	0.0	0.02 (1)	7.81
L- K	0 / 0	-18.5	-18.5	0.01 (4)	10.00
K- J	0 / 24	-18.5	-18.5	0.01 (4)	10.00
J- I	0 / 24	-18.5	-18.5	0.01 (4)	10.00
I- H	0 / 0	-18.5	-18.5	0.01 (4)	10.00

WEBS

MEMB. FR-TO	MAX. FACTORED FORCE (LBS)	MAX CSI (LC)
J- D	-139 / 0	0.05 (1)
K- C	-283 / 0	0.05 (1)
I- E	-283 / 0	0.05 (1)
B- K	0 / 38	0.01 (1)
I- F	0 / 38	0.01 (1)

DESIGN CRITERIA

SPECIFIED LOADS:

TOP CH.	LL	=	32.5	PSF
	DL	=	6.0	PSF
BOT CH.	LL	=	0.0	PSF
	DL	=	7.4	PSF
TOTAL LOAD		=	45.9	PSF

SPACING = 24.0 IN. C/C

THIS TRUSS IS DESIGNED FOR RESIDENTIAL OR SMALL BUILDING REQUIREMENTS OF PART 9, NBCC 2015

THIS DESIGN COMPLIES WITH:
- PART 9 OF BCBC 2018 , NBC-2019AE
- PART 9 OF OBC 2012 (2019 AMENDMENT)
- CSA 086-14
- TPIC 2014

(55 % OF 43.9 P.S.F. G.S.L. PLUS 8.4 P.S.F. RAIN LOAD) EQUALS 32.5 P.S.F. SPECIFIED ROOF LIVE LOAD

CSI: TC=0.15/1.00 (F-G:1) , BC=0.01/1.00 (J-K:4) , WB=0.05/1.00 (C-K:1) , SSI=0.09/1.00 (A-B:1)

DOL LUMBER=1.00 NAIL=1.00 LS BEND=1.10 COMP=1.10 SHEAR=1.10 TENS= 1.10

COMPANION LIVE LOAD FACTOR = 1.00

AUTOSOLVE HEELS OFF

TRUSS PLATE MANUFACTURER IS NOT RESPONSIBLE FOR QUALITY CONTROL IN THE TRUSS MANUFACTURING PLANT .

NAIL VALUES

PLATE	GRIP(DRY) (PSI) MAX	MIN	SHEAR (PLI) MAX	MIN	SECTION (PLI) MAX	MIN
MT20	650	371	1747	788	1987	1873

PLATE PLACEMENT TOL. = 0.250 inches

PLATE ROTATION TOL. = 5.0 Deg.

JSI GRIP= 0.32 (K) (INPUT = 0.90)
JSI METAL= 0.15 (C) (INPUT = 0.95)

LICENSED PROFESSIONAL ENGINEER
4/02/24
C. M. HEYENS
100505065
PROVINCE OF ONTARIO

STRUCTURAL COMPONENT ONLY
DWG # TR24040052

JOB NAME	TRUSS NAME	QUANTITY	PLY	JOB DESC.	DRWG NO.
436388	T28W	1	1	BAYVIEW WELLINGTON TRUSS DESC.	

Tamarack Roof Truss, Burlington

Version 8.630 S Aug 30 2023 MiTek Industries, Inc. Tue Apr 2 10:53:56 2024 Page 1
ID:GRmvuh1dyQr3nydBfsTFcCy6OGl-ONZaCpQN0yeFoj0HR651IMrpl?u7RCGpKTZG MzUo3v

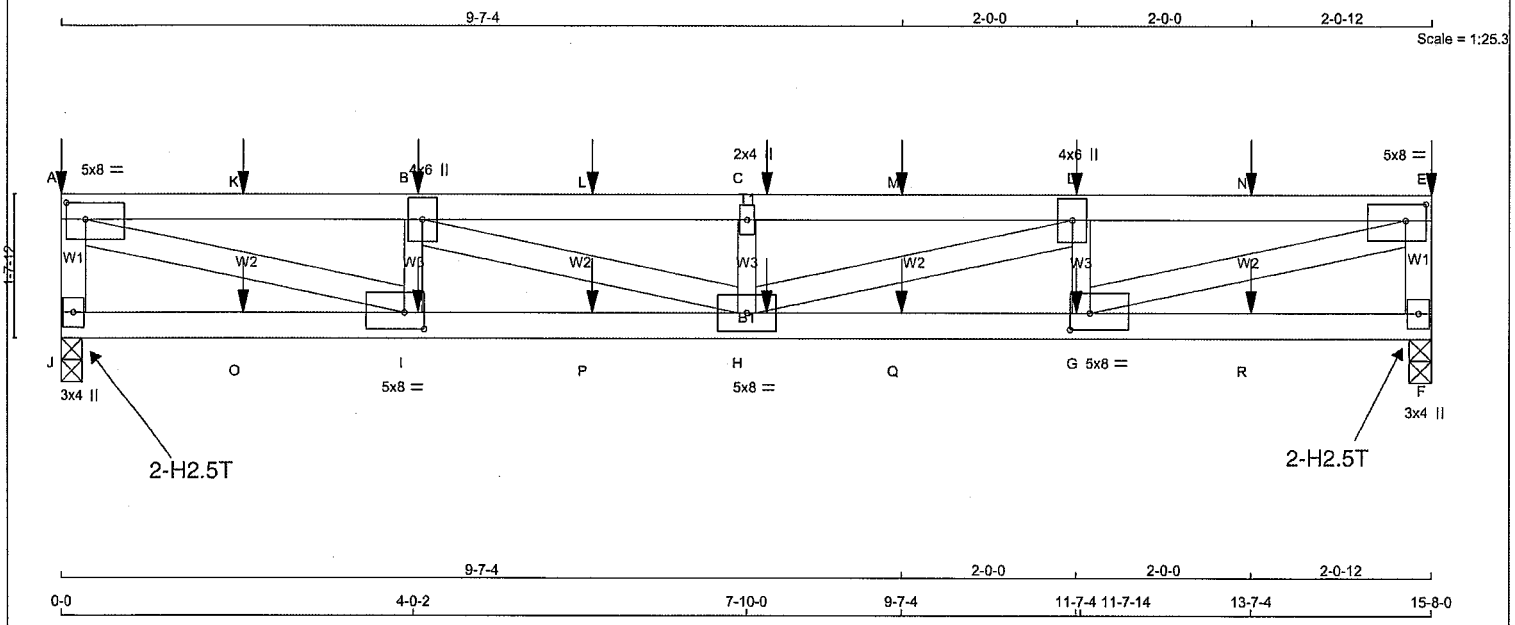

TOTAL WEIGHT = 58 lb [M]

LUMBER
N. L. G. A. RULES

CHORDS	SIZE		LUMBER	DESCR.
J - A	2x4	DRY	No.2	SPF
A - E	2x4	DRY	No.2	SPF
F - E	2x4	DRY	No.2	SPF
J - F	2x4	DRY	No.2	SPF
ALL WEBS	2x4	DRY	No.2	SPF
EXCEPT				
G - D	2x3	DRY	No.2	SPF
I - B	2x3	DRY	No.2	SPF
H - C	2x3	DRY	No.2	SPF

DRY: SEASONED LUMBER.

PLATES (table is in Inches)

JT	TYPE	PLATES	W	LEN	Y	X
A	TMVW-t	MT20	5.0	8.0	2.25	2.75
B	TMWW+t	MT20	4.0	6.0		
C	TMW+w	MT20	2.0	4.0		
D	TMWW+t	MT20	4.0	6.0		
E	TMVW-t	MT20	5.0	8.0	2.25	2.75
F	BMV1+p	MT20	3.0	4.0		
G	BMWW-t	MT20	5.0	8.0	2.25	2.75
H	BMWWW-t	MT20	5.0	8.0		
I	BMWW-t	MT20	5.0	8.0	2.25	2.75
J	BMV1+p	MT20	3.0	4.0		

NOTES- (1)
1) Lateral braces to be a minimum of 2X4 SPF #2.

LICENSED PROFESSIONAL ENGINEER
4/02/24
C. M. HEYENS
100505065
PROVINCE OF ONTARIO

STRUCTURAL COMPONENT ONLY
DWG # TR24040053

DIMENSIONS, SUPPORTS AND LOADINGS SPECIFIED BY FABRICATOR TO BE VERIFIED BY BUILDING DESIGNER

BEARINGS

JT	FACTORED GROSS REACTION VERT	HORZ	MAXIMUM FACTORED GROSS REACTION DOWN	HORZ	UPLIFT	INPUT BRG IN-SX	REQRD BRG IN-SX
J	1605	0	1605	-50	-818	3-0	1-12
F	1605	0	1605	0	-816	3-0	1-12

PROVIDE ANCHORAGE AT BEARING JOINT J FOR 818 LBS FACTORED UPLIFT
PROVIDE ANCHORAGE AT BEARING JOINT F FOR 816 LBS FACTORED UPLIFT

PROVIDE FOR 50 LBS FACTORED HORIZONTAL REACTION AT JOINT J

UNFACTORED REACTIONS

JT	1ST LCASE COMBINED	MAX./MIN. COMPONENT REACTIONS SNOW	LIVE	PERM.LIVE	WIND	DEAD	SOIL
J	1123	803 / 0	0 / 0	0 / 0	0 / -790	320 / 0	0 / 0
F	1123	803 / 0	0 / 0	0 / 0	0 / -789	320 / 0	0 / 0
HORIZONTAL REACTIONS							
J	---	0 / 0	0 / 0	0 / 0	36 / -36	0 / 0	0 /0

BEARING MATERIAL TO BE SPF NO.2 OR BETTER AT JOINT(S) J, F

BRACING
TOP CHORD TO BE SHEATHED OR MAX. PURLIN SPACING = 2.76 FT.
MAX. UNBRACED BOTTOM CHORD LENGTH = 4.91 FT OR RIGID CEILING DIRECTLY APPLIED.

ALL PITCH BREAKS AND PERIMETER CORNER JOINTS MUST BE LATERALLY RESTRAINED.

LOADING
TOTAL LOAD CASES: (12)

CHORDS

MEMB. FR-TO	MAX. FACTORED FORCE (LBS)	FACTORED VERT. LOAD LC1 (PLF) FROM	TO	MAX CSI (LC)	MAX. UNBRAC LENGTH
J- A	-1543 / 760	0.0	0.0	0.18 (1)	6.58
A- K	-3525 / 1835	-112.4	-112.4	0.54 (1)	3.17
K- B	-3525 / 1835	-112.4	-112.4	0.54 (1)	3.17
B- L	-4527 / 2354	-112.4	-112.4	0.59 (1)	2.76
L- C	-4527 / 2354	-112.4	-112.4	0.59 (1)	2.76
C- M	-4527 / 2354	-112.4	-112.4	0.59 (1)	2.76
M- D	-4527 / 2354	-112.4	-112.4	0.59 (1)	2.76
D- N	-3525 / 1835	-112.4	-112.4	0.54 (1)	3.17
N- E	-3525 / 1835	-112.4	-112.4	0.54 (1)	3.17
F- E	-1543 / 758	0.0	0.0	0.18 (1)	6.58
J- O	-32 / 43	-18.5	-18.5	0.13 (1)	6.25
O- I	-32 / 43	-18.5	-18.5	0.13 (1)	6.25
I- P	-1797 / 3525	-18.5	-18.5	0.76 (1)	4.91
P- H	-1797 / 3525	-18.5	-18.5	0.76 (1)	4.91
H- Q	-1797 / 3525	-18.5	-18.5	0.76 (1)	4.91
Q- G	-1797 / 3525	-18.5	-18.5	0.76 (1)	4.91
G- R	-8 / 19	-18.5	-18.5	0.13 (1)	10.00
R- F	-8 / 19	-18.5	-18.5	0.13 (1)	10.00

WEBS

MEMB. FR-TO	MAX. FACTORED FORCE (LBS)	MAX CSI (LC)
G- E	-1917 / 3721	0.66 (1)
A- I	-1924 / 3721	0.66 (1)
G- D	-1016 / 442	0.16 (1)
I- B	-1016 / 444	0.16 (1)
H- D	-550 / 1064	0.19 (1)
B- H	-556 / 1064	0.19 (1)
H- C	-546 / 219	0.09 (1)

SPECIFIED CONCENTRATED LOADS (LBS)

JT	LOC.	LC1	MAX-	MAX+	FACE	DIR.	TYPE	HEEL	CONN.
A	0-0	-90	-90	43	FRONT	VERT	TOTAL	---	C1
B	4-0-12	-54	-55	38	FRONT	VERT	TOTAL	---	C1
C	8-0-12	-54	-55	38	FRONT	VERT	TOTAL	---	C1
D	11-7-4	-54	-55	38	FRONT	VERT	TOTAL	---	C1
E	15-8-0	-90	-90	43	FRONT	VERT	TOTAL	---	C1
G	11-7-4	-36	-39	31	FRONT	VERT	TOTAL	---	C1
H	8-0-12	-36	-39	31	FRONT	VERT	TOTAL	---	C1
I	4-0-12	-36	-39	31	FRONT	VERT	TOTAL	---	C1
K	2-0-12	-54	-55	38	FRONT	VERT	TOTAL	---	C1
L	6-0-12	-54	-55	38	FRONT	VERT	TOTAL	---	C1
M	9-7-4	-54	-55	38	FRONT	VERT	TOTAL	---	C1
N	13-7-4	-54	-55	38	FRONT	VERT	TOTAL	---	C1
O	2-0-12	-36	-39	31	FRONT	VERT	TOTAL	---	C1

DESIGN CRITERIA

SPECIFIED LOADS:

TOP CH.	LL	=	32.5	PSF
	DL	=	6.0	PSF
BOT CH.	LL	=	0.0	PSF
	DL	=	7.4	PSF
TOTAL LOAD		=	45.9	PSF

SPACING = 24.0 IN. C/C

LOADING IN FLAT SECTION BASED ON A SLOPE OF 2.00/12 MINIMUM

THIS TRUSS IS DESIGNED FOR RESIDENTIAL OR SMALL BUILDING REQUIREMENTS OF PART 9, NBCC 2015

THIS DESIGN COMPLIES WITH:
- PART 9 OF BCBC 2018 , NBC-2019AE
- PART 9 OF OBC 2012 (2019 AMENDMENT)
- CSA 086-14
- TPIC 2014

(55 % OF 43.9 P.S.F. G.S.L. PLUS 8.4 P.S.F. RAIN LOAD) EQUALS 32.5 P.S.F. SPECIFIED ROOF LIVE LOAD

ALLOWABLE DEFL.(LL)= L/360 (0.52")
CALCULATED VERT. DEFL.(LL) = L/ 921 (0.20")
ALLOWABLE DEFL.(TL)= L/360 (0.52")
CALCULATED VERT. DEFL.(TL) = L/ 528 (0.36")

CSI: TC=0.59/1.00 (C-D:1) , BC=0.76/1.00 (G-H:1) , WB=0.66/1.00 (E-G:1) , SSI=0.26/1.00 (A-B:1)

DOL LUMBER=1.00 NAIL=1.00 LS BEND=1.00 COMP=1.00 SHEAR=1.00 TENS= 1.00

COMPANION LIVE LOAD FACTOR = 1.00

TRUSS PLATE MANUFACTURER IS NOT RESPONSIBLE FOR QUALITY CONTROL IN THE TRUSS MANUFACTURING PLANT .

NAIL VALUES

PLATE	GRIP(DRY) (PSI) MAX	MIN	SHEAR (PLI) MAX	MIN	SECTION (PLI) MAX	MIN
MT20	650	371	1747	788	1987	1873

PLATE PLACEMENT TOL. = 0.250 Inches

PLATE ROTATION TOL. = 5.0 Deg.

JSI GRIP= 0.87 (G) (INPUT = 0.90)
JSI METAL= 0.63 (I) (INPUT = 0.95)

CONTINUED ON PAGE 2

SPECIFIED CONCENTRATED LOADS (LBS)

JT	LOC.	LC1	MAX-	MAX+	FACE	DIR.	TYPE	HEEL	CONN.
P	6-0-12	-36	-39	31	FRONT	VERT	TOTAL	---	C1
Q	9-7-4	-36	-39	31	FRONT	VERT	TOTAL	---	C1
R	13-7-4	-36	-39	31	FRONT	VERT	TOTAL	---	C1

CONNECTION REQUIREMENTS

1) **C1:** A SUITABLE HANGER/MECHANICAL CONNECTION IS REQUIRED.

WIND LOAD APPLIED IS DERIVED FROM REFERENCE VELOCITY PRESSURE OF (7.5) PSF AT {20-0-0} FT-IN-SX REFERENCE HEIGHT ABOVE GRADE AND USING EXTERNAL PEAK COEFFICIENTS, CpCg, BASED ON THE {MAIN WIND FORCE RESISTING SYSTEM}.INTERNAL WIND PRESSURE IS BASED ON DESIGN {CATEGORY 2}. BUILDING MAY BE LOCATED ON {OPEN TERRAIN}, AND TRUSS IS DESIGNED TO BE LOCATED AT LEAST {0-0} FT-IN-SX AWAY FROM EAVE.TRUSS UPLIFT IS BASED ON TOP AND BOTTOM CHORD DEAD LOADS OF 6.0 PSF AND 7.4 PSF RESPECTIVELY.

LICENSED PROFESSIONAL ENGINEER
4/02/24
C. M. HEYENS
100505065
PROVINCE OF ONTARIO

STRUCTURAL COMPONENT ONLY
DWG # TR24040053

JOB NAME	TRUSS NAME	QUANTITY	PLY	JOB DESC.	DRWG NO.
436388	T29W	1	1	BAYVIEW WELLINGTON TRUSS DESC.	

Tamarack Roof Truss, Burlington

Version 8.630 S Aug 30 2023 MiTek Industries, Inc. Tue Apr 2 10:53:57 2024 Page 1
ID:GRmvuh1dyQr3nydBfsTFcCy6OGl-sa7yQ9Q?nGm6QtbU?qcGraNxvPMCAf0zZ7lpWozUo3u

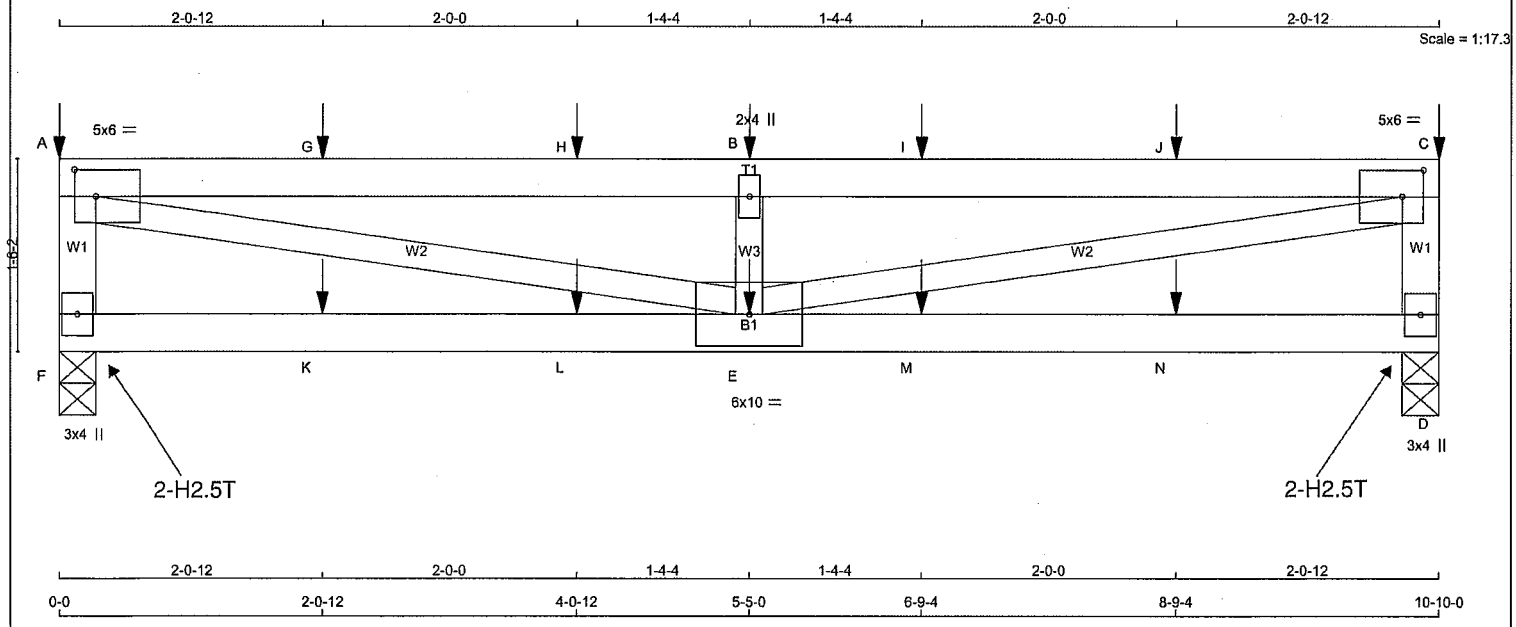

TOTAL WEIGHT = 36 lb

LUMBER
N. L. G. A. RULES

CHORDS	SIZE		LUMBER	DESCR.
F - A	2x4	DRY	No.2	SPF
A - C	2x4	DRY	No.2	SPF
D - C	2x4	DRY	No.2	SPF
F - D	2x4	DRY	No.2	SPF
ALL WEBS	2x3	DRY	No.2	SPF

DRY: SEASONED LUMBER.

PLATES (table is in inches)

JT	TYPE	PLATES	W	LEN	Y	X
A	TMVW-t	MT20	5.0	6.0	2.50	2.00
B	TMW+w	MT20	2.0	4.0		
C	TMVW-t	MT20	5.0	6.0	2.50	2.00
D	BMV1+p	MT20	3.0	4.0		
E	BMWWW-t	MT20	6.0	10.0		
F	BMV1+p	MT20	3.0	4.0		

NOTES- (1)
1) Lateral braces to be a minimum of 2X4 SPF #2.

DIMENSIONS, SUPPORTS AND LOADINGS SPECIFIED BY FABRICATOR TO BE VERIFIED BY BUILDING DESIGNER

BEARINGS

JT	FACTORED GROSS REACTION VERT	HORZ	MAXIMUM FACTORED GROSS REACTION DOWN	HORZ	UPLIFT	INPUT BRG IN-SX	REQRD BRG IN-SX
F	1071	0	1071	-45	-547	3-8	1-8
D	1071	0	1071	0	-544	3-8	1-8

PROVIDE ANCHORAGE AT BEARING JOINT F FOR 547 LBS FACTORED UPLIFT
PROVIDE ANCHORAGE AT BEARING JOINT D FOR 544 LBS FACTORED UPLIFT

PROVIDE FOR 45 LBS FACTORED HORIZONTAL REACTION AT JOINT F

UNFACTORED REACTIONS

JT	1ST LCASE COMBINED	MAX./MIN. COMPONENT REACTIONS SNOW	LIVE	PERM.LIVE	WIND	DEAD	SOIL
F	750	537 / 0	0 / 0	0 / 0	0 / -527	212 / 0	0 / 0
D	750	537 / 0	0 / 0	0 / 0	0 / -525	212 / 0	0 / 0
HORIZONTAL REACTIONS							
F	---	0 / 0	0 / 0	0 / 0	32 / -32	0 / 0	0 /0

BEARING MATERIAL TO BE SPF NO.2 OR BETTER AT JOINT(S) F, D

BRACING
TOP CHORD TO BE SHEATHED OR MAX. PURLIN SPACING = 3.17 FT.
MAX. UNBRACED BOTTOM CHORD LENGTH = 6.25 FT OR RIGID CEILING DIRECTLY APPLIED.

ALL PITCH BREAKS AND PERIMETER CORNER JOINTS MUST BE LATERALLY RESTRAINED.

LOADING
TOTAL LOAD CASES: (12)

CHORDS

MEMB. FR-TO	MAX. FACTORED FORCE (LBS)	FACTORED VERT. LOAD (PLF) FROM	TO	LC1 CSI (LC)	MAX UNBRAC LENGTH
F- A	-988 / 471	0.0	0.0	0.11 (1)	7.81
A- G	-2659 / 1392	-112.4	-112.4	0.82 (1)	3.17
G- H	-2659 / 1392	-112.4	-112.4	0.82 (1)	3.17
H- B	-2659 / 1392	-112.4	-112.4	0.82 (1)	3.17
B- I	-2659 / 1392	-112.4	-112.4	0.82 (1)	3.17
I- J	-2659 / 1392	-112.4	-112.4	0.82 (1)	3.17
J- C	-2659 / 1392	-112.4	-112.4	0.82 (1)	3.17
D- C	-988 / 469	0.0	0.0	0.11 (1)	7.81
F- K	-29 / 39	-18.5	-18.5	0.20 (1)	6.25
K- L	-29 / 39	-18.5	-18.5	0.20 (1)	6.25
L- E	-29 / 39	-18.5	-18.5	0.20 (1)	6.25
E- M	-7 / 17	-18.5	-18.5	0.20 (1)	10.00
M- N	-7 / 17	-18.5	-18.5	0.20 (1)	10.00
N- D	-7 / 17	-18.5	-18.5	0.20 (1)	10.00

WEBS

MEMB. FR-TO	MAX. FACTORED FORCE (LBS)	MAX CSI (LC)
A- E	-1420 / 2725	0.69 (5)
E- B	-941 / 373	0.15 (1)
E- C	-1409 / 2725	0.68 (7)

SPECIFIED CONCENTRATED LOADS (LBS)

JT	LOC.	LC1	MAX-	MAX+	FACE	DIR.	TYPE	HEEL	CONN.
A	0-0	-76	-76	38	FRONT	VERT	TOTAL	---	C1
B	5-5-0	-40	-42	33	FRONT	VERT	TOTAL	---	C1
C	10-10-0	-76	-76	38	FRONT	VERT	TOTAL	---	C1
E	5-5-0	-31	-35	28	FRONT	VERT	TOTAL	---	C1
G	2-0-12	-40	-42	33	FRONT	VERT	TOTAL	---	C1
H	4-0-12	-40	-42	33	FRONT	VERT	TOTAL	---	C1
I	6-9-4	-40	-42	33	FRONT	VERT	TOTAL	---	C1
J	8-9-4	-40	-42	33	FRONT	VERT	TOTAL	---	C1
K	2-0-12	-31	-35	28	FRONT	VERT	TOTAL	---	C1
L	4-0-12	-31	-35	28	FRONT	VERT	TOTAL	---	C1
M	6-9-4	-31	-35	28	FRONT	VERT	TOTAL	---	C1
N	8-9-4	-31	-35	28	FRONT	VERT	TOTAL	---	C1

CONNECTION REQUIREMENTS

1) **C1:** A SUITABLE HANGER/MECHANICAL CONNECTION IS REQUIRED.

DESIGN CRITERIA

SPECIFIED LOADS:

TOP CH.	LL	=	32.5	PSF
	DL	=	6.0	PSF
BOT CH.	LL	=	0.0	PSF
	DL	=	7.4	PSF
TOTAL LOAD		=	45.9	PSF

SPACING = 24.0 IN. C/C

LOADING IN FLAT SECTION BASED ON A SLOPE OF 2.00/12 MINIMUM

THIS TRUSS IS DESIGNED FOR RESIDENTIAL OR SMALL BUILDING REQUIREMENTS OF PART 9, NBCC 2015

THIS DESIGN COMPLIES WITH:
- PART 9 OF BCBC 2018 , NBC-2019AE
- PART 9 OF OBC 2012 (2019 AMENDMENT)
- CSA 086-14
- TPIC 2014

(55 % OF 43.9 P.S.F. G.S.L. PLUS 8.4 P.S.F. RAIN LOAD) EQUALS 32.5 P.S.F. SPECIFIED ROOF LIVE LOAD

ALLOWABLE DEFL.(LL)= L/360 (0.36")
CALCULATED VERT. DEFL.(LL) = L/ 975 (0.13")
ALLOWABLE DEFL.(TL)= L/360 (0.36")
CALCULATED VERT. DEFL.(TL) = L/ 559 (0.23")

CSI: TC=0.82/1.00 (A-B:1) , BC=0.20/1.00 (E-F:1) , WB=0.69/1.00 (A-E:5) , SSI=0.38/1.00 (A-B:1)

DOL LUMBER=1.00 NAIL=1.00 LS BEND=1.00 COMP=1.00 SHEAR=1.00 TENS= 1.00

COMPANION LIVE LOAD FACTOR = 1.00

TRUSS PLATE MANUFACTURER IS NOT RESPONSIBLE FOR QUALITY CONTROL IN THE TRUSS MANUFACTURING PLANT .

NAIL VALUES

PLATE	GRIP(DRY) (PSI) MAX	MIN	SHEAR (PLI) MAX	MIN	SECTION (PLI) MAX	MIN
MT20	650	371	1747	788	1987	1873

PLATE PLACEMENT TOL. = 0.250 Inches

PLATE ROTATION TOL. = 5.0 Deg.

JSI GRIP= 0.86 (A) (INPUT = 0.90)
JSI METAL= 0.60 (A) (INPUT = 0.95)

LICENSED PROFESSIONAL ENGINEER
4/02/24
C. M. HEYENS
100505065
PROVINCE OF ONTARIO

STRUCTURAL COMPONENT ONLY
DWG # TR24040054

CONTINUED ON PAGE 2

CONNECTION REQUIREMENTS

1) **C1:** A SUITABLE HANGER/MECHANICAL CONNECTION IS REQUIRED.

WIND LOAD APPLIED IS DERIVED FROM REFERENCE VELOCITY PRESSURE OF { 7.5} PSF AT {20-0-0} FT-IN-SX REFERENCE HEIGHT ABOVE GRADE AND USING EXTERNAL PEAK COEFFICIENTS, CpCg, BASED ON THE {MAIN WIND FORCE RESISTING SYSTEM}.INTERNAL WIND PRESSURE IS BASED ON DESIGN {CATEGORY 2}. BUILDING MAY BE LOCATED ON {OPEN TERRAIN}, AND TRUSS IS DESIGNED TO BE LOCATED AT LEAST {0-0} FT-IN-SX AWAY FROM EAVE.TRUSS UPLIFT IS BASED ON TOP AND BOTTOM CHORD DEAD LOADS OF 6.0 PSF AND 7.4 PSF RESPECTIVELY.

LICENSED PROFESSIONAL ENGINEER
4/02/24
C. M. HEYENS
100505065
PROVINCE OF ONTARIO

STRUCTURAL COMPONENT ONLY
DWG # TR24040054

JOB NAME	TRUSS NAME	QUANTITY	PLY	JOB DESC.	DRWG NO.
436388	T30	15	1	BAYVIEW WELLINGTON TRUSS DESC.	

Tamarack Roof Truss, Burlington

Version 8.630 S Aug 30 2023 MiTek Industries, Inc. Tue Apr 2 10:53:59 2024 Page 1
ID:GRmvuh1dyQr3nydBfsTFcCv6OGl-pyEirrSFJt0qfAks6Ffkw?TJQCvIecqG0RnwahzUo3s

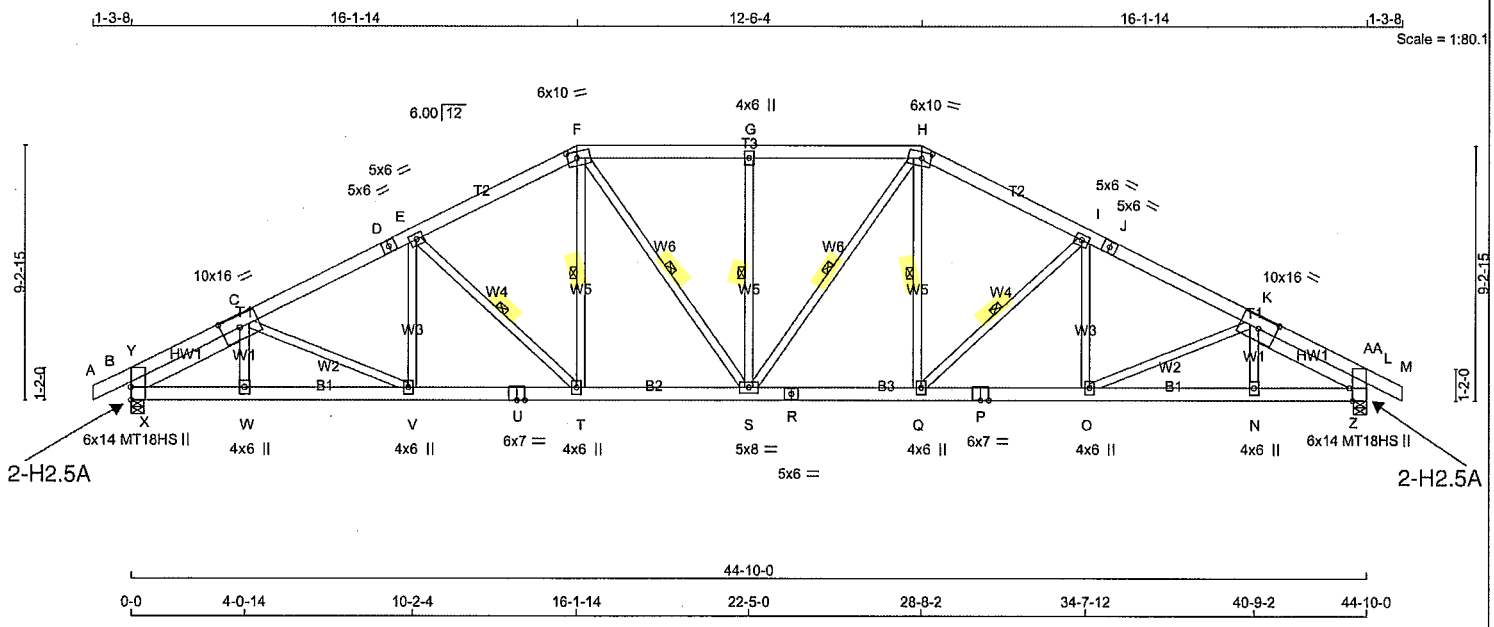

TOTAL WEIGHT = 15 X 291 = 4366 lb

LUMBER
N. L. G. A. RULES

CHORDS	SIZE		LUMBER	DESCR.
A - D	2x6	DRY	No.2	SPF
D - F	2x6	DRY	No.2	SPF
F - H	2x6	DRY	No.2	SPF
H - J	2x6	DRY	No.2	SPF
J - M	2x6	DRY	No.2	SPF
B - U	2x6	DRY	No.2	SPF
U - R	2x6	DRY	No.2	SPF
R - P	2x6	DRY	No.2	SPF
P - L	2x6	DRY	No.2	SPF
REINFORCING MEMBERS				
HW1	2x6	DRY	No.2	SPF
HW2	2x6	DRY	No.2	SPF
ALL WEBS	2x4	DRY	No.2	SPF

DRY: SEASONED LUMBER.

PLATES (table is in inches)

JT	TYPE	PLATES	W	LEN	Y	X
B	TMBMW1+t	MT18HS	6.0	14.0	Edge	
C	TMWWW-t	MT20	10.0	16.0	5.00	7.75
D	TS-t	MT20	5.0	6.0		
E	TMWW-t	MT20	5.0	6.0		
F	TTWW-m	MT20	6.0	10.0	2.75	4.25
G	TMW+w	MT20	4.0	6.0		
H	TTWW-m	MT20	6.0	10.0	2.75	4.25
I	TMWW-t	MT20	5.0	6.0		
J	TS-t	MT20	5.0	6.0		
K	TMWWW-t	MT20	10.0	16.0	5.00	7.75
L	TMBMW1+t	MT18HS	6.0	14.0	Edge	1.50
N	BMW+w	MT20	4.0	6.0		
O, Q, T, V						
O	BMWW+t	MT20	4.0	6.0		
P	BS-t	MT20	6.0	7.0		
R	BS-t	MT20	5.0	6.0		
S	BMWWW-t	MT20	5.0	8.0		
U	BS-t	MT20	6.0	7.0		
W	BMW+w	MT20	4.0	6.0		

Edge - INDICATES REFERENCE CORNER OF PLATE TOUCHES EDGE OF CHORD.

LICENSED PROFESSIONAL ENGINEER
4/02/24
C. M. HEYENS
100505065
PROVINCE OF ONTARIO

STRUCTURAL COMPONENT ONLY
DWG # TR24040055

DIMENSIONS, SUPPORTS AND LOADINGS SPECIFIED BY FABRICATOR TO BE VERIFIED BY BUILDING DESIGNER

BEARINGS

JT	FACTORED GROSS REACTION VERT	HORZ	MAXIMUM FACTORED GROSS REACTION DOWN	HORZ	UPLIFT	INPUT BRG IN-SX	REQRD BRG IN-SX
B	4408	0	4408	193	-735	5-8	5-8
L	4408	0	4408	0	-735	5-8	5-8

PROVIDE ANCHORAGE AT BEARING JOINT B FOR 735 LBS FACTORED UPLIFT
PROVIDE ANCHORAGE AT BEARING JOINT L FOR 735 LBS FACTORED UPLIFT

PROVIDE FOR 193 LBS FACTORED HORIZONTAL REACTION AT JOINT B

UNFACTORED REACTIONS

JT	1ST LCASE COMBINED	MAX./MIN. COMPONENT REACTIONS SNOW	LIVE	PERM.LIVE	WIND	DEAD	SOIL
B	3207	2069 / 0	471 / 0	0 / 0	106 / -854	668 / 0	0 / 0
L	3207	2069 / 0	471 / 0	0 / 0	106 / -854	668 / 0	0 / 0
HORIZONTAL REACTIONS							
B	---	0 / 0	0 / 0	0 / 0	138 / -138	0 / 0	0 /0

BEARING MATERIAL TO BE SPF NO.2 OR BETTER AT JOINT(S) B, L

BRACING
FOR SECTION F-H, MAX. UNBRACED TOP CHORD LENGTH = 2.00 FT.
FOR OTHER SECTIONS, MAX. UNBRACED TOP CHORD LENGTH = 2.91 FT.
MAX. UNBRACED BOTTOM CHORD LENGTH = 6.25 FT OR RIGID CEILING DIRECTLY APPLIED.

ALL PITCH BREAKS AND PERIMETER CORNER JOINTS MUST BE LATERALLY RESTRAINED.

1 LATERAL BRACE(S) AT 1/ 2 LENGTH OF E-T, F-T, F-S, G-S, H-S, H-Q, I-Q.

LOADING
TOTAL LOAD CASES: (18)

CHORDS

MEMB. FR-TO	MAX. FACTORED FORCE (LBS)	FACTORED VERT. LOAD (PLF) FROM	TO	LC1	MAX CSI (LC)	MAX. UNBRAC LENGTH
A- B	0 / 1	-145.3	-145.3	0.11 (2)	10.00	
B- Y	-4817 / 756	-145.3	-145.3	0.28 (1)	3.77	
Y- C	-2730 / 519	-145.3	-145.3	0.21 (1)	4.86	
C- D	-6529 / 1079	-145.3	-145.3	0.69 (2)	2.91	
D- E	-6529 / 1079	-145.3	-145.3	0.69 (2)	2.91	
E- F	-5628 / 960	-145.3	-145.3	0.61 (2)	3.20	
F- G	-5510 / 915	-155.3	-155.3	0.67 (1)	2.00	
G- H	-5510 / 915	-155.3	-155.3	0.67 (1)	2.00	
H- I	-5628 / 960	-145.3	-145.3	0.61 (3)	3.20	
I- J	-6529 / 1079	-145.3	-145.3	0.69 (3)	2.91	
J- K	-6529 / 1079	-145.3	-145.3	0.69 (3)	2.91	
K-AA	-2730 / 519	-145.3	-145.3	0.21 (1)	4.86	
AA- L	-4817 / 755	-145.3	-145.3	0.28 (1)	3.77	
L- M	0 / 1	-145.3	-145.3	0.11 (3)	10.00	
B- X	-557 / 2429	-39.5	-39.5	0.29 (1)	6.25	
X- W	-1045 / 5791	-39.5	-39.5	0.74 (1)	6.25	
W- V	-1047 / 5786	-39.5	-39.5	0.80 (1)	6.25	
V- U	-923 / 5866	-39.5	-39.5	0.77 (1)	6.25	
U- T	-923 / 5866	-39.5	-39.5	0.77 (1)	6.25	
T- S	-623 / 5011	-39.5	-39.5	0.67 (1)	6.25	
S- R	-471 / 5011	-39.5	-39.5	0.67 (1)	6.25	
R- Q	-471 / 5011	-39.5	-39.5	0.67 (1)	6.25	
Q- P	-731 / 5866	-39.5	-39.5	0.77 (1)	6.25	
P- O	-731 / 5866	-39.5	-39.5	0.77 (1)	6.25	
O- N	-856 / 5786	-39.5	-39.5	0.80 (1)	6.25	
N- Z	-855 / 5791	-39.5	-39.5	0.74 (1)	6.25	
Z- L	-364 / 2429	-39.5	-39.5	0.29 (1)	6.25	

WEBS

MEMB. FR-TO	MAX. FACTORED FORCE (LBS)	MAX CSI (LC)
W- C	0 / 245	0.04 (17)
C- V	-170 / 307	0.10 (2)
V- E	-3 / 365	0.06 (5)
E- T	-1478 / 418	0.49 (2)
T- F	-234 / 1259	0.20 (2)
F- S	-234 / 1395	0.22 (3)
S- G	-1179 / 225	0.43 (1)
S- H	-235 / 1395	0.22 (2)
Q- H	-235 / 1259	0.20 (3)
Q- I	-1478 / 418	0.49 (3)
O- I	-3 / 365	0.06 (6)
O- K	-170 / 307	0.10 (3)
N- K	0 / 245	0.04 (17)
X- Y	-328 / 2618	0.00 (1)
X- C	-4201 / 610	0.76 (1)
K- Z	-4201 / 613	0.76 (1)
Z-AA	-328 / 2618	0.00 (1)

TRUSS HAS BEEN CHECKED FOR UNBALANCED LOADING AS PER NBCC 4.1.6.2.(8)

[M]

DESIGN CRITERIA

SPECIFIED LOADS:

TOP CH.	LL	=	43.5	PSF
	DL	=	6.0	PSF
BOT CH.	LL	=	10.5	PSF
	DL	=	7.4	PSF
TOTAL LOAD		=	67.3	PSF

SPACING = 24.0 IN. C/C

LOADING IN FLAT SECTION BASED ON PIGGYBACK TRUSS WITH SLOPES OF 6.00/12 AND -6.00/12 AND RESPECTIVE HEEL HEIGHTS OF 0-0 AND 0-0 AND AN ADDITIONAL DEAD LOAD OF 4.0 P.S.F.

THIS TRUSS IS DESIGNED FOR COMMERCIAL OR INDUSTRIAL BUILDING REQUIREMENTS OF PART 4, NBCC 2015

THIS DESIGN COMPLIES WITH:
- PART 4 OF BCBC 2018 , NBC-2019AE
- PART 4 OF OBC 2012 (2019 AMENDMENT)
- CSA 086-14
- TPIC 2014

DESIGN ASSUMPTIONS
- SLOPE REDUCTION FACTOR NOT USED

(80 % OF 43.9 P.S.F. G.S.L. PLUS 8.4 P.S.F. RAIN LOAD) TIMES IMPORTANCE FACTOR EQUALS 43.5 P.S.F. SPECIFIED ROOF LIVE LOAD

ALLOWABLE DEFL.(LL)= L/360 (1.49")
CALCULATED VERT. DEFL.(LL) = L/ 999 (0.25")
ALLOWABLE DEFL.(TL)= L/180 (2.99")
CALCULATED VERT. DEFL.(TL) = L/ 999 (0.34")

CSI: TC=0.69/1.00 (I-K:3) , BC=0.80/1.00 (N-O:1) , WB=0.76/1.00 (C-X:1) , SSI=0.39/1.00 (F-G:2)

DOL LUMBER=1.00 NAIL=1.00 LS BEND=1.10 COMP=1.10 SHEAR=1.10 TENS= 1.10

SNOW LOAD IMPORTANCE FACTOR = 1.00
WIND LOAD IMPORTANCE FACTOR = 1.00
LIVE LOAD IMPORTANCE FACTOR = 1.00
COMPANION LIVE LOAD FACTOR = 1.00

AUTOSOLVE HEELS OFF

TRUSS PLATE MANUFACTURER IS NOT RESPONSIBLE FOR QUALITY CONTROL IN THE TRUSS MANUFACTURING PLANT .

NAIL VALUES

PLATE	GRIP(DRY) (PSI) MAX	MIN	SHEAR (PLI) MAX	MIN	SECTION (PLI) MAX	MIN
MT20	650	371	1747	788	1987	1873
MT18HS	586	403	2455	1382	3163	3004

PLATE PLACEMENT TOL. = 0.250 inches

PLATE ROTATION TOL. = 5.0 Deg.

JSI GRIP= 0.88 (H) (INPUT = 0.90)
JSI METAL= 0.91 (B) (INPUT = 0.95)

CONTINUED ON PAGE 2

NOTES- (1)

1) Lateral braces to be a minimum of 2X4 SPF #2.

WIND LOAD APPLIED IS DERIVED FROM REFERENCE VELOCITY PRESSURE OF { 7.5} PSF AT {40-0-0} FT-IN-SX REFERENCE HEIGHT ABOVE GRADE AND USING EXTERNAL PEAK COEFFICIENTS, CpCg, BASED ON THE {MAIN WIND FORCE RESISTING SYSTEM}.INTERNAL WIND PRESSURE IS BASED ON DESIGN {CATEGORY 2}. BUILDING MAY BE LOCATED ON {OPEN TERRAIN}, AND TRUSS IS DESIGNED TO BE LOCATED AT LEAST {0-0} FT-IN-SX AWAY FROM EAVE.TRUSS UPLIFT IS BASED ON TOP AND BOTTOM CHORD DEAD LOADS OF 5.0 PSF AND 5.0 PSF RESPECTIVELY.

LICENSED PROFESSIONAL ENGINEER
4/02/24
C. M. HEYENS
100505065
PROVINCE OF ONTARIO

STRUCTURAL COMPONENT ONLY
DWG # TR24040055

JOB NAME	TRUSS NAME	QUANTITY	PLY	JOB DESC.	DRWG NO.
436388	T30AG	2	1	BAYVIEW WELLINGTON TRUSS DESC.	

Tamarack Roof Truss, Burlington

Version 8.630 S Aug 30 2023 MiTek Industries, Inc. Tue Apr 2 11:31:53 2024 Page 1
ID:GRmvuh1dyQr3nydBfsTFcCy6OGl-DReN5PzfnZWATeavKqS 4Xe35tCOR62zwDeFPuzUnWK

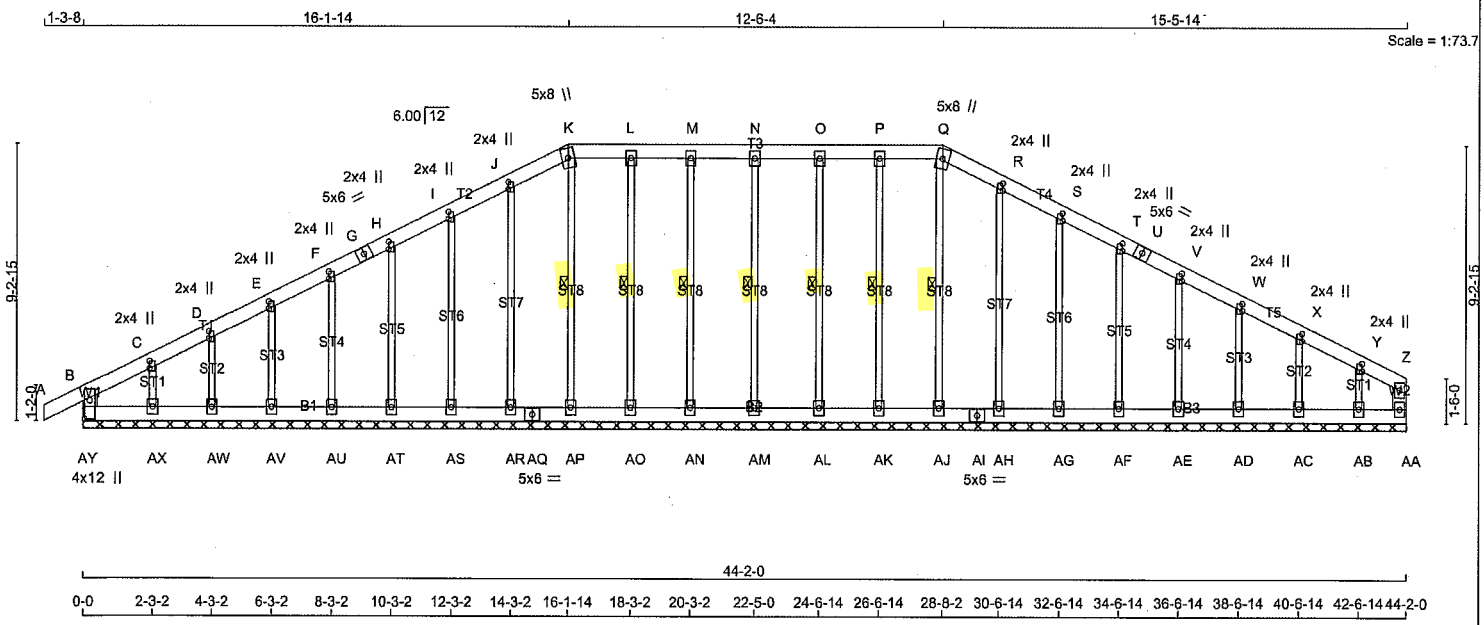

TOTAL WEIGHT = 2 X 268 = 536 lb

LUMBER
N. L. G. A. RULES

CHORDS	SIZE		LUMBER	DESCR.
A - G	2x6	DRY	No.2	SPF
G - K	2x6	DRY	No.2	SPF
K - Q	2x6	DRY	No.2	SPF
Q - U	2x6	DRY	No.2	SPF
U - Z	2x6	DRY	No.2	SPF
AY- B	2x6	DRY	No.2	SPF
AA- Z	2x6	DRY	No.2	SPF
AY- AQ	2x6	DRY	No.2	SPF
AQ- AI	2x6	DRY	No.2	SPF
AI - AA	2x6	DRY	No.2	SPF
ALL WEBS	2x3	DRY	No.2	SPF
ALL GABLE WEBS	2x3	DRY	No.2	SPF

DRY: SEASONED LUMBER.

GABLE STUDS SPACED AT 200-0-0 OC.

PLATES (table is in inches)

JT	TYPE	PLATES	W	LEN	Y	X
B						
C, E, F, W, X, Y						
C	TMW+w	MT20	2.0	4.0	2.75	
D, H, I, J, R, S, T, V						
D	TMW+w	MT20	2.0	4.0	3.00	
G	TS-t	MT20	5.0	6.0		
K	TTW+m	MT20	5.0	8.0		
L, M, N, O, P						
L	TMW+w	MT20	4.0	6.0		
Q	TTW+m	MT20	5.0	8.0		
U	TS-t	MT20	5.0	6.0		
Z	TMV+p	MT20	4.0	6.0		
AA	BMV1+p	MT20	4.0	6.0		
AB, AC, AD, AE, AF, AG, AH, AJ, AK, AL, AM, AN, AO, AP, AR, AS, AT, AU, AV, AW, AX						
AB	BMW1+w	MT20	4.0	6.0		
AI	BS-t	MT20	5.0	6.0		
AQ	BS-t	MT20	5.0	6.0		
AY						
AY	TMBMV1+p	MT20	4.0	12.0	7.50	2.00

NOTES- (1)
1)

LICENSED PROFESSIONAL ENGINEER
4/02/24
C. M. HEYENS
100505065
PROVINCE OF ONTARIO

STRUCTURAL COMPONENT ONLY
DWG # TR24040056

DIMENSIONS, SUPPORTS AND LOADINGS SPECIFIED BY FABRICATOR TO BE VERIFIED BY BUILDING DESIGNER

BEARINGS

THIS TRUSS DESIGNED FOR CONTINUOUS BEARINGS.

BEARING MATERIAL TO BE SPF NO.2 OR BETTER AT JOINT(S)

BRACING
FOR SECTION K-Q, MAX. PURLIN SPACING = 2.00 FT.
FOR OTHER SECTIONS, TOP CHORD TO BE SHEATHED OR MAX. PURLIN SPACING = 6.25 FT.
MAX. UNBRACED BOTTOM CHORD LENGTH = 10.00 FT OR RIGID CEILING DIRECTLY APPLIED.

ALL PITCH BREAKS AND PERIMETER CORNER JOINTS MUST BE LATERALLY RESTRAINED.

1 LATERAL BRACE(S) AT 1/ 2 LENGTH OF Q-AJ, K-AP, L-AO, M-AN, O-AL, P-AK, N-AM.

END VERTICAL(S) MUST BE SHEATHED OR HAVE BRACES AS INDICATED IN THE MAX. UNBRACED LENGTH COLUMN OF THE TABLE BELOW

LOADING
TOTAL LOAD CASES: (4)

CHORDS

MEMB. FR-TO	MAX. FACTORED FORCE (LBS)	FACTORED VERT. LOAD LC1 (PLF) FROM	TO	MAX CSI (LC)	MAX. UNBRAC LENGTH
A- B	0 / 35	-112.4	-112.4	0.08 (1)	10.00
B- C	-75 / 0	-112.4	-112.4	0.04 (1)	6.25
C- D	-58 / 0	-112.4	-112.4	0.03 (1)	6.25
D- E	-49 / 0	-112.4	-112.4	0.03 (1)	6.25
E- F	-42 / 0	-112.4	-112.4	0.03 (1)	6.25
F- G	-36 / 0	-112.4	-112.4	0.03 (1)	6.25
G- H	-36 / 0	-112.4	-112.4	0.03 (1)	6.25
H- I	-32 / 0	-112.4	-112.4	0.03 (1)	6.25
I- J	-28 / 0	-112.4	-112.4	0.03 (1)	6.25
J- K	-24 / 0	-112.4	-112.4	0.03 (1)	6.25
K- L	-20 / 0	-122.4	-122.4	0.03 (1)	2.00
L- M	-20 / 0	-122.4	-122.4	0.03 (1)	2.00
M- N	-20 / 0	-122.4	-122.4	0.03 (1)	2.00
N- O	-20 / 0	-122.4	-122.4	0.03 (1)	2.00
O- P	-20 / 0	-122.4	-122.4	0.03 (1)	2.00
P- Q	-20 / 0	-122.4	-122.4	0.03 (1)	2.00
Q- R	-24 / 0	-112.4	-112.4	0.03 (1)	6.25
R- S	-28 / 0	-112.4	-112.4	0.03 (1)	6.25
S- T	-32 / 0	-112.4	-112.4	0.03 (1)	6.25
T- U	-36 / 0	-112.4	-112.4	0.03 (1)	6.25
U- V	-36 / 0	-112.4	-112.4	0.03 (1)	6.25
V- W	-42 / 0	-112.4	-112.4	0.03 (1)	6.25
W- X	-49 / 0	-112.4	-112.4	0.03 (1)	6.25
X- Y	-55 / 0	-112.4	-112.4	0.03 (1)	6.25
Y- Z	-73 / 0	-112.4	-112.4	0.03 (1)	6.25
AY- B	-317 / 0	0.0	0.0	0.02 (1)	7.81
AA- Z	-123 / 0	0.0	0.0	0.03 (1)	7.81
AY-AX	0 / 64	-18.5	-18.5	0.02 (1)	10.00
AX-AW	0 / 52	-18.5	-18.5	0.01 (4)	10.00
AW-AV	0 / 43	-18.5	-18.5	0.01 (1)	10.00
AV-AU	0 / 37	-18.5	-18.5	0.01 (4)	10.00
AU-AT	0 / 33	-18.5	-18.5	0.01 (4)	10.00
AT-AS	0 / 29	-18.5	-18.5	0.01 (4)	10.00
AS-AR	0 / 25	-18.5	-18.5	0.01 (4)	10.00
AR-AQ	0 / 22	-18.5	-18.5	0.01 (4)	10.00
AQ-AP	0 / 22	-18.5	-18.5	0.01 (4)	10.00
AP-AO	0 / 20	-18.5	-18.5	0.01 (4)	10.00
AO-AN	0 / 20	-18.5	-18.5	0.01 (4)	10.00
AN-AM	0 / 20	-18.5	-18.5	0.01 (4)	10.00
AM-AL	0 / 20	-18.5	-18.5	0.01 (4)	10.00
AL-AK	0 / 20	-18.5	-18.5	0.01 (4)	10.00
AK-AJ	0 / 20	-18.5	-18.5	0.01 (4)	10.00
AJ-AI	0 / 22	-18.5	-18.5	0.01 (4)	10.00
AI-AH	0 / 22	-18.5	-18.5	0.01 (4)	10.00
AH-AG	0 / 25	-18.5	-18.5	0.01 (4)	10.00

WEBS

MEMB. FR-TO	MAX. FACTORED FORCE (LBS)	MAX CSI (LC)
AJ- Q	-231 / 0	0.12 (1)
AH- R	-222 / 0	0.27 (1)
AG- S	-223 / 0	0.18 (1)
AP- K	-231 / 0	0.12 (1)
AO- L	-250 / 0	0.13 (1)
AN- M	-255 / 0	0.13 (1)
AL- O	-255 / 0	0.13 (1)
AK- P	-250 / 0	0.13 (1)
AM- N	-266 / 0	0.14 (1)
AR- J	-222 / 0	0.27 (1)
AS- I	-223 / 0	0.18 (1)
AT- H	-223 / 0	0.12 (1)
AU- F	-223 / 0	0.08 (1)
AV- E	-222 / 0	0.05 (1)
AW- D	-221 / 0	0.04 (1)
AX- C	-221 / 0	0.03 (1)
AB- Y	-177 / 0	0.03 (1)
AC- X	-228 / 0	0.04 (1)
AD- W	-221 / 0	0.05 (1)
AE- V	-223 / 0	0.08 (1)
AF- T	-223 / 0	0.12 (1)

DESIGN CRITERIA

SPECIFIED LOADS:

TOP CH.	LL	=	32.5	PSF
	DL	=	6.0	PSF
BOT CH.	LL	=	0.0	PSF
	DL	=	7.4	PSF
TOTAL LOAD		=	45.9	PSF

SPACING = 24.0 IN. C/C

LOADING IN FLAT SECTION BASED ON PIGGYBACK TRUSS WITH SLOPES OF 6.00/12 AND -6.00/12 AND RESPECTIVE HEEL HEIGHTS OF 0-0 AND 0-0 AND AN ADDITIONAL DEAD LOAD OF 4.0 P.S.F.

THIS TRUSS IS DESIGNED FOR RESIDENTIAL OR SMALL BUILDING REQUIREMENTS OF PART 9, NBCC 2015

THIS DESIGN COMPLIES WITH:
- PART 9 OF BCBC 2018 , NBC-2019AE
- PART 9 OF OBC 2012 (2019 AMENDMENT)
- CSA 086-14
- TPIC 2014

DESIGN ASSUMPTIONS
-OVERHANG NOT TO BE ALTERED OR CUT OFF.

(55 % OF 43.9 P.S.F. G.S.L. PLUS 8.4 P.S.F. RAIN LOAD) EQUALS 32.5 P.S.F. SPECIFIED ROOF LIVE LOAD

CSI: TC=0.08/1.00 (A-B:1) , BC=0.02/1.00 (AA-AB:1) , WB=0.27/1.00 (R-AH:1) , SSI=0.08/1.00 (A-B:1)

DOL LUMBER=1.00 NAIL=1.00 LS BEND=1.10 COMP=1.10 SHEAR=1.10 TENS= 1.10

COMPANION LIVE LOAD FACTOR = 1.00

AUTOSOLVE HEELS OFF

TRUSS PLATE MANUFACTURER IS NOT RESPONSIBLE FOR QUALITY CONTROL IN THE TRUSS MANUFACTURING PLANT .

NAIL VALUES

PLATE	GRIP(DRY) (PSI) MAX	MIN	SHEAR (PLI) MAX	MIN	SECTION (PLI) MAX	MIN
MT20	650	371	1747	788	1987	1873

PLATE PLACEMENT TOL. = 0.250 inches

PLATE ROTATION TOL. = 5.0 Deg.

JSI GRIP= 0.35 (Y) (INPUT = 0.90)
JSI METAL= 0.09 (X) (INPUT = 0.95)

CONTINUED ON PAGE 2

JOB NAME	TRUSS NAME	QUANTITY	PLY	JOB DESC.	DRWG NO.
436388	T30AG	2	1	BAYVIEW WELLINGTON TRUSS DESC.	

Tamarack Roof Truss, Burlington

NOTES-
1) Lateral braces to be a minimum of 2X4 SPF #2.

LOADING
TOTAL LOAD CASES: (4)

CHORDS

MEMB. FR-TO	MAX. FACTORED FORCE (LBS)	FACTORED VERT. LOAD LC1 (PLF) FROM	TO	MAX CSI (LC)	MAX. UNBRAC LENGTH
AG-AF	0 / 29	-18.5	-18.5	0.01 (4)	10.00
AF-AE	0 / 33	-18.5	-18.5	0.01 (4)	10.00
AE-AD	0 / 37	-18.5	-18.5	0.01 (1)	10.00
AD-AC	0 / 43	-18.5	-18.5	0.01 (1)	10.00
AC-AB	0 / 52	-18.5	-18.5	0.01 (1)	10.00
AB-AA	0 / 62	-18.5	-18.5	0.02 (1)	10.00

WEBS

MEMB. FR-TO	MAX. FACTORED FORCE (LBS)	MAX CSI (LC)

LICENSED PROFESSIONAL ENGINEER
4/02/24
C. M. HEYENS
100505065
PROVINCE OF ONTARIO

STRUCTURAL COMPONENT ONLY
DWG # TR24040056

JOB NAME	TRUSS NAME	QUANTITY	PLY	JOB DESC.	DRWG NO.
436388	T30G	2	1	BAYVIEW WELLINGTON TRUSS DESC.	

Tamarack Roof Truss, Burlington

Version 8.630 S Aug 30 2023 MiTek Industries, Inc. Tue Apr 2 11:31:55 2024 Page 1
ID:GRmvuh1dyQr3nydBfsTFcCy6OGl-Aqm7W5?vJAmujykISFUSAykPbgtyv0YGOX7LTmzUnWI

1-3-8 | 16-1-14 | 12-6-4 | 16-1-14 | 1-3-8

Scale = 1:75.8

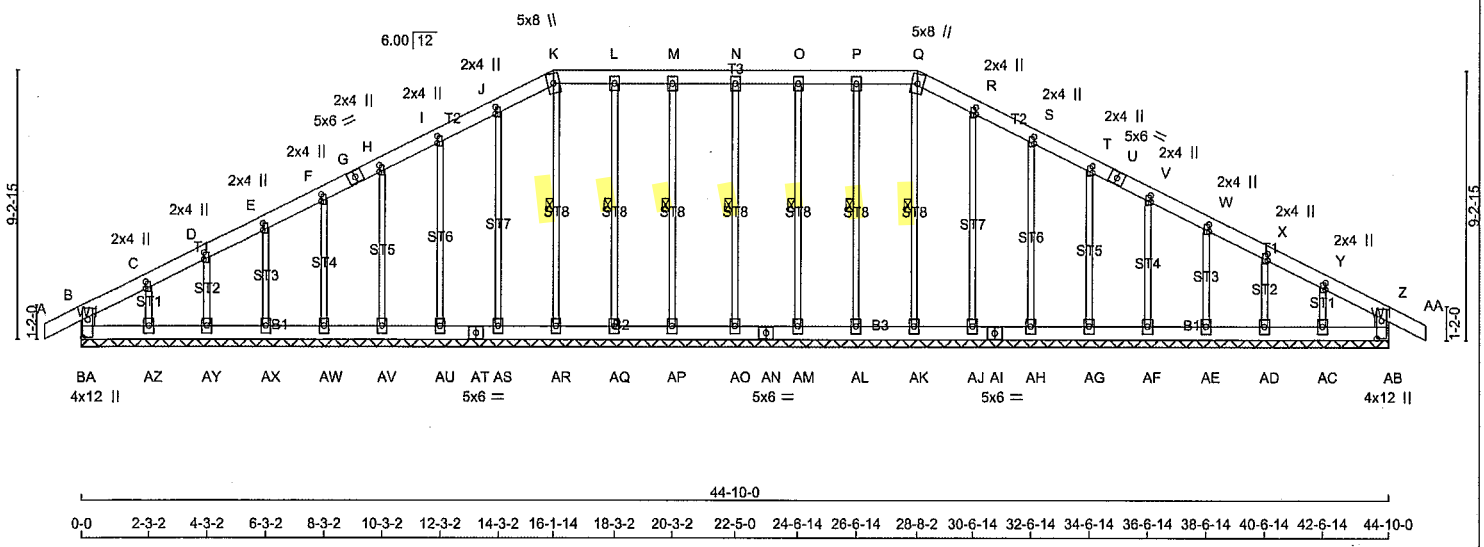

TOTAL WEIGHT = 2 X 272 = 545 lb

[M]

LUMBER
N. L. G. A. RULES

CHORDS	SIZE		LUMBER	DESCR.
A - G	2x6	DRY	No.2	SPF
G - K	2x6	DRY	No.2	SPF
K - Q	2x6	DRY	No.2	SPF
Q - U	2x6	DRY	No.2	SPF
U - AA	2x6	DRY	No.2	SPF
BA- B	2x6	DRY	No.2	SPF
AB- Z	2x6	DRY	No.2	SPF
BA- AT	2x6	DRY	No.2	SPF
AT- AN	2x6	DRY	No.2	SPF
AN- AI	2x6	DRY	No.2	SPF
AI - AB	2x6	DRY	No.2	SPF
ALL WEBS	2x3	DRY	No.2	SPF
ALL GABLE WEBS	2x3	DRY	No.2	SPF

DRY: SEASONED LUMBER.

GABLE STUDS SPACED AT 20000-0-0 OC.

PLATES (table is in inches)

JT	TYPE	PLATES	W	LEN	Y	X
B, Z, AB, BA						
B						
C, E, F, X, Y						
C	TMW+w	MT20	2.0	4.0	2.75	
D, H, I, J, R, S, T, V, W						
D	TMW+w	MT20	2.0	4.0	3.00	
G	TS-t	MT20	5.0	6.0		
K	TTW+m	MT20	5.0	8.0		
L, M, N, O, P						
L	TMW+w	MT20	4.0	6.0		
Q	TTW+m	MT20	5.0	8.0		
U	TS-t	MT20	5.0	6.0		
AB	TMBMV1+p	MT20	4.0	12.0	7.25	2.00
AC, AD, AE, AF, AG, AH, AJ, AK, AL, AM, AO, AP, AQ, AR, AS, AU, AV, AW, AX, AY, AZ						
AC	BMW1+w	MT20	4.0	6.0		
AI, AN, AT						
AI	BS-t	MT20	5.0	6.0		
BA	TMBMV1+p	MT20	4.0	12.0	7.25	2.00

NOTES- (1)
1)

LICENSED PROFESSIONAL ENGINEER
4/02/24
C. M. HEYENS
100505065
PROVINCE OF ONTARIO

STRUCTURAL COMPONENT ONLY
DWG # TR24040057

DIMENSIONS, SUPPORTS AND LOADINGS SPECIFIED BY FABRICATOR TO BE VERIFIED BY BUILDING DESIGNER

BEARINGS

THIS TRUSS DESIGNED FOR CONTINUOUS BEARINGS.

BEARING MATERIAL TO BE SPF NO.2 OR BETTER AT JOINT(S)

BRACING
FOR SECTION K-Q, MAX. PURLIN SPACING = 2.00 FT.
FOR OTHER SECTIONS, TOP CHORD TO BE SHEATHED OR MAX. PURLIN SPACING = 6.25 FT.
MAX. UNBRACED BOTTOM CHORD LENGTH = 10.00 FT OR RIGID CEILING DIRECTLY APPLIED.

ALL PITCH BREAKS AND PERIMETER CORNER JOINTS MUST BE LATERALLY RESTRAINED.

1 LATERAL BRACE(S) AT 1/ 2 LENGTH OF Q-AK, K-AR, L-AQ, M-AP, O-AM, P-AL, N-AO.

END VERTICAL(S) MUST BE SHEATHED OR HAVE BRACES AS INDICATED IN THE MAX. UNBRACED LENGTH COLUMN OF THE TABLE BELOW

LOADING
TOTAL LOAD CASES: (4)

CHORDS

MEMB. FR-TO	MAX. FACTORED FORCE (LBS)	FACTORED VERT. LOAD LC1 (PLF) FROM	TO	MAX CSI (LC)	MAX. UNBRAC LENGTH
A- B	0 / 35	-112.4	-112.4	0.08 (1)	10.00
B- C	-79 / 0	-112.4	-112.4	0.04 (1)	6.25
C- D	-61 / 0	-112.4	-112.4	0.03 (1)	6.25
D- E	-52 / 0	-112.4	-112.4	0.03 (1)	6.25
E- F	-45 / 0	-112.4	-112.4	0.03 (1)	6.25
F- G	-40 / 0	-112.4	-112.4	0.03 (1)	6.25
G- H	-40 / 0	-112.4	-112.4	0.03 (1)	6.25
H- I	-36 / 0	-112.4	-112.4	0.03 (1)	6.25
I- J	-32 / 0	-112.4	-112.4	0.03 (1)	6.25
J- K	-28 / 0	-112.4	-112.4	0.03 (1)	6.25
K- L	-23 / 0	-122.4	-122.4	0.03 (1)	2.00
L- M	-23 / 0	-122.4	-122.4	0.03 (1)	2.00
M- N	-23 / 0	-122.4	-122.4	0.03 (1)	2.00
N- O	-23 / 0	-122.4	-122.4	0.03 (1)	2.00
O- P	-23 / 0	-122.4	-122.4	0.03 (1)	2.00
P- Q	-23 / 0	-122.4	-122.4	0.03 (1)	2.00
Q- R	-28 / 0	-112.4	-112.4	0.03 (1)	6.25
R- S	-32 / 0	-112.4	-112.4	0.03 (1)	6.25
S- T	-36 / 0	-112.4	-112.4	0.03 (1)	6.25
T- U	-40 / 0	-112.4	-112.4	0.03 (1)	6.25
U- V	-40 / 0	-112.4	-112.4	0.03 (1)	6.25
V- W	-45 / 0	-112.4	-112.4	0.03 (1)	6.25
W- X	-52 / 0	-112.4	-112.4	0.03 (1)	6.25
X- Y	-61 / 0	-112.4	-112.4	0.03 (1)	6.25
Y- Z	-79 / 0	-112.4	-112.4	0.04 (1)	6.25
Z-AA	0 / 35	-112.4	-112.4	0.08 (1)	10.00
BA- B	-319 / 0	0.0	0.0	0.02 (1)	7.81
AB- Z	-319 / 0	0.0	0.0	0.02 (1)	7.81
BA-AZ	0 / 68	-18.5	-18.5	0.02 (1)	10.00
AZ-AY	0 / 55	-18.5	-18.5	0.01 (1)	10.00
AY-AX	0 / 47	-18.5	-18.5	0.01 (1)	10.00
AX-AW	0 / 41	-18.5	-18.5	0.01 (1)	10.00
AW-AV	0 / 36	-18.5	-18.5	0.01 (4)	10.00
AV-AU	0 / 32	-18.5	-18.5	0.01 (4)	10.00
AU-AT	0 / 29	-18.5	-18.5	0.01 (4)	10.00
AT-AS	0 / 29	-18.5	-18.5	0.01 (4)	10.00
AS-AR	0 / 26	-18.5	-18.5	0.01 (4)	10.00
AR-AQ	0 / 23	-18.5	-18.5	0.01 (4)	10.00
AQ-AP	0 / 23	-18.5	-18.5	0.01 (4)	10.00
AP-AO	0 / 23	-18.5	-18.5	0.01 (4)	10.00
AO-AN	0 / 23	-18.5	-18.5	0.01 (4)	10.00
AN-AM	0 / 23	-18.5	-18.5	0.01 (4)	10.00
AM-AL	0 / 23	-18.5	-18.5	0.01 (4)	10.00
AL-AK	0 / 23	-18.5	-18.5	0.01 (4)	10.00
AK-AJ	0 / 26	-18.5	-18.5	0.01 (4)	10.00

WEBS

MEMB. FR-TO	MAX. FACTORED FORCE (LBS)	MAX CSI (LC)
AK- Q	-229 / 0	0.12 (1)
AR- K	-229 / 0	0.12 (1)
AQ- L	-250 / 0	0.13 (1)
AP- M	-255 / 0	0.13 (1)
AM- O	-255 / 0	0.13 (1)
AL- P	-250 / 0	0.13 (1)
AS- J	-222 / 0	0.27 (1)
AU- I	-223 / 0	0.18 (1)
AZ- C	-221 / 0	0.03 (1)
AY- D	-221 / 0	0.04 (1)
AX- E	-222 / 0	0.05 (1)
AW- F	-223 / 0	0.08 (1)
AV- H	-223 / 0	0.12 (1)
AJ- R	-222 / 0	0.27 (1)
AH- S	-223 / 0	0.18 (1)
AG- T	-223 / 0	0.12 (1)
AF- V	-223 / 0	0.08 (1)
AE- W	-222 / 0	0.05 (1)
AD- X	-221 / 0	0.04 (1)
AC- Y	-221 / 0	0.03 (1)
AO- N	-266 / 0	0.14 (1)

DESIGN CRITERIA

SPECIFIED LOADS:

TOP CH.	LL	=	32.5	PSF
	DL	=	6.0	PSF
BOT CH.	LL	=	0.0	PSF
	DL	=	7.4	PSF
TOTAL LOAD		=	45.9	PSF

SPACING = 24.0 IN. C/C

LOADING IN FLAT SECTION BASED ON PIGGYBACK TRUSS WITH SLOPES OF 6.00/12 AND -6.00/12 AND RESPECTIVE HEEL HEIGHTS OF 0-0 AND 0-0 AND AN ADDITIONAL DEAD LOAD OF 4.0 P.S.F.

THIS TRUSS IS DESIGNED FOR RESIDENTIAL OR SMALL BUILDING REQUIREMENTS OF PART 9, NBCC 2015

THIS DESIGN COMPLIES WITH:
- PART 9 OF BCBC 2018 , NBC-2019AE
- PART 9 OF OBC 2012 (2019 AMENDMENT)
- CSA 086-14
- TPIC 2014

DESIGN ASSUMPTIONS
-OVERHANG NOT TO BE ALTERED OR CUT OFF.

(55 % OF 43.9 P.S.F. G.S.L. PLUS 8.4 P.S.F. RAIN LOAD) EQUALS 32.5 P.S.F. SPECIFIED ROOF LIVE LOAD

CSI: TC=0.08/1.00 (A-B:1) , BC=0.02/1.00 (AB-AC:1) , WB=0.27/1.00 (J-AS:1) , SSI=0.08/1.00 (A-B:1)

DOL LUMBER=1.00 NAIL=1.00 LS BEND=1.10 COMP=1.10 SHEAR=1.10 TENS= 1.10

COMPANION LIVE LOAD FACTOR = 1.00

AUTOSOLVE HEELS OFF

TRUSS PLATE MANUFACTURER IS NOT RESPONSIBLE FOR QUALITY CONTROL IN THE TRUSS MANUFACTURING PLANT .

NAIL VALUES

PLATE	GRIP(DRY) (PSI) MAX	MIN	SHEAR (PLI) MAX	MIN	SECTION (PLI) MAX	MIN
MT20	650	371	1747	788	1987	1873

PLATE PLACEMENT TOL. = 0.250 inches

PLATE ROTATION TOL. = 5.0 Deg.

JSI GRIP= 0.34 (R) (INPUT = 0.90)
JSI METAL= 0.09 (BA) (INPUT = 0.95)

CONTINUED ON PAGE 2

JOB NAME	TRUSS NAME	QUANTITY	PLY	JOB DESC.	DRWG NO.
436388	T30G	2	1	BAYVIEW WELLINGTON TRUSS DESC.	

NOTES-
1) Lateral braces to be a minimum of 2X4 SPF #2.

LOADING
TOTAL LOAD CASES: (4)

CHORDS

MEMB. FR-TO	MAX. FACTORED FORCE (LBS)	FACTORED VERT. LOAD LC1 (PLF) FROM	TO	MAX CSI (LC)	MAX. UNBRAC LENGTH
AJ-AI	0 / 29	-18.5	-18.5	0.01 (4)	10.00
AI-AH	0 / 29	-18.5	-18.5	0.01 (4)	10.00
AH-AG	0 / 32	-18.5	-18.5	0.01 (4)	10.00
AG-AF	0 / 36	-18.5	-18.5	0.01 (4)	10.00
AF-AE	0 / 41	-18.5	-18.5	0.01 (1)	10.00
AE-AD	0 / 47	-18.5	-18.5	0.01 (1)	10.00
AD-AC	0 / 55	-18.5	-18.5	0.01 (1)	10.00
AC-AB	0 / 68	-18.5	-18.5	0.02 (1)	10.00

WEBS

MEMB. FR-TO	MAX. FACTORED FORCE (LBS)	MAX CSI (LC)

LICENSED PROFESSIONAL ENGINEER
4/02/24
C. M. HEYENS
100505065
PROVINCE OF ONTARIO

STRUCTURAL COMPONENT ONLY
DWG # TR24040057

JOB NAME	TRUSS NAME	QUANTITY	PLY	JOB DESC.	DRWG NO.
436388	T30X	4	1	BAYVIEW WELLINGTON TRUSS DESC.	

Tamarack Roof Truss, Burlington

Version 8.630 S Aug 30 2023 MiTek Industries, Inc. Tue Apr 2 10:54:05 2024 Page 1
ID:GRmvuh1dyQr3nydBfsTFcCy6OGl-d6bz5uX0ujnzN5C0TVm8AGjKkd192IG8PMEEoLzUo3m

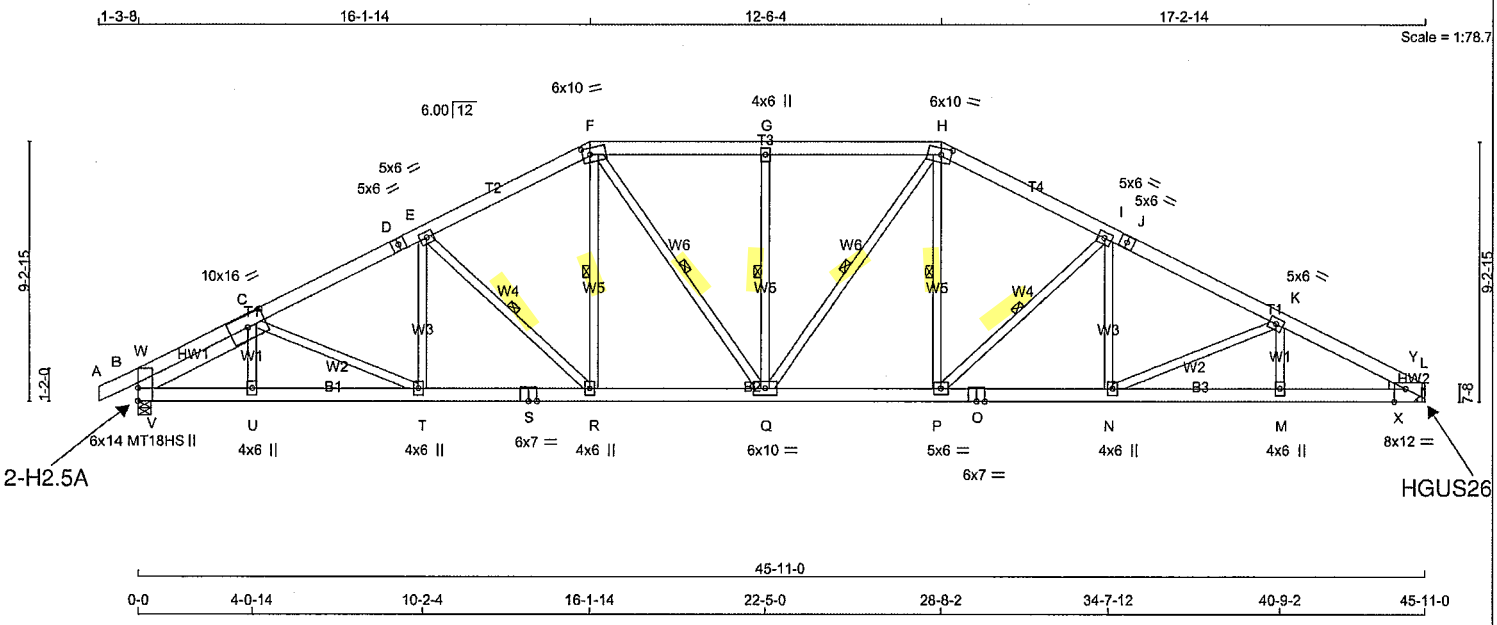

TOTAL WEIGHT = 4 X 285 = 1141 lb

LUMBER
N. L. G. A. RULES

CHORDS	SIZE		LUMBER	DESCR.
A - D	2x6	DRY	No.2	SPF
D - F	2x6	DRY	No.2	SPF
F - H	2x6	DRY	No.2	SPF
H - J	2x6	DRY	No.2	SPF
J - L	2x6	DRY	No.2	SPF
B - S	2x6	DRY	2100F 1.8E	SPF
S - O	2x6	DRY	2100F 1.8E	SPF
O - L	2x6	DRY	2100F 1.8E	SPF

REINFORCING MEMBERS

HW1	2x6	DRY	No.2	SPF
ALL WEBS	2x4	DRY	No.2	SPF

DRY: SEASONED LUMBER.

PLATES (table is in inches)

JT	TYPE	PLATES	W	LEN	Y	X
B	TMBMW1m	MT18HS	6.0	14.0		5.50
C	TMWWW-t	MT20	10.0	16.0	5.00	8.00
D	TS-t	MT20	5.0	6.0		
E, I, K						
E	TMWW-t	MT20	5.0	6.0		
F	TTWW-m	MT20	6.0	10.0	2.75	3.25
G	TMW+w	MT20	4.0	6.0		
H	TTWW-m	MT20	6.0	10.0	2.75	4.25
J	TS-t	MT20	5.0	6.0		
L	TMBH1-I	MT20	8.0	12.0	Edge	4.75
M	BMW+w	MT20	4.0	6.0		
N, R, T						
N	BMWW+t	MT20	4.0	6.0		
O	BS-t	MT20	6.0	7.0		
P	BMWW-t	MT20	5.0	6.0		
Q	BMWWW-t	MT20	6.0	10.0		
S	BS-t	MT20	6.0	7.0		
U	BMW+w	MT20	4.0	6.0		

Edge - INDICATES REFERENCE CORNER OF PLATE TOUCHES EDGE OF CHORD.

NOTES- (1)
1) Lateral braces to be a minimum of 2X4 SPF #2.

LICENSED PROFESSIONAL ENGINEER
4/02/24
C. M. HEYENS
100505065
PROVINCE OF ONTARIO

STRUCTURAL COMPONENT ONLY
DWG # TR24040058

DIMENSIONS, SUPPORTS AND LOADINGS SPECIFIED BY FABRICATOR TO BE VERIFIED BY BUILDING DESIGNER

BEARINGS

JT	FACTORED GROSS REACTION VERT	HORZ	MAXIMUM FACTORED GROSS REACTION DOWN	HORZ	UPLIFT	INPUT BRG IN-SX	REQRD BRG IN-SX	HEEL WEDGE
B	4510	0	4510	193	-747	5-8	4-14	
L	4304	0	4304	0	-712	MECHANICAL		2x4 R

A SUITABLE HANGER/MECHANICAL CONNECTION IS REQUIRED AT JOINT L. MINIMUM BEARING LENGTH AT JOINT L = 3-13.

PROVIDE ANCHORAGE AT BEARING JOINT B FOR 747 LBS FACTORED UPLIFT
PROVIDE ANCHORAGE AT BEARING JOINT L FOR 712 LBS FACTORED UPLIFT

PROVIDE FOR 193 LBS FACTORED HORIZONTAL REACTION AT JOINT B

UNFACTORED REACTIONS

JT	1ST LCASE COMBINED	SNOW	MAX./MIN. COMPONENT REACTIONS LIVE	PERM.LIVE	WIND	DEAD	SOIL
B	3281	2116 / 0	482 / 0	0 / 0	106 / -870	683 / 0	0 / 0
L	3141	1995 / 0	482 / 0	0 / 0	121 / -835	664 / 0	0 / 0
HORIZONTAL REACTIONS							
B	---	0 / 0	0 / 0	0 / 0	138 / -137	0 / 0	0 /0

BEARING MATERIAL TO BE SPF NO.2 OR BETTER AT JOINT(S) B

BRACING
FOR SECTION F-H, MAX. UNBRACED TOP CHORD LENGTH = 2.00 FT.
FOR OTHER SECTIONS, MAX. UNBRACED TOP CHORD LENGTH = 2.67 FT.
MAX. UNBRACED BOTTOM CHORD LENGTH = 6.25 FT OR RIGID CEILING DIRECTLY APPLIED.

ALL PITCH BREAKS AND PERIMETER CORNER JOINTS MUST BE LATERALLY RESTRAINED.

1 LATERAL BRACE(S) AT 1/ 2 LENGTH OF E-R, F-R, F-Q, G-Q, H-Q, H-P, I-P.

LOADING
TOTAL LOAD CASES: (18)

CHORDS

MEMB. FR-TO	MAX. FACTORED FORCE (LBS)	FACTORED VERT. LOAD LC1 (PLF) FROM	TO	MAX CSI (LC)	MAX. UNBRAC LENGTH
A- B	0 / 1	-145.3	-145.3	0.11 (2)	10.00
B- W	-4911 / 761	-145.3	-145.3	0.29 (1)	3.73
W- C	-2778 / 522	-145.3	-145.3	0.21 (1)	4.82
C- D	-6727 / 1102	-145.3	-145.3	0.70 (2)	2.85
D- E	-6727 / 1102	-145.3	-145.3	0.70 (2)	2.85
E- F	-5838 / 983	-145.3	-145.3	0.61 (1)	3.14
F- G	-5768 / 957	-155.3	-155.3	0.69 (1)	2.00
G- H	-5768 / 957	-155.3	-155.3	0.69 (1)	2.00
H- I	-5995 / 1020	-145.3	-145.3	0.64 (1)	3.06
I- J	-7215 / 1191	-145.3	-145.3	0.76 (1)	2.69
J- K	-7215 / 1191	-145.3	-145.3	0.76 (1)	2.69
K- Y	-8082 / 1329	-145.3	-145.3	0.53 (1)	2.76
Y- L	-8451 / 1304	-145.3	-145.3	0.52 (1)	2.67
B- V	-560 / 2473	-39.5	-39.5	0.12 (1)	6.25
V- U	-1063 / 5946	-39.5	-39.5	0.32 (1)	6.25
U- T	-1065 / 5941	-39.5	-39.5	0.35 (1)	6.25
T- S	-943 / 6043	-39.5	-39.5	0.33 (1)	6.25
S- R	-943 / 6043	-39.5	-39.5	0.33 (1)	6.25
R- Q	-645 / 5199	-39.5	-39.5	0.29 (1)	6.25
Q- P	-509 / 5342	-39.5	-39.5	0.29 (1)	6.25
P- O	-832 / 6483	-39.5	-39.5	0.35 (1)	6.25
O- N	-832 / 6483	-39.5	-39.6	0.35 (1)	6.25
N- M	-1100 / 7215	-39.5	-39.5	0.45 (1)	6.25
M- X	-1100 / 7215	-39.5	-39.5	0.43 (1)	6.25
X- L	-1100 / 7215	-39.5	-39.5	0.41 (1)	6.25

WEBS

MEMB. FR-TO	MAX. FACTORED FORCE (LBS)	MAX CSI (LC)
U- C	0 / 245	0.04 (17)
C- T	-162 / 331	0.09 (2)
T- E	-15 / 359	0.06 (5)
E- R	-1469 / 416	0.48 (2)
R- F	-234 / 1256	0.20 (2)
F- Q	-254 / 1509	0.24 (3)
Q- G	-1178 / 225	0.43 (1)
Q- H	-302 / 1330	0.21 (2)
P- H	-279 / 1510	0.24 (3)
P- I	-1850 / 483	0.61 (3)
N- I	-68 / 708	0.11 (3)
N- K	-1022 / 293	0.58 (3)
M- K	-46 / 210	0.04 (17)
V- W	-332 / 2683	0.00 (1)
V- C	-4340 / 629	0.79 (1)
X- Y	0 / 388	0.00 (1)

[M]

DESIGN CRITERIA

SPECIFIED LOADS:

TOP CH.	LL	=	43.5	PSF
	DL	=	6.0	PSF
BOT CH.	LL	=	10.5	PSF
	DL	=	7.4	PSF
TOTAL LOAD		=	67.3	PSF

SPACING = 24.0 IN. C/C

LOADING IN FLAT SECTION BASED ON PIGGYBACK TRUSS WITH SLOPES OF 6.00/12 AND -6.00/12 AND RESPECTIVE HEEL HEIGHTS OF 0-0 AND 0-0 AND AN ADDITIONAL DEAD LOAD OF 4.0 P.S.F.

THIS TRUSS IS DESIGNED FOR COMMERCIAL OR INDUSTRIAL BUILDING REQUIREMENTS OF PART 4, NBCC 2015

THIS DESIGN COMPLIES WITH:
- PART 4 OF BCBC 2018 , NBC-2019AE
- PART 4 OF OBC 2012 (2019 AMENDMENT)
- CSA 086-14
- TPIC 2014

DESIGN ASSUMPTIONS
- SLOPE REDUCTION FACTOR NOT USED

(80 % OF 43.9 P.S.F. G.S.L. PLUS 8.4 P.S.F. RAIN LOAD) TIMES IMPORTANCE FACTOR EQUALS 43.5 P.S.F. SPECIFIED ROOF LIVE LOAD

ALLOWABLE DEFL.(LL)= L/360 (1.53")
CALCULATED VERT. DEFL.(LL) = L/ 999 (0.28")
ALLOWABLE DEFL.(TL)= L/180 (3.06")
CALCULATED VERT. DEFL.(TL) = L/ 999 (0.38")

CSI: TC=0.76/1.00 (I-K:1) , BC=0.45/1.00 (M-N:1) , WB=0.79/1.00 (C-V:1) , SSI=0.39/1.00 (F-G:2)

DOL LUMBER=1.00 NAIL=1.00 LS BEND=1.10 COMP=1.10 SHEAR=1.10 TENS= 1.10

SNOW LOAD IMPORTANCE FACTOR = 1.00
WIND LOAD IMPORTANCE FACTOR = 1.00
LIVE LOAD IMPORTANCE FACTOR = 1.00
COMPANION LIVE LOAD FACTOR = 1.00

TRUSS PLATE MANUFACTURER IS NOT RESPONSIBLE FOR QUALITY CONTROL IN THE TRUSS MANUFACTURING PLANT .

NAIL VALUES

PLATE	GRIP(DRY) (PSI) MAX	MIN	SHEAR (PLI) MAX	MIN	SECTION (PLI) MAX	MIN
MT20	650	371	1747	788	1987	1873
MT18HS	586	403	2455	1382	3163	3004

PLATE PLACEMENT TOL. = 0.250 inches

PLATE ROTATION TOL. = 5.0 Deg.

JSI GRIP= 0.89 (F) (INPUT = 0.90)
JSI METAL= 0.94 (B) (INPUT = 0.95)

CONTINUED ON PAGE 2

TRUSS HAS BEEN CHECKED FOR UNBALANCED LOADING
AS PER NBCC 4.1.6.2.(8)

WIND LOAD APPLIED IS DERIVED FROM REFERENCE VELOCITY PRESSURE OF { 7.5} PSF AT {40-0-0} FT-IN-SX REFERENCE HEIGHT ABOVE GRADE AND USING EXTERNAL PEAK COEFFICIENTS, CpCg, BASED ON THE {MAIN WIND FORCE RESISTING SYSTEM}.INTERNAL WIND PRESSURE IS BASED ON DESIGN {CATEGORY 2}. BUILDING MAY BE LOCATED ON {OPEN TERRAIN}, AND TRUSS IS DESIGNED TO BE LOCATED AT LEAST {0-0} FT-IN-SX AWAY FROM EAVE.TRUSS UPLIFT IS BASED ON TOP AND BOTTOM CHORD DEAD LOADS OF 5.0 PSF AND 5.0 PSF RESPECTIVELY.

LICENSED PROFESSIONAL ENGINEER
4/02/24
C. M. HEYENS
100505065
PROVINCE OF ONTARIO

STRUCTURAL COMPONENT ONLY
DWG # TR24040058

JOB NAME	TRUSS NAME	QUANTITY	PLY	JOB DESC.	DRWG NO.
436388	T31	1	1	BAYVIEW WELLINGTON TRUSS DESC.	

Tamarack Roof Truss, Burlington

Version 8.630 S Aug 30 2023 MiTek Industries, Inc. Tue Apr 2 10:54:07 2024 Page 1
ID:GRmvuh1dyQr3nydBfsTFcCy6OGl-aVjkWaYGQK1hdPLPawocFhogFRdPW8bRsgjLsDzUo3k

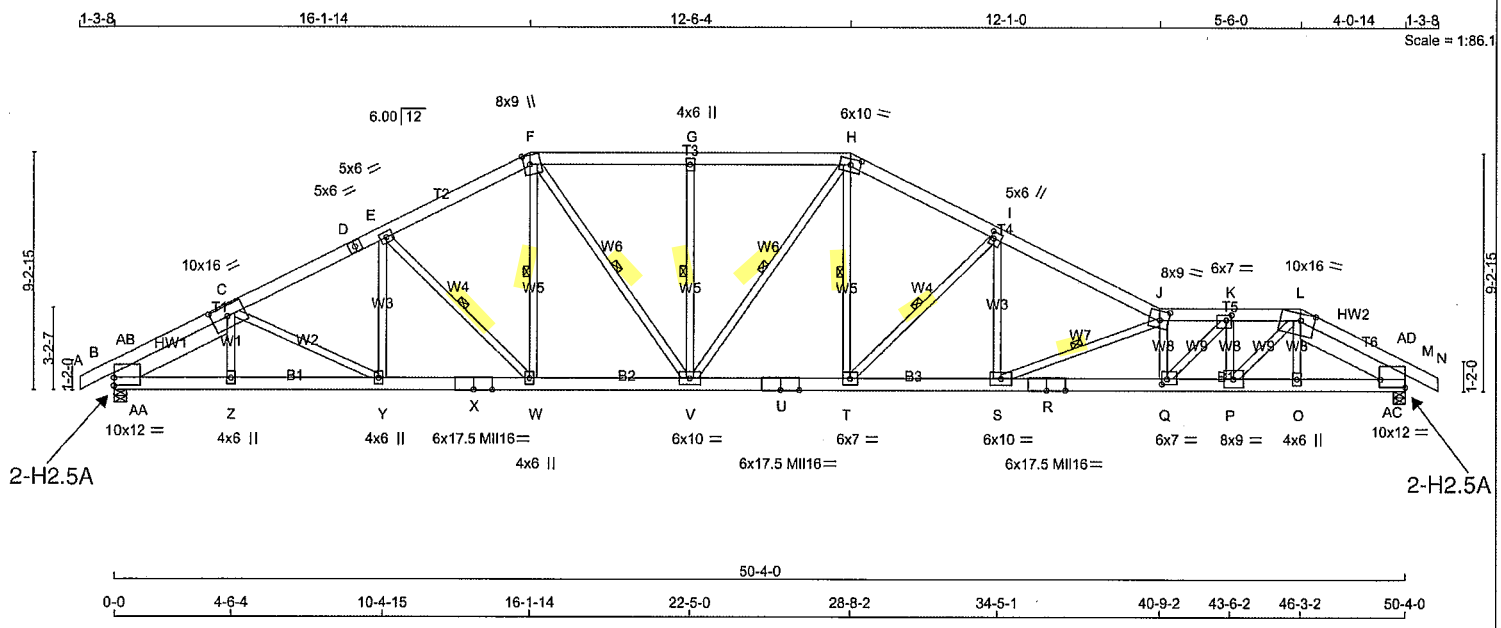

TOTAL WEIGHT = 331 lb

LUMBER

N. L. G. A. RULES

CHORDS	SIZE		LUMBER	DESCR.
A - D	2x6	DRY	No.2	SPF
D - F	2x6	DRY	No.2	SPF
F - H	2x6	DRY	No.2	SPF
H - J	2x6	DRY	2100F 1.8E	SPF
J - L	2x6	DRY	2100F 1.8E	SPF
L - N	2x6	DRY	No.2	SPF
B - X	2x6	DRY	2100F 1.8E	SPF
X - U	2x6	DRY	2100F 1.8E	SPF
U - R	2x6	DRY	2100F 1.8E	SPF
R - M	2x6	DRY	2100F 1.8E	SPF
REINFORCING MEMBERS				
HW1	2x8	DRY	No.2	SPF
HW2	2x8	DRY	No.2	SPF
ALL WEBS	2x4	DRY	No.2	SPF
EXCEPT				
E - W	2x4	DRY	2100F 1.8E	SPF
T - I	2x4	DRY	2100F 1.8E	SPF
S - J	2x4	DRY	2100F 1.8E	SPF

DRY: SEASONED LUMBER.

PLATES (table is in inches)

JT	TYPE	PLATES	W	LEN	Y	X
B	TMBMW1-I	MT20	10.0	12.0	3.75	
C	TMWWW-t	MT20	10.0	16.0	4.75	7.50
D	TS-t	MT20	5.0	6.0		
E	TMWW-t	MT20	5.0	6.0		
F	TTWW+m	MT20	8.0	9.0	4.25	3.00
G	TMW+w	MT20	4.0	6.0		
H	TTWW-m	MT20	6.0	10.0	2.75	4.75
I	TMWW+t	MT20	5.0	6.0	3.00	1.50
J	TTWW-m	MT20	8.0	9.0	4.50	4.00
K	TMWW-t	MT20	6.0	7.0	2.50	2.50
L	TTWWW-m	MT20	10.0	16.0	3.25	6.50
M	TMBMW1-I	MT20	10.0	12.0	3.75	Edge
O	BMW+w	MT20	4.0	6.0		
P	BMWW-t	MT20	8.0	9.0		
Q	BMWW-t	MT20	6.0	7.0	2.50	2.50
R, U, X						
R	BS-t	MII16	6.0	17.5		

LICENSED PROFESSIONAL ENGINEER
4/02/24
C. M. HEYENS
100505065
PROVINCE OF ONTARIO

STRUCTURAL COMPONENT ONLY
DWG # TR24040059

DIMENSIONS, SUPPORTS AND LOADINGS SPECIFIED BY FABRICATOR TO BE VERIFIED BY BUILDING DESIGNER

BEARINGS

JT	FACTORED GROSS REACTION VERT	HORZ	MAXIMUM FACTORED GROSS REACTION DOWN	HORZ	UPLIFT	INPUT BRG IN-SX	REQRD BRG IN-SX
B	4923	0	4923	193	-792	5-8	5-5
M	4910	0	4910	0	-863	5-8	5-5

PROVIDE ANCHORAGE AT BEARING JOINT B FOR 792 LBS FACTORED UPLIFT
PROVIDE ANCHORAGE AT BEARING JOINT M FOR 863 LBS FACTORED UPLIFT

PROVIDE FOR 193 LBS FACTORED HORIZONTAL REACTION AT JOINT B

UNFACTORED REACTIONS

MAX./MIN. COMPONENT REACTIONS

JT	1ST LCASE COMBINED	SNOW	LIVE	PERM.LIVE	WIND	DEAD	SOIL
B	3583	2308 / 0	528 / 0	0 / 0	106 / -934	747 / 0	0 / 0
M	3572	2308 / 0	529 / 0	0 / 0	138 / -977	736 / 0	0 / 0
HORIZONTAL REACTIONS							
B	---	0 / 0	0 / 0	0 / 0	138 / -138	0 / 0	0 /0

BEARING MATERIAL TO BE SPF NO.2 OR BETTER AT JOINT(S) B, M

BRACING

FOR SECTION F-H, MAX. UNBRACED TOP CHORD LENGTH = 2.00 FT.
FOR OTHER SECTIONS, MAX. UNBRACED TOP CHORD LENGTH = 2.69 FT.
MAX. UNBRACED BOTTOM CHORD LENGTH = 6.25 FT OR RIGID CEILING DIRECTLY APPLIED.

ALL PITCH BREAKS AND PERIMETER CORNER JOINTS MUST BE LATERALLY RESTRAINED.

1 LATERAL BRACE(S) AT 1/ 2 LENGTH OF E-W, F-W, F-V, G-V, H-V, H-T, I-T, J-S.

LOADING

TOTAL LOAD CASES: (18)

CHORDS

MEMB. FR-TO	MAX. FACTORED FORCE (LBS)	FACTORED VERT. LOAD LC1 (PLF) FROM	TO	MAX CSI (LC)	MAX. UNBRAC LENGTH
A- B	0 / 1	-145.3	-145.3	0.11 (2)	10.00
B-AB	-5498 / 839	-145.3	-145.3	0.24 (1)	3.61
AB- C	-3587 / 650	-145.3	-145.3	0.22 (2)	4.38
C- D	-7509 / 1190	-145.3	-145.3	0.71 (1)	2.69
D- E	-7509 / 1190	-145.3	-145.3	0.71 (1)	2.69
E- F	-6688 / 1081	-145.3	-145.3	0.63 (1)	2.92
F- G	-6824 / 1136	-155.3	-155.3	0.76 (1)	2.00
G- H	-6824 / 1136	-155.3	-155.3	0.76 (1)	2.00
H- I	-7487 / 1279	-145.3	-145.3	0.35 (3)	3.79
I- J	-9864 / 1635	-145.3	-145.3	0.45 (3)	3.29
J- K	-13085 / 2211	-145.3	-145.3	0.31 (1)	2.91
K- L	-10081 / 1768	-145.3	-145.3	0.21 (1)	3.40
L-AD	-3538 / 707	-145.3	-145.3	0.17 (3)	4.44
AD- M	-5359 / 897	-145.3	-145.3	0.22 (3)	3.64
M- N	0 / 1	-145.3	-145.3	0.11 (3)	10.00
B-AA	-666 / 3213	-39.5	-39.5	0.20 (1)	6.25
AA- Z	-1139 / 6683	-39.5	-39.5	0.38 (1)	6.25
Z- Y	-1140 / 6677	-39.5	-39.5	0.38 (1)	6.25
Y- X	-1012 / 6737	-39.5	-39.5	0.36 (1)	6.25
X- W	-1012 / 6737	-39.5	-39.5	0.36 (1)	6.25
W- V	-729 / 5960	-39.5	-39.5	0.33 (1)	6.25
V- U	-714 / 6691	-39.5	-39.5	0.35 (1)	6.25
U- T	-714 / 6691	-39.5	-39.5	0.35 (1)	6.25
T- S	-1234 / 8866	-39.5	-39.5	0.47 (1)	6.25
S- R	-2084 / 13255	-39.5	-39.5	0.78 (1)	6.25
R- Q	-2084 / 13255	-39.5	-39.5	0.78 (1)	6.25
Q- P	-1611 / 10081	-39.5	-39.5	0.62 (1)	6.25
P- O	-1021 / 6502	-39.5	-39.5	0.35 (1)	6.25
O-AC	-1020 / 6488	-39.5	-39.5	0.39 (1)	6.25
AC- M	-517 / 3142	-39.5	-39.5	0.23 (1)	6.25

WEBS

MEMB. FR-TO	MAX. FACTORED FORCE (LBS)	MAX CSI (LC)
Z- C	0 / 263	0.04 (17)
C- Y	-246 / 351	0.13 (2)
Y- E	-49 / 371	0.06 (5)
E- W	-1428 / 405	0.28 (2)
W- F	-235 / 1252	0.20 (2)
F- V	-340 / 1994	0.32 (3)
V- G	-1172 / 224	0.42 (1)
V- H	-755 / 1085	0.44 (3)
T- H	-474 / 2570	0.41 (3)
T- I	-3324 / 747	0.66 (3)
S- I	-322 / 2229	0.36 (3)
S- J	-4797 / 926	0.68 (3)
Q- J	-3197 / 557	0.39 (1)
O- L	-2 / 280	0.05 (4)
Q- K	-645 / 4364	0.70 (1)
P- K	-3383 / 583	0.41 (1)
P- L	-832 / 5044	0.81 (1)
L-AC	-4315 / 650	0.53 (1)
AA-AB	-286 / 2532	0.00 (1)
AA- C	-4376 / 597	0.68 (1)
AC-AD	-283 / 2419	0.00 (1)

[M]

DESIGN CRITERIA

SPECIFIED LOADS:

TOP CH.	LL	=	43.5	PSF
	DL	=	6.0	PSF
BOT CH.	LL	=	10.5	PSF
	DL	=	7.4	PSF
TOTAL LOAD		=	67.3	PSF

SPACING = 24.0 IN. C/C

LOADING IN HIGHEST FLAT SECTION BASED ON PIGGYBACK TRUSS WITH SLOPES OF 6.00/12 AND -6.00/12 AND RESPECTIVE HEEL HEIGHTS OF 0-0 AND 0-0 AND AN ADDITIONAL DEAD LOAD OF 4.0 P.S.F.

LOADING IN OTHER FLAT SECTIONS BASED ON A SLOPE OF 6.00/12

THIS TRUSS IS DESIGNED FOR COMMERCIAL OR INDUSTRIAL BUILDING REQUIREMENTS OF PART 4, NBCC 2015

THIS DESIGN COMPLIES WITH:
- PART 4 OF BCBC 2018 , NBC-2019AE
- PART 4 OF OBC 2012 (2019 AMENDMENT)
- CSA 086-14
- TPIC 2014

DESIGN ASSUMPTIONS
- SLOPE REDUCTION FACTOR NOT USED

(80 % OF 43.9 P.S.F. G.S.L. PLUS 8.4 P.S.F. RAIN LOAD) TIMES IMPORTANCE FACTOR EQUALS 43.5 P.S.F. SPECIFIED ROOF LIVE LOAD

ALLOWABLE DEFL.(LL)= L/360 (1.68")
CALCULATED VERT. DEFL.(LL) = L/ 999 (0.50")
ALLOWABLE DEFL.(TL)= L/180 (3.36")
CALCULATED VERT. DEFL.(TL) = L/ 895 (0.67")

CSI: TC=0.76/1.00 (G-H:1) , BC=0.78/1.00 (Q-S:1) , WB=0.81/1.00 (L-P:1) , SSI=0.39/1.00 (F-G:2)

DOL LUMBER=1.00 NAIL=1.00 LS BEND=1.10 COMP=1.10 SHEAR=1.10 TENS= 1.10

SNOW LOAD IMPORTANCE FACTOR = 1.00
WIND LOAD IMPORTANCE FACTOR = 1.00
LIVE LOAD IMPORTANCE FACTOR = 1.00
COMPANION LIVE LOAD FACTOR = 1.00

AUTOSOLVE HEELS OFF

TRUSS PLATE MANUFACTURER IS NOT RESPONSIBLE FOR QUALITY CONTROL IN THE TRUSS MANUFACTURING PLANT .

NAIL VALUES

PLATE	GRIP(DRY) (PSI) MAX	MIN	SHEAR (PLI) MAX	MIN	SECTION (PLI) MAX	MIN
MT20	650	371	1747	788	1987	1873
MII16	438	302	2547	1256	4283	1816

PLATE PLACEMENT TOL. = 0.250 Inches

PLATE ROTATION TOL. = 5.0 Deg.

CONTINUED ON PAGE 2

PLATES (table is in inches)

JT	TYPE	PLATES	W	LEN	Y	X
S	BMWW-t	MT20	6.0	10.0		
T	BMWW-t	MT20	6.0	7.0		
V	BMWWW-t	MT20	6.0	10.0		
W	BMWW+t	MT20	4.0	6.0		
Y	BMWW+t	MT20	4.0	6.0		
Z	BMW+w	MT20	4.0	6.0		

Edge - INDICATES REFERENCE CORNER OF PLATE TOUCHES EDGE OF CHORD.

NOTES- (1)
1) Lateral braces to be a minimum of 2X4 SPF #2.

TRUSS HAS BEEN CHECKED FOR UNBALANCED LOADING AS PER NBCC 4.1.6.2.(8)

WIND LOAD APPLIED IS DERIVED FROM REFERENCE VELOCITY PRESSURE OF (7.5) PSF AT {40-0-0} FT-IN-SX REFERENCE HEIGHT ABOVE GRADE AND USING EXTERNAL PEAK COEFFICIENTS, CpCg, BASED ON THE {MAIN WIND FORCE RESISTING SYSTEM}.INTERNAL WIND PRESSURE IS BASED ON DESIGN {CATEGORY 2}. BUILDING MAY BE LOCATED ON {OPEN TERRAIN}, AND TRUSS IS DESIGNED TO BE LOCATED AT LEAST {0-0} FT-IN-SX AWAY FROM EAVE.TRUSS UPLIFT IS BASED ON TOP AND BOTTOM CHORD DEAD LOADS OF 5.0 PSF AND 5.0 PSF RESPECTIVELY.

JSI GRIP= 0.88 (P) (INPUT = 0.90)
JSI METAL= 0.93 (R) (INPUT = 0.95)

LICENSED PROFESSIONAL ENGINEER
4/02/24
C. M. HEYENS
100505065
PROVINCE OF ONTARIO

STRUCTURAL COMPONENT ONLY
DWG # TR24040059

JOB NAME	TRUSS NAME	QUANTITY	PLY	JOB DESC.	DRWG NO.
436388	T32	1	1	BAYVIEW WELLINGTON TRUSS DESC.	

Tamarack Roof Truss, Burlington

Version 8.630 S Aug 30 2023 MiTek Industries, Inc. Tue Apr 2 10:54:08 2024 Page 1
ID:GRmvuh1dyQr3nydBfsTFcCy6OGl-2hH6kwZvBe9YEZwb8eJrnuLr?q11FbXa5KTuPqzUo3j

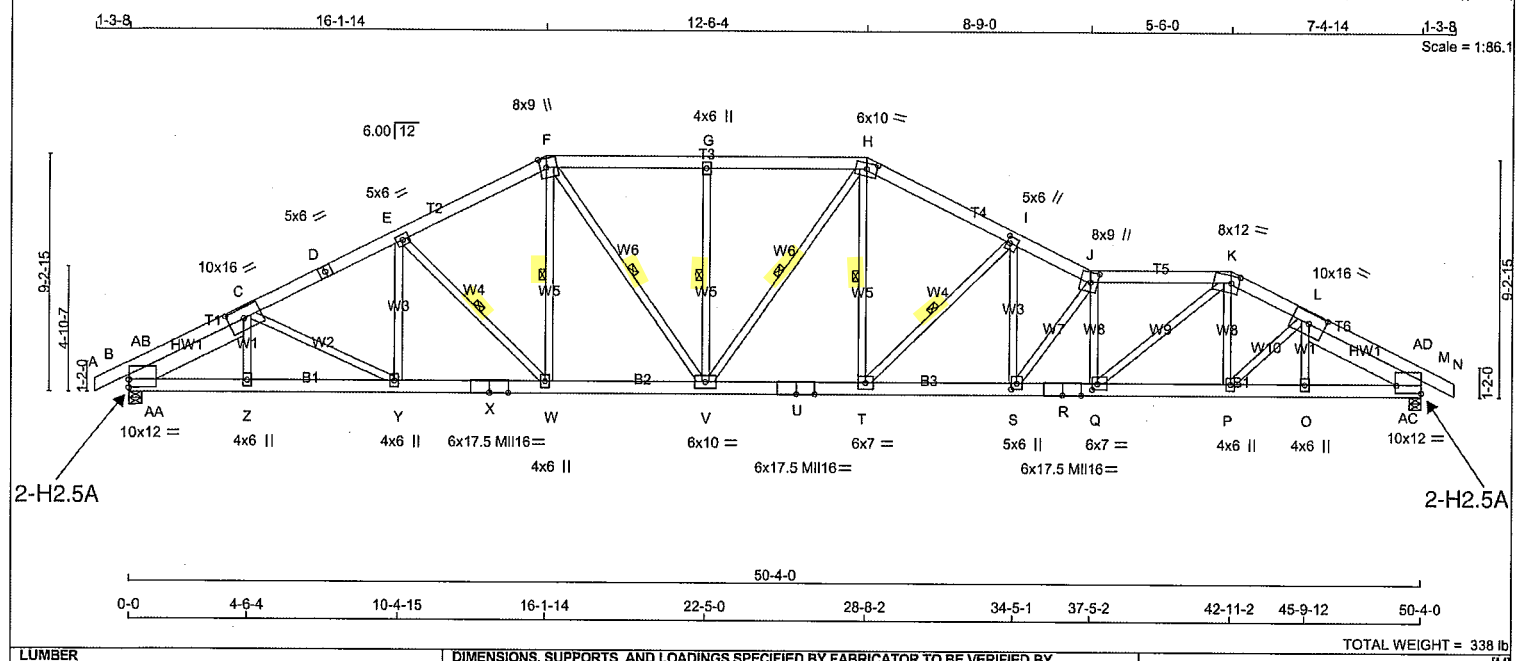

TOTAL WEIGHT = 338 lb

[M]

LUMBER

N. L. G. A. RULES

CHORDS	SIZE		LUMBER	DESCR.
A - D	2x6	DRY	No.2	SPF
D - F	2x6	DRY	No.2	SPF
F - H	2x6	DRY	No.2	SPF
H - J	2x6	DRY	No.2	SPF
J - K	2x6	DRY	2100F 1.8E	SPF
K - N	2x6	DRY	No.2	SPF
B - X	2x6	DRY	2100F 1.8E	SPF
X - U	2x6	DRY	2100F 1.8E	SPF
U - R	2x6	DRY	2100F 1.8E	SPF
R - M	2x6	DRY	2100F 1.8E	SPF
REINFORCING MEMBERS				
HW1	2x8	DRY	No.2	SPF
HW2	2x8	DRY	No.2	SPF
ALL WEBS EXCEPT	2x4	DRY	No.2	SPF
E - W	2x4	DRY	2100F 1.8E	SPF
T - I	2x4	DRY	2100F 1.8E	SPF

DRY: SEASONED LUMBER.

PLATES (table is in inches)

JT	TYPE	PLATES	W	LEN	Y	X
B	TMBMW1-I	MT20	10.0	12.0	3.75	
C	TMWWW-t	MT20	10.0	16.0	4.75	7.50
D	TS-t	MT20	5.0	6.0		
E	TMWW-t	MT20	5.0	6.0		
F	TTWW+m	MT20	8.0	9.0	4.25	3.00
G	TMW+w	MT20	4.0	6.0		
H	TTWW-m	MT20	6.0	10.0	2.75	4.75
I	TMWW+t	MT20	5.0	6.0	3.00	1.50
J	TTWW+m	MT20	8.0	9.0	4.75	3.25
K	TTWW-m	MT20	8.0	12.0	3.50	3.75
L	TMWWW-t	MT20	10.0	16.0	5.00	7.50
M	TMBMW1-I	MT20	10.0	12.0	3.75	Edge
O	BMW+w	MT20	4.0	6.0		
P, W, Y						
P	BMWW+t	MT20	4.0	6.0		
Q	BMWW-t	MT20	6.0	7.0	2.75	2.50
R, U, X						
R	BS-t	MII16	6.0	17.5		

LICENSED PROFESSIONAL ENGINEER
4/02/24
C. M. HEYENS
100505065
PROVINCE OF ONTARIO

STRUCTURAL COMPONENT ONLY
DWG # TR24040060

DIMENSIONS, SUPPORTS AND LOADINGS SPECIFIED BY FABRICATOR TO BE VERIFIED BY BUILDING DESIGNER

BEARINGS

JT	FACTORED GROSS REACTION VERT	HORZ	MAXIMUM FACTORED GROSS REACTION DOWN	HORZ	UPLIFT	INPUT BRG IN-SX	REQRD BRG IN-SX
B	4923	0	4923	193	-792	5-8	5-5
M	4910	0	4910	0	-863	5-8	5-5

PROVIDE ANCHORAGE AT BEARING JOINT B FOR 792 LBS FACTORED UPLIFT
PROVIDE ANCHORAGE AT BEARING JOINT M FOR 863 LBS FACTORED UPLIFT

PROVIDE FOR 193 LBS FACTORED HORIZONTAL REACTION AT JOINT B

UNFACTORED REACTIONS

MAX./MIN. COMPONENT REACTIONS

JT	1ST LCASE COMBINED	SNOW	LIVE	PERM.LIVE	WIND	DEAD	SOIL
B	3583	2308 / 0	528 / 0	0 / 0	106 / -934	747 / 0	0 / 0
M	3572	2308 / 0	528 / 0	0 / 0	138 / -977	736 / 0	0 / 0
HORIZONTAL REACTIONS							
B	—	0 / 0	0 / 0	0 / 0	138 / -138	0 / 0	0 /0

BEARING MATERIAL TO BE SPF NO.2 OR BETTER AT JOINT(S) B, M

BRACING

FOR SECTION F-H, MAX. UNBRACED TOP CHORD LENGTH = 2.00 FT.
FOR OTHER SECTIONS, MAX. UNBRACED TOP CHORD LENGTH = 2.19 FT.
MAX. UNBRACED BOTTOM CHORD LENGTH = 6.25 FT OR RIGID CEILING DIRECTLY APPLIED.

ALL PITCH BREAKS AND PERIMETER CORNER JOINTS MUST BE LATERALLY RESTRAINED.

1 LATERAL BRACE(S) AT 1/ 2 LENGTH OF E-W, F-W, F-V, G-V, H-V, H-T, I-T.

LOADING

TOTAL LOAD CASES: (18)

CHORDS

MEMB. FR-TO	MAX. FACTORED FORCE (LBS)	FACTORED VERT. LOAD LC1 (PLF) FROM	TO	MAX CSI (LC)	MAX. UNBRAC LENGTH
A- B	0 / 1	-145.3	-145.3	0.11 (2)	10.00
B-AB	-5498 / 839	-145.3	-145.3	0.24 (1)	3.61
AB- C	-3587 / 650	-145.3	-145.3	0.22 (2)	4.38
C- D	-7509 / 1190	-145.3	-145.3	0.71 (1)	2.69
D- E	-7509 / 1190	-145.3	-145.3	0.71 (1)	2.69
E- F	-6688 / 1081	-145.3	-145.3	0.63 (1)	2.92
F- G	-6822 / 1136	-155.3	-155.3	0.76 (1)	2.00
G- H	-6822 / 1136	-155.3	-155.3	0.76 (1)	2.00
H- I	-7479 / 1272	-145.3	-145.3	0.63 (1)	2.75
I- J	-9765 / 1660	-145.3	-145.3	0.68 (1)	2.19
J- K	-10177 / 1748	-145.3	-145.3	0.40 (3)	3.23
K- L	-7646 / 1366	-145.3	-145.3	0.33 (1)	2.97
L-AD	-3665 / 724	-145.3	-145.3	0.19 (3)	4.35
AD- M	-5537 / 921	-145.3	-145.3	0.25 (3)	3.56
M- N	0 / 1	-145.3	-145.3	0.11 (3)	10.00
B-AA	-666 / 3213	-39.5	-39.5	0.20 (1)	6.25
AA- Z	-1139 / 6683	-39.5	-39.5	0.38 (1)	6.25
Z- Y	-1140 / 6678	-39.5	-39.5	0.38 (1)	6.25
Y- X	-1012 / 6737	-39.5	-39.5	0.36 (1)	6.25
X- W	-1012 / 6737	-39.5	-39.5	0.36 (1)	6.25
W- V	-729 / 5960	-39.5	-39.5	0.33 (1)	6.25
V- U	-714 / 6697	-39.5	-39.5	0.37 (1)	6.25
U- T	-714 / 6697	-39.5	-39.5	0.37 (1)	6.25
T- S	-1217 / 8800	-39.5	-39.5	0.48 (1)	6.25
S- R	-1513 / 10267	-39.5	-39.5	0.57 (1)	6.25
R- Q	-1513 / 10267	-39.5	-39.5	0.57 (1)	6.25
Q- P	-1002 / 6825	-39.5	-39.5	0.40 (1)	6.25
P- O	-1040 / 6574	-39.5	-39.5	0.38 (1)	6.25
O-AC	-1039 / 6575	-39.5	-39.5	0.38 (1)	6.25
AC- M	-532 / 3263	-39.5	-39.5	0.20 (1)	6.25

WEBS

MEMB. FR-TO	MAX. FACTORED FORCE (LBS)	MAX CSI (LC)
Z- C	0 / 263	0.04 (17)
C- Y	-246 / 351	0.13 (2)
Y- E	-50 / 370	0.06 (5)
E- W	-1427 / 405	0.28 (2)
W- F	-235 / 1254	0.20 (2)
F- V	-339 / 1991	0.32 (3)
V- G	-1172 / 224	0.42 (1)
V- H	-766 / 1078	0.45 (3)
T- H	-460 / 2543	0.41 (3)
T- I	-3216 / 723	0.64 (3)
S- I	-394 / 2375	0.38 (3)
S- J	-2648 / 523	0.83 (3)
Q- J	-2708 / 461	0.59 (1)
Q- K	-641 / 4338	0.70 (1)
P- K	-40 / 210	0.03 (6)
P- L	0 / 352	0.06 (1)
O- L	-24 / 115	0.02 (17)
AA-AB	-286 / 2532	0.00 (1)
AA- C	-4376 / 597	0.68 (1)
L-AC	-4177 / 640	0.65 (1)
AC-AD	-296 / 2472	0.00 (1)

DESIGN CRITERIA

SPECIFIED LOADS:

TOP CH.	LL	=	43.5	PSF
	DL	=	6.0	PSF
BOT CH.	LL	=	10.5	PSF
	DL	=	7.4	PSF
TOTAL LOAD		=	67.3	PSF

SPACING = 24.0 IN. C/C

LOADING IN HIGHEST FLAT SECTION BASED ON PIGGYBACK TRUSS WITH SLOPES OF 6.00/12 AND -6.00/12 AND RESPECTIVE HEEL HEIGHTS OF 0-0 AND 0-0 AND AN ADDITIONAL DEAD LOAD OF 4.0 P.S.F.

LOADING IN OTHER FLAT SECTIONS BASED ON A SLOPE OF 6.00/12

THIS TRUSS IS DESIGNED FOR COMMERCIAL OR INDUSTRIAL BUILDING REQUIREMENTS OF PART 4, NBCC 2015

THIS DESIGN COMPLIES WITH:
- PART 4 OF BCBC 2018 , NBC-2019AE
- PART 4 OF OBC 2012 (2019 AMENDMENT)
- CSA 086-14
- TPIC 2014

DESIGN ASSUMPTIONS
- SLOPE REDUCTION FACTOR NOT USED

(80 % OF 43.9 P.S.F. G.S.L. PLUS 8.4 P.S.F. RAIN LOAD) TIMES IMPORTANCE FACTOR EQUALS 43.5 P.S.F. SPECIFIED ROOF LIVE LOAD

ALLOWABLE DEFL.(LL)= L/360 (1.68")
CALCULATED VERT. DEFL.(LL) = L/ 999 (0.43")
ALLOWABLE DEFL.(TL)= L/180 (3.36")
CALCULATED VERT. DEFL.(TL) = L/ 999 (0.58")

CSI: TC=0.76/1.00 (F-G:1) , BC=0.57/1.00 (Q-S:1) , WB=0.83/1.00 (J-S:3) , SSI=0.39/1.00 (F-G:2)

DOL LUMBER=1.00 NAIL=1.00 LS BEND=1.10 COMP=1.10 SHEAR=1.10 TENS= 1.10

SNOW LOAD IMPORTANCE FACTOR = 1.00
WIND LOAD IMPORTANCE FACTOR = 1.00
LIVE LOAD IMPORTANCE FACTOR = 1.00
COMPANION LIVE LOAD FACTOR = 1.00

AUTOSOLVE HEELS OFF

TRUSS PLATE MANUFACTURER IS NOT RESPONSIBLE FOR QUALITY CONTROL IN THE TRUSS MANUFACTURING PLANT .

NAIL VALUES

PLATE	GRIP(DRY) (PSI) MAX	MIN	SHEAR (PLI) MAX	MIN	SECTION (PLI) MAX	MIN
MT20	650	371	1747	788	1987	1873
MII16	438	302	2547	1256	4283	1816

PLATE PLACEMENT TOL. = 0.250 inches

PLATE ROTATION TOL. = 5.0 Deg.

CONTINUED ON PAGE 2

PLATES (table is in inches)

JT	TYPE	PLATES	W	LEN	Y	X
S	BMWW+t	MT20	5.0	6.0	2.75	2.50
T	BMWW-t	MT20	6.0	7.0		
V	BMWWW-t	MT20	6.0	10.0		
Z	BMW+w	MT20	4.0	6.0		

Edge - INDICATES REFERENCE CORNER OF PLATE TOUCHES EDGE OF CHORD.

NOTES- (1)
1) Lateral braces to be a minimum of 2X4 SPF #2.

TRUSS HAS BEEN CHECKED FOR UNBALANCED LOADING AS PER NBCC 4.1.6.2.(8)

WIND LOAD APPLIED IS DERIVED FROM REFERENCE VELOCITY PRESSURE OF { 7.5} PSF AT {40-0-0} FT-IN-SX REFERENCE HEIGHT ABOVE GRADE AND USING EXTERNAL PEAK COEFFICIENTS, CpCg, BASED ON THE {MAIN WIND FORCE RESISTING SYSTEM}.INTERNAL WIND PRESSURE IS BASED ON DESIGN {CATEGORY 2}. BUILDING MAY BE LOCATED ON {OPEN TERRAIN}, AND TRUSS IS DESIGNED TO BE LOCATED AT LEAST {0-0} FT-IN-SX AWAY FROM EAVE.TRUSS UPLIFT IS BASED ON TOP AND BOTTOM CHORD DEAD LOADS OF 5.0 PSF AND 5.0 PSF RESPECTIVELY.

JSI GRIP= 0.90 (K) (INPUT = 0.90)
JSI METAL= 0.90 (H) (INPUT = 0.95)

LICENSED PROFESSIONAL ENGINEER
4/02/24
C. M. HEYENS
100505065
PROVINCE OF ONTARIO

STRUCTURAL COMPONENT ONLY
DWG # TR24040060

JOB NAME	TRUSS NAME	QUANTITY	PLY	JOB DESC.	DRWG NO.
436388	T33	1	1	BAYVIEW WELLINGTON TRUSS DESC.	

Tamarack Roof Truss, Burlington

Version 8.630 S Aug 30 2023 MiTek Industries, Inc. Tue Apr 2 10:54:10 2024 Page 1
ID:GRmvuh1dyQr3nydBfsTFcCy6OGl- 4Ps8ca9jFPGUt4 G2LJsJQ9Oek?jUDtYey?TYzUo3h

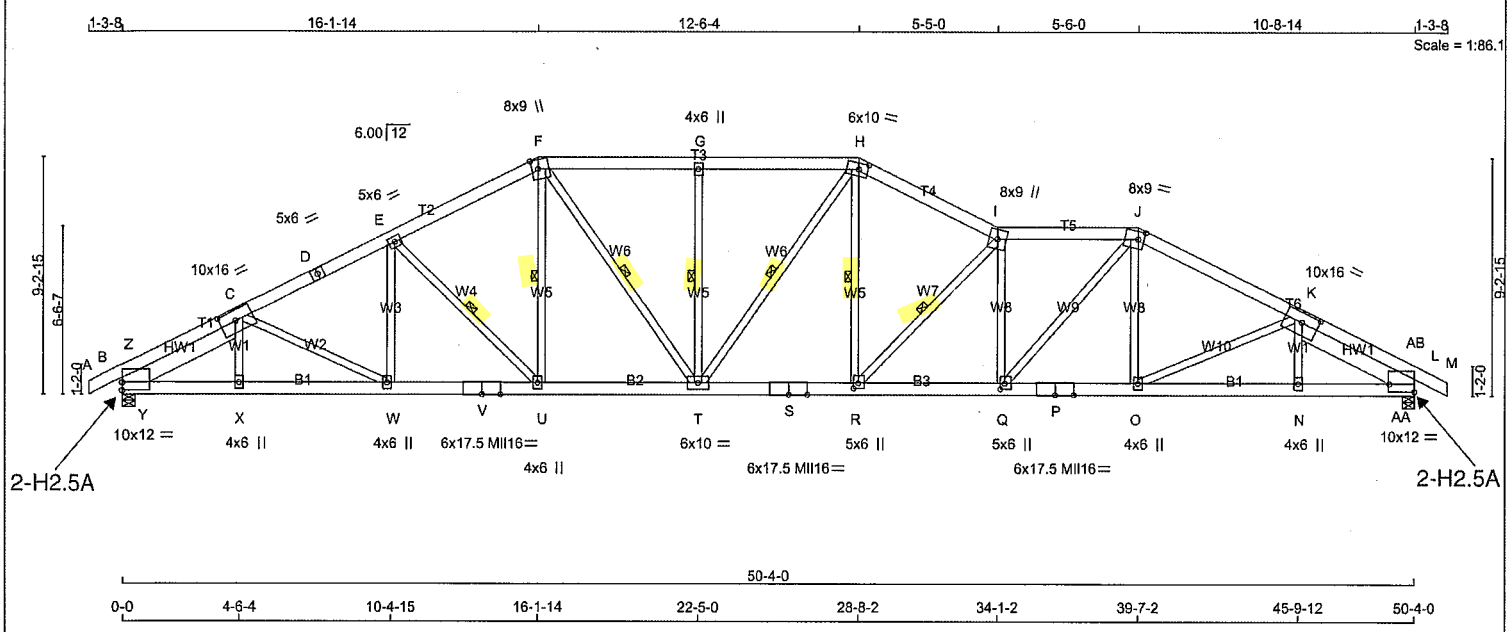

TOTAL WEIGHT = 334 lb [M]

LUMBER

N. L. G. A. RULES

CHORDS	SIZE		LUMBER	DESCR.
A - D	2x6	DRY	No.2	SPF
D - F	2x6	DRY	No.2	SPF
F - H	2x6	DRY	No.2	SPF
H - I	2x6	DRY	No.2	SPF
I - J	2x6	DRY	No.2	SPF
J - M	2x6	DRY	No.2	SPF
B - V	2x6	DRY	2100F 1.8E	SPF
V - S	2x6	DRY	2100F 1.8E	SPF
S - P	2x6	DRY	2100F 1.8E	SPF
P - L	2x6	DRY	2100F 1.8E	SPF
REINFORCING MEMBERS				
HW1	2x8	DRY	No.2	SPF
HW2	2x8	DRY	No.2	SPF
ALL WEBS	2x4	DRY	No.2	SPF
EXCEPT				
R - I	2x4	DRY	2100F 1.8E	SPF

DRY: SEASONED LUMBER.

PLATES (table is in inches)

JT	TYPE	PLATES	W	LEN	Y	X
B	TMBMW1-I	MT20	10.0	12.0	3.75	
C	TMWWW-t	MT20	10.0	16.0	4.75	7.50
D	TS-t	MT20	5.0	6.0		
E	TMWW-t	MT20	5.0	6.0		
F	TTWW+m	MT20	8.0	9.0	4.25	3.00
G	TMW+w	MT20	4.0	6.0		
H	TTWW-m	MT20	6.0	10.0	3.00	4.25
I	TTWW+m	MT20	8.0	9.0		
J	TTWW-m	MT20	8.0	9.0	3.75	2.75
K	TMWWW-t	MT20	10.0	16.0	4.50	7.50
L	TMBMW1-I	MT20	10.0	12.0	3.75	Edge
N	BMW+w	MT20	4.0	6.0		
O, U, W						
O	BMWW+t	MT20	4.0	6.0		
P, S, V						
P	BS-t	MII16	6.0	17.5		
Q	BMWW+t	MT20	5.0	6.0	2.75	2.00
R	BMWW+t	MT20	5.0	6.0	2.50	2.25
T	BMWWW-t	MT20	6.0	10.0		

LICENSED PROFESSIONAL ENGINEER
4/02/24
C. M. HEYENS
100505065
PROVINCE OF ONTARIO

STRUCTURAL COMPONENT ONLY
DWG # TR24040061

DIMENSIONS, SUPPORTS AND LOADINGS SPECIFIED BY FABRICATOR TO BE VERIFIED BY BUILDING DESIGNER

BEARINGS

JT	FACTORED GROSS REACTION VERT	HORZ	MAXIMUM FACTORED GROSS REACTION DOWN	HORZ	UPLIFT	INPUT BRG IN-SX	REQRD BRG IN-SX
B	4923	0	4923	193	-792	5-8	5-5
L	4910	0	4910	0	-863	5-8	5-5

PROVIDE ANCHORAGE AT BEARING JOINT B FOR 792 LBS FACTORED UPLIFT
PROVIDE ANCHORAGE AT BEARING JOINT L FOR 863 LBS FACTORED UPLIFT

PROVIDE FOR 193 LBS FACTORED HORIZONTAL REACTION AT JOINT B

UNFACTORED REACTIONS

	1ST LCASE	MAX./MIN. COMPONENT REACTIONS					
JT	COMBINED	SNOW	LIVE	PERM.LIVE	WIND	DEAD	SOIL
B	3583	2308 / 0	529 / 0	0 / 0	106 / -934	747 / 0	0 / 0
L	3572	2308 / 0	528 / 0	0 / 0	138 / -977	736 / 0	0 / 0
HORIZONTAL REACTIONS							
B	---	0 / 0	0 / 0	0 / 0	138 / -138	0 / 0	0 /0

BEARING MATERIAL TO BE SPF NO.2 OR BETTER AT JOINT(S) B, L

BRACING

FOR SECTION F-H, MAX. UNBRACED TOP CHORD LENGTH = 2.00 FT.
FOR OTHER SECTIONS, MAX. UNBRACED TOP CHORD LENGTH = 2.32 FT.
MAX. UNBRACED BOTTOM CHORD LENGTH = 6.25 FT OR RIGID CEILING DIRECTLY APPLIED.

ALL PITCH BREAKS AND PERIMETER CORNER JOINTS MUST BE LATERALLY RESTRAINED.

1 LATERAL BRACE(S) AT 1/ 2 LENGTH OF E-U, F-U, F-T, G-T, H-T, H-R, I-R.

LOADING

TOTAL LOAD CASES: (18)

CHORDS

MEMB. FR-TO	MAX. FACTORED FORCE (LBS)	FACTORED VERT. LOAD LC1 (PLF) FROM	TO	MAX CSI (LC)	MAX. UNBRAC LENGTH
A- B	0 / 1	-145.3	-145.3	0.11 (2)	10.00
B- Z	-5497 / 839	-145.3	-145.3	0.24 (1)	3.61
Z- C	-3586 / 649	-145.3	-145.3	0.22 (2)	4.38
C- D	-7507 / 1190	-145.3	-145.3	0.71 (1)	2.69
D- E	-7507 / 1190	-145.3	-145.3	0.71 (1)	2.69
E- F	-6688 / 1081	-145.3	-145.3	0.63 (1)	2.93
F- G	-6824 / 1136	-155.3	-155.3	0.76 (1)	2.00
G- H	-6824 / 1136	-155.3	-155.3	0.76 (1)	2.00
H- I	-7437 / 1263	-145.3	-145.3	0.69 (1)	2.65
I- J	-8523 / 1490	-145.3	-145.3	0.77 (3)	2.32
J- K	-7415 / 1303	-145.3	-145.3	0.73 (3)	2.69
K-AB	-3499 / 670	-145.3	-145.3	0.38 (3)	4.24
AB- L	-5486 / 925	-145.3	-145.3	0.18 (1)	3.66
L- M	0 / 1	-145.3	-145.3	0.11 (3)	10.00
B- Y	-665 / 3212	-39.5	-39.5	0.20 (1)	6.25
Y- X	-1139 / 6684	-39.5	-39.5	0.38 (1)	6.25
X- W	-1141 / 6678	-39.5	-39.5	0.38 (1)	6.25
W- V	-1011 / 6736	-39.5	-39.5	0.37 (1)	6.25
V- U	-1011 / 6736	-39.5	-39.5	0.37 (1)	6.25
U- T	-729 / 5960	-39.5	-39.5	0.33 (1)	6.25
T- S	-713 / 6691	-39.5	-39.5	0.35 (1)	6.25
S- R	-713 / 6691	-39.5	-39.5	0.35 (1)	6.25
R- Q	-1152 / 8572	-39.5	-39.5	0.47 (1)	6.25
Q- P	-894 / 6610	-39.5	-39.5	0.38 (1)	6.25
P- O	-894 / 6610	-39.5	-39.5	0.38 (1)	6.25
O- N	-1081 / 6715	-39.5	-39.5	0.38 (1)	6.25
N-AA	-1079 / 6720	-39.5	-39.5	0.38 (1)	6.25
AA- L	-503 / 3162	-39.5	-39.5	0.19 (1)	6.25

WEBS

MEMB. FR-TO	MAX. FACTORED FORCE (LBS)	MAX CSI (LC)
X- C	0 / 265	0.04 (17)
C- W	-250 / 350	0.13 (2)
W- E	-49 / 369	0.06 (5)
E- U	-1424 / 404	0.46 (2)
U- F	-236 / 1253	0.20 (2)
F- T	-339 / 1994	0.32 (3)
T- G	-1172 / 224	0.42 (1)
T- H	-755 / 1084	0.44 (3)
R- H	-436 / 2465	0.40 (3)
R- I	-3008 / 660	0.59 (3)
Q- I	-2027 / 340	0.88 (1)
Q- J	-377 / 2890	0.46 (1)
O- J	-49 / 462	0.07 (3)
O- K	-370 / 218	0.24 (3)
N- K	0 / 270	0.05 (17)
Y- Z	-286 / 2533	0.00 (1)
Y- C	-4378 / 598	0.68 (1)
K-AA	-4485 / 727	0.70 (1)
AA-AB	-385 / 2647	0.00 (1)

DESIGN CRITERIA

SPECIFIED LOADS:

TOP CH.	LL	=	43.5	PSF
	DL	=	6.0	PSF
BOT CH.	LL	=	10.5	PSF
	DL	=	7.4	PSF
TOTAL LOAD		=	67.3	PSF

SPACING = 24.0 IN. C/C

LOADING IN HIGHEST FLAT SECTION BASED ON PIGGYBACK TRUSS WITH SLOPES OF 6.00/12 AND -6.00/12 AND RESPECTIVE HEEL HEIGHTS OF 0-0 AND 0-0 AND AN ADDITIONAL DEAD LOAD OF 4.0 P.S.F.

LOADING IN OTHER FLAT SECTIONS BASED ON A SLOPE OF 6.00/12

THIS TRUSS IS DESIGNED FOR COMMERCIAL OR INDUSTRIAL BUILDING REQUIREMENTS OF PART 4, NBCC 2015

THIS DESIGN COMPLIES WITH:
- PART 4 OF BCBC 2018 , NBC-2019AE
- PART 4 OF OBC 2012 (2019 AMENDMENT)
- CSA 086-14
- TPIC 2014

DESIGN ASSUMPTIONS
- SLOPE REDUCTION FACTOR NOT USED

(80 % OF 43.9 P.S.F. G.S.L. PLUS 8.4 P.S.F. RAIN LOAD) TIMES IMPORTANCE FACTOR EQUALS 43.5 P.S.F. SPECIFIED ROOF LIVE LOAD

ALLOWABLE DEFL.(LL)= L/360 (1.68")
CALCULATED VERT. DEFL.(LL) = L/ 999 (0.38")
ALLOWABLE DEFL.(TL)= L/180 (3.36")
CALCULATED VERT. DEFL.(TL) = L/ 999 (0.50")

CSI: TC=0.77/1.00 (I-J:3) , BC=0.47/1.00 (Q-R:1) , WB=0.88/1.00 (I-Q:1) , SSI=0.39/1.00 (F-G:2)

DOL LUMBER=1.00 NAIL=1.00 LS BEND=1.10 COMP=1.10 SHEAR=1.10 TENS= 1.10

SNOW LOAD IMPORTANCE FACTOR = 1.00
WIND LOAD IMPORTANCE FACTOR = 1.00
LIVE LOAD IMPORTANCE FACTOR = 1.00
COMPANION LIVE LOAD FACTOR = 1.00

AUTOSOLVE HEELS OFF

TRUSS PLATE MANUFACTURER IS NOT RESPONSIBLE FOR QUALITY CONTROL IN THE TRUSS MANUFACTURING PLANT .

NAIL VALUES

PLATE	GRIP(DRY) (PSI) MAX	MIN	SHEAR (PLI) MAX	MIN	SECTION (PLI) MAX	MIN
MT20	650	371	1747	788	1987	1873
MII16	438	302	2547	1256	4283	1816

PLATE PLACEMENT TOL. = 0.250 Inches

PLATE ROTATION TOL. = 5.0 Deg.

CONTINUED ON PAGE 2

JOB NAME	TRUSS NAME	QUANTITY	PLY	JOB DESC. BAYVIEW WELLINGTON	DRWG NO.
436388	T33	1	1	TRUSS DESC.	

PLATES (table is in inches)

JT	TYPE	PLATES	W	LEN	Y	X
X	BMW+w	MT20	4.0	6.0		

Edge - INDICATES REFERENCE CORNER OF PLATE TOUCHES EDGE OF CHORD.

NOTES- (1)
1) Lateral braces to be a minimum of 2X4 SPF #2.

TRUSS HAS BEEN CHECKED FOR UNBALANCED LOADING AS PER NBCC 4.1.6.2.(8)

WIND LOAD APPLIED IS DERIVED FROM REFERENCE VELOCITY PRESSURE OF (7.5) PSF AT {40-0-0} FT-IN-SX REFERENCE HEIGHT ABOVE GRADE AND USING EXTERNAL PEAK COEFFICIENTS, CpCg, BASED ON THE {MAIN WIND FORCE RESISTING SYSTEM}.INTERNAL WIND PRESSURE IS BASED ON DESIGN {CATEGORY 2}. BUILDING MAY BE LOCATED ON {OPEN TERRAIN}, AND TRUSS IS DESIGNED TO BE LOCATED AT LEAST {0-0} FT-IN-SX AWAY FROM EAVE.TRUSS UPLIFT IS BASED ON TOP AND BOTTOM CHORD DEAD LOADS OF 5.0 PSF AND 5.0 PSF RESPECTIVELY.

JSI GRIP= 0.90 (I) (INPUT = 0.90)
JSI METAL= 0.90 (H) (INPUT = 0.95)

LICENSED PROFESSIONAL ENGINEER
4/02/24
C. M. HEYENS
100505065
PROVINCE OF ONTARIO

STRUCTURAL COMPONENT ONLY
DWG # TR24040061

JOB NAME	TRUSS NAME	QUANTITY	PLY	JOB DESC.	DRWG NO.
436388	T34	1	1	BAYVIEW WELLINGTON TRUSS DESC.	

Tamarack Roof Truss, Burlington

Version 8.630 S Aug 30 2023 MiTek Industries, Inc. Tue Apr 2 10:54:11 2024 Page 1
ID:GRmvuh1dyQr3nydBfsTFcCy6OGI-SGzFMybnUZX750fApmtYPWzLE25NSyD1nlhZ? zUo3g

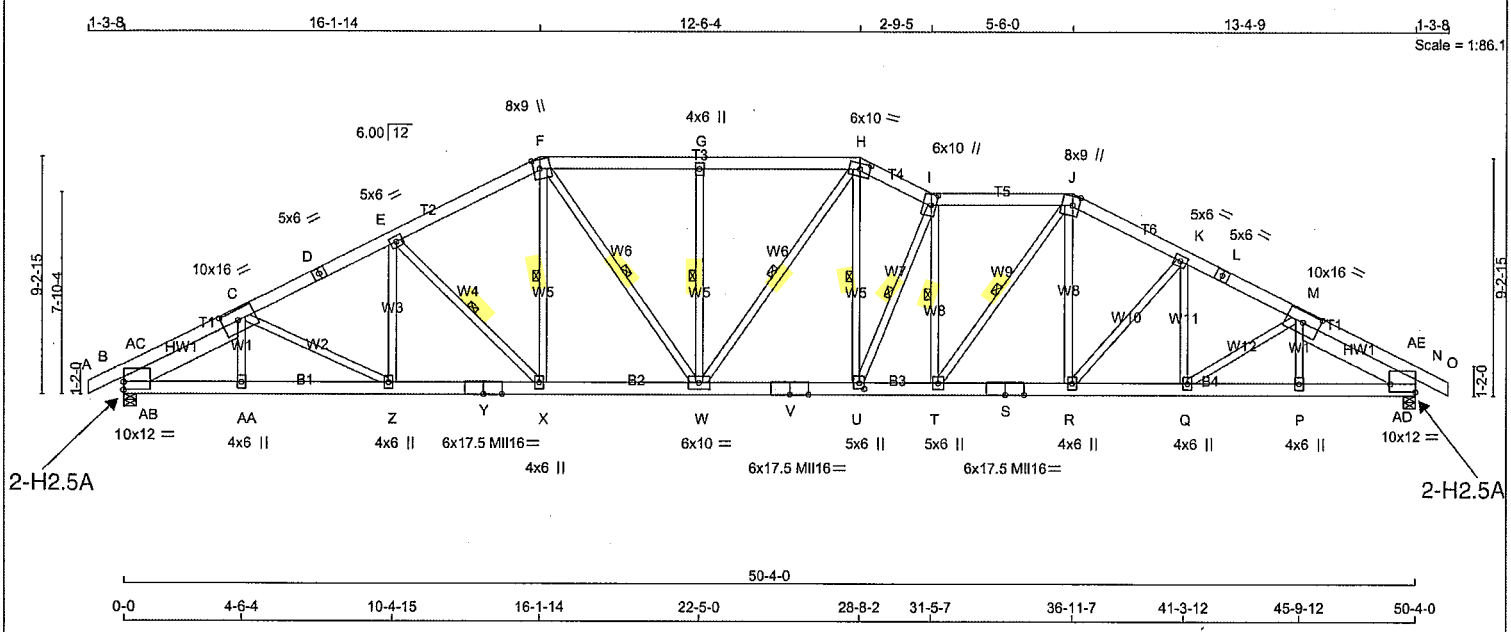

TOTAL WEIGHT = 349 lb

LUMBER
N. L. G. A. RULES

CHORDS	SIZE		LUMBER	DESCR.
A - D	2x6	DRY	No.2	SPF
D - F	2x6	DRY	No.2	SPF
F - H	2x6	DRY	No.2	SPF
H - I	2x6	DRY	No.2	SPF
I - J	2x6	DRY	No.2	SPF
J - L	2x6	DRY	No.2	SPF
L - O	2x6	DRY	No.2	SPF
B - Y	2x6	DRY	2100F 1.8E	SPF
Y - V	2x6	DRY	2100F 1.8E	SPF
V - S	2x6	DRY	2100F 1.8E	SPF
S - N	2x6	DRY	2100F 1.8E	SPF
REINFORCING MEMBERS				
HW1	2x8	DRY	No.2	SPF
HW2	2x8	DRY	No.2	SPF
ALL WEBS	2x4	DRY	No.2	SPF

DRY: SEASONED LUMBER.

PLATES (table is in inches)

JT	TYPE	PLATES	W	LEN	Y	X
B	TMBMW1-I	MT20	10.0	12.0	3.75	
C	TMWWW-t	MT20	10.0	16.0	4.75	7.50
D	TS-t	MT20	5.0	6.0		
E	TMWW-t	MT20	5.0	6.0		
F	TTWW+m	MT20	8.0	9.0	4.25	3.00
G	TMW+w	MT20	4.0	6.0		
H	TTWW-m	MT20	6.0	10.0	2.75	4.75
I	TTWW+m	MT20	6.0	10.0	5.00	2.25
J	TTWW+m	MT20	8.0	9.0	4.25	3.00
K	TMWW-t	MT20	5.0	6.0		
L	TS-t	MT20	5.0	6.0		
M	TMWWW-t	MT20	10.0	16.0	5.00	7.75
N	TMBMW1-I	MT20	10.0	12.0	3.75	Edge
P	BMW+w	MT20	4.0	6.0		
Q, R, X, Z						
Q	BMWW+t	MT20	4.0	6.0		
S, V, Y						
S	BS-t	MII16	6.0	17.5		
T	BMWW+t	MT20	5.0	6.0		
U	BMWW+t	MT20	5.0	6.0	2.75	2.25
W	BMWWW-t	MT20	6.0	10.0		

LICENSED PROFESSIONAL ENGINEER
4/02/24
C. M. HEYENS
100505065
PROVINCE OF ONTARIO

STRUCTURAL COMPONENT ONLY
DWG # TR24040062

DIMENSIONS, SUPPORTS AND LOADINGS SPECIFIED BY FABRICATOR TO BE VERIFIED BY BUILDING DESIGNER

BEARINGS

JT	FACTORED GROSS REACTION VERT	HORZ	MAXIMUM FACTORED GROSS REACTION DOWN	HORZ	UPLIFT	INPUT BRG IN-SX	REQRD BRG IN-SX
B	4923	0	4923	193	-792	5-8	5-5
N	4910	0	4910	0	-863	5-8	5-5

PROVIDE ANCHORAGE AT BEARING JOINT B FOR 792 LBS FACTORED UPLIFT
PROVIDE ANCHORAGE AT BEARING JOINT N FOR 863 LBS FACTORED UPLIFT

PROVIDE FOR 193 LBS FACTORED HORIZONTAL REACTION AT JOINT B

UNFACTORED REACTIONS

JT	1ST LCASE COMBINED	SNOW	MAX./MIN. COMPONENT REACTIONS LIVE	PERM.LIVE	WIND	DEAD	SOIL
B	3583	2308 / 0	529 / 0	0 / 0	106 / -934	747 / 0	0 / 0
N	3572	2308 / 0	529 / 0	0 / 0	138 / -977	736 / 0	0 / 0
HORIZONTAL REACTIONS							
B	---	0 / 0	0 / 0	0 / 0	138 / -138	0 / 0	0 /0

BEARING MATERIAL TO BE SPF NO.2 OR BETTER AT JOINT(S) B, N

BRACING
FOR SECTION F-H, MAX. UNBRACED TOP CHORD LENGTH = 2.00 FT.
FOR OTHER SECTIONS, MAX. UNBRACED TOP CHORD LENGTH = 2.60 FT.
MAX. UNBRACED BOTTOM CHORD LENGTH = 6.25 FT OR RIGID CEILING DIRECTLY APPLIED.

ALL PITCH BREAKS AND PERIMETER CORNER JOINTS MUST BE LATERALLY RESTRAINED.

1 LATERAL BRACE(S) AT 1/ 2 LENGTH OF E-X, F-X, F-W, G-W, H-W, H-U, I-U, I-T, J-T.

LOADING
TOTAL LOAD CASES: (18)

CHORDS

MEMB. FR-TO	MAX. FACTORED FORCE (LBS)	FACTORED VERT. LOAD LC1 (PLF) FROM	TO	MAX CSI (LC)	MAX. UNBRAC LENGTH
A- B	0 / 1	-145.3	-145.3	0.11 (2)	10.00
B-AC	-5497 / 839	-145.3	-145.3	0.24 (1)	3.61
AC- C	-3587 / 649	-145.3	-145.3	0.22 (2)	4.38
C- D	-7507 / 1190	-145.3	-145.3	0.71 (1)	2.69
D- E	-7507 / 1190	-145.3	-145.3	0.71 (1)	2.69
E- F	-6688 / 1081	-145.3	-145.3	0.63 (1)	2.93
F- G	-6825 / 1136	-155.3	-155.3	0.76 (1)	2.00
G- H	-6825 / 1136	-155.3	-155.3	0.76 (1)	2.00
H- I	-7428 / 1304	-145.3	-145.3	0.32 (1)	3.02
I- J	-7529 / 1341	-145.3	-145.3	0.69 (3)	2.60
J- K	-7070 / 1294	-145.3	-145.3	0.43 (1)	3.04
K- L	-7552 / 1347	-145.3	-145.3	0.47 (3)	2.91
L- M	-7552 / 1347	-145.3	-145.3	0.47 (3)	2.91
M-AE	-3621 / 716	-145.3	-145.3	0.19 (3)	4.38
AE- N	-5496 / 919	-145.3	-145.3	0.25 (3)	3.58
N- O	0 / 1	-145.3	-145.3	0.11 (3)	10.00
B-AB	-665 / 3212	-39.5	-39.5	0.20 (1)	6.25
AB-AA	-1139 / 6684	-39.5	-39.5	0.38 (1)	6.25
AA- Z	-1141 / 6678	-39.5	-39.5	0.38 (1)	6.25
Z- Y	-1011 / 6736	-39.5	-39.5	0.36 (1)	6.25
Y- X	-1011 / 6736	-39.5	-39.5	0.36 (1)	6.25
X- W	-729 / 5960	-39.5	-39.5	0.33 (1)	6.25
W- V	-714 / 6686	-39.5	-39.5	0.36 (1)	6.25
V- U	-714 / 6686	-39.5	-39.5	0.36 (1)	6.25
U- T	-925 / 7561	-39.5	-39.5	0.40 (1)	6.25
T- S	-790 / 6310	-39.5	-39.5	0.35 (1)	6.25
S- R	-790 / 6310	-39.5	-39.5	0.35 (1)	6.25
R- Q	-976 / 6769	-39.5	-39.5	0.37 (1)	6.25
Q- P	-1047 / 6618	-39.5	-39.5	0.37 (1)	6.25
P-AD	-1046 / 6623	-39.5	-39.5	0.38 (1)	6.25
AD- N	-527 / 3231	-39.5	-39.5	0.20 (1)	6.25

WEBS

MEMB. FR-TO	MAX. FACTORED FORCE (LBS)	MAX CSI (LC)
AA- C	0 / 264	0.04 (17)
C- Z	-249 / 351	0.13 (2)
Z- E	-49 / 370	0.06 (5)
E- X	-1424 / 404	0.46 (2)
X- F	-236 / 1251	0.20 (2)
F- W	-339 / 1997	0.32 (3)
W- G	-1172 / 224	0.42 (1)
W- H	-746 / 1096	0.44 (3)
U- H	-519 / 2681	0.43 (3)
U- I	-2661 / 595	0.77 (3)
T- I	-1608 / 282	0.41 (1)
T- J	-291 / 2077	0.33 (1)
R- J	-186 / 973	0.16 (3)
P- M	0 / 231	0.04 (17)
R- K	-935 / 290	0.55 (3)
Q- K	-62 / 173	0.03 (17)
Q- M	0 / 255	0.04 (2)
AB-AC	-286 / 2533	0.00 (1)
AB- C	-4378 / 598	0.68 (1)
M-AD	-4278 / 654	0.66 (1)
AD-AE	-305 / 2479	0.00 (1)

DESIGN CRITERIA

SPECIFIED LOADS:

TOP CH.	LL	=	43.5	PSF
	DL	=	6.0	PSF
BOT CH.	LL	=	10.5	PSF
	DL	=	7.4	PSF
TOTAL LOAD		=	67.3	PSF

SPACING = 24.0 IN. C/C

LOADING IN HIGHEST FLAT SECTION BASED ON PIGGYBACK TRUSS WITH SLOPES OF 6.00/12 AND -6.00/12 AND RESPECTIVE HEEL HEIGHTS OF 0-0 AND 0-0 AND AN ADDITIONAL DEAD LOAD OF 4.0 P.S.F.

LOADING IN OTHER FLAT SECTIONS BASED ON A SLOPE OF 6.00/12

THIS TRUSS IS DESIGNED FOR COMMERCIAL OR INDUSTRIAL BUILDING REQUIREMENTS OF PART 4, NBCC 2015

THIS DESIGN COMPLIES WITH:
- PART 4 OF BCBC 2018 , NBC-2019AE
- PART 4 OF OBC 2012 (2019 AMENDMENT)
- CSA 086-14
- TPIC 2014

DESIGN ASSUMPTIONS
- SLOPE REDUCTION FACTOR NOT USED

(80 % OF 43.9 P.S.F. G.S.L. PLUS 8.4 P.S.F. RAIN LOAD) TIMES IMPORTANCE FACTOR EQUALS 43.5 P.S.F. SPECIFIED ROOF LIVE LOAD

ALLOWABLE DEFL.(LL)= L/360 (1.68")
CALCULATED VERT. DEFL.(LL) = L/ 999 (0.35")
ALLOWABLE DEFL.(TL)= L/180 (3.36")
CALCULATED VERT. DEFL.(TL) = L/ 999 (0.47")

CSI: TC=0.76/1.00 (F-G:1) , BC=0.40/1.00 (T-U:1) , WB=0.77/1.00 (I-U:3) , SSI=0.39/1.00 (F-G:2)

DOL LUMBER=1.00 NAIL=1.00 LS BEND=1.10 COMP=1.10 SHEAR=1.10 TENS= 1.10

SNOW LOAD IMPORTANCE FACTOR = 1.00
WIND LOAD IMPORTANCE FACTOR = 1.00
LIVE LOAD IMPORTANCE FACTOR = 1.00
COMPANION LIVE LOAD FACTOR = 1.00

AUTOSOLVE HEELS OFF

TRUSS PLATE MANUFACTURER IS NOT RESPONSIBLE FOR QUALITY CONTROL IN THE TRUSS MANUFACTURING PLANT .

NAIL VALUES

PLATE	GRIP(DRY) (PSI) MAX	MIN	SHEAR (PLI) MAX	MIN	SECTION (PLI) MAX	MIN
MT20	650	371	1747	788	1987	1873
MII16	438	302	2547	1256	4283	1816

PLATE PLACEMENT TOL. = 0.250 inches

PLATE ROTATION TOL. = 5.0 Deg.

CONTINUED ON PAGE 2

JOB NAME	TRUSS NAME	QUANTITY	PLY	JOB DESC. BAYVIEW WELLINGTON	DRWG NO.
436388	T34	1	1	TRUSS DESC.	

PLATES (table is in inches)

JT	TYPE	PLATES	W	LEN	Y	X
AA	BMW+w	MT20	4.0	6.0		

Edge - INDICATES REFERENCE CORNER OF PLATE TOUCHES EDGE OF CHORD.

NOTES- (1)
1) Lateral braces to be a minimum of 2X4 SPF #2.

TRUSS HAS BEEN CHECKED FOR UNBALANCED LOADING AS PER NBCC 4.1.6.2.(8)

WIND LOAD APPLIED IS DERIVED FROM REFERENCE VELOCITY PRESSURE OF (7.5) PSF AT {40-0-0} FT-IN-SX REFERENCE HEIGHT ABOVE GRADE AND USING EXTERNAL PEAK COEFFICIENTS, CpCg, BASED ON THE {MAIN WIND FORCE RESISTING SYSTEM}.INTERNAL WIND PRESSURE IS BASED ON DESIGN {CATEGORY 2}. BUILDING MAY BE LOCATED ON {OPEN TERRAIN}, AND TRUSS IS DESIGNED TO BE LOCATED AT LEAST {0-0} FT-IN-SX AWAY FROM EAVE.TRUSS UPLIFT IS BASED ON TOP AND BOTTOM CHORD DEAD LOADS OF 5.0 PSF AND 5.0 PSF RESPECTIVELY.

JSI GRIP= 0.87 (N) (INPUT = 0.90)
JSI METAL= 0.89 (H) (INPUT = 0.95)

LICENSED PROFESSIONAL ENGINEER
4/02/24
C. M. HEYENS
100505065
PROVINCE OF ONTARIO

STRUCTURAL COMPONENT ONLY
DWG # TR24040062

JOB NAME	TRUSS NAME	QUANTITY	PLY	JOB DESC.	DRWG NO.
436388	T35	1	3	BAYVIEW WELLINGTON TRUSS DESC.	

Tamarack Roof Truss, Burlington

Version 8.630 S Aug 30 2023 MiTek Industries, Inc. Tue Apr 2 10:54:14 2024 Page 1
ID:GRmvuh1dyQr3nydBfsTFcCy6OGl-sreN zefnUviyUOlVuQF19awBF6efNATTGwDcJzUo3d

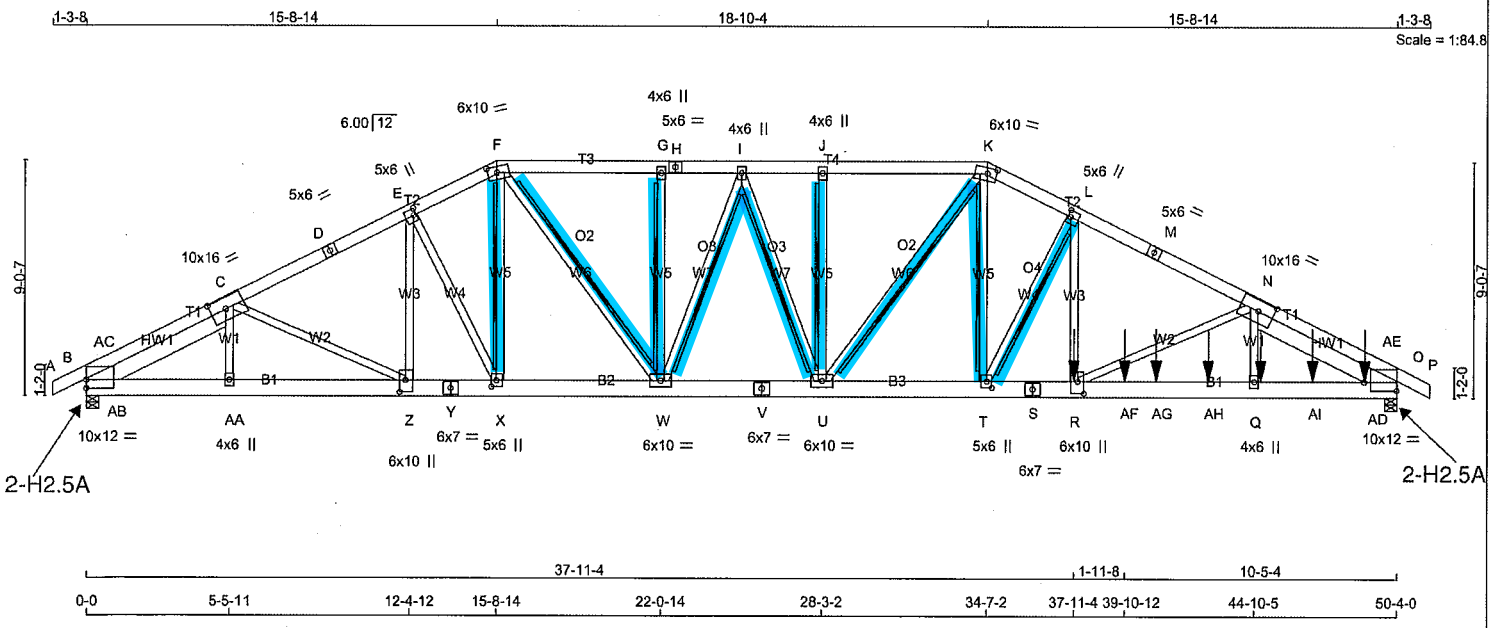

TOTAL WEIGHT = 3 X 382 = 1146 lb

LUMBER

N. L. G. A. RULES

CHORDS	SIZE		LUMBER	DESCR.
A - D	2x6	DRY	No.2	SPF
D - F	2x6	DRY	No.2	SPF
F - H	2x6	DRY	No.2	SPF
H - K	2x6	DRY	No.2	SPF
K - M	2x6	DRY	No.2	SPF
M - P	2x6	DRY	No.2	SPF
B - Y	2x8	DRY	1950F 1.7E	SPF
Y - V	2x8	DRY	1950F 1.7E	SPF
V - S	2x8	DRY	1950F 1.7E	SPF
S - O	2x8	DRY	1950F 1.7E	SPF

REINFORCING MEMBERS

HW1	2x8	DRY	No.2	SPF
HW2	2x8	DRY	No.2	SPF
ALL WEBS	2x4	DRY	No.2	SPF

DRY: SEASONED LUMBER.

DESIGN CONSISTS OF 3 TRUSSES BUILT SEPARATELY THEN FASTENED TOGETHER AS FOLLOWS:

CHORDS	#ROWS	SURFACE SPACING (IN)	LOAD(PLF)
TOP CHORDS : (0.122"X3") SPIRAL NAILS			
A- D	2	12	TOP
D- F	2	12	TOP
F- H	2	12	TOP
H- K	2	12	TOP
K- M	2	12	TOP
M- P	2	12	TOP
BOTTOM CHORDS : (0.122"X3") SPIRAL NAILS			
B- Y	2	12	TOP
Y- V	2	12	TOP
V- S	2	12	TOP
S- O	2	12	SIDE(340.9)
WEBS : (0.122"X3") SPIRAL NAILS			
L- R	2	4	SIDE(1802.9)
2x4	1	6	
E- Z	2	4	
2x8	2	6	

STAGGER NAILS BY HALF THE SURFACE SPACING IN ADJACENT PLIES.

LICENSED PROFESSIONAL ENGINEER
4/02/24
C. M. HEYENS
100505065
PROVINCE OF ONTARIO

STRUCTURAL COMPONENT ONLY
DWG # TR24040063

DIMENSIONS, SUPPORTS AND LOADINGS SPECIFIED BY FABRICATOR TO BE VERIFIED BY BUILDING DESIGNER

BEARINGS

JT	FACTORED GROSS REACTION VERT	HORZ	MAXIMUM FACTORED GROSS REACTION DOWN	HORZ	UPLIFT	INPUT BRG IN-SX	REQRD BRG IN-SX
B	6958	0	6958	188	-807	5-8	2-8
O	13095	0	13095	0	-807	5-8	4-12

PROVIDE ANCHORAGE AT BEARING JOINT B FOR 807 LBS FACTORED UPLIFT
PROVIDE ANCHORAGE AT BEARING JOINT O FOR 807 LBS FACTORED UPLIFT

PROVIDE FOR 188 LBS FACTORED HORIZONTAL REACTION AT JOINT B

UNFACTORED REACTIONS

JT	1ST LCASE COMBINED	MAX./MIN. COMPONENT REACTIONS SNOW	LIVE	PERM.LIVE	WIND	DEAD	SOIL
B	5015	3285 / 0	529 / 0	0 / 0	123 / -958	1202 / 0	0 / 0
O	9318	6317 / 0	529 / 0	0 / 0	123 / -958	2473 / 0	0 / 0
HORIZONTAL REACTIONS							
B	---	0 / 0	0 / 0	0 / 0	134 / -134	0 / 0	0 /0

BEARING MATERIAL TO BE SPF NO.2 OR BETTER AT JOINT(S) B, O

BRACING

FOR SECTION F-K, MAX. UNBRACED TOP CHORD LENGTH = 2.00 FT.
FOR OTHER SECTIONS, MAX. UNBRACED TOP CHORD LENGTH = 3.19 FT.
MAX. UNBRACED BOTTOM CHORD LENGTH = 6.25 FT OR RIGID CEILING DIRECTLY APPLIED.

ALL PITCH BREAKS AND PERIMETER CORNER JOINTS MUST BE LATERALLY RESTRAINED.

2x6 DRY SPF No.2 T-BRACE AT F-X, K-T, L-T, K-U, F-W, J-U, G-W, I-W, I-U

FASTEN T AND I-BRACES TO NARROW EDGE OF WEB WITH ONE ROW PER PLY OF 3" COMMON WIRE NAILS @ 6" O.C. WITH 3" MINIMUM END DISTANCE. BRACE MUST COVER 90% OF WEB LENGTH.

LOADING

TOTAL LOAD CASES: (18)

CHORDS

MEMB. FR-TO	MAX. FACTORED FORCE (LBS)	FACTORED VERT. LOAD LC1 (PLF) FROM	TO	MAX CSI (LC)	MAX. UNBRAC LENGTH
A- B	0 / 8	-145.3	-145.3	0.04 (2)	10.00
B-AC	-8011 / 863	-145.3	-145.3	0.07 (1)	5.07
AC- C	-5942 / 748	-145.3	-145.3	0.12 (2)	5.64
C- D	-11463 / 1183	-145.3	-145.3	0.21 (1)	4.28
D- E	-11463 / 1183	-145.3	-145.3	0.21 (1)	4.28
E- F	-11071 / 1173	-145.3	-145.3	0.17 (2)	4.36
F- G	-12261 / 1122	-155.3	-155.3	0.23 (1)	2.00
G- H	-12261 / 1123	-155.3	-155.3	0.19 (2)	2.00
H- I	-12261 / 1123	-155.3	-155.3	0.19 (2)	2.00
I- J	-13732 / 1123	-155.3	-155.3	0.20 (1)	2.00
J- K	-13732 / 1122	-155.3	-155.3	0.26 (1)	2.00
K- L	-15928 / 1173	-145.3	-145.3	0.19 (3)	3.72
L- M	-19892 / 1183	-145.3	-145.3	0.46 (1)	3.19
M- N	-19892 / 1183	-145.3	-145.3	0.46 (1)	3.19
N-AE	-11267 / 749	-145.3	-145.3	0.14 (3)	4.38
AE- O	-15210 / 864	-145.3	-145.3	0.16 (1)	3.81
O- P	0 / 8	-145.3	-145.3	0.04 (3)	10.00
B-AB	-741 / 5334	-39.5	-39.5	0.12 (1)	6.25
AB-AA	-1196 / 10335	-39.5	-39.5	0.19 (1)	6.25
AA- Z	-1197 / 10326	-39.5	-39.5	0.17 (1)	6.25
Z- Y	-951 / 10255	-39.5	-39.5	0.16 (1)	6.25
Y- X	-951 / 10255	-39.5	-39.5	0.16 (1)	6.25
X- W	-779 / 9858	-39.5	-39.5	0.16 (1)	6.25
W- V	-774 / 13028	-39.5	-39.5	0.20 (1)	6.25
V- U	-774 / 13028	-39.5	-39.5	0.20 (1)	6.25
U- T	-591 / 14324	-39.5	-39.5	0.22 (1)	6.25
T- S	-763 / 17792	-39.5	-39.5	0.27 (1)	6.25

WEBS

MEMB. FR-TO	MAX. FACTORED FORCE (LBS)	MAX CSI (LC)
AA- C	0 / 412	0.03 (17)
C- Z	-360 / 530	0.10 (2)
Z- E	-228 / 295	0.04 (10)
E- X	-1174 / 389	0.30 (2)
X- F	-324 / 1383	0.07 (2)
T- K	-325 / 7531	0.40 (3)
T- L	-8135 / 388	0.56 (3)
R- L	-59 / 8084	0.43 (3)
R- N	-1956 / 277	0.53 (3)
Q- N	0 / 2856	0.15 (1)
U- K	-2117 / 39	0.27 (10)
F- W	-271 / 4169	0.22 (3)
U- J	-1090 / 254	0.09 (3)
W- G	-1109 / 255	0.09 (2)
W- I	-3214 / 171	0.31 (3)
I- U	-141 / 3084	0.17 (3)
AB-AC	-193 / 2955	0.00 (1)
AB- C	-6201 / 565	0.45 (1)
N-AD	-11512 / 567	0.84 (1)
AD-AE	-194 / 5953	0.00 (1)

[M]

DESIGN CRITERIA

SPECIFIED LOADS:

TOP CH.	LL	=	43.5	PSF
	DL	=	6.0	PSF
BOT CH.	LL	=	10.5	PSF
	DL	=	7.4	PSF
TOTAL LOAD		=	67.3	PSF

SPACING = 24.0 IN. C/C

LOADING IN FLAT SECTION BASED ON PIGGYBACK TRUSS WITH SLOPES OF 6.00/12 AND -6.00/12 AND RESPECTIVE HEEL HEIGHTS OF 0-0 AND 0-0 AND AN ADDITIONAL DEAD LOAD OF 4.0 P.S.F.

THIS TRUSS IS DESIGNED FOR COMMERCIAL OR INDUSTRIAL BUILDING REQUIREMENTS OF PART 4, NBCC 2015

THIS DESIGN COMPLIES WITH:
- PART 4 OF BCBC 2018 , NBC-2019AE
- PART 4 OF OBC 2012 (2019 AMENDMENT)
- CSA 086-14
- TPIC 2014

DESIGN ASSUMPTIONS
- SLOPE REDUCTION FACTOR NOT USED

(80 % OF 43.9 P.S.F. G.S.L. PLUS 8.4 P.S.F. RAIN LOAD) TIMES IMPORTANCE FACTOR EQUALS 43.5 P.S.F. SPECIFIED ROOF LIVE LOAD

ALLOWABLE DEFL.(LL)= L/360 (1.68")
CALCULATED VERT. DEFL.(LL) = L/ 999 (0.21")
ALLOWABLE DEFL.(TL)= L/180 (3.36")
CALCULATED VERT. DEFL.(TL) = L/ 999 (0.30")

CSI: TC=0.46/1.00 (L-N:1) , BC=0.42/1.00 (Q-R:1) , WB=0.84/1.00 (N-AD:1) , SSI=0.26/1.00 (O-AD:1)

DOL LUMBER=1.00 NAIL=1.00 LS BEND=1.10 COMP=1.10 SHEAR=1.10 TENS= 1.10

SNOW LOAD IMPORTANCE FACTOR = 1.00
WIND LOAD IMPORTANCE FACTOR = 1.00
LIVE LOAD IMPORTANCE FACTOR = 1.00
COMPANION LIVE LOAD FACTOR = 1.00

AUTOSOLVE HEELS OFF

TRUSS PLATE MANUFACTURER IS NOT RESPONSIBLE FOR QUALITY CONTROL IN THE TRUSS MANUFACTURING PLANT .

NAIL VALUES

PLATE	GRIP(DRY) (PSI) MAX	MIN	SHEAR (PLI) MAX	MIN	SECTION (PLI) MAX	MIN
MT20	650	371	1747	788	1987	1873

PLATE PLACEMENT TOL. = 0.250 inches

PLATE ROTATION TOL. = 5.0 Deg.

JSI GRIP= 0.88 (E) (INPUT = 0.90)
JSI METAL= 0.84 (Y) (INPUT = 0.95)

CONTINUED ON PAGE 2

GIRDER NAILING ASSUMES NAILED HANGERS ARE FASTENED WITH MIN. 3-0 INCH NAILS.

PLATES (table is in inches)

JT	TYPE	PLATES	W	LEN	Y	X
B	TMBMW1-I	MT20	10.0	12.0	4.00	
C	TMWWW-t	MT20	10.0	16.0	5.00	7.25
D, H, M						
D	TS-t	MT20	5.0	6.0		
E	TMWW+t	MT20	5.0	6.0	3.00	1.25
F	TTWW-m	MT20	6.0	10.0	2.75	4.25
G	TMW+w	MT20	4.0	6.0		
I	TMWW+t	MT20	4.0	6.0		
J	TMW+w	MT20	4.0	6.0		
K	TTWW-m	MT20	6.0	10.0	2.75	4.25
L	TMWW+t	MT20	5.0	6.0	3.00	1.25
N	TMWWW-t	MT20	10.0	16.0	5.00	7.25
O	TMBMW1-I	MT20	10.0	12.0	4.00	Edge
Q	BMW+w	MT20	4.0	6.0		
R	BMWW+t	MT20	6.0	10.0	5.50	2.75
S, V, Y						
S	BS-t	MT20	6.0	7.0		
T	BMWW+t	MT20	5.0	6.0	3.00	2.25
U	BMWWW-t	MT20	6.0	10.0		
W	BMWWW-t	MT20	6.0	10.0		
X	BMWW+t	MT20	5.0	6.0	3.00	2.25
Z	BMWW+t	MT20	6.0	10.0	5.50	2.75
AA	BMW+w	MT20	4.0	6.0		

Edge - INDICATES REFERENCE CORNER OF PLATE TOUCHES EDGE OF CHORD.

NOTES- (1)
1) Lateral braces to be a minimum of 2X4 SPF #2.

LOADING
TOTAL LOAD CASES: (18)

CHORDS

MEMB. FR-TO	MAX. FORCE (LBS)	FACTORED VERT. LOAD (PLF) FROM	TO	LC1	MAX CSI (LC)	MAX. UNBRAC LENGTH
S- R	-763 / 17792	-39.5	-39.5	0.27	(1)	6.25
R-AF	-1011 / 19292	-39.5	-39.5	0.42	(1)	6.25
AF-AG	-1011 / 19292	-39.5	-39.5	0.42	(1)	6.25
AG-AH	-1011 / 19292	-39.5	-39.5	0.42	(1)	6.25
AH- Q	-1011 / 19292	-39.5	-39.5	0.42	(1)	6.25
Q-AI	-1010 / 19364	-39.5	-39.5	0.37	(1)	6.25
AI-AD	-1010 / 19364	-39.5	-39.5	0.37	(1)	6.25
AD- O	-553 / 10080	-39.5	-39.5	0.24	(1)	6.25

WEBS

MEMB. FR-TO	MAX. FORCE (LBS)	MAX CSI (LC)

SPECIFIED CONCENTRATED LOADS (LBS)

JT	LOC.	LC1	MAX-	MAX+	FACE	DIR.	TYPE	HEEL	CONN.
Q	45-1-4	-456	-456	---	BACK	VERT	TOTAL	---	C1
R	37-11-4	-4391	-4391	---	BACK	VERT	TOTAL	---	C1
AD	49-1-4	-456	-456	---	BACK	VERT	TOTAL	---	C1
AF	39-10-12	-456	-456	---	BACK	VERT	TOTAL	---	C1
AG	41-1-4	-456	-456	---	BACK	VERT	TOTAL	---	C1
AH	43-1-4	-456	-456	---	BACK	VERT	TOTAL	---	C1
AI	47-1-4	-456	-456	---	BACK	VERT	TOTAL	---	C1

CONNECTION REQUIREMENTS

1) **C1:** A SUITABLE HANGER/MECHANICAL CONNECTION IS REQUIRED.

TRUSS HAS BEEN CHECKED FOR UNBALANCED LOADING AS PER NBCC 4.1.6.2.(8)

WIND LOAD APPLIED IS DERIVED FROM REFERENCE VELOCITY PRESSURE OF { 7.5} PSF AT {40-0-0} FT-IN-SX REFERENCE HEIGHT ABOVE GRADE AND USING EXTERNAL PEAK COEFFICIENTS, CpCg, BASED ON THE {MAIN WIND FORCE RESISTING SYSTEM}.INTERNAL WIND PRESSURE IS BASED ON DESIGN {CATEGORY 2}. BUILDING MAY BE LOCATED ON {OPEN TERRAIN}, AND TRUSS IS DESIGNED TO BE LOCATED AT LEAST {0-0} FT-IN-SX AWAY FROM EAVE.TRUSS UPLIFT IS BASED ON TOP AND BOTTOM CHORD DEAD LOADS OF 5.0 PSF AND 5.0 PSF RESPECTIVELY.

LICENSED PROFESSIONAL ENGINEER
4/02/24
C. M. HEYENS
100505065
PROVINCE OF ONTARIO

STRUCTURAL COMPONENT ONLY
DWG # TR24040063

JOB NAME	TRUSS NAME	QUANTITY	PLY	JOB DESC. BAYVIEW WELLINGTON	DRWG NO.
436388	T36	1	3	TRUSS DESC.	

Tamarack Roof Truss, Burlington

Version 8.630 S Aug 30 2023 MiTek Industries, Inc. Tue Apr 2 10:54:17 2024 Page 1
ID:GRmvuh1dyQr3nydBfsTFcCy6OGl-HQKWc?gY3PHGpx6KA1zyfnCTjT9Ask5v9E8tDezUo3a

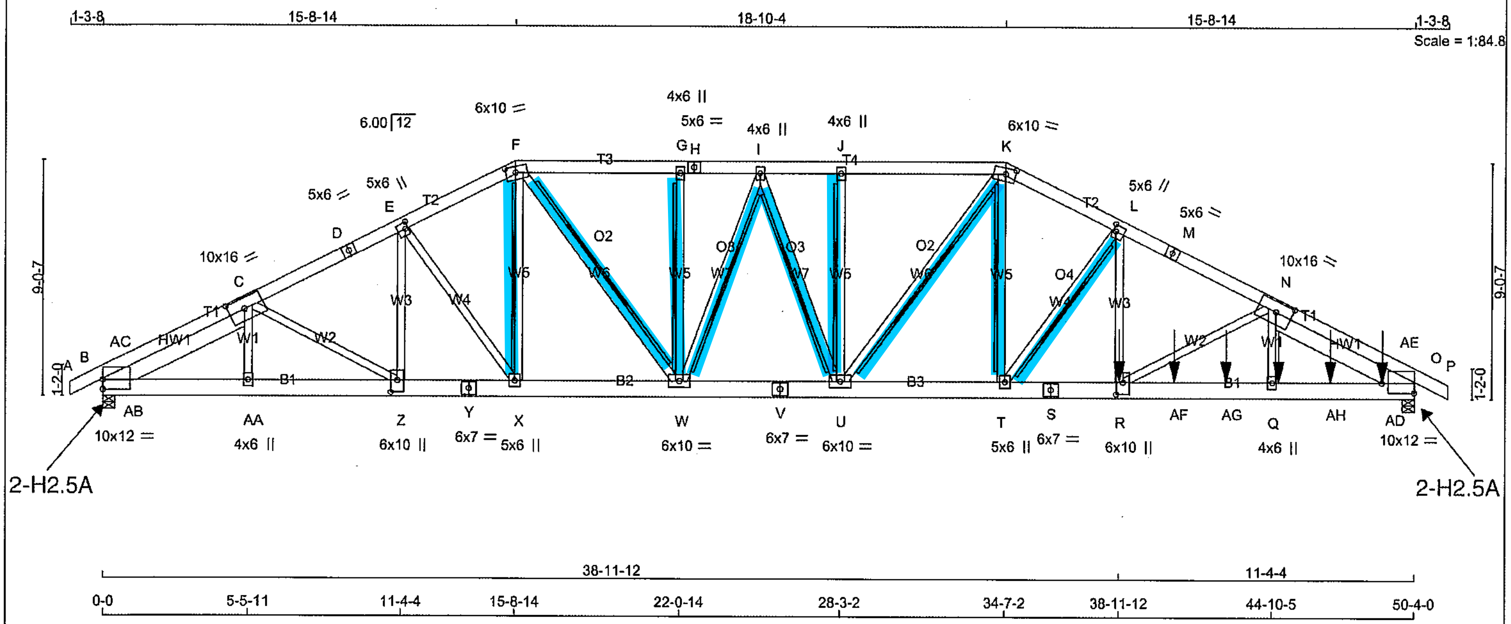

TOTAL WEIGHT = 3 X 379 = 1136 lb

[M]

LUMBER

N. L. G. A. RULES

CHORDS	SIZE		LUMBER	DESCR.
A - D	2x6	DRY	No.2	SPF
D - F	2x6	DRY	No.2	SPF
F - H	2x6	DRY	No.2	SPF
H - K	2x6	DRY	No.2	SPF
K - M	2x6	DRY	No.2	SPF
M - P	2x6	DRY	No.2	SPF
B - Y	2x8	DRY	1950F 1.7E	SPF
Y - V	2x8	DRY	1950F 1.7E	SPF
V - S	2x8	DRY	1950F 1.7E	SPF
S - O	2x8	DRY	1950F 1.7E	SPF

REINFORCING MEMBERS

HW1	2x8	DRY	No.2	SPF
HW2	2x8	DRY	No.2	SPF
ALL WEBS	2x4	DRY	No.2	SPF

DRY: SEASONED LUMBER.

DESIGN CONSISTS OF 3 TRUSSES BUILT SEPARATELY THEN FASTENED TOGETHER AS FOLLOWS:

CHORDS	#ROWS	SURFACE SPACING (IN)	LOAD(PLF)
TOP CHORDS : (0.122"X3") SPIRAL NAILS			
A- D	2	12	TOP
D- F	2	12	TOP
F- H	2	12	TOP
H- K	2	12	TOP
K- M	2	12	TOP
M- P	2	12	TOP
BOTTOM CHORDS : (0.122"X3") SPIRAL NAILS			
B- Y	2	11	TOP
Y- V	2	12	TOP
V- S	2	12	TOP
S- O	2	11	SIDE(421.1)
WEBS : (0.122"X3") SPIRAL NAILS			
L- R	2	4	SIDE(1729.6)
2x4	1	6	
E- Z	2	4	
2x8	2	6	

STAGGER NAILS BY HALF THE SURFACE SPACING IN ADJACENT PLIES.

LICENSED PROFESSIONAL ENGINEER
4/02/24
C. M. HEYENS
100505065
PROVINCE OF ONTARIO

STRUCTURAL COMPONENT ONLY
DWG # TR24040064

DIMENSIONS, SUPPORTS AND LOADINGS SPECIFIED BY FABRICATOR TO BE VERIFIED BY BUILDING DESIGNER

BEARINGS

	FACTORED GROSS REACTION		MAXIMUM FACTORED GROSS REACTION			INPUT BRG	REQRD BRG
JT	VERT	HORZ	DOWN	HORZ	UPLIFT	IN-SX	IN-SX
B	6725	0	6725	188	-807	5-8	2-7
O	12815	0	12815	0	-807	5-8	4-10

PROVIDE ANCHORAGE AT BEARING JOINT B FOR 807 LBS FACTORED UPLIFT
PROVIDE ANCHORAGE AT BEARING JOINT O FOR 807 LBS FACTORED UPLIFT

PROVIDE FOR 188 LBS FACTORED HORIZONTAL REACTION AT JOINT B

UNFACTORED REACTIONS

	1ST LCASE	MAX./MIN. COMPONENT REACTIONS					
JT	COMBINED	SNOW	LIVE	PERM.LIVE	WIND	DEAD	SOIL
B	4852	3171 / 0	529 / 0	0 / 0	123 / -958	1153 / 0	0 / 0
O	9123	6171 / 0	528 / 0	0 / 0	123 / -958	2423 / 0	0 / 0
HORIZONTAL REACTIONS							
B	---	0 / 0	0 / 0	0 / 0	134 / -134	0 / 0	0 /0

BEARING MATERIAL TO BE SPF NO.2 OR BETTER AT JOINT(S) B, O

BRACING

FOR SECTION F-K, MAX. UNBRACED TOP CHORD LENGTH = 2.00 FT.
FOR OTHER SECTIONS, MAX. UNBRACED TOP CHORD LENGTH = 3.24 FT.
MAX. UNBRACED BOTTOM CHORD LENGTH = 6.25 FT OR RIGID CEILING DIRECTLY APPLIED.

ALL PITCH BREAKS AND PERIMETER CORNER JOINTS MUST BE LATERALLY RESTRAINED.

2x6 DRY SPF No.2 T-BRACE AT F-X, K-T, L-T, K-U, F-W, J-U, G-W, I-W, I-U

FASTEN T AND I-BRACES TO NARROW EDGE OF WEB WITH ONE ROW PER PLY OF 3" COMMON WIRE NAILS @ 6" O.C. WITH 3" MINIMUM END DISTANCE. BRACE MUST COVER 90% OF WEB LENGTH.

LOADING

TOTAL LOAD CASES: (18)

CHORDS

MEMB. FR-TO	MAX. FACTORED FORCE (LBS)	FACTORED VERT. LOAD LC1 (PLF) FROM	TO	MAX CSI (LC)	MAX. UNBRAC LENGTH
A- B	0 / 8	-145.3	-145.3	0.04 (2)	10.00
B-AC	-7746 / 862	-145.3	-145.3	0.07 (2)	5.13
AC- C	-5790 / 766	-145.3	-145.3	0.09 (2)	5.73
C- D	-11075 / 1211	-145.3	-145.3	0.16 (2)	4.38
D- E	-11075 / 1211	-145.3	-145.3	0.16 (2)	4.38
E- F	-10562 / 1147	-145.3	-145.3	0.15 (2)	4.47
F- G	-11657 / 1122	-155.3	-155.3	0.22 (1)	2.00
G- H	-11658 / 1123	-155.3	-155.3	0.18 (2)	2.00
H- I	-11658 / 1123	-155.3	-155.3	0.18 (2)	2.00
I- J	-12960 / 1123	-155.3	-155.3	0.19 (1)	2.00
J- K	-12960 / 1122	-155.3	-155.3	0.25 (1)	2.00
K- L	-14857 / 1147	-145.3	-145.3	0.19 (1)	3.83
L- M	-19737 / 1211	-145.3	-145.3	0.38 (1)	3.24
M- N	-19737 / 1211	-145.3	-145.3	0.38 (1)	3.24
N-AE	-11170 / 767	-145.3	-145.3	0.14 (3)	4.38
AE- O	-15024 / 863	-145.3	-145.3	0.17 (1)	3.83
O- P	0 / 8	-145.3	-145.3	0.04 (3)	10.00
B-AB	-750 / 5183	-39.5	-39.5	0.12 (1)	6.25
AB-AA	-1184 / 9907	-39.5	-39.5	0.19 (1)	6.25
AA- Z	-1184 / 9899	-39.5	-39.5	0.16 (1)	6.25
Z- Y	-993 / 9913	-39.5	-39.5	0.15 (1)	6.25
Y- X	-993 / 9913	-39.5	-39.5	0.15 (1)	6.25
X- W	-779 / 9423	-39.5	-39.5	0.15 (1)	6.25
W- V	-774 / 12340	-39.5	-39.5	0.19 (1)	6.25
V- U	-774 / 12340	-39.5	-39.5	0.19 (1)	6.25
U- T	-590 / 13366	-39.5	-39.5	0.20 (1)	6.25
T- S	-805 / 17663	-39.5	-39.5	0.28 (1)	6.25

WEBS

MEMB. FR-TO	MAX. FACTORED FORCE (LBS)	MAX CSI (LC)
AA- C	0 / 378	0.02 (17)
C- Z	-231 / 486	0.04 (2)
Z- E	-220 / 272	0.03 (10)
E- X	-1124 / 374	0.30 (2)
X- F	-270 / 1242	0.07 (2)
T- K	-270 / 6680	0.36 (3)
T- L	-7794 / 374	0.55 (3)
R- L	-55 / 7607	0.41 (3)
R- N	-1408 / 224	0.27 (3)
Q- N	0 / 2459	0.13 (1)
U- K	-1804 / 38	0.23 (10)
F- W	-272 / 3885	0.21 (3)
U- J	-1094 / 254	0.09 (3)
W- G	-1111 / 255	0.09 (2)
W- I	-2967 / 171	0.29 (3)
I- U	-141 / 2838	0.15 (3)
AB-AC	-162 / 2774	0.00 (1)
AB- C	-5859 / 537	0.43 (1)
N-AD	-10846 / 539	0.79 (1)
AD-AE	-163 / 5807	0.00 (1)

DESIGN CRITERIA

SPECIFIED LOADS:

TOP CH.	LL	=	43.5	PSF
	DL	=	6.0	PSF
BOT CH.	LL	=	10.5	PSF
	DL	=	7.4	PSF
TOTAL LOAD		=	67.3	PSF

SPACING = 24.0 IN. C/C

LOADING IN FLAT SECTION BASED ON PIGGYBACK TRUSS WITH SLOPES OF 6.00/12 AND -6.00/12 AND RESPECTIVE HEEL HEIGHTS OF 0-0 AND 0-0 AND AN ADDITIONAL DEAD LOAD OF 4.0 P.S.F.

THIS TRUSS IS DESIGNED FOR COMMERCIAL OR INDUSTRIAL BUILDING REQUIREMENTS OF PART 4, NBCC 2015

THIS DESIGN COMPLIES WITH:
- PART 4 OF BCBC 2018 , NBC-2019AE
- PART 4 OF OBC 2012 (2019 AMENDMENT)
- CSA 086-14
- TPIC 2014

DESIGN ASSUMPTIONS
- SLOPE REDUCTION FACTOR NOT USED

(80 % OF 43.9 P.S.F. G.S.L. PLUS 8.4 P.S.F. RAIN LOAD) TIMES IMPORTANCE FACTOR EQUALS 43.5 P.S.F. SPECIFIED ROOF LIVE LOAD

ALLOWABLE DEFL.(LL)= L/360 (1.68")
CALCULATED VERT. DEFL.(LL) = L/ 999 (0.19")
ALLOWABLE DEFL.(TL)= L/180 (3.36")
CALCULATED VERT. DEFL.(TL) = L/ 999 (0.28")

CSI: TC=0.38/1.00 (L-N:1) , BC=0.37/1.00 (Q-R:1) , WB=0.79/1.00 (N-AD:1) , SSI=0.23/1.00 (O-AD:1)

DOL LUMBER=1.00 NAIL=1.00 LS BEND=1.10 COMP=1.10 SHEAR=1.10 TENS= 1.10

SNOW LOAD IMPORTANCE FACTOR = 1.00
WIND LOAD IMPORTANCE FACTOR = 1.00
LIVE LOAD IMPORTANCE FACTOR = 1.00
COMPANION LIVE LOAD FACTOR = 1.00

AUTOSOLVE HEELS OFF

TRUSS PLATE MANUFACTURER IS NOT RESPONSIBLE FOR QUALITY CONTROL IN THE TRUSS MANUFACTURING PLANT .

NAIL VALUES

PLATE	GRIP(DRY) (PSI) MAX	MIN	SHEAR (PLI) MAX	MIN	SECTION (PLI) MAX	MIN
MT20	650	371	1747	788	1987	1873

PLATE PLACEMENT TOL. = 0.250 Inches

PLATE ROTATION TOL. = 5.0 Deg.

JSI GRIP= 0.90 (F) (INPUT = 0.90)
JSI METAL= 0.86 (Y) (INPUT = 0.95)

CONTINUED ON PAGE 2

JOB NAME	TRUSS NAME	QUANTITY	PLY	JOB DESC.	DRWG NO.
436388	T36	1	3	BAYVIEW WELLINGTON TRUSS DESC.	

Tamarack Roof Truss, Burlington

GIRDER NAILING ASSUMES NAILED HANGERS ARE FASTENED WITH MIN. 3-0 INCH NAILS.

PLATES (table is in inches)

JT	TYPE	PLATES	W	LEN	Y	X
B	TMBMW1-I	MT20	10.0	12.0	4.50	
C	TMWWW-t	MT20	10.0	16.0	4.75	7.25
D, H, M						
D	TS-t	MT20	5.0	6.0		
E	TMWW+t	MT20	5.0	6.0	3.00	1.25
F	TTWW-m	MT20	6.0	10.0	2.75	4.50
G	TMW+w	MT20	4.0	6.0		
I	TMWW+t	MT20	4.0	6.0		
J	TMW+w	MT20	4.0	6.0		
K	TTWW-m	MT20	6.0	10.0	2.75	4.50
L	TMWW+t	MT20	5.0	6.0	3.00	1.25
N	TMWWW-t	MT20	10.0	16.0	4.75	7.25
O	TMBMW1-I	MT20	10.0	12.0	4.50	Edge
Q	BMW+w	MT20	4.0	6.0		
R	BMWW+t	MT20	6.0	10.0	5.50	3.00
S, V, Y						
S	BS-t	MT20	6.0	7.0		
T	BMWW+t	MT20	5.0	6.0		
U	BMWWW-t	MT20	6.0	10.0		
W	BMWWW-t	MT20	6.0	10.0		
X	BMWW+t	MT20	5.0	6.0		
Z	BMWW+t	MT20	6.0	10.0	5.50	3.00
AA	BMW+w	MT20	4.0	6.0		

Edge - INDICATES REFERENCE CORNER OF PLATE TOUCHES EDGE OF CHORD.

NOTES- (1)
1) Lateral braces to be a minimum of 2X4 SPF #2.

LOADING
TOTAL LOAD CASES: (18)

CHORDS

MEMB. FR-TO	MAX. FACTORED FORCE (LBS)	FACTORED VERT. LOAD (PLF) FROM	TO	LC1	MAX CSI (LC)	MAX. UNBRAC LENGTH
S- R	-805 / 17663	-39.5	-39.5	0.28	(1)	6.25
R-AF	-998 / 18665	-39.5	-39.5	0.37	(1)	6.25
AF-AG	-998 / 18665	-39.5	-39.5	0.37	(1)	6.25
AG- Q	-998 / 18665	-39.5	-39.5	0.37	(1)	6.25
Q-AH	-997 / 18723	-39.5	-39.5	0.35	(1)	6.25
AH-AD	-997 / 18723	-39.5	-39.5	0.35	(1)	6.25
AD- O	-563 / 9977	-39.5	-39.5	0.23	(1)	6.25

WEBS

MEMB. FR-TO	MAX. FACTORED FORCE (LBS)	MAX CSI (LC)

SPECIFIED CONCENTRATED LOADS (LBS)

JT	LOC.	LC1	MAX-	MAX+	FACE	DIR.	TYPE	HEEL	CONN.
Q	45-1-4	-456	-456	---	FRONT	VERT	TOTAL	---	C1
R	38-11-12	-4489	-4489	---	FRONT	VERT	TOTAL	---	C1
AD	49-1-4	-456	-456	---	FRONT	VERT	TOTAL	---	C1
AF	41-1-4	-456	-456	---	FRONT	VERT	TOTAL	---	C1
AG	43-1-4	-456	-456	---	FRONT	VERT	TOTAL	---	C1
AH	47-1-4	-456	-456	---	FRONT	VERT	TOTAL	---	C1

CONNECTION REQUIREMENTS

1) **C1:** A SUITABLE HANGER/MECHANICAL CONNECTION IS REQUIRED.

TRUSS HAS BEEN CHECKED FOR UNBALANCED LOADING AS PER NBCC 4.1.6.2.(8)

WIND LOAD APPLIED IS DERIVED FROM REFERENCE VELOCITY PRESSURE OF (7.5) PSF AT {40-0-0} FT-IN-SX REFERENCE HEIGHT ABOVE GRADE AND USING EXTERNAL PEAK COEFFICIENTS, CpCg, BASED ON THE {MAIN WIND FORCE RESISTING SYSTEM}.INTERNAL WIND PRESSURE IS BASED ON DESIGN {CATEGORY 2}. BUILDING MAY BE LOCATED ON {OPEN TERRAIN}, AND TRUSS IS DESIGNED TO BE LOCATED AT LEAST {0-0} FT-IN-SX AWAY FROM EAVE.TRUSS UPLIFT IS BASED ON TOP AND BOTTOM CHORD DEAD LOADS OF 5.0 PSF AND 5.0 PSF RESPECTIVELY.

LICENSED PROFESSIONAL ENGINEER
4/02/24
C. M. HEYENS
100505065
PROVINCE OF ONTARIO

STRUCTURAL COMPONENT ONLY
DWG # TR24040064

JOB NAME	TRUSS NAME	QUANTITY	PLY	JOB DESC.	DRWG NO.
436388	T37	8	1	BAYVIEW WELLINGTON TRUSS DESC.	

Tamarack Roof Truss, Burlington

Version 8.630 S Aug 30 2023 MiTek Industries, Inc. Tue Apr 2 10:54:19 2024 Page 1
ID:GRmvuh1dyQr3nydBfsTFcCy6OGl-DoSG1hhob0Y 3FGiHR0QkCljnGqVKcoCdYd IXzUo3Y

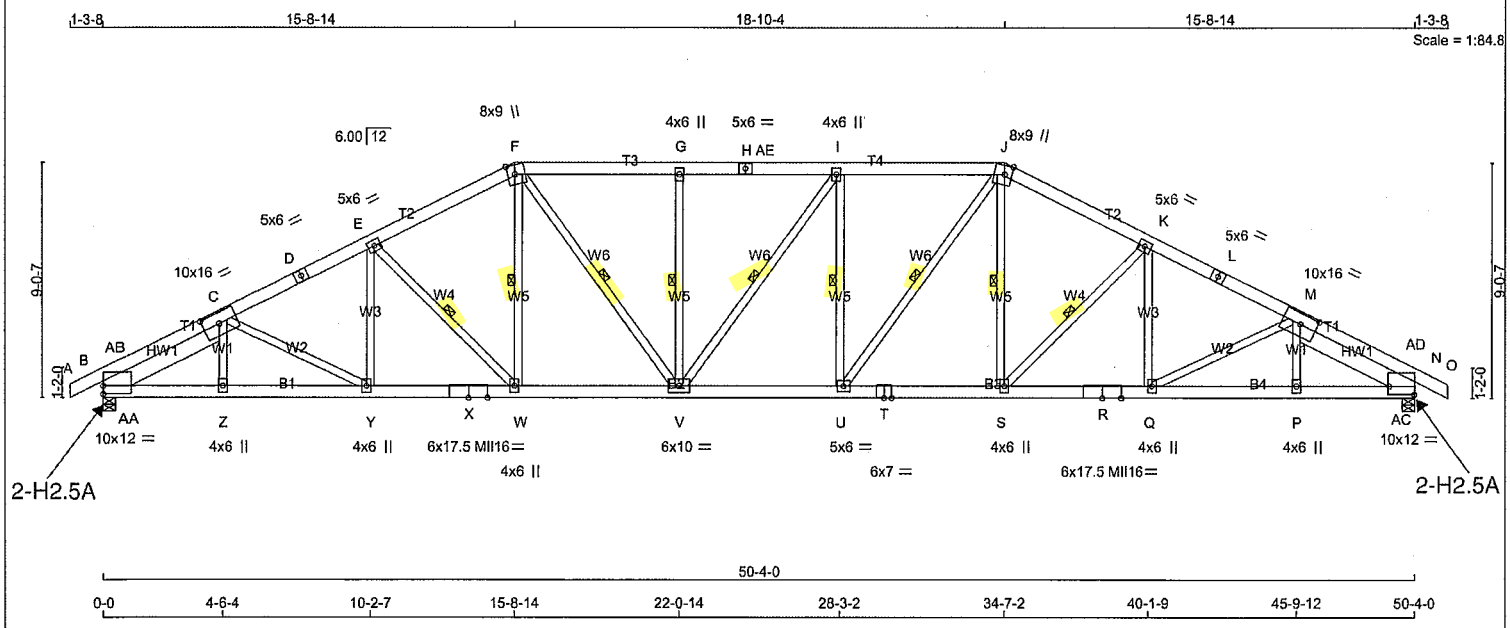

TOTAL WEIGHT = 8 X 337 = 2695 lb

LUMBER
N. L. G. A. RULES

CHORDS	SIZE		LUMBER	DESCR.
A - D	2x6	DRY	No.2	SPF
D - F	2x6	DRY	No.2	SPF
F - H	2x6	DRY	No.2	SPF
H - J	2x6	DRY	No.2	SPF
J - L	2x6	DRY	No.2	SPF
L - O	2x6	DRY	No.2	SPF
B - X	2x6	DRY	2100F 1.8E	SPF
X - T	2x6	DRY	2100F 1.8E	SPF
T - R	2x6	DRY	2100F 1.8E	SPF
R - N	2x6	DRY	2100F 1.8E	SPF
REINFORCING MEMBERS				
HW1	2x8	DRY	No.2	SPF
HW2	2x8	DRY	No.2	SPF
ALL WEBS	2x4	DRY	No.2	SPF

DRY: SEASONED LUMBER.

PLATES (table is in inches)

JT	TYPE	PLATES	W	LEN	Y	X
B	TMBMW1-I	MT20	10.0	12.0	3.75	
C	TMWWW-t	MT20	10.0	16.0	4.75	7.50
D, H, L						
D	TS-t	MT20	5.0	6.0		
E	TMWW-t	MT20	5.0	6.0		
F	TTWW+m	MT20	8.0	9.0	Edge	3.25
G	TMW+w	MT20	4.0	6.0		
I	TMWW+t	MT20	4.0	6.0		
J	TTWW+m	MT20	8.0	9.0	Edge	3.25
K	TMWW-t	MT20	5.0	6.0		
M	TMWWW-t	MT20	10.0	16.0	4.75	7.50
N	TMBMW1-I	MT20	10.0	12.0	3.75	Edge
P	BMW+w	MT20	4.0	6.0		
Q, S, W, Y						
Q	BMWW+t	MT20	4.0	6.0		
R	BS-t	MII16	6.0	17.5		
T	BS-t	MT20	6.0	7.0		
U	BMWW-t	MT20	5.0	6.0		
V	BMWWW-t	MT20	6.0	10.0		
X	BS-t	MII16	6.0	17.5		
Z	BMW+w	MT20	4.0	6.0		

LICENSED PROFESSIONAL ENGINEER
4/02/24
C. M. HEYENS
100505065
PROVINCE OF ONTARIO

STRUCTURAL COMPONENT ONLY
DWG # TR24040065

DIMENSIONS, SUPPORTS AND LOADINGS SPECIFIED BY FABRICATOR TO BE VERIFIED BY BUILDING DESIGNER

BEARINGS

JT	FACTORED GROSS REACTION VERT	HORZ	MAXIMUM FACTORED GROSS REACTION DOWN	HORZ	UPLIFT	INPUT BRG IN-SX	REQRD BRG IN-SX
B	4948	0	4948	188	-807	5-8	5-6
N	4948	0	4948	0	-807	5-8	5-6

PROVIDE ANCHORAGE AT BEARING JOINT B FOR 807 LBS FACTORED UPLIFT
PROVIDE ANCHORAGE AT BEARING JOINT N FOR 807 LBS FACTORED UPLIFT

PROVIDE FOR 188 LBS FACTORED HORIZONTAL REACTION AT JOINT B

UNFACTORED REACTIONS

JT	1ST LCASE COMBINED	MAX./MIN. COMPONENT REACTIONS SNOW	LIVE	PERM.LIVE	WIND	DEAD	SOIL
B	3603	2308 / 0	529 / 0	0 / 0	123 / -958	767 / 0	0 / 0
N	3603	2308 / 0	529 / 0	0 / 0	123 / -958	767 / 0	0 / 0
HORIZONTAL REACTIONS							
B	---	0 / 0	0 / 0	0 / 0	134 / -134	0 / 0	0 /0

BEARING MATERIAL TO BE SPF NO.2 OR BETTER AT JOINT(S) B, N

BRACING
FOR SECTION F-J, MAX. UNBRACED TOP CHORD LENGTH = 2.00 FT.
FOR OTHER SECTIONS, MAX. UNBRACED TOP CHORD LENGTH = 2.72 FT.
MAX. UNBRACED BOTTOM CHORD LENGTH = 6.25 FT OR RIGID CEILING DIRECTLY APPLIED.

ALL PITCH BREAKS AND PERIMETER CORNER JOINTS MUST BE LATERALLY RESTRAINED.

1 LATERAL BRACE(S) AT 1/ 2 LENGTH OF E-W, F-W, J-S, K-S, J-U, F-V, I-U, G-V, I-V.

LOADING
TOTAL LOAD CASES: (18)

CHORDS

MEMB. FR-TO	MAX. FACTORED FORCE (LBS)	FACTORED VERT. LOAD LC1 (PLF) FROM	TO	MAX CSI (LC)	MAX. UNBRAC LENGTH
A- B	0 / 1	-145.3	-145.3	0.11 (2)	10.00
B-AB	-5529 / 856	-145.3	-145.3	0.24 (1)	3.59
AB- C	-3613 / 663	-145.3	-145.3	0.21 (2)	4.38
C- D	-7569 / 1222	-145.3	-145.3	0.67 (1)	2.72
D- E	-7569 / 1222	-145.3	-145.3	0.67 (1)	2.72
E- F	-6805 / 1122	-145.3	-145.3	0.60 (1)	2.94
F- G	-7007 / 1118	-155.3	-155.3	0.70 (1)	2.00
G- H	-7007 / 1119	-155.3	-155.3	0.72 (1)	2.00
H-AE	-7007 / 1119	-155.3	-155.3	0.72 (1)	2.00
AE- I	-7007 / 1119	-155.3	-155.3	0.72 (1)	2.00
I- J	-7016 / 1120	-155.3	-155.3	0.73 (1)	2.00
J- K	-6804 / 1122	-145.3	-145.3	0.60 (1)	2.94
K- L	-7569 / 1223	-145.3	-145.3	0.67 (1)	2.72
L- M	-7569 / 1223	-145.3	-145.3	0.67 (1)	2.72
M-AD	-3613 / 663	-145.3	-145.3	0.21 (3)	4.38
AD- N	-5529 / 856	-145.3	-145.3	0.24 (1)	3.59
N- O	0 / 1	-145.3	-145.3	0.11 (3)	10.00
B-AA	-672 / 3234	-39.5	-39.5	0.20 (1)	6.25
AA- Z	-1156 / 6716	-39.5	-39.5	0.38 (1)	6.25
Z- Y	-1157 / 6710	-39.5	-39.5	0.38 (1)	6.25
Y- X	-1038 / 6790	-39.5	-39.5	0.37 (1)	6.25
X- W	-1038 / 6790	-39.5	-39.5	0.37 (1)	6.25
W- V	-771 / 6066	-39.5	-39.5	0.34 (1)	6.25
V- U	-712 / 7016	-39.5	-39.5	0.38 (1)	6.25
U- T	-583 / 6065	-39.5	-39.5	0.33 (1)	6.25
T- S	-583 / 6065	-39.5	-39.5	0.33 (1)	6.25
S- R	-850 / 6790	-39.5	-39.5	0.37 (1)	6.25
R- Q	-850 / 6790	-39.5	-39.5	0.37 (1)	6.25
Q- P	-970 / 6710	-39.5	-39.5	0.38 (1)	6.25
P-AC	-969 / 6715	-39.5	-39.5	0.38 (1)	6.25
AC- N	-484 / 3234	-39.5	-39.5	0.20 (1)	6.25

WEBS

MEMB. FR-TO	MAX. FACTORED FORCE (LBS)	MAX CSI (LC)
Z- C	0 / 260	0.04 (17)
C- Y	-158 / 300	0.08 (2)
Y- E	-35 / 321	0.05 (5)
E- W	-1327 / 387	0.40 (2)
W- F	-229 / 1207	0.19 (2)
S- J	-227 / 1201	0.19 (3)
S- K	-1329 / 387	0.40 (3)
Q- K	-33 / 323	0.05 (6)
Q- M	-157 / 301	0.08 (3)
P- M	0 / 259	0.04 (17)
U- J	-279 / 1729	0.28 (2)
F- V	-275 / 1718	0.28 (3)
U- I	-1137 / 279	0.39 (2)
V- G	-1188 / 270	0.41 (2)
V- I	-1179 / 1159	0.67 (3)
AA-AB	-290 / 2539	0.00 (1)
AA- C	-4390 / 610	0.68 (1)
M-AC	-4389 / 611	0.68 (1)
AC-AD	-291 / 2540	0.00 (1)

[M]

DESIGN CRITERIA

SPECIFIED LOADS:

TOP CH.	LL	=	43.5	PSF
	DL	=	6.0	PSF
BOT CH.	LL	=	10.5	PSF
	DL	=	7.4	PSF
TOTAL LOAD		=	67.3	PSF

SPACING = 24.0 IN. C/C

LOADING IN FLAT SECTION BASED ON PIGGYBACK TRUSS WITH SLOPES OF 6.00/12 AND -6.00/12 AND RESPECTIVE HEEL HEIGHTS OF 0-0 AND 0-0 AND AN ADDITIONAL DEAD LOAD OF 4.0 P.S.F.

THIS TRUSS IS DESIGNED FOR COMMERCIAL OR INDUSTRIAL BUILDING REQUIREMENTS OF PART 4, NBCC 2015

THIS DESIGN COMPLIES WITH:
- PART 4 OF BCBC 2018 , NBC-2019AE
- PART 4 OF OBC 2012 (2019 AMENDMENT)
- CSA 086-14
- TPIC 2014

DESIGN ASSUMPTIONS
- SLOPE REDUCTION FACTOR NOT USED

(80 % OF 43.9 P.S.F. G.S.L. PLUS 8.4 P.S.F. RAIN LOAD) TIMES IMPORTANCE FACTOR EQUALS 43.5 P.S.F. SPECIFIED ROOF LIVE LOAD

ALLOWABLE DEFL.(LL)= L/360 (1.68")
CALCULATED VERT. DEFL.(LL) = L/ 999 (0.33")
ALLOWABLE DEFL.(TL)= L/180 (3.36")
CALCULATED VERT. DEFL.(TL) = L/ 999 (0.44")

CSI: TC=0.73/1.00 (I-J:1) , BC=0.38/1.00 (P-AC:1) , WB=0.68/1.00 (C-AA:1) , SSI=0.41/1.00 (I-J:3)

DOL LUMBER=1.00 NAIL=1.00 LS BEND=1.10 COMP=1.10 SHEAR=1.10 TENS= 1.10

SNOW LOAD IMPORTANCE FACTOR = 1.00
WIND LOAD IMPORTANCE FACTOR = 1.00
LIVE LOAD IMPORTANCE FACTOR = 1.00
COMPANION LIVE LOAD FACTOR = 1.00

AUTOSOLVE HEELS OFF

TRUSS PLATE MANUFACTURER IS NOT RESPONSIBLE FOR QUALITY CONTROL IN THE TRUSS MANUFACTURING PLANT .

NAIL VALUES

PLATE	GRIP(DRY) (PSI) MAX	MIN	SHEAR (PLI) MAX	MIN	SECTION (PLI) MAX	MIN
MT20	650	371	1747	788	1987	1873
MII16	438	302	2547	1256	4283	1816

PLATE PLACEMENT TOL. = 0.250 inches

PLATE ROTATION TOL. = 5.0 Deg.

JSI GRIP= 0.87 (N) (INPUT = 0.90)
JSI METAL= 0.88 (T) (INPUT = 0.95)

CONTINUED ON PAGE 2

Edge - INDICATES REFERENCE CORNER OF PLATE TOUCHES EDGE OF CHORD.

NOTES- (1)
1) Lateral braces to be a minimum of 2X4 SPF #2.

TRUSS HAS BEEN CHECKED FOR UNBALANCED LOADING AS PER NBCC 4.1.6.2.(8)

WIND LOAD APPLIED IS DERIVED FROM REFERENCE VELOCITY PRESSURE OF (7.5) PSF AT {40-0-0} FT-IN-SX REFERENCE HEIGHT ABOVE GRADE AND USING EXTERNAL PEAK COEFFICIENTS, CpCg, BASED ON THE {MAIN WIND FORCE RESISTING SYSTEM}.INTERNAL WIND PRESSURE IS BASED ON DESIGN {CATEGORY 2}. BUILDING MAY BE LOCATED ON {OPEN TERRAIN}, AND TRUSS IS DESIGNED TO BE LOCATED AT LEAST {0-0} FT-IN-SX AWAY FROM EAVE.TRUSS UPLIFT IS BASED ON TOP AND BOTTOM CHORD DEAD LOADS OF 5.0 PSF AND 5.0 PSF RESPECTIVELY.

LICENSED PROFESSIONAL ENGINEER
4/02/24
C. M. HEYENS
100505065
PROVINCE OF ONTARIO

STRUCTURAL COMPONENT ONLY
DWG # TR24040065

JOB NAME	TRUSS NAME	QUANTITY	PLY	JOB DESC.	DRWG NO.
436388	T37G	2	1	BAYVIEW WELLINGTON TRUSS DESC.	

Tamarack Roof Truss, Burlington

Version 8.630 S Aug 30 2023 MiTek Industries, Inc. Tue Apr 2 10:54:21 2024 Page 1
ID:GRmvuh1dyQr3nydBfsTFcCy6OGl-9BZ1SMj27eoiIZQ5Ps2updNDQ4bNodqV4s64MPzUo3W

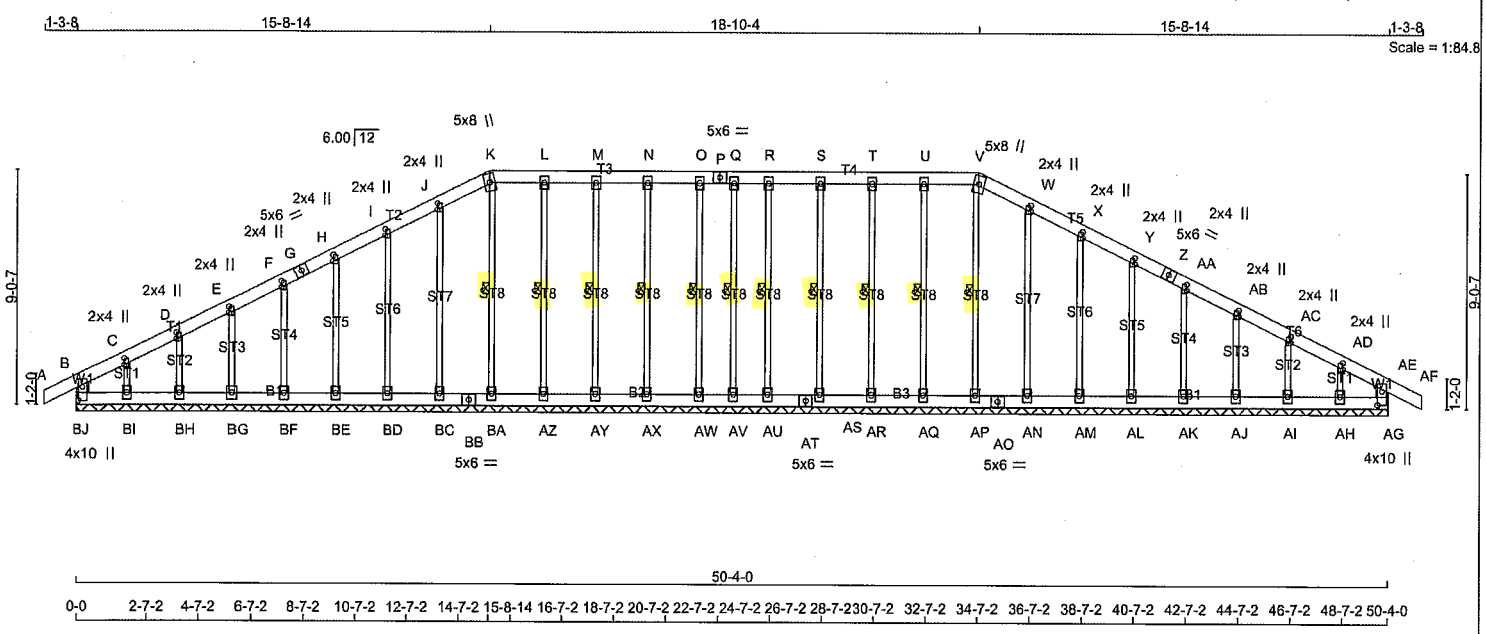

TOTAL WEIGHT = 2 X 315 = 630 lb

[M]

LUMBER

N. L. G. A. RULES

CHORDS	SIZE		LUMBER	DESCR.
A - G	2x6	DRY	No.2	SPF
G - K	2x6	DRY	No.2	SPF
K - P	2x6	DRY	No.2	SPF
P - V	2x6	DRY	No.2	SPF
V - Z	2x6	DRY	No.2	SPF
Z - AF	2x6	DRY	No.2	SPF
BJ - B	2x6	DRY	No.2	SPF
AG- AE	2x6	DRY	No.2	SPF
BJ - BB	2x6	DRY	No.2	SPF
BB- AT	2x6	DRY	No.2	SPF
AT- AO	2x6	DRY	No.2	SPF
AO- AG	2x6	DRY	No.2	SPF
ALL WEBS	2x3	DRY	No.2	SPF
ALL GABLE WEBS	2x3	DRY	No.2	SPF

DRY: SEASONED LUMBER.

GABLE STUDS SPACED AT 2-0-0 OC.

PLATES (table is in inches)

JT	TYPE	PLATES	W	LEN	Y	X
B, AE, AG, BJ						
B						
C, F, AD						
C	TMW+w	MT20	2.0	4.0	2.75	
D, E, H, I, J, W, X, Y, AA, AB, AC						
D	TMW+w	MT20	2.0	4.0	3.00	
G, P, Z						
G	TS-t	MT20	5.0	6.0		
K	TTW+m	MT20	5.0	8.0		
L, M, N, O, Q, R, S, T, U						
L	TMW+w	MT20	4.0	6.0		
V	TTW+m	MT20	5.0	8.0		
AG	TMBMV1+p	MT20	4.0	10.0	6.25	2.00
AH, AI, AJ, AK, AL, AM, AN, AP, AQ, AR, AS, AU, AV, AW, AX, AY, AZ, BA, BC, BD, BE, BF, BG, BH, BI						
AH	BMW1+w	MT20	4.0	6.0		
AO, AT, BB						
AO	BS-t	MT20	5.0	6.0		
BJ	TMBMV1+p	MT20	4.0	10.0	6.25	2.00

LICENSED PROFESSIONAL ENGINEER
4/02/24
C. M. HEYENS
100505065
PROVINCE OF ONTARIO

STRUCTURAL COMPONENT ONLY
DWG # TR24040066

DIMENSIONS, SUPPORTS AND LOADINGS SPECIFIED BY FABRICATOR TO BE VERIFIED BY BUILDING DESIGNER

BEARINGS

THIS TRUSS DESIGNED FOR CONTINUOUS BEARINGS.

THIS TRUSS REQUIRES RIGID SHEATHING ON EXPOSED FACE.

BEARING MATERIAL TO BE SPF NO.2 OR BETTER AT JOINT(S)

BRACING

FOR SECTION K-V, MAX. PURLIN SPACING = 2.00 FT.
FOR OTHER SECTIONS, TOP CHORD TO BE SHEATHED OR MAX. PURLIN SPACING = 6.25 FT.
MAX. UNBRACED BOTTOM CHORD LENGTH = 10.00 FT OR RIGID CEILING DIRECTLY APPLIED.

ALL PITCH BREAKS AND PERIMETER CORNER JOINTS MUST BE LATERALLY RESTRAINED.

1 LATERAL BRACE(S) AT 1/ 2 LENGTH OF V-AP, U-AQ, T-AR, S-AS, R-AU, Q-AV, O-AW, N-AX, M-AY, L-AZ, K-BA.

END VERTICAL(S) MUST BE SHEATHED OR HAVE BRACES AS INDICATED IN THE MAX. UNBRACED LENGTH COLUMN OF THE TABLE BELOW

LOADING

TOTAL LOAD CASES: (4)

CHORDS

MEMB. FR-TO	MAX. FACTORED FORCE (LBS)	FACTORED VERT. LOAD LC1 (PLF) FROM	TO	MAX CSI (LC)	MAX. UNBRAC LENGTH
A- B	0 / 35	-112.4	-112.4	0.08 (1)	10.00
B- C	-73 / 0	-112.4	-112.4	0.07 (1)	6.25
C- D	-37 / 0	-112.4	-112.4	0.03 (1)	6.25
D- E	-32 / 0	-112.4	-112.4	0.03 (1)	6.25
E- F	-24 / 0	-112.4	-112.4	0.03 (1)	6.25
F- G	-18 / 0	-112.4	-112.4	0.03 (1)	6.25
G- H	-18 / 0	-112.4	-112.4	0.03 (1)	6.25
H- I	-14 / 0	-112.4	-112.4	0.03 (1)	6.25
I- J	-10 / 0	-112.4	-112.4	0.03 (1)	10.00
J- K	-6 / 0	-112.4	-112.4	0.03 (1)	10.00
K- L	-3 / 0	-122.4	-122.4	0.03 (1)	2.00
L- M	-3 / 0	-122.4	-122.4	0.03 (1)	2.00
M- N	-3 / 0	-122.4	-122.4	0.03 (1)	2.00
N- O	-3 / 0	-122.4	-122.4	0.03 (1)	2.00
O- P	-3 / 0	-122.4	-122.4	0.02 (1)	2.00
P- Q	-3 / 0	-122.4	-122.4	0.02 (1)	2.00
Q- R	-3 / 0	-122.4	-122.4	0.02 (1)	2.00
R- S	-3 / 0	-122.4	-122.4	0.03 (1)	2.00
S- T	-3 / 0	-122.4	-122.4	0.03 (1)	2.00
T- U	-3 / 0	-122.4	-122.4	0.03 (1)	2.00
U- V	-3 / 0	-122.4	-122.4	0.03 (1)	2.00
V- W	-6 / 0	-112.4	-112.4	0.03 (1)	10.00
W- X	-10 / 0	-112.4	-112.4	0.03 (1)	10.00
X- Y	-14 / 0	-112.4	-112.4	0.03 (1)	6.25
Y- Z	-18 / 0	-112.4	-112.4	0.03 (1)	6.25
Z-AA	-18 / 0	-112.4	-112.4	0.03 (1)	6.25
AA-AB	-24 / 0	-112.4	-112.4	0.03 (1)	6.25
AB-AC	-32 / 0	-112.4	-112.4	0.03 (1)	6.25
AC-AD	-37 / 0	-112.4	-112.4	0.03 (1)	6.25
AD-AE	-73 / 0	-112.4	-112.4	0.07 (1)	6.25
AE-AF	0 / 35	-112.4	-112.4	0.08 (1)	10.00
BJ- B	-324 / 0	0.0	0.0	0.03 (1)	7.81
AG-AE	-324 / 0	0.0	0.0	0.03 (1)	7.81

WEBS

MEMB. FR-TO	MAX. FACTORED FORCE (LBS)	MAX CSI (LC)
AP- V	-237 / 0	0.12 (1)
AQ- U	-253 / 0	0.12 (1)
AR- T	-247 / 0	0.12 (1)
AS- S	-247 / 0	0.12 (1)
AU- R	-198 / 0	0.10 (1)
AV- Q	-164 / 0	0.08 (1)
AW- O	-198 / 0	0.10 (1)
AX- N	-247 / 0	0.12 (1)
AY- M	-247 / 0	0.12 (1)
AZ- L	-253 / 0	0.12 (1)
BC- J	-224 / 0	0.25 (1)
BD- I	-223 / 0	0.17 (1)
BE- H	-223 / 0	0.11 (1)
BF- F	-222 / 0	0.07 (1)
BG- E	-220 / 0	0.05 (1)
BH- D	-233 / 0	0.04 (1)
BI- C	-149 / 0	0.02 (1)
AN- W	-224 / 0	0.25 (1)
AM- X	-223 / 0	0.17 (1)
AL- Y	-223 / 0	0.11 (1)
AK-AA	-222 / 0	0.07 (1)
AJ-AB	-220 / 0	0.05 (1)
AI-AC	-233 / 0	0.04 (1)
AH-AD	-149 / 0	0.02 (1)
BA- K	-237 / 0	0.12 (1)

DESIGN CRITERIA

SPECIFIED LOADS:

TOP CH.	LL	=	32.5	PSF
	DL	=	6.0	PSF
BOT CH.	LL	=	0.0	PSF
	DL	=	7.4	PSF
TOTAL LOAD		=	45.9	PSF

SPACING = 24.0 IN. C/C

LOADING IN FLAT SECTION BASED ON PIGGYBACK TRUSS WITH SLOPES OF 6.00/12 AND -6.00/12 AND RESPECTIVE HEEL HEIGHTS OF 0-0 AND 0-0 AND AN ADDITIONAL DEAD LOAD OF 4.0 P.S.F.

THIS TRUSS IS DESIGNED FOR RESIDENTIAL OR SMALL BUILDING REQUIREMENTS OF PART 9, NBCC 2015

THIS DESIGN COMPLIES WITH:
- PART 9 OF BCBC 2018 , NBC-2019AE
- PART 9 OF OBC 2012 (2019 AMENDMENT)
- CSA 086-14
- TPIC 2014

DESIGN ASSUMPTIONS
-OVERHANG NOT TO BE ALTERED OR CUT OFF.

(55 % OF 43.9 P.S.F. G.S.L. PLUS 8.4 P.S.F. RAIN LOAD) EQUALS 32.5 P.S.F. SPECIFIED ROOF LIVE LOAD

CSI: TC=0.08/1.00 (A-B:1) , BC=0.03/1.00 (BI-BJ:1) , WB=0.25/1.00 (J-BC:1) , SSI=0.08/1.00 (A-B:1)

DOL LUMBER=1.00 NAIL=1.00 LS BEND=1.10 COMP=1.10 SHEAR=1.10 TENS= 1.10

COMPANION LIVE LOAD FACTOR = 1.00

AUTOSOLVE HEELS OFF

TRUSS PLATE MANUFACTURER IS NOT RESPONSIBLE FOR QUALITY CONTROL IN THE TRUSS MANUFACTURING PLANT .

NAIL VALUES

PLATE	GRIP(DRY) (PSI) MAX	MIN	SHEAR (PLI) MAX	MIN	SECTION (PLI) MAX	MIN
MT20	650	371	1747	788	1987	1873

PLATE PLACEMENT TOL. = 0.250 inches

PLATE ROTATION TOL. = 5.0 Deg.

JSI GRIP= 0.36 (C) (INPUT = 0.90)
JSI METAL= 0.10 (D) (INPUT = 0.95)

CONTINUED ON PAGE 2

JOB NAME	TRUSS NAME	QUANTITY	PLY	JOB DESC.	DRWG NO.
436388	T37G	2	1	BAYVIEW WELLINGTON TRUSS DESC.	

NOTES- (1)
1) Lateral braces to be a minimum of 2X4 SPF #2.

LOADING
TOTAL LOAD CASES: (4)

CHORDS

MEMB. FR-TO	MAX. FACTORED FORCE (LBS)	FACTORED VERT. LOAD LC1 (PLF) FROM	TO	MAX CSI (LC)	MAX. UNBRAC LENGTH
BA-AZ	0 / 3	-18.5	-18.5	0.01 (4)	10.00
AZ-AY	0 / 3	-18.5	-18.5	0.01 (4)	10.00
AY-AX	0 / 3	-18.5	-18.5	0.01 (4)	10.00
AX-AW	0 / 3	-18.5	-18.5	0.01 (4)	10.00
AW-AV	0 / 3	-18.5	-18.5	0.01 (4)	10.00
AV-AU	0 / 3	-18.5	-18.5	0.01 (4)	10.00
AU-AT	0 / 3	-18.5	-18.5	0.01 (4)	10.00
AT-AS	0 / 3	-18.5	-18.5	0.01 (4)	10.00
AS-AR	0 / 3	-18.5	-18.5	0.01 (4)	10.00
AR-AQ	0 / 3	-18.5	-18.5	0.01 (4)	10.00
AQ-AP	0 / 3	-18.5	-18.5	0.01 (4)	10.00
AP-AO	0 / 6	-18.5	-18.5	0.01 (4)	10.00
AO-AN	0 / 6	-18.5	-18.5	0.01 (4)	10.00
AN-AM	0 / 9	-18.5	-18.5	0.01 (4)	10.00
AM-AL	0 / 12	-18.5	-18.5	0.01 (4)	10.00
AL-AK	0 / 16	-18.5	-18.5	0.01 (4)	10.00
AK-AJ	0 / 21	-18.5	-18.5	0.01 (4)	10.00
AJ-AI	0 / 28	-18.5	-18.5	0.01 (1)	10.00
AI-AH	0 / 37	-18.5	-18.5	0.01 (1)	10.00
AH-AG	0 / 47	-18.5	-18.5	0.03 (1)	10.00

WEBS

MEMB. FR-TO	MAX. FACTORED FORCE (LBS)	MAX CSI (LC)

LICENSED PROFESSIONAL ENGINEER
4/02/24
C. M. HEYENS
100505065
PROVINCE OF ONTARIO

STRUCTURAL COMPONENT ONLY
DWG # TR24040066

JOB NAME	TRUSS NAME	QUANTITY	PLY	JOB DESC.	DRWG NO.
436388	T39	1	1	BAYVIEW WELLINGTON TRUSS DESC.	

Tamarack Roof Truss, Burlington

Version 8.630 S Aug 30 2023 MiTek Industries, Inc. Tue Apr 2 10:54:22 2024 Page 1
ID:GRmvuh1dyQr3nydBfsTFcCy6OGI-dN7PgikhuxwZw|?HzaZ7MrwCWUoQX deJWseuszUo3V

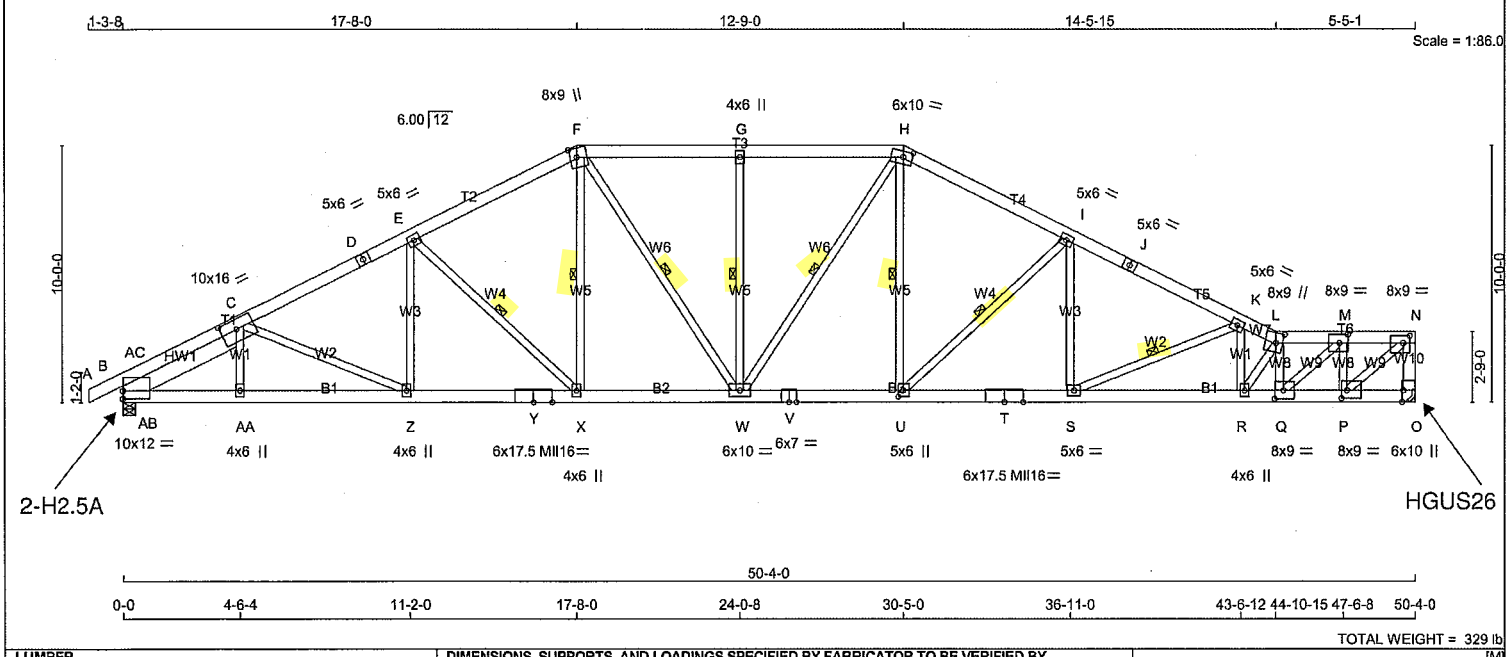

TOTAL WEIGHT = 329 lb

LUMBER
N. L. G. A. RULES

CHORDS	SIZE		LUMBER	DESCR.
A - D	2x6	DRY	No.2	SPF
D - F	2x6	DRY	No.2	SPF
F - H	2x6	DRY	No.2	SPF
H - J	2x6	DRY	2100F 1.8E	SPF
J - L	2x6	DRY	2100F 1.8E	SPF
L - N	2x6	DRY	No.2	SPF
O - N	2x6	DRY	No.2	SPF
B - Y	2x6	DRY	2100F 1.8E	SPF
Y - V	2x6	DRY	2100F 1.8E	SPF
V - T	2x6	DRY	2100F 1.8E	SPF
T - O	2x6	DRY	2100F 1.8E	SPF
REINFORCING MEMBERS				
HW1	2x8	DRY	No.2	SPF
ALL WEBS	2x4	DRY	No.2	SPF
EXCEPT				
E - X	2x4	DRY	2100F 1.8E	SPF
U - I	2x4	DRY	2100F 1.8E	SPF
Q - M	2x4	DRY	2100F 1.8E	SPF
P - N	2x4	DRY	2100F 1.8E	SPF

DRY: SEASONED LUMBER.

PLATES (table is in inches)

JT	TYPE	PLATES	W	LEN	Y	X
B	TMBMW1-I	MT20	10.0	12.0	3.75	
C	TMWWW-t	MT20	10.0	16.0	4.50	7.50
D	TS-t	MT20	5.0	6.0		
E, I, K						
E	TMWW-t	MT20	5.0	6.0		
F	TTWW+m	MT20	8.0	9.0	Edge	3.25
G	TMW+w	MT20	4.0	6.0		
H	TTWW-m	MT20	6.0	10.0	2.75	4.25
J	TS-t	MT20	5.0	6.0		
L	TTWW+m	MT20	8.0	9.0	4.75	3.00
M	TMWW-t	MT20	8.0	9.0	4.00	4.00
N	TMVW-t	MT20	8.0	9.0	3.50	3.00
O	BMV1+t	MT20	6.0	10.0	Edge	0.50
P	BMWW-t	MT20	8.0	9.0	3.75	2.50
Q	BMWW-t	MT20	8.0	9.0	4.00	4.00
R, X, Z						
R	BMWW+t	MT20	4.0	6.0		

LICENSED PROFESSIONAL ENGINEER
4/02/24
C. M. HEYENS
100505065
PROVINCE OF ONTARIO

STRUCTURAL COMPONENT ONLY
DWG # TR24040067

DIMENSIONS, SUPPORTS AND LOADINGS SPECIFIED BY FABRICATOR TO BE VERIFIED BY BUILDING DESIGNER

BEARINGS

JT	FACTORED GROSS REACTION VERT	HORZ	MAXIMUM FACTORED GROSS REACTION DOWN	HORZ	UPLIFT	INPUT BRG IN-SX	REQRD BRG IN-SX
O	4712	0	4712	0	-792	MECHANICAL	
B	4921	0	4921	232	-811	5-8	5-5

A SUITABLE HANGER/MECHANICAL CONNECTION IS REQUIRED AT JOINT O. MINIMUM BEARING LENGTH AT JOINT O = 5-0.

PROVIDE ANCHORAGE AT BEARING JOINT O FOR 792 LBS FACTORED UPLIFT
PROVIDE ANCHORAGE AT BEARING JOINT B FOR 811 LBS FACTORED UPLIFT

PROVIDE FOR 232 LBS FACTORED HORIZONTAL REACTION AT JOINT B

UNFACTORED REACTIONS

JT	1ST LCASE COMBINED	MAX./MIN. COMPONENT REACTIONS SNOW	LIVE	PERM.LIVE	WIND	DEAD	SOIL
O	3438	2187 / 0	528 / 0	0 / 0	134 / -921	723 / 0	0 / 0
B	3581	2308 / 0	528 / 0	0 / 0	115 / -946	744 / 0	0 / 0
HORIZONTAL REACTIONS							
B	---	0 / 0	0 / 0	0 / 0	165 / -110	0 / 0	0 /0

BEARING MATERIAL TO BE SPF NO.2 OR BETTER AT JOINT(S) B

BRACING
FOR SECTION F-H, MAX. UNBRACED TOP CHORD LENGTH = 2.00 FT.
FOR OTHER SECTIONS, MAX. UNBRACED TOP CHORD LENGTH = 2.49 FT.
MAX. UNBRACED BOTTOM CHORD LENGTH = 6.25 FT OR RIGID CEILING DIRECTLY APPLIED.

ALL PITCH BREAKS AND PERIMETER CORNER JOINTS MUST BE LATERALLY RESTRAINED.

1 LATERAL BRACE(S) AT 1/ 2 LENGTH OF E-X, F-X, F-W, G-W, H-W, H-U, I-U, K-S.

END VERTICAL(S) MUST BE SHEATHED OR HAVE BRACES AS INDICATED IN THE MAX. UNBRACED LENGTH COLUMN OF THE TABLE BELOW

LOADING
TOTAL LOAD CASES: (18)

CHORDS

MEMB. FR-TO	MAX. FACTORED FORCE (LBS)	FACTORED VERT. LOAD (PLF) FROM	TO	LC1 MAX CSI (LC)	MAX. UNBRAC LENGTH
A- B	0 / 1	-145.3	-145.3	0.11 (2)	10.00
B-AC	-5483 / 862	-145.3	-145.3	0.23 (1)	3.52
AC- C	-3553 / 654	-145.3	-145.3	0.27 (2)	4.35
C- D	-7449 / 1212	-145.3	-145.3	0.89 (1)	2.51
D- E	-7449 / 1212	-145.3	-145.3	0.89 (1)	2.51
E- F	-6443 / 1077	-145.3	-145.3	0.78 (1)	2.82
F- G	-6352 / 1063	-155.3	-155.3	0.75 (1)	2.00
G- H	-6352 / 1063	-155.3	-155.3	0.75 (1)	2.00
H- I	-6748 / 1147	-145.3	-145.3	0.37 (3)	3.95
I- J	-8425 / 1388	-145.3	-145.3	0.44 (3)	3.54
J- K	-8425 / 1388	-145.3	-145.3	0.44 (3)	3.54
K- L	-10421 / 1718	-145.3	-145.3	0.25 (3)	3.33
L- M	-9574 / 1599	-145.3	-145.3	0.47 (1)	2.49
M- N	-5406 / 935	-145.3	-145.3	0.22 (1)	3.63
O- N	-4648 / 798	0.0	0.0	0.36 (1)	5.02
B-AB	-695 / 3191	-39.5	-39.5	0.20 (1)	6.25
AB-AA	-1195 / 6708	-39.5	-39.5	0.38 (1)	6.25
AA- Z	-1197 / 6701	-39.5	-39.5	0.38 (1)	6.25
Z- Y	-1044 / 6687	-39.5	-39.5	0.37 (1)	6.25
Y- X	-1044 / 6687	-39.5	-39.5	0.37 (1)	6.25
X- W	-714 / 5736	-39.5	-39.5	0.32 (1)	6.25
W- V	-618 / 6017	-39.5	-39.5	0.33 (1)	6.25
V- U	-618 / 6017	-39.5	-39.5	0.33 (1)	6.25
U- T	-1044 / 7562	-39.5	-39.5	0.41 (1)	6.25

WEBS

MEMB. FR-TO	MAX. FACTORED FORCE (LBS)	MAX CSI (LC)
AA- C	0 / 286	0.05 (17)
C- Z	-313 / 299	0.22 (2)
Z- E	-8 / 435	0.07 (5)
E- X	-1642 / 460	0.41 (2)
X- F	-259 / 1384	0.22 (2)
F- W	-285 / 1683	0.27 (3)
W- G	-1198 / 229	0.53 (1)
W- H	-462 / 1317	0.31 (10)
U- H	-348 / 1901	0.31 (3)
U- I	-2413 / 592	0.60 (3)
S- I	-143 / 1201	0.19 (3)
S- K	-2186 / 486	0.54 (3)
Q- L	-4111 / 646	0.46 (1)
R- K	-81 / 987	0.16 (1)
R- L	-820 / 151	0.10 (3)
Q- M	-904 / 5675	0.43 (1)
P- M	-4184 / 748	0.47 (1)
P- N	-1161 / 6995	0.52 (1)
AB-AC	-314 / 2563	0.00 (1)
AB- C	-4433 / 631	0.69 (1)

[M]

DESIGN CRITERIA

SPECIFIED LOADS:

TOP CH.	LL	=	43.5	PSF
	DL	=	6.0	PSF
BOT CH.	LL	=	10.5	PSF
	DL	=	7.4	PSF
TOTAL LOAD		=	67.3	PSF

SPACING = 24.0 IN. C/C

LOADING IN HIGHEST FLAT SECTION BASED ON PIGGYBACK TRUSS WITH SLOPES OF 6.00/12 AND -6.00/12 AND RESPECTIVE HEEL HEIGHTS OF 0-0 AND 0-0 AND AN ADDITIONAL DEAD LOAD OF 4.0 P.S.F.

LOADING IN OTHER FLAT SECTIONS BASED ON A SLOPE OF 6.00/12

THIS TRUSS IS DESIGNED FOR COMMERCIAL OR INDUSTRIAL BUILDING REQUIREMENTS OF PART 4, NBCC 2015

THIS DESIGN COMPLIES WITH:
- PART 4 OF BCBC 2018 , NBC-2019AE
- PART 4 OF OBC 2012 (2019 AMENDMENT)
- CSA 086-14
- TPIC 2014

DESIGN ASSUMPTIONS
- SLOPE REDUCTION FACTOR NOT USED

(80 % OF 43.9 P.S.F. G.S.L. PLUS 8.4 P.S.F. RAIN LOAD) TIMES IMPORTANCE FACTOR EQUALS 43.5 P.S.F. SPECIFIED ROOF LIVE LOAD

ALLOWABLE DEFL.(LL)= L/360 (1.68")
CALCULATED VERT. DEFL.(LL) = L/ 999 (0.36")
ALLOWABLE DEFL.(TL)= L/180 (3.36")
CALCULATED VERT. DEFL.(TL) = L/ 999 (0.49")

CSI: TC=0.89/1.00 (C-E:1) , BC=0.62/1.00 (Q-R:1) , WB=0.69/0.90 (C-AB:1) , SSI=0.39/1.00 (F-G:2)

DOL LUMBER=1.00 NAIL=1.00 LS BEND=1.10 COMP=1.10 SHEAR=1.10 TENS= 1.10

SNOW LOAD IMPORTANCE FACTOR = 1.00
WIND LOAD IMPORTANCE FACTOR = 1.00
LIVE LOAD IMPORTANCE FACTOR = 1.00
COMPANION LIVE LOAD FACTOR = 1.00

AUTOSOLVE RIGHT HEEL ONLY

TRUSS PLATE MANUFACTURER IS NOT RESPONSIBLE FOR QUALITY CONTROL IN THE TRUSS MANUFACTURING PLANT .

NAIL VALUES

PLATE	GRIP(DRY) (PSI) MAX	MIN	SHEAR (PLI) MAX	MIN	SECTION (PLI) MAX	MIN
MT20	650	371	1747	788	1987	1873
MII16	438	302	2547	1256	4283	1816

PLATE PLACEMENT TOL. = 0.250 inches

PLATE ROTATION TOL. = 5.0 Deg.

CONTINUED ON PAGE 2

JOB NAME	TRUSS NAME	QUANTITY	PLY	JOB DESC.	DRWG NO.
436388	T39	1	1	BAYVIEW WELLINGTON TRUSS DESC.	

PLATES (table is in inches)

JT	TYPE	PLATES	W	LEN	Y	X
S	BMWW-t	MT20	5.0	6.0		
T	BS-t	MII16	6.0	17.5		
U	BMWW+t	MT20	5.0	6.0	3.00	2.25
V	BS-t	MT20	6.0	7.0		
W	BMWWW-t	MT20	6.0	10.0		
Y	BS-t	MII16	6.0	17.5		
AA	BMW+w	MT20	4.0	6.0		

Edge - INDICATES REFERENCE CORNER OF PLATE TOUCHES EDGE OF CHORD.

NOTES- (1)
1) Lateral braces to be a minimum of 2X4 SPF #2.

LOADING
TOTAL LOAD CASES: (18)

CHORDS

MEMB. FR-TO	MAX. FACTORED FORCE (LBS)	FACTORED VERT. LOAD (PLF) FROM	TO	LC1 CSI (LC)	MAX UNBRAC LENGTH
T- S	-1044 / 7562	-39.5	-39.5	0.41 (1)	6.25
S- R	-1488 / 9419	-39.5	-39.5	0.54 (1)	6.25
R- Q	-1565 / 9836	-39.5	-39.5	0.62 (1)	6.25
Q- P	-860 / 5406	-39.5	-39.5	0.41 (1)	6.25
P- O	-15 / 38	-39.5	-39.5	0.02 (3)	6.25

WEBS

MAX. MEMB. FR-TO	MAX. FACTORED FORCE (LBS)	MAX CSI (LC)

TRUSS HAS BEEN CHECKED FOR UNBALANCED LOADING AS PER NBCC 4.1.6.2.(8)

WIND LOAD APPLIED IS DERIVED FROM REFERENCE VELOCITY PRESSURE OF { 7.5} PSF AT {40-0-0} FT-IN-SX REFERENCE HEIGHT ABOVE GRADE AND USING EXTERNAL PEAK COEFFICIENTS, CpCg, BASED ON THE {MAIN WIND FORCE RESISTING SYSTEM}.INTERNAL WIND PRESSURE IS BASED ON DESIGN {CATEGORY 2}. BUILDING MAY BE LOCATED ON {OPEN TERRAIN}, AND TRUSS IS DESIGNED TO BE LOCATED AT LEAST {0-0} FT-IN-SX AWAY FROM EAVE.TRUSS UPLIFT IS BASED ON TOP AND BOTTOM CHORD DEAD LOADS OF 5.0 PSF AND 5.0 PSF RESPECTIVELY.

JSI GRIP= 0.90 (P) (INPUT = 0.90)
JSI METAL= 0.93 (P) (INPUT = 0.95)

LICENSED PROFESSIONAL ENGINEER
4/02/24
C. M. HEYENS
100505065
PROVINCE OF ONTARIO

STRUCTURAL COMPONENT ONLY
DWG # TR24040067

JOB NAME	TRUSS NAME	QUANTITY	PLY	JOB DESC.	DRWG NO.
436388	T40	1	1	BAYVIEW WELLINGTON TRUSS DESC.	

Tamarack Roof Truss, Burlington

Version 8.630 S Aug 30 2023 MiTek Industries, Inc. Tue Apr 2 10:54:24 2024 Page 1
ID:GRmvuh1dyQr3nydBfsTFcCy6OGl-amF94OlxQZAH909q4?bbRG?Y?HWy?soxmpLlzkzUo3T

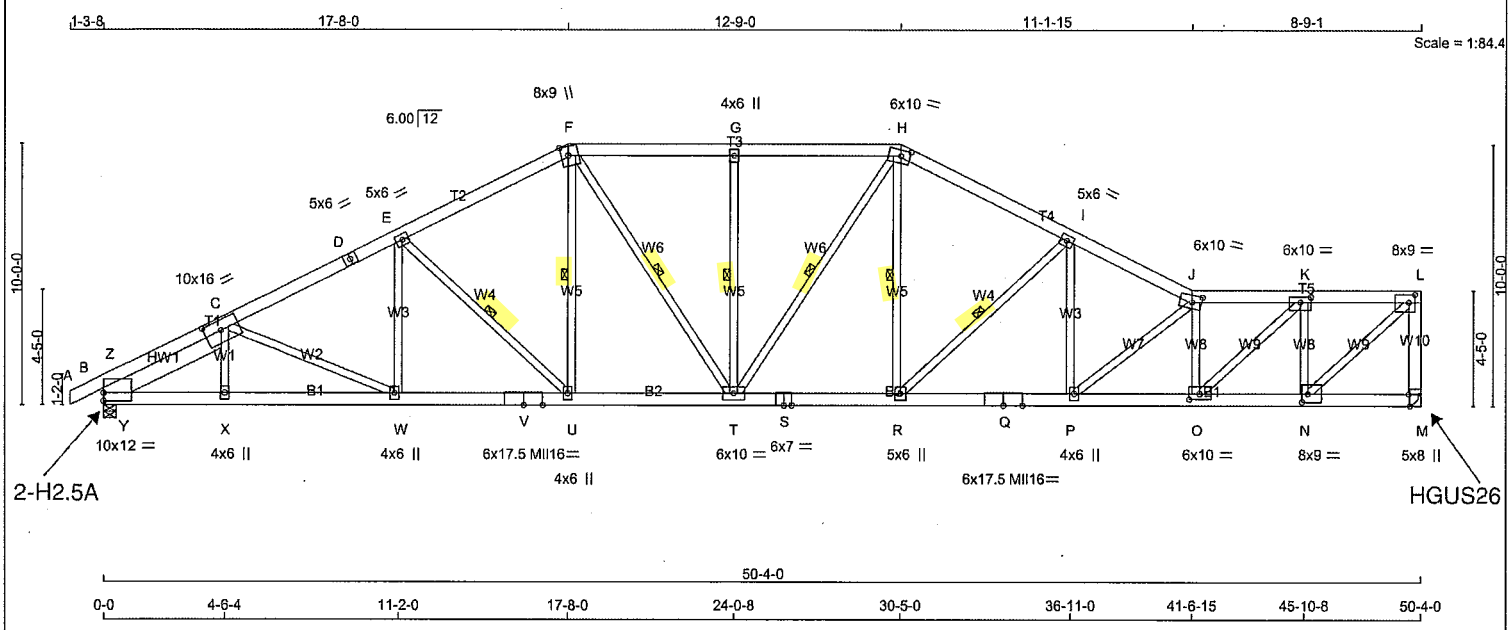

TOTAL WEIGHT = 334 lb [M]

LUMBER
N. L. G. A. RULES

CHORDS	SIZE		LUMBER	DESCR.
A - D	2x6	DRY	No.2	SPF
D - F	2x6	DRY	No.2	SPF
F - H	2x6	DRY	No.2	SPF
H - J	2x6	DRY	No.2	SPF
J - L	2x6	DRY	No.2	SPF
M - L	2x6	DRY	No.2	SPF
B - V	2x6	DRY	2100F 1.8E	SPF
V - S	2x6	DRY	2100F 1.8E	SPF
S - Q	2x6	DRY	2100F 1.8E	SPF
Q - M	2x6	DRY	2100F 1.8E	SPF
REINFORCING MEMBERS				
HW1	2x8	DRY	No.2	SPF
ALL WEBS EXCEPT	2x4	DRY	No.2	SPF
E - U	2x4	DRY	2100F 1.8E	SPF
R - I	2x4	DRY	2100F 1.8E	SPF
O - K	2x4	DRY	2100F 1.8E	SPF
N - L	2x4	DRY	2100F 1.8E	SPF

DRY: SEASONED LUMBER.

PLATES (table is in inches)

JT	TYPE	PLATES	W	LEN	Y	X
B	TMBMW1-I	MT20	10.0	12.0	3.75	
C	TMWWW-t	MT20	10.0	16.0	4.50	7.50
D	TS-t	MT20	5.0	6.0		
E	TMWW-t	MT20	5.0	6.0		
F	TTWW+m	MT20	8.0	9.0	Edge	3.25
G	TMW+w	MT20	4.0	6.0		
H	TTWW-m	MT20	6.0	10.0	2.75	4.25
I	TMWW-t	MT20	5.0	6.0		
J	TTWW-m	MT20	6.0	10.0	3.25	4.25
K	TMWW-t	MT20	6.0	10.0	2.50	4.75
L	TMVW-t	MT20	8.0	9.0	3.75	2.75
M	BMV1+t	MT20	5.0	8.0	Edge	0.50
N	BMWW-t	MT20	8.0	9.0	3.75	2.75
O	BMWW-t	MT20	6.0	10.0	2.50	4.75
P, U, W						
P	BMWW+t	MT20	4.0	6.0		
Q	BS-t	MII16	6.0	17.5		

LICENSED PROFESSIONAL ENGINEER
4/02/24
C. M. HEYENS
100505065
PROVINCE OF ONTARIO

STRUCTURAL COMPONENT ONLY
DWG # TR24040068

DIMENSIONS, SUPPORTS AND LOADINGS SPECIFIED BY FABRICATOR TO BE VERIFIED BY BUILDING DESIGNER

BEARINGS

JT	FACTORED GROSS REACTION VERT	HORZ	MAXIMUM FACTORED GROSS REACTION DOWN	HORZ	UPLIFT	INPUT BRG IN-SX	REQRD BRG IN-SX
M	4712	0	4712	0	-795	MECHANICAL	
B	4921	0	4921	287	-810	5-8	5-5

A SUITABLE HANGER/MECHANICAL CONNECTION IS REQUIRED AT JOINT M. MINIMUM BEARING LENGTH AT JOINT M = 5-0.

PROVIDE ANCHORAGE AT BEARING JOINT M FOR 795 LBS FACTORED UPLIFT
PROVIDE ANCHORAGE AT BEARING JOINT B FOR 810 LBS FACTORED UPLIFT

PROVIDE FOR 287 LBS FACTORED HORIZONTAL REACTION AT JOINT B

UNFACTORED REACTIONS

JT	1ST LCASE COMBINED	MAX./MIN. COMPONENT REACTIONS SNOW	LIVE	PERM.LIVE	WIND	DEAD	SOIL
M	3438	2187 / 0	528 / 0	0 / 0	132 / -922	723 / 0	0 / 0
B	3581	2308 / 0	528 / 0	0 / 0	115 / -946	744 / 0	0 / 0
HORIZONTAL REACTIONS							
B	---	0 / 0	0 / 0	0 / 0	205 / -92	0 / 0	0 /0

BEARING MATERIAL TO BE SPF NO.2 OR BETTER AT JOINT(S) B

BRACING
FOR SECTION F-H, MAX. UNBRACED TOP CHORD LENGTH = 2.00 FT.
FOR OTHER SECTIONS, MAX. UNBRACED TOP CHORD LENGTH = 2.38 FT.
MAX. UNBRACED BOTTOM CHORD LENGTH = 6.25 FT OR RIGID CEILING DIRECTLY APPLIED.

ALL PITCH BREAKS AND PERIMETER CORNER JOINTS MUST BE LATERALLY RESTRAINED.

1 LATERAL BRACE(S) AT 1/ 2 LENGTH OF E-U, F-U, F-T, G-T, H-T, H-R, I-R.

END VERTICAL(S) MUST BE SHEATHED OR HAVE BRACES AS INDICATED IN THE MAX. UNBRACED LENGTH COLUMN OF THE TABLE BELOW

LOADING
TOTAL LOAD CASES: (18)

CHORDS

MEMB. FR-TO	MAX. FACTORED FORCE (LBS)	FACTORED VERT. LOAD (PLF) FROM	TO	LC1 MAX CSI (LC)	MAX. UNBRAC LENGTH
A- B	0 / 1	-145.3	-145.3	0.11 (2)	10.00
B- Z	-5483 / 862	-145.3	-145.3	0.23 (1)	3.52
Z- C	-3553 / 653	-145.3	-145.3	0.27 (2)	4.35
C- D	-7449 / 1212	-145.3	-145.3	0.89 (1)	2.51
D- E	-7449 / 1212	-145.3	-145.3	0.89 (1)	2.51
E- F	-6443 / 1077	-145.3	-145.3	0.78 (1)	2.82
F- G	-6351 / 1056	-155.3	-155.3	0.75 (1)	2.00
G- H	-6351 / 1056	-155.3	-155.3	0.75 (1)	2.00
H- I	-6743 / 1135	-145.3	-145.3	0.70 (1)	2.85
I- J	-8355 / 1380	-145.3	-145.3	0.75 (3)	2.38
J- K	-8485 / 1416	-145.3	-145.3	0.49 (1)	2.65
K- L	-4920 / 881	-145.3	-145.3	0.32 (3)	3.72
M- L	-4634 / 809	0.0	0.0	0.76 (1)	5.03
B- Y	-698 / 3191	-39.5	-39.5	0.20 (1)	6.25
Y- X	-1199 / 6708	-39.5	-39.5	0.38 (1)	6.25
X- W	-1200 / 6701	-39.5	-39.5	0.38 (1)	6.25
W- V	-1048 / 6687	-39.5	-39.5	0.37 (1)	6.25
V- U	-1048 / 6687	-39.5	-39.5	0.37 (1)	6.25
U- T	-717 / 5737	-39.5	-39.5	0.32 (1)	6.25
T- S	-650 / 6019	-39.5	-39.5	0.34 (1)	6.25
S- R	-650 / 6019	-39.5	-39.5	0.34 (1)	6.25
R- Q	-1062 / 7528	-39.5	-39.5	0.41 (1)	6.25
Q- P	-1062 / 7528	-39.5	-39.5	0.41 (1)	6.25
P- O	-1307 / 8608	-39.5	-39.5	0.49 (1)	6.25

WEBS

MEMB. FR-TO	MAX. FACTORED FORCE (LBS)	MAX CSI (LC)
X- C	0 / 286	0.05 (17)
C- W	-313 / 299	0.22 (2)
W- E	-8 / 435	0.07 (5)
E- U	-1642 / 460	0.41 (2)
U- F	-259 / 1385	0.22 (2)
F- T	-282 / 1681	0.27 (3)
T- G	-1198 / 229	0.53 (1)
T- H	-467 / 1314	0.32 (10)
R- H	-336 / 1888	0.30 (3)
R- I	-2360 / 573	0.59 (3)
P- I	-157 / 1249	0.20 (3)
P- J	-1531 / 322	0.68 (3)
O- J	-3333 / 561	0.60 (1)
O- K	-741 / 4930	0.37 (1)
N- K	-4131 / 762	0.75 (1)
N- L	-1091 / 6579	0.49 (1)
Y- Z	-314 / 2563	0.00 (1)
Y- C	-4433 / 631	0.69 (1)

DESIGN CRITERIA

SPECIFIED LOADS:

TOP CH.	LL	=	43.5	PSF
	DL	=	6.0	PSF
BOT CH.	LL	=	10.5	PSF
	DL	=	7.4	PSF
TOTAL LOAD		=	67.3	PSF

SPACING = 24.0 IN. C/C

LOADING IN HIGHEST FLAT SECTION BASED ON PIGGYBACK TRUSS WITH SLOPES OF 6.00/12 AND -6.00/12 AND RESPECTIVE HEEL HEIGHTS OF 0-0 AND 0-0 AND AN ADDITIONAL DEAD LOAD OF 4.0 P.S.F.

LOADING IN OTHER FLAT SECTIONS BASED ON A SLOPE OF 6.00/12

THIS TRUSS IS DESIGNED FOR COMMERCIAL OR INDUSTRIAL BUILDING REQUIREMENTS OF PART 4, NBCC 2015

THIS DESIGN COMPLIES WITH:
- PART 4 OF BCBC 2018 , NBC-2019AE
- PART 4 OF OBC 2012 (2019 AMENDMENT)
- CSA 086-14
- TPIC 2014

DESIGN ASSUMPTIONS
- SLOPE REDUCTION FACTOR NOT USED

(80 % OF 43.9 P.S.F. G.S.L. PLUS 8.4 P.S.F. RAIN LOAD) TIMES IMPORTANCE FACTOR EQUALS 43.5 P.S.F. SPECIFIED ROOF LIVE LOAD

ALLOWABLE DEFL.(LL)= L/360 (1.68")
CALCULATED VERT. DEFL.(LL) = L/ 999 (0.37")
ALLOWABLE DEFL.(TL)= L/180 (3.36")
CALCULATED VERT. DEFL.(TL) = L/ 999 (0.50")

CSI: TC=0.89/1.00 (C-E:1) , BC=0.49/1.00 (O-P:1) , WB=0.75/0.90 (K-N:1) , SSI=0.39/1.00 (F-G:2)

DOL LUMBER=1.00 NAIL=1.00 LS BEND=1.10 COMP=1.10 SHEAR=1.10 TENS= 1.10

SNOW LOAD IMPORTANCE FACTOR = 1.00
WIND LOAD IMPORTANCE FACTOR = 1.00
LIVE LOAD IMPORTANCE FACTOR = 1.00
COMPANION LIVE LOAD FACTOR = 1.00

AUTOSOLVE RIGHT HEEL ONLY

TRUSS PLATE MANUFACTURER IS NOT RESPONSIBLE FOR QUALITY CONTROL IN THE TRUSS MANUFACTURING PLANT .

NAIL VALUES

PLATE	GRIP(DRY) (PSI) MAX	MIN	SHEAR (PLI) MAX	MIN	SECTION (PLI) MAX	MIN
MT20	650	371	1747	788	1987	1873
MII16	438	302	2547	1256	4283	1816

PLATE PLACEMENT TOL. = 0.250 inches

PLATE ROTATION TOL. = 5.0 Deg.

CONTINUED ON PAGE 2

JOB NAME	TRUSS NAME	QUANTITY	PLY	JOB DESC.	DRWG NO.
436388	T40	1	1	BAYVIEW WELLINGTON TRUSS DESC.	

PLATES (table is in inches)

JT	TYPE	PLATES	W	LEN	Y	X
R	BMWW+t	MT20	5.0	6.0		
S	BS-t	MT20	6.0	7.0		
T	BMWWW-t	MT20	6.0	10.0		
V	BS-t	MII16	6.0	17.5		
X	BMW+w	MT20	4.0	6.0		

Edge - INDICATES REFERENCE CORNER OF PLATE TOUCHES EDGE OF CHORD.

NOTES- (1)
1) Lateral braces to be a minimum of 2X4 SPF #2.

LOADING
TOTAL LOAD CASES: (18)

CHORDS

MEMB. FR-TO	MAX. FACTORED FORCE (LBS)	FACTORED VERT. LOAD LC1 (PLF) FROM	TO	MAX CSI (LC)	MAX. UNBRAC LENGTH
O- N	-751 / 4920	-39.5	-39.5	0.31 (1)	6.25
N- M	-25 / 65	-39.5	-39.5	0.03 (17)	6.25

WEBS

MEMB. FR-TO	MAX. FACTORED FORCE (LBS)	MAX CSI (LC)

TRUSS HAS BEEN CHECKED FOR UNBALANCED LOADING AS PER NBCC 4.1.6.2.(8)

WIND LOAD APPLIED IS DERIVED FROM REFERENCE VELOCITY PRESSURE OF { 7.5} PSF AT {40-0-0} FT-IN-SX REFERENCE HEIGHT ABOVE GRADE AND USING EXTERNAL PEAK COEFFICIENTS, CpCg, BASED ON THE {MAIN WIND FORCE RESISTING SYSTEM}.INTERNAL WIND PRESSURE IS BASED ON DESIGN {CATEGORY 2}. BUILDING MAY BE LOCATED ON {OPEN TERRAIN}, AND TRUSS IS DESIGNED TO BE LOCATED AT LEAST {0-0} FT-IN-SX AWAY FROM EAVE.TRUSS UPLIFT IS BASED ON TOP AND BOTTOM CHORD DEAD LOADS OF 5.0 PSF AND 5.0 PSF RESPECTIVELY.

JSI GRIP= 0.89 (R) (INPUT = 0.90)
JSI METAL= 0.91 (J) (INPUT = 0.95)

LICENSED PROFESSIONAL ENGINEER
4/02/24
C. M. HEYENS
100505065
PROVINCE OF ONTARIO

STRUCTURAL COMPONENT ONLY
DWG # TR24040068

JOB NAME	TRUSS NAME	QUANTITY	PLY	JOB DESC.	DRWG NO.
436388	T41	1	1	BAYVIEW WELLINGTON TRUSS DESC.	

Tamarack Roof Truss, Burlington

Version 8.630 S Aug 30 2023 MiTek Industries, Inc. Tue Apr 2 10:54:25 2024 Page 1
ID:GRmvuh1dyQr3nydBfsTFcCy6OGl-2ypXIkmZBsI8nA|seI7qzTYjlhpfkKM4?T4IVBzUo3S

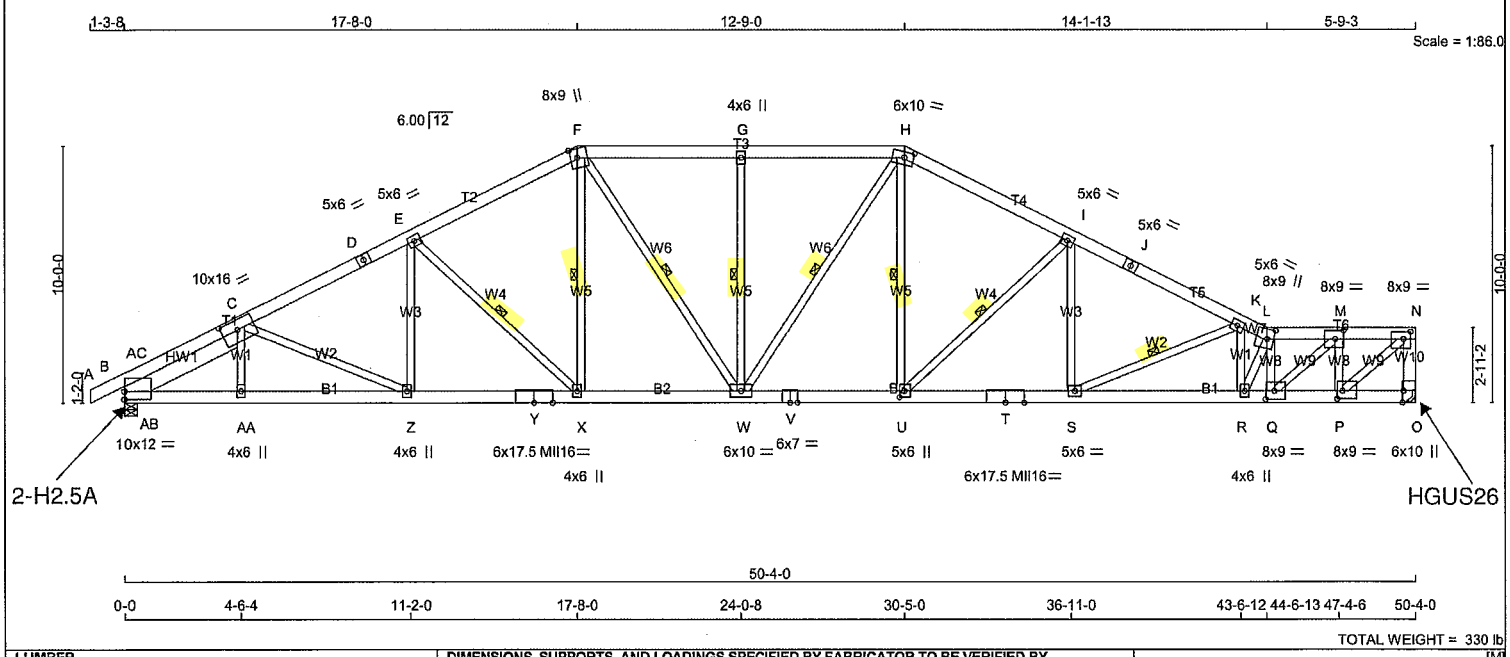

TOTAL WEIGHT = 330 lb

LUMBER
N. L. G. A. RULES

CHORDS	SIZE		LUMBER	DESCR.
A - D	2x6	DRY	No.2	SPF
D - F	2x6	DRY	No.2	SPF
F - H	2x6	DRY	No.2	SPF
H - J	2x6	DRY	2100F 1.8E	SPF
J - L	2x6	DRY	2100F 1.8E	SPF
L - N	2x6	DRY	No.2	SPF
O - N	2x6	DRY	No.2	SPF
B - Y	2x6	DRY	2100F 1.8E	SPF
Y - V	2x6	DRY	2100F 1.8E	SPF
V - T	2x6	DRY	2100F 1.8E	SPF
T - O	2x6	DRY	2100F 1.8E	SPF
REINFORCING MEMBERS				
HW1	2x8	DRY	No.2	SPF
ALL WEBS	2x4	DRY	No.2	SPF
EXCEPT				
E - X	2x4	DRY	2100F 1.8E	SPF
U - I	2x4	DRY	2100F 1.8E	SPF
Q - M	2x4	DRY	2100F 1.8E	SPF
P - N	2x4	DRY	2100F 1.8E	SPF

DRY: SEASONED LUMBER.

PLATES (table is in inches)

JT	TYPE	PLATES	W	LEN	Y	X
B	TMBMW1-I	MT20	10.0	12.0	3.75	
C	TMWWW-t	MT20	10.0	16.0	4.50	7.50
D	TS-t	MT20	5.0	6.0		
E, I, K						
E	TMWW-t	MT20	5.0	6.0		
F	TTWW+m	MT20	8.0	9.0	Edge	3.25
G	TMW+w	MT20	4.0	6.0		
H	TTWW-m	MT20	6.0	10.0	2.75	4.25
J	TS-t	MT20	5.0	6.0		
L	TTWW+m	MT20	8.0	9.0	4.75	3.00
M	TMWW-t	MT20	8.0	9.0	4.00	4.00
N	TMVW-t	MT20	8.0	9.0	3.50	3.25
O	BMV1+t	MT20	6.0	10.0	Edge	0.50
P	BMWW-t	MT20	8.0	9.0	3.75	2.50
Q	BMWW-t	MT20	8.0	9.0	4.00	4.00
R, X, Z						
R	BMWW+t	MT20	4.0	6.0		

LICENSED PROFESSIONAL ENGINEER
4/02/24
C. M. HEYENS
100505065
PROVINCE OF ONTARIO

STRUCTURAL COMPONENT ONLY
DWG # TR24040069

DIMENSIONS, SUPPORTS AND LOADINGS SPECIFIED BY FABRICATOR TO BE VERIFIED BY BUILDING DESIGNER

BEARINGS

JT	FACTORED GROSS REACTION VERT	HORZ	MAXIMUM FACTORED GROSS REACTION DOWN	HORZ	UPLIFT	INPUT BRG IN-SX	REQRD BRG IN-SX
O	4712	0	4712	0	-792	MECHANICAL	
B	4921	0	4921	237	-811	5-8	5-5

A SUITABLE HANGER/MECHANICAL CONNECTION IS REQUIRED AT JOINT O. MINIMUM BEARING LENGTH AT JOINT O = 5-0.

PROVIDE ANCHORAGE AT BEARING JOINT O FOR 792 LBS FACTORED UPLIFT
PROVIDE ANCHORAGE AT BEARING JOINT B FOR 811 LBS FACTORED UPLIFT

PROVIDE FOR 237 LBS FACTORED HORIZONTAL REACTION AT JOINT B

UNFACTORED REACTIONS

JT	1ST LCASE COMBINED	MAX./MIN. COMPONENT REACTIONS SNOW	LIVE	PERM.LIVE	WIND	DEAD	SOIL
O	3438	2187 / 0	528 / 0	0 / 0	134 / -921	723 / 0	0 / 0
B	3581	2308 / 0	528 / 0	0 / 0	115 / -946	744 / 0	0 / 0
HORIZONTAL REACTIONS							
B	---	0 / 0	0 / 0	0 / 0	170 / -107	0 / 0	0 /0

BEARING MATERIAL TO BE SPF NO.2 OR BETTER AT JOINT(S) B

BRACING
FOR SECTION F-H, MAX. UNBRACED TOP CHORD LENGTH = 2.00 FT.
FOR OTHER SECTIONS, MAX. UNBRACED TOP CHORD LENGTH = 2.51 FT.
MAX. UNBRACED BOTTOM CHORD LENGTH = 6.25 FT OR RIGID CEILING DIRECTLY APPLIED.

ALL PITCH BREAKS AND PERIMETER CORNER JOINTS MUST BE LATERALLY RESTRAINED.

1 LATERAL BRACE(S) AT 1/ 2 LENGTH OF E-X, F-X, F-W, G-W, H-W, H-U, I-U, K-S.

END VERTICAL(S) MUST BE SHEATHED OR HAVE BRACES AS INDICATED IN THE MAX. UNBRACED LENGTH COLUMN OF THE TABLE BELOW

LOADING
TOTAL LOAD CASES: (18)

CHORDS

MEMB. FR-TO	MAX. FACTORED FORCE (LBS)	FACTORED VERT. LOAD (PLF) FROM	TO	LC1 MAX CSI (LC)	MAX. UNBRAC LENGTH
A- B	0 / 1	-145.3	-145.3	0.11 (2)	10.00
B-AC	-5483 / 862	-145.3	-145.3	0.23 (1)	3.52
AC- C	-3553 / 654	-145.3	-145.3	0.27 (2)	4.35
C- D	-7449 / 1212	-145.3	-145.3	0.89 (1)	2.51
D- E	-7449 / 1212	-145.3	-145.3	0.89 (1)	2.51
E- F	-6443 / 1077	-145.3	-145.3	0.78 (1)	2.82
F- G	-6352 / 1062	-155.3	-155.3	0.75 (1)	2.00
G- H	-6352 / 1062	-155.3	-155.3	0.75 (1)	2.00
H- I	-6747 / 1146	-145.3	-145.3	0.37 (3)	3.95
I- J	-8429 / 1387	-145.3	-145.3	0.44 (3)	3.54
J- K	-8429 / 1387	-145.3	-145.3	0.44 (3)	3.54
K- L	-10366 / 1700	-145.3	-145.3	0.26 (3)	3.33
L- M	-9451 / 1578	-145.3	-145.3	0.46 (1)	2.51
M- N	-5332 / 926	-145.3	-145.3	0.22 (1)	3.65
O- N	-4646 / 799	0.0	0.0	0.38 (1)	5.02
B-AB	-695 / 3191	-39.5	-39.5	0.20 (1)	6.25
AB-AA	-1196 / 6708	-39.5	-39.5	0.38 (1)	6.25
AA- Z	-1197 / 6701	-39.5	-39.5	0.38 (1)	6.25
Z- Y	-1045 / 6687	-39.5	-39.5	0.37 (1)	6.25
Y- X	-1045 / 6687	-39.5	-39.5	0.37 (1)	6.25
X- W	-714 / 5736	-39.5	-39.5	0.32 (1)	6.25
W- V	-622 / 6017	-39.5	-39.5	0.33 (1)	6.25
V- U	-622 / 6017	-39.5	-39.5	0.33 (1)	6.25
U- T	-1047 / 7563	-39.5	-39.5	0.42 (1)	6.25

WEBS

MEMB. FR-TO	MAX. FACTORED FORCE (LBS)	MAX CSI (LC)
AA- C	0 / 286	0.05 (17)
C- Z	-313 / 299	0.22 (2)
Z- E	-8 / 435	0.07 (5)
E- X	-1642 / 460	0.41 (2)
X- F	-259 / 1384	0.22 (2)
F- W	-284 / 1683	0.27 (3)
W- G	-1198 / 229	0.53 (1)
W- H	-462 / 1318	0.31 (10)
U- H	-347 / 1899	0.31 (3)
U- I	-2414 / 592	0.60 (3)
S- I	-144 / 1209	0.19 (3)
Q- L	-3999 / 614	0.46 (1)
S- K	-2181 / 483	0.54 (3)
R- K	-43 / 887	0.14 (1)
R- L	-725 / 119	0.09 (1)
Q- M	-891 / 5623	0.42 (1)
P- M	-4209 / 754	0.48 (1)
P- N	-1151 / 6935	0.52 (1)
AB-AC	-314 / 2563	0.00 (1)
AB- C	-4433 / 631	0.69 (1)

[M]

DESIGN CRITERIA

SPECIFIED LOADS:

TOP CH.	LL	=	43.5	PSF
	DL	=	6.0	PSF
BOT CH.	LL	=	10.5	PSF
	DL	=	7.4	PSF
TOTAL LOAD		=	67.3	PSF

SPACING = 24.0 IN. C/C

LOADING IN HIGHEST FLAT SECTION BASED ON PIGGYBACK TRUSS WITH SLOPES OF 6.00/12 AND -6.00/12 AND RESPECTIVE HEEL HEIGHTS OF 0-0 AND 0-0 AND AN ADDITIONAL DEAD LOAD OF 4.0 P.S.F.

LOADING IN OTHER FLAT SECTIONS BASED ON A SLOPE OF 6.00/12

THIS TRUSS IS DESIGNED FOR COMMERCIAL OR INDUSTRIAL BUILDING REQUIREMENTS OF PART 4, NBCC 2015

THIS DESIGN COMPLIES WITH:
- PART 4 OF BCBC 2018 , NBC-2019AE
- PART 4 OF OBC 2012 (2019 AMENDMENT)
- CSA 086-14
- TPIC 2014

DESIGN ASSUMPTIONS
- SLOPE REDUCTION FACTOR NOT USED

(80 % OF 43.9 P.S.F. G.S.L. PLUS 8.4 P.S.F. RAIN LOAD) TIMES IMPORTANCE FACTOR EQUALS 43.5 P.S.F. SPECIFIED ROOF LIVE LOAD

ALLOWABLE DEFL.(LL)= L/360 (1.68")
CALCULATED VERT. DEFL.(LL) = L/ 999 (0.36")
ALLOWABLE DEFL.(TL)= L/180 (3.36")
CALCULATED VERT. DEFL.(TL) = L/ 999 (0.49")

CSI: TC=0.89/1.00 (C-E:1) , BC=0.59/1.00 (Q-R:1) , WB=0.69/0.90 (C-AB:1) , SSI=0.39/1.00 (F-G:2)

DOL LUMBER=1.00 NAIL=1.00 LS BEND=1.10 COMP=1.10 SHEAR=1.10 TENS= 1.10

SNOW LOAD IMPORTANCE FACTOR = 1.00
WIND LOAD IMPORTANCE FACTOR = 1.00
LIVE LOAD IMPORTANCE FACTOR = 1.00
COMPANION LIVE LOAD FACTOR = 1.00

AUTOSOLVE RIGHT HEEL ONLY

TRUSS PLATE MANUFACTURER IS NOT RESPONSIBLE FOR QUALITY CONTROL IN THE TRUSS MANUFACTURING PLANT .

NAIL VALUES

PLATE	GRIP(DRY) (PSI) MAX	MIN	SHEAR (PLI) MAX	MIN	SECTION (PLI) MAX	MIN
MT20	650	371	1747	788	1987	1873
MII16	438	302	2547	1256	4283	1816

PLATE PLACEMENT TOL. = 0.250 Inches

PLATE ROTATION TOL. = 5.0 Deg.

CONTINUED ON PAGE 2

JOB NAME	TRUSS NAME	QUANTITY	PLY	JOB DESC.	DRWG NO.
436388	T41	1	1	BAYVIEW WELLINGTON TRUSS DESC.	

PLATES (table is in inches)

JT	TYPE	PLATES	W	LEN	Y	X
S	BMWW-t	MT20	5.0	6.0		
T	BS-t	MII16	6.0	17.5		
U	BMWW+t	MT20	5.0	6.0	3.00	2.25
V	BS-t	MT20	6.0	7.0		
W	BMWWW-t	MT20	6.0	10.0		
Y	BS-t	MII16	6.0	17.5		
AA	BMW+w	MT20	4.0	6.0		

Edge - INDICATES REFERENCE CORNER OF PLATE TOUCHES EDGE OF CHORD.

NOTES- (1)
1) Lateral braces to be a minimum of 2X4 SPF #2.

LOADING
TOTAL LOAD CASES: (18)

CHORDS

MEMB. FR-TO	MAX. FACTORED FORCE (LBS)	FACTORED VERT. LOAD LC1 (PLF) FROM	TO	MAX CSI (LC)	MAX. UNBRAC LENGTH
T- S	-1047 / 7563	-39.5	-39.5	0.42 (1)	6.25
S- R	-1489 / 9414	-39.5	-39.5	0.55 (1)	6.25
R- Q	-1534 / 9688	-39.5	-39.5	0.59 (1)	6.25
Q- P	-844 / 5332	-39.5	-39.5	0.38 (1)	6.25
P- O	-16 / 41	-39.5	-39.5	0.02 (3)	6.25

WEBS

MEMB. FR-TO	MAX. FACTORED FORCE (LBS)	MAX CSI (LC)

TRUSS HAS BEEN CHECKED FOR UNBALANCED LOADING AS PER NBCC 4.1.6.2.(8)

WIND LOAD APPLIED IS DERIVED FROM REFERENCE VELOCITY PRESSURE OF { 7.5} PSF AT {40-0-0} FT-IN-SX REFERENCE HEIGHT ABOVE GRADE AND USING EXTERNAL PEAK COEFFICIENTS, CpCg, BASED ON THE {MAIN WIND FORCE RESISTING SYSTEM}.INTERNAL WIND PRESSURE IS BASED ON DESIGN {CATEGORY 2}. BUILDING MAY BE LOCATED ON {OPEN TERRAIN}, AND TRUSS IS DESIGNED TO BE LOCATED AT LEAST {0-0} FT-IN-SX AWAY FROM EAVE.TRUSS UPLIFT IS BASED ON TOP AND BOTTOM CHORD DEAD LOADS OF 5.0 PSF AND 5.0 PSF RESPECTIVELY.

JSI GRIP= 0.90 (P) (INPUT = 0.90)
JSI METAL= 0.92 (P) (INPUT = 0.95)

LICENSED PROFESSIONAL ENGINEER
4/02/24
C. M. HEYENS
100505065
PROVINCE OF ONTARIO

STRUCTURAL COMPONENT ONLY
DWG # TR24040069

JOB NAME	TRUSS NAME	QUANTITY	PLY	JOB DESC.	DRWG NO.
436388	T42	2	1	BAYVIEW WELLINGTON TRUSS DESC.	

Tamarack Roof Truss, Burlington

Version 8.630 S Aug 30 2023 MiTek Industries, Inc. Tue Apr 2 10:54:27 2024 Page 1
ID:GRmvuh1dyQr3nydBfsTFcCy6OGl- LxI|QopjUYs0UtFI79I3ud2FVXpCBlNSnZPa3zUo3Q

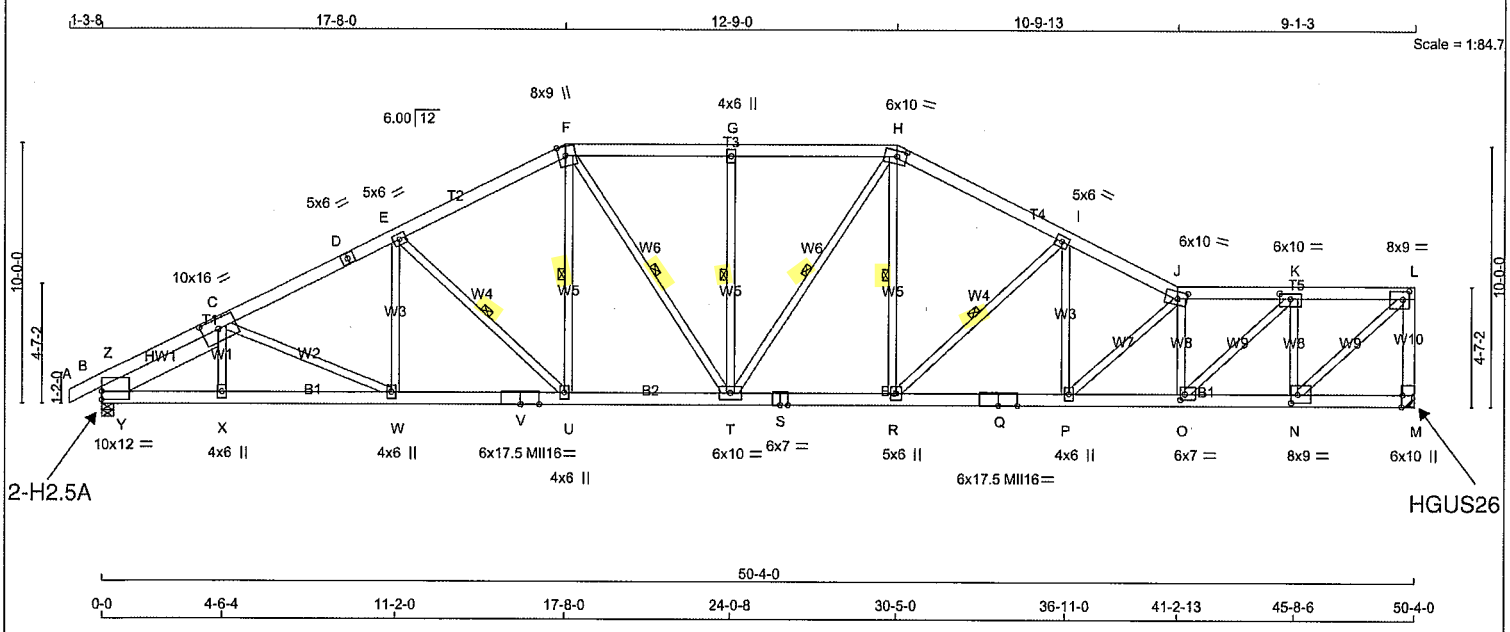

TOTAL WEIGHT = 2 X 335 = 670 lb

LUMBER
N. L. G. A. RULES

CHORDS	SIZE		LUMBER	DESCR.
A - D	2x6	DRY	No.2	SPF
D - F	2x6	DRY	No.2	SPF
F - H	2x6	DRY	No.2	SPF
H - J	2x6	DRY	No.2	SPF
J - L	2x6	DRY	No.2	SPF
M - L	2x6	DRY	No.2	SPF
B - V	2x6	DRY	2100F 1.8E	SPF
V - S	2x6	DRY	2100F 1.8E	SPF
S - Q	2x6	DRY	2100F 1.8E	SPF
Q - M	2x6	DRY	2100F 1.8E	SPF
REINFORCING MEMBERS				
HW1	2x8	DRY	No.2	SPF
ALL WEBS	2x4	DRY	No.2	SPF
EXCEPT				
E - U	2x4	DRY	2100F 1.8E	SPF
R - I	2x4	DRY	2100F 1.8E	SPF
O - K	2x4	DRY	2100F 1.8E	SPF
N - L	2x4	DRY	2100F 1.8E	SPF

DRY: SEASONED LUMBER.

PLATES (table is in inches)

JT	TYPE	PLATES	W	LEN	Y	X
B	TMBMW1-I	MT20	10.0	12.0	3.75	
C	TMWWW-t	MT20	10.0	16.0	4.50	7.50
D	TS-t	MT20	5.0	6.0		
E	TMWW-t	MT20	5.0	6.0		
F	TTWW+m	MT20	8.0	9.0	Edge	3.25
G	TMW+w	MT20	4.0	6.0		
H	TTWW-m	MT20	6.0	10.0	2.75	4.25
I	TMWW-t	MT20	5.0	6.0		
J	TTWW-m	MT20	6.0	10.0	3.25	4.25
K	TMWW-t	MT20	6.0	10.0	2.50	5.00
L	TMVW-t	MT20	8.0	9.0	3.75	3.00
M	BMV1+t	MT20	6.0	10.0	Edge	0.50
N	BMWW-t	MT20	8.0	9.0	3.75	3.00
O	BMWW-t	MT20	6.0	7.0	2.50	2.00
P, U, W						
P	BMWW+t	MT20	4.0	6.0		
Q	BS-t	MII16	6.0	17.5		

LICENSED PROFESSIONAL ENGINEER
4/02/24
C. M. HEYENS
100505065
PROVINCE OF ONTARIO

STRUCTURAL COMPONENT ONLY
DWG # TR24040070

DIMENSIONS, SUPPORTS AND LOADINGS SPECIFIED BY FABRICATOR TO BE VERIFIED BY BUILDING DESIGNER

BEARINGS

JT	FACTORED GROSS REACTION VERT	HORZ	MAXIMUM FACTORED GROSS REACTION DOWN	HORZ	UPLIFT	INPUT BRG IN-SX	REQRD BRG IN-SX
M	4712	0	4712	0	-795	MECHANICAL	
B	4921	0	4921	292	-810	5-8	5-5

A SUITABLE HANGER/MECHANICAL CONNECTION IS REQUIRED AT JOINT M. MINIMUM BEARING LENGTH AT JOINT M = 5-0.

PROVIDE ANCHORAGE AT BEARING JOINT M FOR 795 LBS FACTORED UPLIFT
PROVIDE ANCHORAGE AT BEARING JOINT B FOR 810 LBS FACTORED UPLIFT

PROVIDE FOR 292 LBS FACTORED HORIZONTAL REACTION AT JOINT B

UNFACTORED REACTIONS

JT	1ST LCASE COMBINED	MAX./MIN. COMPONENT REACTIONS SNOW	LIVE	PERM.LIVE	WIND	DEAD	SOIL
M	3438	2187 / 0	529 / 0	0 / 0	131 / -923	723 / 0	0 / 0
B	3581	2308 / 0	528 / 0	0 / 0	115 / -946	744 / 0	0 / 0
HORIZONTAL REACTIONS							
B	--	0 / 0	0 / 0	0 / 0	209 / -91	0 / 0	0 /0

BEARING MATERIAL TO BE SPF NO.2 OR BETTER AT JOINT(S) B

BRACING
FOR SECTION F-H, MAX. UNBRACED TOP CHORD LENGTH = 2.00 FT.
FOR OTHER SECTIONS, MAX. UNBRACED TOP CHORD LENGTH = 2.40 FT.
MAX. UNBRACED BOTTOM CHORD LENGTH = 6.25 FT OR RIGID CEILING DIRECTLY APPLIED.

ALL PITCH BREAKS AND PERIMETER CORNER JOINTS MUST BE LATERALLY RESTRAINED.

1 LATERAL BRACE(S) AT 1/ 2 LENGTH OF E-U, F-U, F-T, G-T, H-T, H-R, I-R.

END VERTICAL(S) MUST BE SHEATHED OR HAVE BRACES AS INDICATED IN THE MAX. UNBRACED LENGTH COLUMN OF THE TABLE BELOW

LOADING
TOTAL LOAD CASES: (18)

CHORDS

MEMB. FR-TO	MAX. FACTORED FORCE (LBS)	FACTORED VERT. LOAD LC1 (PLF) FROM	TO	MAX CSI (LC)	MAX. UNBRAC LENGTH
A- B	0 / 1	-145.3	-145.3	0.11 (2)	10.00
B- Z	-5483 / 862	-145.3	-145.3	0.23 (1)	3.63
Z- C	-3553 / 653	-145.3	-145.3	0.27 (2)	4.35
C- D	-7449 / 1212	-145.3	-145.3	0.89 (1)	2.51
D- E	-7449 / 1212	-145.3	-145.3	0.89 (1)	2.51
E- F	-6443 / 1077	-145.3	-145.3	0.78 (1)	2.82
F- G	-6351 / 1056	-155.3	-155.3	0.75 (1)	2.00
G- H	-6351 / 1055	-155.3	-155.3	0.75 (1)	2.00
H- I	-6743 / 1134	-145.3	-145.3	0.70 (1)	2.86
I- J	-8347 / 1381	-145.3	-145.3	0.72 (3)	2.40
J- K	-8389 / 1402	-145.3	-145.3	0.52 (1)	2.64
K- L	-4885 / 878	-145.3	-145.3	0.34 (3)	3.71
M- L	-4633 / 810	0.0	0.0	0.84 (1)	5.03
B- Y	-698 / 3191	-39.5	-39.5	0.20 (1)	6.25
Y- X	-1199 / 6708	-39.5	-39.5	0.38 (1)	6.25
X- W	-1200 / 6701	-39.5	-39.5	0.38 (1)	6.25
W- V	-1048 / 6687	-39.5	-39.5	0.37 (1)	6.25
V- U	-1048 / 6687	-39.5	-39.5	0.37 (1)	6.25
U- T	-717 / 5737	-39.5	-39.5	0.32 (1)	6.25
T- S	-653 / 6020	-39.5	-39.5	0.34 (1)	6.25
S- R	-653 / 6020	-39.5	-39.5	0.34 (1)	6.25
R- Q	-1063 / 7523	-39.5	-39.5	0.41 (1)	6.25
Q- P	-1063 / 7523	-39.5	-39.5	0.41 (1)	6.25
P- O	-1286 / 8505	-39.5	-39.5	0.48 (1)	6.25

WEBS

MEMB. FR-TO	MAX. FACTORED FORCE (LBS)	MAX CSI (LC)
X- C	0 / 286	0.05 (17)
C- W	-313 / 299	0.22 (2)
W- E	-8 / 435	0.07 (5)
E- U	-1642 / 460	0.41 (2)
U- F	-259 / 1385	0.22 (2)
F- T	-281 / 1681	0.27 (3)
T- G	-1198 / 229	0.53 (1)
T- H	-467 / 1314	0.32 (10)
R- H	-334 / 1887	0.30 (3)
R- I	-2352 / 570	0.58 (3)
P- I	-163 / 1265	0.20 (3)
P- J	-1471 / 308	0.62 (3)
O- J	-3281 / 548	0.64 (1)
O- K	-726 / 4849	0.36 (1)
N- K	-4114 / 763	0.80 (1)
N- L	-1085 / 6547	0.49 (1)
Y- Z	-314 / 2563	0.00 (1)
Y- C	-4433 / 631	0.69 (1)

DESIGN CRITERIA

SPECIFIED LOADS:

TOP CH.	LL	=	43.5	PSF
	DL	=	6.0	PSF
BOT CH.	LL	=	10.5	PSF
	DL	=	7.4	PSF
TOTAL LOAD		=	67.3	PSF

SPACING = 24.0 IN. C/C

LOADING IN HIGHEST FLAT SECTION BASED ON PIGGYBACK TRUSS WITH SLOPES OF 6.00/12 AND -6.00/12 AND RESPECTIVE HEEL HEIGHTS OF 0-0 AND 0-0 AND AN ADDITIONAL DEAD LOAD OF 4.0 P.S.F.

LOADING IN OTHER FLAT SECTIONS BASED ON A SLOPE OF 6.00/12

THIS TRUSS IS DESIGNED FOR COMMERCIAL OR INDUSTRIAL BUILDING REQUIREMENTS OF PART 4, NBCC 2015

THIS DESIGN COMPLIES WITH:
- PART 4 OF BCBC 2018 , NBC-2019AE
- PART 4 OF OBC 2012 (2019 AMENDMENT)
- CSA 086-14
- TPIC 2014

DESIGN ASSUMPTIONS
- SLOPE REDUCTION FACTOR NOT USED

(80 % OF 43.9 P.S.F. G.S.L. PLUS 8.4 P.S.F. RAIN LOAD) TIMES IMPORTANCE FACTOR EQUALS 43.5 P.S.F. SPECIFIED ROOF LIVE LOAD

ALLOWABLE DEFL.(LL)= L/360 (1.68")
CALCULATED VERT. DEFL.(LL) = L/ 999 (0.37")
ALLOWABLE DEFL.(TL)= L/180 (3.36")
CALCULATED VERT. DEFL.(TL) = L/ 999 (0.49")

CSI: TC=0.89/1.00 (C-E:1) , BC=0.48/1.00 (O-P:1) , WB=0.80/1.00 (K-N:1) , SSI=0.39/1.00 (F-G:2)

DOL LUMBER=1.00 NAIL=1.00 LS BEND=1.10 COMP=1.10 SHEAR=1.10 TENS= 1.10

SNOW LOAD IMPORTANCE FACTOR = 1.00
WIND LOAD IMPORTANCE FACTOR = 1.00
LIVE LOAD IMPORTANCE FACTOR = 1.00
COMPANION LIVE LOAD FACTOR = 1.00

AUTOSOLVE RIGHT HEEL ONLY

TRUSS PLATE MANUFACTURER IS NOT RESPONSIBLE FOR QUALITY CONTROL IN THE TRUSS MANUFACTURING PLANT .

NAIL VALUES

PLATE	GRIP(DRY) (PSI) MAX	MIN	SHEAR (PLI) MAX	MIN	SECTION (PLI) MAX	MIN
MT20	650	371	1747	788	1987	1873
MII16	438	302	2547	1256	4283	1816

PLATE PLACEMENT TOL. = 0.250 inches

PLATE ROTATION TOL. = 5.0 Deg.

CONTINUED ON PAGE 2

JOB NAME	TRUSS NAME	QUANTITY	PLY	JOB DESC. BAYVIEW WELLINGTON	DRWG NO.
436388	T42	2	1	TRUSS DESC.	

PLATES (table is in inches)

JT	TYPE	PLATES	W	LEN	Y	X
R	BMWW+t	MT20	5.0	6.0		
S	BS-t	MT20	6.0	7.0		
T	BMWWW-t	MT20	6.0	10.0		
V	BS-t	MII16	6.0	17.5		
X	BMW+w	MT20	4.0	6.0		

Edge - INDICATES REFERENCE CORNER OF PLATE TOUCHES EDGE OF CHORD.

NOTES- (1)
1) Lateral braces to be a minimum of 2X4 SPF #2.

LOADING
TOTAL LOAD CASES: (18)

CHORDS

MEMB. FR-TO	MAX. FACTORED FORCE (LBS)	FACTORED VERT. LOAD LC1 (PLF) FROM	TO	MAX CSI (LC)	MAX. UNBRAC LENGTH
O- N	-742 / 4885	-39.5	-39.5	0.30 (1)	6.25
N- M	-27 / 68	-39.5	-39.5	0.04 (17)	6.25

WEBS

MEMB. FR-TO	MAX. FACTORED FORCE (LBS)	MAX CSI (LC)

TRUSS HAS BEEN CHECKED FOR UNBALANCED LOADING AS PER NBCC 4.1.6.2.(8)

WIND LOAD APPLIED IS DERIVED FROM REFERENCE VELOCITY PRESSURE OF { 7.5} PSF AT {40-0-0} FT-IN-SX REFERENCE HEIGHT ABOVE GRADE AND USING EXTERNAL PEAK COEFFICIENTS, CpCg, BASED ON THE {MAIN WIND FORCE RESISTING SYSTEM}.INTERNAL WIND PRESSURE IS BASED ON DESIGN {CATEGORY 2}. BUILDING MAY BE LOCATED ON {OPEN TERRAIN}, AND TRUSS IS DESIGNED TO BE LOCATED AT LEAST {0-0} FT-IN-SX AWAY FROM EAVE.TRUSS UPLIFT IS BASED ON TOP AND BOTTOM CHORD DEAD LOADS OF 5.0 PSF AND 5.0 PSF RESPECTIVELY.

JSI GRIP= 0.90 (N) (INPUT = 0.90)
JSI METAL= 0.89 (J) (INPUT = 0.95)

LICENSED PROFESSIONAL ENGINEER
4/02/24
C. M. HEYENS
100505065
PROVINCE OF ONTARIO

STRUCTURAL COMPONENT ONLY
DWG # TR24040070

JOB NAME	TRUSS NAME	QUANTITY	PLY	JOB DESC.	DRWG NO.
436388	T43	1	1	BAYVIEW WELLINGTON TRUSS DESC.	

Tamarack Roof Truss, Burlington

Version 8.630 S Aug 30 2023 MiTek Industries, Inc. Tue Apr 2 10:54:28 2024 Page 1
ID:GRmvuh1dyQr3nydBfsTFcCy6OGl-SXUqwmoRUngjeeSRJqgXb6AD?uoRxeaXhRJy6VzUo3P

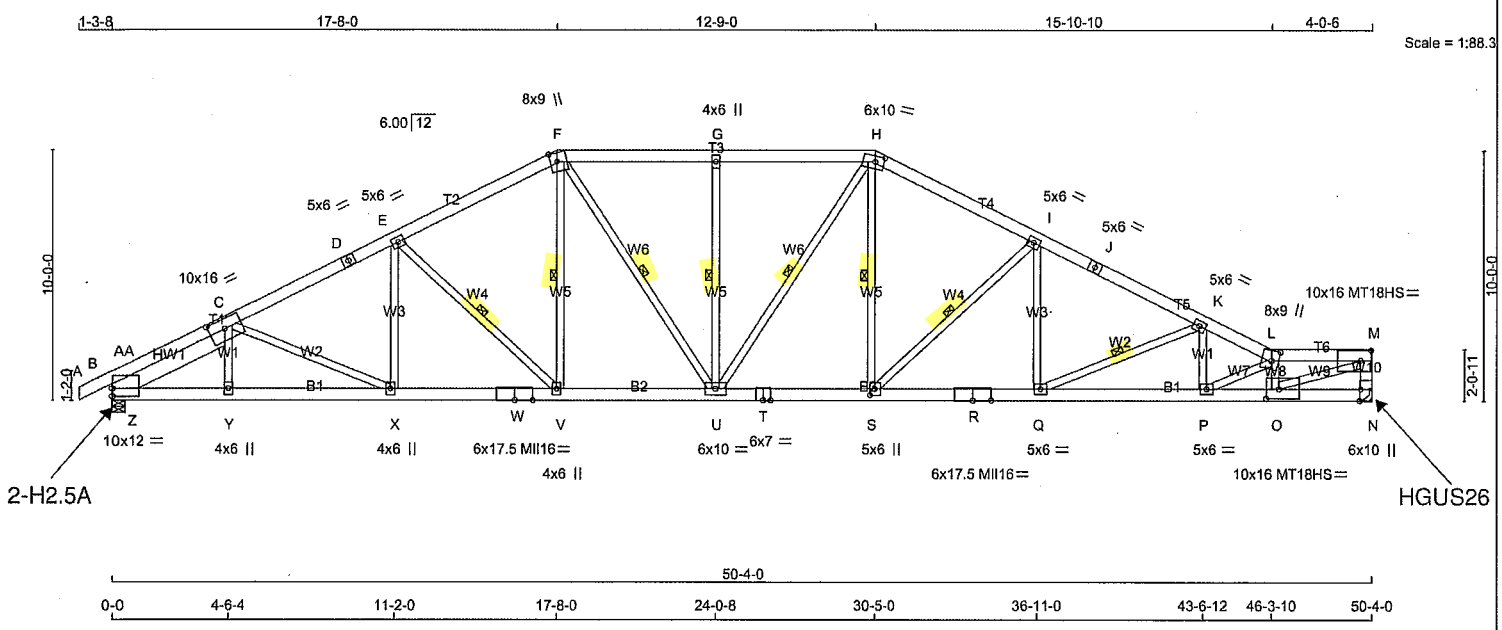

TOTAL WEIGHT = 323 lb

[M]

LUMBER

N. L. G. A. RULES

CHORDS	SIZE		LUMBER	DESCR.
A - D	2x6	DRY	No.2	SPF
D - F	2x6	DRY	No.2	SPF
F - H	2x6	DRY	No.2	SPF
H - J	2x6	DRY	2100F 1.8E	SPF
J - L	2x6	DRY	2100F 1.8E	SPF
L - M	2x6	DRY	No.2	SPF
N - M	2x6	DRY	No.2	SPF
B - W	2x6	DRY	2100F 1.8E	SPF
W - T	2x6	DRY	2100F 1.8E	SPF
T - R	2x6	DRY	2100F 1.8E	SPF
R - N	2x6	DRY	2100F 1.8E	SPF
REINFORCING MEMBERS				
HW1	2x8	DRY	No.2	SPF
ALL WEBS EXCEPT	2x4	DRY	No.2	SPF
E - V	2x4	DRY	2100F 1.8E	SPF
S - I	2x4	DRY	2100F 1.8E	SPF
O - M	2x4	DRY	2100F 1.8E	SPF

DRY: SEASONED LUMBER.

PLATES (table is in inches)

JT	TYPE	PLATES	W	LEN	Y	X
B	TMBMW1-I	MT20	10.0	12.0	3.75	
C	TMWWW-t	MT20	10.0	16.0	4.50	7.50
D	TS-t	MT20	5.0	6.0		
E, I, K						
E	TMWW-t	MT20	5.0	6.0		
F	TTWW+m	MT20	8.0	9.0	Edge	3.25
G	TMW+w	MT20	4.0	6.0		
H	TTWW-m	MT20	6.0	10.0	2.75	4.25
J	TS-t	MT20	5.0	6.0		
L	TTWW+m	MT20	8.0	9.0	5.00	3.25
M	TMVW-t	MT18HS	10.0	16.0	5.00	5.00
N	BMV1+t	MT20	6.0	10.0	Edge	0.50
O	BMWW-t	MT18HS	10.0	16.0	4.50	6.00
P	BMWW-t	MT20	5.0	6.0		
Q	BMWW-t	MT20	5.0	6.0		
R	BS-t	MII16	6.0	17.5		
S	BMWW+t	MT20	5.0	6.0	3.00	2.25

LICENSED PROFESSIONAL ENGINEER
4/02/24
C. M. HEYENS
100505065
PROVINCE OF ONTARIO

STRUCTURAL COMPONENT ONLY
DWG # TR24040071

DIMENSIONS, SUPPORTS AND LOADINGS SPECIFIED BY FABRICATOR TO BE VERIFIED BY BUILDING DESIGNER

BEARINGS

JT	FACTORED GROSS REACTION VERT	HORZ	MAXIMUM FACTORED GROSS REACTION DOWN	HORZ	UPLIFT	INPUT BRG IN-SX	REQRD BRG IN-SX
N	4712	0	4712	0	-791	MECHANICAL	
B	4921	0	4921	213	-811	5-8	5-5

A SUITABLE HANGER/MECHANICAL CONNECTION IS REQUIRED AT JOINT N. MINIMUM BEARING LENGTH AT JOINT N = 5-0.

PROVIDE ANCHORAGE AT BEARING JOINT N FOR 791 LBS FACTORED UPLIFT
PROVIDE ANCHORAGE AT BEARING JOINT B FOR 811 LBS FACTORED UPLIFT

PROVIDE FOR 213 LBS FACTORED HORIZONTAL REACTION AT JOINT B

UNFACTORED REACTIONS

MAX./MIN. COMPONENT REACTIONS

JT	1ST LCASE COMBINED	SNOW	LIVE	PERM.LIVE	WIND	DEAD	SOIL
N	3438	2187 / 0	528 / 0	0 / 0	135 / -920	723 / 0	0 / 0
B	3581	2308 / 0	528 / 0	0 / 0	115 / -946	744 / 0	0 / 0
HORIZONTAL REACTIONS							
B	---	0 / 0	0 / 0	0 / 0	152 / -122	0 / 0	0 /0

BEARING MATERIAL TO BE SPF NO.2 OR BETTER AT JOINT(S) B

BRACING

FOR SECTION F-H, MAX. UNBRACED TOP CHORD LENGTH = 2.00 FT.
FOR OTHER SECTIONS, MAX. UNBRACED TOP CHORD LENGTH = 2.19 FT.
MAX. UNBRACED BOTTOM CHORD LENGTH = 6.25 FT OR RIGID CEILING DIRECTLY APPLIED.

ALL PITCH BREAKS AND PERIMETER CORNER JOINTS MUST BE LATERALLY RESTRAINED.

1 LATERAL BRACE(S) AT 1/ 2 LENGTH OF E-V, F-V, F-U, G-U, H-U, H-S, I-S, K-Q.

END VERTICAL(S) MUST BE SHEATHED OR HAVE BRACES AS INDICATED IN THE MAX. UNBRACED LENGTH COLUMN OF THE TABLE BELOW

LOADING

TOTAL LOAD CASES: (18)

CHORDS

MEMB. FR-TO	MAX. FACTORED FORCE (LBS)	FACTORED VERT. LOAD (PLF) FROM	TO	LC1	MAX CSI (LC)	MAX. UNBRAC LENGTH
A- B	0 / 1	-145.3	-145.3	0.11 (2)		10.00
B-AA	-5483 / 862	-145.3	-145.3	0.23 (1)		3.52
AA- C	-3553 / 654	-145.3	-145.3	0.27 (2)		4.35
C- D	-7449 / 1213	-145.3	-145.3	0.89 (1)		2.51
D- E	-7449 / 1213	-145.3	-145.3	0.89 (1)		2.51
E- F	-6443 / 1078	-145.3	-145.3	0.78 (1)		2.82
F- G	-6352 / 1064	-155.3	-155.3	0.75 (1)		2.00
G- H	-6352 / 1064	-155.3	-155.3	0.75 (1)		2.00
H- I	-6750 / 1149	-145.3	-145.3	0.38 (3)		3.94
I- J	-8418 / 1390	-145.3	-145.3	0.45 (3)		3.53
J- K	-8418 / 1390	-145.3	-145.3	0.45 (3)		3.53
K- L	-10518 / 1740	-145.3	-145.3	0.25 (1)		3.33
L- M	-10170 / 1685	-145.3	-145.3	0.65 (1)		2.19
N- M	-4444 / 774	0.0	0.0	0.30 (1)		5.13
B- Z	-693 / 3191	-39.5	-39.5	0.20 (1)		6.25
Z- Y	-1194 / 6708	-39.5	-39.5	0.38 (1)		6.25
Y- X	-1195 / 6701	-39.5	-39.5	0.38 (1)		6.25
X- W	-1043 / 6687	-39.5	-39.5	0.37 (1)		6.25
W- V	-1043 / 6687	-39.5	-39.5	0.37 (1)		6.25
V- U	-712 / 5736	-39.5	-39.5	0.32 (1)		6.25
U- T	-604 / 6018	-39.5	-39.5	0.33 (1)		6.25
T- S	-604 / 6018	-39.5	-39.5	0.33 (1)		6.25
S- R	-1030 / 7558	-39.5	-39.5	0.41 (1)		6.25
R- Q	-1030 / 7558	-39.5	-39.5	0.41 (1)		6.25

WEBS

MEMB. FR-TO	MAX. FACTORED FORCE (LBS)	MAX CSI (LC)
Y- C	0 / 286	0.05 (17)
C- X	-313 / 299	0.22 (2)
X- E	-8 / 435	0.07 (5)
E- V	-1642 / 460	0.41 (2)
V- F	-259 / 1384	0.22 (2)
F- U	-285 / 1682	0.27 (3)
U- G	-1198 / 229	0.53 (1)
U- H	-464 / 1316	0.31 (10)
S- H	-351 / 1905	0.31 (3)
S- I	-2407 / 594	0.60 (3)
Q- I	-142 / 1185	0.19 (3)
O- L	-4508 / 782	0.46 (1)
O- M	-1794 / 10997	0.82 (1)
Q- K	-2220 / 499	0.55 (3)
P- K	-112 / 1068	0.17 (1)
P- L	-1329 / 252	0.19 (3)
Z-AA	-314 / 2563	0.00 (1)
Z- C	-4433 / 631	0.69 (1)

DESIGN CRITERIA

SPECIFIED LOADS:

TOP CH.	LL	=	43.5	PSF
	DL	=	6.0	PSF
BOT CH.	LL	=	10.5	PSF
	DL	=	7.4	PSF
TOTAL LOAD		=	67.3	PSF

SPACING = 24.0 IN. C/C

LOADING IN HIGHEST FLAT SECTION BASED ON PIGGYBACK TRUSS WITH SLOPES OF 6.00/12 AND -6.00/12 AND RESPECTIVE HEEL HEIGHTS OF 0-0 AND 0-0 AND AN ADDITIONAL DEAD LOAD OF 4.0 P.S.F.

LOADING IN OTHER FLAT SECTIONS BASED ON A SLOPE OF 6.00/12

THIS TRUSS IS DESIGNED FOR COMMERCIAL OR INDUSTRIAL BUILDING REQUIREMENTS OF PART 4, NBCC 2015

THIS DESIGN COMPLIES WITH:
- PART 4 OF BCBC 2018 , NBC-2019AE
- PART 4 OF OBC 2012 (2019 AMENDMENT)
- CSA 086-14
- TPIC 2014

DESIGN ASSUMPTIONS
- SLOPE REDUCTION FACTOR NOT USED

(80 % OF 43.9 P.S.F. G.S.L. PLUS 8.4 P.S.F. RAIN LOAD) TIMES IMPORTANCE FACTOR EQUALS 43.5 P.S.F. SPECIFIED ROOF LIVE LOAD

ALLOWABLE DEFL.(LL)= L/360 (1.68")
CALCULATED VERT. DEFL.(LL) = L/ 999 (0.40")
ALLOWABLE DEFL.(TL)= L/180 (3.36")
CALCULATED VERT. DEFL.(TL) = L/ 999 (0.54")

CSI: TC=0.89/1.00 (C-E:1) , BC=0.78/1.00 (O-P:1) , WB=0.82/0.90 (M-O:1) , SSI=0.39/1.00 (F-G:2)

DOL LUMBER=1.00 NAIL=1.00 LS BEND=1.10 COMP=1.10 SHEAR=1.10 TENS= 1.10

SNOW LOAD IMPORTANCE FACTOR = 1.00
WIND LOAD IMPORTANCE FACTOR = 1.00
LIVE LOAD IMPORTANCE FACTOR = 1.00
COMPANION LIVE LOAD FACTOR = 1.00

AUTOSOLVE RIGHT HEEL ONLY

TRUSS PLATE MANUFACTURER IS NOT RESPONSIBLE FOR QUALITY CONTROL IN THE TRUSS MANUFACTURING PLANT .

NAIL VALUES

PLATE	GRIP(DRY) (PSI) MAX	MIN	SHEAR (PLI) MAX	MIN	SECTION (PLI) MAX	MIN
MT20	650	371	1747	788	1987	1873
MT18HS	586	403	2455	1382	3163	3004
MII16	438	302	2547	1256	4283	1816

PLATE PLACEMENT TOL. = 0.250 inches

PLATE ROTATION TOL. = 5.0 Deg.

CONTINUED ON PAGE 2

JOB NAME	TRUSS NAME	QUANTITY	PLY	JOB DESC.	DRWG NO.
436388	T43	1	1	BAYVIEW WELLINGTON TRUSS DESC.	

PLATES (table is in inches)

JT	TYPE	PLATES	W	LEN	Y	X
T	BS-t	MT20	6.0	7.0		
U	BMWWW-t	MT20	6.0	10.0		
V	BMWW+t	MT20	4.0	6.0		
W	BS-t	MII16	6.0	17.5		
X	BMWW+t	MT20	4.0	6.0		
Y	BMW+w	MT20	4.0	6.0		

Edge - INDICATES REFERENCE CORNER OF PLATE TOUCHES EDGE OF CHORD.

NOTES- (1)
1) Lateral braces to be a minimum of 2X4 SPF #2.

LOADING
TOTAL LOAD CASES: (18)

CHORDS

MEMB. FR-TO	MAX. FACTORED FORCE (LBS)	FACTORED VERT. LOAD LC1 (PLF) FROM	TO	MAX CSI (LC)	MAX. UNBRAC LENGTH
Q- P	-1486 / 9451	-39.5	-39.5	0.52 (1)	6.25
P- O	-1704 / 10583	-39.5	-39.5	0.78 (1)	6.25
O- N	-10 / 26	-39.5	-39.5	0.27 (1)	6.25

WEBS

MEMB. FR-TO	MAX. FACTORED FORCE (LBS)	MAX CSI (LC)

TRUSS HAS BEEN CHECKED FOR UNBALANCED LOADING AS PER NBCC 4.1.6.2.(8)

WIND LOAD APPLIED IS DERIVED FROM REFERENCE VELOCITY PRESSURE OF { 7.5} PSF AT {40-0-0} FT-IN-SX REFERENCE HEIGHT ABOVE GRADE AND USING EXTERNAL PEAK COEFFICIENTS, CpCg, BASED ON THE {MAIN WIND FORCE RESISTING SYSTEM}.INTERNAL WIND PRESSURE IS BASED ON DESIGN {CATEGORY 2}. BUILDING MAY BE LOCATED ON {OPEN TERRAIN}, AND TRUSS IS DESIGNED TO BE LOCATED AT LEAST {0-0} FT-IN-SX AWAY FROM EAVE.TRUSS UPLIFT IS BASED ON TOP AND BOTTOM CHORD DEAD LOADS OF 5.0 PSF AND 5.0 PSF RESPECTIVELY.

JSI GRIP= 0.89 (L) (INPUT = 0.90)
JSI METAL= 0.94 (M) (INPUT = 0.95)

LICENSED PROFESSIONAL ENGINEER
4/02/24
C. M. HEYENS
100505065
PROVINCE OF ONTARIO

STRUCTURAL COMPONENT ONLY
DWG # TR24040071

JOB NAME	TRUSS NAME	QUANTITY	PLY	JOB DESC.	DRWG NO.
436388	T44	1	3	BAYVIEW WELLINGTON TRUSS DESC.	

Tamarack Roof Truss, Burlington

Version 8.630 S Aug 30 2023 MiTek Industries, Inc. Tue Apr 2 10:54:30 2024 Page 1
ID:GRmvuh1dyQr3nydBfsTFcCy6OGl-OwcQLRql?PwQtxcqRFl?gXFkZic?Pdiq9lo3AOzUo3N

Scale = 1:29.3

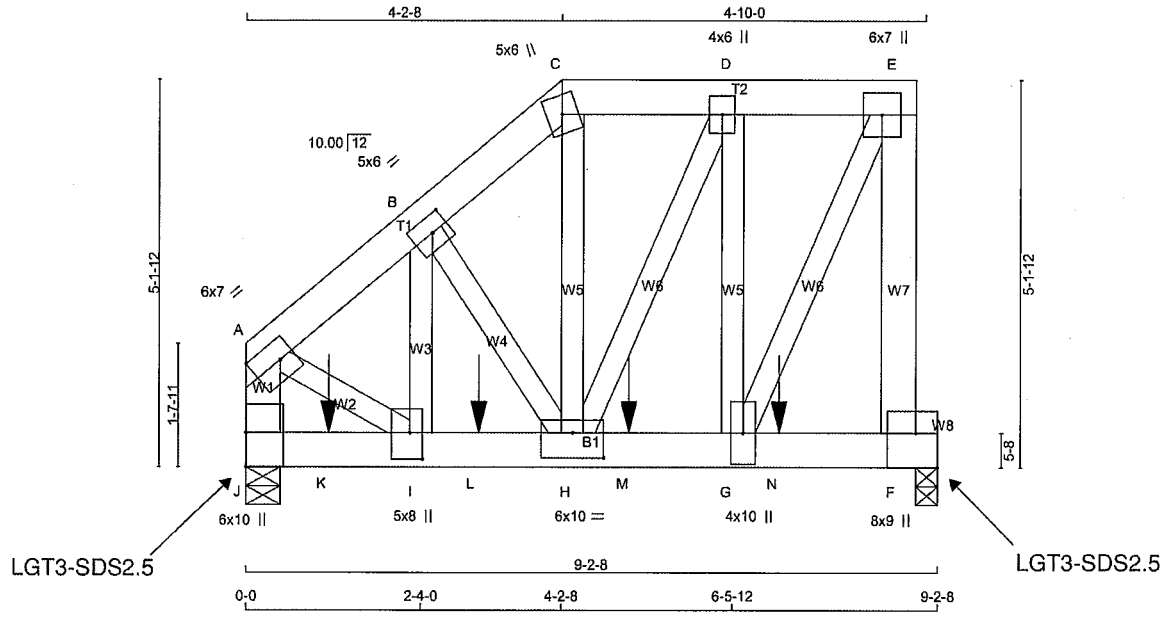

TOTAL WEIGHT = 3 X 74 = 222 lb

LUMBER

N. L. G. A. RULES

CHORDS	SIZE		LUMBER	DESCR.
A - C	2x6	DRY	No.2	SPF
C - E	2x6	DRY	No.2	SPF
J - A	2x6	DRY	No.2	SPF
J - F	2x6	DRY	2100F 1.8E	SPF
ALL WEBS	2x4	DRY	No.2	SPF
EXCEPT				
F - E	2x6	DRY	No.2	SPF

DRY: SEASONED LUMBER.

DESIGN CONSISTS OF 3 TRUSSES BUILT SEPARATELY THEN FASTENED TOGETHER AS FOLLOWS:

CHORDS	#ROWS	SURFACE SPACING (IN)	LOAD(PLF)
TOP CHORDS : (0.122"X3") SPIRAL NAILS			
A- C	2	12	TOP
C- E	2	12	TOP
J- A	2	12	TOP
BOTTOM CHORDS : (0.122"X3") SPIRAL NAILS			
J- F	3	5	SIDE(1139.7)
WEBS : (0.122"X3") SPIRAL NAILS			
2x4	1	6	
2x6	2	6	

STAGGER NAILS BY HALF THE SURFACE SPACING IN ADJACENT PLIES.

GIRDER NAILING ASSUMES NAILED HANGERS ARE FASTENED WITH MIN. 3-0 INCH NAILS.

TOP - COMPONENTS ARE LOADED FROM THE TOP AND MUST BE PLACED ON TOP EDGE OF ALL PLIES FOR THE LOAD TO BE TRANSFERRED TO EACH PLY.

SIDE - PLF SHOWN IS THE EQUIVALENT UDL APPLIED TO ONE SIDE THAT THE CORRESPONDING NAILING PATTERN SHALL BE CAPABLE OF TRANSFERING. REMAINING PLF MUST BE APPLIED ON THE OPPOSITE SIDE OR ON THE TOP.

LICENSED PROFESSIONAL ENGINEER
4/02/24
C. M. HEYENS
100505065
PROVINCE OF ONTARIO

STRUCTURAL COMPONENT ONLY
DWG # TR24040072

DIMENSIONS, SUPPORTS AND LOADINGS SPECIFIED BY FABRICATOR TO BE VERIFIED BY BUILDING DESIGNER

BEARINGS

JT	FACTORED GROSS REACTION VERT	HORZ	MAXIMUM FACTORED GROSS REACTION DOWN	HORZ	UPLIFT	INPUT BRG IN-SX	REQRD BRG IN-SX
J	10023	0	10107	240	-1669	5-8	3-10
F	9058	0	9085	0	-1645	3-8	3-5

PROVIDE ANCHORAGE AT BEARING JOINT J FOR 1669 LBS FACTORED UPLIFT
PROVIDE ANCHORAGE AT BEARING JOINT F FOR 1645 LBS FACTORED UPLIFT

PROVIDE FOR 240 LBS FACTORED HORIZONTAL REACTION AT JOINT J

UNFACTORED REACTIONS

JT	1ST LCASE COMBINED	MAX./MIN. COMPONENT REACTIONS SNOW	LIVE	PERM.LIVE	WIND	DEAD	SOIL
J	7278	4799 / 0	1040 / 0	0 / 0	247 / -1930	1494 / 0	0 / 0
F	6577	4304 / 0	941 / 0	0 / 0	194 / -1841	1350 / 0	0 / 0
HORIZONTAL REACTIONS							
J	---	0 / 0	0 / 0	0 / 0	172 / -115	0 / 0	0 /0

BEARING MATERIAL TO BE SPF NO.2 OR BETTER AT JOINT(S) J, F

BRACING

MAX. UNBRACED TOP CHORD LENGTH = 5.07 FT.
MAX. UNBRACED BOTTOM CHORD LENGTH = 6.25 FT OR RIGID CEILING DIRECTLY APPLIED.

ALL PITCH BREAKS AND PERIMETER CORNER JOINTS MUST BE LATERALLY RESTRAINED.

LOADING

TOTAL LOAD CASES: (18)

CHORDS

MEMB. FR-TO	MAX. FACTORED FORCE (LBS)	FACTORED VERT. LOAD LC1 (PLF) FROM	TO	MAX CSI (LC)	MAX. UNBRAC LENGTH
A- B	-7869 / 1320	-145.3	-145.3	0.11 (3)	5.07
B- C	-6275 / 1113	-145.3	-145.3	0.10 (3)	5.54
C- D	-4960 / 917	-145.3	-145.3	0.11 (2)	6.01
D- E	-3687 / 671	-145.3	-145.3	0.11 (2)	6.25
J- A	-8165 / 1352	0.0	0.0	0.18 (2)	6.33
J- K	-222 / 38	-39.5	-39.5	0.26 (2)	6.25
K- I	-222 / 38	-39.5	-39.5	0.26 (2)	6.25
I- L	-1158 / 5986	-39.5	-39.5	0.24 (2)	6.25
L- H	-1158 / 5986	-39.5	-39.5	0.24 (2)	6.25
H- M	-671 / 3687	-39.5	-39.5	0.22 (2)	6.25
M- G	-671 / 3687	-39.5	-39.5	0.22 (2)	6.25
G- N	0 / 0	-39.5	-39.5	0.17 (3)	10.00
N- F	0 / 0	-39.5	-39.5	0.17 (3)	10.00

WEBS

MEMB. FR-TO	MAX. FACTORED FORCE (LBS)	MAX CSI (LC)
H- C	-573 / 3384	0.18 (2)
F- E	-8193 / 1509	0.42 (2)
B- H	-2059 / 470	0.11 (2)
I- B	-436 / 2615	0.14 (3)
A- I	-1046 / 6632	0.36 (2)
H- D	-596 / 3076	0.16 (2)
G- D	-2651 / 575	0.21 (2)
G- E	-1575 / 8654	0.46 (2)

SPECIFIED CONCENTRATED LOADS (LBS)

JT	LOC.	LC1	MAX-	MAX+	FACE	DIR.	TYPE	HEEL	CONN.
K	1-1-4	-3171	-3171	352	BACK	VERT	TOTAL	---	C1
L	3-1-4	-3171	-3171	352	BACK	VERT	TOTAL	---	C1
M	5-1-4	-3171	-3171	352	BACK	VERT	TOTAL	---	C1
N	7-1-4	-3171	-3171	352	BACK	VERT	TOTAL	---	C1

CONNECTION REQUIREMENTS

1) C1: A SUITABLE HANGER/MECHANICAL CONNECTION IS REQUIRED.

TRUSS HAS BEEN CHECKED FOR UNBALANCED LOADING AS PER NBCC 4.1.6.2.(8)

DESIGN CRITERIA

SPECIFIED LOADS:

TOP CH.	LL	=	43.5	PSF
	DL	=	6.0	PSF
BOT CH.	LL	=	10.5	PSF
	DL	=	7.4	PSF
TOTAL LOAD		=	67.3	PSF

SPACING = 24.0 IN. C/C

LOADING IN FLAT SECTION BASED ON A SLOPE OF 2.00/12

THIS TRUSS IS DESIGNED FOR COMMERCIAL OR INDUSTRIAL BUILDING REQUIREMENTS OF PART 4, NBCC 2015

THIS DESIGN COMPLIES WITH:
- PART 4 OF BCBC 2018 , NBC-2019AE
- PART 4 OF OBC 2012 (2019 AMENDMENT)
- CSA 086-14
- TPIC 2014

DESIGN ASSUMPTIONS
- SLOPE REDUCTION FACTOR NOT USED

(80 % OF 43.9 P.S.F. G.S.L. PLUS 8.4 P.S.F. RAIN LOAD) TIMES IMPORTANCE FACTOR EQUALS 43.5 P.S.F. SPECIFIED ROOF LIVE LOAD

ALLOWABLE DEFL.(LL)= L/360 (0.29")
CALCULATED VERT. DEFL.(LL) = L/ 999 (0.02")
ALLOWABLE DEFL.(TL)= L/180 (0.58")
CALCULATED VERT. DEFL.(TL) = L/ 999 (0.03")

CSI: TC=0.18/1.00 (A-J:2) , BC=0.26/1.00 (I-J:2) , WB=0.46/1.00 (E-G:2) , SSI=0.72/1.00 (F-G:2)

DOL LUMBER=1.00 NAIL=1.00 LS BEND=1.10 COMP=1.10 SHEAR=1.10 TENS= 1.10

SNOW LOAD IMPORTANCE FACTOR = 1.00
WIND LOAD IMPORTANCE FACTOR = 1.00
LIVE LOAD IMPORTANCE FACTOR = 1.00
COMPANION LIVE LOAD FACTOR = 1.00

AUTOSOLVE RIGHT HEEL ONLY

TRUSS PLATE MANUFACTURER IS NOT RESPONSIBLE FOR QUALITY CONTROL IN THE TRUSS MANUFACTURING PLANT .

NAIL VALUES

PLATE	GRIP(DRY) (PSI) MAX	MIN	SHEAR (PLI) MAX	MIN	SECTION (PLI) MAX	MIN
MT20	650	371	1747	788	1987	1873

PLATE PLACEMENT TOL. = 0.250 inches

PLATE ROTATION TOL. = 5.0 Deg.

JSI GRIP= 0.87 (H) (INPUT = 0.90)
JSI METAL= 0.72 (I) (INPUT = 0.95)

CONTINUED ON PAGE 2

PLATES (table is in inches)

JT	TYPE	PLATES	W	LEN	Y	X
A	TMVW-t	MT20	6.0	7.0	3.00	Edge
B	TMWW-t	MT20	5.0	6.0	2.50	2.75
C	TTW+m	MT20	5.0	6.0		
D	TMWW+t	MT20	4.0	6.0		
E	TMWW+t	MT20	6.0	7.0		
F	BMWW1+m	MT20	8.0	9.0	5.50	Edge
G	BMWW+t	MT20	4.0	10.0		
H	BMWWW-t	MT20	6.0	10.0	4.00	5.00
I	BMWW+t	MT20	5.0	8.0	4.25	2.00
J	BMV1+p	MT20	6.0	10.0	5.50	

Edge - INDICATES REFERENCE CORNER OF PLATE TOUCHES EDGE OF CHORD.

NOTES- (1)
1) Lateral braces to be a minimum of 2X4 SPF #2.

CONNECTION REQUIREMENTS

1) **C1:** A SUITABLE HANGER/MECHANICAL CONNECTION IS REQUIRED.

WIND LOAD APPLIED IS DERIVED FROM REFERENCE VELOCITY PRESSURE OF { 7.5} PSF AT {40-0-0} FT-IN-SX REFERENCE HEIGHT ABOVE GRADE AND USING EXTERNAL PEAK COEFFICIENTS, CpCg, BASED ON THE {MAIN WIND FORCE RESISTING SYSTEM}.INTERNAL WIND PRESSURE IS BASED ON DESIGN {CATEGORY 2}. BUILDING MAY BE LOCATED ON {OPEN TERRAIN}, AND TRUSS IS DESIGNED TO BE LOCATED AT LEAST {0-0} FT-IN-SX AWAY FROM EAVE.TRUSS UPLIFT IS BASED ON TOP AND BOTTOM CHORD DEAD LOADS OF 5.0 PSF AND 5.0 PSF RESPECTIVELY.

LICENSED PROFESSIONAL ENGINEER
4/02/24
C. M. HEYENS
100505065
PROVINCE OF ONTARIO

STRUCTURAL COMPONENT ONLY
DWG # TR24040072

JOB NAME	TRUSS NAME	QUANTITY	PLY	JOB DESC.	DRWG NO.
436388	T45	1	3	BAYVIEW WELLINGTON TRUSS DESC.	

Tamarack Roof Truss, Burlington

Version 8.630 S Aug 30 2023 MiTek Industries, Inc. Tue Apr 2 10:54:32 2024 Page 1
ID:GRmvuh1dyQr3nydBfsTFcCy6OGl-LIkBm7syX0A87FmCYglTmyK4NWGDtXu6c3HAFHzUo3L

Scale = 1:24.6

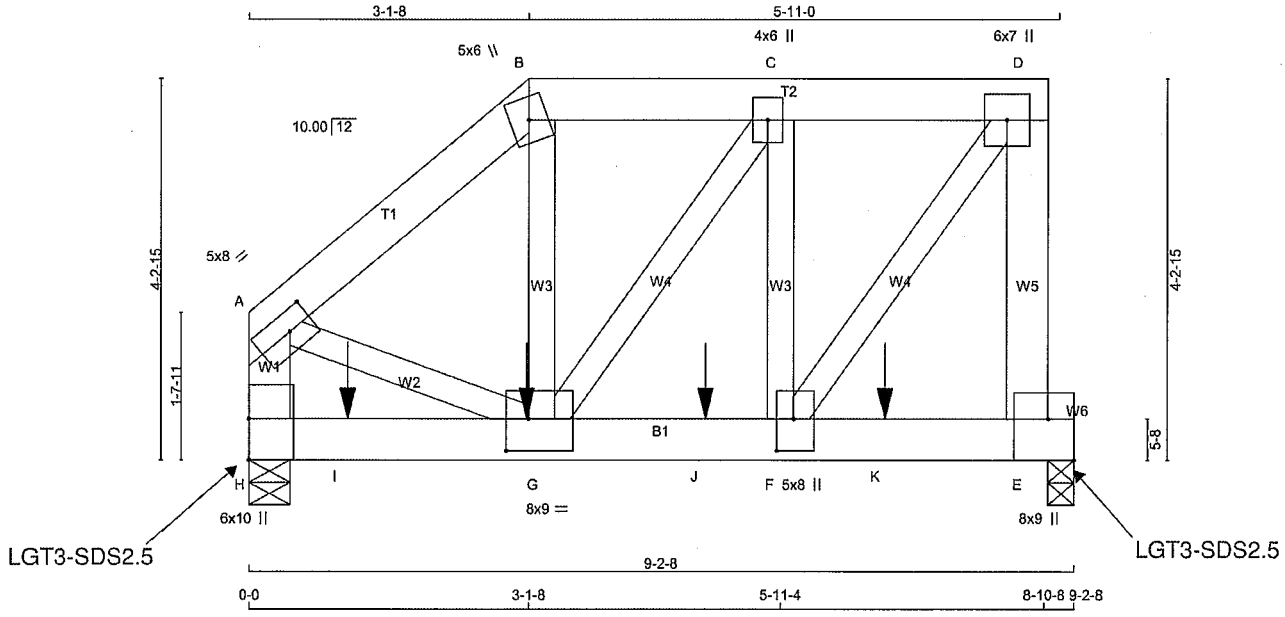

TOTAL WEIGHT = 3 X 63 = 189 lb

LUMBER

N. L. G. A. RULES

CHORDS	SIZE		LUMBER	DESCR.
A - B	2x6	DRY	No.2	SPF
B - D	2x6	DRY	No.2	SPF
H - A	2x6	DRY	No.2	SPF
H - E	2x6	DRY	2100F 1.8E	SPF
ALL WEBS	2x4	DRY	No.2	SPF
EXCEPT				
E - D	2x6	DRY	No.2	SPF

DRY: SEASONED LUMBER.

DESIGN CONSISTS OF 3 TRUSSES BUILT SEPARATELY THEN FASTENED TOGETHER AS FOLLOWS:

CHORDS	#ROWS	SURFACE SPACING (IN)	LOAD(PLF)
TOP CHORDS : (0.122"X3") SPIRAL NAILS			
A- B	2	12	TOP
B- D	2	12	TOP
H- A	2	12	TOP
BOTTOM CHORDS : (0.122"X3") SPIRAL NAILS			
H- E	3	5	SIDE(1487.5)
WEBS : (0.122"X3") SPIRAL NAILS			
2x4	1	6	
2x6	2	6	

STAGGER NAILS BY HALF THE SURFACE SPACING IN ADJACENT PLIES.

GIRDER NAILING ASSUMES NAILED HANGERS ARE FASTENED WITH MIN. 3-0 INCH NAILS.

TOP - COMPONENTS ARE LOADED FROM THE TOP AND MUST BE PLACED ON TOP EDGE OF ALL PLIES FOR THE LOAD TO BE TRANSFERRED TO EACH PLY.

SIDE - PLF SHOWN IS THE EQUIVALENT UDL APPLIED TO ONE SIDE THAT THE CORRESPONDING NAILING PATTERN SHALL BE CAPABLE OF TRANSFERING. REMAINING PLF MUST BE APPLIED ON THE OPPOSITE SIDE OR ON THE TOP.

LICENSED PROFESSIONAL ENGINEER
4/02/24
C. M. HEYENS
100505065
PROVINCE OF ONTARIO

STRUCTURAL COMPONENT ONLY
DWG # TR24040073

DIMENSIONS, SUPPORTS AND LOADINGS SPECIFIED BY FABRICATOR TO BE VERIFIED BY BUILDING DESIGNER

BEARINGS

JT	FACTORED GROSS REACTION VERT	HORZ	MAXIMUM FACTORED GROSS REACTION DOWN	HORZ	UPLIFT	INPUT BRG IN-SX	REQRD BRG IN-SX
H	9721	0	9789	189	-1632	5-8	3-9
E	8944	0	8958	0	-1591	3-8	3-4

PROVIDE ANCHORAGE AT BEARING JOINT H FOR 1632 LBS FACTORED UPLIFT
PROVIDE ANCHORAGE AT BEARING JOINT E FOR 1591 LBS FACTORED UPLIFT

PROVIDE FOR 189 LBS FACTORED HORIZONTAL REACTION AT JOINT H

UNFACTORED REACTIONS

1ST LCASE MAX./MIN. COMPONENT REACTIONS

JT	COMBINED	SNOW	LIVE	PERM.LIVE	WIND	DEAD	SOIL
H	7079	4594 / 0	1056 / 0	0 / 0	259 / -1891	1474 / 0	0 / 0
E	6512	4195 / 0	971 / 0	0 / 0	217 / -1803	1356 / 0	0 / 0
HORIZONTAL REACTIONS							
H	---	0 / 0	0 / 0	0 / 0	135 / -96	0 / 0	0 /0

BEARING MATERIAL TO BE SPF NO.2 OR BETTER AT JOINT(S) H, E

BRACING

MAX. UNBRACED TOP CHORD LENGTH = 5.13 FT.
MAX. UNBRACED BOTTOM CHORD LENGTH = 6.25 FT OR RIGID CEILING DIRECTLY APPLIED.

ALL PITCH BREAKS AND PERIMETER CORNER JOINTS MUST BE LATERALLY RESTRAINED.

LOADING

TOTAL LOAD CASES: (18)

CHORDS

MEMB. FR-TO	MAX. FACTORED FORCE (LBS)	FACTORED VERT. LOAD LC1 (PLF) FROM	TO	MAX CSI (LC)	MAX. UNBRAC LENGTH
A- B	-7711 / 1303	-145.3	-145.3	0.08 (2)	5.13
B- C	-6062 / 1098	-145.3	-145.3	0.09 (2)	5.61
C- D	-5307 / 947	-145.3	-145.3	0.08 (2)	5.90
H- A	-7248 / 1222	0.0	0.0	0.16 (2)	6.64
H- I	-171 / 31	-39.5	-39.5	0.34 (2)	6.25
I- G	-171 / 31	-39.5	-39.5	0.34 (2)	6.25
G- J	-947 / 5307	-39.5	-39.5	0.26 (2)	6.25
J- F	-947 / 5307	-39.5	-39.5	0.26 (2)	6.25
F- K	0 / 0	-39.5	-39.5	0.25 (3)	10.00
K- E	0 / 0	-39.5	-39.5	0.25 (3)	10.00

WEBS

MEMB. FR-TO	MAX. FACTORED FORCE (LBS)	MAX CSI (LC)
G- B	-732 / 4470	0.24 (3)
A- G	-1019 / 6224	0.33 (2)
E- D	-7608 / 1380	0.27 (2)
G- C	-263 / 1308	0.07 (2)
F- C	-1199 / 315	0.07 (2)
F- D	-1612 / 9031	0.48 (2)

SPECIFIED CONCENTRATED LOADS (LBS)

JT	LOC.	LC1	MAX-	MAX+	FACE	DIR.	TYPE	HEEL	CONN.
G	3-1-4	-3105	-3105	337	FRONT	VERT	TOTAL	---	C1
I	1-1-4	-3105	-3105	337	FRONT	VERT	TOTAL	---	C1
J	5-1-4	-3105	-3105	337	FRONT	VERT	TOTAL	---	C1
K	7-1-4	-3105	-3105	337	FRONT	VERT	TOTAL	---	C1

CONNECTION REQUIREMENTS

1) **C1:** A SUITABLE HANGER/MECHANICAL CONNECTION IS REQUIRED.

TRUSS HAS BEEN CHECKED FOR UNBALANCED LOADING AS PER NBCC 4.1.6.2.(8)

WIND LOAD APPLIED IS DERIVED FROM REFERENCE VELOCITY PRESSURE OF (7.5) PSF AT (40-0-0) FT-IN-SX REFERENCE HEIGHT ABOVE GRADE AND USING EXTERNAL PEAK COEFFICIENTS, CpCg, BASED ON THE (MAIN WIND FORCE RESISTING SYSTEM).INTERNAL WIND PRESSURE IS BASED ON DESIGN (CATEGORY 2). BUILDING MAY BE LOCATED ON (OPEN TERRAIN), AND TRUSS IS DESIGNED TO BE LOCATED AT LEAST (0-0) FT-IN-SX AWAY FROM EAVE.TRUSS UPLIFT IS BASED ON TOP AND BOTTOM CHORD DEAD LOADS OF 5.0 PSF AND 5.0 PSF RESPECTIVELY.

[M]

DESIGN CRITERIA

SPECIFIED LOADS:

TOP CH.	LL	=	43.5	PSF
	DL	=	6.0	PSF
BOT CH.	LL	=	10.5	PSF
	DL	=	7.4	PSF
TOTAL LOAD		=	67.3	PSF

SPACING = 24.0 IN. C/C

LOADING IN FLAT SECTION BASED ON A SLOPE OF 2.00/12

THIS TRUSS IS DESIGNED FOR COMMERCIAL OR INDUSTRIAL BUILDING REQUIREMENTS OF PART 4, NBCC 2015

THIS DESIGN COMPLIES WITH:
- PART 4 OF BCBC 2018 , NBC-2019AE
- PART 4 OF OBC 2012 (2019 AMENDMENT)
- CSA 086-14
- TPIC 2014

DESIGN ASSUMPTIONS
- SLOPE REDUCTION FACTOR NOT USED

(80 % OF 43.9 P.S.F. G.S.L. PLUS 8.4 P.S.F. RAIN LOAD) TIMES IMPORTANCE FACTOR EQUALS 43.5 P.S.F. SPECIFIED ROOF LIVE LOAD

ALLOWABLE DEFL.(LL)= L/360 (0.29")
CALCULATED VERT. DEFL.(LL) = L/ 999 (0.02")
ALLOWABLE DEFL.(TL)= L/180 (0.58")
CALCULATED VERT. DEFL.(TL) = L/ 999 (0.03")

CSI: TC=0.16/1.00 (A-H:2) , BC=0.34/1.00 (G-H:2) , WB=0.48/1.00 (D-F:2) , SSI=0.62/1.00 (F-G:2)

DOL LUMBER=1.00 NAIL=1.00 LS BEND=1.10 COMP=1.10 SHEAR=1.10 TENS= 1.10

SNOW LOAD IMPORTANCE FACTOR = 1.00
WIND LOAD IMPORTANCE FACTOR = 1.00
LIVE LOAD IMPORTANCE FACTOR = 1.00
COMPANION LIVE LOAD FACTOR = 1.00

AUTOSOLVE RIGHT HEEL ONLY

TRUSS PLATE MANUFACTURER IS NOT RESPONSIBLE FOR QUALITY CONTROL IN THE TRUSS MANUFACTURING PLANT .

NAIL VALUES

PLATE	GRIP(DRY) (PSI) MAX	MIN	SHEAR (PLI) MAX	MIN	SECTION (PLI) MAX	MIN
MT20	650	371	1747	788	1987	1873

PLATE PLACEMENT TOL. = 0.250 inches

PLATE ROTATION TOL. = 5.0 Deg.

JSI GRIP= 0.84 (G) (INPUT = 0.90)
JSI METAL= 0.64 (F) (INPUT = 0.95)

CONTINUED ON PAGE 2

JOB NAME	TRUSS NAME	QUANTITY	PLY	JOB DESC. BAYVIEW WELLINGTON	DRWG NO.
436388	T45	1	3	TRUSS DESC.	

Tamarack Roof Truss, Burlington

ID:GRmvuh1dyQr3nydBfsTFcCy6OGl-LIkBm7syX0A87FmCYglTmyK4NWGDtXu6c3HAFHzUo3L

PLATES (table is in inches)

JT	TYPE	PLATES	W	LEN	Y	X
A	TMVW-t	MT20	5.0	8.0	2.50	3.25
B	TTW+m	MT20	5.0	6.0		
C	TMWW+t	MT20	4.0	6.0		
D	TMWW+t	MT20	6.0	7.0		
E	BMWW1+m	MT20	8.0	9.0	5.50	Edge
F	BMWW+t	MT20	5.0	8.0	4.25	2.25
G	BMWWW-t	MT20	8.0	9.0	4.25	3.00
H	BMV1+p	MT20	6.0	10.0	5.50	

Edge - INDICATES REFERENCE CORNER OF PLATE TOUCHES EDGE OF CHORD.

NOTES- (1)
1) Lateral braces to be a minimum of 2X4 SPF #2.

LICENSED PROFESSIONAL ENGINEER
4/02/24
C. M. HEYENS
100505065
PROVINCE OF ONTARIO

STRUCTURAL COMPONENT ONLY
DWG # TR24040073

JOB NAME	TRUSS NAME	QUANTITY	PLY	JOB DESC.	DRWG NO.
436388	T46	2	1	BAYVIEW WELLINGTON TRUSS DESC.	

Tamarack Roof Truss, Burlington

Version 8.630 S Aug 30 2023 MiTek Industries, Inc. Tue Apr 2 10:54:33 2024 Page 1
ID:GRmvuh1dyQr3nydBfsTFcCy6OGl-pVlZzTsaIKI?kPLP6OGil9tDQvgMc36Grj0jnjzUo3K

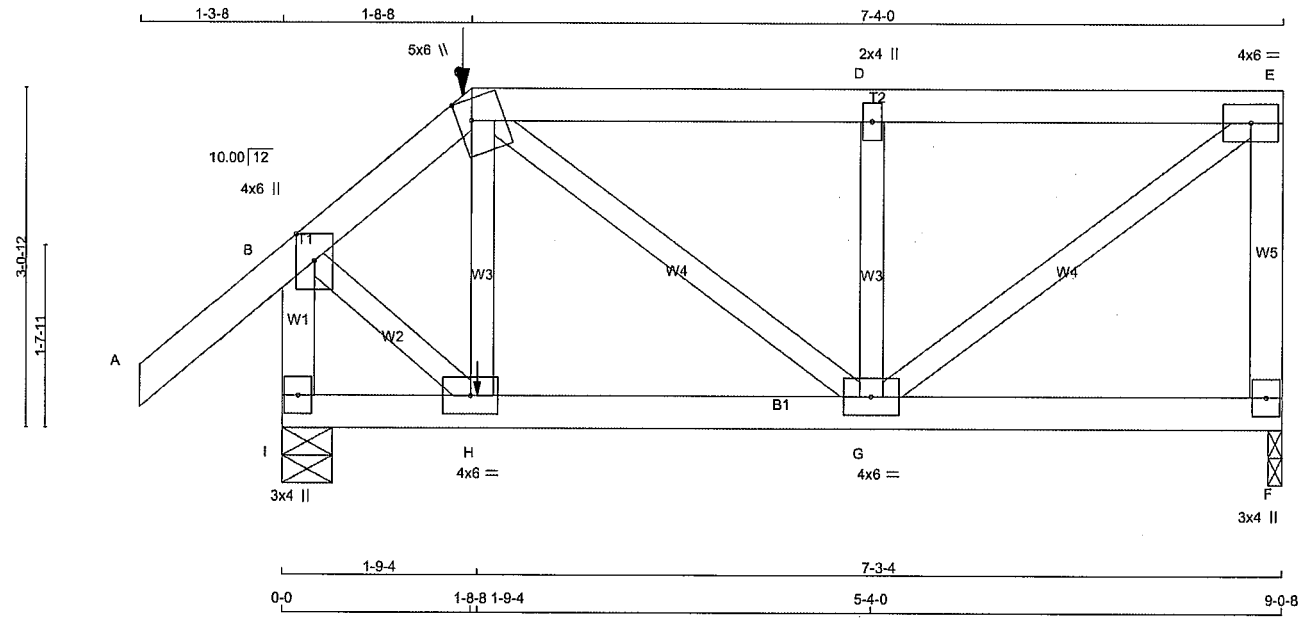

TOTAL WEIGHT = 2 X 40 = 80 lb [M]

LUMBER
N. L. G. A. RULES

CHORDS	SIZE		LUMBER	DESCR.
A - C	2x4	DRY	No.2	SPF
C - E	2x4	DRY	No.2	SPF
F - E	2x4	DRY	No.2	SPF
I - B	2x4	DRY	No.2	SPF
I - F	2x4	DRY	No.2	SPF
ALL WEBS EXCEPT	2x3	DRY	No.2	SPF

DRY: SEASONED LUMBER.

PLATES (table is in inches)

JT	TYPE	PLATES	W	LEN	Y	X
B	TMVW+p	MT20	4.0	6.0	Edge	
C	TTWW+m	MT20	5.0	6.0	2.25	1.50
D	TMW+w	MT20	2.0	4.0		
E	TMVW-t	MT20	4.0	6.0		
F	BMV1+p	MT20	3.0	4.0		
G	BMWWW-t	MT20	4.0	6.0		
H	BMWW-t	MT20	4.0	6.0		
I	BMV1+p	MT20	3.0	4.0		

Edge - INDICATES REFERENCE CORNER OF PLATE TOUCHES EDGE OF CHORD.

NOTES- (1)
1) Lateral braces to be a minimum of 2X4 SPF #2.

DIMENSIONS, SUPPORTS AND LOADINGS SPECIFIED BY FABRICATOR TO BE VERIFIED BY BUILDING DESIGNER

BEARINGS

JT	FACTORED GROSS REACTION VERT	HORZ	MAXIMUM FACTORED GROSS REACTION DOWN	HORZ	UPLIFT	INPUT BRG IN-SX	REQRD BRG IN-SX
F	594	0	594	0	0	1-8	1-8
I	818	0	818	0	0	5-8	1-8

UNFACTORED REACTIONS

JT	1ST LCASE COMBINED	MAX./MIN. COMPONENT REACTIONS SNOW	LIVE	PERM.LIVE	WIND	DEAD	SOIL
F	416	295 / 0	0 / 0	0 / 0	0 / 0	121 / 0	0 / 0
I	570	424 / 0	0 / 0	0 / 0	0 / 0	145 / 0	0 / 0

BEARING MATERIAL TO BE SPF NO.2 OR BETTER AT JOINT(S) F, I

BRACING
TOP CHORD TO BE SHEATHED OR MAX. PURLIN SPACING = 6.25 FT.
MAX. UNBRACED BOTTOM CHORD LENGTH = 10.00 FT OR RIGID CEILING DIRECTLY APPLIED.

ALL PITCH BREAKS AND PERIMETER CORNER JOINTS MUST BE LATERALLY RESTRAINED.

LOADING
TOTAL LOAD CASES: (7)

CHORDS

MEMB. FR-TO	MAX. FORCE (LBS)	FACTORED VERT. LOAD (PLF) FROM	TO	LC1 MAX CSI (LC)	MAX. UNBRAC LENGTH
A- B	0 / 50	-112.4	-112.4	0.17 (1)	10.00
B- C	-454 / 0	-112.4	-112.4	0.16 (1)	6.25
C- D	-536 / 0	-112.4	-112.4	0.27 (1)	6.25
D- E	-537 / 0	-112.4	-112.4	0.27 (1)	6.25
F- E	-563 / 0	0.0	0.0	0.09 (1)	7.81
I- B	-809 / 0	0.0	0.0	0.09 (1)	7.81
I- H	0 / 0	-18.5	-18.5	0.03 (4)	10.00
H- G	0 / 309	-18.5	-18.5	0.09 (4)	10.00
G- F	0 / 0	-18.5	-18.5	0.06 (4)	10.00

WEBS

MEMB. FR-TO	MAX. FORCE (LBS)	MAX CSI (LC)
H- C	-170 / 0	0.03 (1)
C- G	0 / 352	0.09 (5)
G- D	-504 / 0	0.10 (5)
G- E	0 / 670	0.17 (1)
B- H	0 / 389	0.10 (1)

SPECIFIED CONCENTRATED LOADS (LBS)

JT	LOC.	LC1	MAX-	MAX+	FACE	DIR.	TYPE	HEEL	CONN.
C	1-8-8	-50	-50	101	FRONT	VERT	TOTAL	---	C1
H	1-9-4	1	1	---	FRONT	VERT	TOTAL	---	C1

CONNECTION REQUIREMENTS

1) **C1:** A SUITABLE HANGER/MECHANICAL CONNECTION IS REQUIRED.

DESIGN CRITERIA

SPECIFIED LOADS:

TOP CH.	LL	=	32.5	PSF
	DL	=	6.0	PSF
BOT CH.	LL	=	0.0	PSF
	DL	=	7.4	PSF
TOTAL LOAD		=	45.9	PSF

SPACING = 24.0 IN. C/C

LOADING IN FLAT SECTION BASED ON A SLOPE OF 2.00/12 MINIMUM

THIS TRUSS IS DESIGNED FOR RESIDENTIAL OR SMALL BUILDING REQUIREMENTS OF PART 9, NBCC 2015

THIS DESIGN COMPLIES WITH:
- PART 9 OF BCBC 2018 , NBC-2019AE
- PART 9 OF OBC 2012 (2019 AMENDMENT)
- CSA 086-14
- TPIC 2014

DESIGN ASSUMPTIONS
-OVERHANG NOT TO BE ALTERED OR CUT OFF.

(55 % OF 43.9 P.S.F. G.S.L. PLUS 8.4 P.S.F. RAIN LOAD) EQUALS 32.5 P.S.F. SPECIFIED ROOF LIVE LOAD

ALLOWABLE DEFL.(LL)= L/360 (0.30")
CALCULATED VERT. DEFL.(LL) = L/ 999 (0.01")
ALLOWABLE DEFL.(TL)= L/360 (0.30")
CALCULATED VERT. DEFL.(TL) = L/ 999 (0.02")

CSI: TC=0.27/1.00 (D-E:1) , BC=0.09/1.00 (G-H:4) , WB=0.17/1.00 (E-G:1) , SSI=0.22/1.00 (D-E:5)

DOL LUMBER=1.00 NAIL=1.00 LS BEND=1.00 COMP=1.00 SHEAR=1.00 TENS= 1.00

COMPANION LIVE LOAD FACTOR = 1.00

TRUSS PLATE MANUFACTURER IS NOT RESPONSIBLE FOR QUALITY CONTROL IN THE TRUSS MANUFACTURING PLANT .

NAIL VALUES

PLATE	GRIP(DRY) (PSI) MAX	MIN	SHEAR (PLI) MAX	MIN	SECTION (PLI) MAX	MIN
MT20	650	371	1747	788	1987	1873

PLATE PLACEMENT TOL. = 0.250 inches

PLATE ROTATION TOL. = 5.0 Deg.

JSI GRIP= 0.79 (G) (INPUT = 0.90)
JSI METAL= 0.26 (B) (INPUT = 0.95)

LICENSED PROFESSIONAL ENGINEER
4/02/24
C. M. HEYENS
100505065
PROVINCE OF ONTARIO

STRUCTURAL COMPONENT ONLY
DWG # TR24040074

JOB NAME	TRUSS NAME	QUANTITY	PLY	JOB DESC.	DRWG NO.
436388	T47	1	1	BAYVIEW WELLINGTON TRUSS DESC.	

Tamarack Roof Truss, Burlington

Version 8.630 S Aug 30 2023 MiTek Industries, Inc. Tue Apr 2 10:54:34 2024 Page 1
ID:GRmvuh1dyQr3nydBfsTFcCy6OGl-HhsxBptC3dRsMZwbq5nxrNQPDJ0sLWrP3NmGJ9zUo3J

Scale = 1:22.4

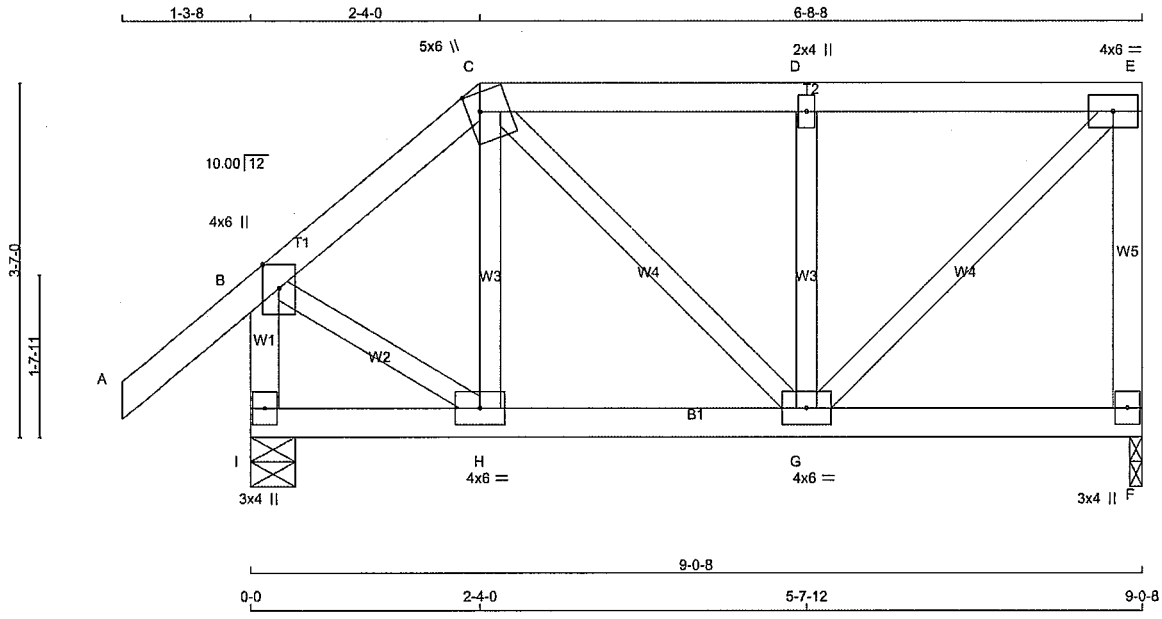

TOTAL WEIGHT = 42 lb

LUMBER
N. L. G. A. RULES

CHORDS	SIZE		LUMBER	DESCR.
A - C	2x4	DRY	No.2	SPF
C - E	2x4	DRY	No.2	SPF
F - E	2x4	DRY	No.2	SPF
I - B	2x4	DRY	No.2	SPF
I - F	2x4	DRY	No.2	SPF
ALL WEBS EXCEPT	2x3	DRY	No.2	SPF

DRY: SEASONED LUMBER.

PLATES (table is in inches)

JT	TYPE	PLATES	W	LEN	Y	X
B	TMVW+p	MT20	4.0	6.0	Edge	
C	TTWW+m	MT20	5.0	6.0	2.25	1.50
D	TMW+w	MT20	2.0	4.0		
E	TMVW-t	MT20	4.0	6.0		
F	BMV1+p	MT20	3.0	4.0		
G	BMWWW-t	MT20	4.0	6.0		
H	BMWW-t	MT20	4.0	6.0		
I	BMV1+p	MT20	3.0	4.0		

Edge - INDICATES REFERENCE CORNER OF PLATE TOUCHES EDGE OF CHORD.

NOTES- (1)
1) Lateral braces to be a minimum of 2X4 SPF #2.

DIMENSIONS, SUPPORTS AND LOADINGS SPECIFIED BY FABRICATOR TO BE VERIFIED BY BUILDING DESIGNER

BEARINGS

JT	FACTORED GROSS REACTION VERT	HORZ	MAXIMUM FACTORED GROSS REACTION DOWN	HORZ	UPLIFT	INPUT BRG IN-SX	REQRD BRG IN-SX
F	592	0	592	0	0	1-8	1-8
I	748	0	748	0	0	5-8	1-8

UNFACTORED REACTIONS

JT	1ST LCASE COMBINED	MAX./MIN. COMPONENT REACTIONS SNOW	LIVE	PERM.LIVE	WIND	DEAD	SOIL
F	415	294 / 0	0 / 0	0 / 0	0 / 0	121 / 0	0 / 0
I	521	384 / 0	0 / 0	0 / 0	0 / 0	138 / 0	0 / 0

BEARING MATERIAL TO BE SPF NO.2 OR BETTER AT JOINT(S) F, I

BRACING
TOP CHORD TO BE SHEATHED OR MAX. PURLIN SPACING = 6.25 FT.
MAX. UNBRACED BOTTOM CHORD LENGTH = 10.00 FT OR RIGID CEILING DIRECTLY APPLIED.

ALL PITCH BREAKS AND PERIMETER CORNER JOINTS MUST BE LATERALLY RESTRAINED.

LOADING
TOTAL LOAD CASES: (4)

CHORDS

MEMB. FR-TO	MAX. FORCE (LBS)	FACTORED VERT. LOAD (PLF) FROM	TO	LC1 CSI (LC)	MAX. UNBRAC LENGTH
A- B	0 / 50	-112.4	-112.4	0.15 (1)	10.00
B- C	-421 / 0	-112.4	-112.4	0.11 (1)	6.25
C- D	-428 / 0	-112.4	-112.4	0.20 (1)	6.25
D- E	-428 / 0	-112.4	-112.4	0.20 (1)	6.25
F- E	-564 / 0	0.0	0.0	0.11 (1)	7.81
I- B	-730 / 0	0.0	0.0	0.08 (1)	7.81
I- H	0 / 0	-18.5	-18.5	0.03 (4)	10.00
H- G	0 / 318	-18.5	-18.5	0.07 (4)	10.00
G- F	0 / 0	-18.5	-18.5	0.05 (4)	10.00

WEBS

MEMB. FR-TO	MAX. FORCE (LBS)	MAX CSI (LC)
H- C	-114 / 11	0.02 (1)
B- H	0 / 365	0.08 (1)
C- G	0 / 155	0.03 (1)
G- D	-461 / 0	0.10 (1)
G- E	0 / 596	0.13 (1)

[M]

DESIGN CRITERIA

SPECIFIED LOADS:

TOP CH.	LL	=	32.5	PSF
	DL	=	6.0	PSF
BOT CH.	LL	=	0.0	PSF
	DL	=	7.4	PSF
TOTAL LOAD		=	45.9	PSF

SPACING = 24.0 IN. C/C

LOADING IN FLAT SECTION BASED ON A SLOPE OF 2.00/12 MINIMUM

THIS TRUSS IS DESIGNED FOR RESIDENTIAL OR SMALL BUILDING REQUIREMENTS OF PART 9, NBCC 2015

THIS DESIGN COMPLIES WITH:
- PART 9 OF BCBC 2018 , NBC-2019AE
- PART 9 OF OBC 2012 (2019 AMENDMENT)
- CSA 086-14
- TPIC 2014

(55 % OF 43.9 P.S.F. G.S.L. PLUS 8.4 P.S.F. RAIN LOAD) EQUALS 32.5 P.S.F. SPECIFIED ROOF LIVE LOAD

ALLOWABLE DEFL.(LL)= L/360 (0.30")
CALCULATED VERT. DEFL.(LL) = L/ 999 (0.01")
ALLOWABLE DEFL.(TL)= L/360 (0.30")
CALCULATED VERT. DEFL.(TL) = L/ 999 (0.01")

CSI: TC=0.20/1.00 (D-E:1) , BC=0.07/1.00 (G-H:4) , WB=0.13/1.00 (E-G:1) , SSI=0.18/1.00 (D-E:1)

DOL LUMBER=1.00 NAIL=1.00 LS BEND=1.10 COMP=1.10 SHEAR=1.10 TENS= 1.10

COMPANION LIVE LOAD FACTOR = 1.00

TRUSS PLATE MANUFACTURER IS NOT RESPONSIBLE FOR QUALITY CONTROL IN THE TRUSS MANUFACTURING PLANT .

NAIL VALUES

PLATE	GRIP(DRY) (PSI) MAX	MIN	SHEAR (PLI) MAX	MIN	SECTION (PLI) MAX	MIN
MT20	650	371	1747	788	1987	1873

PLATE PLACEMENT TOL. = 0.250 Inches

PLATE ROTATION TOL. = 5.0 Deg.

JSI GRIP= 0.71 (G) (INPUT = 0.90)
JSI METAL= 0.25 (B) (INPUT = 0.95)

LICENSED PROFESSIONAL ENGINEER
4/02/24
C. M. HEYENS
100505065
PROVINCE OF ONTARIO

STRUCTURAL COMPONENT ONLY
DWG # TR24040075

JOB NAME	TRUSS NAME	QUANTITY	PLY	JOB DESC.	DRWG NO.
436388	T48	2	1	BAYVIEW WELLINGTON TRUSS DESC.	

Tamarack Roof Truss, Burlington

Version 8.630 S Aug 30 2023 MiTek Industries, Inc. Tue Apr 2 10:54:36 2024 Page 1
ID:GRmvuh1dyQr3nydBfsTFcCy6OGI-D4zhcVvTbFhabs3znWpPwoVIU7gUpQNiXhFNO2zUo3H

Scale = 1:41.1

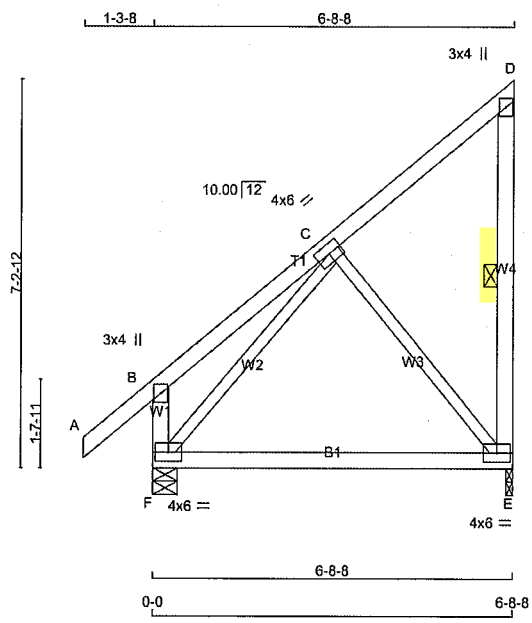

TOTAL WEIGHT = 2 X 36 = 73 lb

LUMBER
N. L. G. A. RULES

CHORDS	SIZE		LUMBER	DESCR.
A - D	2x4	DRY	No.2	SPF
E - D	2x4	DRY	No.2	SPF
F - B	2x4	DRY	No.2	SPF
F - E	2x4	DRY	No.2	SPF
ALL WEBS EXCEPT	2x3	DRY	No.2	SPF

DRY: SEASONED LUMBER.

PLATES (table is in inches)

JT	TYPE	PLATES	W	LEN	Y	X
B	TMV+p	MT20	3.0	4.0		
C	TMWW-t	MT20	4.0	6.0		
D	TMV+p	MT20	3.0	4.0		
E	BMVW1-t	MT20	4.0	6.0		
F	BMVW1-t	MT20	4.0	6.0		

NOTES- (1)
1) Lateral braces to be a minimum of 2X4 SPF #2.

DIMENSIONS, SUPPORTS AND LOADINGS SPECIFIED BY FABRICATOR TO BE VERIFIED BY BUILDING DESIGNER

BEARINGS

JT	FACTORED GROSS REACTION VERT	HORZ	MAXIMUM FACTORED GROSS REACTION DOWN	HORZ	UPLIFT	INPUT BRG IN-SX	REQRD BRG IN-SX
E	439	0	439	0	0	1-8	1-8
F	595	0	595	0	0	5-8	1-8

UNFACTORED REACTIONS

JT	1ST LCASE COMBINED	MAX./MIN. COMPONENT REACTIONS SNOW	LIVE	PERM.LIVE	WIND	DEAD	SOIL
E	308	218 / 0	0 / 0	0 / 0	0 / 0	90 / 0	0 / 0
F	414	308 / 0	0 / 0	0 / 0	0 / 0	107 / 0	0 / 0

BEARING MATERIAL TO BE SPF NO.2 OR BETTER AT JOINT(S) E, F

BRACING
TOP CHORD TO BE SHEATHED OR MAX. PURLIN SPACING = 6.25 FT.
MAX. UNBRACED BOTTOM CHORD LENGTH = 10.00 FT OR RIGID CEILING DIRECTLY APPLIED.

ALL PITCH BREAKS AND PERIMETER CORNER JOINTS MUST BE LATERALLY RESTRAINED.

1 LATERAL BRACE(S) AT 1/ 2 LENGTH OF D-E.

END VERTICAL(S) MUST BE SHEATHED OR HAVE BRACES AS INDICATED IN THE MAX. UNBRACED LENGTH COLUMN OF THE TABLE BELOW

LOADING
TOTAL LOAD CASES: (4)

CHORDS

MEMB. FR-TO	MAX. FACTORED FORCE (LBS)	FACTORED VERT. LOAD LC1 (PLF) FROM	TO	MAX CSI (LC)	MAX. UNBRAC LENGTH
A- B	0 / 50	-112.4	-112.4	0.15 (1)	10.00
B- C	0 / 31	-112.4	-112.4	0.22 (1)	10.00
C- D	-28 / 0	-112.4	-112.4	0.16 (1)	6.25
E- D	-152 / 0	0.0	0.0	0.03 (1)	6.25
F- B	-289 / 0	0.0	0.0	0.03 (1)	7.81
F- E	0 / 197	-18.5	-18.5	0.25 (4)	10.00

WEBS

MEMB. FR-TO	MAX. FACTORED FORCE (LBS)	MAX CSI (LC)
C- E	-299 / 0	0.13 (1)
F- C	-314 / 0	0.13 (1)

[M][F]

DESIGN CRITERIA

SPECIFIED LOADS:

TOP CH.	LL	=	32.5	PSF
	DL	=	6.0	PSF
BOT CH.	LL	=	0.0	PSF
	DL	=	7.4	PSF
TOTAL LOAD		=	45.9	PSF

SPACING = 24.0 IN. C/C

THIS TRUSS IS DESIGNED FOR RESIDENTIAL OR SMALL BUILDING REQUIREMENTS OF PART 9, NBCC 2015

THIS DESIGN COMPLIES WITH:
- PART 9 OF BCBC 2018 , NBC-2019AE
- PART 9 OF OBC 2012 (2019 AMENDMENT)
- CSA 086-14
- TPIC 2014

(55 % OF 43.9 P.S.F. G.S.L. PLUS 8.4 P.S.F. RAIN LOAD) EQUALS 32.5 P.S.F. SPECIFIED ROOF LIVE LOAD

ALLOWABLE DEFL.(TL)= L/360 (0.22")
CALCULATED VERT. DEFL.(TL) = L/ 881 (0.09")

CSI: TC=0.22/1.00 (B-C:1) , BC=0.25/1.00 (E-F:4) , WB=0.13/1.00 (C-F:1) , SSI=0.14/1.00 (C-D:1)

DOL LUMBER=1.00 NAIL=1.00 LS BEND=1.10 COMP=1.10 SHEAR=1.10 TENS= 1.10

COMPANION LIVE LOAD FACTOR = 1.00

TRUSS PLATE MANUFACTURER IS NOT RESPONSIBLE FOR QUALITY CONTROL IN THE TRUSS MANUFACTURING PLANT .

NAIL VALUES

PLATE	GRIP(DRY) (PSI) MAX	MIN	SHEAR (PLI) MAX	MIN	SECTION (PLI) MAX	MIN
MT20	650	371	1747	788	1987	1873

PLATE PLACEMENT TOL. = 0.250 Inches

PLATE ROTATION TOL. = 5.0 Deg.

JSI GRIP= 0.20 (C) (INPUT = 0.90)
JSI METAL= 0.10 (B) (INPUT = 0.95)

LICENSED PROFESSIONAL ENGINEER
4/02/24
C. M. HEYENS
100505065
PROVINCE OF ONTARIO

STRUCTURAL COMPONENT ONLY
DWG # TR24040076

JOB NAME	TRUSS NAME	QUANTITY	PLY	JOB DESC.	DRWG NO.
436388	T48G	2	1	BAYVIEW WELLINGTON TRUSS DESC.	

Tamarack Roof Truss, Burlington

Version 8.630 S Aug 30 2023 MiTek Industries, Inc. Tue Apr 2 10:54:37 2024 Page 1
ID:GRmvuh1dyQr3nydBfsTFcCy6OGl-hGX4prv5MYpRD0eALDKeT?1xAX3LYupsmL xwUzUo3G

Scale = 1:44.2

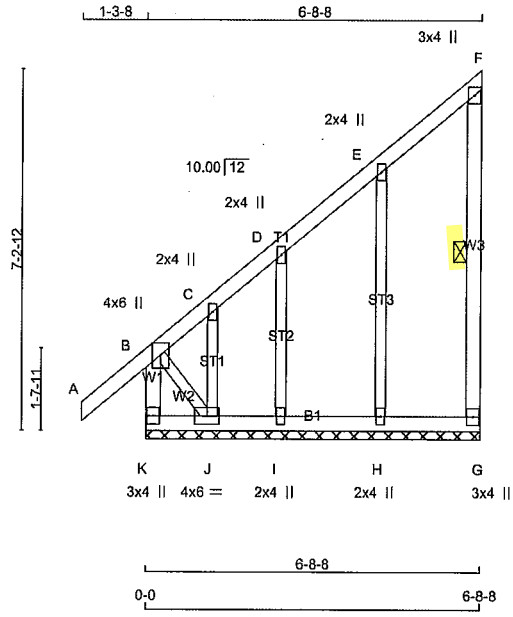

TOTAL WEIGHT = 2 X 38 = 77 lb

LUMBER
N. L. G. A. RULES

CHORDS	SIZE		LUMBER	DESCR.
K - B	2x4	DRY	No.2	SPF
A - F	2x4	DRY	No.2	SPF
G - F	2x4	DRY	No.2	SPF
K - G	2x4	DRY	No.2	SPF
ALL WEBS	2x3	DRY	No.2	SPF
ALL GABLE WEBS	2x3	DRY	No.2	SPF

DRY: SEASONED LUMBER.

GABLE STUDS SPACED AT 2-0-0 OC.

PLATES (table is in inches)

JT	TYPE	PLATES	W	LEN	Y	X
B	TMVW+p	MT20	4.0	6.0	Edge	
C, D, E						
C	TMW+w	MT20	2.0	4.0		
F	TMV+p	MT20	3.0	4.0		
G	BMV1+p	MT20	3.0	4.0		
H	BMW1+w	MT20	2.0	4.0		
I	BMW1+w	MT20	2.0	4.0		
J	BMWW1-t	MT20	4.0	6.0		
K	BMV1+p	MT20	3.0	4.0		

Edge - INDICATES REFERENCE CORNER OF PLATE TOUCHES EDGE OF CHORD.

NOTES- (1)
1) Lateral braces to be a minimum of 2X4 SPF #2.

DIMENSIONS, SUPPORTS AND LOADINGS SPECIFIED BY FABRICATOR TO BE VERIFIED BY BUILDING DESIGNER

BEARINGS

THIS TRUSS DESIGNED FOR CONTINUOUS BEARINGS.

THIS TRUSS REQUIRES RIGID SHEATHING ON EXPOSED FACE.

BEARING MATERIAL TO BE SPF NO.2 OR BETTER AT JOINT(S)

BRACING
TOP CHORD TO BE SHEATHED OR MAX. PURLIN SPACING = 6.25 FT.
MAX. UNBRACED BOTTOM CHORD LENGTH = 10.00 FT OR RIGID CEILING DIRECTLY APPLIED.

ALL PITCH BREAKS AND PERIMETER CORNER JOINTS MUST BE LATERALLY RESTRAINED.

1 LATERAL BRACE(S) AT 1/ 2 LENGTH OF F-G.

END VERTICAL(S) MUST BE SHEATHED OR HAVE BRACES AS INDICATED IN THE MAX. UNBRACED LENGTH COLUMN OF THE TABLE BELOW

LOADING
TOTAL LOAD CASES: (4)

CHORDS

MEMB. FR-TO	MAX. FACTORED FORCE (LBS)	FACTORED VERT. LOAD LC1 (PLF) FROM	TO	MAX CSI (LC)	MAX. UNBRAC LENGTH
K- B	-336 / 0	0.0	0.0	0.04 (1)	7.81
A- B	0 / 50	-112.4	-112.4	0.15 (1)	10.00
B- C	-72 / 0	-112.4	-112.4	0.15 (1)	6.25
C- D	0 / 2	-112.4	-112.4	0.04 (1)	10.00
D- E	0 / 0	-112.4	-112.4	0.06 (1)	10.00
E- F	-15 / 0	-112.4	-112.4	0.06 (1)	6.25
G- F	-95 / 0	0.0	0.0	0.02 (1)	6.25
K- J	0 / 0	-18.5	-18.5	0.01 (4)	10.00
J- I	0 / 10	-18.5	-18.5	0.01 (4)	10.00
I- H	0 / 5	-18.5	-18.5	0.02 (4)	10.00
H- G	0 / 0	-18.5	-18.5	0.02 (4)	10.00

WEBS

MEMB. FR-TO	MAX. FACTORED FORCE (LBS)	MAX CSI (LC)
H- E	-258 / 0	0.12 (1)
I- D	-201 / 0	0.05 (1)
J- C	-32 / 0	0.01 (1)
B- J	0 / 16	0.00 (1)

DESIGN CRITERIA

SPECIFIED LOADS:

TOP CH.	LL	=	32.5	PSF
	DL	=	6.0	PSF
BOT CH.	LL	=	0.0	PSF
	DL	=	7.4	PSF
TOTAL LOAD		=	45.9	PSF

SPACING = 24.0 IN. C/C

THIS TRUSS IS DESIGNED FOR RESIDENTIAL OR SMALL BUILDING REQUIREMENTS OF PART 9, NBCC 2015

THIS DESIGN COMPLIES WITH:
- PART 9 OF BCBC 2018 , NBC-2019AE
- PART 9 OF OBC 2012 (2019 AMENDMENT)
- CSA 086-14
- TPIC 2014

DESIGN ASSUMPTIONS
-OVERHANG NOT TO BE ALTERED OR CUT OFF.

(55 % OF 43.9 P.S.F. G.S.L. PLUS 8.4 P.S.F. RAIN LOAD) EQUALS 32.5 P.S.F. SPECIFIED ROOF LIVE LOAD

CSI: TC=0.15/1.00 (A-B:1) , BC=0.02/1.00 (G-H:4) , WB=0.12/1.00 (E-H:1) , SSI=0.10/1.00 (B-C:1)

DOL LUMBER=1.00 NAIL=1.00 LS BEND=1.10 COMP=1.10 SHEAR=1.10 TENS= 1.10

COMPANION LIVE LOAD FACTOR = 1.00

TRUSS PLATE MANUFACTURER IS NOT RESPONSIBLE FOR QUALITY CONTROL IN THE TRUSS MANUFACTURING PLANT .

NAIL VALUES

PLATE	GRIP(DRY) (PSI) MAX	MIN	SHEAR (PLI) MAX	MIN	SECTION (PLI) MAX	MIN
MT20	650	371	1747	788	1987	1873

PLATE PLACEMENT TOL. = 0.250 inches

PLATE ROTATION TOL. = 5.0 Deg.

JSI GRIP= 0.21 (B) (INPUT = 0.90)
JSI METAL= 0.14 (E) (INPUT = 0.95)

LICENSED PROFESSIONAL ENGINEER
4/02/24
C. M. HEYENS
100505065
PROVINCE OF ONTARIO

STRUCTURAL COMPONENT ONLY
DWG # TR24040077

JOB NAME	TRUSS NAME	QUANTITY	PLY	JOB DESC.	DRWG NO.
436388	T49G	2	1	BAYVIEW WELLINGTON TRUSS DESC.	

Tamarack Roof Truss, Burlington

Version 8.630 S Aug 30 2023 MiTek Industries, Inc. Tue Apr 2 10:54:38 2024 Page 1
ID:GRmvuh1dyQr3nydBfsTFcCy6OGl-9S5S1Awj7sxlrADMvxst?Da6wwOTHKz? 7kUTwzUo3F

Scale = 1:57.5

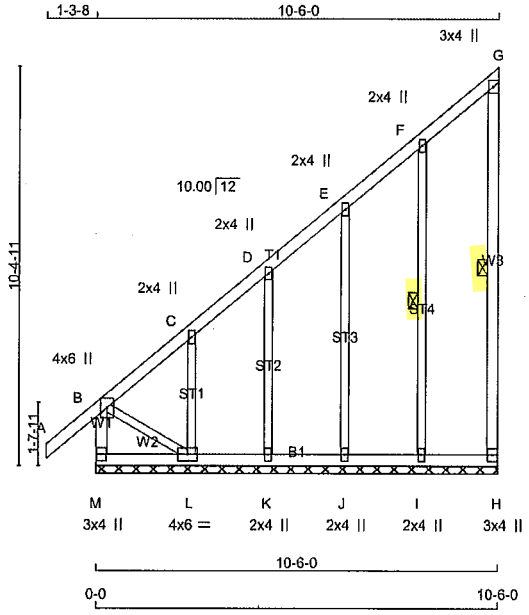

TOTAL WEIGHT = 2 X 63 = 125 lb

LUMBER
N. L. G. A. RULES

CHORDS	SIZE		LUMBER	DESCR.
M - B	2x4	DRY	No.2	SPF
A - G	2x4	DRY	No.2	SPF
H - G	2x4	DRY	No.2	SPF
M - H	2x4	DRY	No.2	SPF
ALL WEBS	2x3	DRY	No.2	SPF
ALL GABLE WEBS	2x3	DRY	No.2	SPF

DRY: SEASONED LUMBER.

GABLE STUDS SPACED AT 2-0-0 OC.

PLATES (table is in inches)

JT	TYPE	PLATES	W	LEN	Y	X
B	TMVW+p	MT20	4.0	6.0	Edge	
C, D, E, F						
C	TMW+w	MT20	2.0	4.0		
G	TMV+p	MT20	3.0	4.0		
H	BMV1+p	MT20	3.0	4.0		
I, J, K						
I	BMW1+w	MT20	2.0	4.0		
L	BMWW1-t	MT20	4.0	6.0		
M	BMV1+p	MT20	3.0	4.0		

Edge - INDICATES REFERENCE CORNER OF PLATE TOUCHES EDGE OF CHORD.

NOTES- (1)
1) Lateral braces to be a minimum of 2X4 SPF #2.

DIMENSIONS, SUPPORTS AND LOADINGS SPECIFIED BY FABRICATOR TO BE VERIFIED BY BUILDING DESIGNER

BEARINGS

THIS TRUSS DESIGNED FOR CONTINUOUS BEARINGS.

THIS TRUSS REQUIRES RIGID SHEATHING ON EXPOSED FACE.

BEARING MATERIAL TO BE SPF NO.2 OR BETTER AT JOINT(S)

BRACING
TOP CHORD TO BE SHEATHED OR MAX. PURLIN SPACING = 6.25 FT.
MAX. UNBRACED BOTTOM CHORD LENGTH = 10.00 FT OR RIGID CEILING DIRECTLY APPLIED.

ALL PITCH BREAKS AND PERIMETER CORNER JOINTS MUST BE LATERALLY RESTRAINED.

1 LATERAL BRACE(S) AT 1/ 2 LENGTH OF G-H, F-I.

END VERTICAL(S) MUST BE SHEATHED OR HAVE BRACES AS INDICATED IN THE MAX. UNBRACED LENGTH COLUMN OF THE TABLE BELOW

LOADING
TOTAL LOAD CASES: (4)

CHORDS

MEMB. FR-TO	MAX. FACTORED FORCE (LBS)	FACTORED VERT. LOAD (PLF) FROM	TO	LC1	MAX CSI (LC)	MAX. UNBRAC LENGTH
M- B	-290 / 0	0.0	0.0		0.03 (1)	7.81
A- B	0 / 50	-112.4	-112.4		0.15 (1)	10.00
B- C	-7 / 0	-112.4	-112.4		0.08 (1)	10.00
C- D	-22 / 0	-112.4	-112.4		0.08 (1)	6.25
D- E	-6 / 0	-112.4	-112.4		0.05 (1)	10.00
E- F	-2 / 0	-112.4	-112.4		0.06 (1)	10.00
F- G	-14 / 0	-112.4	-112.4		0.06 (1)	6.25
H- G	-97 / 0	0.0	0.0		0.05 (1)	6.25
M- L	0 / 0	-18.5	-18.5		0.03 (4)	10.00
L- K	0 / 10	-18.5	-18.5		0.03 (4)	10.00
K- J	0 / 6	-18.5	-18.5		0.01 (4)	10.00
J- I	0 / 3	-18.5	-18.5		0.02 (4)	10.00
I- H	0 / 0	-18.5	-18.5		0.02 (4)	10.00

WEBS

MEMB. FR-TO	MAX. FACTORED FORCE (LBS)	MAX CSI (LC)
I- F	-252 / 0	0.12 (1)
J- E	-221 / 0	0.19 (1)
K- D	-205 / 0	0.09 (1)
L- C	-281 / 0	0.06 (1)
B- L	0 / 20	0.00 (1)

DESIGN CRITERIA

SPECIFIED LOADS:

TOP CH.	LL	=	32.5	PSF
	DL	=	6.0	PSF
BOT CH.	LL	=	0.0	PSF
	DL	=	7.4	PSF
TOTAL LOAD		=	45.9	PSF

SPACING = 24.0 IN. C/C

THIS TRUSS IS DESIGNED FOR RESIDENTIAL OR SMALL BUILDING REQUIREMENTS OF PART 9, NBCC 2015

THIS DESIGN COMPLIES WITH:
- PART 9 OF BCBC 2018 , NBC-2019AE
- PART 9 OF OBC 2012 (2019 AMENDMENT)
- CSA 086-14
- TPIC 2014

(55 % OF 43.9 P.S.F. G.S.L. PLUS 8.4 P.S.F. RAIN LOAD) EQUALS 32.5 P.S.F. SPECIFIED ROOF LIVE LOAD

CSI: TC=0.15/1.00 (A-B:1) , BC=0.03/1.00 (K-L:4) , WB=0.19/1.00 (E-J:1) , SSI=0.10/1.00 (B-C:1)

DOL LUMBER=1.00 NAIL=1.00 LS BEND=1.10 COMP=1.10 SHEAR=1.10 TENS= 1.10

COMPANION LIVE LOAD FACTOR = 1.00

TRUSS PLATE MANUFACTURER IS NOT RESPONSIBLE FOR QUALITY CONTROL IN THE TRUSS MANUFACTURING PLANT .

NAIL VALUES

PLATE	GRIP(DRY) (PSI) MAX	MIN	SHEAR (PLI) MAX	MIN	SECTION (PLI) MAX	MIN
MT20	650	371	1747	788	1987	1873

PLATE PLACEMENT TOL. = 0.250 inches

PLATE ROTATION TOL. = 5.0 Deg.

JSI GRIP= 0.20 (C) (INPUT = 0.90)
JSI METAL= 0.15 (C) (INPUT = 0.95)

LICENSED PROFESSIONAL ENGINEER
4/02/24
C. M. HEYENS
100505065
PROVINCE OF ONTARIO

STRUCTURAL COMPONENT ONLY
DWG # TR24040078

JOB NAME	TRUSS NAME	QUANTITY	PLY	JOB DESC.	DRWG NO.
436388	T50	2	1	BAYVIEW WELLINGTON TRUSS DESC.	

Tamarack Roof Truss, Burlington

Version 8.630 S Aug 30 2023 MiTek Industries, Inc. Tue Apr 2 10:54:40 2024 Page 1
ID:GRmvuh1dyQr3nydBfsTFcCy6OGl-6rDCRsyzfTB04UNl0MuL4efO k2slFAlSJDbXpzUo3D

Scale = 1:37.5

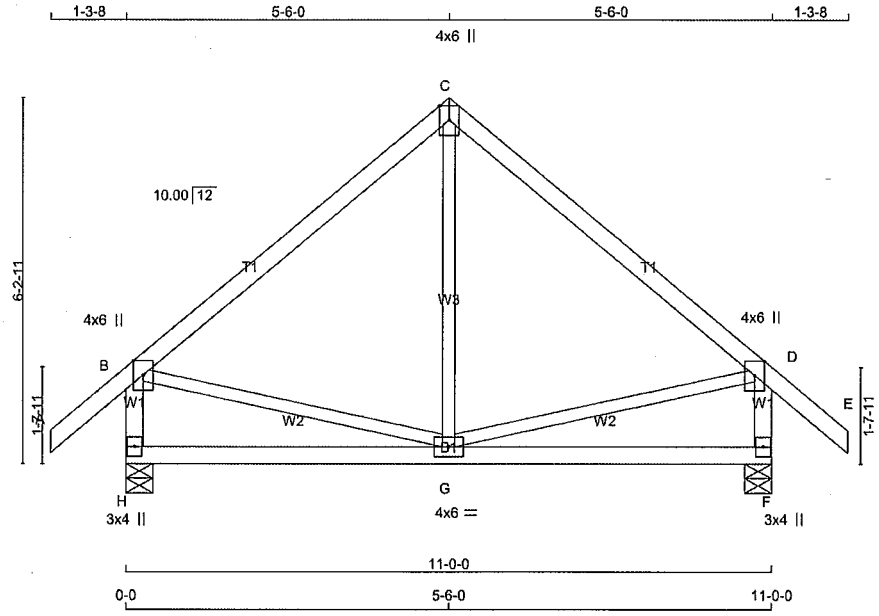

TOTAL WEIGHT = 2 X 49 = 98 lb

[M][F]

LUMBER
N. L. G. A. RULES

CHORDS	SIZE		LUMBER	DESCR.
A - C	2x4	DRY	No.2	SPF
C - E	2x4	DRY	No.2	SPF
H - B	2x4	DRY	No.2	SPF
F - D	2x4	DRY	No.2	SPF
H - F	2x4	DRY	No.2	SPF
ALL WEBS EXCEPT	2x3	DRY	No.2	SPF

DRY: SEASONED LUMBER.

PLATES (table is in inches)

JT	TYPE	PLATES	W	LEN	Y	X
B	TMVW+p	MT20	4.0	6.0	Edge	
C	TTW+p	MT20	4.0	6.0	Edge	
D	TMVW+p	MT20	4.0	6.0	Edge	
F	BMV1+p	MT20	3.0	4.0		
G	BMWWW-t	MT20	4.0	6.0		
H	BMV1+p	MT20	3.0	4.0		

Edge - INDICATES REFERENCE CORNER OF PLATE TOUCHES EDGE OF CHORD.

NOTES- (1)
1) Lateral braces to be a minimum of 2X4 SPF #2.

DIMENSIONS, SUPPORTS AND LOADINGS SPECIFIED BY FABRICATOR TO BE VERIFIED BY BUILDING DESIGNER

BEARINGS

JT	FACTORED GROSS REACTION VERT	HORZ	MAXIMUM FACTORED GROSS REACTION DOWN	HORZ	UPLIFT	INPUT BRG IN-SX	REQRD BRG IN-SX
H	876	0	876	0	0	5-8	1-8
F	876	0	876	0	0	5-8	1-8

UNFACTORED REACTIONS

JT	1ST LCASE COMBINED	MAX./MIN. COMPONENT REACTIONS SNOW	LIVE	PERM.LIVE	WIND	DEAD	SOIL
H	611	447 / 0	0 / 0	0 / 0	0 / 0	164 / 0	0 / 0
F	611	447 / 0	0 / 0	0 / 0	0 / 0	164 / 0	0 / 0

BEARING MATERIAL TO BE SPF NO.2 OR BETTER AT JOINT(S) H, F

BRACING
TOP CHORD TO BE SHEATHED OR MAX. PURLIN SPACING = 6.25 FT.
MAX. UNBRACED BOTTOM CHORD LENGTH = 10.00 FT OR RIGID CEILING DIRECTLY APPLIED.

ALL PITCH BREAKS AND PERIMETER CORNER JOINTS MUST BE LATERALLY RESTRAINED.

LOADING
TOTAL LOAD CASES: (4)

CHORDS

MEMB. FR-TO	MAX. FORCE (LBS)	FACTORED VERT. LOAD (PLF) FROM	TO	LC1 CSI (LC)	MAX. UNBRAC LENGTH
A- B	0 / 50	-112.4	-112.4	0.15 (1)	10.00
B- C	-452 / 0	-112.4	-112.4	0.44 (1)	6.25
C- D	-452 / 0	-112.4	-112.4	0.44 (1)	6.25
D- E	0 / 50	-112.4	-112.4	0.15 (1)	10.00
H- B	-837 / 0	0.0	0.0	0.09 (1)	7.81
F- D	-837 / 0	0.0	0.0	0.09 (1)	7.81
H- G	0 / 0	-18.5	-18.5	0.16 (4)	10.00
G- F	0 / 0	-18.5	-18.5	0.16 (4)	10.00

WEBS

MEMB. FR-TO	MAX. FORCE (LBS)	MAX CSI (LC)
G- C	-40 / 90	0.03 (4)
B- G	0 / 357	0.08 (1)
G- D	0 / 357	0.08 (1)

DESIGN CRITERIA

SPECIFIED LOADS:

TOP CH.	LL	=	32.5	PSF
	DL	=	6.0	PSF
BOT CH.	LL	=	0.0	PSF
	DL	=	7.4	PSF
TOTAL LOAD		=	45.9	PSF

SPACING = 24.0 IN. C/C

THIS TRUSS IS DESIGNED FOR RESIDENTIAL OR SMALL BUILDING REQUIREMENTS OF PART 9, NBCC 2015

THIS DESIGN COMPLIES WITH:
- PART 9 OF BCBC 2018 , NBC-2019AE
- PART 9 OF OBC 2012 (2019 AMENDMENT)
- CSA 086-14
- TPIC 2014

(55 % OF 43.9 P.S.F. G.S.L. PLUS 8.4 P.S.F. RAIN LOAD) EQUALS 32.5 P.S.F. SPECIFIED ROOF LIVE LOAD

ALLOWABLE DEFL.(LL)= L/360 (0.37")
CALCULATED VERT. DEFL.(LL) = L/ 999 (0.01")
ALLOWABLE DEFL.(TL)= L/360 (0.37")
CALCULATED VERT. DEFL.(TL) = L/ 999 (0.02")

CSI: TC=0.44/1.00 (B-C:1) , BC=0.16/1.00 (G-H:4) , WB=0.08/1.00 (D-G:1) , SSI=0.19/1.00 (B-C:1)

DOL LUMBER=1.00 NAIL=1.00 LS BEND=1.10 COMP=1.10 SHEAR=1.10 TENS= 1.10

COMPANION LIVE LOAD FACTOR = 1.00

TRUSS PLATE MANUFACTURER IS NOT RESPONSIBLE FOR QUALITY CONTROL IN THE TRUSS MANUFACTURING PLANT .

NAIL VALUES

PLATE	GRIP(DRY) (PSI) MAX	MIN	SHEAR (PLI) MAX	MIN	SECTION (PLI) MAX	MIN
MT20	650	371	1747	788	1987	1873

PLATE PLACEMENT TOL. = 0.250 inches

PLATE ROTATION TOL. = 5.0 Deg.

JSI GRIP= 0.52 (B) (INPUT = 0.90)
JSI METAL= 0.31 (D) (INPUT = 0.95)

LICENSED PROFESSIONAL ENGINEER
4/02/24
C. M. HEYENS
100505065
PROVINCE OF ONTARIO

STRUCTURAL COMPONENT ONLY
DWG # TR24040079

JOB NAME	TRUSS NAME	QUANTITY	PLY	JOB DESC.	DRWG NO.
436388	T50G	1	1	BAYVIEW WELLINGTON TRUSS DESC.	

Tamarack Roof Truss, Burlington

Version 8.630 S Aug 30 2023 MiTek Industries, Inc. Tue Apr 2 10:54:41 2024 Page 1
ID:GRmvuh1dyQr3nydBfsTFcCy6OGl-a1nafCybQnJtidyxa3PadrCdA8QLUi6Rqzy83FzUo3C

Scale = 1:37.5

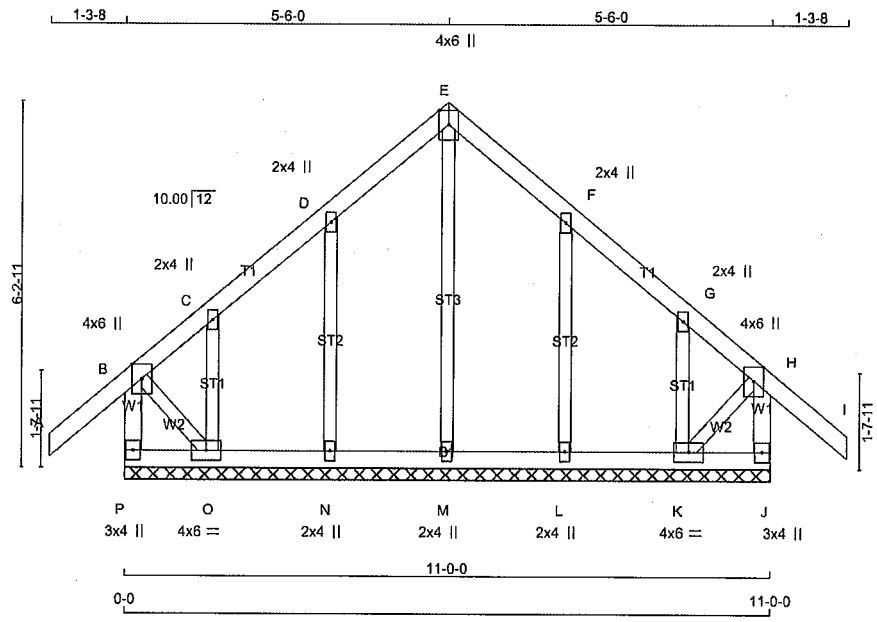

TOTAL WEIGHT = 53 lb
[M]

LUMBER
N. L. G. A. RULES

CHORDS	SIZE		LUMBER	DESCR.
P - B	2x4	DRY	No.2	SPF
A - E	2x4	DRY	No.2	SPF
E - I	2x4	DRY	No.2	SPF
J - H	2x4	DRY	No.2	SPF
P - J	2x4	DRY	No.2	SPF
ALL WEBS	2x3	DRY	No.2	SPF
ALL GABLE WEBS	2x3	DRY	No.2	SPF

DRY: SEASONED LUMBER.

GABLE STUDS SPACED AT 2-0-0 OC.

PLATES (table is in inches)

JT	TYPE	PLATES	W	LEN	Y	X
B	TMVW+p	MT20	4.0	6.0	Edge	
C, D, F, G						
C	TMW+w	MT20	2.0	4.0		
E	TTW+p	MT20	4.0	6.0	Edge	
H	TMVW+p	MT20	4.0	6.0	Edge	
J	BMV1+p	MT20	3.0	4.0		
K	BMWW1-t	MT20	4.0	6.0		
L, M, N						
L	BMW1+w	MT20	2.0	4.0		
O	BMWW1-t	MT20	4.0	6.0		
P	BMV1+p	MT20	3.0	4.0		

Edge - INDICATES REFERENCE CORNER OF PLATE TOUCHES EDGE OF CHORD.

NOTES- (1)
1) Lateral braces to be a minimum of 2X4 SPF #2.

DIMENSIONS, SUPPORTS AND LOADINGS SPECIFIED BY FABRICATOR TO BE VERIFIED BY BUILDING DESIGNER

BEARINGS

THIS TRUSS DESIGNED FOR CONTINUOUS BEARINGS.

THIS TRUSS REQUIRES RIGID SHEATHING ON EXPOSED FACE.

BEARING MATERIAL TO BE SPF NO.2 OR BETTER AT JOINT(S)

BRACING
TOP CHORD TO BE SHEATHED OR MAX. PURLIN SPACING = 6.25 FT.
MAX. UNBRACED BOTTOM CHORD LENGTH = 10.00 FT OR RIGID CEILING DIRECTLY APPLIED.

ALL PITCH BREAKS AND PERIMETER CORNER JOINTS MUST BE LATERALLY RESTRAINED.

LOADING
TOTAL LOAD CASES: (4)

CHORDS

MEMB. FR-TO	MAX. FACTORED FORCE (LBS)	FACTORED VERT. LOAD (PLF) FROM	TO	LC1	MAX CSI (LC)	MAX. UNBRAC LENGTH
P- B	-336 / 0	0.0	0.0	0.04 (1)	7.81	
A- B	0 / 50	-112.4	-112.4	0.15 (1)	10.00	
B- C	-69 / 0	-112.4	-112.4	0.15 (1)	6.25	
C- D	-5 / 0	-112.4	-112.4	0.07 (1)	10.00	
D- E	-28 / 0	-112.4	-112.4	0.07 (1)	6.25	
E- F	-28 / 0	-112.4	-112.4	0.07 (1)	6.25	
F- G	-5 / 0	-112.4	-112.4	0.07 (1)	10.00	
G- H	-69 / 0	-112.4	-112.4	0.15 (1)	6.25	
H- I	0 / 50	-112.4	-112.4	0.15 (1)	10.00	
J- H	-336 / 0	0.0	0.0	0.04 (1)	7.81	
P- O	0 / 0	-18.5	-18.5	0.01 (4)	10.00	
O- N	0 / 15	-18.5	-18.5	0.02 (4)	10.00	
N- M	0 / 9	-18.5	-18.5	0.02 (4)	10.00	
M- L	0 / 9	-18.5	-18.5	0.02 (4)	10.00	
L- K	0 / 15	-18.5	-18.5	0.02 (4)	10.00	
K- J	0 / 0	-18.5	-18.5	0.01 (4)	10.00	

WEBS

MEMB. FR-TO	MAX. FACTORED FORCE (LBS)	MAX CSI (LC)
M- E	-170 / 0	0.10 (1)
N- D	-273 / 0	0.08 (1)
O- C	-97 / 0	0.02 (1)
L- F	-273 / 0	0.08 (1)
K- G	-97 / 0	0.02 (1)
B- O	0 / 25	0.01 (1)
K- H	0 / 25	0.01 (1)

DESIGN CRITERIA

SPECIFIED LOADS:

TOP CH.	LL	=	32.5	PSF
	DL	=	6.0	PSF
BOT CH.	LL	=	0.0	PSF
	DL	=	7.4	PSF
TOTAL LOAD		=	45.9	PSF

SPACING = 24.0 IN. C/C

THIS TRUSS IS DESIGNED FOR RESIDENTIAL OR SMALL BUILDING REQUIREMENTS OF PART 9, NBCC 2015

THIS DESIGN COMPLIES WITH:
- PART 9 OF BCBC 2018 , NBC-2019AE
- PART 9 OF OBC 2012 (2019 AMENDMENT)
- CSA 086-14
- TPIC 2014

DESIGN ASSUMPTIONS
-OVERHANG NOT TO BE ALTERED OR CUT OFF.

(55 % OF 43.9 P.S.F. G.S.L. PLUS 8.4 P.S.F. RAIN LOAD) EQUALS 32.5 P.S.F. SPECIFIED ROOF LIVE LOAD

CSI: TC=0.15/1.00 (H-I:1) , BC=0.02/1.00 (K-L:4) , WB=0.10/1.00 (E-M:1) , SSI=0.09/1.00 (H-I:1)

DOL LUMBER=1.00 NAIL=1.00 LS BEND=1.10 COMP=1.10 SHEAR=1.10 TENS= 1.10

COMPANION LIVE LOAD FACTOR = 1.00

TRUSS PLATE MANUFACTURER IS NOT RESPONSIBLE FOR QUALITY CONTROL IN THE TRUSS MANUFACTURING PLANT .

NAIL VALUES

PLATE	GRIP(DRY) (PSI) MAX	MIN	SHEAR (PLI) MAX	MIN	SECTION (PLI) MAX	MIN
MT20	650	371	1747	788	1987	1873

PLATE PLACEMENT TOL. = 0.250 inches

PLATE ROTATION TOL. = 5.0 Deg.

JSI GRIP= 0.21 (B) (INPUT = 0.90)
JSI METAL= 0.15 (F) (INPUT = 0.95)

STRUCTURAL COMPONENT ONLY
DWG # TR24040080

JOB NAME	TRUSS NAME	QUANTITY	PLY	JOB DESC.	DRWG NO.
436388	T51	1	3	BAYVIEW WELLINGTON TRUSS DESC.	

Tamarack Roof Truss, Burlington

Version 8.630 S Aug 30 2023 MiTek Industries, Inc. Tue Apr 2 10:54:43 2024 Page 1
ID:GRmvuh1dyQr3nydBfsTFcCy6OGl-WQuL4u syOZaxx6KhUR2iGHxCx2ZyTek8HRF88zUo3A

Scale = 1:37.5

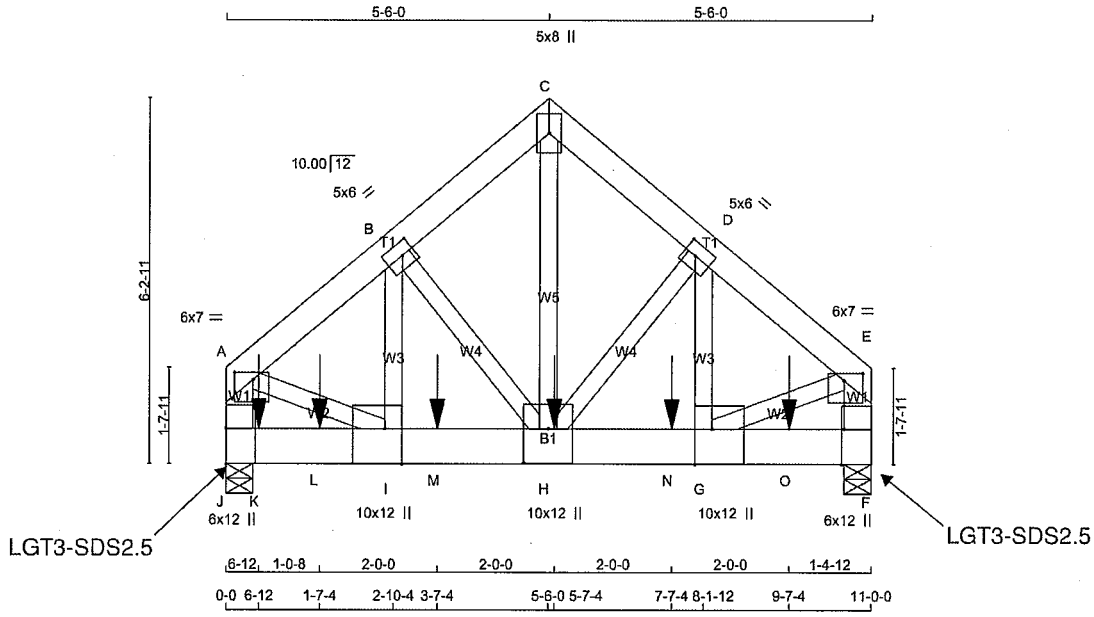

TOTAL WEIGHT = 3 X 82 = 247 lb

LUMBER

N. L. G. A. RULES

CHORDS	SIZE		LUMBER	DESCR.
A - C	2x6	DRY	No.2	SPF
C - E	2x6	DRY	No.2	SPF
J - A	2x6	DRY	No.2	SPF
F - E	2x6	DRY	No.2	SPF
J - F	2x8	DRY	1950F 1.7E	SPF
ALL WEBS EXCEPT	2x4	DRY	No.2	SPF

DRY: SEASONED LUMBER.

DESIGN CONSISTS OF 3 TRUSSES BUILT SEPARATELY THEN FASTENED TOGETHER AS FOLLOWS:

CHORDS	#ROWS	SURFACE SPACING (IN)	LOAD(PLF)
TOP CHORDS : (0.122"X3") SPIRAL NAILS			
A- C	2	12	TOP
C- E	2	12	TOP
J- A	2	7	TOP
F- E	2	7	TOP
BOTTOM CHORDS : (0.122"X3") SPIRAL NAILS			
J- F	4	4	SIDE(2421.8)
WEBS : (0.122"X3") SPIRAL NAILS			
2x4	1	6	

STAGGER NAILS BY HALF THE SURFACE SPACING IN ADJACENT PLIES.

GIRDER NAILING ASSUMES NAILED HANGERS ARE FASTENED WITH MIN. 3-0 INCH NAILS.

TOP - COMPONENTS ARE LOADED FROM THE TOP AND MUST BE PLACED ON TOP EDGE OF ALL PLIES FOR THE LOAD TO BE TRANSFERRED TO EACH PLY.

SIDE - PLF SHOWN IS THE EQUIVALENT UDL APPLIED TO ONE SIDE THAT THE CORRESPONDING NAILING PATTERN SHALL BE CAPABLE OF TRANSFERING. REMAINING PLF MUST BE APPLIED ON THE OPPOSITE SIDE OR ON THE TOP.

LICENSED PROFESSIONAL ENGINEER
4/02/24
C. M. HEYENS
100505065
PROVINCE OF ONTARIO

STRUCTURAL COMPONENT ONLY
DWG # TR24040081

DIMENSIONS, SUPPORTS AND LOADINGS SPECIFIED BY FABRICATOR TO BE VERIFIED BY BUILDING DESIGNER

BEARINGS

JT	FACTORED GROSS REACTION VERT	HORZ	MAXIMUM FACTORED GROSS REACTION DOWN	HORZ	UPLIFT	INPUT BRG IN-SX	REQRD BRG IN-SX
J	16964	0	16964	-201	-2889	5-8	5-8
F	13115	0	13115	0	-2232	5-8	5-8

PROVIDE ANCHORAGE AT BEARING JOINT J FOR 2889 LBS FACTORED UPLIFT
PROVIDE ANCHORAGE AT BEARING JOINT F FOR 2232 LBS FACTORED UPLIFT

PROVIDE FOR 201 LBS FACTORED HORIZONTAL REACTION AT JOINT J

UNFACTORED REACTIONS

1ST LCASE MAX./MIN. COMPONENT REACTIONS

JT	COMBINED	SNOW	LIVE	PERM.LIVE	WIND	DEAD	SOIL
J	12354	7936 / 0	1851 / 0	0 / 0	512 / -3324	2567 / 0	0 / 0
F	9550	6139 / 0	1430 / 0	0 / 0	401 / -2567	1982 / 0	0 / 0
HORIZONTAL REACTIONS							
J	---	0 / 0	0 / 0	0 / 0	143 / -143	0 / 0	0 /0

BEARING MATERIAL TO BE SPF NO.2 OR BETTER AT JOINT(S) J, F
BEARING SIZE FACTOR = 1.15 AT JNT(S) J, F (BASED ON SUPPORT DEPTH = 1-8)

BRACING

MAX. UNBRACED TOP CHORD LENGTH = 4.16 FT.
MAX. UNBRACED BOTTOM CHORD LENGTH = 6.25 FT OR RIGID CEILING DIRECTLY APPLIED.

ALL PITCH BREAKS AND PERIMETER CORNER JOINTS MUST BE LATERALLY RESTRAINED.

LOADING

TOTAL LOAD CASES: (18)

CHORDS

MEMB. FR-TO	MAX. FACTORED FORCE (LBS)	FACTORED VERT. LOAD (PLF) FROM	TO	LC1 CSI (LC)	MAX. UNBRAC LENGTH
A- B	-12215 / 2122	-145.3	-145.3	0.19 (3)	4.16
B- C	-9343 / 1711	-145.3	-145.3	0.17 (3)	4.68
C- D	-9349 / 1712	-145.3	-145.3	0.16 (2)	4.69
D- E	-11512 / 2001	-145.3	-145.3	0.18 (2)	4.28
J- A	-11512 / 1976	0.0	0.0	0.25 (1)	5.48
F- E	-10862 / 1865	0.0	0.0	0.23 (1)	5.62
J- K	-184 / 193	-39.5	-39.5	0.29 (2)	6.25
K- L	-184 / 193	-39.5	-39.5	0.29 (2)	6.25
L- I	-184 / 193	-39.5	-39.5	0.29 (2)	6.25
I- M	-1619 / 9306	-39.5	-39.5	0.25 (1)	6.25
M- H	-1619 / 9306	-39.5	-39.5	0.25 (1)	6.25
H- N	-1452 / 8771	-39.5	-39.5	0.23 (1)	6.25
N- G	-1452 / 8771	-39.5	-39.5	0.23 (1)	6.25
G- O	-8 / 17	-39.5	-39.5	0.23 (3)	10.00
O- F	-8 / 17	-39.5	-39.5	0.23 (3)	10.00

WEBS

MEMB. FR-TO	MAX. FACTORED FORCE (LBS)	MAX CSI (LC)
H- C	-2062 / 11386	0.61 (1)
H- D	-2557 / 566	0.17 (3)
G- D	-550 / 3248	0.17 (2)
B- H	-3431 / 715	0.23 (2)
I- B	-745 / 4404	0.24 (3)
A- I	-1662 / 9904	0.53 (1)
G- E	-1564 / 9335	0.50 (1)

SPECIFIED CONCENTRATED LOADS (LBS)

JT	LOC.	LC1	MAX-	MAX+	FACE	DIR.	TYPE	HEEL	CONN.
H	5-7-4	-3402	-3402	381	FRONT	VERT	TOTAL	---	C1
K	6-12	-3410	-3410	376	FRONT	VERT	TOTAL	---	C1
L	1-7-4	-3402	-3402	379	FRONT	VERT	TOTAL	---	C1
M	3-7-4	-3402	-3402	381	FRONT	VERT	TOTAL	---	C1
N	7-7-4	-3402	-3402	380	FRONT	VERT	TOTAL	---	C1
O	9-7-4	-3402	-3402	379	FRONT	VERT	TOTAL	---	C1

CONNECTION REQUIREMENTS

1) **C1:** A SUITABLE HANGER/MECHANICAL CONNECTION IS REQUIRED.

TRUSS HAS BEEN CHECKED FOR UNBALANCED LOADING AS PER NBCC 4.1.6.2.(8)

[M]

DESIGN CRITERIA

SPECIFIED LOADS:

TOP CH.	LL	=	43.5	PSF
	DL	=	6.0	PSF
BOT CH.	LL	=	10.5	PSF
	DL	=	7.4	PSF
TOTAL LOAD		=	67.3	PSF

SPACING = 24.0 IN. C/C

THIS TRUSS IS DESIGNED FOR COMMERCIAL OR INDUSTRIAL BUILDING REQUIREMENTS OF PART 4, NBCC 2015

THIS DESIGN COMPLIES WITH:
- PART 4 OF BCBC 2018 , NBC-2019AE
- PART 4 OF OBC 2012 (2019 AMENDMENT)
- CSA 086-14
- TPIC 2014

DESIGN ASSUMPTIONS
- SLOPE REDUCTION FACTOR NOT USED

(80 % OF 43.9 P.S.F. G.S.L. PLUS 8.4 P.S.F. RAIN LOAD) TIMES IMPORTANCE FACTOR EQUALS 43.5 P.S.F. SPECIFIED ROOF LIVE LOAD

ALLOWABLE DEFL.(LL)= L/360 (0.37")
CALCULATED VERT. DEFL.(LL) = L/ 999 (0.04")
ALLOWABLE DEFL.(TL)= L/180 (0.73")
CALCULATED VERT. DEFL.(TL) = L/ 999 (0.05")

CSI: TC=0.25/1.00 (A-J:1) , BC=0.29/1.00 (I-J:2) , WB=0.61/1.00 (C-H:1) , SSI=0.97/1.00 (I-J:2)

DOL LUMBER=1.00 NAIL=1.00 LS BEND=1.10 COMP=1.10 SHEAR=1.10 TENS= 1.10

SNOW LOAD IMPORTANCE FACTOR = 1.00
WIND LOAD IMPORTANCE FACTOR = 1.00
LIVE LOAD IMPORTANCE FACTOR = 1.00
COMPANION LIVE LOAD FACTOR = 1.00

AUTOSOLVE HEELS OFF

TRUSS PLATE MANUFACTURER IS NOT RESPONSIBLE FOR QUALITY CONTROL IN THE TRUSS MANUFACTURING PLANT .

NAIL VALUES

PLATE	GRIP(DRY) (PSI) MAX	MIN	SHEAR (PLI) MAX	MIN	SECTION (PLI) MAX	MIN
MT20	650	371	1747	788	1987	1873

PLATE PLACEMENT TOL. = 0.250 inches

PLATE ROTATION TOL. = 5.0 Deg.

JSI GRIP= 0.87 (A) (INPUT = 0.90)
JSI METAL= 0.72 (C) (INPUT = 0.95)

CONTINUED ON PAGE 2

JOB NAME	TRUSS NAME	QUANTITY	PLY	JOB DESC. BAYVIEW WELLINGTON	DRWG NO.
436388	T51	1	3	TRUSS DESC.	

PLATES (table is in inches)

JT	TYPE	PLATES	W	LEN	Y	X
A	TMVW-p	MT20	6.0	7.0	1.50	3.75
B	TMWW-t	MT20	5.0	6.0	2.50	2.50
C	TTW+p	MT20	5.0	8.0		
D	TMWW-t	MT20	5.0	6.0	2.50	2.50
E	TMVW-p	MT20	6.0	7.0	1.50	3.75
F	BMV1+t	MT20	6.0	12.0	Edge	0.50
G	BMWW+m	MT20	10.0	12.0	Edge	3.50
H	BMWWW+t	MT20	10.0	12.0	7.00	5.00
I	BMWW+m	MT20	10.0	12.0	Edge	3.50
J	BMV1+t	MT20	6.0	12.0	7.25	

Edge - INDICATES REFERENCE CORNER OF PLATE TOUCHES EDGE OF CHORD.

NOTES- (1)
1) Lateral braces to be a minimum of 2X4 SPF #2.

CONNECTION REQUIREMENTS

1) **C1:** A SUITABLE HANGER/MECHANICAL CONNECTION IS REQUIRED.

WIND LOAD APPLIED IS DERIVED FROM REFERENCE VELOCITY PRESSURE OF (7.5) PSF AT {40-0-0} FT-IN-SX REFERENCE HEIGHT ABOVE GRADE AND USING EXTERNAL PEAK COEFFICIENTS, CpCg, BASED ON THE {MAIN WIND FORCE RESISTING SYSTEM}.INTERNAL WIND PRESSURE IS BASED ON DESIGN {CATEGORY 2}. BUILDING MAY BE LOCATED ON {OPEN TERRAIN}, AND TRUSS IS DESIGNED TO BE LOCATED AT LEAST {0-0} FT-IN-SX AWAY FROM EAVE.TRUSS UPLIFT IS BASED ON TOP AND BOTTOM CHORD DEAD LOADS OF 5.0 PSF AND 5.0 PSF RESPECTIVELY.

LICENSED PROFESSIONAL ENGINEER
4/02/24
C. M. HEYENS
100505065
PROVINCE OF ONTARIO

STRUCTURAL COMPONENT ONLY
DWG # TR24040081

JOB NAME	TRUSS NAME	QUANTITY	PLY	JOB DESC.	DRWG NO.
436388	T52	1	2	BAYVIEW WELLINGTON TRUSS DESC.	

Tamarack Roof Truss, Burlington

Version 8.630 S Aug 30 2023 MiTek Industries, Inc. Tue Apr 2 10:54:44 2024 Page 1
ID:GRmvuh1dyQr3nydBfsTFcCy6OGI- cSjHE?UiihRZ5gWFByHFUq1FLPbh 0tNxBogazUo39

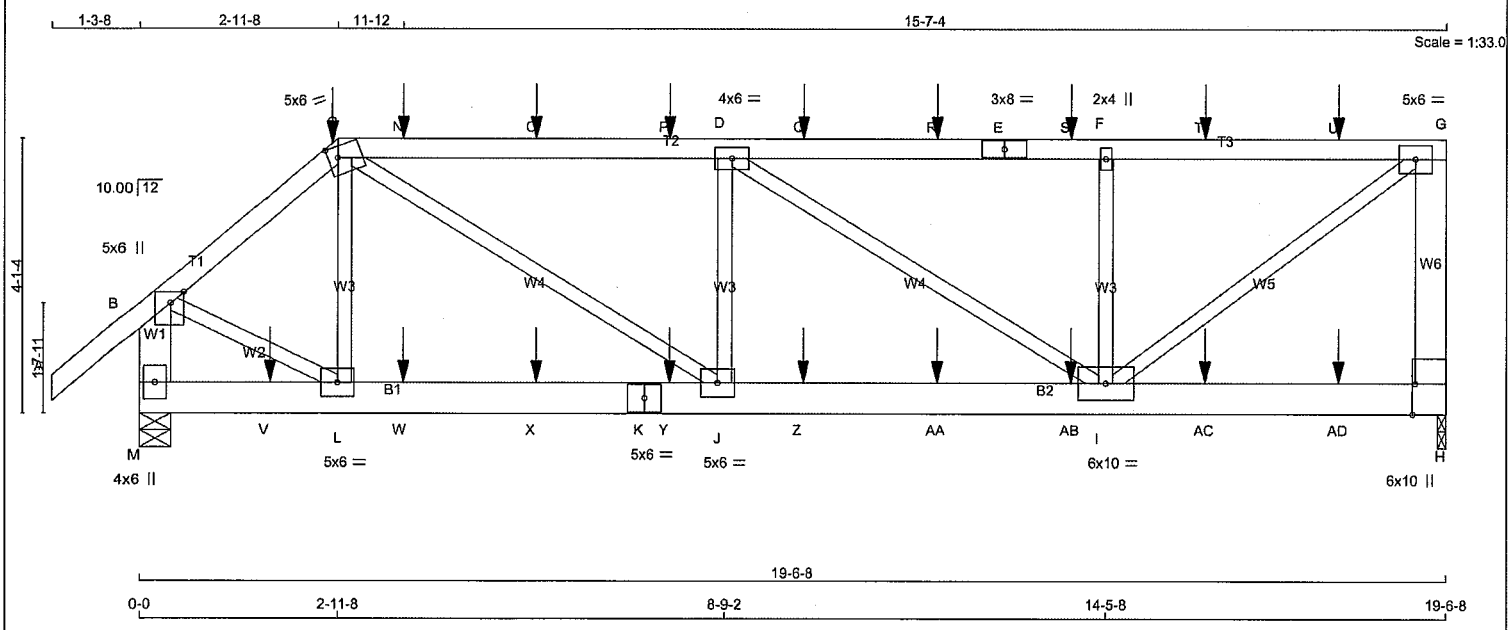

TOTAL WEIGHT = 2 X 94 = 188 lb

LUMBER

N. L. G. A. RULES

CHORDS	SIZE		LUMBER	DESCR.
A - C	2x4	DRY	No.2	SPF
C - E	2x4	DRY	No.2	SPF
E - G	2x4	DRY	No.2	SPF
H - G	2x6	DRY	No.2	SPF
M - B	2x6	DRY	No.2	SPF
M - K	2x6	DRY	No.2	SPF
K - H	2x6	DRY	No.2	SPF
ALL WEBS EXCEPT	2x3	DRY	No.2	SPF

DRY: SEASONED LUMBER.

DESIGN CONSISTS OF 2 TRUSSES BUILT SEPARATELY THEN FASTENED TOGETHER AS FOLLOWS:

CHORDS	#ROWS	SURFACE SPACING (IN)	LOAD(PLF)
TOP CHORDS : (0.122"X3") SPIRAL NAILS			
A- C	1	12	SIDE(61.0)
C- E	1	12	SIDE(61.0)
E- G	1	12	SIDE(0.0)
G- H	2	12	TOP
M- B	2	12	TOP
BOTTOM CHORDS : (0.122"X3") SPIRAL NAILS			
M- K	2	12	SIDE(0.0)
K- H	2	12	SIDE(0.0)
WEBS : (0.122"X3") SPIRAL NAILS			
2x3	1	6	

NAILS TO BE DRIVEN FROM ONE SIDE ONLY.

GIRDER NAILING ASSUMES NAILED HANGERS ARE FASTENED WITH MIN. 3-0 INCH NAILS.

TOP - COMPONENTS ARE LOADED FROM THE TOP AND MUST BE PLACED ON TOP EDGE OF ALL PLIES FOR THE LOAD TO BE TRANSFERRED TO EACH PLY.

SIDE - PLF SHOWN IS THE EQUIVALENT UDL APPLIED TO ONE SIDE THAT THE CORRESPONDING NAILING PATTERN SHALL BE CAPABLE OF TRANSFERING. REMAINING PLF MUST BE APPLIED ON THE OPPOSITE SIDE OR ON THE TOP.

LICENSED PROFESSIONAL ENGINEER
4/02/24
C. M. HEYENS
100505065
PROVINCE OF ONTARIO

STRUCTURAL COMPONENT ONLY
DWG # TR24040082

DIMENSIONS, SUPPORTS AND LOADINGS SPECIFIED BY FABRICATOR TO BE VERIFIED BY BUILDING DESIGNER

BEARINGS

JT	FACTORED GROSS REACTION VERT	HORZ	MAXIMUM FACTORED GROSS REACTION DOWN	HORZ	UPLIFT	INPUT BRG IN-SX	REQRD BRG IN-SX
H	2047	0	2047	0	0	1-8	1-8
M	2260	0	2260	0	0	5-8	1-8

UNFACTORED REACTIONS

JT	1ST LCASE COMBINED	MAX./MIN. COMPONENT REACTIONS SNOW	LIVE	PERM.LIVE	WIND	DEAD	SOIL
H	1436	1009 / 0	0 / 0	0 / 0	0 / 0	428 / 0	0 / 0
M	1581	1134 / 0	0 / 0	0 / 0	0 / 0	447 / 0	0 / 0

BEARING MATERIAL TO BE SPF NO.2 OR BETTER AT JOINT(S) H, M

BRACING

TOP CHORD TO BE SHEATHED OR MAX. PURLIN SPACING = 4.66 FT.
MAX. UNBRACED BOTTOM CHORD LENGTH = 10.00 FT OR RIGID CEILING DIRECTLY APPLIED.

ALL PITCH BREAKS AND PERIMETER CORNER JOINTS MUST BE LATERALLY RESTRAINED.

LOADING

TOTAL LOAD CASES: (4)

CHORDS

MEMB. FR-TO	MAX. FACTORED FORCE (LBS)	FACTORED VERT. LOAD (PLF) FROM	TO	MAX CSI (LC)	MAX. UNBRAC LENGTH
A- B	0 / 50	-112.4	-112.4	0.09 (1)	10.00
B- C	-2033 / 0	-112.4	-112.4	0.11 (1)	6.07
C- N	-2920 / 0	-112.4	-112.4	0.55 (1)	4.66
N- O	-2920 / 0	-112.4	-112.4	0.55 (1)	4.66
O- P	-2920 / 0	-112.4	-112.4	0.55 (1)	4.66
P- D	-2920 / 0	-112.4	-112.4	0.55 (1)	4.66
D- Q	-2253 / 0	-112.4	-112.4	0.52 (1)	5.20
Q- R	-2253 / 0	-112.4	-112.4	0.52 (1)	5.20
R- E	-2253 / 0	-112.4	-112.4	0.52 (1)	5.20
E- S	-2253 / 0	-112.4	-112.4	0.52 (1)	5.20
S- F	-2253 / 0	-112.4	-112.4	0.52 (1)	5.20
F- T	-2253 / 0	-112.4	-112.4	0.40 (1)	5.41
T- U	-2253 / 0	-112.4	-112.4	0.40 (1)	5.41
U- G	-2253 / 0	-112.4	-112.4	0.40 (1)	5.41
H- G	-1977 / 0	0.0	0.0	0.16 (1)	7.81
M- B	-2251 / 0	0.0	0.0	0.08 (1)	7.81
M- V	0 / 0	-18.5	-18.5	0.05 (4)	10.00
V- L	0 / 0	-18.5	-18.5	0.05 (4)	10.00
L- W	0 / 1544	-18.5	-18.5	0.13 (1)	10.00
W- X	0 / 1544	-18.5	-18.5	0.13 (1)	10.00
X- K	0 / 1544	-18.5	-18.5	0.13 (1)	10.00
K- Y	0 / 1544	-18.5	-18.5	0.13 (1)	10.00
Y- J	0 / 1544	-18.5	-18.5	0.13 (1)	10.00
J- Z	0 / 2921	-18.5	-18.5	0.24 (1)	10.00
Z-AA	0 / 2921	-18.5	-18.5	0.24 (1)	10.00
AA-AB	0 / 2921	-18.5	-18.5	0.24 (1)	10.00
AB- I	0 / 2921	-18.5	-18.5	0.24 (1)	10.00
I-AC	0 / 0	-18.5	-18.5	0.05 (4)	10.00
AC-AD	0 / 0	-18.5	-18.5	0.05 (4)	10.00
AD- H	0 / 0	-18.5	-18.5	0.05 (4)	10.00

WEBS

MEMB. FR-TO	MAX. FACTORED FORCE (LBS)	MAX CSI (LC)
L- C	-439 / 0	0.06 (1)
C- J	0 / 1634	0.20 (1)
J- D	-717 / 0	0.09 (1)
D- I	-798 / 0	0.34 (1)
I- F	-1041 / 0	0.13 (1)
I- G	0 / 2794	0.35 (1)
B- L	0 / 1675	0.21 (1)

SPECIFIED CONCENTRATED LOADS (LBS)

JT	LOC.	LC1	MAX-	MAX+	FACE	DIR.	TYPE	HEEL	CONN.
C	2-11-8	-29	-29	---	FRONT	VERT	DEAD	---	C1
C	2-11-8	-157	-157	---	FRONT	VERT	SNOW	---	C1
N	3-11-4	-93	-93	---	FRONT	VERT	TOTAL	---	C1
O	5-11-4	-93	-93	---	FRONT	VERT	TOTAL	---	C1
P	7-11-4	-93	-93	---	FRONT	VERT	TOTAL	---	C1
Q	9-11-4	-93	-93	---	FRONT	VERT	TOTAL	---	C1
R	11-11-4	-93	-93	---	FRONT	VERT	TOTAL	---	C1
S	13-11-4	-93	-93	---	FRONT	VERT	TOTAL	---	C1

[M]

DESIGN CRITERIA

*** SPECIAL LOADS ANALYSIS ***
GEOMETRY AND/OR BASIC LOADS CHANGED BY USER.
LOADS WERE DERIVED FROM USER INPUT
NO FURTHER MODIFICATIONS WERE MADE

SPECIFIED LOADS:

TOP CH.	LL	=	32.5	PSF
	DL	=	6.0	PSF
BOT CH.	LL	=	0.0	PSF
	DL	=	7.4	PSF
TOTAL LOAD		=	45.9	PSF

SPACING = 24.0 IN. C/C

LOADING IN FLAT SECTION BASED ON A SLOPE OF 2.00/12 MINIMUM

*** NON STANDARD GIRDER ***
ADDT'L USER-DEFINED LOADS APPLIED TO ALL LOAD CASES.

THIS TRUSS IS DESIGNED FOR RESIDENTIAL OR SMALL BUILDING REQUIREMENTS OF PART 9, NBCC 2015

THIS DESIGN COMPLIES WITH:
- PART 9 OF BCBC 2018 , NBC-2019AE
- PART 9 OF OBC 2012 (2019 AMENDMENT)
- CSA 086-14
- TPIC 2014

(55 % OF 43.9 P.S.F. G.S.L. PLUS 8.4 P.S.F. RAIN LOAD) EQUALS 32.5 P.S.F. SPECIFIED ROOF LIVE LOAD

ALLOWABLE DEFL.(LL)= L/360 (0.65")
CALCULATED VERT. DEFL.(LL) = L/ 999 (0.04")
ALLOWABLE DEFL.(TL)= L/360 (0.65")
CALCULATED VERT. DEFL.(TL) = L/ 999 (0.08")

CSI: TC=0.55/1.00 (C-D:1) , BC=0.24/1.00 (I-J:1) , WB=0.35/1.00 (G-I:1) , SSI=0.28/1.00 (C-D:1)

DOL LUMBER=1.00 NAIL=1.00 LS BEND=1.00 COMP=1.00 SHEAR=1.00 TENS= 1.00

COMPANION LIVE LOAD FACTOR = 1.00

AUTOSOLVE RIGHT HEEL ONLY

TRUSS PLATE MANUFACTURER IS NOT RESPONSIBLE FOR QUALITY CONTROL IN THE TRUSS MANUFACTURING PLANT .

NAIL VALUES

PLATE	GRIP(DRY) (PSI) MAX	MIN	SHEAR (PLI) MAX	MIN	SECTION (PLI) MAX	MIN
MT20	650	371	1747	788	1987	1873

PLATE PLACEMENT TOL. = 0.250 inches

PLATE ROTATION TOL. = 5.0 Deg.

JSI GRIP= 0.78 (C) (INPUT = 0.90)
JSI METAL= 0.28 (G) (INPUT = 0.95)

CONTINUED ON PAGE 2

JOB NAME	TRUSS NAME	QUANTITY	PLY	JOB DESC.	DRWG NO.
436388	T52	1	2	BAYVIEW WELLINGTON TRUSS DESC.	

PLATES (table is in inches)

JT	TYPE	PLATES	W	LEN	Y	X
B	TMVW+p	MT20	5.0	6.0	2.00	2.25
C	TTWW-m	MT20	5.0	6.0	2.00	1.75
D	TMWW-t	MT20	4.0	6.0		
E	TS-t	MT20	3.0	8.0		
F	TMW+w	MT20	2.0	4.0		
G	TMVW-t	MT20	5.0	6.0		
H	BMV1+p	MT20	6.0	10.0	Edge 0.50	
I	BMWWW-t	MT20	6.0	10.0		
J	BMWW-t	MT20	5.0	6.0		
K	BS-t	MT20	5.0	6.0		
L	BMWW-t	MT20	5.0	6.0		
M	BMV1+p	MT20	4.0	6.0		

Edge - INDICATES REFERENCE CORNER OF PLATE TOUCHES EDGE OF CHORD.

NOTES- (1)
1) Lateral braces to be a minimum of 2X4 SPF #2.

SPECIFIED CONCENTRATED LOADS (LBS)

JT	LOC.	LC1	MAX-	MAX+	FACE	DIR.	TYPE	HEEL	CONN.
T	15-11-4	-93	-93	---	FRONT	VERT	TOTAL	---	C1
U	17-11-4	-93	-93	---	FRONT	VERT	TOTAL	---	C1
V	1-11-4	-21	-21	---	FRONT	VERT	TOTAL	---	C1
W	3-11-4	-21	-21	---	FRONT	VERT	TOTAL	---	C1
X	5-11-4	-21	-21	---	FRONT	VERT	TOTAL	---	C1
Y	7-11-4	-21	-21	---	FRONT	VERT	TOTAL	---	C1
Z	9-11-4	-21	-21	---	FRONT	VERT	TOTAL	---	C1
AA	11-11-4	-21	-21	---	FRONT	VERT	TOTAL	---	C1
AB	13-11-4	-21	-21	---	FRONT	VERT	TOTAL	---	C1
AC	15-11-4	-21	-21	---	FRONT	VERT	TOTAL	---	C1
AD	17-11-4	-21	-21	---	FRONT	VERT	TOTAL	---	C1

CONNECTION REQUIREMENTS

1) **C1:** A SUITABLE HANGER/MECHANICAL CONNECTION IS REQUIRED.

LICENSED PROFESSIONAL ENGINEER
4/02/24
C. M. HEYENS
100505065
PROVINCE OF ONTARIO

STRUCTURAL COMPONENT ONLY
DWG # TR24040082

JOB NAME	TRUSS NAME	QUANTITY	PLY	JOB DESC.	DRWG NO.
436388	T52Z	1	2	BAYVIEW WELLINGTON TRUSS DESC.	

Tamarack Roof Truss, Burlington

Version 8.630 S Aug 30 2023 MiTek Industries, Inc. Tue Apr 2 10:54:45 2024 Page 1
ID:GRmvuh1dyQr3nydBfsTFcCy6OGI-Sp05Va06T0pIAFFipvUWnhNESIkqQOU1bbwMC0zUo38

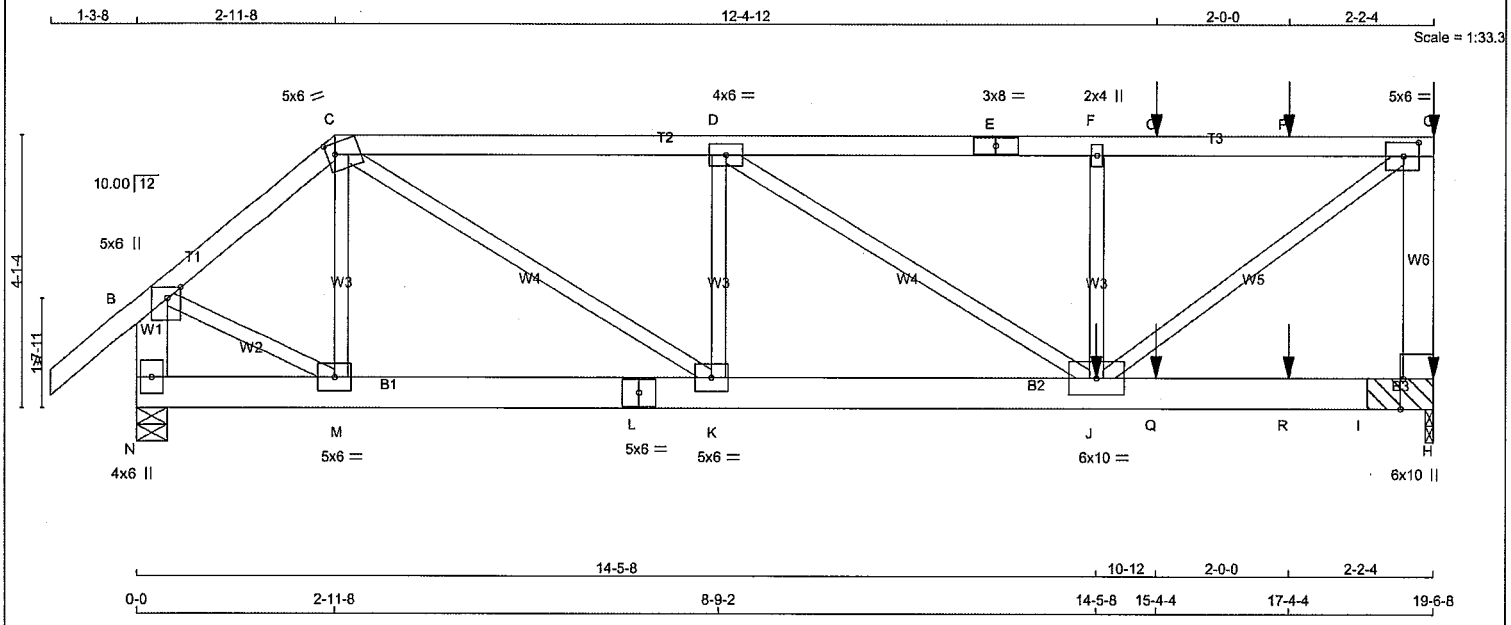

TOTAL WEIGHT = 2 X 96 = 192 lb

[M]

LUMBER

N. L. G. A. RULES

CHORDS	SIZE		LUMBER	DESCR.
A - C	2x4	DRY	No.2	SPF
C - E	2x4	DRY	No.2	SPF
E - G	2x4	DRY	No.2	SPF
H - G	2x6	DRY	No.2	SPF
N - B	2x6	DRY	No.2	SPF
N - L	2x6	DRY	No.2	SPF
L - H	2x6	DRY	No.2	SPF
ALL WEBS EXCEPT	2x3	DRY	No.2	SPF

DRY: SEASONED LUMBER.

DESIGN CONSISTS OF 2 TRUSSES BUILT SEPARATELY THEN FASTENED TOGETHER AS FOLLOWS:

CHORDS	#ROWS	SURFACE SPACING (IN)	LOAD(PLF)
TOP CHORDS : (0.122"X3") SPIRAL NAILS			
A- C	1	12	TOP
C- E	1	12	TOP
E- G	1	12	SIDE(61.0)
G- H	2	12	TOP
N- B	2	12	TOP
BOTTOM CHORDS : (0.122"X3") SPIRAL NAILS			
N- L	2	12	TOP
L- H	2	12	SIDE(183.1)
WEBS : (0.122"X3") SPIRAL NAILS			
F- J	1	6	SIDE(295.3)
2x3	1	6	

NAILS TO BE DRIVEN FROM ONE SIDE ONLY.

GIRDER NAILING ASSUMES NAILED HANGERS ARE FASTENED WITH MIN. 3-0 INCH NAILS.

TOP - COMPONENTS ARE LOADED FROM THE TOP AND MUST BE PLACED ON TOP EDGE OF ALL PLIES FOR THE LOAD TO BE TRANSFERRED TO EACH PLY.

LICENSED PROFESSIONAL ENGINEER
4/02/24
C. M. HEYENS
100505065
PROVINCE OF ONTARIO

STRUCTURAL COMPONENT ONLY
DWG # TR24040083

DIMENSIONS, SUPPORTS AND LOADINGS SPECIFIED BY FABRICATOR TO BE VERIFIED BY BUILDING DESIGNER

BEARINGS

JT	FACTORED GROSS REACTION VERT	HORZ	MAXIMUM FACTORED GROSS REACTION DOWN	HORZ	UPLIFT	INPUT BRG IN-SX	REQRD BRG IN-SX
H	3122	0	3122	0	0	1-8	1-8 & BLOCK
N	1965	0	1965	0	0	5-8	1-8

UNFACTORED REACTIONS

JT	1ST LCASE COMBINED	MAX./MIN. COMPONENT REACTIONS SNOW	LIVE	PERM.LIVE	WIND	DEAD	SOIL
H	2184	1566 / 0	0 / 0	0 / 0	0 / 0	618 / 0	0 / 0
N	1373	995 / 0	0 / 0	0 / 0	0 / 0	378 / 0	0 / 0

BEARING MATERIAL TO BE SPF NO.2 OR BETTER AT JOINT(S) H, N

2x6 DRY SPF No.2 BEARING BLOCK 12" LONG AT JT. H ATTACHED TO FRONT SIDE WITH 3 ROWS OF (0.122"X3") SPIRAL NAILS SPACED 4" C.C. 6 NAILS TOTAL.

BRACING

TOP CHORD TO BE SHEATHED OR MAX. PURLIN SPACING = 4.63 FT.
MAX. UNBRACED BOTTOM CHORD LENGTH = 10.00 FT OR RIGID CEILING DIRECTLY APPLIED.

ALL PITCH BREAKS AND PERIMETER CORNER JOINTS MUST BE LATERALLY RESTRAINED.

LOADING

TOTAL LOAD CASES: (4)

CHORDS

MEMB. FR-TO	MAX. FACTORED FORCE (LBS)	FACTORED VERT. LOAD (PLF) FROM	TO	LC1	MAX CSI (LC)	MAX. UNBRAC LENGTH
A- B	0 / 50	-112.4	-112.4		0.09 (1)	10.00
B- C	-1724 / 0	-112.4	-112.4		0.10 (1)	6.25
C- D	-2996 / 0	-112.4	-112.4		0.33 (1)	4.97
D- E	-3413 / 0	-112.4	-112.4		0.36 (1)	4.68
E- F	-3413 / 0	-112.4	-112.4		0.36 (1)	4.68
F- O	-3413 / 0	-112.4	-112.4		0.39 (1)	4.63
O- P	-3413 / 0	-112.4	-112.4		0.39 (1)	4.63
P- G	-3413 / 0	-112.4	-112.4		0.39 (1)	4.63
H- G	-2999 / 0	0.0	0.0		0.24 (1)	7.81
N- B	-1958 / 0	0.0	0.0		0.07 (1)	7.81
N- M	0 / 0	-18.5	-18.5		0.03 (4)	10.00
M- L	0 / 1308	-18.5	-18.5		0.11 (1)	10.00
L- K	0 / 1308	-18.5	-18.5		0.11 (1)	10.00
K- J	0 / 2997	-18.5	-18.5		0.25 (1)	10.00
J- Q	0 / 0	-18.5	-18.5		0.06 (1)	10.00
Q- R	0 / 0	-18.5	-18.5		0.06 (1)	10.00
R- I	0 / 0	-18.5	-18.5		0.06 (1)	10.00
I- H	0 / 0	-18.5	-18.5		0.06 (1)	10.00

WEBS

MEMB. FR-TO	MAX. FACTORED FORCE (LBS)	MAX CSI (LC)
M- C	-412 / 0	0.05 (1)
C- K	0 / 2003	0.25 (1)
K- D	-965 / 0	0.12 (1)
D- J	0 / 497	0.06 (1)
J- F	-852 / 0	0.11 (1)
J- G	0 / 4233	0.52 (1)
B- M	0 / 1421	0.18 (1)

SPECIFIED CONCENTRATED LOADS (LBS)

JT	LOC.	LC1	MAX-	MAX+	FACE	DIR.	TYPE	HEEL	CONN.
G	19-6-8	-124	-124	---	BACK	VERT	TOTAL	---	C1
H	19-6-8	-27	-27	---	BACK	VERT	TOTAL	---	C1
J	14-5-8	-1279	-1279	---	BACK	VERT	TOTAL	---	C1
O	15-4-4	-93	-93	---	BACK	VERT	TOTAL	---	C1
P	17-4-4	-93	-93	---	BACK	VERT	TOTAL	---	C1
Q	15-4-4	-21	-21	---	BACK	VERT	TOTAL	---	C1
R	17-4-4	-21	-21	---	BACK	VERT	TOTAL	---	C1

CONNECTION REQUIREMENTS

1) C1: A SUITABLE HANGER/MECHANICAL CONNECTION IS REQUIRED.

DESIGN CRITERIA

SPECIFIED LOADS:

TOP CH.	LL	=	32.5	PSF
	DL	=	6.0	PSF
BOT CH.	LL	=	0.0	PSF
	DL	=	7.4	PSF
TOTAL LOAD		=	45.9	PSF

SPACING = 24.0 IN. C/C

LOADING IN FLAT SECTION BASED ON A SLOPE OF 2.00/12 MINIMUM

THIS TRUSS IS DESIGNED FOR RESIDENTIAL OR SMALL BUILDING REQUIREMENTS OF PART 9, NBCC 2015

THIS DESIGN COMPLIES WITH:
- PART 9 OF BCBC 2018 , NBC-2019AE
- PART 9 OF OBC 2012 (2019 AMENDMENT)
- CSA 086-14
- TPIC 2014

(55 % OF 43.9 P.S.F. G.S.L. PLUS 8.4 P.S.F. RAIN LOAD) EQUALS 32.5 P.S.F. SPECIFIED ROOF LIVE LOAD

ALLOWABLE DEFL.(LL)= L/360 (0.65")
CALCULATED VERT. DEFL.(LL) = L/ 999 (0.06")
ALLOWABLE DEFL.(TL)= L/360 (0.65")
CALCULATED VERT. DEFL.(TL) = L/ 999 (0.10")

CSI: TC=0.39/1.00 (F-G:1) , BC=0.25/1.00 (J-K:1) , WB=0.52/1.00 (G-J:1) , SSI=0.23/1.00 (F-G:1)

DOL LUMBER=1.00 NAIL=1.00 LS BEND=1.00 COMP=1.00 SHEAR=1.00 TENS= 1.00

COMPANION LIVE LOAD FACTOR = 1.00

AUTOSOLVE RIGHT HEEL ONLY

TRUSS PLATE MANUFACTURER IS NOT RESPONSIBLE FOR QUALITY CONTROL IN THE TRUSS MANUFACTURING PLANT .

NAIL VALUES

PLATE	GRIP(DRY) (PSI) MAX	MIN	SHEAR (PLI) MAX	MIN	SECTION (PLI) MAX	MIN
MT20	650	371	1747	788	1987	1873

PLATE PLACEMENT TOL. = 0.250 inches

PLATE ROTATION TOL. = 5.0 Deg.

JSI GRIP= 0.89 (G) (INPUT = 0.90)
JSI METAL= 0.40 (G) (INPUT = 0.95)

CONTINUED ON PAGE 2

JOB NAME	TRUSS NAME	QUANTITY	PLY	JOB DESC. BAYVIEW WELLINGTON	DRWG NO.
436388	T52Z	1	2	TRUSS DESC.	

PLATES (table is in inches)

JT	TYPE	PLATES	W	LEN	Y	X
B	TMVW+p	MT20	5.0	6.0	2.00	2.25
C	TTWW-m	MT20	5.0	6.0	2.00	1.50
D	TMWW-t	MT20	4.0	6.0		
E	TS-t	MT20	3.0	8.0		
F	TMW+w	MT20	2.0	4.0		
G	TMVW-t	MT20	5.0	6.0	2.50	2.75
H	BMV1+p	MT20	6.0	10.0	Edge	0.50
J	BMWWW-t	MT20	6.0	10.0		
K	BMWW-t	MT20	5.0	6.0		
L	BS-t	MT20	5.0	6.0		
M	BMWW-t	MT20	5.0	6.0		
N	BMV1+p	MT20	4.0	6.0		

Edge - INDICATES REFERENCE CORNER OF PLATE TOUCHES EDGE OF CHORD.

NOTES- (1)
1) Lateral braces to be a minimum of 2X4 SPF #2.

LICENSED PROFESSIONAL ENGINEER
4/02/24
C. M. HEYENS
100505065
PROVINCE OF ONTARIO

STRUCTURAL COMPONENT ONLY
DWG # TR24040083

JOB NAME	TRUSS NAME	QUANTITY	PLY	JOB DESC.	DRWG NO.
436388	T53	2	1	BAYVIEW WELLINGTON TRUSS DESC.	

Tamarack Roof Truss, Burlington

Version 8.630 S Aug 30 2023 MiTek Industries, Inc. Tue Apr 2 10:54:46 2024 Page 1
ID:GRmvuh1dyQr3nydBfsTFcCy6OGl-w?aTiw0kEJx9oPquNc?lKvvNn9459uYAqFqvlTzUo37

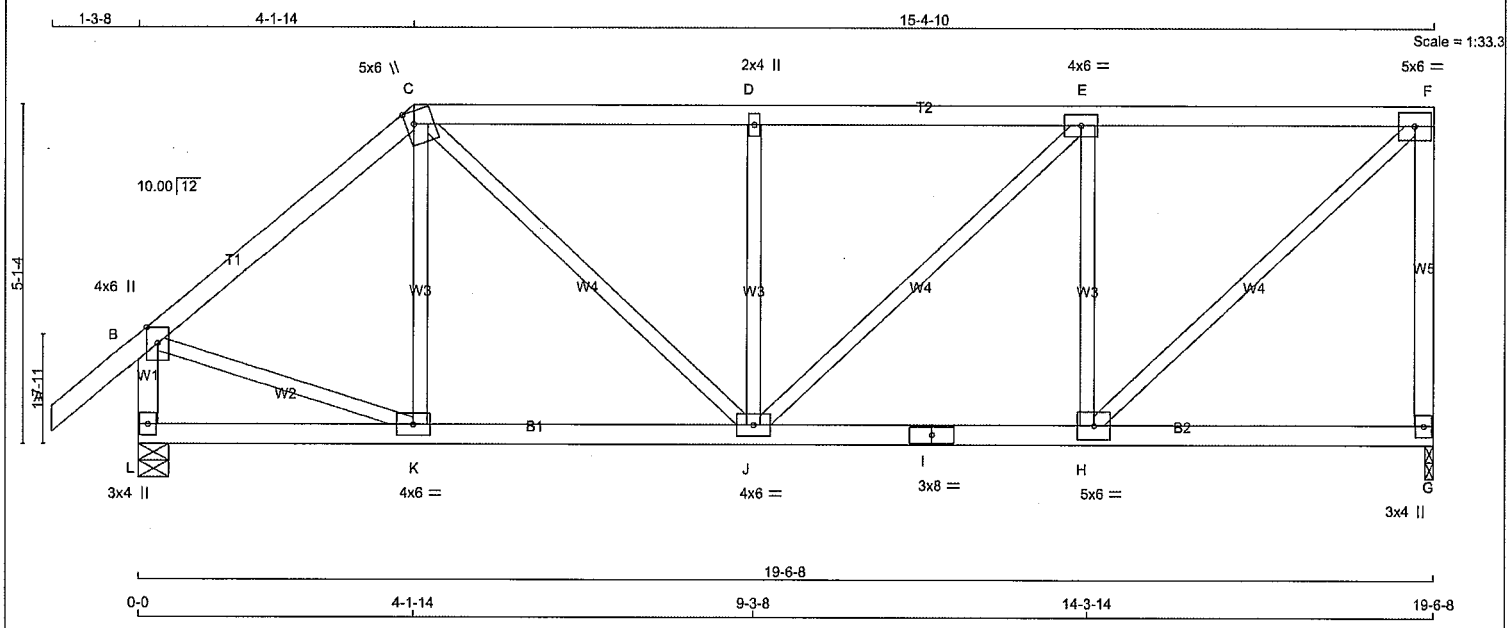

TOTAL WEIGHT = 2 X 85 = 170 lb

LUMBER
N. L. G. A. RULES

CHORDS	SIZE		LUMBER	DESCR.
A - C	2x4	DRY	No.2	SPF
C - F	2x4	DRY	No.2	SPF
G - F	2x4	DRY	No.2	SPF
L - B	2x4	DRY	No.2	SPF
L - I	2x4	DRY	No.2	SPF
I - G	2x4	DRY	No.2	SPF
ALL WEBS EXCEPT	2x3	DRY	No.2	SPF

DRY: SEASONED LUMBER.

PLATES (table is in inches)

JT	TYPE	PLATES	W	LEN	Y	X
B	TMVW+p	MT20	4.0	6.0	Edge	
C	TTWW+m	MT20	5.0	6.0	2.25	1.50
D	TMW+w	MT20	2.0	4.0		
E	TMWW-t	MT20	4.0	6.0		
F	TMVW-t	MT20	5.0	6.0		
G	BMV1+p	MT20	3.0	4.0		
H	BMWW-t	MT20	5.0	6.0		
I	BS-t	MT20	3.0	8.0		
J	BMWWW-t	MT20	4.0	6.0		
K	BMWW-t	MT20	4.0	6.0		
L	BMV1+p	MT20	3.0	4.0		

Edge - INDICATES REFERENCE CORNER OF PLATE TOUCHES EDGE OF CHORD.

NOTES- (1)
1) Lateral braces to be a minimum of 2X4 SPF #2.

DIMENSIONS, SUPPORTS AND LOADINGS SPECIFIED BY FABRICATOR TO BE VERIFIED BY BUILDING DESIGNER

BEARINGS

JT	FACTORED GROSS REACTION VERT	HORZ	MAXIMUM FACTORED GROSS REACTION DOWN	HORZ	UPLIFT	INPUT BRG IN-SX	REQRD BRG IN-SX
G	1279	0	1279	0	0	1-8	1-8
L	1435	0	1435	0	0	5-8	1-9

UNFACTORED REACTIONS

JT	1ST LCASE COMBINED	MAX./MIN. COMPONENT REACTIONS SNOW	LIVE	PERM.LIVE	WIND	DEAD	SOIL
G	897	635 / 0	0 / 0	0 / 0	0 / 0	262 / 0	0 / 0
L	1003	725 / 0	0 / 0	0 / 0	0 / 0	278 / 0	0 / 0

BEARING MATERIAL TO BE SPF NO.2 OR BETTER AT JOINT(S) G, L

BRACING
TOP CHORD TO BE SHEATHED OR MAX. PURLIN SPACING = 4.98 FT.
MAX. UNBRACED BOTTOM CHORD LENGTH = 10.00 FT OR RIGID CEILING DIRECTLY APPLIED.

ALL PITCH BREAKS AND PERIMETER CORNER JOINTS MUST BE LATERALLY RESTRAINED.

LOADING
TOTAL LOAD CASES: (4)

CHORDS

MEMB. FR-TO	MAX. FORCE (LBS)	FACTORED VERT. LOAD (PLF) FROM	TO	LC1 CSI (LC)	MAX UNBRAC LENGTH
A- B	0 / 50	-112.4	-112.4	0.15 (1)	10.00
B- C	-1158 / 0	-112.4	-112.4	0.37 (1)	5.43
C- D	-1357 / 0	-112.4	-112.4	0.43 (1)	5.02
D- E	-1358 / 0	-112.4	-112.4	0.45 (1)	4.98
E- F	-1086 / 0	-112.4	-112.4	0.43 (1)	5.44
G- F	-1239 / 0	0.0	0.0	0.55 (1)	7.21
L- B	-1405 / 0	0.0	0.0	0.15 (1)	6.87
L- K	0 / 0	-18.5	-18.5	0.09 (4)	10.00
K- J	0 / 883	-18.5	-18.5	0.20 (1)	10.00
J- I	0 / 1086	-18.5	-18.5	0.23 (1)	10.00
I- H	0 / 1086	-18.5	-18.5	0.23 (1)	10.00
H- G	0 / 0	-18.5	-18.5	0.12 (4)	10.00

WEBS

MEMB. FR-TO	MAX. FORCE (LBS)	MAX CSI (LC)
K- C	-173 / 29	0.07 (1)
B- K	0 / 928	0.21 (1)
H- F	0 / 1478	0.33 (1)
C- J	0 / 648	0.15 (1)
H- E	-894 / 0	0.34 (1)
J- D	-617 / 0	0.24 (1)
J- E	0 / 375	0.08 (1)

[M]

DESIGN CRITERIA

SPECIFIED LOADS:

TOP CH.	LL	=	32.5	PSF
	DL	=	6.0	PSF
BOT CH.	LL	=	0.0	PSF
	DL	=	7.4	PSF
TOTAL LOAD		=	45.9	PSF

SPACING = 24.0 IN. C/C

LOADING IN FLAT SECTION BASED ON A SLOPE OF 2.00/12 MINIMUM

THIS TRUSS IS DESIGNED FOR RESIDENTIAL OR SMALL BUILDING REQUIREMENTS OF PART 9, NBCC 2015

THIS DESIGN COMPLIES WITH:
- PART 9 OF BCBC 2018 , NBC-2019AE
- PART 9 OF OBC 2012 (2019 AMENDMENT)
- CSA 086-14
- TPIC 2014

(55 % OF 43.9 P.S.F. G.S.L. PLUS 8.4 P.S.F. RAIN LOAD) EQUALS 32.5 P.S.F. SPECIFIED ROOF LIVE LOAD

ALLOWABLE DEFL.(LL)= L/360 (0.65")
CALCULATED VERT. DEFL.(LL) = L/ 999 (0.04")
ALLOWABLE DEFL.(TL)= L/360 (0.65")
CALCULATED VERT. DEFL.(TL) = L/ 999 (0.08")

CSI: TC=0.55/1.00 (F-G:1) , BC=0.23/1.00 (H-J:1) , WB=0.34/1.00 (E-H:1) , SSI=0.27/1.00 (E-F:1)

DOL LUMBER=1.00 NAIL=1.00 LS BEND=1.10 COMP=1.10 SHEAR=1.10 TENS= 1.10

COMPANION LIVE LOAD FACTOR = 1.00

TRUSS PLATE MANUFACTURER IS NOT RESPONSIBLE FOR QUALITY CONTROL IN THE TRUSS MANUFACTURING PLANT .

NAIL VALUES

PLATE	GRIP(DRY) (PSI) MAX	MIN	SHEAR (PLI) MAX	MIN	SECTION (PLI) MAX	MIN
MT20	650	371	1747	788	1987	1873

PLATE PLACEMENT TOL. = 0.250 Inches

PLATE ROTATION TOL. = 5.0 Deg.

JSI GRIP= 0.88 (B) (INPUT = 0.90)
JSI METAL= 0.59 (B) (INPUT = 0.95)

LICENSED PROFESSIONAL ENGINEER
4/02/24
C. M. HEYENS
100505065
PROVINCE OF ONTARIO

STRUCTURAL COMPONENT ONLY
DWG # TR24040084

JOB NAME	TRUSS NAME	QUANTITY	PLY	JOB DESC.	DRWG NO.
436388	T54	2	1	BAYVIEW WELLINGTON TRUSS DESC.	

Tamarack Roof Truss, Burlington

Version 8.630 S Aug 30 2023 MiTek Industries, Inc. Tue Apr 2 10:54:48 2024 Page 1
ID:GRmvuh1dyQr3nydBfsTFcCy6OGl-tNiE7b2 mxBt1i HU11DPK?dpymydl THY90pLzUo35

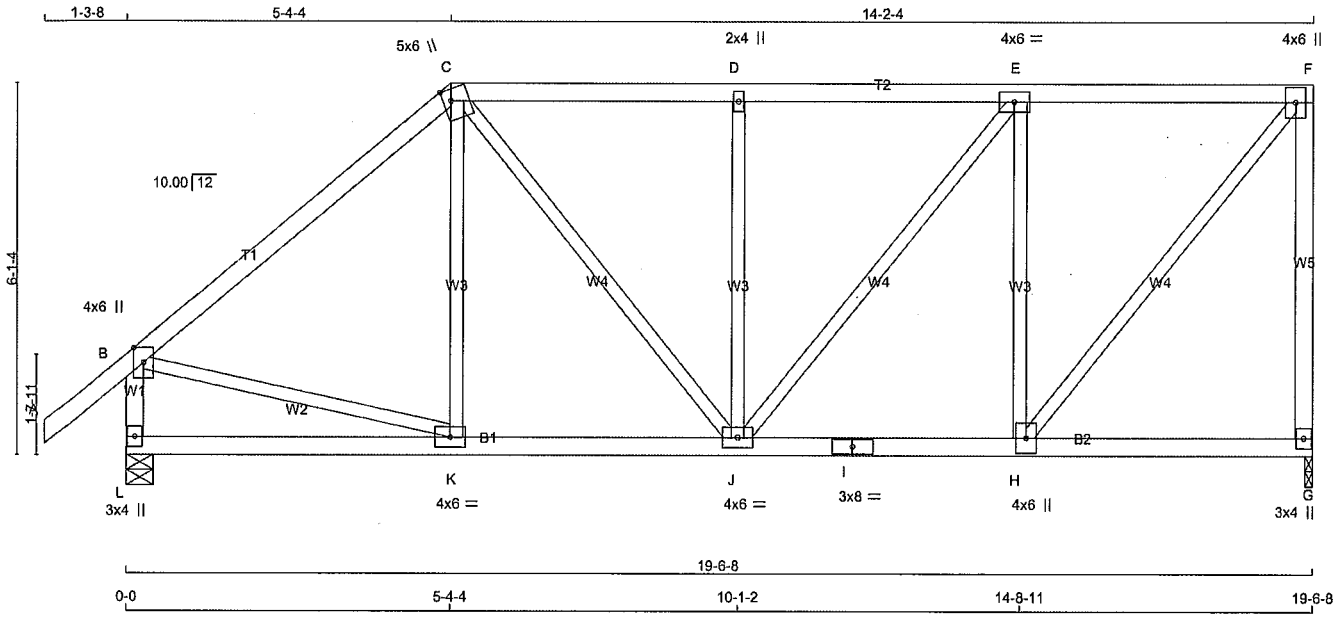

TOTAL WEIGHT = 2 X 91 = 183 lb [M]

LUMBER
N. L. G. A. RULES

CHORDS	SIZE		LUMBER	DESCR.
A - C	2x4	DRY	No.2	SPF
C - F	2x4	DRY	No.2	SPF
G - F	2x4	DRY	No.2	SPF
L - B	2x4	DRY	No.2	SPF
L - I	2x4	DRY	No.2	SPF
I - G	2x4	DRY	No.2	SPF
ALL WEBS EXCEPT	2x3	DRY	No.2	SPF

DRY: SEASONED LUMBER.

PLATES (table is in inches)

JT	TYPE	PLATES	W	LEN	Y	X
B	TMVW+p	MT20	4.0	6.0	Edge	
C	TTWW+m	MT20	5.0	6.0	2.25	1.50
D	TMW+w	MT20	2.0	4.0		
E	TMWW-t	MT20	4.0	6.0		
F	TMVW+p	MT20	4.0	6.0		
G	BMV1+p	MT20	3.0	4.0		
H	BMWW+t	MT20	4.0	6.0		
I	BS-t	MT20	3.0	8.0		
J	BMWWW-t	MT20	4.0	6.0		
K	BMWW-t	MT20	4.0	6.0		
L	BMV1+p	MT20	3.0	4.0		

Edge - INDICATES REFERENCE CORNER OF PLATE TOUCHES EDGE OF CHORD.

NOTES- (1)
1) Lateral braces to be a minimum of 2X4 SPF #2.

DIMENSIONS, SUPPORTS AND LOADINGS SPECIFIED BY FABRICATOR TO BE VERIFIED BY BUILDING DESIGNER

BEARINGS

JT	FACTORED GROSS REACTION VERT	HORZ	MAXIMUM FACTORED GROSS REACTION DOWN	HORZ	UPLIFT	INPUT BRG IN-SX	REQRD BRG IN-SX
G	1279	0	1279	0	0	1-8	1-8
L	1435	0	1435	0	0	5-8	1-9

UNFACTORED REACTIONS

JT	1ST LCASE COMBINED	MAX./MIN. COMPONENT REACTIONS SNOW	LIVE	PERM.LIVE	WIND	DEAD	SOIL
G	897	635 / 0	0 / 0	0 / 0	0 / 0	262 / 0	0 / 0
L	1003	725 / 0	0 / 0	0 / 0	0 / 0	278 / 0	0 / 0

BEARING MATERIAL TO BE SPF NO.2 OR BETTER AT JOINT(S) G, L

BRACING
TOP CHORD TO BE SHEATHED OR MAX. PURLIN SPACING = 5.00 FT.
MAX. UNBRACED BOTTOM CHORD LENGTH = 10.00 FT OR RIGID CEILING DIRECTLY APPLIED.

ALL PITCH BREAKS AND PERIMETER CORNER JOINTS MUST BE LATERALLY RESTRAINED.

LOADING
TOTAL LOAD CASES: (4)

CHORDS

MEMB. FR-TO	MAX. FORCE (LBS)	FACTORED VERT. LOAD (PLF) FROM	TO	LC1 CSI (LC)	MAX. UNBRAC LENGTH
A- B	0 / 50	-112.4	-112.4	0.15 (1)	10.00
B- C	-1136 / 0	-112.4	-112.4	0.64 (1)	5.00
C- D	-1116 / 0	-112.4	-112.4	0.35 (1)	5.53
D- E	-1117 / 0	-112.4	-112.4	0.37 (1)	5.50
E- F	-848 / 0	-112.4	-112.4	0.36 (1)	6.10
G- F	-1243 / 0	0.0	0.0	0.90 (1)	7.20
L- B	-1394 / 0	0.0	0.0	0.15 (1)	6.90
L- K	0 / 0	-18.5	-18.5	0.12 (4)	10.00
K- J	0 / 869	-18.5	-18.5	0.21 (1)	10.00
J- I	0 / 848	-18.5	-18.5	0.19 (1)	10.00
I- H	0 / 848	-18.5	-18.5	0.19 (1)	10.00
H- G	0 / 0	-18.5	-18.5	0.10 (4)	10.00

WEBS

MEMB. FR-TO	MAX. FORCE (LBS)	MAX CSI (LC)
K- C	-97 / 61	0.06 (1)
B- K	0 / 895	0.20 (1)
H- F	0 / 1329	0.30 (1)
C- J	0 / 391	0.09 (1)
H- E	-922 / 0	0.54 (1)
J- D	-568 / 0	0.33 (1)
J- E	0 / 430	0.10 (1)

DESIGN CRITERIA

SPECIFIED LOADS:

TOP CH.	LL	=	32.5	PSF
	DL	=	6.0	PSF
BOT CH.	LL	=	0.0	PSF
	DL	=	7.4	PSF
TOTAL LOAD		=	45.9	PSF

SPACING = 24.0 IN. C/C

LOADING IN FLAT SECTION BASED ON A SLOPE OF 2.00/12 MINIMUM

THIS TRUSS IS DESIGNED FOR RESIDENTIAL OR SMALL BUILDING REQUIREMENTS OF PART 9, NBCC 2015

THIS DESIGN COMPLIES WITH:
- PART 9 OF BCBC 2018 , NBC-2019AE
- PART 9 OF OBC 2012 (2019 AMENDMENT)
- CSA 086-14
- TPIC 2014

(55 % OF 43.9 P.S.F. G.S.L. PLUS 8.4 P.S.F. RAIN LOAD) EQUALS 32.5 P.S.F. SPECIFIED ROOF LIVE LOAD

ALLOWABLE DEFL.(LL)= L/360 (0.65")
CALCULATED VERT. DEFL.(LL) = L/ 999 (0.04")
ALLOWABLE DEFL.(TL)= L/360 (0.65")
CALCULATED VERT. DEFL.(TL) = L/ 999 (0.07")

CSI: TC=0.90/1.00 (F-G:1) , BC=0.21/1.00 (J-K:1) , WB=0.54/1.00 (E-H:1) , SSI=0.25/1.00 (E-F:1)

DOL LUMBER=1.00 NAIL=1.00 LS BEND=1.10 COMP=1.10 SHEAR=1.10 TENS= 1.10

COMPANION LIVE LOAD FACTOR = 1.00

TRUSS PLATE MANUFACTURER IS NOT RESPONSIBLE FOR QUALITY CONTROL IN THE TRUSS MANUFACTURING PLANT .

NAIL VALUES

PLATE	GRIP(DRY) (PSI) MAX	MIN	SHEAR (PLI) MAX	MIN	SECTION (PLI) MAX	MIN
MT20	650	371	1747	788	1987	1873

PLATE PLACEMENT TOL. = 0.250 inches

PLATE ROTATION TOL. = 5.0 Deg.

JSI GRIP= 0.88 (B) (INPUT = 0.90)
JSI METAL= 0.59 (B) (INPUT = 0.95)

LICENSED PROFESSIONAL ENGINEER
4/02/24
C. M. HEYENS
100505065
PROVINCE OF ONTARIO

STRUCTURAL COMPONENT ONLY
DWG # TR24040085

JOB NAME	TRUSS NAME	QUANTITY	PLY	JOB DESC.	DRWG NO.
436388	T55	2	1	BAYVIEW WELLINGTON TRUSS DESC.	

Tamarack Roof Truss, Burlington

Version 8.630 S Aug 30 2023 MiTek Industries, Inc. Tue Apr 2 10:54:49 2024 Page 1
ID:GRmvuh1dyQr3nydBfsTFcCy6OGl-LaGcKx3dXEJkfsZT2lYSyXXp2M6eM8IdWCuZLozUo34

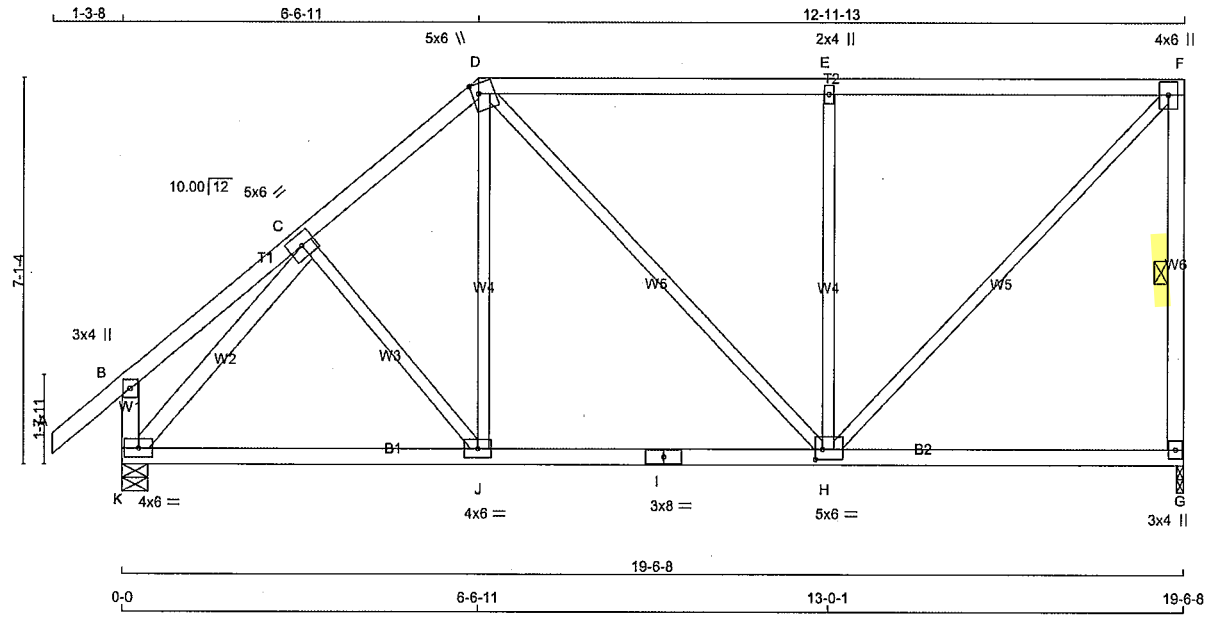

TOTAL WEIGHT = 2 X 93 = 185 lb

LUMBER
N. L. G. A. RULES

CHORDS	SIZE		LUMBER	DESCR.
A - D	2x4	DRY	No.2	SPF
D - F	2x4	DRY	No.2	SPF
G - F	2x4	DRY	No.2	SPF
K - B	2x4	DRY	No.2	SPF
K - I	2x4	DRY	No.2	SPF
I - G	2x4	DRY	No.2	SPF
ALL WEBS	2x3	DRY	No.2	SPF
EXCEPT				
K - C	2x4	DRY	No.2	SPF

DRY: SEASONED LUMBER.

PLATES (table is in inches)

JT	TYPE	PLATES	W	LEN	Y	X
B	TMV+p	MT20	3.0	4.0		
C	TMWW-t	MT20	5.0	6.0		
D	TTWW+m	MT20	5.0	6.0	2.25	1.50
E	TMW+w	MT20	2.0	4.0		
F	TMVW+p	MT20	4.0	6.0		
G	BMV1+p	MT20	3.0	4.0		
H	BMWWW-t	MT20	5.0	6.0	2.25	1.50
I	BS-t	MT20	3.0	8.0		
J	BMWW-t	MT20	4.0	6.0		
K	BMVW1-t	MT20	4.0	6.0		

NOTES- (1)
1) Lateral braces to be a minimum of 2X4 SPF #2.

DIMENSIONS, SUPPORTS AND LOADINGS SPECIFIED BY FABRICATOR TO BE VERIFIED BY BUILDING DESIGNER

BEARINGS

JT	FACTORED GROSS REACTION VERT	HORZ	MAXIMUM FACTORED GROSS REACTION DOWN	HORZ	UPLIFT	INPUT BRG IN-SX	REQRD BRG IN-SX
G	1279	0	1279	0	0	1-8	1-8
K	1435	0	1435	0	0	5-8	1-9

UNFACTORED REACTIONS

JT	1ST LCASE COMBINED	MAX./MIN. COMPONENT REACTIONS SNOW	LIVE	PERM.LIVE	WIND	DEAD	SOIL
G	897	635 / 0	0 / 0	0 / 0	0 / 0	262 / 0	0 / 0
K	1003	725 / 0	0 / 0	0 / 0	0 / 0	278 / 0	0 / 0

BEARING MATERIAL TO BE SPF NO.2 OR BETTER AT JOINT(S) G, K

BRACING
TOP CHORD TO BE SHEATHED OR MAX. PURLIN SPACING = 4.59 FT.
MAX. UNBRACED BOTTOM CHORD LENGTH = 10.00 FT OR RIGID CEILING DIRECTLY APPLIED.

ALL PITCH BREAKS AND PERIMETER CORNER JOINTS MUST BE LATERALLY RESTRAINED.

1 LATERAL BRACE(S) AT 1/ 2 LENGTH OF F-G.

END VERTICAL(S) MUST BE SHEATHED OR HAVE BRACES AS INDICATED IN THE MAX. UNBRACED LENGTH COLUMN OF THE TABLE BELOW

LOADING
TOTAL LOAD CASES: (4)

CHORDS

MEMB. FR-TO	MAX. FACTORED FORCE (LBS)	FACTORED VERT. LOAD LC1 (PLF) FROM	TO	MAX CSI (LC)	MAX. UNBRAC LENGTH
A- B	0 / 50	-112.4	-112.4	0.15 (1)	10.00
B- C	0 / 27	-112.4	-112.4	0.19 (1)	10.00
C- D	-1110 / 0	-112.4	-112.4	0.21 (1)	5.76
D- E	-911 / 0	-112.4	-112.4	0.86 (1)	4.59
E- F	-911 / 0	-112.4	-112.4	0.87 (1)	4.59
G- F	-1229 / 0	0.0	0.0	0.28 (1)	5.79
K- B	-296 / 0	0.0	0.0	0.03 (1)	7.81
K- J	0 / 881	-18.5	-18.5	0.24 (1)	10.00
J- I	0 / 833	-18.5	-18.5	0.24 (4)	10.00
I- H	0 / 833	-18.5	-18.5	0.24 (4)	10.00
H- G	0 / 0	-18.5	-18.5	0.17 (4)	10.00

WEBS

MEMB. FR-TO	MAX. FACTORED FORCE (LBS)	MAX CSI (LC)
C- J	-79 / 20	0.04 (1)
J- D	0 / 193	0.05 (4)
D- H	0 / 114	0.03 (1)
H- E	-905 / 0	0.79 (1)
H- F	0 / 1317	0.30 (1)
K- C	-1401 / 0	0.43 (1)

[M]

DESIGN CRITERIA

SPECIFIED LOADS:

TOP CH.	LL	=	32.5	PSF
	DL	=	6.0	PSF
BOT CH.	LL	=	0.0	PSF
	DL	=	7.4	PSF
TOTAL LOAD		=	45.9	PSF

SPACING = 24.0 IN. C/C

LOADING IN FLAT SECTION BASED ON A SLOPE OF 2.00/12 MINIMUM

THIS TRUSS IS DESIGNED FOR RESIDENTIAL OR SMALL BUILDING REQUIREMENTS OF PART 9, NBCC 2015

THIS DESIGN COMPLIES WITH:
- PART 9 OF BCBC 2018 , NBC-2019AE
- PART 9 OF OBC 2012 (2019 AMENDMENT)
- CSA 086-14
- TPIC 2014

(55 % OF 43.9 P.S.F. G.S.L. PLUS 8.4 P.S.F. RAIN LOAD) EQUALS 32.5 P.S.F. SPECIFIED ROOF LIVE LOAD

ALLOWABLE DEFL.(LL)= L/360 (0.65")
CALCULATED VERT. DEFL.(LL) = L/ 999 (0.03")
ALLOWABLE DEFL.(TL)= L/360 (0.65")
CALCULATED VERT. DEFL.(TL) = L/ 999 (0.08")

CSI: TC=0.87/1.00 (E-F:1) , BC=0.24/1.00 (H-J:4) , WB=0.79/1.00 (E-H:1) , SSI=0.36/1.00 (E-F:1)

DOL LUMBER=1.00 NAIL=1.00 LS BEND=1.10 COMP=1.10 SHEAR=1.10 TENS= 1.10

COMPANION LIVE LOAD FACTOR = 1.00

AUTOSOLVE RIGHT HEEL ONLY

TRUSS PLATE MANUFACTURER IS NOT RESPONSIBLE FOR QUALITY CONTROL IN THE TRUSS MANUFACTURING PLANT .

NAIL VALUES

PLATE	GRIP(DRY) (PSI) MAX	MIN	SHEAR (PLI) MAX	MIN	SECTION (PLI) MAX	MIN
MT20	650	371	1747	788	1987	1873

PLATE PLACEMENT TOL. = 0.250 inches

PLATE ROTATION TOL. = 5.0 Deg.

JSI GRIP= 0.90 (H) (INPUT = 0.90)
JSI METAL= 0.41 (F) (INPUT = 0.95)

LICENSED PROFESSIONAL ENGINEER
4/02/24
C. M. HEYENS
100505065
PROVINCE OF ONTARIO

STRUCTURAL COMPONENT ONLY
DWG # TR24040086

JOB NAME	TRUSS NAME	QUANTITY	PLY	JOB DESC.	DRWG NO.
436388	T56	2	1	BAYVIEW WELLINGTON TRUSS DESC.	

Tamarack Roof Truss, Burlington

Version 8.630 S Aug 30 2023 MiTek Industries, Inc. Tue Apr 2 10:54:50 2024 Page 1
ID:GRmvuh1dyQr3nydBfsTFcCy6OGl-pmq YH3FIYSbH08gcS3hUl41VmR35ekmlse7uEzUo33

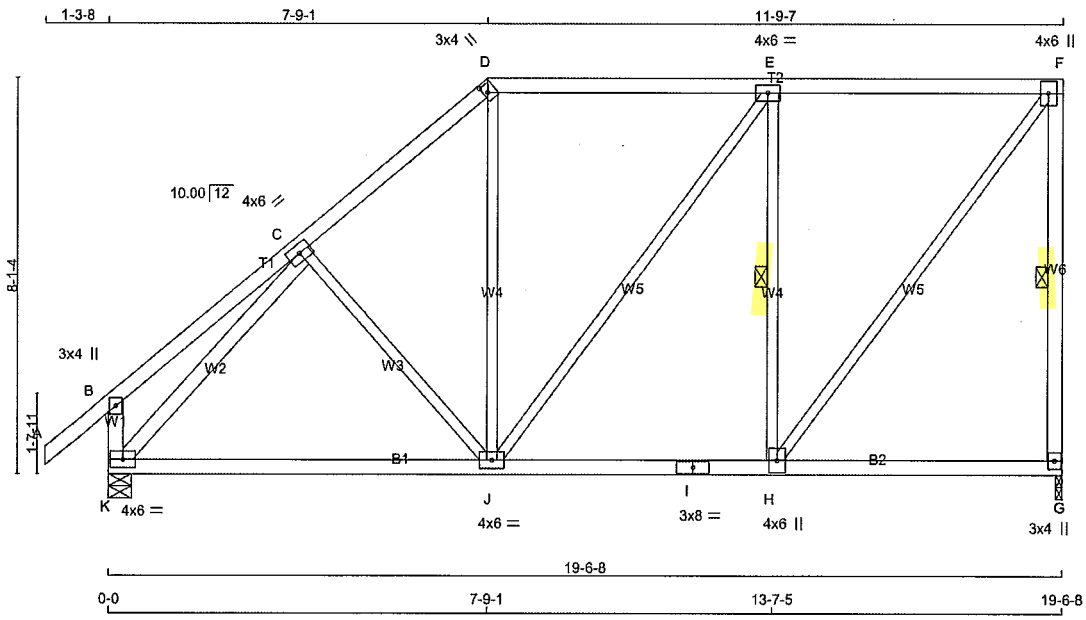

TOTAL WEIGHT = 2 X 98 = 196 lb

LUMBER
N. L. G. A. RULES

CHORDS	SIZE		LUMBER	DESCR.
A - D	2x4	DRY	No.2	SPF
D - F	2x4	DRY	No.2	SPF
G - F	2x4	DRY	No.2	SPF
K - B	2x4	DRY	No.2	SPF
K - I	2x4	DRY	No.2	SPF
I - G	2x4	DRY	No.2	SPF
ALL WEBS	2x3	DRY	No.2	SPF
EXCEPT				
K - C	2x4	DRY	No.2	SPF

DRY: SEASONED LUMBER.

PLATES (table is in inches)

JT	TYPE	PLATES	W	LEN	Y	X
B	TMV+p	MT20	3.0	4.0		
C	TMWW-t	MT20	4.0	6.0		
D	TTW+h	MT20	3.0	4.0	2.00	1.00
E	TMWW-t	MT20	4.0	6.0		
F	TMVW+p	MT20	4.0	6.0		
G	BMV1+p	MT20	3.0	4.0		
H	BMWW+t	MT20	4.0	6.0		
I	BS-t	MT20	3.0	8.0		
J	BMWWW-t	MT20	4.0	6.0		
K	BMVW1-t	MT20	4.0	6.0		

NOTES- (1)
1) Lateral braces to be a minimum of 2X4 SPF #2.

LICENSED PROFESSIONAL ENGINEER
4/02/24
C. M. HEYENS
100505065
PROVINCE OF ONTARIO

STRUCTURAL COMPONENT ONLY
DWG # TR24040087

DIMENSIONS, SUPPORTS AND LOADINGS SPECIFIED BY FABRICATOR TO BE VERIFIED BY BUILDING DESIGNER

BEARINGS

JT	FACTORED GROSS REACTION VERT	HORZ	MAXIMUM FACTORED GROSS REACTION DOWN	HORZ	UPLIFT	INPUT BRG IN-SX	REQRD BRG IN-SX
G	1279	0	1279	0	0	1-8	1-8
K	1435	0	1435	0	0	5-8	1-9

UNFACTORED REACTIONS

JT	1ST LCASE COMBINED	MAX./MIN. COMPONENT REACTIONS SNOW	LIVE	PERM.LIVE	WIND	DEAD	SOIL
G	897	635 / 0	0 / 0	0 / 0	0 / 0	262 / 0	0 / 0
K	1003	725 / 0	0 / 0	0 / 0	0 / 0	278 / 0	0 / 0

BEARING MATERIAL TO BE SPF NO.2 OR BETTER AT JOINT(S) G, K

BRACING
TOP CHORD TO BE SHEATHED OR MAX. PURLIN SPACING = 5.51 FT.
MAX. UNBRACED BOTTOM CHORD LENGTH = 10.00 FT OR RIGID CEILING DIRECTLY APPLIED.

ALL PITCH BREAKS AND PERIMETER CORNER JOINTS MUST BE LATERALLY RESTRAINED.

1 LATERAL BRACE(S) AT 1/ 2 LENGTH OF F-G, E-H.

END VERTICAL(S) MUST BE SHEATHED OR HAVE BRACES AS INDICATED IN THE MAX. UNBRACED LENGTH COLUMN OF THE TABLE BELOW

LOADING
TOTAL LOAD CASES: (4)

CHORDS

MEMB. FR-TO	MAX. FACTORED FORCE (LBS)	FACTORED VERT. LOAD LC1 (PLF) FROM	TO	MAX CSI (LC)	MAX. UNBRAC LENGTH
A- B	0 / 50	-112.4	-112.4	0.15 (1)	10.00
B- C	0 / 33	-112.4	-112.4	0.27 (1)	10.00
C- D	-1047 / 0	-112.4	-112.4	0.30 (1)	5.75
D- E	-780 / 0	-112.4	-112.4	0.69 (1)	5.51
E- F	-744 / 0	-112.4	-112.4	0.69 (1)	5.60
G- F	-1232 / 0	0.0	0.0	0.37 (1)	5.78
K- B	-320 / 0	0.0	0.0	0.03 (1)	7.81
K- J	0 / 899	-18.5	-18.5	0.30 (4)	10.00
J- I	0 / 744	-18.5	-18.5	0.29 (4)	10.00
I- H	0 / 744	-18.5	-18.5	0.29 (4)	10.00
H- G	0 / 0	-18.5	-18.5	0.14 (4)	10.00

WEBS

MEMB. FR-TO	MAX. FACTORED FORCE (LBS)	MAX CSI (LC)
C- J	-183 / 0	0.12 (1)
J- D	0 / 233	0.05 (1)
J- E	0 / 62	0.01 (4)
H- E	-871 / 0	0.36 (1)
H- F	0 / 1229	0.28 (1)
K- C	-1385 / 0	0.59 (1)

[M]

DESIGN CRITERIA

SPECIFIED LOADS:

TOP CH.	LL	=	32.5	PSF
	DL	=	6.0	PSF
BOT CH.	LL	=	0.0	PSF
	DL	=	7.4	PSF
TOTAL LOAD		=	45.9	PSF

SPACING = 24.0 IN. C/C

LOADING IN FLAT SECTION BASED ON A SLOPE OF 2.00/12 MINIMUM

THIS TRUSS IS DESIGNED FOR RESIDENTIAL OR SMALL BUILDING REQUIREMENTS OF PART 9, NBCC 2015

THIS DESIGN COMPLIES WITH:
- PART 9 OF BCBC 2018 , NBC-2019AE
- PART 9 OF OBC 2012 (2019 AMENDMENT)
- CSA 086-14
- TPIC 2014

(55 % OF 43.9 P.S.F. G.S.L. PLUS 8.4 P.S.F. RAIN LOAD) EQUALS 32.5 P.S.F. SPECIFIED ROOF LIVE LOAD

ALLOWABLE DEFL.(LL)= L/360 (0.65")
CALCULATED VERT. DEFL.(LL) = L/ 999 (0.03")
ALLOWABLE DEFL.(TL)= L/360 (0.65")
CALCULATED VERT. DEFL.(TL) = L/ 999 (0.13")

CSI: TC=0.69/1.00 (D-E:1) , BC=0.30/1.00 (J-K:4) , WB=0.59/1.00 (C-K:1) , SSI=0.32/1.00 (E-F:1)

DOL LUMBER=1.00 NAIL=1.00 LS BEND=1.10 COMP=1.10 SHEAR=1.10 TENS= 1.10

COMPANION LIVE LOAD FACTOR = 1.00

AUTOSOLVE RIGHT HEEL ONLY

TRUSS PLATE MANUFACTURER IS NOT RESPONSIBLE FOR QUALITY CONTROL IN THE TRUSS MANUFACTURING PLANT .

NAIL VALUES

PLATE	GRIP(DRY) (PSI) MAX	MIN	SHEAR (PLI) MAX	MIN	SECTION (PLI) MAX	MIN
MT20	650	371	1747	788	1987	1873

PLATE PLACEMENT TOL. = 0.250 inches

PLATE ROTATION TOL. = 5.0 Deg.

JSI GRIP= 0.83 (C) (INPUT = 0.90)
JSI METAL= 0.34 (F) (INPUT = 0.95)

JOB NAME	TRUSS NAME	QUANTITY	PLY	JOB DESC.	DRWG NO.
436388	T57	8	1	BAYVIEW WELLINGTON TRUSS DESC.	

Tamarack Roof Truss, Burlington

Version 8.630 S Aug 30 2023 MiTek Industries, Inc. Tue Apr 2 10:54:51 2024 Page 1
ID:GRmvuh1dyQr3nydBfsTFcCy6OGI-HyNMld4t3saSvAjs9Aaw1ydEXAoyq7Zv WNqQgzUo32

Scale = 1:50.6

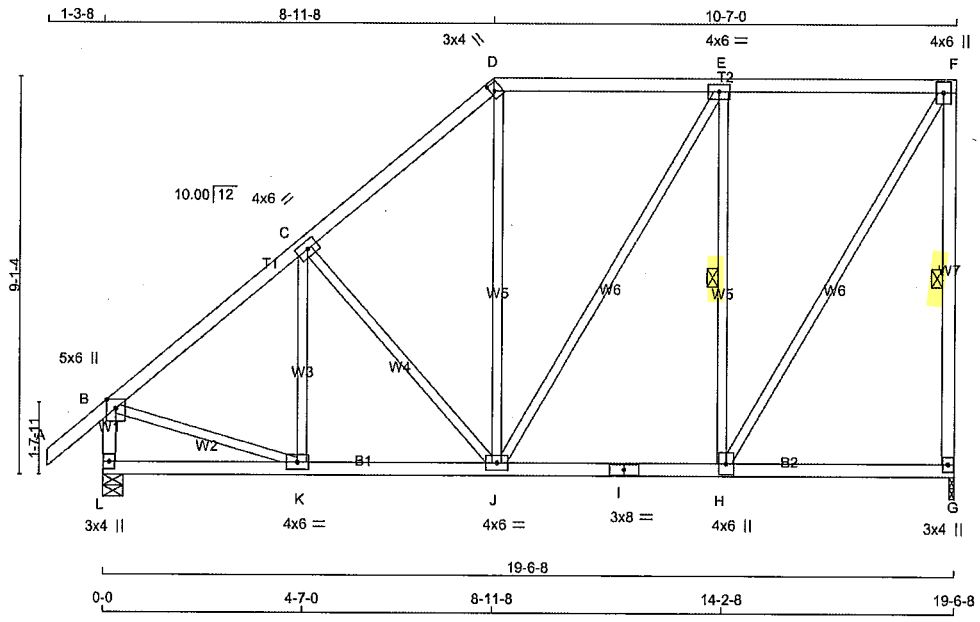

TOTAL WEIGHT = 8 X 104 = 829 lb

[M]

LUMBER
N. L. G. A. RULES

CHORDS	SIZE		LUMBER	DESCR.
A - D	2x4	DRY	No.2	SPF
D - F	2x4	DRY	No.2	SPF
G - F	2x4	DRY	No.2	SPF
L - B	2x4	DRY	No.2	SPF
L - I	2x4	DRY	No.2	SPF
I - G	2x4	DRY	No.2	SPF
ALL WEBS EXCEPT	2x3	DRY	No.2	SPF

DRY: SEASONED LUMBER.

PLATES (table is in inches)

JT	TYPE	PLATES	W	LEN	Y	X
B	TMVW+p	MT20	5.0	6.0	Edge	
C	TMWW-t	MT20	4.0	6.0		
D	TTW+h	MT20	3.0	4.0	2.00	1.00
E	TMWW-t	MT20	4.0	6.0		
F	TMVW+p	MT20	4.0	6.0		
G	BMV1+p	MT20	3.0	4.0		
H	BMWW+t	MT20	4.0	6.0		
I	BS-t	MT20	3.0	8.0		
J	BMWWW-t	MT20	4.0	6.0		
K	BMWW-t	MT20	4.0	6.0		
L	BMV1+p	MT20	3.0	4.0		

Edge - INDICATES REFERENCE CORNER OF PLATE TOUCHES EDGE OF CHORD.

NOTES- (1)
1) Lateral braces to be a minimum of 2X4 SPF #2.

LICENSED PROFESSIONAL ENGINEER
4/02/24
C. M. HEYENS
100505065
PROVINCE OF ONTARIO

STRUCTURAL COMPONENT ONLY
DWG # TR24040088

DIMENSIONS, SUPPORTS AND LOADINGS SPECIFIED BY FABRICATOR TO BE VERIFIED BY BUILDING DESIGNER

BEARINGS

JT	FACTORED GROSS REACTION VERT	HORZ	MAXIMUM FACTORED GROSS REACTION DOWN	HORZ	UPLIFT	INPUT BRG IN-SX	REQRD BRG IN-SX
G	1279	0	1279	0	0	1-8	1-8
L	1435	0	1435	0	0	5-8	1-9

UNFACTORED REACTIONS

JT	1ST LCASE COMBINED	MAX./MIN. COMPONENT REACTIONS SNOW	LIVE	PERM.LIVE	WIND	DEAD	SOIL
G	897	635 / 0	0 / 0	0 / 0	0 / 0	262 / 0	0 / 0
L	1003	725 / 0	0 / 0	0 / 0	0 / 0	278 / 0	0 / 0

BEARING MATERIAL TO BE SPF NO.2 OR BETTER AT JOINT(S) G, L

BRACING
TOP CHORD TO BE SHEATHED OR MAX. PURLIN SPACING = 5.32 FT.
MAX. UNBRACED BOTTOM CHORD LENGTH = 10.00 FT OR RIGID CEILING DIRECTLY APPLIED.

ALL PITCH BREAKS AND PERIMETER CORNER JOINTS MUST BE LATERALLY RESTRAINED.

1 LATERAL BRACE(S) AT 1/ 2 LENGTH OF F-G, E-H.

END VERTICAL(S) MUST BE SHEATHED OR HAVE BRACES AS INDICATED IN THE MAX. UNBRACED LENGTH COLUMN OF THE TABLE BELOW

LOADING
TOTAL LOAD CASES: (4)

CHORDS

MEMB. FR-TO	MAX. FACTORED FORCE (LBS)	FACTORED VERT. LOAD (PLF) FROM	TO	LC1 MAX CSI (LC)	MAX. UNBRAC LENGTH
A- B	0 / 50	-112.4	-112.4	0.15 (1)	10.00
B- C	-1179 / 0	-112.4	-112.4	0.43 (1)	5.32
C- D	-960 / 0	-112.4	-112.4	0.41 (1)	5.76
D- E	-707 / 0	-112.4	-112.4	0.55 (1)	6.12
E- F	-612 / 0	-112.4	-112.4	0.54 (1)	6.25
G- F	-1239 / 0	0.0	0.0	0.48 (1)	5.77
L- B	-1399 / 0	0.0	0.0	0.15 (1)	6.88
L- K	0 / 0	-18.5	-18.5	0.09 (4)	10.00
K- J	0 / 935	-18.5	-18.5	0.19 (1)	10.00
J- I	0 / 612	-18.5	-18.5	0.17 (4)	10.00
I- H	0 / 612	-18.5	-18.5	0.17 (4)	10.00
H- G	0 / 0	-18.5	-18.5	0.13 (4)	10.00

WEBS

MEMB. FR-TO	MAX. FACTORED FORCE (LBS)	MAX CSI (LC)
K- C	-175 / 29	0.08 (1)
C- J	-349 / 0	0.30 (1)
J- D	0 / 182	0.04 (1)
J- E	0 / 190	0.04 (1)
H- E	-900 / 0	0.49 (1)
H- F	0 / 1182	0.27 (1)
B- K	0 / 972	0.22 (1)

DESIGN CRITERIA

SPECIFIED LOADS:

TOP CH.	LL	=	32.5	PSF
	DL	=	6.0	PSF
BOT CH.	LL	=	0.0	PSF
	DL	=	7.4	PSF
TOTAL LOAD		=	45.9	PSF

SPACING = 24.0 IN. C/C

LOADING IN FLAT SECTION BASED ON A SLOPE OF 2.00/12 MINIMUM

THIS TRUSS IS DESIGNED FOR RESIDENTIAL OR SMALL BUILDING REQUIREMENTS OF PART 9, NBCC 2015

THIS DESIGN COMPLIES WITH:
- PART 9 OF BCBC 2018 , NBC-2019AE
- PART 9 OF OBC 2012 (2019 AMENDMENT)
- CSA 086-14
- TPIC 2014

(55 % OF 43.9 P.S.F. G.S.L. PLUS 8.4 P.S.F. RAIN LOAD) EQUALS 32.5 P.S.F. SPECIFIED ROOF LIVE LOAD

ALLOWABLE DEFL.(LL)= L/360 (0.65")
CALCULATED VERT. DEFL.(LL) = L/ 999 (0.03")
ALLOWABLE DEFL.(TL)= L/360 (0.65")
CALCULATED VERT. DEFL.(TL) = L/ 999 (0.06")

CSI: TC=0.55/1.00 (D-E:1) , BC=0.19/1.00 (J-K:1) , WB=0.49/1.00 (E-H:1) , SSI=0.29/1.00 (E-F:1)

DOL LUMBER=1.00 NAIL=1.00 LS BEND=1.10 COMP=1.10 SHEAR=1.10 TENS= 1.10

COMPANION LIVE LOAD FACTOR = 1.00

TRUSS PLATE MANUFACTURER IS NOT RESPONSIBLE FOR QUALITY CONTROL IN THE TRUSS MANUFACTURING PLANT .

NAIL VALUES

PLATE	GRIP(DRY) (PSI) MAX	MIN	SHEAR (PLI) MAX	MIN	SECTION (PLI) MAX	MIN
MT20	650	371	1747	788	1987	1873

PLATE PLACEMENT TOL. = 0.250 Inches

PLATE ROTATION TOL. = 5.0 Deg.

JSI GRIP= 0.74 (D) (INPUT = 0.90)
JSI METAL= 0.48 (B) (INPUT = 0.95)

JOB NAME	TRUSS NAME	QUANTITY	PLY	JOB DESC.	DRWG NO.
436388	T58	2	1	BAYVIEW WELLINGTON TRUSS DESC.	

Tamarack Roof Truss, Burlington

Version 8.630 S Aug 30 2023 MiTek Industries, Inc. Tue Apr 2 10:54:53 2024 Page 1
ID:GRmvuh1dyQr3nydBfsTFcCy6OGl-DLV7AJ67bTqA8TsFHadO6NiZtzT6I NCRqsnUZzUo30

Scale = 1:57.1

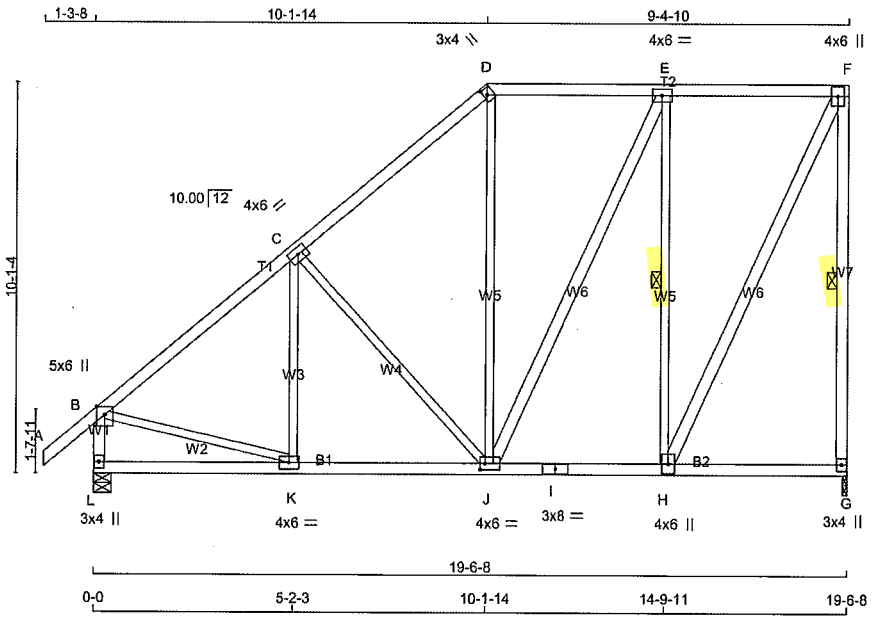

TOTAL WEIGHT = 2 X 116 = 232 lb

[M][F]

LUMBER

N. L. G. A. RULES

CHORDS	SIZE		LUMBER	DESCR.
A - D	2x4	DRY	No.2	SPF
D - F	2x4	DRY	No.2	SPF
G - F	2x4	DRY	No.2	SPF
L - B	2x4	DRY	No.2	SPF
L - I	2x4	DRY	No.2	SPF
I - G	2x4	DRY	No.2	SPF
ALL WEBS EXCEPT	2x3	DRY	No.2	SPF
J - E	2x4	DRY	No.2	SPF
H - F	2x4	DRY	No.2	SPF

DRY: SEASONED LUMBER.

PLATES (table is in inches)

JT	TYPE	PLATES	W	LEN	Y	X
B	TMVW+p	MT20	5.0	6.0	Edge	
C	TMWW-t	MT20	4.0	6.0		
D	TTW+h	MT20	3.0	4.0	2.00	1.00
E	TMWW-t	MT20	4.0	6.0		
F	TMVW+p	MT20	4.0	6.0		
G	BMV1+p	MT20	3.0	4.0		
H	BMWW+t	MT20	4.0	6.0		
I	BS-t	MT20	3.0	8.0		
J	BMWWW-t	MT20	4.0	6.0	2.00	1.50
K	BMWW-t	MT20	4.0	6.0		
L	BMV1+p	MT20	3.0	4.0		

Edge - INDICATES REFERENCE CORNER OF PLATE TOUCHES EDGE OF CHORD.

NOTES- (1)
1) Lateral braces to be a minimum of 2X4 SPF #2.

LICENSED PROFESSIONAL ENGINEER
4/02/24
C. M. HEYENS
100505065
PROVINCE OF ONTARIO

STRUCTURAL COMPONENT ONLY
DWG # TR24040089

DIMENSIONS, SUPPORTS AND LOADINGS SPECIFIED BY FABRICATOR TO BE VERIFIED BY BUILDING DESIGNER

BEARINGS

JT	FACTORED GROSS REACTION VERT	HORZ	MAXIMUM FACTORED GROSS REACTION DOWN	HORZ	UPLIFT	INPUT BRG IN-SX	REQRD BRG IN-SX
G	1279	0	1279	0	0	1-8	1-8
L	1435	0	1435	0	0	5-8	1-9

UNFACTORED REACTIONS

JT	1ST LCASE COMBINED	MAX./MIN. COMPONENT REACTIONS SNOW	LIVE	PERM.LIVE	WIND	DEAD	SOIL
G	897	635 / 0	0 / 0	0 / 0	0 / 0	262 / 0	0 / 0
L	1003	725 / 0	0 / 0	0 / 0	0 / 0	278 / 0	0 / 0

BEARING MATERIAL TO BE SPF NO.2 OR BETTER AT JOINT(S) G, L

BRACING

TOP CHORD TO BE SHEATHED OR MAX. PURLIN SPACING = 5.38 FT.
MAX. UNBRACED BOTTOM CHORD LENGTH = 10.00 FT OR RIGID CEILING DIRECTLY APPLIED.

ALL PITCH BREAKS AND PERIMETER CORNER JOINTS MUST BE LATERALLY RESTRAINED.

1 LATERAL BRACE(S) AT 1/ 2 LENGTH OF F-G, E-H.

END VERTICAL(S) MUST BE SHEATHED OR HAVE BRACES AS INDICATED IN THE MAX. UNBRACED LENGTH COLUMN OF THE TABLE BELOW

LOADING

TOTAL LOAD CASES: (4)

CHORDS

MEMB. FR-TO	MAX. FACTORED FORCE (LBS)	FACTORED VERT. LOAD (PLF) FROM	TO	LC1 MAX CSI (LC)	MAX. UNBRAC LENGTH
A- B	0 / 50	-112.4	-112.4	0.15 (1)	10.00
B- C	-1176 / 0	-112.4	-112.4	0.40 (1)	5.38
C- D	-875 / 0	-112.4	-112.4	0.39 (1)	6.04
D- E	-637 / 0	-112.4	-112.4	0.32 (1)	6.25
E- F	-502 / 0	-112.4	-112.4	0.31 (1)	6.25
G- F	-1244 / 0	0.0	0.0	0.62 (1)	5.76
L- B	-1396 / 0	0.0	0.0	0.15 (1)	6.89
L- K	0 / 0	-18.5	-18.5	0.12 (4)	10.00
K- J	0 / 937	-18.5	-18.5	0.21 (1)	10.00
J- I	0 / 502	-18.5	-18.5	0.13 (1)	10.00
I- H	0 / 502	-18.5	-18.5	0.13 (1)	10.00
H- G	0 / 0	-18.5	-18.5	0.10 (4)	10.00

WEBS

MEMB. FR-TO	MAX. FACTORED FORCE (LBS)	MAX CSI (LC)
K- C	-129 / 55	0.07 (1)
C- J	-450 / 0	0.52 (1)
J- D	0 / 124	0.03 (4)
J- E	0 / 322	0.05 (1)
H- E	-943 / 0	0.66 (1)
H- F	0 / 1155	0.19 (1)
B- K	0 / 966	0.22 (1)

DESIGN CRITERIA

SPECIFIED LOADS:

TOP CH.	LL	=	32.5	PSF
	DL	=	6.0	PSF
BOT CH.	LL	=	0.0	PSF
	DL	=	7.4	PSF
TOTAL LOAD		=	45.9	PSF

SPACING = 24.0 IN. C/C

LOADING IN FLAT SECTION BASED ON A SLOPE OF 2.00/12 MINIMUM

THIS TRUSS IS DESIGNED FOR RESIDENTIAL OR SMALL BUILDING REQUIREMENTS OF PART 9, NBCC 2015

THIS DESIGN COMPLIES WITH:
- PART 9 OF BCBC 2018 , NBC-2019AE
- PART 9 OF OBC 2012 (2019 AMENDMENT)
- CSA 086-14
- TPIC 2014

(55 % OF 43.9 P.S.F. G.S.L. PLUS 8.4 P.S.F. RAIN LOAD) EQUALS 32.5 P.S.F. SPECIFIED ROOF LIVE LOAD

ALLOWABLE DEFL.(LL)= L/360 (0.65")
CALCULATED VERT. DEFL.(LL) = L/ 999 (0.03")
ALLOWABLE DEFL.(TL)= L/360 (0.65")
CALCULATED VERT. DEFL.(TL) = L/ 999 (0.06")

CSI: TC=0.62/1.00 (F-G:1) , BC=0.21/1.00 (J-K:1) , WB=0.66/1.00 (E-H:1) , SSI=0.26/1.00 (E-F:1)

DOL LUMBER=1.00 NAIL=1.00 LS BEND=1.10 COMP=1.10 SHEAR=1.10 TENS= 1.10

COMPANION LIVE LOAD FACTOR = 1.00

TRUSS PLATE MANUFACTURER IS NOT RESPONSIBLE FOR QUALITY CONTROL IN THE TRUSS MANUFACTURING PLANT .

NAIL VALUES

PLATE	GRIP(DRY) (PSI) MAX	MIN	SHEAR (PLI) MAX	MIN	SECTION (PLI) MAX	MIN
MT20	650	371	1747	788	1987	1873

PLATE PLACEMENT TOL. = 0.250 inches

PLATE ROTATION TOL. = 5.0 Deg.

JSI GRIP= 0.74 (D) (INPUT = 0.90)
JSI METAL= 0.49 (B) (INPUT = 0.95)

JOB NAME	TRUSS NAME	QUANTITY	PLY	JOB DESC.	DRWG NO.
436388	T59	1	1	BAYVIEW WELLINGTON TRUSS DESC.	

Tamarack Roof Truss, Burlington

Version 8.630 S Aug 30 2023 MiTek Industries, Inc. Tue Apr 2 10:54:54 2024 Page 1
ID:GRmvuh1dyQr3nydBfsTFcCy6OGI-hX3VNf7IMny0mdRRrI8dfbFjmNmk1WjMgUcK1?zUo3?

Scale = 1:33.8

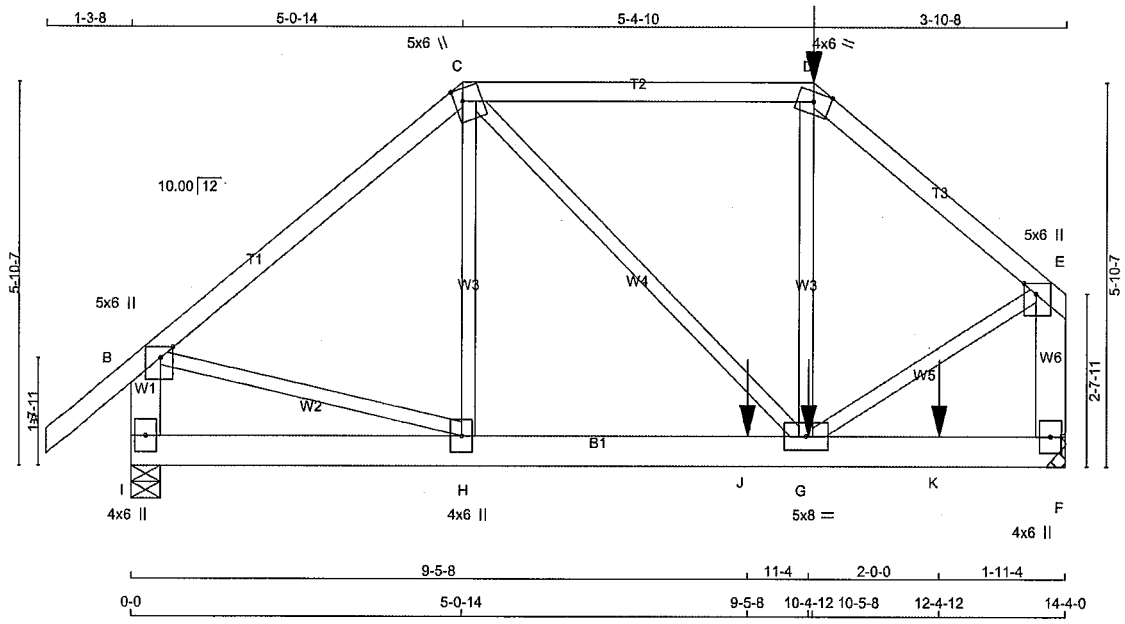

TOTAL WEIGHT = 75 lb

LUMBER
N. L. G. A. RULES

CHORDS	SIZE		LUMBER	DESCR.
A - C	2x4	DRY	No.2	SPF
C - D	2x4	DRY	No.2	SPF
D - E	2x4	DRY	No.2	SPF
I - B	2x6	DRY	No.2	SPF
F - E	2x6	DRY	No.2	SPF
I - F	2x6	DRY	No.2	SPF
ALL WEBS EXCEPT	2x3	DRY	No.2	SPF

DRY: SEASONED LUMBER.

PLATES (table is in inches)

JT	TYPE	PLATES	W	LEN	Y	X
B	TMVW+p	MT20	5.0	6.0	2.00	2.25
C	TTWW+m	MT20	5.0	6.0	2.25	1.50
D	TTW-m	MT20	4.0	6.0	Edge	
E	TMVW+p	MT20	5.0	6.0	2.00	2.25
F	BMV1+p	MT20	4.0	6.0		
G	BMWWW-t	MT20	5.0	8.0		
H	BMWW+t	MT20	4.0	6.0		
I	BMV1+p	MT20	4.0	6.0		

Edge - INDICATES REFERENCE CORNER OF PLATE TOUCHES EDGE OF CHORD.

NOTES- (1)
1) Lateral braces to be a minimum of 2X4 SPF #2.

DIMENSIONS, SUPPORTS AND LOADINGS SPECIFIED BY FABRICATOR TO BE VERIFIED BY BUILDING DESIGNER

BEARINGS

JT	FACTORED GROSS REACTION VERT	HORZ	MAXIMUM FACTORED GROSS REACTION DOWN	HORZ	UPLIFT	INPUT BRG IN-SX	REQRD BRG IN-SX
I	1505	0	1505	0	0	5-8	1-10
F	1823	0	1823	0	0	MECHANICAL	

A SUITABLE HANGER/MECHANICAL CONNECTION IS REQUIRED AT JOINT F. MINIMUM BEARING LENGTH AT JOINT F = 2-0.

UNFACTORED REACTIONS

JT	1ST LCASE COMBINED	MAX./MIN. COMPONENT REACTIONS SNOW	LIVE	PERM.LIVE	WIND	DEAD	SOIL
I	1050	772 / 0	0 / 0	0 / 0	0 / 0	277 / 0	0 / 0
F	1273	928 / 0	0 / 0	0 / 0	0 / 0	345 / 0	0 / 0

BEARING MATERIAL TO BE SPF NO.2 OR BETTER AT JOINT(S) I

BRACING
TOP CHORD TO BE SHEATHED OR MAX. PURLIN SPACING = 4.74 FT.
MAX. UNBRACED BOTTOM CHORD LENGTH = 10.00 FT OR RIGID CEILING DIRECTLY APPLIED.

ALL PITCH BREAKS AND PERIMETER CORNER JOINTS MUST BE LATERALLY RESTRAINED.

LOADING
TOTAL LOAD CASES: (4)

CHORDS

MEMB. FR-TO	MAX. FORCE (LBS)	FACTORED VERT. LOAD (PLF) FROM	TO	LC1	MAX CSI (LC)	MAX. UNBRAC LENGTH
A- B	0 / 50	-112.4	-112.4	0.17 (1)	10.00	
B- C	-1271 / 0	-112.4	-112.4	0.64 (1)	4.76	
C- D	-1172 / 0	-112.4	-112.4	0.67 (1)	4.74	
D- E	-1527 / 0	-112.4	-112.4	0.38 (1)	4.85	
I- B	-1487 / 0	0.0	0.0	0.11 (1)	7.81	
F- E	-1853 / 0	0.0	0.0	0.17 (1)	7.32	
I- H	0 / 0	-18.5	-18.5	0.11 (1)	10.00	
H- J	0 / 975	-18.5	-18.5	0.44 (1)	10.00	
J- G	0 / 975	-18.5	-18.5	0.44 (1)	10.00	
G- K	0 / 0	-18.5	-18.5	0.22 (1)	10.00	
K- F	0 / 0	-18.5	-18.5	0.22 (1)	10.00	

WEBS

MEMB. FR-TO	MAX. FORCE (LBS)	MAX CSI (LC)
H- C	0 / 91	0.03 (4)
C- G	0 / 284	0.07 (1)
G- D	0 / 118	0.04 (4)
B- H	0 / 1001	0.25 (1)
G- E	0 / 1340	0.33 (1)

SPECIFIED CONCENTRATED LOADS (LBS)

JT	LOC.	LC1	MAX-	MAX+	FACE	DIR.	TYPE	HEEL	CONN.
D	10-5-8	-245	-245	---	BACK	VERT	TOTAL	---	C1
G	10-4-12	-14	-14	---	BACK	VERT	TOTAL	---	C1
J	9-5-8	-627	-627	---	BACK	VERT	TOTAL	---	C1
K	12-4-12	-14	-14	---	BACK	VERT	TOTAL	---	C1

CONNECTION REQUIREMENTS

1) **C1:** A SUITABLE HANGER/MECHANICAL CONNECTION IS REQUIRED.

[M]

DESIGN CRITERIA

SPECIFIED LOADS:

TOP CH.	LL	=	32.5	PSF
	DL	=	6.0	PSF
BOT CH.	LL	=	0.0	PSF
	DL	=	7.4	PSF
TOTAL LOAD		=	45.9	PSF

SPACING = 24.0 IN. C/C

LOADING IN FLAT SECTION BASED ON A SLOPE OF 2.00/12 MINIMUM

THIS TRUSS IS DESIGNED FOR RESIDENTIAL OR SMALL BUILDING REQUIREMENTS OF PART 9, NBCC 2015

THIS DESIGN COMPLIES WITH:
- PART 9 OF BCBC 2018 , NBC-2019AE
- PART 9 OF OBC 2012 (2019 AMENDMENT)
- CSA 086-14
- TPIC 2014

(55 % OF 43.9 P.S.F. G.S.L. PLUS 8.4 P.S.F. RAIN LOAD) EQUALS 32.5 P.S.F. SPECIFIED ROOF LIVE LOAD

ALLOWABLE DEFL.(LL)= L/360 (0.48")
CALCULATED VERT. DEFL.(LL) = L/ 999 (0.04")
ALLOWABLE DEFL.(TL)= L/360 (0.48")
CALCULATED VERT. DEFL.(TL) = L/ 999 (0.07")

CSI: TC=0.67/1.00 (C-D:1) , BC=0.44/1.00 (G-H:1) , WB=0.33/1.00 (E-G:1) , SSI=0.55/1.00 (G-H:1)

DOL LUMBER=1.00 NAIL=1.00 LS BEND=1.00 COMP=1.00 SHEAR=1.00 TENS= 1.00

COMPANION LIVE LOAD FACTOR = 1.00

AUTOSOLVE HEELS OFF

TRUSS PLATE MANUFACTURER IS NOT RESPONSIBLE FOR QUALITY CONTROL IN THE TRUSS MANUFACTURING PLANT .

NAIL VALUES

PLATE	GRIP(DRY) (PSI) MAX	MIN	SHEAR (PLI) MAX	MIN	SECTION (PLI) MAX	MIN
MT20	650	371	1747	788	1987	1873

PLATE PLACEMENT TOL. = 0.250 inches

PLATE ROTATION TOL. = 5.0 Deg.

JSI GRIP= 0.80 (E) (INPUT = 0.90)
JSI METAL= 0.44 (H) (INPUT = 0.95)

LICENSED PROFESSIONAL ENGINEER
4/02/24
C. M. HEYENS
100505065
PROVINCE OF ONTARIO

STRUCTURAL COMPONENT ONLY
DWG # TR24040090

JOB NAME	TRUSS NAME	QUANTITY	PLY	JOB DESC.	DRWG NO.
436388	T60	1	1	BAYVIEW WELLINGTON TRUSS DESC.	

Tamarack Roof Truss, Burlington

Version 8.630 S Aug 30 2023 MiTek Industries, Inc. Tue Apr 2 10:54:55 2024 Page 1
ID:GRmvuh1dyQr3nydBfsTFcCy6OGl-Akdtb 7N744tNn0dO?fsBon?Rn8vmxoVu8LuZRzUo3

Scale = 1:42.8

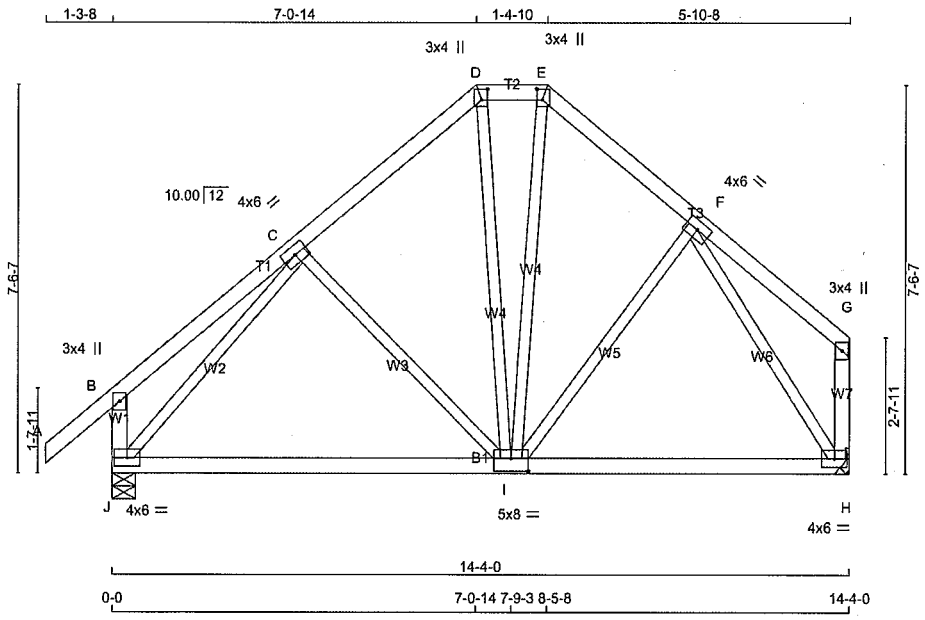

TOTAL WEIGHT = 72 lb

LUMBER
N. L. G. A. RULES

CHORDS	SIZE		LUMBER	DESCR.
A - D	2x4	DRY	No.2	SPF
D - E	2x4	DRY	No.2	SPF
E - G	2x4	DRY	No.2	SPF
J - B	2x4	DRY	No.2	SPF
H - G	2x4	DRY	No.2	SPF
J - H	2x4	DRY	No.2	SPF
ALL WEBS EXCEPT	2x3	DRY	No.2	SPF

DRY: SEASONED LUMBER.

PLATES (table is in inches)

JT	TYPE	PLATES	W	LEN	Y	X
B	TMV+p	MT20	3.0	4.0		
C	TMWW-t	MT20	4.0	6.0		
D	TTW+p	MT20	3.0	4.0	2.50	1.25
E	TTW+p	MT20	3.0	4.0	2.50	1.25
F	TMWW-t	MT20	4.0	6.0		
G	TMV+p	MT20	3.0	4.0		
H	BMVW1-t	MT20	4.0	6.0		
I	BMWWWW*-I	MT20	5.0	8.0	3.00	4.00
J	BMVW1-t	MT20	4.0	6.0		

NOTES- (1)
1) Lateral braces to be a minimum of 2X4 SPF #2.

DIMENSIONS, SUPPORTS AND LOADINGS SPECIFIED BY FABRICATOR TO BE VERIFIED BY BUILDING DESIGNER

BEARINGS

JT	FACTORED GROSS REACTION VERT	HORZ	MAXIMUM FACTORED GROSS REACTION DOWN	HORZ	UPLIFT	INPUT BRG IN-SX	REQRD BRG IN-SX
J	1094	0	1094	0	0	5-8	1-8
H	938	0	938	0	0	MECHANICAL	

A SUITABLE HANGER/MECHANICAL CONNECTION IS REQUIRED AT JOINT H. MINIMUM BEARING LENGTH AT JOINT H = 1-8.

UNFACTORED REACTIONS

JT	1ST LCASE COMBINED	MAX./MIN. COMPONENT REACTIONS SNOW	LIVE	PERM.LIVE	WIND	DEAD	SOIL
J	764	555 / 0	0 / 0	0 / 0	0 / 0	209 / 0	0 / 0
H	658	465 / 0	0 / 0	0 / 0	0 / 0	192 / 0	0 / 0

BEARING MATERIAL TO BE SPF NO.2 OR BETTER AT JOINT(S) J

BRACING
TOP CHORD TO BE SHEATHED OR MAX. PURLIN SPACING = 6.25 FT.
MAX. UNBRACED BOTTOM CHORD LENGTH = 10.00 FT OR RIGID CEILING DIRECTLY APPLIED.

ALL PITCH BREAKS AND PERIMETER CORNER JOINTS MUST BE LATERALLY RESTRAINED.

LOADING
TOTAL LOAD CASES: (4)

CHORDS

MEMB. FR-TO	MAX. FACTORED FORCE (LBS)	FACTORED VERT. LOAD LC1 (PLF) FROM	TO	MAX CSI (LC)	MAX. UNBRAC LENGTH
A- B	0 / 50	-112.4	-112.4	0.15 (1)	10.00
B- C	0 / 30	-112.4	-112.4	0.23 (1)	10.00
C- D	-628 / 0	-112.4	-112.4	0.18 (1)	6.25
D- E	-474 / 0	-112.4	-112.4	0.03 (1)	6.25
E- F	-619 / 0	-112.4	-112.4	0.12 (1)	6.25
F- G	0 / 25	-112.4	-112.4	0.16 (1)	10.00
J- B	-306 / 0	0.0	0.0	0.03 (1)	7.81
H- G	-125 / 0	0.0	0.0	0.02 (1)	7.81
J- I	0 / 607	-18.5	-18.5	0.32 (4)	10.00
I- H	0 / 473	-18.5	-18.5	0.31 (4)	10.00

WEBS

MEMB. FR-TO	MAX. FACTORED FORCE (LBS)	MAX CSI (LC)
C- I	-207 / 0	0.13 (1)
I- F	-25 / 30	0.02 (1)
J- C	-950 / 0	0.47 (1)
F- H	-904 / 0	0.46 (1)
D- I	0 / 155	0.03 (1)
I- E	0 / 177	0.04 (1)

[M][F]

DESIGN CRITERIA

SPECIFIED LOADS:

TOP CH.	LL	=	32.5	PSF
	DL	=	6.0	PSF
BOT CH.	LL	=	0.0	PSF
	DL	=	7.4	PSF
TOTAL LOAD		=	45.9	PSF

SPACING = 24.0 IN. C/C

LOADING IN FLAT SECTION BASED ON A SLOPE OF 2.00/12 MINIMUM

THIS TRUSS IS DESIGNED FOR RESIDENTIAL OR SMALL BUILDING REQUIREMENTS OF PART 9, NBCC 2015

THIS DESIGN COMPLIES WITH:
- PART 9 OF BCBC 2018 , NBC-2019AE
- PART 9 OF OBC 2012 (2019 AMENDMENT)
- CSA 086-14
- TPIC 2014

(55 % OF 43.9 P.S.F. G.S.L. PLUS 8.4 P.S.F. RAIN LOAD) EQUALS 32.5 P.S.F. SPECIFIED ROOF LIVE LOAD

ALLOWABLE DEFL.(LL)= L/360 (0.48")
CALCULATED VERT. DEFL.(LL) = L/ 999 (0.01")
ALLOWABLE DEFL.(TL)= L/360 (0.48")
CALCULATED VERT. DEFL.(TL) = L/ 999 (0.10")

CSI: TC=0.23/1.00 (B-C:1) , BC=0.32/1.00 (I-J:4) , WB=0.47/1.00 (C-J:1) , SSI=0.15/1.00 (C-D:1)

DOL LUMBER=1.00 NAIL=1.00 LS BEND=1.10 COMP=1.10 SHEAR=1.10 TENS= 1.10

COMPANION LIVE LOAD FACTOR = 1.00

AUTOSOLVE LEFT HEEL ONLY

TRUSS PLATE MANUFACTURER IS NOT RESPONSIBLE FOR QUALITY CONTROL IN THE TRUSS MANUFACTURING PLANT .

NAIL VALUES

PLATE	GRIP(DRY) (PSI) MAX	MIN	SHEAR (PLI) MAX	MIN	SECTION (PLI) MAX	MIN
MT20	650	371	1747	788	1987	1873

PLATE PLACEMENT TOL. = 0.250 inches

PLATE ROTATION TOL. = 5.0 Deg.

JSI GRIP= 0.76 (F) (INPUT = 0.90)
JSI METAL= 0.21 (C) (INPUT = 0.95)

LICENSED PROFESSIONAL ENGINEER
4/02/24
C. M. HEYENS
100505065
PROVINCE OF ONTARIO

STRUCTURAL COMPONENT ONLY
DWG # TR24040091

JOB NAME	TRUSS NAME	QUANTITY	PLY	JOB DESC.	DRWG NO.
436388	T61	3	1	BAYVIEW WELLINGTON TRUSS DESC.	

Tamarack Roof Truss, Burlington

Version 8.630 S Aug 30 2023 MiTek Industries, Inc. Tue Apr 2 10:54:56 2024 Page 1
ID:GRmvuh1dyQr3nydBfsTFcCy6OGl-ewBFoK80uOCk?xbpyjA5k0K9uBXKVUMe7o5R4uzUo2z

Scale = 1:34.8

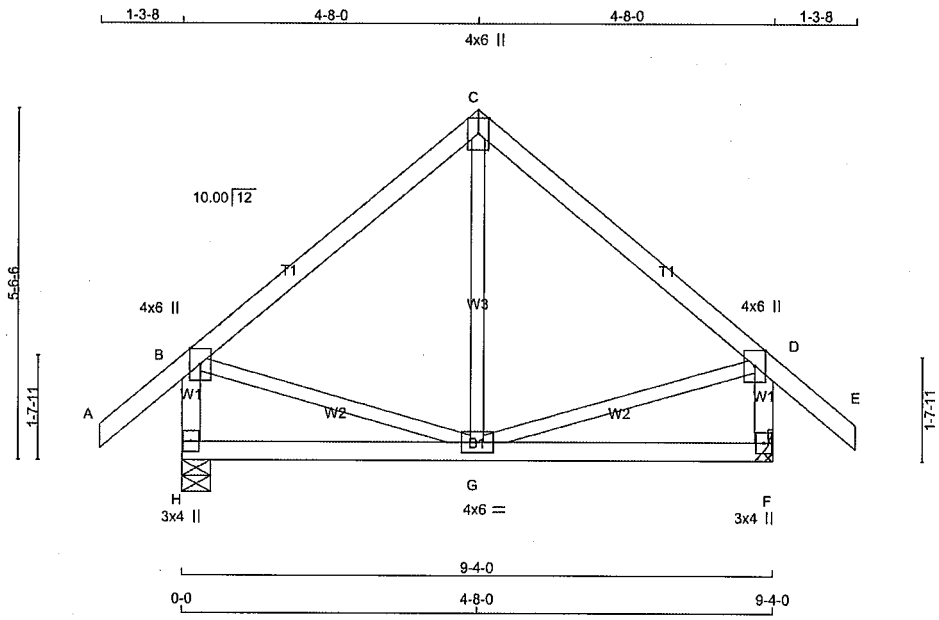

TOTAL WEIGHT = 3 X 43 = 129 lb

LUMBER
N. L. G. A. RULES

CHORDS	SIZE		LUMBER	DESCR.
A - C	2x4	DRY	No.2	SPF
C - E	2x4	DRY	No.2	SPF
H - B	2x4	DRY	No.2	SPF
F - D	2x4	DRY	No.2	SPF
H - F	2x4	DRY	No.2	SPF
ALL WEBS EXCEPT	2x3	DRY	No.2	SPF

DRY: SEASONED LUMBER.

PLATES (table is in inches)

JT	TYPE	PLATES	W	LEN	Y	X
B	TMVW+p	MT20	4.0	6.0	Edge	
C	TTW+p	MT20	4.0	6.0	Edge	
D	TMVW+p	MT20	4.0	6.0	Edge	
F	BMV1+p	MT20	3.0	4.0		
G	BMWWW-t	MT20	4.0	6.0		
H	BMV1+p	MT20	3.0	4.0		

Edge - INDICATES REFERENCE CORNER OF PLATE TOUCHES EDGE OF CHORD.

NOTES- (1)
1) Lateral braces to be a minimum of 2X4 SPF #2.

DIMENSIONS, SUPPORTS AND LOADINGS SPECIFIED BY FABRICATOR TO BE VERIFIED BY BUILDING DESIGNER

BEARINGS

JT	FACTORED GROSS REACTION VERT	HORZ	MAXIMUM FACTORED GROSS REACTION DOWN	HORZ	UPLIFT	INPUT BRG IN-SX	REQRD BRG IN-SX
H	767	0	767	0	0	5-8	1-8
F	767	0	767	0	0	MECHANICAL	

A SUITABLE HANGER/MECHANICAL CONNECTION IS REQUIRED AT JOINT F. MINIMUM BEARING LENGTH AT JOINT F = 1-8.

UNFACTORED REACTIONS

JT	1ST LCASE COMBINED	MAX./MIN. COMPONENT REACTIONS SNOW	LIVE	PERM.LIVE	WIND	DEAD	SOIL
H	535	393 / 0	0 / 0	0 / 0	0 / 0	142 / 0	0 / 0
F	535	393 / 0	0 / 0	0 / 0	0 / 0	142 / 0	0 / 0

BEARING MATERIAL TO BE SPF NO.2 OR BETTER AT JOINT(S) H

BRACING
TOP CHORD TO BE SHEATHED OR MAX. PURLIN SPACING = 6.25 FT.
MAX. UNBRACED BOTTOM CHORD LENGTH = 10.00 FT OR RIGID CEILING DIRECTLY APPLIED.

ALL PITCH BREAKS AND PERIMETER CORNER JOINTS MUST BE LATERALLY RESTRAINED.

LOADING
TOTAL LOAD CASES: (4)

CHORDS

MEMB. FR-TO	MAX. FACTORED FORCE (LBS)	FACTORED VERT. LOAD (PLF) FROM	TO	LC1 MAX CSI (LC)	MAX. UNBRAC LENGTH
A- B	0 / 50	-112.4	-112.4	0.15 (1)	10.00
B- C	-369 / 0	-112.4	-112.4	0.31 (1)	6.25
C- D	-369 / 0	-112.4	-112.4	0.31 (1)	6.25
D- E	0 / 50	-112.4	-112.4	0.15 (1)	10.00
H- B	-733 / 0	0.0	0.0	0.08 (1)	7.81
F- D	-733 / 0	0.0	0.0	0.08 (1)	7.81
H- G	0 / 0	-18.5	-18.5	0.11 (4)	10.00
G- F	0 / 0	-18.5	-18.5	0.11 (4)	10.00

WEBS

MEMB. FR-TO	MAX. FACTORED FORCE (LBS)	MAX CSI (LC)
G- C	-53 / 70	0.02 (4)
B- G	0 / 294	0.07 (1)
G- D	0 / 294	0.07 (1)

DESIGN CRITERIA

SPECIFIED LOADS:

TOP CH.	LL	=	32.5	PSF	
	DL	=	6.0	PSF	
BOT CH.	LL	=	0.0	PSF	
	DL	=	7.4	PSF	
TOTAL LOAD		=	45.9	PSF	

SPACING = 24.0 IN. C/C

THIS TRUSS IS DESIGNED FOR RESIDENTIAL OR SMALL BUILDING REQUIREMENTS OF PART 9, NBCC 2015

THIS DESIGN COMPLIES WITH:
- PART 9 OF BCBC 2018 , NBC-2019AE
- PART 9 OF OBC 2012 (2019 AMENDMENT)
- CSA 086-14
- TPIC 2014

(55 % OF 43.9 P.S.F. G.S.L. PLUS 8.4 P.S.F. RAIN LOAD) EQUALS 32.5 P.S.F. SPECIFIED ROOF LIVE LOAD

ALLOWABLE DEFL.(LL)= L/360 (0.31")
CALCULATED VERT. DEFL.(LL) = L/ 999 (0.00")
ALLOWABLE DEFL.(TL)= L/360 (0.31")
CALCULATED VERT. DEFL.(TL) = L/ 999 (0.01")

CSI: TC=0.31/1.00 (B-C:1) , BC=0.11/1.00 (G-H:4) , WB=0.07/1.00 (D-G:1) , SSI=0.16/1.00 (B-C:1)

DOL LUMBER=1.00 NAIL=1.00 LS BEND=1.10 COMP=1.10 SHEAR=1.10 TENS= 1.10

COMPANION LIVE LOAD FACTOR = 1.00

TRUSS PLATE MANUFACTURER IS NOT RESPONSIBLE FOR QUALITY CONTROL IN THE TRUSS MANUFACTURING PLANT .

NAIL VALUES

PLATE	GRIP(DRY) (PSI) MAX	MIN	SHEAR (PLI) MAX	MIN	SECTION (PLI) MAX	MIN
MT20	650	371	1747	788	1987	1873

PLATE PLACEMENT TOL. = 0.250 inches

PLATE ROTATION TOL. = 5.0 Deg.

JSI GRIP= 0.48 (G) (INPUT = 0.90)
JSI METAL= 0.26 (D) (INPUT = 0.95)

LICENSED PROFESSIONAL ENGINEER
4/02/24
C. M. HEYENS
100505065
PROVINCE OF ONTARIO

STRUCTURAL COMPONENT ONLY
DWG # TR24040092

JOB NAME	TRUSS NAME	QUANTITY	PLY	JOB DESC.	DRWG NO.
436388	T61Z	1	1	BAYVIEW WELLINGTON TRUSS DESC.	

Tamarack Roof Truss, Burlington

Version 8.630 S Aug 30 2023 MiTek Industries, Inc. Tue Apr 2 10:54:58 2024 Page 1
ID:GRmvuh1dyQr3nydBfsTFcCy6OGI-aJI0D0AGP?SSEFIC48CZpRPRI 65zNpxb6aY9mzUo2x

Scale = 1:34.8

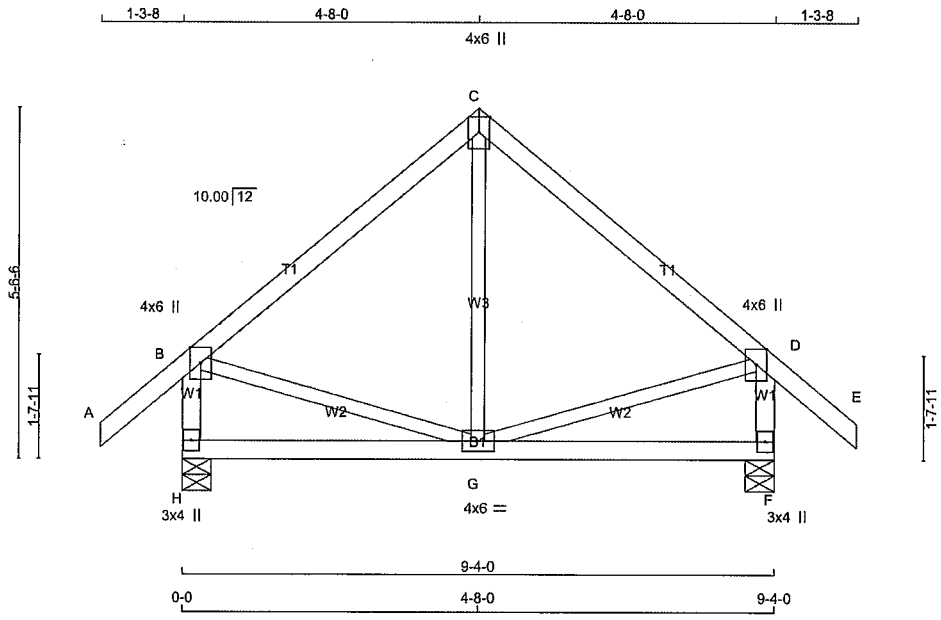

TOTAL WEIGHT = 43 lb

LUMBER
N. L. G. A. RULES

CHORDS	SIZE		LUMBER	DESCR.
A - C	2x4	DRY	No.2	SPF
C - E	2x4	DRY	No.2	SPF
H - B	2x4	DRY	No.2	SPF
F - D	2x4	DRY	No.2	SPF
H - F	2x4	DRY	No.2	SPF
ALL WEBS EXCEPT	2x3	DRY	No.2	SPF

DRY: SEASONED LUMBER.

PLATES (table is in inches)

JT	TYPE	PLATES	W	LEN	Y	X
B	TMVW+p	MT20	4.0	6.0	Edge	
C	TTW+p	MT20	4.0	6.0	Edge	
D	TMVW+p	MT20	4.0	6.0	Edge	
F	BMV1+p	MT20	3.0	4.0		
G	BMWWW-t	MT20	4.0	6.0		
H	BMV1+p	MT20	3.0	4.0		

Edge - INDICATES REFERENCE CORNER OF PLATE TOUCHES EDGE OF CHORD.

NOTES- (1)
1) Lateral braces to be a minimum of 2X4 SPF #2.

DIMENSIONS, SUPPORTS AND LOADINGS SPECIFIED BY FABRICATOR TO BE VERIFIED BY BUILDING DESIGNER

BEARINGS

JT	FACTORED GROSS REACTION VERT	HORZ	MAXIMUM FACTORED GROSS REACTION DOWN	HORZ	UPLIFT	INPUT BRG IN-SX	REQRD BRG IN-SX
H	1000	0	1000	0	0	5-8	1-8
F	1000	0	1000	0	0	5-8	1-8

UNFACTORED REACTIONS

JT	1ST LCASE COMBINED	MAX./MIN. COMPONENT REACTIONS SNOW	LIVE	PERM.LIVE	WIND	DEAD	SOIL
H	721	393 / 0	0 / 0	0 / 0	0 / 0	328 / 0	0 / 0
F	721	393 / 0	0 / 0	0 / 0	0 / 0	328 / 0	0 / 0

BEARING MATERIAL TO BE SPF NO.2 OR BETTER AT JOINT(S) H, F

BRACING
TOP CHORD TO BE SHEATHED OR MAX. PURLIN SPACING = 6.25 FT.
MAX. UNBRACED BOTTOM CHORD LENGTH = 10.00 FT OR RIGID CEILING DIRECTLY APPLIED.

ALL PITCH BREAKS AND PERIMETER CORNER JOINTS MUST BE LATERALLY RESTRAINED.

LOADING
TOTAL LOAD CASES: (4)

CHORDS

MEMB. FR-TO	MAX. FACTORED FORCE (LBS)	FACTORED VERT. LOAD (PLF) FROM	TO	LC1	MAX CSI (LC)	MAX. UNBRAC LENGTH
A- B	0 / 50	-112.4	-112.4	0.17 (1)	10.00	
B- C	-562 / 0	-112.4	-112.4	0.48 (1)	6.25	
C- D	-562 / 0	-112.4	-112.4	0.48 (1)	6.25	
D- E	0 / 50	-112.4	-112.4	0.17 (1)	10.00	
H- B	-899 / 0	0.0	0.0	0.10 (1)	7.81	
F- D	-899 / 0	0.0	0.0	0.10 (1)	7.81	
H- G	0 / 0	-43.5	-93.5	0.48 (4)	10.00	
G- F	0 / 0	-93.5	-43.5	0.48 (4)	10.00	

WEBS

MEMB. FR-TO	MAX. FACTORED FORCE (LBS)	MAX CSI (LC)
G- C	0 / 348	0.13 (4)
B- G	0 / 448	0.11 (1)
G- D	0 / 448	0.11 (1)

DESIGN CRITERIA

*** SPECIAL LOADS ANALYSIS ***
GEOMETRY AND/OR BASIC LOADS CHANGED BY USER.
LOADS WERE DERIVED FROM USER INPUT
NO FURTHER MODIFICATIONS WERE MADE

SPECIFIED LOADS:

TOP CH.	LL	=	32.5	PSF
	DL	=	6.0	PSF
BOT CH.	LL	=	0.0	PSF
	DL	=	7.4	PSF
TOTAL LOAD		=	45.9	PSF

SPACING = 24.0 IN. C/C

*** NON STANDARD GIRDER ***
ADDT'L USER-DEFINED LOADS APPLIED TO ALL LOAD CASES.

THIS TRUSS IS DESIGNED FOR RESIDENTIAL OR SMALL BUILDING REQUIREMENTS OF PART 9, NBCC 2015

THIS DESIGN COMPLIES WITH:
- PART 9 OF BCBC 2018 , NBC-2019AE
- PART 9 OF OBC 2012 (2019 AMENDMENT)
- CSA 086-14
- TPIC 2014

(55 % OF 43.9 P.S.F. G.S.L. PLUS 8.4 P.S.F. RAIN LOAD) EQUALS 32.5 P.S.F. SPECIFIED ROOF LIVE LOAD

ALLOWABLE DEFL.(LL)= L/360 (0.31")
CALCULATED VERT. DEFL.(LL) = L/ 999 (0.00")
ALLOWABLE DEFL.(TL)= L/360 (0.31")
CALCULATED VERT. DEFL.(TL) = L/ 999 (0.04")

CSI: TC=0.48/1.00 (B-C:1) , BC=0.48/1.00 (G-H:4) , WB=0.13/1.00 (C-G:4) , SSI=0.32/1.00 (F-G:4)

DOL LUMBER=1.00 NAIL=1.00 LS BEND=1.00 COMP=1.00 SHEAR=1.00 TENS= 1.00

COMPANION LIVE LOAD FACTOR = 1.00

TRUSS PLATE MANUFACTURER IS NOT RESPONSIBLE FOR QUALITY CONTROL IN THE TRUSS MANUFACTURING PLANT .

NAIL VALUES

PLATE	GRIP(DRY) (PSI) MAX	MIN	SHEAR (PLI) MAX	MIN	SECTION (PLI) MAX	MIN
MT20	650	371	1747	788	1987	1873

PLATE PLACEMENT TOL. = 0.250 inches

PLATE ROTATION TOL. = 5.0 Deg.

JSI GRIP= 0.73 (G) (INPUT = 0.90)
JSI METAL= 0.35 (D) (INPUT = 0.95)

LICENSED PROFESSIONAL ENGINEER
4/02/24
C. M. HEYENS
100505065
PROVINCE OF ONTARIO

STRUCTURAL COMPONENT ONLY
DWG # TR24040093

JOB NAME	TRUSS NAME	QUANTITY	PLY	JOB DESC.	DRWG NO.
436388	T62	1	2	BAYVIEW WELLINGTON TRUSS DESC.	

Tamarack Roof Truss, Burlington

Version 8.630 S Aug 30 2023 MiTek Industries, Inc. Tue Apr 2 10:54:59 2024 Page 1
ID:GRmvuh1dyQr3nydBfsTFcCy6OGl-2VsORMAuAJaJsOKOdrkoMeyhaOVEis75pmJ5hCzUo2w

Scale = 1:32.6

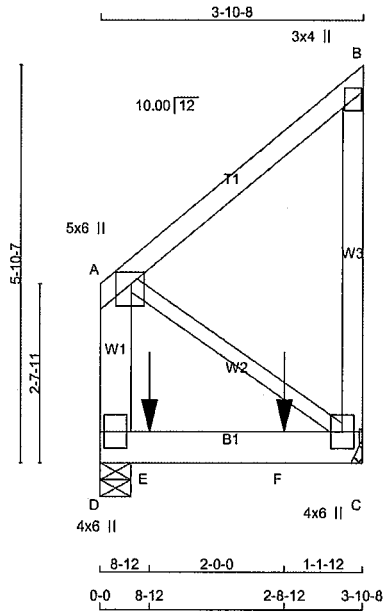

TOTAL WEIGHT = 2 X 26 = 51 lb

LUMBER
N. L. G. A. RULES

CHORDS	SIZE		LUMBER	DESCR.
A - B	2x4	DRY	No.2	SPF
C - B	2x4	DRY	No.2	SPF
D - A	2x6	DRY	No.2	SPF
D - C	2x6	DRY	No.2	SPF
ALL WEBS	2x3	DRY	No.2	SPF

DRY: SEASONED LUMBER.

DESIGN CONSISTS OF 2 TRUSSES BUILT SEPARATELY THEN FASTENED TOGETHER AS FOLLOWS:

CHORDS	#ROWS	SURFACE SPACING (IN)	LOAD(PLF)
TOP CHORDS : (0.122"X3") SPIRAL NAILS			
A- B	1	12	TOP
B- C	1	12	TOP
D- A	2	12	TOP
BOTTOM CHORDS : (0.122"X3") SPIRAL NAILS			
D- C	2	12	SIDE(0.0)
WEBS : (0.122"X3") SPIRAL NAILS			
2x3	1	6	

NAILS TO BE DRIVEN FROM ONE SIDE ONLY.

GIRDER NAILING ASSUMES NAILED HANGERS ARE FASTENED WITH MIN. 3-0 INCH NAILS.

TOP - COMPONENTS ARE LOADED FROM THE TOP AND MUST BE PLACED ON TOP EDGE OF ALL PLIES FOR THE LOAD TO BE TRANSFERRED TO EACH PLY.

SIDE - PLF SHOWN IS THE EQUIVALENT UDL APPLIED TO ONE SIDE THAT THE CORRESPONDING NAILING PATTERN SHALL BE CAPABLE OF TRANSFERING. REMAINING PLF MUST BE APPLIED ON THE OPPOSITE SIDE OR ON THE TOP.

PLATES (table is in inches)

JT	TYPE	PLATES	W	LEN	Y	X
A	TMVW+p	MT20	5.0	6.0	2.00	2.25
B	TMV+p	MT20	3.0	4.0		
C	BMVW1+p	MT20	4.0	6.0		
D	BMV1+p	MT20	4.0	6.0		

LICENSED PROFESSIONAL ENGINEER
4/02/24
C. M. HEYENS
100505065
PROVINCE OF ONTARIO

STRUCTURAL COMPONENT ONLY
DWG # TR24040094

DIMENSIONS, SUPPORTS AND LOADINGS SPECIFIED BY FABRICATOR TO BE VERIFIED BY BUILDING DESIGNER

BEARINGS

JT	FACTORED GROSS REACTION VERT	HORZ	MAXIMUM FACTORED GROSS REACTION DOWN	HORZ	UPLIFT	INPUT BRG IN-SX	REQRD BRG IN-SX
C	922	0	922	0	0	MECHANICAL	
D	1084	0	1084	0	0	5-8	1-8

A SUITABLE HANGER/MECHANICAL CONNECTION IS REQUIRED AT JOINT C. MINIMUM BEARING LENGTH AT JOINT C = 1-8.

UNFACTORED REACTIONS

JT	1ST LCASE COMBINED	MAX./MIN. COMPONENT REACTIONS SNOW	LIVE	PERM.LIVE	WIND	DEAD	SOIL
C	642	477 / 0	0 / 0	0 / 0	0 / 0	166 / 0	0 / 0
D	755	561 / 0	0 / 0	0 / 0	0 / 0	194 / 0	0 / 0

BEARING MATERIAL TO BE SPF NO.2 OR BETTER AT JOINT(S) D

BRACING
TOP CHORD TO BE SHEATHED OR MAX. PURLIN SPACING = 10.00 FT.
MAX. UNBRACED BOTTOM CHORD LENGTH = 10.00 FT OR RIGID CEILING DIRECTLY APPLIED.

ALL PITCH BREAKS AND PERIMETER CORNER JOINTS MUST BE LATERALLY RESTRAINED.

LOADING
TOTAL LOAD CASES: (4)

CHORDS

MEMB. FR-TO	MAX. FORCE (LBS)	FACTORED VERT. LOAD (PLF) FROM	TO	LC1	MAX CSI (LC)	MAX. UNBRAC LENGTH
A- B	0 / 0	-112.4	-112.4	0.16 (1)	10.00	
C- B	-218 / 0	0.0	0.0	0.06 (1)	7.81	
D- A	-218 / 0	0.0	0.0	0.01 (1)	7.81	
D- E	0 / 0	-18.5	-18.5	0.29 (1)	10.00	
E- F	0 / 0	-18.5	-18.5	0.29 (1)	10.00	
F- C	0 / 0	-18.5	-18.5	0.29 (1)	10.00	

WEBS

MEMB. FR-TO	MAX. FORCE (LBS)	MAX CSI (LC)
A- C	0 / 0	0.00 (1)

SPECIFIED CONCENTRATED LOADS (LBS)

JT	LOC.	LC1	MAX-	MAX+	FACE	DIR.	TYPE	HEEL	CONN.
E	8-12	-522	-522	---	FRONT	VERT	TOTAL	---	C1
F	2-8-12	-520	-520	---	FRONT	VERT	TOTAL	---	C1

CONNECTION REQUIREMENTS

1) **C1:** A SUITABLE HANGER/MECHANICAL CONNECTION IS REQUIRED.

[M]

DESIGN CRITERIA

SPECIFIED LOADS:

TOP CH.	LL	=	32.5	PSF
	DL	=	6.0	PSF
BOT CH.	LL	=	0.0	PSF
	DL	=	7.4	PSF
TOTAL LOAD		=	45.9	PSF

SPACING = 24.0 IN. C/C

THIS TRUSS IS DESIGNED FOR RESIDENTIAL OR SMALL BUILDING REQUIREMENTS OF PART 9, NBCC 2015

THIS DESIGN COMPLIES WITH:
- PART 9 OF BCBC 2018 , NBC-2019AE
- PART 9 OF OBC 2012 (2019 AMENDMENT)
- CSA 086-14
- TPIC 2014

(55 % OF 43.9 P.S.F. G.S.L. PLUS 8.4 P.S.F. RAIN LOAD) EQUALS 32.5 P.S.F. SPECIFIED ROOF LIVE LOAD

ALLOWABLE DEFL.(LL)= L/360 (0.19")
CALCULATED VERT. DEFL.(LL) = L/ 999 (0.02")
ALLOWABLE DEFL.(TL)= L/360 (0.19")
CALCULATED VERT. DEFL.(TL) = L/ 999 (0.03")

CSI: TC=0.16/1.00 (A-B:1) , BC=0.29/1.00 (C-D:1) , WB=0.00/1.00 (A-C:1) , SSI=0.29/1.00 (C-D:1)

DOL LUMBER=1.00 NAIL=1.00 LS BEND=1.00 COMP=1.00 SHEAR=1.00 TENS= 1.00

COMPANION LIVE LOAD FACTOR = 1.00

AUTOSOLVE RIGHT HEEL ONLY

TRUSS PLATE MANUFACTURER IS NOT RESPONSIBLE FOR QUALITY CONTROL IN THE TRUSS MANUFACTURING PLANT .

NAIL VALUES

PLATE	GRIP(DRY) (PSI) MAX	MIN	SHEAR (PLI) MAX	MIN	SECTION (PLI) MAX	MIN
MT20	650	371	1747	788	1987	1873

PLATE PLACEMENT TOL. = 0.250 inches

PLATE ROTATION TOL. = 5.0 Deg.

JSI GRIP= 0.05 (B) (INPUT = 0.90)
JSI METAL= 0.04 (B) (INPUT = 0.95)

CONTINUED ON PAGE 2

NOTES- (1)
1) Lateral braces to be a minimum of 2X4 SPF #2.

LICENSED PROFESSIONAL ENGINEER
4/02/24
C. M. HEYENS
100505065
PROVINCE OF ONTARIO

STRUCTURAL COMPONENT ONLY
DWG # TR24040094

JOB NAME	TRUSS NAME	QUANTITY	PLY	JOB DESC.	DRWG NO.
436388	T70	5	1	BAYVIEW WELLINGTON TRUSS DESC.	

Tamarack Roof Truss, Burlington

Version 8.630 S Aug 30 2023 MiTek Industries, Inc. Tue Apr 2 10:55:00 2024 Page 1
ID:GRmvuh1dyQr3nydBfsTFcCy6OGI-WhQmeiBWxdiAUYvbBZF1usUpfooWR7dE2Q3fDfzUo2v

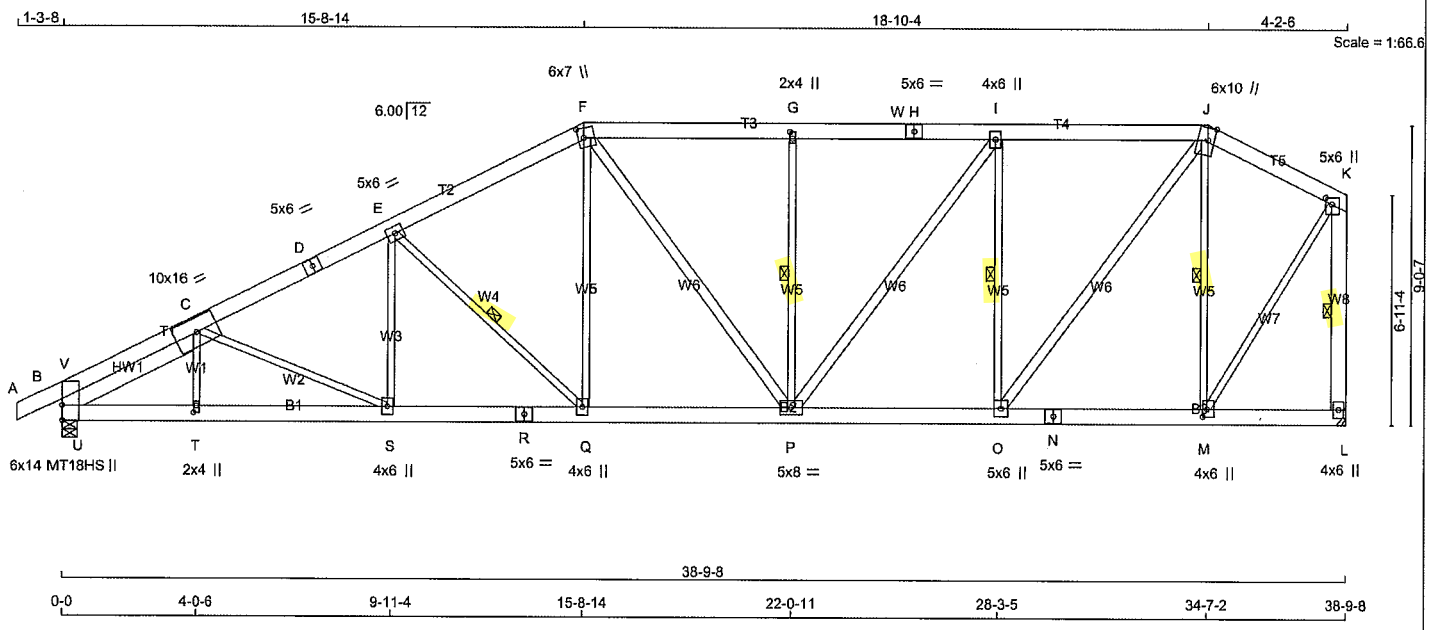

TOTAL WEIGHT = 5 X 250 = 1250 lb

LUMBER
N. L. G. A. RULES

CHORDS	SIZE		LUMBER	DESCR.
A - D	2x6	DRY	No.2	SPF
D - F	2x6	DRY	No.2	SPF
F - H	2x6	DRY	No.2	SPF
H - J	2x6	DRY	No.2	SPF
J - K	2x6	DRY	No.2	SPF
L - K	2x6	DRY	No.2	SPF
B - R	2x6	DRY	No.2	SPF
R - N	2x6	DRY	No.2	SPF
N - L	2x6	DRY	No.2	SPF
REINFORCING MEMBERS				
HW1	2x6	DRY	No.2	SPF
ALL WEBS EXCEPT	2x3	DRY	No.2	SPF
F - P	2x4	DRY	No.2	SPF
P - I	2x4	DRY	No.2	SPF
O - J	2x4	DRY	No.2	SPF

DRY: SEASONED LUMBER.

PLATES (table is in inches)

JT	TYPE	PLATES	W	LEN	Y	X
B	TMBMW1m	MT18HS	6.0	14.0		Edge
C	TMWWW-t	MT20	10.0	16.0		
D	TS-t	MT20	5.0	6.0		
E	TMWW-t	MT20	5.0	6.0		
F	TTWW+m	MT20	6.0	7.0	3.50	2.00
G	TMW+w	MT20	2.0	4.0	2.50	1.00
H	TS-t	MT20	5.0	6.0		
I	TMWW+t	MT20	4.0	6.0		
J	TTWW+m	MT20	6.0	10.0	Edge	2.25
K	TMVW+p	MT20	5.0	6.0	2.50	2.25
L	BMV1+p	MT20	4.0	6.0		
M	BMWW+t	MT20	4.0	6.0	2.75	1.50
N	BS-t	MT20	5.0	6.0		
O	BMWW+t	MT20	5.0	6.0		
P	BMWWW-t	MT20	5.0	8.0		
Q	BMWW+t	MT20	4.0	6.0		
R	BS-t	MT20	5.0	6.0		
S	BMWW+t	MT20	4.0	6.0		
T	BMW+w	MT20	2.0	4.0	2.50	1.00

LICENSED PROFESSIONAL ENGINEER
4/02/24
C. M. HEYENS
100505065
PROVINCE OF ONTARIO

STRUCTURAL COMPONENT ONLY
DWG # TR24040095

DIMENSIONS, SUPPORTS AND LOADINGS SPECIFIED BY FABRICATOR TO BE VERIFIED BY BUILDING DESIGNER

BEARINGS

JT	FACTORED GROSS REACTION VERT	HORZ	MAXIMUM FACTORED GROSS REACTION DOWN	HORZ	UPLIFT	INPUT BRG IN-SX	REQRD BRG IN-SX
B	2762	0	2762	0	0	5-8	3-0
L	2662	0	2662	0	0	MECHANICAL	

A SUITABLE HANGER/MECHANICAL CONNECTION IS REQUIRED AT JOINT L. MINIMUM BEARING LENGTH AT JOINT L = 3-2.

UNFACTORED REACTIONS

JT	1ST LCASE COMBINED	MAX./MIN. COMPONENT REACTIONS SNOW	LIVE	PERM.LIVE	WIND	DEAD	SOIL
B	1940	1350 / 0	0 / 0	0 / 0	0 / 0	590 / 0	0 / 0
L	1877	1260 / 0	0 / 0	0 / 0	0 / 0	618 / 0	0 / 0

BEARING MATERIAL TO BE SPF NO.2 OR BETTER AT JOINT(S) B

BRACING
FOR SECTION F-J, MAX. PURLIN SPACING = 2.00 FT.
FOR OTHER SECTIONS, TOP CHORD TO BE SHEATHED OR MAX. PURLIN SPACING = 4.14 FT.
MAX. UNBRACED BOTTOM CHORD LENGTH = 10.00 FT OR RIGID CEILING DIRECTLY APPLIED.

ALL PITCH BREAKS AND PERIMETER CORNER JOINTS MUST BE LATERALLY RESTRAINED.

1 LATERAL BRACE(S) AT 1/ 2 LENGTH OF E-Q, G-P, I-O, J-M, K-L.

END VERTICAL(S) MUST BE SHEATHED OR HAVE BRACES AS INDICATED IN THE MAX. UNBRACED LENGTH COLUMN OF THE TABLE BELOW

LOADING
TOTAL LOAD CASES: (4)

CHORDS

MEMB. FR-TO	MAX. FACTORED FORCE (LBS)	FACTORED VERT. LOAD LC1 (PLF) FROM	TO	MAX CSI (LC)	MAX. UNBRAC LENGTH
A- B	0 / 0	-112.4	-112.4	0.07 (1)	10.00
B- V	-2967 / 0	-112.4	-112.4	0.13 (1)	4.80
V- C	-1686 / 0	-112.4	-112.4	0.10 (1)	5.99
C- D	-3905 / 0	-112.4	-112.4	0.29 (1)	4.14
D- E	-3905 / 0	-112.4	-112.4	0.29 (1)	4.14
E- F	-3268 / 0	-112.4	-112.4	0.26 (1)	4.48
F- G	-3017 / 0	-122.4	-122.4	0.31 (1)	2.00
G- W	-3017 / 0	-122.4	-122.4	0.29 (1)	2.00
W- H	-3017 / 0	-122.4	-122.4	0.29 (1)	2.00
H- I	-3017 / 0	-122.4	-122.4	0.29 (1)	2.00
I- J	-2453 / 0	-122.4	-122.4	0.29 (1)	2.00
J- K	-1342 / 0	-112.4	-112.4	0.13 (1)	6.25
L- K	-2637 / 0	0.0	0.0	0.35 (1)	5.13
B- U	0 / 1503	-18.5	-18.5	0.18 (1)	10.00
U- T	0 / 3535	-18.5	-18.5	0.46 (1)	10.00
T- S	0 / 3534	-18.5	-18.5	0.48 (1)	10.00
S- R	0 / 3511	-18.5	-18.5	0.45 (1)	10.00
R- Q	0 / 3511	-18.5	-18.5	0.45 (1)	10.00
Q- P	0 / 2902	-18.5	-18.5	0.38 (1)	10.00
P- O	0 / 2453	-18.5	-18.5	0.33 (1)	10.00
O- N	0 / 1178	-18.5	-18.5	0.18 (1)	10.00
N- M	0 / 1178	-18.5	-18.5	0.18 (1)	10.00
M- L	0 / 0	-18.5	-18.5	0.06 (4)	10.00

WEBS

MEMB. FR-TO	MAX. FACTORED FORCE (LBS)	MAX CSI (LC)
T- C	0 / 97	0.03 (4)
C- S	-25 / 8	0.02 (1)
S- E	0 / 125	0.04 (4)
E- Q	-855 / 0	0.37 (1)
Q- F	0 / 715	0.16 (1)
F- P	0 / 193	0.03 (1)
P- G	-826 / 0	0.40 (1)
P- I	0 / 961	0.15 (1)
O- I	-1615 / 0	0.78 (1)
O- J	0 / 2147	0.35 (1)
M- J	-1681 / 0	0.82 (1)
M- K	0 / 2161	0.49 (1)
U- V	0 / 1569	0.00 (1)
U- C	-2545 / 0	0.45 (1)

[M][F]

DESIGN CRITERIA

SPECIFIED LOADS:

TOP CH.	LL	=	32.5	PSF
	DL	=	6.0	PSF
BOT CH.	LL	=	0.0	PSF
	DL	=	7.4	PSF
TOTAL LOAD		=	45.9	PSF

SPACING = 24.0 IN. C/C

LOADING IN FLAT SECTION BASED ON PIGGYBACK TRUSS WITH SLOPES OF 6.00/12 AND -6.00/12 AND RESPECTIVE HEEL HEIGHTS OF 0-0 AND 0-0 AND AN ADDITIONAL DEAD LOAD OF 4.0 P.S.F.

THIS TRUSS IS DESIGNED FOR RESIDENTIAL OR SMALL BUILDING REQUIREMENTS OF PART 9, NBCC 2015

THIS DESIGN COMPLIES WITH:
- PART 9 OF BCBC 2018 , NBC-2019AE
- PART 9 OF OBC 2012 (2019 AMENDMENT)
- CSA 086-14
- TPIC 2014

(55 % OF 43.9 P.S.F. G.S.L. PLUS 8.4 P.S.F. RAIN LOAD) EQUALS 32.5 P.S.F. SPECIFIED ROOF LIVE LOAD

ALLOWABLE DEFL.(LL)= L/360 (1.29")
CALCULATED VERT. DEFL.(LL) = L/ 999 (0.14")
ALLOWABLE DEFL.(TL)= L/360 (1.29")
CALCULATED VERT. DEFL.(TL) = L/ 999 (0.25")

CSI: TC=0.35/1.00 (K-L:1) , BC=0.48/1.00 (S-T:1) , WB=0.82/1.00 (J-M:1) , SSI=0.28/1.00 (I-J:1)

DOL LUMBER=1.00 NAIL=1.00 LS BEND=1.10 COMP=1.10 SHEAR=1.10 TENS= 1.10

COMPANION LIVE LOAD FACTOR = 1.00

AUTOSOLVE LEFT HEEL ONLY

TRUSS PLATE MANUFACTURER IS NOT RESPONSIBLE FOR QUALITY CONTROL IN THE TRUSS MANUFACTURING PLANT .

NAIL VALUES

PLATE	GRIP(DRY) (PSI) MAX	MIN	SHEAR (PLI) MAX	MIN	SECTION (PLI) MAX	MIN
MT20	650	371	1747	788	1987	1873
MT18HS	586	403	2455	1382	3163	3004

PLATE PLACEMENT TOL. = 0.250 inches

PLATE ROTATION TOL. = 5.0 Deg.

JSI GRIP= 0.89 (M) (INPUT = 0.90)
JSI METAL= 0.61 (R) (INPUT = 0.95)

CONTINUED ON PAGE 2

Edge - INDICATES REFERENCE CORNER OF PLATE TOUCHES EDGE OF CHORD.

NOTES- (1)
1) Lateral braces to be a minimum of 2X4 SPF #2.

LICENSED PROFESSIONAL ENGINEER
4/02/24
C. M. HEYENS
100505065
PROVINCE OF ONTARIO

STRUCTURAL COMPONENT ONLY
DWG # TR24040095

JOB NAME	TRUSS NAME	QUANTITY	PLY	JOB DESC.	DRWG NO.
436388	T71	5	1	BAYVIEW WELLINGTON TRUSS DESC.	

Tamarack Roof Truss, Burlington

Version 8.630 S Aug 30 2023 MiTek Industries, Inc. Tue Apr 2 10:55:02 2024 Page 1
ID:GRmvuh1dyQr3nydBfsTFcCy6OGl-S4YX3ODmTEyujs3zJzHVzHa88bUCv?uXVkYIIXzUo2t

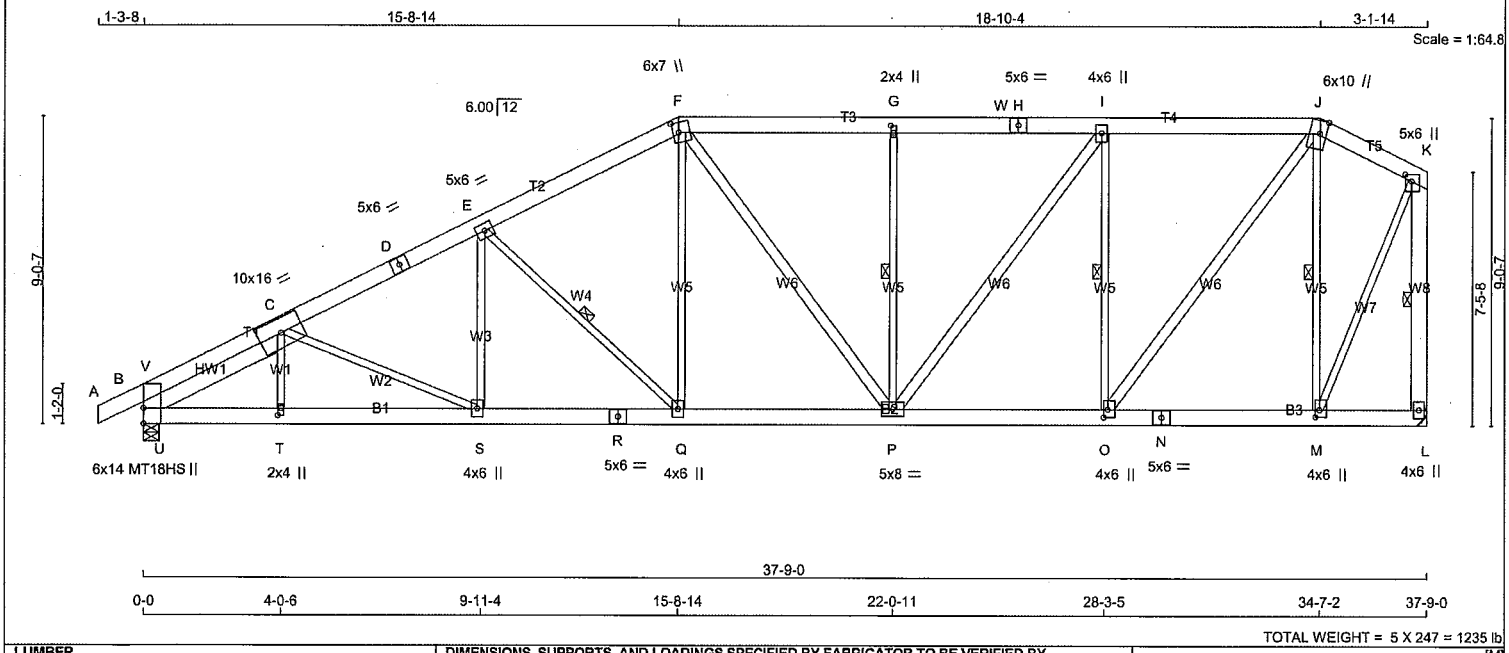

TOTAL WEIGHT = 5 X 247 = 1235 lb

LUMBER

N. L. G. A. RULES

CHORDS	SIZE		LUMBER	DESCR.
A - D	2x6	DRY	No.2	SPF
D - F	2x6	DRY	No.2	SPF
F - H	2x6	DRY	No.2	SPF
H - J	2x6	DRY	No.2	SPF
J - K	2x6	DRY	No.2	SPF
L - K	2x6	DRY	No.2	SPF
B - R	2x6	DRY	No.2	SPF
R - N	2x6	DRY	No.2	SPF
N - L	2x6	DRY	No.2	SPF
REINFORCING MEMBERS				
HW1	2x6	DRY	No.2	SPF
ALL WEBS	2x3	DRY	No.2	SPF
EXCEPT				
F - P	2x4	DRY	No.2	SPF
P - I	2x4	DRY	No.2	SPF
O - J	2x4	DRY	No.2	SPF

DRY: SEASONED LUMBER.

PLATES (table is in inches)

JT	TYPE	PLATES	W	LEN	Y	X
B	TMBMW1m	MT18HS	6.0	14.0		Edge
C	TMWWW-t	MT20	10.0	16.0		
D	TS-t	MT20	5.0	6.0		
E	TMWW-t	MT20	5.0	6.0		
F	TTWW+m	MT20	6.0	7.0	3.50	2.00
G	TMW+w	MT20	2.0	4.0	2.50	1.00
H	TS-t	MT20	5.0	6.0		
I	TMWW+t	MT20	4.0	6.0		
J	TTWW+m	MT20	6.0	10.0	Edge	2.25
K	TMVW+p	MT20	5.0	6.0	2.50	2.25
L	BMV1+p	MT20	4.0	6.0		
M	BMWW+t	MT20	4.0	6.0	2.50	1.50
N	BS-t	MT20	5.0	6.0		
O	BMWW+t	MT20	4.0	6.0	2.75	1.50
P	BMWWW-t	MT20	5.0	8.0		
Q	BMWW+t	MT20	4.0	6.0		
R	BS-t	MT20	5.0	6.0		
S	BMWW+t	MT20	4.0	6.0		
T	BMW+w	MT20	2.0	4.0	2.50	1.00

LICENSED PROFESSIONAL ENGINEER
4/02/24
C. M. HEYENS
100505065
PROVINCE OF ONTARIO

STRUCTURAL COMPONENT ONLY
DWG # TR24040096

DIMENSIONS, SUPPORTS AND LOADINGS SPECIFIED BY FABRICATOR TO BE VERIFIED BY BUILDING DESIGNER

BEARINGS

JT	FACTORED GROSS REACTION VERT	HORZ	MAXIMUM FACTORED GROSS REACTION DOWN	HORZ	UPLIFT	INPUT BRG IN-SX	REQRD BRG IN-SX
B	2691	0	2691	0	0	5-8	2-15
L	2597	0	2597	0	0	MECHANICAL	

A SUITABLE HANGER/MECHANICAL CONNECTION IS REQUIRED AT JOINT L. MINIMUM BEARING LENGTH AT JOINT L = 2-15.

UNFACTORED REACTIONS

JT	1ST LCASE COMBINED	MAX./MIN. COMPONENT REACTIONS SNOW	LIVE	PERM.LIVE	WIND	DEAD	SOIL
B	1889	1317 / 0	0 / 0	0 / 0	0 / 0	573 / 0	0 / 0
L	1832	1226 / 0	0 / 0	0 / 0	0 / 0	606 / 0	0 / 0

BEARING MATERIAL TO BE SPF NO.2 OR BETTER AT JOINT(S) B

BRACING

FOR SECTION F-J, MAX. PURLIN SPACING = 2.00 FT.
FOR OTHER SECTIONS, TOP CHORD TO BE SHEATHED OR MAX. PURLIN SPACING = 4.11 FT.
MAX. UNBRACED BOTTOM CHORD LENGTH = 10.00 FT OR RIGID CEILING DIRECTLY APPLIED.

ALL PITCH BREAKS AND PERIMETER CORNER JOINTS MUST BE LATERALLY RESTRAINED.

1 LATERAL BRACE(S) AT 1/ 2 LENGTH OF E-Q, G-P, I-O, J-M, K-L.

END VERTICAL(S) MUST BE SHEATHED OR HAVE BRACES AS INDICATED IN THE MAX. UNBRACED LENGTH COLUMN OF THE TABLE BELOW

LOADING

TOTAL LOAD CASES: (4)

CHORDS

MEMB. FR-TO	MAX. FACTORED FORCE (LBS)	FACTORED VERT. LOAD (PLF) FROM	TO	LC1	MAX CSI (LC)	MAX. UNBRAC LENGTH
A- B	0 / 0	-112.4	-112.4	0.07 (1)	10.00	
B- V	-2885 / 0	-112.4	-112.4	0.15 (1)	4.83	
V- C	-1640 / 0	-112.4	-112.4	0.12 (1)	6.02	
C- D	-3765 / 0	-112.4	-112.4	0.37 (1)	4.11	
D- E	-3765 / 0	-112.4	-112.4	0.37 (1)	4.11	
E- F	-3121 / 0	-112.4	-112.4	0.34 (1)	4.47	
F- G	-2833 / 0	-122.4	-122.4	0.35 (1)	2.00	
G- W	-2833 / 0	-122.4	-122.4	0.37 (1)	2.00	
W- H	-2833 / 0	-122.4	-122.4	0.37 (1)	2.00	
H- I	-2833 / 0	-122.4	-122.4	0.37 (1)	2.00	
I- J	-2218 / 0	-122.4	-122.4	0.35 (1)	2.00	
J- K	-1018 / 0	-112.4	-112.4	0.10 (1)	6.25	
L- K	-2581 / 0	0.0	0.0	0.39 (1)	5.17	
B- U	0 / 1462	-18.5	-18.5	0.18 (1)	10.00	
U- T	0 / 3430	-18.5	-18.5	0.44 (1)	10.00	
T- S	0 / 3428	-18.5	-18.5	0.47 (1)	10.00	
S- R	0 / 3386	-18.5	-18.5	0.44 (1)	10.00	
R- Q	0 / 3386	-18.5	-18.5	0.44 (1)	10.00	
Q- P	0 / 2771	-18.5	-18.5	0.36 (1)	10.00	
P- O	0 / 2218	-18.5	-18.5	0.30 (1)	10.00	
O- N	0 / 887	-18.5	-18.5	0.14 (1)	10.00	
N- M	0 / 887	-18.5	-18.5	0.14 (1)	10.00	
M- L	0 / 0	-18.5	-18.5	0.05 (4)	10.00	

WEBS

MEMB. FR-TO	MAX. FACTORED FORCE (LBS)	MAX CSI (LC)
T- C	0 / 97	0.03 (4)
C- S	-47 / 0	0.04 (1)
S- E	0 / 134	0.04 (4)
E- Q	-863 / 0	0.38 (1)
Q- F	0 / 720	0.16 (1)
F- P	0 / 105	0.02 (1)
P- G	-827 / 0	0.40 (1)
P- I	0 / 1048	0.17 (1)
O- I	-1686 / 0	0.82 (1)
O- J	0 / 2241	0.36 (1)
M- J	-1843 / 0	0.90 (1)
M- K	0 / 2147	0.48 (1)
U- V	0 / 1519	0.00 (1)
U- C	-2464 / 0	0.43 (1)

DESIGN CRITERIA

SPECIFIED LOADS:

TOP CH.	LL	=	32.5	PSF
	DL	=	6.0	PSF
BOT CH.	LL	=	0.0	PSF
	DL	=	7.4	PSF
TOTAL LOAD		=	45.9	PSF

SPACING = 24.0 IN. C/C

LOADING IN FLAT SECTION BASED ON PIGGYBACK TRUSS WITH SLOPES OF 6.00/12 AND -6.00/12 AND RESPECTIVE HEEL HEIGHTS OF 0-0 AND 0-0 AND AN ADDITIONAL DEAD LOAD OF 4.0 P.S.F.

THIS TRUSS IS DESIGNED FOR RESIDENTIAL OR SMALL BUILDING REQUIREMENTS OF PART 9, NBCC 2015

THIS DESIGN COMPLIES WITH:
- PART 9 OF BCBC 2018 , NBC-2019AE
- PART 9 OF OBC 2012 (2019 AMENDMENT)
- CSA 086-14
- TPIC 2014

(55 % OF 43.9 P.S.F. G.S.L. PLUS 8.4 P.S.F. RAIN LOAD) EQUALS 32.5 P.S.F. SPECIFIED ROOF LIVE LOAD

ALLOWABLE DEFL.(LL)= L/360 (1.26")
CALCULATED VERT. DEFL.(LL) = L/ 999 (0.13")
ALLOWABLE DEFL.(TL)= L/360 (1.26")
CALCULATED VERT. DEFL.(TL) = L/ 999 (0.24")

CSI: TC=0.39/1.00 (K-L:1) , BC=0.47/1.00 (S-T:1) , WB=0.90/1.00 (J-M:1) , SSI=0.28/1.00 (I-J:1)

DOL LUMBER=1.00 NAIL=1.00 LS BEND=1.10 COMP=1.10 SHEAR=1.10 TENS= 1.10

COMPANION LIVE LOAD FACTOR = 1.00

AUTOSOLVE LEFT HEEL ONLY

TRUSS PLATE MANUFACTURER IS NOT RESPONSIBLE FOR QUALITY CONTROL IN THE TRUSS MANUFACTURING PLANT .

NAIL VALUES

PLATE	GRIP(DRY) (PSI) MAX	MIN	SHEAR (PLI) MAX	MIN	SECTION (PLI) MAX	MIN
MT20	650	371	1747	788	1987	1873
MT18HS	586	403	2455	1382	3163	3004

PLATE PLACEMENT TOL. = 0.250 inches

PLATE ROTATION TOL. = 5.0 Deg.

JSI GRIP= 0.88 (M) (INPUT = 0.90)
JSI METAL= 0.60 (O) (INPUT = 0.95)

CONTINUED ON PAGE 2

JOB NAME	TRUSS NAME	QUANTITY	PLY	JOB DESC. BAYVIEW WELLINGTON	DRWG NO.
436388	T71	5	1	TRUSS DESC.	

Edge - INDICATES REFERENCE CORNER OF PLATE TOUCHES EDGE OF CHORD.

NOTES- (1)
1) Lateral braces to be a minimum of 2X4 SPF #2.

STRUCTURAL COMPONENT ONLY
DWG # TR24040096

JOB NAME	TRUSS NAME	QUANTITY	PLY	JOB DESC.	DRWG NO.
436388	T73	1	3	BAYVIEW WELLINGTON TRUSS DESC.	

Tamarack Roof Truss, Burlington

Version 8.630 S Aug 30 2023 MiTek Industries, Inc. Tue Apr 2 10:55:03 2024 Page 1
ID:GRmvuh1dyQr3nydBfsTFcCy6OGI-xG6vGkEPEY4IL0dAshokWU6O2?oSeUcgkOHJq zUo2s

Scale = 1:55.1

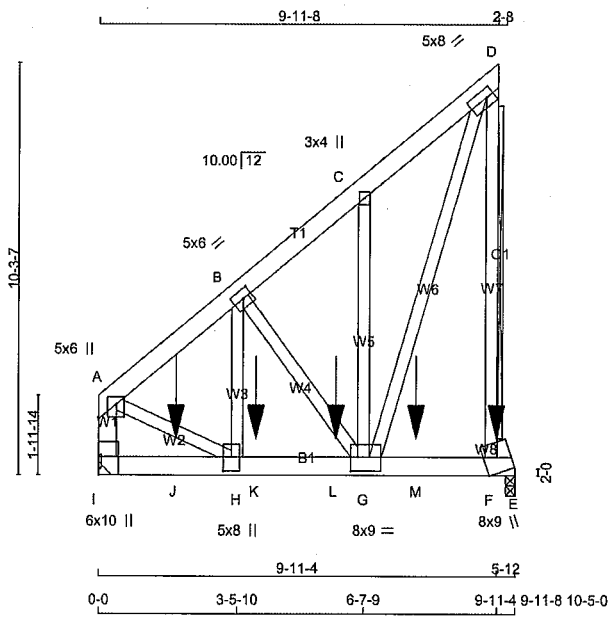

TOTAL WEIGHT = 3 X 88 = 264 lb

LUMBER
N. L. G. A. RULES

CHORDS	SIZE		LUMBER	DESCR.
A - D	2x6	DRY	No.2	SPF
I - A	2x6	DRY	No.2	SPF
I - E	2x6	DRY	2100F 1.8E	SPF
F - E	2x6	DRY	No.2	SPF
ALL WEBS EXCEPT	2x4	DRY	No.2	SPF

DRY: SEASONED LUMBER.

DESIGN CONSISTS OF 3 TRUSSES BUILT SEPARATELY THEN FASTENED TOGETHER AS FOLLOWS:

CHORDS #ROWS	SURFACE SPACING (IN)		LOAD(PLF)
TOP CHORDS : (0.122"X3") SPIRAL NAILS			
A- D	2	12	TOP
I- A	2	12	TOP
BOTTOM CHORDS : (0.122"X3") SPIRAL NAILS			
I- E	2	6	SIDE(768.7)
WEBS : (0.122"X3") SPIRAL NAILS			
D- F	1	6	SIDE(261.8)
2x4	1	6	
2x6	2	6	

STAGGER NAILS BY HALF THE SURFACE SPACING IN ADJACENT PLIES.

GIRDER NAILING ASSUMES NAILED HANGERS ARE FASTENED WITH MIN. 3-0 INCH NAILS.

TOP - COMPONENTS ARE LOADED FROM THE TOP AND MUST BE PLACED ON TOP EDGE OF ALL PLIES FOR THE LOAD TO BE TRANSFERRED TO EACH PLY.

SIDE - PLF SHOWN IS THE EQUIVALENT UDL APPLIED TO ONE SIDE THAT THE CORRESPONDING NAILING PATTERN SHALL BE CAPABLE OF TRANSFERING. REMAINING PLF MUST BE APPLIED ON THE OPPOSITE SIDE OR ON THE TOP.

LICENSED PROFESSIONAL ENGINEER
4/02/24
C. M. HEYENS
100505065
PROVINCE OF ONTARIO

STRUCTURAL COMPONENT ONLY
DWG # TR24040097

DIMENSIONS, SUPPORTS AND LOADINGS SPECIFIED BY FABRICATOR TO BE VERIFIED BY BUILDING DESIGNER [M]

BEARINGS

JT	FACTORED GROSS REACTION VERT	HORZ	MAXIMUM FACTORED GROSS REACTION DOWN	HORZ	UPLIFT	INPUT BRG IN-SX	REQRD BRG IN-SX
I	6395	0	6395	0	0	MECHANICAL	
E	8122	0	8122	0	0	3-0	2-15

A SUITABLE HANGER/MECHANICAL CONNECTION IS REQUIRED AT JOINT I. MINIMUM BEARING LENGTH AT JOINT I = 1-14.

UNFACTORED REACTIONS

JT	1ST LCASE COMBINED	MAX./MIN. COMPONENT REACTIONS SNOW	LIVE	PERM.LIVE	WIND	DEAD	SOIL
I	4504	3061 / 0	0 / 0	0 / 0	0 / 0	1443 / 0	0 / 0
E	5723	3876 / 0	0 / 0	0 / 0	0 / 0	1847 / 0	0 / 0

BEARING MATERIAL TO BE SPF NO.2 OR BETTER AT JOINT(S) E

BRACING
TOP CHORD TO BE SHEATHED OR MAX. PURLIN SPACING = 5.87 FT.
MAX. UNBRACED BOTTOM CHORD LENGTH = 10.00 FT OR RIGID CEILING DIRECTLY APPLIED.

ALL PITCH BREAKS AND PERIMETER CORNER JOINTS MUST BE LATERALLY RESTRAINED.

2x6 DRY SPF No.2 T-BRACE AT D-F

FASTEN T AND I-BRACES TO NARROW EDGE OF WEB WITH ONE ROW PER PLY OF 3" COMMON WIRE NAILS @ 6" O.C. WITH 3" MINIMUM END DISTANCE. BRACE MUST COVER 90% OF WEB LENGTH.

END VERTICAL(S) MUST BE SHEATHED OR HAVE BRACES AS INDICATED IN THE MAX. UNBRACED LENGTH COLUMN OF THE TABLE BELOW

LOADING
TOTAL LOAD CASES: (4)

CHORDS

MEMB. FR-TO	MAX. FACTORED FORCE (LBS)	FACTORED VERT. LOAD LC1 (PLF) FROM	TO	MAX CSI (LC)	MAX. UNBRAC LENGTH
A- B	-5509 / 0	-112.4	-112.4	0.05 (1)	5.87
B- C	-3743 / 0	-112.4	-112.4	0.07 (1)	6.25
C- D	-3607 / 0	-112.4	-112.4	0.08 (1)	6.25
I- A	-5493 / 0	0.0	0.0	0.13 (1)	7.39
I- J	0 / 0	-18.5	-18.5	0.21 (1)	10.00
J- H	0 / 0	-18.5	-18.5	0.21 (1)	10.00
H- K	0 / 4244	-18.5	-18.5	0.28 (1)	10.00
K- L	0 / 4244	-18.5	-18.5	0.28 (1)	10.00
L- G	0 / 4244	-18.5	-18.5	0.28 (1)	10.00
G- M	0 / 0	-18.5	-18.5	0.59 (1)	10.00
M- F	0 / 0	-18.5	-18.5	0.59 (1)	10.00
F- E	0 / 0	-18.5	-18.5	0.46 (1)	10.00

WEBS

MEMB. FR-TO	MAX. FACTORED FORCE (LBS)	MAX CSI (LC)
G- C	-147 / 15	0.03 (1)
F- D	-6439 / 0	0.74 (1)
B- G	-2432 / 0	0.26 (1)
H- B	0 / 2648	0.14 (1)
A- H	0 / 4604	0.25 (1)
G- D	0 / 8964	0.48 (1)

SPECIFIED CONCENTRATED LOADS (LBS)

JT	LOC.	LC1	MAX-	MAX+	FACE	DIR.	TYPE	HEEL	CONN.
F	9-11-4	-1867	-1867	---	FRONT	VERT	TOTAL	---	C1
J	1-11-4	-1863	-1863	---	FRONT	VERT	TOTAL	---	C1
K	3-11-4	-1863	-1863	---	FRONT	VERT	TOTAL	---	C1
L	5-11-4	-1863	-1863	---	FRONT	VERT	TOTAL	---	C1
M	7-11-4	-1863	-1863	---	FRONT	VERT	TOTAL	---	C1

CONNECTION REQUIREMENTS

1) **C1:** A SUITABLE HANGER/MECHANICAL CONNECTION IS REQUIRED.

DESIGN CRITERIA

SPECIFIED LOADS:

TOP CH.	LL	=	32.5	PSF
	DL	=	6.0	PSF
BOT CH.	LL	=	0.0	PSF
	DL	=	7.4	PSF
TOTAL LOAD		=	45.9	PSF

SPACING = 24.0 IN. C/C

THIS TRUSS IS DESIGNED FOR RESIDENTIAL OR SMALL BUILDING REQUIREMENTS OF PART 9, NBCC 2015

THIS DESIGN COMPLIES WITH:
- PART 9 OF BCBC 2018 , NBC-2019AE
- PART 9 OF OBC 2012 (2019 AMENDMENT)
- CSA 086-14
- TPIC 2014

(55 % OF 43.9 P.S.F. G.S.L. PLUS 8.4 P.S.F. RAIN LOAD) EQUALS 32.5 P.S.F. SPECIFIED ROOF LIVE LOAD

ALLOWABLE DEFL.(LL)= L/360 (0.35")
CALCULATED VERT. DEFL.(LL) = L/ 999 (0.07")
ALLOWABLE DEFL.(TL)= L/360 (0.35")
CALCULATED VERT. DEFL.(TL) = L/ 926 (0.13")

CSI: TC=0.13/1.00 (A-I:1) , BC=0.59/1.00 (F-G:1) , WB=0.74/1.00 (D-F:1) , SSI=0.82/1.00 (E-F:1)

DOL LUMBER=1.00 NAIL=1.00 LS BEND=1.10 COMP=1.10 SHEAR=1.10 TENS= 1.10

COMPANION LIVE LOAD FACTOR = 1.00

AUTOSOLVE RIGHT HEEL ONLY

TRUSS PLATE MANUFACTURER IS NOT RESPONSIBLE FOR QUALITY CONTROL IN THE TRUSS MANUFACTURING PLANT .

NAIL VALUES

PLATE	GRIP(DRY) (PSI) MAX	MIN	SHEAR (PLI) MAX	MIN	SECTION (PLI) MAX	MIN
MT20	650	371	1747	788	1987	1873

PLATE PLACEMENT TOL. = 0.250 inches

PLATE ROTATION TOL. = 5.0 Deg.

JSI GRIP= 0.88 (D) (INPUT = 0.90)
JSI METAL= 0.62 (F) (INPUT = 0.95)

CONTINUED ON PAGE 2

JOB NAME	TRUSS NAME	QUANTITY	PLY	JOB DESC.	DRWG NO.
436388	T73	1	3	BAYVIEW WELLINGTON TRUSS DESC.	

PLATES (table is in inches)

JT	TYPE	PLATES	W	LEN	Y	X
A	TMVW+p	MT20	5.0	6.0	2.00	2.25
B	TMWW-t	MT20	5.0	6.0	2.50	2.75
C	TMW+w	MT20	3.0	4.0		
D	TMWW-t	MT20	5.0	8.0	2.50	2.25
F	BMWWm	MT20	8.0	9.0	0.50	Edge
G	BMWWW-t	MT20	8.0	9.0	4.25	2.00
H	BMWW+t	MT20	5.0	8.0	4.25	2.50
I	BMV1+p	MT20	6.0	10.0	5.50	

Edge - INDICATES REFERENCE CORNER OF PLATE TOUCHES EDGE OF CHORD.

NOTES- (1)
1) Lateral braces to be a minimum of 2X4 SPF #2.

LICENSED PROFESSIONAL ENGINEER
4/02/24
C. M. HEYENS
100505065
PROVINCE OF ONTARIO

STRUCTURAL COMPONENT ONLY
DWG # TR24040097

JOB NAME	TRUSS NAME	QUANTITY	PLY	JOB DESC.	DRWG NO.
436388	T73Z	1	3	BAYVIEW WELLINGTON TRUSS DESC.	

Tamarack Roof Truss, Burlington

ID:GRmvuh1dyQr3nydBfsTFcCy6OGl-PSgHU3E1?rCcyACMQOJz3ifZrP7vNx6qz21sMQzUo2r

Scale = 1:55.1

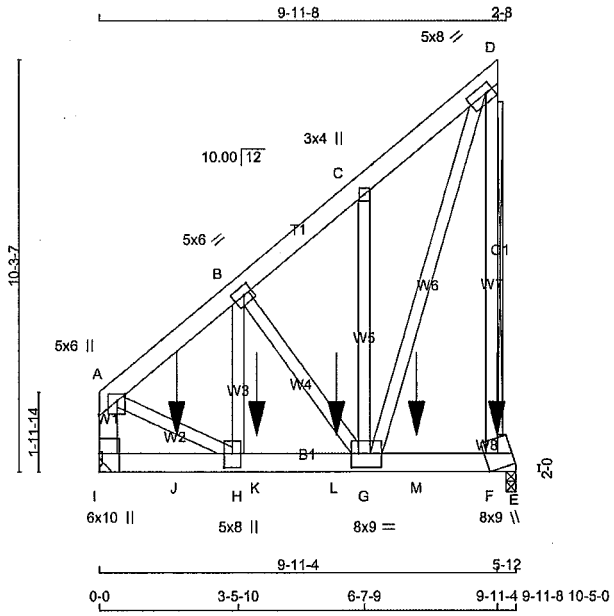

TOTAL WEIGHT = 3 X 88 = 264 lb

LUMBER
N. L. G. A. RULES

CHORDS	SIZE		LUMBER	DESCR.
A - D	2x6	DRY	No.2	SPF
I - A	2x6	DRY	No.2	SPF
I - E	2x6	DRY	2100F 1.8E	SPF
F - E	2x6	DRY	No.2	SPF
ALL WEBS EXCEPT	2x4	DRY	No.2	SPF

DRY: SEASONED LUMBER.

DESIGN CONSISTS OF 3 TRUSSES BUILT SEPARATELY THEN FASTENED TOGETHER AS FOLLOWS:

CHORDS	#ROWS	SURFACE SPACING (IN)	LOAD(PLF)
TOP CHORDS : (0.122"X3") SPIRAL NAILS			
A- D	2	12	TOP
I- A	2	12	TOP
BOTTOM CHORDS : (0.122"X3") SPIRAL NAILS			
I- E	2	6	SIDE(749.9)
WEBS : (0.122"X3") SPIRAL NAILS			
D- F	1	6	SIDE(239.2)
2x4	1	6	
2x6	2	6	

STAGGER NAILS BY HALF THE SURFACE SPACING IN ADJACENT PLIES.

GIRDER NAILING ASSUMES NAILED HANGERS ARE FASTENED WITH MIN. 3-0 INCH NAILS.

TOP - COMPONENTS ARE LOADED FROM THE TOP AND MUST BE PLACED ON TOP EDGE OF ALL PLIES FOR THE LOAD TO BE TRANSFERRED TO EACH PLY.

SIDE - PLF SHOWN IS THE EQUIVALENT UDL APPLIED TO ONE SIDE THAT THE CORRESPONDING NAILING PATTERN SHALL BE CAPABLE OF TRANSFERING. REMAINING PLF MUST BE APPLIED ON THE OPPOSITE SIDE OR ON THE TOP.

LICENSED PROFESSIONAL ENGINEER
4/02/24
C. M. HEYENS
100505065
PROVINCE OF ONTARIO

STRUCTURAL COMPONENT ONLY
DWG # TR24040098

DIMENSIONS, SUPPORTS AND LOADINGS SPECIFIED BY FABRICATOR TO BE VERIFIED BY BUILDING DESIGNER

BEARINGS

JT	FACTORED GROSS REACTION VERT	HORZ	MAXIMUM FACTORED GROSS REACTION DOWN	HORZ	UPLIFT	INPUT BRG IN-SX	REQRD BRG IN-SX
I	6254	0	6254	0	0	MECHANICAL	
E	7939	0	7939	0	0	3-0	2-14

A SUITABLE HANGER/MECHANICAL CONNECTION IS REQUIRED AT JOINT I. MINIMUM BEARING LENGTH AT JOINT I = 1-13.

UNFACTORED REACTIONS

JT	1ST LCASE COMBINED	SNOW	MAX./MIN. COMPONENT REACTIONS LIVE	PERM.LIVE	WIND	DEAD	SOIL
I	4406	2988 / 0	0 / 0	0 / 0	0 / 0	1419 / 0	0 / 0
E	5595	3780 / 0	0 / 0	0 / 0	0 / 0	1815 / 0	0 / 0

BEARING MATERIAL TO BE SPF NO.2 OR BETTER AT JOINT(S) E

BRACING
TOP CHORD TO BE SHEATHED OR MAX. PURLIN SPACING = 5.91 FT.
MAX. UNBRACED BOTTOM CHORD LENGTH = 10.00 FT OR RIGID CEILING DIRECTLY APPLIED.

ALL PITCH BREAKS AND PERIMETER CORNER JOINTS MUST BE LATERALLY RESTRAINED.

2x6 DRY SPF No.2 T-BRACE AT D-F

FASTEN T AND I-BRACES TO NARROW EDGE OF WEB WITH ONE ROW PER PLY OF 3" COMMON WIRE NAILS @ 6" O.C. WITH 3" MINIMUM END DISTANCE. BRACE MUST COVER 90% OF WEB LENGTH.

END VERTICAL(S) MUST BE SHEATHED OR HAVE BRACES AS INDICATED IN THE MAX. UNBRACED LENGTH COLUMN OF THE TABLE BELOW

LOADING
TOTAL LOAD CASES: (4)

CHORDS

MEMB. FR-TO	MAX. FACTORED FORCE (LBS)	FACTORED VERT. LOAD (PLF) FROM	TO	LC1	MAX CSI (LC)	MAX. UNBRAC LENGTH
A- B	-5385 / 0	-112.4	-112.4		0.04 (1)	5.91
B- C	-3660 / 0	-112.4	-112.4		0.07 (1)	6.25
C- D	-3526 / 0	-112.4	-112.4		0.08 (1)	6.25
I- A	-5374 / 0	0.0	0.0		0.12 (1)	7.45
I- J	0 / 0	-18.5	-18.5		0.20 (1)	10.00
J- H	0 / 0	-18.5	-18.5		0.20 (1)	10.00
H- K	0 / 4149	-18.5	-18.5		0.27 (1)	10.00
K- L	0 / 4149	-18.5	-18.5		0.27 (1)	10.00
L- G	0 / 4149	-18.5	-18.5		0.27 (1)	10.00
G- M	0 / 0	-18.5	-18.5		0.58 (1)	10.00
M- F	0 / 0	-18.5	-18.5		0.58 (1)	10.00
F- E	0 / 0	-18.5	-18.5		0.45 (1)	10.00

WEBS

MEMB. FR-TO	MAX. FACTORED FORCE (LBS)	MAX CSI (LC)
G- C	-152 / 14	0.03 (1)
F- D	-6299 / 0	0.72 (1)
B- G	-2378 / 0	0.25 (1)
H- B	0 / 2580	0.14 (1)
A- H	0 / 4502	0.24 (1)
G- D	0 / 8763	0.47 (1)

SPECIFIED CONCENTRATED LOADS (LBS)

JT	LOC.	LC1	MAX-	MAX+	FACE	DIR.	TYPE	HEEL	CONN.
F	9-11-4	-1821	-1821	---	BACK	VERT	TOTAL	---	C1
J	1-11-4	-1818	-1818	---	BACK	VERT	TOTAL	---	C1
K	3-11-4	-1818	-1818	---	BACK	VERT	TOTAL	---	C1
L	5-11-4	-1818	-1818	---	BACK	VERT	TOTAL	---	C1
M	7-11-4	-1818	-1818	---	BACK	VERT	TOTAL	---	C1

CONNECTION REQUIREMENTS

1) C1: A SUITABLE HANGER/MECHANICAL CONNECTION IS REQUIRED.

DESIGN CRITERIA

SPECIFIED LOADS:

TOP CH.	LL	=	32.5	PSF
	DL	=	6.0	PSF
BOT CH.	LL	=	0.0	PSF
	DL	=	7.4	PSF
TOTAL LOAD		=	45.9	PSF

SPACING = 24.0 IN. C/C

THIS TRUSS IS DESIGNED FOR RESIDENTIAL OR SMALL BUILDING REQUIREMENTS OF PART 9, NBCC 2015

THIS DESIGN COMPLIES WITH:
- PART 9 OF BCBC 2018 , NBC-2019AE
- PART 9 OF OBC 2012 (2019 AMENDMENT)
- CSA 086-14
- TPIC 2014

(55 % OF 43.9 P.S.F. G.S.L. PLUS 8.4 P.S.F. RAIN LOAD) EQUALS 32.5 P.S.F. SPECIFIED ROOF LIVE LOAD

ALLOWABLE DEFL.(LL)= L/360 (0.35")
CALCULATED VERT. DEFL.(LL) = L/ 999 (0.07")
ALLOWABLE DEFL.(TL)= L/360 (0.35")
CALCULATED VERT. DEFL.(TL) = L/ 948 (0.13")

CSI: TC=0.12/1.00 (A-I:1) , BC=0.58/1.00 (F-G:1) , WB=0.72/1.00 (D-F:1) , SSI=0.80/1.00 (E-F:1)

DOL LUMBER=1.00 NAIL=1.00 LS BEND=1.10 COMP=1.10 SHEAR=1.10 TENS= 1.10

COMPANION LIVE LOAD FACTOR = 1.00

AUTOSOLVE RIGHT HEEL ONLY

TRUSS PLATE MANUFACTURER IS NOT RESPONSIBLE FOR QUALITY CONTROL IN THE TRUSS MANUFACTURING PLANT .

NAIL VALUES

PLATE	GRIP(DRY) (PSI) MAX	MIN	SHEAR (PLI) MAX	MIN	SECTION (PLI) MAX	MIN
MT20	650	371	1747	788	1987	1873

PLATE PLACEMENT TOL. = 0.250 inches

PLATE ROTATION TOL. = 5.0 Deg.

JSI GRIP= 0.86 (D) (INPUT = 0.90)
JSI METAL= 0.60 (F) (INPUT = 0.95)

CONTINUED ON PAGE 2

PLATES (table is in inches)

JT	TYPE	PLATES	W	LEN	Y	X
A	TMVW+p	MT20	5.0	6.0	2.00	2.25
B	TMWW-t	MT20	5.0	6.0	2.50	2.75
C	TMW+w	MT20	3.0	4.0		
D	TMWW-t	MT20	5.0	8.0	2.50	2.25
F	BMWWm	MT20	8.0	9.0	0.50	Edge
G	BMWWW-t	MT20	8.0	9.0	4.25	2.00
H	BMWW+t	MT20	5.0	8.0	4.25	2.50
I	BMV1+p	MT20	6.0	10.0	5.50	

Edge - INDICATES REFERENCE CORNER OF PLATE TOUCHES EDGE OF CHORD.

NOTES- (1)
1) Lateral braces to be a minimum of 2X4 SPF #2.

LICENSED PROFESSIONAL ENGINEER
4/02/24
C. M. HEYENS
100505065
PROVINCE OF ONTARIO

STRUCTURAL COMPONENT ONLY
DWG # TR24040098

JOB NAME	TRUSS NAME	QUANTITY	PLY	JOB DESC.	DRWG NO.
436388	T74	4	1	BAYVIEW WELLINGTON TRUSS DESC.	

Tamarack Roof Truss, Burlington

Version 8.630 S Aug 30 2023 MiTek Industries, Inc. Tue Apr 2 10:55:06 2024 Page 1
ID:GRmvuh1dyQr3nydBfsTFcCy6OGI-Lrn1vlGHXTTKCTMkYpMR87koDDryrrp7QMWzRIzUo2p

Scale = 1:56.3

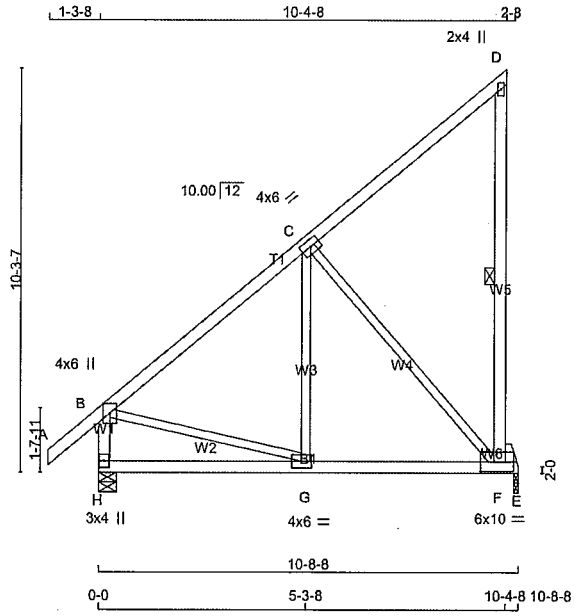

TOTAL WEIGHT = 4 X 57 = 228 lb [M]

LUMBER
N. L. G. A. RULES

CHORDS	SIZE		LUMBER	DESCR.
A - D	2x4	DRY	No.2	SPF
H - B	2x4	DRY	No.2	SPF
H - E	2x4	DRY	No.2	SPF
F - E	2x6	DRY	No.2	SPF
ALL WEBS	2x3	DRY	No.2	SPF
EXCEPT				
F - D	2x4	DRY	No.2	SPF

DRY: SEASONED LUMBER.

PLATES (table is in inches)

JT	TYPE	PLATES	W	LEN	Y	X
B	TMVW+p	MT20	4.0	6.0	Edge	
C	TMWW-t	MT20	4.0	6.0		
D	TMW+w	MT20	2.0	4.0		
F	BMWWW-t	MT20	6.0	10.0	3.00	4.00
G	BMWW-t	MT20	4.0	6.0		
H	BMV1+p	MT20	3.0	4.0		

Edge - INDICATES REFERENCE CORNER OF PLATE TOUCHES EDGE OF CHORD.

NOTES- (1)
1) Lateral braces to be a minimum of 2X4 SPF #2.

DIMENSIONS, SUPPORTS AND LOADINGS SPECIFIED BY FABRICATOR TO BE VERIFIED BY BUILDING DESIGNER

BEARINGS

JT	FACTORED GROSS REACTION VERT	HORZ	MAXIMUM FACTORED GROSS REACTION DOWN	HORZ	UPLIFT	INPUT BRG IN-SX	REQRD BRG IN-SX
H	855	0	855	0	0	5-8	1-8
E	638	0	638	0	0	1-8	1-8

UNFACTORED REACTIONS

JT	1ST LCASE COMBINED	MAX./MIN. COMPONENT REACTIONS SNOW	LIVE	PERM.LIVE	WIND	DEAD	SOIL
H	597	437 / 0	0 / 0	0 / 0	0 / 0	160 / 0	0 / 0
E	448	312 / 0	0 / 0	0 / 0	0 / 0	137 / 0	0 / 0

BEARING MATERIAL TO BE SPF NO.2 OR BETTER AT JOINT(S) H, E

BRACING
TOP CHORD TO BE SHEATHED OR MAX. PURLIN SPACING = 6.25 FT.
MAX. UNBRACED BOTTOM CHORD LENGTH = 10.00 FT OR RIGID CEILING DIRECTLY APPLIED.

ALL PITCH BREAKS AND PERIMETER CORNER JOINTS MUST BE LATERALLY RESTRAINED.

1 LATERAL BRACE(S) AT 1/ 2 LENGTH OF D-F.

END VERTICAL(S) MUST BE SHEATHED OR HAVE BRACES AS INDICATED IN THE MAX. UNBRACED LENGTH COLUMN OF THE TABLE BELOW

LOADING
TOTAL LOAD CASES: (4)

CHORDS

MEMB. FR-TO	MAX. FACTORED FORCE (LBS)	FACTORED VERT. LOAD LC1 (PLF) FROM	TO	MAX CSI (LC)	MAX. UNBRAC LENGTH
A- B	0 / 50	-112.4	-112.4	0.15 (1)	10.00
B- C	-492 / 0	-112.4	-112.4	0.52 (1)	6.25
C- D	-50 / 0	-112.4	-112.4	0.49 (1)	6.25
H- B	-830 / 0	0.0	0.0	0.09 (1)	7.81
H- G	0 / 0	-18.5	-18.5	0.18 (4)	10.00
G- F	0 / 412	-18.5	-18.5	0.48 (1)	10.00
F- E	0 / 0	-18.5	-18.5	0.13 (1)	10.00

WEBS

MEMB. FR-TO	MAX. FACTORED FORCE (LBS)	MAX CSI (LC)
G- C	0 / 129	0.04 (4)
C- F	-627 / 0	0.71 (1)
B- G	0 / 424	0.10 (1)
F- D	-197 / 0	0.10 (1)

DESIGN CRITERIA

SPECIFIED LOADS:

TOP CH.	LL	=	32.5	PSF
	DL	=	6.0	PSF
BOT CH.	LL	=	0.0	PSF
	DL	=	7.4	PSF
TOTAL LOAD		=	45.9	PSF

SPACING = 24.0 IN. C/C

THIS TRUSS IS DESIGNED FOR RESIDENTIAL OR SMALL BUILDING REQUIREMENTS OF PART 9, NBCC 2015

THIS DESIGN COMPLIES WITH:
- PART 9 OF BCBC 2018 , NBC-2019AE
- PART 9 OF OBC 2012 (2019 AMENDMENT)
- CSA 086-14
- TPIC 2014

(55 % OF 43.9 P.S.F. G.S.L. PLUS 8.4 P.S.F. RAIN LOAD) EQUALS 32.5 P.S.F. SPECIFIED ROOF LIVE LOAD

ALLOWABLE DEFL.(LL)= L/360 (0.36")
CALCULATED VERT. DEFL.(LL) = L/ 999 (0.07")
ALLOWABLE DEFL.(TL)= L/360 (0.36")
CALCULATED VERT. DEFL.(TL) = L/ 976 (0.13")

CSI: TC=0.52/1.00 (B-C:1) , BC=0.48/1.00 (F-G:1) , WB=0.71/1.00 (C-F:1) , SSI=0.24/1.00 (E-F:1)

DOL LUMBER=1.00 NAIL=1.00 LS BEND=1.10 COMP=1.10 SHEAR=1.10 TENS= 1.10

COMPANION LIVE LOAD FACTOR = 1.00

TRUSS PLATE MANUFACTURER IS NOT RESPONSIBLE FOR QUALITY CONTROL IN THE TRUSS MANUFACTURING PLANT .

NAIL VALUES

PLATE	GRIP(DRY) (PSI) MAX	MIN	SHEAR (PLI) MAX	MIN	SECTION (PLI) MAX	MIN
MT20	650	371	1747	788	1987	1873

PLATE PLACEMENT TOL. = 0.250 inches

PLATE ROTATION TOL. = 5.0 Deg.

JSI GRIP= 0.52 (B) (INPUT = 0.90)
JSI METAL= 0.33 (B) (INPUT = 0.95)

LICENSED PROFESSIONAL ENGINEER
4/02/24
C. M. HEYENS
100505065
PROVINCE OF ONTARIO

STRUCTURAL COMPONENT ONLY
DWG # TR24040099

JOB NAME	TRUSS NAME	QUANTITY	PLY	JOB DESC.	DRWG NO.
436388	T74A	11	1	BAYVIEW WELLINGTON TRUSS DESC.	

Tamarack Roof Truss, Burlington

Version 8.630 S Aug 30 2023 MiTek Industries, Inc. Tue Apr 2 10:55:07 2024 Page 1
ID:GRmvuh1dyQr3nydBfsTFcCy6OGI-p1LQ65HvlmbApdxx5XtggKH hcBZaJmGf0FWzlzUo2o

Scale = 1:56.3

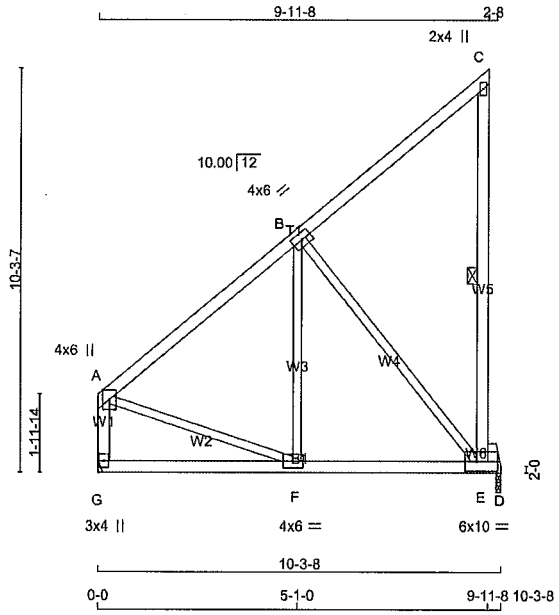

TOTAL WEIGHT = 11 X 55 = 600 lb

LUMBER
N. L. G. A. RULES

CHORDS	SIZE		LUMBER	DESCR.
A - C	2x4	DRY	No.2	SPF
G - A	2x4	DRY	No.2	SPF
G - D	2x4	DRY	No.2	SPF
E - D	2x6	DRY	No.2	SPF
ALL WEBS	2x3	DRY	No.2	SPF
EXCEPT				
E - C	2x4	DRY	No.2	SPF

DRY: SEASONED LUMBER.

PLATES (table is in inches)

JT	TYPE	PLATES	W	LEN	Y	X
A	TMVW+p	MT20	4.0	6.0	Edge	
B	TMWW-t	MT20	4.0	6.0		
C	TMW+w	MT20	2.0	4.0		
E	BMWWW-t	MT20	6.0	10.0	3.00	3.50
F	BMWW-t	MT20	4.0	6.0		
G	BMV1+p	MT20	3.0	4.0		

Edge - INDICATES REFERENCE CORNER OF PLATE TOUCHES EDGE OF CHORD.

NOTES- (1)
1) Lateral braces to be a minimum of 2X4 SPF #2.

DIMENSIONS, SUPPORTS AND LOADINGS SPECIFIED BY FABRICATOR TO BE VERIFIED BY BUILDING DESIGNER

BEARINGS

JT	FACTORED GROSS REACTION VERT	HORZ	MAXIMUM FACTORED GROSS REACTION DOWN	HORZ	UPLIFT	INPUT BRG IN-SX	REQRD BRG IN-SX
G	672	0	672	0	0	MECHANICAL	
D	611	0	611	0	0	1-8	1-8

A SUITABLE HANGER/MECHANICAL CONNECTION IS REQUIRED AT JOINT G. MINIMUM BEARING LENGTH AT JOINT G = 1-8.

UNFACTORED REACTIONS

JT	1ST LCASE COMBINED	MAX./MIN. COMPONENT REACTIONS SNOW	LIVE	PERM.LIVE	WIND	DEAD	SOIL
G	471	333 / 0	0 / 0	0 / 0	0 / 0	138 / 0	0 / 0
D	429	298 / 0	0 / 0	0 / 0	0 / 0	131 / 0	0 / 0

BEARING MATERIAL TO BE SPF NO.2 OR BETTER AT JOINT(S) D

BRACING
TOP CHORD TO BE SHEATHED OR MAX. PURLIN SPACING = 6.25 FT.
MAX. UNBRACED BOTTOM CHORD LENGTH = 10.00 FT OR RIGID CEILING DIRECTLY APPLIED.

ALL PITCH BREAKS AND PERIMETER CORNER JOINTS MUST BE LATERALLY RESTRAINED.

1 LATERAL BRACE(S) AT 1/ 2 LENGTH OF C-E.

END VERTICAL(S) MUST BE SHEATHED OR HAVE BRACES AS INDICATED IN THE MAX. UNBRACED LENGTH COLUMN OF THE TABLE BELOW

LOADING
TOTAL LOAD CASES: (4)

CHORDS

MEMB. FR-TO	MAX. FACTORED FORCE (LBS)	FACTORED VERT. LOAD LC1 (PLF) FROM	TO	MAX CSI (LC)	MAX. UNBRAC LENGTH
A- B	-439 / 0	-112.4	-112.4	0.47 (1)	6.25
B- C	-48 / 0	-112.4	-112.4	0.45 (1)	6.25
G- A	-648 / 0	0.0	0.0	0.07 (1)	7.81
G- F	0 / 0	-18.5	-18.5	0.17 (4)	10.00
F- E	0 / 369	-18.5	-18.5	0.45 (1)	10.00
E- D	0 / 0	-18.5	-18.5	0.12 (1)	10.00

WEBS

MEMB. FR-TO	MAX. FACTORED FORCE (LBS)	MAX CSI (LC)
F- B	0 / 118	0.04 (4)
B- E	-586 / 0	0.66 (1)
A- F	0 / 388	0.09 (1)
E- C	-188 / 0	0.10 (1)

DESIGN CRITERIA

SPECIFIED LOADS:

TOP CH.	LL	=	32.5	PSF
	DL	=	6.0	PSF
BOT CH.	LL	=	0.0	PSF
	DL	=	7.4	PSF
TOTAL LOAD		=	45.9	PSF

SPACING = 24.0 IN. C/C

THIS TRUSS IS DESIGNED FOR RESIDENTIAL OR SMALL BUILDING REQUIREMENTS OF PART 9, NBCC 2015

THIS DESIGN COMPLIES WITH:
- PART 9 OF BCBC 2018 , NBC-2019AE
- PART 9 OF OBC 2012 (2019 AMENDMENT)
- CSA 086-14
- TPIC 2014

(55 % OF 43.9 P.S.F. G.S.L. PLUS 8.4 P.S.F. RAIN LOAD) EQUALS 32.5 P.S.F. SPECIFIED ROOF LIVE LOAD

ALLOWABLE DEFL.(LL)= L/360 (0.34")
CALCULATED VERT. DEFL.(LL) = L/ 999 (0.06")
ALLOWABLE DEFL.(TL)= L/360 (0.34")
CALCULATED VERT. DEFL.(TL) = L/ 999 (0.12")

CSI: TC=0.47/1.00 (A-B:1) , BC=0.45/1.00 (E-F:1) , WB=0.66/1.00 (B-E:1) , SSI=0.23/1.00 (D-E:1)

DOL LUMBER=1.00 NAIL=1.00 LS BEND=1.10 COMP=1.10 SHEAR=1.10 TENS= 1.10

COMPANION LIVE LOAD FACTOR = 1.00

TRUSS PLATE MANUFACTURER IS NOT RESPONSIBLE FOR QUALITY CONTROL IN THE TRUSS MANUFACTURING PLANT .

NAIL VALUES

PLATE	GRIP(DRY) (PSI) MAX	MIN	SHEAR (PLI) MAX	MIN	SECTION (PLI) MAX	MIN
MT20	650	371	1747	788	1987	1873

PLATE PLACEMENT TOL. = 0.250 inches

PLATE ROTATION TOL. = 5.0 Deg.

JSI GRIP= 0.40 (A) (INPUT = 0.90)
JSI METAL= 0.26 (A) (INPUT = 0.95)

LICENSED PROFESSIONAL ENGINEER
4/02/24
C. M. HEYENS
100505065
PROVINCE OF ONTARIO

STRUCTURAL COMPONENT ONLY
DWG # TR24040100

JOB NAME	TRUSS NAME	QUANTITY	PLY	JOB DESC.	DRWG NO.
436388	T100G	1	1	BAYVIEW WELLINGTON TRUSS DESC.	

Tamarack Roof Truss, Burlington

Version 8.630 S Aug 30 2023 MiTek Industries, Inc. Tue Apr 2 10:55:08 2024 Page 1
ID:GRmvuh1dyQr3nydBfsTFcCy6OGl-HEvoJRHX34j1RnW7fEOvDYqEM0efJvzQug?4VBzUo2n

Scale = 1:36.4

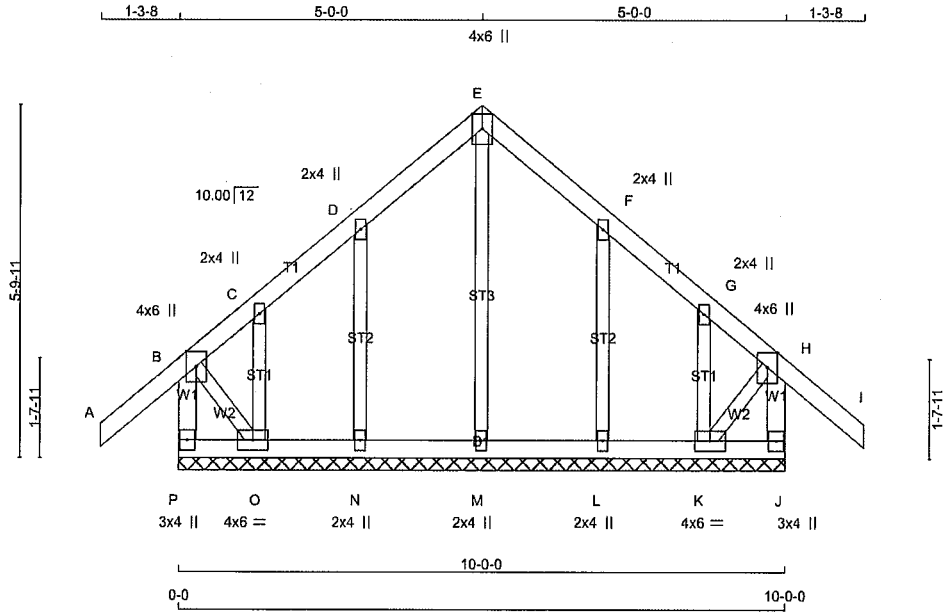

TOTAL WEIGHT = 49 lb

LUMBER
N. L. G. A. RULES

CHORDS	SIZE		LUMBER	DESCR.
P - B	2x4	DRY	No.2	SPF
A - E	2x4	DRY	No.2	SPF
E - I	2x4	DRY	No.2	SPF
J - H	2x4	DRY	No.2	SPF
P - J	2x4	DRY	No.2	SPF
ALL WEBS	2x3	DRY	No.2	SPF
ALL GABLE WEBS	2x3	DRY	No.2	SPF

DRY: SEASONED LUMBER.

GABLE STUDS SPACED AT 2-0-0 OC.

PLATES (table is in inches)

JT	TYPE	PLATES	W	LEN	Y	X
B	TMVW+p	MT20	4.0	6.0	Edge	
C, D, F, G						
C	TMW+w	MT20	2.0	4.0		
E	TTW+p	MT20	4.0	6.0	Edge	
H	TMVW+p	MT20	4.0	6.0	Edge	
J	BMV1+p	MT20	3.0	4.0		
K	BMWW1-t	MT20	4.0	6.0		
L, M, N						
L	BMW1+w	MT20	2.0	4.0		
O	BMWW1-t	MT20	4.0	6.0		
P	BMV1+p	MT20	3.0	4.0		

Edge - INDICATES REFERENCE CORNER OF PLATE TOUCHES EDGE OF CHORD.

NOTES- (1)
1) Lateral braces to be a minimum of 2X4 SPF #2.

LICENSED PROFESSIONAL ENGINEER
4/02/24
C. M. HEYENS
100505065
PROVINCE OF ONTARIO

STRUCTURAL COMPONENT ONLY
DWG # TR24040101

DIMENSIONS, SUPPORTS AND LOADINGS SPECIFIED BY FABRICATOR TO BE VERIFIED BY BUILDING DESIGNER

BEARINGS

THIS TRUSS DESIGNED FOR CONTINUOUS BEARINGS.

THIS TRUSS REQUIRES RIGID SHEATHING ON EXPOSED FACE.

BEARING MATERIAL TO BE SPF NO.2 OR BETTER AT JOINT(S)

BRACING
TOP CHORD TO BE SHEATHED OR MAX. PURLIN SPACING = 6.25 FT.
MAX. UNBRACED BOTTOM CHORD LENGTH = 10.00 FT OR RIGID CEILING DIRECTLY APPLIED.

ALL PITCH BREAKS AND PERIMETER CORNER JOINTS MUST BE LATERALLY RESTRAINED.

LOADING
TOTAL LOAD CASES: (4)

CHORDS

MEMB. FR-TO	MAX. FACTORED FORCE (LBS)	FACTORED VERT. LOAD LC1 (PLF) FROM	TO	MAX CSI (LC)	MAX. UNBRAC LENGTH
P- B	-339 / 0	0.0	0.0	0.04 (1)	7.81
A- B	0 / 50	-112.4	-112.4	0.15 (1)	10.00
B- C	-75 / 0	-112.4	-112.4	0.15 (1)	6.25
C- D	0 / 2	-112.4	-112.4	0.07 (1)	10.00
D- E	-23 / 0	-112.4	-112.4	0.07 (1)	6.25
E- F	-23 / 0	-112.4	-112.4	0.07 (1)	6.25
F- G	0 / 2	-112.4	-112.4	0.07 (1)	10.00
G- H	-75 / 0	-112.4	-112.4	0.15 (1)	6.25
H- I	0 / 50	-112.4	-112.4	0.15 (1)	10.00
J- H	-339 / 0	0.0	0.0	0.04 (1)	7.81
P- O	0 / 0	-18.5	-18.5	0.01 (4)	10.00
O- N	0 / 13	-18.5	-18.5	0.01 (4)	10.00
N- M	0 / 6	-18.5	-18.5	0.02 (4)	10.00
M- L	0 / 6	-18.5	-18.5	0.02 (4)	10.00
L- K	0 / 13	-18.5	-18.5	0.01 (4)	10.00
K- J	0 / 0	-18.5	-18.5	0.01 (4)	10.00

WEBS

MEMB. FR-TO	MAX. FACTORED FORCE (LBS)	MAX CSI (LC)
M- E	-179 / 0	0.09 (1)
N- D	-258 / 0	0.07 (1)
O- C	-46 / 0	0.01 (1)
L- F	-258 / 0	0.07 (1)
K- G	-46 / 0	0.01 (1)
B- O	0 / 20	0.00 (1)
K- H	0 / 20	0.00 (1)

[M]

DESIGN CRITERIA

SPECIFIED LOADS:

TOP CH.	LL =	32.5	PSF
	DL =	6.0	PSF
BOT CH.	LL =	0.0	PSF
	DL =	7.4	PSF
TOTAL LOAD	=	45.9	PSF

SPACING = 24.0 IN. C/C

THIS TRUSS IS DESIGNED FOR RESIDENTIAL OR SMALL BUILDING REQUIREMENTS OF PART 9, NBCC 2015

THIS DESIGN COMPLIES WITH:
- PART 9 OF BCBC 2018 , NBC-2019AE
- PART 9 OF OBC 2012 (2019 AMENDMENT)
- CSA 086-14
- TPIC 2014

DESIGN ASSUMPTIONS
-OVERHANG NOT TO BE ALTERED OR CUT OFF.

(55 % OF 43.9 P.S.F. G.S.L. PLUS 8.4 P.S.F. RAIN LOAD) EQUALS 32.5 P.S.F. SPECIFIED ROOF LIVE LOAD

CSI: TC=0.15/1.00 (A-B:1) , BC=0.02/1.00 (L-M:4) , WB=0.09/1.00 (E-M:1) , SSI=0.09/1.00 (B-C:1)

DOL LUMBER=1.00 NAIL=1.00 LS BEND=1.10 COMP=1.10 SHEAR=1.10 TENS= 1.10

COMPANION LIVE LOAD FACTOR = 1.00

TRUSS PLATE MANUFACTURER IS NOT RESPONSIBLE FOR QUALITY CONTROL IN THE TRUSS MANUFACTURING PLANT .

NAIL VALUES

PLATE	GRIP(DRY) (PSI) MAX	MIN	SHEAR (PLI) MAX	MIN	SECTION (PLI) MAX	MIN
MT20	650	371	1747	788	1987	1873

PLATE PLACEMENT TOL. = 0.250 inches

PLATE ROTATION TOL. = 5.0 Deg.

JSI GRIP= 0.21 (H) (INPUT = 0.90)
JSI METAL= 0.14 (F) (INPUT = 0.95)

JOB NAME	TRUSS NAME	QUANTITY	PLY	JOB DESC.	DRWG NO.
436388	PB1	1	1	BAYVIEW WELLINGTON TRUSS DESC.	

Tamarack Roof Truss, Burlington

Version 8.630 S Aug 30 2023 MiTek Industries, Inc. Tue Apr 2 10:53:02 2024 Page 1
ID:GRmvuh1dyQr3nydBfsTFcCy6OGi-z I9tMmVkMrwKQtvHm7M6zchSEb9nvqtv3UP4UzUo4I

Scale = 1:16.4

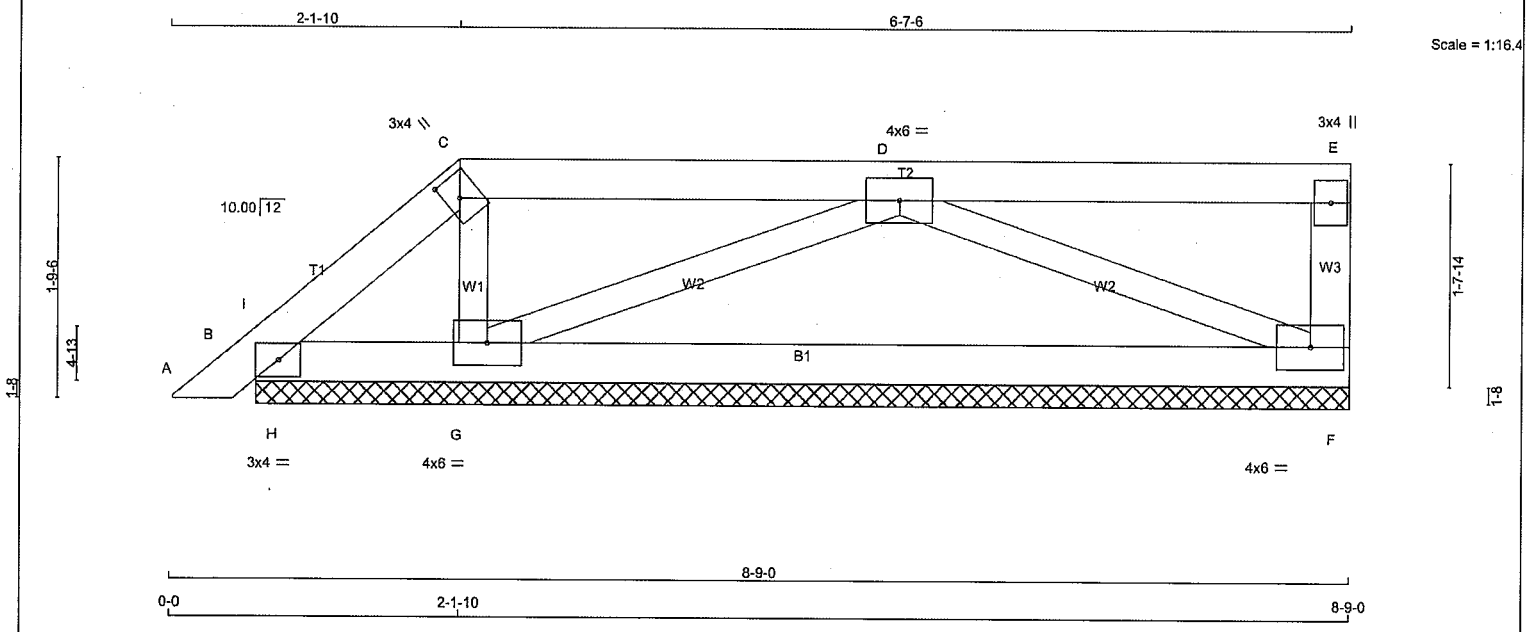

TOTAL WEIGHT = 27 lb
[M]

LUMBER
N. L. G. A. RULES

CHORDS	SIZE		LUMBER	DESCR.
A - C	2x4	DRY	No.2	SPF
C - E	2x4	DRY	No.2	SPF
F - E	2x4	DRY	No.2	SPF
B - F	2x4	DRY	No.2	SPF
ALL WEBS	2x3	DRY	No.2	SPF

DRY: SEASONED LUMBER.

PLATES (table is in inches)

JT	TYPE	PLATES	W	LEN	Y	X
B	TMB1-I	MT20	3.0	4.0		
C	TTW+h	MT20	3.0	4.0	2.00	1.25
D	TMWW-t	MT20	4.0	6.0		
E	TMV+p	MT20	3.0	4.0		
F	BMVW1-t	MT20	4.0	6.0		
G	BMWW1-t	MT20	4.0	6.0		

NOTES- (1)
1) Lateral braces to be a minimum of 2X4 SPF #2.

DIMENSIONS, SUPPORTS AND LOADINGS SPECIFIED BY FABRICATOR TO BE VERIFIED BY BUILDING DESIGNER

BEARINGS

JT	FACTORED GROSS REACTION VERT	HORZ	MAXIMUM FACTORED GROSS REACTION DOWN	HORZ	UPLIFT	INPUT BRG IN-SX	REQRD BRG IN-SX
F	391	0	391	0	0	8-1-7	1-8
B	21	0	21	0	-37	8-1-7	1-8
G	711	0	711	0	0	8-1-7	1-8

UNFACTORED REACTIONS

JT	1ST LCASE COMBINED	MAX./MIN. COMPONENT REACTIONS SNOW	LIVE	PERM.LIVE	WIND	DEAD	SOIL
F	273	199 / 0	0 / 0	0 / 0	0 / 0	74 / 0	0 / 0
B	10	36 / 0	0 / 0	0 / 0	0 / 0	0 / -26	0 / 0
G	503	327 / 0	0 / 0	0 / 0	0 / 0	176 / 0	0 / 0

BEARING MATERIAL TO BE SPF NO.2 OR BETTER AT JOINT(S) F, B, G

BRACING
TOP CHORD TO BE SHEATHED OR MAX. PURLIN SPACING = 10.00 FT.
MAX. UNBRACED BOTTOM CHORD LENGTH = 6.25 FT OR RIGID CEILING DIRECTLY APPLIED.

ALL PITCH BREAKS AND PERIMETER CORNER JOINTS MUST BE LATERALLY RESTRAINED.

LOADING
TOTAL LOAD CASES: (4)

CHORDS

MEMB. FR-TO	MAX. FACTORED FORCE (LBS)	FACTORED VERT. LOAD LC1 (PLF) FROM	TO	MAX CSI (LC)	MAX. UNBRAC LENGTH
A- B	0 / 17	-112.4	-112.4	0.02 (1)	10.00
B- I	0 / 202	-112.4	-112.4	0.06 (4)	10.00
I- C	0 / 119	-112.4	-112.4	0.04 (1)	10.00
C- D	0 / 120	-112.4	-112.4	0.20 (1)	10.00
D- E	0 / 0	-112.4	-112.4	0.18 (1)	10.00
F- E	-149 / 0	0.0	0.0	0.02 (1)	7.81
B- H	-98 / 0	-18.5	-18.5	0.04 (1)	6.25
H- G	-98 / 0	-18.5	-18.5	0.19 (4)	6.25
G- F	0 / 478	-18.5	-18.5	0.21 (4)	10.00

WEBS

MEMB. FR-TO	MAX. FACTORED FORCE (LBS)	MAX CSI (LC)
G- C	-282 / 0	0.04 (1)
G- D	-651 / 0	0.15 (1)
D- F	-516 / 0	0.12 (1)
H- I	-200 / 0	0.00 (1)

DESIGN CRITERIA

SPECIFIED LOADS:

TOP CH.	LL	=	32.5	PSF
	DL	=	6.0	PSF
BOT CH.	LL	=	0.0	PSF
	DL	=	7.4	PSF
TOTAL LOAD		=	45.9	PSF

SPACING = 24.0 IN. C/C

LOADING IN FLAT SECTION BASED ON A SLOPE OF 2.00/12 MINIMUM

THIS TRUSS IS DESIGNED FOR RESIDENTIAL OR SMALL BUILDING REQUIREMENTS OF PART 9, NBCC 2015

THIS DESIGN COMPLIES WITH:
- PART 9 OF BCBC 2018 , NBC-2019AE
- PART 9 OF OBC 2012 (2019 AMENDMENT)
- CSA 086-14
- TPIC 2014

(55 % OF 43.9 P.S.F. G.S.L. PLUS 8.4 P.S.F. RAIN LOAD) EQUALS 32.5 P.S.F. SPECIFIED ROOF LIVE LOAD

CSI: TC=0.20/1.00 (C-D:1) , BC=0.21/1.00 (F-G:4) , WB=0.15/1.00 (D-G:1) , SSI=0.18/1.00 (D-E:1)

DOL LUMBER=1.00 NAIL=1.00 LS BEND=1.10 COMP=1.10 SHEAR=1.10 TENS= 1.10

COMPANION LIVE LOAD FACTOR = 1.00

TRUSS PLATE MANUFACTURER IS NOT RESPONSIBLE FOR QUALITY CONTROL IN THE TRUSS MANUFACTURING PLANT .

NAIL VALUES

PLATE	GRIP(DRY) (PSI) MAX	MIN	SHEAR (PLI) MAX	MIN	SECTION (PLI) MAX	MIN
MT20	650	371	1747	788	1987	1873

PLATE PLACEMENT TOL. = 0.250 inches

PLATE ROTATION TOL. = 5.0 Deg.

JSI GRIP= 0.37 (G) (INPUT = 0.90)
JSI METAL= 0.14 (G) (INPUT = 0.95)

LICENSED PROFESSIONAL ENGINEER
4/02/24
C. M. HEYENS
100505065
PROVINCE OF ONTARIO

STRUCTURAL COMPONENT ONLY
DWG # TR24040008

JOB NAME	TRUSS NAME	QUANTITY	PLY	JOB DESC.	DRWG NO.
436388	PB2	1	1	BAYVIEW WELLINGTON TRUSS DESC.	

Tamarack Roof Truss, Burlington

Version 8.630 S Aug 30 2023 MiTek Industries, Inc. Tue Apr 2 10:53:03 2024 Page 1
ID:GRmvuh1dyQr3nydBfsTFcCy6OGl-RBsX4in7VgzmxaS5qUebfB8mgdxaWOT08jDydxzUo4k

Scale = 1:16.4

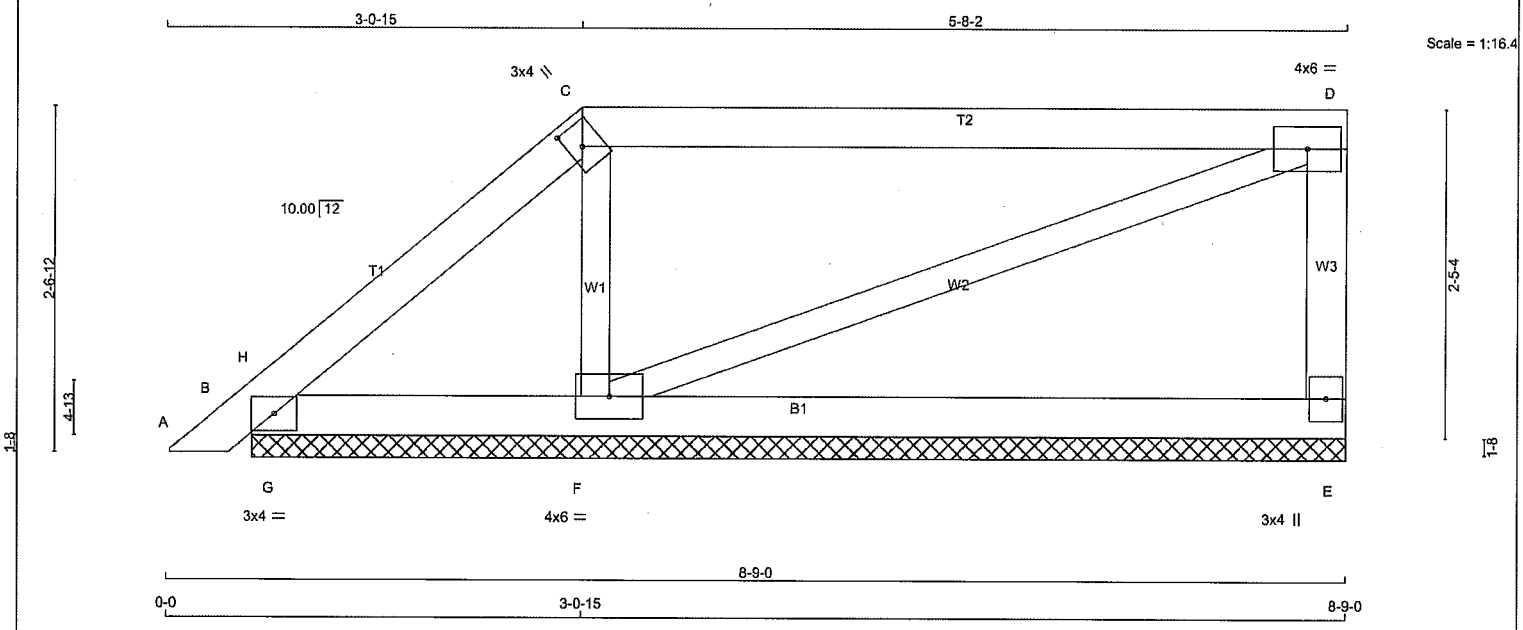

TOTAL WEIGHT = 28 lb

LUMBER
N. L. G. A. RULES

CHORDS	SIZE		LUMBER	DESCR.
A - C	2x4	DRY	No.2	SPF
C - D	2x4	DRY	No.2	SPF
E - D	2x4	DRY	No.2	SPF
B - E	2x4	DRY	No.2	SPF
ALL WEBS	2x3	DRY	No.2	SPF

DRY: SEASONED LUMBER.

PLATES (table is in inches)

JT	TYPE	PLATES	W	LEN	Y	X
B	TMB1-I	MT20	3.0	4.0		
C	TTW+h	MT20	3.0	4.0	2.00	1.25
D	TMVW-t	MT20	4.0	6.0		
E	BMV1+p	MT20	3.0	4.0		
F	BMWW1-t	MT20	4.0	6.0		

NOTES- (1)
1) Lateral braces to be a minimum of 2X4 SPF #2.

DIMENSIONS, SUPPORTS AND LOADINGS SPECIFIED BY FABRICATOR TO BE VERIFIED BY BUILDING DESIGNER

BEARINGS

JT	FACTORED GROSS REACTION VERT	HORZ	MAXIMUM FACTORED GROSS REACTION DOWN	HORZ	UPLIFT	INPUT BRG IN-SX	REQRD BRG IN-SX
E	372	0	372	0	0	8-1-7	1-8
B	242	0	242	0	0	8-1-7	1-8
F	508	0	508	0	0	8-1-7	1-8

UNFACTORED REACTIONS

JT	1ST LCASE COMBINED	MAX./MIN. COMPONENT REACTIONS SNOW	LIVE	PERM.LIVE	WIND	DEAD	SOIL
E	259	191 / 0	0 / 0	0 / 0	0 / 0	68 / 0	0 / 0
B	165	139 / 0	0 / 0	0 / 0	0 / 0	26 / 0	0 / 0
F	360	231 / 0	0 / 0	0 / 0	0 / 0	130 / 0	0 / 0

BEARING MATERIAL TO BE SPF NO.2 OR BETTER AT JOINT(S) E, B, F

BRACING
TOP CHORD TO BE SHEATHED OR MAX. PURLIN SPACING = 6.25 FT.
MAX. UNBRACED BOTTOM CHORD LENGTH = 10.00 FT OR RIGID CEILING DIRECTLY APPLIED.

ALL PITCH BREAKS AND PERIMETER CORNER JOINTS MUST BE LATERALLY RESTRAINED.

LOADING
TOTAL LOAD CASES: (4)

CHORDS

MEMB. FR-TO	MAX. FACTORED FORCE (LBS)	FACTORED VERT. LOAD (PLF) FROM	TO	LC1 MAX CSI (LC)	MAX. UNBRAC LENGTH
A- B	0 / 17	-112.4	-112.4	0.02 (1)	10.00
B- H	0 / 22	-112.4	-112.4	0.04 (1)	10.00
H- C	-78 / 0	-112.4	-112.4	0.07 (1)	6.25
C- D	-34 / 0	-112.4	-112.4	0.62 (1)	6.25
E- D	-332 / 0	0.0	0.0	0.04 (1)	7.81
B- G	0 / 53	-18.5	-18.5	0.09 (1)	10.00
G- F	0 / 53	-18.5	-18.5	0.13 (4)	10.00
F- E	0 / 0	-18.5	-18.5	0.13 (4)	10.00

WEBS

MEMB. FR-TO	MAX. FACTORED FORCE (LBS)	MAX CSI (LC)
F- C	-385 / 0	0.06 (1)
F- D	0 / 36	0.01 (1)
G- H	-262 / 0	0.00 (1)

DESIGN CRITERIA

SPECIFIED LOADS:

TOP CH.	LL	=	32.5	PSF
	DL	=	6.0	PSF
BOT CH.	LL	=	0.0	PSF
	DL	=	7.4	PSF
TOTAL LOAD		=	45.9	PSF

SPACING = 24.0 IN. C/C

LOADING IN FLAT SECTION BASED ON A SLOPE OF 2.00/12 MINIMUM

THIS TRUSS IS DESIGNED FOR RESIDENTIAL OR SMALL BUILDING REQUIREMENTS OF PART 9, NBCC 2015

THIS DESIGN COMPLIES WITH:
- PART 9 OF BCBC 2018 , NBC-2019AE
- PART 9 OF OBC 2012 (2019 AMENDMENT)
- CSA 086-14
- TPIC 2014

(55 % OF 43.9 P.S.F. G.S.L. PLUS 8.4 P.S.F. RAIN LOAD) EQUALS 32.5 P.S.F. SPECIFIED ROOF LIVE LOAD

CSI: TC=0.62/1.00 (C-D:1) , BC=0.13/1.00 (F-G:4) , WB=0.06/1.00 (C-F:1) , SSI=0.25/1.00 (C-D:1)

DOL LUMBER=1.00 NAIL=1.00 LS BEND=1.10 COMP=1.10 SHEAR=1.10 TENS= 1.10

COMPANION LIVE LOAD FACTOR = 1.00

TRUSS PLATE MANUFACTURER IS NOT RESPONSIBLE FOR QUALITY CONTROL IN THE TRUSS MANUFACTURING PLANT .

NAIL VALUES

PLATE	GRIP(DRY) (PSI) MAX	MIN	SHEAR (PLI) MAX	MIN	SECTION (PLI) MAX	MIN
MT20	650	371	1747	788	1987	1873

PLATE PLACEMENT TOL. = 0.250 inches

PLATE ROTATION TOL. = 5.0 Deg.

JSI GRIP= 0.50 (C) (INPUT = 0.90)
JSI METAL= 0.05 (B) (INPUT = 0.95)

LICENSED PROFESSIONAL ENGINEER
4/02/24
C. M. HEYENS
100505065
PROVINCE OF ONTARIO

STRUCTURAL COMPONENT ONLY
DWG # TR24040009

JOB NAME	TRUSS NAME	QUANTITY	PLY	JOB DESC.	DRWG NO.
436388	PB3	1	1	BAYVIEW WELLINGTON TRUSS DESC.	

Tamarack Roof Truss, Burlington

Version 8.630 S Aug 30 2023 MiTek Industries, Inc. Tue Apr 2 10:53:04 2024 Page 1
ID:GRmvuh1dyQr3nydBfsTFcCy6OGI-wNQwI1nlG 5dZj1IOBAqBOh2A1H Fqo9NNzW9NzUo4j

Scale = 1:16.4

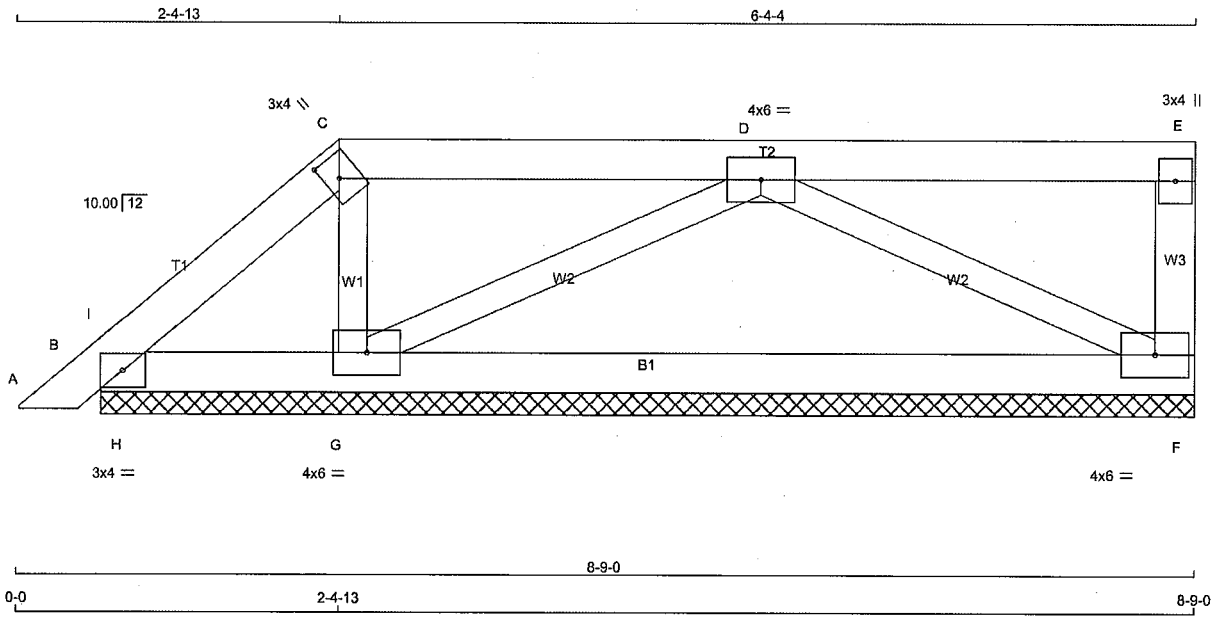

TOTAL WEIGHT = 28 lb

LUMBER
N. L. G. A. RULES

CHORDS	SIZE		LUMBER	DESCR.
A - C	2x4	DRY	No.2	SPF
C - E	2x4	DRY	No.2	SPF
F - E	2x4	DRY	No.2	SPF
B - F	2x4	DRY	No.2	SPF
ALL WEBS	2x3	DRY	No.2	SPF

DRY: SEASONED LUMBER.

PLATES (table is in inches)

JT	TYPE	PLATES	W	LEN	Y	X
B	TMB1-I	MT20	3.0	4.0		
C	TTW+h	MT20	3.0	4.0	2.00	1.25
D	TMWW-t	MT20	4.0	6.0		
E	TMV+p	MT20	3.0	4.0		
F	BMVW1-t	MT20	4.0	6.0		
G	BMWW1-t	MT20	4.0	6.0		

NOTES- (1)
1) Lateral braces to be a minimum of 2X4 SPF #2.

DIMENSIONS, SUPPORTS AND LOADINGS SPECIFIED BY FABRICATOR TO BE VERIFIED BY BUILDING DESIGNER

BEARINGS

JT	FACTORED GROSS REACTION VERT	HORZ	MAXIMUM FACTORED GROSS REACTION DOWN	HORZ	UPLIFT	INPUT BRG IN-SX	REQRD BRG IN-SX
F	380	0	380	0	0	8-1-7	1-8
B	85	0	85	0	-13	8-1-7	1-8
G	657	0	657	0	0	8-1-7	1-8

UNFACTORED REACTIONS

JT	1ST LCASE COMBINED	MAX./MIN. COMPONENT REACTIONS SNOW	LIVE	PERM.LIVE	WIND	DEAD	SOIL
F	265	194 / 0	0 / 0	0 / 0	0 / 0	72 / 0	0 / 0
B	55	64 / 0	0 / 0	0 / 0	0 / 0	0 / -9	0 / 0
G	465	303 / 0	0 / 0	0 / 0	0 / 0	162 / 0	0 / 0

BEARING MATERIAL TO BE SPF NO.2 OR BETTER AT JOINT(S) F, B, G

BRACING
TOP CHORD TO BE SHEATHED OR MAX. PURLIN SPACING = 10.00 FT.
MAX. UNBRACED BOTTOM CHORD LENGTH = 6.25 FT OR RIGID CEILING DIRECTLY APPLIED.

ALL PITCH BREAKS AND PERIMETER CORNER JOINTS MUST BE LATERALLY RESTRAINED.

LOADING
TOTAL LOAD CASES: (4)

CHORDS

MEMB. FR-TO	MAX. FACTORED FORCE (LBS)	FACTORED VERT. LOAD (PLF) FROM	TO	LC1 MAX CSI (LC)	MAX. UNBRAC LENGTH
A- B	0 / 17	-112.4	-112.4	0.02 (1)	10.00
B- I	0 / 146	-112.4	-112.4	0.05 (4)	10.00
I- C	0 / 68	-112.4	-112.4	0.04 (1)	10.00
C- D	0 / 75	-112.4	-112.4	0.18 (1)	10.00
D- E	0 / 0	-112.4	-112.4	0.17 (1)	10.00
F- E	-142 / 0	0.0	0.0	0.02 (1)	7.81
B- H	-58 / 0	-18.5	-18.5	0.05 (1)	6.25
H- G	-58 / 0	-18.5	-18.5	0.17 (4)	6.25
G- F	0 / 392	-18.5	-18.5	0.19 (4)	10.00

WEBS

MEMB. FR-TO	MAX. FACTORED FORCE (LBS)	MAX CSI (LC)
G- C	-258 / 0	0.04 (1)
G- D	-527 / 0	0.12 (1)
D- F	-437 / 0	0.10 (1)
H- I	-208 / 0	0.00 (1)

DESIGN CRITERIA

SPECIFIED LOADS:

TOP CH.	LL	=	32.5	PSF
	DL	=	6.0	PSF
BOT CH.	LL	=	0.0	PSF
	DL	=	7.4	PSF
TOTAL LOAD		=	45.9	PSF

SPACING = 24.0 IN. C/C

LOADING IN FLAT SECTION BASED ON A SLOPE OF 2.00/12 MINIMUM

THIS TRUSS IS DESIGNED FOR RESIDENTIAL OR SMALL BUILDING REQUIREMENTS OF PART 9, NBCC 2015

THIS DESIGN COMPLIES WITH:
- PART 9 OF BCBC 2018 , NBC-2019AE
- PART 9 OF OBC 2012 (2019 AMENDMENT)
- CSA 086-14
- TPIC 2014

(55 % OF 43.9 P.S.F. G.S.L. PLUS 8.4 P.S.F. RAIN LOAD) EQUALS 32.5 P.S.F. SPECIFIED ROOF LIVE LOAD

CSI: TC=0.18/1.00 (C-D:1) , BC=0.19/1.00 (F-G:4) , WB=0.12/1.00 (D-G:1) , SSI=0.17/1.00 (D-E:1)

DOL LUMBER=1.00 NAIL=1.00 LS BEND=1.10 COMP=1.10 SHEAR=1.10 TENS= 1.10

COMPANION LIVE LOAD FACTOR = 1.00

TRUSS PLATE MANUFACTURER IS NOT RESPONSIBLE FOR QUALITY CONTROL IN THE TRUSS MANUFACTURING PLANT .

NAIL VALUES

PLATE	GRIP(DRY) (PSI) MAX	MIN	SHEAR (PLI) MAX	MIN	SECTION (PLI) MAX	MIN
MT20	650	371	1747	788	1987	1873

PLATE PLACEMENT TOL. = 0.250 inches

PLATE ROTATION TOL. = 5.0 Deg.

JSI GRIP= 0.28 (G) (INPUT = 0.90)
JSI METAL= 0.11 (G) (INPUT = 0.95)

LICENSED PROFESSIONAL ENGINEER
4/02/24
C. M. HEYENS
100505065
PROVINCE OF ONTARIO

STRUCTURAL COMPONENT ONLY
DWG # TR24040010

JOB NAME	TRUSS NAME	QUANTITY	PLY	JOB DESC.	DRWG NO.
436388	PB4	1	1	BAYVIEW WELLINGTON TRUSS DESC.	

Tamarack Roof Truss, Burlington

Version 8.630 S Aug 30 2023 MiTek Industries, Inc. Tue Apr 2 10:53:06 2024 Page 1
ID:GRmvuh1dyQr3nydBfsTFcCy6OGl-smXqjjp0obLLo1BqWcClGpmHlr ZjlASqhScDGzUo4h

Scale = 1:17.3

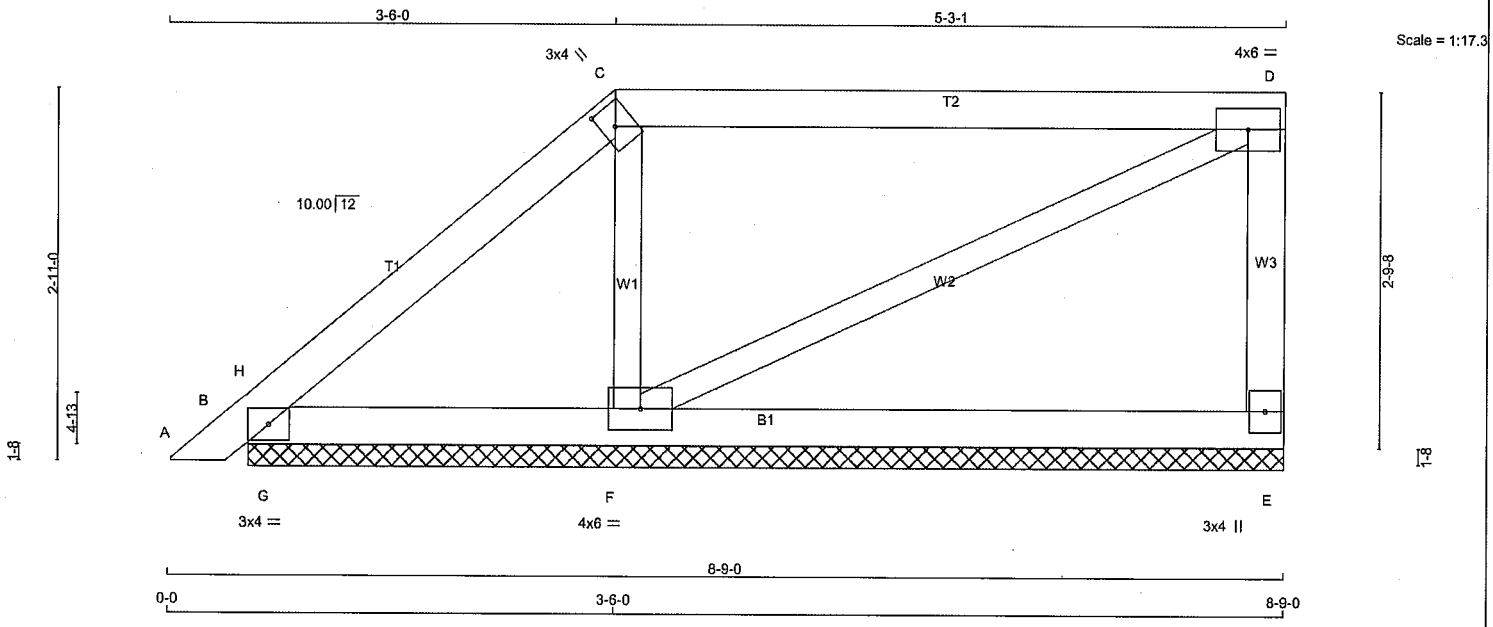

TOTAL WEIGHT = 29 lb

LUMBER
N. L. G. A. RULES

CHORDS	SIZE		LUMBER	DESCR.
A - C	2x4	DRY	No.2	SPF
C - D	2x4	DRY	No.2	SPF
E - D	2x4	DRY	No.2	SPF
B - E	2x4	DRY	No.2	SPF
ALL WEBS	2x3	DRY	No.2	SPF

DRY: SEASONED LUMBER.

PLATES (table is in inches)

JT	TYPE	PLATES	W	LEN	Y	X
B	TMB1-l	MT20	3.0	4.0		
C	TTW+h	MT20	3.0	4.0	2.00	1.25
D	TMVW-t	MT20	4.0	6.0		
E	BMV1+p	MT20	3.0	4.0		
F	BMWW1-t	MT20	4.0	6.0		

NOTES- (1)
1) Lateral braces to be a minimum of 2X4 SPF #2.

DIMENSIONS, SUPPORTS AND LOADINGS SPECIFIED BY FABRICATOR TO BE VERIFIED BY BUILDING DESIGNER

BEARINGS

JT	FACTORED GROSS REACTION VERT	HORZ	MAXIMUM FACTORED GROSS REACTION DOWN	HORZ	UPLIFT	INPUT BRG IN-SX	REQRD BRG IN-SX
E	352	0	352	0	0	8-1-7	1-8
B	279	0	279	0	0	8-1-7	1-8
F	491	0	491	0	0	8-1-7	1-8

UNFACTORED REACTIONS

JT	1ST LCASE COMBINED	MAX./MIN. COMPONENT REACTIONS SNOW	LIVE	PERM.LIVE	WIND	DEAD	SOIL
E	245	181 / 0	0 / 0	0 / 0	0 / 0	64 / 0	0 / 0
B	192	155 / 0	0 / 0	0 / 0	0 / 0	38 / 0	0 / 0
F	348	226 / 0	0 / 0	0 / 0	0 / 0	122 / 0	0 / 0

BEARING MATERIAL TO BE SPF NO.2 OR BETTER AT JOINT(S) E, B, F

BRACING
TOP CHORD TO BE SHEATHED OR MAX. PURLIN SPACING = 6.25 FT.
MAX. UNBRACED BOTTOM CHORD LENGTH = 10.00 FT OR RIGID CEILING DIRECTLY APPLIED.

ALL PITCH BREAKS AND PERIMETER CORNER JOINTS MUST BE LATERALLY RESTRAINED.

LOADING
TOTAL LOAD CASES: (4)

CHORDS

MEMB. FR-TO	MAX. FACTORED FORCE (LBS)	VERT. LOAD (PLF) FROM	TO	LC1 MAX CSI (LC)	MAX. UNBRAC LENGTH
A- B	0 / 17	-112.4	-112.4	0.02 (1)	10.00
B- H	0 / 32	-112.4	-112.4	0.06 (1)	10.00
H- C	-87 / 0	-112.4	-112.4	0.11 (1)	6.25
C- D	-43 / 0	-112.4	-112.4	0.53 (1)	6.25
E- D	-316 / 0	0.0	0.0	0.04 (1)	7.81
B- G	0 / 59	-18.5	-18.5	0.11 (1)	10.00
G- F	0 / 59	-18.5	-18.5	0.12 (4)	10.00
F- E	0 / 0	-18.5	-18.5	0.11 (4)	10.00

WEBS

MEMB. FR-TO	MAX. FACTORED FORCE (LBS)	MAX CSI (LC)
F- C	-379 / 0	0.06 (1)
F- D	0 / 48	0.01 (1)
G- H	-323 / 0	0.00 (1)

DESIGN CRITERIA

SPECIFIED LOADS:

TOP CH.	LL	=	32.5	PSF
	DL	=	6.0	PSF
BOT CH.	LL	=	0.0	PSF
	DL	=	7.4	PSF
TOTAL LOAD		=	45.9	PSF

SPACING = 24.0 IN. C/C

LOADING IN FLAT SECTION BASED ON A SLOPE OF 2.00/12 MINIMUM

THIS TRUSS IS DESIGNED FOR RESIDENTIAL OR SMALL BUILDING REQUIREMENTS OF PART 9, NBCC 2015

THIS DESIGN COMPLIES WITH:
- PART 9 OF BCBC 2018 , NBC-2019AE
- PART 9 OF OBC 2012 (2019 AMENDMENT)
- CSA 086-14
- TPIC 2014

(55 % OF 43.9 P.S.F. G.S.L. PLUS 8.4 P.S.F. RAIN LOAD) EQUALS 32.5 P.S.F. SPECIFIED ROOF LIVE LOAD

CSI: TC=0.53/1.00 (C-D:1) , BC=0.12/1.00 (F-G:4) , WB=0.06/1.00 (C-F:1) , SSI=0.24/1.00 (B-G:1)

DOL LUMBER=1.00 NAIL=1.00 LS BEND=1.10 COMP=1.10 SHEAR=1.10 TENS= 1.10

COMPANION LIVE LOAD FACTOR = 1.00

TRUSS PLATE MANUFACTURER IS NOT RESPONSIBLE FOR QUALITY CONTROL IN THE TRUSS MANUFACTURING PLANT .

NAIL VALUES

PLATE	GRIP(DRY) (PSI) MAX	MIN	SHEAR (PLI) MAX	MIN	SECTION (PLI) MAX	MIN
MT20	650	371	1747	788	1987	1873

PLATE PLACEMENT TOL. = 0.250 inches

PLATE ROTATION TOL. = 5.0 Deg.

JSI GRIP= 0.47 (C) (INPUT = 0.90)
JSI METAL= 0.05 (B) (INPUT = 0.95)

LICENSED PROFESSIONAL ENGINEER
4/02/24
C. M. HEYENS
100505065
PROVINCE OF ONTARIO

STRUCTURAL COMPONENT ONLY
DWG # TR24040011

JOB NAME	TRUSS NAME	QUANTITY	PLY	JOB DESC.	DRWG NO.
436388	PB5	27	1	BAYVIEW WELLINGTON TRUSS DESC.	

Tamarack Roof Truss, Burlington

Version 8.630 S Aug 30 2023 MiTek Industries, Inc. Tue Apr 2 10:53:07 2024 Page 1
ID:GRmvuh1dyQr3nydBfsTFcCy6OGl-Ky52w3qeYvTCQBmt3KjXp1JVLFG1SCZc3LBAmizUo4g

Scale = 1:20.4

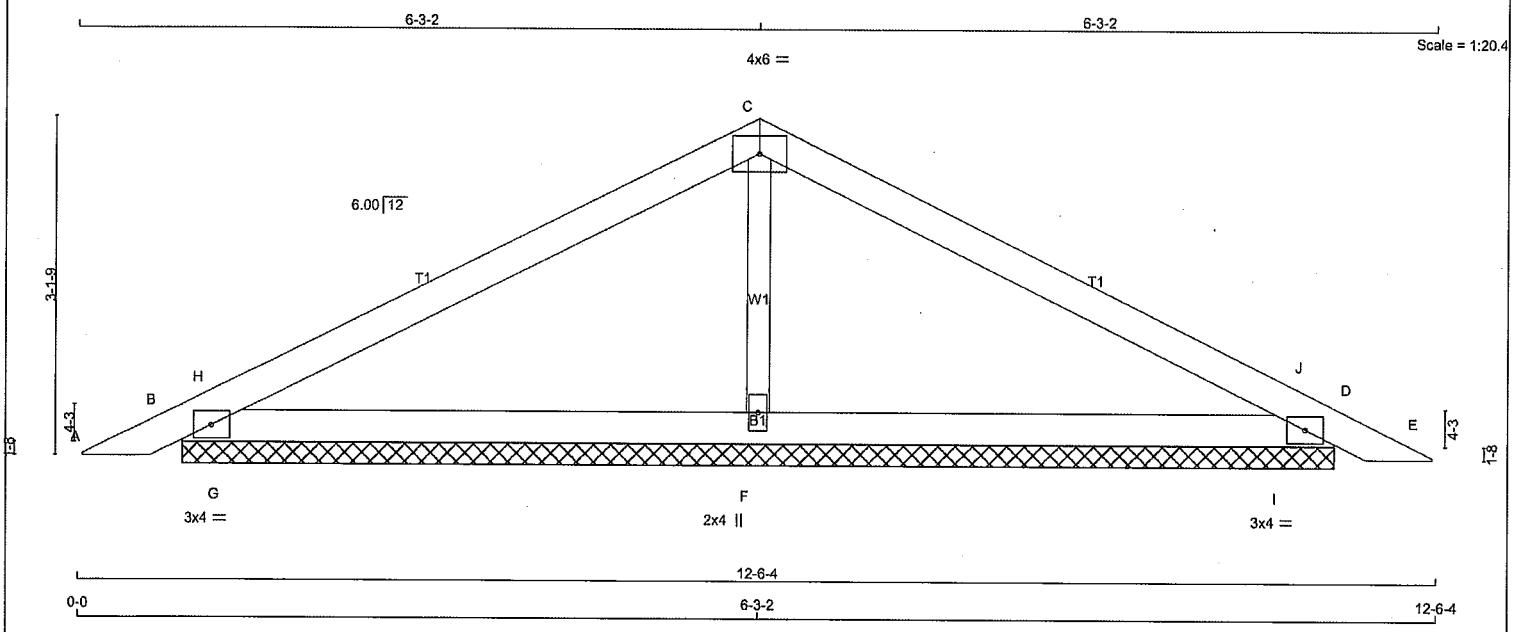

TOTAL WEIGHT = 27 X 30 = 809 lb [M]

LUMBER
N. L. G. A. RULES

CHORDS	SIZE		LUMBER	DESCR.
A - C	2x4	DRY	No.2	SPF
C - E	2x4	DRY	No.2	SPF
B - D	2x4	DRY	No.2	SPF
ALL WEBS	2x3	DRY	No.2	SPF

DRY: SEASONED LUMBER.

PLATES (table is in inches)

JT	TYPE	PLATES	W	LEN	Y	X
B	TMB1-I	MT20	3.0	4.0		
C	TTW-p	MT20	4.0	6.0		
D	TMB1-I	MT20	3.0	4.0		
F	BMW1+w	MT20	2.0	4.0		

NOTES- (1)
1) Lateral braces to be a minimum of 2X4 SPF #2.

DIMENSIONS, SUPPORTS AND LOADINGS SPECIFIED BY FABRICATOR TO BE VERIFIED BY BUILDING DESIGNER

BEARINGS

JT	FACTORED GROSS REACTION VERT	HORZ	MAXIMUM FACTORED GROSS REACTION DOWN	HORZ	UPLIFT	INPUT BRG IN-SX	REQRD BRG IN-SX
B	502	0	502	0	0	10-7-10	1-8
D	502	0	502	0	0	10-7-10	1-8
F	579	0	579	0	0	10-7-10	1-8

UNFACTORED REACTIONS

JT	1ST LCASE COMBINED	MAX./MIN. COMPONENT REACTIONS SNOW	LIVE	PERM.LIVE	WIND	DEAD	SOIL
B	349	264 / 0	0 / 0	0 / 0	0 / 0	85 / 0	0 / 0
D	349	264 / 0	0 / 0	0 / 0	0 / 0	85 / 0	0 / 0
F	408	273 / 0	0 / 0	0 / 0	0 / 0	135 / 0	0 / 0

BEARING MATERIAL TO BE SPF NO.2 OR BETTER AT JOINT(S) B, D, F

BRACING
TOP CHORD TO BE SHEATHED OR MAX. PURLIN SPACING = 6.25 FT.
MAX. UNBRACED BOTTOM CHORD LENGTH = 10.00 FT OR RIGID CEILING DIRECTLY APPLIED.

ALL PITCH BREAKS AND PERIMETER CORNER JOINTS MUST BE LATERALLY RESTRAINED.

LOADING
TOTAL LOAD CASES: (4)

CHORDS

MEMB. FR-TO	MAX. FORCE (LBS)	FACTORED VERT. LOAD (PLF) FROM	TO	LC1	MAX CSI (LC)	MAX. UNBRAC LENGTH
A- B	0 / 20	-112.4	-112.4		0.06 (1)	10.00
B- H	-53 / 0	-112.4	-112.4		0.18 (1)	6.25
H- C	-221 / 0	-112.4	-112.4		0.38 (1)	6.25
C- J	-221 / 0	-112.4	-112.4		0.38 (1)	6.25
J- D	-53 / 0	-112.4	-112.4		0.18 (1)	6.25
D- E	0 / 20	-112.4	-112.4		0.06 (1)	10.00
B- G	0 / 187	-18.5	-18.5		0.36 (1)	10.00
G- F	0 / 187	-18.5	-18.5		0.36 (1)	10.00
F- I	0 / 187	-18.5	-18.5		0.36 (1)	10.00
I- D	0 / 187	-18.5	-18.5		0.36 (1)	10.00

WEBS

MEMB. FR-TO	MAX. FACTORED FORCE (LBS)	MAX CSI (LC)
F- C	-312 / 0	0.05 (1)
G- H	-630 / 0	0.00 (1)
I- J	-630 / 0	0.00 (1)

DESIGN CRITERIA

SPECIFIED LOADS:

TOP CH.	LL	=	32.5	PSF
	DL	=	6.0	PSF
BOT CH.	LL	=	0.0	PSF
	DL	=	7.4	PSF
TOTAL LOAD		=	45.9	PSF

SPACING = 24.0 IN. C/C

THIS TRUSS IS DESIGNED FOR RESIDENTIAL OR SMALL BUILDING REQUIREMENTS OF PART 9, NBCC 2015

THIS DESIGN COMPLIES WITH:
- PART 9 OF BCBC 2018 , NBC-2019AE
- PART 9 OF OBC 2012 (2019 AMENDMENT)
- CSA 086-14
- TPIC 2014

(55 % OF 43.9 P.S.F. G.S.L. PLUS 8.4 P.S.F. RAIN LOAD) EQUALS 32.5 P.S.F. SPECIFIED ROOF LIVE LOAD

CSI: TC=0.38/1.00 (C-H:1) , BC=0.36/1.00 (B-G:1) , WB=0.05/1.00 (C-F:1) , SSI=0.46/1.00 (D-I:1)

DOL LUMBER=1.00 NAIL=1.00 LS BEND=1.10 COMP=1.10 SHEAR=1.10 TENS= 1.10

COMPANION LIVE LOAD FACTOR = 1.00

TRUSS PLATE MANUFACTURER IS NOT RESPONSIBLE FOR QUALITY CONTROL IN THE TRUSS MANUFACTURING PLANT .

NAIL VALUES

PLATE	GRIP(DRY) (PSI) MAX	MIN	SHEAR (PLI) MAX	MIN	SECTION (PLI) MAX	MIN
MT20	650	371	1747	788	1987	1873

PLATE PLACEMENT TOL. = 0.250 inches

PLATE ROTATION TOL. = 5.0 Deg.

JSI GRIP= 0.44 (D) (INPUT = 0.90)
JSI METAL= 0.11 (B) (INPUT = 0.95)

LICENSED PROFESSIONAL ENGINEER
4/02/24
C. M. HEYENS
100505065
PROVINCE OF ONTARIO

STRUCTURAL COMPONENT ONLY
DWG # TR24040012

JOB NAME	TRUSS NAME	QUANTITY	PLY	JOB DESC.	DRWG NO.
436388	PB6	1	1	BAYVIEW WELLINGTON TRUSS DESC.	

Tamarack Roof Truss, Burlington

Version 8.630 S Aug 30 2023 MiTek Industries, Inc. Tue Apr 2 10:53:08 2024 Page 1
ID:GRmvuh1dyQr3nydBfsTFcCy6OGl-o8fQ8PqGJCb32LL3d1EmMEsefefSBe0lI?xjI8zUo4f

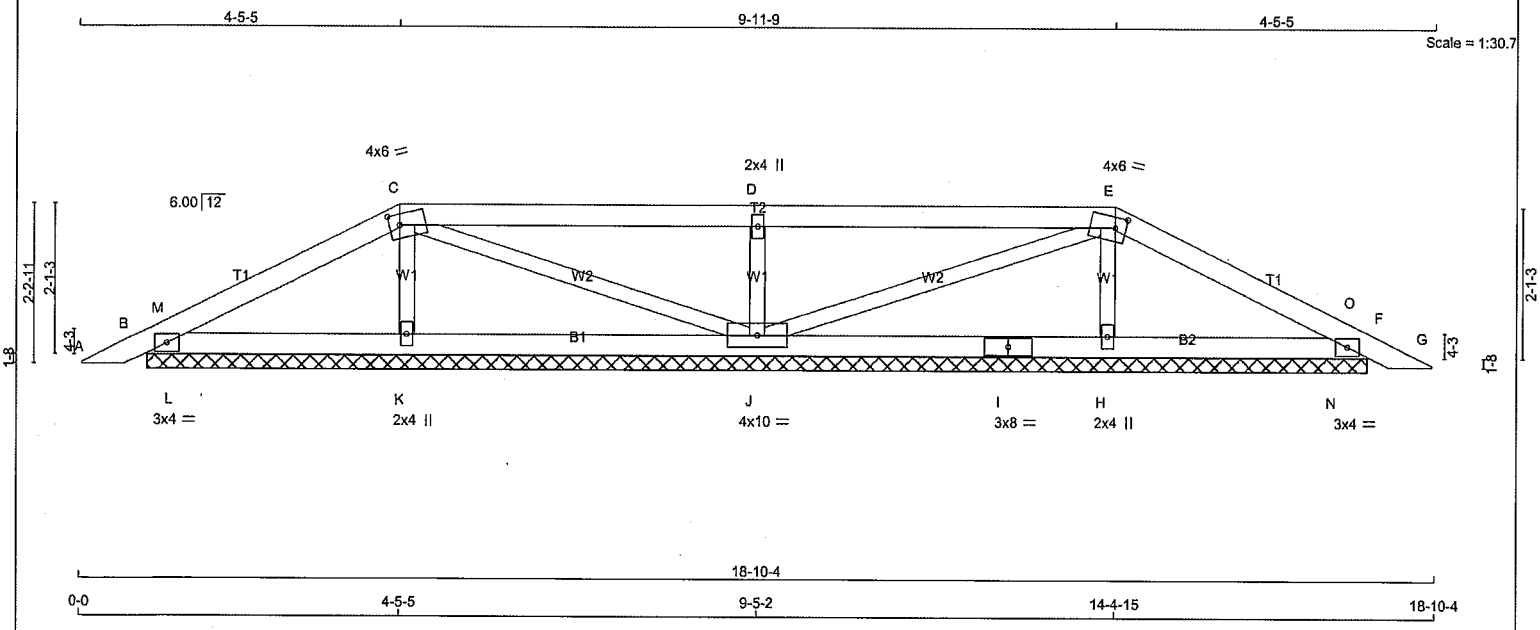

TOTAL WEIGHT = 54 lb

LUMBER
N. L. G. A. RULES

CHORDS	SIZE		LUMBER	DESCR.
A - C	2x4	DRY	No.2	SPF
C - E	2x4	DRY	No.2	SPF
E - G	2x4	DRY	No.2	SPF
B - I	2x4	DRY	No.2	SPF
I - F	2x4	DRY	No.2	SPF
ALL WEBS	2x3	DRY	No.2	SPF

DRY: SEASONED LUMBER.

PLATES (table is in inches)

JT	TYPE	PLATES	W	LEN	Y	X
B	TMB1-I	MT20	3.0	4.0		
C	TTWW-m	MT20	4.0	6.0	1.75	1.75
D	TMW+w	MT20	2.0	4.0		
E	TTWW-m	MT20	4.0	6.0	1.75	1.75
F	TMB1-I	MT20	3.0	4.0		
H	BMW1+w	MT20	2.0	4.0		
I	BS-t	MT20	3.0	8.0		
J	BMWWW1-t	MT20	4.0	10.0		
K	BMW1+w	MT20	2.0	4.0		

NOTES- (1)
1) Lateral braces to be a minimum of 2X4 SPF #2.

DIMENSIONS, SUPPORTS AND LOADINGS SPECIFIED BY FABRICATOR TO BE VERIFIED BY BUILDING DESIGNER

BEARINGS

JT	FACTORED GROSS REACTION VERT	HORZ	MAXIMUM FACTORED GROSS REACTION DOWN	HORZ	UPLIFT	INPUT BRG IN-SX	REQRD BRG IN-SX
B	347	0	347	0	0	16-11-10 (4-11-14)	
K	456	0	456	0	0	16-11-10 (4-11-14)	
J	805	0	805	0	0	16-11-10 (4-11-14)	
H	456	0	456	0	0	16-11-10 (4-11-14)	
F	347	0	347	0	0	16-11-10 (4-11-14)	

VALUE IN PARENTHESIS INDICATES EFFECTIVE BEARING LENGTH

UNFACTORED REACTIONS

JT	1ST LCASE COMBINED	MAX./MIN. COMPONENT REACTIONS SNOW	LIVE	PERM.LIVE	WIND	DEAD	SOIL
B	240	185 / 0	0 / 0	0 / 0	0 / 0	55 / 0	0 / 0
K	322	215 / 0	0 / 0	0 / 0	0 / 0	107 / 0	0 / 0
J	562	411 / 0	0 / 0	0 / 0	0 / 0	151 / 0	0 / 0
H	322	215 / 0	0 / 0	0 / 0	0 / 0	107 / 0	0 / 0
F	240	185 / 0	0 / 0	0 / 0	0 / 0	55 / 0	0 / 0

BEARING MATERIAL TO BE SPF NO.2 OR BETTER AT JOINT(S) B, K, J, H, F

BRACING
TOP CHORD TO BE SHEATHED OR MAX. PURLIN SPACING = 6.25 FT.
MAX. UNBRACED BOTTOM CHORD LENGTH = 10.00 FT OR RIGID CEILING DIRECTLY APPLIED.

ALL PITCH BREAKS AND PERIMETER CORNER JOINTS MUST BE LATERALLY RESTRAINED.

LOADING
TOTAL LOAD CASES: (4)

CHORDS

MEMB. FR-TO	MAX. FACTORED FORCE (LBS)	FACTORED VERT. LOAD LC1 (PLF) FROM	TO	MAX CSI (LC)	MAX. UNBRAC LENGTH
A- B	0 / 20	-112.4	-112.4	0.06 (1)	10.00
B- M	-48 / 0	-112.4	-112.4	0.04 (1)	6.25
M- C	-86 / 0	-112.4	-112.4	0.16 (1)	6.25
C- D	-13 / 0	-112.4	-112.4	0.47 (1)	6.25
D- E	-13 / 0	-112.4	-112.4	0.47 (1)	6.25
E- O	-86 / 0	-112.4	-112.4	0.16 (1)	6.25
O- F	-48 / 0	-112.4	-112.4	0.04 (1)	6.25
F- G	0 / 20	-112.4	-112.4	0.06 (1)	10.00
B- L	0 / 73	-18.5	-18.5	0.15 (1)	10.00
L- K	0 / 73	-18.5	-18.5	0.15 (1)	10.00
K- J	0 / 54	-18.5	-18.5	0.09 (1)	10.00
J- I	0 / 54	-18.5	-18.5	0.09 (1)	10.00
I- H	0 / 54	-18.5	-18.5	0.09 (1)	10.00
H- N	0 / 73	-18.5	-18.5	0.15 (1)	10.00
N- F	0 / 73	-18.5	-18.5	0.15 (1)	10.00

WEBS

MEMB. FR-TO	MAX. FACTORED FORCE (LBS)	MAX CSI (LC)
K- C	-324 / 0	0.05 (1)
C- J	-44 / 0	0.02 (1)
J- D	-700 / 0	0.10 (1)
J- E	-44 / 0	0.02 (1)
H- E	-324 / 0	0.05 (1)
L- M	-272 / 0	0.00 (1)
N- O	-272 / 0	0.00 (1)

[M]

DESIGN CRITERIA

SPECIFIED LOADS:

TOP CH.	LL	=	32.5	PSF
	DL	=	6.0	PSF
BOT CH.	LL	=	0.0	PSF
	DL	=	7.4	PSF
TOTAL LOAD		=	45.9	PSF

SPACING = 24.0 IN. C/C

LOADING IN FLAT SECTION BASED ON A SLOPE OF 2.00/12 MINIMUM

THIS TRUSS IS DESIGNED FOR RESIDENTIAL OR SMALL BUILDING REQUIREMENTS OF PART 9, NBCC 2015

THIS DESIGN COMPLIES WITH:
- PART 9 OF BCBC 2018 , NBC-2019AE
- PART 9 OF OBC 2012 (2019 AMENDMENT)
- CSA 086-14
- TPIC 2014

(55 % OF 43.9 P.S.F. G.S.L. PLUS 8.4 P.S.F. RAIN LOAD) EQUALS 32.5 P.S.F. SPECIFIED ROOF LIVE LOAD

CSI: TC=0.47/1.00 (C-D:1) , BC=0.15/1.00 (B-L:1) , WB=0.10/1.00 (D-J:1) , SSI=0.27/1.00 (C-D:1)

DOL LUMBER=1.00 NAIL=1.00 LS BEND=1.10 COMP=1.10 SHEAR=1.10 TENS= 1.10

COMPANION LIVE LOAD FACTOR = 1.00

TRUSS PLATE MANUFACTURER IS NOT RESPONSIBLE FOR QUALITY CONTROL IN THE TRUSS MANUFACTURING PLANT .

NAIL VALUES

PLATE	GRIP(DRY) (PSI) MAX	MIN	SHEAR (PLI) MAX	MIN	SECTION (PLI) MAX	MIN
MT20	650	371	1747	788	1987	1873

PLATE PLACEMENT TOL. = 0.250 inches

PLATE ROTATION TOL. = 5.0 Deg.

JSI GRIP= 0.87 (C) (INPUT = 0.90)
JSI METAL= 0.15 (D) (INPUT = 0.95)

LICENSED PROFESSIONAL ENGINEER
4/02/24
C. M. HEYENS
100505065
PROVINCE OF ONTARIO

STRUCTURAL COMPONENT ONLY
DWG # TR24040013

JOB NAME	TRUSS NAME	QUANTITY	PLY	JOB DESC.	DRWG NO.
436388	PB7	1	1	BAYVIEW WELLINGTON TRUSS DESC.	

Tamarack Roof Truss, Burlington

Version 8.630 S Aug 30 2023 MiTek Industries, Inc. Tue Apr 2 10:53:09 2024 Page 1
ID:GRmvuh1dyQr3nydBfsTFcCy6OGl-GLDpLIru4WjwfVwFBIl?uSOsn2 ow4evWfqHqazUo4e

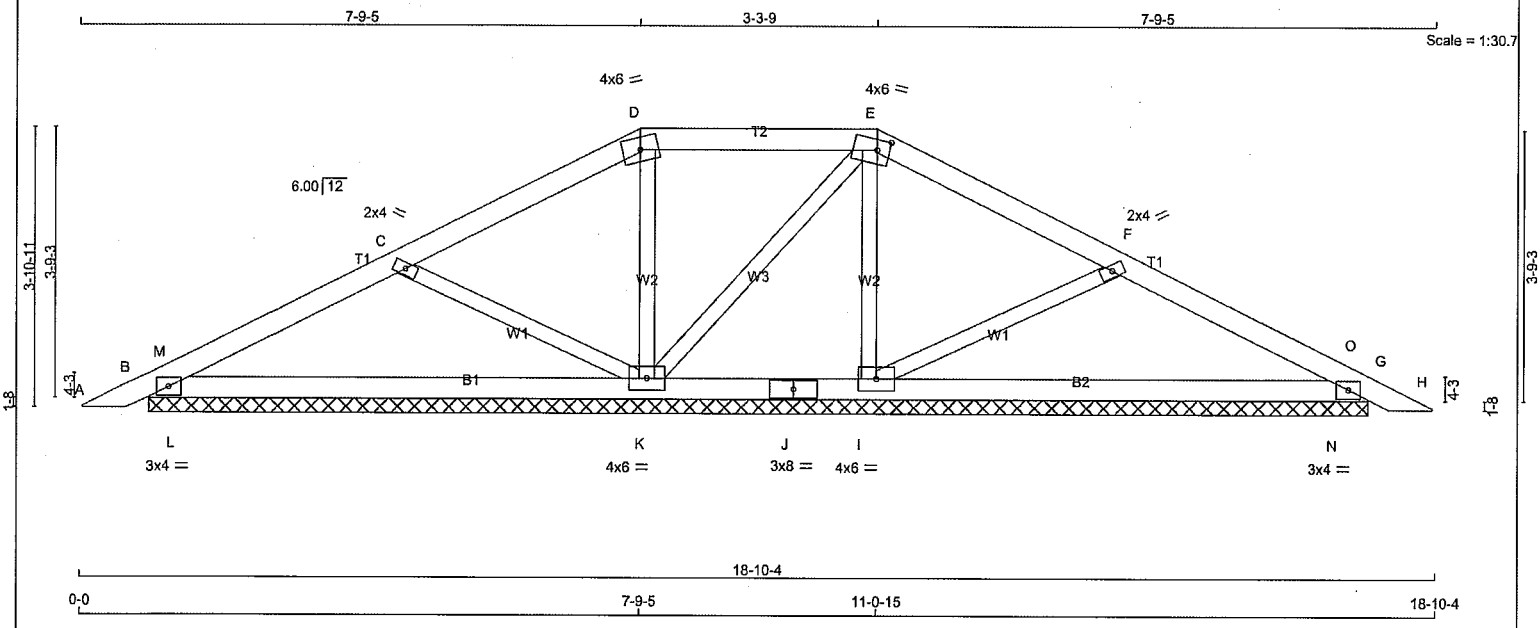

TOTAL WEIGHT = 58 lb

LUMBER
N. L. G. A. RULES

CHORDS	SIZE		LUMBER	DESCR.
A - D	2x4	DRY	No.2	SPF
D - E	2x4	DRY	No.2	SPF
E - H	2x4	DRY	No.2	SPF
B - J	2x4	DRY	No.2	SPF
J - G	2x4	DRY	No.2	SPF
ALL WEBS	2x3	DRY	No.2	SPF

DRY: SEASONED LUMBER.

PLATES (table is in inches)

JT	TYPE	PLATES	W	LEN	Y	X
B	TMB1-I	MT20	3.0	4.0		
C	TMW+w	MT20	2.0	4.0		
D	TTW-m	MT20	4.0	6.0		
E	TTWW-m	MT20	4.0	6.0	1.75	2.00
F	TMW+w	MT20	2.0	4.0		
G	TMB1-I	MT20	3.0	4.0		
I	BMWW1-t	MT20	4.0	6.0		
J	BS-t	MT20	3.0	8.0		
K	BMWWW1-t	MT20	4.0	6.0		

NOTES- (1)
1) Lateral braces to be a minimum of 2X4 SPF #2.

DIMENSIONS, SUPPORTS AND LOADINGS SPECIFIED BY FABRICATOR TO BE VERIFIED BY BUILDING DESIGNER

BEARINGS

JT	FACTORED GROSS REACTION VERT	HORZ	MAXIMUM FACTORED GROSS REACTION DOWN	HORZ	UPLIFT	INPUT BRG IN-SX	REQRD BRG IN-SX
B	421	0	421	0	0	16-11-10 (7-11-84)	
K	860	0	860	0	0	16-11-10 (7-11-84)	
I	676	0	676	0	0	16-11-10 (7-11-84)	
G	454	0	454	0	0	16-11-10 (7-11-84)	

VALUE IN PARENTHESIS INDICATES EFFECTIVE BEARING LENGTH

UNFACTORED REACTIONS

JT	1ST LCASE COMBINED	MAX./MIN. COMPONENT REACTIONS SNOW	LIVE	PERM.LIVE	WIND	DEAD	SOIL
B	294	211 / 0	0 / 0	0 / 0	0 / 0	84 / 0	0 / 0
K	600	439 / 0	0 / 0	0 / 0	0 / 0	161 / 0	0 / 0
I	474	331 / 0	0 / 0	0 / 0	0 / 0	143 / 0	0 / 0
G	317	230 / 0	0 / 0	0 / 0	0 / 0	87 / 0	0 / 0

BEARING MATERIAL TO BE SPF NO.2 OR BETTER AT JOINT(S) B, K, I, G

BRACING
TOP CHORD TO BE SHEATHED OR MAX. PURLIN SPACING = 6.25 FT.
MAX. UNBRACED BOTTOM CHORD LENGTH = 6.25 FT OR RIGID CEILING DIRECTLY APPLIED.

ALL PITCH BREAKS AND PERIMETER CORNER JOINTS MUST BE LATERALLY RESTRAINED.

LOADING
TOTAL LOAD CASES: (4)

CHORDS

MEMB. FR-TO	MAX. FACTORED FORCE (LBS)	FACTORED VERT. LOAD LC1 (PLF) FROM	TO	MAX CSI (LC)	MAX. UNBRAC LENGTH
A- B	0 / 20	-112.4	-112.4	0.06 (1)	10.00
B- M	-359 / 0	-112.4	-112.4	0.13 (4)	6.25
M- C	-238 / 0	-112.4	-112.4	0.22 (1)	6.25
C- D	0 / 236	-112.4	-112.4	0.26 (1)	10.00
D- E	0 / 243	-112.4	-112.4	0.25 (1)	10.00
E- F	0 / 162	-112.4	-112.4	0.24 (1)	10.00
F- O	-311 / 0	-112.4	-112.4	0.22 (1)	6.25
O- G	-431 / 0	-112.4	-112.4	0.13 (4)	6.25
G- H	0 / 20	-112.4	-112.4	0.06 (1)	10.00
B- L	0 / 242	-18.5	-18.5	0.10 (4)	10.00
L- K	0 / 242	-18.5	-18.5	0.14 (4)	10.00
K- J	-174 / 0	-18.5	-18.5	0.13 (4)	6.25
J- I	-174 / 0	-18.5	-18.5	0.13 (4)	6.25
I- N	0 / 306	-18.5	-18.5	0.15 (4)	10.00
N- G	0 / 306	-18.5	-18.5	0.10 (4)	10.00

WEBS

MEMB. FR-TO	MAX. FACTORED FORCE (LBS)	MAX CSI (LC)
C- K	-532 / 0	0.14 (1)
K- D	-441 / 0	0.10 (1)
K- E	-103 / 0	0.04 (1)
I- E	-332 / 0	0.07 (1)
I- F	-530 / 0	0.14 (1)
L- M	0 / 167	0.00 (1)
N- O	0 / 167	0.00 (1)

DESIGN CRITERIA

SPECIFIED LOADS:

TOP CH.	LL	=	32.5	PSF
	DL	=	6.0	PSF
BOT CH.	LL	=	0.0	PSF
	DL	=	7.4	PSF
TOTAL LOAD		=	45.9	PSF

SPACING = 24.0 IN. C/C

LOADING IN FLAT SECTION BASED ON A SLOPE OF 2.00/12 MINIMUM

THIS TRUSS IS DESIGNED FOR RESIDENTIAL OR SMALL BUILDING REQUIREMENTS OF PART 9, NBCC 2015

THIS DESIGN COMPLIES WITH:
- PART 9 OF BCBC 2018 , NBC-2019AE
- PART 9 OF OBC 2012 (2019 AMENDMENT)
- CSA 086-14
- TPIC 2014

(55 % OF 43.9 P.S.F. G.S.L. PLUS 8.4 P.S.F. RAIN LOAD) EQUALS 32.5 P.S.F. SPECIFIED ROOF LIVE LOAD

CSI: TC=0.26/1.00 (C-D:1) , BC=0.15/1.00 (I-N:4) , WB=0.14/1.00 (C-K:1) , SSI=0.17/1.00 (C-M:1)

DOL LUMBER=1.00 NAIL=1.00 LS BEND=1.10 COMP=1.10 SHEAR=1.10 TENS= 1.10

COMPANION LIVE LOAD FACTOR = 1.00

TRUSS PLATE MANUFACTURER IS NOT RESPONSIBLE FOR QUALITY CONTROL IN THE TRUSS MANUFACTURING PLANT .

NAIL VALUES

PLATE	GRIP(DRY) (PSI) MAX	MIN	SHEAR (PLI) MAX	MIN	SECTION (PLI) MAX	MIN
MT20	650	371	1747	788	1987	1873

PLATE PLACEMENT TOL. = 0.250 inches

PLATE ROTATION TOL. = 5.0 Deg.

JSI GRIP= 0.88 (E) (INPUT = 0.90)
JSI METAL= 0.25 (C) (INPUT = 0.95)

LICENSED PROFESSIONAL ENGINEER
4/02/24
C. M. HEYENS
100505065
PROVINCE OF ONTARIO

STRUCTURAL COMPONENT ONLY
DWG # TR24040014

JOB NAME	TRUSS NAME	QUANTITY	PLY	JOB DESC.	DRWG NO.
436388	PB8	17	1	BAYVIEW WELLINGTON TRUSS DESC.	

Tamarack Roof Truss, Burlington

Version 8.630 S Aug 30 2023 MiTek Industries, Inc. Tue Apr 2 10:53:11 2024 Page 1
ID:GRmvuh1dyQr3nydBfsTFcCy6OGI-CjLZmRt8c7zevo3el9oTztUB4sqNO?bB z9NvTzUo4c

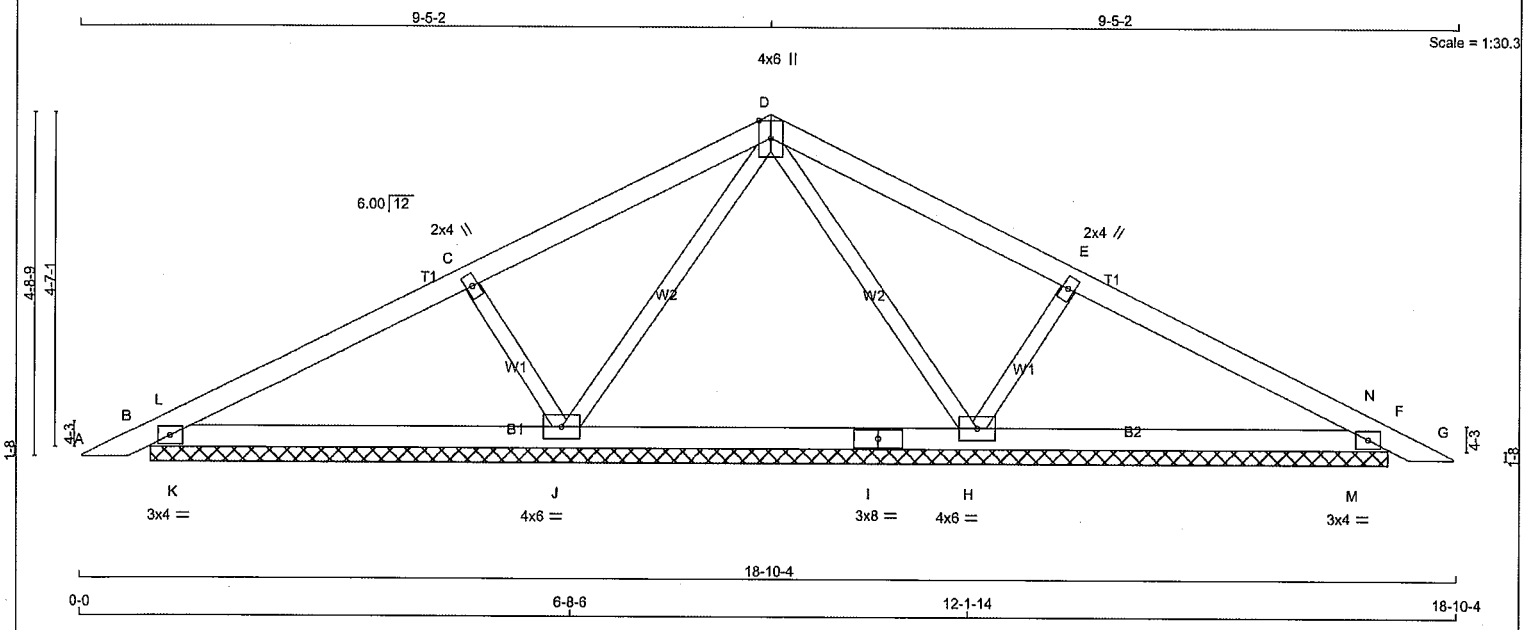

TOTAL WEIGHT = 17 X 55 = 935 lb

LUMBER
N. L. G. A. RULES

CHORDS	SIZE		LUMBER	DESCR.
A - D	2x4	DRY	No.2	SPF
D - G	2x4	DRY	No.2	SPF
B - I	2x4	DRY	No.2	SPF
I - F	2x4	DRY	No.2	SPF
ALL WEBS	2x3	DRY	No.2	SPF

DRY: SEASONED LUMBER.

PLATES (table is in inches)

JT	TYPE	PLATES	W	LEN	Y	X
B	TMB1-I	MT20	3.0	4.0		
C	TMW+w	MT20	2.0	4.0		
D	TTWW+p	MT20	4.0	6.0	Edge	
E	TMW+w	MT20	2.0	4.0		
F	TMB1-I	MT20	3.0	4.0		
H	BMWW1-t	MT20	4.0	6.0		
I	BS-t	MT20	3.0	8.0		
J	BMWW1-t	MT20	4.0	6.0		

Edge - INDICATES REFERENCE CORNER OF PLATE TOUCHES EDGE OF CHORD.

NOTES- (1)
1) Lateral braces to be a minimum of 2X4 SPF #2.

DIMENSIONS, SUPPORTS AND LOADINGS SPECIFIED BY FABRICATOR TO BE VERIFIED BY BUILDING DESIGNER

BEARINGS

JT	FACTORED GROSS REACTION VERT	HORZ	MAXIMUM FACTORED GROSS REACTION DOWN	HORZ	UPLIFT	INPUT BRG IN-SX	REQRD BRG IN-SX
B	423	0	423	0	0	16-11-10 (9-11-82)	
H	783	0	783	0	0	16-11-10 (9-11-82)	
J	783	0	783	0	0	16-11-10 (9-11-82)	
F	423	0	423	0	0	16-11-10 (9-11-82)	

VALUE IN PARENTHESIS INDICATES EFFECTIVE BEARING LENGTH

UNFACTORED REACTIONS

JT	1ST LCASE COMBINED	MAX./MIN. COMPONENT REACTIONS SNOW	LIVE	PERM.LIVE	WIND	DEAD	SOIL
B	295	219 / 0	0 / 0	0 / 0	0 / 0	76 / 0	0 / 0
H	549	387 / 0	0 / 0	0 / 0	0 / 0	161 / 0	0 / 0
J	549	387 / 0	0 / 0	0 / 0	0 / 0	161 / 0	0 / 0
F	295	219 / 0	0 / 0	0 / 0	0 / 0	76 / 0	0 / 0

BEARING MATERIAL TO BE SPF NO.2 OR BETTER AT JOINT(S) B, H, J, F

BRACING
TOP CHORD TO BE SHEATHED OR MAX. PURLIN SPACING = 6.25 FT.
MAX. UNBRACED BOTTOM CHORD LENGTH = 10.00 FT OR RIGID CEILING DIRECTLY APPLIED.

ALL PITCH BREAKS AND PERIMETER CORNER JOINTS MUST BE LATERALLY RESTRAINED.

LOADING
TOTAL LOAD CASES: (4)

CHORDS

MEMB. FR-TO	MAX. FACTORED FORCE (LBS)	FACTORED VERT. LOAD (PLF) FROM	TO	LC1 MAX CSI (LC)	MAX. UNBRAC LENGTH
A- B	0 / 20	-112.4	-112.4	0.06 (1)	10.00
B- L	-242 / 0	-112.4	-112.4	0.06 (4)	6.25
L- C	-185 / 0	-112.4	-112.4	0.33 (1)	6.25
C- D	0 / 59	-112.4	-112.4	0.33 (1)	10.00
D- E	0 / 59	-112.4	-112.4	0.33 (1)	10.00
E- N	-185 / 0	-112.4	-112.4	0.33 (1)	6.25
N- F	-242 / 0	-112.4	-112.4	0.06 (4)	6.25
F- G	0 / 20	-112.4	-112.4	0.06 (1)	10.00
B- K	0 / 191	-18.5	-18.5	0.11 (1)	10.00
K- J	0 / 191	-18.5	-18.5	0.14 (4)	10.00
J- I	0 / 66	-18.5	-18.5	0.13 (4)	10.00
I- H	0 / 66	-18.5	-18.5	0.13 (4)	10.00
H- M	0 / 191	-18.5	-18.5	0.14 (4)	10.00
M- F	0 / 191	-18.5	-18.5	0.11 (1)	10.00

WEBS

MEMB. FR-TO	MAX. FACTORED FORCE (LBS)	MAX CSI (LC)
D- H	-257 / 0	0.12 (1)
H- E	-517 / 0	0.09 (1)
J- D	-257 / 0	0.12 (1)
C- J	-517 / 0	0.09 (1)
K- L	-123 / 58	0.00 (1)
M- N	-123 / 58	0.00 (1)

DESIGN CRITERIA

SPECIFIED LOADS:

TOP CH.	LL	=	32.5	PSF
	DL	=	6.0	PSF
BOT CH.	LL	=	0.0	PSF
	DL	=	7.4	PSF
TOTAL LOAD		=	45.9	PSF

SPACING = 24.0 IN. C/C

THIS TRUSS IS DESIGNED FOR RESIDENTIAL OR SMALL BUILDING REQUIREMENTS OF PART 9, NBCC 2015

THIS DESIGN COMPLIES WITH:
- PART 9 OF BCBC 2018 , NBC-2019AE
- PART 9 OF OBC 2012 (2019 AMENDMENT)
- CSA 086-14
- TPIC 2014

(55 % OF 43.9 P.S.F. G.S.L. PLUS 8.4 P.S.F. RAIN LOAD) EQUALS 32.5 P.S.F. SPECIFIED ROOF LIVE LOAD

CSI: TC=0.33/1.00 (D-E:1) , BC=0.14/1.00 (J-K:4) , WB=0.12/1.00 (D-J:1) , SSI=0.20/1.00 (C-D:1)

DOL LUMBER=1.00 NAIL=1.00 LS BEND=1.10 COMP=1.10 SHEAR=1.10 TENS= 1.10

COMPANION LIVE LOAD FACTOR = 1.00

TRUSS PLATE MANUFACTURER IS NOT RESPONSIBLE FOR QUALITY CONTROL IN THE TRUSS MANUFACTURING PLANT .

NAIL VALUES

PLATE	GRIP(DRY) (PSI) MAX	MIN	SHEAR (PLI) MAX	MIN	SECTION (PLI) MAX	MIN
MT20	650	371	1747	788	1987	1873

PLATE PLACEMENT TOL. = 0.250 inches

PLATE ROTATION TOL. = 5.0 Deg.

JSI GRIP= 0.35 (F) (INPUT = 0.90)
JSI METAL= 0.12 (E) (INPUT = 0.95)

LICENSED PROFESSIONAL ENGINEER
4/02/24
C. M. HEYENS
100505065
PROVINCE OF ONTARIO

STRUCTURAL COMPONENT ONLY
DWG # TR24040015

JOB NAME	TRUSS NAME	QUANTITY	PLY	JOB DESC.	DRWG NO.
436388	PB9	6	1	BAYVIEW WELLINGTON TRUSS DESC.	

Tamarack Roof Truss, Burlington

Version 8.630 S Aug 30 2023 MiTek Industries, Inc. Tue Apr 2 10:53:12 2024 Page 1
ID:GRmvuh1dyQr3nydBfsTFcCy6OGI-hvvxzmumNR5VWyeqstJiW40PYG0f7ROLDdvxRvzUo4b

Scale = 1:20.7

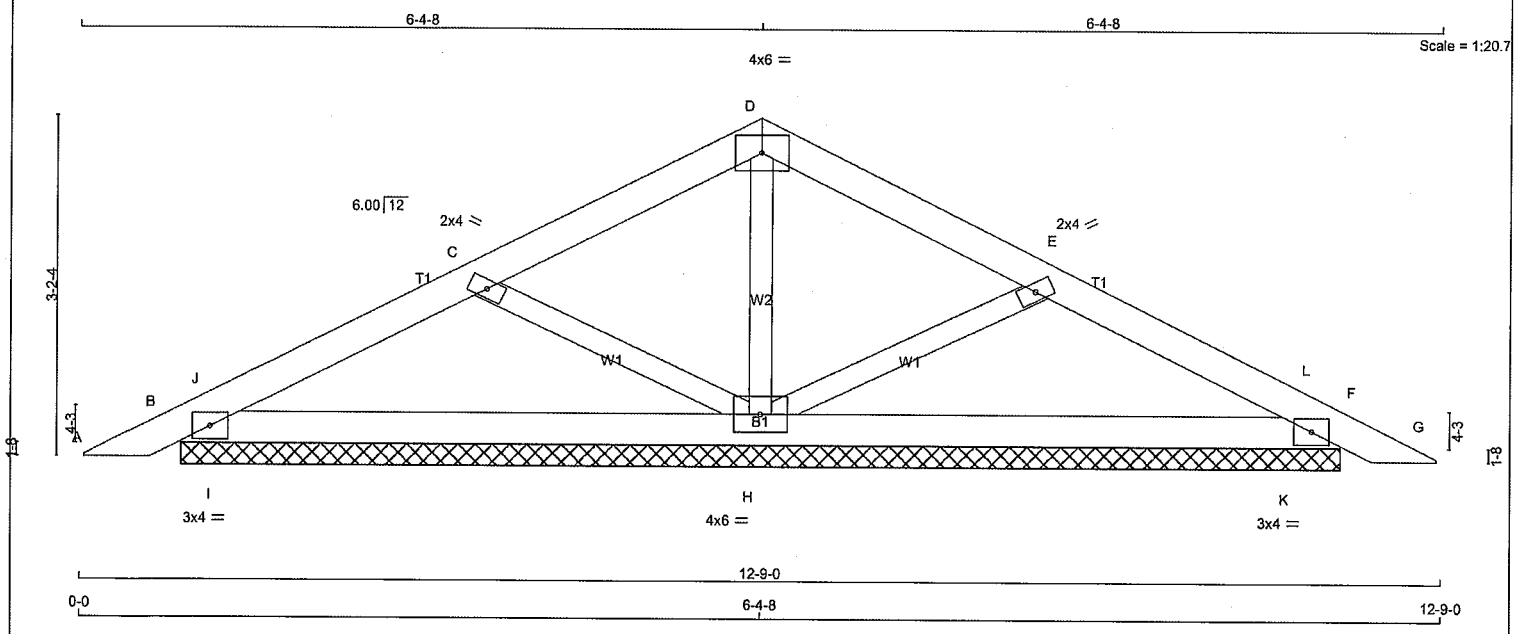

TOTAL WEIGHT = 6 X 35 = 211 lb

[M]

LUMBER

N. L. G. A. RULES

CHORDS	SIZE		LUMBER	DESCR.
A - D	2x4	DRY	No.2	SPF
D - G	2x4	DRY	No.2	SPF
B - F	2x4	DRY	No.2	SPF
ALL WEBS	2x3	DRY	No.2	SPF

DRY: SEASONED LUMBER.

PLATES (table is in inches)

JT	TYPE	PLATES	W	LEN	Y	X
B	TMB1-I	MT20	3.0	4.0		
C	TMW+w	MT20	2.0	4.0		
D	TTW-p	MT20	4.0	6.0		
E	TMW+w	MT20	2.0	4.0		
F	TMB1-I	MT20	3.0	4.0		
H	BMWWW1-t	MT20	4.0	6.0		

NOTES- (1)

1) Lateral braces to be a minimum of 2X4 SPF #2.

DIMENSIONS, SUPPORTS AND LOADINGS SPECIFIED BY FABRICATOR TO BE VERIFIED BY BUILDING DESIGNER

BEARINGS

JT	FACTORED GROSS REACTION VERT	HORZ	MAXIMUM FACTORED GROSS REACTION DOWN	HORZ	UPLIFT	INPUT BRG IN-SX	REQRD BRG IN-SX
B	350	0	350	0	0	10-10-6	1-8
F	350	0	350	0	0	10-10-6	1-8
H	912	0	912	0	0	10-10-6	1-8

UNFACTORED REACTIONS

JT	1ST LCASE COMBINED	MAX./MIN. COMPONENT REACTIONS SNOW	LIVE	PERM.LIVE	WIND	DEAD	SOIL
B	244	180 / 0	0 / 0	0 / 0	0 / 0	64 / 0	0 / 0
F	244	180 / 0	0 / 0	0 / 0	0 / 0	64 / 0	0 / 0
H	638	455 / 0	0 / 0	0 / 0	0 / 0	183 / 0	0 / 0

BEARING MATERIAL TO BE SPF NO.2 OR BETTER AT JOINT(S) B, F, H

BRACING

TOP CHORD TO BE SHEATHED OR MAX. PURLIN SPACING = 6.25 FT.
MAX. UNBRACED BOTTOM CHORD LENGTH = 10.00 FT OR RIGID CEILING DIRECTLY APPLIED.

ALL PITCH BREAKS AND PERIMETER CORNER JOINTS MUST BE LATERALLY RESTRAINED.

LOADING

TOTAL LOAD CASES: (4)

CHORDS

MEMB. FR-TO	MAX. FACTORED FORCE (LBS)	FACTORED VERT. LOAD (PLF) FROM	TO	LC1	MAX CSI (LC)	MAX. UNBRAC LENGTH
A- B	0 / 20	-112.4	-112.4		0.06 (1)	10.00
B- J	-256 / 0	-112.4	-112.4		0.07 (4)	6.25
J- C	-182 / 0	-112.4	-112.4		0.13 (1)	6.25
C- D	0 / 177	-112.4	-112.4		0.16 (1)	10.00
D- E	0 / 177	-112.4	-112.4		0.16 (1)	10.00
E- L	-182 / 0	-112.4	-112.4		0.13 (1)	6.25
L- F	-256 / 0	-112.4	-112.4		0.07 (4)	6.25
F- G	0 / 20	-112.4	-112.4		0.06 (1)	10.00
B- I	0 / 184	-18.5	-18.5		0.05 (1)	10.00
I- H	0 / 184	-18.5	-18.5		0.14 (4)	10.00
H- K	0 / 184	-18.5	-18.5		0.14 (4)	10.00
K- F	0 / 184	-18.5	-18.5		0.05 (1)	10.00

WEBS

MEMB. FR-TO	MAX. FACTORED FORCE (LBS)	MAX CSI (LC)
H- D	-396 / 0	0.07 (1)
H- E	-407 / 0	0.08 (1)
C- H	-407 / 0	0.08 (1)
I- J	-4 / 82	0.00 (1)
K- L	-4 / 82	0.00 (1)

DESIGN CRITERIA

SPECIFIED LOADS:

TOP CH.	LL	=	32.5	PSF
	DL	=	6.0	PSF
BOT CH.	LL	=	0.0	PSF
	DL	=	7.4	PSF
TOTAL LOAD		=	45.9	PSF

SPACING = 24.0 IN. C/C

THIS TRUSS IS DESIGNED FOR RESIDENTIAL OR SMALL BUILDING REQUIREMENTS OF PART 9, NBCC 2015

THIS DESIGN COMPLIES WITH:
- PART 9 OF BCBC 2018 , NBC-2019AE
- PART 9 OF OBC 2012 (2019 AMENDMENT)
- CSA 086-14
- TPIC 2014

(55 % OF 43.9 P.S.F. G.S.L. PLUS 8.4 P.S.F. RAIN LOAD) EQUALS 32.5 P.S.F. SPECIFIED ROOF LIVE LOAD

CSI: TC=0.16/1.00 (C-D:1) , BC=0.14/1.00 (H-I:4) , WB=0.08/1.00 (E-H:1) , SSI=0.13/1.00 (C-J:1)

DOL LUMBER=1.00 NAIL=1.00 LS BEND=1.10 COMP=1.10 SHEAR=1.10 TENS= 1.10

COMPANION LIVE LOAD FACTOR = 1.00

TRUSS PLATE MANUFACTURER IS NOT RESPONSIBLE FOR QUALITY CONTROL IN THE TRUSS MANUFACTURING PLANT .

NAIL VALUES

PLATE	GRIP(DRY) (PSI) MAX	MIN	SHEAR (PLI) MAX	MIN	SECTION (PLI) MAX	MIN
MT20	650	371	1747	788	1987	1873

PLATE PLACEMENT TOL. = 0.250 inches

PLATE ROTATION TOL. = 5.0 Deg.

JSI GRIP= 0.28 (E) (INPUT = 0.90)
JSI METAL= 0.19 (C) (INPUT = 0.95)

LICENSED PROFESSIONAL ENGINEER
4/02/24
C. M. HEYENS
100505065
PROVINCE OF ONTARIO

STRUCTURAL COMPONENT ONLY
DWG # TR24040016

JOB NAME	TRUSS NAME	QUANTITY	PLY	JOB DESC.	DRWG NO.
436388	PB10	2	1	BAYVIEW WELLINGTON TRUSS DESC.	

Tamarack Roof Truss, Burlington

Version 8.630 S Aug 30 2023 MiTek Industries, Inc. Tue Apr 2 10:53:13 2024 Page 1
ID:GRmvuh1dyQr3nydBfsTFcCy6OGI-96SJB6uP8IDM86D0Qaqx3IZYofNlsubURHeUzMzUo4a

Scale = 1:17.6

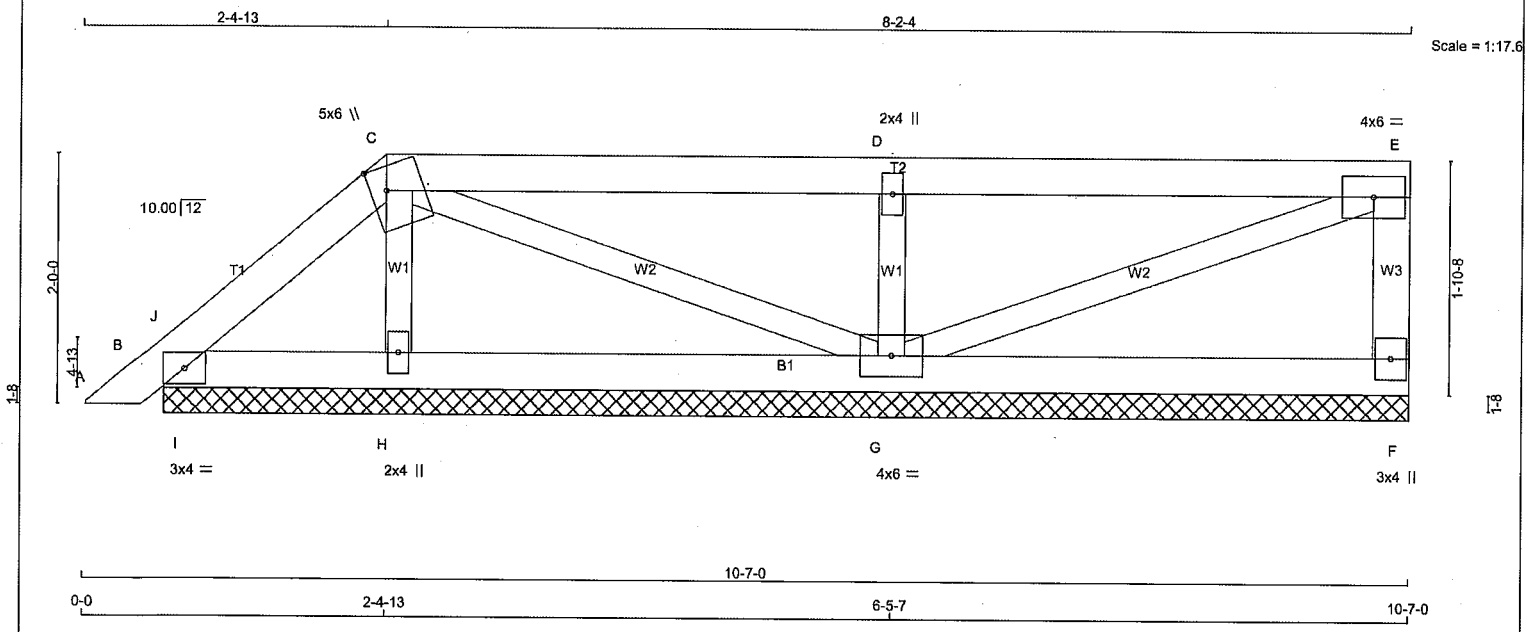

TOTAL WEIGHT = 2 X 34 = 68 lb

[M]

LUMBER
N. L. G. A. RULES

CHORDS	SIZE		LUMBER	DESCR.
A - C	2x4	DRY	No.2	SPF
C - E	2x4	DRY	No.2	SPF
F - E	2x4	DRY	No.2	SPF
B - F	2x4	DRY	No.2	SPF
ALL WEBS	2x3	DRY	No.2	SPF

DRY: SEASONED LUMBER.

PLATES (table is in inches)

JT	TYPE	PLATES	W	LEN	Y	X
B	TMB1-I	MT20	3.0	4.0		
C	TTWW+m	MT20	5.0	6.0	2.25	1.50
D	TMW+w	MT20	2.0	4.0		
E	TMVW-t	MT20	4.0	6.0		
F	BMV1+p	MT20	3.0	4.0		
G	BMWWW1-t	MT20	4.0	6.0		
H	BMW1+w	MT20	2.0	4.0		

NOTES- (1)
1) Lateral braces to be a minimum of 2X4 SPF #2.

DIMENSIONS, SUPPORTS AND LOADINGS SPECIFIED BY FABRICATOR TO BE VERIFIED BY BUILDING DESIGNER

BEARINGS

JT	FACTORED GROSS REACTION VERT	HORZ	MAXIMUM FACTORED GROSS REACTION DOWN	HORZ	UPLIFT	INPUT BRG IN-SX	REQRD BRG IN-SX
F	205	0	205	0	0	9-11-7	1-8
B	206	0	206	0	0	9-11-7	1-8
H	277	0	277	0	0	9-11-7	1-8
G	674	0	674	0	0	9-11-7	1-8

UNFACTORED REACTIONS

JT	1ST LCASE COMBINED	MAX./MIN. COMPONENT REACTIONS SNOW	LIVE	PERM.LIVE	WIND	DEAD	SOIL
F	144	101 / 0	0 / 0	0 / 0	0 / 0	43 / 0	0 / 0
B	142	114 / 0	0 / 0	0 / 0	0 / 0	28 / 0	0 / 0
H	196	127 / 0	0 / 0	0 / 0	0 / 0	69 / 0	0 / 0
G	472	339 / 0	0 / 0	0 / 0	0 / 0	133 / 0	0 / 0

BEARING MATERIAL TO BE SPF NO.2 OR BETTER AT JOINT(S) F, B, H, G

BRACING
TOP CHORD TO BE SHEATHED OR MAX. PURLIN SPACING = 6.25 FT.
MAX. UNBRACED BOTTOM CHORD LENGTH = 10.00 FT OR RIGID CEILING DIRECTLY APPLIED.

ALL PITCH BREAKS AND PERIMETER CORNER JOINTS MUST BE LATERALLY RESTRAINED.

LOADING
TOTAL LOAD CASES: (4)

CHORDS

MEMB. FR-TO	MAX. FACTORED FORCE (LBS)	FACTORED VERT. LOAD (PLF) FROM	TO	LC1 MAX CSI (LC)	MAX. UNBRAC LENGTH
A- B	0 / 17	-112.4	-112.4	0.02 (1)	10.00
B- J	-41 / 0	-112.4	-112.4	0.01 (1)	6.25
J- C	-64 / 0	-112.4	-112.4	0.04 (1)	6.25
C- D	0 / 2	-112.4	-112.4	0.32 (1)	10.00
D- E	0 / 2	-112.4	-112.4	0.32 (1)	10.00
F- E	-175 / 0	0.0	0.0	0.02 (1)	7.81
B- I	0 / 46	-18.5	-18.5	0.05 (1)	10.00
I- H	0 / 46	-18.5	-18.5	0.05 (1)	10.00
H- G	0 / 33	-18.5	-18.5	0.08 (4)	10.00
G- F	0 / 0	-18.5	-18.5	0.08 (4)	10.00

WEBS

MEMB. FR-TO	MAX. FACTORED FORCE (LBS)	MAX CSI (LC)
H- C	-198 / 0	0.03 (1)
C- G	-37 / 0	0.01 (1)
G- D	-575 / 0	0.08 (1)
G- E	-2 / 0	0.00 (1)
I- J	-130 / 0	0.00 (1)

DESIGN CRITERIA

SPECIFIED LOADS:

TOP CH.	LL	=	32.5	PSF
	DL	=	6.0	PSF
BOT CH.	LL	=	0.0	PSF
	DL	=	7.4	PSF
TOTAL LOAD		=	45.9	PSF

SPACING = 24.0 IN. C/C

LOADING IN FLAT SECTION BASED ON A SLOPE OF 2.00/12 MINIMUM

THIS TRUSS IS DESIGNED FOR RESIDENTIAL OR SMALL BUILDING REQUIREMENTS OF PART 9, NBCC 2015

THIS DESIGN COMPLIES WITH:
- PART 9 OF BCBC 2018 , NBC-2019AE
- PART 9 OF OBC 2012 (2019 AMENDMENT)
- CSA 086-14
- TPIC 2014

(55 % OF 43.9 P.S.F. G.S.L. PLUS 8.4 P.S.F. RAIN LOAD) EQUALS 32.5 P.S.F. SPECIFIED ROOF LIVE LOAD

CSI: TC=0.32/1.00 (C-D:1) , BC=0.08/1.00 (G-H:4) , WB=0.08/1.00 (D-G:1) , SSI=0.23/1.00 (D-E:1)

DOL LUMBER=1.00 NAIL=1.00 LS BEND=1.10 COMP=1.10 SHEAR=1.10 TENS= 1.10

COMPANION LIVE LOAD FACTOR = 1.00

TRUSS PLATE MANUFACTURER IS NOT RESPONSIBLE FOR QUALITY CONTROL IN THE TRUSS MANUFACTURING PLANT .

NAIL VALUES

PLATE	GRIP(DRY) (PSI) MAX	MIN	SHEAR (PLI) MAX	MIN	SECTION (PLI) MAX	MIN
MT20	650	371	1747	788	1987	1873

PLATE PLACEMENT TOL. = 0.250 inches

PLATE ROTATION TOL. = 5.0 Deg.

JSI GRIP= 0.29 (D) (INPUT = 0.90)
JSI METAL= 0.12 (D) (INPUT = 0.95)

LICENSED PROFESSIONAL ENGINEER
4/02/24
C. M. HEYENS
100505065
PROVINCE OF ONTARIO

STRUCTURAL COMPONENT ONLY
DWG # TR24040017

JOB NAME	TRUSS NAME	QUANTITY	PLY	JOB DESC.	DRWG NO.
436388	PB11	2	1	BAYVIEW WELLINGTON TRUSS DESC.	

Tamarack Roof Truss, Burlington

Version 8.630 S Aug 30 2023 MiTek Industries, Inc. Tue Apr 2 10:53:14 2024 Page 1
ID:GRmvuh1dyQr3nydBfsTFcCy6OGl-dI0iOSv1v2LDmGoD ILAbV5k43hwbLBegwO2WozUo4Z

Scale = 1:18.1

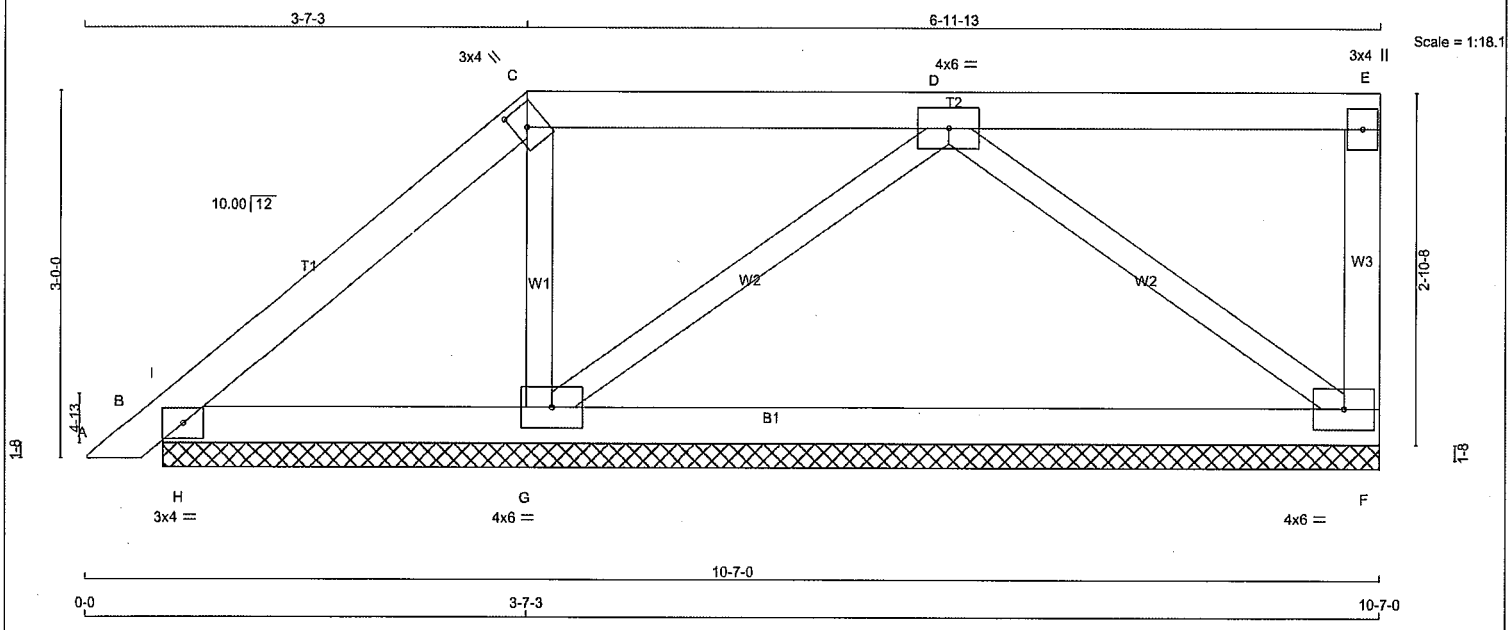

TOTAL WEIGHT = 2 X 36 = 71 lb

LUMBER
N. L. G. A. RULES

CHORDS	SIZE		LUMBER	DESCR.
A - C	2x4	DRY	No.2	SPF
C - E	2x4	DRY	No.2	SPF
F - E	2x4	DRY	No.2	SPF
B - F	2x4	DRY	No.2	SPF
ALL WEBS	2x3	DRY	No.2	SPF

DRY: SEASONED LUMBER.

PLATES (table is in inches)

JT	TYPE	PLATES	W	LEN	Y	X
B	TMB1-I	MT20	3.0	4.0		
C	TTW+h	MT20	3.0	4.0	2.00	1.25
D	TMWW-t	MT20	4.0	6.0		
E	TMV+p	MT20	3.0	4.0		
F	BMVW1-t	MT20	4.0	6.0		
G	BMWW1-t	MT20	4.0	6.0		

NOTES- (1)
1) Lateral braces to be a minimum of 2X4 SPF #2.

DIMENSIONS, SUPPORTS AND LOADINGS SPECIFIED BY FABRICATOR TO BE VERIFIED BY BUILDING DESIGNER

BEARINGS

JT	FACTORED GROSS REACTION VERT	HORZ	MAXIMUM FACTORED GROSS REACTION DOWN	HORZ	UPLIFT	INPUT BRG IN-SX	REQRD BRG IN-SX
F	439	0	439	0	0	9-11-7	1-8
B	234	0	234	0	0	9-11-7	1-8
G	690	0	690	0	0	9-11-7	1-8

UNFACTORED REACTIONS

JT	1ST LCASE COMBINED	MAX./MIN. COMPONENT REACTIONS SNOW	LIVE	PERM.LIVE	WIND	DEAD	SOIL
F	306	225 / 0	0 / 0	0 / 0	0 / 0	81 / 0	0 / 0
B	160	137 / 0	0 / 0	0 / 0	0 / 0	23 / 0	0 / 0
G	488	319 / 0	0 / 0	0 / 0	0 / 0	169 / 0	0 / 0

BEARING MATERIAL TO BE SPF NO.2 OR BETTER AT JOINT(S) F, B, G

BRACING
TOP CHORD TO BE SHEATHED OR MAX. PURLIN SPACING = 6.25 FT.
MAX. UNBRACED BOTTOM CHORD LENGTH = 10.00 FT OR RIGID CEILING DIRECTLY APPLIED.

ALL PITCH BREAKS AND PERIMETER CORNER JOINTS MUST BE LATERALLY RESTRAINED.

LOADING
TOTAL LOAD CASES: (4)

CHORDS

MEMB. FR-TO	MAX. FORCE (LBS)	FACTORED VERT. LOAD (PLF) FROM	TO	LC1 MAX CSI (LC)	MAX. UNBRAC LENGTH
A- B	0 / 17	-112.4	-112.4	0.02 (1)	10.00
B- I	0 / 130	-112.4	-112.4	0.09 (1)	10.00
I- C	-27 / 0	-112.4	-112.4	0.11 (1)	6.25
C- D	0 / 4	-112.4	-112.4	0.22 (1)	10.00
D- E	0 / 0	-112.4	-112.4	0.22 (1)	10.00
F- E	-153 / 0	0.0	0.0	0.02 (1)	7.81
B- H	-3 / 12	-18.5	-18.5	0.12 (1)	10.00
H- G	-3 / 12	-18.5	-18.5	0.20 (4)	10.00
G- F	0 / 324	-18.5	-18.5	0.21 (4)	10.00

WEBS

MEMB. FR-TO	MAX. FORCE (LBS)	MAX CSI (LC)
G- C	-273 / 0	0.05 (1)
G- D	-408 / 0	0.12 (1)
D- F	-401 / 0	0.12 (1)
H- I	-381 / 0	0.00 (1)

DESIGN CRITERIA

SPECIFIED LOADS:

TOP CH.	LL	=	32.5	PSF
	DL	=	6.0	PSF
BOT CH.	LL	=	0.0	PSF
	DL	=	7.4	PSF
TOTAL LOAD		=	45.9	PSF

SPACING = 24.0 IN. C/C

LOADING IN FLAT SECTION BASED ON A SLOPE OF 2.00/12 MINIMUM

THIS TRUSS IS DESIGNED FOR RESIDENTIAL OR SMALL BUILDING REQUIREMENTS OF PART 9, NBCC 2015

THIS DESIGN COMPLIES WITH:
- PART 9 OF BCBC 2018 , NBC-2019AE
- PART 9 OF OBC 2012 (2019 AMENDMENT)
- CSA 086-14
- TPIC 2014

(55 % OF 43.9 P.S.F. G.S.L. PLUS 8.4 P.S.F. RAIN LOAD) EQUALS 32.5 P.S.F. SPECIFIED ROOF LIVE LOAD

CSI: TC=0.22/1.00 (C-D:1) , BC=0.21/1.00 (F-G:4) , WB=0.12/1.00 (D-G:1) , SSI=0.27/1.00 (B-H:1)

DOL LUMBER=1.00 NAIL=1.00 LS BEND=1.10 COMP=1.10 SHEAR=1.10 TENS= 1.10

COMPANION LIVE LOAD FACTOR = 1.00

TRUSS PLATE MANUFACTURER IS NOT RESPONSIBLE FOR QUALITY CONTROL IN THE TRUSS MANUFACTURING PLANT .

NAIL VALUES

PLATE	GRIP(DRY) (PSI) MAX	MIN	SHEAR (PLI) MAX	MIN	SECTION (PLI) MAX	MIN
MT20	650	371	1747	788	1987	1873

PLATE PLACEMENT TOL. = 0.250 inches

PLATE ROTATION TOL. = 5.0 Deg.

JSI GRIP= 0.23 (C) (INPUT = 0.90)
JSI METAL= 0.08 (G) (INPUT = 0.95)

LICENSED PROFESSIONAL ENGINEER
4/02/24
C. M. HEYENS
100505065
PROVINCE OF ONTARIO

STRUCTURAL COMPONENT ONLY
DWG # TR24040018

JOB NAME	TRUSS NAME	QUANTITY	PLY	JOB DESC.	DRWG NO.
436388	PB12	2	1	BAYVIEW WELLINGTON TRUSS DESC.	

Tamarack Roof Truss, Burlington

Version 8.630 S Aug 30 2023 MiTek Industries, Inc. Tue Apr 2 10:53:15 2024 Page 1
ID:GRmvuh1dyQr3nydBfsTFcCy6OGl-5Ua4cowfgMU3NQNPX?sP8jeoXT0QKoqnva7b2EzUo4Y

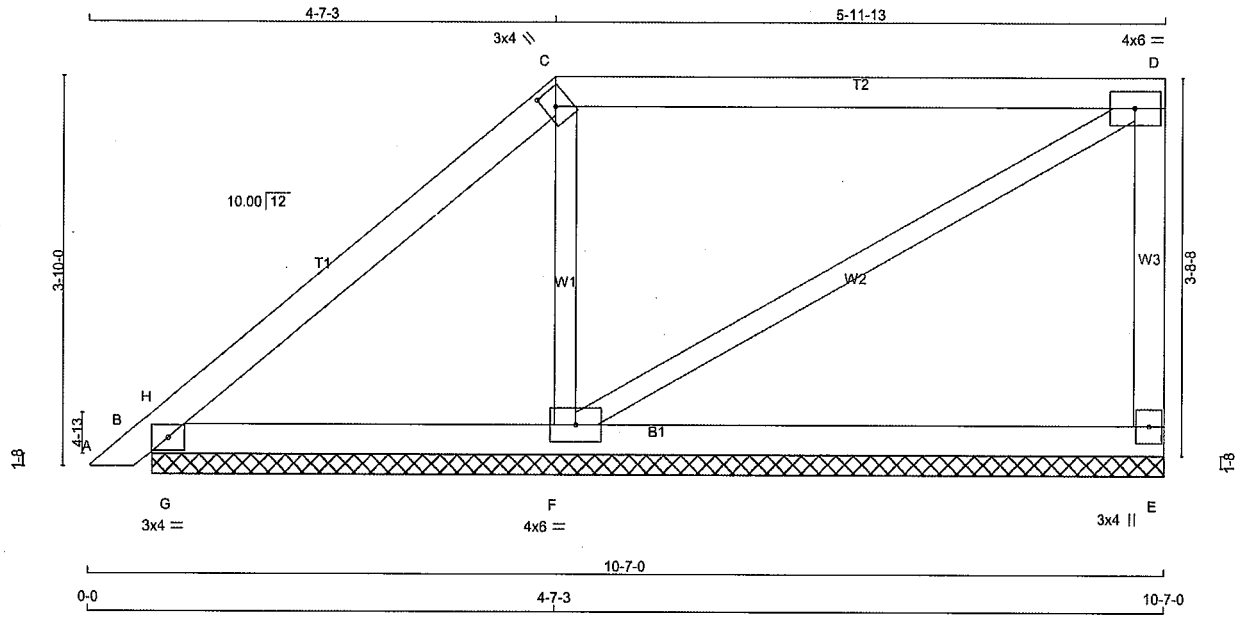

TOTAL WEIGHT = 2 X 36 = 72 lb

LUMBER
N. L. G. A. RULES

CHORDS	SIZE		LUMBER	DESCR.
A - C	2x4	DRY	No.2	SPF
C - D	2x4	DRY	No.2	SPF
E - D	2x4	DRY	No.2	SPF
B - E	2x4	DRY	No.2	SPF
ALL WEBS	2x3	DRY	No.2	SPF

DRY: SEASONED LUMBER.

PLATES (table is in inches)

JT	TYPE	PLATES	W	LEN	Y	X
B	TMB1-l	MT20	3.0	4.0		
C	TTW+h	MT20	3.0	4.0	2.00	1.25
D	TMVW-t	MT20	4.0	6.0		
E	BMV1+p	MT20	3.0	4.0		
F	BMWW1-t	MT20	4.0	6.0		

NOTES- (1)
1) Lateral braces to be a minimum of 2X4 SPF #2.

DIMENSIONS, SUPPORTS AND LOADINGS SPECIFIED BY FABRICATOR TO BE VERIFIED BY BUILDING DESIGNER

BEARINGS

JT	FACTORED GROSS REACTION VERT	HORZ	MAXIMUM FACTORED GROSS REACTION DOWN	HORZ	UPLIFT	INPUT BRG IN-SX	REQRD BRG IN-SX
E	417	0	417	0	0	9-11-7	1-8
B	372	0	372	0	0	9-11-7	1-8
F	574	0	574	0	0	9-11-7	1-8

UNFACTORED REACTIONS

JT	1ST LCASE COMBINED	MAX./MIN. COMPONENT REACTIONS SNOW	LIVE	PERM.LIVE	WIND	DEAD	SOIL
E	291	215 / 0	0 / 0	0 / 0	0 / 0	75 / 0	0 / 0
B	257	201 / 0	0 / 0	0 / 0	0 / 0	56 / 0	0 / 0
F	406	264 / 0	0 / 0	0 / 0	0 / 0	142 / 0	0 / 0

BEARING MATERIAL TO BE SPF NO.2 OR BETTER AT JOINT(S) E, B, F

BRACING
TOP CHORD TO BE SHEATHED OR MAX. PURLIN SPACING = 6.25 FT.
MAX. UNBRACED BOTTOM CHORD LENGTH = 10.00 FT OR RIGID CEILING DIRECTLY APPLIED.

ALL PITCH BREAKS AND PERIMETER CORNER JOINTS MUST BE LATERALLY RESTRAINED.

LOADING
TOTAL LOAD CASES: (4)

CHORDS

MEMB. FR-TO	MAX. FACTORED FORCE (LBS)	VERT. LOAD LC1 (PLF) FROM	TO	MAX CSI (LC)	MAX. UNBRAC LENGTH
A- B	0 / 17	-112.4	-112.4	0.02 (1)	10.00
B- H	0 / 128	-112.4	-112.4	0.14 (1)	10.00
H- C	-127 / 0	-112.4	-112.4	0.21 (1)	6.25
C- D	-72 / 0	-112.4	-112.4	0.69 (1)	6.25
E- D	-378 / 0	0.0	0.0	0.08 (1)	7.81
B- G	0 / 86	-18.5	-18.5	0.20 (1)	10.00
G- F	0 / 86	-18.5	-18.5	0.20 (1)	10.00
F- E	0 / 0	-18.5	-18.5	0.16 (4)	10.00

WEBS

MEMB. FR-TO	MAX. FACTORED FORCE (LBS)	MAX CSI (LC)
F- C	-452 / 0	0.10 (1)
F- D	0 / 83	0.02 (1)
G- H	-570 / 0	0.00 (1)

DESIGN CRITERIA [M]

SPECIFIED LOADS:

TOP CH.	LL	=	32.5	PSF
	DL	=	6.0	PSF
BOT CH.	LL	=	0.0	PSF
	DL	=	7.4	PSF
TOTAL LOAD		=	45.9	PSF

SPACING = 24.0 IN. C/C

LOADING IN FLAT SECTION BASED ON A SLOPE OF 2.00/12 MINIMUM

THIS TRUSS IS DESIGNED FOR RESIDENTIAL OR SMALL BUILDING REQUIREMENTS OF PART 9, NBCC 2015

THIS DESIGN COMPLIES WITH:
- PART 9 OF BCBC 2018 , NBC-2019AE
- PART 9 OF OBC 2012 (2019 AMENDMENT)
- CSA 086-14
- TPIC 2014

(55 % OF 43.9 P.S.F. G.S.L. PLUS 8.4 P.S.F. RAIN LOAD) EQUALS 32.5 P.S.F. SPECIFIED ROOF LIVE LOAD

CSI: TC=0.69/1.00 (C-D:1) , BC=0.20/1.00 (B-G:1) , WB=0.10/1.00 (C-F:1) , SSI=0.43/1.00 (B-G:1)

DOL LUMBER=1.00 NAIL=1.00 LS BEND=1.10 COMP=1.10 SHEAR=1.10 TENS= 1.10

COMPANION LIVE LOAD FACTOR = 1.00

TRUSS PLATE MANUFACTURER IS NOT RESPONSIBLE FOR QUALITY CONTROL IN THE TRUSS MANUFACTURING PLANT .

NAIL VALUES

PLATE	GRIP(DRY) (PSI) MAX	MIN	SHEAR (PLI) MAX	MIN	SECTION (PLI) MAX	MIN
MT20	650	371	1747	788	1987	1873

PLATE PLACEMENT TOL. = 0.250 inches

PLATE ROTATION TOL. = 5.0 Deg.

JSI GRIP= 0.53 (C) (INPUT = 0.90)
JSI METAL= 0.07 (B) (INPUT = 0.95)

LICENSED PROFESSIONAL ENGINEER
4/02/24
C. M. HEYENS
100505065
PROVINCE OF ONTARIO

STRUCTURAL COMPONENT ONLY
DWG # TR24040019

JOB NAME	TRUSS NAME	QUANTITY	PLY	JOB DESC.	DRWG NO.
436388	PB13	1	1	BAYVIEW WELLINGTON TRUSS DESC.	

Tamarack Roof Truss, Burlington

Version 8.630 S Aug 30 2023 MiTek Industries, Inc. Tue Apr 2 10:53:17 2024 Page 1
ID:GRmvuh1dyQr3nydBfsTFcCy6OGI-1tiq1UxvCzkndjXofQvtD8j9AHk oi54Muci67zUo4W

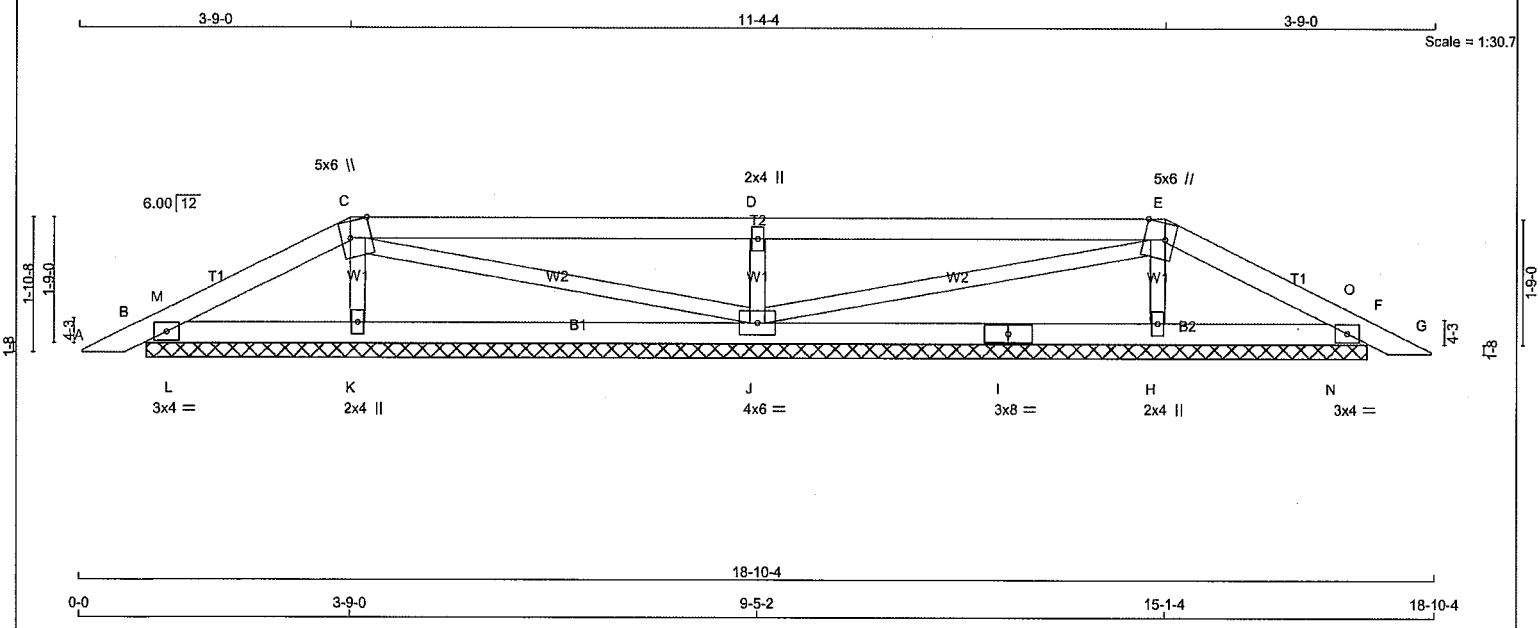

TOTAL WEIGHT = 54 lb

LUMBER
N. L. G. A. RULES

CHORDS	SIZE		LUMBER	DESCR.
A - C	2x4	DRY	No.2	SPF
C - E	2x4	DRY	No.2	SPF
E - G	2x4	DRY	No.2	SPF
B - I	2x4	DRY	No.2	SPF
I - F	2x4	DRY	No.2	SPF
ALL WEBS	2x3	DRY	No.2	SPF

DRY: SEASONED LUMBER.

PLATES (table is in inches)

JT	TYPE	PLATES	W	LEN	Y	X
B	TMB1-I	MT20	3.0	4.0		
C	TTWW+m	MT20	5.0	6.0	Edge	3.50
D	TMW+w	MT20	2.0	4.0		
E	TTWW+m	MT20	5.0	6.0	Edge	3.50
F	TMB1-I	MT20	3.0	4.0		
H	BMW1+w	MT20	2.0	4.0		
I	BS-t	MT20	3.0	8.0		
J	BMWWW1-t	MT20	4.0	6.0		
K	BMW1+w	MT20	2.0	4.0		

Edge - INDICATES REFERENCE CORNER OF PLATE TOUCHES EDGE OF CHORD.

NOTES- (1)
1) Lateral braces to be a minimum of 2X4 SPF #2.

DIMENSIONS, SUPPORTS AND LOADINGS SPECIFIED BY FABRICATOR TO BE VERIFIED BY BUILDING DESIGNER

BEARINGS

JT	FACTORED GROSS REACTION VERT	HORZ	MAXIMUM FACTORED GROSS REACTION DOWN	HORZ	UPLIFT	INPUT BRG IN-SX	REQRD BRG IN-SX
B	292	0	292	0	0	16-11-10 (4-11-84)	
K	459	0	459	0	0	16-11-10 (4-11-84)	
J	911	0	911	0	0	16-11-10 (4-11-84)	
H	459	0	459	0	0	16-11-10 (4-11-84)	
F	292	0	292	0	0	16-11-10 (4-11-84)	

VALUE IN PARENTHESIS INDICATES EFFECTIVE BEARING LENGTH

UNFACTORED REACTIONS

JT	1ST LCASE COMBINED	MAX./MIN. COMPONENT REACTIONS SNOW	LIVE	PERM.LIVE	WIND	DEAD	SOIL
B	201	160 / 0	0 / 0	0 / 0	0 / 0	41 / 0	0 / 0
K	324	214 / 0	0 / 0	0 / 0	0 / 0	110 / 0	0 / 0
J	636	463 / 0	0 / 0	0 / 0	0 / 0	173 / 0	0 / 0
H	324	214 / 0	0 / 0	0 / 0	0 / 0	110 / 0	0 / 0
F	201	160 / 0	0 / 0	0 / 0	0 / 0	41 / 0	0 / 0

BEARING MATERIAL TO BE SPF NO.2 OR BETTER AT JOINT(S) B, K, J, H, F

BRACING
TOP CHORD TO BE SHEATHED OR MAX. PURLIN SPACING = 6.25 FT.
MAX. UNBRACED BOTTOM CHORD LENGTH = 10.00 FT OR RIGID CEILING DIRECTLY APPLIED.

ALL PITCH BREAKS AND PERIMETER CORNER JOINTS MUST BE LATERALLY RESTRAINED.

LOADING
TOTAL LOAD CASES: (4)

CHORDS

MEMB. FR-TO	MAX. FACTORED FORCE (LBS)	FACTORED VERT. LOAD (PLF) FROM	TO	LC1 MAX CSI (LC)	MAX. UNBRAC LENGTH
A- B	0 / 20	-112.4	-112.4	0.06 (1)	10.00
B- M	-47 / 0	-112.4	-112.4	0.02 (1)	6.25
M- C	-65 / 0	-112.4	-112.4	0.10 (1)	6.25
C- D	-7 / 0	-112.4	-112.4	0.62 (1)	10.00
D- E	-7 / 0	-112.4	-112.4	0.62 (1)	10.00
E- O	-65 / 0	-112.4	-112.4	0.10 (1)	6.25
O- F	-47 / 0	-112.4	-112.4	0.02 (1)	6.25
F- G	0 / 20	-112.4	-112.4	0.06 (1)	10.00
B- L	0 / 56	-18.5	-18.5	0.10 (1)	10.00
L- K	0 / 56	-18.5	-18.5	0.10 (1)	10.00
K- J	0 / 32	-18.5	-18.5	0.12 (4)	10.00
J- I	0 / 32	-18.5	-18.5	0.12 (4)	10.00
I- H	0 / 32	-18.5	-18.5	0.12 (4)	10.00
H- N	0 / 56	-18.5	-18.5	0.10 (1)	10.00
N- F	0 / 56	-18.5	-18.5	0.10 (1)	10.00

WEBS

MEMB. FR-TO	MAX. FACTORED FORCE (LBS)	MAX CSI (LC)
K- C	-335 / 0	0.05 (1)
C- J	-25 / 0	0.01 (1)
J- D	-798 / 0	0.11 (1)
J- E	-25 / 0	0.01 (1)
H- E	-335 / 0	0.05 (1)
L- M	-194 / 0	0.00 (1)
N- O	-194 / 0	0.00 (1)

DESIGN CRITERIA

SPECIFIED LOADS:

TOP CH.	LL	=	32.5	PSF
	DL	=	6.0	PSF
BOT CH.	LL	=	0.0	PSF
	DL	=	7.4	PSF
TOTAL LOAD		=	45.9	PSF

SPACING = 24.0 IN. C/C

LOADING IN FLAT SECTION BASED ON A SLOPE OF 2.00/12 MINIMUM

THIS TRUSS IS DESIGNED FOR RESIDENTIAL OR SMALL BUILDING REQUIREMENTS OF PART 9, NBCC 2015

THIS DESIGN COMPLIES WITH:
- PART 9 OF BCBC 2018 , NBC-2019AE
- PART 9 OF OBC 2012 (2019 AMENDMENT)
- CSA 086-14
- TPIC 2014

(55 % OF 43.9 P.S.F. G.S.L. PLUS 8.4 P.S.F. RAIN LOAD) EQUALS 32.5 P.S.F. SPECIFIED ROOF LIVE LOAD

CSI: TC=0.62/1.00 (C-D:1) , BC=0.12/1.00 (J-K:4) , WB=0.11/1.00 (D-J:1) , SSI=0.31/1.00 (C-D:1)

DOL LUMBER=1.00 NAIL=1.00 LS BEND=1.10 COMP=1.10 SHEAR=1.10 TENS= 1.10

COMPANION LIVE LOAD FACTOR = 1.00

TRUSS PLATE MANUFACTURER IS NOT RESPONSIBLE FOR QUALITY CONTROL IN THE TRUSS MANUFACTURING PLANT .

NAIL VALUES

PLATE	GRIP(DRY) (PSI) MAX	MIN	SHEAR (PLI) MAX	MIN	SECTION (PLI) MAX	MIN
MT20	650	371	1747	788	1987	1873

PLATE PLACEMENT TOL. = 0.250 inches

PLATE ROTATION TOL. = 5.0 Deg.

JSI GRIP= 0.88 (E) (INPUT = 0.90)
JSI METAL= 0.17 (D) (INPUT = 0.95)

LICENSED PROFESSIONAL ENGINEER
4/02/24
C. M. HEYENS
100505065
PROVINCE OF ONTARIO

STRUCTURAL COMPONENT ONLY
DWG # TR24040020

JOB NAME	TRUSS NAME	QUANTITY	PLY	JOB DESC.	DRWG NO.
436388	PB14	1	1	BAYVIEW WELLINGTON TRUSS DESC.	

Tamarack Roof Truss, Burlington

Version 8.630 S Aug 30 2023 MiTek Industries, Inc. Tue Apr 2 10:53:18 2024 Page 1
ID:GRmvuh1dyQr3nydBfsTFcCy6OGI-V3GCEqyXzHseEt6 D8Q6mLGMTg39X9ODbYMFfZzUo4V

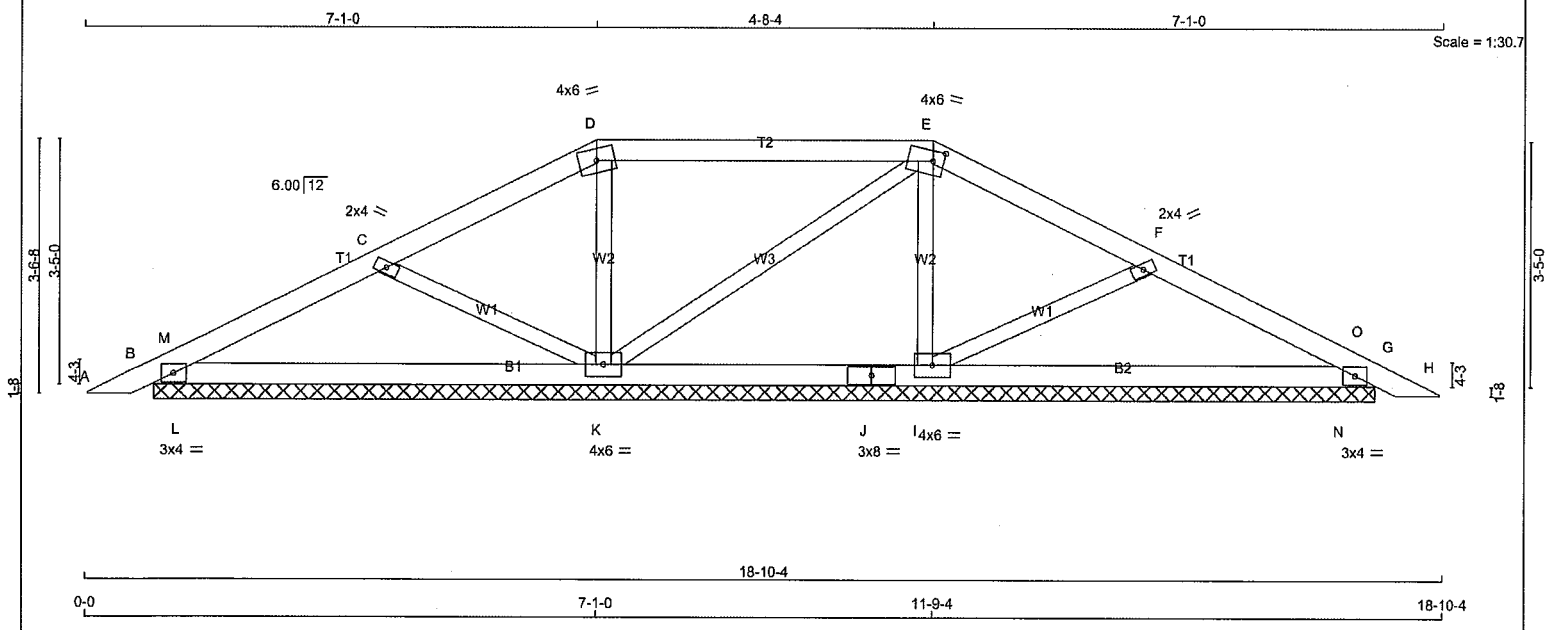

TOTAL WEIGHT = 57 lb

LUMBER
N. L. G. A. RULES

CHORDS	SIZE		LUMBER	DESCR.
A - D	2x4	DRY	No.2	SPF
D - E	2x4	DRY	No.2	SPF
E - H	2x4	DRY	No.2	SPF
B - J	2x4	DRY	No.2	SPF
J - G	2x4	DRY	No.2	SPF
ALL WEBS	2x3	DRY	No.2	SPF

DRY: SEASONED LUMBER.

PLATES (table is in inches)

JT	TYPE	PLATES	W	LEN	Y	X
B	TMB1-I	MT20	3.0	4.0		
C	TMW+w	MT20	2.0	4.0		
D	TTW-m	MT20	4.0	6.0		
E	TTWW-m	MT20	4.0	6.0	1.75	1.75
F	TMW+w	MT20	2.0	4.0		
G	TMB1-I	MT20	3.0	4.0		
I	BMWW1-t	MT20	4.0	6.0		
J	BS-t	MT20	3.0	8.0		
K	BMWWW1-t	MT20	4.0	6.0		

NOTES- (1)
1) Lateral braces to be a minimum of 2X4 SPF #2.

DIMENSIONS, SUPPORTS AND LOADINGS SPECIFIED BY FABRICATOR TO BE VERIFIED BY BUILDING DESIGNER

BEARINGS

JT	FACTORED GROSS REACTION VERT	HORZ	MAXIMUM FACTORED GROSS REACTION DOWN	HORZ	UPLIFT	INPUT BRG IN-SX	REQRD BRG IN-SX
B	403	0	403	0	0	16-11-10 (6-11-84)	
K	841	0	841	0	0	16-11-10 (6-11-84)	
I	737	0	737	0	0	16-11-10 (6-11-84)	
G	431	0	431	0	0	16-11-10 (6-11-84)	

VALUE IN PARENTHESIS INDICATES EFFECTIVE BEARING LENGTH

UNFACTORED REACTIONS

JT	1ST LCASE COMBINED	MAX./MIN. COMPONENT REACTIONS SNOW	LIVE	PERM.LIVE	WIND	DEAD	SOIL
B	281	205 / 0	0 / 0	0 / 0	0 / 0	77 / 0	0 / 0
K	588	424 / 0	0 / 0	0 / 0	0 / 0	165 / 0	0 / 0
I	517	363 / 0	0 / 0	0 / 0	0 / 0	154 / 0	0 / 0
G	300	221 / 0	0 / 0	0 / 0	0 / 0	80 / 0	0 / 0

BEARING MATERIAL TO BE SPF NO.2 OR BETTER AT JOINT(S) B, K, I, G

BRACING
TOP CHORD TO BE SHEATHED OR MAX. PURLIN SPACING = 6.25 FT.
MAX. UNBRACED BOTTOM CHORD LENGTH = 6.25 FT OR RIGID CEILING DIRECTLY APPLIED.

ALL PITCH BREAKS AND PERIMETER CORNER JOINTS MUST BE LATERALLY RESTRAINED.

LOADING
TOTAL LOAD CASES: (4)

CHORDS

MEMB. FR-TO	MAX. FACTORED FORCE (LBS)	FACTORED VERT. LOAD (PLF) FROM	TO	LC1	MAX CSI (LC)	MAX. UNBRAC LENGTH
A- B	0 / 20	-112.4	-112.4	0.06 (1)	10.00	
B- M	-348 / 0	-112.4	-112.4	0.11 (4)	6.25	
M- C	-243 / 0	-112.4	-112.4	0.18 (1)	6.25	
C- D	0 / 179	-112.4	-112.4	0.20 (1)	10.00	
D- E	0 / 193	-112.4	-112.4	0.45 (1)	10.00	
E- F	0 / 118	-112.4	-112.4	0.19 (1)	10.00	
F- O	-303 / 0	-112.4	-112.4	0.17 (1)	6.25	
O- G	-407 / 0	-112.4	-112.4	0.11 (4)	6.25	
G- H	0 / 20	-112.4	-112.4	0.06 (1)	10.00	
B- L	0 / 244	-18.5	-18.5	0.08 (4)	10.00	
L- K	0 / 244	-18.5	-18.5	0.13 (4)	10.00	
K- J	-136 / 0	-18.5	-18.5	0.11 (4)	6.25	
J- I	-136 / 0	-18.5	-18.5	0.11 (4)	6.25	
I- N	0 / 297	-18.5	-18.5	0.13 (4)	10.00	
N- G	0 / 297	-18.5	-18.5	0.08 (4)	10.00	

WEBS

MEMB. FR-TO	MAX. FACTORED FORCE (LBS)	MAX CSI (LC)
C- K	-475 / 0	0.11 (1)
K- D	-478 / 0	0.10 (1)
K- E	-69 / 0	0.03 (1)
I- E	-413 / 0	0.08 (1)
I- F	-473 / 0	0.11 (1)
L- M	0 / 133	0.00 (1)
N- O	0 / 133	0.00 (1)

DESIGN CRITERIA

SPECIFIED LOADS:

TOP CH.	LL	=	32.5	PSF
	DL	=	6.0	PSF
BOT CH.	LL	=	0.0	PSF
	DL	=	7.4	PSF
TOTAL LOAD		=	45.9	PSF

SPACING = 24.0 IN. C/C

LOADING IN FLAT SECTION BASED ON A SLOPE OF 2.00/12 MINIMUM

THIS TRUSS IS DESIGNED FOR RESIDENTIAL OR SMALL BUILDING REQUIREMENTS OF PART 9, NBCC 2015

THIS DESIGN COMPLIES WITH:
- PART 9 OF BCBC 2018 , NBC-2019AE
- PART 9 OF OBC 2012 (2019 AMENDMENT)
- CSA 086-14
- TPIC 2014

(55 % OF 43.9 P.S.F. G.S.L. PLUS 8.4 P.S.F. RAIN LOAD) EQUALS 32.5 P.S.F. SPECIFIED ROOF LIVE LOAD

CSI: TC=0.45/1.00 (D-E:1) , BC=0.13/1.00 (I-N:4) , WB=0.11/1.00 (C-K:1) , SSI=0.21/1.00 (D-E:1)

DOL LUMBER=1.00 NAIL=1.00 LS BEND=1.10 COMP=1.10 SHEAR=1.10 TENS= 1.10

COMPANION LIVE LOAD FACTOR = 1.00

TRUSS PLATE MANUFACTURER IS NOT RESPONSIBLE FOR QUALITY CONTROL IN THE TRUSS MANUFACTURING PLANT .

NAIL VALUES

PLATE	GRIP(DRY) (PSI) MAX	MIN	SHEAR (PLI) MAX	MIN	SECTION (PLI) MAX	MIN
MT20	650	371	1747	788	1987	1873

PLATE PLACEMENT TOL. = 0.250 inches

PLATE ROTATION TOL. = 5.0 Deg.

JSI GRIP= 0.79 (E) (INPUT = 0.90)
JSI METAL= 0.22 (C) (INPUT = 0.95)

LICENSED PROFESSIONAL ENGINEER
4/02/24
C. M. HEYENS
100505065
PROVINCE OF ONTARIO

STRUCTURAL COMPONENT ONLY
DWG # TR24040021

JOB NAME	TRUSS NAME	QUANTITY	PLY	JOB DESC.	DRWG NO.
436388	J1	15	1	BAYVIEW WELLINGTON TRUSS DESC.	

Tamarack Roof Truss, Burlington

Version 8.630 S Aug 30 2023 MiTek Industries, Inc. Tue Apr 2 10:52:56 2024 Page 1
ID:GRmvuh1dyQr3nydBfsTFcCy6OGI-9qxuclhk8W4mcVQlwW0ytiMYIpY NDg X715trzUo4r

Scale = 1:23.3

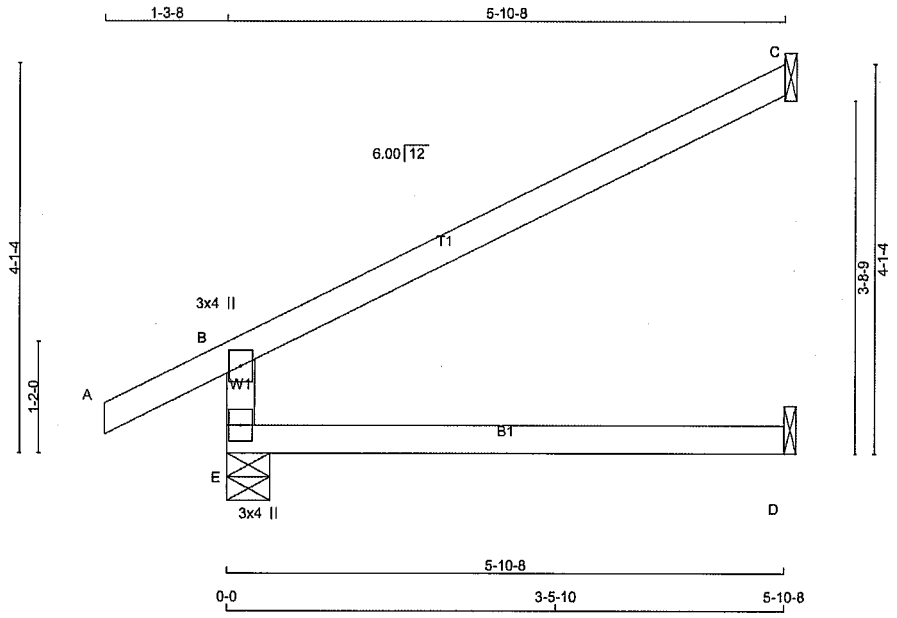

TOTAL WEIGHT = 15 X 17 = 252 lb

LUMBER
N. L. G. A. RULES

CHORDS	SIZE		LUMBER	DESCR.
E - B	2x4	DRY	No.2	SPF
A - C	2x4	DRY	No.2	SPF
E - D	2x4	DRY	No.2	SPF

DRY: SEASONED LUMBER.

PLATES (table is in inches)

JT	TYPE	PLATES	W	LEN	Y	X
B	TMV+p	MT20	3.0	4.0		
E	BMV1+p	MT20	3.0	4.0		

NOTES- (1)
1) Lateral braces to be a minimum of 2X4 SPF #2.

DIMENSIONS, SUPPORTS AND LOADINGS SPECIFIED BY FABRICATOR TO BE VERIFIED BY BUILDING DESIGNER

BEARINGS

JT	FACTORED GROSS REACTION VERT	HORZ	MAXIMUM FACTORED GROSS REACTION DOWN	HORZ	UPLIFT	INPUT BRG IN-SX	REQRD BRG IN-SX
E	629	0	629	0	0	5-8	1-8
C	248	0	248	0	0	1-8	1-8
D	45	0	50	0	0	1-8	1-8

SEE MITEK STANDARD DETAIL MSD2015-H FOR CONNECTION TO JOINT(S) C , D

UNFACTORED REACTIONS

JT	1ST LCASE COMBINED	MAX./MIN. COMPONENT REACTIONS SNOW	LIVE	PERM.LIVE	WIND	DEAD	SOIL
E	438	327 / 0	0 / 0	0 / 0	0 / 0	111 / 0	0 / 0
C	170	143 / 0	0 / 0	0 / 0	0 / 0	26 / 0	0 / 0
D	36	0 / 0	0 / 0	0 / 0	0 / 0	36 / 0	0 / 0

BEARING MATERIAL TO BE SPF NO.2 OR BETTER AT JOINT(S) E

BRACING
TOP CHORD TO BE SHEATHED OR MAX. PURLIN SPACING = 6.25 FT.
MAX. UNBRACED BOTTOM CHORD LENGTH = 10.00 FT OR RIGID CEILING DIRECTLY APPLIED.

ALL PITCH BREAKS AND PERIMETER CORNER JOINTS MUST BE LATERALLY RESTRAINED.

LOADING
TOTAL LOAD CASES: (4)

CHORDS

MEMB. FR-TO	MAX. FORCE (LBS)	FACTORED VERT. LOAD (PLF)	LC1 FROM	TO	MAX CSI (LC)	MAX. UNBRAC LENGTH
E- B	-565 / 0	0.0	0.0		0.13 (4)	7.81
A- B	0 / 34	-112.4	-112.4		0.15 (1)	10.00
B- C	-37 / 0	-112.4	-112.4		0.66 (1)	6.25
E- D	0 / 0	-18.5	-18.5		0.13 (4)	10.00

WEBS

MEMB. FR-TO	MAX. FORCE (LBS)	MAX CSI (LC)

DESIGN CRITERIA

SPECIFIED LOADS:

TOP CH.	LL	=	32.5	PSF
	DL	=	6.0	PSF
BOT CH.	LL	=	0.0	PSF
	DL	=	7.4	PSF
TOTAL LOAD		=	45.9	PSF

SPACING = 24.0 IN. C/C

THIS TRUSS IS DESIGNED FOR RESIDENTIAL OR SMALL BUILDING REQUIREMENTS OF PART 9, NBCC 2015

THIS DESIGN COMPLIES WITH:
- PART 9 OF BCBC 2018 , NBC-2019AE
- PART 9 OF OBC 2012 (2019 AMENDMENT)
- CSA 086-14
- TPIC 2014

DESIGN ASSUMPTIONS
-OVERHANG NOT TO BE ALTERED OR CUT OFF.

(55 % OF 43.9 P.S.F. G.S.L. PLUS 8.4 P.S.F. RAIN LOAD) EQUALS 32.5 P.S.F. SPECIFIED ROOF LIVE LOAD

ALLOWABLE DEFL.(LL)= L/360 (0.20")
CALCULATED VERT. DEFL.(LL) = L/ 999 (0.00")
ALLOWABLE DEFL.(TL)= L/360 (0.20")
CALCULATED VERT. DEFL.(TL) = L/ 999 (0.03")

CSI: TC=0.66/1.00 (B-C:1) , BC=0.13/1.00 (D-E:4) , WB=0.00/1.00 (n/a:0) , SSI=0.29/1.00 (B-C:1)

DOL LUMBER=1.00 NAIL=1.00 LS BEND=1.10 COMP=1.10 SHEAR=1.10 TENS= 1.10

COMPANION LIVE LOAD FACTOR = 1.00

AUTOSOLVE RIGHT HEEL ONLY

TRUSS PLATE MANUFACTURER IS NOT RESPONSIBLE FOR QUALITY CONTROL IN THE TRUSS MANUFACTURING PLANT .

NAIL VALUES

PLATE	GRIP(DRY) (PSI) MAX	MIN	SHEAR (PLI) MAX	MIN	SECTION (PLI) MAX	MIN
MT20	650	371	1747	788	1987	1873

PLATE PLACEMENT TOL. = 0.250 Inches

PLATE ROTATION TOL. = 5.0 Deg.

JSI GRIP= 0.23 (E) (INPUT = 0.90)
JSI METAL= 0.16 (B) (INPUT = 0.95)

LICENSED PROFESSIONAL ENGINEER
4/02/24
C. M. HEYENS
100505065
PROVINCE OF ONTARIO

STRUCTURAL COMPONENT ONLY
DWG # TR24040003

JOB NAME	TRUSS NAME	QUANTITY	PLY	JOB DESC.	DRWG NO.
436388	J2W	9	1	BAYVIEW WELLINGTON TRUSS DESC.	

Tamarack Roof Truss, Burlington

Version 8.630 S Aug 30 2023 MiTek Industries, Inc. Tue Apr 2 10:52:58 2024 Page 1
ID:GRmvuh1dyQr3nydBfsTFcCy6OGl-5D2e1 | g8KUroa82x3Qy7R?8cEor7AH?RWBxjzUo4p

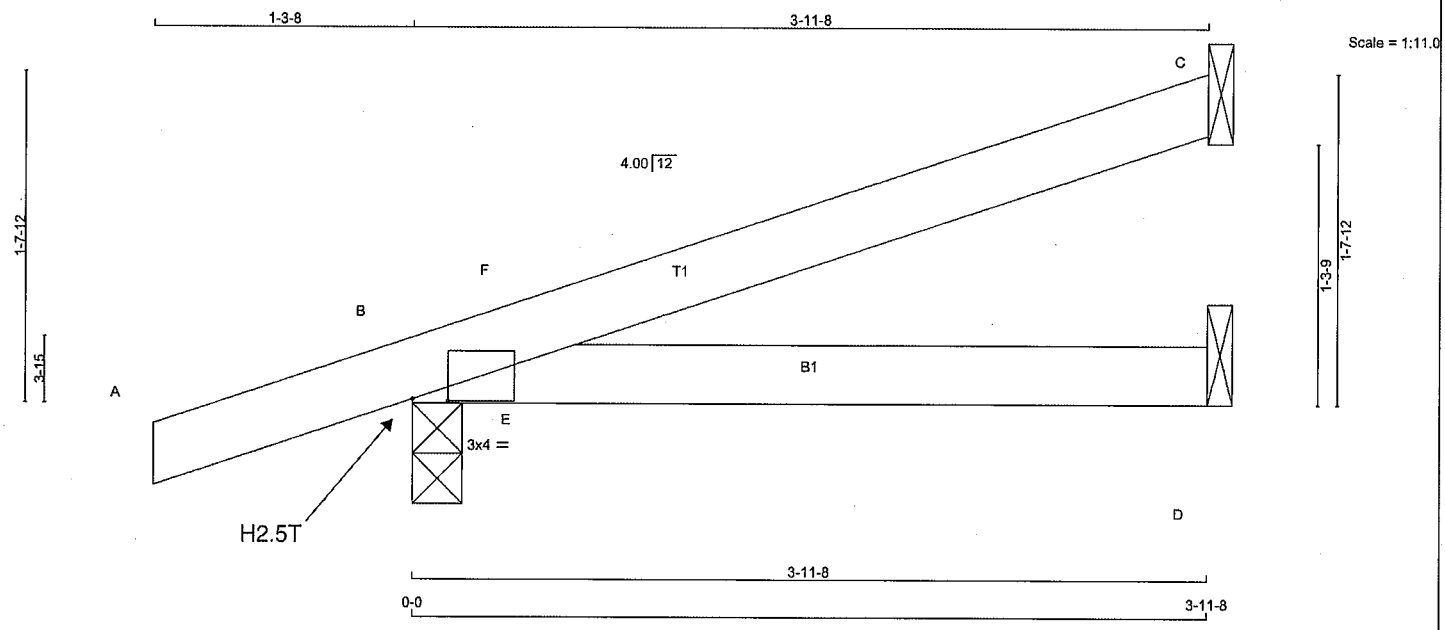

TOTAL WEIGHT = 9 X 11 = 98 lb [M]

LUMBER
N. L. G. A. RULES

CHORDS	SIZE		LUMBER	DESCR.
A - C	2x4	DRY	No.2	SPF
B - D	2x4	DRY	No.2	SPF

DRY: SEASONED LUMBER.

PLATES (table is in inches)

JT	TYPE	PLATES	W	LEN	Y	X
B	TMB1-I	MT20	3.0	4.0	0.25	2.25

NOTES- (1)
1) Lateral braces to be a minimum of 2X4 SPF #2.

DIMENSIONS, SUPPORTS AND LOADINGS SPECIFIED BY FABRICATOR TO BE VERIFIED BY BUILDING DESIGNER

BEARINGS

JT	FACTORED GROSS REACTION VERT	HORZ	MAXIMUM FACTORED GROSS REACTION DOWN	HORZ	UPLIFT	INPUT BRG IN-SX	REQRD BRG IN-SX
C	190	0	190	0	-81	1-8	1-8
B	410	0	410	83	-151	3-0	1-8
D	69	0	69	0	-56	1-8	1-8

SEE MITEK STANDARD DETAIL MSD2015-H FOR CONNECTION TO JOINT(S) C , D

PROVIDE ANCHORAGE AT BEARING JOINT C FOR 150 LBS FACTORED UPLIFT
PROVIDE ANCHORAGE AT BEARING JOINT B FOR 151 LBS FACTORED UPLIFT
PROVIDE ANCHORAGE AT BEARING JOINT D FOR 150 LBS FACTORED UPLIFT

PROVIDE FOR 83 LBS FACTORED HORIZONTAL REACTION AT JOINT B

UNFACTORED REACTIONS

JT	1ST LCASE COMBINED	MAX./MIN. COMPONENT REACTIONS SNOW	LIVE	PERM.LIVE	WIND	DEAD	SOIL
C	131	107 / 0	0 / 0	0 / 0	0 / -73	24 / 0	0 / 0
B	285	215 / 0	0 / 0	0 / 0	0 / -152	69 / 0	0 / 0
D	51	22 / 0	0 / 0	0 / 0	0 / -59	29 / 0	0 / 0
HORIZONTAL REACTIONS							
B	---	0 / 0	0 / 0	0 / 0	59 / 0	0 / 0	0 /0

BEARING MATERIAL TO BE SPF NO.2 OR BETTER AT JOINT(S) B, D

BRACING
TOP CHORD TO BE SHEATHED OR MAX. PURLIN SPACING = 6.25 FT.
MAX. UNBRACED BOTTOM CHORD LENGTH = 10.00 FT OR RIGID CEILING DIRECTLY APPLIED.

ALL PITCH BREAKS AND PERIMETER CORNER JOINTS MUST BE LATERALLY RESTRAINED.

LOADING
TOTAL LOAD CASES: (13)

CHORDS

MEMB. FR-TO	MAX. FACTORED FORCE (LBS)	FACTORED VERT. LOAD LC1 (PLF) FROM	TO	MAX CSI (LC)	MAX. UNBRAC LENGTH
A- B	0 / 22	-112.4	-112.4	0.15 (13)	10.00
B- F	-52 / 0	-112.4	-112.4	0.04 (12)	6.25
F- C	-31 / 2	-112.4	-112.4	0.22 (1)	6.25
B- E	0 / 0	-18.5	-18.5	0.17 (1)	10.00
E- D	0 / 0	-18.5	-18.5	0.17 (1)	10.00

WEBS

MEMB. FR-TO	MAX. FACTORED FORCE (LBS)	MAX CSI (LC)
E- F	-216 / 52	0.00 (1)

CANTILEVER ANALYSIS HAS BEEN CONSIDERED IN THIS DESIGN

WIND LOAD APPLIED IS DERIVED FROM REFERENCE VELOCITY PRESSURE OF { 7.5} PSF AT {20-0-0} FT-IN-SX REFERENCE HEIGHT ABOVE GRADE AND USING EXTERNAL PEAK COEFFICIENTS, CpCg, BASED ON THE {MAIN WIND FORCE RESISTING SYSTEM}.INTERNAL WIND PRESSURE IS BASED ON DESIGN {CATEGORY 2}. BUILDING MAY BE LOCATED ON {OPEN TERRAIN}, AND TRUSS IS DESIGNED TO BE LOCATED AT LEAST {0-0} FT-IN-SX AWAY FROM EAVE.TRUSS UPLIFT IS BASED ON TOP AND BOTTOM CHORD DEAD LOADS OF 6.0 PSF AND 7.4 PSF RESPECTIVELY.

DESIGN CRITERIA

SPECIFIED LOADS:

TOP CH.	LL	=	32.5	PSF
	DL	=	6.0	PSF
BOT CH.	LL	=	0.0	PSF
	DL	=	7.4	PSF
TOTAL LOAD		=	45.9	PSF

SPACING = 24.0 IN. C/C

THIS TRUSS IS DESIGNED FOR RESIDENTIAL OR SMALL BUILDING REQUIREMENTS OF PART 9, NBCC 2015

THIS DESIGN COMPLIES WITH:
- PART 9 OF BCBC 2018 , NBC-2019AE
- PART 9 OF OBC 2012 (2019 AMENDMENT)
- CSA 086-14
- TPIC 2014

(55 % OF 43.9 P.S.F. G.S.L. PLUS 8.4 P.S.F. RAIN LOAD) EQUALS 32.5 P.S.F. SPECIFIED ROOF LIVE LOAD

ALLOWABLE DEFL.(LL)= L/360 (0.19")
CALCULATED VERT. DEFL.(LL) = L/ 999 (0.02")
ALLOWABLE DEFL.(TL)= L/360 (0.19")
CALCULATED VERT. DEFL.(TL) = L/ 999 (0.04")

CSI: TC=0.22/1.00 (C-F:1) , BC=0.17/1.00 (D-E:1) , WB=0.00/1.00 (E-F:1) , SSI=0.17/1.00 (B-E:1)

DOL LUMBER=1.00 NAIL=1.00 LS BEND=1.10 COMP=1.10 SHEAR=1.10 TENS= 1.10

COMPANION LIVE LOAD FACTOR = 1.00

TRUSS PLATE MANUFACTURER IS NOT RESPONSIBLE FOR QUALITY CONTROL IN THE TRUSS MANUFACTURING PLANT .

NAIL VALUES

PLATE	GRIP(DRY) (PSI) MAX	MIN	SHEAR (PLI) MAX	MIN	SECTION (PLI) MAX	MIN
MT20	650	371	1747	788	1987	1873

PLATE PLACEMENT TOL. = 0.250 inches

PLATE ROTATION TOL. = 5.0 Deg.

JSI GRIP= 0.26 (B) (INPUT = 0.90)
JSI METAL= 0.07 (B) (INPUT = 0.95)

LICENSED PROFESSIONAL ENGINEER
4/02/24
C. M. HEYENS
100505065
PROVINCE OF ONTARIO

STRUCTURAL COMPONENT ONLY
DWG # TR24040004

JOB NAME	TRUSS NAME	QUANTITY	PLY	JOB DESC.	DRWG NO.
436388	J3W	7	1	BAYVIEW WELLINGTON TRUSS DESC.	

Tamarack Roof Truss, Burlington

Version 8.630 S Aug 30 2023 MiTek Industries, Inc. Tue Apr 2 10:52:59 2024 Page 1
ID:GRmvuh1dyQr3nydBfsTFcCy6OGl-ZPc1FKjdRRTLTy9KbeafUL Bc0aXaaQQD5FIUAzUo4o

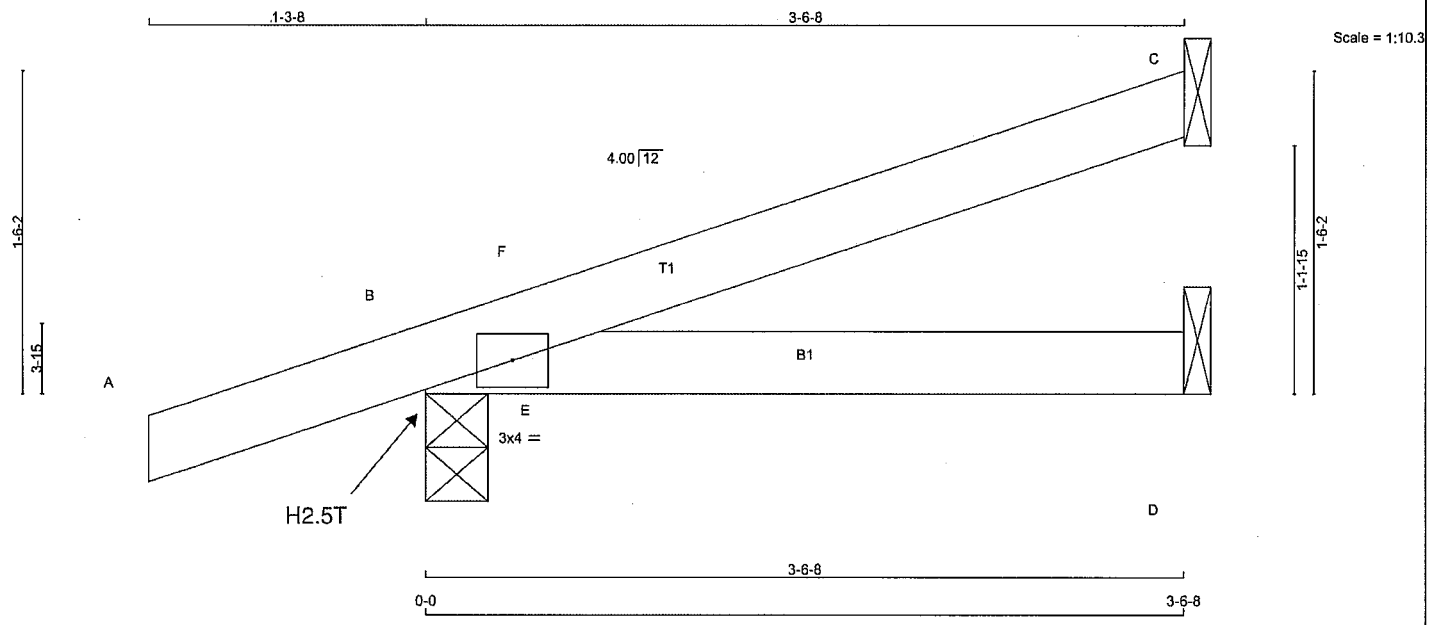

TOTAL WEIGHT = 7 X 10 = 70 lb [M]

LUMBER
N. L. G. A. RULES

CHORDS	SIZE		LUMBER	DESCR.
A - C	2x4	DRY	No.2	SPF
B - D	2x4	DRY	No.2	SPF

DRY: SEASONED LUMBER.

PLATES (table is in inches)

JT	TYPE	PLATES	W	LEN	Y	X
B	TMB1-I	MT20	3.0	4.0		

NOTES- (1)
1) Lateral braces to be a minimum of 2X4 SPF #2.

DIMENSIONS, SUPPORTS AND LOADINGS SPECIFIED BY FABRICATOR TO BE VERIFIED BY BUILDING DESIGNER

BEARINGS

JT	FACTORED GROSS REACTION VERT	HORZ	MAXIMUM FACTORED GROSS REACTION DOWN	HORZ	UPLIFT	INPUT BRG IN-SX	REQRD BRG IN-SX
C	169	0	169	0	-72	1-8	1-8
B	382	0	382	76	-139	3-8	1-8
D	62	0	62	0	-51	1-8	1-8

SEE MITEK STANDARD DETAIL MSD2015-H FOR CONNECTION TO JOINT(S) C , D

PROVIDE ANCHORAGE AT BEARING JOINT C FOR 150 LBS FACTORED UPLIFT
PROVIDE ANCHORAGE AT BEARING JOINT B FOR 150 LBS FACTORED UPLIFT
PROVIDE ANCHORAGE AT BEARING JOINT D FOR 150 LBS FACTORED UPLIFT

PROVIDE FOR 76 LBS FACTORED HORIZONTAL REACTION AT JOINT B

UNFACTORED REACTIONS

JT	1ST LCASE COMBINED	MAX./MIN. COMPONENT REACTIONS SNOW	LIVE	PERM.LIVE	WIND	DEAD	SOIL
C	117	95 / 0	0 / 0	0 / 0	0 / -66	22 / 0	0 / 0
B	265	202 / 0	0 / 0	0 / 0	0 / -140	64 / 0	0 / 0
D	46	20 / 0	0 / 0	0 / 0	0 / -53	26 / 0	0 / 0
HORIZONTAL REACTIONS							
B	---	0 / 0	0 / 0	0 / 0	54 / 0	0 / 0	0 /0

BEARING MATERIAL TO BE SPF NO.2 OR BETTER AT JOINT(S) B, D

BRACING
TOP CHORD TO BE SHEATHED OR MAX. PURLIN SPACING = 6.25 FT.
MAX. UNBRACED BOTTOM CHORD LENGTH = 10.00 FT OR RIGID CEILING DIRECTLY APPLIED.

ALL PITCH BREAKS AND PERIMETER CORNER JOINTS MUST BE LATERALLY RESTRAINED.

LOADING
TOTAL LOAD CASES: (13)

CHORDS

MEMB. FR-TO	MAX. FACTORED FORCE (LBS)	FACTORED VERT. LOAD LC1 (PLF) FROM	TO	MAX CSI (LC)	MAX. UNBRAC LENGTH
A- B	0 / 22	-112.4	-112.4	0.15 (13)	10.00
B- F	-46 / 0	-112.4	-112.4	0.04 (12)	6.25
F- C	-28 / 2	-112.4	-112.4	0.17 (1)	6.25
B- E	0 / 0	-18.5	-18.5	0.14 (1)	10.00
E- D	0 / 0	-18.5	-18.5	0.14 (1)	10.00

WEBS

MEMB. FR-TO	MAX. FACTORED FORCE (LBS)	MAX CSI (LC)
E- F	-179 / 43	0.00 (1)

CANTILEVER ANALYSIS HAS BEEN CONSIDERED IN THIS DESIGN

WIND LOAD APPLIED IS DERIVED FROM REFERENCE VELOCITY PRESSURE OF { 7.5} PSF AT {20-0-0} FT-IN-SX REFERENCE HEIGHT ABOVE GRADE AND USING EXTERNAL PEAK COEFFICIENTS, CpCg, BASED ON THE {MAIN WIND FORCE RESISTING SYSTEM}.INTERNAL WIND PRESSURE IS BASED ON DESIGN {CATEGORY 2}. BUILDING MAY BE LOCATED ON {OPEN TERRAIN}, AND TRUSS IS DESIGNED TO BE LOCATED AT LEAST {0-0} FT-IN-SX AWAY FROM EAVE.TRUSS UPLIFT IS BASED ON TOP AND BOTTOM CHORD DEAD LOADS OF 6.0 PSF AND 7.4 PSF RESPECTIVELY.

DESIGN CRITERIA

SPECIFIED LOADS:

TOP CH.	LL	=	32.5	PSF
	DL	=	6.0	PSF
BOT CH.	LL	=	0.0	PSF
	DL	=	7.4	PSF
TOTAL LOAD		=	45.9	PSF

SPACING = 24.0 IN. C/C

THIS TRUSS IS DESIGNED FOR RESIDENTIAL OR SMALL BUILDING REQUIREMENTS OF PART 9, NBCC 2015

THIS DESIGN COMPLIES WITH:
- PART 9 OF BCBC 2018 , NBC-2019AE
- PART 9 OF OBC 2012 (2019 AMENDMENT)
- CSA 086-14
- TPIC 2014

(55 % OF 43.9 P.S.F. G.S.L. PLUS 8.4 P.S.F. RAIN LOAD) EQUALS 32.5 P.S.F. SPECIFIED ROOF LIVE LOAD

ALLOWABLE DEFL.(LL)= L/360 (0.19")
CALCULATED VERT. DEFL.(LL) = L/ 999 (0.01")
ALLOWABLE DEFL.(TL)= L/360 (0.19")
CALCULATED VERT. DEFL.(TL) = L/ 999 (0.02")

CSI: TC=0.17/1.00 (C-F:1) , BC=0.14/1.00 (B-E:1) , WB=0.00/1.00 (E-F:1) , SSI=0.14/1.00 (B-E:1)

DOL LUMBER=1.00 NAIL=1.00 LS BEND=1.10 COMP=1.10 SHEAR=1.10 TENS= 1.10

COMPANION LIVE LOAD FACTOR = 1.00

TRUSS PLATE MANUFACTURER IS NOT RESPONSIBLE FOR QUALITY CONTROL IN THE TRUSS MANUFACTURING PLANT .

NAIL VALUES

PLATE	GRIP(DRY) (PSI) MAX	MIN	SHEAR (PLI) MAX	MIN	SECTION (PLI) MAX	MIN
MT20	650	371	1747	788	1987	1873

PLATE PLACEMENT TOL. = 0.250 inches

PLATE ROTATION TOL. = 5.0 Deg.

JSI GRIP= 0.24 (B) (INPUT = 0.90)
JSI METAL= 0.06 (B) (INPUT = 0.95)

LICENSED PROFESSIONAL ENGINEER
4/02/24
C. M. HEYENS
100505065
PROVINCE OF ONTARIO

STRUCTURAL COMPONENT ONLY
DWG # TR24040005

JOB NAME	TRUSS NAME	QUANTITY	PLY	JOB DESC.	DRWG NO.
436388	J4	2	1	BAYVIEW WELLINGTON TRUSS DESC.	

Tamarack Roof Truss, Burlington

Version 8.630 S Aug 30 2023 MiTek Industries, Inc. Tue Apr 2 10:53:00 2024 Page 1
ID:GRmvuh1dyQr3nydBfsTFcCy6OGl-1cAPSgkFClbC46kX9M5u1YWMfQyjJ1gaSl?I0czUo4n

Scale = 1:18.5

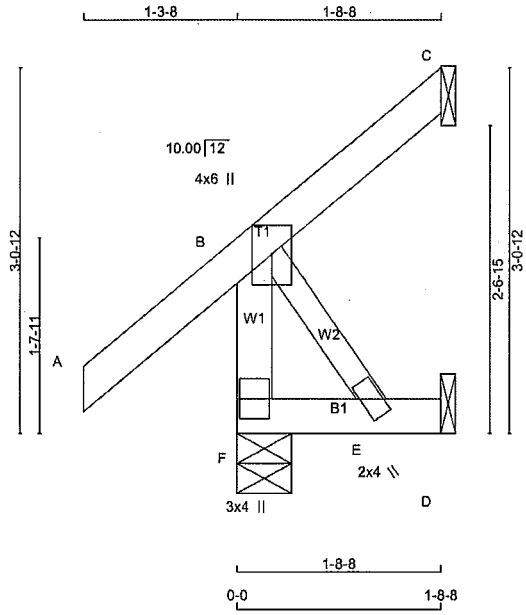

TOTAL WEIGHT = 2 X 9 = 19 lb

LUMBER
N. L. G. A. RULES

CHORDS	SIZE		LUMBER	DESCR.
F - B	2x4	DRY	No.2	SPF
A - C	2x4	DRY	No.2	SPF
F - D	2x4	DRY	No.2	SPF
ALL WEBS	2x3	DRY	No.2	SPF

DRY: SEASONED LUMBER.

PLATES (table is in inches)

JT	TYPE	PLATES	W	LEN	Y	X
B	TMVW+p	MT20	4.0	6.0	Edge	
E	BMW+w	MT20	2.0	4.0		
F	BMV1+p	MT20	3.0	4.0		

Edge - INDICATES REFERENCE CORNER OF PLATE TOUCHES EDGE OF CHORD.

NOTES- (1)
1) Lateral braces to be a minimum of 2X4 SPF #2.

DIMENSIONS, SUPPORTS AND LOADINGS SPECIFIED BY FABRICATOR TO BE VERIFIED BY BUILDING DESIGNER

BEARINGS

JT	FACTORED GROSS REACTION VERT	HORZ	MAXIMUM FACTORED GROSS REACTION DOWN	HORZ	UPLIFT	INPUT BRG IN-SX	REQRD BRG IN-SX
F	331	0	331	0	0	5-8	1-8
C	33	0	33	0	-54	1-8	1-8
D	16	0	18	0	0	1-8	1-8

SEE MITEK STANDARD DETAIL MSD2015-H FOR CONNECTION TO JOINT(S) C , D

PROVIDE ANCHORAGE AT BEARING JOINT C FOR 150 LBS FACTORED UPLIFT

UNFACTORED REACTIONS

JT	1ST LCASE COMBINED	MAX./MIN. COMPONENT REACTIONS SNOW	LIVE	PERM.LIVE	WIND	DEAD	SOIL
F	228	182 / 0	0 / 0	0 / 0	0 / 0	46 / 0	0 / 0
C	23	19 / -36	0 / 0	0 / 0	0 / 0	4 / 0	0 / 0
D	13	0 / 0	0 / 0	0 / 0	0 / 0	13 / 0	0 / 0

BEARING MATERIAL TO BE SPF NO.2 OR BETTER AT JOINT(S) F

BRACING
TOP CHORD TO BE SHEATHED OR MAX. PURLIN SPACING = 6.25 FT.
MAX. UNBRACED BOTTOM CHORD LENGTH = 10.00 FT OR RIGID CEILING DIRECTLY APPLIED.

ALL PITCH BREAKS AND PERIMETER CORNER JOINTS MUST BE LATERALLY RESTRAINED.

LOADING
TOTAL LOAD CASES: (5)

CHORDS

MEMB. FR-TO	MAX. FACTORED FORCE (LBS)	FACTORED VERT. LOAD LC1 (PLF) FROM	TO	MAX CSI (LC)	MAX. UNBRAC LENGTH
F- B	-315 / 0	0.0	0.0	0.03 (1)	7.81
A- B	0 / 50	-112.4	-112.4	0.15 (1)	10.00
B- C	-40 / 0	-112.4	-112.4	0.15 (1)	6.25
F- E	0 / 0	-18.5	-18.5	0.02 (4)	10.00
E- D	0 / 0	-18.5	-18.5	0.01 (4)	10.00

WEBS

MEMB. FR-TO	MAX. FACTORED FORCE (LBS)	MAX CSI (LC)
B- E	0 / 0	0.00 (1)

CANTILEVER ANALYSIS HAS BEEN CONSIDERED IN THIS DESIGN

[M]

DESIGN CRITERIA

SPECIFIED LOADS:

TOP CH.	LL	=	32.5	PSF
	DL	=	6.0	PSF
BOT CH.	LL	=	0.0	PSF
	DL	=	7.4	PSF
TOTAL LOAD		=	45.9	PSF

SPACING = 24.0 IN. C/C

THIS TRUSS IS DESIGNED FOR RESIDENTIAL OR SMALL BUILDING REQUIREMENTS OF PART 9, NBCC 2015

THIS DESIGN COMPLIES WITH:
- PART 9 OF BCBC 2018 , NBC-2019AE
- PART 9 OF OBC 2012 (2019 AMENDMENT)
- CSA 086-14
- TPIC 2014

DESIGN ASSUMPTIONS
-OVERHANG NOT TO BE ALTERED OR CUT OFF.

(55 % OF 43.9 P.S.F. G.S.L. PLUS 8.4 P.S.F. RAIN LOAD) EQUALS 32.5 P.S.F. SPECIFIED ROOF LIVE LOAD

ALLOWABLE DEFL.(LL)= L/360 (0.19")
CALCULATED VERT. DEFL.(LL) = L/ 999 (0.00")
ALLOWABLE DEFL.(TL)= L/360 (0.19")
CALCULATED VERT. DEFL.(TL) = L/ 999 (0.00")

CSI: TC=0.15/1.00 (A-B:1) , BC=0.02/1.00 (E-F:4) , WB=0.00/1.00 (B-E:1) , SSI=0.10/1.00 (B-C:1)

DOL LUMBER=1.00 NAIL=1.00 LS BEND=1.10 COMP=1.10 SHEAR=1.10 TENS= 1.10

COMPANION LIVE LOAD FACTOR = 1.00

AUTOSOLVE RIGHT HEEL ONLY

TRUSS PLATE MANUFACTURER IS NOT RESPONSIBLE FOR QUALITY CONTROL IN THE TRUSS MANUFACTURING PLANT .

NAIL VALUES

PLATE	GRIP(DRY) (PSI) MAX	MIN	SHEAR (PLI) MAX	MIN	SECTION (PLI) MAX	MIN
MT20	650	371	1747	788	1987	1873

PLATE PLACEMENT TOL. = 0.250 inches

PLATE ROTATION TOL. = 5.0 Deg.

JSI GRIP= 0.20 (B) (INPUT = 0.90)
JSI METAL= 0.08 (B) (INPUT = 0.95)

LICENSED PROFESSIONAL ENGINEER
4/02/24
C. M. HEYENS
100505065
PROVINCE OF ONTARIO

STRUCTURAL COMPONENT ONLY
DWG # TR24040006

JOB NAME	TRUSS NAME	QUANTITY	PLY	JOB DESC.	DRWG NO.
436388	J6	1	1	BAYVIEW WELLINGTON TRUSS DESC.	

Tamarack Roof Truss, Burlington

Version 8.630 S Aug 30 2023 MiTek Industries, Inc. Tue Apr 2 10:53:01 2024 Page 1
ID:GRmvuh1dyQr3nydBfsTFcCy6OGl-Vokng0ltz3j3iGJjj3c7am3VKqHw2UwjhPksY2zUo4m

Scale = 1:32.6

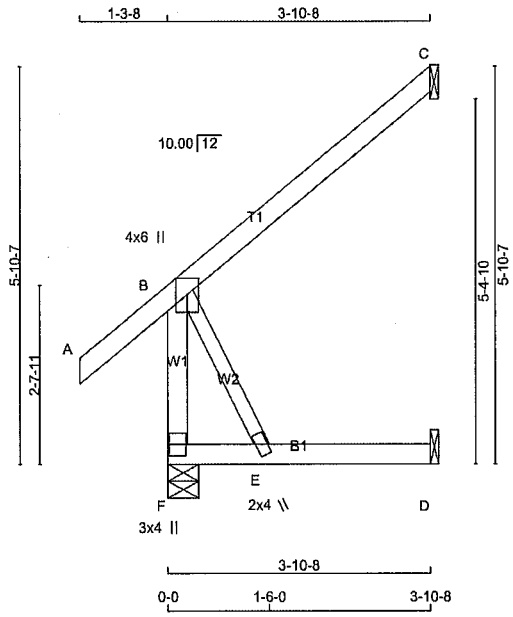

TOTAL WEIGHT = 17 lb

LUMBER
N. L. G. A. RULES

CHORDS	SIZE		LUMBER	DESCR.
F - B	2x4	DRY	No.2	SPF
A - C	2x4	DRY	No.2	SPF
F - D	2x4	DRY	No.2	SPF
ALL WEBS	2x3	DRY	No.2	SPF

DRY: SEASONED LUMBER.

PLATES (table is in inches)

JT	TYPE	PLATES	W	LEN	Y	X
B	TMVW+p	MT20	4.0	6.0	Edge	
E	BMW+w	MT20	2.0	4.0		
F	BMV1+p	MT20	3.0	4.0		

Edge - INDICATES REFERENCE CORNER OF PLATE TOUCHES EDGE OF CHORD.

NOTES- (1)
1) Lateral braces to be a minimum of 2X4 SPF #2.

DIMENSIONS, SUPPORTS AND LOADINGS SPECIFIED BY FABRICATOR TO BE VERIFIED BY BUILDING DESIGNER

BEARINGS

JT	FACTORED GROSS REACTION VERT	HORZ	MAXIMUM FACTORED GROSS REACTION DOWN	HORZ	UPLIFT	INPUT BRG IN-SX	REQRD BRG IN-SX
F	409	0	409	0	0	5-8	1-8
C	218	0	218	0	0	1-8	1-8
D	36	0	40	0	0	1-8	1-8

SEE MITEK STANDARD DETAIL MSD2015-H FOR CONNECTION TO JOINT(S) C , D

UNFACTORED REACTIONS

JT	1ST LCASE COMBINED	MAX./MIN. COMPONENT REACTIONS SNOW	LIVE	PERM.LIVE	WIND	DEAD	SOIL
F	284	216 / 0	0 / 0	0 / 0	0 / 0	69 / 0	0 / 0
C	149	126 / 0	0 / 0	0 / 0	0 / 0	23 / 0	0 / 0
D	29	0 / 0	0 / 0	0 / 0	0 / 0	29 / 0	0 / 0

BEARING MATERIAL TO BE SPF NO.2 OR BETTER AT JOINT(S) F

BRACING
TOP CHORD TO BE SHEATHED OR MAX. PURLIN SPACING = 10.00 FT.
MAX. UNBRACED BOTTOM CHORD LENGTH = 10.00 FT OR RIGID CEILING DIRECTLY APPLIED.

ALL PITCH BREAKS AND PERIMETER CORNER JOINTS MUST BE LATERALLY RESTRAINED.

LOADING
TOTAL LOAD CASES: (5)

CHORDS

MEMB. FR-TO	MAX. FACTORED FORCE (LBS)	FACTORED VERT. LOAD LC1 (PLF) FROM	TO	MAX CSI (LC)	MAX. UNBRAC LENGTH
F- B	-374 / 0	0.0	0.0	0.05 (1)	7.81
A- B	0 / 50	-112.4	-112.4	0.16 (5)	10.00
B- C	0 / 0	-112.4	-112.4	0.29 (1)	10.00
F- E	0 / 0	-18.5	-18.5	0.07 (4)	10.00
E- D	0 / 0	-18.5	-18.5	0.08 (4)	10.00

WEBS

MEMB. FR-TO	MAX. FACTORED FORCE (LBS)	MAX CSI (LC)
B- E	0 / 0	0.00 (1)

CANTILEVER ANALYSIS HAS BEEN CONSIDERED IN THIS DESIGN

[M]

DESIGN CRITERIA

SPECIFIED LOADS:

TOP CH.	LL	=	32.5	PSF
	DL	=	6.0	PSF
BOT CH.	LL	=	0.0	PSF
	DL	=	7.4	PSF
TOTAL LOAD		=	45.9	PSF

SPACING = 24.0 IN. C/C

THIS TRUSS IS DESIGNED FOR RESIDENTIAL OR SMALL BUILDING REQUIREMENTS OF PART 9, NBCC 2015

THIS DESIGN COMPLIES WITH:
- PART 9 OF BCBC 2018 , NBC-2019AE
- PART 9 OF OBC 2012 (2019 AMENDMENT)
- CSA 086-14
- TPIC 2014

(55 % OF 43.9 P.S.F. G.S.L. PLUS 8.4 P.S.F. RAIN LOAD) EQUALS 32.5 P.S.F. SPECIFIED ROOF LIVE LOAD

ALLOWABLE DEFL.(LL)= L/360 (0.19")
CALCULATED VERT. DEFL.(LL) = L/ 999 (0.00")
ALLOWABLE DEFL.(TL)= L/360 (0.19")
CALCULATED VERT. DEFL.(TL) = L/ 999 (0.01")

CSI: TC=0.29/1.00 (B-C:1) , BC=0.08/1.00 (D-E:4) , WB=0.00/1.00 (B-E:1) , SSI=0.13/1.00 (B-C:1)

DOL LUMBER=1.00 NAIL=1.00 LS BEND=1.10 COMP=1.10 SHEAR=1.10 TENS= 1.10

COMPANION LIVE LOAD FACTOR = 1.00

TRUSS PLATE MANUFACTURER IS NOT RESPONSIBLE FOR QUALITY CONTROL IN THE TRUSS MANUFACTURING PLANT .

NAIL VALUES

PLATE	GRIP(DRY) (PSI) MAX	MIN	SHEAR (PLI) MAX	MIN	SECTION (PLI) MAX	MIN
MT20	650	371	1747	788	1987	1873

PLATE PLACEMENT TOL. = 0.250 inches

PLATE ROTATION TOL. = 5.0 Deg.

JSI GRIP= 0.23 (B) (INPUT = 0.90)
JSI METAL= 0.10 (B) (INPUT = 0.95)

LICENSED PROFESSIONAL ENGINEER
4/02/24
C. M. HEYENS
100505065
PROVINCE OF ONTARIO

STRUCTURAL COMPONENT ONLY
DWG # TR24040007

JOB NAME	TRUSS NAME	QUANTITY	PLY	JOB DESC.	DRWG NO.
436388	C1	1	1	BAYVIEW WELLINGTON TRUSS DESC.	

Tamarack Roof Truss, Burlington

Version 8.630 S Aug 30 2023 MiTek Industries, Inc. Tue Apr 2 10:52:54 2024 Page 1
ID:GRmvuh1dyQr3nydBfsTFcCy6OGl-CSp8CdgUcvq2MBGNp5 UnHGKA?vFvJBh4pX oyzUo4t

Scale: 1/2"=1'

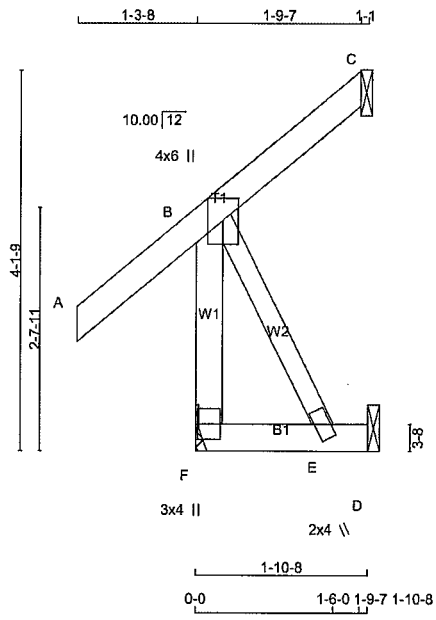

TOTAL WEIGHT = 12 lb

LUMBER
N. L. G. A. RULES

CHORDS	SIZE		LUMBER	DESCR.
F - B	2x4	DRY	No.2	SPF
A - C	2x4	DRY	No.2	SPF
F - D	2x4	DRY	No.2	SPF
ALL WEBS	2x3	DRY	No.2	SPF

DRY: SEASONED LUMBER.

PLATES (table is in inches)

JT	TYPE	PLATES	W	LEN	Y	X
B	TMVW+p	MT20	4.0	6.0	Edge	
E	BMW+w	MT20	2.0	4.0		
F	BMV1+p	MT20	3.0	4.0		

Edge - INDICATES REFERENCE CORNER OF PLATE TOUCHES EDGE OF CHORD.

NOTES- (1)
1) Lateral braces to be a minimum of 2X4 SPF #2.

DIMENSIONS, SUPPORTS AND LOADINGS SPECIFIED BY FABRICATOR TO BE VERIFIED BY BUILDING DESIGNER

BEARINGS

JT	FACTORED GROSS REACTION VERT	HORZ	MAXIMUM FACTORED GROSS REACTION DOWN	HORZ	UPLIFT	INPUT BRG IN-SX	REQRD BRG IN-SX
F	334	0	334	0	0	MECHANICAL	
C	40	0	40	0	-51	1-8	1-8
D	17	0	19	0	0	1-8	1-8

A SUITABLE HANGER/MECHANICAL CONNECTION IS REQUIRED AT JOINT F. MINIMUM BEARING LENGTH AT JOINT F = 1-8.

SEE MITEK STANDARD DETAIL MSD2015-H FOR CONNECTION TO JOINT(S) C , D

PROVIDE ANCHORAGE AT BEARING JOINT C FOR 150 LBS FACTORED UPLIFT

UNFACTORED REACTIONS

JT	1ST LCASE COMBINED	MAX./MIN. COMPONENT REACTIONS SNOW	LIVE	PERM.LIVE	WIND	DEAD	SOIL
F	231	183 / 0	0 / 0	0 / 0	0 / 0	48 / 0	0 / 0
C	27	23 / -35	0 / 0	0 / 0	0 / 0	4 / 0	0 / 0
D	14	0 / 0	0 / 0	0 / 0	0 / 0	14 / 0	0 / 0

BRACING
TOP CHORD TO BE SHEATHED OR MAX. PURLIN SPACING = 6.25 FT.
MAX. UNBRACED BOTTOM CHORD LENGTH = 10.00 FT OR RIGID CEILING DIRECTLY APPLIED.

ALL PITCH BREAKS AND PERIMETER CORNER JOINTS MUST BE LATERALLY RESTRAINED.

LOADING
TOTAL LOAD CASES: (5)

CHORDS

MEMB. FR-TO	MAX. FACTORED FORCE (LBS)	FACTORED VERT. LOAD LC1 (PLF) FROM	TO	MAX CSI (LC)	MAX. UNBRAC LENGTH
F- B	-317 / 0	0.0	0.0	0.04 (1)	7.81
A- B	0 / 50	-112.4	-112.4	0.15 (1)	10.00
B- C	-39 / 0	-112.4	-112.4	0.15 (1)	6.25
F- E	0 / 0	-18.5	-18.5	0.02 (4)	10.00
E- D	0 / 0	-18.5	-18.5	0.01 (4)	10.00

WEBS

MEMB. FR-TO	MAX. FACTORED FORCE (LBS)	MAX CSI (LC)
B- E	0 / 0	0.00 (1)

CANTILEVER ANALYSIS HAS BEEN CONSIDERED IN THIS DESIGN

DESIGN CRITERIA

SPECIFIED LOADS:

TOP CH.	LL	=	32.5	PSF
	DL	=	6.0	PSF
BOT CH.	LL	=	0.0	PSF
	DL	=	7.4	PSF
TOTAL LOAD		=	45.9	PSF

SPACING = 24.0 IN. C/C

THIS TRUSS IS DESIGNED FOR RESIDENTIAL OR SMALL BUILDING REQUIREMENTS OF PART 9, NBCC 2015

THIS DESIGN COMPLIES WITH:
- PART 9 OF BCBC 2018 , NBC-2019AE
- PART 9 OF OBC 2012 (2019 AMENDMENT)
- CSA 086-14
- TPIC 2014

DESIGN ASSUMPTIONS
-OVERHANG NOT TO BE ALTERED OR CUT OFF.

(55 % OF 43.9 P.S.F. G.S.L. PLUS 8.4 P.S.F. RAIN LOAD) EQUALS 32.5 P.S.F. SPECIFIED ROOF LIVE LOAD

ALLOWABLE DEFL.(LL)= L/360 (0.19")
CALCULATED VERT. DEFL.(LL) = L/ 999 (0.00")
ALLOWABLE DEFL.(TL)= L/360 (0.19")
CALCULATED VERT. DEFL.(TL) = L/ 999 (0.00")

CSI: TC=0.15/1.00 (A-B:1) , BC=0.02/1.00 (E-F:4) , WB=0.00/1.00 (B-E:1) , SSI=0.10/1.00 (B-C:1)

DOL LUMBER=1.00 NAIL=1.00 LS BEND=1.10 COMP=1.10 SHEAR=1.10 TENS= 1.10

COMPANION LIVE LOAD FACTOR = 1.00

TRUSS PLATE MANUFACTURER IS NOT RESPONSIBLE FOR QUALITY CONTROL IN THE TRUSS MANUFACTURING PLANT .

NAIL VALUES

PLATE	GRIP(DRY) (PSI) MAX	MIN	SHEAR (PLI) MAX	MIN	SECTION (PLI) MAX	MIN
MT20	650	371	1747	788	1987	1873

PLATE PLACEMENT TOL. = 0.250 inches

PLATE ROTATION TOL. = 5.0 Deg.

JSI GRIP= 0.20 (B) (INPUT = 0.90)
JSI METAL= 0.08 (B) (INPUT = 0.95)

LICENSED PROFESSIONAL ENGINEER
4/02/24
C. M. HEYENS
100505065
PROVINCE OF ONTARIO

STRUCTURAL COMPONENT ONLY
DWG # TR24040001

JOB NAME	TRUSS NAME	QUANTITY	PLY	JOB DESC.	DRWG NO.
436388	C2	1	1	BAYVIEW WELLINGTON TRUSS DESC.	

Tamarack Roof Truss, Burlington

Version 8.630 S Aug 30 2023 MiTek Industries, Inc. Tue Apr 2 10:52:55 2024 Page 1
ID:GRmvuh1dyQr3nydBfsTFcCy6OGI-geNWPyg6NDyv LrZMoVjKVpVkPEWemQrlTHXLOzUo4s

Scale: 1/2"=1'

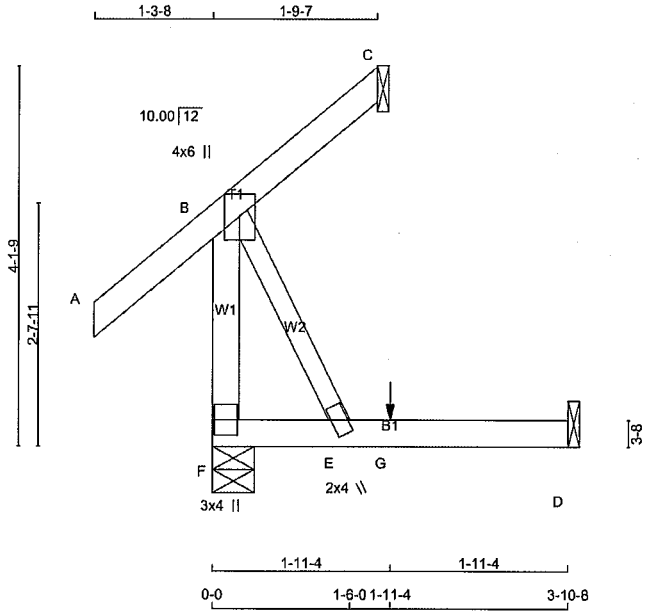

TOTAL WEIGHT = 14 lb

LUMBER
N. L. G. A. RULES

CHORDS	SIZE		LUMBER	DESCR.
F - B	2x4	DRY	No.2	SPF
A - C	2x4	DRY	No.2	SPF
F - D	2x4	DRY	No.2	SPF
ALL WEBS	2x3	DRY	No.2	SPF

DRY: SEASONED LUMBER.

PLATES (table is in inches)

JT	TYPE	PLATES	W	LEN	Y	X
B	TMVW+p	MT20	4.0	6.0	Edge	
E	BMW+w	MT20	2.0	4.0		
F	BMV1+p	MT20	3.0	4.0		

Edge - INDICATES REFERENCE CORNER OF PLATE TOUCHES EDGE OF CHORD.

NOTES- (1)
1) Lateral braces to be a minimum of 2X4 SPF #2.

DIMENSIONS, SUPPORTS AND LOADINGS SPECIFIED BY FABRICATOR TO BE VERIFIED BY BUILDING DESIGNER

BEARINGS

JT	FACTORED GROSS REACTION VERT	HORZ	MAXIMUM FACTORED GROSS REACTION DOWN	HORZ	UPLIFT	INPUT BRG IN-SX	REQRD BRG IN-SX
F	352	0	352	0	0	5-8	1-8
C	40	0	40	0	-51	1-8	1-8
D	36	0	40	0	0	1-8	1-8

SEE MITEK STANDARD DETAIL MSD2015-H FOR CONNECTION TO JOINT(S) C , D

PROVIDE ANCHORAGE AT BEARING JOINT C FOR 150 LBS FACTORED UPLIFT

UNFACTORED REACTIONS

JT	1ST LCASE COMBINED	MAX./MIN. COMPONENT REACTIONS SNOW	LIVE	PERM.LIVE	WIND	DEAD	SOIL
F	245	183 / 0	0 / 0	0 / 0	0 / 0	62 / 0	0 / 0
C	27	23 / -35	0 / 0	0 / 0	0 / 0	4 / 0	0 / 0
D	29	0 / 0	0 / 0	0 / 0	0 / 0	29 / 0	0 / 0

BEARING MATERIAL TO BE SPF NO.2 OR BETTER AT JOINT(S) F, C

BRACING
TOP CHORD TO BE SHEATHED OR MAX. PURLIN SPACING = 6.25 FT.
MAX. UNBRACED BOTTOM CHORD LENGTH = 10.00 FT OR RIGID CEILING DIRECTLY APPLIED.

ALL PITCH BREAKS AND PERIMETER CORNER JOINTS MUST BE LATERALLY RESTRAINED.

LOADING
TOTAL LOAD CASES: (5)

CHORDS

MEMB. FR-TO	MAX. FACTORED FORCE (LBS)	FACTORED VERT. LOAD LC1 (PLF) FROM	TO	MAX CSI (LC)	MAX. UNBRAC LENGTH
F- B	-317 / 0	0.0	0.0	0.04 (1)	7.81
A- B	0 / 50	-112.4	-112.4	0.17 (5)	10.00
B- C	-39 / 0	-112.4	-112.4	0.16 (5)	6.25
F- E	0 / 0	-18.5	-18.5	0.07 (4)	10.00
E- G	0 / 0	-18.5	-18.5	0.08 (4)	10.00
G- D	0 / 0	-18.5	-18.5	0.08 (4)	10.00

WEBS

MEMB. FR-TO	MAX. FACTORED FORCE (LBS)	MAX CSI (LC)
B- E	0 / 0	0.00 (1)

SPECIFIED CONCENTRATED LOADS (LBS)

JT	LOC.	LC1	MAX-	MAX+	FACE	DIR.	TYPE	HEEL	CONN.
G	1-11-4	1	1	---	BACK	VERT	TOTAL	---	C1

CONNECTION REQUIREMENTS

1) **C1:** A SUITABLE HANGER/MECHANICAL CONNECTION IS REQUIRED.

CANTILEVER ANALYSIS HAS BEEN CONSIDERED IN THIS DESIGN

DESIGN CRITERIA

SPECIFIED LOADS:

TOP CH.	LL	=	32.5	PSF
	DL	=	6.0	PSF
BOT CH.	LL	=	0.0	PSF
	DL	=	7.4	PSF
TOTAL LOAD		=	45.9	PSF

SPACING = 24.0 IN. C/C

THIS TRUSS IS DESIGNED FOR RESIDENTIAL OR SMALL BUILDING REQUIREMENTS OF PART 9, NBCC 2015

THIS DESIGN COMPLIES WITH:
- PART 9 OF BCBC 2018 , NBC-2019AE
- PART 9 OF OBC 2012 (2019 AMENDMENT)
- CSA 086-14
- TPIC 2014

DESIGN ASSUMPTIONS
-OVERHANG NOT TO BE ALTERED OR CUT OFF.

(55 % OF 43.9 P.S.F. G.S.L. PLUS 8.4 P.S.F. RAIN LOAD) EQUALS 32.5 P.S.F. SPECIFIED ROOF LIVE LOAD

ALLOWABLE DEFL.(LL)= L/360 (0.19")
CALCULATED VERT. DEFL.(LL) = L/ 999 (0.00")
ALLOWABLE DEFL.(TL)= L/360 (0.19")
CALCULATED VERT. DEFL.(TL) = L/ 999 (0.01")

CSI: TC=0.17/1.00 (A-B:5) , BC=0.08/1.00 (D-E:4) , WB=0.00/1.00 (B-E:1) , SSI=0.10/1.00 (A-B:5)

DOL LUMBER=1.00 NAIL=1.00 LS BEND=1.10 COMP=1.10 SHEAR=1.10 TENS= 1.10

COMPANION LIVE LOAD FACTOR = 1.00

TRUSS PLATE MANUFACTURER IS NOT RESPONSIBLE FOR QUALITY CONTROL IN THE TRUSS MANUFACTURING PLANT .

NAIL VALUES

PLATE	GRIP(DRY) (PSI) MAX	MIN	SHEAR (PLI) MAX	MIN	SECTION (PLI) MAX	MIN
MT20	650	371	1747	788	1987	1873

PLATE PLACEMENT TOL. = 0.250 inches

PLATE ROTATION TOL. = 5.0 Deg.

JSI GRIP= 0.20 (B) (INPUT = 0.90)
JSI METAL= 0.08 (B) (INPUT = 0.95)

LICENSED PROFESSIONAL ENGINEER
4/02/24
C. M. HEYENS
100505065
PROVINCE OF ONTARIO

STRUCTURAL COMPONENT ONLY
DWG # TR24040002

EWP DESIGN INC.

(905) 832-2250 FAX (905) 832-0286

RESPONSIBILITIES AND SPECIFICATIONS

RESPONSIBILITIES

1. EWP DESIGN INC. is responsible for the design of trusses as individual components.
2. It is the responsibility of others to ascertain that the design loads utilized on each drawing meet or exceed the actual dead load imposed by the structure, the live load imposed by the intended use and the snow load imposed by local building code or authorities with jurisdictions.
3. All dimensions are to be verified by the owner, contractor, architect or other authorities with jurisdictions before truss fabrication.
4. EWP DESIGN INC. bears no responsibility for the erection of trusses. Persons erecting trusses are cautioned to seek professional advice regarding the temporary and permanent bracing for the system. Bracing shown on EWP DESIGN INC. drawing is specified for the truss as a component only and forms an integral part of the truss design.
5. It is the truss manufacturer's responsibility to ensure that trusses are manufactured in conformance with specifications of EWP DESIGN INC. as outlined below.

SPECIFICATIONS

1. Trusses designed by EWP DESIGN INC. conform to the relevant section of the Ontario Building Code of Canada (Part 9 or Part 4) or to the Canadian code for farm buildings, whichever applies to the building type, as indicated on the EWP DESIGN INC. drawings, and conform to the design procedures established by the Truss Plate Institute of Canada. Unit stresses used for truss designs are as per the edition of CSA-O86 shown on EWP DESIGN INC. drawings.
2. Lumber is to be the size, species and grade as specified on EWP DESIGN INC. drawings.
3. Moisture content of lumber shall not exceed 19% in service unless specified otherwise.
4. Metal connector plates shall be applied to both faces of truss at each joint and shall be positioned as specified.
5. Top chords of trusses are assumed to be continuously braced laterally by roof sheathing or by purlins at intervals not exceeding 12.5 times the thickness of top chord member.
6. Bottom chords shall be laterally braced at intervals not exceeding 3M (10') o.c., where rigid ceiling is not applied directly to the underside of chords.

THESE DRAWINGS CONSTITUTE THE PROPERTY OF EWP DESIGN INC., SHALL NOT BE REPRODUCED, PUBLISHED, OR REDISTRIBUTED IN ANY MANNER OR UTILIZED FOR ANY PURPOSE OTHER THAN THE MANUFACTURE OF TRUSSES BY THE ALPA LUMBER GROUP, AND WILL BE RETRACTED BY EWP DESIGN INC. IF UTILIZED FOR ANY OTHER PURPOSE.

February 1, 2019

TOE-NAIL CAPACITY DETAILS

LATERAL AND WITHDRAWAL RESISTANCE OF BEARING ANCHORAGE BY TOE-NAILS

			SPF	D. FIR	SPF	D. FIR
COMMON WIRE	3.00	0.144	122	139	30	42
	3.25	0.144	127	144	32	45
	3.50	0.160	152	173	38	52
COMMON SPIRAL	3.00	0.122	96	108	26	36
	3.25	0.122	97	108	28	40
	3.50	0.152	142	161	36	50
3.25" Gun nail	3.25	0.120	94	105	28	39

Note: If using truss with D. Fir lumber and SPF bearing plate, use tabulated SPF values in table.

Nail type:	**Common wire**	**Common spiral**	**Common wire**	**Common spiral**	**Gun Nail**
Diameter (in.)	0.160	0.152	0.144	0.122	0.120
Length (in.)	3.50	3.50	3.00	3.00	3.25
2x4 SPF	2	2	3	3	3
2x6 SPF	4	4	4	5	5
2x4 D. FIR	2	2	2	2	2
2x6 D. FIR	3	3	3	4	4

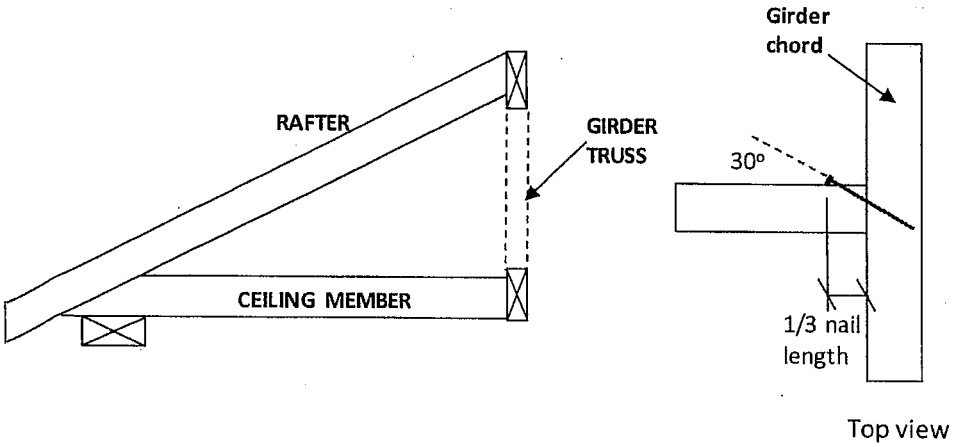

Figure 1: Toe-Nailing Rafter / Ceiling Member to Girder Truss

PEO
Certificate No. 10889485

LICENSED PROFESSIONAL ENGINEER
C. Cordogiannis
90553736
PROVINCE OF ONTARIO

December 21, 2020

©2020 MiTek Canada Inc., 240 Stirling Crescent, Bradford, Ontario, L3Z 4L5 | (800) 268-3434, www.mitek.ca

TOE-NAIL CAPACITY DETAILS

Figure 2: Toe-Nail Anchorage to Bearing Plate for Uplift

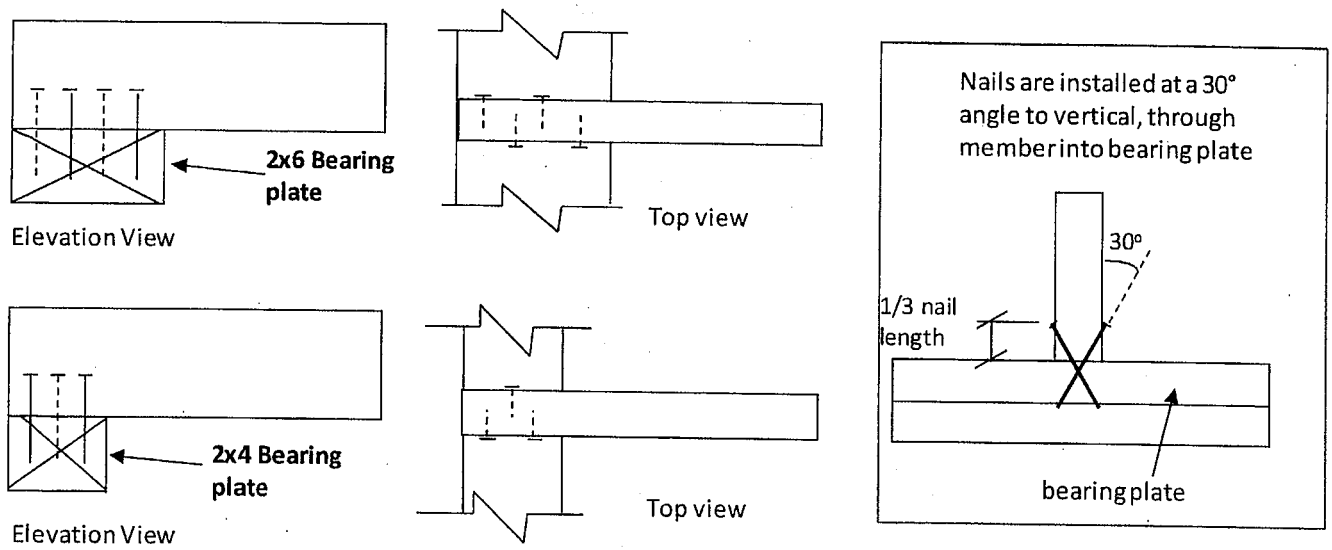

NOTES:

1. Rafter and ceiling members may be connected to top and bottom chords of girder truss by toe-nailing the members into the girder chords (see fig. 1), provided the factored vertical reactions of the supported members do not exceed the lateral resistance of the toe-nails. Mechanical connectors (hangers) are required if factored vertical reactions exceed the toe-nail capacity, or if the connection must resist horizontal loads (loads perpendicular to the face of girder or rafter).
2. Trusses, rafters or ceiling members may be anchored to the bearing plate with toe-nails (see fig. 2), provided that the factored uplift reactions due to **wind or earthquake loads** do not exceed the **withdrawal resistance of the toe-nails.** Mechanical anchors (tie-downs) are required for reactions that exceed the toe-nail withdrawal capacity. Toe-nail anchorage to bearing plates is **NOT** permitted if uplift reactions are generated from gravity loads (snow, floor live, dead).
3. Tabulated toe-nail resistances on page 1 are for **one** toe-nail. Multiply unit values by the number of nails used in the connection. Maximum number of nails in a connection shall not exceed the tabulated limits shown on page 1 for a given lumber size /species.
4. Nail values are based on specific gravity of G = 0.42 (SPF) and G = 0.49 (D. Fir).
5. Toe-nails shall be driven at approximately 1/3 the nail length from the edge of the joist/truss chord and driven at an angle of 30° to the grain of the member.
6. For wind / earthquake loads, tabulated lateral resistances may be multiplied by 1.15 (K_D factor). No increases are permitted for tabulated withdrawal resistances.
7. Lumber must be dry (< 19% moisture content) at the time of nail installation.
8. Nail values in this table comply with CSA O86-19, Clause 12.9.

PEO
Certificate No. 10889485

December 21, 2020

©2020 MiTek Canada Inc., 240 Stirling Crescent, Bradford, Ontario, L3Z 4L5 | (800) 268-3434, www.mitek.ca

TECHNICAL BULLETIN

LUS — Double-Shear Joist Hangers

SIMPSON Strong-Tie

All LUS hangers have double-shear nailing. This patented innovation distributes the load through two points on each joist nail for greater strength. It also allows the use of fewer nails, faster installation and the use of common nails for all connections.

Material: 18 gauge

Finish: G90 galvanized

Design:

- Factored resistances are in accordance with CSA O86-14 and CSA O86:19.
- Uplift resistances have been increased 15%. No further increase is permitted.
- Wood shear is not considered in the factored resistances given. The specifier must ensure that the joist and header capacities are capable of withstanding these loads.

Installation:

- Use all specified fasteners
- Nails: 16d = 0.162" dia. x 3½" long common wire, 10d = 0.148" x 3" long common wire
- Double-shear nails must be driven at an angle through the joist or truss into the header to achieve the table loads
- Not designed for welded or nailer applications

Options:

- These hangers cannot be modified

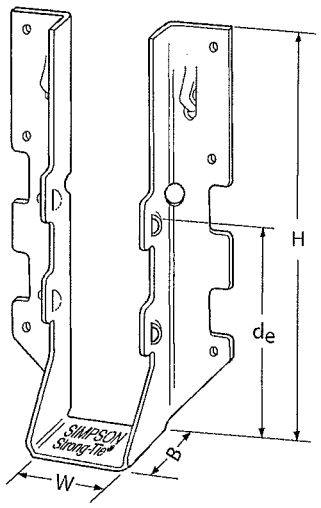

LUS28

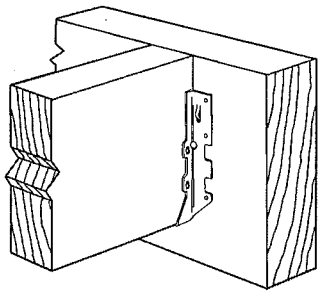

Typical LUS Installation

Model No.	Ga.	Dimensions (in.)				Fasteners		Factored Resistance (lb.)			
								D.Fir–L		S-P-F	
		W	H	B	d_e[1]	Face	Joist	Uplift (K_D=1.15)	Normal (K_D=1.00)	Uplift (K_D=1.15)	Normal (K_D=1.00)
LUS24	18	1 9/16	3 1/8	1 3/4	1 15/16	(4) 10d	(2) 10d	710	1630	645	1155
LUS24-2	18	3 1/8	3 1/8	2	1 13/16	(4) 16d	(2) 16d	835	2020	590	1435
LUS26	18	1 9/16	4 3/4	1 3/4	3 5/8	(4) 10d	(4) 10d	1420	2170	1290	1630
LUS26-2	18	3 1/8	4 7/8	2	4	(4) 16d	(4) 16d	1720	2595	1545	1920
LUS26-3	18	4 5/8	4 3/16	2	3 1/4	(4) 16d	(4) 16d	1720	2595	1545	2340
LUS28	18	1 9/16	6 5/8	1 3/4	3 3/4	(6) 10d	(6) 10d	1420	2520	1290	1790
LUS28-2	18	3 1/8	7	2	4	(6) 16d	(4) 16d	1720	3325	1545	2575
LUS28-3	18	4 5/8	6 1/4	2	3 1/4	(6) 16d	(4) 16d	1720	3325	1545	2375
LUS210	18	1 9/16	7 13/16	1 3/4	3 7/8	(8) 10d	(4) 10d	1420	2785	1290	2210
LUS210-2	18	3 1/8	9	2	6	(8) 16d	(6) 16d	2580	4500	2320	3195
LUS210-3	18	4 5/8	8 3/16	2	5 1/4	(8) 16d	(6) 16d	2580	3345	2320	2375

1. d_e is the distance from the seat of the hanger to the highest joist nail.

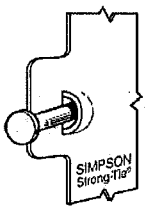

Dome double-shear nailing prevents tabs breaking off (available on some models).

US Patent 5,603,580

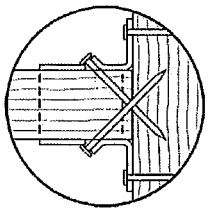

Double-shear nailing top view.

LICENSED PROFESSIONAL ENGINEER
07/19/2022
B. D. BUNTING
PROVINCE OF ONTARIO

This technical bulletin is effective until December 31, 2024, and reflects information available as of July 1, 2022. This information is updated periodically and should not be relied upon after December 31, 2024. Contact Simpson Strong-Tie for current information and limited warranty or see strongtie.com.

© 2022 Simpson Strong-Tie Company Inc. • P.O. Box 10789, Pleasanton, CA 94588

(800) 999-5099
strongtie.com

TECHNICAL BULLETIN

HUS/LJS — Double-Shear Joist Hangers

SIMPSON Strong-Tie

All hangers have double-shear nailing. This patented innovation distributes the load through two points on each joist nail for greater strength. It also allows the use of fewer nails, faster installation and the use of common nails for all connections. Do not bend or remove tabs.

Material: See table

Finish: G90 galvanized

Design:

- Factored resistances are in accordance with CSA O86-14 and CSA O86:19.
- Uplift resistances have been increased 15%. No further increase is permitted.
- Wood shear is not considered in the factored resistances given. The specifier must ensure that the joist and header capacities are capable of withstanding these loads.

Installation:

- Use all specified fasteners
- Nails: 16d = 0.162" dia. x 3½" long common wire
- Double-shear nails must be driven at an angle through the joist or truss into the header to achieve the table loads
- Not designed for welded or nailer applications

Options:

- See current catalogue for options

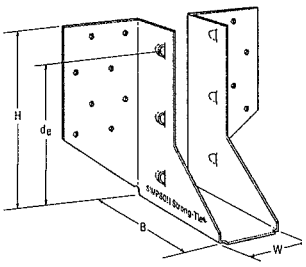

LJS26DS

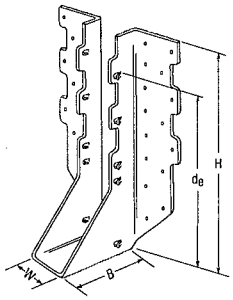

HUS210
(HUS26, HUS28, similar)

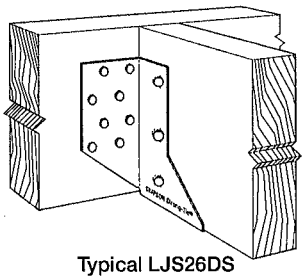

Typical LJS26DS Installation

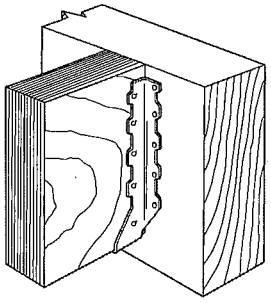

Typical HUS Installation

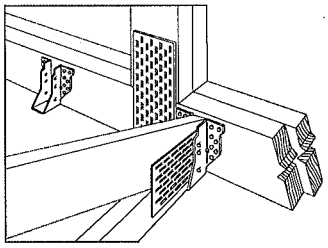

Typical HUS Installation
(Truss designer to provide fastener quantity for connecting multiple members together)

Model No.	Ga.	Dimensions (in.)				Fasteners		Factored Resistance (lb.)			
								D.Fir–L		S-P-F	
		W	H	B	d_e[1]	Face	Joist	Uplift (K_D=1.15) lb.	Normal (K_D=1.00) lb.	Uplift (K_D=1.15) lb.	Normal (K_D=1.00) lb.
LJS26DS	18	1 9/16	5	3½	4⅝	(16) 16d	(6) 16d	2055	4265	1460	4115
HUS26	16	1⅝	5⅜	3	3 15/16	(14) 16d	(6) 16d	2705	4940	2065	3875
HUS28	16	1⅝	7 3/32	3	6 3/32	(22) 16d	(8) 16d	3605	5365	2675	4345
HUS210	16	1⅝	9 3/32	3	7 31/32	(30) 16d	(10) 16d	4505	5795	4010	4740
HUS1.81/10	16	1 13/16	9	3	8	(30) 16d	(10) 16d	4505	6450	4010	5200

1. d_e is the distance from the seat of the hanger to the highest joist nail.

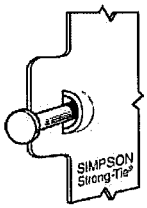

Dome double-shear nailing prevents tabs breaking off (available on some models).

US Patent 5,603,580

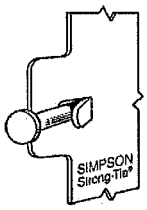

Double-shear nailing side view. Do not bend tab back.

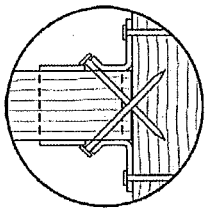

Double-shear nailing top view.

This technical bulletin is effective until December 31, 2024, and reflects information available as of July 1, 2022. This information is updated periodically and should not be relied upon after December 31, 2024. Contact Simpson Strong-Tie for current information and limited warranty or see strongtie.com.

© 2022 Simpson Strong-Tie Company Inc. • P.O. Box 10789, Pleasanton, CA 94588

(800) 999-5099
strongtie.com

TECHNICAL BULLETIN

HGUS — Double-Shear Joist Hangers

SIMPSON Strong-Tie

All HGUS hangers have double-shear nailing. This patented innovation distributes the load through two points on each joist nail for greater strength. It also allows the use of fewer nails, faster installation and the use of common nails for all connections. Do not bend or remove tabs.

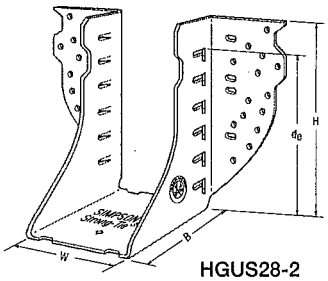

HGUS28-2

Material: 12 gauge

Finish: G90 galvanized

Design:

- Factored resistances are in accordance with CSA O86-14 and CSA O86:19.
- Uplift resistances have been increased 15%. No further increase is permitted.
- Wood shear is not considered in the factored resistances given. The specifier must ensure that the joist and header capacities are capable of withstanding these loads.

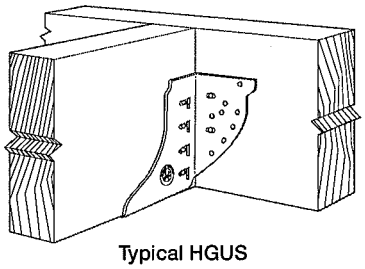
Typical HGUS Installation

Installation:

- Use all specified fasteners
- Nails: 16d = 0.162" dia x 3½" long common wire
- Double-shear nails must be driven at an angle through the joist or truss into the header to achieve the table loads
- Not designed for welded or nailer applications

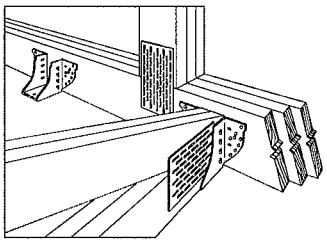
Typical HGUS Installation
(Truss designer to provide fastener quantity for connecting multiple members together)

Options:

- See current catalogue for options

Model No.	Ga.	Dimensions (in.)				Fasteners		Factored Resistance (lb.)			
								D.Fir–L		S-P-F	
		W	H	B	d_e[1]	Face	Joist	Uplift (K_D=1.15)	Normal (K_D=1.00)	Uplift (K_D=1.15)	Normal (K_D=1.00)
HGUS26	12	1⅝	5⅜	5	4 5/32	(20) 16d	(8) 16d	2685	6625	2685	5700
HGUS26-2	12	3 5/16	5 7/16	4	4⅛	(20) 16d	(8) 16d	4385	8950	3100	6355
HGUS26-3	12	4 15/16	5½	4	4⅛	(20) 16d	(8) 16d	4385	8950	3100	6355
HGUS26-4	12	6 9/16	5 7/16	4	4⅛	(20) 16d	(8) 16d	4385	8950	3100	6355
HGUS28	12	1⅝	7⅛	5	6⅛	(36) 16d	(12) 16d	3310	7675	3100	6900
HGUS28-2	12	3 5/16	7 3/16	4	6⅛	(36) 16d	(12) 16d	6070	12980	4310	9215
HGUS28-3	12	4 15/16	7¼	4	6⅜	(36) 16d	(12) 16d	6070	12980	4310	9215
HGUS28-4	12	6 9/16	7 3/16	4	6⅛	(36) 16d	(12) 16d	6070	12980	4310	9215
HGUS210-2	12	3 5/16	9 3/16	4	8⅛	(46) 16d	(16) 16d	6840	14015	4855	10270
HGUS210-3	12	4 15/16	9¼	4	8⅜	(46) 16d	(16) 16d	6840	14645	4855	10400
HGUS210-4	12	6 9/16	9 3/16	4	8⅛	(46) 16d	(16) 16d	6840	14645	4855	10400
HGUS212-4	12	6 9/16	10⅝	4	10⅛	(56) 16d	(20) 16d	7640	14995	5425	10645
HGUS214-4	12	6 9/16	12⅝	4	11⅛	(66) 16d	(22) 16d	10130	16400	7195	11645

1. d_e is the distance from the seat of the hanger to the highest joist nail.

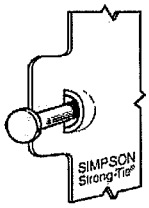

Dome double-shear nailing prevents tabs breaking off (available on some models).

US Patent 5,603,580

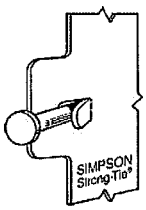

Double-shear nailing side view. Do not bend tab back.

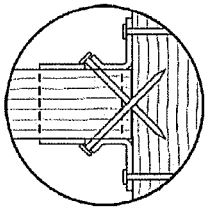
Double-shear nailing top view.

This technical bulletin is effective until December 31, 2024, and reflects information available as of July 1, 2022. This information is updated periodically and should not be relied upon after December 31, 2024. Contact Simpson Strong-Tie for current information and limited warranty or see strongtie.com.

© 2022 Simpson Strong-Tie Company Inc. • P.O. Box 10789, Pleasanton, CA 94588 T-SPECHGUS22 7/22 exp. 12/24

(800) 999-5099
strongtie.com

TECHNICAL BULLETIN

H — Seismic and Hurricane Ties

SIMPSON Strong-Tie

The H connector series provides wind and seismic ties for trusses and rafters.

Material: 18 gauge

Finish: G90 galvanized

Design:
- Factored resistances are in accordance with CSA O86-14 and CSA O86:19.
- Factored resistances have been increased 15%. No further increase is permitted.

Installation:
- Use all specified fasteners
- Nails: 8d = 0.131" dia. x 2½" long common wire, 8d x 1½" = 0.131" x 1½ long, 10d x 1½" = 0.146" x 1½" long
- H1 can be installed with flanges facing outwards
- Hurricane ties do not replace solid blocking

Factored resistances for more than one direction for a single connection cannot be added together. A factored load which can be divided into components in the directions given must be evaluated as follows: Factored Shear/Resisting Shear + Factored Tension/Resisting Tension ≤ 1.0.

Hurricane Tie Installations to Achieve Twice the Load (Top View)

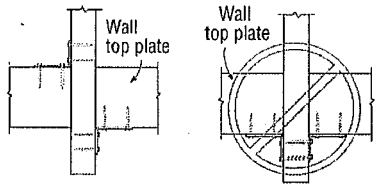

Install diagonally across from each other for minimum 2x truss.

Nailing into both sides of a single ply 2x truss may cause the wood to split.

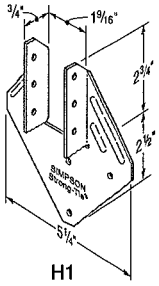

H1

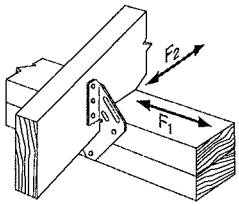

H1 Installation

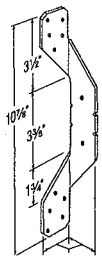

H2A

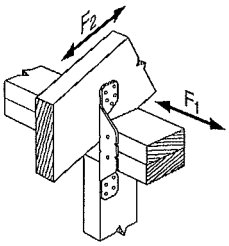

H2A Installation

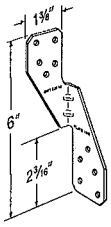

H2.5A

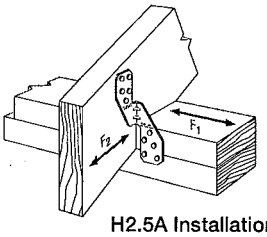

H2.5A Installation

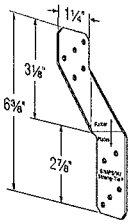

H2.5T

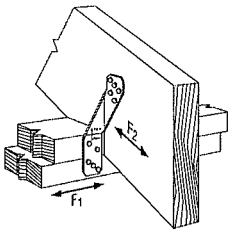

H2.5T Installation
(Nails into both top plates)

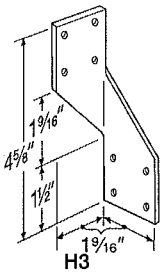

H3

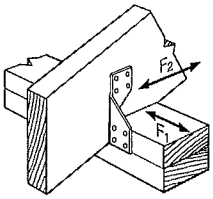

H3 Installation

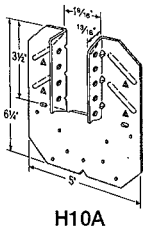

H10A

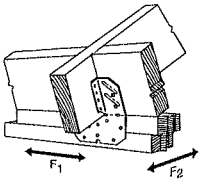

H10A Installation

Model No.	Ga.	Fasteners			Factored Resistance (lb.)					
					D.Fir–L			S-P-F		
					Uplift	Normal		Uplift	Normal	
		To Rafter	To Plates	To Studs		F_1	F_2		F_1	F_2
					(K_D=1.15)			(K_D=1.15)		
H1	18	(6) 8d x 1½"	(4) 8d	—	740	685	300	680	485	215
H2A	18	(5) 8d x 1½"	(2) 8d x 1½"	(5) 8d x 1½"	830	220	75	590	155	55
H2.5A	18	(5) 8d	(5) 8d	—	805	160	160	755	160	160
H2.5T	18	(5) 8d	(5) 8d	—	835	175	240	740	160	210
H3	18	(4) 8d	(4) 8d	—	740	180	265	615	125	190
H10A	18	(9) 10d x 1½"	(9) 10d x 1½"	—	1735	795	410	1505	565	290

1. Factored resistances have been increased 15% for earthquake or wind loading with no further increase allowed.
2. Factored resistances are for one anchor. A minimum rafter thickness of 2½" must be used when framing anchors are installed on each side of the joist and on the same side of the plate.
3. When cross-grain bending or cross-grain tension cannot be avoided, mechanical reinforcement to resist such forces should be considered.
4. Hurricane ties are shown installed on the outside of the wall for clarity. Installation on the inside of the wall is acceptable. For a Continuous Load Path, connections must be on same side of the wall.

LICENSED PROFESSIONAL ENGINEER
07/19/2022
B. D. BUNTING
PROVINCE OF ONTARIO

This technical bulletin is effective until December 31, 2024, and reflects information available as of July 1, 2022. This information is updated periodically and should not be relied upon after December 31, 2024. Contact Simpson Strong-Tie for current information and limited warranty or see strongtie.com.

© 2022 Simpson Strong-Tie Company Inc. • P.O. Box 10789, Pleasanton, CA 94588

(800) 999-5099
strongtie.com

ONTARIO WOOD TRUSS
FABRICATORS ASSOCIATION

TECH-NOTES

TN 15-001
Piggyback Bracing

Overview:

Where piggybacks are connected overtop of base trusses, 2x4 purlins must be first added to the flat portion of the base truss at a spacing no more than 24" o/c. These purlins not only provide support for the piggyback trusses above, but are required to laterally support the top chord of the base truss which will not have the sheathing directly connected to the flat portion of the base truss. This ensures the top chord, most often in compression, will not buckle laterally.

Further, the purlins in the plane of the flat portion require diagonal bracing to prevent lateral displacement of the purlins themselves where under certain conditions, the trusses may in fact all buckle in the same direction if this additional bracing is not added in the plane of the purlins.

Detail:

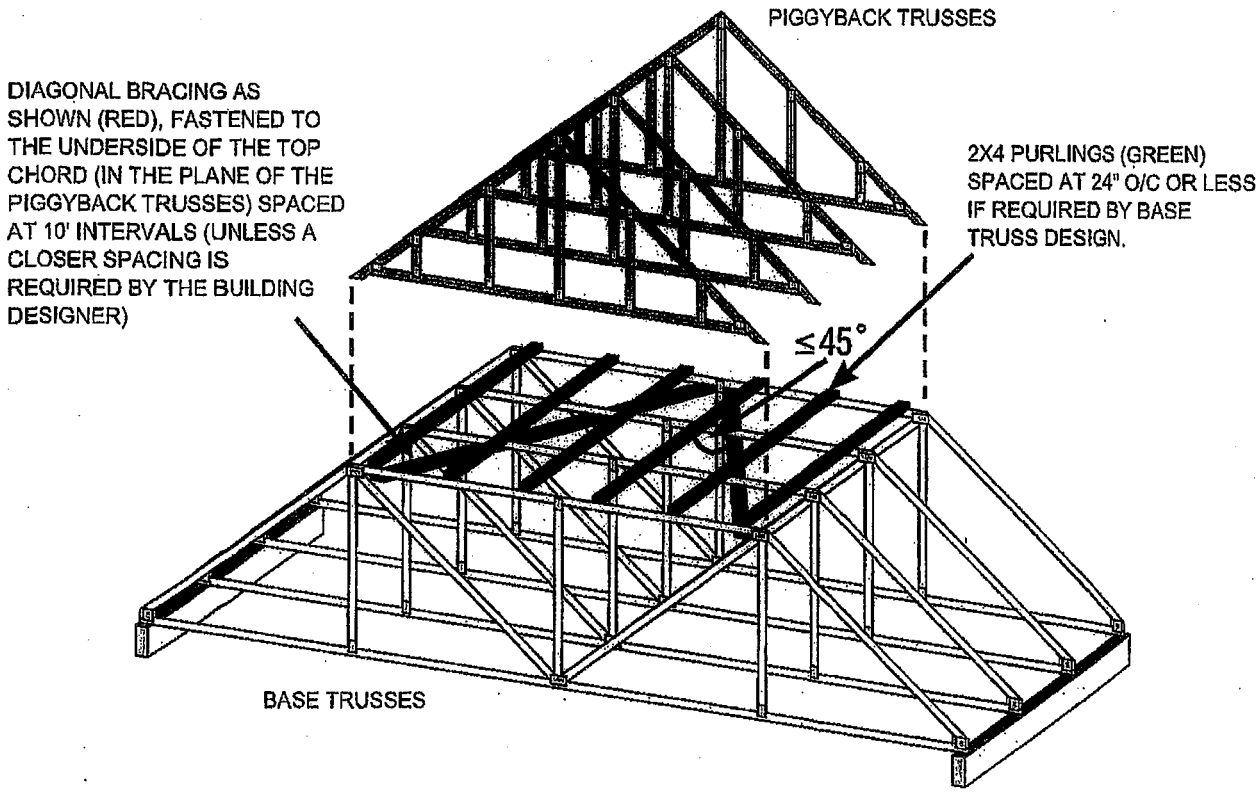

NOTE: THE SLOPED PORTION OF THE TOP CHORD OF THE BASE TRUSS AND PIGGYBACK TRUSS IN THIS SKETCH IS ASSUMED TO BE SHEATHED IN ACCORDANCE WITH THE OBC.

SKETCH FROM BCSI-CANADA 2013

Disclaimer:

OWTFA Tech Notes are intended to provide guidance to the design community both within the membership as well as to third party designers who might benefit from the information. The details have been developed by the OWTFA technical committee and although there may be professional engineers involved in development, the information contained in the tech-note are not intended to be used without having a professional engineer review the information for a specific application. The OWTFA takes no responsibility with respect to the information provided but has developed this tech-note to offer guidance where it is not currently readily available.

Symbols

PLATE LOCATION AND ORIENTATION

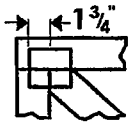

Center plate on joint unless x, y offsets are indicated. Dimensions are in ft-in-sixteenths or mm. Apply plates to both sides of truss and fully embed teeth.

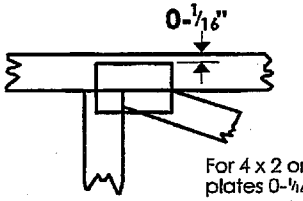

For 4 x 2 orientation, locate plates 0-1/16" from outside edge of truss.

This symbol indicates the required direction of slots in connector plates.

*Plate location details available in MiTek software or upon request.

PLATE SIZE

4 x 4

The first dimension is the plate width measured perpendicular to slots. Second dimension is the length parallel to slots.

LATERAL BRACING LOCATION

Indicated by symbol shown and/or by text in the bracing section of the output. Use T, I or Eliminator bracing if indicated.

BEARING

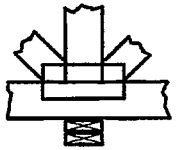

Indicates location where bearings (supports) occur. Icons vary but reaction section indicates joint number where bearings occur.

Industry Standards:

TPIC: Truss Design Procedures and Specifications for Light Metal Plate Connected Wood Trusses
DSB-89: Design Standard for Bracing.
BCSI: Building Component Safety Information, Guide to Good Practice for Handling, Installing & Bracing of Metal Plate Connected Wood Trusses.

Numbering System

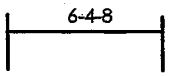

dimensions shown in ft-in-sixteenths or mm (Drawings not to scale)

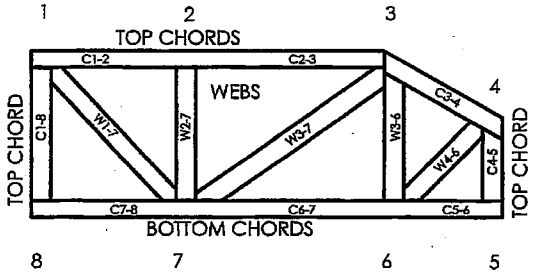

JOINTS ARE GENERALLY NUMBERED/LETTERED CLOCKWISE AROUND THE TRUSS STARTING AT THE JOINT FARTHEST TO THE LEFT.

CHORDS AND WEBS ARE IDENTIFIED BY END JOINT NUMBERS/LETTERS.

PRODUCT CODE APPROVALS

CCMC Reports:

11996-L, 10319-L, 13270-L, 12691-R

© 2007 MiTek® All Rights Reserved

MiTek®

POWER TO PERFORM.™

MiTek Engineering Reference Sheet: MII-7473C rev. 10-'08

General Safety Notes

Failure to Follow Could Cause Property Damage or Personal Injury

1. Additional stability bracing for truss system, e.g. diagonal or X-bracing, is always required. See BCSI.
2. Truss bracing must be designed by an engineer. For wide truss spacing, individual lateral braces themselves may require bracing, or alternative T, I, or Eliminator bracing should be considered.
3. Never exceed the design loading shown and never stack materials on inadequately braced trusses.
4. Provide copies of this truss design to the building designer, erection supervisor, property owner and all other interested parties.
5. Cut members to bear tightly against each other.
6. Place plates on each face of truss at each joint and embed fully. Knots and wane at joint locations are regulated by TPIC.
7. Design assumes trusses will be suitably protected from the environment in accord with TPIC.
8. Unless otherwise noted, moisture content of lumber shall not exceed 19% at time of fabrication.
9. Unless expressly noted, this design is not applicable for use with fire retardant, preservative treated, or green lumber.
10. Camber is a non-structural consideration and is the responsibility of truss fabricator. General practice is to camber for dead load deflection.
11. Plate type, size, orientation and location dimensions indicated are minimum plating requirements.
12. Lumber used shall be of the species and size, and in all respects, equal to or better than that specified.
13. Top chords must be sheathed or purlins provided at spacing indicated on design.
14. Bottom chords require lateral bracing at 10 ft. spacing, or less, if no ceiling is installed, unless otherwise noted.
15. Connections not shown are the responsibility of others.
16. Do not cut or alter truss member or plate without prior approval of an engineer.
17. Install and load vertically unless indicated otherwise.
18. Use of green or treated lumber may pose unacceptable environmental, health or performance risks. Consult with project engineer before use.
19. Review all portions of this design (front, back, words and pictures) before use. Reviewing pictures alone is not sufficient.
20. Design assumes manufacture in accordance with TPIC Quality Criteria.

MiTek®

STANDARD DETAIL MSD2015-P

Issued: **APRIL 27, 2022**
Expiry: **APRIL 30, 2024**

ALTERNATIVE WEB BRACING SOLUTIONS

The scab brace detail shown on this page provides an alternative method of bracing compression webs of single ply trusses. Where the original design calls for web bracing, the scab-brace is an acceptable alternative provided that the factored axial force in the web member does not exceed the tabulated values shown below. This detail applies to web lengths of 4.0 ft. to 10.0 ft. only. For intermediate web lengths, do not interpolate, use the tabulated value of the longer length. (ex. For a 6.25 ft. web, use the tabulated values for a 6.5 ft. web)

Maximum factored web force, lbs (1-Ply Truss)

WEB LENGTH (Ft.)	Web size 2x3	2x4	2x5	2x6	2x8+
4.0	4331	6064	7796	9529	12561
4.5	3794	5312	6829	8347	11003
5.0	3285	4599	5913	7227	9527
5.5	2823	3952	5081	6210	8186
6.0	2415	3381	4347	5313	7003
6.5	2063	2888	3713	4538	5982
7.0	1763	2468	3174	3879	5113
7.5	1510	2114	2718	3322	4379
8.0	1297	1816	2335	2854	3762
8.5	1117	1564	2011	2458	3240
9.0	966	1353	1740	2126	2803
9.5	840	1176	1512	1848	2436
10.0	733	1027	1320	1614	2127

SCAB BRACE DETAIL
1-PLY TRUSS

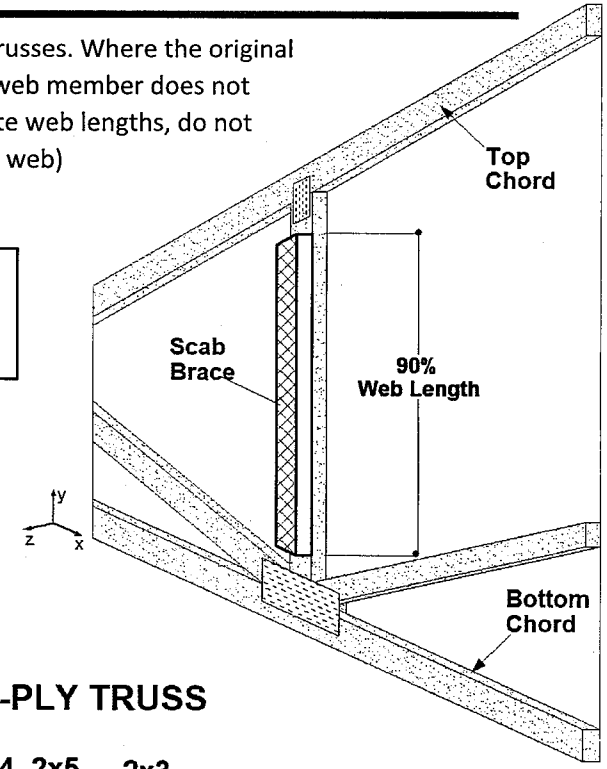

SCAB CONNECTION: 1-PLY TRUSS

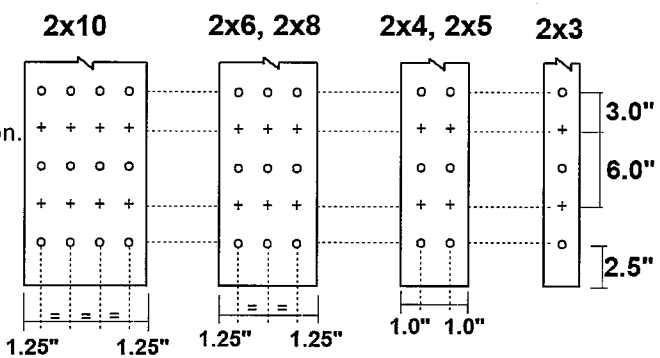

+ 0.122" dia. x 3.0" nail driven from front face
o 0.122" dia. x 3.0" nail driven from back face

Note: Connect scabs to truss along their entire length.

NOTES:

1. This detail **CANNOT** be used to repair damaged webs.
2. Scab and web sizes must be equal (i.e. use a 2x6 scab on a 2x6 web, etc.).
3. Scab & web lumber must be DRY (≤ 19% moisture content) at time of installation.
4. Scab must cover minimum 90% of the entire length of web.
5. For 2x12 webs use 2x10 nail pattern, but with 5 rows of nails instead of 4 rows.
6. This detail is for webs loaded axially only (not for axial/bending members).
7. Web and scab lumber shall be SPF No. 2 (or better) grade.
8. Tabulated resistances are for standard load duration only (K_D=1.0) and DRY service conditions (K_S =1.0). Do not use detail for WET service applications.
9. This detail shall be used only in conjunction with sealed MiTek truss drawings.

PEO
Certificate No. 10889485

LICENSED PROFESSIONAL ENGINEER
2022-05-03
C. Cordogiannis
90553736
PROVINCE OF ONTARIO

©2021 MiTek Canada Inc., 240 Stirling Crescent, Bradford, Ontario, L3Z 4L5 | (800) 268-3434, www.mitek.ca

MiTek®

STANDARD DETAIL MSD2015-P

Issued: **APRIL 27, 2022**
Expiry: **APRIL 30, 2024**

ALTERNATIVE WEB BRACING SOLUTIONS

The scab brace detail shown on this page provides an alternative method of bracing compression webs of 2-PLY trusses. Where the original design calls for web bracing, the scab-brace is an acceptable alternative provided that the maximum factored axial force in the web member does not exceed the tabulated values shown below. This detail applies to web lengths of 4.0 Ft. to 10.0 Ft. only. For intermediate web lengths, do not interpolate, use the tabulated value of the longer length. (ex. For a 6.25 ft. web, use the tabulated values for a 6.5 ft. web)

Maximum factored web force, lbs (2-Ply Truss)

WEB LENGTH (Ft.)	Web size 2x3	2x4	2x5	2x6	2x8+
4.0	8663	12128	15593	19058	25122
4.5	7588	10623	13659	16694	22006
5.0	6570	9198	11826	14455	19054
5.5	5645	7903	10162	12420	16371
6.0	4830	6762	8694	10626	14007
6.5	4126	5776	7426	9077	11965
7.0	3526	4937	6347	7758	10226
7.5	3020	4228	5436	6644	8758
8.0	2594	3632	4670	5708	7524
8.5	2235	3128	4022	4916	6480
9.0	1933	2706	3479	4253	5606
9.5	1680	2352	3024	3696	4872
10.0	1467	2054	2640	3227	4254

SCAB BRACE DETAIL
2-PLY TRUSS

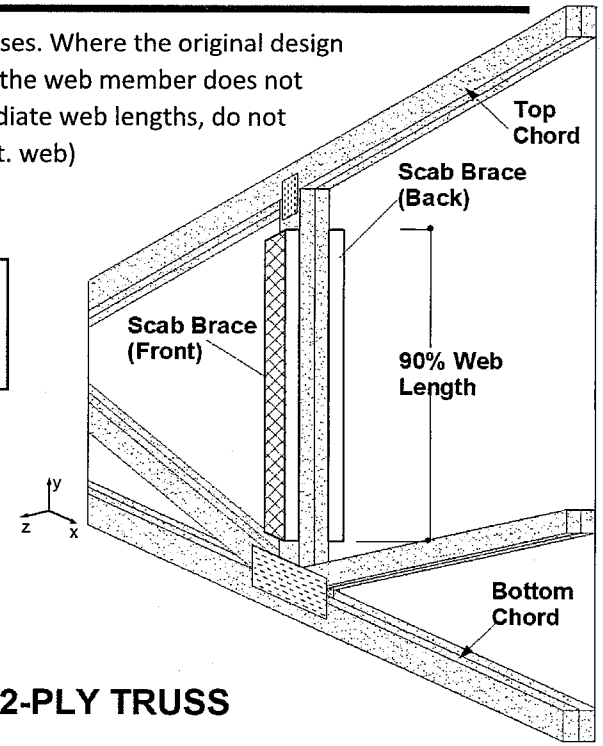

NOTES:

1. This detail **CANNOT** be used to repair damaged webs.
2. Scab sizes must be equal to web size (i.e. use a 2x6 scab on a 2x6 web, etc.).
3. Scabs &web lumber must be DRY (≤ 19% moisture content) at time of installation.
4. Scabs must cover 90% of the entire length of web and installed on both faces.
5. This detail shall NOT apply to vertical webs used for girder load transfer.
6. Web & scab lumber to be SPF No. 2 (or better) grade.
7. This detail is for webs loaded axially only (not for axial/bending members).
8. Ensure scabs will not interfere with incoming trusses, prior to using this detail.
9. Tabulated resistances are for standard load duration only (K_D=1.0) and DRY service conditions (K_S =1.0). Do not use detail for WET service applications.
10. This detail shall be used only in conjunction with sealed MiTek truss drawings.

SCAB CONNECTION: 2-PLY TRUSS

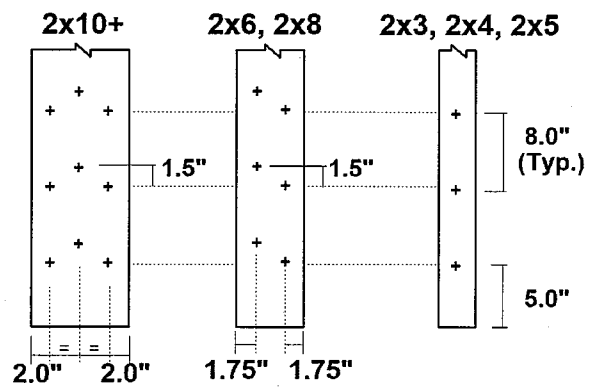

+ MITEK MIFLK006 Screw @ 8 in. cc
Note: Connect scabs to truss along their entire length.

PEO
Certificate No. 10889485

LICENSED PROFESSIONAL ENGINEER
2022-05-03
C. Cordogiannis
90553736
PROVINCE OF ONTARIO

©2021 MiTek Canada Inc., 240 Stirling Crescent, Bradford, Ontario, L3Z 4L5 | (800) 268-3434, www.mitek.ca