It is the builder's complete responsibility to ensure that all plans submitted for approval fully comply with the Architectural Guidelines and all applicable regulations and requirements including zoning provisions and any provisions in the subdivision agreement. The Control Architect is not responsible in any way for examining or approving site (lotting) plans or working drawings with respect to any zoning or building code or permit matter or that any house can be properly built or located on its lot.

This is to certify that these plans comply with the applicable Architectural Design Guidelines approved by the Municipality of CLARINGTON.

ARCHITECTURAL REVIEW & APPROVAL

DEC 09 2015

John G. Williams Limited, Architect

SITE PLAN REVIEW

LOT NO 34 REGISTERED PLAN .....

THE PROPOSED LOT GRADING AND DRAINAGE IS APPROVED AS BEING IN CONFORMITY WITH THE OVERALL APPROVED GRADING PLANS FOR THE SUBDIVISION.

THIS REVIEW DOES NOT WARRANT THAT OTHER INFORMATION SHOWN ON THIS DRAWING IS ACCURATE OR COMPLETE. SOLE RESPONSIBILITY FOR THE DESIGN AND DETAILS SHALL REMAIN WITH THE DESIGNER.

NO COMMENT ☒ REVIEWED BY .....

COMMENTS AS NOTED ☐ DATE Dec 7, 2015

CANDEVCON LIMITED
CONSULTING ENGINEERS AND PLANNERS

NOTE: BUILDER TO VERIFY LOCATION OF ALL HYDRANTS, STREET LIGHTS, TRANSFORMERS AND OTHER SERVICES. IF MIN. DIMENSIONS ARE NOT MAINTAINED BUILDER IS TO RELOCATE AT HIS OWN EXPENSE.

CLIENT
ESQUIRE HOMES

PROJECT/LOCATION
NORTHGLEN PHASE 2
CLARINGTON, ONTARIO

DRAWING
SITE GRADING PLAN

CONSULTANT'S DECLARATION:

THIS PROPOSAL CONFORMS WITH THE MUNICIPALITY'S GRADING CRITERIA AND APPROVED SUBDIVISION MASTER LOT GRADING PLAN AND THE PROPOSED HOUSE TYPE IS COMPATIBLE WITH THE GRADING. THE PROPOSED DRIVEWAY LOCATION DOES NOT CONFLICT WITH ADJACE DRIVEWAYS, WALKWAYS, CATCHBASIN, HYDRANT, VALVE OR ANY STREET UTILITY.

BUILDING STATISTICS

REG. PLAN No.	
ZONE	R2-54
LOT NUMBER	34
LOT AREA(m)^2	339.00
BLDG AREA(m)^2	119.94
LOT COVERAGE(%)	35.3
No. OF STOREYS	2
MEAN HEIGHT(m)	7.86
PEAK HEIGHT(m)	N/A
DECK LINE(m)	N/A

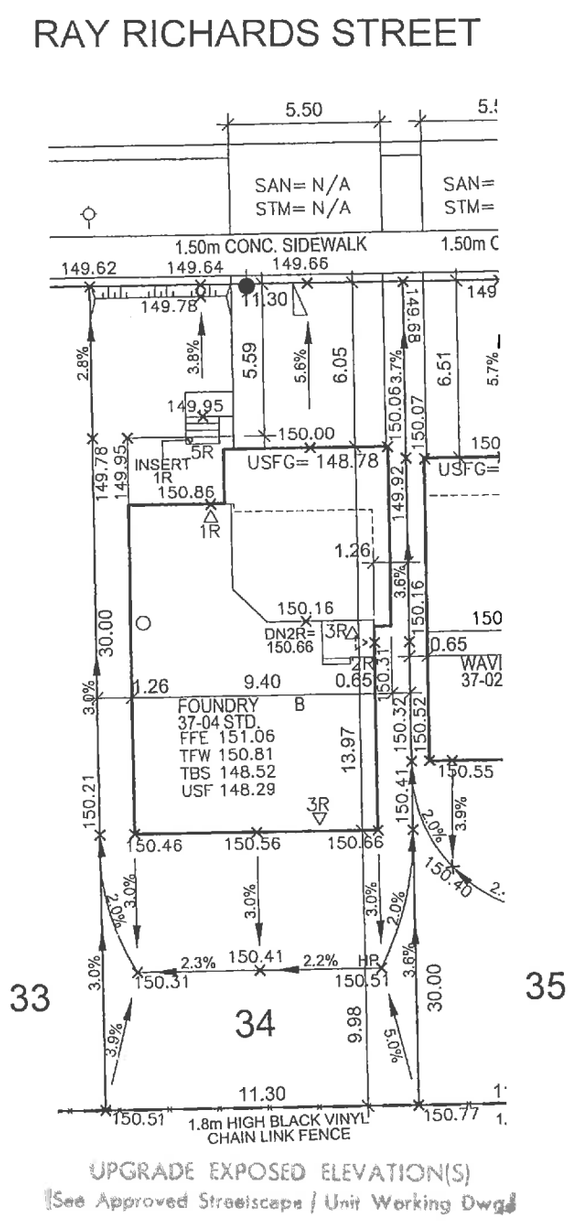

UPGRADE EXPOSED ELEVATION(S)
(See Approved Streetscape / Unit Working Dwgs)

LEGEND

FFE	FINISHED FLOOR ELEVATION
TFW	TOP OF FOUNDATION WALL
TBS	TOP OF BASEMENT SLAB
USF	UNDER SIDE FOOTING
USFR	UNDER SIDE FOOTING @ REAR
USFG	UNDER SIDE FOOTING @ GARAGE
TEF	TOP OF ENGINEERED FILL
R	NUMBER OF RISERS TO GRADE
WOD	WALKOUT DECK
LOB	LOOKOUT BASEMENT
WOB	WALK OUT BASEMENT
REV	REVERSE PLAN
STD	STANDARD PLAN
△	DOOR
○	WINDOW
⊠	BELL PEDISTAL
◩	CABLE PEDISTAL
□	CATCH BASIN
⊡	DBL. CATCH BASIN
✱	ENGINEERED FILL
	HYDRO CONNECTION
	FIRE HYDRANT
SL	STREET LIGHT
	MAIL BOX
	TRANSFORMER
	WATER VALVE
	WATER CONNECTION
▽	SEWER CONNECTIONS 2 LOTS
	SEWER CONNECTIONS 1 LOT
AC	AIR CONDITIONING
	DOWN SPOUT TO SPLASH PAD
→	SWALE DIRECTION
—— ——	CHAINLINK FENCE
—— ——	PRIVACY FENCE
—— ——	SOUND BARRIER
- - - - - -	FOOTING TO BE EXTENDED TO 1.25 (MIN) BELOW GRADE

ISSUED OR REVISION COMMENTS

NO.	DESCRIPTION	DATE	DWN	CHK
1	ISSUED FOR REVIEW (SITED)	NOV16/15	NC	NC
2	ISSUED FOR FINAL	NOV30/15	NC	NC

I, NELSON CUNHA DECLARE THAT I HAVE REVIEWED AND TAKE DESIGN RESPONSIBILITY FOR THE DESIGN WORK ON BEHALF OF RN DESIGN LIMITED UNDER SUBSECTION 2.17.4 OF THE BUILDING CODE. I AM QUALIFIED, AND THE FIRM IS REGISTERED, IN THE APPROPRIATE CLASSES/CATEGORIES.

QUALIFIED DESIGNER BCIN 21032

FIRM BCIN 26995

NOV 30, 2015
DATE SIGNATURE

DRAWN BY	NC
SCALE	1:250
PROJECT No.	14093
LOT NUMBER	34

RN design
Imagine ▸ Inspire ▸ Create
TEL.(905)738-3177
FAX.(905)738-5449
DWG@RNDESIGN.COM