LOT 4
APPLEVIEW

p.1/8

HOME APPLIANCES

LG COOKING

LWC3063_

Combi Wall Oven

1.7 cu.ft. Microwave (Speed Oven)
Infrared Heating™
4.7 cu.ft. Oven
Crisp Convection
Self+EasyClean
SmartThinQ® Technology

B 1 Jan 2021
8h
K Bill

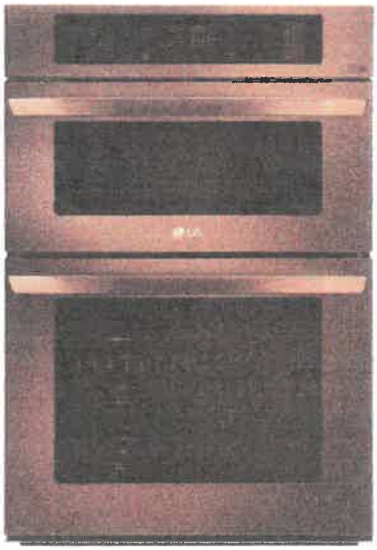

SMART APPLIANCE

Enjoy new ways to control your home with LG smart appliances

- Start or stop your Oven remotely
- Set your Monitor Status from your smartphone
- Works with the LG SmartThinQ® app

SmartThinQ works with alexa innit SIDECHEF

SUMMARY

Total Oven Capacity (cu. ft.)	6.4 (Upper & Lower)
Colors	Stainless Steel / Black Stainless Steel

UPPER OVEN FEATURES

Capacity (cu.ft)	1.7
Interior(Cavity) - Upper MWO / Lower Oven	Stainless / Enamel Coating
Microwave Power output	950W
Microwave mode power consumption	1650W
Convection Bake mode power consumption	1550W
Broil mode power consumption	1650W
Convection Element (W)	1500W (Sheath heater)
Broil Upper Element (W)	1200W = 700W (Miraclon heater) + 500W (Infrared Heating™)
Broil Lower Element (W)	375W (Miraclon heater)
Microwave	Yes
Convection Bake	Yes
Broil	Yes
Speed cook	Yes (TurboCook™)
- # of Defrost (4 Menu)	Meat / Poultry / Fish / Bread
- # of Sensor cook (9 Menu)	Beverage / Casserole / Chicken / Pasta / Pizza / Plate of food / Rice / Soup / Vegetable
- # of Auto cook (28 Menu)	Bacon (regular sliced) / Bagels (frozen) / Baked potatoes (7-9oz/ea) / Brownie / Cod fillets (1 lb) / Corn dog (frozen) / Fresh vegetable / Frozen chicken wings / Frozen fries / Frozen chicken nuggets / Frozen pizza (regular crust) / Frozen soft pretzels / Frozen vegetable / Garlic bread (sliced, frozen) / Hamburger (1/2" thick) / Lamb chops (1/2" thick, 6-7oz) / Meat loaf (9" X 5") / Nachos / Oatmeal / Pork chops (1/2" thick, 6-7oz) / Quinoa / Rib eye steak (1" thick 14-15oz) / Rice / Salmon steak (1" thick) / Sausage / Sirloin steak (1" thick, 18-21oz) / Tenderloin / Vegetable-canned
- # of Soften (4 Menu)	Butter & Margarine / Cream Cheese / Ice Cream / Frozen Juice
- # of Melt (5 Menu)	Butter / Caramel / Cheese / Chocolate / Marshmallow

LOWER OVEN FEATURES

Capacity (cu.ft)	4.7
EasyClean®	Yes
Self Clean	Yes (3,4,5 hours)
Variable cleaning time	Yes (3,4,5 hours)
Variable broil	Yes (Full,Center / High,Med,Low)
Broil element	2,500 watts inner / 1,500 watts outer
Bake element	2,500 watts
Bake element type	Hidden (8 pass)
# of rack position	5
12 hrs. shut-off	Yes
- # of light	3 (Halogen Lamp - 3 dimension lighting)
Convection conversion	Yes
-Convection element	Yes (2,000 watts Sheath heater)
Convection System/Mode/Cooking System	Conventional
Convection Fan	Dual Speed (High/Low)
Oven Cooking mode	Conv.Bake / Conv.Roast / Bake / Broil / Steam Bake / Steam Roast / Probe / more mode (Favorite/Warm/Proof)
Oven Control Features	Glass Touch (SmoothTouch™)
Door Lock	Yes

CONTROL

Oven Control Type	Glass Touch (SmoothTouch™)
Display	White VFD
Language	English / Spanish / French
Smart Function	Wi-Fi / Smart Buzzer
Clock	12 hr or 24 hr (option)
Kitchen Timer	Yes
Timed Cook	Yes
Temperature Unit of Measure	Fahrenheit / Celsius
Cooking Complete Reminder Volume	Beeper (1. Loud, 2. Low, 3. Mute)

APPEARANCE

Available Colors	Stainless Steel / Black Stainless Steel
Handle/Knobs	Stainless Steel Finish (Aluminum) Black Stainless Steel Finish (Aluminum)
Oven Door Feature	WideView™ Window
Scratch-Resistant	Yes
PrintProof™ Finish	Yes (Only Black Stainless Steel)

SMART FEATURES

SmartDiagnosis™	Yes
Wi-Fi Connectivity	Yes
Works with	Google Assistant and Amazon Alexa
SmartThinQ® with Innit and SideChef	Yes

DIMENSIONS/CLEARANCES/WEIGHT

Shipping Weight (lbs)	244 lbs
Product Weight (lbs)	194 lbs
Product (W x H x D)	29 3/4" x 43 13/16" x 24 1/2"
Cut-out (W x H x D)	28 1/2" x 43 8/19" x 23 1/2"
Overall Depth (in) - including handle	26 7/8"
Actual Depth with Door Open (Upper) (in).	37.1"
Actual Depth with Door Open (Lower) (in):	45.7"
Oven Interior Dimensions (Upper) (in) (W x H x D)	20 8/11" x 8 9/25" x 17 5/13"
Oven Interior Dimensions (Lower) (in) (W x H x D)	24 1/2" x 17 5/8" x 18 7/8"
Carton Dimensions (in) (W x H x D)	33" x 30" x 50"

POWER/RATINGS

Amp at 240V	32.5A
kW at 240V	7.8kW
Requirements	120 / 240 VAC, 120 / 208 VAC

ACCESSORIES

Glass Tray(Upper)	Yes
Metal Tray(Upper)	Yes
Rack(Upper)	Yes
Broiler pan & Grid	Yes
Gliding Rack	1
Heavy Duty Rack	2
Meat probe	Yes
Scouring Pad	Yes

WARRANTY

Parts & Labor	1 Year

UPC CODES

LWC3063ST (Stainless Steel)	048231339810
LWC3063BD (Black Stainless Steel)	048231339827

© 2018 LG Electronics USA, Inc. All rights reserved. "LG Life's Good" is a registered trademark of LG Corp. All other product and brand names are trademarks or registered trademarks of their respective owners. Design, features and specifications are subject to change without notice. Non-metric weights and measurements are approximate. Some features may require Internet access. Content and services may vary by product and are subject to change without notice. 10/4/16

13h Jan 2021 2/8

HOME APPLIANCES

LG COOKING

LWC3063_
Combi Wall Oven

QUICK INSTALL & CLEARANCES

For full installation directions/clearances please refer to the corresponding User Manual and Installation Guide.

IMPORTANT

DIMENSIONS / CLEARANCES / WEIGHT	
Product Dimensions (in) (W x H x D)	29 3/4" x 43 13/16" x 24 1/2"
Cut-out (W x H x D)	28 1/2" x 43 8/16" x 23 1/2
Overall Depth (in) - including handle	26 7/8"
Actual Depth with Door Open (Upper) (in):	37.1"
Actual Depth with Door Open (Lower) (in):	45.7"
Oven Interior Dimensions (Upper) (in) (W x H x D)	20 8/11" x 8 9/25" x 17 5/13"
Oven Interior Dimensions (Lower) (in) (W x H x D)	24 1/2" x 17 5/8" x 18 7/8"
Carton Dimensions (in) (W x H x D)	33" x 30" x 50"
POWER RATINGS	
Amp at 240V	32.5A
kW at 240V	7.8kW
Requirements	120 / 240 VAC, 120 / 208 VAC

INSTALLATION REQUIREMENTS

- The cabinet base platform must be able to support 202 lbs (91.65 kg) for a Microwave Combination Wall Oven. If the cabinet does not have a solid bottom, two braces or runners must be installed level with the bottom of the cutout to support the weight of the oven. Make sure the base is level and the front of the cabinet is square. If the cabinet base is not level, the oven racks will tend to slide out when opening the door.
- If marks, blemishes or the cutout opening are visible above the installed oven, it may be necessary to add wood shims under the runners and front trim until the marks or opening are covered.
- If the cabinet does not have a front frame and the sides are less than 3/4" (1.9 cm) thick, shim both sides equally to establish the cutout width.
- The junction box must be flush with the rear wall of the cabinet as shown below.
- Allow at least a 23" clearance for the door depth when it is open.
- Kitchen cabinets in contact with the oven must be heat resistant up to 194°F (90°C), and fronts of nearby units up to at least 158°F (70°C).

CUTOUT DIMENSIONS

- Cabinet Width: 30" (762 mm)
- Recommended Minimum Cutout Location from Floor: 12" (304.8 mm)
- Cutout Depth: 23 1/2" Min. (596.9 mm)
- Cutout Width: 28 1/2" Min. (723.9 mm) 28 5/8" Max. (727 mm)
- Cutout Height: 43 7/16" Min. (1103 mm) 43 1/2" Max. (1106 mm)

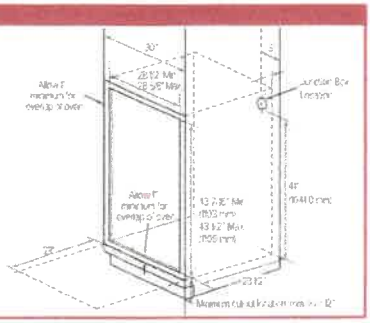

PRODUCT DIMENSIONS

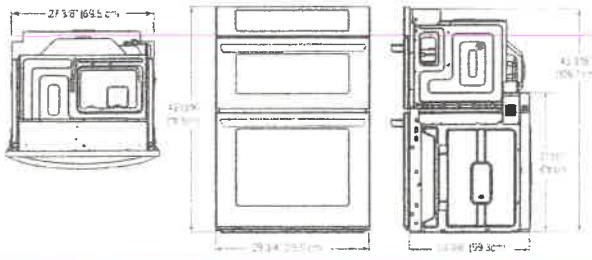

ELECTRICAL CONNECTIONS

- **Be sure the wall oven is installed and grounded properly by a qualified installer or service technician.**
- This wall oven must be electrically grounded in accordance with local codes or, in their absence, with the National Electrical Code ANSI/NFPA No.70- latest edition in United States, or with CSA Standard C22.1-1982 and C22.2 No.01982 (or latest edition), Canadian Electrical Code, Part1, and all local codes and ordinances.
- This wall oven must be supplied with the proper voltage and frequency, and connected to an individual, properly grounded branch circuit, protected by a circuit breaker or fuse. For the circuit breaker or fuse required by this model, see the rating plate to find the wattage consumption and refer to the table below to get the circuit breaker or fuse amperage.
- A Microwave Combination Wall Oven can consume up to 7,800 W at 240 VAC. A 50 Amp circuit breaker with wire gauge #8 AWG must be used.
- Do Not ground to a gas pipe.
- Do Not have a fuse in the neutral or grounding circuit.
- A U.L.-listed conduit connector must be provided at the junction box.
- **Prepare the electrical connection as follows:**
- Turn off the circuit breaker or remove fuses to the oven branch circuit.
- With the oven positioned directly in front of the cabinet opening, connect the flexible conduit to the electrical junction box as shown below. Position the conduit in such a manner that it will lie on top of the oven in a natural loop when the oven is installed.

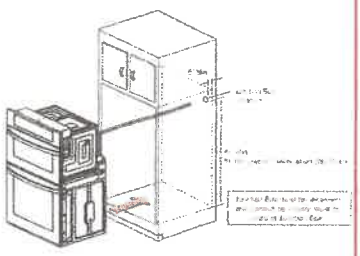

- If local codes permit connection of the frame grounding conductor to the neutral(white) wire, follow the instructions for a 3-wire circuit connection.
- If used in mobile homes or new construction, or a recreational vehicle, or local codes do not permit connection of the frame grounding conductor to the neutral(white) wire, follow the instructions for a 4-wire circuit connection.

INSTALL THE OVEN

- **Install the oven into the cabinet as follows:**
- Slide the oven into the opening.
  a. Loop (do not tie) a 36" (91 cm) string around the conduit before the oven is slid into place. Lay the string over the top of the oven and use it to keep the conduit from falling behind the oven.
  b. Lift oven into cabinet cutout using the oven opening as a grip. Carefully push against the oven front frame. Do not push against outside edges.
  c. While sliding the oven back, pull the string so that the conduit lies on the top of the oven in a natural loop.
  d. When you are sure the conduit is out of the way, slide the oven 3/4 way back into the opening. Remove the string by pulling on one end of the loop.
- Secure the oven.
  a. Using the mounting holes on the oven side trim as a guide, drill pilot holes for screws provided. (For securing the Combi Oven, use a minimum of 4 screws, one on each side in both the upper and lower ovens.)
  b. Secure the oven to the cabinet with screws provided. If the cabinet is particle board, you must use 3/4" particle board screws. These may be purchased at any hardware store.

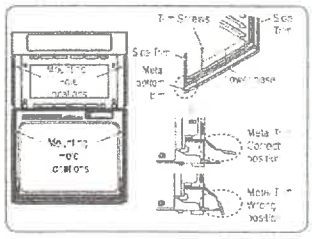

- Install the metal bottom trim.
  a. Place the metal bottom trim centered over the pre-drilled mounting holes on the lower base.
  b. Using 3 screws provided, secure the bottom trim to the bottom edge of the cabinet.
- Reinstall the oven door.

© 2018 LG Electronics USA, Inc. All rights reserved. "LG Life's Good" is a registered trademark of LG Corp. All other product and brand names are trademarks or registered trademarks of their respective owners. Design, features and specifications are subject to change without notice. Non-metric weights and measurements are approximate. Some features may require Internet access. Content and services may vary by product and are subject to change without notice. 10/4/18

36" Gas Cooktop

800 Series – Stainless Steel NGM8657UC

BOSCH
Invented for life

318

NGM8657UC
Stainless Steel

The stainless steel gas cooktop with FlameSelect® – achieve consistent cooking results thanks to nine precisely defined power levels.

Features & Benefits

- FlameSelect® – allows for a precise adjustment of the flame size with nine defined power levels
- Dual flame power burner with two heat options, quickly boil water or maintain a precise simmer
- Heavy-duty grates can be easily and quickly cleaned in the dishwasher
- OptiSim® burner – simmer delicate sauces and melt chocolate without scorching
- Low profile stainless steel cooking surface is easily accessible and quick to clean

General Properties

No. of burners	5
Knob color	Stainless steel appearance
Control location	Front-center
Sealed burners	Yes
Gas valves	Five 9-level step valves
Ignition system	Electric; thermocouple safety control
Cooktop surface material	Stainless steel
Grate material	Cast iron
Grate features	Continuous grates; dishwasher safe

Element Performance

Total BTU load (NG / LP)	41,400 / 40,100
Power of front left burner (NG / LP) OptiSim®	3,400 / 3,400 BTU
Power of back left burner (NG / LP)	6,000 / 6,000 BTU
Power of center burner (NG / LP) Dual-flame	17,000 / 15,700 BTU
Power of back right burner (NG / LP)	9,000 / 9,000 BTU
Power of front right burner (NG / LP)	6,000 / 6,000 BTU

ADA COMPLIANT† FlameSelect

Technical Details

Circuit breaker	15 A
Volts	120 V
Frequency	60 Hz
Plug type	3-prong
Power cord length	40"
Fuel type	Natural Gas (factory set)
Convertible to LP (kit required)	Yes

Dimensions & Weight

Overall appliance dimensions (HxWxD)	2 23/64" x 36" x 20 1/2"
Required cutout size (HxWxD)	1 1/4" x 33 1/2" x 19 5/16"
Minimum distance from counter front	1 7/8"
Minimum distance from rear wall	3"
Net weight	42 lbs

Accessories – Included

Included	LP conversion kit, OptiSim® cap

Accessories – Optional

HEZ298107
Wok ring

HEZ27754
FlameSelect® 800 Series metal control knob kit, stainless steel

13th Jan 2021

R Bahl

† To be fully ADA compliant, these units must be installed according to ADA guidelines. Please check current ADA requirements for guidance on installation.

Accessories: To purchase Bosch accessories, cleaners & parts please visit www.bosch-home.com/us/store or call 1-800-944-2904 (Mon to Fri 5 am to 6 pm PST, Sat 6 am to 3 pm PST).

Notes: All height, width and depth dimensions are shown in inches. BSH reserves the absolute and unrestricted right to change product materials and specifications, at any time, without notice. Consult the product's installation instructions for final dimensional data and other details prior to making cutout.

Warranties: Please see Use & Care manual or Bosch website for statement of limited warranty.

For more information on our entire line of products, go to www.bosch-home.com/us or call 1-800-944-2904

© BSH Home Appliances Corporation. All rights reserved. Bosch is a registered trademark of Robert Bosch GmbH.

36" Gas Cooktop

418

800 Series – Stainless Steel NGM8657UC

BOSCH
Invented for life

Installation Details

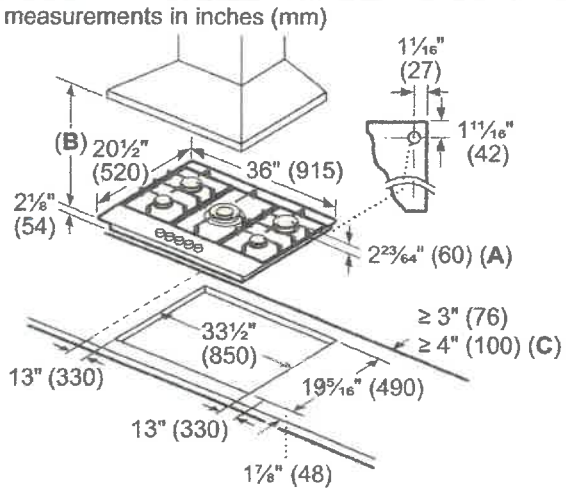

A: Dimension from countertop to top of grates in front of 2 23/64" (60)
B: When installed in combination with a hood, refer to hood manufacturer's requirements for installation
C: For installation in a kitchen island

Installation above Wall Ovens

measurements in inches (mm)
Built-in oven - under gas cooktop

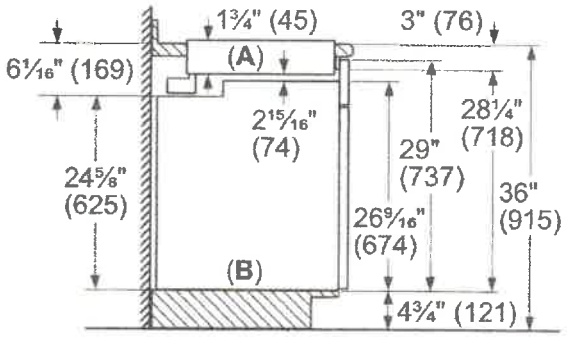

Dimensions based on standard countertop height (36" with 4¾" toe kick including base plate).
A: Cooktop
B: Built-in oven

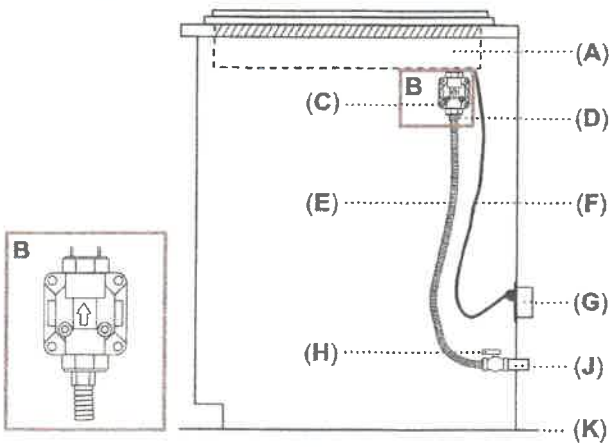

A: Rough-in Cooktop Box
B: Arrow on the back of the Pressure Regulator shows the direction of gas flow
C: Pressure Regulator
D: ½" Female Pipe Threads
E: Flexible Gas Line
F: Power Cord (40 inches /1.016 mm)
G: 120 Volt Receptacle
H: Gas Cut-off Valve
J: Gas Supply Line Stub-out
K: Floor

measurements in inches (mm)

13 th Jan 2021

Slr

K Bath

Accessories: To purchase Bosch accessories, cleaners & parts please visit www.bosch-home.com/us/store or call 1-800-944-2904 (Mon to Fri 5 am to 6 pm PST, Sat 6 am to 3 pm PST).
Notes: All height, width and depth dimensions are shown in inches. BSH reserves the absolute and unrestricted right to change product materials and specifications, at any time, without notice. Consult the product's installation instructions for final dimensional data and other details prior to making cutout.
Warranties: Please see Use & Care manual or Bosch website for statement of limited warranty.
For more information on our entire line of products, go to www.bosch-home.com/us or call 1-800-944-2904
© BSH Home Appliances Corporation. All rights reserved. Bosch is a registered trademark of Robert Bosch GmbH.

8/20

36" Gas Cooktop

800 Series – Stainless Steel NGM8657UC

BOSCH
Invented for life

5/8

Installation Details

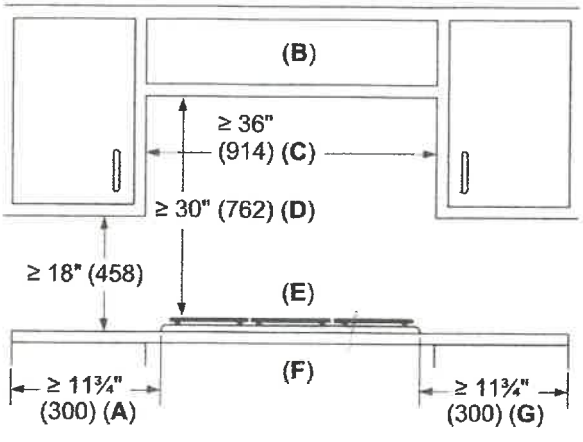

A: Left side
B: Depth from back wall: Cabinet max. 13" (330)
C: Centered over cooktop
D: Above counter: min. 30" (762) to combustible surface
E: Rear wall: 2¼" (58). For installation in kitchen islands: 4" (100)
F: Front countertop edge: 1¼" (32)
G: Right side

measurements in inches (mm)

13th Jan 2021

K. Bush

Accessories: To purchase Bosch accessories, cleaners & parts please visit www.bosch-home.com/us/store or call 1-800-944-2904 (Mon to Fri 5 am to 6 pm PST, Sat 6 am to 3 pm PST).

Notes: All height, width and depth dimensions are shown in inches. BSH reserves the absolute and unrestricted right to change product materials and specifications, at any time, without notice. Consult the product's installation instructions for final dimensional data and other details prior to making cutout.

Warranties: Please see Use & Care manual or Bosch website for statement of limited warranty.

For more information on our entire line of products, go to www.bosch-home.com/us or call 1-800-944-2904

© BSH Home Appliances Corporation. All rights reserved. Bosch is a registered trademark of Robert Bosch GmbH.

36" Gas Cooktop

800 Series – Stainless Steel NGM8657UC

48

BOSCH
Invented for life

Bosch Cooktop over Built-In Oven Approved Combination Guide

The following **OVENS, COOKTOPS AND DRAWERS**
are approved to be installed in combination and the installation has been certified by CSA.

Built-in ovens		Cooktops		
Conventional ovens (1)	**Steam ovens**	**Induction**	**Electric**	**Gas (1) ***
HBL5351UC, HBL5354UC	HSLP451UC, HSLP454UC	NIT5068UC	NET8068UC	NGM8046UC
HBL5451UC, HBL5344UC		NIT5668UC, NIT5469UC	NET8068SUC	NGM5656UC
HBL8443UC, HBL5454UC		NIT8068UC, NIT8068SUC	NET8668UC	NGMP656UC
HBL8453UC, HBL8444UC		NIT8668UC, NIT8668SUC	NET8668SUC	NGM8656UC
HBL8451UC, HBL8444LUC		NITP068UC, NITP068SUC	NETP068SUC	NGM8646UC
HBL8463UC, HBL8444RUC		NITP668UC, NITP668SUC	NETP668SUC	NGM5656UC
HBL8461UC, HBL8454UC		NIT8069UC, NIT8069SUC	NEM5066UC	NGMP056UC
HBL8442UC, HBLP454UC		NIT8669UC, NIT8669SUC	NEM5666UC	NGM8056UC
HBLP451UC, HBLP454LUC		NITP069UC, NITP069SUC		**Gas (2) ***
HBLP451LUC, HBLP454RUC		NITP669UC, NITP669SUC		NGM5456UC
HBLP451RUC, HBN8454UC				**Gas (3) ***
HBN5451UC, HBN8451UC				NGMP077UC
Conventional ovens (2)				NGMP677UC
HBE5451UC				NGM8657UC
Conventional ovens (3)				NGM8057UC
HBE5452UC				

The following **OVENS, COOKTOPS AND DRAWERS**
are approved by BSH Home Appliances Corporation to be installed in combination. These products, identified in the table below, may be installed in combination. The suitability of the combination has not been evaluated by CSA.

Built-in ovens		Cooktops		
Conventional ovens (2)	**Speed oven (1)**	**Induction (1)**	**Electric (1)**	**Gas (1) ***
HBE5453UC	HMCP0252UC, HMCP0254UC	NIT5068UC	NET8068UC	NGM8046UC
Built-in microwave	HMC80242UC, HMC80244UC	NIT5668UC, NIT5469UC	NET8068SUC	NGM5656UC
HMB57152UC	HMC80252UC, HMC80254UC	NIT8068UC, NIT8068SUC	NET8668UC	NGMP656UC
HMB50162UC	HMC87152UC, HMC87154UC	NIT8668UC, NIT8668SUC	NET8668SUC	NGM8656UC
HMB50152UC	HMC80152UC, HMC50154UC	NITP068UC, NITP068SUC	NETP068SUC	NGM8646UC
HMB87154UC		NITP668UC, NITP668SUC	NETP668SUC	NGM5656UC
HMB50154UC		NIT8069UC, NIT8069SUC	NEM5066UC	NGMP056UC
Storage drawer	**Speed oven (2)**	NIT8669UC, NIT8669SUC	NEM5666UC	NGM8056UC
HSD5051UC	HMC54151UC	NITP069UC, NITP069SUC		**Gas (2) ***
Drawer microwave	HMC54152UC	NITP669UC, NITP669SUC		NGM5456UC
HMD8053UC	HMC54154UC			**Gas (3) ***
HMD8451UC				NGMP077UC
Warming drawers				NGMP677UC
HWD5051UC				NGM8657UC
HWD5751UC				NGM8057UC

*Gas cooktops may require a 3/8" street elbow (not provided) at the regulator outlet for installation above built-in oven.
COOKTOPS that are not listed above must be approved under local codes and/or by the local authority having jurisdiction.
Please note: For the latest updates to the approved oven/cooktop combination refer to the website listed in your appliance's installation instructions.

Accessories: To purchase Bosch accessories, cleaners & parts please visit www.bosch-home.com/us/store or call 1-800-944-2904 (Mon to Fri 5 am to 6 pm PST, Sat 6 am to 3 pm PST).

Notes: All height, width and depth dimensions are shown in inches. BSH reserves the absolute and unrestricted right to change product materials and specifications, at any time, without notice. Consult the product's installation instructions for final dimensional data and other details prior to making cutout.

Warranties: Please see Use & Care manual or Bosch website for statement of limited warranty.

For more information on our entire line of products, go to www.bosch-home.com/us or call 1-800-944-2904

© BSH Home Appliances Corporation. All rights reserved. Bosch is a registered trademark of Robert Bosch GmbH.

8/20

36" Gas Cooktop

800 Series – Stainless Steel NGM8657UC

BOSCH
Invented for life

718

Cooktop over built-in oven combination installation

Refer to the product installation guide for all other measurements.

Oven installation requirements				Cooktop installation requirements (wall spacing)				

When installing an oven or oven with a drawer in combination with a cooktop, a minimum distance between the cabinet floor and countertop (B) is required. Reference the table for dimensions. Refer to the oven installation guide for all other measurements.

Oven type	A Inches (mm)	B min. Inches (mm)	C max. Inches (mm)	Gas cooktop (1) min. Inches (mm)	Gas cooktop (2) min. Inches (mm)	Gas cooktop (3) min. Inches (mm)	Electric cooktop	Induction cooktop
Conventional oven (1)	28 1/4 (718)	31 1/4 (794)	4 3/4 (121)	D: 24 (610) E: 24 (610)	D: 3 (76) E: 4 (102)	D: 24 (610) E: 24 (610)	Reference Product Installation Instructions	
Conventional oven (2)	23 (584)	27 3/4 (705)	8 1/4 (210)	D: 24 (610) E: 24 (610)	D: 3 (76) E: 4 (102)	D: 24 (610) E: 24 (610)	Reference Product Installation Instructions	
Conventional oven (3)	23 1/16 (585)	27 13/16 (707)	8 3/16 (208)	D: 24 (610) E: 24 (610)	D: 3 (76) E: 4 (102)	D: 24 (610) E: 24 (610)	Reference Product Installation Instructions	
Steam oven	19 1/4 (488)	23 3/8 (594)	12 5/8 (321)	D: 24 (610) E: 24 (610)	D: 3 (76) E: 4 (102)	D: 24 (610) E: 24 (610)	Reference Product Installation Instructions	
Steam oven with 4" storage drawer								
Speed oven (2)	17 3/4 (450)	22 1/2 (572)	13 1/2 (343)	D: 24 (610) E: 24 (610)	D: 3 (76) E: 4 (102)	Reference Product Installation Instructions		
Microwave speed oven (1)	19 1/4 (488)	24 (609)	12 (306)	D: 24 (610) E: 24 (610)	D: 3 (76) E: 4 (102)	Reference Product Installation Instructions		
Microwave speed oven (1) with warming drawer	28 1/4 (718)	31 1/4 (794)	4 3/4 (121)	D: 24 (610) E: 24 (610)	D: 3 (76) E: 4 (102)	Reference Product Installation Instructions		
Drawer microwave	14 13/16 (376)	20 (508)	16 (406)	D: 24 (610) E: 24 (610)	D: 3 (76) E: 4 (102)	Reference Product Installation Instructions		

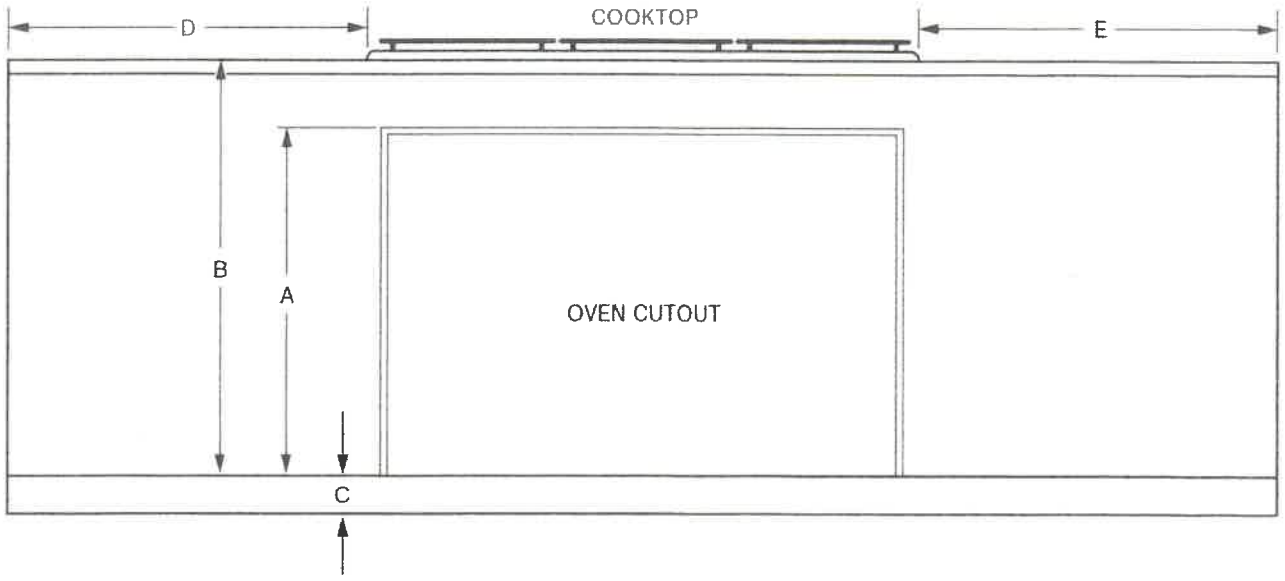

Accessories: To purchase Bosch accessories, cleaners & parts please visit www.bosch-home.com/us/store or call 1-800-944-2904 (Mon to Fri 5 am to 6 pm PST, Sat 6 am to 3 pm PST).

Notes: All height, width and depth dimensions are shown in inches. BSH reserves the absolute and unrestricted right to change product materials and specifications, at any time, without notice. Consult the product's installation instructions for final dimensional data and other details prior to making cutout.

Warranties: Please see Use & Care manual or Bosch website for statement of limited warranty.

For more information on our entire line of products, go to www.bosch-home.com/us or call 1-800-944-2904

© BSH Home Appliances Corporation. All rights reserved. Bosch is a registered trademark of Robert Bosch GmbH.

8/20

HOME APPLIANCES

LG REFRIGERATION

LMWS27626S

4-Door French Door Refrigerator

8/8

KEY FEATURES

- Sleek Design
- Double Freezer
- Internal Water Dispenser
- Door Cooling+
- Smart Cooling System
- SmartDiagnosis™
- ENERGY STAR® Qualified

13 th Jan 2021

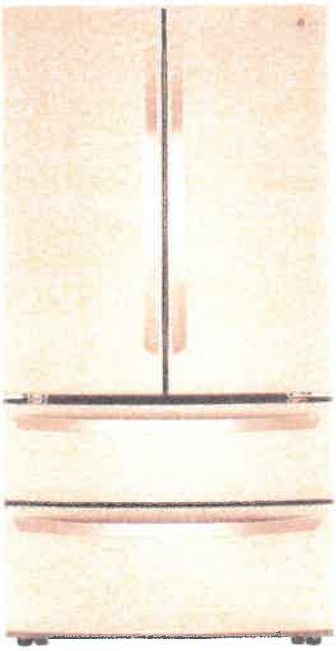

AVAILABLE COLORS

PrintProof™ Stainless Steel

PRODUCT FEATURES

CAPACITY	
Refrigerator (cu.ft.)	18.20
Freezer (cu.ft.)	8.70
Total Capacity (cu.ft.)	26.90
ENERGY	
Energy Consumption (kWh/Year)	636
ENERGY STAR® Qualified	Yes
WATER & ICE SYSTEM	
Ice & Water Dispenser	Water Only
Dispenser Type	Internal Water Dispenser
Daily Ice Production (lbs)	2.5 lbs
IcePlus™ Production (lbs)	2.7 lbs
Ice Storage Capacity (lbs)	3.5 lbs
Ice System	Factory Installed
Water Filter	LT1000P
COOLING	
Linear Compressor	Yes
Smart Cooling™ System	Yes
Door Cooling+	Yes
Multi-Air Flow™ System	Yes
Temperature Sensors	5
Evaporator	1
CONVENIENCE	
Display Type	Membrane / White LED
Temperature Controls	Electronic/Digital
Auto Closing Door Hinge	Yes
Sabbath Mode	Yes
LoDecibel™ Quiet Operation	Yes
REFRIGERATOR	
No. of Shelves	4 Split
Cantilevered Shelves	Yes
Shelf Construction	Spill Protector™ Tempered Glass
Crisper Bins	2 Humidity Crisper
Glide N' Serve™ Drawer	Yes
Refrigerator Light	Ceiling LED (Frameless)
REFRIGERATOR DOOR	
No. of Bins	6 Total (2 Adjustable Gallon Sized)
Door Bin Construction	1 Piece (Clear)

FREEZER	
Door Type	Pull Drawer
Drawers	2-Tier Organization
DuraBase™ Solid Drawer Base	Yes
Drawer Divider	Yes
Freezer Light	Premium LED
Freezer Handle	Vista
Smart Features	
SmartDiagnosis™	Yes
MATERIALS AND FINISHES	
Contour Door	Yes
Hidden Hinges	Yes
Surface	Smooth
Fingerprint & Smudge Resistant Exterior	Yes
Handles	Matching Commercial Handles
All Available Colors	PrintProof™ Stainless Steel
DIMENSIONS/CLEARANCES/WEIGHTS	
Depth with Handles	34 1/4"
Depth without Handles	31 3/4"
Depth without Door	27 7/8"
Depth (Total with Door Open)	46 1/2"
Height to Top of Case	68 3/8"
Height to Top of Door Hinge	69 3/4"
Width	35 3/4"
Width (Door Open 90° with Handle)	44 1/4"
Width (Door Open 90° without Handle)	39 1/4"
Door Edge Clearance with Handle	4 1/2"
Door Edge Clearance without Handle	1 3/4"
Installation Clearance	Sides 1/8", Top 1", Back 2"
Weight (Unit/Carton)	287lbs. / 311lbs.
Carton Dimensions (WxHxD)	38" x 73" x 36"
LIMITED WARRANTY	
Parts & Labor	1 Year
Sealed System (Parts & Labor)	5 Years
Compressor (Parts & Labor)	5 Years
Linear Compressor (Parts Only)	6-10 Years
UPC CODES	
LMWS27626S (PrintProof™ Stainless Steel)	048231806442

© 2019 LG Electronics USA, Inc. All rights reserved. "LG Life's Good" is a registered trademark of LG Corp. All other product and brand names are trademarks or registered trademarks of their respective owners. Design, features and specifications are subject to change without notice. Non-metric weights and measurements are approximate. Some features may require Internet access. Content and services may vary by product and are subject to change without notice. 1/03/20