ALL CONV. FRAMING TO CONFORM WITH PART 9 OF O.B.C. (Latest Edition) ROOF RAFTERS THAT CROSS MEET OVER TRUSSES TO BE 2X4 SPF #2 24"O.C. WITH A VERT.POST TO THE TRUSS UNDERNEATH AT EACH CROSS PT. VERT. POST LONGER THAN 6' TO HAVE LATERAL BRACING SO THAT THE DIST. BETWEEN END PT. & BETWEEN ROWS OF BRACING DOES NOT EXCEED 6'

ALPA-BARRIE

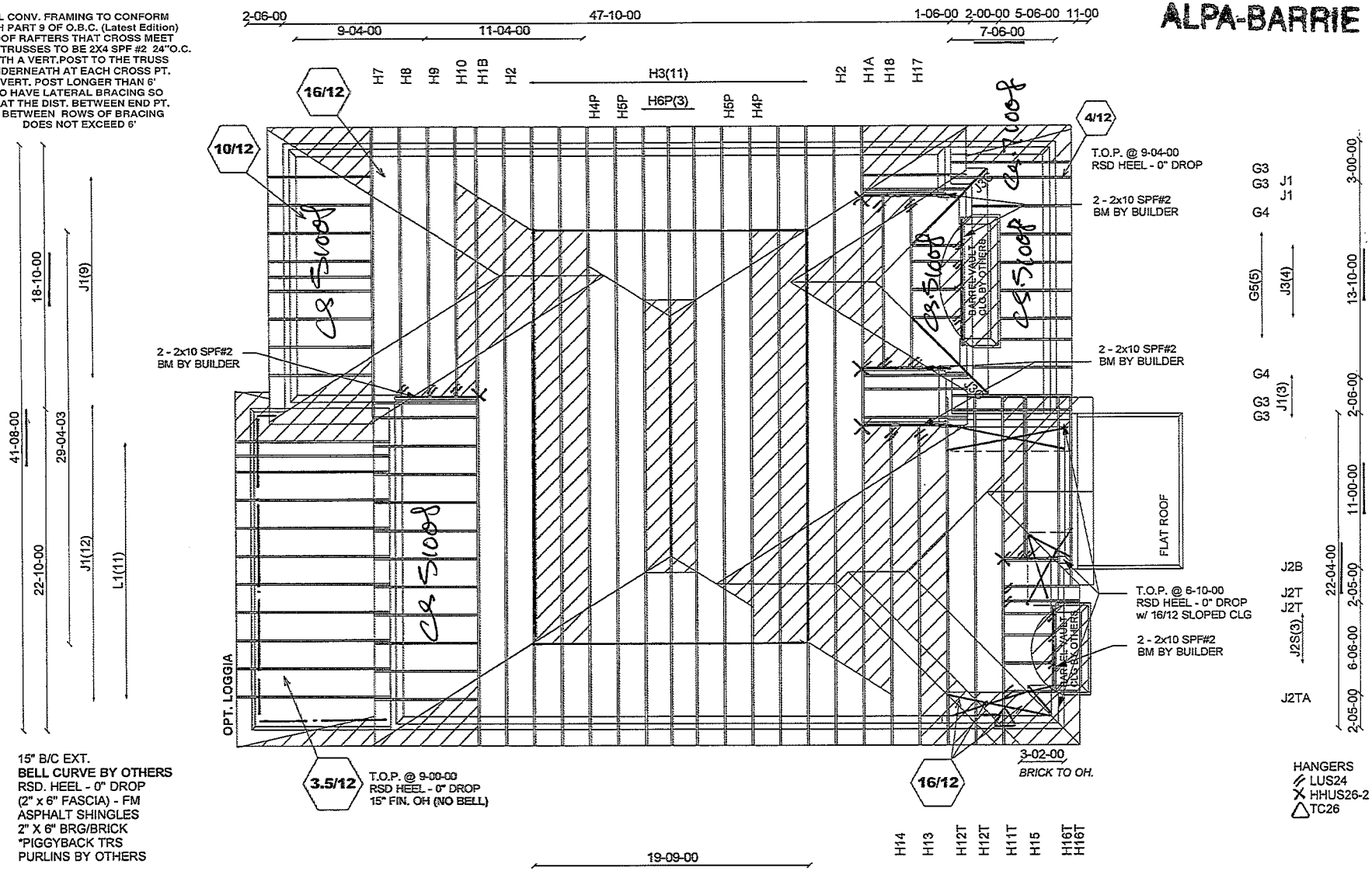

15" B/C EXT.
BELL CURVE BY OTHERS
RSD. HEEL - 0" DROP
(2" x 6" FASCIA) - FM
ASPHALT SHINGLES
2" X 6" BRG/BRICK
*PIGGYBACK TRS
PURLINS BY OTHERS

~~CONFIRM TRUSS LAYOUT/DIRECTION~~
P.L.95914

HANGERS
LUS24
HHUS26-2
TC26

CONVENTIONAL FRAMING BY OTHERS

A-18023831 - A-18023839
A-18023849, A-18023860 - A-18023872

ROSEVIEW

Job Track: 45147	Builder / Location: GOLD PARK HOMES / VAUGHAN	Model / Elevation: 5002 REV1 / B	STD OR OPT 2ND FLR OR OPT LOGGIA
Layout ID: 292628	Project: PINE VALLEY	THESE DRAWINGS CONSTITUTE THE PROPERTY OF ALPA ROOF TRUSSES INC., SHALL NOT BE REPRODUCED, PUBLISHED, OR REDISTRIBUTED IN ANY MANNER OR UTILIZED FOR ANY PURPOSE OTHER THAN THE MANUFACTURE OF TRUSSES BY ALPA ROOF TRUSSES INC AND WILL BE RETRACTED BY ALPA ROOF TRUSSES INC IF UTLILZED FOR ANY OTHER PURPOSE.	
Plan Log: 95914	Date: 1/18/2018 Designer: AMANDA		

ALPA-BARRIE

ALL CONV. FRAMING TO CONFORM WITH PART 9 OF O.B.C. (Latest Edition) ROOF RAFTERS THAT CROSS MEET OVER TRUSSES TO BE 2X4 SPF #2 24"O.C. WITH A VERT.POST TO THE TRUSS UNDERNEATH AT EACH CROSS PT. VERT. POST LONGER THAN 6' TO HAVE LATERAL BRACING SO THAT THE DIST. BETWEEN END PT. & BETWEEN ROWS OF BRACING DOES NOT EXCEED 6'

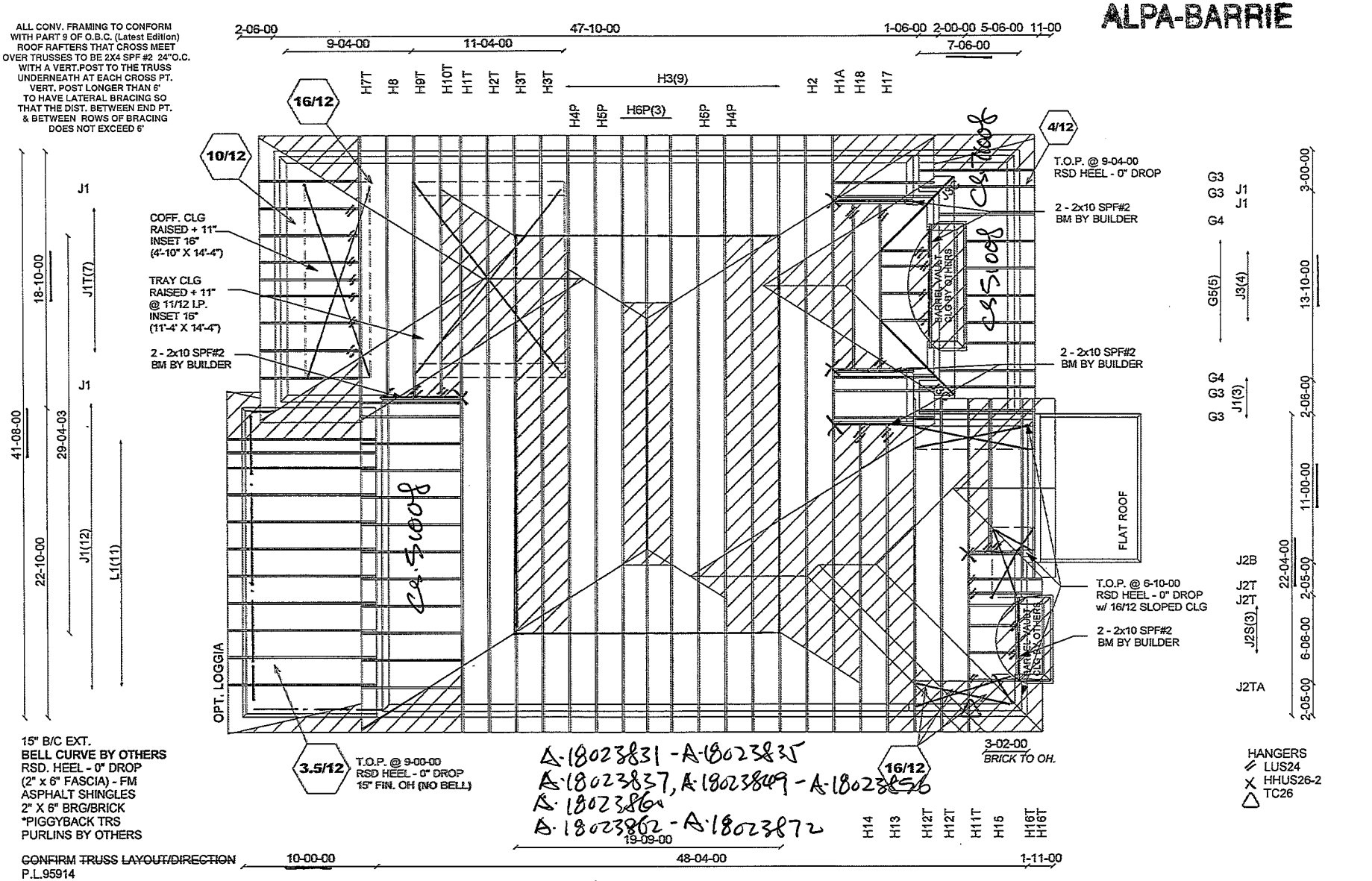

15" B/C EXT.
BELL CURVE BY OTHERS
RSD. HEEL - 0" DROP
(2" x 6" FASCIA) - FM
ASPHALT SHINGLES
2" X 6" BRG/BRICK
*PIGGYBACK TRS
PURLINS BY OTHERS

~~CONFIRM TRUSS LAYOUT/DIRECTION~~
P.L.95914

A-18023831 - A-18023835
A-18023837, A-18023849 - A-18023856
A-18023861
A-18023862 - A-18023872

HANGERS
LUS24
HHUS26-2
TC26

CONVENTIONAL FRAMING BY OTHERS

ROSEVIEW

Job Track: 45147	Builder / Location: GOLD PARK HOMES / VAUGHAN	Model / Elevation: 5002 REV1	/ B OPT CLGS OR OPT LOGGIA
Layout ID: 292629	Project: PINE VALLEY	THESE DRAWINGS CONSTITUTE THE PROPERTY OF ALPA ROOF TRUSSES INC., SHALL NOT BE REPRODUCED, PUBLISHED, OR REDISTRIBUTED IN ANY MANNER OR UTILIZED FOR ANY PURPOSE OTHER THAN THE MANUFACTURE OF TRUSSES BY ALPA ROOF TRUSSES INC AND WILL BE RETRACTED BY ALPA ROOF TRUSSES INC IF UTLILZED FOR ANY OTHER PURPOSE.	
Plan Log: 95914	Date: 1/18/2018 Designer: AMANDA		

ALL CONV. FRAMING TO CONFORM WITH PART 9 OF O.B.C. (Latest Edition) ROOF RAFTERS THAT CROSS MEET OVER TRUSSES TO BE 2X4 SPF #2 24"O.C. WITH A VERT.POST TO THE TRUSS UNDERNEATH AT EACH CROSS PT. VERT. POST LONGER THAN 6' TO HAVE LATERAL BRACING SO THAT THE DIST. BETWEEN END PT. & BETWEEN ROWS OF BRACING DOES NOT EXCEED 6'

ALPA-BARRIE

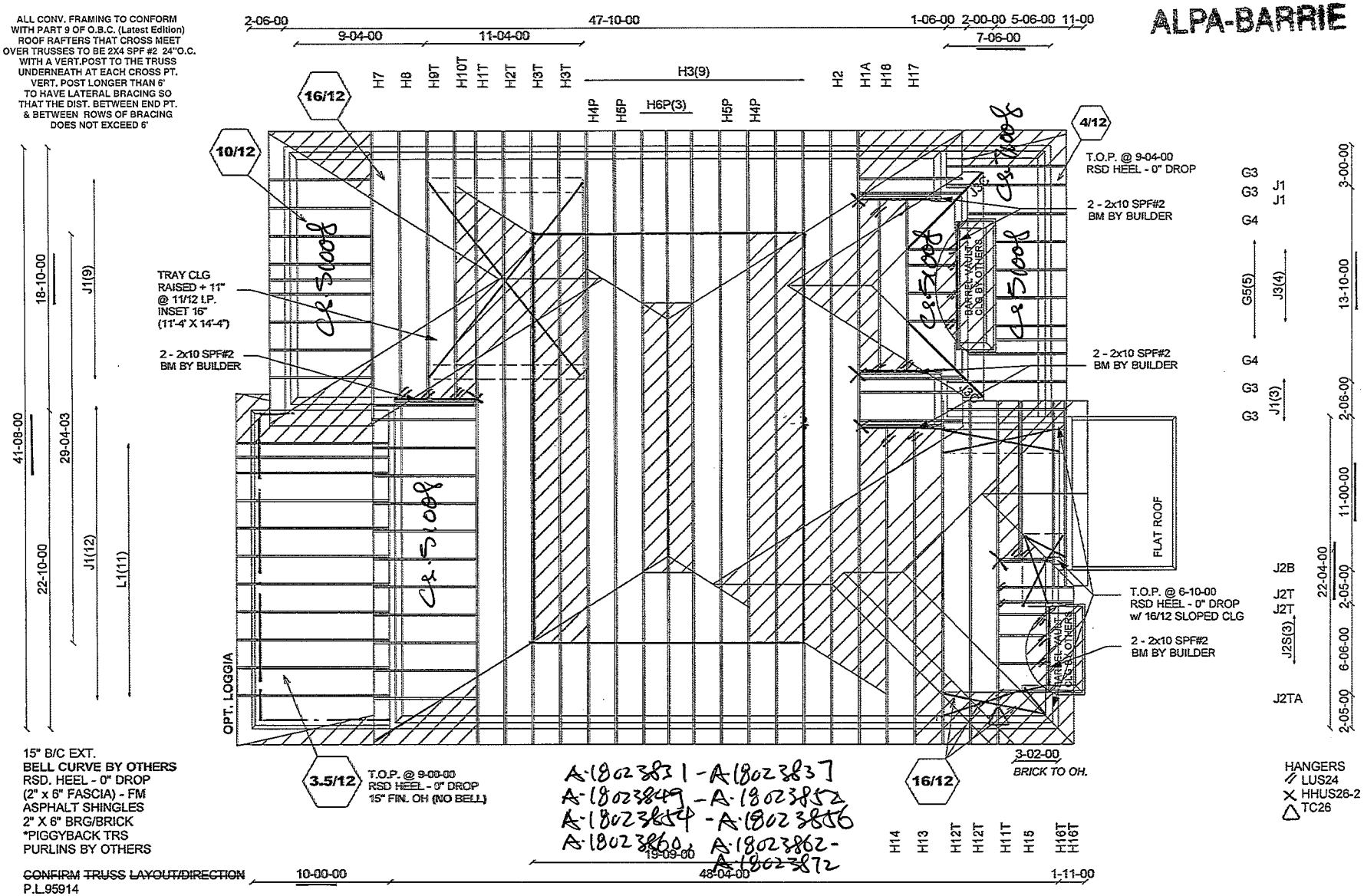

15" B/C EXT.
BELL CURVE BY OTHERS
RSD. HEEL - 0" DROP
(2" x 6" FASCIA) - FM
ASPHALT SHINGLES
2" X 6" BRG/BRICK
*PIGGYBACK TRS
PURLINS BY OTHERS

~~CONFIRM TRUSS LAYOUT/DIRECTION~~
P.L.95914

HANGERS
// LUS24
X HHUS26-2
△ TC26

CONVENTIONAL FRAMING BY OTHERS

ROSEVIEW

Job Track: 45147	Builder / Location: GOLD PARK HOMES / VAUGHAN	Model / Elevation: 5002 REV1	/ B OPT TRAY MST OR OPT LOGGIA
Layout ID: 292630			
Plan Log: 95914	Project: PINE VALLEY	THESE DRAWINGS CONSTITUTE THE PROPERTY OF ALPA ROOF TRUSSES INC., SHALL NOT BE REPRODUCED, PUBLISHED, OR REDISTRIBUTED IN ANY MANNER OR UTILIZED FOR ANY PURPOSE OTHER THAN THE MANUFACTURE OF TRUSSES BY ALPA ROOF TRUSSES INC AND WILL BE RETRACTED BY ALPA ROOF TRUSSES INC IF UTLILZED FOR ANY OTHER PURPOSE.	
	Date: 1/18/2018 Designer: AMANDA		

ALL CONV. FRAMING TO CONFORM WITH PART 9 OF O.B.C. (Latest Edition) ROOF RAFTERS THAT CROSS MEET OVER TRUSSES TO BE 2X4 SPF #2 24"O.C. WITH A VERT.POST TO THE TRUSS UNDERNEATH AT EACH CROSS PT. VERT. POST LONGER THAN 6' TO HAVE LATERAL BRACING SO THAT THE DIST. BETWEEN END PT. & BETWEEN ROWS OF BRACING DOES NOT EXCEED 6'

ALPA-BARRIE

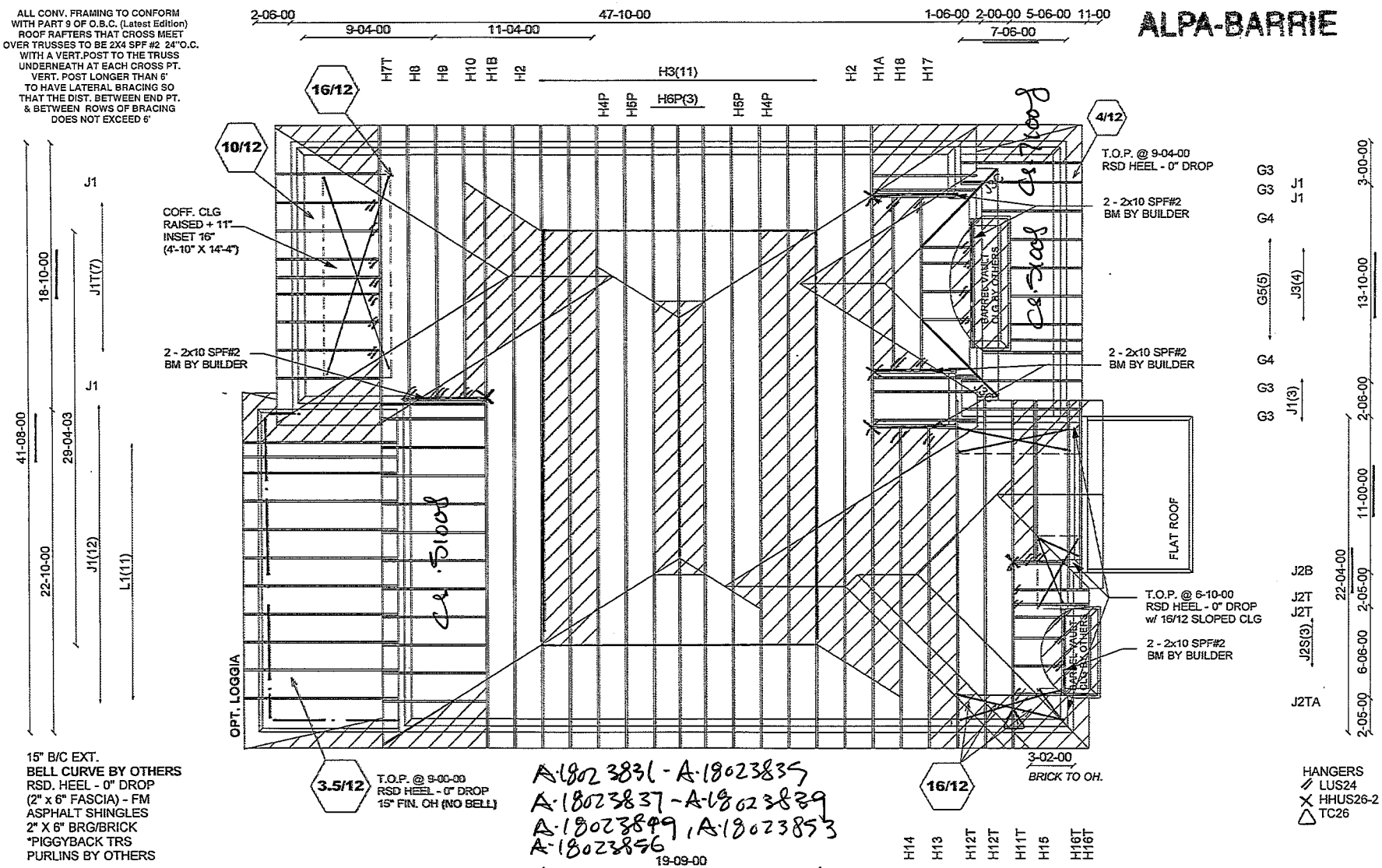

15" B/C EXT.
BELL CURVE BY OTHERS
RSD. HEEL - 0" DROP
(2" x 6" FASCIA) - FM
ASPHALT SHINGLES
2" X 6" BRG/BRICK
*PIGGYBACK TRS
PURLINS BY OTHERS

~~CONFIRM TRUSS LAYOUT/DIRECTION~~
P.L.95914

A-18023831 - A-18023835
A-18023837 - A-18023839
A-18023849, A-18023853
A-18023856
A-18023860 - A-18023872

HANGERS
LUS24
HHUS26-2
TC26

CONVENTIONAL FRAMING BY OTHERS

ROSEVIEW

Job Track: 45147	Builder / Location: GOLD PARK HOMES / VAUGHAN	Model / Elevation: 5002 REV1	/ B OPT TRAY SIT OR OPT LOGGIA
Layout ID: 292631			
Plan Log: 95914	Project: PINE VALLEY		
	Date: 1/18/2018	Designer: AMANDA	

THESE DRAWINGS CONSTITUTE THE PROPERTY OF ALPA ROOF TRUSSES INC., SHALL NOT BE REPRODUCED, PUBLISHED, OR REDISTRIBUTED IN ANY MANNER OR UTILIZED FOR ANY PURPOSE OTHER THAN THE MANUFACTURE OF TRUSSES BY ALPA ROOF TRUSSES INC AND WILL BE RETRACTED BY ALPA ROOF TRUSSES INC IF UTLILZED FOR ANY OTHER PURPOSE.

ALL CONV. FRAMING TO CONFORM WITH PART 9 OF O.B.C. (Latest Edition) ROOF RAFTERS THAT CROSS MEET OVER TRUSSES TO BE 2X4 SPF #2 24"O.C. WITH A VERT.POST TO THE TRUSS UNDERNEATH AT EACH CROSS PT. VERT. POST LONGER THAN 6' TO HAVE LATERAL BRACING SO THAT THE DIST. BETWEEN END PT. & BETWEEN ROWS OF BRACING DOES NOT EXCEED 6'

ALPA-BARRIE

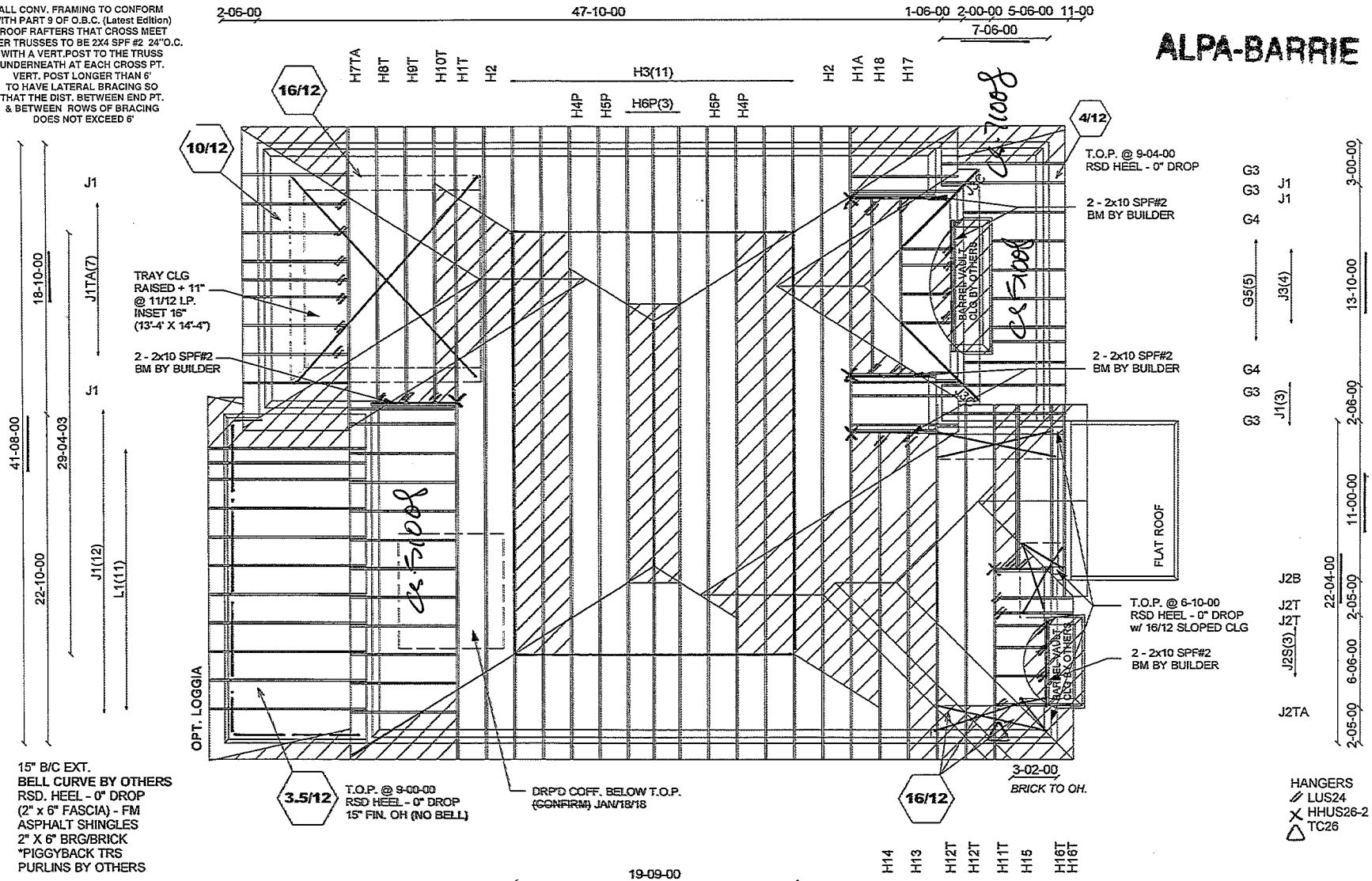

15" B/C EXT.
BELL CURVE BY OTHERS
RSD. HEEL - 0" DROP
(2" x 6" FASCIA) - FM
ASPHALT SHINGLES
2" X 6" BRG/BRICK
*PIGGYBACK TRS
PURLINS BY OTHERS

~~CONFIRM TRUSS LAYOUT/DIRECTION~~
P.L.95914

HANGERS
// LUS24
X HHUS26-2
△ TC26

CONVENTIONAL FRAMING BY OTHERS

A-18023831 - A-18023835
A-18023849 - A-18023850
A-18023854. A-18023855
A-18023857 - A-18023860
A-18023862 - A-18023872

ROSEVIEW

OR OPT LOGGIA

Job Track: 45147	Builder / Location: GOLD PARK HOMES / VAUGHAN	Model / Elevation: 5002 REV1	/ B OPT TRAY 5 BED
Layout ID: 292632			
Plan Log: 95914	Project: PINE VALLEY		
	Date: 1/18/2018	Designer: AMANDA	

THESE DRAWINGS CONSTITUTE THE PROPERTY OF ALPA ROOF TRUSSES INC., SHALL NOT BE REPRODUCED, PUBLISHED, OR REDISTRIBUTED IN ANY MANNER OR UTILIZED FOR ANY PURPOSE OTHER THAN THE MANUFACTURE OF TRUSSES BY ALPA ROOF TRUSSES INC AND WILL BE RETRACTED BY ALPA ROOF TRUSSES INC IF UTLILZED FOR ANY OTHER PURPOSE.

Stracon Engineering Inc.

69 Graydon Crescent
Richmond Hill, Ontario
L4B 3W7
(905) 832-2250 Fax (905) 832-0286

REGISTERED PROFESSIONAL ENGINEER
DANIEL E. FOX
PROVINCE OF ONTARIO

RESPONSIBILITIES

1. Stracon Engineering Inc. is responsible for the design of trusses as individual components.
2. It is the responsibility of others to ascertain that the design loads utilized on this drawing meet or exceed the actual dead load imposed by the structure and the live load imposed by the local building code or the authorities with jurisdictions.
3. All dimensions are to be verified by owner contractor, architect or other authority before manufacture.
4. Stracon Engineering Inc. bears no responsibility for the erection of the trusses. Persons erecting trusses are cautioned to seek professional advice regarding temporary and permanent bracing system. Bracing shown on Stracon Engineering Inc. drawings is specified for the truss as a component only and forms an integral part of the truss design.
5. It is the truss manufacture's responsibility to ensure that trusses are manufactured in conformance with Stracon Engineering Inc. specifications outlined below.

SPECIFICATIONS

1. Trusses designed by Stracon Engineering Inc. conforms to the relevant section of the Ontario Building Code of Canada (Part 9 or Part 4) or to the Canadian code for farm buildings, whichever applies to the building type indicated on the drawings as well as to the procedures established by the truss plate institute of Canada. Unit stresses used are as per CSA-086-09.
2. Lumber is to be the sizes and grade specified.
3. Moisture content of lumber is not to exceed 19% in service unless otherwise specified.
4. Lumber not to be treated with chemicals unless otherwise specified.
5. Plates shall be applied to both faces of the truss at each joint and shall be positioned as specified.
6. The top chord is assumed to be continuously laterally braced by the roof sheathing or purlins at intervals not exceeding 12.5 times in thickness.
7. Where not rigid ceiling is attached directly to the bottom chord, laterally brace the chords at intervals not exceeding 3M (10') o.c.

January 15, 2014

JOB NAME	TRUSS NAME	QUANTITY	PLY	JOB DESC.	DRWG NO.
292623	H2	2	1	TRUSS DESC.	

Alpa Roof Truss, Maple

Version 8.200 S Jan 6 2018 MiTek Industries, Inc. Sun Feb 18 17:04:48 2018 Page 1
ID:Rbextx08A5M1Jnp0FfBKG3yNySB-1V5XuJKCdkqij?1hYjgnF9xzNJBy_Ye56Vcw?Bzjs3z

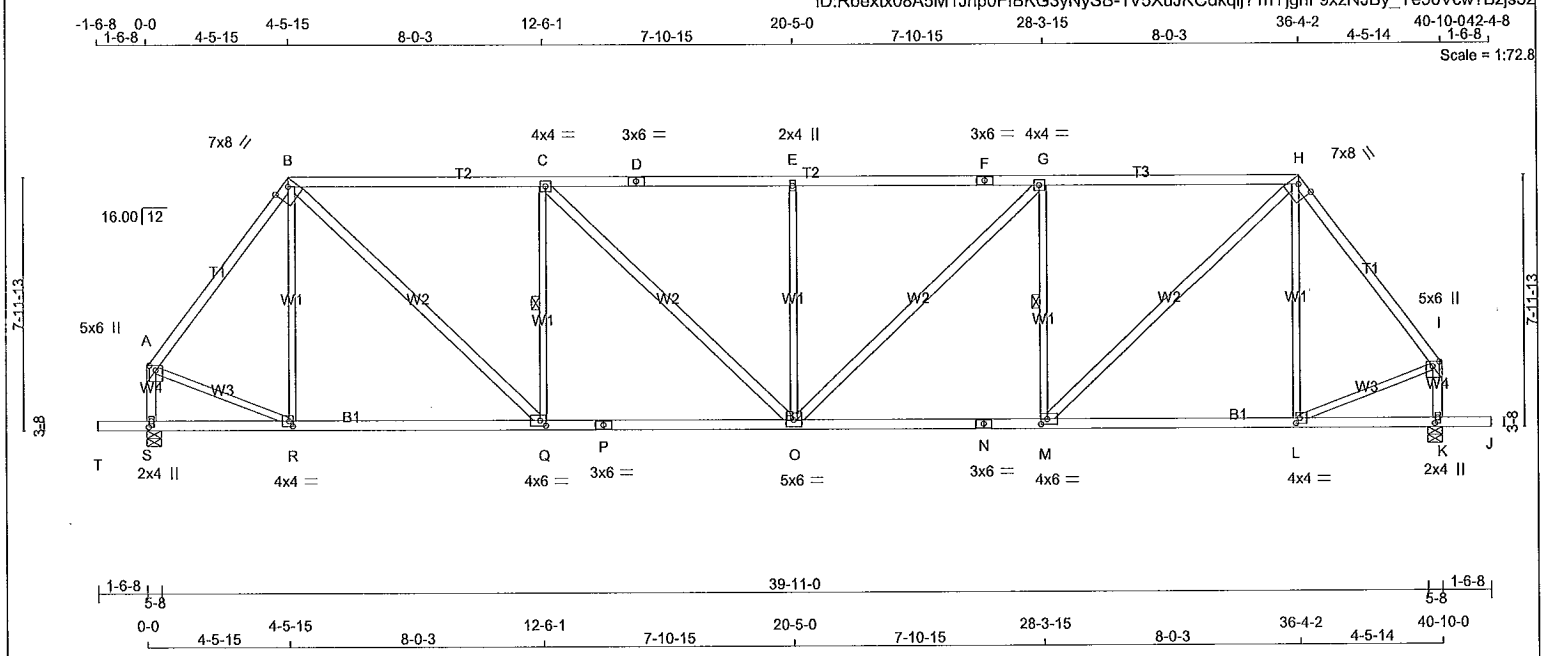

TOTAL WEIGHT = 2 X 194 = 388 lb

[M]

LUMBER

N. L. G. A. RULES

CHORDS	SIZE		LUMBER	DESCR.
A - B	2x4	DRY	No.2	SPF
B - D	2x4	DRY	1650F 1.5E	SPF
D - F	2x4	DRY	1650F 1.5E	SPF
F - H	2x4	DRY	1650F 1.5E	SPF
H - I	2x4	DRY	No.2	SPF
S - A	2x4	DRY	No.2	SPF
K - I	2x4	DRY	No.2	SPF
T - P	2x4	DRY	No.2	SPF
P - N	2x4	DRY	No.2	SPF
N - J	2x4	DRY	No.2	SPF
ALL WEBS EXCEPT	2x3	DRY	No.2	SPF
B - Q	2x4	DRY	No.2	SPF
C - O	2x4	DRY	No.2	SPF
O - G	2x4	DRY	No.2	SPF
M - H	2x4	DRY	No.2	SPF

DRY: SEASONED LUMBER.

PLATES (table is In Inches)

JT	TYPE	PLATES	W	LEN	Y	X
A	TMVW+p	MT20	5.0	6.0	1.75	2.50
B	TTWW-h	MT20	7.0	8.0	2.00	5.25
C	TMWW-t	MT20	4.0	4.0		
D	TS-t	MT20	3.0	6.0		
E	TMW+w	MT20	2.0	4.0		
F	TS-t	MT20	3.0	6.0		
G	TMWW-t	MT20	4.0	4.0		
H	TTWW-h	MT20	7.0	8.0	2.00	5.25
I	TMVW+p	MT20	5.0	6.0	1.75	2.50
K	BMV1+p	MT20	2.0	4.0	2.25	1.00
L	BMWW-t	MT20	4.0	4.0	2.00	1.50
M	BMWW-t	MT20	4.0	6.0	2.00	2.25
N	BS-t	MT20	3.0	6.0		
O	BMWWW-t	MT20	5.0	6.0		
P	BS-t	MT20	3.0	6.0		
Q	BMWW-t	MT20	4.0	6.0	2.00	2.25
R	BMWW-t	MT20	4.0	4.0	2.00	1.50
S	BMV1+p	MT20	2.0	4.0	2.25	1.00

NOTE: Lateral brace(s) shown shall be 1x4 for Part 9 design as per OBC 9.23.13.11, and no less than 2x4 for Part 4 design

REGISTERED PROFESSIONAL ENGINEER
02/18/2018
EDWIN C. FOK
PROVINCE OF ONTARIO

DIMENSIONS, SUPPORTS AND LOADINGS SPECIFIED BY FABRICATOR TO BE VERIFIED BY BUILDING DESIGNER

BEARINGS

JT	FACTORED GROSS REACTION VERT	HORZ	MAXIMUM FACTORED GROSS REACTION DOWN	HORZ	UPLIFT	INPUT BRG IN-SX	REQRD BRG IN-SX
S	2118	0	2118	0	0	5-8	3-3
K	2118	0	2118	0	0	5-8	3-3

UNFACTORED REACTIONS

JT	1ST LCASE COMBINED	MAX./MIN. COMPONENT REACTIONS SNOW	LIVE	PERM.LIVE	WIND	DEAD	SOIL
S	1510	922 / 0	0 / 0	0 / 0	0 / 0	588 / 0	0 / 0
K	1510	922 / 0	0 / 0	0 / 0	0 / 0	588 / 0	0 / 0

BEARING MATERIAL TO BE SPF NO.2 OR BETTER AT JOINT(S) S, K

BRACING

TOP CHORD TO BE SHEATHED OR MAX. PURLIN SPACING = 3.82 FT.
MAX. UNBRACED BOTTOM CHORD LENGTH = 10.00 FT OR RIGID CEILING DIRECTLY APPLIED.

ALL PITCH BREAKS AND PERIMETER CORNER JOINTS MUST BE LATERALLY RESTRAINED.

1 LATERAL BRACE(S) AT 1/ 2 LENGTH OF C-Q, G-M.

END VERTICAL(S) MUST BE SHEATHED OR HAVE BRACES AS INDICATED IN THE MAX. UNBRACED LENGTH COLUMN OF THE TABLE BELOW

LOADING

TOTAL LOAD CASES: (4)

CHORDS

MEMB. FR-TO	MAX. FACTORED FORCE (LBS)	FACTORED VERT. LOAD LC1 (PLF) FROM	TO	MAX CSI (LC)	MAX. UNBRAC LENGTH
A- B	-1750 / 0	-78.0	-78.0	0.41 (1)	4.69
B- C	-2302 / 0	-78.0	-78.0	0.85 (1)	4.09
C- D	-2668 / 0	-78.0	-78.0	0.90 (1)	3.82
D- E	-2668 / 0	-78.0	-78.0	0.90 (1)	3.82
E- F	-2668 / 0	-78.0	-78.0	0.90 (1)	3.82
F- G	-2668 / 0	-78.0	-78.0	0.90 (1)	3.82
G- H	-2302 / 0	-78.0	-78.0	0.85 (1)	4.09
H- I	-1750 / 0	-78.0	-78.0	0.41 (1)	4.69
S- A	-1944 / 0	0.0	0.0	0.22 (1)	6.03
K- I	-1944 / 0	0.0	0.0	0.22 (1)	6.03
T- S	0 / 0	-96.5	-96.5	0.16 (1)	10.00
S- R	0 / 0	-18.5	-18.5	0.18 (4)	10.00
R- Q	0 / 1041	-18.5	-18.5	0.34 (4)	10.00
Q- P	0 / 2302	-18.5	-18.5	0.50 (1)	10.00
P- O	0 / 2302	-18.5	-18.5	0.50 (1)	10.00
O- N	0 / 2302	-18.5	-18.5	0.50 (1)	10.00
N- M	0 / 2302	-18.5	-18.5	0.50 (1)	10.00
M- L	0 / 1041	-18.5	-18.5	0.34 (4)	10.00
L- K	0 / 0	-18.5	-18.5	0.18 (4)	10.00
K- J	0 / 0	-96.5	-96.5	0.16 (1)	10.00

WEBS

MEMB. FR-TO	MAX. FACTORED FORCE (LBS)	MAX CSI (LC)
R- B	-235 / 0	0.29 (1)
B- Q	0 / 1742	0.28 (1)
Q- C	-1052 / 0	0.42 (1)
C- O	0 / 511	0.08 (1)
O- E	-569 / 0	0.69 (1)
O- G	0 / 511	0.08 (1)
M- G	-1052 / 0	0.42 (1)
M- H	0 / 1742	0.28 (1)
L- H	-235 / 0	0.29 (1)
A- R	0 / 1106	0.25 (1)
L- I	0 / 1106	0.25 (1)

DESIGN CRITERIA

SPECIFIED LOADS:

TOP CH.	LL	=	21.0	PSF
	DL	=	6.0	PSF
BOT CH.	LL	=	0.0	PSF
	DL	=	7.4	PSF
TOTAL LOAD		=	34.4	PSF

SPACING = 24.0 IN. C/C

LOADING IN FLAT SECTION BASED ON A SLOPE OF 2.00/12 MINIMUM

THIS TRUSS IS DESIGNED FOR RESIDENTIAL OR SMALL BUILDING REQUIREMENTS OF PART 9, NBCC 2010, NBCC 2015

THIS DESIGN COMPLIES WITH:
- PART 9 OF OBC 2012, OBC 2018
- CSA 086-09, CSA 086-14
- TPIC 2011, TPIC 2014

(55 % OF 23.0 P.S.F. G.S.L. PLUS 8.4 P.S.F. RAIN LOAD) EQUALS 21.0 P.S.F. SPECIFIED ROOF LIVE LOAD

ALLOWABLE DEFL.(LL)= L/360 (1.36")
CALCULATED VERT. DEFL.(LL) = L/ 999 (0.13")
ALLOWABLE DEFL.(TL)= L/360 (1.36")
CALCULATED VERT. DEFL.(TL) = L/ 999 (0.28")

CANTILEVER DEFLECTION:
ALLOWABLE DEFL.(LL)= L/120 (0.19")
CALCULATED VERT. DEFL.(LL) = L/ 999 (0.01")
ALLOWABLE DEFL.(TL)= L/120 (0.19")
CALCULATED VERT. DEFL.(TL) = L/ 999 (0.01")

CSI: TC=0.90/1.00 (C-E:1) , BC=0.50/1.00 (O-Q:1) , WB=0.69/1.00 (E-O:1) , SSI=0.29/1.00 (B-C:1)

DOL LUMBER=1.00 NAIL=1.00 LS BEND=1.10 COMP=1.10 SHEAR=1.10 TENS= 1.10

COMPANION LIVE LOAD FACTOR = 1.00

TRUSS PLATE MANUFACTURER IS NOT RESPONSIBLE FOR QUALITY CONTROL IN THE TRUSS MANUFACTURING PLANT .

NAIL VALUES

PLATE	GRIP(DRY) (PSI) MAX	MIN	SHEAR (PLI) MAX	MIN	SECTION (PLI) MAX	MIN
MT20	618	354	1667	788	1987	1656

PLATE PLACEMENT TOL. = 0.250 Inches

PLATE ROTATION TOL. = 5.0 Deg.

JSI GRIP= 0.89 (A) (INPUT = 0.90)
JSI METAL= 0.68 (N) (INPUT = 1.00)

A-18023831

CONTINUED ON PAGE 2

JOB NAME	TRUSS NAME	QUANTITY	PLY	JOB DESC.	DRWG NO.
292623	H3	11	1	TRUSS DESC.	

Alpa Roof Truss, Maple

Version 8.200 S Jan 6 2018 MiTek Industries, Inc. Sun Feb 18 17:05:05 2018 Page 1
ID:Rbextx08A5M1Jnp0FfBKG3yNySB-1mdyS7XsdzzHGcqy2oUmRI8xc9?sTEMc0eDK5izjs3i

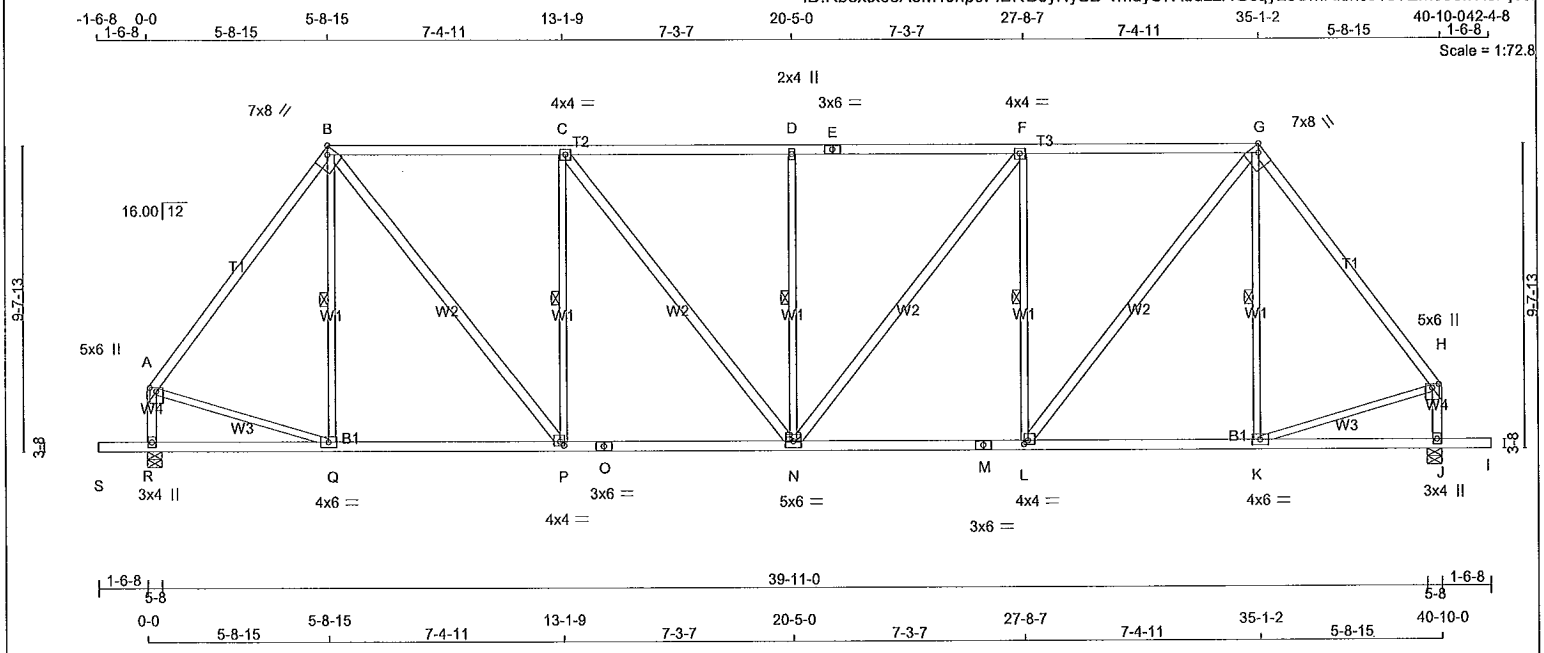

TOTAL WEIGHT = 11 X 209 = 2294 lb

LUMBER
N. L. G. A. RULES

CHORDS	SIZE		LUMBER	DESCR.
A - B	2x4	DRY	No.2	SPF
B - E	2x4	DRY	No.2	SPF
E - G	2x4	DRY	No.2	SPF
G - H	2x4	DRY	No.2	SPF
R - A	2x4	DRY	No.2	SPF
J - H	2x4	DRY	No.2	SPF
S - O	2x4	DRY	No.2	SPF
O - M	2x4	DRY	No.2	SPF
M - I	2x4	DRY	No.2	SPF
ALL WEBS EXCEPT	2x3	DRY	No.2	SPF
B - P	2x4	DRY	No.2	SPF
C - N	2x4	DRY	No.2	SPF
N - F	2x4	DRY	No.2	SPF
L - G	2x4	DRY	No.2	SPF

DRY: SEASONED LUMBER.

PLATES (table is In inches)

JT	TYPE	PLATES	W	LEN	Y	X
A	TMVW+p	MT20	5.0	6.0	1.50	2.50
B	TTWW-h	MT20	7.0	8.0	Edge	2.75
C	TMWW-t	MT20	4.0	4.0		
D	TMW+w	MT20	2.0	4.0		
E	TS-t	MT20	3.0	6.0		
F	TMWW-t	MT20	4.0	4.0		
G	TTWW-h	MT20	7.0	8.0	Edge	2.75
H	TMVW+p	MT20	5.0	6.0	1.50	2.50
J	BMV1+p	MT20	3.0	4.0		
K	BMWW-t	MT20	4.0	6.0		
L	BMWW-t	MT20	4.0	4.0	1.50	1.50
M	BS-t	MT20	3.0	6.0		
N	BMWWW-t	MT20	5.0	6.0		
O	BS-t	MT20	3.0	6.0		
P	BMWW-t	MT20	4.0	4.0	1.50	1.50
Q	BMWW-t	MT20	4.0	6.0		
R	BMV1+p	MT20	3.0	4.0		

Edge - INDICATES REFERENCE CORNER OF PLATE TOUCHES EDGE OF CHORD.

NOTE: Lateral brace(s) shown shall be 1x4 for Part 9 design as per OBC 9.23.13.11, and no less than 2x4 for Part 4 design

REGISTERED PROFESSIONAL ENGINEER
02/18/2018
EDWIN C. FOK
PROVINCE OF ONTARIO

DIMENSIONS, SUPPORTS AND LOADINGS SPECIFIED BY FABRICATOR TO BE VERIFIED BY BUILDING DESIGNER

BEARINGS

JT	FACTORED GROSS REACTION VERT	HORZ	MAXIMUM FACTORED GROSS REACTION DOWN	HORZ	UPLIFT	INPUT BRG IN-SX	REQRD BRG IN-SX
R	2228	0	2228	0	0	5-8	3-9
J	2228	0	2228	0	0	5-8	3-9

UNFACTORED REACTIONS

JT	1ST LCASE COMBINED	MAX./MIN. COMPONENT REACTIONS SNOW	LIVE	PERM.LIVE	WIND	DEAD	SOIL
R	1598	922 / 0	0 / 0	0 / 0	0 / 0	677 / 0	0 / 0
J	1598	922 / 0	0 / 0	0 / 0	0 / 0	677 / 0	0 / 0

BEARING MATERIAL TO BE SPF NO.2 OR BETTER AT JOINT(S) R, J

BRACING
FOR SECTION B-G, MAX. PURLIN SPACING = 2.00 FT.
FOR OTHER SECTIONS, TOP CHORD TO BE SHEATHED OR MAX. PURLIN SPACING = 4.51 FT.
MAX. UNBRACED BOTTOM CHORD LENGTH = 10.00 FT OR RIGID CEILING DIRECTLY APPLIED.

ALL PITCH BREAKS AND PERIMETER CORNER JOINTS MUST BE LATERALLY RESTRAINED.

1 LATERAL BRACE(S) AT 1/ 2 LENGTH OF B-Q, C-P, D-N, F-L, G-K.

END VERTICAL(S) MUST BE SHEATHED OR HAVE BRACES AS INDICATED IN THE MAX. UNBRACED LENGTH COLUMN OF THE TABLE BELOW

LOADING
TOTAL LOAD CASES: (4)

CHORDS

MEMB. FR-TO	MAX. FACTORED FORCE (LBS)	FACTORED VERT. LOAD LC1 (PLF) FROM	TO	MAX CSI (LC)	MAX. UNBRAC LENGTH
A- B	-1879 / 0	-78.0	-78.0	0.53 (1)	4.51
B- C	-2068 / 0	-85.5	-85.5	0.67 (1)	2.00
C- D	-2343 / 0	-85.5	-85.5	0.67 (1)	2.00
D- E	-2343 / 0	-85.5	-85.5	0.67 (1)	2.00
E- F	-2343 / 0	-85.5	-85.5	0.67 (1)	2.00
F- G	-2068 / 0	-85.5	-85.5	0.67 (1)	2.00
G- H	-1879 / 0	-78.0	-78.0	0.53 (1)	4.51
R- A	-2039 / 0	0.0	0.0	0.23 (1)	5.92
J- H	-2039 / 0	0.0	0.0	0.23 (1)	5.92
S- R	0 / 0	-96.5	-96.5	0.16 (1)	10.00
R- Q	0 / 0	-18.5	-18.5	0.19 (4)	10.00
Q- P	0 / 1121	-18.5	-18.5	0.31 (4)	10.00
P- O	0 / 2068	-18.5	-18.5	0.44 (1)	10.00
O- N	0 / 2068	-18.5	-18.5	0.44 (1)	10.00
N- M	0 / 2068	-18.5	-18.5	0.44 (1)	10.00
M- L	0 / 2068	-18.5	-18.5	0.44 (1)	10.00
L- K	0 / 1121	-18.5	-18.5	0.31 (4)	10.00
K- J	0 / 0	-18.5	-18.5	0.19 (4)	10.00
J- I	0 / 0	-96.5	-96.5	0.16 (1)	10.00

WEBS

MEMB. FR-TO	MAX. FACTORED FORCE (LBS)	MAX CSI (LC)
Q- B	-174 / 16	0.11 (1)
B- P	0 / 1524	0.24 (1)
P- C	-1057 / 0	0.66 (1)
C- N	0 / 447	0.07 (1)
N- D	-574 / 0	0.36 (1)
N- F	0 / 447	0.07 (1)
L- F	-1057 / 0	0.66 (1)
L- G	0 / 1524	0.24 (1)
K- G	-174 / 16	0.11 (1)
A- Q	0 / 1164	0.26 (1)
K- H	0 / 1164	0.26 (1)

DESIGN CRITERIA [M][F]

SPECIFIED LOADS:

TOP CH.	LL	=	21.0	PSF
	DL	=	6.0	PSF
BOT CH.	LL	=	0.0	PSF
	DL	=	7.4	PSF
TOTAL LOAD		=	34.4	PSF

SPACING = 24.0 IN. C/C

LOADING IN FLAT SECTION BASED ON PIGGYBACK TRUSS WITH SLOPES OF 6.00/12 AND -6.00/12 AND RESPECTIVE WALL HEIGHTS OF 0-0 AND 0-0 AND AN ADDITIONAL DEAD LOAD OF 3.0 P.S.F.

THIS TRUSS IS DESIGNED FOR RESIDENTIAL OR SMALL BUILDING REQUIREMENTS OF PART 9, NBCC 2010, NBCC 2015

THIS DESIGN COMPLIES WITH:
- PART 9 OF OBC 2012, OBC 2018
- CSA 086-09, CSA 086-14
- TPIC 2011, TPIC 2014

(55 % OF 23.0 P.S.F. G.S.L. PLUS 8.4 P.S.F. RAIN LOAD) EQUALS 21.0 P.S.F. SPECIFIED ROOF LIVE LOAD

ALLOWABLE DEFL.(LL)= L/360 (1.36")
CALCULATED VERT. DEFL.(LL) = L/ 999 (0.11")
ALLOWABLE DEFL.(TL)= L/360 (1.36")
CALCULATED VERT. DEFL.(TL) = L/ 999 (0.24")

CANTILEVER DEFLECTION:
ALLOWABLE DEFL.(LL)= L/120 (0.19")
CALCULATED VERT. DEFL.(LL) = L/ 999 (0.01")
ALLOWABLE DEFL.(TL)= L/120 (0.19")
CALCULATED VERT. DEFL.(TL) = L/ 999 (0.01")

CSI: TC=0.67/1.00 (B-C:1) , BC=0.44/1.00 (N-P:1) , WB=0.66/1.00 (F-L:1) , SSI=0.30/1.00 (B-C:1)

DOL LUMBER=1.00 NAIL=1.00 LS BEND=1.10 COMP=1.10 SHEAR=1.10 TENS= 1.10

COMPANION LIVE LOAD FACTOR = 1.00

TRUSS PLATE MANUFACTURER IS NOT RESPONSIBLE FOR QUALITY CONTROL IN THE TRUSS MANUFACTURING PLANT .

NAIL VALUES

PLATE	GRIP(DRY) (PSI) MAX	MIN	SHEAR (PLI) MAX	MIN	SECTION (PLI) MAX	MIN
MT20	618	354	1667	788	1987	1656

PLATE PLACEMENT TOL. = 0.250 inches

PLATE ROTATION TOL. = 5.0 Deg.

JSI GRIP= 0.86 (L) (INPUT = 0.90)
JSI METAL= 0.63 (A) (INPUT = 1.00)

A-18023832

CONTINUED ON PAGE 2

JOB NAME	TRUSS NAME	QUANTITY	PLY	JOB DESC.	DRWG NO.
292623	H4P	2	1	TRUSS DESC.	

Alpa Roof Truss, Maple

Version 8.200 S Jan 6 2018 MiTek Industries, Inc. Sun Feb 18 17:05:16 2018 Page 1

ID:Rbextx08A5M1Jnp0FfBKG3yNySB-Cto6mugm1LMj4IA3BbALN35pRbpUYKJDYsOP_azjs3X

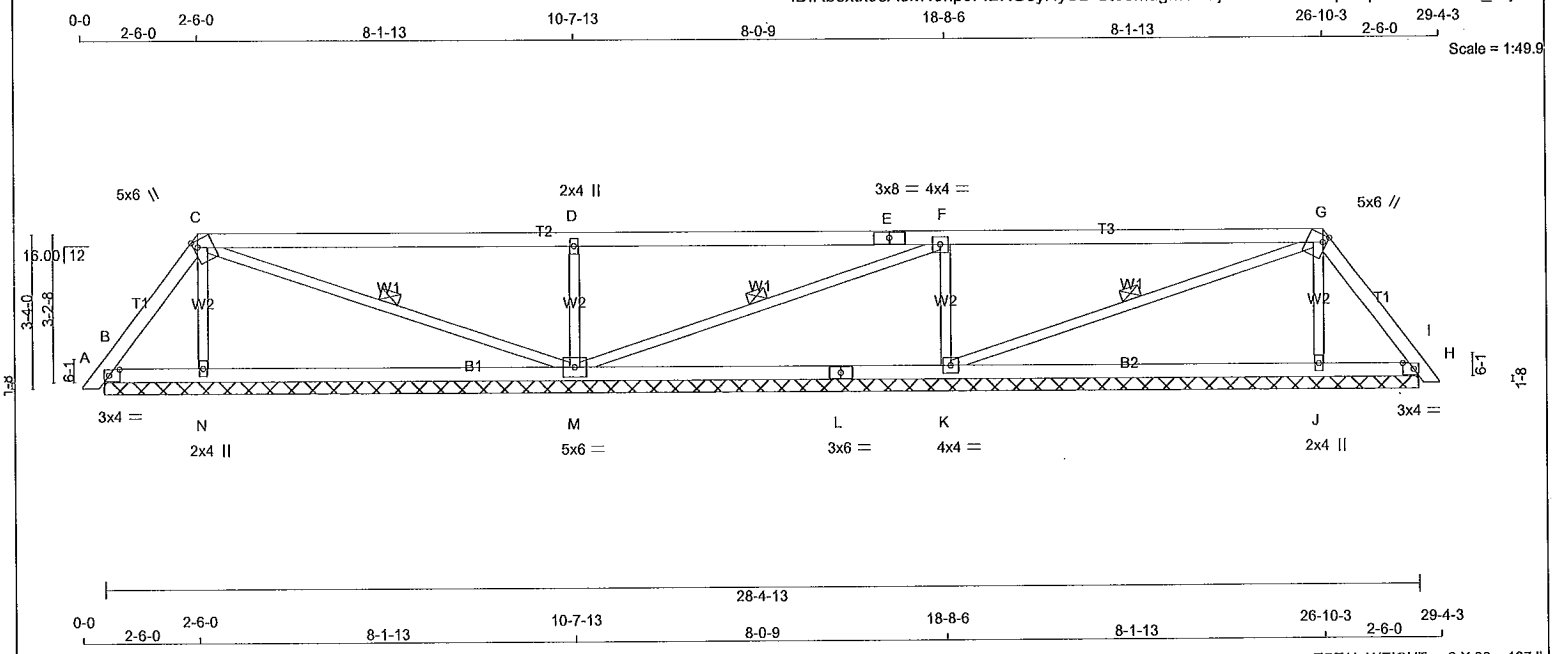

TOTAL WEIGHT = 2 X 98 = 197 lb

LUMBER

N. L. G. A. RULES

CHORDS	SIZE		LUMBER	DESCR.
A - C	2x4	DRY	No.2	SPF
C - E	2x4	DRY	No.2	SPF
E - G	2x4	DRY	No.2	SPF
G - I	2x4	DRY	No.2	SPF
B - L	2x4	DRY	No.2	SPF
L - H	2x4	DRY	No.2	SPF
ALL WEBS	2x3	DRY	No.2	SPF

DRY: SEASONED LUMBER.

PLATES (table is in inches)

JT	TYPE	PLATES	W	LEN	Y	X
B	TMB1-I	MT20	3.0	4.0	1.50	2.75
C	TTWW+m	MT20	5.0	6.0	1.75	1.00
D	TMW+w	MT20	2.0	4.0		
E	TS-t	MT20	3.0	8.0		
F	TMWW-t	MT20	4.0	4.0		
G	TTWW+m	MT20	5.0	6.0	1.75	1.00
H	TMB1-I	MT20	3.0	4.0	1.50	2.75
J	BMW1+w	MT20	2.0	4.0		
K	BMWW1-t	MT20	4.0	4.0		
L	BS-t	MT20	3.0	6.0		
M	BMWWW1-t	MT20	5.0	6.0		
N	BMW1+w	MT20	2.0	4.0		

NOTE: Lateral brace(s) shown shall be 1x4 for Part 9 design as per OBC 9.23.13.11, and no less than 2x4 for Part 4 design

REGISTERED PROFESSIONAL ENGINEER
02/18/2018
EDWIN C. FOK
PROVINCE OF ONTARIO

DIMENSIONS, SUPPORTS AND LOADINGS SPECIFIED BY FABRICATOR TO BE VERIFIED BY BUILDING DESIGNER

BEARINGS

JT	FACTORED GROSS REACTION VERT	HORZ	MAXIMUM FACTORED GROSS REACTION DOWN	HORZ	UPLIFT	INPUT BRG IN-SX	REQRD BRG IN-SX
B	162	0	162	0	0	28-4-13	(12-5252-13)
N	371	0	371	0	0	28-4-13	(12-5252-13)
M	878	0	878	0	0	28-4-13	(12-5252-13)
K	841	0	841	0	0	28-4-13	(12-5252-13)
J	361	0	361	0	0	28-4-13	(12-5252-13)
H	181	0	181	0	0	28-4-13	(12-5252-13)

VALUE IN PARENTHESIS INDICATES EFFECTIVE BEARING LENGTH

UNFACTORED REACTIONS

JT	1ST LCASE COMBINED	MAX./MIN. COMPONENT REACTIONS SNOW	LIVE	PERM.LIVE	WIND	DEAD	SOIL
B	110	97 / 0	0 / 0	0 / 0	0 / 0	14 / 0	0 / 0
N	271	131 / 0	0 / 0	0 / 0	0 / 0	140 / 0	0 / 0
M	624	391 / 0	0 / 0	0 / 0	0 / 0	233 / 0	0 / 0
K	598	371 / 0	0 / 0	0 / 0	0 / 0	228 / 0	0 / 0
J	264	125 / 0	0 / 0	0 / 0	0 / 0	139 / 0	0 / 0
H	123	107 / 0	0 / 0	0 / 0	0 / 0	16 / 0	0 / 0

BEARING MATERIAL TO BE SPF NO.2 OR BETTER AT JOINT(S) B, N, M, K, J, H

BRACING

TOP CHORD TO BE SHEATHED OR MAX. PURLIN SPACING = 6.25 FT.
MAX. UNBRACED BOTTOM CHORD LENGTH = 10.00 FT OR RIGID CEILING DIRECTLY APPLIED.

ALL PITCH BREAKS AND PERIMETER CORNER JOINTS MUST BE LATERALLY RESTRAINED.

1 LATERAL BRACE(S) AT 1/ 2 LENGTH OF C-M, F-M, G-K.

LOADING

TOTAL LOAD CASES: (4)

CHORDS

MEMB. FR-TO	MAX. FACTORED FORCE (LBS)	FACTORED VERT. LOAD LC1 (PLF) FROM	TO	MAX CSI (LC)	MAX. UNBRAC LENGTH
A- B	0 / 10	-78.0	-78.0	0.01 (1)	10.00
B- C	-90 / 0	-78.0	-78.0	0.05 (1)	6.25
C- D	0 / 8	-78.0	-78.0	0.70 (1)	10.00
D- E	0 / 7	-78.0	-78.0	0.70 (1)	10.00
E- F	0 / 7	-78.0	-78.0	0.70 (1)	10.00
F- G	-31 / 0	-78.0	-78.0	0.70 (1)	6.25
G- H	-113 / 0	-78.0	-78.0	0.05 (1)	6.25
H- I	0 / 10	-78.0	-78.0	0.01 (1)	10.00
B- N	0 / 52	-18.5	-18.5	0.19 (4)	10.00
N- M	0 / 43	-18.5	-18.5	0.25 (4)	10.00
M- L	0 / 32	-18.5	-18.5	0.25 (4)	10.00
L- K	0 / 32	-18.5	-18.5	0.25 (4)	10.00
K- J	0 / 57	-18.5	-18.5	0.25 (4)	10.00
J- H	0 / 65	-18.5	-18.5	0.19 (4)	10.00

WEBS

MEMB. FR-TO	MAX. FACTORED FORCE (LBS)	MAX CSI (LC)
N- C	-243 / 0	0.05 (1)
C- M	-53 / 0	0.03 (1)
M- D	-694 / 0	0.13 (1)
M- F	-41 / 0	0.02 (1)
K- F	-680 / 0	0.13 (1)
K- G	-27 / 0	0.01 (1)
J- G	-233 / 0	0.04 (1)

DESIGN CRITERIA

SPECIFIED LOADS:

TOP CH.	LL	=	21.0	PSF
	DL	=	6.0	PSF
BOT CH.	LL	=	0.0	PSF
	DL	=	7.4	PSF
TOTAL LOAD		=	34.4	PSF

SPACING = 24.0 IN. C/C

LOADING IN FLAT SECTION BASED ON A SLOPE OF 2.00/12 MINIMUM

THIS TRUSS IS DESIGNED FOR RESIDENTIAL OR SMALL BUILDING REQUIREMENTS OF PART 9, NBCC 2010, NBCC 2015

THIS DESIGN COMPLIES WITH:
- PART 9 OF OBC 2012, OBC 2018
- CSA 086-09, CSA 086-14
- TPIC 2011, TPIC 2014

(55 % OF 23.0 P.S.F. G.S.L. PLUS 8.4 P.S.F. RAIN LOAD) EQUALS 21.0 P.S.F. SPECIFIED ROOF LIVE LOAD

CSI: TC=0.70/1.00 (F-G:1) , BC=0.25/1.00 (J-K:4) , WB=0.13/1.00 (D-M:1) , SSI=0.30/1.00 (F-G:1)

DOL LUMBER=1.00 NAIL=1.00 LS BEND=1.10 COMP=1.10 SHEAR=1.10 TENS= 1.10

COMPANION LIVE LOAD FACTOR = 1.00

TRUSS PLATE MANUFACTURER IS NOT RESPONSIBLE FOR QUALITY CONTROL IN THE TRUSS MANUFACTURING PLANT .

NAIL VALUES

PLATE	GRIP(DRY) (PSI) MAX	MIN	SHEAR (PLI) MAX	MIN	SECTION (PLI) MAX	MIN
MT20	618	354	1667	788	1987	1656

PLATE PLACEMENT TOL. = 0.250 inches

PLATE ROTATION TOL. = 5.0 Deg.

JSI GRIP= 0.90 (M) (INPUT = 0.90)
JSI METAL= 0.52 (E) (INPUT = 1.00)

A-18023833

JOB NAME	TRUSS NAME	QUANTITY	PLY	JOB DESC.	DRWG NO.
292623	H5P	2	1	TRUSS DESC.	

Alpa Roof Truss, Maple

Version 8.200 S Jan 6 2018 MiTek Industries, Inc. Sun Feb 18 17:05:39 2018 Page 1
ID:Rbextx08A5M1Jnp0FfBKG3yNySB-1JhpblyBcPFSLqRU1x5lpvYnksfaQjfcrxS7lkzjs3A

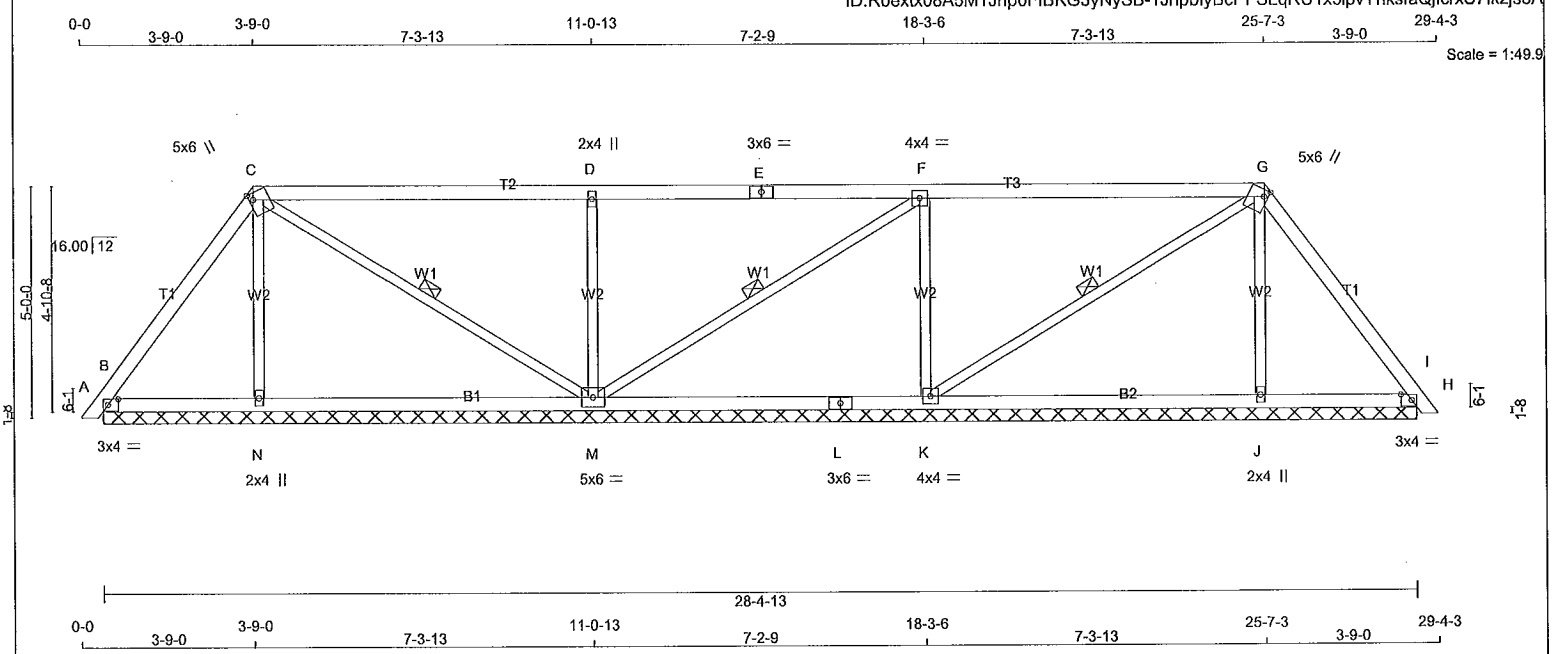

TOTAL WEIGHT = 2 X 106 = 211 lb

[M]

LUMBER
N. L. G. A. RULES

CHORDS	SIZE		LUMBER	DESCR.
A - C	2x4	DRY	No.2	SPF
C - E	2x4	DRY	No.2	SPF
E - G	2x4	DRY	No.2	SPF
G - I	2x4	DRY	No.2	SPF
B - L	2x4	DRY	No.2	SPF
L - H	2x4	DRY	No.2	SPF
ALL WEBS	2x3	DRY	No.2	SPF

DRY: SEASONED LUMBER.

PLATES (table is in inches)

JT	TYPE	PLATES	W	LEN	Y	X
B	TMB1-I	MT20	3.0	4.0	1.50	2.75
C	TTWW+m	MT20	5.0	6.0	1.75	1.00
D	TMW+w	MT20	2.0	4.0		
E	TS-t	MT20	3.0	6.0		
F	TMWW-t	MT20	4.0	4.0		
G	TTWW+m	MT20	5.0	6.0	1.75	1.00
H	TMB1-I	MT20	3.0	4.0	1.50	2.75
J	BMW1+w	MT20	2.0	4.0		
K	BMWW1-t	MT20	4.0	4.0		
L	BS-t	MT20	3.0	6.0		
M	BMWWW1-t	MT20	5.0	6.0		
N	BMW1+w	MT20	2.0	4.0		

NOTE: Lateral brace(s) shown shall be 1x4 for Part 9 design as per OBC 9.23.13.11, and no less than 2x4 for Part 4 design

REGISTERED PROFESSIONAL ENGINEER
02/18/2018
EDWIN C. FOK
PROVINCE OF ONTARIO

DIMENSIONS, SUPPORTS AND LOADINGS SPECIFIED BY FABRICATOR TO BE VERIFIED BY BUILDING DESIGNER

BEARINGS

JT	FACTORED GROSS REACTION VERT	HORZ	MAXIMUM FACTORED GROSS REACTION DOWN	HORZ	UPLIFT	INPUT BRG IN-SX	REQRD BRG IN-SX
B	246	0	246	0	0	28-4-13 (12-5250-9	
N	341	0	341	0	0	28-4-13 (12-5250-9	
M	862	0	862	0	0	28-4-13 (12-5250-9	
K	728	0	728	0	0	28-4-13 (12-5250-9	
J	333	0	333	0	0	28-4-13 (12-5250-9	
H	285	0	285	0	0	28-4-13 (12-5250-9	

VALUE IN PARENTHESIS INDICATES EFFECTIVE BEARING LENGTH

UNFACTORED REACTIONS

JT	1ST LCASE COMBINED	MAX./MIN. COMPONENT REACTIONS SNOW	LIVE	PERM.LIVE	WIND	DEAD	SOIL
B	171	125 / 0	0 / 0	0 / 0	0 / 0	46 / 0	0 / 0
N	248	122 / 0	0 / 0	0 / 0	0 / 0	126 / 0	0 / 0
M	611	390 / 0	0 / 0	0 / 0	0 / 0	221 / 0	0 / 0
K	519	319 / 0	0 / 0	0 / 0	0 / 0	200 / 0	0 / 0
J	243	118 / 0	0 / 0	0 / 0	0 / 0	124 / 0	0 / 0
H	199	147 / 0	0 / 0	0 / 0	0 / 0	52 / 0	0 / 0

BEARING MATERIAL TO BE SPF NO.2 OR BETTER AT JOINT(S) B, N, M, K, J, H

BRACING
TOP CHORD TO BE SHEATHED OR MAX. PURLIN SPACING = 6.25 FT.
MAX. UNBRACED BOTTOM CHORD LENGTH = 10.00 FT OR RIGID CEILING DIRECTLY APPLIED.

ALL PITCH BREAKS AND PERIMETER CORNER JOINTS MUST BE LATERALLY RESTRAINED.

1 LATERAL BRACE(S) AT 1/ 2 LENGTH OF C-M, F-M, G-K.

LOADING
TOTAL LOAD CASES: (4)

CHORDS

MEMB. FR-TO	MAX. FACTORED FORCE (LBS)	FACTORED VERT. LOAD LC1 (PLF) FROM	TO	MAX CSI (LC)	MAX. UNBRAC LENGTH
A- B	0 / 10	-78.0	-78.0	0.01 (1)	10.00
B- C	-96 / 0	-78.0	-78.0	0.14 (1)	6.25
C- D	0 / 33	-78.0	-78.0	0.57 (1)	10.00
D- E	0 / 32	-78.0	-78.0	0.57 (1)	10.00
E- F	0 / 32	-78.0	-78.0	0.57 (1)	10.00
F- G	-47 / 0	-78.0	-78.0	0.56 (1)	6.25
G- H	-145 / 0	-78.0	-78.0	0.14 (1)	6.25
H- I	0 / 10	-78.0	-78.0	0.01 (1)	10.00
B- N	0 / 56	-18.5	-18.5	0.15 (4)	10.00
N- M	0 / 51	-18.5	-18.5	0.20 (4)	10.00
M- L	0 / 47	-18.5	-18.5	0.20 (4)	10.00
L- K	0 / 47	-18.5	-18.5	0.20 (4)	10.00
K- J	0 / 80	-18.5	-18.5	0.20 (4)	10.00
J- H	0 / 85	-18.5	-18.5	0.15 (4)	10.00

WEBS

MEMB. FR-TO	MAX. FACTORED FORCE (LBS)	MAX CSI (LC)
N- C	-228 / 0	0.08 (1)
C- M	-98 / 0	0.05 (1)
M- D	-623 / 0	0.22 (1)
M- F	-94 / 0	0.05 (1)
K- F	-572 / 0	0.20 (1)
K- G	-38 / 0	0.02 (1)
J- G	-220 / 0	0.08 (1)

DESIGN CRITERIA

SPECIFIED LOADS:

TOP CH.	LL	=	21.0	PSF
	DL	=	6.0	PSF
BOT CH.	LL	=	0.0	PSF
	DL	=	7.4	PSF
TOTAL LOAD		=	34.4	PSF

SPACING = 24.0 IN. C/C

LOADING IN FLAT SECTION BASED ON A SLOPE OF 2.00/12 MINIMUM

THIS TRUSS IS DESIGNED FOR RESIDENTIAL OR SMALL BUILDING REQUIREMENTS OF PART 9, NBCC 2010, NBCC 2015

THIS DESIGN COMPLIES WITH:
- PART 9 OF OBC 2012, OBC 2018
- CSA 086-09, CSA 086-14
- TPIC 2011, TPIC 2014

(55 % OF 23.0 P.S.F. G.S.L. PLUS 8.4 P.S.F. RAIN LOAD) EQUALS 21.0 P.S.F. SPECIFIED ROOF LIVE LOAD

CSI: TC=0.57/1.00 (D-F:1) , BC=0.20/1.00 (J-K:4) , WB=0.22/1.00 (D-M:1) , SSI=0.27/1.00 (F-G:1)

DOL LUMBER=1.00 NAIL=1.00 LS BEND=1.10 COMP=1.10 SHEAR=1.10 TENS= 1.10

COMPANION LIVE LOAD FACTOR = 1.00

TRUSS PLATE MANUFACTURER IS NOT RESPONSIBLE FOR QUALITY CONTROL IN THE TRUSS MANUFACTURING PLANT .

NAIL VALUES

PLATE	GRIP(DRY) (PSI) MAX	MIN	SHEAR (PLI) MAX	MIN	SECTION (PLI) MAX	MIN
MT20	618	354	1667	788	1987	1656

PLATE PLACEMENT TOL. = 0.250 inches

PLATE ROTATION TOL. = 5.0 Deg.

JSI GRIP= 0.64 (C) (INPUT = 0.90)
JSI METAL= 0.26 (E) (INPUT = 1.00)

A-18023834

JOB NAME	TRUSS NAME	QUANTITY	PLY	JOB DESC.	DRWG NO.
292623	H6P	3	1	TRUSS DESC.	

Alpa Roof Truss, Maple

Version 8.200 S Jan 6 2018 MiTek Industries, Inc. Sun Feb 18 17:06:06 2018 Page 1
ID:Rbextx08A5M1Jnp0FfBKG3yNySB-kVp0G_H7Fifd4_?g6544Pc9QmludFtja2eV2kgzjs2l

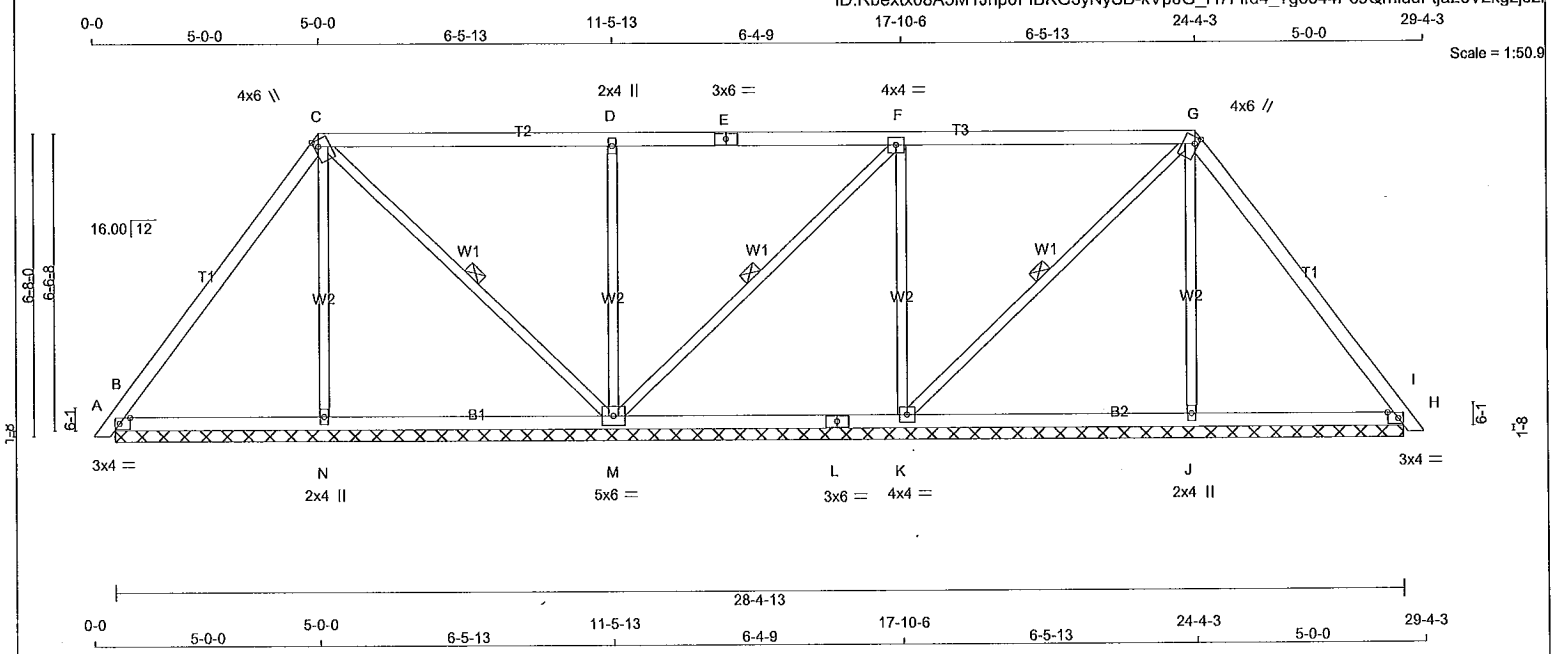

TOTAL WEIGHT = 3 X 114 = 341 lb

[M]

LUMBER
N. L. G. A. RULES

CHORDS	SIZE		LUMBER	DESCR.
A - C	2x4	DRY	No.2	SPF
C - E	2x4	DRY	No.2	SPF
E - G	2x4	DRY	No.2	SPF
G - I	2x4	DRY	No.2	SPF
B - L	2x4	DRY	No.2	SPF
L - H	2x4	DRY	No.2	SPF
ALL WEBS	2x3	DRY	No.2	SPF

DRY: SEASONED LUMBER.

PLATES (table is in inches)

JT	TYPE	PLATES	W	LEN	Y	X
B	TMB1-I	MT20	3.0	4.0	1.50	2.75
C	TTWW+m	MT20	4.0	6.0	1.75	1.00
D	TMW+w	MT20	2.0	4.0		
E	TS-t	MT20	3.0	6.0		
F	TMWW-t	MT20	4.0	4.0		
G	TTWW+m	MT20	4.0	6.0	1.75	1.00
H	TMB1-I	MT20	3.0	4.0	1.50	2.75
J	BMW1+w	MT20	2.0	4.0		
K	BMWW1-t	MT20	4.0	4.0		
L	BS-t	MT20	3.0	6.0		
M	BMWWW1-t	MT20	5.0	6.0		
N	BMW1+w	MT20	2.0	4.0		

NOTE: Lateral brace(s) shown shall be 1x4 for Part 9 design as per OBC 9.23.13.11, and no less than 2x4 for Part 4 design

REGISTERED PROFESSIONAL ENGINEER
02/18/2018
EDWIN C. FOK
PROVINCE OF ONTARIO

DIMENSIONS, SUPPORTS AND LOADINGS SPECIFIED BY FABRICATOR TO BE VERIFIED BY BUILDING DESIGNER

BEARINGS

JT	FACTORED GROSS REACTION VERT	HORZ	MAXIMUM FACTORED GROSS REACTION DOWN	HORZ	UPLIFT	INPUT BRG IN-SX	REQRD BRG IN-SX
B	308	0	308	0	0	28-4-13 (12-5-1)	1-10
N	322	0	322	0	0	28-4-13 (12-5-1)	1-10
M	867	0	867	0	0	28-4-13 (12-5-1)	1-10
K	610	0	610	0	0	28-4-13 (12-5-1)	1-10
J	320	0	320	0	0	28-4-13 (12-5-1)	1-10
H	367	0	367	0	0	28-4-13 (12-5-1)	1-10

VALUE IN PARENTHESIS INDICATES EFFECTIVE BEARING LENGTH

UNFACTORED REACTIONS

JT	1ST LCASE COMBINED	MAX./MIN. COMPONENT REACTIONS SNOW	LIVE	PERM.LIVE	WIND	DEAD	SOIL
B	217	150 / 0	0 / 0	0 / 0	0 / 0	67 / 0	0 / 0
N	235	113 / 0	0 / 0	0 / 0	0 / 0	123 / 0	0 / 0
M	613	402 / 0	0 / 0	0 / 0	0 / 0	210 / 0	0 / 0
K	435	264 / 0	0 / 0	0 / 0	0 / 0	171 / 0	0 / 0
J	234	111 / 0	0 / 0	0 / 0	0 / 0	122 / 0	0 / 0
H	258	181 / 0	0 / 0	0 / 0	0 / 0	76 / 0	0 / 0

BEARING MATERIAL TO BE SPF NO.2 OR BETTER AT JOINT(S) B, N, M, K, J, H

BRACING
TOP CHORD TO BE SHEATHED OR MAX. PURLIN SPACING = 6.25 FT.
MAX. UNBRACED BOTTOM CHORD LENGTH = 10.00 FT OR RIGID CEILING DIRECTLY APPLIED.

ALL PITCH BREAKS AND PERIMETER CORNER JOINTS MUST BE LATERALLY RESTRAINED.

1 LATERAL BRACE(S) AT 1/ 2 LENGTH OF C-M, F-M, G-K.

LOADING
TOTAL LOAD CASES: (4)

CHORDS

MEMB. FR-TO	MAX. FACTORED FORCE (LBS)	FACTORED VERT. LOAD LC1 (PLF) FROM	TO	MAX CSI (LC)	MAX. UNBRAC LENGTH
A- B	0 / 10	-78.0	-78.0	0.01 (1)	10.00
B- C	-92 / 0	-78.0	-78.0	0.27 (1)	6.25
C- D	0 / 50	-78.0	-78.0	0.45 (1)	10.00
D- E	0 / 50	-78.0	-78.0	0.45 (1)	10.00
E- F	0 / 50	-78.0	-78.0	0.45 (1)	10.00
F- G	-51 / 0	-78.0	-78.0	0.44 (1)	6.25
G- H	-165 / 0	-78.0	-78.0	0.28 (1)	6.25
H- I	0 / 10	-78.0	-78.0	0.01 (1)	10.00
B- N	0 / 54	-18.5	-18.5	0.14 (4)	10.00
N- M	0 / 50	-18.5	-18.5	0.15 (4)	10.00
M- L	0 / 52	-18.5	-18.5	0.15 (4)	10.00
L- K	0 / 52	-18.5	-18.5	0.15 (4)	10.00
K- J	0 / 94	-18.5	-18.5	0.15 (4)	10.00
J- H	0 / 97	-18.5	-18.5	0.14 (4)	10.00

WEBS

MEMB. FR-TO	MAX. FACTORED FORCE (LBS)	MAX CSI (LC)
N- C	-209 / 0	0.15 (1)
C- M	-139 / 0	0.08 (1)
M- D	-551 / 0	0.39 (1)
M- F	-143 / 0	0.08 (1)
K- F	-451 / 0	0.32 (1)
K- G	-58 / 0	0.03 (1)
J- G	-207 / 0	0.14 (1)

DESIGN CRITERIA

SPECIFIED LOADS:

TOP CH.	LL	=	21.0	PSF
	DL	=	6.0	PSF
BOT CH.	LL	=	0.0	PSF
	DL	=	7.4	PSF
TOTAL LOAD		=	34.4	PSF

SPACING = 24.0 IN. C/C

LOADING IN FLAT SECTION BASED ON A SLOPE OF 2.00/12 MINIMUM

THIS TRUSS IS DESIGNED FOR RESIDENTIAL OR SMALL BUILDING REQUIREMENTS OF PART 9, NBCC 2010, NBCC 2015

THIS DESIGN COMPLIES WITH:
- PART 9 OF OBC 2012, OBC 2018
- CSA 086-09, CSA 086-14
- TPIC 2011, TPIC 2014

(55 % OF 23.0 P.S.F. G.S.L. PLUS 8.4 P.S.F. RAIN LOAD) EQUALS 21.0 P.S.F. SPECIFIED ROOF LIVE LOAD

CSI: TC=0.45/1.00 (D-F:1) , BC=0.15/1.00 (J-K:4) , WB=0.39/1.00 (D-M:1) , SSI=0.24/1.00 (F-G:1)

DOL LUMBER=1.00 NAIL=1.00 LS BEND=1.10 COMP=1.10 SHEAR=1.10 TENS= 1.10

COMPANION LIVE LOAD FACTOR = 1.00

TRUSS PLATE MANUFACTURER IS NOT RESPONSIBLE FOR QUALITY CONTROL IN THE TRUSS MANUFACTURING PLANT .

NAIL VALUES

PLATE	GRIP(DRY) (PSI) MAX	MIN	SHEAR (PLI) MAX	MIN	SECTION (PLI) MAX	MIN
MT20	618	354	1667	788	1987	1656

PLATE PLACEMENT TOL. = 0.250 inches

PLATE ROTATION TOL. = 5.0 Deg.

JSI GRIP= 0.64 (G) (INPUT = 0.90)
JSI METAL= 0.17 (H) (INPUT = 1.00)

A-18023835

JOB NAME	TRUSS NAME	QUANTITY	PLY	JOB DESC.	DRWG NO.
292623	H7	1	1	TRUSS DESC.	

Alpa Roof Truss, Maple

Version 8.200 S Jan 6 2018 MiTek Industries, Inc. Sun Feb 18 17:06:37 2018 Page 1

ID:Rbextx08A5M1Jnp0FfBKG3yNySB-KTBkmafayEZEIltdR67L98ycjFQn0rT8AyVBKNzjs2G

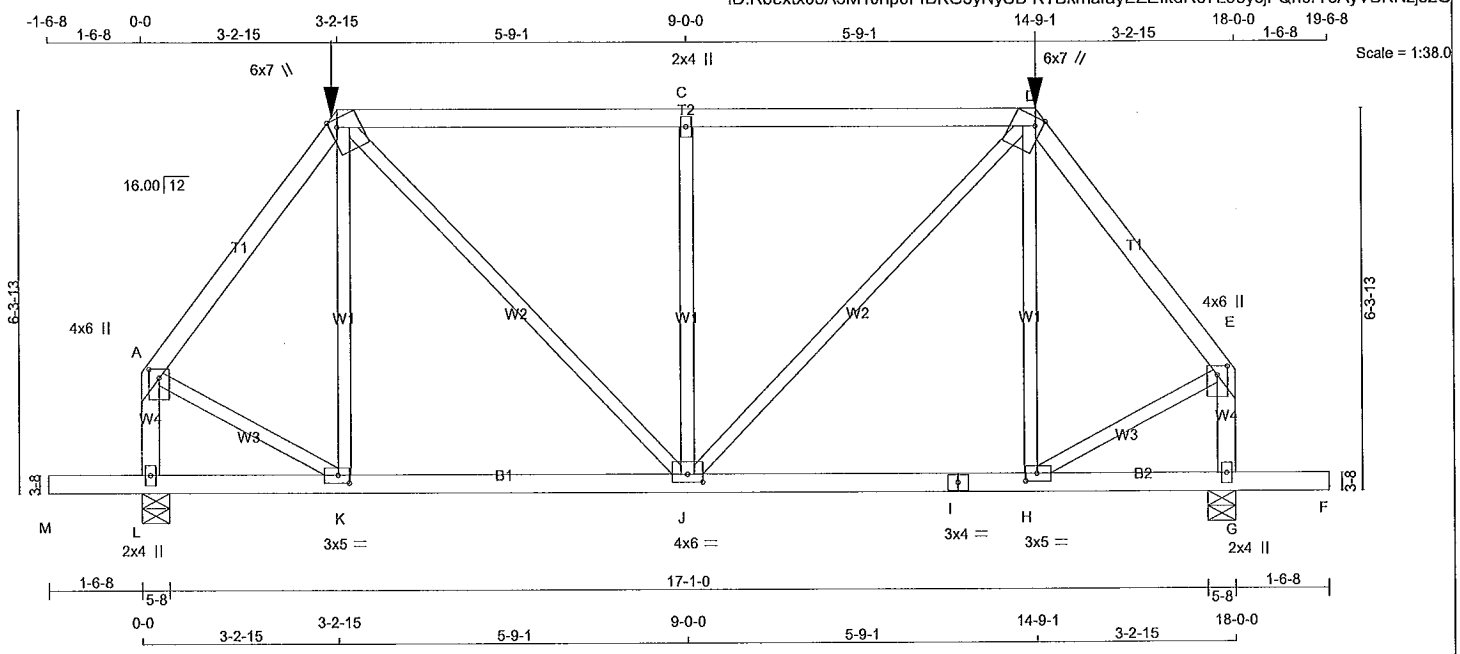

TOTAL WEIGHT = 86 lb

[M]

LUMBER

N. L. G. A. RULES

CHORDS	SIZE		LUMBER	DESCR.
A - B	2x4	DRY	No.2	SPF
B - D	2x4	DRY	1650F 1.5E	SPF
D - E	2x4	DRY	No.2	SPF
L - A	2x4	DRY	No.2	SPF
G - E	2x4	DRY	No.2	SPF
M - I	2x4	DRY	No.2	SPF
I - F	2x4	DRY	No.2	SPF
ALL WEBS EXCEPT	2x3	DRY	No.2	SPF

DRY: SEASONED LUMBER.

PLATES (table is in inches)

JT	TYPE	PLATES	W	LEN	Y	X
A	TMVW+p	MT20	4.0	6.0	1.75	2.00
B	TTWW+m	MT20	6.0	7.0	Edge	1.50
C	TMW+w	MT20	2.0	4.0		
D	TTWW+m	MT20	6.0	7.0	Edge	1.50
E	TMVW+p	MT20	4.0	6.0	1.75	2.00
G	BMV1+p	MT20	2.0	4.0		
H	BMWW-t	MT20	3.0	5.0	1.50	2.25
I	BS-t	MT20	3.0	4.0		
J	BMWWW-t	MT20	4.0	6.0	1.50	3.00
K	BMWW-t	MT20	3.0	5.0	1.50	2.25
L	BMV1+p	MT20	2.0	4.0		

Edge - INDICATES REFERENCE CORNER OF PLATE TOUCHES EDGE OF CHORD.

HANGERS NOTES

1) SPECIAL HANGER(S) OR CONNECTION(S) REQUIRED TO SUPPORT CONCENTRATED LOAD(S) 184.5 lbs FACTORED DOWN AT 14-9-1, AND 184.5 lbs FACTORED DOWN AT 3-2-15 ON TOP CHORD. DESIGN FOR UNSPECIFIED CONNECTION(S) IS DELEGATED TO THE BUILDING DESIGNER.

NOTE: Lateral brace(s) shown shall be 1x4 for Part 9 design as per OBC 9.23.13.11, and no less than 2x4 for Part 4 design

REGISTERED PROFESSIONAL ENGINEER
02/18/2018
EDWIN C. FOK
PROVINCE OF ONTARIO

DIMENSIONS, SUPPORTS AND LOADINGS SPECIFIED BY FABRICATOR TO BE VERIFIED BY BUILDING DESIGNER

BEARINGS

JT	FACTORED GROSS REACTION VERT	HORZ	MAXIMUM FACTORED GROSS REACTION DOWN	HORZ	UPLIFT	INPUT BRG IN-SX	REQRD BRG IN-SX
L	1798	0	1798	0	0	5-8	2-11
G	1798	0	1798	0	0	5-8	2-11

UNFACTORED REACTIONS

JT	1ST LCASE COMBINED	MAX./MIN. COMPONENT REACTIONS SNOW	LIVE	PERM.LIVE	WIND	DEAD	SOIL
L	1283	776 / 0	0 / 0	0 / 0	0 / 0	507 / 0	0 / 0
G	1283	776 / 0	0 / 0	0 / 0	0 / 0	507 / 0	0 / 0

BEARING MATERIAL TO BE SPF NO.2 OR BETTER AT JOINT(S) L, G

BRACING

TOP CHORD TO BE SHEATHED OR MAX. PURLIN SPACING = 4.35 FT.
MAX. UNBRACED BOTTOM CHORD LENGTH = 10.00 FT OR RIGID CEILING DIRECTLY APPLIED.

ALL PITCH BREAKS AND PERIMETER CORNER JOINTS MUST BE LATERALLY RESTRAINED.

LOADING

TOTAL LOAD CASES: (4)

CHORDS

MEMB. FR-TO	MAX. FACTORED FORCE (LBS)	FACTORED VERT. LOAD (PLF) FROM	TO	LC1 MAX CSI (LC)	MAX. UNBRAC LENGTH
A- B	-1364 / 0	-78.0	-78.0	0.20 (1)	5.33
B- C	-1426 / 0	-153.5	-153.5	0.85 (1)	4.35
C- D	-1426 / 0	-153.5	-153.5	0.85 (1)	4.35
D- E	-1364 / 0	-78.0	-78.0	0.20 (1)	5.33
L- A	-1612 / 0	0.0	0.0	0.20 (1)	6.47
G- E	-1612 / 0	0.0	0.0	0.20 (1)	6.47
M- L	0 / 0	-96.5	-96.5	0.17 (1)	10.00
L- K	0 / 0	-36.4	-36.4	0.20 (4)	10.00
K- J	0 / 809	-36.4	-36.4	0.35 (4)	10.00
J- I	0 / 809	-36.4	-36.4	0.35 (4)	10.00
I- H	0 / 809	-36.4	-36.4	0.35 (4)	10.00
H- G	0 / 0	-36.4	-36.4	0.20 (4)	10.00
G- F	0 / 0	-96.5	-96.5	0.17 (1)	10.00

WEBS

MEMB. FR-TO	MAX. FACTORED FORCE (LBS)	MAX CSI (LC)
K- B	-204 / 51	0.13 (1)
B- J	0 / 891	0.22 (1)
J- C	-1073 / 0	0.70 (1)
J- D	0 / 891	0.22 (1)
H- D	-204 / 51	0.13 (1)
A- K	0 / 901	0.22 (1)
H- E	0 / 901	0.22 (1)

FACTORED CONCENTRATED LOADS (LBS)

JT	LOC.	LC1	MAX-	MAX+	FACE	DIR.	TYPE
B	3-2-15	-184	-184	---	FRONT	VERT	TOTAL
D	14-9-1	-184	-184	---	FRONT	VERT	TOTAL

DESIGN CRITERIA

SPECIFIED LOADS:

TOP CH.	LL	=	21.0	PSF
	DL	=	6.0	PSF
BOT CH.	LL	=	0.0	PSF
	DL	=	7.4	PSF
TOTAL LOAD		=	34.4	PSF

SPACING = 24.0 IN. C/C

LOADING IN FLAT SECTION BASED ON A SLOPE OF 2.00/12 MINIMUM

GIRDER TYPE: CPrimeHip
SIDE SETBACK = 3-2-15
END SETBACK = 5-10-8
END WALL WIDTH = 0-0
CORNER FRAMING TYPE: CONVENTIONAL
END JACK TYPE: CONVENTIONAL
APPLIED TO FRONT SIDE
- ADDT'L LOADS BASED ON 55 % OF GSL.

THIS TRUSS IS DESIGNED FOR RESIDENTIAL OR SMALL BUILDING REQUIREMENTS OF PART 9, NBCC 2010, NBCC 2015

THIS DESIGN COMPLIES WITH:
- PART 9 OF OBC 2012, OBC 2018
- CSA 086-09, CSA 086-14
- TPIC 2011, TPIC 2014

(55 % OF 23.0 P.S.F. G.S.L. PLUS 8.4 P.S.F. RAIN LOAD) EQUALS 21.0 P.S.F. SPECIFIED ROOF LIVE LOAD

ALLOWABLE DEFL.(LL)= L/360 (0.60")
CALCULATED VERT. DEFL.(LL) = L/ 999 (0.03")
ALLOWABLE DEFL.(TL)= L/360 (0.60")
CALCULATED VERT. DEFL.(TL) = L/ 999 (0.07")

CANTILEVER DEFLECTION:
ALLOWABLE DEFL.(LL)= L/120 (0.19")
CALCULATED VERT. DEFL.(LL) = L/ 999 (0.01")
ALLOWABLE DEFL.(TL)= L/120 (0.19")
CALCULATED VERT. DEFL.(TL) = L/ 999 (0.01")

CSI: TC=0.85/1.00 (C-D:1) , BC=0.35/1.00 (H-J:4) , WB=0.70/1.00 (C-J:1) , SSI=0.47/1.00 (B-C:1)

DOL LUMBER=1.00 NAIL=1.00 LS BEND=1.00 COMP=1.00 SHEAR=1.00 TENS= 1.00

COMPANION LIVE LOAD FACTOR = 1.00

TRUSS PLATE MANUFACTURER IS NOT RESPONSIBLE FOR QUALITY CONTROL IN THE TRUSS MANUFACTURING PLANT .

NAIL VALUES

PLATE	GRIP(DRY) (PSI) MAX	MIN	SHEAR (PLI) MAX	MIN	SECTION (PLI) MAX	MIN
MT20	618	354	1667	788	1987	1656

PLATE PLACEMENT TOL. = 0.250 inches

PLATE ROTATION TOL. = 5.0 Deg.

A-18023836

CONTINUED ON PAGE 2

JOB NAME	TRUSS NAME	QUANTITY	PLY	JOB DESC.	DRWG NO.
292623	H8	1	1	TRUSS DESC.	

Alpa Roof Truss, Maple

Version 8.200 S Jan 6 2018 MiTek Industries, Inc. Sun Feb 18 17:06:58 2018 Page 1
ID:Rbextx08A5M1Jnp0FfBKG3yNySB-DVygAmvl?hCFJzzg90?GWaJMKjcpRTIE?j5oZfzjs1x

Scale = 1:45.7

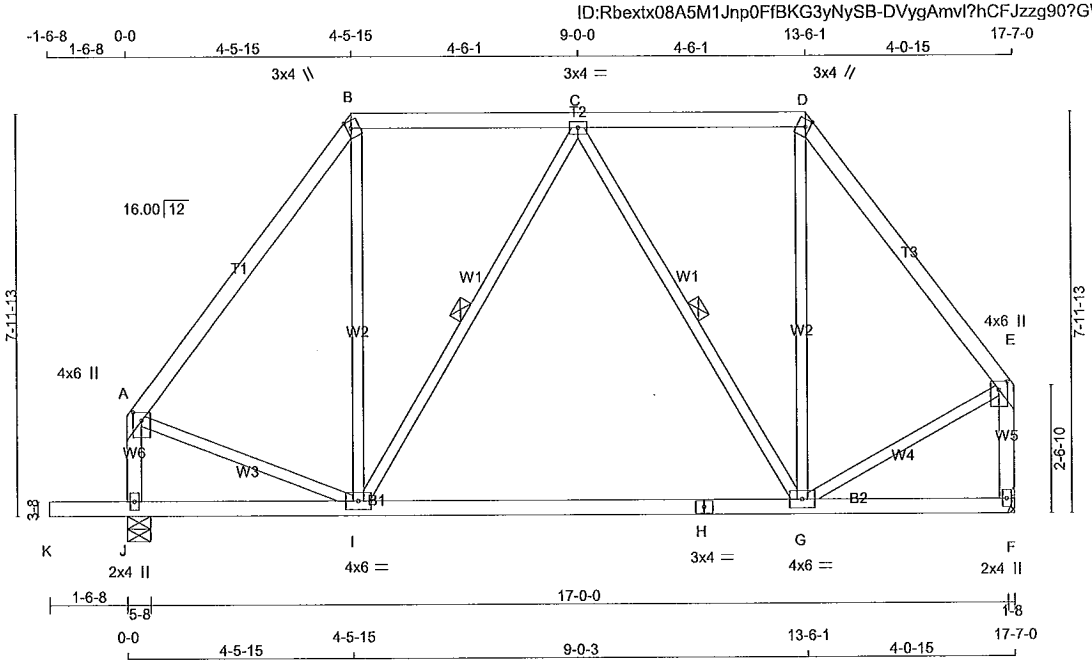

TOTAL WEIGHT = 87 lb

[M][F]

LUMBER
N. L. G. A. RULES

CHORDS	SIZE		LUMBER	DESCR.
A - B	2x4	DRY	No.2	SPF
B - D	2x4	DRY	No.2	SPF
D - E	2x4	DRY	No.2	SPF
J - A	2x4	DRY	No.2	SPF
F - E	2x4	DRY	No.2	SPF
K - H	2x4	DRY	No.2	SPF
H - F	2x4	DRY	No.2	SPF
ALL WEBS EXCEPT	2x3	DRY	No.2	SPF

DRY: SEASONED LUMBER.

PLATES (table is in inches)

JT	TYPE	PLATES	W	LEN	Y	X
A	TMVW+p	MT20	4.0	6.0	2.00	2.00
B	TTW+m	MT20	3.0	4.0	1.75	1.00
C	TMWW-t	MT20	3.0	4.0		
D	TTW+m	MT20	3.0	4.0	1.75	1.00
E	TMVW+p	MT20	4.0	6.0	2.00	2.00
F	BMV1+p	MT20	2.0	4.0		
G	BMWWW-t	MT20	4.0	6.0		
H	BS-t	MT20	3.0	4.0		
I	BMWWW-t	MT20	4.0	6.0		
J	BMV1+p	MT20	2.0	4.0		

NOTE: Lateral brace(s) shown shall be 1x4 for Part 9 design as per OBC 9.23.13.11, and no less than 2x4 for Part 4 design

REGISTERED PROFESSIONAL ENGINEER
02/18/2018
EDWIN C. FOK
PROVINCE OF ONTARIO

DIMENSIONS, SUPPORTS AND LOADINGS SPECIFIED BY FABRICATOR TO BE VERIFIED BY BUILDING DESIGNER

BEARINGS

JT	FACTORED GROSS REACTION VERT	HORZ	MAXIMUM FACTORED GROSS REACTION DOWN	HORZ	UPLIFT	INPUT BRG IN-SX	REQRD BRG IN-SX
J	997	0	997	0	0	5-8	1-8
F	848	0	848	0	0	HANGER BY OTHERS	
						MIN. SEAT SIZE: 1-8	

UNFACTORED REACTIONS

JT	1ST LCASE COMBINED	MAX./MIN. COMPONENT REACTIONS SNOW	LIVE	PERM.LIVE	WIND	DEAD	SOIL
J	711	434 / 0	0 / 0	0 / 0	0 / 0	277 / 0	0 / 0
F	605	369 / 0	0 / 0	0 / 0	0 / 0	236 / 0	0 / 0

BEARING MATERIAL TO BE SPF NO.2 OR BETTER AT JOINT(S) J

BRACING
TOP CHORD TO BE SHEATHED OR MAX. PURLIN SPACING = 6.25 FT.
MAX. UNBRACED BOTTOM CHORD LENGTH = 10.00 FT OR RIGID CEILING DIRECTLY APPLIED.

ALL PITCH BREAKS AND PERIMETER CORNER JOINTS MUST BE LATERALLY RESTRAINED.

1 LATERAL BRACE(S) AT 1/ 2 LENGTH OF C-I, C-G.

END VERTICAL(S) MUST BE SHEATHED OR HAVE BRACES AS INDICATED IN THE MAX. UNBRACED LENGTH COLUMN OF THE TABLE BELOW

LOADING
TOTAL LOAD CASES: (4)

CHORDS

MEMB. FR-TO	MAX. FACTORED FORCE (LBS)	FACTORED VERT. LOAD LC1 (PLF) FROM	TO	MAX CSI (LC)	MAX. UNBRAC LENGTH
A- B	-645 / 0	-78.0	-78.0	0.21 (1)	6.25
B- C	-387 / 0	-78.0	-78.0	0.20 (1)	6.25
C- D	-364 / 0	-78.0	-78.0	0.20 (1)	6.25
D- E	-606 / 0	-78.0	-78.0	0.17 (1)	6.25
J- A	-827 / 0	0.0	0.0	0.10 (1)	7.81
F- E	-833 / 0	0.0	0.0	0.11 (1)	7.81
K- J	0 / 0	-96.5	-96.5	0.16 (1)	10.00
J- I	0 / 0	-18.5	-18.5	0.24 (4)	10.00
I- H	0 / 499	-18.5	-18.5	0.28 (4)	10.00
H- G	0 / 499	-18.5	-18.5	0.28 (4)	10.00
G- F	0 / 0	-18.5	-18.5	0.23 (4)	10.00

WEBS

MEMB. FR-TO	MAX. FACTORED FORCE (LBS)	MAX CSI (LC)
I- B	0 / 205	0.05 (4)
I- C	-223 / 0	0.12 (1)
C- G	-270 / 0	0.15 (1)
G- D	0 / 191	0.05 (4)
A- I	0 / 408	0.09 (1)
G- E	0 / 407	0.09 (1)

DESIGN CRITERIA

SPECIFIED LOADS:

TOP CH.	LL	=	21.0	PSF
	DL	=	6.0	PSF
BOT CH.	LL	=	0.0	PSF
	DL	=	7.4	PSF
TOTAL LOAD		=	34.4	PSF

SPACING = 24.0 IN. C/C

LOADING IN FLAT SECTION BASED ON A SLOPE OF 2.00/12 MINIMUM

THIS TRUSS IS DESIGNED FOR RESIDENTIAL OR SMALL BUILDING REQUIREMENTS OF PART 9, NBCC 2010, NBCC 2015

THIS DESIGN COMPLIES WITH:
- PART 9 OF OBC 2012, OBC 2018
- CSA 086-09, CSA 086-14
- TPIC 2011, TPIC 2014

(55 % OF 23.0 P.S.F. G.S.L. PLUS 8.4 P.S.F. RAIN LOAD) EQUALS 21.0 P.S.F. SPECIFIED ROOF LIVE LOAD

ALLOWABLE DEFL.(LL)= L/360 (0.59")
CALCULATED VERT. DEFL.(LL) = L/ 999 (0.01")
ALLOWABLE DEFL.(TL)= L/360 (0.59")
CALCULATED VERT. DEFL.(TL) = L/ 999 (0.11")

CANTILEVER DEFLECTION:
ALLOWABLE DEFL.(LL)= L/120 (0.19")
CALCULATED VERT. DEFL.(LL) = L/ 999 (0.01")
ALLOWABLE DEFL.(TL)= L/120 (0.19")
CALCULATED VERT. DEFL.(TL) = L/ 999 (0.01")

CSI: TC=0.21/1.00 (A-B:1) , BC=0.28/1.00 (G-I:4) , WB=0.15/1.00 (C-G:1) , SSI=0.17/1.00 (B-C:1)

DOL LUMBER=1.00 NAIL=1.00 LS BEND=1.10 COMP=1.10 SHEAR=1.10 TENS= 1.10

COMPANION LIVE LOAD FACTOR = 1.00

TRUSS PLATE MANUFACTURER IS NOT RESPONSIBLE FOR QUALITY CONTROL IN THE TRUSS MANUFACTURING PLANT .

NAIL VALUES

PLATE	GRIP(DRY) (PSI) MAX	MIN	SHEAR (PLI) MAX	MIN	SECTION (PLI) MAX	MIN
MT20	618	354	1667	788	1987	1656

PLATE PLACEMENT TOL. = 0.250 inches

PLATE ROTATION TOL. = 5.0 Deg.

JSI GRIP= 0.84 (I) (INPUT = 0.90)
JSI METAL= 0.24 (A) (INPUT = 1.00)

A-18023837

JOB NAME	TRUSS NAME	QUANTITY	PLY	JOB DESC.	DRWG NO.
292623	H9	1	1	TRUSS DESC.	

Alpa Roof Truss, Maple

Version 8.200 S Jan 6 2018 MiTek Industries, Inc. Sun Feb 18 17:07:15 2018 Page 1
ID:Rbextx08A5M1Jnp0FfBKG3yNySB-DnU5Ia6P?vLrsanxf5pFi9WDIZQ7wAWkwtjCfAzjs1g

Scale = 1:55.2

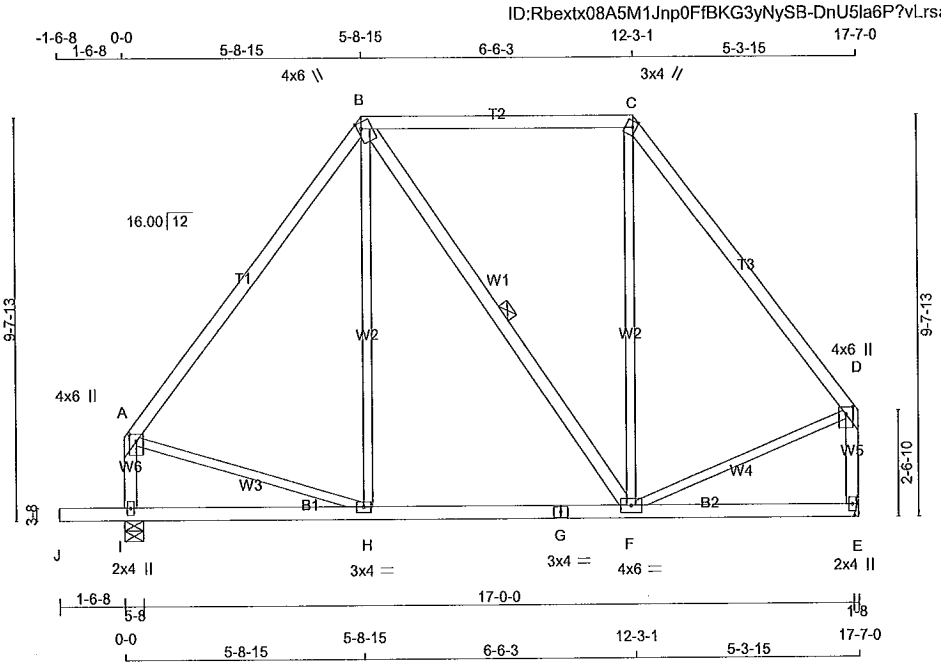

TOTAL WEIGHT = 92 lb

[M][F]

LUMBER
N. L. G. A. RULES

CHORDS	SIZE		LUMBER	DESCR.
A - B	2x4	DRY	No.2	SPF
B - C	2x4	DRY	No.2	SPF
C - D	2x4	DRY	No.2	SPF
I - A	2x4	DRY	No.2	SPF
E - D	2x4	DRY	No.2	SPF
J - G	2x4	DRY	No.2	SPF
G - E	2x4	DRY	No.2	SPF
ALL WEBS EXCEPT	2x3	DRY	No.2	SPF
B - F	2x4	DRY	No.2	SPF

DRY: SEASONED LUMBER.

PLATES (table is in Inches)

JT	TYPE	PLATES	W	LEN	Y	X
A	TMVW+p	MT20	4.0	6.0	2.00	2.00
B	TTWW+m	MT20	4.0	6.0	1.75	1.00
C	TTW+m	MT20	3.0	4.0	1.75	1.00
D	TMVW+p	MT20	4.0	6.0	2.00	2.00
E	BMV1+p	MT20	2.0	4.0		
F	BMWWW-t	MT20	4.0	6.0		
G	BS-t	MT20	3.0	4.0		
H	BMWW-t	MT20	3.0	4.0		
I	BMV1+p	MT20	2.0	4.0		

NOTE: Lateral brace(s) shown shall be 1x4 for Part 9 design as per OBC 9.23.13.11, and no less than 2x4 for Part 4 design

REGISTERED PROFESSIONAL ENGINEER
02/18/2018
EDWIN C. FOK
PROVINCE OF ONTARIO

DIMENSIONS, SUPPORTS AND LOADINGS SPECIFIED BY FABRICATOR TO BE VERIFIED BY BUILDING DESIGNER

BEARINGS

JT	FACTORED GROSS REACTION VERT	HORZ	MAXIMUM FACTORED GROSS REACTION DOWN	HORZ	UPLIFT	INPUT BRG IN-SX	REQRD BRG IN-SX
I	997	0	997	0	0	5-8	1-8
E	848	0	848	0	0	HANGER BY OTHERS	
						MIN. SEAT SIZE: 1-8	

UNFACTORED REACTIONS

JT	1ST LCASE COMBINED	MAX./MIN. COMPONENT REACTIONS SNOW	LIVE	PERM.LIVE	WIND	DEAD	SOIL
I	711	434 / 0	0 / 0	0 / 0	0 / 0	277 / 0	0 / 0
E	605	369 / 0	0 / 0	0 / 0	0 / 0	236 / 0	0 / 0

BEARING MATERIAL TO BE SPF NO.2 OR BETTER AT JOINT(S) I

BRACING
TOP CHORD TO BE SHEATHED OR MAX. PURLIN SPACING = 6.25 FT.
MAX. UNBRACED BOTTOM CHORD LENGTH = 10.00 FT OR RIGID CEILING DIRECTLY APPLIED.

ALL PITCH BREAKS AND PERIMETER CORNER JOINTS MUST BE LATERALLY RESTRAINED.

1 LATERAL BRACE(S) AT 1/ 2 LENGTH OF B-F.

END VERTICAL(S) MUST BE SHEATHED OR HAVE BRACES AS INDICATED IN THE MAX. UNBRACED LENGTH COLUMN OF THE TABLE BELOW

LOADING
TOTAL LOAD CASES: (4)

CHORDS

MEMB. FR-TO	MAX. FACTORED FORCE (LBS)	FACTORED VERT. LOAD (PLF) FROM	TO	LC1 MAX CSI (LC)	MAX. UNBRAC LENGTH
A- B	-602 / 0	-78.0	-78.0	0.35 (1)	6.25
B- C	-346 / 0	-78.0	-78.0	0.42 (1)	6.25
C- D	-578 / 0	-78.0	-78.0	0.30 (1)	6.25
I- A	-805 / 0	0.0	0.0	0.09 (1)	7.81
E- D	-809 / 0	0.0	0.0	0.11 (1)	7.81
J- I	0 / 0	-96.5	-96.5	0.16 (1)	10.00
I- H	0 / 0	-18.5	-18.5	0.16 (4)	10.00
H- G	0 / 360	-18.5	-18.5	0.20 (4)	10.00
G- F	0 / 360	-18.5	-18.5	0.20 (4)	10.00
F- E	0 / 0	-18.5	-18.5	0.14 (4)	10.00

WEBS

MEMB. FR-TO	MAX. FACTORED FORCE (LBS)	MAX CSI (LC)
H- B	0 / 100	0.03 (4)
B- F	-26 / 0	0.02 (1)
F- C	0 / 87	0.03 (4)
A- H	0 / 373	0.08 (1)
F- D	0 / 372	0.08 (1)

DESIGN CRITERIA

SPECIFIED LOADS:

TOP CH.	LL	=	21.0	PSF
	DL	=	6.0	PSF
BOT CH.	LL	=	0.0	PSF
	DL	=	7.4	PSF
TOTAL LOAD		=	34.4	PSF

SPACING = 24.0 IN. C/C

LOADING IN FLAT SECTION BASED ON A SLOPE OF 2.00/12 MINIMUM

THIS TRUSS IS DESIGNED FOR RESIDENTIAL OR SMALL BUILDING REQUIREMENTS OF PART 9, NBCC 2010, NBCC 2015

THIS DESIGN COMPLIES WITH:
- PART 9 OF OBC 2012, OBC 2018
- CSA 086-09, CSA 086-14
- TPIC 2011, TPIC 2014

(55 % OF 23.0 P.S.F. G.S.L. PLUS 8.4 P.S.F. RAIN LOAD) EQUALS 21.0 P.S.F. SPECIFIED ROOF LIVE LOAD

ALLOWABLE DEFL.(LL)= L/360 (0.59")
CALCULATED VERT. DEFL.(LL) = L/ 999 (0.01")
ALLOWABLE DEFL.(TL)= L/360 (0.59")
CALCULATED VERT. DEFL.(TL) = L/ 999 (0.03")

CANTILEVER DEFLECTION:
ALLOWABLE DEFL.(LL)= L/120 (0.19")
CALCULATED VERT. DEFL.(LL) = L/ 999 (0.01")
ALLOWABLE DEFL.(TL)= L/120 (0.19")
CALCULATED VERT. DEFL.(TL) = L/ 999 (0.01")

CSI: TC=0.42/1.00 (B-C:1) , BC=0.20/1.00 (F-H:4) , WB=0.08/1.00 (A-H:1) , SSI=0.20/1.00 (B-C:1)

DOL LUMBER=1.00 NAIL=1.00 LS BEND=1.10 COMP=1.10 SHEAR=1.10 TENS= 1.10

COMPANION LIVE LOAD FACTOR = 1.00

TRUSS PLATE MANUFACTURER IS NOT RESPONSIBLE FOR QUALITY CONTROL IN THE TRUSS MANUFACTURING PLANT .

NAIL VALUES

PLATE	GRIP(DRY) (PSI) MAX	MIN	SHEAR (PLI) MAX	MIN	SECTION (PLI) MAX	MIN
MT20	618	354	1667	788	1987	1656

PLATE PLACEMENT TOL. = 0.250 inches

PLATE ROTATION TOL. = 5.0 Deg.

JSI GRIP= 0.83 (H) (INPUT = 0.90)
JSI METAL= 0.24 (A) (INPUT = 1.00)

A-18023838

JOB NAME	TRUSS NAME	QUANTITY	PLY	JOB DESC.	DRWG NO.
292623	H10	1	1	TRUSS DESC.	

Alpa Roof Truss, Maple

Version 8.200 S Jan 6 2018 MiTek Industries, Inc. Sun Feb 18 17:07:30 2018 Page 1

ID:Rbextx08A5M1Jnp0FfBKG3yNySB-HfumuilpTWEj9uQp1kanpKer1cY7xnBxMirVhpzjs1R

Scale: 3/16"=1"

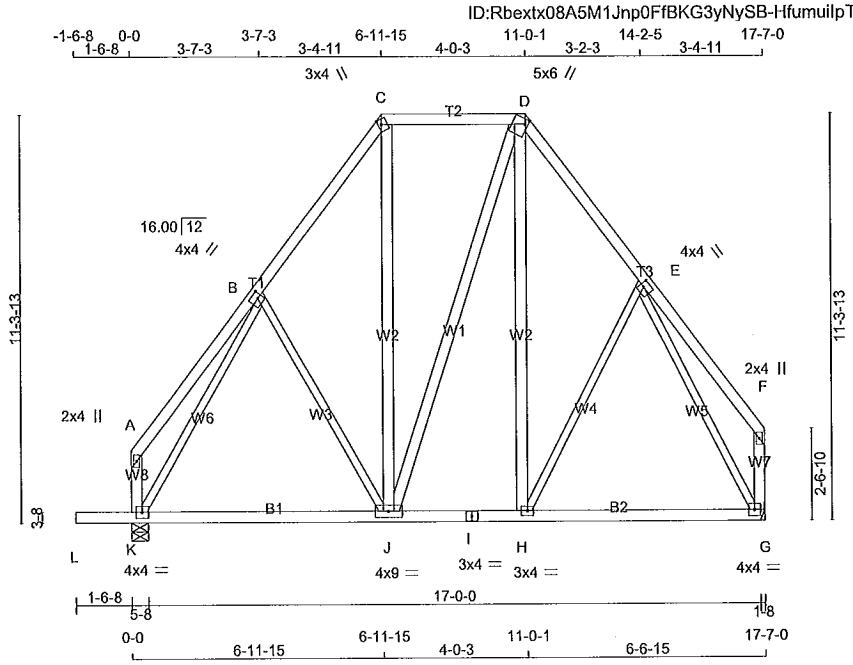

TOTAL WEIGHT = 117 lb

[M][F]

LUMBER

N. L. G. A. RULES

CHORDS	SIZE		LUMBER	DESCR.
A - C	2x4	DRY	No.2	SPF
C - D	2x4	DRY	No.2	SPF
D - F	2x4	DRY	No.2	SPF
K - A	2x4	DRY	No.2	SPF
G - F	2x4	DRY	No.2	SPF
L - I	2x4	DRY	No.2	SPF
I - G	2x4	DRY	No.2	SPF
ALL WEBS EXCEPT	2x4	DRY	No.2	SPF
B - J	2x3	DRY	No.2	SPF
H - E	2x3	DRY	No.2	SPF
K - B	2x3	DRY	No.2	SPF
E - G	2x3	DRY	No.2	SPF

DRY: SEASONED LUMBER.

PLATES (table is in inches)

JT	TYPE	PLATES	W	LEN	Y	X
A	TMV+p	MT20	2.0	4.0		
B	TMWW-t	MT20	4.0	4.0	2.00	1.50
C	TTW+m	MT20	3.0	4.0	1.75	1.00
D	TTWW+m	MT20	5.0	6.0	1.75	1.00
E	TMWW-t	MT20	4.0	4.0	2.00	1.25
F	TMV+p	MT20	2.0	4.0		
G	BMVW1-t	MT20	4.0	4.0		
H	BMWW-t	MT20	3.0	4.0		
I	BS-t	MT20	3.0	4.0		
J	BMWWW-t	MT20	4.0	9.0		
K	BMVW1-t	MT20	4.0	4.0		

NOTE: Lateral brace(s) shown shall be 1x4 for Part 9 design as per OBC 9.23.13.11, and no less than 2x4 for Part 4 design

REGISTERED PROFESSIONAL ENGINEER
02/18/2018
EDWIN C. FOK
PROVINCE OF ONTARIO

DIMENSIONS, SUPPORTS AND LOADINGS SPECIFIED BY FABRICATOR TO BE VERIFIED BY BUILDING DESIGNER

BEARINGS

JT	FACTORED GROSS REACTION VERT	HORZ	MAXIMUM FACTORED GROSS REACTION DOWN	HORZ	UPLIFT	INPUT BRG IN-SX	REQRD BRG IN-SX
K	997	0	997	0	0	5-8	1-8
G	848	0	848	0	0	HANGER BY OTHERS	
						MIN. SEAT SIZE: 1-8	

UNFACTORED REACTIONS

JT	1ST LCASE COMBINED	MAX./MIN. COMPONENT REACTIONS SNOW	LIVE	PERM.LIVE	WIND	DEAD	SOIL
K	711	434 / 0	0 / 0	0 / 0	0 / 0	277 / 0	0 / 0
G	605	369 / 0	0 / 0	0 / 0	0 / 0	236 / 0	0 / 0

BEARING MATERIAL TO BE SPF NO.2 OR BETTER AT JOINT(S) K

BRACING

TOP CHORD TO BE SHEATHED OR MAX. PURLIN SPACING = 6.25 FT.
MAX. UNBRACED BOTTOM CHORD LENGTH = 10.00 FT OR RIGID CEILING DIRECTLY APPLIED.

ALL PITCH BREAKS AND PERIMETER CORNER JOINTS MUST BE LATERALLY RESTRAINED.

LOADING

TOTAL LOAD CASES: (4)

CHORDS

MEMB. FR-TO	MAX. FACTORED FORCE (LBS)	FACTORED VERT. LOAD (PLF) FROM	TO	LC1	MAX CSI (LC)	MAX. UNBRAC LENGTH
A- B	0 / 26	-78.0	-78.0	0.15 (1)	10.00	
B- C	-579 / 0	-78.0	-78.0	0.12 (1)	6.25	
C- D	-332 / 0	-78.0	-78.0	0.16 (1)	6.25	
D- E	-563 / 0	-78.0	-78.0	0.11 (1)	6.25	
E- F	0 / 24	-78.0	-78.0	0.14 (1)	10.00	
K- A	-102 / 0	0.0	0.0	0.01 (1)	7.81	
G- F	-95 / 0	0.0	0.0	0.01 (1)	7.81	
L- K	0 / 0	-96.5	-96.5	0.16 (1)	10.00	
K- J	0 / 384	-18.5	-18.5	0.23 (4)	10.00	
J- I	0 / 324	-18.5	-18.5	0.21 (4)	10.00	
I- H	0 / 324	-18.5	-18.5	0.21 (4)	10.00	
H- G	0 / 349	-18.5	-18.5	0.21 (4)	10.00	

WEBS

MEMB. FR-TO	MAX. FACTORED FORCE (LBS)	MAX CSI (LC)
B- J	-104 / 0	0.11 (1)
J- C	0 / 180	0.03 (4)
J- D	0 / 25	0.00 (1)
H- D	0 / 151	0.03 (4)
H- E	-57 / 10	0.06 (1)
K- B	-790 / 0	0.76 (1)
E- G	-782 / 0	0.79 (1)

DESIGN CRITERIA

SPECIFIED LOADS:

TOP CH.	LL	=	21.0	PSF
	DL	=	6.0	PSF
BOT CH.	LL	=	0.0	PSF
	DL	=	7.4	PSF
TOTAL LOAD		=	34.4	PSF

SPACING = 24.0 IN. C/C

LOADING IN FLAT SECTION BASED ON A SLOPE OF 2.00/12 MINIMUM

THIS TRUSS IS DESIGNED FOR RESIDENTIAL OR SMALL BUILDING REQUIREMENTS OF PART 9, NBCC 2010, NBCC 2015

THIS DESIGN COMPLIES WITH:
- PART 9 OF OBC 2012, OBC 2018
- CSA 086-09, CSA 086-14
- TPIC 2011, TPIC 2014

(55 % OF 23.0 P.S.F. G.S.L. PLUS 8.4 P.S.F. RAIN LOAD) EQUALS 21.0 P.S.F. SPECIFIED ROOF LIVE LOAD

ALLOWABLE DEFL.(LL)= L/360 (0.59")
CALCULATED VERT. DEFL.(LL) = L/ 999 (0.01")
ALLOWABLE DEFL.(TL)= L/360 (0.59")
CALCULATED VERT. DEFL.(TL) = L/ 999 (0.08")

CANTILEVER DEFLECTION:
ALLOWABLE DEFL.(LL)= L/120 (0.19")
CALCULATED VERT. DEFL.(LL) = L/ 999 (0.01")
ALLOWABLE DEFL.(TL)= L/120 (0.19")
CALCULATED VERT. DEFL.(TL) = L/ 999 (0.01")

CSI: TC=0.16/1.00 (C-D:1) , BC=0.23/1.00 (J-K:4) , WB=0.79/1.00 (E-G:1) , SSI=0.12/1.00 (C-D:1)

DOL LUMBER=1.00 NAIL=1.00 LS BEND=1.10 COMP=1.10 SHEAR=1.10 TENS= 1.10

COMPANION LIVE LOAD FACTOR = 1.00

TRUSS PLATE MANUFACTURER IS NOT RESPONSIBLE FOR QUALITY CONTROL IN THE TRUSS MANUFACTURING PLANT .

NAIL VALUES

PLATE	GRIP(DRY) (PSI) MAX	MIN	SHEAR (PLI) MAX	MIN	SECTION (PLI) MAX	MIN
MT20	618	354	1667	788	1987	1656

PLATE PLACEMENT TOL. = 0.250 inches

PLATE ROTATION TOL. = 5.0 Deg.

JSI GRIP= 0.85 (H) (INPUT = 0.90)
JSI METAL= 0.31 (B) (INPUT = 1.00)

A-18023839

JOB NAME	TRUSS NAME	QUANTITY	PLY	JOB DESC.	DRWG NO.
292623	L1	11	1	TRUSS DESC.	

Alpa Roof Truss, Maple

Version 8.200 S Jan 6 2018 MiTek Industries, Inc. Sun Feb 18 17:12:14 2018 Page 1

ID:Rbextx08A5M1Jnp0FfBKG3yNySB-zI28Vpkybn0QEX7PgOgNKCPMT5MsUKLIgueWgLzjrz?

Scale = 1:22.0

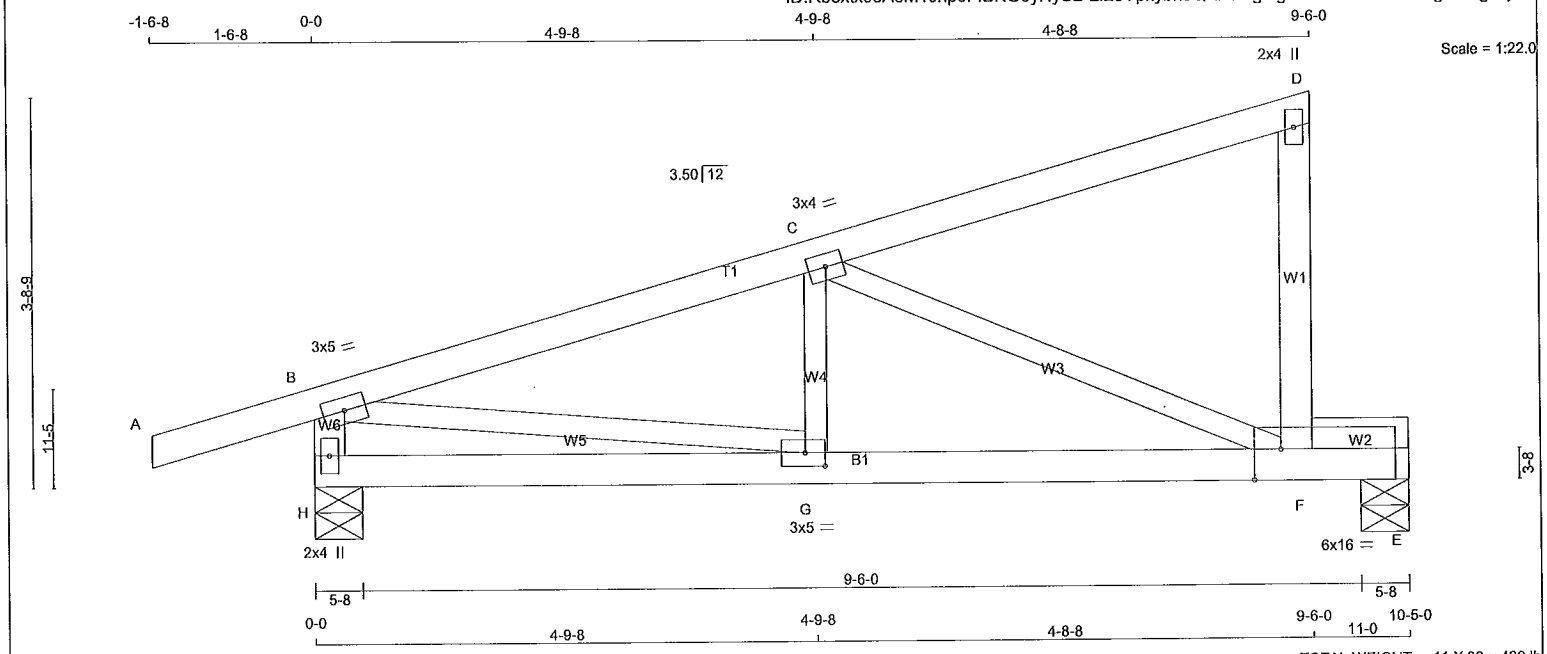

TOTAL WEIGHT = 11 X 39 = 429 lb

[M][F]

LUMBER

N. L. G. A. RULES

CHORDS	SIZE		LUMBER	DESCR.
A - D	2x4	DRY	No.2	SPF
F - D	2x4	DRY	No.2	SPF
H - B	2x4	DRY	No.2	SPF
H - E	2x4	DRY	No.2	SPF
F - E	2x4	DRY	No.2	SPF
ALL WEBS EXCEPT	2x3	DRY	No.2	SPF

DRY: SEASONED LUMBER.

PLATES (table is in inches)

JT	TYPE	PLATES	W	LEN	Y	X
B	TMVW-t	MT20	3.0	5.0		
C	TMWW-t	MT20	3.0	4.0		
D	TMV+p	MT20	2.0	4.0		
F	BMVWW-t	MT20	6.0	16.0	Edge	3.00
G	BMWW-t	MT20	3.0	5.0	1.50	2.25
H	BMV1+p	MT20	2.0	4.0		

Edge - INDICATES REFERENCE CORNER OF PLATE TOUCHES EDGE OF CHORD.

NOTE: Lateral brace(s) shown shall be 1x4 for Part 9 design as per OBC 9.23.13.11, and no less than 2x4 for Part 4 design

REGISTERED PROFESSIONAL ENGINEER
02/18/2018
EDWIN C. FOK
PROVINCE OF ONTARIO

DIMENSIONS, SUPPORTS AND LOADINGS SPECIFIED BY FABRICATOR TO BE VERIFIED BY BUILDING DESIGNER

BEARINGS

JT	FACTORED GROSS REACTION VERT	HORZ	MAXIMUM FACTORED GROSS REACTION DOWN	HORZ	UPLIFT	INPUT BRG IN-SX	REQRD BRG IN-SX
H	623	0	623	0	0	5-8	1-8
E	434	0	434	0	0	5-8	1-8

UNFACTORED REACTIONS

JT	1ST LCASE COMBINED	MAX./MIN. COMPONENT REACTIONS SNOW	LIVE	PERM.LIVE	WIND	DEAD	SOIL
H	441	283 / 0	0 / 0	0 / 0	0 / 0	158 / 0	0 / 0
E	311	182 / 0	0 / 0	0 / 0	0 / 0	129 / 0	0 / 0

BEARING MATERIAL TO BE SPF NO.2 OR BETTER AT JOINT(S) H, E

BRACING

TOP CHORD TO BE SHEATHED OR MAX. PURLIN SPACING = 6.25 FT.
MAX. UNBRACED BOTTOM CHORD LENGTH = 10.00 FT OR RIGID CEILING DIRECTLY APPLIED.

ALL PITCH BREAKS AND PERIMETER CORNER JOINTS MUST BE LATERALLY RESTRAINED.

LOADING

TOTAL LOAD CASES: (4)

CHORDS

MEMB. FR-TO	MAX. FACTORED FORCE (LBS)	FACTORED VERT. LOAD (PLF) FROM	TO	LC1 MAX CSI (LC)	MAX. UNBRAC LENGTH
A- B	0 / 17	-78.0	-78.0	0.14 (1)	10.00
B- C	-810 / 0	-78.0	-78.0	0.22 (1)	6.25
C- D	-12 / 0	-78.0	-78.0	0.21 (1)	6.25
F- D	-141 / 0	0.0	0.0	0.03 (1)	7.81
H- B	-605 / 0	0.0	0.0	0.06 (1)	7.81
H- G	0 / 0	-18.5	-18.5	0.18 (4)	10.00
G- F	0 / 789	-18.5	-18.5	0.66 (1)	10.00
F- E	0 / 0	-18.5	-18.5	0.22 (1)	10.00

WEBS

MEMB. FR-TO	MAX. FACTORED FORCE (LBS)	MAX CSI (LC)
G- C	0 / 127	0.04 (4)
C- F	-860 / 0	0.35 (1)
B- G	0 / 796	0.18 (1)

DESIGN CRITERIA

SPECIFIED LOADS:

TOP CH.	LL	=	21.0	PSF
	DL	=	6.0	PSF
BOT CH.	LL	=	0.0	PSF
	DL	=	7.4	PSF
TOTAL LOAD		=	34.4	PSF

SPACING = 24.0 IN. C/C

THIS TRUSS IS DESIGNED FOR RESIDENTIAL OR SMALL BUILDING REQUIREMENTS OF PART 9, NBCC 2010, NBCC 2015

THIS DESIGN COMPLIES WITH:
- PART 9 OF OBC 2012, OBC 2018
- CSA 086-09, CSA 086-14
- TPIC 2011, TPIC 2014

(55 % OF 23.0 P.S.F. G.S.L. PLUS 8.4 P.S.F. RAIN LOAD) EQUALS 21.0 P.S.F. SPECIFIED ROOF LIVE LOAD

ALLOWABLE DEFL.(LL)= L/360 (0.35")
CALCULATED VERT. DEFL.(LL) = L/ 999 (0.09")
ALLOWABLE DEFL.(TL)= L/360 (0.35")
CALCULATED VERT. DEFL.(TL) = L/ 616 (0.20")

CSI: TC=0.22/1.00 (B-C:1) , BC=0.66/1.00 (F-G:1) , WB=0.35/1.00 (C-F:1) , SSI=0.17/1.00 (B-C:1)

DOL LUMBER=1.00 NAIL=1.00 LS BEND=1.10 COMP=1.10 SHEAR=1.10 TENS= 1.10

COMPANION LIVE LOAD FACTOR = 1.00

AUTOSOLVE RIGHT HEEL ONLY

TRUSS PLATE MANUFACTURER IS NOT RESPONSIBLE FOR QUALITY CONTROL IN THE TRUSS MANUFACTURING PLANT .

NAIL VALUES

PLATE	GRIP(DRY) (PSI) MAX	MIN	SHEAR (PLI) MAX	MIN	SECTION (PLI) MAX	MIN
MT20	618	354	1667	788	1987	1656

PLATE PLACEMENT TOL. = 0.250 inches

PLATE ROTATION TOL. = 5.0 Deg.

JSI GRIP= 0.85 (C) (INPUT = 0.90)
JSI METAL= 0.27 (B) (INPUT = 1.00)

A-18023849

JOB NAME	TRUSS NAME	QUANTITY	PLY	JOB DESC.	DRWG NO.
292624	H1T	1	1	TRUSS DESC.	

Alpa Roof Truss, Maple

Version 8.200 S Jan 6 2018 MiTek Industries, Inc. Mon Feb 19 08:26:40 2018 Page 1

ID:Rbextx08A5M1Jnp0FfBKG3yNySB-WcGlgPjTZMZZZGWCoE?f?LnQav_rgNOY5yGnMEzjeZj

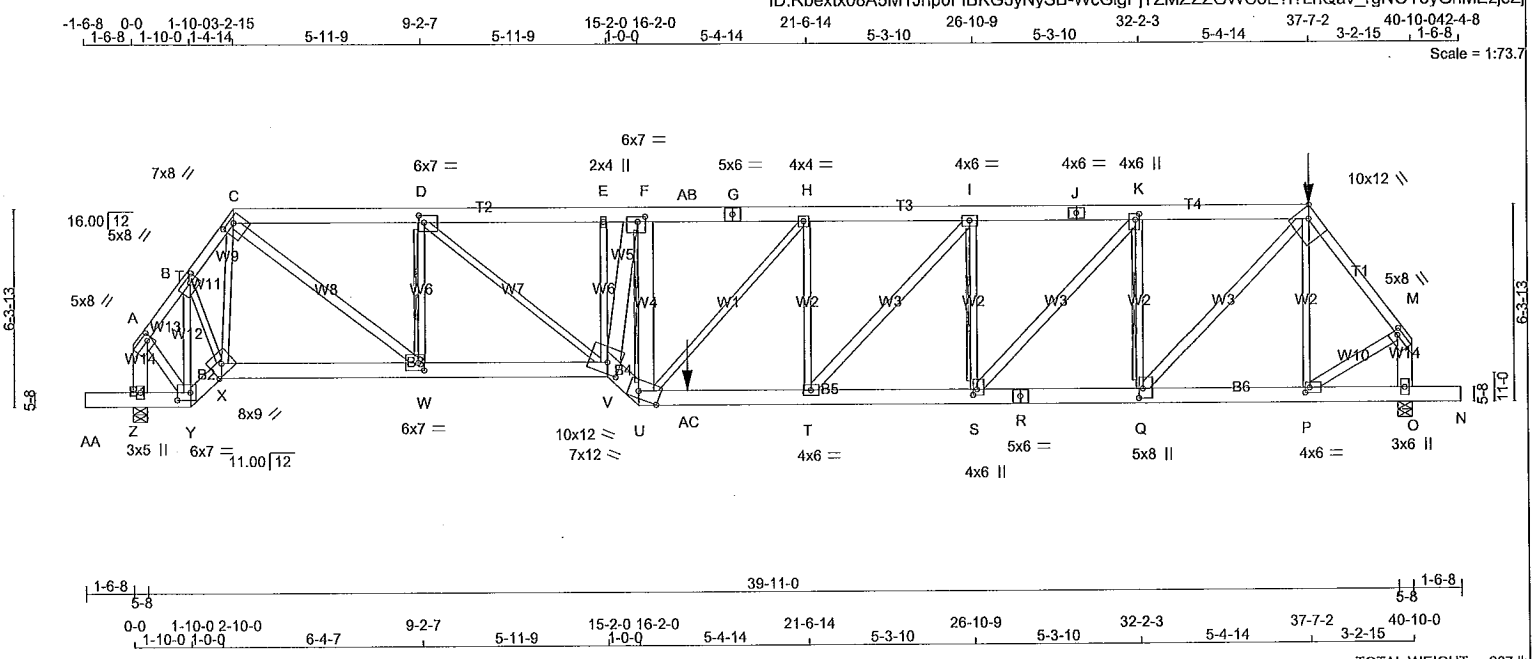

LUMBER

N. L. G. A. RULES

CHORDS	SIZE		LUMBER	DESCR.
A - C	2x4	DRY	No.2	SPF
C - G	2x6	DRY	No.2	SPF
G - J	2x6	DRY	No.2	SPF
J - L	2x6	DRY	No.2	SPF
L - M	2x4	DRY	No.2	SPF
Z - A	2x6	DRY	No.2	SPF
O - M	2x6	DRY	No.2	SPF
AA- Y	2x6	DRY	No.2	SPF
Y - X	2x6	DRY	No.2	SPF
X - V	2x6	DRY	No.2	SPF
V - U	2x8	DRY	1950F 1.7E	SPF
U - R	2x6	DRY	2100F 1.8E	SPF
R - N	2x6	DRY	2100F 1.8E	SPF
ALL WEBS	2x3	DRY	No.2	SPF
EXCEPT				
C - W	2x4	DRY	No.2	SPF
V - F	2x6	DRY	No.2	SPF
U - F	2x6	DRY	No.2	SPF
T - I	2x4	DRY	No.2	SPF
S - K	2x4	DRY	No.2	SPF
Q - L	2x4	DRY	No.2	SPF
A - Y	2x4	DRY	No.2	SPF
P - M	2x4	DRY	No.2	SPF

DRY: SEASONED LUMBER.

PLATES (table is in inches)

JT	TYPE	PLATES	W	LEN	Y	X
A	TMVW-t	MT20	5.0	8.0	2.25	2.00
B	TMWW-t	MT20	5.0	8.0	2.00	3.25
C	TTWW-h	MT20	7.0	8.0	1.75	4.25
D	TMWW-t	MT20	6.0	7.0	2.75	2.00
E	TMW+w	MT20	2.0	4.0		
F	TMWW-t	MT20	6.0	7.0	2.00	2.75
G	TS-t	MT20	5.0	6.0		
H	TMWW-t	MT20	4.0	4.0		
I	TMWW-t	MT20	4.0	6.0		
J	TS-t	MT20	4.0	6.0		
K	TMWW+t	MT20	4.0	6.0	2.25	1.50
L	TTWW-h	MT20	10.0	12.0	3.25	4.25

NOTE: Lateral brace(s) shown shall be 1x4 for Part 9 design as per OBC 9.23.13.11, and no less than 2x4 for Part 4 design

REGISTERED PROFESSIONAL ENGINEER
02/19/2018
EDWIN C. FOK
PROVINCE OF ONTARIO

DIMENSIONS, SUPPORTS AND LOADINGS SPECIFIED BY FABRICATOR TO BE VERIFIED BY BUILDING DESIGNER

BEARINGS

JT	FACTORED GROSS REACTION VERT	HORZ	MAXIMUM FACTORED GROSS REACTION DOWN	HORZ	UPLIFT	INPUT BRG IN-SX	REQRD BRG IN-SX
Z	3473	0	3473	0	0	5-8	5-8
O	4155	0	4155	0	0	5-8	5-4

UNFACTORED REACTIONS

JT	1ST LCASE COMBINED	MAX./MIN. COMPONENT REACTIONS SNOW	LIVE	PERM.LIVE	WIND	DEAD	SOIL
Z	2463	1579 / 0	0 / 0	0 / 0	0 / 0	884 / 0	0 / 0
O	2954	1852 / 0	0 / 0	0 / 0	0 / 0	1102 / 0	0 / 0

BEARING MATERIAL TO BE SPF NO.2 OR BETTER AT JOINT(S) Z, O
BEARING SIZE FACTOR = 1.15 AT JNT(S) O (BASED ON SUPPORT DEPTH = 1-8)

BRACING

TOP CHORD TO BE SHEATHED OR MAX. PURLIN SPACING = 2.55 FT.
MAX. UNBRACED BOTTOM CHORD LENGTH = 10.00 FT OR RIGID CEILING DIRECTLY APPLIED.

ALL PITCH BREAKS AND PERIMETER CORNER JOINTS MUST BE LATERALLY RESTRAINED.

2x4 DRY SPF No.2 T-BRACE AT D-W, F-U, I-S, K-Q

FASTEN T AND I-BRACES TO NARROW EDGE OF WEB WITH ONE ROW PER PLY OF 3" COMMON WIRE NAILS @ 6" O.C. WITH 3" MINIMUM END DISTANCE. BRACE MUST COVER 90% OF WEB LENGTH.

END VERTICAL(S) MUST BE SHEATHED OR HAVE BRACES AS INDICATED IN THE MAX. UNBRACED LENGTH COLUMN OF THE TABLE BELOW

LOADING

TOTAL LOAD CASES: (4)

CHORDS

MEMB. FR-TO	MAX. FACTORED FORCE (LBS)	FACTORED VERT. LOAD LC1 (PLF) FROM	TO	MAX CSI (LC)	MAX. UNBRAC LENGTH
A- B	-2473 / 0	-78.0	-78.0	0.13 (1)	4.25
B- C	-3416 / 0	-78.0	-78.0	0.19 (1)	3.64
C- D	-5416 / 0	-78.0	-78.0	0.48 (1)	3.39
D- E	-8045 / 0	-78.0	-78.0	0.78 (1)	2.55
E- F	-8048 / 0	-78.0	-78.0	0.63 (1)	2.62
F-AB	-7166 / 0	-78.0	-78.0	0.64 (1)	2.81
AB- G	-7166 / 0	-153.5	-153.5	0.64 (1)	2.81
G- H	-7166 / 0	-153.5	-153.5	0.64 (1)	2.81
H- I	-7520 / 0	-153.5	-153.5	0.69 (1)	2.70
I- J	-6593 / 0	-153.5	-153.5	0.66 (1)	2.89
J- K	-6593 / 0	-153.5	-153.5	0.66 (1)	2.89
K- L	-4909 / 0	-153.5	-153.5	0.51 (1)	3.49
L- M	-3586 / 0	-78.0	-78.0	0.42 (1)	3.39
Z- A	-3245 / 0	0.0	0.0	0.26 (1)	5.84
O- M	-3975 / 0	0.0	0.0	0.32 (1)	5.33
AA- Z	0 / 0	-96.5	-96.5	0.08 (1)	10.00
Z- Y	-1 / 0	-18.5	-18.5	0.08 (1)	10.00
Y- X	0 / 1916	-18.5	-18.5	0.25 (1)	10.00
X- W	0 / 2070	-18.5	-18.5	0.32 (1)	10.00
W- V	0 / 5417	-18.5	-18.5	0.75 (1)	10.00
V- U	0 / 9455	-18.5	-18.5	0.43 (1)	10.00
U-AC	0 / 7524	-18.5	-18.5	0.92 (1)	10.00
AC- T	0 / 7524	-36.4	-36.4	0.92 (1)	10.00
T- S	0 / 6593	-36.4	-36.4	0.52 (1)	10.00
S- R	0 / 4909	-36.4	-36.4	0.32 (1)	10.00
R- Q	0 / 4909	-36.4	-36.4	0.32 (1)	10.00
Q- P	0 / 2136	-36.4	-36.4	0.15 (1)	10.00
P- O	0 / 0	-36.4	-36.4	0.05 (4)	10.00

WEBS

MEMB. FR-TO	MAX. FACTORED FORCE (LBS)	MAX CSI (LC)
Y- B	-2530 / 0	0.67 (1)
B- X	0 / 1766	0.44 (1)
X- C	-282 / 0	0.11 (1)
C- W	0 / 4344	0.77 (1)
W- D	-2732 / 0	0.61 (1)
D- V	0 / 3389	0.84 (1)
V- E	0 / 130	0.03 (1)
V- F	0 / 4390	0.57 (1)
U- F	-4941 / 0	0.75 (1)
U- H	-517 / 0	0.60 (1)
T- H	-439 / 10	0.25 (1)
T- I	0 / 1381	0.24 (1)
S- I	-1804 / 0	0.49 (1)
S- K	0 / 2509	0.44 (1)
Q- K	-2777 / 0	0.76 (1)
Q- L	0 / 4086	0.72 (1)
P- L	-787 / 0	0.45 (1)
A- Y	0 / 1906	0.34 (1)
P- M	0 / 2362	0.42 (1)

[M]

DESIGN CRITERIA

*** SPECIAL LOADS ANALYSIS ***
GEOMETRY AND/OR BASIC LOADS CHANGED BY USER.
LOADS WERE DERIVED FROM USER INPUT
NO FURTHER MODIFICATIONS WERE MADE

SPECIFIED LOADS:

TOP CH.	LL	=	21.0	PSF
	DL	=	6.0	PSF
BOT CH.	LL	=	0.0	PSF
	DL	=	7.4	PSF
TOTAL LOAD		=	34.4	PSF

SPACING = 24.0 IN. C/C

LOADING IN FLAT SECTION BASED ON A SLOPE OF 2.00/12 MINIMUM

GIRDER TYPE: CPrimeHip
SIDE SETBACK = 3-2-15
END SETBACK = 5-10-8
END WALL WIDTH = 0-0
CORNER FRAMING TYPE: CONVENTIONAL
END JACK TYPE: CONVENTIONAL
APPLIED TO FRONT SIDE
- ADDT'L LOADS BASED ON 55 % OF GSL.
LOADS APPLIED TO FIRST 23-3-0 OF SPAN MEASURED FROM THE RIGHT.

*** NON STANDARD GIRDER ***
ADDT'L USER-DEFINED LOADS APPLIED TO ALL LOAD CASES.

THIS TRUSS IS DESIGNED FOR RESIDENTIAL OR SMALL BUILDING REQUIREMENTS OF PART 9, NBCC 2010, NBCC 2015

THIS DESIGN COMPLIES WITH:
- PART 9 OF OBC 2012, OBC 2018
- CSA 086-09, CSA 086-14
- TPIC 2011, TPIC 2014

DESIGN ASSUMPTIONS
-OVERHANG NOT TO BE ALTERED OR CUT OFF.

(55 % OF 23.0 P.S.F. G.S.L. PLUS 8.4 P.S.F. RAIN LOAD) EQUALS 21.0 P.S.F. SPECIFIED ROOF LIVE LOAD

ALLOWABLE DEFL.(LL)= L/360 (1.36")
CALCULATED VERT. DEFL.(LL) = L/ 999 (0.42")
ALLOWABLE DEFL.(TL)= L/360 (1.36")
CALCULATED VERT. DEFL.(TL) = L/ 626 (0.78")

CANTILEVER DEFLECTION:
ALLOWABLE DEFL.(LL)= L/120 (0.19")
CALCULATED VERT. DEFL.(LL) = L/ 525 (0.04")
ALLOWABLE DEFL.(TL)= L/120 (0.19")
CALCULATED VERT. DEFL.(TL) = L/ 280 (0.07")

CSI: TC=0.78/1.00 (D-E:1) , BC=0.92/1.00 (T-U:1) , WB=0.84/1.00 (D-V:1) , SSI=0.62/1.00 (T-U:1)

DOL LUMBER=1.00 NAIL=1.00 LS BEND=1.00 COMP=1.00 SHEAR=1.00 TENS= 1.00

A-18023850

CONTINUED ON PAGE 2

JOB NAME	TRUSS NAME	QUANTITY	PLY	JOB DESC.	DRWG NO.
292624	H1T	1	1	TRUSS DESC.	

PLATES (table is in Inches)

JT	TYPE	PLATES	W	LEN	Y	X
M	TMVW-t	MT20	5.0	8.0	2.00	2.00
O	BMV1+p	MT20	3.0	6.0		
P	BMWW-t	MT20	4.0	6.0	2.00	1.75
Q	BMWW+t	MT20	5.0	8.0	3.75	1.50
R	BS-t	MT20	5.0	6.0		
S	BMWW+t	MT20	4.0	6.0	2.25	1.50
T	BMWW-t	MT20	4.0	6.0		
U	BBWW-m	MT20	7.0	12.0	Edge	8.00
V	BBWWW-m	MT20	10.0	12.0	4.25	5.00
W	BMWW-t	MT20	6.0	7.0	2.75	2.25
X	BBWW-h	MT20	8.0	9.0	3.75	4.50
Y	BBWW-l	MT20	6.0	7.0	3.00	5.00
Z	BMV1+p	MT20	3.0	5.0		

Edge - INDICATES REFERENCE CORNER OF PLATE TOUCHES EDGE OF CHORD.

HANGERS NOTES

1) SPECIAL HANGER(S) OR CONNECTION(S) REQUIRED TO SUPPORT CONCENTRATED LOAD(S) 184.5 lbs FACTORED DOWN AT 37-7-2 ON TOP CHORD, AND 1279.7 lbs FACTORED DOWN AT 17-8-8 ON BOTTOM CHORD. DESIGN FOR UNSPECIFIED CONNECTION(S) IS DELEGATED TO THE BUILDING DESIGNER.

NOTE: Lateral brace(s) shown shall be 1x4 for Part 9 design as per OBC 9.23.13.11, and no less than 2x4 for Part 4 design

REGISTERED PROFESSIONAL ENGINEER
02/19/2018
EDWIN C. FOK
PROVINCE OF ONTARIO

LOADING

TOTAL LOAD CASES: (4)

CHORDS

MEMB.	MAX. FORCE (LBS)	FACTORED VERT. LOAD (PLF)	LC1	MAX CSI (LC)	MAX. UNBRAC LENGTH	MEMB. FR-TO
O- N	0 / 0	FROM -96.5	TO -96.5	0.05 (1)	10.00	

WEBS

MEMB.	MAX. FORCE (LBS)	MAX CSI (LC)

FACTORED CONCENTRATED LOADS (LBS)

JT	LOC.	LC1	MAX-	MAX+	FACE	DIR.	TYPE
L	37-7-2	-184	-184	---	FRONT	VERT	TOTAL
AC	17-8-8	-1280	-1280	---	FRONT	VERT	TOTAL

COMPANION LIVE LOAD FACTOR = 1.00

AUTOSOLVE HEELS OFF

TRUSS PLATE MANUFACTURER IS NOT RESPONSIBLE FOR QUALITY CONTROL IN THE TRUSS MANUFACTURING PLANT .

NAIL VALUES

PLATE	GRIP(DRY) (PSI) MAX	MIN	SHEAR (PLI) MAX	MIN	SECTION (PLI) MAX	MIN
MT20	618	354	1667	788	1987	1656

PLATE PLACEMENT TOL. = 0.250 Inches

PLATE ROTATION TOL. = 5.0 Deg.

JSI GRIP= 0.90 (K) (INPUT = 0.90)
JSI METAL= 1.00 (Q) (INPUT = 1.00)

A-18023850(2)

JOB NAME	TRUSS NAME	QUANTITY	PLY	JOB DESC.	DRWG NO.
292624	H2T	1	1	TRUSS DESC.	

Alpa Roof Truss, Maple

Version 8.200 S Jan 6 2018 MiTek Industries, Inc. Mon Feb 19 08:26:56 2018 Page 1

ID:Rbextx08A5M1Jnp0FfBKG3yNySB-2hEo1tvWoGaIUjkHkbIPfjS9MMYmQduumS8dwlzjeZT

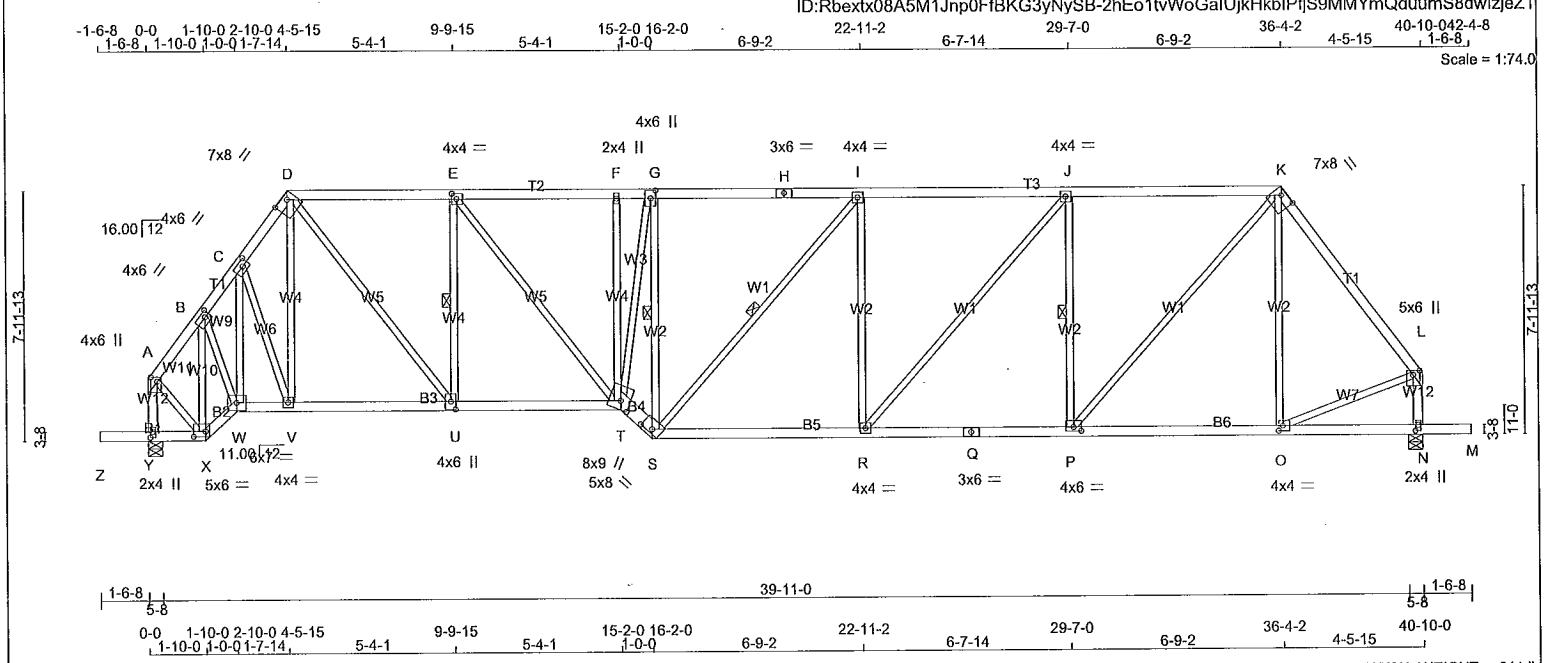

TOTAL WEIGHT = 211 lb

LUMBER

N. L. G. A. RULES

CHORDS	SIZE		LUMBER	DESCR.
A - D	2x4	DRY	No.2	SPF
D - H	2x4	DRY	No.2	SPF
H - K	2x4	DRY	No.2	SPF
K - L	2x4	DRY	No.2	SPF
Y - A	2x4	DRY	No.2	SPF
N - L	2x4	DRY	No.2	SPF
Z - X	2x4	DRY	No.2	SPF
X - W	2x4	DRY	No.2	SPF
W - T	2x4	DRY	No.2	SPF
T - S	2x6	DRY	No.2	SPF
S - Q	2x4	DRY	No.2	SPF
Q - M	2x4	DRY	No.2	SPF
ALL WEBS EXCEPT	2x3	DRY	No.2	SPF

DRY: SEASONED LUMBER.

PLATES (table is in inches)

JT	TYPE	PLATES	W	LEN	Y	X
A	TMVW+p	MT20	4.0	6.0	1.75	2.50
B	TMWW-t	MT20	4.0	6.0	1.75	2.00
C	TMWW-t	MT20	4.0	6.0	2.00	2.50
D	TTWW-h	MT20	7.0	8.0	1.75	5.00
E	TMWW-t	MT20	4.0	4.0	2.00	1.75
F	TMW+w	MT20	2.0	4.0		
G	TMWW+t	MT20	4.0	6.0	3.00	1.75
H	TS-t	MT20	3.0	6.0		
I	TMWW-t	MT20	4.0	4.0		
J	TMWW-t	MT20	4.0	4.0		
K	TTWW-h	MT20	7.0	8.0	1.75	5.00
L	TMVW+p	MT20	5.0	6.0	1.75	2.50
N	BMV1+p	MT20	2.0	4.0	2.25	1.00
O	BMWW-t	MT20	4.0	4.0	2.00	1.50
P	BMWW-t	MT20	4.0	6.0	1.50	3.00
Q	BS-t	MT20	3.0	6.0		
R	BMWW-t	MT20	4.0	4.0		
S	BBWW-h	MT20	5.0	8.0	1.50	4.50
T	BBWWW+m	MT20	8.0	9.0	3.25	3.50
U	BMWW+t	MT20	4.0	6.0	3.00	1.75
V	BMWW-t	MT20	4.0	4.0		

NOTE: Lateral brace(s) shown shall be 1x4 for Part 9 design as per OBC 9.23.13.11, and no less than 2x4 for Part 4 design

REGISTERED PROFESSIONAL ENGINEER
02/19/2018
EDWIN C. FOK
PROVINCE OF ONTARIO

DIMENSIONS, SUPPORTS AND LOADINGS SPECIFIED BY FABRICATOR TO BE VERIFIED BY BUILDING DESIGNER

BEARINGS

JT	FACTORED GROSS REACTION VERT	HORZ	MAXIMUM FACTORED GROSS REACTION DOWN	HORZ	UPLIFT	INPUT BRG IN-SX	REQRD BRG IN-SX
Y	2121	0	2121	0	0	5-8	3-4
N	2115	0	2115	0	0	5-8	3-3

UNFACTORED REACTIONS

JT	1ST LCASE COMBINED	MAX./MIN. COMPONENT REACTIONS SNOW	LIVE	PERM.LIVE	WIND	DEAD	SOIL
Y	1512	923 / 0	0 / 0	0 / 0	0 / 0	589 / 0	0 / 0
N	1508	921 / 0	0 / 0	0 / 0	0 / 0	588 / 0	0 / 0

BEARING MATERIAL TO BE SPF NO.2 OR BETTER AT JOINT(S) Y, N

BRACING

TOP CHORD TO BE SHEATHED OR MAX. PURLIN SPACING = 3.52 FT.
MAX. UNBRACED BOTTOM CHORD LENGTH = 10.00 FT OR RIGID CEILING DIRECTLY APPLIED.

ALL PITCH BREAKS AND PERIMETER CORNER JOINTS MUST BE LATERALLY RESTRAINED.

1 LATERAL BRACE(S) AT 1/ 2 LENGTH OF E-U, G-S, I-S, J-P.

END VERTICAL(S) MUST BE SHEATHED OR HAVE BRACES AS INDICATED IN THE MAX. UNBRACED LENGTH COLUMN OF THE TABLE BELOW

LOADING

TOTAL LOAD CASES: (4)

CHORDS

MEMB. FR-TO	MAX. FACTORED FORCE (LBS)	FACTORED VERT. LOAD (PLF) FROM	TO	LC1	MAX CSI (LC)	MAX. UNBRAC LENGTH
A- B	-1386 / 0	-78.0	-78.0	0.06 (1)	5.49	
B- C	-1913 / 0	-78.0	-78.0	0.06 (1)	4.84	
C- D	-1961 / 0	-78.0	-78.0	0.08 (1)	4.77	
D- E	-2200 / 0	-78.0	-78.0	0.47 (1)	4.13	
E- F	-2802 / 0	-78.0	-78.0	0.53 (1)	3.67	
F- G	-2801 / 0	-78.0	-78.0	0.45 (1)	3.65	
G- H	-2556 / 0	-78.0	-78.0	0.62 (1)	3.80	
H- I	-2556 / 0	-78.0	-78.0	0.62 (1)	3.80	
I- J	-2613 / 0	-78.0	-78.0	0.79 (1)	3.52	
J- K	-2137 / 0	-78.0	-78.0	0.71 (1)	3.91	
K- L	-1744 / 0	-78.0	-78.0	0.41 (1)	4.69	
Y- A	-1893 / 0	0.0	0.0	0.22 (1)	6.10	
N- L	-1938 / 0	0.0	0.0	0.22 (1)	6.04	
Z- Y	0 / 0	-96.5	-96.5	0.16 (1)	10.00	
Y- X	0 / 0	-18.5	-18.5	0.16 (1)	10.00	
X- W	0 / 1077	-18.5	-18.5	0.18 (1)	10.00	
W- V	0 / 1148	-18.5	-18.5	0.23 (1)	10.00	
V- U	0 / 1161	-18.5	-18.5	0.25 (1)	10.00	
U- T	0 / 2201	-18.5	-18.5	0.42 (1)	10.00	
T- S	0 / 3427	-18.5	-18.5	0.41 (1)	10.00	
S- R	0 / 2613	-18.5	-18.5	0.52 (1)	10.00	
R- Q	0 / 2137	-18.5	-18.5	0.45 (1)	10.00	
Q- P	0 / 2137	-18.5	-18.5	0.45 (1)	10.00	
P- O	0 / 1038	-18.5	-18.5	0.25 (1)	10.00	
O- N	0 / 0	-18.5	-18.5	0.14 (4)	10.00	
N- M	0 / 0	-96.5	-96.5	0.16 (1)	10.00	

WEBS

MEMB. FR-TO	MAX. FACTORED FORCE (LBS)	MAX CSI (LC)
X- B	-1482 / 0	0.40 (1)
B- W	0 / 1003	0.23 (1)
W- C	-191 / 0	0.07 (1)
C- V	0 / 39	0.01 (4)
V- D	0 / 56	0.02 (4)
D- U	0 / 1672	0.38 (1)
U- E	-1234 / 0	0.39 (1)
E- T	0 / 964	0.22 (1)
T- F	-21 / 10	0.02 (1)
T- G	0 / 1689	0.38 (1)
S- G	-2160 / 0	0.87 (1)
S- I	-86 / 0	0.06 (1)
R- I	-443 / 0	0.54 (1)
R- J	0 / 727	0.16 (1)
P- J	-1124 / 0	0.45 (1)
P- K	0 / 1660	0.37 (1)
O- K	-245 / 0	0.30 (1)
A- X	0 / 1100	0.25 (1)
O- L	0 / 1103	0.25 (1)

DESIGN CRITERIA

SPECIFIED LOADS:

TOP CH.	LL	=	21.0	PSF
	DL	=	6.0	PSF
BOT CH.	LL	=	0.0	PSF
	DL	=	7.4	PSF
TOTAL LOAD		=	34.4	PSF

SPACING = 24.0 IN. C/C

LOADING IN FLAT SECTION BASED ON A SLOPE OF 2.00/12 MINIMUM

THIS TRUSS IS DESIGNED FOR RESIDENTIAL OR SMALL BUILDING REQUIREMENTS OF PART 9, NBCC 2010, NBCC 2015

THIS DESIGN COMPLIES WITH:
- PART 9 OF OBC 2012, OBC 2018
- CSA 086-09, CSA 086-14
- TPIC 2011, TPIC 2014

DESIGN ASSUMPTIONS
-OVERHANG NOT TO BE ALTERED OR CUT OFF.

(55 % OF 23.0 P.S.F. G.S.L. PLUS 8.4 P.S.F. RAIN LOAD) EQUALS 21.0 P.S.F. SPECIFIED ROOF LIVE LOAD

ALLOWABLE DEFL.(LL)= L/360 (1.36")
CALCULATED VERT. DEFL.(LL) = L/ 999 (0.19")
ALLOWABLE DEFL.(TL)= L/360 (1.36")
CALCULATED VERT. DEFL.(TL) = L/ 999 (0.37")

CANTILEVER DEFLECTION:
ALLOWABLE DEFL.(LL)= L/120 (0.19")
CALCULATED VERT. DEFL.(LL) = L/ 999 (0.01")
ALLOWABLE DEFL.(TL)= L/120 (0.19")
CALCULATED VERT. DEFL.(TL) = L/ 999 (0.01")

CSI: TC=0.79/1.00 (I-J:1) , BC=0.52/1.00 (R-S:1) , WB=0.87/1.00 (G-S:1) , SSI=0.25/1.00 (J-K:1)

DOL LUMBER=1.00 NAIL=1.00 LS BEND=1.10 COMP=1.10 SHEAR=1.10 TENS= 1.10

COMPANION LIVE LOAD FACTOR = 1.00

TRUSS PLATE MANUFACTURER IS NOT RESPONSIBLE FOR QUALITY CONTROL IN THE TRUSS MANUFACTURING PLANT .

NAIL VALUES

PLATE	GRIP(DRY) (PSI) MAX	MIN	SHEAR (PLI) MAX	MIN	SECTION (PLI) MAX	MIN
MT20	618	354	1667	788	1987	1656

PLATE PLACEMENT TOL. = 0.250 Inches

PLATE ROTATION TOL. = 5.0 Deg.

JSI GRIP= 0.90 (E) (INPUT = 0.90)
JSI METAL= 0.69 (Q) (INPUT = 1.00)

A-18023851

CONTINUED ON PAGE 2

JOB NAME	TRUSS NAME	QUANTITY	PLY	JOB DESC.	DRWG NO.
292624	H3T	2	1	TRUSS DESC.	

Alpa Roof Truss, Maple

Version 8.200 S Jan 6 2018 MiTek Industries, Inc. Mon Feb 19 08:27:21 2018 Page 1

ID:Rbextx08A5M1Jnp0FfBKG3yNySB-pVFFGQDBvyjl_Z95hLEGA__RtR5knuRaWqlSJLzjeZ4

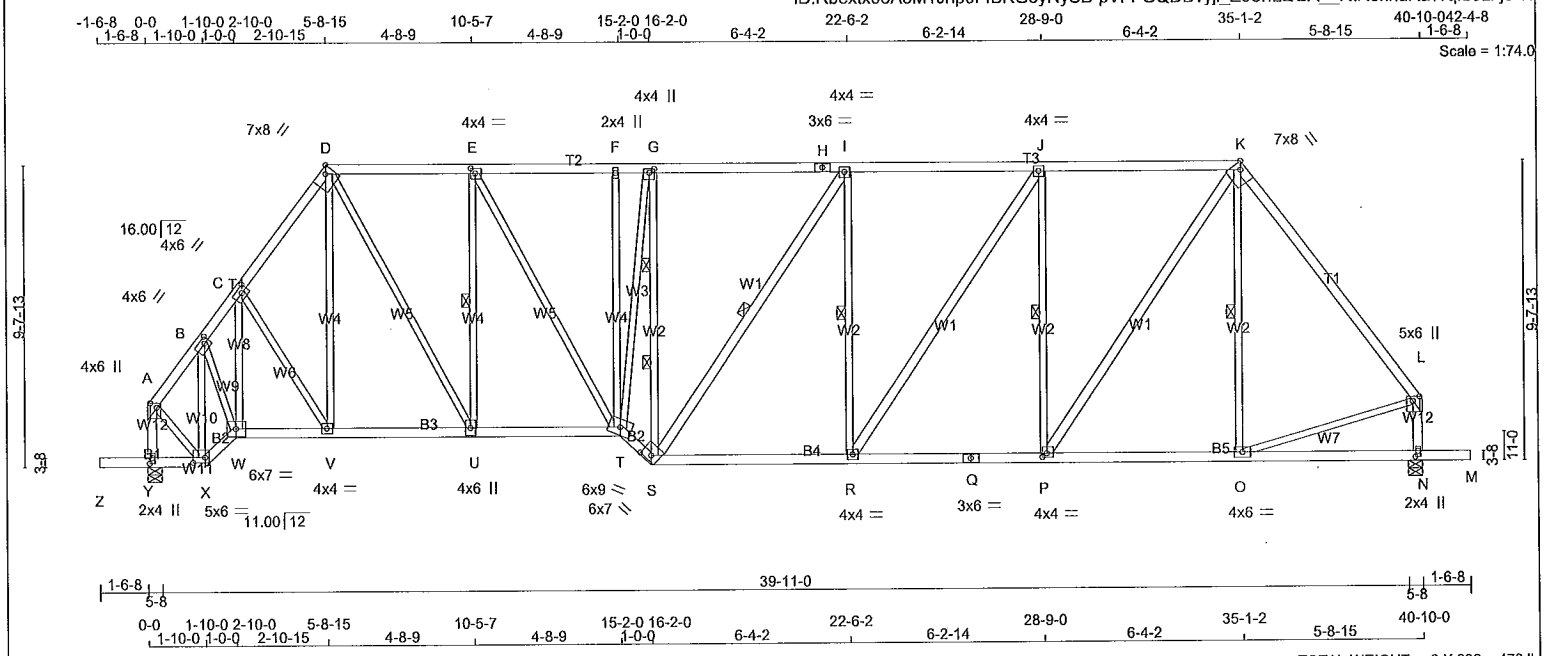

TOTAL WEIGHT = 2 X 239 = 479 lb

[M]

LUMBER

N. L. G. A. RULES

CHORDS	SIZE		LUMBER	DESCR.
A - D	2x4	DRY	No.2	SPF
D - H	2x4	DRY	No.2	SPF
H - K	2x4	DRY	No.2	SPF
K - L	2x4	DRY	No.2	SPF
Y - A	2x4	DRY	No.2	SPF
N - L	2x4	DRY	No.2	SPF
Z - X	2x4	DRY	No.2	SPF
X - W	2x4	DRY	No.2	SPF
W - T	2x4	DRY	No.2	SPF
T - S	2x4	DRY	No.2	SPF
S - Q	2x4	DRY	No.2	SPF
Q - M	2x4	DRY	No.2	SPF
ALL WEBS	2x3	DRY	No.2	SPF
EXCEPT				
S - I	2x4	DRY	No.2	SPF
R - J	2x4	DRY	No.2	SPF
P - K	2x4	DRY	No.2	SPF

DRY: SEASONED LUMBER.

PLATES (table is in inches)

JT	TYPE	PLATES	W	LEN	Y	X
A	TMVW+p	MT20	4.0	6.0	1.75	2.50
B	TMWW-t	MT20	4.0	6.0	1.75	2.00
C	TMWW-t	MT20	4.0	6.0	2.00	2.50
D	TTWW-h	MT20	7.0	8.0	Edge	2.75
E	TMWW-t	MT20	4.0	4.0	2.00	1.75
F	TMW+w	MT20	2.0	4.0		
G	TMWW+t	MT20	4.0	4.0	1.50	1.75
H	TS-t	MT20	3.0	6.0		
I	TMWW-t	MT20	4.0	4.0		
J	TMWW-t	MT20	4.0	4.0		
K	TTWW-h	MT20	7.0	8.0	Edge	2.75
L	TMVW+p	MT20	5.0	6.0	1.75	2.50
N	BMV1+p	MT20	2.0	4.0	2.25	1.00
O	BMWW-t	MT20	4.0	6.0		
P	BMWW-t	MT20	4.0	4.0	1.50	1.75
Q	BS-t	MT20	3.0	6.0		
R	BMWW-t	MT20	4.0	4.0		
S	BBWW-h	MT20	6.0	7.0	2.00	4.00

NOTE: Lateral brace(s) shown shall be 1x4 for Part 9 design as per OBC 9.23.13.11, and no less than 2x4 for Part 4 design

REGISTERED PROFESSIONAL ENGINEER
02/19/2018
EDWIN C. FOK
PROVINCE OF ONTARIO

DIMENSIONS, SUPPORTS AND LOADINGS SPECIFIED BY FABRICATOR TO BE VERIFIED BY BUILDING DESIGNER

BEARINGS

JT	FACTORED GROSS REACTION VERT	HORZ	MAXIMUM FACTORED GROSS REACTION DOWN	HORZ	UPLIFT	INPUT BRG IN-SX	REQRD BRG IN-SX
Y	2121	0	2121	0	0	5-8	3-4
N	2115	0	2115	0	0	5-8	3-3

UNFACTORED REACTIONS

JT	1ST LCASE COMBINED	MAX./MIN. COMPONENT REACTIONS SNOW	LIVE	PERM.LIVE	WIND	DEAD	SOIL
Y	1512	923 / 0	0 / 0	0 / 0	0 / 0	589 / 0	0 / 0
N	1508	921 / 0	0 / 0	0 / 0	0 / 0	588 / 0	0 / 0

BEARING MATERIAL TO BE SPF NO.2 OR BETTER AT JOINT(S) Y, N

BRACING

TOP CHORD TO BE SHEATHED OR MAX. PURLIN SPACING = 4.00 FT.
MAX. UNBRACED BOTTOM CHORD LENGTH = 10.00 FT OR RIGID CEILING DIRECTLY APPLIED.

ALL PITCH BREAKS AND PERIMETER CORNER JOINTS MUST BE LATERALLY RESTRAINED.

1 LATERAL BRACE(S) AT 1/ 2 LENGTH OF E-U, I-S, I-R, J-P, K-O.
2 LATERAL BRACE(S) AT 1/ 3 LENGTH OF G-S.

END VERTICAL(S) MUST BE SHEATHED OR HAVE BRACES AS INDICATED IN THE MAX. UNBRACED LENGTH COLUMN OF THE TABLE BELOW

LOADING

TOTAL LOAD CASES: (4)

CHORDS

MEMB. FR-TO	MAX. FACTORED FORCE (LBS)	FACTORED VERT. LOAD (PLF) FROM	TO	LC1	MAX CSI (LC)	MAX. UNBRAC LENGTH
A- B	-1386 / 0	-78.0	-78.0	0.06 (1)	5.47	
B- C	-1893 / 0	-78.0	-78.0	0.09 (1)	4.82	
C- D	-1943 / 0	-78.0	-78.0	0.14 (1)	4.74	
D- E	-1832 / 0	-78.0	-78.0	0.34 (1)	4.60	
E- F	-2225 / 0	-78.0	-78.0	0.37 (1)	4.22	
F- G	-2225 / 0	-78.0	-78.0	0.37 (1)	4.15	
G- H	-2081 / 0	-78.0	-78.0	0.48 (1)	4.25	
H- I	-2081 / 0	-78.0	-78.0	0.48 (1)	4.25	
I- J	-2153 / 0	-78.0	-78.0	0.61 (1)	4.00	
J- K	-1826 / 0	-78.0	-78.0	0.57 (1)	4.32	
K- L	-1760 / 0	-78.0	-78.0	0.80 (1)	4.38	
Y- A	-1893 / 0	0.0	0.0	0.22 (1)	6.10	
N- L	-1924 / 0	0.0	0.0	0.22 (1)	6.06	
Z- Y	0 / 0	-96.5	-96.5	0.16 (1)	10.00	
Y- X	0 / 0	-18.5	-18.5	0.16 (1)	10.00	
X- W	0 / 1074	-18.5	-18.5	0.18 (1)	10.00	
W- V	0 / 1157	-18.5	-18.5	0.23 (1)	10.00	
V- U	0 / 1150	-18.5	-18.5	0.24 (1)	10.00	
U- T	0 / 1832	-18.5	-18.5	0.35 (1)	10.00	
T- S	0 / 2797	-18.5	-18.5	0.45 (1)	10.00	
S- R	0 / 2153	-18.5	-18.5	0.44 (1)	10.00	
R- Q	0 / 1826	-18.5	-18.5	0.39 (1)	10.00	
Q- P	0 / 1826	-18.5	-18.5	0.39 (1)	10.00	
P- O	0 / 1050	-18.5	-18.5	0.27 (4)	10.00	
O- N	0 / 0	-18.5	-18.5	0.16 (4)	10.00	
N- M	0 / 0	-96.5	-96.5	0.16 (1)	10.00	

WEBS

MEMB. FR-TO	MAX. FACTORED FORCE (LBS)	MAX CSI (LC)
X- B	-1479 / 0	0.40 (1)
W- C	-208 / 0	0.07 (1)
C- V	-15 / 2	0.01 (1)
V- D	0 / 81	0.03 (4)
D- U	0 / 1393	0.31 (1)
U- E	-1128 / 0	0.55 (1)
E- T	0 / 803	0.18 (1)
T- F	0 / 15	0.01 (4)
T- G	0 / 1254	0.28 (1)
S- G	-1717 / 0	0.97 (1)
S- I	-129 / 0	0.09 (1)
R- I	-369 / 0	0.23 (1)
R- J	0 / 589	0.09 (1)
P- J	-1029 / 0	0.64 (1)
P- K	0 / 1378	0.22 (1)
O- K	-163 / 28	0.10 (1)
A- X	0 / 1097	0.25 (1)
O- L	0 / 1091	0.25 (1)

DESIGN CRITERIA

SPECIFIED LOADS:

TOP CH.	LL	=	21.0	PSF
	DL	=	6.0	PSF
BOT CH.	LL	=	0.0	PSF
	DL	=	7.4	PSF
TOTAL LOAD		=	34.4	PSF

SPACING = 24.0 IN. C/C

LOADING IN FLAT SECTION BASED ON A SLOPE OF 2.00/12 MINIMUM

THIS TRUSS IS DESIGNED FOR RESIDENTIAL OR SMALL BUILDING REQUIREMENTS OF PART 9, NBCC 2010, NBCC 2015

THIS DESIGN COMPLIES WITH:
- PART 9 OF OBC 2012, OBC 2018
- CSA 086-09, CSA 086-14
- TPIC 2011, TPIC 2014

DESIGN ASSUMPTIONS
-OVERHANG NOT TO BE ALTERED OR CUT OFF.

(55 % OF 23.0 P.S.F. G.S.L. PLUS 8.4 P.S.F. RAIN LOAD) EQUALS 21.0 P.S.F. SPECIFIED ROOF LIVE LOAD

ALLOWABLE DEFL.(LL)= L/360 (1.36")
CALCULATED VERT. DEFL.(LL) = L/ 999 (0.15")
ALLOWABLE DEFL.(TL)= L/120 (0.19")
CALCULATED VERT. DEFL.(TL) = L/ 999 (0.29")

CANTILEVER DEFLECTION:
ALLOWABLE DEFL.(LL)= L/120 (0.19")
CALCULATED VERT. DEFL.(LL) = L/ 999 (0.01")
ALLOWABLE DEFL.(TL)= L/120 (0.19")
CALCULATED VERT. DEFL.(TL) = L/ 999 (0.01")

CSI: TC=0.80/1.00 (K-L:1) , BC=0.45/1.00 (S-T:1) , WB=0.97/1.00 (G-S:1) , SSI=0.23/1.00 (J-K:1)

DOL LUMBER=1.00 NAIL=1.00 LS BEND=1.10 COMP=1.10 SHEAR=1.10 TENS= 1.10

COMPANION LIVE LOAD FACTOR = 1.00

TRUSS PLATE MANUFACTURER IS NOT RESPONSIBLE FOR QUALITY CONTROL IN THE TRUSS MANUFACTURING PLANT .

NAIL VALUES

PLATE	GRIP(DRY) (PSI) MAX	MIN	SHEAR (PLI) MAX	MIN	SECTION (PLI) MAX	MIN
MT20	618	354	1667	788	1987	1656

PLATE PLACEMENT TOL. = 0.250 inches

PLATE ROTATION TOL. = 5.0 Deg.

JSI GRIP= 0.90 (P) (INPUT = 0.90)
JSI METAL= 0.58 (Q) (INPUT = 1.00)

A-18023852

CONTINUED ON PAGE 2

JOB NAME	TRUSS NAME	QUANTITY	PLY	JOB DESC.	DRWG NO.
292624	H7T	1	1	TRUSS DESC.	

Alpa Roof Truss, Maple

Version 8.200 S Jan 6 2018 MiTek Industries, Inc. Mon Feb 19 08:23:01 2018 Page 1

ID:Rbextx08A5M1Jnp0FfBKG3yNySB-QUXyiW3683zencH6TkaId9D3EdInsUZJkOjiAQzjed8

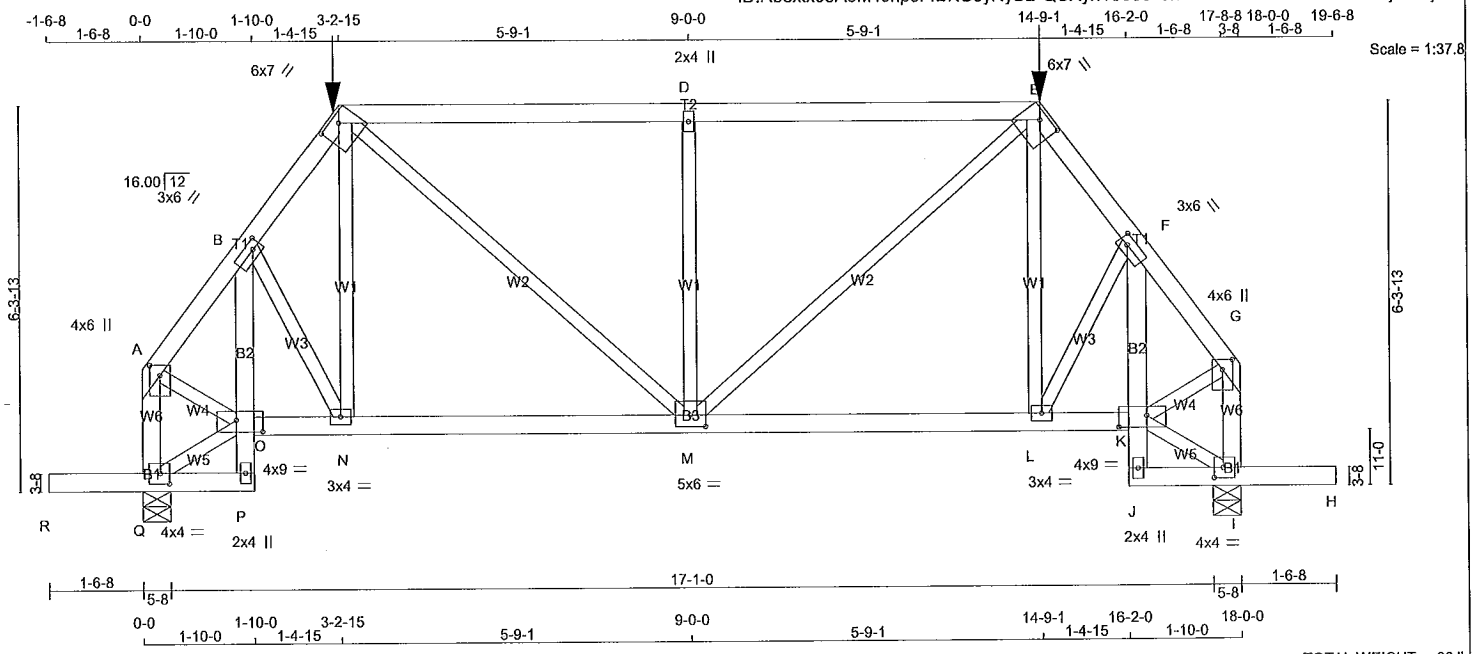

TOTAL WEIGHT = 96 lb

[M]

LUMBER

N. L. G. A. RULES

CHORDS	SIZE		LUMBER	DESCR.
A - C	2x4	DRY	No.2	SPF
C - E	2x4	DRY	No.2	SPF
E - G	2x4	DRY	No.2	SPF
Q - A	2x4	DRY	No.2	SPF
I - G	2x4	DRY	No.2	SPF
R - P	2x4	DRY	No.2	SPF
P - B	2x4	DRY	No.2	SPF
O - K	2x4	DRY	No.2	SPF
J - F	2x4	DRY	No.2	SPF
J - H	2x4	DRY	No.2	SPF
ALL WEBS EXCEPT	2x3	DRY	No.2	SPF

DRY: SEASONED LUMBER.

PLATES (table is in inches)

JT	TYPE	PLATES	W	LEN	Y	X
A	TMVW+p	MT20	4.0	6.0	2.00	2.00
B	TMVW-t	MT20	3.0	6.0	1.50	1.75
C	TTWW-h	MT20	6.0	7.0	1.50	3.75
D	TMW+w	MT20	2.0	4.0		
E	TTWW-h	MT20	6.0	7.0	1.50	3.75
F	TMVW-t	MT20	3.0	6.0	1.50	1.75
G	TMVW+p	MT20	4.0	6.0	2.00	2.00
I	BMVW1-t	MT20	4.0	4.0	2.00	1.75
J	BMV+p	MT20	2.0	4.0		
K	BVMWW-I	MT20	4.0	9.0	2.25	5.25
L	BMWW-t	MT20	3.0	4.0		
M	BMWWW-t	MT20	5.0	6.0	2.25	3.00
N	BMWW-t	MT20	3.0	4.0		
O	BVMWW-I	MT20	4.0	9.0	2.25	5.25
P	BMV+p	MT20	2.0	4.0		
Q	BMVW1-t	MT20	4.0	4.0	2.00	1.75

HANGERS NOTES

1)

NOTE: Lateral brace(s) shown shall be 1x4 for Part 9 design as per OBC 9.23.13.11, and no less than 2x4 for Part 4 design

REGISTERED PROFESSIONAL ENGINEER
02/19/2018
EDWIN C. FOK
PROVINCE OF ONTARIO

DIMENSIONS, SUPPORTS AND LOADINGS SPECIFIED BY FABRICATOR TO BE VERIFIED BY BUILDING DESIGNER

BEARINGS

JT	FACTORED GROSS REACTION VERT	HORZ	MAXIMUM FACTORED GROSS REACTION DOWN	HORZ	UPLIFT	INPUT BRG IN-SX	REQRD BRG IN-SX
Q	1790	0	1790	0	0	5-8	1-14
I	1790	0	1790	0	0	5-8	1-14

UNFACTORED REACTIONS

JT	1ST LCASE COMBINED	MAX./MIN. COMPONENT REACTIONS SNOW	LIVE	PERM.LIVE	WIND	DEAD	SOIL
Q	1277	772 / 0	0 / 0	0 / 0	0 / 0	506 / 0	0 / 0
I	1277	772 / 0	0 / 0	0 / 0	0 / 0	506 / 0	0 / 0

BEARING MATERIAL TO BE SPF NO.2 OR BETTER AT JOINT(S) Q, I

BRACING

TOP CHORD TO BE SHEATHED OR MAX. PURLIN SPACING = 4.44 FT.
MAX. UNBRACED BOTTOM CHORD LENGTH = 7.81 FT OR RIGID CEILING DIRECTLY APPLIED.

ALL PITCH BREAKS AND PERIMETER CORNER JOINTS MUST BE LATERALLY RESTRAINED.

LOADING

TOTAL LOAD CASES: (4)

CHORDS

MEMB. FR-TO	MAX. FACTORED FORCE (LBS)	FACTORED VERT. LOAD (PLF) FROM	TO	LC1 MAX CSI (LC)	MAX. UNBRAC LENGTH
A- B	-1432 / 0	-78.0	-78.0	0.06 (1)	5.38
B- C	-1617 / 0	-78.0	-78.0	0.06 (1)	5.13
C- D	-1640 / 0	-78.0	-78.0	0.56 (1)	4.44
D- E	-1640 / 0	-78.0	-78.0	0.56 (1)	4.44
E- F	-1617 / 0	-78.0	-78.0	0.06 (1)	5.13
F- G	-1432 / 0	-78.0	-78.0	0.06 (1)	5.38
Q- A	-1529 / 0	0.0	0.0	0.19 (1)	6.61
I- G	-1529 / 0	0.0	0.0	0.19 (1)	6.61
R- Q	0 / 0	-96.5	-96.5	0.17 (1)	10.00
Q- P	0 / 22	-36.4	-36.4	0.18 (1)	10.00
P- O	-37 / 8	0.0	0.0	0.03 (1)	7.81
O- B	-439 / 0	0.0	0.0	0.04 (1)	7.81
O- N	0 / 864	-36.4	-36.4	0.48 (1)	10.00
N- M	0 / 959	-112.0	-112.0	0.65 (1)	10.00
M- L	0 / 959	-112.0	-112.0	0.65 (1)	10.00
L- K	0 / 864	-36.4	-36.4	0.48 (1)	10.00
J- K	-37 / 8	0.0	0.0	0.03 (1)	7.81
K- F	-439 / 0	0.0	0.0	0.04 (1)	7.81
J- I	0 / 22	-36.4	-36.4	0.18 (1)	10.00
I- H	0 / 0	-96.5	-96.5	0.17 (1)	10.00

WEBS

MEMB. FR-TO	MAX. FACTORED FORCE (LBS)	MAX CSI (LC)
B- N	0 / 173	0.04 (1)
N- C	0 / 277	0.07 (4)
C- M	0 / 906	0.22 (1)
M- D	-527 / 0	0.24 (1)
M- E	0 / 906	0.22 (1)
L- E	0 / 277	0.07 (4)
L- F	0 / 173	0.04 (1)
Q- O	-26 / 0	0.00 (1)
A- O	0 / 919	0.23 (1)
K- I	-26 / 0	0.00 (1)
K- G	0 / 919	0.23 (1)

FACTORED CONCENTRATED LOADS (LBS)

JT	LOC.	LC1	MAX-	MAX+	FACE	DIR.	TYPE
C	3-2-15	-184	-184	---	FRONT	VERT	TOTAL
E	14-9-1	-184	-184	---	FRONT	VERT	TOTAL

DESIGN CRITERIA

SPECIFIED LOADS:

TOP CH.	LL	=	21.0	PSF
	DL	=	6.0	PSF
BOT CH.	LL	=	0.0	PSF
	DL	=	7.4	PSF
TOTAL LOAD		=	34.4	PSF

SPACING = 24.0 IN. C/C

LOADING IN FLAT SECTION BASED ON A SLOPE OF 2.00/12 MINIMUM

GIRDER TYPE: CPrimeHip
SIDE SETBACK = 3-2-15
END SETBACK = 5-10-8
END WALL WIDTH = 0-0
CORNER FRAMING TYPE: CONVENTIONAL
END JACK TYPE: CONVENTIONAL
APPLIED TO FRONT SIDE
- ADDT'L LOADS BASED ON 55 % OF GSL.
LOADS APPLIED TO FIRST 3-2-15 OF SPAN MEASURED FROM THE LEFT.

GIRDER TYPE: CStdGirder
START DISTANCE = 3-2-15
START SPAN CARRIED = 5-10-8
END DISTANCE = 14-9-1
END SPAN CARRIED = 5-10-8
END WALL WIDTH = 0-0
APPLIED TO FRONT SIDE OF BOTTOM CHORD.
- ADDT'L LOADS BASED ON 55 % OF GSL.

GIRDER TYPE: CPrimeHip
SIDE SETBACK = 3-2-15
END SETBACK = 5-10-8
END WALL WIDTH = 0-0
CORNER FRAMING TYPE: CONVENTIONAL
END JACK TYPE: CONVENTIONAL
APPLIED TO FRONT SIDE
- ADDT'L LOADS BASED ON 55 % OF GSL.
LOADS APPLIED TO FIRST 3-2-15 OF SPAN MEASURED FROM THE RIGHT.

THIS TRUSS IS DESIGNED FOR RESIDENTIAL OR SMALL BUILDING REQUIREMENTS OF PART 9, NBCC 2010, NBCC 2015

THIS DESIGN COMPLIES WITH:
- PART 9 OF OBC 2012, OBC 2018
- CSA 086-09, CSA 086-14
- TPIC 2011, TPIC 2014

DESIGN ASSUMPTIONS
-OVERHANG NOT TO BE ALTERED OR CUT OFF.

(55 % OF 23.0 P.S.F. G.S.L. PLUS 8.4 P.S.F. RAIN LOAD) EQUALS 21.0 P.S.F. SPECIFIED ROOF LIVE LOAD

ALLOWABLE DEFL.(LL)= L/360 (0.60")
CALCULATED VERT. DEFL.(LL) = L/ 999 (0.06")
ALLOWABLE DEFL.(TL)= L/360 (0.60")
CALCULATED VERT. DEFL.(TL) = L/ 999 (0.13")

CANTILEVER DEFLECTION:
ALLOWABLE DEFL.(LL)= L/120 (0.19")

A-18023853

CONTINUED ON PAGE 2

JOB NAME	TRUSS NAME	QUANTITY	PLY	JOB DESC.	DRWG NO.
292624	H9T	1	1	TRUSS DESC.	

Alpa Roof Truss, Maple

Version 8.200 S Jan 6 2018 MiTek Industries, Inc. Mon Feb 19 08:23:14 2018 Page 1
ID:Rbextx08A5M1Jnp0FfBKG3yNySB-Y_ptRzDG43corcmcjzJLfvFJ1tsYPOtDjvNu7Azjecx

Scale = 1:55.2

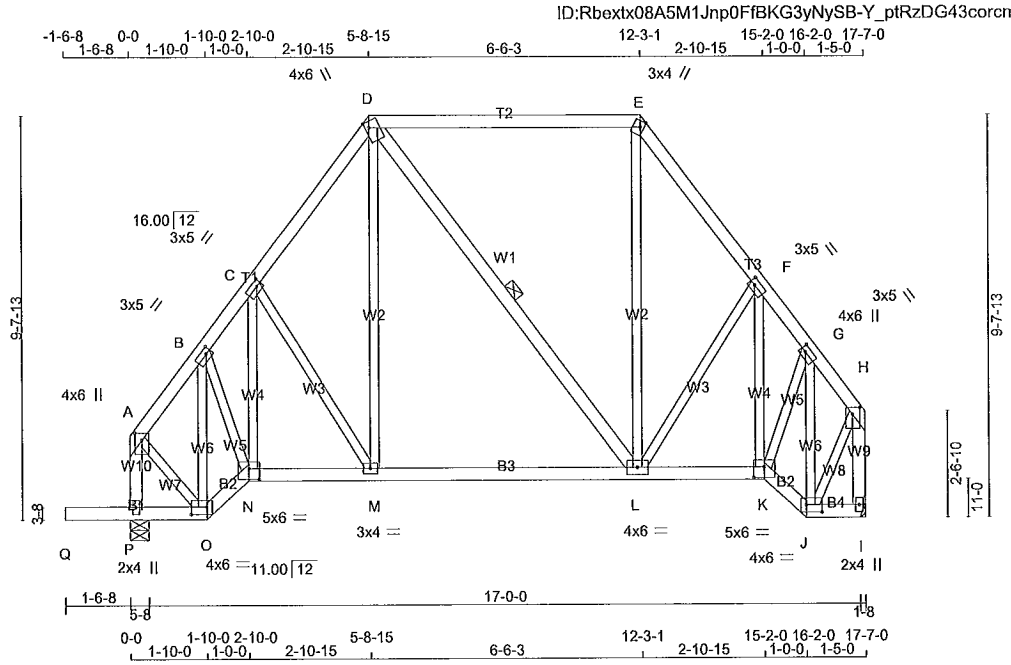

TOTAL WEIGHT = 112 lb

[M][F]

LUMBER
N. L. G. A. RULES

CHORDS	SIZE		LUMBER	DESCR.
A - D	2x4	DRY	No.2	SPF
D - E	2x4	DRY	No.2	SPF
E - H	2x4	DRY	No.2	SPF
P - A	2x4	DRY	No.2	SPF
I - H	2x4	DRY	No.2	SPF
Q - O	2x4	DRY	No.2	SPF
O - N	2x4	DRY	No.2	SPF
N - K	2x4	DRY	No.2	SPF
K - J	2x4	DRY	No.2	SPF
J - I	2x4	DRY	No.2	SPF
ALL WEBS EXCEPT	2x3	DRY	No.2	SPF
D - L	2x4	DRY	No.2	SPF

DRY: SEASONED LUMBER.

PLATES (table is in inches)

JT	TYPE	PLATES	W	LEN	Y	X
A	TMVW+p	MT20	4.0	6.0	2.00	2.00
B, C, F, G						
B	TMWW-t	MT20	3.0	5.0	1.50	1.50
D	TTWW+m	MT20	4.0	6.0	1.75	1.00
E	TTW+m	MT20	3.0	4.0	1.75	1.00
H	TMVW+p	MT20	4.0	6.0	2.00	2.00
I	BMV1+p	MT20	2.0	4.0		
J	BBWW-l	MT20	4.0	6.0	2.00	4.50
K	BBWW-l	MT20	5.0	6.0	3.00	3.00
L	BMWWW-t	MT20	4.0	6.0		
M	BMWW-t	MT20	3.0	4.0		
N	BBWW-l	MT20	5.0	6.0	3.00	3.00
O	BBWW-l	MT20	4.0	6.0	2.00	4.50
P	BMV1+p	MT20	2.0	4.0		

NOTE: Lateral brace(s) shown shall be 1x4 for Part 9 design as per OBC 9.23.13.11, and no less than 2x4 for Part 4 design

REGISTERED PROFESSIONAL ENGINEER
02/19/2018
EDWIN C. FOK
PROVINCE OF ONTARIO

DIMENSIONS, SUPPORTS AND LOADINGS SPECIFIED BY FABRICATOR TO BE VERIFIED BY BUILDING DESIGNER

BEARINGS

JT	FACTORED GROSS REACTION VERT	HORZ	MAXIMUM FACTORED GROSS REACTION DOWN	HORZ	UPLIFT	INPUT BRG IN-SX	REQRD BRG IN-SX
I	842	0	842	0	0	HANGER BY OTHERS MIN. SEAT SIZE: 1-8	
P	1003	0	1003	0	0	5-8	1-8

UNFACTORED REACTIONS

JT	1ST LCASE COMBINED	MAX./MIN. COMPONENT REACTIONS SNOW	LIVE	PERM.LIVE	WIND	DEAD	SOIL
I	600	366 / 0	0 / 0	0 / 0	0 / 0	234 / 0	0 / 0
P	715	437 / 0	0 / 0	0 / 0	0 / 0	279 / 0	0 / 0

BEARING MATERIAL TO BE SPF NO.2 OR BETTER AT JOINT(S) P

BRACING
TOP CHORD TO BE SHEATHED OR MAX. PURLIN SPACING = 6.25 FT.
MAX. UNBRACED BOTTOM CHORD LENGTH = 10.00 FT OR RIGID CEILING DIRECTLY APPLIED.

ALL PITCH BREAKS AND PERIMETER CORNER JOINTS MUST BE LATERALLY RESTRAINED.

1 LATERAL BRACE(S) AT 1/ 2 LENGTH OF D-L.

END VERTICAL(S) MUST BE SHEATHED OR HAVE BRACES AS INDICATED IN THE MAX. UNBRACED LENGTH COLUMN OF THE TABLE BELOW

LOADING
TOTAL LOAD CASES: (4)

CHORDS

MEMB. FR-TO	MAX. FACTORED FORCE (LBS)	FACTORED VERT. LOAD LC1 (PLF) FROM	TO	MAX CSI (LC)	MAX. UNBRAC LENGTH
A- B	-537 / 0	-78.0	-78.0	0.03 (1)	6.25
B- C	-707 / 0	-78.0	-78.0	0.05 (1)	6.25
C- D	-662 / 0	-78.0	-78.0	0.08 (1)	6.25
D- E	-378 / 0	-78.0	-78.0	0.43 (1)	6.25
E- F	-646 / 0	-78.0	-78.0	0.08 (1)	6.25
F- G	-636 / 0	-78.0	-78.0	0.06 (1)	6.25
G- H	-457 / 0	-78.0	-78.0	0.02 (1)	6.25
P- A	-775 / 0	0.0	0.0	0.09 (1)	7.81
I- H	-829 / 0	0.0	0.0	0.11 (1)	7.81
Q- P	0 / 0	-96.5	-96.5	0.16 (1)	10.00
P- O	0 / 0	-18.5	-18.5	0.12 (1)	10.00
O- N	0 / 418	-18.5	-18.5	0.07 (1)	10.00
N- M	0 / 442	-18.5	-18.5	0.16 (4)	10.00
M- L	0 / 388	-18.5	-18.5	0.16 (4)	10.00
L- K	0 / 407	-18.5	-18.5	0.16 (4)	10.00
K- J	0 / 347	-18.5	-18.5	0.06 (1)	10.00
J- I	0 / 0	-18.5	-18.5	0.01 (4)	10.00

WEBS

MEMB. FR-TO	MAX. FACTORED FORCE (LBS)	MAX CSI (LC)
O- B	-598 / 0	0.16 (1)
B- N	0 / 382	0.09 (1)
N- C	-51 / 0	0.02 (1)
C- M	-106 / 0	0.05 (1)
M- D	0 / 188	0.05 (4)
D- L	-17 / 0	0.01 (1)
L- E	0 / 162	0.04 (4)
L- F	-58 / 0	0.03 (1)
K- F	-140 / 0	0.05 (1)
K- G	0 / 425	0.10 (1)
J- G	-622 / 0	0.17 (1)
A- O	0 / 428	0.10 (1)
J- H	0 / 492	0.11 (1)

DESIGN CRITERIA

SPECIFIED LOADS:

TOP CH.	LL	=	21.0	PSF
	DL	=	6.0	PSF
BOT CH.	LL	=	0.0	PSF
	DL	=	7.4	PSF
TOTAL LOAD		=	34.4	PSF

SPACING = 24.0 IN. C/C

LOADING IN FLAT SECTION BASED ON A SLOPE OF 2.00/12 MINIMUM

THIS TRUSS IS DESIGNED FOR RESIDENTIAL OR SMALL BUILDING REQUIREMENTS OF PART 9, NBCC 2010, NBCC 2015

THIS DESIGN COMPLIES WITH:
- PART 9 OF OBC 2012, OBC 2018
- CSA 086-09, CSA 086-14
- TPIC 2011, TPIC 2014

DESIGN ASSUMPTIONS
-OVERHANG NOT TO BE ALTERED OR CUT OFF.

(55 % OF 23.0 P.S.F. G.S.L. PLUS 8.4 P.S.F. RAIN LOAD) EQUALS 21.0 P.S.F. SPECIFIED ROOF LIVE LOAD

ALLOWABLE DEFL.(LL)= L/360 (0.59")
CALCULATED VERT. DEFL.(LL) = L/ 999 (0.01")
ALLOWABLE DEFL.(TL)= L/360 (0.59")
CALCULATED VERT. DEFL.(TL) = L/ 999 (0.05")

CANTILEVER DEFLECTION:
ALLOWABLE DEFL.(LL)= L/120 (0.19")
CALCULATED VERT. DEFL.(LL) = L/ 999 (0.01")
ALLOWABLE DEFL.(TL)= L/120 (0.19")
CALCULATED VERT. DEFL.(TL) = L/ 718 (0.03")

CSI: TC=0.43/1.00 (D-E:1) , BC=0.16/1.00 (L-M:4) , WB=0.17/1.00 (G-J:1) , SSI=0.20/1.00 (D-E:1)

DOL LUMBER=1.00 NAIL=1.00 LS BEND=1.10 COMP=1.10 SHEAR=1.10 TENS= 1.10

COMPANION LIVE LOAD FACTOR = 1.00

TRUSS PLATE MANUFACTURER IS NOT RESPONSIBLE FOR QUALITY CONTROL IN THE TRUSS MANUFACTURING PLANT .

NAIL VALUES

PLATE	GRIP(DRY) (PSI) MAX	MIN	SHEAR (PLI) MAX	MIN	SECTION (PLI) MAX	MIN
MT20	618	354	1667	788	1987	1656

PLATE PLACEMENT TOL. = 0.250 Inches

PLATE ROTATION TOL. = 5.0 Deg.

JSI GRIP= 0.79 (M) (INPUT = 0.90)
JSI METAL= 0.22 (J) (INPUT = 1.00)

A-18023854

JOB NAME	TRUSS NAME	QUANTITY	PLY	JOB DESC.	DRWG NO.
292624	H10T	1	1	TRUSS DESC.	

Alpa Roof Truss, Maple

Version 8.200 S Jan 6 2018 MiTek Industries, Inc. Mon Feb 19 08:23:44 2018 Page 1
ID:Rbextx08A5M1Jnp0FfBKG3yNySB-fldCkDb40HOYRD3NUGrNtDVVaz6cRyKecaeUBQzjecT

Scale: 3/16"=1'

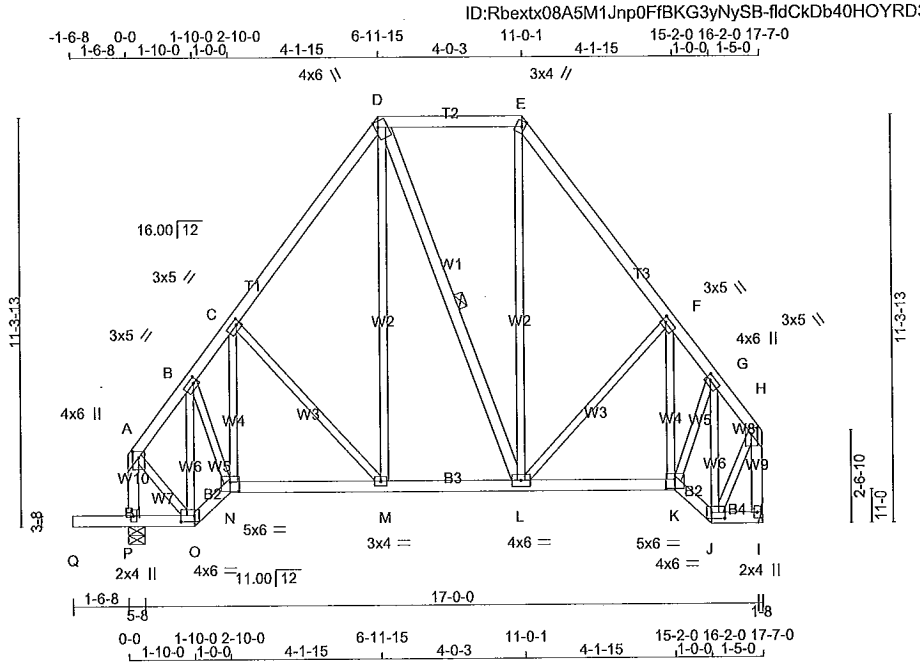

TOTAL WEIGHT = 118 lb

[M][F]

LUMBER

N. L. G. A. RULES

CHORDS	SIZE		LUMBER	DESCR.
A - D	2x4	DRY	No.2	SPF
D - E	2x4	DRY	No.2	SPF
E - H	2x4	DRY	No.2	SPF
P - A	2x4	DRY	No.2	SPF
I - H	2x4	DRY	No.2	SPF
Q - O	2x4	DRY	No.2	SPF
O - N	2x4	DRY	No.2	SPF
N - K	2x4	DRY	No.2	SPF
K - J	2x4	DRY	No.2	SPF
J - I	2x4	DRY	No.2	SPF
ALL WEBS EXCEPT	2x3	DRY	No.2	SPF
D - L	2x4	DRY	No.2	SPF

DRY: SEASONED LUMBER.

PLATES (table is in inches)

JT	TYPE	PLATES	W	LEN	Y	X
A	TMVW+p	MT20	4.0	6.0	2.00	2.00
B, C, F, G						
B	TMWW-t	MT20	3.0	5.0	1.50	1.50
D	TTWW+m	MT20	4.0	6.0	1.75	1.00
E	TTW+m	MT20	3.0	4.0	1.75	1.00
H	TMVW+p	MT20	4.0	6.0	2.00	2.00
I	BMV1+p	MT20	2.0	4.0		
J	BBWW-l	MT20	4.0	6.0	2.00	4.50
K	BBWW-l	MT20	5.0	6.0	3.00	3.00
L	BMWWW-t	MT20	4.0	6.0		
M	BMWW-t	MT20	3.0	4.0		
N	BBWW-l	MT20	5.0	6.0	3.00	3.00
O	BBWW-l	MT20	4.0	6.0	2.00	4.50
P	BMV1+p	MT20	2.0	4.0		

NOTE: Lateral brace(s) shown shall be 1x4 for Part 9 design as per OBC 9.23.13.11, and no less than 2x4 for Part 4 design

REGISTERED PROFESSIONAL ENGINEER
02/19/2018
EDWIN C. FOK
PROVINCE OF ONTARIO

DIMENSIONS, SUPPORTS AND LOADINGS SPECIFIED BY FABRICATOR TO BE VERIFIED BY BUILDING DESIGNER

BEARINGS

JT	FACTORED GROSS REACTION VERT	HORZ	MAXIMUM FACTORED GROSS REACTION DOWN	HORZ	UPLIFT	INPUT BRG	REQRD BRG
I	842	0	842	0	0	IN-SX	IN-SX
						HANGER BY OTHERS	
						MIN. SEAT SIZE: 1-8	
P	1003	0	1003	0	0	5-8	1-8

UNFACTORED REACTIONS

JT	1ST LCASE COMBINED	MAX./MIN. COMPONENT REACTIONS SNOW	LIVE	PERM.LIVE	WIND	DEAD	SOIL
I	600	366 / 0	0 / 0	0 / 0	0 / 0	234 / 0	0 / 0
P	715	437 / 0	0 / 0	0 / 0	0 / 0	279 / 0	0 / 0

BEARING MATERIAL TO BE SPF NO.2 OR BETTER AT JOINT(S) P

BRACING

TOP CHORD TO BE SHEATHED OR MAX. PURLIN SPACING = 6.25 FT.
MAX. UNBRACED BOTTOM CHORD LENGTH = 10.00 FT OR RIGID CEILING DIRECTLY APPLIED.

ALL PITCH BREAKS AND PERIMETER CORNER JOINTS MUST BE LATERALLY RESTRAINED.

1 LATERAL BRACE(S) AT 1/ 2 LENGTH OF D-L.

END VERTICAL(S) MUST BE SHEATHED OR HAVE BRACES AS INDICATED IN THE MAX. UNBRACED LENGTH COLUMN OF THE TABLE BELOW

LOADING

TOTAL LOAD CASES: (4)

CHORDS

MEMB. FR-TO	MAX. FACTORED FORCE (LBS)	FACTORED VERT. LOAD LC1 (PLF) FROM	TO	MAX CSI (LC)	MAX. UNBRAC LENGTH
A- B	-538 / 0	-78.0	-78.0	0.04 (1)	6.25
B- C	-675 / 0	-78.0	-78.0	0.13 (1)	6.25
C- D	-609 / 0	-78.0	-78.0	0.15 (1)	6.25
D- E	-346 / 0	-78.0	-78.0	0.16 (1)	6.25
E- F	-601 / 0	-78.0	-78.0	0.15 (1)	6.25
F- G	-603 / 0	-78.0	-78.0	0.13 (1)	6.25
G- H	-459 / 0	-78.0	-78.0	0.04 (1)	6.25
P- A	-775 / 0	0.0	0.0	0.09 (1)	7.81
I- H	-829 / 0	0.0	0.0	0.11 (1)	7.81
Q- P	0 / 0	-96.5	-96.5	0.16 (1)	10.00
P- O	0 / 0	-18.5	-18.5	0.12 (1)	10.00
O- N	0 / 413	-18.5	-18.5	0.07 (1)	10.00
N- M	0 / 458	-18.5	-18.5	0.11 (1)	10.00
M- L	0 / 351	-18.5	-18.5	0.11 (4)	10.00
L- K	0 / 422	-18.5	-18.5	0.11 (4)	10.00
K- J	0 / 341	-18.5	-18.5	0.06 (1)	10.00
J- I	0 / 0	-18.5	-18.5	0.01 (4)	10.00

WEBS

MEMB. FR-TO	MAX. FACTORED FORCE (LBS)	MAX CSI (LC)
O- B	-592 / 0	0.16 (1)
B- N	0 / 433	0.10 (1)
N- C	-82 / 11	0.03 (1)
C- M	-162 / 0	0.11 (1)
M- D	0 / 197	0.04 (4)
D- L	-13 / 0	0.01 (1)
L- E	0 / 179	0.04 (4)
L- F	-115 / 0	0.08 (1)
K- F	-172 / 0	0.06 (1)
K- G	0 / 477	0.11 (1)
J- G	-613 / 0	0.17 (1)
A- O	0 / 423	0.10 (1)
J- H	0 / 485	0.11 (1)

DESIGN CRITERIA

SPECIFIED LOADS:

TOP CH.	LL	=	21.0	PSF
	DL	=	6.0	PSF
BOT CH.	LL	=	0.0	PSF
	DL	=	7.4	PSF
TOTAL LOAD		=	34.4	PSF

SPACING = 24.0 IN. C/C

LOADING IN FLAT SECTION BASED ON A SLOPE OF 2.00/12 MINIMUM

THIS TRUSS IS DESIGNED FOR RESIDENTIAL OR SMALL BUILDING REQUIREMENTS OF PART 9, NBCC 2010, NBCC 2015

THIS DESIGN COMPLIES WITH:
- PART 9 OF OBC 2012, OBC 2018
- CSA 086-09, CSA 086-14
- TPIC 2011, TPIC 2014

DESIGN ASSUMPTIONS
-OVERHANG NOT TO BE ALTERED OR CUT OFF.

(55 % OF 23.0 P.S.F. G.S.L. PLUS 8.4 P.S.F. RAIN LOAD) EQUALS 21.0 P.S.F. SPECIFIED ROOF LIVE LOAD

ALLOWABLE DEFL.(LL)= L/360 (0.59")
CALCULATED VERT. DEFL.(LL) = L/ 999 (0.01")
ALLOWABLE DEFL.(TL)= L/360 (0.59")
CALCULATED VERT. DEFL.(TL) = L/ 999 (0.03")

CANTILEVER DEFLECTION:
ALLOWABLE DEFL.(LL)= L/120 (0.19")
CALCULATED VERT. DEFL.(LL) = L/ 999 (0.01")
ALLOWABLE DEFL.(TL)= L/120 (0.19")
CALCULATED VERT. DEFL.(TL) = L/ 723 (0.03")

CSI: TC=0.16/1.00 (D-E:1) , BC=0.16/1.00 (P-Q:1) , WB=0.17/1.00 (G-J:1) , SSI=0.12/1.00 (D-E:1)

DOL LUMBER=1.00 NAIL=1.00 LS BEND=1.10 COMP=1.10 SHEAR=1.10 TENS= 1.10

COMPANION LIVE LOAD FACTOR = 1.00

TRUSS PLATE MANUFACTURER IS NOT RESPONSIBLE FOR QUALITY CONTROL IN THE TRUSS MANUFACTURING PLANT .

NAIL VALUES

PLATE	GRIP(DRY) (PSI) MAX	MIN	SHEAR (PLI) MAX	MIN	SECTION (PLI) MAX	MIN
MT20	618	354	1667	788	1987	1656

PLATE PLACEMENT TOL. = 0.250 inches

PLATE ROTATION TOL. = 5.0 Deg.

JSI GRIP= 0.87 (G) (INPUT = 0.90)
JSI METAL= 0.22 (J) (INPUT = 1.00)

A-18023855

JOB NAME	TRUSS NAME	QUANTITY	PLY	JOB DESC.	DRWG NO.
292624	J1T	7	1	TRUSS DESC.	

Alpa Roof Truss, Maple

Version 8.200 S Jan 6 2018 MiTek Industries, Inc. Mon Feb 19 08:21:26 2018 Page 1

ID:Rbextx08A5M1Jnp0FfBKG3yNySB-lCI2m2wWWt?7u?WsOHN0H7nwPL?K6ZeKu6CBLQzjeed

Scale = 1:37.1

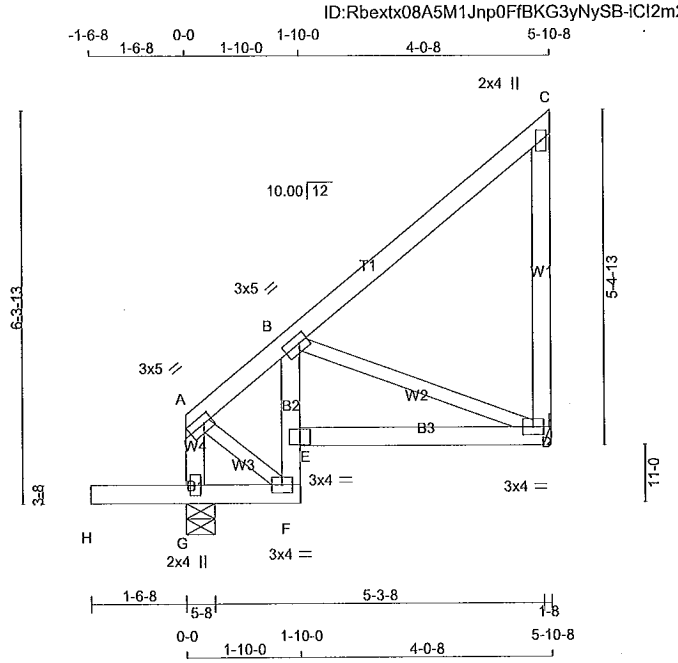

TOTAL WEIGHT = 7 X 31 = 218 lb

[M]

LUMBER

N. L. G. A. RULES

CHORDS	SIZE		LUMBER	DESCR.
G - A	2x4	DRY	No.2	SPF
A - C	2x4	DRY	No.2	SPF
D - C	2x4	DRY	No.2	SPF
H - F	2x4	DRY	No.2	SPF
F - B	2x4	DRY	No.2	SPF
E - D	2x4	DRY	No.2	SPF
ALL WEBS	2x3	DRY	No.2	SPF

DRY: SEASONED LUMBER.

PLATES (table is in inches)

JT	TYPE	PLATES	W	LEN	Y	X
A	TMVW-t	MT20	3.0	5.0	1.50	1.75
B	TMVW-t	MT20	3.0	5.0	1.50	1.75
C	TMV+p	MT20	2.0	4.0		
D	BMVW1-t	MT20	3.0	4.0		
E	BVM-I	MT20	3.0	4.0		
F	BMVW-t	MT20	3.0	4.0		
G	BMV1+p	MT20	2.0	4.0		

NOTE: Lateral brace(s) shown shall be 1x4 for Part 9 design as per OBC 9.23.13.11, and no less than 2x4 for Part 4 design

REGISTERED PROFESSIONAL ENGINEER
02/19/2018
EDWIN C. FOK
PROVINCE OF ONTARIO

DIMENSIONS, SUPPORTS AND LOADINGS SPECIFIED BY FABRICATOR TO BE VERIFIED BY BUILDING DESIGNER

BEARINGS

JT	FACTORED GROSS REACTION VERT	HORZ	MAXIMUM FACTORED GROSS REACTION DOWN	HORZ	UPLIFT	INPUT BRG IN-SX	REQRD BRG IN-SX
G	452	0	452	0	0	5-8	1-8
D	264	0	264	0	0	HANGER BY OTHERS	
						MIN. SEAT SIZE: 1-8	

UNFACTORED REACTIONS

JT	1ST LCASE COMBINED	MAX./MIN. COMPONENT REACTIONS SNOW	LIVE	PERM.LIVE	WIND	DEAD	SOIL
G	322	197 / 0	0 / 0	0 / 0	0 / 0	125 / 0	0 / 0
D	188	115 / 0	0 / 0	0 / 0	0 / 0	73 / 0	0 / 0

BEARING MATERIAL TO BE SPF NO.2 OR BETTER AT JOINT(S) G

BRACING

TOP CHORD TO BE SHEATHED OR MAX. PURLIN SPACING = 6.25 FT.
MAX. UNBRACED BOTTOM CHORD LENGTH = 6.25 FT OR RIGID CEILING DIRECTLY APPLIED.

ALL PITCH BREAKS AND PERIMETER CORNER JOINTS MUST BE LATERALLY RESTRAINED.

LOADING

TOTAL LOAD CASES: (4)

CHORDS

MEMB. FR-TO	MAX. FACTORED FORCE (LBS)	FACTORED VERT. LOAD LC1 (PLF) FROM	TO	MAX CSI (LC)	MAX. UNBRAC LENGTH
G- A	-278 / 0	0.0	0.0	0.09 (1)	7.81
A- B	-157 / 0	-78.0	-78.0	0.04 (1)	6.25
B- C	-35 / 0	-78.0	-78.0	0.16 (1)	6.25
D- C	-134 / 0	0.0	0.0	0.10 (1)	7.81
H- G	0 / 0	-96.5	-96.5	0.16 (1)	10.00
G- F	-61 / 0	-18.5	-18.5	0.06 (1)	6.25
F- E	-116 / 0	0.0	0.0	0.12 (1)	7.81
E- B	-87 / 16	0.0	0.0	0.12 (1)	7.81
E- D	0 / 238	-18.5	-18.5	0.09 (1)	10.00

WEBS

MEMB. FR-TO	MAX. FACTORED FORCE (LBS)	MAX CSI (LC)
B- D	-232 / 0	0.07 (1)
A- F	0 / 226	0.05 (1)

DESIGN CRITERIA

SPECIFIED LOADS:

TOP CH.	LL	=	21.0	PSF
	DL	=	6.0	PSF
BOT CH.	LL	=	0.0	PSF
	DL	=	7.4	PSF
TOTAL LOAD		=	34.4	PSF

SPACING = 24.0 IN. C/C

THIS TRUSS IS DESIGNED FOR RESIDENTIAL OR SMALL BUILDING REQUIREMENTS OF PART 9, NBCC 2010, NBCC 2015

THIS DESIGN COMPLIES WITH:
- PART 9 OF OBC 2012, OBC 2018
- CSA 086-09, CSA 086-14
- TPIC 2011, TPIC 2014

DESIGN ASSUMPTIONS
-OVERHANG NOT TO BE ALTERED OR CUT OFF.

(55 % OF 23.0 P.S.F. G.S.L. PLUS 8.4 P.S.F. RAIN LOAD) EQUALS 21.0 P.S.F. SPECIFIED ROOF LIVE LOAD

ALLOWABLE DEFL.(LL)= L/360 (0.20")
CALCULATED VERT. DEFL.(LL) = L/ 999 (0.00")
ALLOWABLE DEFL.(TL)= L/360 (0.20")
CALCULATED VERT. DEFL.(TL) = L/ 999 (0.01")

CANTILEVER DEFLECTION:
ALLOWABLE DEFL.(LL)= L/120 (0.19")
CALCULATED VERT. DEFL.(LL) = L/ 999 (0.01")
ALLOWABLE DEFL.(TL)= L/120 (0.19")
CALCULATED VERT. DEFL.(TL) = L/ 999 (0.02")

CSI: TC=0.16/1.00 (B-C:1) , BC=0.16/1.00 (G-H:1) , WB=0.07/1.00 (B-D:1) , SSI=0.12/1.00 (G-H:1)

DOL LUMBER=1.00 NAIL=1.00 LS BEND=1.10 COMP=1.10 SHEAR=1.10 TENS= 1.10

COMPANION LIVE LOAD FACTOR = 1.00

TRUSS PLATE MANUFACTURER IS NOT RESPONSIBLE FOR QUALITY CONTROL IN THE TRUSS MANUFACTURING PLANT .

NAIL VALUES

PLATE	GRIP(DRY) (PSI) MAX	MIN	SHEAR (PLI) MAX	MIN	SECTION (PLI) MAX	MIN
MT20	618	354	1667	788	1987	1656

PLATE PLACEMENT TOL. = 0.250 inches

PLATE ROTATION TOL. = 5.0 Deg.

JSI GRIP= 0.46 (A) (INPUT = 0.90)
JSI METAL= 0.09 (D) (INPUT = 1.00)

A-18023856

JOB NAME	TRUSS NAME	QUANTITY	PLY	JOB DESC.	DRWG NO.
292627	H7TA	1	1	TRUSS DESC.	

Alpa Roof Truss, Maple

Version 8.200 S Jan 6 2018 MiTek Industries, Inc. Mon Feb 19 08:44:13 2018 Page 1

ID:Rbextx08A5M1Jnp0FfBKG3yNySB-ACOqgTT_auD9O4WaztOaBOvRCNN4ulvXDHr?qhzjeJG

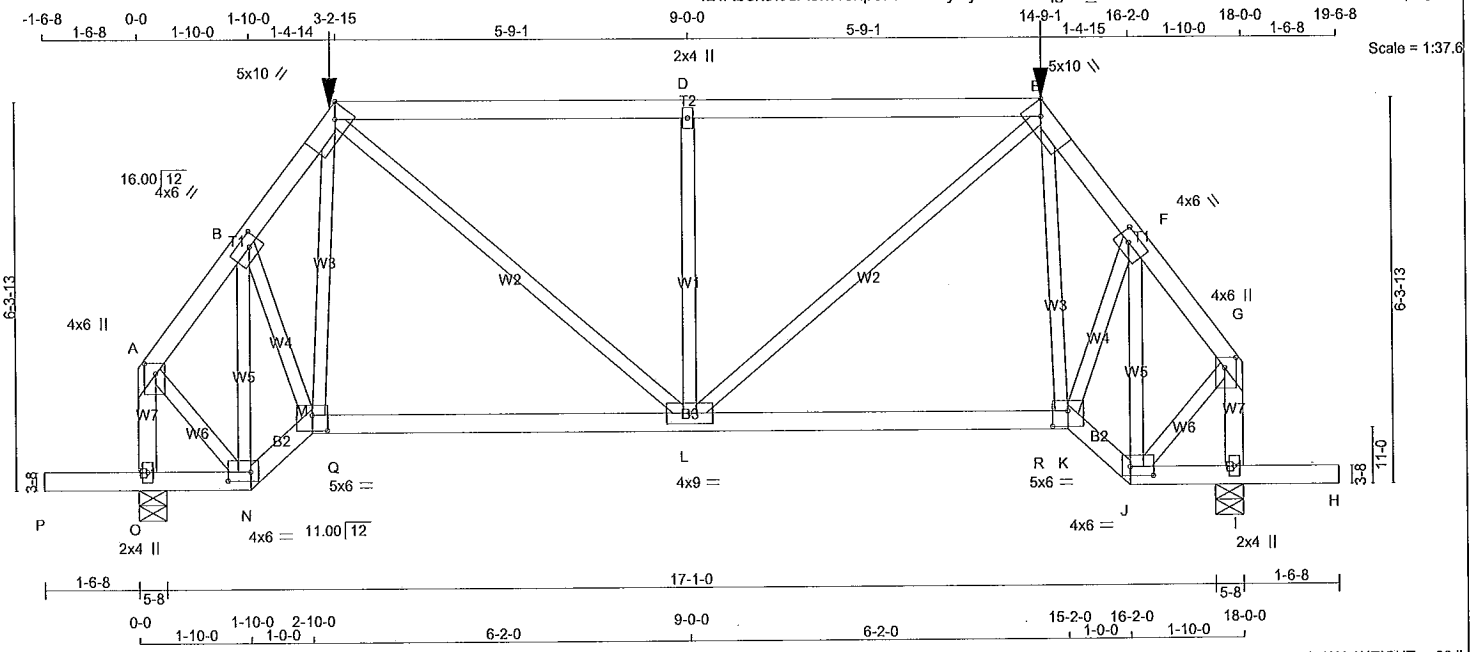

TOTAL WEIGHT = 93 lb

[M]

LUMBER

N. L. G. A. RULES

CHORDS	SIZE		LUMBER	DESCR.
A - C	2x4	DRY	No.2	SPF
C - E	2x4	DRY	No.2	SPF
E - G	2x4	DRY	No.2	SPF
O - A	2x4	DRY	No.2	SPF
I - G	2x4	DRY	No.2	SPF
P - N	2x4	DRY	No.2	SPF
N - M	2x4	DRY	No.2	SPF
M - K	2x4	DRY	No.2	SPF
K - J	2x4	DRY	No.2	SPF
J - H	2x4	DRY	No.2	SPF
ALL WEBS EXCEPT	2x3	DRY	No.2	SPF

DRY: SEASONED LUMBER.

PLATES (table is in inches)

JT	TYPE	PLATES	W	LEN	Y	X
A	TMVW+p	MT20	4.0	6.0	2.00	2.25
B	TMWW-t	MT20	4.0	6.0	2.00	2.25
C	TTWW-h	MT20	5.0	10.0	Edge	2.75
D	TMW+w	MT20	2.0	4.0		
E	TTWW-h	MT20	5.0	10.0	Edge	2.75
F	TMWW-t	MT20	4.0	6.0	2.00	2.25
G	TMVW+p	MT20	4.0	6.0	2.00	2.25
I	BMV1+p	MT20	2.0	4.0		
J	BBWW-l	MT20	4.0	6.0	1.75	4.50
K	BBWW-l	MT20	5.0	6.0	3.00	3.00
L	BMWWW-t	MT20	4.0	9.0		
M	BBWW-l	MT20	5.0	6.0	3.00	3.00
N	BBWW-l	MT20	4.0	6.0	1.75	4.50
O	BMV1+p	MT20	2.0	4.0		

Edge - INDICATES REFERENCE CORNER OF PLATE TOUCHES EDGE OF CHORD.

HANGERS NOTES

1)

NOTE: Lateral brace(s) shown shall be 1x4 for Part 9 design as per OBC 9.23.13.11, and no less than 2x4 for Part 4 design

REGISTERED PROFESSIONAL ENGINEER
02/19/2018
EDWIN C. FOK
PROVINCE OF ONTARIO

DIMENSIONS, SUPPORTS AND LOADINGS SPECIFIED BY FABRICATOR TO BE VERIFIED BY BUILDING DESIGNER

BEARINGS

JT	FACTORED GROSS REACTION VERT	HORZ	MAXIMUM FACTORED GROSS REACTION DOWN	HORZ	UPLIFT	INPUT BRG IN-SX	REQRD BRG IN-SX
O	1797	0	1797	0	0	5-8	2-11
I	1797	0	1797	0	0	5-8	2-11

UNFACTORED REACTIONS

JT	1ST LCASE COMBINED	MAX./MIN. COMPONENT REACTIONS SNOW	LIVE	PERM.LIVE	WIND	DEAD	SOIL
O	1283	776 / 0	0 / 0	0 / 0	0 / 0	507 / 0	0 / 0
I	1283	776 / 0	0 / 0	0 / 0	0 / 0	507 / 0	0 / 0

BEARING MATERIAL TO BE SPF NO.2 OR BETTER AT JOINT(S) O, I

BRACING

TOP CHORD TO BE SHEATHED OR MAX. PURLIN SPACING = 4.39 FT.
MAX. UNBRACED BOTTOM CHORD LENGTH = 10.00 FT OR RIGID CEILING DIRECTLY APPLIED.

ALL PITCH BREAKS AND PERIMETER CORNER JOINTS MUST BE LATERALLY RESTRAINED.

LOADING

TOTAL LOAD CASES: (4)

CHORDS

MEMB. FR-TO	MAX. FACTORED FORCE (LBS)	FACTORED VERT. LOAD (PLF) FROM	TO	LC1 MAX CSI (LC)	MAX. UNBRAC LENGTH
A- B	-1128 / 0	-78.0	-78.0	0.06 (1)	5.90
B- C	-1545 / 0	-78.0	-78.0	0.06 (1)	5.23
C- D	-1682 / 0	-78.0	-78.0	0.56 (1)	4.39
D- E	-1682 / 0	-78.0	-78.0	0.56 (1)	4.39
E- F	-1545 / 0	-78.0	-78.0	0.06 (1)	5.23
F- G	-1128 / 0	-78.0	-78.0	0.06 (1)	5.90
O- A	-1553 / 0	0.0	0.0	0.19 (1)	6.57
I- G	-1553 / 0	0.0	0.0	0.19 (1)	6.57
P- O	0 / 0	-96.5	-96.5	0.17 (1)	10.00
O- N	0 / 0	-36.4	-36.4	0.17 (1)	10.00
N- M	0 / 876	-36.4	-36.4	0.16 (1)	10.00
M- Q	0 / 901	-36.4	-36.4	0.93 (1)	10.00
Q- L	0 / 901	-112.0	-112.0	0.93 (1)	10.00
L- R	0 / 901	-112.0	-112.0	0.93 (1)	10.00
R- K	0 / 901	-36.4	-36.4	0.93 (1)	10.00
K- J	0 / 876	-36.4	-36.4	0.16 (1)	10.00
J- I	0 / 0	-36.4	-36.4	0.17 (1)	10.00
I- H	0 / 0	-96.5	-96.5	0.17 (1)	10.00

WEBS

MEMB. FR-TO	MAX. FACTORED FORCE (LBS)	MAX CSI (LC)
N- B	-1187 / 0	0.34 (1)
B- M	0 / 763	0.19 (1)
M- C	0 / 132	0.04 (4)
C- L	0 / 1040	0.26 (1)
L- D	-526 / 0	0.24 (1)
L- E	0 / 1040	0.26 (1)
E- K	0 / 132	0.04 (4)
K- F	0 / 763	0.19 (1)
J- F	-1187 / 0	0.34 (1)
A- N	0 / 895	0.22 (1)
J- G	0 / 895	0.22 (1)

FACTORED CONCENTRATED LOADS (LBS)

JT	LOC.	LC1	MAX-	MAX+	FACE	DIR.	TYPE
C	3-2-15	-184	-184	---	FRONT	VERT	TOTAL
E	14-9-1	-184	-184	---	FRONT	VERT	TOTAL

DESIGN CRITERIA

SPECIFIED LOADS:

TOP CH.	LL	=	21.0	PSF
	DL	=	6.0	PSF
BOT CH.	LL	=	0.0	PSF
	DL	=	7.4	PSF
TOTAL LOAD		=	34.4	PSF

SPACING = 24.0 IN. C/C

LOADING IN FLAT SECTION BASED ON A SLOPE OF 2.00/12 MINIMUM

GIRDER TYPE: CPrimeHip
SIDE SETBACK = 3-2-15
END SETBACK = 5-10-8
END WALL WIDTH = 0-0
CORNER FRAMING TYPE: CONVENTIONAL
END JACK TYPE: CONVENTIONAL
APPLIED TO FRONT SIDE
- ADDT'L LOADS BASED ON 55 % OF GSL.
LOADS APPLIED TO FIRST 3-2-15 OF SPAN MEASURED FROM THE LEFT.

GIRDER TYPE: CStdGirder
START DISTANCE = 3-2-15
START SPAN CARRIED = 5-10-8
END DISTANCE = 14-9-1
END SPAN CARRIED = 5-10-8
END WALL WIDTH = 0-0
APPLIED TO FRONT SIDE OF BOTTOM CHORD.
- ADDT'L LOADS BASED ON 55 % OF GSL.

GIRDER TYPE: CPrimeHip
SIDE SETBACK = 3-2-15
END SETBACK = 5-10-8
END WALL WIDTH = 0-0
CORNER FRAMING TYPE: CONVENTIONAL
END JACK TYPE: CONVENTIONAL
APPLIED TO FRONT SIDE
- ADDT'L LOADS BASED ON 55 % OF GSL.
LOADS APPLIED TO FIRST 3-3-0 OF SPAN MEASURED FROM THE RIGHT.

THIS TRUSS IS DESIGNED FOR RESIDENTIAL OR SMALL BUILDING REQUIREMENTS OF PART 9, NBCC 2010, NBCC 2015

THIS DESIGN COMPLIES WITH:
- PART 9 OF OBC 2012, OBC 2018
- CSA 086-09, CSA 086-14
- TPIC 2011, TPIC 2014

DESIGN ASSUMPTIONS
-OVERHANG NOT TO BE ALTERED OR CUT OFF.

(55 % OF 23.0 P.S.F. G.S.L. PLUS 8.4 P.S.F. RAIN LOAD) EQUALS 21.0 P.S.F. SPECIFIED ROOF LIVE LOAD

ALLOWABLE DEFL.(LL)= L/360 (0.60")
CALCULATED VERT. DEFL.(LL) = L/ 999 (0.11")
ALLOWABLE DEFL.(TL)= L/360 (0.60")
CALCULATED VERT. DEFL.(TL) = L/ 914 (0.24")

CANTILEVER DEFLECTION:
ALLOWABLE DEFL.(LL)= L/120 (0.19")

A-18023857

CONTINUED ON PAGE 2

JOB NAME	TRUSS NAME	QUANTITY	PLY	JOB DESC.	DRWG NO.
292627	H8T	1	1	TRUSS DESC.	

Alpa Roof Truss, Maple

Version 8.200 S Jan 6 2018 MiTek Industries, Inc. Mon Feb 19 08:45:01 2018 Page 1
ID:Rbextx08A5M1Jnp0FfBKG3yNySB-mRIzlt25HeGL8TBpnyGr7WujIkv98SBbGlTYVvzjeIW

Scale = 1:45.7

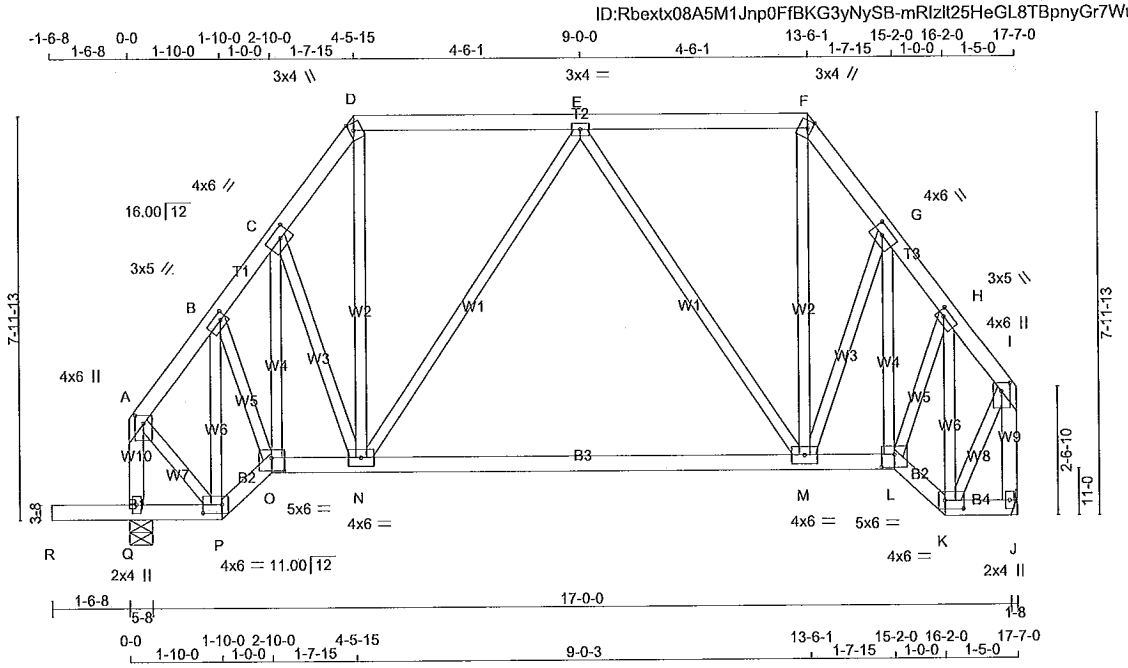

TOTAL WEIGHT = 107 lb

LUMBER
N. L. G. A. RULES

CHORDS	SIZE		LUMBER	DESCR.
A - D	2x4	DRY	No.2	SPF
D - F	2x4	DRY	No.2	SPF
F - I	2x4	DRY	No.2	SPF
Q - A	2x4	DRY	No.2	SPF
J - I	2x4	DRY	No.2	SPF
R - P	2x4	DRY	No.2	SPF
P - O	2x4	DRY	No.2	SPF
O - L	2x4	DRY	No.2	SPF
L - K	2x4	DRY	No.2	SPF
K - J	2x4	DRY	No.2	SPF
ALL WEBS EXCEPT	2x3	DRY	No.2	SPF

DRY: SEASONED LUMBER.

PLATES (table is in inches)

JT	TYPE	PLATES	W	LEN	Y	X
A	TMVW+p	MT20	4.0	6.0	2.00	2.00
B	TMWW-t	MT20	3.0	5.0	1.50	1.50
C	TMWW-t	MT20	4.0	6.0	2.00	2.50
D	TTW+m	MT20	3.0	4.0	1.75	1.00
E	TMWW-t	MT20	3.0	4.0		
F	TTW+m	MT20	3.0	4.0	1.75	1.00
G	TMWW-t	MT20	4.0	6.0	2.00	2.50
H	TMWW-t	MT20	3.0	5.0	1.50	1.50
I	TMVW+p	MT20	4.0	6.0	2.00	2.00
J	BMV1+p	MT20	2.0	4.0		
K	BBWW-l	MT20	4.0	6.0	2.00	4.50
L	BBWW-l	MT20	5.0	6.0	3.00	3.00
M	BMWWW-t	MT20	4.0	6.0		
N	BMWWW-t	MT20	4.0	6.0		
O	BBWW-l	MT20	5.0	6.0	3.00	3.00
P	BBWW-l	MT20	4.0	6.0	2.00	4.50
Q	BMV1+p	MT20	2.0	4.0		

NOTE: Lateral brace(s) shown shall be 1x4 for Part 9 design as per OBC 9.23.13.11, and no less than 2x4 for Part 4 design

REGISTERED PROFESSIONAL ENGINEER
02/19/2018
EDWIN C. FOK
PROVINCE OF ONTARIO

DIMENSIONS, SUPPORTS AND LOADINGS SPECIFIED BY FABRICATOR TO BE VERIFIED BY BUILDING DESIGNER

BEARINGS

JT	FACTORED GROSS REACTION VERT	HORZ	MAXIMUM FACTORED GROSS REACTION DOWN	HORZ	UPLIFT	INPUT BRG IN-SX	REQRD BRG IN-SX
J	842	0	842	0	0	HANGER BY OTHERS MIN. SEAT SIZE: 1-8	
Q	1003	0	1003	0	0	5-8	1-8

UNFACTORED REACTIONS

JT	1ST LCASE COMBINED	MAX./MIN. COMPONENT REACTIONS SNOW	LIVE	PERM.LIVE	WIND	DEAD	SOIL
J	600	366 / 0	0 / 0	0 / 0	0 / 0	234 / 0	0 / 0
Q	715	437 / 0	0 / 0	0 / 0	0 / 0	279 / 0	0 / 0

BEARING MATERIAL TO BE SPF NO.2 OR BETTER AT JOINT(S) Q

BRACING
TOP CHORD TO BE SHEATHED OR MAX. PURLIN SPACING = 6.25 FT.
MAX. UNBRACED BOTTOM CHORD LENGTH = 10.00 FT OR RIGID CEILING DIRECTLY APPLIED.

ALL PITCH BREAKS AND PERIMETER CORNER JOINTS MUST BE LATERALLY RESTRAINED.

LOADING
TOTAL LOAD CASES: (4)

CHORDS

MEMB. FR-TO	MAX. FACTORED FORCE (LBS)	FACTORED VERT. LOAD LC1 (PLF) FROM	TO	MAX CSI (LC)	MAX. UNBRAC LENGTH
A- B	-537 / 0	-78.0	-78.0	0.03 (1)	6.25
B- C	-731 / 0	-78.0	-78.0	0.02 (1)	6.25
C- D	-714 / 0	-78.0	-78.0	0.03 (1)	6.25
D- E	-428 / 0	-78.0	-78.0	0.20 (1)	6.25
E- F	-410 / 0	-78.0	-78.0	0.20 (1)	6.25
F- G	-685 / 0	-78.0	-78.0	0.03 (1)	6.25
G- H	-660 / 0	-78.0	-78.0	0.02 (1)	6.25
H- I	-455 / 0	-78.0	-78.0	0.02 (1)	6.25
Q- A	-775 / 0	0.0	0.0	0.09 (1)	7.81
J- I	-829 / 0	0.0	0.0	0.11 (1)	7.81
R- Q	0 / 0	-96.5	-96.5	0.16 (1)	10.00
Q- P	0 / 0	-18.5	-18.5	0.12 (1)	10.00
P- O	0 / 421	-18.5	-18.5	0.07 (1)	10.00
O- N	0 / 432	-18.5	-18.5	0.29 (4)	10.00
N- M	0 / 558	-18.5	-18.5	0.30 (4)	10.00
M- L	0 / 396	-18.5	-18.5	0.28 (4)	10.00
L- K	0 / 350	-18.5	-18.5	0.06 (1)	10.00
K- J	0 / 0	-18.5	-18.5	0.01 (4)	10.00

WEBS

MEMB. FR-TO	MAX. FACTORED FORCE (LBS)	MAX CSI (LC)
P- B	-603 / 0	0.16 (1)
O- B	0 / 346	0.08 (1)
O- C	-66 / 0	0.02 (1)
C- N	-28 / 22	0.01 (1)
N- D	0 / 376	0.08 (1)
N- E	-238 / 0	0.33 (1)
E- M	-271 / 0	0.38 (1)
M- F	0 / 354	0.08 (1)
M- G	0 / 43	0.01 (4)
L- G	-154 / 0	0.06 (1)
L- H	0 / 388	0.09 (1)
K- H	-629 / 0	0.17 (1)
A- P	0 / 431	0.10 (1)
K- I	0 / 498	0.11 (1)

{M}[F]

DESIGN CRITERIA

SPECIFIED LOADS:

TOP CH.	LL	=	21.0	PSF
	DL	=	6.0	PSF
BOT CH.	LL	=	0.0	PSF
	DL	=	7.4	PSF
TOTAL LOAD		=	34.4	PSF

SPACING = 24.0 IN. C/C

LOADING IN FLAT SECTION BASED ON A SLOPE OF 2.00/12 MINIMUM

THIS TRUSS IS DESIGNED FOR RESIDENTIAL OR SMALL BUILDING REQUIREMENTS OF PART 9, NBCC 2010, NBCC 2015

THIS DESIGN COMPLIES WITH:
- PART 9 OF OBC 2012, OBC 2018
- CSA 086-09, CSA 086-14
- TPIC 2011, TPIC 2014

DESIGN ASSUMPTIONS
-OVERHANG NOT TO BE ALTERED OR CUT OFF.

(55 % OF 23.0 P.S.F. G.S.L. PLUS 8.4 P.S.F. RAIN LOAD) EQUALS 21.0 P.S.F. SPECIFIED ROOF LIVE LOAD

ALLOWABLE DEFL.(LL)= L/360 (0.59")
CALCULATED VERT. DEFL.(LL) = L/ 999 (0.01")
ALLOWABLE DEFL.(TL)= L/360 (0.59")
CALCULATED VERT. DEFL.(TL) = L/ 999 (0.11")

CANTILEVER DEFLECTION:
ALLOWABLE DEFL.(LL)= L/120 (0.19")
CALCULATED VERT. DEFL.(LL) = L/ 999 (0.01")
ALLOWABLE DEFL.(TL)= L/120 (0.19")
CALCULATED VERT. DEFL.(TL) = L/ 732 (0.03")

CSI: TC=0.20/1.00 (D-E:1) , BC=0.30/1.00 (M-N:4) , WB=0.38/1.00 (E-M:1) , SSI=0.17/1.00 (D-E:1)

DOL LUMBER=1.00 NAIL=1.00 LS BEND=1.10 COMP=1.10 SHEAR=1.10 TENS= 1.10

COMPANION LIVE LOAD FACTOR = 1.00

TRUSS PLATE MANUFACTURER IS NOT RESPONSIBLE FOR QUALITY CONTROL IN THE TRUSS MANUFACTURING PLANT .

NAIL VALUES

PLATE	GRIP(DRY) (PSI) MAX	MIN	SHEAR (PLI) MAX	MIN	SECTION (PLI) MAX	MIN
MT20	618	354	1667	788	1987	1656

PLATE PLACEMENT TOL. = 0.250 inches

PLATE ROTATION TOL. = 5.0 Deg.

JSI GRIP= 0.85 (D) (INPUT = 0.90)
JSI METAL= 0.23 (K) (INPUT = 1.00)

A-18023858

JOB NAME	TRUSS NAME	QUANTITY	PLY	JOB DESC.	DRWG NO.
292627	J1TA	7	1	TRUSS DESC.	

Alpa Roof Truss, Maple

Version 8.200 S Jan 6 2018 MiTek Industries, Inc. Mon Feb 19 08:41:41 2018 Page 1
ID:Rbextx08A5M1Jnp0FfBKG3yNySB-dyCMmUdeNB4k9juN4ygx0Lca06haH4i9Ge1zUVzjeLe

Scale = 1:37.1

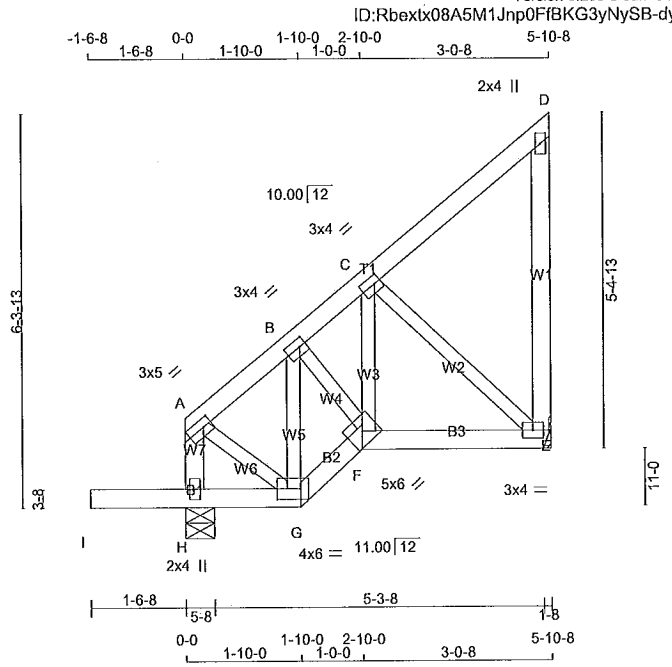

TOTAL WEIGHT = 7 X 34 = 238 lb

[M]

LUMBER

N. L. G. A. RULES

CHORDS	SIZE		LUMBER	DESCR.
H - A	2x4	DRY	No.2	SPF
A - D	2x4	DRY	No.2	SPF
E - D	2x4	DRY	No.2	SPF
I - G	2x4	DRY	No.2	SPF
G - F	2x4	DRY	No.2	SPF
F - E	2x4	DRY	No.2	SPF
ALL WEBS	2x3	DRY	No.2	SPF

DRY: SEASONED LUMBER.

PLATES (table is in inches)

JT	TYPE	PLATES	W	LEN	Y	X
A	TMVW-t	MT20	3.0	5.0	1.50	1.75
B	TMWW-t	MT20	3.0	4.0	1.50	1.25
C	TMWW-t	MT20	3.0	4.0	1.50	1.25
D	TMV+p	MT20	2.0	4.0		
E	BMVW1-t	MT20	3.0	4.0		
F	BBWW-h	MT20	5.0	6.0		
G	BBWW-l	MT20	4.0	6.0	2.00	4.50
H	BMV1+p	MT20	2.0	4.0		

NOTE: Lateral brace(s) shown shall be 1x4 for Part 9 design as per OBC 9.23.13.11, and no less than 2x4 for Part 4 design

REGISTERED PROFESSIONAL ENGINEER
02/19/2018
EDWIN C. FOK
PROVINCE OF ONTARIO

DIMENSIONS, SUPPORTS AND LOADINGS SPECIFIED BY FABRICATOR TO BE VERIFIED BY BUILDING DESIGNER

BEARINGS

JT	FACTORED GROSS REACTION VERT	HORZ	MAXIMUM FACTORED GROSS REACTION DOWN	HORZ	UPLIFT	INPUT BRG IN-SX	REQRD BRG IN-SX
H	452	0	452	0	0	5-8	1-8
E	264	0	264	0	0	HANGER BY OTHERS	
						MIN. SEAT SIZE: 1-8	

UNFACTORED REACTIONS

JT	1ST LCASE COMBINED	MAX./MIN. COMPONENT REACTIONS SNOW	LIVE	PERM.LIVE	WIND	DEAD	SOIL
H	322	197 / 0	0 / 0	0 / 0	0 / 0	125 / 0	0 / 0
E	188	115 / 0	0 / 0	0 / 0	0 / 0	73 / 0	0 / 0

BEARING MATERIAL TO BE SPF NO.2 OR BETTER AT JOINT(S) H

BRACING

TOP CHORD TO BE SHEATHED OR MAX. PURLIN SPACING = 6.25 FT.
MAX. UNBRACED BOTTOM CHORD LENGTH = 10.00 FT OR RIGID CEILING DIRECTLY APPLIED.

ALL PITCH BREAKS AND PERIMETER CORNER JOINTS MUST BE LATERALLY RESTRAINED.

LOADING

TOTAL LOAD CASES: (4)

CHORDS MEMB. FR-TO	MAX. FACTORED FORCE (LBS)	FACTORED VERT. LOAD (PLF) FROM	TO	LC1	MAX CSI (LC)	MAX. UNBRAC LENGTH	WEBS MEMB. FR-TO	MAX. FACTORED FORCE (LBS)	MAX CSI (LC)
H- A	-223 / 0	0.0	0.0	0.02	(1)	7.81	A- G	0 / 130	0.03 (1)
A- B	-145 / 0	-78.0	-78.0	0.04	(1)	6.25	G- B	-198 / 0	0.03 (1)
B- C	-183 / 0	-78.0	-78.0	0.08	(1)	6.25	B- F	0 / 101	0.02 (1)
C- D	-13 / 0	-78.0	-78.0	0.08	(1)	6.25	F- C	0 / 51	0.02 (4)
E- D	-94 / 0	0.0	0.0	0.05	(1)	7.81	C- E	-215 / 0	0.05 (1)
I- H	0 / 0	-96.5	-96.5	0.16	(1)	10.00			
H- G	0 / 0	-18.5	-18.5	0.16	(1)	10.00			
G- F	0 / 142	-18.5	-18.5	0.03	(1)	10.00			
F- E	0 / 161	-18.5	-18.5	0.06	(4)	10.00			

DESIGN CRITERIA

SPECIFIED LOADS:

TOP CH.	LL	=	21.0	PSF
	DL	=	6.0	PSF
BOT CH.	LL	=	0.0	PSF
	DL	=	7.4	PSF
TOTAL LOAD		=	34.4	PSF

SPACING = 24.0 IN. C/C

THIS TRUSS IS DESIGNED FOR RESIDENTIAL OR SMALL BUILDING REQUIREMENTS OF PART 9, NBCC 2010, NBCC 2015

THIS DESIGN COMPLIES WITH:
- PART 9 OF OBC 2012, OBC 2018
- CSA 086-09, CSA 086-14
- TPIC 2011, TPIC 2014

DESIGN ASSUMPTIONS
-OVERHANG NOT TO BE ALTERED OR CUT OFF.

(55 % OF 23.0 P.S.F. G.S.L. PLUS 8.4 P.S.F. RAIN LOAD) EQUALS 21.0 P.S.F. SPECIFIED ROOF LIVE LOAD

ALLOWABLE DEFL.(LL)= L/360 (0.20")
CALCULATED VERT. DEFL.(LL) = L/ 999 (0.00")
ALLOWABLE DEFL.(TL)= L/360 (0.20")
CALCULATED VERT. DEFL.(TL) = L/ 999 (0.01")

CANTILEVER DEFLECTION:
ALLOWABLE DEFL.(LL)= L/120 (0.19")
CALCULATED VERT. DEFL.(LL) = L/ 999 (0.02")
ALLOWABLE DEFL.(TL)= L/120 (0.19")
CALCULATED VERT. DEFL.(TL) = L/ 574 (0.03")

CSI: TC=0.08/1.00 (B-C:1) , BC=0.16/1.00 (G-H:1) , WB=0.05/1.00 (C-E:1) , SSI=0.12/1.00 (H-I:1)

DOL LUMBER=1.00 NAIL=1.00 LS BEND=1.10 COMP=1.10 SHEAR=1.10 TENS= 1.10

COMPANION LIVE LOAD FACTOR = 1.00

TRUSS PLATE MANUFACTURER IS NOT RESPONSIBLE FOR QUALITY CONTROL IN THE TRUSS MANUFACTURING PLANT .

NAIL VALUES

PLATE	GRIP(DRY) (PSI) MAX	MIN	SHEAR (PLI) MAX	MIN	SECTION (PLI) MAX	MIN
MT20	618	354	1667	788	1987	1656

PLATE PLACEMENT TOL. = 0.250 inches

PLATE ROTATION TOL. = 5.0 Deg.

JSI GRIP= 0.28 (E) (INPUT = 0.90)
JSI METAL= 0.06 (E) (INPUT = 1.00)

A-18023859

JOB NAME	TRUSS NAME	QUANTITY	PLY	JOB DESC.	DRWG NO.
292628	H1A	1	1	TRUSS DESC.	

Alpa Roof Truss, Maple

Version 8.200 S Jan 6 2018 MiTek Industries, Inc. Mon Feb 19 09:07:02 2018 Page 1

ID:Rbextx08A5M1Jnp0FfBKG3yNySB-bZcM?a1jBWiw7TgiguSdA55INEhJ9of21mzyMrzjdzt

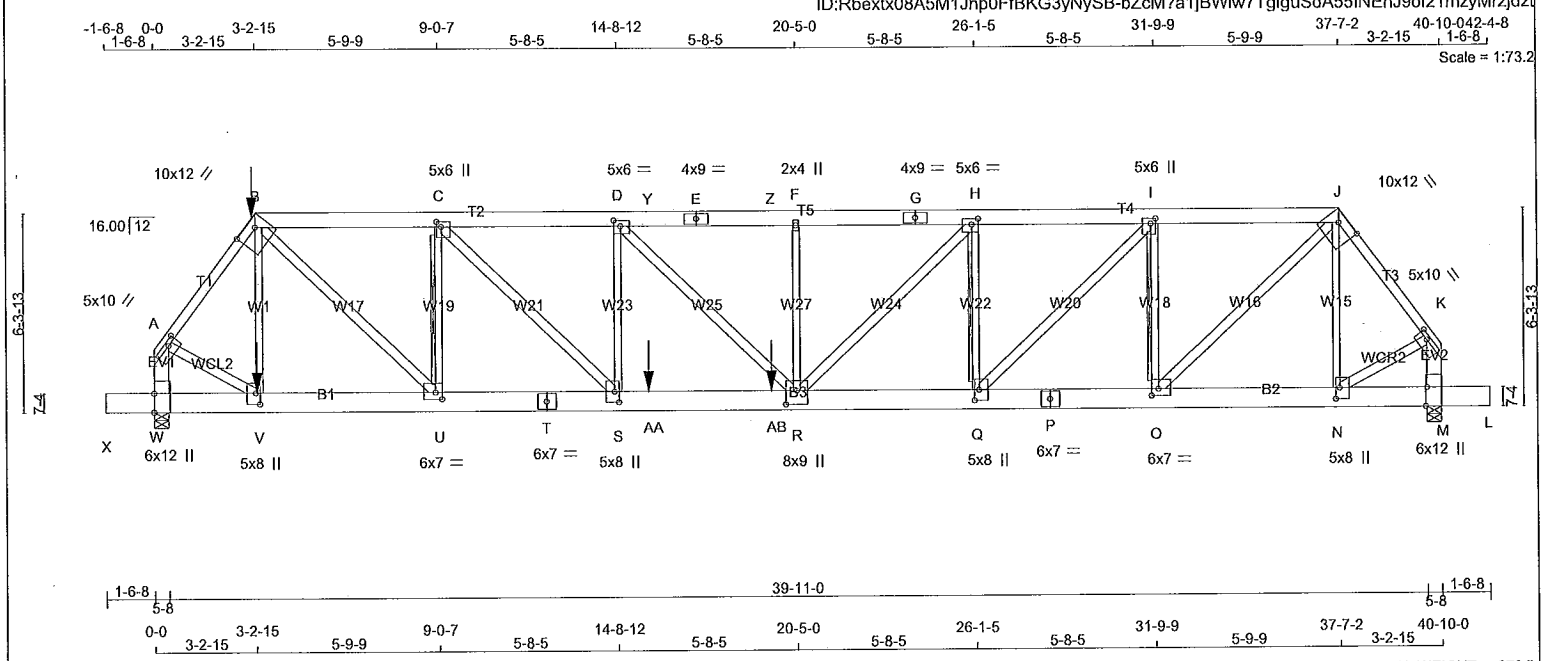

TOTAL WEIGHT = 273 lb

[M]

LUMBER

N. L. G. A. RULES

CHORDS	SIZE		LUMBER	DESCR.
A - B	2x4	DRY	No.2	SPF
B - E	2x6	DRY	No.2	SPF
E - G	2x6	DRY	No.2	SPF
G - J	2x6	DRY	No.2	SPF
J - K	2x4	DRY	No.2	SPF
W - A	2x6	DRY	No.2	SPF
M - K	2x6	DRY	No.2	SPF
X - T	2x8	DRY	1950F 1.7E	SPF
T - P	2x8	DRY	1950F 1.7E	SPF
P - L	2x8	DRY	1950F 1.7E	SPF
ALL WEBS EXCEPT	2x4	DRY	No.2	SPF
V - B	2x3	DRY	No.2	SPF
N - J	2x3	DRY	No.2	SPF
O - I	2x3	DRY	No.2	SPF
U - C	2x3	DRY	No.2	SPF
Q - H	2x3	DRY	No.2	SPF
S - D	2x3	DRY	No.2	SPF
R - F	2x3	DRY	No.2	SPF

DRY: SEASONED LUMBER.

PLATES (table is in inches)

JT	TYPE	PLATES	W	LEN	Y	X
A	TMVW-t	MT20	5.0	10.0	1.50	3.75
B	TTWW-h	MT20	10.0	12.0	3.00	7.50
C	TMWW+t	MT20	5.0	6.0	2.00	1.75
D	TMWW-t	MT20	5.0	6.0	2.25	2.50
E	TS-t	MT20	4.0	9.0		
F	TMW+w	MT20	2.0	4.0		
G	TS-t	MT20	4.0	9.0		
H	TMWW-t	MT20	5.0	6.0	2.25	2.50
I	TMWW+t	MT20	5.0	6.0	2.00	1.75
J	TTWW-h	MT20	10.0	12.0	3.00	7.50
K	TMVW-t	MT20	5.0	10.0	1.50	3.75
M	BMV1+t	MT20	6.0	12.0	Edge	0.50
N	BMWW+t	MT20	5.0	8.0	4.25	1.50
O	BMWW-t	MT20	6.0	7.0	2.50	2.50
P	BS-t	MT20	6.0	7.0		
Q	BMWW+t	MT20	5.0	8.0	4.00	1.75

NOTE: Lateral brace(s) shown shall be 1x4 for Part 9 design as per OBC 9.23.13.11, and no less than 2x4 for Part 4 design

REGISTERED PROFESSIONAL ENGINEER
02/19/2018
EDWIN C. FOK
PROVINCE OF ONTARIO

DIMENSIONS, SUPPORTS AND LOADINGS SPECIFIED BY FABRICATOR TO BE VERIFIED BY BUILDING DESIGNER

BEARINGS

JT	FACTORED GROSS REACTION VERT	HORZ	MAXIMUM FACTORED GROSS REACTION DOWN	HORZ	UPLIFT	INPUT BRG IN-SX	REQRD BRG IN-SX
W	5160	0	5160	0	0	5-8	5-8
M	3584	0	3584	0	0	5-8	5-8

UNFACTORED REACTIONS

JT	1ST LCASE COMBINED	MAX./MIN. COMPONENT REACTIONS SNOW	LIVE	PERM.LIVE	WIND	DEAD	SOIL
W	3633	2475 / 0	0 / 0	0 / 0	0 / 0	1158 / 0	0 / 0
M	2532	1677 / 0	0 / 0	0 / 0	0 / 0	855 / 0	0 / 0

BEARING MATERIAL TO BE SPF NO.2 OR BETTER AT JOINT(S) W, M

BEARING SIZE FACTOR = 1.15 AT JNT(S) W, M (BASED ON SUPPORT DEPTH = 1-8)

BRACING

TOP CHORD TO BE SHEATHED OR MAX. PURLIN SPACING = 2.28 FT.

MAX. UNBRACED BOTTOM CHORD LENGTH = 10.00 FT OR RIGID CEILING DIRECTLY APPLIED.

ALL PITCH BREAKS AND PERIMETER CORNER JOINTS MUST BE LATERALLY RESTRAINED.

2x4 DRY SPF No.2 T-BRACE AT I-O, C-U, H-Q

FASTEN T AND I-BRACES TO NARROW EDGE OF WEB WITH ONE ROW PER PLY OF 3" COMMON WIRE NAILS @ 6" O.C. WITH 3" MINIMUM END DISTANCE. BRACE MUST COVER 90% OF WEB LENGTH.

END VERTICAL(S) MUST BE SHEATHED OR HAVE BRACES AS INDICATED IN THE MAX. UNBRACED LENGTH COLUMN OF THE TABLE BELOW

LOADING

TOTAL LOAD CASES: (4)

CHORDS

MEMB. FR-TO	MAX. FACTORED FORCE (LBS)	FACTORED VERT. LOAD LC1 (PLF) FROM	TO	MAX CSI (LC)	MAX. UNBRAC LENGTH
A- B	-4555 / 0	-78.0	-78.0	0.57 (1)	2.91
B- C	-5742 / 0	-78.0	-78.0	0.45 (1)	3.34
C- D	-8245 / 0	-78.0	-78.0	0.73 (1)	2.58
D- Y	-8745 / 0	-78.0	-78.0	0.90 (1)	2.28
Y- E	-8745 / 0	-154.5	-154.5	0.90 (1)	2.28
E- Z	-8745 / 0	-154.5	-154.5	0.90 (1)	2.28
Z- F	-8745 / 0	-78.0	-78.0	0.90 (1)	2.28
F- G	-8745 / 0	-78.0	-78.0	0.78 (1)	2.45
G- H	-8745 / 0	-78.0	-78.0	0.78 (1)	2.45
H- I	-6922 / 0	-78.0	-78.0	0.57 (1)	2.97
I- J	-4728 / 0	-78.0	-78.0	0.36 (1)	3.73
J- K	-3126 / 0	-78.0	-78.0	0.36 (1)	3.67
W- A	-4955 / 0	0.0	0.0	0.39 (1)	4.79
M- K	-3440 / 0	0.0	0.0	0.27 (1)	5.69
X- W	0 / 0	-96.5	-96.5	0.03 (1)	10.00
W- V	0 / 0	-36.4	-36.4	0.02 (4)	10.00
V- U	0 / 2732	-18.5	-18.5	0.16 (1)	10.00
U- T	0 / 5742	-18.5	-18.5	0.37 (1)	10.00
T- S	0 / 5742	-18.5	-18.5	0.37 (1)	10.00
S-AA	0 / 8245	-18.5	-18.5	0.61 (1)	10.00
AA-AB	0 / 8245	-37.3	-37.3	0.61 (1)	10.00
AB- R	0 / 8245	-18.5	-18.5	0.61 (1)	10.00
R- Q	0 / 6922	-18.5	-18.5	0.41 (1)	10.00
Q- P	0 / 4728	-18.5	-18.5	0.27 (1)	10.00
P- O	0 / 4728	-18.5	-18.5	0.27 (1)	10.00
O- N	0 / 1861	-18.5	-18.5	0.11 (1)	10.00
N- M	0 / 0	-18.5	-18.5	0.03 (1)	10.00
M- L	0 / 0	-96.5	-96.5	0.03 (1)	10.00

WEBS

MEMB. FR-TO	MAX. FACTORED FORCE (LBS)	MAX CSI (LC)
V- B	0 / 133	0.03 (1)
N- J	-674 / 0	0.36 (1)
A- V	0 / 2975	0.53 (1)
N- K	0 / 2042	0.36 (1)
O- J	0 / 4048	0.72 (1)
B- U	0 / 4252	0.75 (1)
O- I	-2735 / 0	0.72 (1)
U- C	-3010 / 0	0.79 (1)
Q- I	0 / 3130	0.55 (1)
C- S	0 / 3569	0.63 (1)
Q- H	-2261 / 0	0.60 (1)
S- D	-1109 / 0	0.60 (1)
R- H	0 / 2600	0.46 (1)
D- R	0 / 714	0.13 (1)
R- F	-612 / 0	0.33 (1)

DESIGN CRITERIA

*** SPECIAL LOADS ANALYSIS ***
GEOMETRY AND/OR BASIC LOADS CHANGED BY USER.
LOADS WERE DERIVED FROM USER INPUT
NO FURTHER MODIFICATIONS WERE MADE

SPECIFIED LOADS:

TOP CH.	LL	=	21.0	PSF
	DL	=	6.0	PSF
BOT CH.	LL	=	0.0	PSF
	DL	=	7.4	PSF
TOTAL LOAD		=	34.4	PSF

SPACING = 24.0 IN. C/C

LOADING IN FLAT SECTION BASED ON A SLOPE OF 2.00/12 MINIMUM

GIRDER TYPE: CPrimeHip
SIDE SETBACK = 3-2-15
END SETBACK = 5-10-8
END WALL WIDTH = 0-0
CORNER FRAMING TYPE: CONVENTIONAL
END JACK TYPE: CONVENTIONAL
APPLIED TO FRONT SIDE
- ADDT'L LOADS BASED ON 55 % OF GSL.
LOADS APPLIED TO FIRST 3-3-6 OF SPAN MEASURED FROM THE LEFT.

*** NON STANDARD GIRDER ***
ADDT'L USER-DEFINED LOADS APPLIED TO ALL LOAD CASES.

THIS TRUSS IS DESIGNED FOR RESIDENTIAL OR SMALL BUILDING REQUIREMENTS OF PART 9, NBCC 2010, NBCC 2015

THIS DESIGN COMPLIES WITH:
- PART 9 OF OBC 2012, OBC 2018
- CSA 086-09, CSA 086-14
- TPIC 2011, TPIC 2014

(55 % OF 23.0 P.S.F. G.S.L. PLUS 8.4 P.S.F. RAIN LOAD) EQUALS 21.0 P.S.F. SPECIFIED ROOF LIVE LOAD

ALLOWABLE DEFL.(LL)= L/360 (1.36")
CALCULATED VERT. DEFL.(LL) = L/ 999 (0.38")
ALLOWABLE DEFL.(TL)= L/360 (1.36")
CALCULATED VERT. DEFL.(TL) = L/ 723 (0.68")

CANTILEVER DEFLECTION:
ALLOWABLE DEFL.(LL)= L/120 (0.19")
CALCULATED VERT. DEFL.(LL) = L/ 999 (0.00")
ALLOWABLE DEFL.(TL)= L/120 (0.19")
CALCULATED VERT. DEFL.(TL) = L/ 999 (0.00")

CSI: TC=0.90/1.00 (D-F:1) , BC=0.61/1.00 (R-S:1) , WB=0.79/1.00 (C-U:1) , SSI=0.94/1.00 (R-S:1)

DOL LUMBER=1.00 NAIL=1.00 LS BEND=1.00 COMP=1.00 SHEAR=1.00 TENS= 1.00

COMPANION LIVE LOAD FACTOR = 1.00

AUTOSOLVE HEELS OFF

A-18023860

CONTINUED ON PAGE 2

JOB NAME	TRUSS NAME	QUANTITY	PLY	JOB DESC.	DRWG NO.
292628	H1A	1	1	TRUSS DESC.	

PLATES (table is in inches)

JT	TYPE	PLATES	W	LEN	Y	X
R	BMWWW+t	MT20	8.0	9.0	5.25	4.00
S	BMWW+t	MT20	5.0	8.0	4.00	1.75
T	BS-t	MT20	6.0	7.0		
U	BMWW-t	MT20	6.0	7.0	2.50	2.50
V	BMWW+t	MT20	5.0	8.0	4.25	1.50
W	BMV1+t	MT20	6.0	12.0	Edge	

Edge - INDICATES REFERENCE CORNER OF PLATE TOUCHES EDGE OF CHORD.

HANGERS NOTES

1) SPECIAL HANGER(S) OR CONNECTION(S) REQUIRED TO SUPPORT CONCENTRATED LOAD(S) 184.5 lbs FACTORED DOWN AT 3-2-15 ON TOP CHORD, AND 1177.5 lbs FACTORED DOWN AT 3-3-6, AND 1177.5 lbs FACTORED DOWN AT 15-8-8, AND 1534.5 lbs FACTORED DOWN AT 19-7-8 ON BOTTOM CHORD. DESIGN FOR UNSPECIFIED CONNECTION(S) IS DELEGATED TO THE BUILDING DESIGNER.

NOTE: Lateral brace(s) shown shall be 1x4 for Part 9 design as per OBC 9.23.13.11, and no less than 2x4 for Part 4 design

REGISTERED PROFESSIONAL ENGINEER
02/19/2018
EDWIN C. FOK
PROVINCE OF ONTARIO

FACTORED CONCENTRATED LOADS (LBS)

JT	LOC.	LC1	MAX-	MAX+	FACE	DIR.	TYPE
B	3-2-15	-184	-184	---	FRONT	VERT	TOTAL
V	3-3-6	-1178	-1178	---	FRONT	VERT	TOTAL
AA	15-8-8	-1178	-1178	---	FRONT	VERT	TOTAL
AB	19-7-8	-1535	-1535	---	FRONT	VERT	TOTAL

TRUSS PLATE MANUFACTURER IS NOT RESPONSIBLE FOR QUALITY CONTROL IN THE TRUSS MANUFACTURING PLANT .

NAIL VALUES

PLATE	GRIP(DRY) (PSI)		SHEAR (PLI)		SECTION (PLI)	
	MAX	MIN	MAX	MIN	MAX	MIN
MT20	618	354	1667	788	1987	1656

PLATE PLACEMENT TOL. = 0.250 inches

PLATE ROTATION TOL. = 5.0 Deg.

JSI GRIP= 0.90 (S) (INPUT = 0.90)
JSI METAL= 0.98 (V) (INPUT = 1.00)

A-180238600(2)

JOB NAME	TRUSS NAME	QUANTITY	PLY	JOB DESC.	DRWG NO.
292628	H1B	1	1	TRUSS DESC.	

Alpa Roof Truss, Maple

Version 8.200 S Jan 6 2018 MiTek Industries, Inc. Mon Feb 19 09:08:11 2018 Page 1

ID:Rbextx08A5M1Jnp0FfBKG3yNySB-4rHSTAs?xjO7v4SyDtCoTeS8G2DHq0DCu?B6HLzjdyo

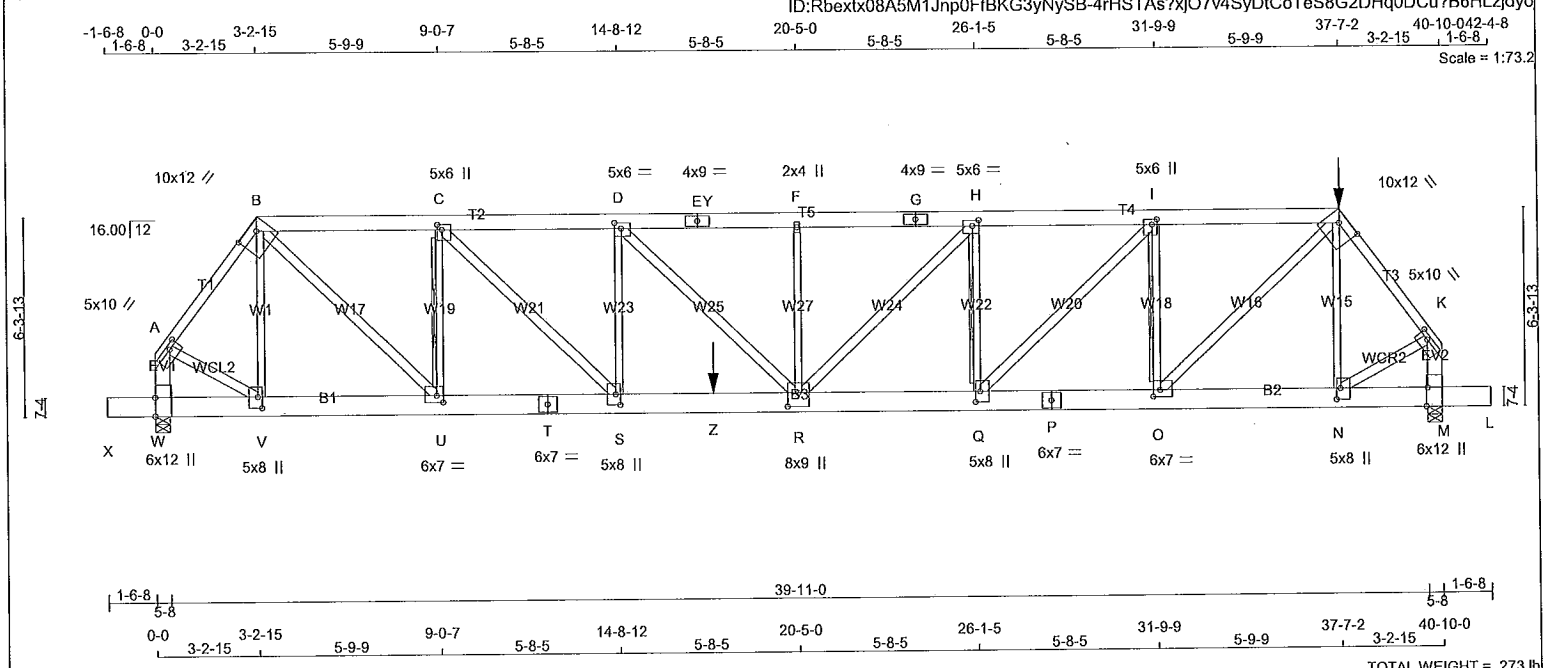

TOTAL WEIGHT = 273 lb

[M]

LUMBER

N. L. G. A. RULES

CHORDS	SIZE		LUMBER	DESCR.
A - B	2x4	DRY	No.2	SPF
B - E	2x6	DRY	No.2	SPF
E - G	2x6	DRY	No.2	SPF
G - J	2x6	DRY	No.2	SPF
J - K	2x4	DRY	No.2	SPF
W - A	2x6	DRY	No.2	SPF
M - K	2x6	DRY	No.2	SPF
X - T	2x8	DRY	1950F 1.7E	SPF
T - P	2x8	DRY	1950F 1.7E	SPF
P - L	2x8	DRY	1950F 1.7E	SPF
ALL WEBS EXCEPT	2x4	DRY	No.2	SPF
V - B	2x3	DRY	No.2	SPF
N - J	2x3	DRY	No.2	SPF
O - I	2x3	DRY	No.2	SPF
U - C	2x3	DRY	No.2	SPF
Q - H	2x3	DRY	No.2	SPF
S - D	2x3	DRY	No.2	SPF
R - F	2x3	DRY	No.2	SPF

DRY: SEASONED LUMBER.

PLATES (table is in inches)

JT	TYPE	PLATES	W	LEN	Y	X
A	TMVW-t	MT20	5.0	10.0	1.50	3.75
B	TTWW-h	MT20	10.0	12.0	3.00	7.50
C	TMWW+t	MT20	5.0	6.0	2.00	1.75
D	TMWW-t	MT20	5.0	6.0	2.25	2.50
E	TS-t	MT20	4.0	9.0		
F	TMW+w	MT20	2.0	4.0		
G	TS-t	MT20	4.0	9.0		
H	TMWW-t	MT20	5.0	6.0	2.25	2.50
I	TMWW+t	MT20	5.0	6.0	2.00	1.75
J	TTWW-h	MT20	10.0	12.0	3.00	7.50
K	TMVW-t	MT20	5.0	10.0	1.50	3.75
M	BMV1+t	MT20	6.0	12.0	Edge	0.50
N	BMWW+t	MT20	5.0	8.0	4.25	1.50
O	BMWW-t	MT20	6.0	7.0	2.50	2.50
P	BS-t	MT20	6.0	7.0		
Q	BMWW+t	MT20	5.0	8.0	4.00	1.75

NOTE: Lateral brace(s) shown shall be 1x4 for Part 9 design as per OBC 9.23.13.11, and no less than 2x4 for Part 4 design

REGISTERED PROFESSIONAL ENGINEER
02/19/2018
EDWIN C. FOK
PROVINCE OF ONTARIO

DIMENSIONS, SUPPORTS AND LOADINGS SPECIFIED BY FABRICATOR TO BE VERIFIED BY BUILDING DESIGNER

BEARINGS

JT	FACTORED GROSS REACTION VERT	HORZ	MAXIMUM FACTORED GROSS REACTION DOWN	HORZ	UPLIFT	INPUT BRG IN-SX	REQRD BRG IN-SX
W	3465	0	3465	0	0	5-8	5-8
M	4161	0	4161	0	0	5-8	5-8

UNFACTORED REACTIONS

JT	1ST LCASE COMBINED	MAX./MIN. COMPONENT REACTIONS SNOW	LIVE	PERM.LIVE	WIND	DEAD	SOIL
W	2457	1575 / 0	0 / 0	0 / 0	0 / 0	882 / 0	0 / 0
M	2958	1855 / 0	0 / 0	0 / 0	0 / 0	1103 / 0	0 / 0

BEARING MATERIAL TO BE SPF NO.2 OR BETTER AT JOINT(S) W, M
BEARING SIZE FACTOR = 1.15 AT JNT(S) M (BASED ON SUPPORT DEPTH = 1-8)

BRACING

TOP CHORD TO BE SHEATHED OR MAX. PURLIN SPACING = 2.62 FT.
MAX. UNBRACED BOTTOM CHORD LENGTH = 10.00 FT OR RIGID CEILING DIRECTLY APPLIED.

ALL PITCH BREAKS AND PERIMETER CORNER JOINTS MUST BE LATERALLY RESTRAINED.

2x4 DRY SPF No.2 T-BRACE AT I-O, C-U, H-Q

FASTEN T AND I-BRACES TO NARROW EDGE OF WEB WITH ONE ROW PER PLY OF 3" COMMON WIRE NAILS @ 6" O.C. WITH 3" MINIMUM END DISTANCE. BRACE MUST COVER 90% OF WEB LENGTH.

END VERTICAL(S) MUST BE SHEATHED OR HAVE BRACES AS INDICATED IN THE MAX. UNBRACED LENGTH COLUMN OF THE TABLE BELOW

LOADING

TOTAL LOAD CASES: (4)

CHORDS

MEMB. FR-TO	MAX. FACTORED FORCE (LBS)	FACTORED VERT. LOAD LC1 (PLF) FROM	TO	MAX CSI (LC)	MAX. UNBRAC LENGTH
A- B	-3024 / 0	-78.0	-78.0	0.35 (1)	3.73
B- C	-4514 / 0	-78.0	-78.0	0.34 (1)	3.83
C- D	-6740 / 0	-78.0	-78.0	0.54 (1)	3.03
D- E	-7680 / 0	-78.0	-78.0	0.71 (1)	2.67
E- Y	-7680 / 0	-78.0	-78.0	0.71 (1)	2.67
Y- F	-7680 / 0	-153.5	-153.5	0.71 (1)	2.67
F- G	-7680 / 0	-153.5	-153.5	0.75 (1)	2.62
G- H	-7680 / 0	-153.5	-153.5	0.75 (1)	2.62
H- I	-6871 / 0	-153.5	-153.5	0.75 (1)	2.72
I- J	-5143 / 0	-153.5	-153.5	0.59 (1)	3.32
J- K	-3649 / 0	-78.0	-78.0	0.43 (1)	3.36
W- A	-3332 / 0	0.0	0.0	0.26 (1)	5.77
M- K	-3995 / 0	0.0	0.0	0.31 (1)	5.32
X- W	0 / 0	-96.5	-96.5	0.03 (1)	10.00
W- V	0 / 0	-18.5	-18.5	0.04 (1)	10.00
V- U	0 / 1802	-18.5	-18.5	0.12 (1)	10.00
U- T	0 / 4514	-18.5	-18.5	0.32 (1)	10.00
T- S	0 / 4514	-18.5	-18.5	0.32 (1)	10.00
S- Z	0 / 6740	-18.5	-18.5	0.69 (1)	10.00
Z- R	0 / 6740	-36.4	-36.4	0.69 (1)	10.00
R- Q	0 / 6871	-36.4	-36.4	0.40 (1)	10.00
Q- P	0 / 5143	-36.4	-36.4	0.29 (1)	10.00
P- O	0 / 5143	-36.4	-36.4	0.29 (1)	10.00
O- N	0 / 2174	-36.4	-36.4	0.14 (1)	10.00
N- M	0 / 0	-36.4	-36.4	0.04 (4)	10.00
M- L	0 / 0	-96.5	-96.5	0.03 (1)	10.00

WEBS

MEMB. FR-TO	MAX. FACTORED FORCE (LBS)	MAX CSI (LC)
V- B	-603 / 0	0.32 (1)
N- J	-720 / 0	0.39 (1)
A- V	0 / 1975	0.35 (1)
N- K	0 / 2384	0.42 (1)
O- J	0 / 4192	0.74 (1)
B- U	0 / 3830	0.68 (1)
O- I	-2736 / 0	0.72 (1)
U- C	-2754 / 0	0.73 (1)
Q- I	0 / 2464	0.44 (1)
C- S	0 / 3175	0.56 (1)
Q- H	-1683 / 0	0.44 (1)
S- D	-1420 / 0	0.76 (1)
R- H	0 / 1154	0.20 (1)
D- R	0 / 1341	0.24 (1)
R- F	-834 / 0	0.45 (1)

DESIGN CRITERIA

*** SPECIAL LOADS ANALYSIS ***
GEOMETRY AND/OR BASIC LOADS CHANGED BY USER.
LOADS WERE DERIVED FROM USER INPUT
NO FURTHER MODIFICATIONS WERE MADE

SPECIFIED LOADS:

TOP CH.	LL	=	21.0	PSF
	DL	=	6.0	PSF
BOT CH.	LL	=	0.0	PSF
	DL	=	7.4	PSF
TOTAL LOAD		=	34.4	PSF

SPACING = 24.0 IN. C/C

LOADING IN FLAT SECTION BASED ON A SLOPE OF 2.00/12 MINIMUM

GIRDER TYPE: CPrimeHip
SIDE SETBACK = 3-2-15
END SETBACK = 5-10-8
END WALL WIDTH = 0-0
CORNER FRAMING TYPE: CONVENTIONAL
END JACK TYPE: CONVENTIONAL
APPLIED TO FRONT SIDE
- ADDT'L LOADS BASED ON 55 % OF GSL.
LOADS APPLIED TO FIRST 23-3-0 OF SPAN MEASURED FROM THE RIGHT.

*** NON STANDARD GIRDER ***
ADDT'L USER-DEFINED LOADS APPLIED TO ALL LOAD CASES.

THIS TRUSS IS DESIGNED FOR RESIDENTIAL OR SMALL BUILDING REQUIREMENTS OF PART 9, NBCC 2010, NBCC 2015

THIS DESIGN COMPLIES WITH:
- PART 9 OF OBC 2012, OBC 2018
- CSA 086-09, CSA 086-14
- TPIC 2011, TPIC 2014

(55 % OF 23.0 P.S.F. G.S.L. PLUS 8.4 P.S.F. RAIN LOAD) EQUALS 21.0 P.S.F. SPECIFIED ROOF LIVE LOAD

ALLOWABLE DEFL.(LL)= L/360 (1.36")
CALCULATED VERT. DEFL.(LL) = L/ 999 (0.33")
ALLOWABLE DEFL.(TL)= L/360 (1.36")
CALCULATED VERT. DEFL.(TL) = L/ 810 (0.60")

CANTILEVER DEFLECTION:
ALLOWABLE DEFL.(LL)= L/120 (0.19")
CALCULATED VERT. DEFL.(LL) = L/ 999 (0.00")
ALLOWABLE DEFL.(TL)= L/120 (0.19")
CALCULATED VERT. DEFL.(TL) = L/ 999 (0.00")

CSI: TC=0.75/1.00 (H-I:1) , BC=0.69/1.00 (R-S:1) , WB=0.76/1.00 (D-S:1) , SSI=0.44/1.00 (R-S:1)

DOL LUMBER=1.00 NAIL=1.00 LS BEND=1.00 COMP=1.00 SHEAR=1.00 TENS= 1.00

COMPANION LIVE LOAD FACTOR = 1.00

AUTOSOLVE HEELS OFF

A-18023861

CONTINUED ON PAGE 2

JOB NAME	TRUSS NAME	QUANTITY	PLY	JOB DESC.	DRWG NO.
292628	H1B	1	1	TRUSS DESC.	

PLATES (table is in inches)

JT	TYPE	PLATES	W	LEN	Y	X
R	BMWWW+t	MT20	8.0	9.0	5.25	4.00
S	BMWW+t	MT20	5.0	8.0	4.00	1.75
T	BS-t	MT20	6.0	7.0		
U	BMWW-t	MT20	6.0	7.0	2.50	2.50
V	BMWW+t	MT20	5.0	8.0	4.25	1.50
W	BMV1+t	MT20	6.0	12.0	Edge	

Edge - INDICATES REFERENCE CORNER OF PLATE TOUCHES EDGE OF CHORD.

HANGERS NOTES

1) SPECIAL HANGER(S) OR CONNECTION(S) REQUIRED TO SUPPORT CONCENTRATED LOAD(S) 184.5 lbs FACTORED DOWN AT 37-7-2 ON TOP CHORD, AND 1279.7 lbs FACTORED DOWN AT 17-8-8 ON BOTTOM CHORD. DESIGN FOR UNSPECIFIED CONNECTION(S) IS DELEGATED TO THE BUILDING DESIGNER.

NOTE: Lateral brace(s) shown shall be 1x4 for Part 9 design as per OBC 9.23.13.11, and no less than 2x4 for Part 4 design

REGISTERED PROFESSIONAL ENGINEER
02/19/2018
EDWIN C. FOK
PROVINCE OF ONTARIO

FACTORED CONCENTRATED LOADS (LBS)

JT	LOC.	LC1	MAX-	MAX+	FACE	DIR.	TYPE
J	37-7-2	-184	-184	---	FRONT	VERT	TOTAL
Z	17-8-8	-1280	-1280	---	FRONT	VERT	TOTAL

TRUSS PLATE MANUFACTURER IS NOT RESPONSIBLE FOR QUALITY CONTROL IN THE TRUSS MANUFACTURING PLANT.

NAIL VALUES

PLATE	GRIP(DRY) (PSI)		SHEAR (PLI)		SECTION (PLI)	
	MAX	MIN	MAX	MIN	MAX	MIN
MT20	618	354	1667	788	1987	1656

PLATE PLACEMENT TOL. = 0.250 inches

PLATE ROTATION TOL. = 5.0 Deg.

JSI GRIP= 0.88 (O) (INPUT = 0.90)
JSI METAL= 0.88 (T) (INPUT = 1.00)

A-18023861(2)

JOB NAME	TRUSS NAME	QUANTITY	PLY	JOB DESC.	DRWG NO.
292628	H11T	1	1	TRUSS DESC.	

Alpa Roof Truss, Maple

Version 8.200 S Jan 6 2018 MiTek Industries, Inc. Mon Feb 19 09:11:16 2018 Page 1

ID:Rbextx08A5M1Jnp0FfBKG3yNySB-9RyOlQ61MZitbV5WYE0BSfdkjdRrgm?QRHVOH7zjdvv

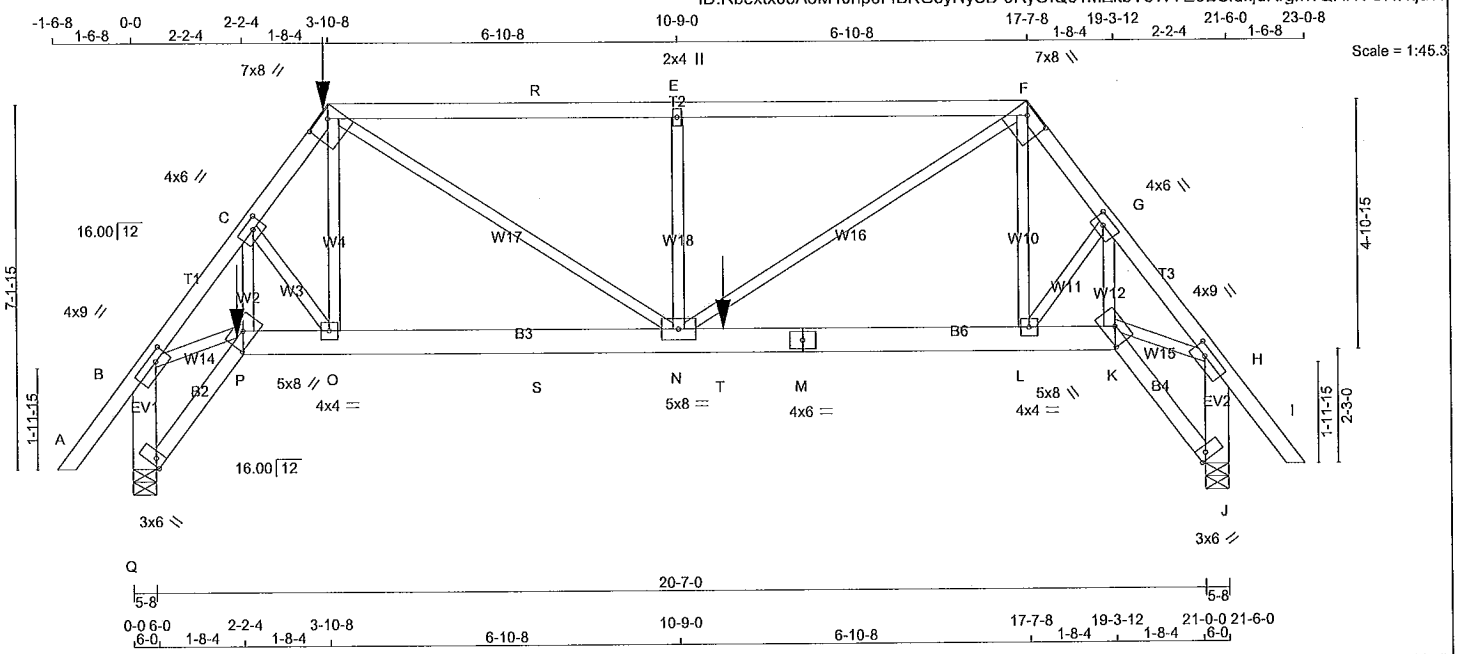

TOTAL WEIGHT = 115 lb

(M)

LUMBER

N. L. G. A. RULES

CHORDS	SIZE		LUMBER	DESCR.
A - D	2x4	DRY	No.2	SPF
D - F	2x4	DRY	1650F 1.5E	SPF
F - I	2x4	DRY	No.2	SPF
Q - B	2x6	DRY	No.2	SPF
J - H	2x6	DRY	No.2	SPF
Q - P	2x4	DRY	No.2	SPF
P - M	2x6	DRY	No.2	SPF
M - K	2x6	DRY	No.2	SPF
K - J	2x4	DRY	No.2	SPF
ALL WEBS EXCEPT	2x3	DRY	No.2	SPF

DRY: SEASONED LUMBER.

PLATES (table is in inches)

JT	TYPE	PLATES	W	LEN	Y	X
B	TMVW-t	MT20	4.0	9.0	1.75	3.00
C	TMWW-t	MT20	4.0	6.0	2.00	2.50
D	TTWW-h	MT20	7.0	8.0	1.75	5.00
E	TMW+w	MT20	2.0	4.0		
F	TTWW-h	MT20	7.0	8.0	1.75	5.00
G	TMWW-t	MT20	4.0	6.0	2.00	2.50
H	TMVW-t	MT20	4.0	9.0	1.75	3.00
J	BVM1+l	MT20	3.0	6.0	Edge	
K	BBWW-h	MT20	5.0	8.0	2.75	4.00
L	BMWW-t	MT20	4.0	4.0		
M	BS-t	MT20	4.0	6.0		
N	BMWWW-t	MT20	5.0	8.0		
O	BMWW-t	MT20	4.0	4.0		
P	BBWW-h	MT20	5.0	8.0	2.75	4.00
Q	BVM1+l	MT20	3.0	6.0	Edge	

Edge - INDICATES REFERENCE CORNER OF PLATE TOUCHES EDGE OF CHORD.

HANGERS NOTES

1)

NOTE: Lateral brace(s) shown shall be 1x4 for Part 9 design as per OBC 9.23.13.11, and no less than 2x4 for Part 4 design

REGISTERED PROFESSIONAL ENGINEER
02/19/2018
EDWIN C. FOK
PROVINCE OF ONTARIO

DIMENSIONS, SUPPORTS AND LOADINGS SPECIFIED BY FABRICATOR TO BE VERIFIED BY BUILDING DESIGNER

BEARINGS

JT	FACTORED GROSS REACTION VERT	HORZ	MAXIMUM FACTORED GROSS REACTION DOWN	HORZ	UPLIFT	INPUT BRG IN-SX	REQRD BRG IN-SX
Q	1933	0	1933	0	0	5-8	1-13
J	1613	0	1613	0	0	5-8	1-8

UNFACTORED REACTIONS

JT	1ST LCASE COMBINED	MAX./MIN. COMPONENT REACTIONS SNOW	LIVE	PERM.LIVE	WIND	DEAD	SOIL
Q	1377	849 / 0	0 / 0	0 / 0	0 / 0	528 / 0	0 / 0
J	1148	714 / 0	0 / 0	0 / 0	0 / 0	434 / 0	0 / 0

BEARING MATERIAL TO BE SPF NO.2 OR BETTER AT JOINT(S) Q, J

BEARING SIZE FACTOR = 1.15 AT JNT(S) Q, J (BASED ON SUPPORT DEPTH = 1-8)

BRACING

TOP CHORD TO BE SHEATHED OR MAX. PURLIN SPACING = 3.91 FT.

MAX. UNBRACED BOTTOM CHORD LENGTH = 10.00 FT OR RIGID CEILING DIRECTLY APPLIED.

ALL PITCH BREAKS AND PERIMETER CORNER JOINTS MUST BE LATERALLY RESTRAINED.

LOADING

TOTAL LOAD CASES: (4)

CHORDS

MEMB. FR-TO	MAX. FACTORED FORCE (LBS)	FACTORED VERT. LOAD (PLF) FROM	TO	LC1	MAX CSI (LC)	MAX. UNBRAC LENGTH
A- B	0 / 43	-78.0	-78.0	0.12 (1)	10.00	
B- C	-2847 / 0	-78.0	-78.0	0.20 (1)	3.94	
C- D	-2249 / 0	-78.0	-78.0	0.11 (1)	4.45	
D- R	-2387 / 0	-114.5	-114.5	0.81 (1)	3.91	
R- E	-2387 / 0	-78.0	-78.0	0.81 (1)	3.91	
E- F	-2386 / 0	-78.0	-78.0	0.81 (1)	3.91	
F- G	-1985 / 0	-78.0	-78.0	0.09 (1)	4.71	
G- H	-2332 / 0	-78.0	-78.0	0.16 (1)	4.33	
H- I	0 / 43	-78.0	-78.0	0.12 (1)	10.00	
Q- B	-1903 / 0	0.0	0.0	0.18 (1)	7.24	
J- H	-1593 / 0	0.0	0.0	0.15 (1)	7.75	
Q- P	0 / 0	-27.2	-27.2	0.04 (4)	10.00	
P- O	0 / 1671	-27.2	-27.2	0.29 (1)	10.00	
O- S	0 / 1347	-27.2	-27.2	0.34 (1)	10.00	
S- N	0 / 1347	-63.7	-63.7	0.34 (1)	10.00	
N- T	0 / 1186	-63.7	-63.7	0.35 (1)	10.00	
T- M	0 / 1186	-18.5	-18.5	0.35 (1)	10.00	
M- L	0 / 1186	-18.5	-18.5	0.35 (1)	10.00	
L- K	0 / 1381	-18.5	-18.5	0.33 (1)	10.00	
K- J	0 / 0	-18.5	-18.5	0.03 (4)	10.00	

WEBS

MEMB. FR-TO	MAX. FACTORED FORCE (LBS)	MAX CSI (LC)
P- C	0 / 786	0.19 (1)
C- O	-578 / 0	0.11 (1)
O- D	0 / 633	0.16 (1)
L- F	0 / 543	0.13 (1)
L- G	-354 / 0	0.07 (1)
K- G	0 / 400	0.10 (1)
B- P	0 / 1800	0.45 (1)
K- H	0 / 1476	0.37 (1)
N- F	0 / 1434	0.35 (1)
D- N	0 / 1242	0.31 (1)
N- E	-692 / 0	0.24 (1)

FACTORED CONCENTRATED LOADS (LBS)

JT	LOC.	LC1	MAX-	MAX+	FACE	DIR.	TYPE
D	3-10-8	-120	-120	---	FRONT	VERT	TOTAL
P	2-2-4	-205	-205	---	FRONT	VERT	TOTAL
T	11-7-8	-548	-548	---	FRONT	VERT	TOTAL

DESIGN CRITERIA

*** SPECIAL LOADS ANALYSIS ***
GEOMETRY AND/OR BASIC LOADS CHANGED BY USER.
LOADS WERE DERIVED FROM USER INPUT
NO FURTHER MODIFICATIONS WERE MADE

SPECIFIED LOADS:

TOP CH.	LL	=	21.0	PSF
	DL	=	6.0	PSF
BOT CH.	LL	=	0.0	PSF
	DL	=	7.4	PSF
TOTAL LOAD		=	34.4	PSF

SPACING = 24.0 IN. C/C

LOADING IN FLAT SECTION BASED ON A SLOPE OF 2.00/12 MINIMUM

GIRDER TYPE: CPrimeHip
SIDE SETBACK = 3-10-8
END SETBACK = 3-10-8
END WALL WIDTH = 0-0
CORNER FRAMING TYPE: CONVENTIONAL
END JACK TYPE: CONVENTIONAL
APPLIED TO FRONT SIDE
- ADDT'L LOADS BASED ON 55 % OF GSL.
LOADS APPLIED TO FIRST 8-0-0 OF SPAN MEASURED FROM THE LEFT.

GIRDER TYPE: CStdGirder
START DISTANCE = 8-0-0
START SPAN CARRIED = 3-10-8
END DISTANCE = 11-7-8
END SPAN CARRIED = 3-10-8
END WALL WIDTH = 0-0
APPLIED TO FRONT SIDE OF BOTTOM CHORD.
- ADDT'L LOADS BASED ON 55 % OF GSL.

*** NON STANDARD GIRDER ***
ADDT'L USER-DEFINED LOADS APPLIED TO ALL LOAD CASES.

THIS TRUSS IS DESIGNED FOR RESIDENTIAL OR SMALL BUILDING REQUIREMENTS OF PART 9, NBCC 2010, NBCC 2015

THIS DESIGN COMPLIES WITH:
- PART 9 OF OBC 2012, OBC 2018
- CSA 086-09, CSA 086-14
- TPIC 2011, TPIC 2014

(55 % OF 23.0 P.S.F. G.S.L. PLUS 8.4 P.S.F. RAIN LOAD) EQUALS 21.0 P.S.F. SPECIFIED ROOF LIVE LOAD

ALLOWABLE DEFL.(LL)= L/360 (0.72")
CALCULATED VERT. DEFL.(LL) = L/ 999 (0.08")
ALLOWABLE DEFL.(TL)= L/360 (0.72")
CALCULATED VERT. DEFL.(TL) = L/ 999 (0.16")

CSI: TC=0.81/1.00 (D-E:1) , BC=0.35/1.00 (L-N:1) , WB=0.45/1.00 (B-P:1) , SSI=0.38/1.00 (L-N:1)

DOL LUMBER=1.00 NAIL=1.00 LS BEND=1.00 COMP=1.00 SHEAR=1.00 TENS= 1.00

COMPANION LIVE LOAD FACTOR = 1.00

A-18023862

CONTINUED ON PAGE 2

JOB NAME	TRUSS NAME	QUANTITY	PLY	JOB DESC.	DRWG NO.
292628	H12T	2	1	TRUSS DESC.	

Alpa Roof Truss, Maple

Version 8.200 S Jan 6 2018 MiTek Industries, Inc. Mon Feb 19 08:58:45 2018 Page 1
ID:Rbextx08A5M1Jnp0FfBKG3yNySB-ey4Thd0yEp5R?5AA3024WH0XCu7xC9auky49Q9zje5e

Scale = 1:58.7

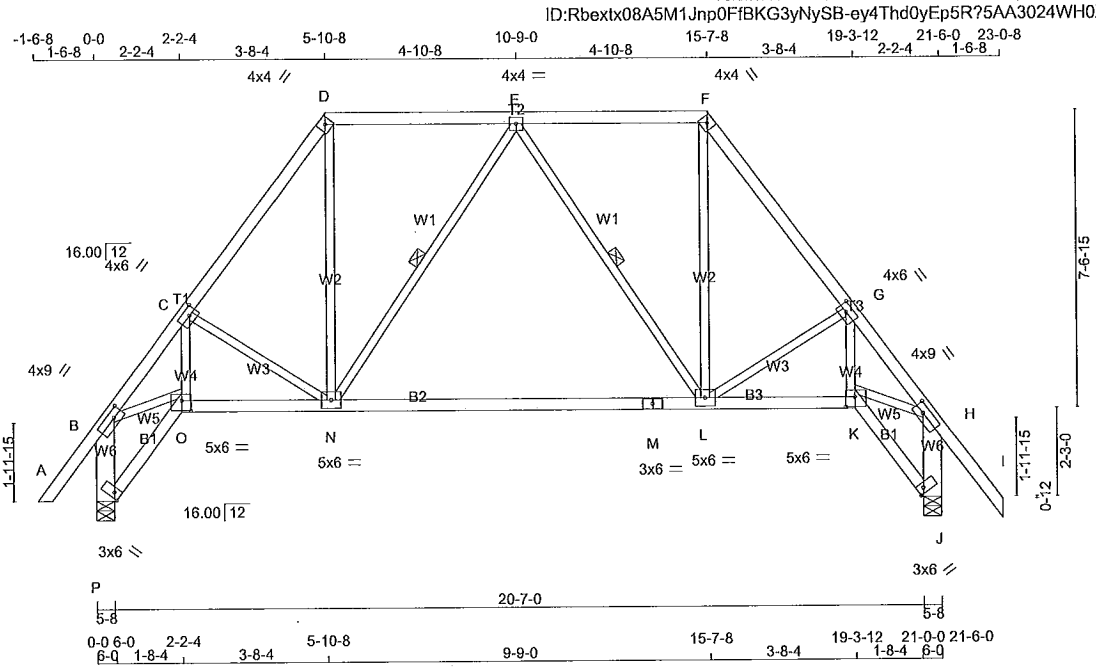

TOTAL WEIGHT = 2 X 113 = 225 lb

[M][F]

LUMBER

N. L. G. A. RULES

CHORDS	SIZE		LUMBER	DESCR.
A - D	2x4	DRY	No.2	SPF
D - F	2x4	DRY	No.2	SPF
F - I	2x4	DRY	No.2	SPF
P - B	2x6	DRY	No.2	SPF
J - H	2x6	DRY	No.2	SPF
P - O	2x4	DRY	No.2	SPF
O - M	2x4	DRY	No.2	SPF
M - K	2x4	DRY	No.2	SPF
K - J	2x4	DRY	No.2	SPF
ALL WEBS EXCEPT	2x3	DRY	No.2	SPF

DRY: SEASONED LUMBER.

PLATES (table is in inches)

JT	TYPE	PLATES	W	LEN	Y	X
B	TMVW-t	MT20	4.0	9.0	2.00	3.00
C	TMWW-t	MT20	4.0	6.0	2.00	2.50
D	TTW-h	MT20	4.0	4.0		
E	TMWW-t	MT20	4.0	4.0		
F	TTW-h	MT20	4.0	4.0		
G	TMWW-t	MT20	4.0	6.0	2.00	2.50
H	TMVW-t	MT20	4.0	9.0	2.00	3.00
J	BVM1+I	MT20	3.0	6.0	Edge	
K	BBWW-I	MT20	5.0	6.0	3.00	2.75
L	BMWWW-t	MT20	5.0	6.0		
M	BS-t	MT20	3.0	6.0		
N	BMWWW-t	MT20	5.0	6.0		
O	BBWW-I	MT20	5.0	6.0	3.00	2.75
P	BVM1+I	MT20	3.0	6.0	Edge	

Edge - INDICATES REFERENCE CORNER OF PLATE TOUCHES EDGE OF CHORD.

NOTE: Lateral brace(s) shown shall be 1x4 for Part 9 design as per OBC 9.23.13.11, and no less than 2x4 for Part 4 design

REGISTERED PROFESSIONAL ENGINEER
02/19/2018
EDWIN C. FOK
PROVINCE OF ONTARIO

DIMENSIONS, SUPPORTS AND LOADINGS SPECIFIED BY FABRICATOR TO BE VERIFIED BY BUILDING DESIGNER

BEARINGS

JT	FACTORED GROSS REACTION VERT	HORZ	MAXIMUM FACTORED GROSS REACTION DOWN	HORZ	UPLIFT	INPUT BRG IN-SX	REQRD BRG IN-SX
P	1140	0	1140	0	0	5-8	1-8
J	1171	0	1171	0	0	5-8	1-8

UNFACTORED REACTIONS

JT	1ST LCASE COMBINED	MAX./MIN. COMPONENT REACTIONS SNOW	LIVE	PERM.LIVE	WIND	DEAD	SOIL
P	810	507 / 0	0 / 0	0 / 0	0 / 0	304 / 0	0 / 0
J	832	524 / 0	0 / 0	0 / 0	0 / 0	309 / 0	0 / 0

BEARING MATERIAL TO BE SPF NO.2 OR BETTER AT JOINT(S) P, J
BEARING SIZE FACTOR = 1.15 AT JNT(S) P, J (BASED ON SUPPORT DEPTH = 1-8)

BRACING

TOP CHORD TO BE SHEATHED OR MAX. PURLIN SPACING = 5.22 FT.
MAX. UNBRACED BOTTOM CHORD LENGTH = 10.00 FT OR RIGID CEILING DIRECTLY APPLIED.

ALL PITCH BREAKS AND PERIMETER CORNER JOINTS MUST BE LATERALLY RESTRAINED.

1 LATERAL BRACE(S) AT 1/ 2 LENGTH OF E-N, E-L.

END VERTICAL(S) MUST BE SHEATHED OR HAVE BRACES AS INDICATED IN THE MAX. UNBRACED LENGTH COLUMN OF THE TABLE BELOW

LOADING

TOTAL LOAD CASES: (4)

CHORDS

MEMB. FR-TO	MAX. FACTORED FORCE (LBS)	FACTORED VERT. LOAD LC1 (PLF) FROM	TO	MAX CSI (LC)	MAX. UNBRAC LENGTH
A- B	0 / 43	-78.0	-78.0	0.11 (1)	10.00
B- C	-1540 / 0	-78.0	-78.0	0.11 (1)	5.22
C- D	-1057 / 0	-78.0	-78.0	0.14 (1)	5.98
D- E	-628 / 0	-78.0	-78.0	0.24 (1)	6.25
E- F	-621 / 0	-78.0	-78.0	0.24 (1)	6.25
F- G	-1042 / 0	-78.0	-78.0	0.15 (1)	6.00
G- H	-1510 / 0	-78.0	-78.0	0.14 (1)	5.22
H- I	0 / 52	-78.0	-78.0	0.15 (1)	10.00
P- B	-1119 / 0	0.0	0.0	0.10 (1)	7.81
J- H	-1151 / 0	0.0	0.0	0.10 (1)	7.81
P- O	0 / 0	-18.5	-18.5	0.03 (4)	10.00
O- N	0 / 925	-18.5	-18.5	0.36 (4)	10.00
N- M	0 / 775	-18.5	-18.5	0.34 (4)	10.00
M- L	0 / 775	-18.5	-18.5	0.34 (4)	10.00
L- K	0 / 881	-18.5	-18.5	0.36 (4)	10.00
K- J	0 / 0	-18.5	-18.5	0.03 (4)	10.00

WEBS

MEMB. FR-TO	MAX. FACTORED FORCE (LBS)	MAX CSI (LC)
O- C	0 / 335	0.08 (1)
C- N	-365 / 0	0.12 (1)
N- D	0 / 566	0.13 (1)
L- F	0 / 551	0.12 (1)
L- G	-320 / 0	0.10 (1)
K- G	0 / 320	0.07 (1)
B- O	0 / 986	0.22 (1)
K- H	0 / 939	0.21 (1)
N- E	-268 / 0	0.14 (1)
E- L	-280 / 0	0.15 (1)

DESIGN CRITERIA

SPECIFIED LOADS:

TOP CH.	LL	=	21.0	PSF
	DL	=	6.0	PSF
BOT CH.	LL	=	0.0	PSF
	DL	=	7.4	PSF
TOTAL LOAD		=	34.4	PSF

SPACING = 24.0 IN. C/C

LOADING IN FLAT SECTION BASED ON A SLOPE OF 2.00/12 MINIMUM

THIS TRUSS IS DESIGNED FOR RESIDENTIAL OR SMALL BUILDING REQUIREMENTS OF PART 9, NBCC 2010, NBCC 2015

THIS DESIGN COMPLIES WITH:
- PART 9 OF OBC 2012, OBC 2018
- CSA 086-09, CSA 086-14
- TPIC 2011, TPIC 2014

DESIGN ASSUMPTIONS
-OVERHANG NOT TO BE ALTERED OR CUT OFF.

(55 % OF 23.0 P.S.F. G.S.L. PLUS 8.4 P.S.F. RAIN LOAD) EQUALS 21.0 P.S.F. SPECIFIED ROOF LIVE LOAD

ALLOWABLE DEFL.(LL)= L/360 (0.72")
CALCULATED VERT. DEFL.(LL) = L/ 999 (0.03")
ALLOWABLE DEFL.(TL)= L/360 (0.72")
CALCULATED VERT. DEFL.(TL) = L/ 999 (0.18")

CSI: TC=0.24/1.00 (D-E:1) , BC=0.36/1.00 (N-O:4) , WB=0.22/1.00 (B-O:1) , SSI=0.18/1.00 (E-F:1)

DOL LUMBER=1.00 NAIL=1.00 LS BEND=1.10 COMP=1.10 SHEAR=1.10 TENS= 1.10

COMPANION LIVE LOAD FACTOR = 1.00

AUTOSOLVE HEELS OFF

TRUSS PLATE MANUFACTURER IS NOT RESPONSIBLE FOR QUALITY CONTROL IN THE TRUSS MANUFACTURING PLANT .

NAIL VALUES

PLATE	GRIP(DRY) (PSI) MAX	MIN	SHEAR (PLI) MAX	MIN	SECTION (PLI) MAX	MIN
MT20	618	354	1667	788	1987	1656

PLATE PLACEMENT TOL. = 0.250 inches

PLATE ROTATION TOL. = 5.0 Deg.

JSI GRIP= 0.82 (O) (INPUT = 0.90)
JSI METAL= 0.37 (K) (INPUT = 1.00)

A-18023863

JOB NAME	TRUSS NAME	QUANTITY	PLY	JOB DESC.	DRWG NO.
292628	H13	1	1	TRUSS DESC.	

Alpa Roof Truss, Maple

Version 8.200 S Jan 6 2018 MiTek Industries, Inc. Mon Feb 19 08:58:53 2018 Page 1
ID:Rbextx08A5M1Jnp0FfBKG3yNySB-PVZVMM6_LG5IzKojXhByrzLr_6uR4i?3aB0aihzje5W

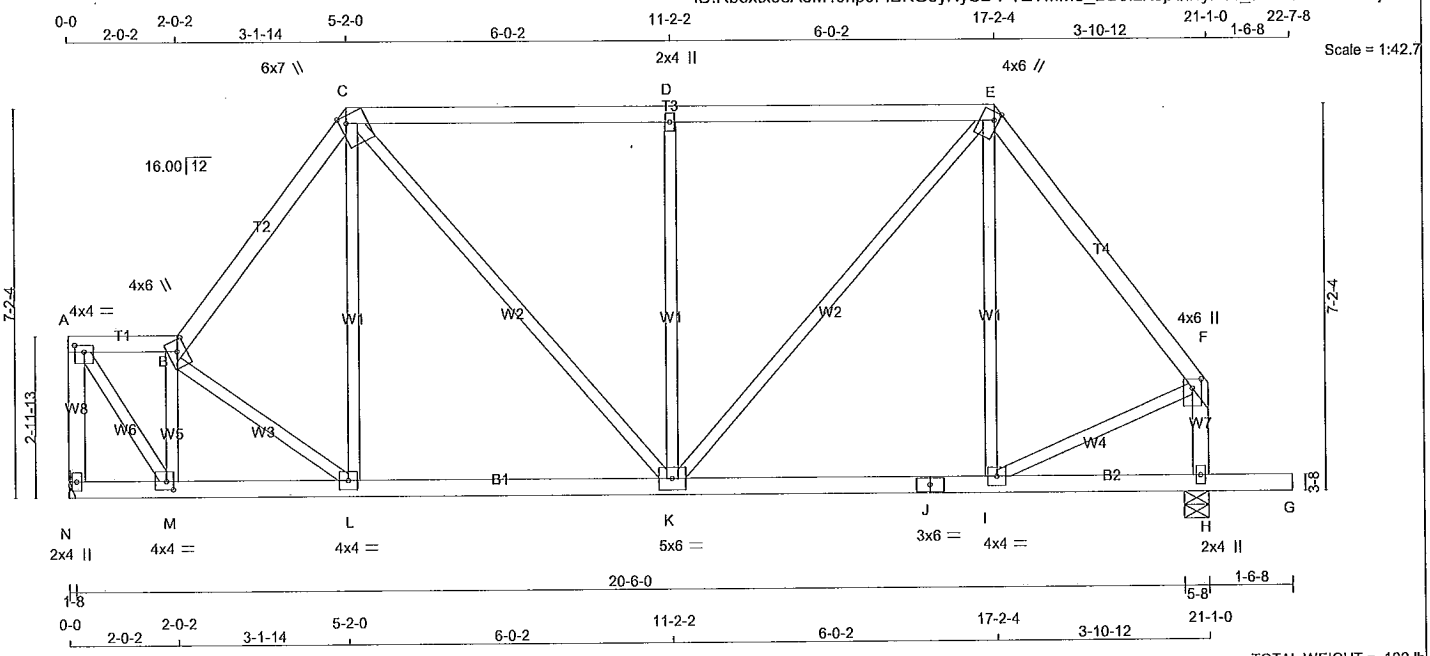

TOTAL WEIGHT = 102 lb

LUMBER
N. L. G. A. RULES

CHORDS	SIZE		LUMBER	DESCR.
N - A	2x4	DRY	No.2	SPF
A - B	2x4	DRY	No.2	SPF
B - C	2x4	DRY	No.2	SPF
C - E	2x4	DRY	No.2	SPF
E - F	2x4	DRY	No.2	SPF
H - F	2x4	DRY	No.2	SPF
N - J	2x4	DRY	No.2	SPF
J - G	2x4	DRY	No.2	SPF
ALL WEBS EXCEPT	2x3	DRY	No.2	SPF

DRY: SEASONED LUMBER.

PLATES (table is in inches)

JT	TYPE	PLATES	W	LEN	Y	X
A	TMVW-t	MT20	4.0	4.0	1.50	2.00
B	TTWW+m	MT20	4.0	6.0	2.50	2.00
C	TTWW+m	MT20	6.0	7.0	Edge	1.50
D	TMW+w	MT20	2.0	4.0		
E	TTWW+m	MT20	4.0	6.0	1.75	1.00
F	TMVW+p	MT20	4.0	6.0	2.00	2.00
H	BMV1+p	MT20	2.0	4.0		
I	BMWW-t	MT20	4.0	4.0		
J	BS-t	MT20	3.0	6.0		
K	BMWWW-t	MT20	5.0	6.0		
L	BMWW-t	MT20	4.0	4.0		
M	BMWW-t	MT20	4.0	4.0	1.75	1.50
N	BMV1+p	MT20	2.0	4.0		

Edge - INDICATES REFERENCE CORNER OF PLATE TOUCHES EDGE OF CHORD.

NOTE: Lateral brace(s) shown shall be 1x4 for Part 9 design as per OBC 9.23.13.11, and no less than 2x4 for Part 4 design

REGISTERED PROFESSIONAL ENGINEER
02/19/2018
EDWIN C. FOK
PROVINCE OF ONTARIO

DIMENSIONS, SUPPORTS AND LOADINGS SPECIFIED BY FABRICATOR TO BE VERIFIED BY BUILDING DESIGNER

BEARINGS

JT	FACTORED GROSS REACTION VERT	HORZ	MAXIMUM FACTORED GROSS REACTION DOWN	HORZ	UPLIFT	INPUT BRG	REQRD BRG
N	1017	0	1017	0	0	IN-SX	IN-SX
						HANGER BY OTHERS	
						MIN. SEAT SIZE: 1-8	
H	1166	0	1166	0	0	5-8	1-12

UNFACTORED REACTIONS

JT	1ST LCASE COMBINED	MAX./MIN. COMPONENT REACTIONS SNOW	LIVE	PERM.LIVE	WIND	DEAD	SOIL
N	725	443 / 0	0 / 0	0 / 0	0 / 0	283 / 0	0 / 0
H	831	507 / 0	0 / 0	0 / 0	0 / 0	324 / 0	0 / 0

BEARING MATERIAL TO BE SPF NO.2 OR BETTER AT JOINT(S) H

BRACING
TOP CHORD TO BE SHEATHED OR MAX. PURLIN SPACING = 5.88 FT.
MAX. UNBRACED BOTTOM CHORD LENGTH = 10.00 FT OR RIGID CEILING DIRECTLY APPLIED.

ALL PITCH BREAKS AND PERIMETER CORNER JOINTS MUST BE LATERALLY RESTRAINED.

LOADING
TOTAL LOAD CASES: (4)

CHORDS

MEMB. FR-TO	MAX. FACTORED FORCE (LBS)	FACTORED VERT. LOAD (PLF) FROM	TO	LC1	MAX CSI (LC)	MAX. UNBRAC LENGTH
N- A	-991 / 0	0.0	0.0	0.15 (1)	7.81	
A- B	-658 / 0	-78.0	-78.0	0.06 (1)	6.25	
B- C	-972 / 0	-78.0	-78.0	0.15 (1)	6.13	
C- D	-831 / 0	-78.0	-78.0	0.50 (1)	5.88	
D- E	-831 / 0	-78.0	-78.0	0.50 (1)	5.88	
E- F	-806 / 0	-78.0	-78.0	0.23 (1)	6.25	
H- F	-991 / 0	0.0	0.0	0.11 (1)	7.81	
N- M	0 / 0	-18.5	-18.5	0.03 (1)	10.00	
M- L	0 / 694	-18.5	-18.5	0.17 (1)	10.00	
L- K	0 / 586	-18.5	-18.5	0.19 (4)	10.00	
K- J	0 / 479	-18.5	-18.5	0.18 (4)	10.00	
J- I	0 / 479	-18.5	-18.5	0.18 (4)	10.00	
I- H	0 / 0	-18.5	-18.5	0.11 (4)	10.00	
H- G	0 / 0	-96.5	-96.5	0.16 (1)	10.00	

WEBS

MEMB. FR-TO	MAX. FACTORED FORCE (LBS)	MAX CSI (LC)
A- M	0 / 1138	0.26 (1)
M- B	-906 / 0	0.16 (1)
B- L	-142 / 0	0.04 (1)
L- C	0 / 191	0.05 (4)
C- K	0 / 372	0.08 (1)
K- D	-569 / 0	0.51 (1)
K- E	0 / 534	0.12 (1)
I- E	-91 / 36	0.08 (1)
I- F	0 / 518	0.12 (1)

DESIGN CRITERIA

SPECIFIED LOADS:

TOP CH.	LL	=	21.0	PSF
	DL	=	6.0	PSF
BOT CH.	LL	=	0.0	PSF
	DL	=	7.4	PSF
TOTAL LOAD		=	34.4	PSF

SPACING = 24.0 IN. C/C

LOADING IN ALL FLAT SECTIONS BASED ON A SLOPE OF 2.00/12 MINIMUM

THIS TRUSS IS DESIGNED FOR RESIDENTIAL OR SMALL BUILDING REQUIREMENTS OF PART 9, NBCC 2010, NBCC 2015

THIS DESIGN COMPLIES WITH:
- PART 9 OF OBC 2012, OBC 2018
- CSA 086-09, CSA 086-14
- TPIC 2011, TPIC 2014

(55 % OF 23.0 P.S.F. G.S.L. PLUS 8.4 P.S.F. RAIN LOAD) EQUALS 21.0 P.S.F. SPECIFIED ROOF LIVE LOAD

ALLOWABLE DEFL.(LL)= L/360 (0.70")
CALCULATED VERT. DEFL.(LL) = L/ 999 (0.02")
ALLOWABLE DEFL.(TL)= L/360 (0.70")
CALCULATED VERT. DEFL.(TL) = L/ 999 (0.06")

CANTILEVER DEFLECTION:
ALLOWABLE DEFL.(LL)= L/120 (0.19")
CALCULATED VERT. DEFL.(LL) = L/ 999 (0.01")
ALLOWABLE DEFL.(TL)= L/120 (0.19")
CALCULATED VERT. DEFL.(TL) = L/ 999 (0.01")

CSI: TC=0.50/1.00 (C-D:1) , BC=0.19/1.00 (K-L:4) , WB=0.51/1.00 (D-K:1) , SSI=0.23/1.00 (C-D:1)

DOL LUMBER=1.00 NAIL=1.00 LS BEND=1.10 COMP=1.10 SHEAR=1.10 TENS= 1.10

COMPANION LIVE LOAD FACTOR = 1.00

TRUSS PLATE MANUFACTURER IS NOT RESPONSIBLE FOR QUALITY CONTROL IN THE TRUSS MANUFACTURING PLANT .

NAIL VALUES

PLATE	GRIP(DRY) (PSI) MAX	MIN	SHEAR (PLI) MAX	MIN	SECTION (PLI) MAX	MIN
MT20	618	354	1667	788	1987	1656

PLATE PLACEMENT TOL. = 0.250 inches

PLATE ROTATION TOL. = 5.0 Deg.

JSI GRIP= 0.89 (M) (INPUT = 0.90)
JSI METAL= 0.30 (A) (INPUT = 1.00)

A-18023864

JOB NAME	TRUSS NAME	QUANTITY	PLY	JOB DESC.	DRWG NO.
292628	H14	1	1	TRUSS DESC.	

Alpa Roof Truss, Maple

Version 8.200 S Jan 6 2018 MiTek Industries, Inc. Mon Feb 19 08:59:04 2018 Page 1
ID:Rbextx08A5M1Jnp0FfBKG3yNySB-bckfg7FtlfUkn07qgVtXoIIj1Ydl9kgh6PBfbYzje5L

Scale = 1:56.3

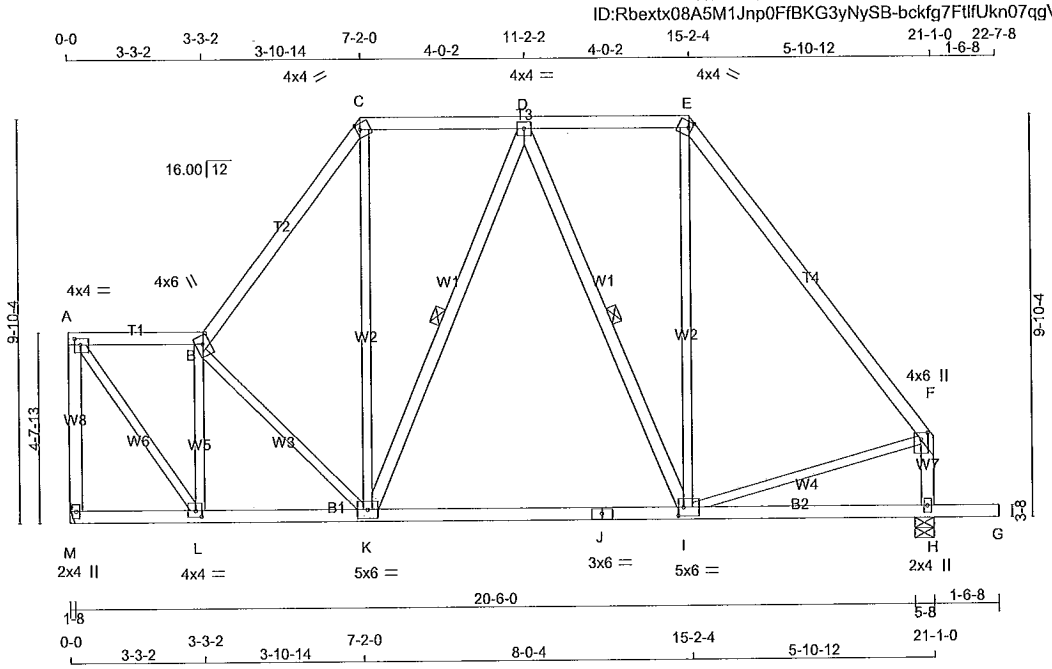

TOTAL WEIGHT = 119 lb [M]

LUMBER
N. L. G. A. RULES

CHORDS	SIZE		LUMBER	DESCR.
M - A	2x4	DRY	No.2	SPF
A - B	2x4	DRY	No.2	SPF
B - C	2x4	DRY	No.2	SPF
C - E	2x4	DRY	No.2	SPF
E - F	2x4	DRY	1650F 1.5E	SPF
H - F	2x4	DRY	No.2	SPF
M - J	2x4	DRY	No.2	SPF
J - G	2x4	DRY	No.2	SPF
ALL WEBS EXCEPT	2x3	DRY	No.2	SPF
K - D	2x4	DRY	No.2	SPF
D - I	2x4	DRY	No.2	SPF

DRY: SEASONED LUMBER.

PLATES (table is in inches)

JT	TYPE	PLATES	W	LEN	Y	X
A	TMVW-t	MT20	4.0	4.0	1.75	1.75
B	TTWW+m	MT20	4.0	6.0	2.50	2.00
C	TTW-m	MT20	4.0	4.0	1.75	1.00
D	TMWW-t	MT20	4.0	4.0		
E	TTW-m	MT20	4.0	4.0	1.75	1.00
F	TMVW+p	MT20	4.0	6.0	2.00	2.00
H	BMV1+p	MT20	2.0	4.0		
I	BMWWW-t	MT20	5.0	6.0	2.50	1.50
J	BS-t	MT20	3.0	6.0		
K	BMWWW-t	MT20	5.0	6.0		
L	BMWW-t	MT20	4.0	4.0	1.75	1.75
M	BMV1+p	MT20	2.0	4.0		

NOTE: Lateral brace(s) shown shall be 1x4 for Part 9 design as per OBC 9.23.13.11, and no less than 2x4 for Part 4 design

REGISTERED PROFESSIONAL ENGINEER
02/19/2018
EDWIN C. FOK
PROVINCE OF ONTARIO

DIMENSIONS, SUPPORTS AND LOADINGS SPECIFIED BY FABRICATOR TO BE VERIFIED BY BUILDING DESIGNER

BEARINGS

JT	FACTORED GROSS REACTION VERT	HORZ	MAXIMUM FACTORED GROSS REACTION DOWN	HORZ	UPLIFT	INPUT BRG	REQRD BRG
M	1017	0	1017	0	0	IN-SX	IN-SX
						HANGER BY OTHERS	
						MIN. SEAT SIZE: 1-8	
H	1166	0	1166	0	0	5-8	1-12

UNFACTORED REACTIONS

JT	1ST LCASE COMBINED	MAX./MIN. COMPONENT REACTIONS SNOW	LIVE	PERM.LIVE	WIND	DEAD	SOIL
M	725	443 / 0	0 / 0	0 / 0	0 / 0	283 / 0	0 / 0
H	831	507 / 0	0 / 0	0 / 0	0 / 0	324 / 0	0 / 0

BEARING MATERIAL TO BE SPF NO.2 OR BETTER AT JOINT(S) H

BRACING
TOP CHORD TO BE SHEATHED OR MAX. PURLIN SPACING = 6.25 FT.
MAX. UNBRACED BOTTOM CHORD LENGTH = 10.00 FT OR RIGID CEILING DIRECTLY APPLIED.

ALL PITCH BREAKS AND PERIMETER CORNER JOINTS MUST BE LATERALLY RESTRAINED.

1 LATERAL BRACE(S) AT 1/ 2 LENGTH OF D-K, D-I.

END VERTICAL(S) MUST BE SHEATHED OR HAVE BRACES AS INDICATED IN THE MAX. UNBRACED LENGTH COLUMN OF THE TABLE BELOW

LOADING
TOTAL LOAD CASES: (4)

CHORDS

MEMB. FR-TO	MAX. FACTORED FORCE (LBS)	FACTORED VERT. LOAD LC1 (PLF) FROM	TO	MAX CSI (LC)	MAX. UNBRAC LENGTH
M- A	-987 / 0	0.0	0.0	0.34 (1)	7.81
A- B	-630 / 0	-78.0	-78.0	0.15 (1)	6.25
B- C	-851 / 0	-78.0	-78.0	0.23 (1)	6.25
C- D	-515 / 0	-78.0	-78.0	0.21 (1)	6.25
D- E	-467 / 0	-78.0	-78.0	0.20 (1)	6.25
E- F	-777 / 0	-78.0	-78.0	0.45 (1)	6.25
H- F	-977 / 0	0.0	0.0	0.11 (1)	7.81
M- L	0 / 0	-18.5	-18.5	0.05 (4)	10.00
L- K	0 / 650	-18.5	-18.5	0.23 (4)	10.00
K- J	0 / 567	-18.5	-18.5	0.27 (4)	10.00
J- I	0 / 567	-18.5	-18.5	0.27 (4)	10.00
I- H	0 / 0	-18.5	-18.5	0.22 (4)	10.00
H- G	0 / 0	-96.5	-96.5	0.16 (1)	10.00

WEBS

MEMB. FR-TO	MAX. FACTORED FORCE (LBS)	MAX CSI (LC)
A- L	0 / 1073	0.24 (1)
L- B	-821 / 0	0.26 (1)
B- K	-204 / 0	0.12 (1)
K- C	0 / 403	0.09 (1)
K- D	-138 / 0	0.08 (1)
D- I	-265 / 0	0.15 (1)
I- E	0 / 267	0.06 (1)
I- F	0 / 480	0.11 (1)

DESIGN CRITERIA

SPECIFIED LOADS:

TOP CH.	LL	=	21.0	PSF
	DL	=	6.0	PSF
BOT CH.	LL	=	0.0	PSF
	DL	=	7.4	PSF
TOTAL LOAD		=	34.4	PSF

SPACING = 24.0 IN. C/C

LOADING IN ALL FLAT SECTIONS BASED ON A SLOPE OF 2.00/12 MINIMUM

THIS TRUSS IS DESIGNED FOR RESIDENTIAL OR SMALL BUILDING REQUIREMENTS OF PART 9, NBCC 2010, NBCC 2015

THIS DESIGN COMPLIES WITH:
- PART 9 OF OBC 2012, OBC 2018
- CSA 086-09, CSA 086-14
- TPIC 2011, TPIC 2014

(55 % OF 23.0 P.S.F. G.S.L. PLUS 8.4 P.S.F. RAIN LOAD) EQUALS 21.0 P.S.F. SPECIFIED ROOF LIVE LOAD

ALLOWABLE DEFL.(LL)= L/360 (0.70")
CALCULATED VERT. DEFL.(LL.) = L/ 999 (0.02")
ALLOWABLE DEFL.(TL)= L/360 (0.70")
CALCULATED VERT. DEFL.(TL.) = L/ 999 (0.09")

CANTILEVER DEFLECTION:
ALLOWABLE DEFL.(LL)= L/120 (0.19")
CALCULATED VERT. DEFL.(LL.) = L/ 999 (0.01")
ALLOWABLE DEFL.(TL)= L/120 (0.19")
CALCULATED VERT. DEFL.(TL.) = L/ 999 (0.01")

CSI: TC=0.45/1.00 (E-F:1) , BC=0.27/1.00 (I-K:4) , WB=0.26/1.00 (B-L:1) , SSI=0.15/1.00 (C-D:1)

DOL LUMBER=1.00 NAIL=1.00 LS BEND=1.10 COMP=1.10 SHEAR=1.10 TENS= 1.10

COMPANION LIVE LOAD FACTOR = 1.00

TRUSS PLATE MANUFACTURER IS NOT RESPONSIBLE FOR QUALITY CONTROL IN THE TRUSS MANUFACTURING PLANT .

NAIL VALUES

PLATE	GRIP(DRY) (PSI) MAX	MIN	SHEAR (PLI) MAX	MIN	SECTION (PLI) MAX	MIN
MT20	618	354	1667	788	1987	1656

PLATE PLACEMENT TOL. = 0.250 inches

PLATE ROTATION TOL. = 5.0 Deg.

JSI GRIP= 0.87 (L) (INPUT = 0.90)
JSI METAL= 0.30 (F) (INPUT = 1.00)

A-18023865

JOB NAME	TRUSS NAME	QUANTITY	PLY	JOB DESC.	DRWG NO.
292628	H15	1	1	TRUSS DESC.	

Alpa Roof Truss, Maple

Version 8.200 S Jan 6 2018 MiTek Industries, Inc. Mon Feb 19 09:17:39 2018 Page 1

ID:Rbextx08A5M1Jnp0FfBKG3yNySB-R7cAhOkHAEyX2Mt7UAO?UQ_Kn0Aav38oVNn9DQzjdpw

Scale = 1:54.9

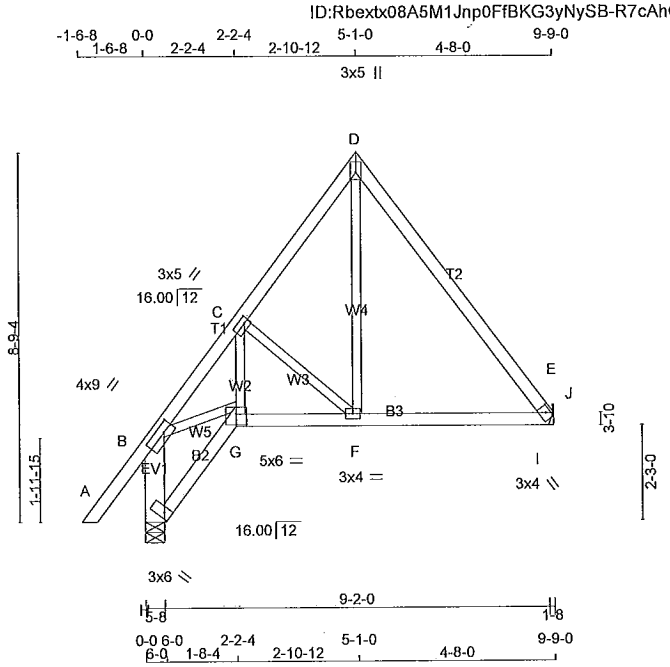

TOTAL WEIGHT = 48 lb

[M]

LUMBER
N. L. G. A. RULES

CHORDS	SIZE		LUMBER	DESCR.
A - D	2x4	DRY	No.2	SPF
D - E	2x4	DRY	No.2	SPF
H - B	2x6	DRY	No.2	SPF
H - G	2x4	DRY	No.2	SPF
G - E	2x4	DRY	No.2	SPF
ALL WEBS EXCEPT	2x3	DRY	No.2	SPF

DRY: SEASONED LUMBER.

PLATES (table is in inches)

JT	TYPE	PLATES	W	LEN	Y	X
B	TMVW-t	MT20	4.0	9.0	2.00	3.00
C	TMWW-t	MT20	3.0	5.0	1.50	1.50
D	TTW+p	MT20	3.0	5.0	2.00	Edge
E	TBM1-h	MT20	3.0	4.0	1.25	2.00
F	BMWW-t	MT20	3.0	4.0		
G	BBWW-l	MT20	5.0	6.0	3.00	3.00
H	BVM1+l	MT20	3.0	6.0	Edge	

Edge - INDICATES REFERENCE CORNER OF PLATE TOUCHES EDGE OF CHORD.

DIMENSIONS, SUPPORTS AND LOADINGS SPECIFIED BY FABRICATOR TO BE VERIFIED BY BUILDING DESIGNER

BEARINGS

JT	FACTORED GROSS REACTION VERT	HORZ	MAXIMUM FACTORED GROSS REACTION DOWN	HORZ	UPLIFT	INPUT BRG IN-SX	REQRD BRG IN-SX
E	500	0	500	0	0	HANGER BY OTHERS MIN. SEAT SIZE: 1-8	
H	607	0	607	0	0	5-8	1-8

UNFACTORED REACTIONS

JT	1ST LCASE COMBINED	MAX./MIN. COMPONENT REACTIONS SNOW	LIVE	PERM.LIVE	WIND	DEAD	SOIL
E	356	217 / 0	0 / 0	0 / 0	0 / 0	139 / 0	0 / 0
H	431	275 / 0	0 / 0	0 / 0	0 / 0	155 / 0	0 / 0

BEARING MATERIAL TO BE SPF NO.2 OR BETTER AT JOINT(S) H
BEARING SIZE FACTOR = 1.15 AT JNT(S) H (BASED ON SUPPORT DEPTH = 1-8)

BRACING
TOP CHORD TO BE SHEATHED OR MAX. PURLIN SPACING = 6.25 FT.
MAX. UNBRACED BOTTOM CHORD LENGTH = 10.00 FT OR RIGID CEILING DIRECTLY APPLIED.

ALL PITCH BREAKS AND PERIMETER CORNER JOINTS MUST BE LATERALLY RESTRAINED.

LOADING
TOTAL LOAD CASES: (4)

CHORDS

MEMB. FR-TO	MAX. FORCE (LBS)	FACTORED VERT. LOAD LC1 (PLF) FROM	TO	MAX CSI (LC)	MAX. UNBRAC LENGTH
A- B	0 / 43	-78.0	-78.0	0.12 (1)	10.00
B- C	-650 / 0	-82.8	-82.8	0.09 (1)	6.25
C- D	-370 / 0	-82.8	-82.8	0.09 (1)	6.25
D- J	-369 / 0	-82.8	-82.8	0.25 (1)	6.25
J- E	-110 / 0	-82.8	-82.8	0.13 (1)	6.25
H- B	-586 / 0	0.0	0.0	0.05 (1)	7.81
H- G	0 / 0	-19.7	-19.7	0.03 (4)	10.00
G- F	0 / 395	-19.7	-19.7	0.19 (1)	10.00
F- I	0 / 212	-19.7	-19.7	0.28 (1)	10.00
I- E	0 / 212	-19.7	-19.7	0.28 (1)	10.00

WEBS

MEMB. FR-TO	MAX. FORCE (LBS)	MAX CSI (LC)
G- C	0 / 155	0.04 (1)
C- F	-242 / 0	0.06 (1)
F- D	0 / 307	0.08 (1)
B- G	0 / 422	0.10 (1)
I- J	-604 / 0	0.00 (1)

DESIGN CRITERIA

SPECIFIED LOADS:

TOP CH.	LL	=	21.0	PSF
	DL	=	6.0	PSF
BOT CH.	LL	=	0.0	PSF
	DL	=	7.4	PSF
TOTAL LOAD		=	34.4	PSF

SPACING = 24.0 IN. C/C

GIRDER TYPE: CPrimeHip
SIDE SETBACK = 0-0
END SETBACK = 2-3-0
END WALL WIDTH = 0-0
CORNER FRAMING TYPE: CONVENTIONAL
END JACK TYPE: CONVENTIONAL
APPLIED TO FRONT SIDE
- ADDT'L LOADS BASED ON 55 % OF GSL.

THIS TRUSS IS DESIGNED FOR RESIDENTIAL OR SMALL BUILDING REQUIREMENTS OF PART 9, NBCC 2010, NBCC 2015

THIS DESIGN COMPLIES WITH:
- PART 9 OF OBC 2012, OBC 2018
- CSA 086-09, CSA 086-14
- TPIC 2011, TPIC 2014

(55 % OF 23.0 P.S.F. G.S.L. PLUS 8.4 P.S.F. RAIN LOAD) EQUALS 21.0 P.S.F. SPECIFIED ROOF LIVE LOAD

ALLOWABLE DEFL.(LL)= L/360 (0.32")
CALCULATED VERT. DEFL.(LL) = L/ 999 (0.03")
ALLOWABLE DEFL.(TL)= L/360 (0.32")
CALCULATED VERT. DEFL.(TL) = L/ 999 (0.05")

CSI: TC=0.25/1.00 (D-J:1) , BC=0.28/1.00 (F-I:1) , WB=0.10/1.00 (B-G:1) , SSI=0.51/1.00 (E-I:1)

DOL LUMBER=1.00 NAIL=1.00 LS BEND=1.00 COMP=1.00 SHEAR=1.00 TENS= 1.00

COMPANION LIVE LOAD FACTOR = 1.00

AUTOSOLVE RIGHT HEEL ONLY

TRUSS PLATE MANUFACTURER IS NOT RESPONSIBLE FOR QUALITY CONTROL IN THE TRUSS MANUFACTURING PLANT .

NAIL VALUES

PLATE	GRIP(DRY) (PSI) MAX	MIN	SHEAR (PLI) MAX	MIN	SECTION (PLI) MAX	MIN
MT20	618	354	1667	788	1987	1656

PLATE PLACEMENT TOL. = 0.250 inches

PLATE ROTATION TOL. = 5.0 Deg.

JSI GRIP= 0.61 (F) (INPUT = 0.90)
JSI METAL= 0.15 (G) (INPUT = 1.00)

REGISTERED PROFESSIONAL ENGINEER
E. FOK
PROVINCE OF ONTARIO

A-18023866

JOB NAME	TRUSS NAME	QUANTITY	PLY	JOB DESC.	DRWG NO.
292628	H16T	2	1	TRUSS DESC.	

Alpa Roof Truss, Maple

Version 8.200 S Jan 6 2018 MiTek Industries, Inc. Mon Feb 19 09:18:13 2018 Page 1
ID:Rbextx08A5M1Jnp0FfBKG3yNySB-Sff1q09c9hFi7bTfUJ?zsbO5JjoDtR2pKg0zQSzjdpO

Scale = 1:56.2

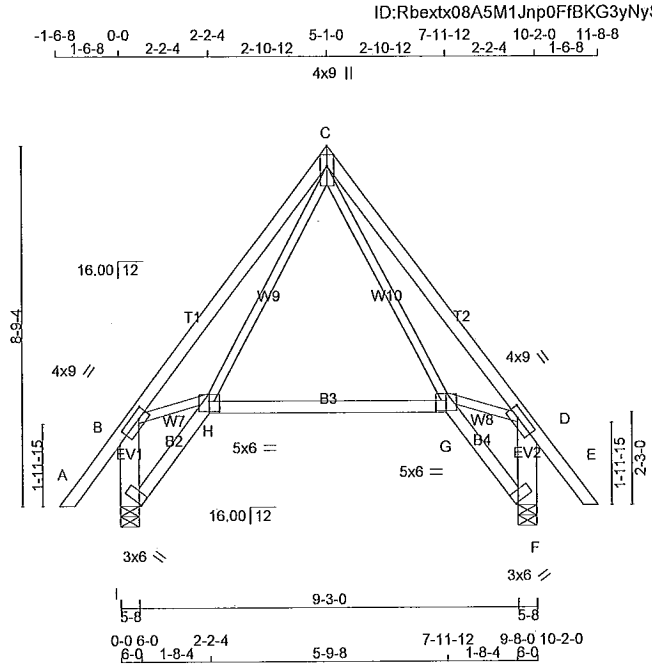

TOTAL WEIGHT = 2 X 60 = 120 lb

[M]

LUMBER
N. L. G. A. RULES

CHORDS	SIZE		LUMBER	DESCR.
A - C	2x4	DRY	No.2	SPF
C - E	2x4	DRY	No.2	SPF
I - B	2x6	DRY	No.2	SPF
F - D	2x6	DRY	No.2	SPF
I - H	2x4	DRY	No.2	SPF
H - G	2x4	DRY	No.2	SPF
G - F	2x4	DRY	No.2	SPF
ALL WEBS	2x3	DRY	No.2	SPF

DRY: SEASONED LUMBER.

PLATES (table is in inches)

JT	TYPE	PLATES	W	LEN	Y	X
B	TMVW-t	MT20	4.0	9.0	2.00	3.00
C	TTWW+p	MT20	4.0	9.0	3.25	Edge
D	TMVW-t	MT20	4.0	9.0	2.00	3.00
F	BVM1+I	MT20	3.0	6.0	Edge	
G	BBWW-I	MT20	5.0	6.0	3.00	3.00
H	BBWW-I	MT20	5.0	6.0	3.00	3.00
I	BVM1+I	MT20	3.0	6.0	Edge	

Edge - INDICATES REFERENCE CORNER OF PLATE TOUCHES EDGE OF CHORD.

DIMENSIONS, SUPPORTS AND LOADINGS SPECIFIED BY FABRICATOR TO BE VERIFIED BY BUILDING DESIGNER

BEARINGS

JT	FACTORED GROSS REACTION VERT	HORZ	MAXIMUM FACTORED GROSS REACTION DOWN	HORZ	UPLIFT	INPUT BRG IN-SX	REQRD BRG IN-SX
I	629	0	629	0	0	5-8	1-8
F	629	0	629	0	0	5-8	1-8

UNFACTORED REACTIONS

JT	1ST LCASE COMBINED	MAX./MIN. COMPONENT REACTIONS SNOW	LIVE	PERM.LIVE	WIND	DEAD	SOIL
I	446	285 / 0	0 / 0	0 / 0	0 / 0	161 / 0	0 / 0
F	446	285 / 0	0 / 0	0 / 0	0 / 0	161 / 0	0 / 0

BEARING MATERIAL TO BE SPF NO.2 OR BETTER AT JOINT(S) I, F
BEARING SIZE FACTOR = 1.15 AT JNT(S) I, F (BASED ON SUPPORT DEPTH = 1-8)

BRACING
TOP CHORD TO BE SHEATHED OR MAX. PURLIN SPACING = 6.25 FT.
MAX. UNBRACED BOTTOM CHORD LENGTH = 10.00 FT OR RIGID CEILING DIRECTLY APPLIED.

ALL PITCH BREAKS AND PERIMETER CORNER JOINTS MUST BE LATERALLY RESTRAINED.

LOADING
TOTAL LOAD CASES: (4)

CHORDS

MEMB. FR-TO	MAX. FACTORED FORCE (LBS)	FACTORED VERT. LOAD LC1 (PLF) FROM	TO	MAX CSI (LC)	MAX. UNBRAC LENGTH
A- B	0 / 43	-78.0	-78.0	0.12 (1)	10.00
B- C	-474 / 0	-82.8	-82.8	0.44 (1)	6.25
C- D	-474 / 0	-82.8	-82.8	0.44 (1)	6.25
D- E	0 / 43	-78.0	-78.0	0.12 (1)	10.00
I- B	-607 / 0	0.0	0.0	0.06 (1)	7.81
F- D	-607 / 0	0.0	0.0	0.06 (1)	7.81
I- H	0 / 0	-19.7	-19.7	0.03 (4)	10.00
H- G	0 / 204	-19.7	-19.7	0.23 (4)	10.00
G- F	0 / 0	-19.7	-19.7	0.03 (4)	10.00

WEBS

MEMB. FR-TO	MAX. FACTORED FORCE (LBS)	MAX CSI (LC)
B- H	0 / 298	0.07 (1)
G- D	0 / 298	0.07 (1)
H- C	0 / 187	0.05 (4)
C- G	0 / 187	0.05 (4)

DESIGN CRITERIA

SPECIFIED LOADS:

TOP CH.	LL	=	21.0	PSF
	DL	=	6.0	PSF
BOT CH.	LL	=	0.0	PSF
	DL	=	7.4	PSF
TOTAL LOAD		=	34.4	PSF

SPACING = 24.0 IN. C/C

GIRDER TYPE: CPrimeHip
SIDE SETBACK = 0-0
END SETBACK = 2-3-0
END WALL WIDTH = 0-0
CORNER FRAMING TYPE: CONVENTIONAL
END JACK TYPE: CONVENTIONAL
APPLIED TO FRONT SIDE
- ADDT'L LOADS BASED ON 55 % OF GSL.

THIS TRUSS IS DESIGNED FOR RESIDENTIAL OR SMALL BUILDING REQUIREMENTS OF PART 9, NBCC 2010, NBCC 2015

THIS DESIGN COMPLIES WITH:
- PART 9 OF OBC 2012, OBC 2018
- CSA 086-09, CSA 086-14
- TPIC 2011, TPIC 2014

(55 % OF 23.0 P.S.F. G.S.L. PLUS 8.4 P.S.F. RAIN LOAD) EQUALS 21.0 P.S.F. SPECIFIED ROOF LIVE LOAD

ALLOWABLE DEFL.(LL)= L/360 (0.34")
CALCULATED VERT. DEFL.(LL) = L/ 999 (0.01")
ALLOWABLE DEFL.(TL)= L/360 (0.34")
CALCULATED VERT. DEFL.(TL) = L/ 999 (0.07")

CSI: TC=0.44/1.00 (C-D:1) , BC=0.23/1.00 (G-H:4) , WB=0.07/1.00 (D-G:1) , SSI=0.11/1.00 (B-C:1)

DOL LUMBER=1.00 NAIL=1.00 LS BEND=1.00 COMP=1.00 SHEAR=1.00 TENS= 1.00

COMPANION LIVE LOAD FACTOR = 1.00

AUTOSOLVE HEELS OFF

TRUSS PLATE MANUFACTURER IS NOT RESPONSIBLE FOR QUALITY CONTROL IN THE TRUSS MANUFACTURING PLANT .

NAIL VALUES

PLATE	GRIP(DRY) (PSI) MAX	MIN	SHEAR (PLI) MAX	MIN	SECTION (PLI) MAX	MIN
MT20	618	354	1667	788	1987	1656

PLATE PLACEMENT TOL. = 0.250 inches

PLATE ROTATION TOL. = 5.0 Deg.

JSI GRIP= 0.26 (G) (INPUT = 0.90)
JSI METAL= 0.12 (D) (INPUT = 1.00)

REGISTERED PROFESSIONAL ENGINEER
E. FOK
PROVINCE OF ONTARIO

A-18023867

JOB NAME	TRUSS NAME	QUANTITY	PLY	JOB DESC.	DRWG NO.
292628	H17	1	1	TRUSS DESC.	

Alpa Roof Truss, Maple

Version 8.200 S Jan 6 2018 MiTek Industries, Inc. Mon Feb 19 09:01:26 2018 Page 1
ID:Rbextx08A5M1Jnp0FfBKG3yNySB-RwJLThzyJHNbpq_7_KRqYEByqo7aQ?LamVaAaJzje37

Scale = 1:41.9

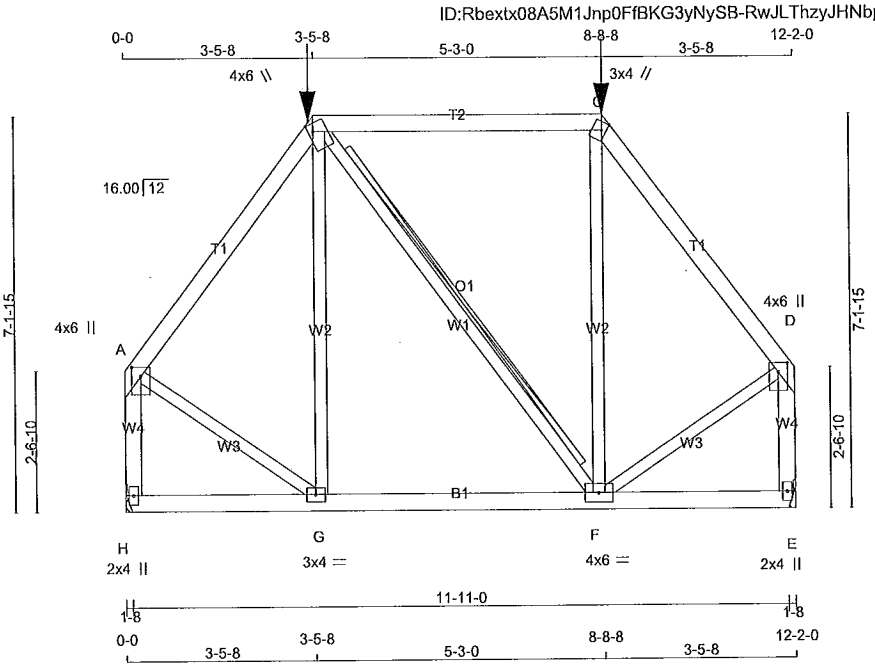

TOTAL WEIGHT = 62 lb

[M]

LUMBER

N. L. G. A. RULES

CHORDS	SIZE		LUMBER	DESCR.
A - B	2x4	DRY	No.2	SPF
B - C	2x4	DRY	No.2	SPF
C - D	2x4	DRY	No.2	SPF
H - A	2x4	DRY	No.2	SPF
E - D	2x4	DRY	No.2	SPF
H - E	2x4	DRY	No.2	SPF
ALL WEBS EXCEPT	2x3	DRY	No.2	SPF

DRY: SEASONED LUMBER.

PLATES (table is in inches)

JT	TYPE	PLATES	W	LEN	Y	X
A	TMVW+p	MT20	4.0	6.0	2.00	2.00
B	TTWW+m	MT20	4.0	6.0	1.75	1.00
C	TTW+m	MT20	3.0	4.0	1.75	1.00
D	TMVW+p	MT20	4.0	6.0	2.00	2.00
E	BMV1+p	MT20	2.0	4.0		
F	BMWWW-t	MT20	4.0	6.0		
G	BMWW-t	MT20	3.0	4.0		
H	BMV1+p	MT20	2.0	4.0		

HANGERS NOTES

1) SPECIAL HANGER(S) OR CONNECTION(S) REQUIRED TO SUPPORT CONCENTRATED LOAD(S) 106.7 lbs FACTORED DOWN AT 8-8-8, AND 106.7 lbs FACTORED DOWN AT 3-5-8 ON TOP CHORD. DESIGN FOR UNSPECIFIED CONNECTION(S) IS DELEGATED TO THE BUILDING DESIGNER.

NOTE: Lateral brace(s) shown shall be 1x4 for Part 9 design as per OBC 9.23.13.11, and no less than 2x4 for Part 4 design

REGISTERED PROFESSIONAL ENGINEER
02/19/2018
EDWIN C. FOK
PROVINCE OF ONTARIO

DIMENSIONS, SUPPORTS AND LOADINGS SPECIFIED BY FABRICATOR TO BE VERIFIED BY BUILDING DESIGNER

BEARINGS

JT	FACTORED GROSS REACTION VERT	HORZ	MAXIMUM FACTORED GROSS REACTION DOWN	HORZ	UPLIFT	INPUT BRG IN-SX	REQRD BRG IN-SX
H	842	0	842	0	0	HANGER BY OTHERS MIN. SEAT SIZE: 1-8	
E	842	0	842	0	0	HANGER BY OTHERS MIN. SEAT SIZE: 1-8	

UNFACTORED REACTIONS

JT	1ST LCASE COMBINED	MAX./MIN. COMPONENT REACTIONS SNOW	LIVE	PERM.LIVE	WIND	DEAD	SOIL
H	601	364 / 0	0 / 0	0 / 0	0 / 0	236 / 0	0 / 0
E	601	364 / 0	0 / 0	0 / 0	0 / 0	236 / 0	0 / 0

BRACING

TOP CHORD TO BE SHEATHED OR MAX. PURLIN SPACING = 6.25 FT.
MAX. UNBRACED BOTTOM CHORD LENGTH = 10.00 FT OR RIGID CEILING DIRECTLY APPLIED.

ALL PITCH BREAKS AND PERIMETER CORNER JOINTS MUST BE LATERALLY RESTRAINED.

2x4 DRY SPF No.2 T-BRACE AT B-F

FASTEN T AND I-BRACES TO NARROW EDGE OF WEB WITH ONE ROW PER PLY OF 3" COMMON WIRE NAILS @ 6" O.C. WITH 3" MINIMUM END DISTANCE. BRACE MUST COVER 90% OF WEB LENGTH.

END VERTICAL(S) MUST BE SHEATHED OR HAVE BRACES AS INDICATED IN THE MAX. UNBRACED LENGTH COLUMN OF THE TABLE BELOW

LOADING

TOTAL LOAD CASES: (4)

CHORDS MEMB. FR-TO	MAX. FACTORED FORCE (LBS)	FACTORED VERT. LOAD (PLF) FROM	TO	LC1	MAX CSI (LC)	MAX. UNBRAC LENGTH	WEBS MEMB. FR-TO	MAX. FACTORED FORCE (LBS)	MAX CSI (LC)
A- B	-578 / 0	-78.0	-78.0	0.19 (1)	6.25	G- B	-78 / 65	0.07 (1)	
B- C	-343 / 0	-114.5	-114.5	0.60 (1)	6.25	B- F	0 / 0	0.00 (1)	
C- D	-578 / 0	-78.0	-78.0	0.19 (1)	6.25	F- C	-78 / 65	0.07 (1)	
H- A	-808 / 0	0.0	0.0	0.12 (1)	7.81	A- G	0 / 403	0.10 (1)	
E- D	-808 / 0	0.0	0.0	0.12 (1)	7.81	F- D	0 / 403	0.10 (1)	
H- G	0 / 0	-27.2	-27.2	0.13 (4)	10.00				
G- F	0 / 343	-27.2	-27.2	0.17 (4)	10.00				
F- E	0 / 0	-27.2	-27.2	0.13 (4)	10.00				

FACTORED CONCENTRATED LOADS (LBS)

JT	LOC.	LC1	MAX-	MAX+	FACE	DIR.	TYPE
B	3-5-8	-107	-107	---	FRONT	VERT	TOTAL
C	8-8-8	-107	-107	---	FRONT	VERT	TOTAL

DESIGN CRITERIA

SPECIFIED LOADS:

TOP CH.	LL	=	21.0	PSF
	DL	=	6.0	PSF
BOT CH.	LL	=	0.0	PSF
	DL	=	7.4	PSF
TOTAL LOAD		=	34.4	PSF

SPACING = 24.0 IN. C/C

LOADING IN FLAT SECTION BASED ON A SLOPE OF 2.00/12 MINIMUM

GIRDER TYPE: CPrimeHip
SIDE SETBACK = 3-5-8
END SETBACK = 3-10-8
END WALL WIDTH = 0-0
CORNER FRAMING TYPE: CONVENTIONAL
END JACK TYPE: CONVENTIONAL
APPLIED TO FRONT SIDE
- ADDT'L LOADS BASED ON 55 % OF GSL.

THIS TRUSS IS DESIGNED FOR RESIDENTIAL OR SMALL BUILDING REQUIREMENTS OF PART 9, NBCC 2010, NBCC 2015

THIS DESIGN COMPLIES WITH:
- PART 9 OF OBC 2012, OBC 2018
- CSA 086-09, CSA 086-14
- TPIC 2011, TPIC 2014

(55 % OF 23.0 P.S.F. G.S.L. PLUS 8.4 P.S.F. RAIN LOAD) EQUALS 21.0 P.S.F. SPECIFIED ROOF LIVE LOAD

ALLOWABLE DEFL.(LL)= L/360 (0.41")
CALCULATED VERT. DEFL.(LL) = L/ 999 (0.01")
ALLOWABLE DEFL.(TL)= L/360 (0.41")
CALCULATED VERT. DEFL.(TL) = L/ 999 (0.02")

CSI: TC=0.60/1.00 (B-C:1) , BC=0.17/1.00 (F-G:4) , WB=0.10/1.00 (A-G:1) , SSI=0.26/1.00 (B-C:1)

DOL LUMBER=1.00 NAIL=1.00 LS BEND=1.00 COMP=1.00 SHEAR=1.00 TENS= 1.00

COMPANION LIVE LOAD FACTOR = 1.00

TRUSS PLATE MANUFACTURER IS NOT RESPONSIBLE FOR QUALITY CONTROL IN THE TRUSS MANUFACTURING PLANT .

NAIL VALUES

PLATE	GRIP(DRY) (PSI) MAX	MIN	SHEAR (PLI) MAX	MIN	SECTION (PLI) MAX	MIN
MT20	618	354	1667	788	1987	1656

PLATE PLACEMENT TOL. = 0.250 Inches

PLATE ROTATION TOL. = 5.0 Deg.

JSI GRIP= 0.61 (G) (INPUT = 0.90)
JSI METAL= 0.21 (A) (INPUT = 1.00)

A-18023868

JOB NAME	TRUSS NAME	QUANTITY	PLY	JOB DESC.	DRWG NO.
292628	H18	1	1	TRUSS DESC.	

Alpa Roof Truss, Maple

Version 8.200 S Jan 6 2018 MiTek Industries, Inc. Mon Feb 19 09:08:18 2018 Page 1

ID:Rbextx08A5M1Jnp0FfBKG3yNySB-NBC5xZyOHsH7F9UI7sqRF7FRatkFyMADVbNz1Rzjdyh

Scale = 1:58.8

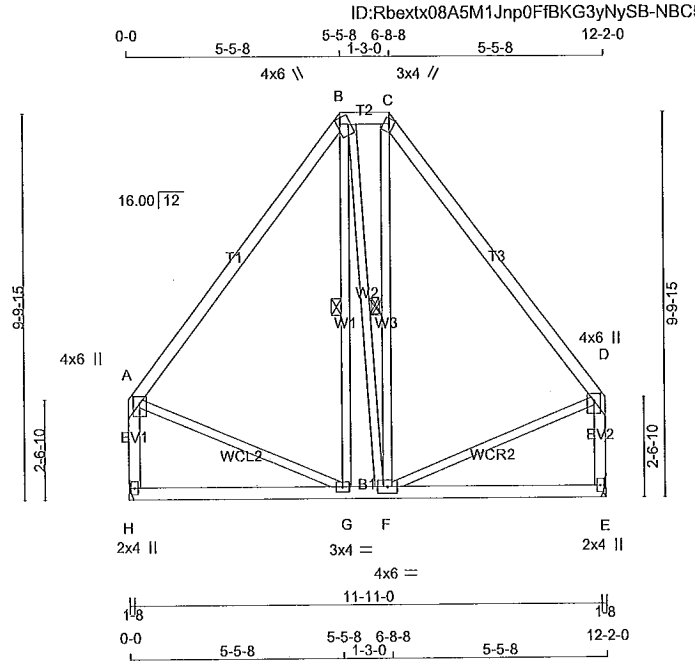

TOTAL WEIGHT = 74 lb

[M][F]

LUMBER

N. L. G. A. RULES

CHORDS	SIZE		LUMBER	DESCR.
A - B	2x4	DRY	No.2	SPF
B - C	2x4	DRY	No.2	SPF
C - D	2x4	DRY	No.2	SPF
H - A	2x4	DRY	No.2	SPF
E - D	2x4	DRY	No.2	SPF
H - E	2x4	DRY	No.2	SPF
ALL WEBS EXCEPT	2x3	DRY	No.2	SPF

DRY: SEASONED LUMBER.

PLATES (table is in inches)

JT	TYPE	PLATES	W	LEN	Y	X
A	TMVW+p	MT20	4.0	6.0	2.00	2.00
B	TTWW+m	MT20	4.0	6.0	1.75	1.00
C	TTW+m	MT20	3.0	4.0	Edge	
D	TMVW+p	MT20	4.0	6.0	2.00	2.00
E	BMV1+p	MT20	2.0	4.0		
F	BMWWW-t	MT20	4.0	6.0		
G	BMWW-t	MT20	3.0	4.0		
H	BMV1+p	MT20	2.0	4.0		

Edge - INDICATES REFERENCE CORNER OF PLATE TOUCHES EDGE OF CHORD.

NOTE: Lateral brace(s) shown shall be 1x4 for Part 9 design as per OBC 9.23.13.11, and no less than 2x4 for Part 4 design

REGISTERED PROFESSIONAL ENGINEER
02/19/2018
EDWIN C. FOK
PROVINCE OF ONTARIO

DIMENSIONS, SUPPORTS AND LOADINGS SPECIFIED BY FABRICATOR TO BE VERIFIED BY BUILDING DESIGNER

BEARINGS

JT	FACTORED GROSS REACTION VERT	HORZ	MAXIMUM FACTORED GROSS REACTION DOWN	HORZ	UPLIFT	INPUT BRG IN-SX	REQRD BRG IN-SX
H	587	0	587	0	0	HANGER BY OTHERS MIN. SEAT SIZE: 1-8	
E	587	0	587	0	0	HANGER BY OTHERS MIN. SEAT SIZE: 1-8	

UNFACTORED REACTIONS

JT	1ST LCASE COMBINED	MAX./MIN. COMPONENT REACTIONS SNOW	LIVE	PERM.LIVE	WIND	DEAD	SOIL
H	418	255 / 0	0 / 0	0 / 0	0 / 0	163 / 0	0 / 0
E	418	255 / 0	0 / 0	0 / 0	0 / 0	163 / 0	0 / 0

BRACING

TOP CHORD TO BE SHEATHED OR MAX. PURLIN SPACING = 6.25 FT.
MAX. UNBRACED BOTTOM CHORD LENGTH = 10.00 FT OR RIGID CEILING DIRECTLY APPLIED.

ALL PITCH BREAKS AND PERIMETER CORNER JOINTS MUST BE LATERALLY RESTRAINED.

1 LATERAL BRACE(S) AT 1/ 2 LENGTH OF B-G, B-F, C-F.

END VERTICAL(S) MUST BE SHEATHED OR HAVE BRACES AS INDICATED IN THE MAX. UNBRACED LENGTH COLUMN OF THE TABLE BELOW

LOADING

TOTAL LOAD CASES: (4)

CHORDS

MEMB. FR-TO	MAX. FACTORED FORCE (LBS)	FACTORED VERT. LOAD LC1 (PLF) FROM	TO	MAX CSI (LC)	MAX. UNBRAC LENGTH
A- B	-321 / 0	-78.0	-78.0	0.30 (1)	6.25
B- C	-192 / 0	-78.0	-78.0	0.02 (1)	6.25
C- D	-321 / 0	-78.0	-78.0	0.30 (1)	6.25
H- A	-545 / 0	0.0	0.0	0.07 (1)	7.81
E- D	-545 / 0	0.0	0.0	0.07 (1)	7.81
H- G	0 / 0	-18.5	-18.5	0.13 (4)	10.00
G- F	0 / 192	-18.5	-18.5	0.15 (4)	10.00
F- E	0 / 0	-18.5	-18.5	0.13 (4)	10.00

WEBS

MEMB. FR-TO	MAX. FACTORED FORCE (LBS)	MAX CSI (LC)
G- B	-4 / 45	0.02 (4)
B- F	0 / 4	0.00 (4)
F- C	-4 / 49	0.02 (4)
A- G	0 / 206	0.05 (1)
F- D	0 / 206	0.05 (1)

DESIGN CRITERIA

SPECIFIED LOADS:

TOP CH.	LL	=	21.0	PSF
	DL	=	6.0	PSF
BOT CH.	LL	=	0.0	PSF
	DL	=	7.4	PSF
TOTAL LOAD		=	34.4	PSF

SPACING = 24.0 IN. C/C

LOADING IN FLAT SECTION BASED ON A SLOPE OF 2.00/12 MINIMUM

THIS TRUSS IS DESIGNED FOR RESIDENTIAL OR SMALL BUILDING REQUIREMENTS OF PART 9, NBCC 2010, NBCC 2015

THIS DESIGN COMPLIES WITH:
- PART 9 OF OBC 2012, OBC 2018
- CSA 086-09, CSA 086-14
- TPIC 2011, TPIC 2014

(55 % OF 23.0 P.S.F. G.S.L. PLUS 8.4 P.S.F. RAIN LOAD) EQUALS 21.0 P.S.F. SPECIFIED ROOF LIVE LOAD

ALLOWABLE DEFL.(LL)= L/360 (0.41")
CALCULATED VERT. DEFL.(LL) = L/ 999 (0.00")
ALLOWABLE DEFL.(TL)= L/360 (0.41")
CALCULATED VERT. DEFL.(TL) = L/ 999 (0.03")

CSI: TC=0.30/1.00 (C-D:1) , BC=0.15/1.00 (F-G:4) , WB=0.05/1.00 (A-G:1) , SSI=0.10/1.00 (C-D:1)

DOL LUMBER=1.00 NAIL=1.00 LS BEND=1.10 COMP=1.10 SHEAR=1.10 TENS= 1.10

COMPANION LIVE LOAD FACTOR = 1.00

TRUSS PLATE MANUFACTURER IS NOT RESPONSIBLE FOR QUALITY CONTROL IN THE TRUSS MANUFACTURING PLANT .

NAIL VALUES

PLATE	GRIP(DRY) (PSI) MAX	MIN	SHEAR (PLI) MAX	MIN	SECTION (PLI) MAX	MIN
MT20	618	354	1667	788	1987	1656

PLATE PLACEMENT TOL. = 0.250 Inches

PLATE ROTATION TOL. = 5.0 Deg.

JSI GRIP= 0.42 (C) (INPUT = 0.90)
JSI METAL= 0.15 (A) (INPUT = 1.00)

A-18023869

JOB NAME	TRUSS NAME	QUANTITY	PLY	JOB DESC.	DRWG NO.
292628	J2B	1	2	TRUSS DESC.	

Alpa Roof Truss, Maple

Version 8.200 S Jan 6 2018 MiTek Industries, Inc. Mon Feb 19 09:09:23 2018 Page 1

ID:Rbextx08A5M1Jnp0FfBKG3yNySB-zhdgank9_rTvY8yoR?UhNqRcS4xPhl2oSCdvpAzjdxg

Scale = 1:40.1

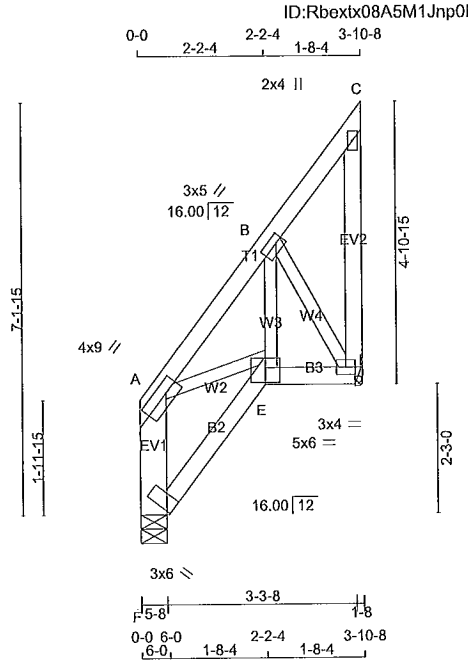

TOTAL WEIGHT = 2 X 27 = 55 lb

(M)

LUMBER

N. L. G. A. RULES

CHORDS	SIZE		LUMBER	DESCR.
F - A	2x6	DRY	No.2	SPF
A - C	2x4	DRY	No.2	SPF
D - C	2x4	DRY	No.2	SPF
F - E	2x4	DRY	No.2	SPF
E - D	2x4	DRY	No.2	SPF
ALL WEBS	2x3	DRY	No.2	SPF

DRY: SEASONED LUMBER.

DESIGN CONSISTS OF 2 TRUSSES BUILT SEPARATELY THEN FASTENED TOGETHER AS FOLLOWS:

CHORDS	#ROWS	SURFACE SPACING (IN)	LOAD(PLF)
TOP CHORDS : (0.122"X3") SPIRAL NAILS			
F- A	2	12	TOP
A- C	1	12	TOP
C- D	1	12	TOP
BOTTOM CHORDS : (0.122"X3") SPIRAL NAILS			
F- E	1	12	SIDE(56.7)
E- D	1	12	SIDE(93.4)
WEBS : (0.122"X3") SPIRAL NAILS			
2x3	1	6	

NAILS TO BE DRIVEN FROM ONE SIDE ONLY.

TOP - COMPONENTS ARE LOADED FROM THE TOP AND MUST BE PLACED ON TOP EDGE OF ALL PLIES FOR THE LOAD TO BE TRANSFERRED TO EACH PLY.

SIDE - PLF SHOWN IS THE EQUIVALENT UDL APPLIED TO ONE SIDE THAT THE CORRESPONDING NAILING PATTERN SHALL BE CAPABLE OF TRANSFERING. REMAINING PLF MUST BE APPLIED ON THE OPPOSITE SIDE OR ON THE TOP.

PLATES (table is in inches)

JT	TYPE	PLATES	W	LEN	Y	X
A	TMVW-t	MT20	4.0	9.0	2.00	3.00
B	TMWW-t	MT20	3.0	5.0	1.50	1.50
C	TMV+p	MT20	2.0	4.0		
D	BMVW1-t	MT20	3.0	4.0		

NOTE: Lateral brace(s) shown shall be 1x4 for Part 9 design as per OBC 9.23.13.11, and no less than 2x4 for Part 4 design

REGISTERED PROFESSIONAL ENGINEER
02/19/2018
EDWIN C. FOK
PROVINCE OF ONTARIO

DIMENSIONS, SUPPORTS AND LOADINGS SPECIFIED BY FABRICATOR TO BE VERIFIED BY BUILDING DESIGNER

BEARINGS

JT	FACTORED GROSS REACTION VERT	HORZ	MAXIMUM FACTORED GROSS REACTION DOWN	HORZ	UPLIFT	INPUT BRG	REQRD BRG
F	549	0	549	0	0	5-8	1-8
D	549	0	549	0	0	HANGER BY OTHERS	
						MIN. SEAT SIZE: 1-8	

UNFACTORED REACTIONS

JT	1ST LCASE COMBINED	MAX./MIN. COMPONENT REACTIONS SNOW	LIVE	PERM.LIVE	WIND	DEAD	SOIL
F	391	239 / 0	0 / 0	0 / 0	0 / 0	153 / 0	0 / 0
D	391	239 / 0	0 / 0	0 / 0	0 / 0	153 / 0	0 / 0

BEARING MATERIAL TO BE SPF NO.2 OR BETTER AT JOINT(S) F

BEARING SIZE FACTOR = 1.15 AT JNT(S) F (BASED ON SUPPORT DEPTH = 1-8)

BRACING

TOP CHORD TO BE SHEATHED OR MAX. PURLIN SPACING = 6.25 FT.

MAX. UNBRACED BOTTOM CHORD LENGTH = 10.00 FT OR RIGID CEILING DIRECTLY APPLIED.

ALL PITCH BREAKS AND PERIMETER CORNER JOINTS MUST BE LATERALLY RESTRAINED.

LOADING

TOTAL LOAD CASES: (4)

CHORDS

MEMB. FR-TO	MAX. FACTORED FORCE (LBS)	FACTORED VERT. LOAD (PLF) FROM	TO	LC1 MAX CSI (LC)	MAX. UNBRAC LENGTH
F- A	-324 / 0	0.0	0.0	0.01 (1)	7.81
A- B	-397 / 0	-78.0	-78.0	0.03 (1)	6.25
B- C	-16 / 0	-78.0	-78.0	0.02 (1)	6.25
D- C	-41 / 0	0.0	0.0	0.01 (1)	7.81
F- E	0 / 0	-205.4	-205.4	0.09 (1)	10.00
E- D	0 / 224	-205.4	-205.4	0.07 (1)	10.00

WEBS

MEMB. FR-TO	MAX. FACTORED FORCE (LBS)	MAX CSI (LC)
A- E	0 / 257	0.03 (1)
E- B	0 / 482	0.06 (1)
B- D	-408 / 0	0.04 (1)

DESIGN CRITERIA

SPECIFIED LOADS:

TOP CH.	LL	=	21.0	PSF
	DL	=	6.0	PSF
BOT CH.	LL	=	0.0	PSF
	DL	=	7.4	PSF
TOTAL LOAD		=	34.4	PSF

SPACING = 24.0 IN. C/C

GIRDER TYPE: CStdGirder
START DISTANCE = 0-0
START SPAN CARRIED = 9-9-0
END DISTANCE = 3-10-8
END SPAN CARRIED = 9-9-0
END WALL WIDTH = 0-0
APPLIED TO FRONT SIDE OF BOTTOM CHORD.
- ADDT'L LOADS BASED ON 55 % OF GSL.

THIS TRUSS IS DESIGNED FOR RESIDENTIAL OR SMALL BUILDING REQUIREMENTS OF PART 9, NBCC 2010, NBCC 2015

THIS DESIGN COMPLIES WITH:
- PART 9 OF OBC 2012, OBC 2018
- CSA 086-09, CSA 086-14
- TPIC 2011, TPIC 2014

(55 % OF 23.0 P.S.F. G.S.L. PLUS 8.4 P.S.F. RAIN LOAD) EQUALS 21.0 P.S.F. SPECIFIED ROOF LIVE LOAD

ALLOWABLE DEFL.(LL)= L/360 (0.19")
CALCULATED VERT. DEFL.(LL) = L/ 999 (0.01")
ALLOWABLE DEFL.(TL)= L/360 (0.19")
CALCULATED VERT. DEFL.(TL) = L/ 999 (0.01")

CSI: TC=0.03/1.00 (A-B:1) , BC=0.09/1.00 (E-F:1) , WB=0.06/1.00 (B-E:1) , SSI=0.07/1.00 (D-E:1)

DOL LUMBER=1.00 NAIL=1.00 LS BEND=1.00 COMP=1.00 SHEAR=1.00 TENS= 1.00

COMPANION LIVE LOAD FACTOR = 1.00

TRUSS PLATE MANUFACTURER IS NOT RESPONSIBLE FOR QUALITY CONTROL IN THE TRUSS MANUFACTURING PLANT .

NAIL VALUES

PLATE	GRIP(DRY) (PSI) MAX	MIN	SHEAR (PLI) MAX	MIN	SECTION (PLI) MAX	MIN
MT20	618	354	1667	788	1987	1656

PLATE PLACEMENT TOL. = 0.250 inches

PLATE ROTATION TOL. = 5.0 Deg.

JSI GRIP= 0.28 (B) (INPUT = 0.90)
JSI METAL= 0.06 (E) (INPUT = 1.00)

A-18023870

CONTINUED ON PAGE 2

JOB NAME	TRUSS NAME	QUANTITY	PLY	JOB DESC.	DRWG NO.
292628	J2T	2	1	TRUSS DESC.	

Alpa Roof Truss, Maple

Version 8.200 S Jan 6 2018 MiTek Industries, Inc. Mon Feb 19 08:54:17 2018 Page 1
ID:Rbextx08A5M1Jnp0FfBKG3yNySB-UOu9R?msLTKSrvhgMkEDfmwmrskTP?ER6F9z0hzJe9q

Scale = 1:40.1

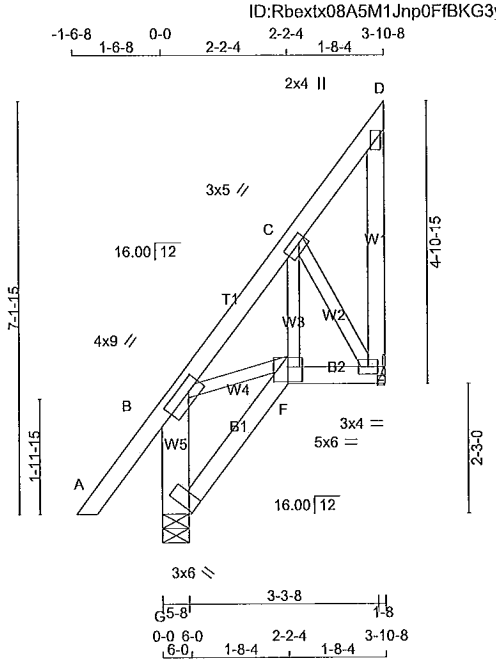

TOTAL WEIGHT = 2 X 30 = 59 lb

[M]

LUMBER

N. L. G. A. RULES

CHORDS	SIZE		LUMBER	DESCR.
G - B	2x6	DRY	No.2	SPF
A - D	2x4	DRY	No.2	SPF
E - D	2x4	DRY	No.2	SPF
G - F	2x4	DRY	No.2	SPF
F - E	2x4	DRY	No.2	SPF
ALL WEBS	2x3	DRY	No.2	SPF

DRY: SEASONED LUMBER.

PLATES (table is in inches)

JT	TYPE	PLATES	W	LEN	Y	X
B	TMVW-t	MT20	4.0	9.0	2.00	3.00
C	TMWW-t	MT20	3.0	5.0	1.50	1.50
D	TMV+p	MT20	2.0	4.0		
E	BMVW1-t	MT20	3.0	4.0		
F	BBWW-l	MT20	5.0	6.0	3.00	3.00
G	BVM1+l	MT20	3.0	6.0	Edge	

Edge - INDICATES REFERENCE CORNER OF PLATE TOUCHES EDGE OF CHORD.

NOTE: Lateral brace(s) shown shall be 1x4 for Part 9 design as per OBC 9.23.13.11, and no less than 2x4 for Part 4 design

REGISTERED PROFESSIONAL ENGINEER
02/19/2018
EDWIN C. FOK
PROVINCE OF ONTARIO

DIMENSIONS, SUPPORTS AND LOADINGS SPECIFIED BY FABRICATOR TO BE VERIFIED BY BUILDING DESIGNER

BEARINGS

JT	FACTORED GROSS REACTION VERT	HORZ	MAXIMUM FACTORED GROSS REACTION DOWN	HORZ	UPLIFT	INPUT BRG IN-SX	REQRD BRG IN-SX
G	294	0	294	0	0	5-8	1-8
E	187	0	187	0	0	HANGER BY OTHERS	
						MIN. SEAT SIZE: 1-8	

UNFACTORED REACTIONS

JT	1ST LCASE COMBINED	MAX./MIN. COMPONENT REACTIONS SNOW	LIVE	PERM.LIVE	WIND	DEAD	SOIL
G	208	139 / 0	0 / 0	0 / 0	0 / 0	68 / 0	0 / 0
E	133	81 / 0	0 / 0	0 / 0	0 / 0	52 / 0	0 / 0

BEARING MATERIAL TO BE SPF NO.2 OR BETTER AT JOINT(S) G
BEARING SIZE FACTOR = 1.15 AT JNT(S) G (BASED ON SUPPORT DEPTH = 1-8)

BRACING

TOP CHORD TO BE SHEATHED OR MAX. PURLIN SPACING = 6.25 FT.
MAX. UNBRACED BOTTOM CHORD LENGTH = 10.00 FT OR RIGID CEILING DIRECTLY APPLIED.

ALL PITCH BREAKS AND PERIMETER CORNER JOINTS MUST BE LATERALLY RESTRAINED.

LOADING

TOTAL LOAD CASES: (5)

CHORDS

MEMB. FR-TO	MAX. FACTORED FORCE (LBS)	FACTORED VERT. LOAD (PLF) FROM	TO	LC1 MAX CSI (LC)	MAX. UNBRAC LENGTH
G- B	-274 / 0	0.0	0.0	0.02 (1)	7.81
A- B	0 / 43	-78.0	-78.0	0.11 (1)	10.00
B- C	-140 / 0	-78.0	-78.0	0.05 (1)	6.25
C- D	-19 / 0	-78.0	-78.0	0.05 (1)	6.25
E- D	-38 / 0	0.0	0.0	0.01 (1)	7.81
G- F	0 / 0	-18.5	-18.5	0.03 (4)	10.00
F- E	0 / 89	-18.5	-18.5	0.02 (1)	10.00

WEBS

MEMB. FR-TO	MAX. FACTORED FORCE (LBS)	MAX CSI (LC)
B- F	0 / 97	0.02 (1)
F- C	0 / 68	0.02 (4)
C- E	-162 / 0	0.03 (1)

CANTILEVER ANALYSIS HAS BEEN CONSIDERED IN THIS DESIGN

DESIGN CRITERIA

SPECIFIED LOADS:

TOP CH.	LL	=	21.0	PSF
	DL	=	6.0	PSF
BOT CH.	LL	=	0.0	PSF
	DL	=	7.4	PSF
TOTAL LOAD		=	34.4	PSF

SPACING = 24.0 IN. C/C

THIS TRUSS IS DESIGNED FOR RESIDENTIAL OR SMALL BUILDING REQUIREMENTS OF PART 9, NBCC 2010, NBCC 2015

THIS DESIGN COMPLIES WITH:
- PART 9 OF OBC 2012, OBC 2018
- CSA 086-09, CSA 086-14
- TPIC 2011, TPIC 2014

(55 % OF 23.0 P.S.F. G.S.L. PLUS 8.4 P.S.F. RAIN LOAD) EQUALS 21.0 P.S.F. SPECIFIED ROOF LIVE LOAD

ALLOWABLE DEFL.(LL)= L/360 (0.19")
CALCULATED VERT. DEFL.(LL) = L/ 999 (0.00")
ALLOWABLE DEFL.(TL)= L/360 (0.19")
CALCULATED VERT. DEFL.(TL) = L/ 999 (0.00")

CSI: TC=0.11/1.00 (A-B:1) , BC=0.03/1.00 (F-G:4) , WB=0.03/1.00 (C-E:1) , SSI=0.05/1.00 (A-B:1)

DOL LUMBER=1.00 NAIL=1.00 LS BEND=1.10 COMP=1.10 SHEAR=1.10 TENS= 1.10

COMPANION LIVE LOAD FACTOR = 1.00

TRUSS PLATE MANUFACTURER IS NOT RESPONSIBLE FOR QUALITY CONTROL IN THE TRUSS MANUFACTURING PLANT .

NAIL VALUES

PLATE	GRIP(DRY) (PSI) MAX	MIN	SHEAR (PLI) MAX	MIN	SECTION (PLI) MAX	MIN
MT20	618	354	1667	788	1987	1656

PLATE PLACEMENT TOL. = 0.250 inches

PLATE ROTATION TOL. = 5.0 Deg.

JSI GRIP= 0.22 (C) (INPUT = 0.90)
JSI METAL= 0.05 (B) (INPUT = 1.00)

A-18023871

JOB NAME	TRUSS NAME	QUANTITY	PLY	JOB DESC.	DRWG NO.
292628	J2TA	1	1	TRUSS DESC.	

Alpa Roof Truss, Maple

Version 8.200 S Jan 6 2018 MiTek Industries, Inc. Mon Feb 19 08:55:26 2018 Page 1
ID:Rbextx08A5M1Jnp0FfBKG3yNySB-zgZFwbc85g0gdWTxvjzPyJHZGgHZ4CJb_UN7xBzje8I

Scale = 1:28.3

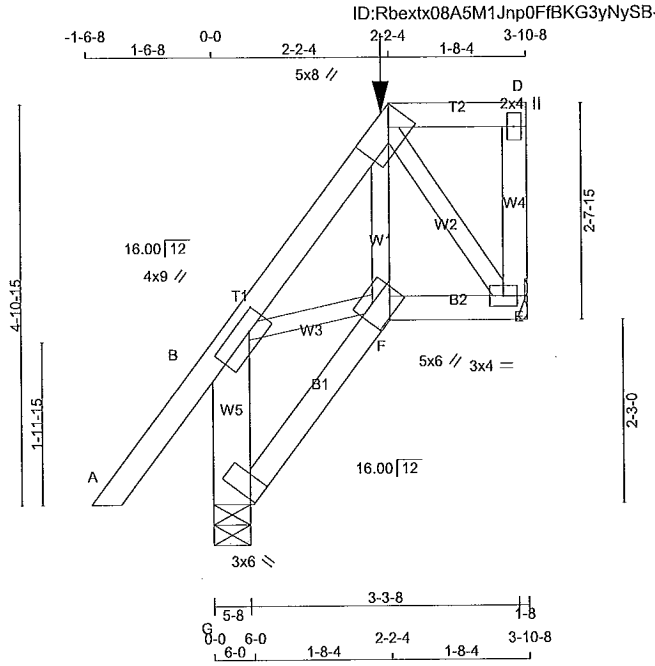

TOTAL WEIGHT = 26 lb

[M]

LUMBER

N. L. G. A. RULES

CHORDS	SIZE		LUMBER	DESCR.
G - B	2x6	DRY	No.2	SPF
A - C	2x4	DRY	No.2	SPF
C - D	2x4	DRY	No.2	SPF
E - D	2x4	DRY	No.2	SPF
G - F	2x4	DRY	No.2	SPF
F - E	2x4	DRY	No.2	SPF
ALL WEBS	2x3	DRY	No.2	SPF

DRY: SEASONED LUMBER.

PLATES (table is in inches)

JT	TYPE	PLATES	W	LEN	Y	X
B	TMVW-t	MT20	4.0	9.0	2.00	3.00
C	TTWW-h	MT20	5.0	8.0	Edge	2.75
D	TMV+p	MT20	2.0	4.0		
E	BMVW1-t	MT20	3.0	4.0		
F	BBWW-h	MT20	5.0	6.0	3.25	2.50
G	BVM1+I	MT20	3.0	6.0	Edge	

Edge - INDICATES REFERENCE CORNER OF PLATE TOUCHES EDGE OF CHORD.

HANGERS NOTES

1) SPECIAL HANGER(S) OR CONNECTION(S) REQUIRED TO SUPPORT CONCENTRATED LOAD(S) 19.5 lbs FACTORED DOWN AT 2-2-4 ON TOP CHORD. DESIGN FOR UNSPECIFIED CONNECTION(S) IS DELEGATED TO THE BUILDING DESIGNER.

NOTE: Lateral brace(s) shown shall be 1x4 for Part 9 design as per OBC 9.23.13.11, and no less than 2x4 for Part 4 design

REGISTERED PROFESSIONAL ENGINEER
02/19/2018
EDWIN C. FOK
PROVINCE OF ONTARIO

DIMENSIONS, SUPPORTS AND LOADINGS SPECIFIED BY FABRICATOR TO BE VERIFIED BY BUILDING DESIGNER

BEARINGS

JT	FACTORED GROSS REACTION VERT	HORZ	MAXIMUM FACTORED GROSS REACTION DOWN	HORZ	UPLIFT	INPUT BRG IN-SX	REQRD BRG IN-SX
G	306	0	306	0	0	5-8	1-8
E	204	0	204	0	0	HANGER BY OTHERS	
						MIN. SEAT SIZE: 1-8	

UNFACTORED REACTIONS

JT	1ST LCASE COMBINED	MAX./MIN. COMPONENT REACTIONS SNOW	LIVE	PERM.LIVE	WIND	DEAD	SOIL
G	216	145 / 0	0 / 0	0 / 0	0 / 0	71 / 0	0 / 0
E	146	90 / 0	0 / 0	0 / 0	0 / 0	56 / 0	0 / 0

BEARING MATERIAL TO BE SPF NO.2 OR BETTER AT JOINT(S) G
BEARING SIZE FACTOR = 1.15 AT JNT(S) G (BASED ON SUPPORT DEPTH = 1-8)

BRACING

TOP CHORD TO BE SHEATHED OR MAX. PURLIN SPACING = 6.25 FT.
MAX. UNBRACED BOTTOM CHORD LENGTH = 10.00 FT OR RIGID CEILING DIRECTLY APPLIED.

ALL PITCH BREAKS AND PERIMETER CORNER JOINTS MUST BE LATERALLY RESTRAINED.

LOADING

TOTAL LOAD CASES: (5)

CHORDS

MEMB. FR-TO	MAX. FACTORED FORCE (LBS)	FACTORED VERT. LOAD LC1 (PLF) FROM	TO	MAX CSI (LC)	MAX. UNBRAC LENGTH
G- B	-285 / 0	0.0	0.0	0.03 (1)	7.81
A- B	0 / 43	-78.0	-78.0	0.12 (1)	10.00
B- C	-149 / 0	-78.0	-78.0	0.07 (1)	6.25
C- D	0 / 0	-81.6	-81.6	0.04 (1)	10.00
E- D	-69 / 0	0.0	0.0	0.01 (1)	7.81
G- F	0 / 0	-19.4	-19.4	0.03 (4)	10.00
F- E	0 / 89	-19.4	-19.4	0.03 (4)	10.00

WEBS

MEMB. FR-TO	MAX. FACTORED FORCE (LBS)	MAX CSI (LC)
B- F	0 / 93	0.02 (1)
F- C	0 / 68	0.02 (4)
C- E	-151 / 0	0.03 (1)

FACTORED CONCENTRATED LOADS (LBS)

JT	LOC.	LC1	MAX-	MAX+	FACE	DIR.	TYPE
C	2-2-4	-20	-20	—	FRONT	VERT	TOTAL

CANTILEVER ANALYSIS HAS BEEN CONSIDERED IN THIS DESIGN

DESIGN CRITERIA

SPECIFIED LOADS:

TOP CH.	LL	=	21.0	PSF
	DL	=	6.0	PSF
BOT CH.	LL	=	0.0	PSF
	DL	=	7.4	PSF
TOTAL LOAD		=	34.4	PSF

SPACING = 24.0 IN. C/C

LOADING IN FLAT SECTION BASED ON A SLOPE OF 2.00/12 MINIMUM

GIRDER TYPE: CPrimeHip
LEFT SETBACK = 2-2-4
RIGHT SETBACK = 0-0
END SETBACK = 2-2-4
END WALL WIDTH = 0-0
CORNER FRAMING TYPE: CONVENTIONAL
END JACK TYPE: CONVENTIONAL
APPLIED TO FRONT SIDE
- ADDT'L LOADS BASED ON 55 % OF GSL.

THIS TRUSS IS DESIGNED FOR RESIDENTIAL OR SMALL BUILDING REQUIREMENTS OF PART 9, NBCC 2010, NBCC 2015

THIS DESIGN COMPLIES WITH:
- PART 9 OF OBC 2012, OBC 2018
- CSA 086-09, CSA 086-14
- TPIC 2011, TPIC 2014

(55 % OF 23.0 P.S.F. G.S.L. PLUS 8.4 P.S.F. RAIN LOAD) EQUALS 21.0 P.S.F. SPECIFIED ROOF LIVE LOAD

ALLOWABLE DEFL.(LL)= L/360 (0.19")
CALCULATED VERT. DEFL.(LL) = L/ 999 (0.00")
ALLOWABLE DEFL.(TL)= L/360 (0.19")
CALCULATED VERT. DEFL.(TL) = L/ 999 (0.00")

CSI: TC=0.12/1.00 (A-B:1) , BC=0.03/1.00 (F-G:4) , WB=0.03/1.00 (C-E:1) , SSI=0.06/1.00 (C-D:1)

DOL LUMBER=1.00 NAIL=1.00 LS BEND=1.00 COMP=1.00 SHEAR=1.00 TENS= 1.00

COMPANION LIVE LOAD FACTOR = 1.00

TRUSS PLATE MANUFACTURER IS NOT RESPONSIBLE FOR QUALITY CONTROL IN THE TRUSS MANUFACTURING PLANT .

NAIL VALUES

PLATE	GRIP(DRY) (PSI) MAX	MIN	SHEAR (PLI) MAX	MIN	SECTION (PLI) MAX	MIN
MT20	618	354	1667	788	1987	1656

PLATE PLACEMENT TOL. = 0.250 inches

PLATE ROTATION TOL. = 5.0 Deg.

JSI GRIP= 0.19 (E) (INPUT = 0.90)
JSI METAL= 0.05 (B) (INPUT = 1.00)

A-18023872

STRACON ENGINEERING INC.

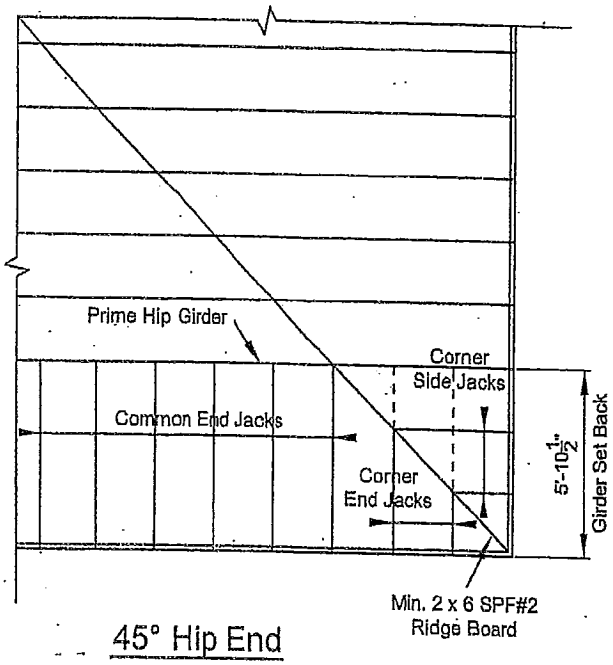

45° Hip End

LUMBER SPECIFICATION

TOP CHORD : 2 x 4 SPF#2
BOTTOM CHORD : 2 x 4 SPF#2
WEBS : 2 x 3 SPF#2
UNLESS OTHERWISE SHOWN

DESIGN LOAD

TOP CHORD SNOW LOAD	:	40.5 P.S.F.
TOP CHORD DEAD LOAD	:	3.0 P.S.F.
BOTTOM CHORD LIVE LOAD	:	0.0 P.S.F.
BOTTOM CHORD DEAD LOAD	:	7.0 P.S.F.
TOTAL LOAD	:	50.5 P.S.F

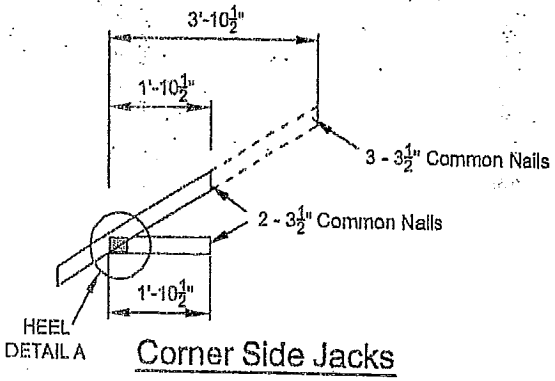

Corner Side Jacks

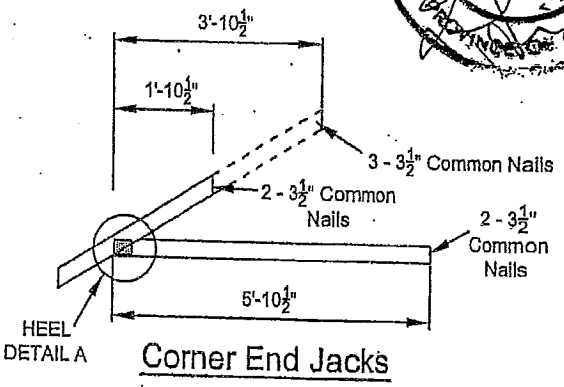

Corner End Jacks

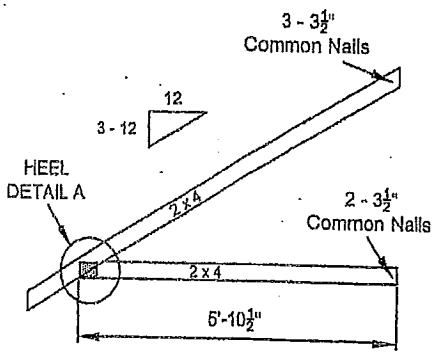

Common End Jacks

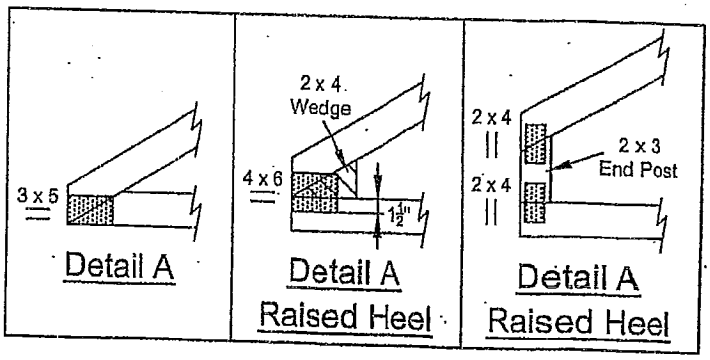

NOTE: DESIGN CONFORMS TO PART 9, O.B.C. 2012 (L.S.D. DESIGN)

CS-51008

TECHNICAL BULLETIN

HHUS – Double Shear Joist Hangers

SIMPSON Strong-Tie®

All HHUS hangers have double shear nailing. This patented innovation distributes the load through two points on each joist nail for greater strength. It also allows the use of fewer nails, faster installation and the use of common nails for all connections. Do not bend or remove tabs.

Material: 14 gauge

Finish: G90 galvanized

Design:

- Factored resistances are in accordance with CSA O86-14.
- Uplift resistances have been increased 15%. No further increase is permitted.
- Wood shear is not considered in the factored resistances given. The specifier must ensure that the joist and header capacities are capable of withstanding these loads.

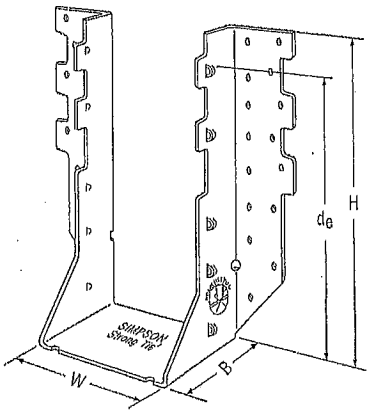

HHUS410

Installation:

- Use all specified fasteners
- Nails: 16d = 0.162" dia. x 3½" long common wire
- Double shear nails must be driven at an angle through the joist or truss into the header to achieve the table loads
- Not designed for welded or nailer applications

Options:

- See current catalogue for options

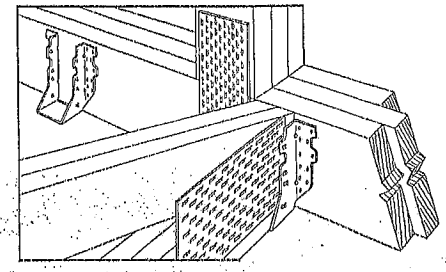

Typical HHUS Installation (Truss Designer to provide fastener quantity for connecting multiple members together)

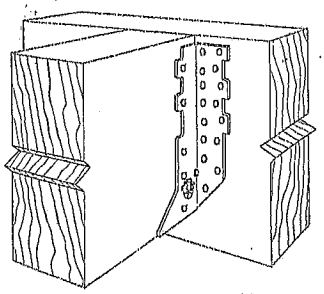

Typical HHUS Installation

Model No.	Ga.	Dimensions (in.)				Fasteners		Factored Resistance (lb.)			
								D.Fir-L		S-P-F	
		W	H	B	d_e[1]	Face	Joist	Uplift (K_D=1.15)	Normal (K_D=1.00)	Uplift (K_D=1.15)	Normal (K_D=1.00)
HHUS26-2	14	3 5/16	5 13/16	3	3 15/16	(14) 16d	(6) 16d	2850	7335	2065	5205
HHUS28-2	14	3 5/16	7 7/32	3	6 5/32	(22) 16d	(8) 16d	3765	8940	2675	6345
HHUS210-2	14	3 5/16	9 3/32	3	8	(30) 16d	(10) 16d	4745	9660	4310	7000
HHUS210-3	14	4 11/16	9	3	7 15/16	(30) 16d	(10) 16d	4745	10545	4310	7485
HHUS210-4	14	6 1/8	8 29/32	3	7 27/32	(30) 16d	(10) 16d	4745	10545	4310	7485
HHUS46	14	3 5/8	5 13/32	3	3 15/16	(14) 16d	(6) 16d	2540	7335	2065	5205
HHUS48	14	3 5/8	7 1/8	3	6 1/8	(22) 16d	(8) 16d	3765	8945	2267	6345
HHUS410	14	3 5/8	9	3	8	(30) 16d	(10) 16d	4745	9855	4310	7000
HHUS5.50/10	14	5 1/2	9	3	8	(30) 16d	(10) 16d	4745	10545	4310	7485
HHUS7.25/10	14	7 1/4	9	3 5/16	7 29/32	(30) 16d	(10) 16d	4745	10770	4310	7650

1. d_e is the distance from the seat of the hanger to the highest joist nail.

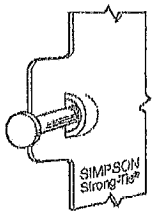

Dome Double Shear Nailing prevents tabs breaking off (available on some models).

U.S. Patent 5,603,580

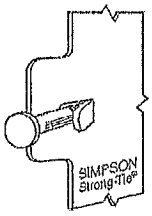

Double Shear Nailing Side View. Do not bend tab back.

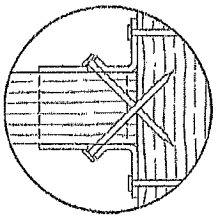

Double Shear Nailing Top View.

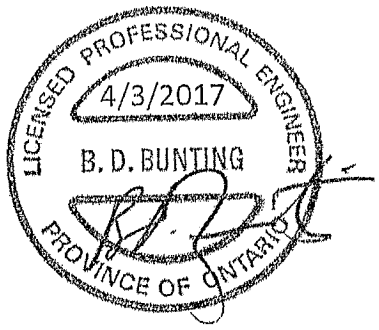

LIMIT STATES DESIGN

This technical bulletin is effective until June 30, 2019, and reflects information available as of March 1, 2017. This information is updated periodically and should not be relied upon after June 30, 2019. Contact Simpson Strong-Tie for current information and limited warranty or see strongtie.com.

© 2017 Simpson Strong-Tie Company Inc.

T-SPECHHUS17 3/17 exp. 6/19

(800) 999-5099
strongtie.com

TECHNICAL BULLETIN

LUS – Double Shear Joist Hangers

SIMPSON Strong-Tie®

All LUS hangers have double shear nailing. This patented innovation distributes the load through two points on each joist nail for greater strength. It also allows the use of fewer nails, faster installation and the use of common nails for all connections.

Material: 18 gauge

Finish: G90 galvanized

Design:

- Factored resistances are in accordance with CSA O86-14.
- Uplift resistances have been increased 15%. No further increase is permitted.
- Wood shear is not considered in the factored resistances given. The specifier must ensure that the joist and header capacities are capable of withstanding these loads.

Installation:

- Use all specified fasteners.
- Nails: 16d = 0.162" dia. x 3½" long common wire, 10d = 0.148" x 3" long common wire.
- Double shear nails must be driven at an angle through the joist or truss into the header to achieve the table loads.
- Not designed for welded or nailer applications.

Options:

- These hangers cannot be modified

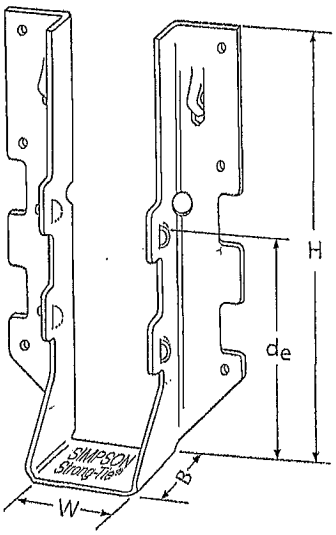

LUS28

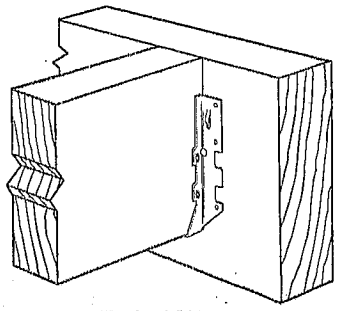

Typical LUS Installation

Model No.	Ga.	Dimensions (in.)				Fasteners		Factored Resistance (lb.)			
								D.Fir-L		S-P-F	
		W	H	B	d_e[1]	Face	Joist	Uplift (K_D=1.15)	Normal (K_D=1.00)	Uplift (K_D=1.15)	Normal (K_D=1.00)
LUS24	18	1 9/16	3 1/8	1 3/4	1 15/16	(4) 10d	(2) 10d	710	1630	645	1155
LUS24-2	18	3 1/8	3 1/8	2	1 13/16	(4) 16d	(2) 16d	835	2020	590	1435
LUS26	18	1 9/16	4 3/4	1 3/4	3 5/8	(4) 10d	(4) 10d	1420	2170	1290	1630
LUS26-2	18	3 1/8	4 7/8	2	4	(4) 16d	(4) 16d	1720	2595	1545	1920
LUS26-3	18	4 5/8	4 3/16	2	3 1/4	(4) 16d	(4) 16d	1720	2595	1545	2340
LUS28	18	1 9/16	6 5/8	1 3/4	3 3/4	(6) 10d	(6) 10d	1420	2520	1290	1790
LUS28-2	18	3 1/8	7	2	4	(6) 16d	(4) 16d	1720	3325	1545	2575
LUS28-3	18	4 5/8	6 1/4	2	3 1/4	(6) 16d	(4) 16d	1720	3325	1545	2375
LUS210	18	1 9/16	7 13/16	1 3/4	3 7/8	(8) 10d	(4) 10d	1420	2785	1290	2210
LUS210-2	18	3 1/8	9	2	6	(8) 16d	(6) 16d	2580	4500	2320	3195
LUS210-3	18	4 5/8	8 3/16	2	5 1/4	(8) 16d	(6) 16d	2580	3345	2320	2375

1. d_e is the distance from the seat of the hanger to the highest joist nail.

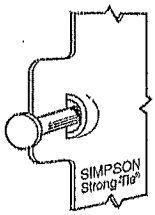

Dome Double Shear Nailing prevents tabs breaking off (available on some models).

U.S. Patent 5,603,580

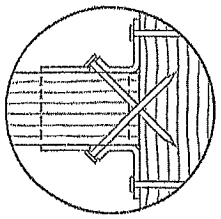

Double Shear Nailing Top View.

LICENSED PROFESSIONAL ENGINEER
4/5/2017
B. D. BUNTING
PROVINCE OF ONTARIO

LIMIT STATES DESIGN

This technical bulletin is effective until June 30, 2019, and reflects information available as of March 1, 2017. This information is updated periodically and should not be relied upon after June 30, 2019. Contact Simpson Strong-Tie for current information and limited warranty or see strongtie.com.

© 2017 Simpson Strong-Tie Company Inc. T-SPECLUS17 3/17 exp. 6/19

(800) 999-5099
strongtie.com

TC – Truss Connectors

SIMPSON Strong-Tie®

The TC truss connector is an ideal connector for scissor trusses and can allow horizontal movement up to 1¼". The TC also attaches plated trusses to top plates or sill plates to resist uplift forces. Typically used on one or both ends of truss as determined by the building designer.

Material: 16 gauge

Finish: G90 galvanized

Design: Factored resistances are in accordance with CSA 086-14

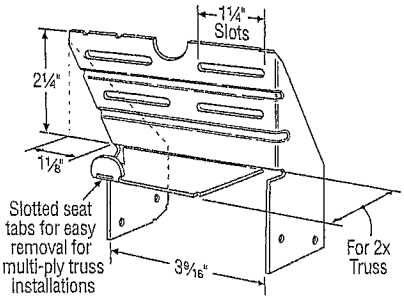

TC24
U.S. Patent 4,932,173

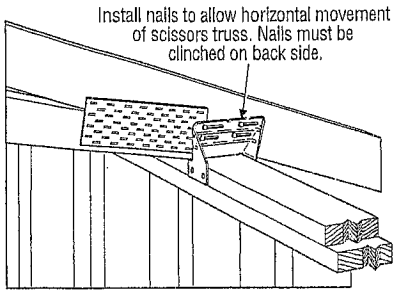

Typical TC24 Installation

Installation:

- Use all specified fasteners.
- Nails: 10d = 0.148" dia. x 3" long common wire, 10d x 1½ = 0.148" dia. x 1½" long.
- Drive 10d nails into the truss at the inside end of the slotted holes (inside end is towards the centre of the truss) and clinch on the back side. Do not seat these nails into the truss–allow room under the nail head for movement of the truss with respect to the wall.

Optional TC Installation:

- Bend one flange up 90°. Drive specified nails into the top and face of the top plates or install Titen® screws into the top and face of masonry wall. See optional load tables and installation details.

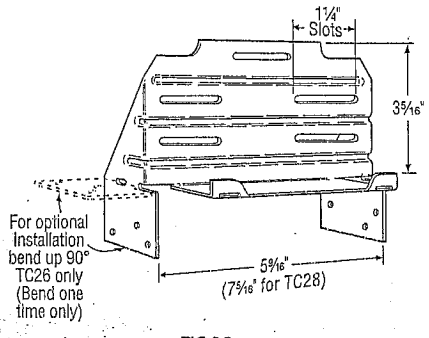

TC26
(TC28 Similar)

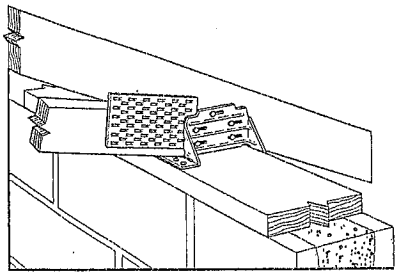

Optional TC26 Installation for Grouted Concrete Block using a Wood Nailer
(8", 10", 12" Wall Installation Similar)

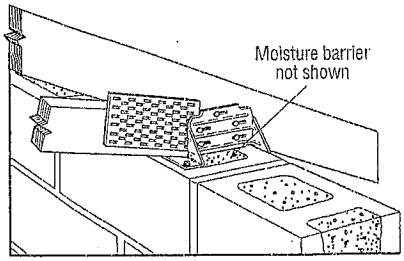

Optional TC26 Installation for Grouted Concrete Block using Titen Screws

Model No.	Fasteners		Factored Resistance	
	Truss	Wall Plates	D.Fir-L	S-P-F
			Uplift (K_D=1.15)	Uplift (K_D=1.15)
			lb.	lb.
TC24	(4) 10d	(4) 10d	605	430
TC26	(5) 10d	(6) 10d	1015	720
TC28	(5) 10d	(6) 10d	1015	720

Optional TC Installation Table

Model No.	Fasteners		Factored Resistance	
	Truss	Wall Plates	D.Fir-L	S-P-F
			Uplift (K_D=1.15)	Uplift (K_D=1.15)
			lb.	lb.
TC26	(5) 10d	(6) 10d x 1½"	810	660
	(5) 10d	(6) 10d	930	660

1. Factored resistances have been increased 15% for earthquake or wind loading; no further increase allowed; reduce where other loads govern.
2. Grout strength is 15 MPa minimum.
3. Optional TC26 installation with 10d nails requires minimum 3" top plate thickness.
4. TC26 fastened to grouted concrete block with (6) – ⅜" x 2¼" Titen screws has a factored uplift resistance of 275 lb.

LIMIT STATES DESIGN

This technical bulletin is effective until June 30, 2019, and reflects information available as of March 1, 2017. This information is updated periodically and should not be relied upon after June 30, 2019. Contact Simpson Strong-Tie for current information and limited warranty or see strongtie.com.

© 2017 Simpson Strong-Tie Company Inc.

(800) 999-5099
strongtie.com