ALPA-BARRIE

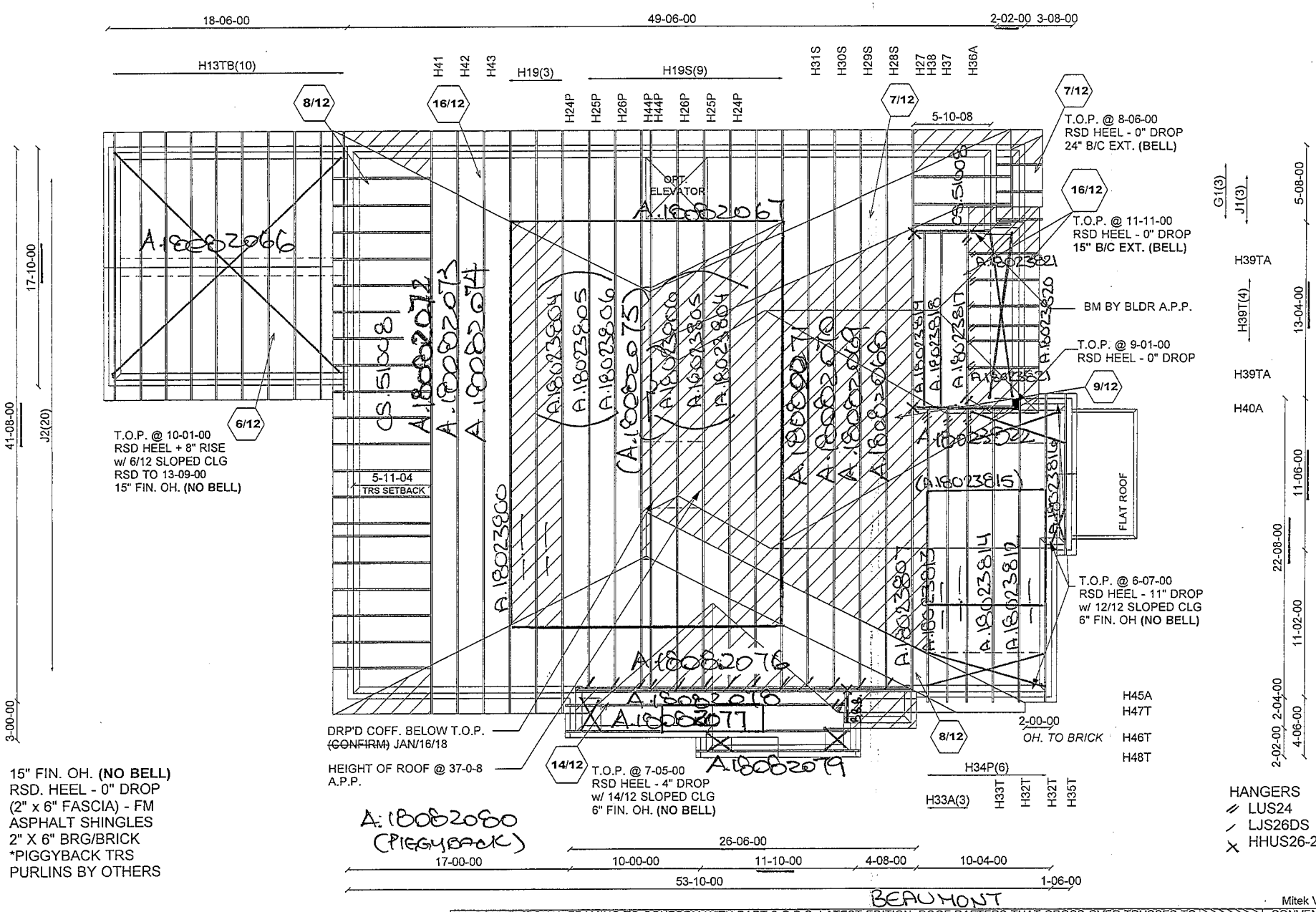

15" FIN. OH. **(NO BELL)**
RSD. HEEL - 0" DROP
(2" x 6" FASCIA) - FM
ASPHALT SHINGLES
2" X 6" BRG/BRICK
*PIGGYBACK TRS
PURLINS BY OTHERS

HANGERS
// LUS24
/ LJS26DS
X HHUS26-2

Mitek V. 8.2.0

ALL CONVENTIONAL FRAMING TO CONFORM WITH PART 9 O.B.C. LATEST EDITION. ROOF RAFTERS THAT CROSS OVER TRUSSES TO BE 2X4 SPF #2 @ 24" O.C WITH A VERT. POST TO THE TRUSS UNDERNEATH AT EACH CROSS POINT. VERT. POSTS LONGER THAN 6' TO HAVE LATERAL BRACING SO THAT THE DISTANCE BETWEEN END POINTS & BETWEEN ROWS OF BRACING DOES NOT EXCEED 6'

CONVENTIONAL FRAMING BY OTHERS

Job Track: 45147	Builder / Location: GOLD PARK HOMES / VAUGHAN	Model / Elevation: 5004 / A LOT 1 OR OPT ELEVATOR, LOGGIA, W.O.D, L.O.D, WALKOUT BSMT	
Layout ID: 300969	Project: PINE VALLEY	THESE DRAWINGS CONSTITUTE THE PROPERTY OF ALPA ROOF TRUSSES INC., SHALL NOT BE REPRODUCED, PUBLISHED, OR REDISTRIBUTED IN ANY MANNER OR UTILIZED FOR ANY PURPOSE OTHER THAN THE MANUFACTURE OF TRUSSES BY ALPA ROOF TRUSSES INC AND WILL BE RETRACTED BY ALPA ROOF TRUSSES INC IF UTLILZED FOR ANY OTHER PURPOSE.	
Plan Log: 99421	Date: 8/9/2018 Designer: AMANDA		

Stracon Engineering Inc.

69 Graydon Crescent
Richmond Hill, Ontario
L4B 3W7
(905) 832-2250 Fax (905) 832-0286

REGISTERED PROFESSIONAL ENGINEER
ONTARIO
F. FOX
PROVINCE OF ONTARIO

RESPONSIBILITIES

1. Stracon Engineering Inc. is responsible for the design of trusses as individual components.
2. It is the responsibility of others to ascertain that the design loads utilized on this drawing meet or exceed the actual dead load imposed by the structure and the live load imposed by the local building code or the authorities with jurisdictions.
3. All dimensions are to be verified by owner contractor, architect or other authority before manufacture.
4. Stracon Engineering Inc. bears no responsibility for the erection of the trusses. Persons erecting trusses are cautioned to seek professional advice regarding temporary and permanent bracing system. Bracing shown on Stracon Engineering Inc. drawings is specified for the truss as a component only and forms an integral part of the truss design.
5. It is the truss manufacture's responsibility to ensure that trusses are manufactured in conformance with Stracon Engineering Inc. specifications outlined below.

SPECIFICATIONS

1. Trusses designed by Stracon Engineering Inc. conforms to the relevant section of the Ontario Building Code of Canada (Part 9 or Part 4) or to the Canadian code for farm buildings, whichever applies to the building type indicated on the drawings as well as to the procedures established by the truss plate institute of Canada. Unit stresses used are as per CSA-086-09.
2. Lumber is to be the sizes and grade specified.
3. Moisture content of lumber is not to exceed 19% in service unless otherwise specified.
4. Lumber not to be treated with chemicals unless otherwise specified.
5. Plates shall be applied to both faces of the truss at each joint and shall be positioned as specified.
6. The top chord is assumed to be continuously laterally braced by the roof sheathing or purlins at intervals not exceeding 12.5 times in thickness.
7. Where not rigid ceiling is attached directly to the bottom chord, laterally brace the chords at intervals not exceeding 3M (10') o.c.

January 15, 2014

JOB NAME	TRUSS NAME	QUANTITY	PLY	JOB DESC.	DRWG NO.
300969	H13TB	10	1	TRUSS DESC.	JT# 45147

Alpa Roof Truss, Maple

Version 8.210 S Jun 13 2018 MiTek Industries, Inc. Wed Aug 15 14:11:36 2018 Page 1
ID:DdSMSEW8qE9HTV0gkasOLLzzSIP-N4ytmMyMv37PlReyKFInhUUenqfuSKXuWJ9P72ynbKb

Scale = 1:39.7

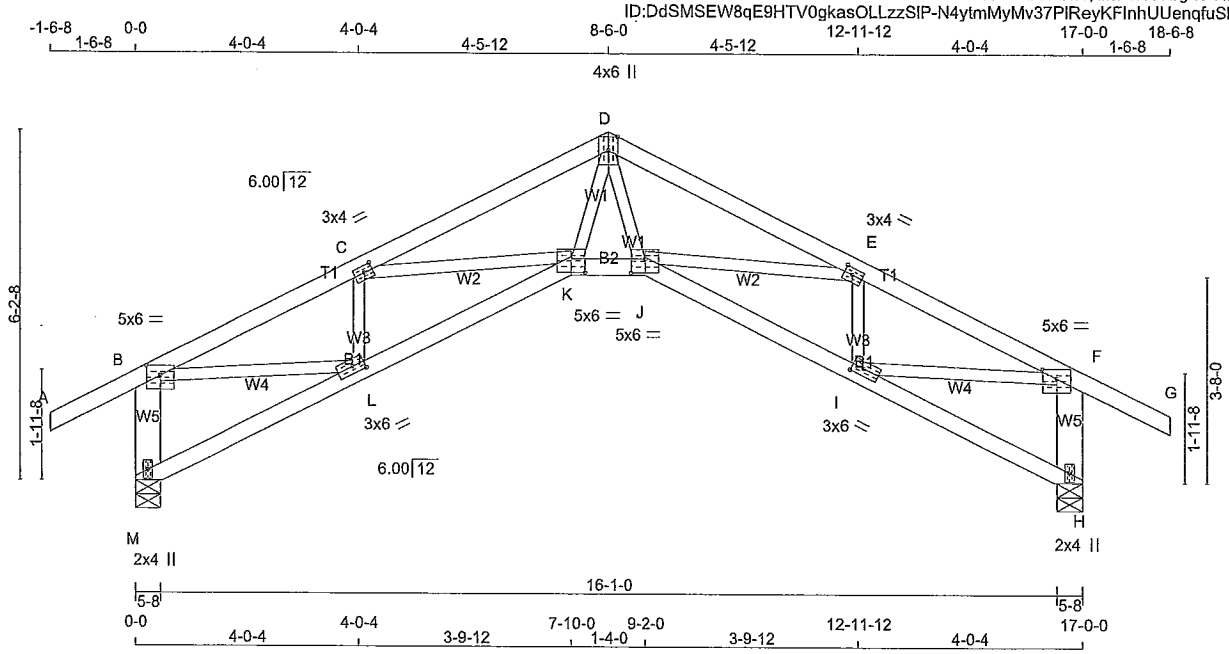

TOTAL WEIGHT = 10 X 72 = 717 lb

[M][F]

LUMBER
N. L. G. A. RULES

CHORDS	SIZE		LUMBER	DESCR.
M - B	2x6	DRY	No.2	SPF
A - D	2x4	DRY	No.2	SPF
D - G	2x4	DRY	No.2	SPF
H - F	2x6	DRY	No.2	SPF
M - K	2x4	DRY	No.2	SPF
K - J	2x4	DRY	No.2	SPF
J - H	2x4	DRY	No.2	SPF
ALL WEBS	2x3	DRY	No.2	SPF

DRY: SEASONED LUMBER.

PLATES (table is in inches)

JT	TYPE	PLATES	W	LEN	Y	X
B	TMVW-p	MT20	5.0	6.0	2.00	3.00
C	TMWW-t	MT20	3.0	4.0	1.50	1.75
D	TTWW+p	MT20	4.0	6.0	Edge	
E	TMWW-t	MT20	3.0	4.0	1.50	1.75
F	TMVW-p	MT20	5.0	6.0	2.00	3.00
H	BMV1+p	MT20	2.0	4.0		
I	BMWW-t	MT20	3.0	6.0	1.50	2.50
J	BBWW-l	MT20	5.0	6.0	3.00	3.00
K	BBWW-l	MT20	5.0	6.0	3.00	3.00
L	BMWW-t	MT20	3.0	6.0	1.50	2.50
M	BMV1+p	MT20	2.0	4.0		

Edge - INDICATES REFERENCE CORNER OF PLATE TOUCHES EDGE OF CHORD.

NOTE: Lateral brace(s) shown shall be 1x4 for Part 9 design as per OBC 9.23.13.11, and no less than 2x4 for Part 4 design.

LICENSED PROFESSIONAL ENGINEER
D. O'CONNOR
100009580
08/15/2018
PROVINCE OF ONTARIO

DIMENSIONS, SUPPORTS AND LOADINGS SPECIFIED BY FABRICATOR TO BE VERIFIED BY BUILDING DESIGNER

BEARINGS

JT	FACTORED GROSS REACTION VERT	HORZ	MAXIMUM FACTORED GROSS REACTION DOWN	HORZ	UPLIFT	INPUT BRG IN-SX	REQRD BRG IN-SX
M	945	0	945	0	0	5-8	1-8
H	945	0	945	0	0	5-8	1-8

UNFACTORED REACTIONS

JT	1ST LCASE COMBINED	MAX./MIN. COMPONENT REACTIONS SNOW	LIVE	PERM.LIVE	WIND	DEAD	SOIL
M	671	424 / 0	0 / 0	0 / 0	0 / 0	247 / 0	0 / 0
H	671	424 / 0	0 / 0	0 / 0	0 / 0	247 / 0	0 / 0

BEARING MATERIAL TO BE SPF NO.2 OR BETTER AT JOINT(S) M, H

BRACING
TOP CHORD TO BE SHEATHED OR MAX. PURLIN SPACING = 4.58 FT.
MAX. UNBRACED BOTTOM CHORD LENGTH = 10.00 FT OR RIGID CEILING DIRECTLY APPLIED.

ALL PITCH BREAKS AND PERIMETER CORNER JOINTS MUST BE LATERALLY RESTRAINED.

LOADING
TOTAL LOAD CASES: (4)

CHORDS

MEMB. FR-TO	MAX. FACTORED FORCE (LBS)	FACTORED VERT. LOAD (PLF) FROM	TO	LC1	MAX CSI (LC)	MAX. UNBRAC LENGTH
M- B	-911 / 0	0.0	0.0	0.07 (1)	7.81	
A- B	0 / 28	-78.0	-78.0	0.14 (1)	10.00	
B- C	-1572 / 0	-78.0	-78.0	0.19 (1)	5.09	
C- D	-2017 / 0	-78.0	-78.0	0.23 (1)	4.58	
D- E	-2017 / 0	-78.0	-78.0	0.23 (1)	4.58	
E- F	-1572 / 0	-78.0	-78.0	0.19 (1)	5.09	
F- G	0 / 28	-78.0	-78.0	0.14 (1)	10.00	
H- F	-911 / 0	0.0	0.0	0.07 (1)	7.81	
M- L	0 / 3	-18.5	-18.5	0.06 (4)	10.00	
L- K	0 / 1586	-18.5	-18.5	0.29 (1)	10.00	
K- J	0 / 1565	-18.5	-18.5	0.26 (1)	10.00	
J- I	0 / 1586	-18.5	-18.5	0.29 (1)	10.00	
I- H	0 / 3	-18.5	-18.5	0.06 (4)	10.00	

WEBS

MEMB. FR-TO	MAX. FACTORED FORCE (LBS)	MAX CSI (LC)
D- J	0 / 787	0.18 (1)
J- E	0 / 370	0.08 (1)
I- E	-584 / 0	0.09 (1)
I- F	0 / 1421	0.32 (1)
K- D	0 / 787	0.18 (1)
C- K	0 / 370	0.08 (1)
L- C	-584 / 0	0.09 (1)
B- L	0 / 1421	0.32 (1)

DESIGN CRITERIA

SPECIFIED LOADS:

TOP CH.	LL	=	21.0	PSF
	DL	=	6.0	PSF
BOT CH.	LL	=	0.0	PSF
	DL	=	7.4	PSF
TOTAL LOAD		=	34.4	PSF

SPACING = 24.0 IN. C/C

THIS TRUSS IS DESIGNED FOR RESIDENTIAL OR SMALL BUILDING REQUIREMENTS OF PART 9, NBCC 2010, NBCC 2015

THIS DESIGN COMPLIES WITH:
- PART 9 OF OBC 2012, OBC 2018
- CSA 086-09, CSA 086-14
- TPIC 2011, TPIC 2014

(55 % OF 23.0 P.S.F. G.S.L. PLUS 8.4 P.S.F. RAIN LOAD) EQUALS 21.0 P.S.F. SPECIFIED ROOF LIVE LOAD

ALLOWABLE DEFL.(LL)= L/360 (0.57")
CALCULATED VERT. DEFL.(LL) = L/ 999 (0.08")
ALLOWABLE DEFL.(TL)= L/360 (0.57")
CALCULATED VERT. DEFL.(TL) = L/ 999 (0.16")

CSI: TC=0.23/1.00 (D-E:1) , BC=0.29/1.00 (I-J:1) , WB=0.32/1.00 (F-I:1) , SSI=0.14/1.00 (D-E:1)

DOL:LUMBER=1.00 NAIL=1.00 LS BEND=1.10 COMP=1.10 SHEAR=1.10 TENS= 1.10

COMPANION LIVE LOAD FACTOR = 1.00

TRUSS PLATE MANUFACTURER IS NOT RESPONSIBLE FOR QUALITY CONTROL IN THE TRUSS MANUFACTURING PLANT .

NAIL VALUES

PLATE	GRIP(DRY) (PSI) MAX	MIN	SHEAR (PLI) MAX	MIN	SECTION (PLI) MAX	MIN
MT20	618	354	1667	788	1987	1656

PLATE PLACEMENT TOL. = 0.250 inches

PLATE ROTATION TOL. = 5.0 Deg.

JSI GRIP= 0.89 (I) (INPUT = 0.90)
JSI METAL= 0.39 (I) (INPUT = 1.00)

A18082066

JOB NAME	TRUSS NAME	QUANTITY	PLY	JOB DESC.	DRWG NO.
300969	H19S	9	1	TRUSS DESC.	JT# 45147

Alpa Roof Truss, Maple

Version 8.210 S Jun 13 2018 MiTek Industries, Inc. Wed Aug 15 14:11:38 2018 Page 1

ID:DdSMSEW8qE9HTV0gkasOLLzzSIP-JT4dB1zcRgO7_loLSgLFmvZsKeIww8RBzdeWBxynbKZ

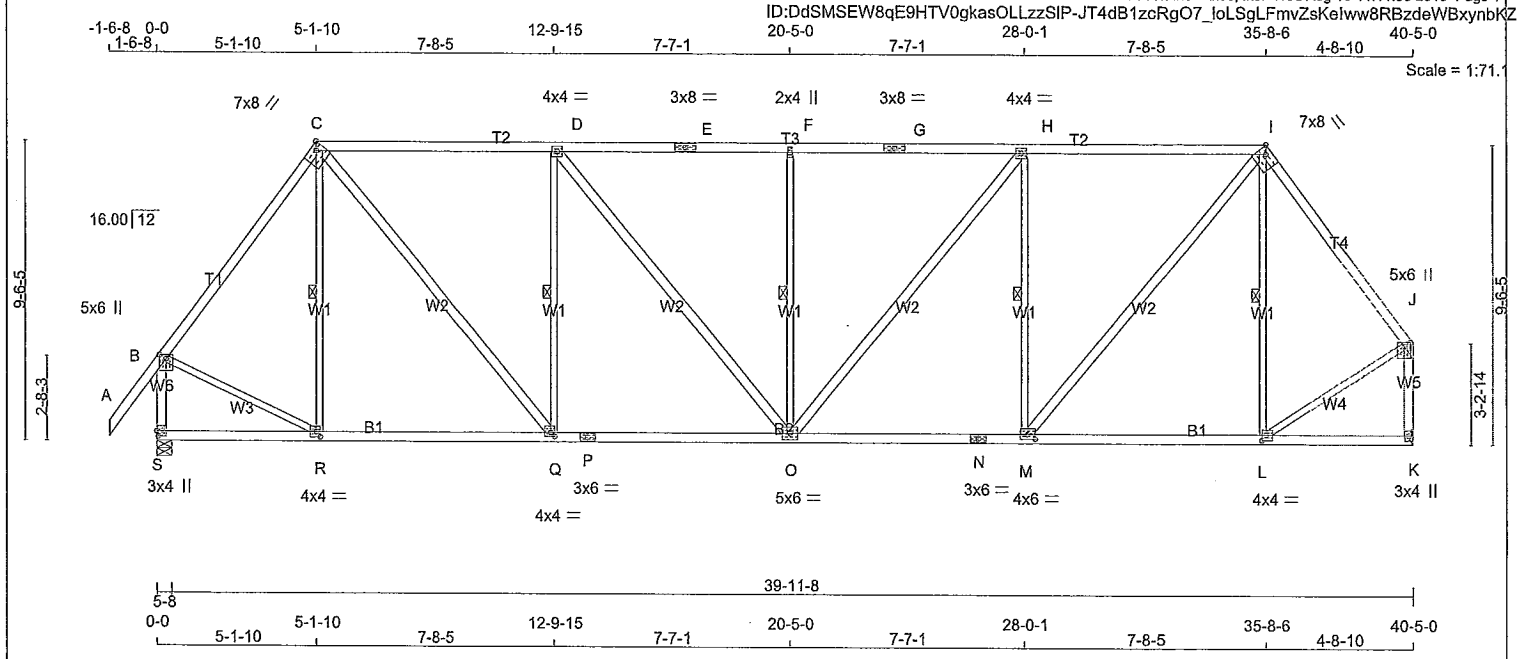

TOTAL WEIGHT = 9 X 207 = 1866 lb

[M][F]

LUMBER

N. L. G. A. RULES

CHORDS	SIZE		LUMBER	DESCR.
A - C	2x4	DRY	No.2	SPF
C - E	2x4	DRY	No.2	SPF
E - G	2x4	DRY	No.2	SPF
G - I	2x4	DRY	No.2	SPF
I - J	2x4	DRY	No.2	SPF
S - B	2x4	DRY	No.2	SPF
K - J	2x4	DRY	No.2	SPF
S - P	2x4	DRY	No.2	SPF
P - N	2x4	DRY	No.2	SPF
N - K	2x4	DRY	No.2	SPF
ALL WEBS	2x3	DRY	No.2	SPF
EXCEPT				
C - Q	2x4	DRY	No.2	SPF
D - O	2x4	DRY	No.2	SPF
O - H	2x4	DRY	No.2	SPF
M - I	2x4	DRY	No.2	SPF

DRY: SEASONED LUMBER.

PLATES (table is in inches)

JT	TYPE	PLATES	W	LEN	Y	X
B	TMVW+p	MT20	5.0	6.0	1.50	2.50
C	TTWW-h	MT20	7.0	8.0	Edge	2.75
D	TMWW-t	MT20	4.0	4.0		
E	TS-t	MT20	3.0	8.0		
F	TMW+w	MT20	2.0	4.0		
G	TS-t	MT20	3.0	8.0		
H	TMWW-t	MT20	4.0	4.0		
I	TTWW-h	MT20	7.0	8.0	Edge	2.75
J	TMVW+p	MT20	5.0	6.0	1.50	2.50
K	BMV1+p	MT20	3.0	4.0		
L	BMWW-t	MT20	4.0	4.0	2.00	1.50
M	BMWW-t	MT20	4.0	6.0	1.75	3.00
N	BS-t	MT20	3.0	6.0		
O	BMWWW-t	MT20	5.0	6.0		
P	BS-t	MT20	3.0	6.0		
Q	BMWW-t	MT20	4.0	4.0	1.50	1.50
R	BMWW-t	MT20	4.0	4.0	2.00	1.50
S	BMV1+p	MT20	3.0	4.0	2.00	0.50

NOTE: Lateral brace(s) shown shall be 1x4 for Part 9 design as per OBC 9.23.13.11, and no less than 2x4 for Part 4 design.

LICENSED PROFESSIONAL ENGINEER
D. O'CONNOR
100009580
08/15/2018
PROVINCE OF ONTARIO

DIMENSIONS, SUPPORTS AND LOADINGS SPECIFIED BY FABRICATOR TO BE VERIFIED BY BUILDING DESIGNER

BEARINGS

JT	FACTORED GROSS REACTION VERT	HORZ	MAXIMUM FACTORED GROSS REACTION DOWN	HORZ	UPLIFT	INPUT BRG IN-SX	REQRD BRG IN-SX
S	2192	0	2192	0	0	5-8	3-10
K	2065	0	2065	0	0	MECHANICAL	

A SUITABLE HANGER/MECHANICAL CONNECTION IS REQUIRED AT JOINT K. MINIMUM BEARING LENGTH AT JOINT K = 3-3.

UNFACTORED REACTIONS

JT	1ST LCASE COMBINED	MAX./MIN. COMPONENT REACTIONS SNOW	LIVE	PERM.LIVE	WIND	DEAD	SOIL
S	1570	918 / 0	0 / 0	0 / 0	0 / 0	652 / 0	0 / 0
K	1483	848 / 0	0 / 0	0 / 0	0 / 0	634 / 0	0 / 0

BEARING MATERIAL TO BE SPF NO.2 OR BETTER AT JOINT(S) S

BRACING

FOR SECTION C-I, MAX. PURLIN SPACING = 2.00 FT.
FOR OTHER SECTIONS, TOP CHORD TO BE SHEATHED OR MAX. PURLIN SPACING = 4.77 FT.
MAX. UNBRACED BOTTOM CHORD LENGTH = 10.00 FT OR RIGID CEILING DIRECTLY APPLIED.

ALL PITCH BREAKS AND PERIMETER CORNER JOINTS MUST BE LATERALLY RESTRAINED.

1 LATERAL BRACE(S) AT 1/ 2 LENGTH OF C-R, D-Q, F-O, H-M, I-L.

END VERTICAL(S) MUST BE SHEATHED OR HAVE BRACES AS INDICATED IN THE MAX. UNBRACED LENGTH COLUMN OF THE TABLE BELOW

LOADING

TOTAL LOAD CASES: (4)

CHORDS

MEMB. FR-TO	MAX. FACTORED FORCE (LBS)	FACTORED VERT. LOAD (PLF) FROM	TO	LC1	MAX CSI (LC)	MAX. UNBRAC LENGTH
A- B	0 / 52	-78.0	-78.0	0.15 (1)	10.00	
B- C	-1720 / 0	-78.0	-78.0	0.38 (1)	4.77	
C- D	-2049 / 0	-85.5	-85.5	0.74 (1)	2.00	
D- E	-2334 / 0	-85.5	-85.5	0.72 (1)	2.00	
E- F	-2334 / 0	-85.5	-85.5	0.72 (1)	2.00	
F- G	-2334 / 0	-85.5	-85.5	0.72 (1)	2.00	
G- H	-2334 / 0	-85.5	-85.5	0.72 (1)	2.00	
H- I	-2014 / 0	-85.5	-85.5	0.73 (1)	2.00	
I- J	-1604 / 0	-78.0	-78.0	0.30 (1)	4.97	
S- B	-2158 / 0	0.0	0.0	0.31 (1)	5.78	
K- J	-2036 / 0	0.0	0.0	0.38 (1)	5.92	
S- R	0 / 0	-18.5	-18.5	0.18 (4)	10.00	
R- Q	0 / 1024	-18.5	-18.5	0.32 (4)	10.00	
Q- P	0 / 2049	-18.5	-18.5	0.45 (1)	10.00	
P- O	0 / 2049	-18.5	-18.5	0.45 (1)	10.00	
O- N	0 / 2014	-18.5	-18.5	0.45 (1)	10.00	
N- M	0 / 2014	-18.5	-18.5	0.45 (1)	10.00	
M- L	0 / 952	-18.5	-18.5	0.32 (4)	10.00	
L- K	0 / 0	-18.5	-18.5	0.17 (4)	10.00	

WEBS

MEMB. FR-TO	MAX. FACTORED FORCE (LBS)	MAX CSI (LC)
R- C	-318 / 0	0.19 (1)
C- Q	0 / 1597	0.26 (1)
Q- D	-1081 / 0	0.65 (1)
D- O	0 / 448	0.07 (1)
O- F	-598 / 0	0.36 (1)
O- H	0 / 503	0.08 (1)
M- H	-1123 / 0	0.68 (1)
M- I	0 / 1654	0.27 (1)
L- I	-438 / 0	0.26 (1)
B- R	0 / 1121	0.25 (1)
L- J	0 / 1112	0.25 (1)

DESIGN CRITERIA

SPECIFIED LOADS:

TOP CH.	LL	=	21.0	PSF
	DL	=	6.0	PSF
BOT CH.	LL	=	0.0	PSF
	DL	=	7.4	PSF
TOTAL LOAD		=	34.4	PSF

SPACING = 24.0 IN. C/C

LOADING IN FLAT SECTION BASED ON PIGGYBACK TRUSS WITH SLOPES OF 16.00/12 AND -16.00/12 AND RESPECTIVE WALL HEIGHTS OF 0-0 AND 0-0 AND AN ADDITIONAL DEAD LOAD OF 3.0 P.S.F.

THIS TRUSS IS DESIGNED FOR RESIDENTIAL OR SMALL BUILDING REQUIREMENTS OF PART 9, NBCC 2010, NBCC 2015

THIS DESIGN COMPLIES WITH:
- PART 9 OF OBC 2012, OBC 2018
- CSA 086-09, CSA 086-14
- TPIC 2011, TPIC 2014

(55 % OF 23.0 P.S.F. G.S.L. PLUS 8.4 P.S.F. RAIN LOAD) EQUALS 21.0 P.S.F. SPECIFIED ROOF LIVE LOAD

ALLOWABLE DEFL.(LL)= L/360 (1.35")
CALCULATED VERT. DEFL.(LL) = L/ 999 (0.11")
ALLOWABLE DEFL.(TL)= L/360 (1.35")
CALCULATED VERT. DEFL.(TL) = L/ 999 (0.24")

CSI: TC=0.74/1.00 (C-D:1) , BC=0.45/1.00 (O-Q:1) , WB=0.68/1.00 (H-M:1) , SSI=0.31/1.00 (C-D:1)

DOL LUMBER=1.00 NAIL=1.00 LS BEND=1.10 COMP=1.10 SHEAR=1.10 TENS= 1.10

COMPANION LIVE LOAD FACTOR = 1.00

TRUSS PLATE MANUFACTURER IS NOT RESPONSIBLE FOR QUALITY CONTROL IN THE TRUSS MANUFACTURING PLANT .

NAIL VALUES

PLATE	GRIP(DRY) (PSI) MAX	MIN	SHEAR (PLI) MAX	MIN	SECTION (PLI) MAX	MIN
MT20	618	354	1667	788	1987	1656

PLATE PLACEMENT TOL. = 0.250 inches

PLATE ROTATION TOL. = 5.0 Deg.

JSI GRIP= 0.90 (Q) (INPUT = 0.90)
JSI METAL= 0.63 (P) (INPUT = 1.00)

A18082067

CONTINUED ON PAGE 2

JOB NAME	TRUSS NAME	QUANTITY	PLY	JOB DESC.	DRWG NO.
300969	H28S	1	1	TRUSS DESC.	JT# 45147

Alpa Roof Truss, Maple

Version 8.210 S Jun 13 2018 MiTek Industries, Inc. Wed Aug 15 14:11:41 2018 Page 1
ID:DdSMSEW8qE9HTV0gkasOLLzzSIP-k2Imp3?VkbmirDWw7ouyOXBMFrGf7U1dfbsAoGynbKW

-1-6-8 0-0 2-6-2 10-8-4 18-9-2 26-10-0 35-0-2 36-4-8 39-8-4 40-5-0
1-6-8 2-6-2 8-2-2 8-0-14 8-0-14 8-2-2 1-4-6 3-3-12 8-12

Scale = 1:73.1

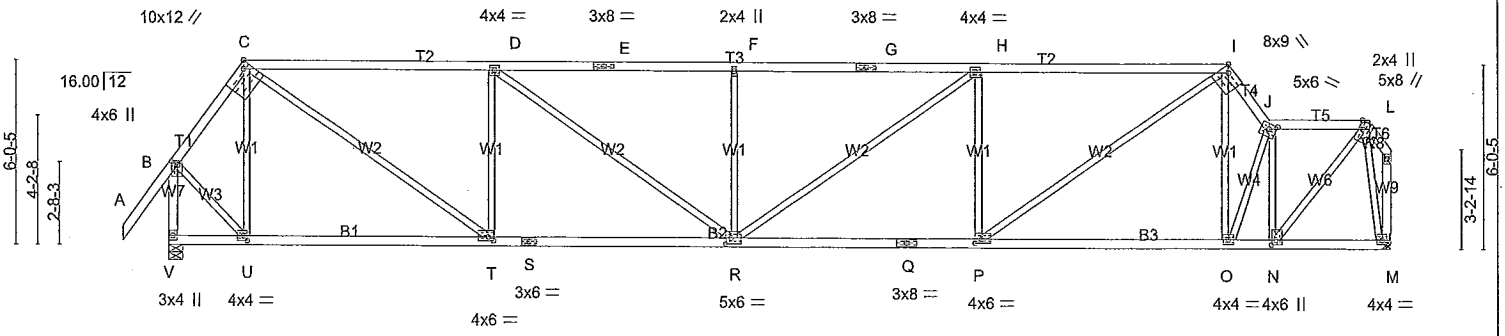

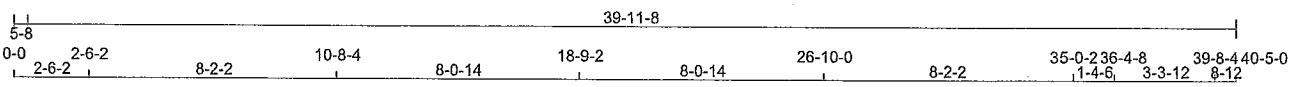

TOTAL WEIGHT = 175 lb

[M]

LUMBER
N. L. G. A. RULES

CHORDS	SIZE		LUMBER	DESCR.
A - C	2x4	DRY	No.2	SPF
C - E	2x4	DRY	2100F 1.8E	SPF
E - G	2x4	DRY	2100F 1.8E	SPF
G - I	2x4	DRY	2100F 1.8E	SPF
I - J	2x4	DRY	No.2	SPF
J - K	2x4	DRY	No.2	SPF
K - L	2x4	DRY	No.2	SPF
V - B	2x4	DRY	No.2	SPF
M - L	2x4	DRY	No.2	SPF
V - S	2x4	DRY	No.2	SPF
S - Q	2x4	DRY	No.2	SPF
Q - M	2x4	DRY	No.2	SPF
ALL WEBS EXCEPT	2x3	DRY	No.2	SPF

DRY: SEASONED LUMBER.

PLATES (table is in inches)

JT	TYPE	PLATES	W	LEN	Y	X
B	TMVW+p	MT20	4.0	6.0	1.50	2.25
C	TTWW-h	MT20	10.0	12.0	Edge	2.75
D	TMWW-t	MT20	4.0	4.0		
E	TS-t	MT20	3.0	8.0		
F	TMW+w	MT20	2.0	4.0		
G	TS-t	MT20	3.0	8.0		
H	TMWW-t	MT20	4.0	4.0		
I	TTWW-h	MT20	8.0	9.0	Edge	2.75
J	TTWW-m	MT20	5.0	6.0	2.00	2.75
K	TTWW+m	MT20	5.0	8.0	Edge	1.50
L	TMV+p	MT20	2.0	4.0		
M	BMVW1-t	MT20	4.0	4.0	1.75	1.75
N	BMWW+t	MT20	4.0	6.0	2.00	1.50
O	BMWW-t	MT20	4.0	4.0		
P	BMWW-t	MT20	4.0	6.0	1.75	2.50
Q	BS-t	MT20	3.0	8.0		
R	BMWWW-t	MT20	5.0	6.0	2.50	2.00
S	BS-t	MT20	3.0	6.0		
T	BMWW-t	MT20	4.0	6.0	1.50	2.00
U	BMWW-t	MT20	4.0	4.0	2.00	1.50
V	BMV1+p	MT20	3.0	4.0		

NOTE: Lateral brace(s) shown shall be 1x4 for Part 9 design as per OBC 9.23.13.11, and no less than 2x4 for Part 4 design.

LICENSED PROFESSIONAL ENGINEER
D. O'CONNOR
100009580
08/15/2018
PROVINCE OF ONTARIO

DIMENSIONS, SUPPORTS AND LOADINGS SPECIFIED BY FABRICATOR TO BE VERIFIED BY BUILDING DESIGNER

BEARINGS

JT	FACTORED GROSS REACTION VERT	HORZ	MAXIMUM FACTORED GROSS REACTION DOWN	HORZ	UPLIFT	INPUT BRG IN-SX	REQRD BRG IN-SX
V	2079	0	2079	0	0	5-8	3-4
M	1949	0	1949	0	0	MECHANICAL	

A SUITABLE HANGER/MECHANICAL CONNECTION IS REQUIRED AT JOINT M. MINIMUM BEARING LENGTH AT JOINT M = 2-2.

UNFACTORED REACTIONS

JT	1ST LCASE COMBINED	MAX./MIN. COMPONENT REACTIONS SNOW	LIVE	PERM.LIVE	WIND	DEAD	SOIL
V	1479	918 / 0	0 / 0	0 / 0	0 / 0	561 / 0	0 / 0
M	1390	848 / 0	0 / 0	0 / 0	0 / 0	542 / 0	0 / 0

BEARING MATERIAL TO BE SPF NO.2 OR BETTER AT JOINT(S) V

BRACING
TOP CHORD TO BE SHEATHED OR MAX. PURLIN SPACING = 3.89 FT.
MAX. UNBRACED BOTTOM CHORD LENGTH = 10.00 FT OR RIGID CEILING DIRECTLY APPLIED.

ALL PITCH BREAKS AND PERIMETER CORNER JOINTS MUST BE LATERALLY RESTRAINED.

LOADING
TOTAL LOAD CASES: (4)

CHORDS

MEMB. FR-TO	MAX. FACTORED FORCE (LBS)	FACTORED VERT. LOAD (PLF) FROM	TO	LC1 CSI (LC)	MAX UNBRAC LENGTH
A- B	0 / 52	-78.0	-78.0	0.15 (1)	10.00
B- C	-1404 / 0	-78.0	-78.0	0.11 (1)	5.40
C- D	-2782 / 0	-78.0	-78.0	0.72 (1)	4.32
D- E	-3493 / 0	-78.0	-78.0	0.82 (1)	3.89
E- F	-3493 / 0	-78.0	-78.0	0.82 (1)	3.89
F- G	-3493 / 0	-78.0	-78.0	0.82 (1)	3.89
G- H	-3493 / 0	-78.0	-78.0	0.82 (1)	3.89
H- I	-3175 / 0	-78.0	-78.0	0.78 (1)	4.07
I- J	-2678 / 0	-78.0	-78.0	0.10 (1)	4.17
J- K	-1785 / 0	-78.0	-78.0	0.19 (1)	4.82
K- L	0 / 0	-78.0	-78.0	0.01 (1)	10.00
V- B	-2089 / 0	0.0	0.0	0.30 (1)	5.86
M- L	-28 / 0	0.0	0.0	0.01 (1)	7.81
V- U	0 / 0	-18.5	-18.5	0.19 (4)	10.00
U- T	0 / 823	-18.5	-18.5	0.32 (4)	10.00
T- S	0 / 2782	-18.5	-18.5	0.57 (1)	10.00
S- R	0 / 2782	-18.5	-18.5	0.57 (1)	10.00
R- Q	0 / 3176	-18.5	-18.5	0.64 (1)	10.00
Q- P	0 / 3176	-18.5	-18.5	0.64 (1)	10.00
P- O	0 / 1620	-18.5	-18.5	0.40 (4)	10.00
O- N	0 / 1832	-18.5	-18.5	0.40 (1)	10.00
N- M	0 / 354	-18.5	-18.5	0.11 (1)	10.00

WEBS

MEMB. FR-TO	MAX. FACTORED FORCE (LBS)	MAX CSI (LC)
U- C	-601 / 0	0.34 (1)
C- T	0 / 2386	0.54 (1)
T- D	-1211 / 0	0.69 (1)
D- R	0 / 871	0.20 (1)
R- F	-582 / 0	0.33 (1)
R- H	0 / 389	0.09 (1)
P- H	-929 / 0	0.53 (1)
P- I	0 / 1895	0.43 (1)
O- I	0 / 735	0.17 (1)
O- J	-634 / 0	0.18 (1)
N- J	-1732 / 0	0.46 (1)
N- K	0 / 2241	0.50 (1)
B- U	0 / 1110	0.25 (1)
K- M	-1915 / 0	0.52 (1)

DESIGN CRITERIA

SPECIFIED LOADS:

TOP CH.	LL	=	21.0	PSF
	DL	=	6.0	PSF
BOT CH.	LL	=	0.0	PSF
	DL	=	7.4	PSF
TOTAL LOAD		=	34.4	PSF

SPACING = 24.0 IN. C/C

LOADING IN ALL FLAT SECTIONS BASED ON A SLOPE OF 2.00/12 MINIMUM

THIS TRUSS IS DESIGNED FOR RESIDENTIAL OR SMALL BUILDING REQUIREMENTS OF PART 9, NBCC 2010, NBCC 2015

THIS DESIGN COMPLIES WITH:
- PART 9 OF OBC 2012, OBC 2018
- CSA 086-09, CSA 086-14
- TPIC 2011, TPIC 2014

(55 % OF 23.0 P.S.F. G.S.L. PLUS 8.4 P.S.F. RAIN LOAD) EQUALS 21.0 P.S.F. SPECIFIED ROOF LIVE LOAD

ALLOWABLE DEFL.(LL)= L/360 (1.35")
CALCULATED VERT. DEFL.(LL) = L/ 999 (0.21")
ALLOWABLE DEFL.(TL)= L/360 (1.35")
CALCULATED VERT. DEFL.(TL) = L/ 999 (0.44")

CSI: TC=0.82/1.00 (D-F:1) , BC=0.64/1.00 (P-R:1) , WB=0.69/1.00 (D-T:1) , SSI=0.30/1.00 (C-D:1)

DOL LUMBER=1.00 NAIL=1.00 LS BEND=1.10 COMP=1.10 SHEAR=1.10 TENS= 1.10

COMPANION LIVE LOAD FACTOR = 1.00

AUTOSOLVE LEFT HEEL ONLY

TRUSS PLATE MANUFACTURER IS NOT RESPONSIBLE FOR QUALITY CONTROL IN THE TRUSS MANUFACTURING PLANT .

NAIL VALUES

PLATE	GRIP(DRY) (PSI) MAX	MIN	SHEAR (PLI) MAX	MIN	SECTION (PLI) MAX	MIN
MT20	618	354	1667	788	1987	1656

PLATE PLACEMENT TOL. = 0.250 inches

PLATE ROTATION TOL. = 5.0 Deg.

JSI GRIP= 0.90 (C) (INPUT = 0.90)
JSI METAL= 0.98 (Q) (INPUT = 1.00)

A18082068

CONTINUED ON PAGE 2

JOB NAME	TRUSS NAME	QUANTITY	PLY	JOB DESC.	DRWG NO.
300969	H29S	1	1	TRUSS DESC.	JT# 45147

Alpa Roof Truss, Maple

Version 8.210 S Jun 13 2018 MiTek Industries, Inc. Wed Aug 15 14:11:43 2018 Page 1
ID:DdSMSEW8qE9HTV0gkasOLLzzSIP-gRtWEI1IFC0P4WgIFDwRTyGhEf_VbMww7vLHs8ynbKU

-1-6-8 0-0 3-4-10 11-1-8 18-9-2 26-4-12 34-1-10 35-4-8 38-8-4 40-5-0
1-6-8 3-4-10 7-8-14 7-7-10 7-7-10 7-8-14 1-2-14 3-3-12 1-8-12

Scale = 1:72.4

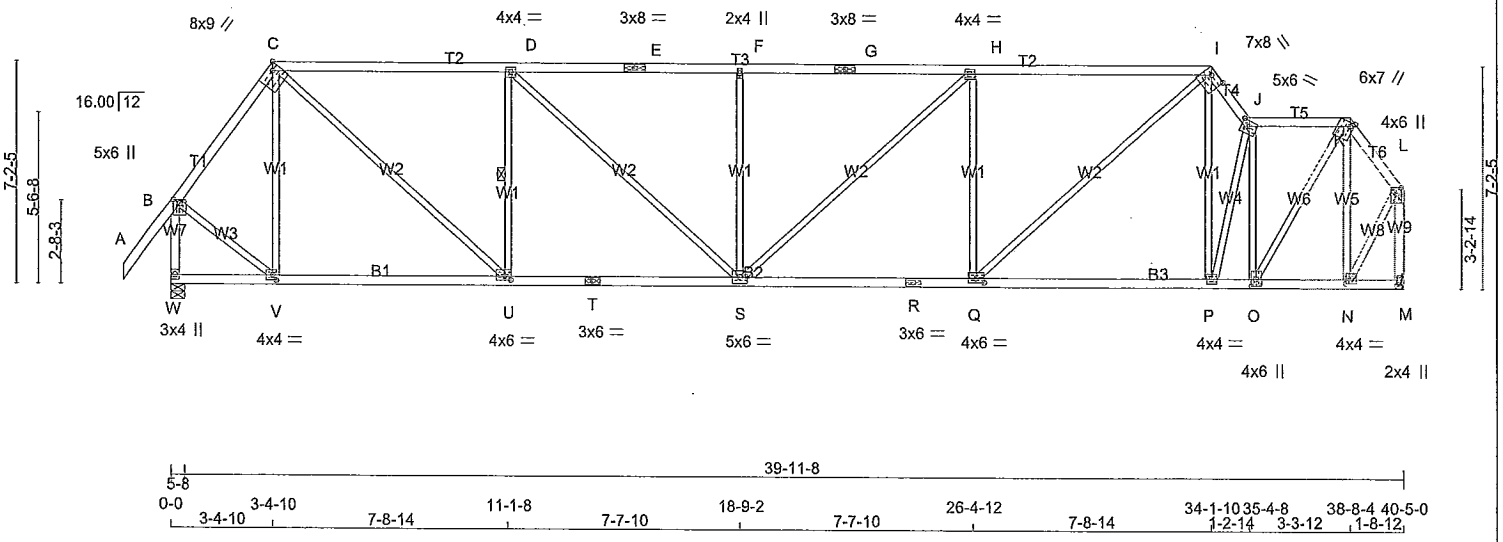

39-11-8
5-8

0-0 3-4-10 11-1-8 18-9-2 26-4-12 34-1-10 35-4-8 38-8-4 40-5-0
3-4-10 7-8-14 7-7-10 7-7-10 7-8-14 1-2-14 3-3-12 1-8-12

TOTAL WEIGHT = 189 lb

[M]

LUMBER
N. L. G. A. RULES

CHORDS	SIZE		LUMBER	DESCR.
A - C	2x4	DRY	No.2	SPF
C - E	2x4	DRY	1650F 1.5E	SPF
E - G	2x4	DRY	1650F 1.5E	SPF
G - I	2x4	DRY	1650F 1.5E	SPF
I - J	2x4	DRY	No.2	SPF
J - K	2x4	DRY	No.2	SPF
K - L	2x4	DRY	No.2	SPF
W - B	2x4	DRY	No.2	SPF
M - L	2x4	DRY	No.2	SPF
W - T	2x4	DRY	No.2	SPF
T - R	2x4	DRY	No.2	SPF
R - M	2x4	DRY	No.2	SPF
ALL WEBS EXCEPT	2x3	DRY	No.2	SPF

DRY: SEASONED LUMBER.

PLATES (table is in inches)

JT	TYPE	PLATES	W	LEN	Y	X
B	TMVW+p	MT20	5.0	6.0	1.50	2.50
C	TTWW-h	MT20	8.0	9.0	Edge	2.75
D	TMWW-t	MT20	4.0	4.0		
E	TS-t	MT20	3.0	8.0		
F	TMW+w	MT20	2.0	4.0		
G	TS-t	MT20	3.0	8.0		
H	TMWW-t	MT20	4.0	4.0		
I	TTWW-h	MT20	7.0	8.0	1.75	5.00
J	TTWW-m	MT20	5.0	6.0	2.00	3.00
K	TTWW+m	MT20	6.0	7.0	Edge	1.50
L	TMVW+p	MT20	4.0	6.0	1.75	2.50
M	BMV1+p	MT20	2.0	4.0	2.25	1.00
N	BMWW-t	MT20	4.0	4.0	1.50	1.50
O	BMWW+t	MT20	4.0	6.0	2.75	1.75
P	BMWW-t	MT20	4.0	4.0		
Q	BMWW-t	MT20	4.0	6.0	1.75	3.00
R	BS-t	MT20	3.0	6.0		
S	BMWWW-t	MT20	5.0	6.0		
T	BS-t	MT20	3.0	6.0		
U	BMWW-t	MT20	4.0	6.0	1.50	2.50
V	BMWW-t	MT20	4.0	4.0	2.00	1.50
W	BMV1+p	MT20	3.0	4.0		

NOTE: Lateral brace(s) shown shall be 1x4 for Part 9 design as per OBC 9.23.13.11, and no less than 2x4 for Part 4 design.

LICENSED PROFESSIONAL ENGINEER
D. O'CONNOR
100009580
08/15/2018
PROVINCE OF ONTARIO

DIMENSIONS, SUPPORTS AND LOADINGS SPECIFIED BY FABRICATOR TO BE VERIFIED BY BUILDING DESIGNER

BEARINGS

JT	FACTORED GROSS REACTION VERT	HORZ	MAXIMUM FACTORED GROSS REACTION DOWN	HORZ	UPLIFT	INPUT BRG IN-SX	REQRD BRG IN-SX
W	2079	0	2079	0	0	5-8	3-4
M	1949	0	1949	0	0	MECHANICAL	

A SUITABLE HANGER/MECHANICAL CONNECTION IS REQUIRED AT JOINT M. MINIMUM BEARING LENGTH AT JOINT M = 2-13.

UNFACTORED REACTIONS

JT	1ST LCASE COMBINED	MAX./MIN. COMPONENT REACTIONS SNOW	LIVE	PERM.LIVE	WIND	DEAD	SOIL
W	1479	918 / 0	0 / 0	0 / 0	0 / 0	561 / 0	0 / 0
M	1390	848 / 0	0 / 0	0 / 0	0 / 0	542 / 0	0 / 0

BEARING MATERIAL TO BE SPF NO.2 OR BETTER AT JOINT(S) W

BRACING

TOP CHORD TO BE SHEATHED OR MAX. PURLIN SPACING = 3.78 FT.
MAX. UNBRACED BOTTOM CHORD LENGTH = 10.00 FT OR RIGID CEILING DIRECTLY APPLIED.

ALL PITCH BREAKS AND PERIMETER CORNER JOINTS MUST BE LATERALLY RESTRAINED.

1 LATERAL BRACE(S) AT 1/ 2 LENGTH OF D-U.

END VERTICAL(S) MUST BE SHEATHED OR HAVE BRACES AS INDICATED IN THE MAX. UNBRACED LENGTH COLUMN OF THE TABLE BELOW

LOADING

TOTAL LOAD CASES: (4)

CHORDS

MEMB. FR-TO	MAX. FACTORED FORCE (LBS)	FACTORED VERT. LOAD LC1 (PLF) FROM	TO	MAX CSI (LC)	MAX. UNBRAC LENGTH
A- B	0 / 52	-78.0	-78.0	0.15 (1)	10.00
B- C	-1512 / 0	-78.0	-78.0	0.20 (1)	5.15
C- D	-2360 / 0	-78.0	-78.0	0.78 (1)	4.15
D- E	-2895 / 0	-78.0	-78.0	0.85 (1)	3.78
E- F	-2895 / 0	-78.0	-78.0	0.85 (1)	3.78
F- G	-2895 / 0	-78.0	-78.0	0.85 (1)	3.78
G- H	-2895 / 0	-78.0	-78.0	0.85 (1)	3.78
H- I	-2670 / 0	-78.0	-78.0	0.83 (1)	3.93
I- J	-2514 / 0	-78.0	-78.0	0.09 (1)	4.30
J- K	-1616 / 0	-78.0	-78.0	0.18 (1)	5.02
K- L	-1093 / 0	-78.0	-78.0	0.05 (1)	6.00
W- B	-2068 / 0	0.0	0.0	0.30 (1)	5.88
M- L	-1955 / 0	0.0	0.0	0.36 (1)	6.03
W- V	0 / 0	-18.5	-18.5	0.16 (4)	10.00
V- U	0 / 894	-18.5	-18.5	0.31 (4)	10.00
U- T	0 / 2360	-18.5	-18.5	0.50 (1)	10.00
T- S	0 / 2360	-18.5	-18.5	0.50 (1)	10.00
S- R	0 / 2670	-18.5	-18.5	0.55 (1)	10.00
R- Q	0 / 2670	-18.5	-18.5	0.55 (1)	10.00
Q- P	0 / 1519	-18.5	-18.5	0.37 (1)	10.00
P- O	0 / 1649	-18.5	-18.5	0.35 (1)	10.00
O- N	0 / 629	-18.5	-18.5	0.16 (1)	10.00
N- M	0 / 0	-18.5	-18.5	0.06 (4)	10.00

WEBS

MEMB. FR-TO	MAX. FACTORED FORCE (LBS)	MAX CSI (LC)
V- C	-470 / 0	0.42 (1)
C- U	0 / 1959	0.44 (1)
U- D	-1154 / 0	0.38 (1)
D- S	0 / 721	0.16 (1)
S- F	-550 / 0	0.50 (1)
S- H	0 / 304	0.07 (1)
Q- H	-872 / 0	0.79 (1)
Q- I	0 / 1537	0.35 (1)
P- I	0 / 688	0.15 (1)
P- J	-563 / 0	0.28 (1)
O- J	-1644 / 0	0.76 (1)
O- K	0 / 1881	0.42 (1)
N- K	-917 / 0	0.42 (1)
B- V	0 / 1078	0.24 (1)
N- L	0 / 1197	0.27 (1)

DESIGN CRITERIA

SPECIFIED LOADS:

TOP CH.	LL	=	21.0	PSF
	DL	=	6.0	PSF
BOT CH.	LL	=	0.0	PSF
	DL	=	7.4	PSF
TOTAL LOAD		=	34.4	PSF

SPACING = 24.0 IN. C/C

LOADING IN ALL FLAT SECTIONS BASED ON A SLOPE OF 2.00/12 MINIMUM

THIS TRUSS IS DESIGNED FOR RESIDENTIAL OR SMALL BUILDING REQUIREMENTS OF PART 9, NBCC 2010, NBCC 2015

THIS DESIGN COMPLIES WITH:
- PART 9 OF OBC 2012, OBC 2018
- CSA 086-09, CSA 086-14
- TPIC 2011, TPIC 2014

(55 % OF 23.0 P.S.F. G.S.L. PLUS 8.4 P.S.F. RAIN LOAD) EQUALS 21.0 P.S.F. SPECIFIED ROOF LIVE LOAD

ALLOWABLE DEFL.(LL)= L/360 (1.35")
CALCULATED VERT. DEFL.(LL) = L/ 999 (0.17")
ALLOWABLE DEFL.(TL)= L/360 (1.35")
CALCULATED VERT. DEFL.(TL) = L/ 999 (0.35")

CSI: TC=0.85/1.00 (D-F:1) , BC=0.55/1.00 (Q-S:1) , WB=0.79/1.00 (H-Q:1) , SSI=0.28/1.00 (C-D:1)

DOL LUMBER=1.00 NAIL=1.00 LS BEND=1.10 COMP=1.10 SHEAR=1.10 TENS= 1.10

COMPANION LIVE LOAD FACTOR = 1.00

TRUSS PLATE MANUFACTURER IS NOT RESPONSIBLE FOR QUALITY CONTROL IN THE TRUSS MANUFACTURING PLANT .

NAIL VALUES

PLATE	GRIP(DRY) (PSI) MAX	MIN	SHEAR (PLI) MAX	MIN	SECTION (PLI) MAX	MIN
MT20	618	354	1667	788	1987	1656

PLATE PLACEMENT TOL. = 0.250 Inches

PLATE ROTATION TOL. = 5.0 Deg.

JSI GRIP= 0.89 (L) (INPUT = 0.90)
JSI METAL= 0.79 (R) (INPUT = 1.00)

A18082069

CONTINUED ON PAGE 2

JOB NAME	TRUSS NAME	QUANTITY	PLY	JOB DESC.	DRWG NO.
300969	H30S	1	1	TRUSS DESC.	JT# 45147

Alpa Roof Truss, Maple

Version 8.210 S Jun 13 2018 MiTek Industries, Inc. Wed Aug 15 14:11:45 2018 Page 1

ID:DdSMSEW8qE9HTV0gkasOLLzzSIP-cp?GfQ3?nqG7KqqhMezvYNL0KShu3HYDaDqOx1ynbKS

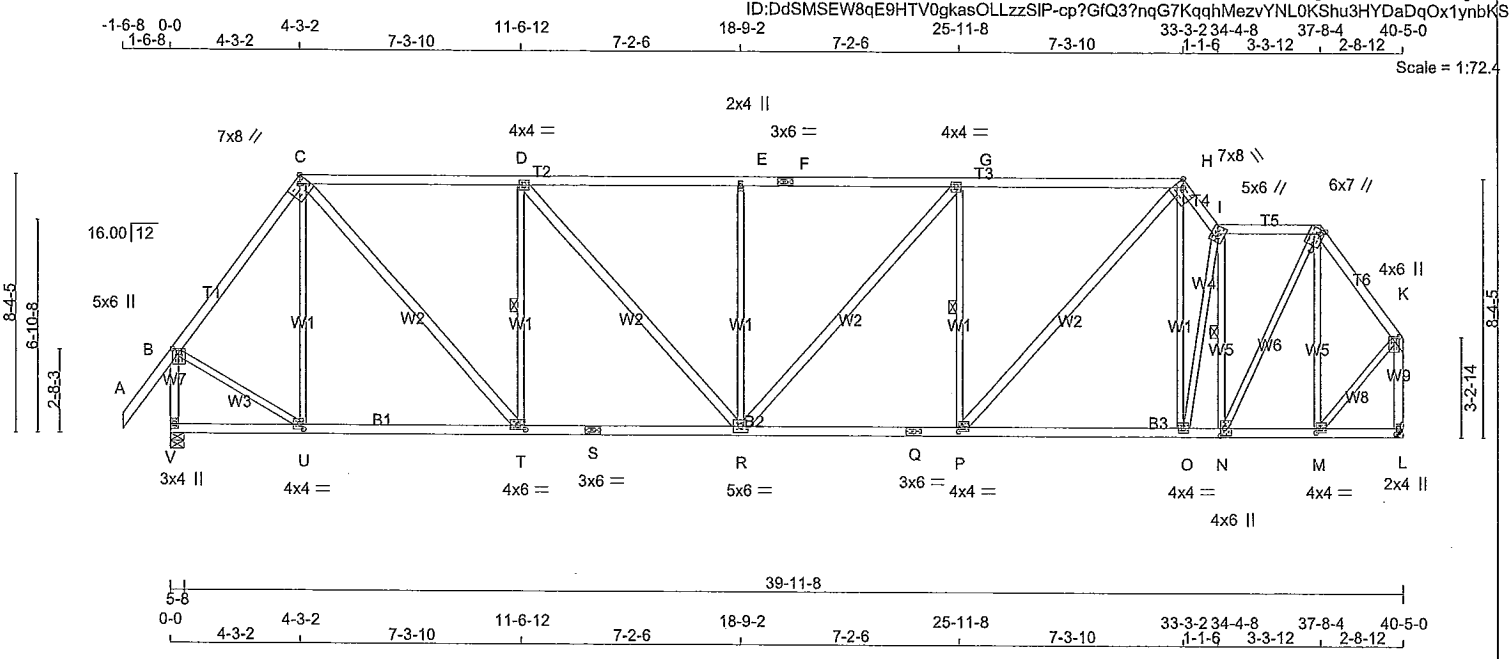

TOTAL WEIGHT = 216 lb

[M]

LUMBER

N. L. G. A. RULES

CHORDS	SIZE		LUMBER	DESCR.
A - C	2x4	DRY	No.2	SPF
C - F	2x4	DRY	No.2	SPF
F - H	2x4	DRY	No.2	SPF
H - I	2x4	DRY	No.2	SPF
I - J	2x4	DRY	No.2	SPF
J - K	2x4	DRY	No.2	SPF
V - B	2x4	DRY	No.2	SPF
L - K	2x4	DRY	No.2	SPF
V - S	2x4	DRY	No.2	SPF
S - Q	2x4	DRY	No.2	SPF
Q - L	2x4	DRY	No.2	SPF
ALL WEBS EXCEPT	2x3	DRY	No.2	SPF
C - T	2x4	DRY	No.2	SPF
D - R	2x4	DRY	No.2	SPF
R - G	2x4	DRY	No.2	SPF
P - H	2x4	DRY	No.2	SPF

DRY: SEASONED LUMBER.

PLATES (table ls in inches)

JT	TYPE	PLATES	W	LEN	Y	X
B	TMVW+p	MT20	5.0	6.0	1.50	2.50
C	TTWW-h	MT20	7.0	8.0	Edge	2.75
D	TMWW-t	MT20	4.0	4.0		
E	TMW+w	MT20	2.0	4.0		
F	TS-t	MT20	3.0	6.0		
G	TMWW-t	MT20	4.0	4.0		
H	TTWW-h	MT20	7.0	8.0	Edge	2.75
I	TTWW+m	MT20	5.0	6.0		
J	TTWW+m	MT20	6.0	7.0	Edge	1.50
K	TMVW+p	MT20	4.0	6.0	1.50	2.00
L	BMV1+p	MT20	2.0	4.0	2.25	1.00
M	BMWW-t	MT20	4.0	4.0	1.75	1.75
N	BMWW+t	MT20	4.0	6.0	3.00	1.50
O	BMWW-t	MT20	4.0	4.0		
P	BMWW-t	MT20	4.0	4.0	1.75	1.50
Q	BS-t	MT20	3.0	6.0		
R	BMWWW-t	MT20	5.0	6.0		
S	BS-t	MT20	3.0	6.0		
T	BMWW-t	MT20	4.0	6.0	1.75	3.00

NOTE: Lateral brace(s) shown shall be 1x4 for Part 9 design as per OBC 9.23.13.11, and no less than 2x4 for Part 4 design.

LICENSED PROFESSIONAL ENGINEER
D. O'CONNOR
100009580
08/15/2018
PROVINCE OF ONTARIO

DIMENSIONS, SUPPORTS AND LOADINGS SPECIFIED BY FABRICATOR TO BE VERIFIED BY BUILDING DESIGNER

BEARINGS

JT	FACTORED GROSS REACTION VERT	HORZ	MAXIMUM FACTORED GROSS REACTION DOWN	HORZ	UPLIFT	INPUT BRG IN-SX	REQRD BRG IN-SX
V	2079	0	2079	0	0	5-8	3-4
L	1949	0	1949	0	0	MECHANICAL	

A SUITABLE HANGER/MECHANICAL CONNECTION IS REQUIRED AT JOINT L. MINIMUM BEARING LENGTH AT JOINT L = 2-13.

UNFACTORED REACTIONS

JT	1ST LCASE COMBINED	MAX./MIN. COMPONENT REACTIONS SNOW	LIVE	PERM.LIVE	WIND	DEAD	SOIL
V	1479	918 / 0	0 / 0	0 / 0	0 / 0	561 / 0	0 / 0
L	1390	848 / 0	0 / 0	0 / 0	0 / 0	542 / 0	0 / 0

BEARING MATERIAL TO BE SPF NO.2 OR BETTER AT JOINT(S) V

BRACING

TOP CHORD TO BE SHEATHED OR MAX. PURLIN SPACING = 3.39 FT.
MAX. UNBRACED BOTTOM CHORD LENGTH = 10.00 FT OR RIGID CEILING DIRECTLY APPLIED.

ALL PITCH BREAKS AND PERIMETER CORNER JOINTS MUST BE LATERALLY RESTRAINED.

1 LATERAL BRACE(S) AT 1/ 2 LENGTH OF D-T, G-P, I-N.

END VERTICAL(S) MUST BE SHEATHED OR HAVE BRACES AS INDICATED IN THE MAX. UNBRACED LENGTH COLUMN OF THE TABLE BELOW

LOADING

TOTAL LOAD CASES: (4)

CHORDS

MEMB. FR-TO	MAX. FACTORED FORCE (LBS)	FACTORED VERT. LOAD (PLF) FROM	TO	LC1 CSI (LC)	MAX UNBRAC LENGTH
A- B	0 / 52	-78.0	-78.0	0.15 (1)	10.00
B- C	-1575 / 0	-78.0	-78.0	0.34 (1)	4.94
C- D	-2058 / 0	-78.0	-78.0	0.86 (1)	3.74
D- E	-2471 / 0	-78.0	-78.0	0.94 (1)	3.39
E- F	-2471 / 0	-78.0	-78.0	0.94 (1)	3.39
F- G	-2471 / 0	-78.0	-78.0	0.94 (1)	3.39
G- H	-2308 / 0	-78.0	-78.0	0.91 (1)	3.52
H- I	-2406 / 0	-78.0	-78.0	0.08 (1)	4.39
I- J	-1507 / 0	-78.0	-78.0	0.18 (1)	5.16
J- K	-1305 / 0	-78.0	-78.0	0.13 (1)	5.53
V- B	-2053 / 0	0.0	0.0	0.30 (1)	5.91
L- K	-1937 / 0	0.0	0.0	0.36 (1)	6.04
V- U	0 / 0	-18.5	-18.5	0.15 (4)	10.00
U- T	0 / 935	-18.5	-18.5	0.29 (4)	10.00
T- S	0 / 2058	-18.5	-18.5	0.44 (1)	10.00
S- R	0 / 2058	-18.5	-18.5	0.44 (1)	10.00
R- Q	0 / 2309	-18.5	-18.5	0.49 (1)	10.00
Q- P	0 / 2309	-18.5	-18.5	0.49 (1)	10.00
P- O	0 / 1436	-18.5	-18.5	0.35 (1)	10.00
O- N	0 / 1532	-18.5	-18.5	0.31 (1)	10.00
N- M	0 / 765	-18.5	-18.5	0.18 (1)	10.00
M- L	0 / 0	-18.5	-18.5	0.06 (4)	10.00

WEBS

MEMB. FR-TO	MAX. FACTORED FORCE (LBS)	MAX CSI (LC)
U- C	-375 / 0	0.52 (1)
C- T	0 / 1668	0.27 (1)
T- D	-1096 / 0	0.49 (1)
D- R	0 / 620	0.10 (1)
R- E	-518 / 0	0.72 (1)
R- G	0 / 244	0.04 (1)
P- G	-813 / 0	0.36 (1)
P- H	0 / 1296	0.21 (1)
O- H	0 / 682	0.15 (1)
O- I	-568 / 0	0.47 (1)
N- I	-1537 / 0	0.46 (1)
N- J	0 / 1683	0.38 (1)
M- J	-697 / 0	0.56 (1)
B- U	0 / 1062	0.24 (1)
M- K	0 / 1102	0.25 (1)

DESIGN CRITERIA

SPECIFIED LOADS:

TOP CH.	LL	=	21.0	PSF
	DL	=	6.0	PSF
BOT CH.	LL	=	0.0	PSF
	DL	=	7.4	PSF
TOTAL LOAD		=	34.4	PSF

SPACING = 24.0 IN. C/C

LOADING IN ALL FLAT SECTIONS BASED ON A SLOPE OF 2.00/12 MINIMUM

THIS TRUSS IS DESIGNED FOR RESIDENTIAL OR SMALL BUILDING REQUIREMENTS OF PART 9, NBCC 2010, NBCC 2015

THIS DESIGN COMPLIES WITH:
- PART 9 OF OBC 2012, OBC 2018
- CSA 086-09, CSA 086-14
- TPIC 2011, TPIC 2014

(55 % OF 23.0 P.S.F. G.S.L. PLUS 8.4 P.S.F. RAIN LOAD) EQUALS 21.0 P.S.F. SPECIFIED ROOF LIVE LOAD

ALLOWABLE DEFL.(LL)= L/360 (1.35")
CALCULATED VERT. DEFL.(LL) = L/ 999 (0.13")
ALLOWABLE DEFL.(TL)= L/360 (1.35")
CALCULATED VERT. DEFL.(TL) = L/ 999 (0.28")

CSI: TC=0.94/1.00 (D-E:1) , BC=0.49/1.00 (P-R:1) , WB=0.72/1.00 (E-R:1) , SSI=0.27/1.00 (C-D:1)

DOL LUMBER=1.00 NAIL=1.00 LS BEND=1.10 COMP=1.10 SHEAR=1.10 TENS= 1.10

COMPANION LIVE LOAD FACTOR = 1.00

TRUSS PLATE MANUFACTURER IS NOT RESPONSIBLE FOR QUALITY CONTROL IN THE TRUSS MANUFACTURING PLANT .

NAIL VALUES

PLATE	GRIP(DRY) (PSI) MAX	MIN	SHEAR (PLI) MAX	MIN	SECTION (PLI) MAX	MIN
MT20	618	354	1667	788	1987	1656

PLATE PLACEMENT TOL. = 0.250 Inches

PLATE ROTATION TOL. = 5.0 Deg.

JSI GRIP= 0.90 (K) (INPUT = 0.90)
JSI METAL= 0.66 (Q) (INPUT = 1.00)

A18082070

CONTINUED ON PAGE 2

JOB NAME	TRUSS NAME	QUANTITY	PLY	JOB DESC.	DRWG NO.
300969	H31S	1	1	TRUSS DESC.	JT# 45147

Alpa Roof Truss, Maple

Version 8.210 S Jun 13 2018 MiTek Industries, Inc. Wed Aug 15 14:11:47 2018 Page 1

ID:DdSMSEW8qE9HTV0gkasOLLzzSIP-ZC61464GJRWrZ8_3U3?NdoRPqGN9XAwW2XJU?vynbKQ

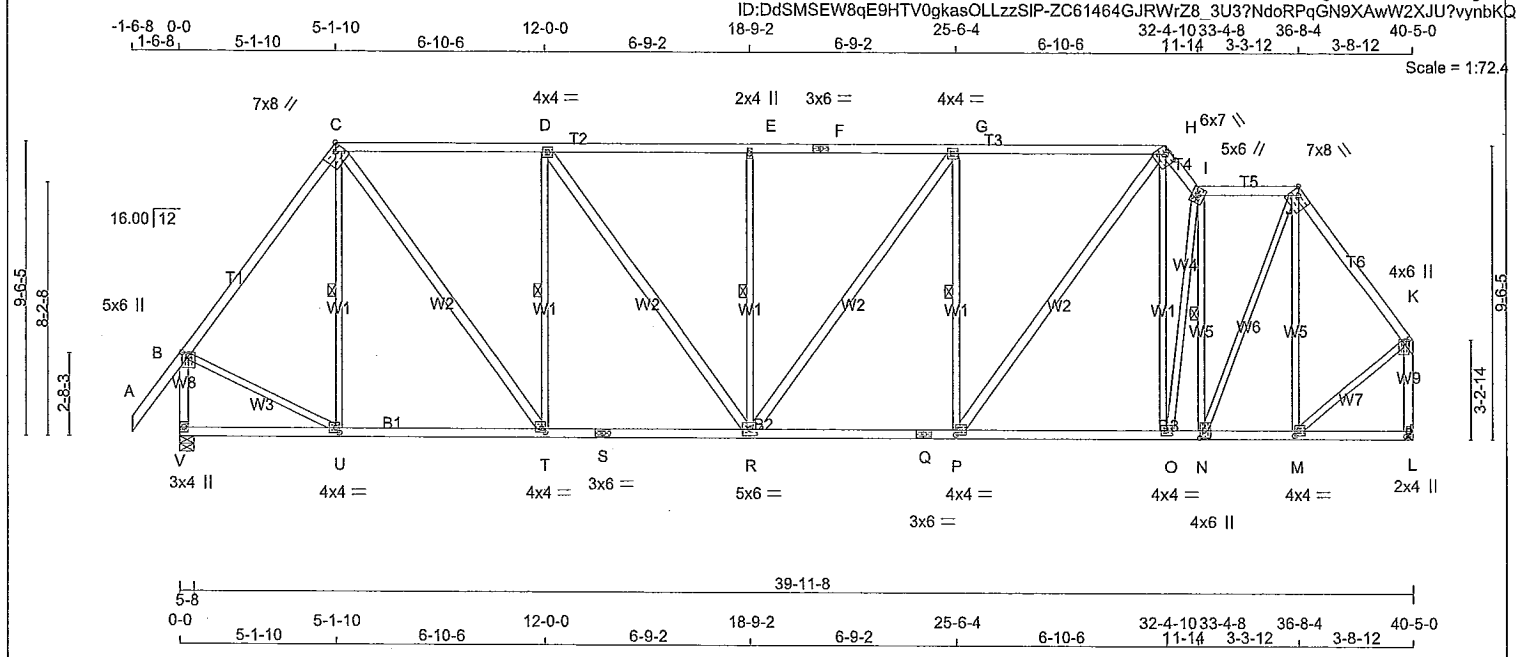

TOTAL WEIGHT = 230 lb

[M]

LUMBER

N. L. G. A. RULES

CHORDS	SIZE		LUMBER	DESCR.
A - C	2x4	DRY	No.2	SPF
C - F	2x4	DRY	No.2	SPF
F - H	2x4	DRY	No.2	SPF
H - I	2x4	DRY	No.2	SPF
I - J	2x4	DRY	No.2	SPF
J - K	2x4	DRY	No.2	SPF
V - B	2x4	DRY	No.2	SPF
L - K	2x4	DRY	No.2	SPF
V - S	2x4	DRY	No.2	SPF
S - Q	2x4	DRY	No.2	SPF
Q - L	2x4	DRY	No.2	SPF
ALL WEBS	2x3	DRY	No.2	SPF
EXCEPT				
C - T	2x4	DRY	No.2	SPF
D - R	2x4	DRY	No.2	SPF
R - G	2x4	DRY	No.2	SPF
P - H	2x4	DRY	No.2	SPF

DRY: SEASONED LUMBER.

PLATES (table is in inches)

JT	TYPE	PLATES	W	LEN	Y	X
B	TMVW+p	MT20	5.0	6.0	1.50	2.50
C	TTWW-h	MT20	7.0	8.0	Edge	2.75
D	TMWW-t	MT20	4.0	4.0		
E	TMW+w	MT20	2.0	4.0		
F	TS-t	MT20	3.0	6.0		
G	TMWW-t	MT20	4.0	4.0		
H	TTWW-h	MT20	6.0	7.0	1.50	3.75
I	TTWW+m	MT20	5.0	6.0		
J	TTWW-h	MT20	7.0	8.0	Edge	2.75
K	TMVW+p	MT20	4.0	6.0	1.50	2.00
L	BMV1+p	MT20	2.0	4.0	2.25	1.00
M, P, U						
M	BMWW-t	MT20	4.0	4.0	2.00	1.50
N	BMWW+t	MT20	4.0	6.0	3.00	1.75
O	BMWW-t	MT20	4.0	4.0		
Q	BS-t	MT20	3.0	6.0		
R	BMWWW-t	MT20	5.0	6.0		
S	BS-t	MT20	3.0	6.0		
T	BMWW-t	MT20	4.0	4.0	1.50	1.50

NOTE: Lateral brace(s) shown shall be 1x4 for Part 9 design as per OBC 9.23.13.11, and no less than 2x4 for Part 4 design.

LICENSED PROFESSIONAL ENGINEER
D. O'CONNOR
100009580
08/15/2018
PROVINCE OF ONTARIO

DIMENSIONS, SUPPORTS AND LOADINGS SPECIFIED BY FABRICATOR TO BE VERIFIED BY BUILDING DESIGNER

BEARINGS

JT	FACTORED GROSS REACTION VERT	HORZ	MAXIMUM FACTORED GROSS REACTION DOWN	HORZ	UPLIFT	INPUT BRG IN-SX	REQRD BRG IN-SX
V	2079	0	2079	0	0	5-8	3-4
L	1949	0	1949	0	0	MECHANICAL	

A SUITABLE HANGER/MECHANICAL CONNECTION IS REQUIRED AT JOINT L. MINIMUM BEARING LENGTH AT JOINT L = 2-13.

UNFACTORED REACTIONS

JT	1ST LCASE COMBINED	MAX./MIN. COMPONENT REACTIONS SNOW	LIVE	PERM.LIVE	WIND	DEAD	SOIL
V	1479	918 / 0	0 / 0	0 / 0	0 / 0	561 / 0	0 / 0
L	1390	848 / 0	0 / 0	0 / 0	0 / 0	542 / 0	0 / 0

BEARING MATERIAL TO BE SPF NO.2 OR BETTER AT JOINT(S) V

BRACING

TOP CHORD TO BE SHEATHED OR MAX. PURLIN SPACING = 3.82 FT.
MAX. UNBRACED BOTTOM CHORD LENGTH = 10.00 FT OR RIGID CEILING DIRECTLY APPLIED.

ALL PITCH BREAKS AND PERIMETER CORNER JOINTS MUST BE LATERALLY RESTRAINED.

1 LATERAL BRACE(S) AT 1/ 2 LENGTH OF C-U, D-T, E-R, G-P, I-N.

END VERTICAL(S) MUST BE SHEATHED OR HAVE BRACES AS INDICATED IN THE MAX. UNBRACED LENGTH COLUMN OF THE TABLE BELOW

LOADING

TOTAL LOAD CASES: (4)

CHORDS

MEMB. FR-TO	MAX. FACTORED FORCE (LBS)	FACTORED VERT. LOAD LC1 (PLF) FROM	TO	MAX CSI (LC)	MAX. UNBRAC LENGTH
A- B	0 / 52	-78.0	-78.0	0.15 (1)	10.00
B- C	-1611 / 0	-78.0	-78.0	0.55 (1)	4.72
C- D	-1830 / 0	-78.0	-78.0	0.70 (1)	4.13
D- E	-2154 / 0	-78.0	-78.0	0.75 (1)	3.82
E- F	-2154 / 0	-78.0	-78.0	0.75 (1)	3.82
F- G	-2154 / 0	-78.0	-78.0	0.75 (1)	3.82
G- H	-2036 / 0	-78.0	-78.0	0.74 (1)	3.92
H- I	-2291 / 0	-78.0	-78.0	0.07 (1)	4.49
I- J	-1422 / 0	-78.0	-78.0	0.17 (1)	5.29
J- K	-1428 / 0	-78.0	-78.0	0.24 (1)	5.22
V- B	-2043 / 0	0.0	0.0	0.29 (1)	5.91
L- K	-1925 / 0	0.0	0.0	0.36 (1)	6.06
V- U	0 / 0	-18.5	-18.5	0.15 (4)	10.00
U- T	0 / 959	-18.5	-18.5	0.26 (4)	10.00
T- S	0 / 1830	-18.5	-18.5	0.39 (1)	10.00
S- R	0 / 1830	-18.5	-18.5	0.39 (1)	10.00
R- Q	0 / 2036	-18.5	-18.5	0.44 (1)	10.00
Q- P	0 / 2036	-18.5	-18.5	0.44 (1)	10.00
P- O	0 / 1368	-18.5	-18.5	0.34 (1)	10.00
O- N	0 / 1441	-18.5	-18.5	0.27 (1)	10.00
N- M	0 / 844	-18.5	-18.5	0.19 (1)	10.00
M- L	0 / 0	-18.5	-18.5	0.08 (4)	10.00

WEBS

MEMB. FR-TO	MAX. FACTORED FORCE (LBS)	MAX CSI (LC)
U- C	-299 / 0	0.18 (1)
C- T	0 / 1455	0.23 (1)
T- D	-1038 / 0	0.62 (1)
D- R	0 / 549	0.09 (1)
R- E	-486 / 0	0.29 (1)
R- G	0 / 200	0.03 (1)
P- G	-755 / 0	0.45 (1)
P- H	0 / 1116	0.18 (1)
O- H	0 / 674	0.15 (1)
O- I	-582 / 0	0.79 (1)
N- I	-1423 / 0	0.61 (1)
N- J	0 / 1529	0.34 (1)
M- J	-544 / 0	0.71 (1)
B- U	0 / 1050	0.24 (1)
M- K	0 / 1061	0.24 (1)

DESIGN CRITERIA

SPECIFIED LOADS:

TOP CH.	LL	=	21.0	PSF
	DL	=	6.0	PSF
BOT CH.	LL	=	0.0	PSF
	DL	=	7.4	PSF
TOTAL LOAD		=	34.4	PSF

SPACING = 24.0 IN. C/C

LOADING IN ALL FLAT SECTIONS BASED ON A SLOPE OF 2.00/12 MINIMUM

THIS TRUSS IS DESIGNED FOR RESIDENTIAL OR SMALL BUILDING REQUIREMENTS OF PART 9, NBCC 2010, NBCC 2015

THIS DESIGN COMPLIES WITH:
- PART 9 OF OBC 2012, OBC 2018
- CSA 086-09, CSA 086-14
- TPIC 2011, TPIC 2014

(55 % OF 23.0 P.S.F. G.S.L. PLUS 8.4 P.S.F. RAIN LOAD) EQUALS 21.0 P.S.F. SPECIFIED ROOF LIVE LOAD

ALLOWABLE DEFL.(LL)= L/360 (1.35")
CALCULATED VERT. DEFL.(LL) = L/ 999 (0.11")
ALLOWABLE DEFL.(TL)= L/360 (1.35")
CALCULATED VERT. DEFL.(TL) = L/ 999 (0.23")

CSI: TC=0.75/1.00 (E-G:1) , BC=0.44/1.00 (P-R:1) , WB=0.79/1.00 (I-O:1) , SSI=0.25/1.00 (G-H:1)

DOL LUMBER=1.00 NAIL=1.00 LS BEND=1.10 COMP=1.10 SHEAR=1.10 TENS= 1.10

COMPANION LIVE LOAD FACTOR = 1.00

TRUSS PLATE MANUFACTURER IS NOT RESPONSIBLE FOR QUALITY CONTROL IN THE TRUSS MANUFACTURING PLANT .

NAIL VALUES

PLATE	GRIP(DRY) (PSI) MAX	MIN	SHEAR (PLI) MAX	MIN	SECTION (PLI) MAX	MIN
MT20	618	354	1667	788	1987	1656

PLATE PLACEMENT TOL. = 0.250 Inches

PLATE ROTATION TOL. = 5.0 Deg.

JSI GRIP= 0.89 (K) (INPUT = 0.90)
JSI METAL= 0.64 (Q) (INPUT = 1.00)

A18082071

CONTINUED ON PAGE 2

JOB NAME	TRUSS NAME	QUANTITY	PLY	JOB DESC.	DRWG NO.
300969	H41	1	1	TRUSS DESC.	JT# 45147

Alpa Roof Truss, Maple

Version 8.210 S Jun 13 2018 MiTek Industries, Inc. Wed Aug 15 14:11:49 2018 Page 1

ID:DdSMSEW8qE9HTV0gkasOLLzzSIP-VaEnUo6Wr2mZoR7SbT1riDWjK3?8?4opVrob4oynbKO

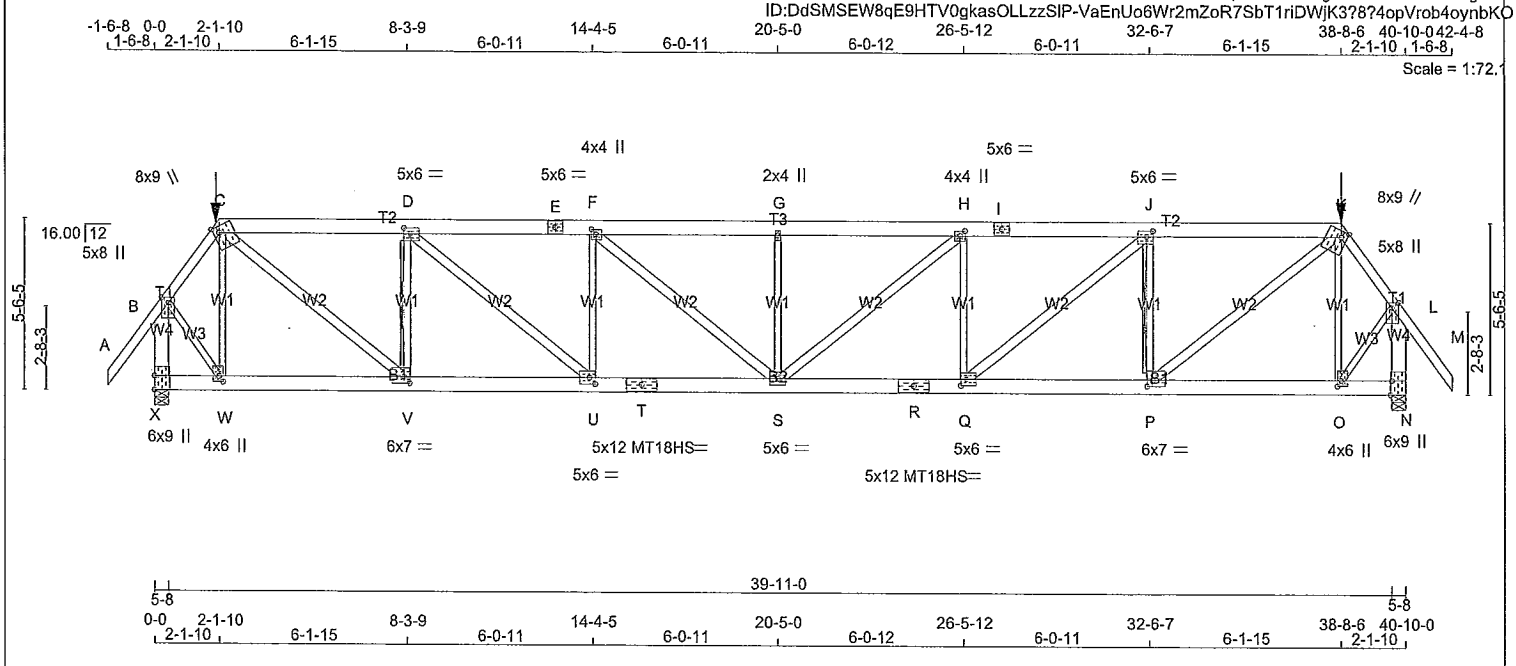

TOTAL WEIGHT = 244 lb

[M]

LUMBER

N. L. G. A. RULES

CHORDS	SIZE		LUMBER	DESCR.
A - C	2x4	DRY	No.2	SPF
C - E	2x6	DRY	No.2	SPF
E - I	2x6	DRY	No.2	SPF
I - K	2x6	DRY	No.2	SPF
K - M	2x4	DRY	No.2	SPF
X - B	2x6	DRY	No.2	SPF
N - L	2x6	DRY	No.2	SPF
X - T	2x6	DRY	1650F 1.5E	SPF
T - R	2x6	DRY	1650F 1.5E	SPF
R - N	2x6	DRY	1650F 1.5E	SPF
ALL WEBS	2x3	DRY	No.2	SPF
EXCEPT				
C - V	2x4	DRY	No.2	SPF
D - U	2x4	DRY	No.2	SPF
F - S	2x4	DRY	No.2	SPF
S - H	2x4	DRY	No.2	SPF
Q - J	2x4	DRY	No.2	SPF
P - K	2x4	DRY	No.2	SPF

DRY: SEASONED LUMBER.

PLATES (table is in inches)

JT	TYPE	PLATES	W	LEN	Y	X
B	TMVW+p	MT20	5.0	8.0	2.00	2.75
C	TTWW+m	MT20	8.0	9.0	2.50	2.25
D	TMWW-t	MT20	5.0	6.0	2.25	2.50
E	TS-t	MT20	5.0	6.0		
F	TMWW+t	MT20	4.0	4.0	2.00	1.75
G	TMW+w	MT20	2.0	4.0		
H	TMWW+t	MT20	4.0	4.0	2.00	1.75
I	TS-t	MT20	5.0	6.0		
J	TMWW-t	MT20	5.0	6.0	2.25	2.50
K	TTWW+m	MT20	8.0	9.0	2.50	2.25
L	TMVW+p	MT20	5.0	8.0	2.00	2.75
N	BMV1+t	MT20	6.0	9.0	Edge	0.50
O	BMWW+t	MT20	4.0	6.0	2.25	1.50
P	BMWW-t	MT20	6.0	7.0	2.50	2.25
Q	BMWW-t	MT20	5.0	6.0	2.50	2.25
R	BS-t	MT18HS	5.0	12.0		
S	BMWWW-t	MT20	5.0	6.0		
T	BS-t	MT18HS	5.0	12.0		

NOTE: Lateral brace(s) shown shall be 1x4 for Part 9 design as per OBC 9.23.13.11, and no less than 2x4 for Part 4 design.

LICENSED PROFESSIONAL ENGINEER
D. O'CONNOR
100009580
08/15/2018
PROVINCE OF ONTARIO

DIMENSIONS, SUPPORTS AND LOADINGS SPECIFIED BY FABRICATOR TO BE VERIFIED BY BUILDING DESIGNER

BEARINGS

JT	FACTORED GROSS REACTION VERT	HORZ	MAXIMUM FACTORED GROSS REACTION DOWN	HORZ	UPLIFT	INPUT BRG IN-SX	REQRD BRG IN-SX
X	3997	0	3997	0	0	5-8	5-8
N	3997	0	3997	0	0	5-8	5-8

UNFACTORED REACTIONS

JT	1ST LCASE COMBINED	MAX./MIN. COMPONENT REACTIONS SNOW	LIVE	PERM.LIVE	WIND	DEAD	SOIL
X	2848	1749 / 0	0 / 0	0 / 0	0 / 0	1099 / 0	0 / 0
N	2848	1749 / 0	0 / 0	0 / 0	0 / 0	1099 / 0	0 / 0

BEARING MATERIAL TO BE SPF NO.2 OR BETTER AT JOINT(S) X, N
BEARING SIZE FACTOR = 1.15 AT JNT(S) X, N (BASED ON SUPPORT DEPTH = 1-8)

BRACING

TOP CHORD TO BE SHEATHED OR MAX. PURLIN SPACING = 2.47 FT.
MAX. UNBRACED BOTTOM CHORD LENGTH = 10.00 FT OR RIGID CEILING DIRECTLY APPLIED.

ALL PITCH BREAKS AND PERIMETER CORNER JOINTS MUST BE LATERALLY RESTRAINED.

2x4 DRY SPF No.2 T-BRACE AT D-V, J-P

FASTEN T AND I-BRACES TO NARROW EDGE OF WEB WITH ONE ROW PER PLY OF 3" COMMON WIRE NAILS @ 6" O.C. WITH 3" MINIMUM END DISTANCE. BRACE MUST COVER 90% OF WEB LENGTH.

END VERTICAL(S) MUST BE SHEATHED OR HAVE BRACES AS INDICATED IN THE MAX. UNBRACED LENGTH COLUMN OF THE TABLE BELOW

LOADING

TOTAL LOAD CASES: (4)

CHORDS

MEMB. FR-TO	MAX. FACTORED FORCE (LBS)	FACTORED VERT. LOAD (PLF) FROM	TO	LC1	MAX CSI (LC)	MAX. UNBRAC LENGTH
A- B	0 / 52	-78.0	-78.0	0.17 (1)	10.00	
B- C	-2744 / 0	-78.0	-78.0	0.27 (1)	3.91	
C- D	-5210 / 0	-154.7	-154.7	0.66 (1)	3.21	
D- E	-7257 / 0	-154.7	-154.7	0.88 (1)	2.49	
E- F	-7257 / 0	-154.7	-154.7	0.88 (1)	2.49	
F- G	-7950 / 0	-154.7	-154.7	0.85 (1)	2.47	
G- H	-7950 / 0	-154.7	-154.7	0.85 (1)	2.47	
H- I	-7257 / 0	-154.7	-154.7	0.88 (1)	2.49	
I- J	-7257 / 0	-154.7	-154.7	0.88 (1)	2.49	
J- K	-5210 / 0	-154.7	-154.7	0.66 (1)	3.21	
K- L	-2744 / 0	-78.0	-78.0	0.27 (1)	3.91	
L- M	0 / 52	-78.0	-78.0	0.17 (1)	10.00	
X- B	-4027 / 0	0.0	0.0	0.40 (1)	5.29	
N- L	-4027 / 0	0.0	0.0	0.40 (1)	5.29	
X- W	0 / 0	-36.7	-36.7	0.09 (4)	10.00	
W- V	0 / 1592	-36.7	-36.7	0.21 (1)	10.00	
V- U	0 / 5210	-36.7	-36.7	0.49 (1)	10.00	
U- T	0 / 7257	-36.7	-36.7	0.67 (1)	10.00	
T- S	0 / 7257	-36.7	-36.7	0.67 (1)	10.00	
S- R	0 / 7257	-36.7	-36.7	0.67 (1)	10.00	
R- Q	0 / 7257	-36.7	-36.7	0.67 (1)	10.00	
Q- P	0 / 5210	-36.7	-36.7	0.49 (1)	10.00	
P- O	0 / 1592	-36.7	-36.7	0.21 (1)	10.00	
O- N	0 / 0	-36.7	-36.7	0.09 (4)	10.00	

WEBS

MEMB. FR-TO	MAX. FACTORED FORCE (LBS)	MAX CSI (LC)
W- C	-1357 / 0	0.56 (1)
C- V	0 / 4682	0.83 (1)
V- D	-2767 / 0	0.63 (1)
D- U	0 / 2669	0.47 (1)
U- F	-1484 / 0	0.61 (1)
F- S	0 / 902	0.16 (1)
S- G	-947 / 0	0.39 (1)
S- H	0 / 902	0.16 (1)
Q- H	-1484 / 0	0.61 (1)
Q- J	0 / 2669	0.47 (1)
P- J	-2767 / 0	0.63 (1)
P- K	0 / 4682	0.83 (1)
O- K	-1357 / 0	0.56 (1)
B- W	0 / 2277	0.56 (1)
O- L	0 / 2277	0.56 (1)

FACTORED CONCENTRATED LOADS (LBS)

JT	LOC.	LC1	MAX-	MAX+	FACE	DIR.	TYPE
C	2-1-10	-123	-123	---	FRONT	VERT	TOTAL
K	38-8-6	-123	-123	---	FRONT	VERT	TOTAL

DESIGN CRITERIA

SPECIFIED LOADS:

TOP CH.	LL	=	21.0	PSF
	DL	=	6.0	PSF
BOT CH.	LL	=	0.0	PSF
	DL	=	7.4	PSF
TOTAL LOAD		=	34.4	PSF

SPACING = 24.0 IN. C/C

LOADING IN FLAT SECTION BASED ON A SLOPE OF 2.00/12 MINIMUM

GIRDER TYPE: CPrimeHip
SIDE SETBACK = 2-1-10
END SETBACK = 5-11-4
END WALL WIDTH = 0-0
CORNER FRAMING TYPE: CONVENTIONAL
END JACK TYPE: CONVENTIONAL
APPLIED TO FRONT SIDE
- ADDT'L LOADS BASED ON 55 % OF GSL.

THIS TRUSS IS DESIGNED FOR RESIDENTIAL OR SMALL BUILDING REQUIREMENTS OF PART 9, NBCC 2010, NBCC 2015

THIS DESIGN COMPLIES WITH:
- PART 9 OF OBC 2012, OBC 2018
- CSA 086-09, CSA 086-14
- TPIC 2011, TPIC 2014

DESIGN ASSUMPTIONS
-OVERHANG NOT TO BE ALTERED OR CUT OFF.

(55 % OF 23.0 P.S.F. G.S.L. PLUS 8.4 P.S.F. RAIN LOAD) EQUALS 21.0 P.S.F. SPECIFIED ROOF LIVE LOAD

ALLOWABLE DEFL.(LL)= L/360 (1.36")
CALCULATED VERT. DEFL.(LL) = L/ 999 (0.36")
ALLOWABLE DEFL.(TL)= L/360 (1.36")
CALCULATED VERT. DEFL.(TL) = L/ 691 (0.71")

CSI: TC=0.88/1.00 (D-F:1) , BC=0.67/1.00 (Q-S:1) , WB=0.83/1.00 (C-V:1) , SSI=0.37/1.00 (C-D:1)

DOL LUMBER=1.00 NAIL=1.00 LS BEND=1.00 COMP=1.00 SHEAR=1.00 TENS= 1.00

COMPANION LIVE LOAD FACTOR = 1.00

AUTOSOLVE HEELS OFF

TRUSS PLATE MANUFACTURER IS NOT RESPONSIBLE FOR QUALITY CONTROL IN THE TRUSS MANUFACTURING PLANT .

NAIL VALUES

PLATE	GRIP(DRY) (PSI) MAX	MIN	SHEAR (PLI) MAX	MIN	SECTION (PLI) MAX	MIN
MT20	618	354	1667	788	1987	1656
MT18HS	511	354	2455	1382	3004	2010

PLATE PLACEMENT TOL. = 0.250 inches

PLATE ROTATION TOL. = 5.0 Deg.

A18082072

CONTINUED ON PAGE 2

PLATES (table is in inches)

JT	TYPE	PLATES	W	LEN	Y	X
U	BMWW-t	MT20	5.0	6.0	2.50	2.25
V	BMWW-t	MT20	6.0	7.0	2.50	2.25
W	BMWW+t	MT20	4.0	6.0	2.25	1.50
X	BMV1+t	MT20	6.0	9.0	5.50	

Edge - INDICATES REFERENCE CORNER OF PLATE TOUCHES EDGE OF CHORD.

HANGERS NOTES

1) SPECIAL HANGER(S) OR CONNECTION(S) REQUIRED TO SUPPORT CONCENTRATED LOAD(S) 123.1 lbs FACTORED DOWN AT 38-8-6, AND 123.1 lbs FACTORED DOWN AT 2-1-10 ON TOP CHORD. DESIGN FOR UNSPECIFIED CONNECTION(S) IS DELEGATED TO THE BUILDING DESIGNER.

JSI GRIP= 0.90 (U) (INPUT = 0.90)
JSI METAL= 0.88 (T) (INPUT = 1.00)

NOTE: Lateral brace(s) shown shall be 1x4 for Part 9 design as per OBC 9.23.13.11, and no less than 2x4 for Part 4 design.

LICENSED PROFESSIONAL ENGINEER
D. O'CONNOR
100009580
08/15/2018
PROVINCE OF ONTARIO

A18082072(2)

JOB NAME	TRUSS NAME	QUANTITY	PLY	JOB DESC.	DRWG NO.
300969	H42	1	1	TRUSS DESC.	JT# 45147

Alpa Roof Truss, Maple

Version 8.210 S Jun 13 2018 MiTek Industries, Inc. Wed Aug 15 14:11:51 2018 Page 1
ID:DdSMSEW8qE9HTV0gkasOLLzzSIP-RzMYvU7mNg0H2lHrju3Joeb1jtj4Txq6z9Hi9hynbKM

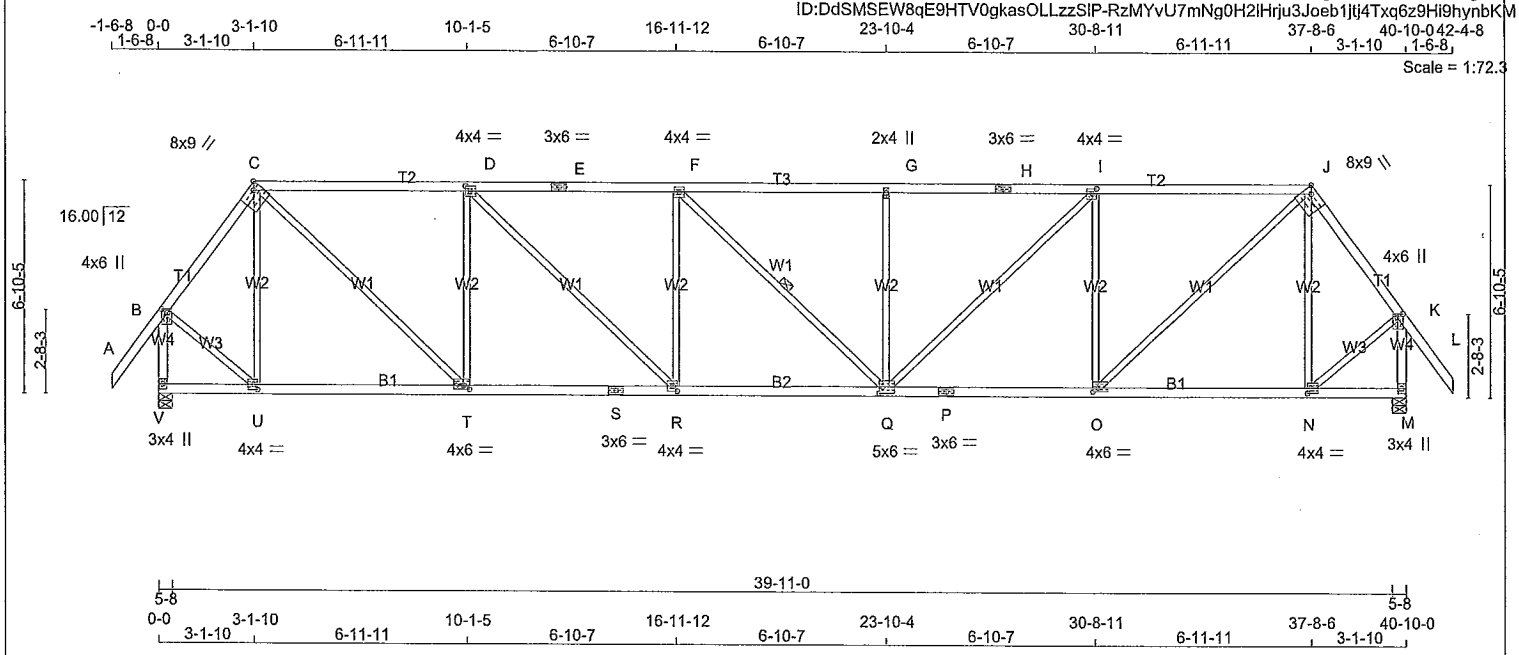

TOTAL WEIGHT = 184 lb

[M]

LUMBER
N. L. G. A. RULES

CHORDS	SIZE		LUMBER	DESCR.
A - C	2x4	DRY	No.2	SPF
C - E	2x4	DRY	No.2	SPF
E - H	2x4	DRY	No.2	SPF
H - J	2x4	DRY	No.2	SPF
J - L	2x4	DRY	No.2	SPF
V - B	2x4	DRY	No.2	SPF
M - K	2x4	DRY	No.2	SPF
V - S	2x4	DRY	No.2	SPF
S - P	2x4	DRY	No.2	SPF
P - M	2x4	DRY	No.2	SPF
ALL WEBS EXCEPT	2x3	DRY	No.2	SPF

DRY: SEASONED LUMBER.

PLATES (table is in inches)

JT	TYPE	PLATES	W	LEN	Y	X
B	TMVW+p	MT20	4.0	6.0	1.50	2.25
C	TTWW-h	MT20	8.0	9.0	Edge	2.75
D	TMWW-t	MT20	4.0	4.0	2.00	1.75
E	TS-t	MT20	3.0	6.0		
F	TMWW-t	MT20	4.0	4.0		
G	TMW+w	MT20	2.0	4.0		
H	TS-t	MT20	3.0	6.0		
I	TMWW-t	MT20	4.0	4.0	2.00	1.75
J	TTWW-h	MT20	8.0	9.0	Edge	2.75
K	TMVW+p	MT20	4.0	6.0	1.50	2.25
M	BMV1+p	MT20	3.0	4.0		
N	BMWW-t	MT20	4.0	4.0	2.00	1.50
O	BMWW-t	MT20	4.0	6.0	1.50	2.25
P	BS-t	MT20	3.0	6.0		
Q	BMWWW-t	MT20	5.0	6.0	2.50	1.50
R	BMWW-t	MT20	4.0	4.0	2.00	1.75
S	BS-t	MT20	3.0	6.0		
T	BMWW-t	MT20	4.0	6.0	1.50	2.25
U	BMWW-t	MT20	4.0	4.0	2.00	1.50
V	BMV1+p	MT20	3.0	4.0		

Edge - INDICATES REFERENCE CORNER OF PLATE TOUCHES EDGE OF CHORD.

NOTE: Lateral brace(s) shown shall be 1x4 for Part 9 design as per OBC 9.23.13.11, and no less than 2x4 for Part 4 design.

LICENSED PROFESSIONAL ENGINEER
D. O'CONNOR
100009580
08/15/2018
PROVINCE OF ONTARIO

DIMENSIONS, SUPPORTS AND LOADINGS SPECIFIED BY FABRICATOR TO BE VERIFIED BY BUILDING DESIGNER

BEARINGS

JT	FACTORED GROSS REACTION VERT	HORZ	MAXIMUM FACTORED GROSS REACTION DOWN	HORZ	UPLIFT	INPUT BRG IN-SX	REQRD BRG IN-SX
V	2099	0	2099	0	0	5-8	3-5
M	2099	0	2099	0	0	5-8	3-5

UNFACTORED REACTIONS

JT	1ST LCASE COMBINED	MAX./MIN. COMPONENT REACTIONS SNOW	LIVE	PERM.LIVE	WIND	DEAD	SOIL
V	1494	927 / 0	0 / 0	0 / 0	0 / 0	567 / 0	0 / 0
M	1494	927 / 0	0 / 0	0 / 0	0 / 0	567 / 0	0 / 0

BEARING MATERIAL TO BE SPF NO.2 OR BETTER AT JOINT(S) V, M

BRACING
TOP CHORD TO BE SHEATHED OR MAX. PURLIN SPACING = 3.17 FT.
MAX. UNBRACED BOTTOM CHORD LENGTH = 10.00 FT OR RIGID CEILING DIRECTLY APPLIED.

ALL PITCH BREAKS AND PERIMETER CORNER JOINTS MUST BE LATERALLY RESTRAINED.

1 LATERAL BRACE(S) AT 1/ 2 LENGTH OF F-Q.

END VERTICAL(S) MUST BE SHEATHED OR HAVE BRACES AS INDICATED IN THE MAX. UNBRACED LENGTH COLUMN OF THE TABLE BELOW

LOADING
TOTAL LOAD CASES: (4)

CHORDS MEMB. FR-TO	MAX. FACTORED FORCE (LBS)	FACTORED VERT. LOAD LC1 (PLF) FROM	TO	MAX CSI (LC)	MAX. UNBRAC LENGTH	WEBS MEMB. FR-TO	MAX. FACTORED FORCE (LBS)	MAX CSI (LC)
A- B	0 / 52	-78.0	-78.0	0.15 (1)	10.00	U- C	-520 / 0	0.41 (1)
B- C	-1499 / 0	-78.0	-78.0	0.17 (1)	5.19	C- T	0 / 2005	0.45 (1)
C- D	-2349 / 0	-78.0	-78.0	0.81 (1)	3.65	T- D	-1241 / 0	0.99 (1)
D- E	-3027 / 0	-78.0	-78.0	0.95 (1)	3.17	D- R	0 / 937	0.21 (1)
E- F	-3027 / 0	-78.0	-78.0	0.95 (1)	3.17	R- F	-520 / 0	0.41 (1)
F- G	-3026 / 0	-78.0	-78.0	0.76 (1)	3.45	F- Q	-1 / 0	0.00 (1)
G- H	-3026 / 0	-78.0	-78.0	0.95 (1)	3.17	Q- G	-520 / 0	0.41 (1)
H- I	-3026 / 0	-78.0	-78.0	0.95 (1)	3.17	Q- I	0 / 935	0.21 (1)
I- J	-2350 / 0	-78.0	-78.0	0.81 (1)	3.65	O- I	-1240 / 0	0.99 (1)
J- K	-1499 / 0	-78.0	-78.0	0.17 (1)	5.19	O- J	0 / 2006	0.45 (1)
K- L	0 / 52	-78.0	-78.0	0.15 (1)	10.00	N- J	-520 / 0	0.41 (1)
V- B	-2088 / 0	0.0	0.0	0.30 (1)	5.86	B- U	0 / 1094	0.25 (1)
M- K	-2088 / 0	0.0	0.0	0.30 (1)	5.86	N- K	0 / 1094	0.25 (1)
V- U	0 / 0	-18.5	-18.5	0.14 (4)	10.00			
U- T	0 / 885	-18.5	-18.5	0.26 (4)	10.00			
T- S	0 / 2350	-18.5	-18.5	0.47 (1)	10.00			
S- R	0 / 2350	-18.5	-18.5	0.47 (1)	10.00			
R- Q	0 / 3027	-18.5	-18.5	0.57 (1)	10.00			
Q- P	0 / 2350	-18.5	-18.5	0.47 (1)	10.00			
P- O	0 / 2350	-18.5	-18.5	0.47 (1)	10.00			
O- N	0 / 885	-18.5	-18.5	0.26 (4)	10.00			
N- M	0 / 0	-18.5	-18.5	0.14 (4)	10.00			

DESIGN CRITERIA

SPECIFIED LOADS:

TOP CH.	LL	=	21.0	PSF
	DL	=	6.0	PSF
BOT CH.	LL	=	0.0	PSF
	DL	=	7.4	PSF
TOTAL LOAD		=	34.4	PSF

SPACING = 24.0 IN. C/C

LOADING IN FLAT SECTION BASED ON A SLOPE OF 2.00/12 MINIMUM

THIS TRUSS IS DESIGNED FOR RESIDENTIAL OR SMALL BUILDING REQUIREMENTS OF PART 9, NBCC 2010, NBCC 2015

THIS DESIGN COMPLIES WITH:
- PART 9 OF OBC 2012, OBC 2018
- CSA 086-09, CSA 086-14
- TPIC 2011, TPIC 2014

(55 % OF 23.0 P.S.F. G.S.L. PLUS 8.4 P.S.F. RAIN LOAD) EQUALS 21.0 P.S.F. SPECIFIED ROOF LIVE LOAD

ALLOWABLE DEFL.(LL)= L/360 (1.36")
CALCULATED VERT. DEFL.(LL) = L/ 999 (0.19")
ALLOWABLE DEFL.(TL)= L/360 (1.36")
CALCULATED VERT. DEFL.(TL) = L/ 999 (0.38")

CSI: TC=0.95/1.00 (G-I:1) , BC=0.57/1.00 (Q-R:1) , WB=0.99/1.00 (D-T:1) , SSI=0.26/1.00 (I-J:1)

DOL LUMBER=1.00 NAIL=1.00 LS BEND=1.10 COMP=1.10 SHEAR=1.10 TENS= 1.10

COMPANION LIVE LOAD FACTOR = 1.00

TRUSS PLATE MANUFACTURER IS NOT RESPONSIBLE FOR QUALITY CONTROL IN THE TRUSS MANUFACTURING PLANT .

NAIL VALUES

PLATE	GRIP(DRY) (PSI) MAX	MIN	SHEAR (PLI) MAX	MIN	SECTION (PLI) MAX	MIN
MT20	618	354	1667	788	1987	1656

PLATE PLACEMENT TOL. = 0.250 inches

PLATE ROTATION TOL. = 5.0 Deg.

JSI GRIP= 0.90 (B) (INPUT = 0.90)
JSI METAL= 0.74 (P) (INPUT = 1.00)

A18082073

CONTINUED ON PAGE 2

JOB NAME	TRUSS NAME	QUANTITY	PLY	JOB DESC.	DRWG NO.
300969	H43	1	1	TRUSS DESC.	JT# 45147

Alpa Roof Truss, Maple

Version 8.210 S Jun 13 2018 MiTek Industries, Inc. Wed Aug 15 14:11:54 2018 Page 1

ID:DdSMSEW8qE9HTV0gkasOLLzzSIP-rY1gYVAfgbPsvC0QO1d0PHDY24lygM5Yf7WMl?ynbKJ

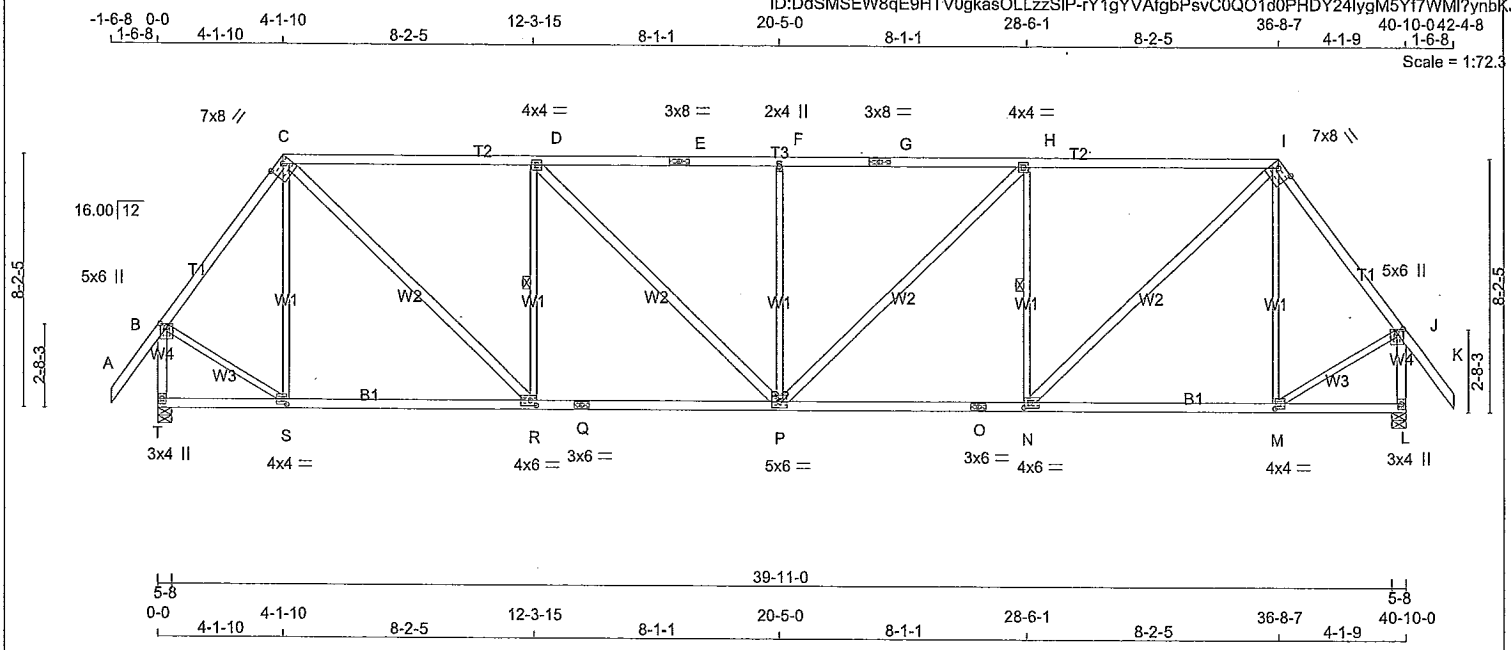

TOTAL WEIGHT = 200 lb

[M]

LUMBER

N. L. G. A. RULES

CHORDS	SIZE		LUMBER	DESCR.
A - C	2x4	DRY	No.2	SPF
C - E	2x4	DRY	1650F 1.5E	SPF
E - G	2x4	DRY	1650F 1.5E	SPF
G - I	2x4	DRY	1650F 1.5E	SPF
I - K	2x4	DRY	No.2	SPF
T - B	2x4	DRY	No.2	SPF
L - J	2x4	DRY	No.2	SPF
T - Q	2x4	DRY	No.2	SPF
Q - O	2x4	DRY	No.2	SPF
O - L	2x4	DRY	No.2	SPF
ALL WEBS EXCEPT	2x3	DRY	No.2	SPF
C - R	2x4	DRY	No.2	SPF
D - P	2x4	DRY	No.2	SPF
P - H	2x4	DRY	No.2	SPF
N - I	2x4	DRY	No.2	SPF

DRY: SEASONED LUMBER.

PLATES (table is in inches)

JT	TYPE	PLATES	W	LEN	Y	X
B	TMVW+p	MT20	5.0	6.0	1.50	2.50
C	TTWW-h	MT20	7.0	8.0	2.00	5.25
D	TMWW-t	MT20	4.0	4.0		
E	TS-t	MT20	3.0	8.0		
F	TMW+w	MT20	2.0	4.0		
G	TS-t	MT20	3.0	8.0		
H	TMWW-t	MT20	4.0	4.0		
I	TTWW-h	MT20	7.0	8.0	2.00	5.25
J	TMVW+p	MT20	5.0	6.0	1.50	2.50
L	BMV1+p	MT20	3.0	4.0		
M	BMWW-t	MT20	4.0	4.0	2.00	1.50
N	BMWW-t	MT20	4.0	6.0	2.00	2.25
O	BS-t	MT20	3.0	6.0		
P	BMWWW-t	MT20	5.0	6.0		
Q	BS-t	MT20	3.0	6.0		
R	BMWW-t	MT20	4.0	6.0	2.00	2.25
S	BMWW-t	MT20	4.0	4.0	2.00	1.50
T	BMV1+p	MT20	3.0	4.0		

NOTE: Lateral brace(s) shown shall be 1x4 for Part 9 design as per OBC 9.23.13.11, and no less than 2x4 for Part 4 design.

LICENSED PROFESSIONAL ENGINEER
D. O'CONNOR
100009580
08/15/2018
PROVINCE OF ONTARIO

DIMENSIONS, SUPPORTS AND LOADINGS SPECIFIED BY FABRICATOR TO BE VERIFIED BY BUILDING DESIGNER

BEARINGS

JT	FACTORED GROSS REACTION VERT	HORZ	MAXIMUM FACTORED GROSS REACTION DOWN	HORZ	UPLIFT	INPUT BRG IN-SX	REQRD BRG IN-SX
T	2099	0	2099	0	0	5-8	3-5
L	2099	0	2099	0	0	5-8	3-5

UNFACTORED REACTIONS

JT	1ST LCASE COMBINED	MAX./MIN. COMPONENT REACTIONS SNOW	LIVE	PERM.LIVE	WIND	DEAD	SOIL
T	1494	927 / 0	0 / 0	0 / 0	0 / 0	567 / 0	0 / 0
L	1494	927 / 0	0 / 0	0 / 0	0 / 0	567 / 0	0 / 0

BEARING MATERIAL TO BE SPF NO.2 OR BETTER AT JOINT(S) T, L

BRACING

TOP CHORD TO BE SHEATHED OR MAX. PURLIN SPACING = 3.80 FT.
MAX. UNBRACED BOTTOM CHORD LENGTH = 10.00 FT OR RIGID CEILING DIRECTLY APPLIED.

ALL PITCH BREAKS AND PERIMETER CORNER JOINTS MUST BE LATERALLY RESTRAINED.

1 LATERAL BRACE(S) AT 1/ 2 LENGTH OF D-R, H-N.

END VERTICAL(S) MUST BE SHEATHED OR HAVE BRACES AS INDICATED IN THE MAX. UNBRACED LENGTH COLUMN OF THE TABLE BELOW

LOADING

TOTAL LOAD CASES: (4)

CHORDS MEMB. FR-TO	MAX. FACTORED FORCE (LBS)	FACTORED VERT. LOAD LC1 (PLF) FROM	TO	MAX CSI (LC)	MAX. UNBRAC LENGTH	WEBS MEMB. FR-TO	MAX. FACTORED FORCE (LBS)	MAX CSI (LC)
A- B	0 / 52	-78.0	-78.0	0.15 (1)	10.00	S- C	-383 / 0	0.50 (1)
B- C	-1589 / 0	-78.0	-78.0	0.32 (1)	4.94	C- R	0 / 1779	0.29 (1)
C- D	-2227 / 0	-78.0	-78.0	0.88 (1)	4.08	R- D	-1077 / 0	0.46 (1)
D- E	-2600 / 0	-78.0	-78.0	0.94 (1)	3.80	D- P	0 / 521	0.08 (1)
E- F	-2600 / 0	-78.0	-78.0	0.94 (1)	3.80	P- F	-582 / 0	0.76 (1)
F- G	-2600 / 0	-78.0	-78.0	0.94 (1)	3.80	P- H	0 / 521	0.08 (1)
G- H	-2600 / 0	-78.0	-78.0	0.94 (1)	3.80	N- H	-1077 / 0	0.46 (1)
H- I	-2227 / 0	-78.0	-78.0	0.88 (1)	4.08	N- I	0 / 1779	0.29 (1)
I- J	-1589 / 0	-78.0	-78.0	0.32 (1)	4.94	M- I	-383 / 0	0.50 (1)
J- K	0 / 52	-78.0	-78.0	0.15 (1)	10.00	B- S	0 / 1078	0.24 (1)
T- B	-2078 / 0	0.0	0.0	0.30 (1)	5.87	M- J	0 / 1078	0.24 (1)
L- J	-2078 / 0	0.0	0.0	0.30 (1)	5.87			
T- S	0 / 0	-18.5	-18.5	0.18 (4)	10.00			
S- R	0 / 943	-18.5	-18.5	0.34 (4)	10.00			
R- Q	0 / 2227	-18.5	-18.5	0.50 (1)	10.00			
Q- P	0 / 2227	-18.5	-18.5	0.50 (1)	10.00			
P- O	0 / 2227	-18.5	-18.5	0.50 (1)	10.00			
O- N	0 / 2227	-18.5	-18.5	0.50 (1)	10.00			
N- M	0 / 943	-18.5	-18.5	0.34 (4)	10.00			
M- L	0 / 0	-18.5	-18.5	0.18 (4)	10.00			

DESIGN CRITERIA

SPECIFIED LOADS:

TOP CH.	LL	=	21.0	PSF
	DL	=	6.0	PSF
BOT CH.	LL	=	0.0	PSF
	DL	=	7.4	PSF
TOTAL LOAD		=	34.4	PSF

SPACING = 24.0 IN. C/C

LOADING IN FLAT SECTION BASED ON A SLOPE OF 2.00/12 MINIMUM

THIS TRUSS IS DESIGNED FOR RESIDENTIAL OR SMALL BUILDING REQUIREMENTS OF PART 9, NBCC 2010, NBCC 2015

THIS DESIGN COMPLIES WITH:
- PART 9 OF OBC 2012, OBC 2018
- CSA 086-09, CSA 086-14
- TPIC 2011, TPIC 2014

(55 % OF 23.0 P.S.F. G.S.L. PLUS 8.4 P.S.F. RAIN LOAD) EQUALS 21.0 P.S.F. SPECIFIED ROOF LIVE LOAD

ALLOWABLE DEFL.(LL)= L/360 (1.36")
CALCULATED VERT. DEFL.(LL) = L/ 999 (0.13")
ALLOWABLE DEFL.(TL)= L/360 (1.36")
CALCULATED VERT. DEFL.(TL) = L/ 999 (0.28")

CSI: TC=0.94/1.00 (F-H:1) , BC=0.50/1.00 (P-R:1) , WB=0.76/1.00 (F-P:1) , SSI=0.30/1.00 (H-I:1)

DOL LUMBER=1.00 NAIL=1.00 LS BEND=1.10 COMP=1.10 SHEAR=1.10 TENS= 1.10

COMPANION LIVE LOAD FACTOR = 1.00

TRUSS PLATE MANUFACTURER IS NOT RESPONSIBLE FOR QUALITY CONTROL IN THE TRUSS MANUFACTURING PLANT .

NAIL VALUES

PLATE	GRIP(DRY) (PSI) MAX	MIN	SHEAR (PLI) MAX	MIN	SECTION (PLI) MAX	MIN
MT20	618	354	1667	788	1987	1656

PLATE PLACEMENT TOL. = 0.250 inches

PLATE ROTATION TOL. = 5.0 Deg.

JSI GRIP= 0.90 (N) (INPUT = 0.90)
JSI METAL= 0.64 (O) (INPUT = 1.00)

A18082074

CONTINUED ON PAGE 2

JOB NAME	TRUSS NAME	QUANTITY	PLY	JOB DESC.	DRWG NO.
300969	H44P	2	1	TRUSS DESC.	JT# 45147

Alpa Roof Truss, Maple

Version 8.210 S Jun 13 2018 MiTek Industries, Inc. Wed Aug 15 14:11:56 2018 Page 1
ID:DdSMSEW8qE9HTV0gkasOLLzzSIP-ox9RyBBvBCfZ8WAoVSfUViJ?PuWS8L3r6R?TquynbKH

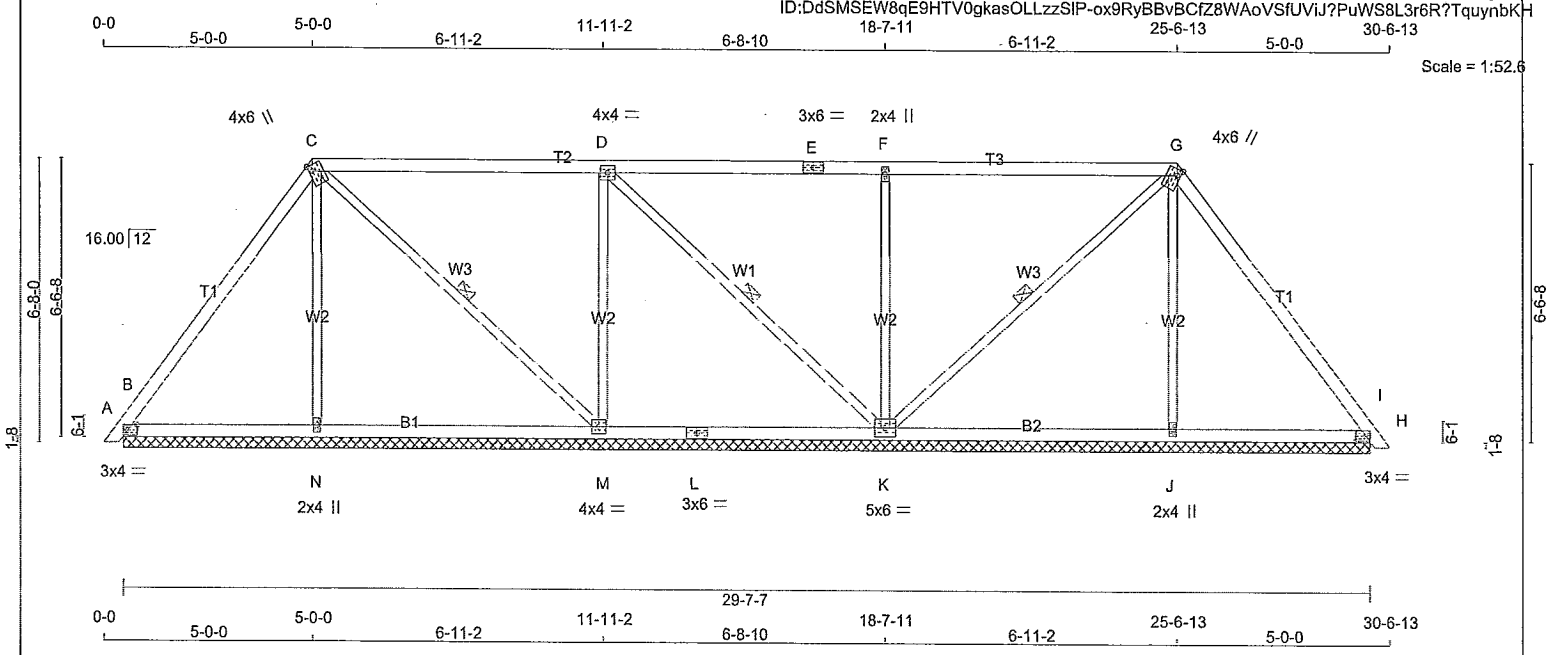

TOTAL WEIGHT = 2 X 117 = 235 lb

[M]

LUMBER
N. L. G. A. RULES

CHORDS	SIZE		LUMBER	DESCR.
A - C	2x4	DRY	No.2	SPF
C - E	2x4	DRY	No.2	SPF
E - G	2x4	DRY	No.2	SPF
G - I	2x4	DRY	No.2	SPF
B - L	2x4	DRY	No.2	SPF
L - H	2x4	DRY	No.2	SPF
ALL WEBS	2x3	DRY	No.2	SPF

DRY: SEASONED LUMBER.

PLATES (table is in inches)

JT	TYPE	PLATES	W	LEN	Y	X
B	TMB1-I	MT20	3.0	4.0	1.50	2.75
C	TTWW+m	MT20	4.0	6.0	1.75	1.00
D	TMWW-t	MT20	4.0	4.0		
E	TS-t	MT20	3.0	6.0		
F	TMW+w	MT20	2.0	4.0		
G	TTWW+m	MT20	4.0	6.0	1.75	1.00
H	TMB1-I	MT20	3.0	4.0	1.50	2.75
J	BMW1+w	MT20	2.0	4.0		
K	BMWWW1-t	MT20	5.0	6.0		
L	BS-t	MT20	3.0	6.0		
M	BMWW1-t	MT20	4.0	4.0		
N	BMW1+w	MT20	2.0	4.0		

NOTE: Lateral brace(s) shown shall be 1x4 for Part 9 design as per OBC 9.23.13.11, and no less than 2x4 for Part 4 design.

LICENSED PROFESSIONAL ENGINEER
D. O'CONNOR
100009580
08/15/2018
PROVINCE OF ONTARIO

DIMENSIONS, SUPPORTS AND LOADINGS SPECIFIED BY FABRICATOR TO BE VERIFIED BY BUILDING DESIGNER

BEARINGS

JT	FACTORED GROSS REACTION VERT	HORZ	MAXIMUM FACTORED GROSS REACTION DOWN	HORZ	UPLIFT	INPUT BRG IN-SX	REQRD BRG IN-SX
B	370	0	370	0	0	29-7-7 (15-11)	2-3
N	337	0	337	0	0	29-7-7 (15-11)	2-3
J	340	0	340	0	0	29-7-7 (15-11)	2-3
H	311	0	311	0	0	29-7-7 (15-11)	2-3
M	651	0	651	0	0	29-7-7 (15-11)	2-3
K	902	0	902	0	0	29-7-7 (15-11)	2-3

VALUE IN PARENTHESIS INDICATES EFFECTIVE BEARING LENGTH

UNFACTORED REACTIONS

JT	1ST LCASE COMBINED	MAX./MIN. COMPONENT REACTIONS SNOW	LIVE	PERM.LIVE	WIND	DEAD	SOIL
B	260	184 / 0	0 / 0	0 / 0	0 / 0	76 / 0	0 / 0
N	246	118 / 0	0 / 0	0 / 0	0 / 0	128 / 0	0 / 0
J	248	120 / 0	0 / 0	0 / 0	0 / 0	129 / 0	0 / 0
H	219	152 / 0	0 / 0	0 / 0	0 / 0	67 / 0	0 / 0
M	464	282 / 0	0 / 0	0 / 0	0 / 0	182 / 0	0 / 0
K	638	417 / 0	0 / 0	0 / 0	0 / 0	221 / 0	0 / 0

BEARING MATERIAL TO BE SPF NO.2 OR BETTER AT JOINT(S) B, N, J, H, M, K

BRACING
TOP CHORD TO BE SHEATHED OR MAX. PURLIN SPACING = 6.25 FT.
MAX. UNBRACED BOTTOM CHORD LENGTH = 10.00 FT OR RIGID CEILING DIRECTLY APPLIED.

ALL PITCH BREAKS AND PERIMETER CORNER JOINTS MUST BE LATERALLY RESTRAINED.

1 LATERAL BRACE(S) AT 1/ 2 LENGTH OF C-M, D-K, G-K.

LOADING
TOTAL LOAD CASES: (4)

CHORDS

MEMB. FR-TO	MAX. FACTORED FORCE (LBS)	FACTORED VERT. LOAD LC1 (PLF) FROM	TO	MAX CSI (LC)	MAX. UNBRAC LENGTH
A- B	0 / 10	-78.0	-78.0	0.01 (1)	10.00
B- C	-170 / 0	-78.0	-78.0	0.28 (1)	6.25
C- D	-54 / 0	-78.0	-78.0	0.50 (1)	6.25
D- E	0 / 51	-78.0	-78.0	0.50 (1)	10.00
E- F	0 / 51	-78.0	-78.0	0.50 (1)	10.00
F- G	0 / 51	-78.0	-78.0	0.50 (1)	10.00
G- H	-97 / 0	-78.0	-78.0	0.27 (1)	6.25
H- I	0 / 10	-78.0	-78.0	0.01 (1)	10.00
B- N	0 / 100	-18.5	-18.5	0.15 (4)	10.00
N- M	0 / 96	-18.5	-18.5	0.17 (4)	10.00
M- L	0 / 54	-18.5	-18.5	0.17 (4)	10.00
L- K	0 / 54	-18.5	-18.5	0.17 (4)	10.00
K- J	0 / 53	-18.5	-18.5	0.17 (4)	10.00
J- H	0 / 57	-18.5	-18.5	0.15 (4)	10.00

WEBS

MEMB. FR-TO	MAX. FACTORED FORCE (LBS)	MAX CSI (LC)
N- C	-219 / 0	0.15 (1)
J- G	-222 / 0	0.16 (1)
C- M	-56 / 0	0.03 (1)
M- D	-486 / 0	0.34 (1)
D- K	-143 / 0	0.08 (1)
K- F	-585 / 0	0.41 (1)
K- G	-140 / 0	0.08 (1)

DESIGN CRITERIA

SPECIFIED LOADS:

TOP CH.	LL =	21.0	PSF
	DL =	6.0	PSF
BOT CH.	LL =	0.0	PSF
	DL =	7.4	PSF
TOTAL LOAD	=	34.4	PSF

SPACING = 24.0 IN. C/C

LOADING IN FLAT SECTION BASED ON A SLOPE OF 2.00/12 MINIMUM

THIS TRUSS IS DESIGNED FOR RESIDENTIAL OR SMALL BUILDING REQUIREMENTS OF PART 9, NBCC 2010, NBCC 2015

THIS DESIGN COMPLIES WITH:
- PART 9 OF OBC 2012, OBC 2018
- CSA 086-09, CSA 086-14
- TPIC 2011, TPIC 2014

(55 % OF 23.0 P.S.F. G.S.L. PLUS 8.4 P.S.F. RAIN LOAD) EQUALS 21.0 P.S.F. SPECIFIED ROOF LIVE LOAD

CSI: TC=0.50/1.00 (D-F:1) , BC=0.17/1.00 (M-N:4) , WB=0.41/1.00 (F-K:1) , SSI=0.25/1.00 (C-D:1)

DOL:LUMBER=1.00 NAIL=1.00 LS BEND=1.10 COMP=1.10 SHEAR=1.10 TENS= 1.10

COMPANION LIVE LOAD FACTOR = 1.00

TRUSS PLATE MANUFACTURER IS NOT RESPONSIBLE FOR QUALITY CONTROL IN THE TRUSS MANUFACTURING PLANT .

NAIL VALUES

PLATE	GRIP(DRY) (PSI) MAX	MIN	SHEAR (PLI) MAX	MIN	SECTION (PLI) MAX	MIN
MT20	618	354	1667	788	1987	1656

PLATE PLACEMENT TOL. = 0.250 inches

PLATE ROTATION TOL. = 5.0 Deg.

JSI GRIP= 0.64 (G) (INPUT = 0.90)
JSI METAL= 0.18 (B) (INPUT = 1.00)

A18082075

JOB NAME	TRUSS NAME	QUANTITY	PLY	JOB DESC.	DRWG NO.
300969	H45A	1	3	TRUSS DESC.	JT# 45147

Alpa Roof Truss, Maple

Version 8.210 S Jun 13 2018 MiTek Industries, Inc. Wed Aug 15 14:11:58 2018 Page 1
ID:DdSMSEW8qE9HTV0gkasOLLzzSIP-kJHBNtD9jpvHNqJBdshya7OGOi2Zc6_8akUaunynbKF

Scale = 1:75.9

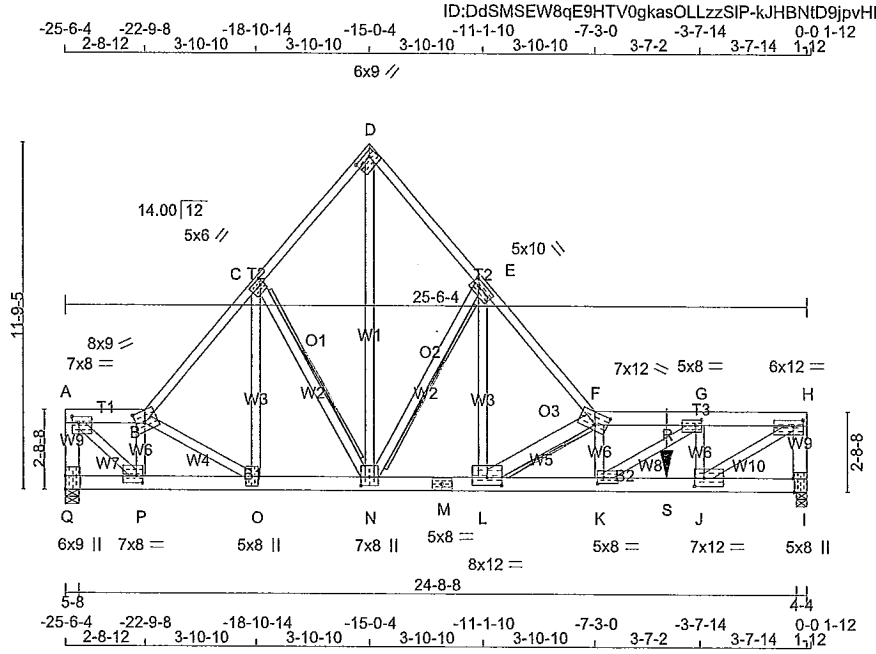

TOTAL WEIGHT = 3 X 172 = 516 lb

[M]

LUMBER
N. L. G. A. RULES

CHORDS	SIZE		LUMBER	DESCR.
Q - A	2x6	DRY	No.2	SPF
A - B	2x6	DRY	No.2	SPF
B - D	2x4	DRY	No.2	SPF
D - F	2x4	DRY	No.2	SPF
F - H	2x6	DRY	No.2	SPF
I - H	2x6	DRY	No.2	SPF
Q - M	2x6	DRY	2100F 1.8E	SPF
M - I	2x6	DRY	2100F 1.8E	SPF
ALL WEBS EXCEPT	2x4	DRY	No.2	SPF
L - F	2x6	DRY	No.2	SPF
J - H	2x4	DRY	1650F 1.5E	SPF

DRY: SEASONED LUMBER.

DESIGN CONSISTS OF 3 TRUSSES BUILT SEPARATELY THEN FASTENED TOGETHER AS FOLLOWS:

CHORDS	#ROWS	SURFACE SPACING (IN)	LOAD(PLF)
TOP CHORDS : (0.122"X3") SPIRAL NAILS			
Q- A	2	12	TOP
A- B	2	12	TOP
F- H	2	12	SIDE(6.5)
H- I	2	12	TOP
B- D	1	12	TOP
D- F	1	12	TOP
BOTTOM CHORDS : (0.122"X3") SPIRAL NAILS			
Q- M	2	4	SIDE(610.3)
M- I	2	4	SIDE(610.3)
WEBS : (0.122"X3") SPIRAL NAILS			
2x4	1	6	
2x6	2	6	

STAGGER NAILS BY HALF THE SURFACE SPACING IN ADJACENT PLIES.

GIRDER NAILING ASSUMES NAILED HANGERS ARE FASTENED WITH MIN. 3-0 INCH NAILS.

TOP - COMPONENTS ARE LOADED FROM THE TOP AND MUST BE PLACED ON TOP EDGE OF ALL PLIES FOR THE LOAD TO BE TRANSFERRED TO EACH PLY.

NOTE: Lateral brace(s) shown shall be 1x4 for Part 9 design as per OBC 9.23.13.11, and no less than 2x4 for Part 4 design.

LICENSED PROFESSIONAL ENGINEER
D. O'CONNOR
100009580
08/15/2018
PROVINCE OF ONTARIO

DIMENSIONS, SUPPORTS AND LOADINGS SPECIFIED BY FABRICATOR TO BE VERIFIED BY BUILDING DESIGNER

BEARINGS

JT	FACTORED GROSS REACTION VERT	HORZ	MAXIMUM FACTORED GROSS REACTION DOWN	HORZ	UPLIFT	INPUT BRG IN-SX	REQRD BRG IN-SX
Q	13046	0	13046	0	0	5-8	5-8
I	13515	0	13515	0	0	4-4	4-4

UNFACTORED REACTIONS

JT	1ST LCASE COMBINED	SNOW	LIVE	PERM.LIVE	WIND	DEAD	SOIL
		MAX./MIN. COMPONENT REACTIONS					
Q	9301	5677 / 0	0 / 0	0 / 0	0 / 0	3624 / 0	0 / 0
I	9636	5881 / 0	0 / 0	0 / 0	0 / 0	3755 / 0	0 / 0

BEARING MATERIAL TO BE SPF NO.2 OR BETTER AT JOINT(S) Q, I
BEARING SIZE FACTOR = 1.15 AT JNT(S) Q, I (BASED ON SUPPORT DEPTH = 1-8)

BRACING
TOP CHORD TO BE SHEATHED OR MAX. PURLIN SPACING = 2.33 FT.
MAX. UNBRACED BOTTOM CHORD LENGTH = 10.00 FT OR RIGID CEILING DIRECTLY APPLIED.

ALL PITCH BREAKS AND PERIMETER CORNER JOINTS MUST BE LATERALLY RESTRAINED.

2x6 DRY SPF No.2 T-BRACE AT C-N, E-N, F-L

FASTEN T AND I-BRACES TO NARROW EDGE OF WEB WITH ONE ROW PER PLY OF 3" COMMON WIRE NAILS @ 6" O.C. WITH 3" MINIMUM END DISTANCE. BRACE MUST COVER 90% OF WEB LENGTH.

END VERTICAL(S) MUST BE SHEATHED OR HAVE BRACES AS INDICATED IN THE MAX. UNBRACED LENGTH COLUMN OF THE TABLE BELOW

LOADING
TOTAL LOAD CASES: (4)

CHORDS

MEMB. FR-TO	MAX. FACTORED FORCE (LBS)	FACTORED VERT. LOAD (PLF) FROM	TO	LC1 MAX CSI (LC)	MAX. UNBRAC LENGTH
Q- A	-11869 / 0	0.0	0.0	0.30 (1)	5.40
A- B	-13481 / 0	-78.0	-78.0	0.10 (1)	4.06
B- C	-14688 / 0	-78.0	-78.0	0.51 (1)	2.98
C- D	-11225 / 0	-78.0	-78.0	0.32 (1)	3.50
D- E	-11224 / 0	-78.0	-78.0	0.33 (1)	3.50
E- F	-18856 / 0	-78.0	-78.0	0.79 (1)	2.45
F- R	-30353 / 0	-78.0	-78.0	0.55 (1)	2.33
R- G	-30353 / 0	-87.7	-87.7	0.55 (1)	2.33
G- H	-19114 / 0	-87.7	-87.7	0.29 (1)	3.30
I- H	-12067 / 0	0.0	0.0	0.31 (1)	5.36
Q- P	0 / 0	-934.0	-934.0	0.09 (1)	10.00
P- O	0 / 14049	-934.0	-934.0	0.41 (1)	10.00
O- N	0 / 9559	-934.0	-934.0	0.33 (1)	10.00
N- M	0 / 12269	-934.0	-934.0	0.37 (1)	10.00
M- L	0 / 12269	-934.0	-934.0	0.37 (1)	10.00
L- K	0 / 30617	-934.0	-934.0	0.71 (1)	10.00
K- S	0 / 19114	-934.0	-934.0	0.47 (1)	10.00
S- J	0 / 19114	-936.3	-936.3	0.47 (1)	10.00
J- I	0 / 0	-936.3	-936.3	0.14 (1)	10.00

WEBS

MEMB. FR-TO	MAX. FACTORED FORCE (LBS)	MAX CSI (LC)
A- P	0 / 17883	0.96 (1)
P- B	-8811 / 0	0.33 (1)
B- O	-5192 / 0	0.41 (1)
O- C	0 / 6268	0.34 (1)
C- N	-4543 / 0	0.35 (1)
N- D	0 / 16745	0.90 (1)
N- E	-10001 / 0	0.76 (1)
L- E	0 / 14172	0.76 (1)
L- F	-21212 / 0	0.59 (1)
K- F	-4091 / 0	0.15 (1)
K- G	0 / 13424	0.72 (1)
J- G	-7399 / 0	0.27 (1)
J- H	0 / 22448	0.87 (1)

FACTORED CONCENTRATED LOADS (LBS)

JT	LOC.	LC1	MAX-	MAX+	FACE	DIR.	TYPE
S	20-8-9	-677	-677	---	FRONT	VERT	TOTAL

DESIGN CRITERIA

*** SPECIAL LOADS ANALYSIS ***
GEOMETRY AND/OR BASIC LOADS CHANGED BY USER.
LOADS WERE DERIVED FROM USER INPUT
NO FURTHER MODIFICATIONS WERE MADE

SPECIFIED LOADS:

TOP CH.	LL	=	21.0	PSF
	DL	=	6.0	PSF
BOT CH.	LL	=	0.0	PSF
	DL	=	7.4	PSF
TOTAL LOAD		=	34.4	PSF

SPACING = 24.0 IN. C/C

LOADING IN ALL FLAT SECTIONS BASED ON A SLOPE OF 2.00/12 MINIMUM

GIRDER TYPE: CStdGirder
START DISTANCE = 0-0
START SPAN CARRIED = 40-5-0
END DISTANCE = 25-8-0
END SPAN CARRIED = 40-5-0
END WALL WIDTH = 5-8
APPLIED TO BACK SIDE OF BOTTOM CHORD.
- ADDT'L LOADS BASED ON 55 % OF GSL.

GIRDER TYPE: CPrimeHip
SIDE SETBACK = 0-0
END SETBACK = 2-6-0
END WALL WIDTH = 0-0
CORNER FRAMING TYPE: CONVENTIONAL
END JACK TYPE: CONVENTIONAL
APPLIED TO FRONT SIDE
- ADDT'L LOADS BASED ON 55 % OF GSL.
LOADS APPLIED TO FIRST 4-9-12 OF SPAN MEASURED FROM THE RIGHT.

*** NON STANDARD GIRDER ***
ADDT'L USER-DEFINED LOADS APPLIED TO ALL LOAD CASES.

THIS TRUSS IS DESIGNED FOR RESIDENTIAL OR SMALL BUILDING REQUIREMENTS OF PART 9, NBCC 2010, NBCC 2015

THIS DESIGN COMPLIES WITH:
- PART 9 OF OBC 2012, OBC 2018
- CSA 086-09, CSA 086-14
- TPIC 2011, TPIC 2014

(55 % OF 23.0 P.S.F. G.S.L. PLUS 8.4 P.S.F. RAIN LOAD) EQUALS 21.0 P.S.F. SPECIFIED ROOF LIVE LOAD

ALLOWABLE DEFL.(LL)= L/360 (0.85")
CALCULATED VERT. DEFL.(LL) = L/ 910 (0.34")
ALLOWABLE DEFL.(TL)= L/360 (0.85")
CALCULATED VERT. DEFL.(TL) = L/ 461 (0.66")

CSI: TC=0.79/1.00 (E-F:1) , BC=0.71/1.00 (K-L:1) , WB=0.96/1.00 (A-P:1) , SSI=0.48/1.00 (J-K:1)

DOL LUMBER=1.00 NAIL=1.00 LS BEND=1.10 COMP=1.10 SHEAR=1.10 TENS= 1.10

COMPANION LIVE LOAD FACTOR = 1.00

A18082076

CONTINUED ON PAGE 2

JOB NAME	TRUSS NAME	QUANTITY	PLY	JOB DESC.	DRWG NO.
300969	H45A	1	3	TRUSS DESC.	

PLATES (table is in inches)

JT	TYPE	PLATES	W	LEN	Y	X
A	TMVW-t	MT20	7.0	8.0	2.50	2.75
B	TTWW-m	MT20	8.0	9.0	4.75	3.50
C	TMWW-t	MT20	5.0	6.0	2.25	1.50
D	TTW-h	MT20	6.0	9.0	2.00	6.25
E	TMWW-t	MT20	5.0	10.0	2.00	2.75
F	TTWW-m	MT20	7.0	12.0	4.75	4.75
G	TMWW-t	MT20	5.0	8.0	2.25	2.50
H	TMVW-t	MT20	6.0	12.0	2.25	4.00
I	BMV1+t	MT20	5.0	8.0	Edge	0.50
J	BMWW-t	MT20	7.0	12.0	3.25	4.00
K	BMWW-t	MT20	5.0	8.0	2.25	2.50
L	BMWW-t	MT20	8.0	12.0	3.25	6.00
M	BS-t	MT20	5.0	8.0		
N	BMWWW+t	MT20	7.0	8.0	3.50	3.50
O	BMWW+t	MT20	5.0	8.0		
P	BMWW-t	MT20	7.0	8.0	2.75	2.50
Q	BMV1+t	MT20	6.0	9.0	5.50	

Edge - INDICATES REFERENCE CORNER OF PLATE TOUCHES EDGE OF CHORD.

HANGERS NOTES

1) SPECIAL HANGER(S) OR CONNECTION(S) REQUIRED TO SUPPORT CONCENTRATED LOAD(S) 677.4 lbs FACTORED DOWN AT 20-8-9 ON BOTTOM CHORD. DESIGN FOR UNSPECIFIED CONNECTION(S) IS DELEGATED TO THE BUILDING DESIGNER.

NOTE: Lateral brace(s) shown shall be 1x4 for Part 9 design as per OBC 9.23.13.11, and no less than 2x4 for Part 4 design.

LICENSED PROFESSIONAL ENGINEER
D. O'CONNOR
100009580
08/15/2018
PROVINCE OF ONTARIO

TRUSS PLATE MANUFACTURER IS NOT RESPONSIBLE FOR QUALITY CONTROL IN THE TRUSS MANUFACTURING PLANT.

NAIL VALUES

PLATE	GRIP(DRY) (PSI) MAX	MIN	SHEAR (PLI) MAX	MIN	SECTION (PLI) MAX	MIN
MT20	618	354	1667	788	1987	1656

PLATE PLACEMENT TOL. = 0.250 inches

PLATE ROTATION TOL. = 5.0 Deg.

JSI GRIP= 0.90 (H) (INPUT = 0.90)
JSI METAL= 0.97 (M) (INPUT = 1.00)

A18082076(2)

JOB NAME	TRUSS NAME	QUANTITY	PLY	JOB DESC.	DRWG NO.
300969	H46T	1	1	TRUSS DESC.	JT# 45147

Alpa Roof Truss, Maple

Version 8.210 S Jun 13 2018 MiTek Industries, Inc. Wed Aug 15 14:12:00 2018 Page 1
ID:DdSMSEW8qE9HTV0gkasOLLzzSIP-giPxoZEQFR9?d7TZkHkQfYTlRVrB49_Q12zgzfynbKD

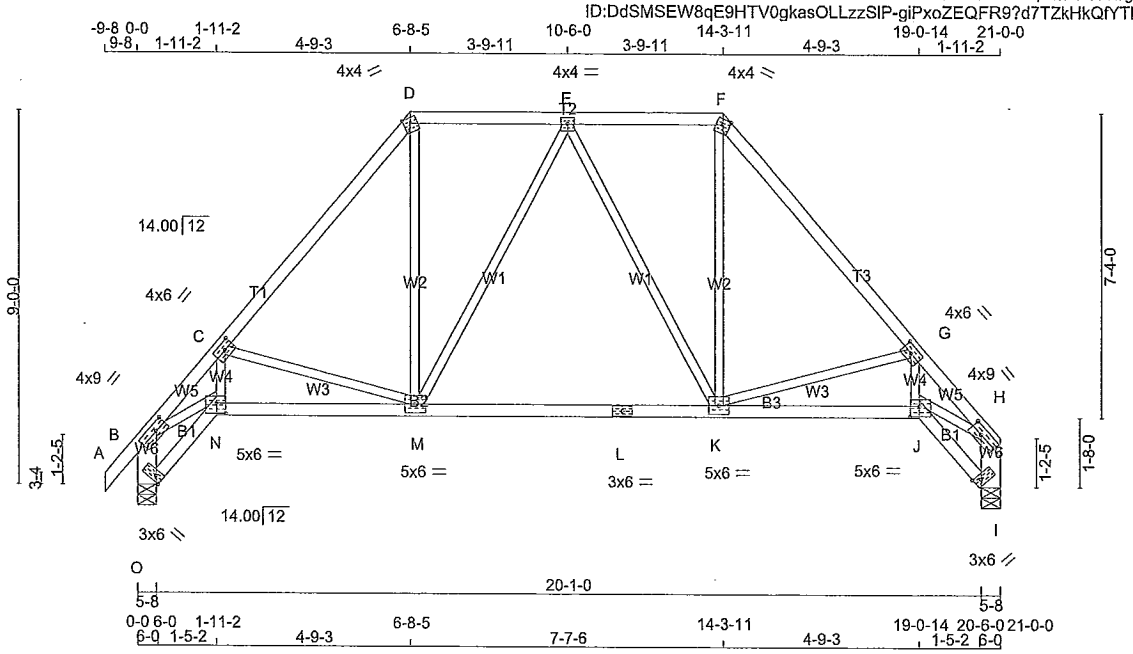

TOTAL WEIGHT = 100 lb

[M][F]

LUMBER
N. L. G. A. RULES

CHORDS	SIZE		LUMBER	DESCR.
A - D	2x4	DRY	No.2	SPF
D - F	2x4	DRY	No.2	SPF
F - H	2x4	DRY	No.2	SPF
O - B	2x6	DRY	No.2	SPF
I - H	2x6	DRY	No.2	SPF
O - N	2x4	DRY	No.2	SPF
N - L	2x4	DRY	No.2	SPF
L - J	2x4	DRY	No.2	SPF
J - I	2x4	DRY	No.2	SPF
ALL WEBS EXCEPT	2x3	DRY	No.2	SPF

DRY: SEASONED LUMBER.

PLATES (table is in inches)

JT	TYPE	PLATES	W	LEN	Y	X
B	TMVW-t	MT20	4.0	9.0	2.00	3.50
C	TMWW-t	MT20	4.0	6.0	2.00	2.75
D	TTW-m	MT20	4.0	4.0	Edge	
E	TMWW-t	MT20	4.0	4.0		
F	TTW-m	MT20	4.0	4.0	Edge	
G	TMWW-t	MT20	4.0	6.0	2.00	2.75
H	TMVW-t	MT20	4.0	9.0	2.00	3.50
I	BVM1+I	MT20	3.0	6.0	Edge	
J	BBWW-I	MT20	5.0	6.0	3.00	2.75
K	BMWWW-t	MT20	5.0	6.0		
L	BS-t	MT20	3.0	6.0		
M	BMWWW-t	MT20	5.0	6.0		
N	BBWW-I	MT20	5.0	6.0	3.00	2.75
O	BVM1+I	MT20	3.0	6.0	2.00	Edge

Edge - INDICATES REFERENCE CORNER OF PLATE TOUCHES EDGE OF CHORD.

NOTE: Lateral brace(s) shown shall be 1x4 for Part 9 design as per OBC 9.23.13.11, and no less than 2x4 for Part 4 design.

LICENSED PROFESSIONAL ENGINEER
D. O'CONNOR
100009580
08/15/2018
PROVINCE OF ONTARIO

DIMENSIONS, SUPPORTS AND LOADINGS SPECIFIED BY FABRICATOR TO BE VERIFIED BY BUILDING DESIGNER

BEARINGS

JT	FACTORED GROSS REACTION VERT	HORZ	MAXIMUM GROSS REACTION DOWN	HORZ	FACTORED UPLIFT	INPUT BRG IN-SX	REQRD BRG IN-SX
O	1112	0	1112	0	0	5-8	1-8
I	1041	0	1041	0	0	5-8	1-8

UNFACTORED REACTIONS

JT	1ST LCASE COMBINED	MAX./MIN. COMPONENT REACTIONS SNOW	LIVE	PERM.LIVE	WIND	DEAD	SOIL
O	794	479 / 0	0 / 0	0 / 0	0 / 0	315 / 0	0 / 0
I	745	441 / 0	0 / 0	0 / 0	0 / 0	304 / 0	0 / 0

BEARING MATERIAL TO BE SPF NO.2 OR BETTER AT JOINT(S) O, I
BEARING SIZE FACTOR = 1.15 AT JNT(S) O, I (BASED ON SUPPORT DEPTH = 1-8)

BRACING
FOR SECTION D-F, MAX. PURLIN SPACING = 2.00 FT.
FOR OTHER SECTIONS, TOP CHORD TO BE SHEATHED OR MAX. PURLIN SPACING = 4.52 FT.
MAX. UNBRACED BOTTOM CHORD LENGTH = 10.00 FT OR RIGID CEILING DIRECTLY APPLIED.

ALL PITCH BREAKS AND PERIMETER CORNER JOINTS MUST BE LATERALLY RESTRAINED.

LOADING
TOTAL LOAD CASES: (4)

CHORDS

MEMB. FR-TO	MAX. FACTORED FORCE (LBS)	FACTORED VERT. LOAD LC1 (PLF) FROM	TO	MAX CSI (LC)	MAX. UNBRAC LENGTH
A- B	0 / 27	-78.0	-78.0	0.05 (1)	10.00
B- C	-2131 / 0	-78.0	-78.0	0.18 (1)	4.52
C- D	-1086 / 0	-78.0	-78.0	0.24 (1)	5.80
D- E	-703 / 0	-85.5	-85.5	0.15 (1)	2.00
E- F	-703 / 0	-85.5	-85.5	0.15 (1)	2.00
F- G	-1086 / 0	-78.0	-78.0	0.24 (1)	5.80
G- H	-2131 / 0	-78.0	-78.0	0.18 (1)	4.52
O- B	-1094 / 0	0.0	0.0	0.07 (1)	7.81
I- H	-1024 / 0	0.0	0.0	0.07 (1)	7.81
O- N	0 / 0	-18.5	-18.5	0.02 (4)	10.00
N- M	0 / 1366	-18.5	-18.5	0.32 (1)	10.00
M- L	0 / 803	-18.5	-18.5	0.25 (4)	10.00
L- K	0 / 803	-18.5	-18.5	0.25 (4)	10.00
K- J	0 / 1366	-18.5	-18.5	0.32 (1)	10.00
J- I	0 / 0	-18.5	-18.5	0.02 (4)	10.00

WEBS

MEMB. FR-TO	MAX. FACTORED FORCE (LBS)	MAX CSI (LC)
N- C	0 / 710	0.16 (1)
C- M	-709 / 0	0.30 (1)
M- D	0 / 523	0.12 (1)
M- E	-217 / 0	0.29 (1)
K- F	0 / 523	0.12 (1)
K- G	-709 / 0	0.30 (1)
J- G	0 / 710	0.16 (1)
J- H	0 / 1557	0.35 (1)
B- N	0 / 1557	0.35 (1)
E- K	-217 / 0	0.29 (1)

DESIGN CRITERIA

SPECIFIED LOADS:

TOP CH.	LL	=	21.0	PSF
	DL	=	6.0	PSF
BOT CH.	LL	=	0.0	PSF
	DL	=	7.4	PSF
TOTAL LOAD		=	34.4	PSF

SPACING = 24.0 IN. C/C

LOADING IN FLAT SECTION BASED ON PIGGYBACK TRUSS WITH SLOPES OF 14.00/12 AND -14.00/12 AND RESPECTIVE WALL HEIGHTS OF 0-0 AND 0-0 AND AN ADDITIONAL DEAD LOAD OF 3.0 P.S.F.

THIS TRUSS IS DESIGNED FOR RESIDENTIAL OR SMALL BUILDING REQUIREMENTS OF PART 9, NBCC 2010, NBCC 2015

THIS DESIGN COMPLIES WITH:
- PART 9 OF OBC 2012, OBC 2018
- CSA 086-09, CSA 086-14
- TPIC 2011, TPIC 2014

(55 % OF 23.0 P.S.F. G.S.L. PLUS 8.4 P.S.F. RAIN LOAD) EQUALS 21.0 P.S.F. SPECIFIED ROOF LIVE LOAD

ALLOWABLE DEFL.(LL)= L/360 (0.70")
CALCULATED VERT. DEFL.(LL) = L/ 999 (0.04")
ALLOWABLE DEFL.(TL)= L/360 (0.70")
CALCULATED VERT. DEFL.(TL) = L/ 999 (0.12")

CSI: TC=0.24/1.00 (F-G:1) , BC=0.32/1.00 (J-K:1) , WB=0.35/1.00 (H-J:1) , SSI=0.16/1.00 (D-E:1)

DOL LUMBER=1.00 NAIL=1.00 LS BEND=1.10 COMP=1.10 SHEAR=1.10 TENS= 1.10

COMPANION LIVE LOAD FACTOR = 1.00

AUTOSOLVE HEELS OFF

TRUSS PLATE MANUFACTURER IS NOT RESPONSIBLE FOR QUALITY CONTROL IN THE TRUSS MANUFACTURING PLANT .

NAIL VALUES

PLATE	GRIP(DRY) (PSI) MAX	MIN	SHEAR (PLI) MAX	MIN	SECTION (PLI) MAX	MIN
MT20	618	354	1667	788	1987	1656

PLATE PLACEMENT TOL. = 0.250 inches

PLATE ROTATION TOL. = 5.0 Deg.

JSI GRIP= 0.83 (N) (INPUT = 0.90)
JSI METAL= 0.57 (N) (INPUT = 1.00)

A18082077

JOB NAME	TRUSS NAME	QUANTITY	PLY	JOB DESC.	DRWG NO.
300969	H47T	1	1	TRUSS DESC.	JT# 45147

Alpa Roof Truss, Maple

Version 8.210 S Jun 13 2018 MiTek Industries, Inc. Wed Aug 15 14:12:02 2018 Page 1
ID:DdSMSEW8qE9HTV0gkasOLLzzSIP-c4WiDFGgn2PjsRdysimukzZ4BJXnY3ajUMSn1YynbKB

Scale = 1:50.8

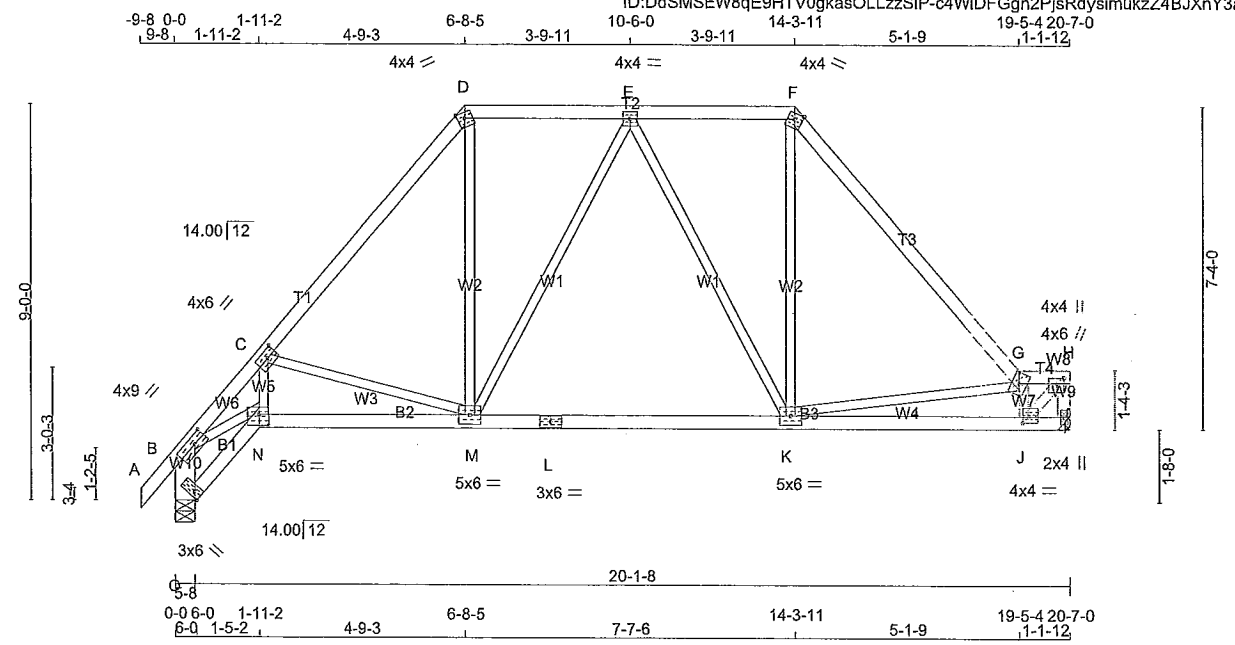

TOTAL WEIGHT = 96 lb

[M][F]

LUMBER
N. L. G. A. RULES

CHORDS	SIZE		LUMBER	DESCR.
A - D	2x4	DRY	No.2	SPF
D - F	2x4	DRY	No.2	SPF
F - G	2x4	DRY	No.2	SPF
G - H	2x4	DRY	No.2	SPF
I - H	2x4	DRY	No.2	SPF
O - B	2x6	DRY	No.2	SPF
O - N	2x4	DRY	No.2	SPF
N - L	2x4	DRY	No.2	SPF
L - I	2x4	DRY	No.2	SPF
ALL WEBS EXCEPT	2x3	DRY	No.2	SPF

DRY: SEASONED LUMBER.

PLATES (table is in inches)

JT	TYPE	PLATES	W	LEN	Y	X
B	TMVW-t	MT20	4.0	9.0	2.00	3.50
C	TMWW-t	MT20	4.0	6.0	2.00	2.75
D	TTW-m	MT20	4.0	4.0	Edge	
E	TMWW-t	MT20	4.0	4.0		
F	TTW-m	MT20	4.0	4.0	Edge	
G	TTWW+m	MT20	4.0	6.0		
H	TMVW+p	MT20	4.0	4.0	1.50	1.75
I	BMV1+p	MT20	2.0	4.0		
J	BMWW-t	MT20	4.0	4.0	1.50	1.50
K	BMWWW-t	MT20	5.0	6.0		
L	BS-t	MT20	3.0	6.0		
M	BMWWW-t	MT20	5.0	6.0		
N	BBWW-l	MT20	5.0	6.0	3.00	2.75
O	BVM1+l	MT20	3.0	6.0	2.00	Edge

Edge - INDICATES REFERENCE CORNER OF PLATE TOUCHES EDGE OF CHORD.

NOTE: Lateral brace(s) shown shall be 1x4 for Part 9 design as per OBC 9.23.13.11, and no less than 2x4 for Part 4 design.

LICENSED PROFESSIONAL ENGINEER
D. O'CONNOR
100009580
08/15/2018
PROVINCE OF ONTARIO

DIMENSIONS, SUPPORTS AND LOADINGS SPECIFIED BY FABRICATOR TO BE VERIFIED BY BUILDING DESIGNER

BEARINGS

JT	FACTORED GROSS REACTION VERT	HORZ	MAXIMUM GROSS REACTION DOWN	HORZ	UPLIFT	FACTORED INPUT BRG IN-SX	REQRD BRG IN-SX
I	1022	0	1022	0	0	MECHANICAL	
O	1091	0	1091	0	0	5-8	1-8

A SUITABLE HANGER/MECHANICAL CONNECTION IS REQUIRED AT JOINT I. MINIMUM BEARING LENGTH AT JOINT I = 1-8.

UNFACTORED REACTIONS

JT	1ST LCASE COMBINED	MAX./MIN. COMPONENT REACTIONS SNOW	LIVE	PERM.LIVE	WIND	DEAD	SOIL
I	731	432 / 0	0 / 0	0 / 0	0 / 0	299 / 0	0 / 0
O	779	470 / 0	0 / 0	0 / 0	0 / 0	309 / 0	0 / 0

BEARING MATERIAL TO BE SPF NO.2 OR BETTER AT JOINT(S) O
BEARING SIZE FACTOR = 1.15 AT JNT(S) O (BASED ON SUPPORT DEPTH = 1-8)

BRACING
FOR SECTION D-F, MAX. PURLIN SPACING = 2.00 FT.
FOR OTHER SECTIONS, TOP CHORD TO BE SHEATHED OR MAX. PURLIN SPACING = 4.56 FT.
MAX. UNBRACED BOTTOM CHORD LENGTH = 10.00 FT OR RIGID CEILING DIRECTLY APPLIED.

ALL PITCH BREAKS AND PERIMETER CORNER JOINTS MUST BE LATERALLY RESTRAINED.

LOADING
TOTAL LOAD CASES: (4)

CHORDS

MEMB. FR-TO	MAX. FACTORED FORCE (LBS)	FROM	TO	VERT. LOAD LC1 (PLF)	MAX CSI (LC)	MAX. UNBRAC LENGTH
A- B	0 / 27	-78.0	-78.0	0.05 (1)	10.00	
B- C	-2087 / 0	-78.0	-78.0	0.17 (1)	4.56	
C- D	-1055 / 0	-78.0	-78.0	0.24 (1)	5.86	
D- E	-682 / 0	-85.5	-85.5	0.15 (1)	2.00	
E- F	-662 / 0	-85.5	-85.5	0.15 (1)	2.00	
F- G	-1003 / 0	-78.0	-78.0	0.29 (1)	5.91	
G- H	-963 / 0	-78.0	-78.0	0.02 (1)	6.25	
I- H	-989 / 0	0.0	0.0	0.10 (1)	7.81	
O- B	-1073 / 0	0.0	0.0	0.07 (1)	7.81	
O- N	0 / 0	-18.5	-18.5	0.02 (4)	10.00	
N- M	0 / 1339	-18.5	-18.5	0.31 (1)	10.00	
M- L	0 / 772	-18.5	-18.5	0.25 (4)	10.00	
L- K	0 / 772	-18.5	-18.5	0.25 (4)	10.00	
K- J	0 / 1061	-18.5	-18.5	0.29 (4)	10.00	
J- I	0 / 0	-18.5	-18.5	0.03 (1)	10.00	

WEBS

MEMB. FR-TO	MAX. FACTORED FORCE (LBS)	MAX CSI (LC)
N- C	0 / 697	0.16 (1)
C- M	-701 / 0	0.29 (1)
M- D	0 / 500	0.11 (1)
K- F	0 / 429	0.10 (1)
K- G	-416 / 0	0.21 (1)
J- G	-965 / 0	0.14 (1)
J- H	0 / 1372	0.31 (1)
B- N	0 / 1526	0.34 (1)
M- E	-196 / 0	0.26 (1)
E- K	-239 / 0	0.32 (1)

DESIGN CRITERIA

SPECIFIED LOADS:

TOP CH.	LL	=	21.0	PSF
	DL	=	6.0	PSF
BOT CH.	LL	=	0.0	PSF
	DL	=	7.4	PSF
TOTAL LOAD		=	34.4	PSF

SPACING = 24.0 IN. C/C

LOADING IN HIGHEST FLAT SECTION BASED ON PIGGYBACK TRUSS WITH SLOPES OF 14.00/12 AND -14.00/12 AND RESPECTIVE WALL HEIGHTS OF 0-0 AND 0-0 AND AN ADDITIONAL DEAD LOAD OF 3.0 P.S.F.

LOADING IN OTHER FLAT SECTIONS BASED ON A SLOPE OF 14.00/12

THIS TRUSS IS DESIGNED FOR RESIDENTIAL OR SMALL BUILDING REQUIREMENTS OF PART 9, NBCC 2010, NBCC 2015

THIS DESIGN COMPLIES WITH:
- PART 9 OF OBC 2012, OBC 2018
- CSA 086-09, CSA 086-14
- TPIC 2011, TPIC 2014

(55 % OF 23.0 P.S.F. G.S.L. PLUS 8.4 P.S.F. RAIN LOAD) EQUALS 21.0 P.S.F. SPECIFIED ROOF LIVE LOAD

ALLOWABLE DEFL.(LL)= L/360 (0.69")
CALCULATED VERT. DEFL.(LL) = L/ 999 (0.03")
ALLOWABLE DEFL.(TL)= L/360 (0.69")
CALCULATED VERT. DEFL.(TL) = L/ 999 (0.10")

CSI: TC=0.29/1.00 (F-G:1) , BC=0.31/1.00 (M-N:1) , WB=0.34/1.00 (B-N:1) , SSI=0.16/1.00 (D-E:1)

DOL LUMBER=1.00 NAIL=1.00 LS BEND=1.10 COMP=1.10 SHEAR=1.10 TENS= 1.10

COMPANION LIVE LOAD FACTOR = 1.00

AUTOSOLVE RIGHT HEEL ONLY

TRUSS PLATE MANUFACTURER IS NOT RESPONSIBLE FOR QUALITY CONTROL IN THE TRUSS MANUFACTURING PLANT .

NAIL VALUES

PLATE	GRIP(DRY) (PSI) MAX	MIN	SHEAR (PLI) MAX	MIN	SECTION (PLI) MAX	MIN
MT20	618	354	1667	788	1987	1656

PLATE PLACEMENT TOL. = 0.250 inches

PLATE ROTATION TOL. = 5.0 Deg.

JSI GRIP= 0.90 (H) (INPUT = 0.90)
JSI METAL= 0.55 (N) (INPUT = 1.00)

A18082078

JOB NAME	TRUSS NAME	QUANTITY	PLY	JOB DESC.	DRWG NO.
300969	H48T	1	1	TRUSS DESC.	JT# 45147

Alpa Roof Truss, Maple

Version 8.210 S Jun 13 2018 MiTek Industries, Inc. Wed Aug 15 14:12:04 2018 Page 1
ID:DdSMSEW8qE9HTV0gkasOLLzzSIP-ZTeSewHwJffR5lnLz7oMpOeTR6Fw00v0ygxu6QynbK9

Scale = 1:49.6

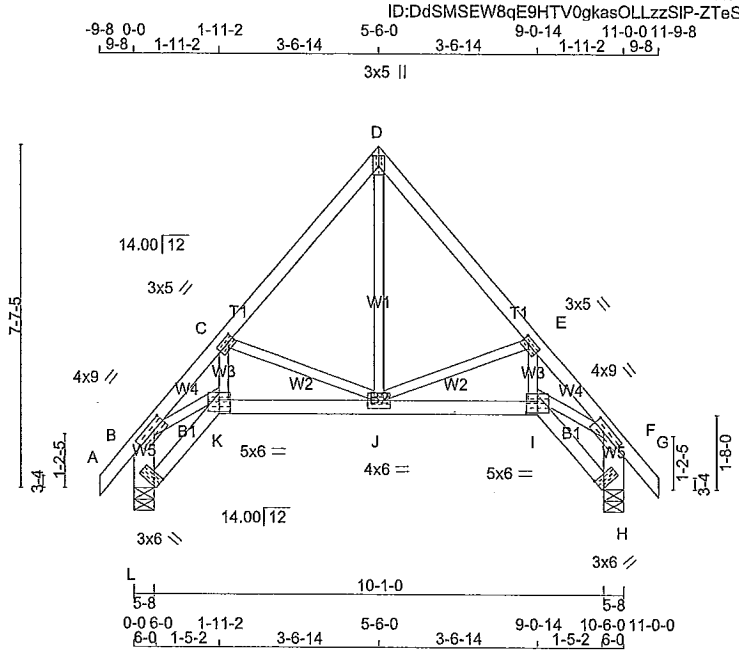

TOTAL WEIGHT = 56 lb

LUMBER
N. L. G. A. RULES

CHORDS	SIZE		LUMBER	DESCR.
A - D	2x4	DRY	No.2	SPF
D - G	2x4	DRY	No.2	SPF
L - B	2x6	DRY	No.2	SPF
H - F	2x6	DRY	No.2	SPF
L - K	2x4	DRY	No.2	SPF
K - I	2x4	DRY	No.2	SPF
I - H	2x4	DRY	No.2	SPF
ALL WEBS EXCEPT	2x3	DRY	No.2	SPF

DRY: SEASONED LUMBER.

PLATES (table is in inches)

JT	TYPE	PLATES	W	LEN	Y	X
B	TMVW-t	MT20	4.0	9.0	2.00	3.50
C	TMWW-t	MT20	3.0	5.0	1.50	1.75
D	TTW+p	MT20	3.0	5.0	2.75	1.50
E	TMWW-t	MT20	3.0	5.0	1.50	1.75
F	TMVW-t	MT20	4.0	9.0	2.00	3.50
H	BVM1+l	MT20	3.0	6.0	Edge	
I	BBWW-l	MT20	5.0	6.0	3.00	3.00
J	BMWWW-t	MT20	4.0	6.0		
K	BBWW-l	MT20	5.0	6.0	3.00	3.00
L	BVM1+l	MT20	3.0	6.0	Edge	

Edge - INDICATES REFERENCE CORNER OF PLATE TOUCHES EDGE OF CHORD.

NOTE: Lateral brace(s) shown shall be 1x4 for Part 9 design as per OBC 9.23.13.11, and no less than 2x4 for Part 4 design.

LICENSED PROFESSIONAL ENGINEER
D. O'CONNOR
100009580
08/15/2018
PROVINCE OF ONTARIO

DIMENSIONS, SUPPORTS AND LOADINGS SPECIFIED BY FABRICATOR TO BE VERIFIED BY BUILDING DESIGNER

BEARINGS

JT	FACTORED GROSS REACTION VERT	HORZ	MAXIMUM FACTORED GROSS REACTION DOWN	HORZ	UPLIFT	INPUT BRG IN-SX	REQRD BRG IN-SX
L	601	0	601	0	0	5-8	1-8
H	601	0	601	0	0	5-8	1-8

UNFACTORED REACTIONS

JT	1ST LCASE COMBINED	MAX./MIN. COMPONENT REACTIONS SNOW	LIVE	PERM.LIVE	WIND	DEAD	SOIL
L	427	269 / 0	0 / 0	0 / 0	0 / 0	158 / 0	0 / 0
H	427	269 / 0	0 / 0	0 / 0	0 / 0	158 / 0	0 / 0

BEARING MATERIAL TO BE SPF NO.2 OR BETTER AT JOINT(S) L, H
BEARING SIZE FACTOR = 1.15 AT JNT(S) L, H (BASED ON SUPPORT DEPTH = 1-8)

BRACING
TOP CHORD TO BE SHEATHED OR MAX. PURLIN SPACING = 6.20 FT.
MAX. UNBRACED BOTTOM CHORD LENGTH = 10.00 FT OR RIGID CEILING DIRECTLY APPLIED.

ALL PITCH BREAKS AND PERIMETER CORNER JOINTS MUST BE LATERALLY RESTRAINED.

LOADING
TOTAL LOAD CASES: (4)

CHORDS

MEMB. FR-TO	MAX. FACTORED FORCE (LBS)	FACTORED VERT. LOAD LC1 (PLF) FROM	TO	MAX CSI (LC)	MAX. UNBRAC LENGTH
A- B	0 / 27	-78.0	-78.0	0.05 (1)	10.00
B- C	-986 / 0	-78.0	-78.0	0.08 (1)	6.20
C- D	-424 / 0	-78.0	-78.0	0.12 (1)	6.25
D- E	-424 / 0	-78.0	-78.0	0.12 (1)	6.25
E- F	-986 / 0	-78.0	-78.0	0.08 (1)	6.20
F- G	0 / 27	-78.0	-78.0	0.05 (1)	10.00
L- B	-583 / 0	0.0	0.0	0.04 (1)	7.81
H- F	-583 / 0	0.0	0.0	0.04 (1)	7.81
L- K	0 / 0	-18.5	-18.5	0.02 (4)	10.00
K- J	0 / 634	-18.5	-18.5	0.14 (1)	10.00
J- I	0 / 634	-18.5	-18.5	0.14 (1)	10.00
I- H	0 / 0	-18.5	-18.5	0.02 (4)	10.00

WEBS

MEMB. FR-TO	MAX. FACTORED FORCE (LBS)	MAX CSI (LC)
J- E	-401 / 0	0.10 (1)
I- E	0 / 353	0.08 (1)
C- J	-401 / 0	0.10 (1)
K- C	0 / 353	0.08 (1)
B- K	0 / 724	0.16 (1)
I- F	0 / 724	0.16 (1)
J- D	0 / 390	0.09 (1)

[M][F]

DESIGN CRITERIA

SPECIFIED LOADS:

TOP CH.	LL	=	21.0	PSF
	DL	=	6.0	PSF
BOT CH.	LL	=	0.0	PSF
	DL	=	7.4	PSF
TOTAL LOAD		=	34.4	PSF

SPACING = 24.0 IN. C/C

THIS TRUSS IS DESIGNED FOR RESIDENTIAL OR SMALL BUILDING REQUIREMENTS OF PART 9, NBCC 2010, NBCC 2015

THIS DESIGN COMPLIES WITH:
- PART 9 OF OBC 2012, OBC 2018
- CSA 086-09, CSA 086-14
- TPIC 2011, TPIC 2014

(55 % OF 23.0 P.S.F. G.S.L. PLUS 8.4 P.S.F. RAIN LOAD) EQUALS 21.0 P.S.F. SPECIFIED ROOF LIVE LOAD

ALLOWABLE DEFL.(LL)= L/360 (0.37")
CALCULATED VERT. DEFL.(LL) = L/ 999 (0.02")
ALLOWABLE DEFL.(TL)= L/360 (0.37")
CALCULATED VERT. DEFL.(TL) = L/ 999 (0.03")

CSI: TC=0.12/1.00 (C-D:1) , BC=0.14/1.00 (J-K:1) , WB=0.16/1.00 (B-K:1) , SSI=0.08/1.00 (C-D:1)

DOL LUMBER=1.00 NAIL=1.00 LS BEND=1.10 COMP=1.10 SHEAR=1.10 TENS= 1.10

COMPANION LIVE LOAD FACTOR = 1.00

AUTOSOLVE HEELS OFF

TRUSS PLATE MANUFACTURER IS NOT RESPONSIBLE FOR QUALITY CONTROL IN THE TRUSS MANUFACTURING PLANT .

NAIL VALUES

PLATE	GRIP(DRY) (PSI) MAX	MIN	SHEAR (PLI) MAX	MIN	SECTION (PLI) MAX	MIN
MT20	618	354	1667	788	1987	1656

PLATE PLACEMENT TOL. = 0.250 inches

PLATE ROTATION TOL. = 5.0 Deg.

JSI GRIP= 0.46 (K) (INPUT = 0.90)
JSI METAL= 0.29 (K) (INPUT = 1.00)

A18082079

JOB NAME	TRUSS NAME	QUANTITY	PLY	JOB DESC.	DRWG NO.
300969	H49P	2	1	TRUSS DESC.	JT# 45147

Alpa Roof Truss, Maple

Version 8.210 S Jun 13 2018 MiTek Industries, Inc. Wed Aug 15 14:12:05 2018 Page 1
ID:HSVaWIIDnhr?B6oeweH9vbyNdls-1fCqrGIY4znIjvMXXqKbMbBeRWbkIVYABKhRetynbK8

Scale = 1:29.1

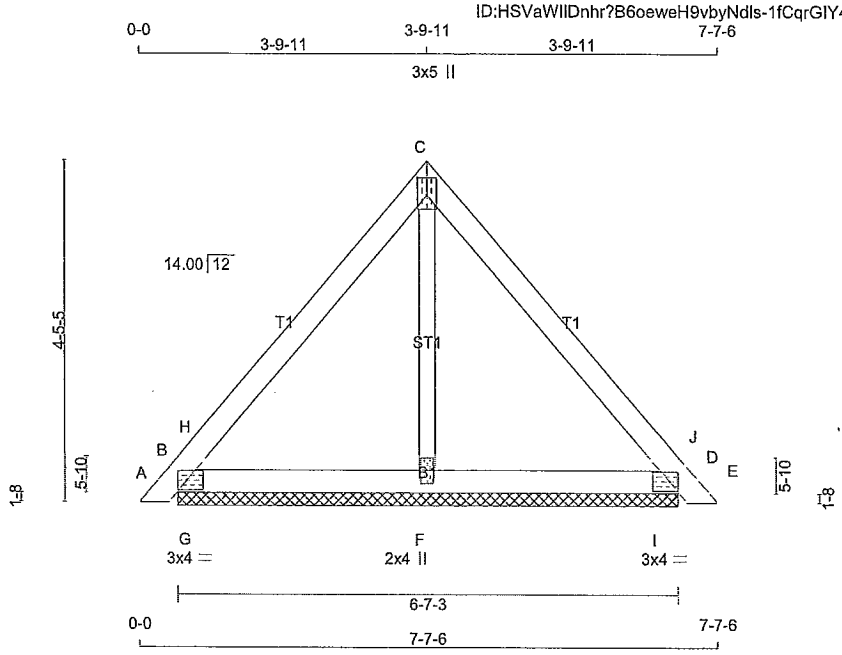

TOTAL WEIGHT = 2 X 24 = 48 lb

[M]

LUMBER
N. L. G. A. RULES

CHORDS	SIZE		LUMBER	DESCR.
A - C	2x4	DRY	No.2	SPF
C - E	2x4	DRY	No.2	SPF
B - D	2x4	DRY	No.2	SPF
ALL WEBS	2x3	DRY	No.2	SPF

DRY: SEASONED LUMBER.

PLATES (table is in inches)

JT	TYPE	PLATES	W	LEN	Y	X
B	TMB1-I	MT20	3.0	4.0	1.50	2.50
C	TTW+p	MT20	3.0	5.0	2.75	1.50
D	TMB1-I	MT20	3.0	4.0	1.50	2.50
F	BMW1+w	MT20	2.0	4.0		

NOTE: Lateral brace(s) shown shall be 1x4 for Part 9 design as per OBC 9.23.13.11, and no less than 2x4 for Part 4 design.

LICENSED PROFESSIONAL ENGINEER
D. O'CONNOR
100009580
08/15/2018
PROVINCE OF ONTARIO

DIMENSIONS, SUPPORTS AND LOADINGS SPECIFIED BY FABRICATOR TO BE VERIFIED BY BUILDING DESIGNER

BEARINGS

JT	FACTORED GROSS REACTION VERT	HORZ	MAXIMUM FACTORED GROSS REACTION DOWN	HORZ	UPLIFT	INPUT BRG IN-SX	REQRD BRG IN-SX
B	263	0	263	0	0	6-7-3	5-2
D	263	0	263	0	0	6-7-3	5-2
F	171	0	171	0	0	6-7-3	5-2

UNFACTORED REACTIONS

JT	1ST LCASE COMBINED	MAX./MIN. COMPONENT REACTIONS SNOW	LIVE	PERM.LIVE	WIND	DEAD	SOIL
B	185	126 / 0	0 / 0	0 / 0	0 / 0	59 / 0	0 / 0
D	185	126 / 0	0 / 0	0 / 0	0 / 0	59 / 0	0 / 0
F	126	58 / 0	0 / 0	0 / 0	0 / 0	68 / 0	0 / 0

BEARING MATERIAL TO BE SPF NO.2 OR BETTER AT JOINT(S) B, D, F

BRACING
TOP CHORD TO BE SHEATHED OR MAX. PURLIN SPACING = 6.25 FT.
MAX. UNBRACED BOTTOM CHORD LENGTH = 10.00 FT OR RIGID CEILING DIRECTLY APPLIED.

ALL PITCH BREAKS AND PERIMETER CORNER JOINTS MUST BE LATERALLY RESTRAINED.

LOADING
TOTAL LOAD CASES: (4)

CHORDS

MEMB. FR-TO	MAX. FACTORED FORCE (LBS)	FACTORED VERT. LOAD (PLF) FROM	TO	LC1 MAX CSI (LC)	MAX. UNBRAC LENGTH
A- B	0 / 10	-78.0	-78.0	0.01 (1)	10.00
B- H	-14 / 86	-78.0	-78.0	0.08 (1)	6.25
H- C	-128 / 0	-78.0	-78.0	0.10 (1)	6.25
C- J	-128 / 0	-78.0	-78.0	0.10 (1)	6.25
J- D	-14 / 86	-78.0	-78.0	0.08 (1)	6.25
D- E	0 / 10	-78.0	-78.0	0.01 (1)	10.00
B- G	0 / 76	-18.5	-18.5	0.10 (1)	10.00
G- F	0 / 76	-18.5	-18.5	0.10 (1)	10.00
F- I	0 / 76	-18.5	-18.5	0.10 (1)	10.00
I- D	0 / 76	-18.5	-18.5	0.10 (1)	10.00

WEBS

MEMB. FR-TO	MAX. FACTORED FORCE (LBS)	MAX CSI (LC)
F- C	-36 / 0	0.01 (1)
G- H	-375 / 0	0.00 (1)
I- J	-375 / 0	0.00 (1)

DESIGN CRITERIA

SPECIFIED LOADS:

TOP CH.	LL	=	21.0	PSF
	DL	=	6.0	PSF
BOT CH.	LL	=	0.0	PSF
	DL	=	7.4	PSF
TOTAL LOAD		=	34.4	PSF

SPACING = 24.0 IN. C/C

THIS TRUSS IS DESIGNED FOR RESIDENTIAL OR SMALL BUILDING REQUIREMENTS OF PART 9, NBCC 2010, NBCC 2015

THIS DESIGN COMPLIES WITH:
- PART 9 OF OBC 2012, OBC 2018
- CSA 086-09, CSA 086-14
- TPIC 2011, TPIC 2014

(55 % OF 23.0 P.S.F. G.S.L. PLUS 8.4 P.S.F. RAIN LOAD) EQUALS 21.0 P.S.F. SPECIFIED ROOF LIVE LOAD

CSI: TC=0.10/1.00 (C-H:1) , BC=0.10/1.00 (B-G:1) , WB=0.01/1.00 (C-F:1) , SSI=0.29/1.00 (D-I:1)

DOL LUMBER=1.00 NAIL=1.00 LS BEND=1.10 COMP=1.10 SHEAR=1.10 TENS= 1.10

COMPANION LIVE LOAD FACTOR = 1.00

TRUSS PLATE MANUFACTURER IS NOT RESPONSIBLE FOR QUALITY CONTROL IN THE TRUSS MANUFACTURING PLANT .

NAIL VALUES

PLATE	GRIP(DRY) (PSI) MAX	MIN	SHEAR (PLI) MAX	MIN	SECTION (PLI) MAX	MIN
MT20	618	354	1667	788	1987	1656

PLATE PLACEMENT TOL. = 0.250 inches

PLATE ROTATION TOL. = 5.0 Deg.

JSI GRIP= 0.33 (B) (INPUT = 0.90)
JSI METAL= 0.07 (D) (INPUT = 1.00)

A18082080

JOB NAME	TRUSS NAME	QUANTITY	PLY	JOB DESC.	DRWG NO.
292651	H19	11	1	TRUSS DESC.	

Alpa Roof Truss, Maple

Version 8.200 S Jan 6 2018 MiTek Industries, Inc. Sun Feb 18 16:25:39 2018 Page 1
ID:DdSMSEW8qE9HTV0gkasOLLzzSIP-IbfVu6vlp0t?P?yDRu1xYo8dLPU669YLzY473rzjseg

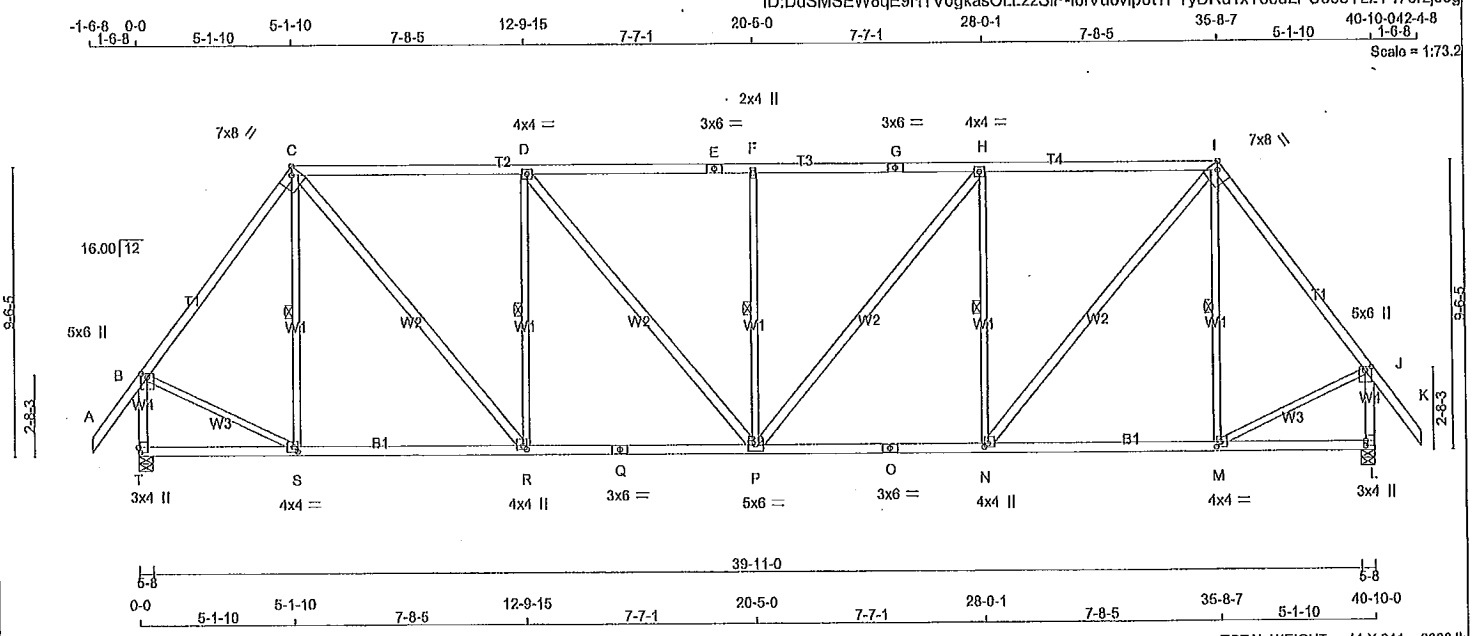

LUMBER
N. L. G. A. RULES

CHORDS	SIZE		LUMBER	DESCR.
A - C	2x4	DRY	No.2	SPF
C - E	2x4	DRY	1650F 1.5E	SPF
E - G	2x4	DRY	1650F 1.5E	SPF
G - I	2x4	DRY	1650F 1.5E	SPF
I - K	2x4	DRY	No.2	SPF
T - B	2x4	DRY	No.2	SPF
L - J	2x4	DRY	No.2	SPF
T - Q	2x4	DRY	No.2	SPF
Q - O	2x4	DRY	No.2	SPF
O - L	2x4	DRY	No.2	SPF
ALL WEBS EXCEPT	2x3	DRY	No.2	SPF
C - R	2x4	DRY	No.2	SPF
D - P	2x4	DRY	No.2	SPF
P - H	2x4	DRY	No.2	SPF
N - I	2x4	DRY	No.2	SPF

DRY: SEASONED LUMBER.

PLATES (table is in inches)

JT	TYPE	PLATES	W	LEN	Y	X
B	TMVW+p	MT20	5.0	6.0	1.50	2.50
C	TTWW-h	MT20	7.0	8.0	Edge	2.75
D	TMWW-t	MT20	4.0	4.0		
E	TS-t	MT20	3.0	6.0		
F	TMW+w	MT20	2.0	4.0		
G	TS-t	MT20	3.0	6.0		
H	TMWW-t	MT20	4.0	4.0		
I	TTWW-h	MT20	7.0	8.0	Edge	2.75
J	TMVW+p	MT20	5.0	6.0	1.50	2.50
L	BMV1+p	MT20	3.0	4.0	2.00	
M	BMWW-t	MT20	4.0	4.0	2.00	1.50
N	BMWW+t	MT20	4.0	4.0	1.50	1.50
O	BS-t	MT20	3.0	6.0		
P	BMWWW-t	MT20	5.0	6.0		
Q	BS-t	MT20	3.0	6.0		
R	BMWW+t	MT20	4.0	4.0	1.50	1.50
S	BMWW-t	MT20	4.0	4.0	2.00	1.50
T	BMV1+p	MT20	3.0	4.0	2.00	0.50

NOTE: Lateral brace(s) shown shall be 1x4 for Part 9 design as per OBC 9.23.13.11, and no less than 2x4 for Part 4 design

REGISTERED PROFESSIONAL ENGINEER
02/18/2018
EDWIN C. FOK
PROVINCE OF ONTARIO

DIMENSIONS, SUPPORTS AND LOADINGS SPECIFIED BY FABRICATOR TO BE VERIFIED BY BUILDING DESIGNER

BEARINGS

JT	FACTORED GROSS REACTION VERT	HORZ	MAXIMUM FACTORED GROSS REACTION DOWN	HORZ	UPLIFT	INPUT BRG IN-SX	REQRD BRG IN-SX
T	2214	0	2214	0	0	5-8	3-11
L	2214	0	2214	0	0	5-8	3-11

UNFACTORED REACTIONS

JT	1ST LCASE COMBINED	MAX./MIN. COMPONENT REACTIONS SNOW	LIVE	PERM.LIVE	WIND	DEAD	SOIL
T	1585	927 / 0	0 / 0	0 / 0	0 / 0	659 / 0	0 / 0
L	1585	927 / 0	0 / 0	0 / 0	0 / 0	659 / 0	0 / 0

BEARING MATERIAL TO BE SPF NO.2 OR BETTER AT JOINT(S) T, L

BRACING
FOR SECTION C-I, MAX. PURLIN SPACING = 2.00 FT.
FOR OTHER SECTIONS, TOP CHORD TO BE SHEATHED OR MAX. PURLIN SPACING = 4.75 FT.
MAX. UNBRACED BOTTOM CHORD LENGTH = 10.00 FT OR RIGID CEILING DIRECTLY APPLIED.

ALL PITCH BREAKS AND PERIMETER CORNER JOINTS MUST BE LATERALLY RESTRAINED.

1 LATERAL BRACE(S) AT 1/ 2 LENGTH OF C-S, D-R, F-P, H-N, I-M.

END VERTICAL(S) MUST BE SHEATHED OR HAVE BRACES AS INDICATED IN THE MAX. UNBRACED LENGTH COLUMN OF THE TABLE BELOW

LOADING
TOTAL LOAD CASES: (4)

CHORDS

MEMB. FR-TO	MAX. FACTORED FORCE (LBS)	FACTORED VERT. LOAD LC1 (PLF) FROM	TO	MAX CSI (LC)	MAX. UNBRAC LENGTH
A- B	0 / 52	-78.0	-78.0	0.15 (1)	10.00
B- C	-1740 / 0	-78.0	-78.0	0.38 (1)	4.75
C- D	-2078 / 0	-85.5	-85.5	0.57 (1)	2.00
D- E	-2381 / 0	-85.5	-85.5	0.55 (1)	2.00
E- F	-2381 / 0	-85.5	-85.5	0.55 (1)	2.00
F- G	-2381 / 0	-85.5	-85.5	0.55 (1)	2.00
G- H	-2381 / 0	-85.5	-85.5	0.55 (1)	2.00
H- I	-2078 / 0	-85.5	-85.5	0.57 (1)	2.00
I- J	-1740 / 0	-78.0	-78.0	0.38 (1)	4.75
J- K	0 / 52	-78.0	-78.0	0.15 (1)	10.00
T- B	-2180 / 0	0.0	0.0	0.31 (1)	5.75
L- J	-2180 / 0	0.0	0.0	0.31 (1)	5.75
T- S	0 / 0	-18.5	-18.5	0.18 (4)	10.00
S- R	0 / 1035	-18.5	-18.5	0.33 (4)	10.00
R- Q	0 / 2079	-18.5	-18.5	0.46 (1)	10.00
Q- P	0 / 2079	-18.5	-18.5	0.46 (1)	10.00
P- O	0 / 2079	-18.5	-18.5	0.46 (1)	10.00
O- N	0 / 2079	-18.5	-18.5	0.46 (1)	10.00
N- M	0 / 1035	-18.5	-18.5	0.33 (4)	10.00
M- L	0 / 0	-18.5	-18.5	0.18 (4)	10.00

WEBS

MEMB. FR-TO	MAX. FACTORED FORCE (LBS)	MAX CSI (LC)
S- C	-323 / 0	0.19 (1)
C- R	0 / 1625	0.26 (1)
R- D	-1102 / 0	0.66 (1)
D- P	0 / 476	0.08 (1)
P- F	-598 / 0	0.36 (1)
P- H	0 / 476	0.08 (1)
N- H	-1102 / 0	0.66 (1)
N- I	0 / 1625	0.26 (1)
M- I	-323 / 0	0.19 (1)
B- S	0 / 1134	0.26 (1)
M- J	0 / 1134	0.26 (1)

DESIGN CRITERIA

SPECIFIED LOADS:

TOP CH.	LL	=	21.0	PSF
	DL	=	6.0	PSF
BOT CH.	LL	=	0.0	PSF
	DL	=	7.4	PSF
TOTAL LOAD		=	34.4	PSF

SPACING = 24.0 IN. C/C

LOADING IN FLAT SECTION BASED ON PIGGYBACK TRUSS WITH SLOPES OF 6.00/12 AND -6.00/12 AND RESPECTIVE WALL HEIGHTS OF 0-0 AND 0-0 AND AN ADDITIONAL DEAD LOAD OF 3.0 P.S.F.

THIS TRUSS IS DESIGNED FOR RESIDENTIAL OR SMALL BUILDING REQUIREMENTS OF PART 9, NBCC 2010, NBCC 2015

THIS DESIGN COMPLIES WITH:
- PART 9 OF OBC 2012, OBC 2018
- CSA 086-09, CSA 086-14
- TPIC 2011, TPIC 2014

(55 % OF 23.0 P.S.F. G.S.L. PLUS 8.4 P.S.F. RAIN LOAD) EQUALS 21.0 P.S.F. SPECIFIED ROOF LIVE LOAD

ALLOWABLE DEFL.(LL)= L/360 (1.36")
CALCULATED VERT. DEFL.(LL) = L/ 999 (0.11")
ALLOWABLE DEFL.(TL)= L/360 (1.36")
CALCULATED VERT. DEFL.(TL) = L/ 999 (0.24")

CSI: TC=0.57/1.00 (H-I:1) , BC=0.46/1.00 (P-R:1) , WB=0.66/1.00 (D-R:1) , SSI=0.31/1.00 (H-I:1)

DOL LUMBER=1.00 NAIL=1.00 LS BEND=1.10 COMP=1.10 SHEAR=1.10 TENS= 1.10

COMPANION LIVE LOAD FACTOR = 1.00

TRUSS PLATE MANUFACTURER IS NOT RESPONSIBLE FOR QUALITY CONTROL IN THE TRUSS MANUFACTURING PLANT .

NAIL VALUES

PLATE	GRIP(DRY) (PSI) MAX	MIN	SHEAR (PLI) MAX	MIN	SECTION (PLI) MAX	MIN
MT20	618	354	1667	788	1987	1656

PLATE PLACEMENT TOL. = 0.250 Inches

PLATE ROTATION TOL. = 5.0 Deg.

JSI GRIP= 0.89 (N) (INPUT = 0.90)
JSI METAL= 0.71 (O) (INPUT = 1.00)

A-18023800

CONTINUED ON PAGE 2

JOB NAME	TRUSS NAME	QUANTITY	PLY	JOB DESC.	DRWG NO.
292651	H24P	1	1	TRUSS DESC.	

Alpa Roof Truss, Maple

Version 8.200 S Jan 6 2018 MiTek Industries, Inc. Sun Feb 18 16:26:06 2018 Page 1

ID:DdSMSEW8qE9HTV0gkasOLLzzSIP-0no|ZLEhSJH999XPW30G8VmFsIk?xWIKAF73Wnz|seF

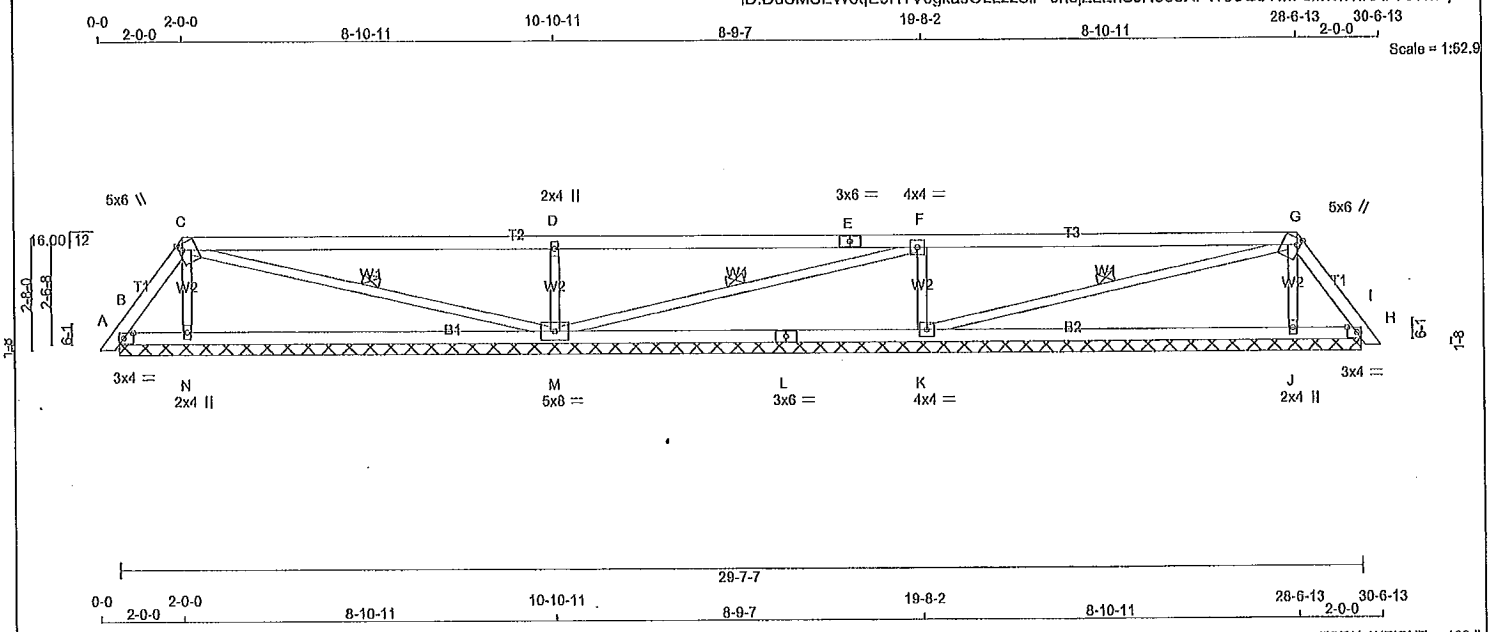

TOTAL WEIGHT = 100 lb

LUMBER
N. L. G. A. RULES

CHORDS	SIZE		LUMBER	DESCR.
A - C	2x4	DRY	No.2	SPF
C - E	2x4	DRY	2100F 1.8E	SPF
E - G	2x4	DRY	2100F 1.8E	SPF
G - I	2x4	DRY	No.2	SPF
B - L	2x4	DRY	No.2	SPF
L - H	2x4	DRY	No.2	SPF
ALL WEBS	2x3	DRY	No.2	SPF

DRY: SEASONED LUMBER.

PLATES (table is in inches)

JT	TYPE	PLATES	W	LEN	Y	X
B	TMB1-I	MT20	3.0	4.0	1.50	2.75
C	TTWW+m	MT20	5.0	6.0	1.75	1.00
D	TMW+w	MT20	2.0	4.0		
E	TS-t	MT20	3.0	6.0		
F	TMWW-t	MT20	4.0	4.0		
G	TTWW+m	MT20	5.0	6.0	1.75	1.00
H	TMB1-I	MT20	3.0	4.0	1.50	2.75
J	BMW1+w	MT20	2.0	4.0		
K	BMWW1-t	MT20	4.0	4.0		
L	BS-t	MT20	3.0	6.0		
M	BMWWW1-t	MT20	5.0	8.0		
N	BMW1+w	MT20	2.0	4.0		

NOTE: Lateral brace(s) shown shall be 1x4 for Part 9 design as per OBC 9.23.13.11, and no less than 2x4 for Part 4 design

REGISTERED PROFESSIONAL ENGINEER
02/18/2018
EDWIN C. FOK
PROVINCE OF ONTARIO

DIMENSIONS, SUPPORTS AND LOADINGS SPECIFIED BY FABRICATOR TO BE VERIFIED BY BUILDING DESIGNER

BEARINGS

JT	FACTORED GROSS REACTION VERT	HORZ	MAXIMUM GROSS REACTION DOWN	HORZ	UPLIFT	FACTORED INPUT BRG IN-SX	REQRD BRG IN-SX
B	112	0	112	0	-18	29-7-7 (13-7-15)	12
N	413	0	413	0	0	29-7-7 (13-7-15)	12
M	938	0	938	0	0	29-7-7 (13-7-15)	12
K	922	0	922	0	0	29-7-7 (13-7-15)	12
J	404	0	404	0	0	29-7-7 (13-7-15)	12
H	124	0	124	0	-15	29-7-7 (13-7-15)	12

VALUE IN PARENTHESIS INDICATES EFFECTIVE BEARING LENGTH

PROVIDE ANCHORAGE AT BEARING JOINT B FOR 150 LBS FACTORED UPLIFT
PROVIDE ANCHORAGE AT BEARING JOINT H FOR 150 LBS FACTORED UPLIFT

UNFACTORED REACTIONS

JT	1ST LCASE COMBINED	MAX./MIN. COMPONENT REACTIONS SNOW	LIVE	PERM.LIVE	WIND	DEAD	SOIL
B	73	85 / 0	0 / 0	0 / 0	0 / 0	0 / -13	0 / 0
N	302	139 / 0	0 / 0	0 / 0	0 / 0	164 / 0	0 / 0
M	667	416 / 0	0 / 0	0 / 0	0 / 0	251 / 0	0 / 0
K	656	407 / 0	0 / 0	0 / 0	0 / 0	249 / 0	0 / 0
J	296	134 / 0	0 / 0	0 / 0	0 / 0	162 / 0	0 / 0
H	81	92 / 0	0 / 0	0 / 0	0 / 0	0 / -11	0 / 0

BEARING MATERIAL TO BE SPF NO.2 OR BETTER AT JOINT(S) B, N, M, K, J, H

BRACING
TOP CHORD TO BE SHEATHED OR MAX. PURLIN SPACING = 6.25 FT.
MAX. UNBRACED BOTTOM CHORD LENGTH = 10.00 FT OR RIGID CEILING DIRECTLY APPLIED.

ALL PITCH BREAKS AND PERIMETER CORNER JOINTS MUST BE LATERALLY RESTRAINED.

1 LATERAL BRACE(S) AT 1/ 2 LENGTH OF C-M, F-M, G-K.

LOADING
TOTAL LOAD CASES: (4)

CHORDS

MEMB. FR-TO	MAX. FACTORED FORCE (LBS)	FACTORED VERT. LOAD LC1 (PLF) FROM	TO	MAX CSI (LC)	MAX. UNBRAC LENGTH
A- B	0 / 10	-78.0	-78.0	0.01 (1)	10.00
B- C	-87 / 0	-78.0	-78.0	0.03 (1)	6.25
C- D	-1 / 0	-78.0	-78.0	0.55 (1)	10.00
D- E	-2 / 0	-78.0	-78.0	0.55 (1)	10.00
E- F	-2 / 0	-78.0	-78.0	0.55 (1)	10.00
F- G	-25 / 0	-78.0	-78.0	0.55 (1)	6.25
G- H	-102 / 0	-78.0	-78.0	0.03 (1)	6.25
H- I	0 / 10	-78.0	-78.0	0.01 (1)	10.00
B- N	0 / 49	-18.5	-18.5	0.24 (4)	10.00
N- M	0 / 37	-18.5	-18.5	0.29 (4)	10.00
M- L	0 / 25	-18.5	-18.5	0.29 (4)	10.00
L- K	0 / 25	-18.5	-18.5	0.29 (4)	10.00
K- J	0 / 46	-18.5	-18.5	0.29 (4)	10.00
J- H	0 / 58	-18.5	-18.5	0.24 (4)	10.00

WEBS

MEMB. FR-TO	MAX. FACTORED FORCE (LBS)	MAX CSI (LC)
N- C	-258 / 0	0.04 (1)
C- M	-37 / 0	0.02 (1)
M- D	-758 / 0	0.12 (1)
M- F	-25 / 0	0.01 (1)
K- F	-751 / 0	0.12 (1)
K- G	-21 / 0	0.01 (1)
J- G	-249 / 0	0.04 (1)

DESIGN CRITERIA

SPECIFIED LOADS:

TOP CH.	LL	=	21.0	PSF
	DL	=	6.0	PSF
BOT CH.	LL	=	0.0	PSF
	DL	=	7.4	PSF
TOTAL LOAD		=	34.4	PSF

SPACING = 24.0 IN. C/C

LOADING IN FLAT SECTION BASED ON A SLOPE OF 2.00/12 MINIMUM

THIS TRUSS IS DESIGNED FOR RESIDENTIAL OR SMALL BUILDING REQUIREMENTS OF PART 9, NBCC 2010, NBCC 2015

THIS DESIGN COMPLIES WITH:
- PART 9 OF OBC 2012, OBC 2018
- CSA 086-09, CSA 086-14
- TPIC 2011, TPIC 2014

(65 % OF 23.0 P.S.F. G.S.L. PLUS 8.4 P.S.F. RAIN LOAD) EQUALS 21.0 P.S.F. SPECIFIED ROOF LIVE LOAD

CSI: TC=0.55/1.00 (F-G:1) , BC=0.29/1.00 (J-K:4) , WB=0.12/1.00 (D-M:1) , SSI=0.32/1.00 (F-G:1)

DOL LUMBER=1.00 NAIL=1.00 LS BEND=1.10 COMP=1.10 SHEAR=1.10 TENS= 1.10

COMPANION LIVE LOAD FACTOR = 1.00

TRUSS PLATE MANUFACTURER IS NOT RESPONSIBLE FOR QUALITY CONTROL IN THE TRUSS MANUFACTURING PLANT .

NAIL VALUES

PLATE	GRIP(DRY) (PSI) MAX	MIN	SHEAR (PLI) MAX	MIN	SECTION (PLI) MAX	MIN
MT20	618	354	1667	788	1987	1656

PLATE PLACEMENT TOL. = 0.250 Inches

PLATE ROTATION TOL. = 6.0 Deg.

JSI GRIP= 0.81 (K) (INPUT = 0.90)
JSI METAL= 0.37 (E) (INPUT = 1.00)

A-18023804

JOB NAME	TRUSS NAME	QUANTITY	PLY	JOB DESC.	DRWG NO.
292651	H25P	1	1	TRUSS DESC.	

Alpa Roof Truss, Maple

Version 8.200 S Jan 6 2018 MiTek Industries, Inc. Sun Feb 18 16:26:13 2018 Page 1
ID:DdSMSEW8qE9HTV0gkasOLLzzSIP-J7jM1kJ4pS9AUEZmR1evwzYOX78E4glMnqKwFtzjse8

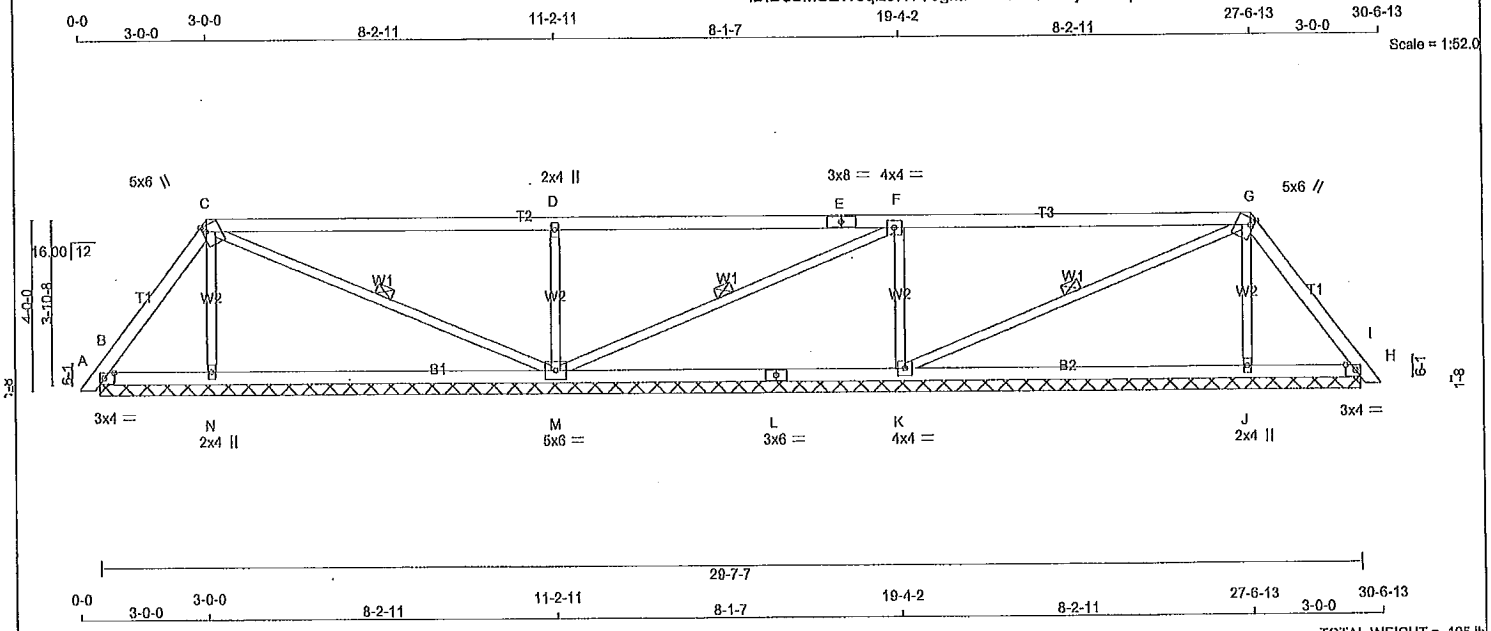

TOTAL WEIGHT = 105 lb

[M]

LUMBER
N. L. G. A. RULES

CHORDS	SIZE		LUMBER	DESCR.
A - C	2x4	DRY	No.2	SPF
C - E	2x4	DRY	No.2	SPF
E - G	2x4	DRY	No.2	SPF
G - I	2x4	DRY	No.2	SPF
B - L	2x4	DRY	No.2	SPF
L - H	2x4	DRY	No.2	SPF
ALL WEBS	2x3	DRY	No.2	SPF

DRY: SEASONED LUMBER.

PLATES (table is in inches)

JT	TYPE	PLATES	W	LEN	Y	X
B	TMB1-I	MT20	3.0	4.0	1.50	2.75
C	TTWW+m	MT20	6.0	6.0	1.75	1.00
D	TMW+w	MT20	2.0	4.0		
E	TS-t	MT20	3.0	8.0		
F	TMWW-t	MT20	4.0	4.0		
G	TTWW+m	MT20	6.0	6.0	1.75	1.00
H	TMB1-I	MT20	3.0	4.0	1.50	2.75
J	BMW1+w	MT20	2.0	4.0		
K	BMWW1-t	MT20	4.0	4.0		
L	BS-t	MT20	3.0	6.0		
M	BMWWW1-t	MT20	6.0	6.0		
N	BMW1+w	MT20	2.0	4.0		

NOTE: Lateral brace(s) shown shall be 1x4 for Part 9 design as per OBC 9.23.13.11, and no less than 2x4 for Part 4 design

REGISTERED PROFESSIONAL ENGINEER
02/18/2018
EDWIN C. FOK
PROVINCE OF ONTARIO

DIMENSIONS, SUPPORTS AND LOADINGS SPECIFIED BY FABRICATOR TO BE VERIFIED BY BUILDING DESIGNER

BEARINGS

JT	FACTORED GROSS REACTION VERT	HORZ	MAXIMUM GROSS REACTION DOWN	HORZ	UPLIFT	FACTORED INPUT BRG IN-SX	REQRD BRG IN-SX
B	199	0	199	0	0	29-7-7 (13-7-13)-2	
N	376	0	376	0	0	29-7-7 (13-7-13)-2	
M	906	0	906	0	0	29-7-7 (13-7-13)-2	
K	842	0	842	0	0	29-7-7 (13-7-13)-2	
J	365	0	365	0	0	29-7-7 (13-7-13)-2	
H	225	0	225	0	0	29-7-7 (13-7-13)-2	

VALUE IN PARENTHESIS INDICATES EFFECTIVE BEARING LENGTH

UNFACTORED REACTIONS

JT	1ST LCASE COMBINED	MAX./MIN. COMPONENT REACTIONS SNOW	LIVE	PERM.LIVE	WIND	DEAD	SOIL
B	137	110 / 0	0 / 0	0 / 0	0 / 0	27 / 0	0 / 0
N	274	134 / 0	0 / 0	0 / 0	0 / 0	139 / 0	0 / 0
M	643	405 / 0	0 / 0	0 / 0	0 / 0	239 / 0	0 / 0
K	600	371 / 0	0 / 0	0 / 0	0 / 0	229 / 0	0 / 0
J	266	129 / 0	0 / 0	0 / 0	0 / 0	138 / 0	0 / 0
H	155	124 / 0	0 / 0	0 / 0	0 / 0	31 / 0	0 / 0

BEARING MATERIAL TO BE SPF NO.2 OR BETTER AT JOINT(S) B, N, M, K, J, H

BRACING
TOP CHORD TO BE SHEATHED OR MAX. PURLIN SPACING = 6.25 FT.
MAX. UNBRACED BOTTOM CHORD LENGTH = 10.00 FT OR RIGID CEILING DIRECTLY APPLIED.

ALL PITCH BREAKS AND PERIMETER CORNER JOINTS MUST BE LATERALLY RESTRAINED.

1 LATERAL BRACE(S) AT 1/ 2 LENGTH OF C-M, F-M, G-K.

LOADING
TOTAL LOAD CASES: (4)

CHORDS

MEMB. FR-TO	MAX. FACTORED FORCE (LBS)	FACTORED VERT. LOAD LC1 (PLF) FROM	TO	MAX CSI (LC)	MAX. UNBRAC LENGTH
A- B	0 / 10	-78.0	-78.0	0.01 (1)	10.00
B- C	-97 / 0	-78.0	-78.0	0.09 (1)	6.25
C- D	0 / 16	-78.0	-78.0	0.71 (1)	10.00
D- E	0 / 15	-78.0	-78.0	0.71 (1)	10.00
E- F	0 / 15	-78.0	-78.0	0.71 (1)	10.00
F- G	-39 / 0	-78.0	-78.0	0.71 (1)	6.25
G- H	-129 / 0	-78.0	-78.0	0.09 (1)	6.25
H- I	0 / 10	-78.0	-78.0	0.01 (1)	10.00
B- N	0 / 56	-18.5	-18.5	0.19 (4)	10.00
N- M	0 / 49	-18.5	-18.5	0.25 (4)	10.00
M- L	0 / 39	-18.5	-18.5	0.25 (4)	10.00
L- K	0 / 39	-18.5	-18.5	0.25 (4)	10.00
K- J	0 / 68	-18.5	-18.5	0.25 (4)	10.00
J- H	0 / 75	-18.5	-18.5	0.19 (4)	10.00

WEBS

MEMB. FR-TO	MAX. FACTORED FORCE (LBS)	MAX CSI (LC)
N- C	-250 / 0	0.06 (1)
C- M	-70 / 0	0.04 (1)
M- D	-701 / 0	0.16 (1)
M- F	-59 / 0	0.03 (1)
K- F	-676 / 0	0.16 (1)
K- G	-31 / 0	0.02 (1)
J- G	-239 / 0	0.06 (1)

DESIGN CRITERIA

SPECIFIED LOADS:

TOP CH.	LL	=	21.0	PSF
	DL	=	6.0	PSF
BOT CH.	LL	=	0.0	PSF
	DL	=	7.4	PSF
TOTAL LOAD		=	34.4	PSF

SPACING = 24.0 IN. C/C

LOADING IN FLAT SECTION BASED ON A SLOPE OF 2.00/12 MINIMUM

THIS TRUSS IS DESIGNED FOR RESIDENTIAL OR SMALL BUILDING REQUIREMENTS OF PART 9, NBCC 2010, NBCC 2015

THIS DESIGN COMPLIES WITH:
- PART 9 OF OBC 2012, OBC 2018
- CSA 086-09, CSA 086-14
- TPIC 2011, TPIC 2014

(55 % OF 23.0 P.S.F. G.S.L. PLUS 8.4 P.S.F. RAIN LOAD) EQUALS 21.0 P.S.F. SPECIFIED ROOF LIVE LOAD

CSI: TC=0.71/1.00 (F-G:1) , BC=0.25/1.00 (J-K:4) , WB=0.16/1.00 (D-M:1) , SSI=0.30/1.00 (F-G:1)

DOL LUMBER=1.00 NAIL=1.00 LS BEND=1.10 COMP=1.10 SHEAR=1.10 TENS= 1.10

COMPANION LIVE LOAD FACTOR = 1.00

TRUSS PLATE MANUFACTURER IS NOT RESPONSIBLE FOR QUALITY CONTROL IN THE TRUSS MANUFACTURING PLANT .

NAIL VALUES

PLATE	GRIP(DRY) (PSI) MAX	MIN	SHEAR (PLI) MAX	MIN	SECTION (PLI) MAX	MIN
MT20	618	354	1667	788	1987	1656

PLATE PLACEMENT TOL. = 0.250 Inches

PLATE ROTATION TOL. = 5.0 Deg.

JSI GRIP= 0.81 (M) (INPUT = 0.90)
JSI METAL= 0.45 (E) (INPUT = 1.00)

A-18023805

JOB NAME	TRUSS NAME	QUANTITY	PLY	JOB DESC.	DRWG NO.
292651	H26P	1	1	TRUSS DESC.	

Alpa Roof Truss, Maple

Version 8.200 S Jan 6 2018 MiTek Industries, Inc. Sun Feb 18 16:26:19 2018 Page 1

ID:DdSMSEW8qE9HTV0gkasOLLzzSIP-7H4dHnOrOlwJC90vnHIJ9EoSjXBEULmE9mnFTXzjso2

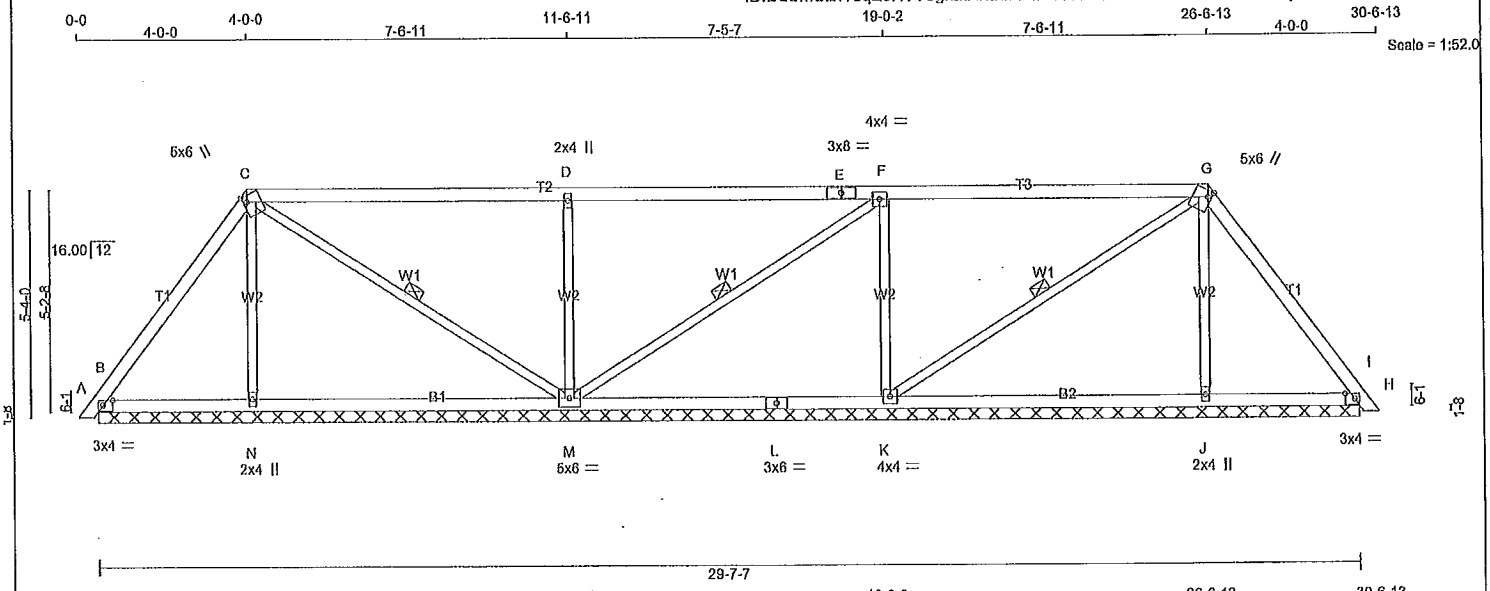

TOTAL WEIGHT = 111 lb

[M]

LUMBER

N. L. G. A. RULES

CHORDS	SIZE		LUMBER	DESCR.
A - C	2x4	DRY	No.2	SPF
C - E	2x4	DRY	No.2	SPF
E - G	2x4	DRY	No.2	SPF
G - I	2x4	DRY	No.2	SPF
B - L	2x4	DRY	No.2	SPF
L - H	2x4	DRY	No.2	SPF
ALL WEBS	2x3	DRY	No.2	SPF

DRY: SEASONED LUMBER.

PLATES (table is in inches)

JT	TYPE	PLATES	W	LEN	Y	X
B	TMB1-I	MT20	3.0	4.0	1.50	2.75
C	TTWW+m	MT20	5.0	6.0	1.75	1.00
D	TMW+w	MT20	2.0	4.0		
E	TS-I	MT20	3.0	8.0		
F	TMWW-I	MT20	4.0	4.0		
G	TTWW+m	MT20	5.0	6.0	1.75	1.00
H	TMB1-I	MT20	3.0	4.0	1.50	2.75
J	BMW1+w	MT20	2.0	4.0		
K	BMWW1-I	MT20	4.0	4.0		
L	BS-I	MT20	3.0	6.0		
M	BMWWW1-I	MT20	5.0	6.0		
N	BMW1+w	MT20	2.0	4.0		

NOTE: Lateral brace(s) shown shall be 1x4 for Part 9 design as per OBC 9.23.13.11, and no less than 2x4 for Part 4 design

REGISTERED PROFESSIONAL ENGINEER
02/18/2018
EDWIN C. FOK
PROVINCE OF ONTARIO

DIMENSIONS, SUPPORTS AND LOADINGS SPECIFIED BY FABRICATOR TO BE VERIFIED BY BUILDING DESIGNER

BEARINGS

JT	FACTORED GROSS REACTION VERT	HORZ	MAXIMUM FACTORED GROSS REACTION DOWN	HORZ	UPLIFT	INPUT BRG IN-SX	REQRD BRG IN-SX
B	261	0	261	0	0	29-7-7 (13-7-13)-8	
N	353	0	353	0	0	29-7-7 (13-7-13)-8	
M	899	0	899	0	0	29-7-7 (13-7-13)-8	
K	750	0	750	0	0	29-7-7 (13-7-13)-8	
J	346	0	346	0	0	29-7-7 (13-7-13)-8	
H	304	0	304	0	0	29-7-7 (13-7-13)-8	

VALUE IN PARENTHESIS INDICATES EFFECTIVE BEARING LENGTH

UNFACTORED REACTIONS

JT	1ST LCASE COMBINED	MAX./MIN. COMPONENT REACTIONS SNOW	LIVE	PERM.LIVE	WIND	DEAD	SOIL
B	182	132 / 0	0 / 0	0 / 0	0 / 0	50 / 0	0 / 0
N	257	127 / 0	0 / 0	0 / 0	0 / 0	130 / 0	0 / 0
M	637	408 / 0	0 / 0	0 / 0	0 / 0	229 / 0	0 / 0
K	534	328 / 0	0 / 0	0 / 0	0 / 0	206 / 0	0 / 0
J	252	123 / 0	0 / 0	0 / 0	0 / 0	129 / 0	0 / 0
H	212	155 / 0	0 / 0	0 / 0	0 / 0	57 / 0	0 / 0

BEARING MATERIAL TO BE SPF NO.2 OR BETTER AT JOINT(S) B, N, M, K, J, H

BRACING

TOP CHORD TO BE SHEATHED OR MAX. PURLIN SPACING = 6.25 FT.
MAX. UNBRACED BOTTOM CHORD LENGTH = 10.00 FT OR RIGID CEILING DIRECTLY APPLIED.

ALL PITCH BREAKS AND PERIMETER CORNER JOINTS MUST BE LATERALLY RESTRAINED.

1 LATERAL BRACE(S) AT 1/ 2 LENGTH OF C-M, F-M, G-K.

LOADING

TOTAL LOAD CASES: (4)

CHORDS

MEMB. FR-TO	MAX. FACTORED FORCE (LBS)	FACTORED VERT. LOAD (PLF) FROM	TO	LC1 MAX CSI (LC)	MAX. UNBRAC LENGTH
A- B	0 / 10	-78.0	-78.0	0.01 (1)	10.00
B- C	-100 / 0	-78.0	-78.0	0.17 (1)	6.25
C- D	0 / 36	-78.0	-78.0	0.60 (1)	10.00
D- E	0 / 36	-78.0	-78.0	0.60 (1)	10.00
E- F	0 / 36	-78.0	-78.0	0.60 (1)	10.00
F- G	-50 / 0	-78.0	-78.0	0.60 (1)	6.25
G- H	-153 / 0	-78.0	-78.0	0.17 (1)	6.25
H- I	0 / 10	-78.0	-78.0	0.01 (1)	10.00
B- N	0 / 58	-18.5	-18.5	0.16 (4)	10.00
N- M	0 / 53	-18.5	-18.5	0.21 (4)	10.00
M- L	0 / 50	-18.5	-18.5	0.21 (4)	10.00
L- K	0 / 50	-18.5	-18.5	0.21 (4)	10.00
K- J	0 / 85	-18.5	-18.5	0.21 (4)	10.00
J- H	0 / 90	-18.5	-18.5	0.16 (4)	10.00

WEBS

MEMB. FR-TO	MAX. FACTORED FORCE (LBS)	MAX CSI (LC)
N- C	-236 / 0	0.09 (1)
C- M	-106 / 0	0.06 (1)
M- D	-643 / 0	0.26 (1)
M- F	-103 / 0	0.06 (1)
K- F	-586 / 0	0.24 (1)
K- G	-41 / 0	0.02 (1)
J- G	-228 / 0	0.09 (1)

DESIGN CRITERIA

SPECIFIED LOADS:

TOP CH.	LL.	=	21.0	PSF
	DL.	=	6.0	PSF
BOT CH.	LL.	=	0.0	PSF
	DL.	=	7.4	PSF
TOTAL LOAD		=	34.4	PSF

SPACING = 24.0 IN. C/C

LOADING IN FLAT SECTION BASED ON A SLOPE OF 2.00/12 MINIMUM

THIS TRUSS IS DESIGNED FOR RESIDENTIAL OR SMALL BUILDING REQUIREMENTS OF PART 9, NBCC 2010, NBCC 2015

THIS DESIGN COMPLIES WITH:
- PART 9 OF OBC 2012, OBC 2018
- CSA 086-09, CSA 086-14
- TPIC 2011, TPIC 2014

(55 % OF 23.0 P.S.F. G.S.L. PLUS 8.4 P.S.F. RAIN LOAD) EQUALS 21.0 P.S.F. SPECIFIED ROOF LIVE LOAD

CSI: TC=0.60/1.00 (D-F:1) , BC=0.21/1.00 (J-K:4) , WB=0.26/1.00 (D-M:1) , SSI=0.28/1.00 (F-G:1)

DOL LUMBER=1.00 NAIL=1.00 LS BEND=1.10 COMP=1.10 SHEAR=1.10 TENS= 1.10

COMPANION LIVE LOAD FACTOR = 1.00

TRUSS PLATE MANUFACTURER IS NOT RESPONSIBLE FOR QUALITY CONTROL IN THE TRUSS MANUFACTURING PLANT .

NAIL VALUES

PLATE	GRIP(DRY) (PSI) MAX	MIN	SHEAR (PLI) MAX	MIN	SECTION (PLI) MAX	MIN
MT20	618	354	1667	788	1987	1656

PLATE PLACEMENT TOL. = 0.250 Inches

PLATE ROTATION TOL. = 5.0 Deg.

JSI GRIP= 0.65 (E) (INPUT = 0.90)
JSI METAL= 0.51 (E) (INPUT = 1.00)

A-18023806

JOB NAME	TRUSS NAME	QUANTITY	PLY	JOB DESC.	DRWG NO.
292651	H27	1	2	TRUSS DESC.	

Alpa Roof Truss, Maple

Version 8.200 S Jan 6 2018 MiTek Industries, Inc. Sun Feb 18 16:34:08 2018 Page 1

ID:DdSMSEW8qE9HTV0gkasOLLzzSIP-y7oAIT2nQnl3kwDgesdqbjeHFnSLORrZYwPRLyzjsW

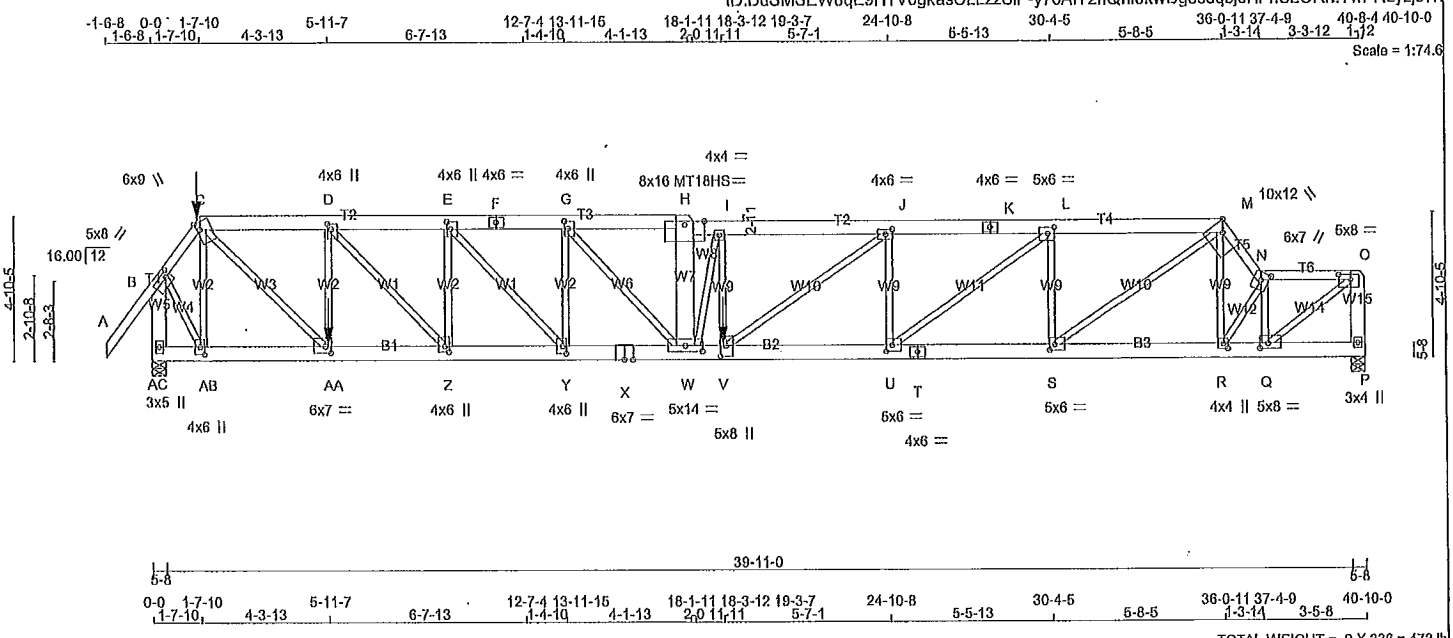

LUMBER
N. L. G. A. RULES

CHORDS	SIZE		LUMBER	DESCR.
A - C	2x4	DRY	No.2	SPF
C - F	2x6	DRY	No.2	SPF
F - H	2x6	DRY	No.2	SPF
H - K	2x6	DRY	No.2	SPF
K - M	2x6	DRY	No.2	SPF
M - N	2x4	DRY	No.2	SPF
N - O	2x4	DRY	No.2	SPF
AC- B	2x6	DRY	No.2	SPF
P - O	2x6	DRY	No.2	SPF
AC- X	2x6	DRY	1650F 1.5E	SPF
X - T	2x6	DRY	1650F 1.5E	SPF
T - P	2x6	DRY	1650F 1.5E	SPF
ALL WEBS EXCEPT	2x3	DRY	No.2	SPF
W - H	2x8	DRY	No.2	SPF

DRY: SEASONED LUMBER.

DESIGN CONSISTS OF 2 TRUSSES BUILT SEPARATELY THEN FASTENED TOGETHER AS FOLLOWS:

CHORDS	#ROWS	SURFACE SPACING (IN)	LOAD(PLF)
TOP CHORDS : (0.122"X3") SPIRAL NAILS			
A- C	1	12	SIDE(61.0)
M- N	1	12	TOP
N- O	1	12	TOP
C- F	2	12	SIDE(37.8)
F- H	2	12	TOP
H- K	2	12	TOP
K- M	2	12	TOP
AC- B	2	12	TOP
P- O	2	12	TOP
BOTTOM CHORDS : (0.122"X3") SPIRAL NAILS			
AC- X	2	12	SIDE(174.2)
X- T	2	12	SIDE(183.1)
T- P	2	12	TOP
WEBS : (0.122"X3") SPIRAL NAILS			
2x3	1	6	
I- V	1	2	SIDE(771.5)
AA- D	1	6	SIDE(140.5)
2x8	2	6	

NOTE: Lateral brace(s) shown shall be 1x4 for Part 9 design as per OBC 9.23.13.11, and no less than 2x4 for Part 4 design

REGISTERED PROFESSIONAL ENGINEER
02/18/2018
EDWIN C. FOK
PROVINCE OF ONTARIO

DIMENSIONS, SUPPORTS AND LOADINGS SPECIFIED BY FABRICATOR TO BE VERIFIED BY BUILDING DESIGNER

BEARINGS

JT	FACTORED GROSS REACTION VERT	HORZ	MAXIMUM FACTORED GROSS REACTION DOWN	HORZ	UPLIFT	INPUT BRG IN-SX	REQRD BRG IN-SX
AC	5547	0	5547	0	0	5-8	3-8
P	3913	0	3913	0	0	5-8	2-2

UNFACTORED REACTIONS

JT	1ST LCASE COMBINED	MAX./MIN. COMPONENT REACTIONS SNOW	LIVE	PERM.LIVE	WIND	DEAD	SOIL
AC	3953	2424 / 0	0 / 0	0 / 0	0 / 0	1529 / 0	0 / 0
P	2790	1703 / 0	0 / 0	0 / 0	0 / 0	1087 / 0	0 / 0

BEARING MATERIAL TO BE SPF NO.2 OR BETTER AT JOINT(S) AC, P

BRACING
TOP CHORD TO BE SHEATHED OR MAX. PURLIN SPACING = 2.89 FT.
MAX. UNBRACED BOTTOM CHORD LENGTH = 10.00 FT OR RIGID CEILING DIRECTLY APPLIED.

ALL PITCH BREAKS AND PERIMETER CORNER JOINTS MUST BE LATERALLY RESTRAINED.

LOADING
TOTAL LOAD CASES: (4)

CHORDS

MEMB. FR-TO	MAX. FACTORED FORCE (LBS)	FACTORED VERT. LOAD LC1 (PLF) FROM	TO	MAX CSI (LC)	MAX. UNBRAC LENGTH
A- B	0 / 52	-78.0	-78.0	0.08 (1)	10.00
B- C	-3525 / 0	-78.0	-78.0	0.12 (1)	4.90
C- D	-6583 / 0	-153.5	-153.5	0.18 (1)	4.52
D- E	-9248 / 0	-78.0	-78.0	0.17 (1)	3.92
E- F	-11540 / 0	-78.0	-78.0	0.26 (1)	3.47
F- G	-11540 / 0	-78.0	-78.0	0.26 (1)	3.47
G- H	-13883 / 0	-78.0	-78.0	0.35 (1)	3.10
H- I	-13913 / 0	-78.0	-78.0	0.36 (1)	3.06
I- J	-14628 / 0	-78.0	-78.0	0.61 (1)	2.89
J- K	-12042 / 0	-78.0	-78.0	0.30 (1)	3.39
K- L	-12042 / 0	-78.0	-78.0	0.30 (1)	3.39
L- M	-8564 / 0	-78.0	-78.0	0.22 (1)	4.02
M- N	-6869 / 0	-78.0	-78.0	0.16 (1)	3.65
N- O	-4940 / 0	-78.0	-78.0	0.17 (1)	4.21
AC- B	-5685 / 0	0.0	0.0	0.29 (1)	6.17
P- O	-3747 / 0	0.0	0.0	0.19 (1)	7.29
AC-AB	0 / 0	-36.4	-36.4	0.07 (1)	10.00
AB-AA	0 / 2025	-36.4	-36.4	0.16 (1)	10.00
AA- Z	0 / 6583	-18.5	-18.5	0.31 (1)	10.00
Z- Y	0 / 9248	-18.5	-18.5	0.41 (1)	10.00
Y- X	0 / 11540	-18.5	-18.5	0.50 (1)	10.00
X- W	0 / 11540	-18.5	-18.5	0.50 (1)	10.00
W- V	0 / 14628	-18.5	-18.5	0.74 (1)	10.00
V- U	0 / 12042	-18.5	-18.5	0.63 (1)	10.00
U- T	0 / 8564	-18.5	-18.5	0.37 (1)	10.00
T- S	0 / 8564	-18.5	-18.5	0.37 (1)	10.00
S- R	0 / 4235	-18.5	-18.5	0.19 (1)	10.00
R- Q	0 / 5114	-18.5	-18.5	0.32 (1)	10.00
Q- P	0 / 0	-18.5	-18.5	0.12 (1)	10.00

WEBS

MEMB. FR-TO	MAX. FACTORED FORCE (LBS)	MAX CSI (LC)
AB- C	-2263 / 0	0.36 (1)
W- H	0 / 417	0.02 (1)
R- M	0 / 2018	0.25 (1)
R- N	-1847 / 0	0.17 (1)
Q- N	-4111 / 0	0.37 (1)
Q- O	0 / 6160	0.76 (1)
B-AB	0 / 3365	0.42 (1)
V- I	0 / 1239	0.15 (1)
AA- D	-3446 / 0	0.54 (1)
Y- G	-2482 / 0	0.39 (1)
C-AA	0 / 6501	0.80 (1)
Z- E	-2802 / 0	0.44 (1)
D- Z	0 / 3952	0.49 (1)
E- Y	0 / 3398	0.42 (1)
G- W	0 / 3468	0.43 (1)
V- J	0 / 3227	0.40 (1)
U- J	-2429 / 0	0.36 (1)
U- L	0 / 4373	0.54 (1)
S- L	-3103 / 0	0.45 (1)
S- M	0 / 5366	0.66 (1)
W- I	-2563 / 0	0.39 (1)

FACTORED CONCENTRATED LOADS (LBS)

JT	LOC.	LC1	MAX-	MAX+	FACE	DIR.	TYPE
C	1-7-10	-93	-93	---	FRONT	VERT	TOTAL
V	19-3-8	-3659	-3659	---	FRONT	VERT	TOTAL
AA	5-11-6	-1206	-1206	---	FRONT	VERT	TOTAL

DESIGN CRITERIA

*** SPECIAL LOADS ANALYSIS ***
GEOMETRY AND/OR BASIC LOADS CHANGED BY USER.
LOADS WERE DERIVED FROM USER INPUT
NO FURTHER MODIFICATIONS WERE MADE

SPECIFIED LOADS:

TOP CH.	LL	=	21.0	PSF
	DL	=	6.0	PSF
BOT CH.	LL	=	0.0	PSF
	DL	=	7.4	PSF
TOTAL LOAD		=	34.4	PSF

SPACING = 24.0 IN. C/C

LOADING IN ALL FLAT SECTIONS BASED ON A SLOPE OF 2.00/12 MINIMUM

GIRDER TYPE: CPrimeHip
LEFT SETBACK = 1-7-10
RIGHT SETBACK = 0-0
END SETBACK = 5-10-8
END WALL WIDTH = 0-0
CORNER FRAMING TYPE: CONVENTIONAL
END JACK TYPE: CONVENTIONAL
APPLIED TO FRONT SIDE
- ADDT'L LOADS BASED ON 55 % OF GSL.
LOADS APPLIED TO FIRST 5-11-6 OF SPAN MEASURED FROM THE LEFT.

*** NON STANDARD GIRDER ***
ADDT'L USER-DEFINED LOADS APPLIED TO ALL LOAD CASES.

THIS TRUSS IS DESIGNED FOR RESIDENTIAL OR SMALL BUILDING REQUIREMENTS OF PART 9, NBCC 2010, NBCC 2015

THIS DESIGN COMPLIES WITH:
- PART 9 OF OBC 2012, OBC 2018
- CSA 086-09, CSA 086-14
- TPIC 2011, TPIC 2014

DESIGN ASSUMPTIONS
-OVERHANG NOT TO BE ALTERED OR CUT OFF.

(55 % OF 23.0 P.S.F. G.S.L. PLUS 8.4 P.S.F. RAIN LOAD) EQUALS 21.0 P.S.F. SPECIFIED ROOF LIVE LOAD

ALLOWABLE DEFL.(LL)= L/360 (1.36")
CALCULATED VERT. DEFL.(LL) = L/ 999 (0.37")
ALLOWABLE DEFL.(TL)= L/360 (1.36")
CALCULATED VERT. DEFL.(TL) = L/ 675 (0.73")

CSI: TC=0.61/1.00 (I-J:1) , BC=0.74/1.00 (V-W:1) , WB=0.80/1.00 (C-AA:1) , SSI=0.16/1.00 (V-W:1)

DOL LUMBER=1.00 NAIL=1.00 LS BEND=1.00 COMP=1.00 SHEAR=1.00 TENS= 1.00

COMPANION LIVE LOAD FACTOR = 1.00

AUTOSOLVE HEELS OFF

A-18023807

CONTINUED ON PAGE 2

JOB NAME	TRUSS NAME	QUANTITY	PLY	JOB DESC.	DRWG NO.
292651	H27	1	2	TRUSS DESC.	

NAILS TO BE DRIVEN FROM ONE SIDE ONLY.

GIRDER NAILING ASSUMES NAILED HANGERS ARE FASTENED WITH MIN. 3-0 INCH NAILS.

PLATES (table is in inches)

JT	TYPE	PLATES	W	LEN	Y	X
B	TMVW-t	MT20	5.0	8.0	2.00	2.00
C	TTWW+m	MT20	6.0	9.0	3.00	1.25
D	TMWW+t	MT20	4.0	6.0	2.25	1.50
E	TMWW+t	MT20	4.0	6.0	3.00	1.50
F	TS-t	MT20	4.0	6.0		
G	TMWW+t	MT20	4.0	6.0	3.00	1.50
H	TTWM+t	MT18HS	8.0	16.0		Edge
I	TMWW-t	MT20	4.0	4.0		
J	TMWW-t	MT20	4.0	6.0	2.00	2.75
K	TS-t	MT20	4.0	6.0		
L	TMWW-t	MT20	5.0	6.0	2.50	2.50
M	TTWW-h	MT20	10.0	12.0	Edge	4.50
N	TTWW+m	MT20	6.0	7.0	3.00	2.75
O	TVMW-t	MT20	5.0	8.0	2.00	4.75
P	BMV1+p	MT20	3.0	4.0		
Q	BMWW-t	MT20	5.0	8.0	2.00	3.25
R	BMWW+t	MT20	4.0	4.0	2.00	1.75
S	BMWW-t	MT20	5.0	6.0	2.25	2.00
T	BS-t	MT20	4.0	6.0		
U	BMWW-t	MT20	5.0	6.0	2.50	2.50
V	BMWW+t	MT20	5.0	8.0	4.25	2.25
W	BMWWW-t	MT20	5.0	14.0	2.25	7.00
X	BS-t	MT20	6.0	7.0		
Y	BMWW+t	MT20	4.0	6.0	3.00	1.50
Z	BMWW+t	MT20	4.0	6.0	2.25	1.50
AA	BMWW-t	MT20	6.0	7.0	2.50	2.25
AB	BMWW+t	MT20	4.0	6.0	3.00	1.75
AC	BMV1+p	MT20	3.0	5.0		

Edge - INDICATES REFERENCE CORNER OF PLATE TOUCHES EDGE OF CHORD.

HANGERS NOTES

1) SPECIAL HANGER(S) OR CONNECTION(S) REQUIRED TO SUPPORT CONCENTRATED LOAD(S) 93.0 lbs FACTORED DOWN AT 1-7-10 ON TOP CHORD, AND 3659.3 lbs FACTORED DOWN AT 19-3-8, AND 1206.2 lbs FACTORED DOWN AT 5-11-6 ON BOTTOM CHORD. DESIGN FOR UNSPECIFIED CONNECTION(S) IS DELEGATED TO THE BUILDING DESIGNER.

NOTE: Lateral brace(s) shown shall be 1x4 for Part 9 design as per OBC 9.23.13.11, and no less than 2x4 for Part 4 design

REGISTERED PROFESSIONAL ENGINEER
02/18/2018
EDWIN C. FOK
PROVINCE OF ONTARIO

TRUSS PLATE MANUFACTURER IS NOT RESPONSIBLE FOR QUALITY CONTROL IN THE TRUSS MANUFACTURING PLANT.

NAIL VALUES

PLATE	GRIP(DRY) (PSI) MAX	MIN	SHEAR (PLI) MAX	MIN	SECTION (PLI) MAX	MIN
MT20	618	354	1667	788	1987	1656
MT18HS	511	354	2455	1362	3004	2010

PLATE PLACEMENT TOL. = 0.250 Inches

PLATE ROTATION TOL. = 5.0 Deg.

JSI GRIP= 0.90 (S) (INPUT = 0.90)
JSI METAL= 0.92 (T) (INPUT = 1.00)

A-18023807(2)

JOB NAME	TRUSS NAME	QUANTITY	PLY	JOB DESC.	DRWG NO.
292651	H32T	2	1	TRUSS DESC.	

Alpa Roof Truss, Maple

Version 8.200 S Jan 6 2018 MiTek Industries, Inc. Sun Feb 18 16:26:57 2018 Page 1

ID:DdSMSEW8qE9HTV0gkasOLLzzSIP-0bN?GnrhR_iwm_wD0GQDIFN3fs6GNXlquq_FoKzJsdS

Scale = 1:55.3

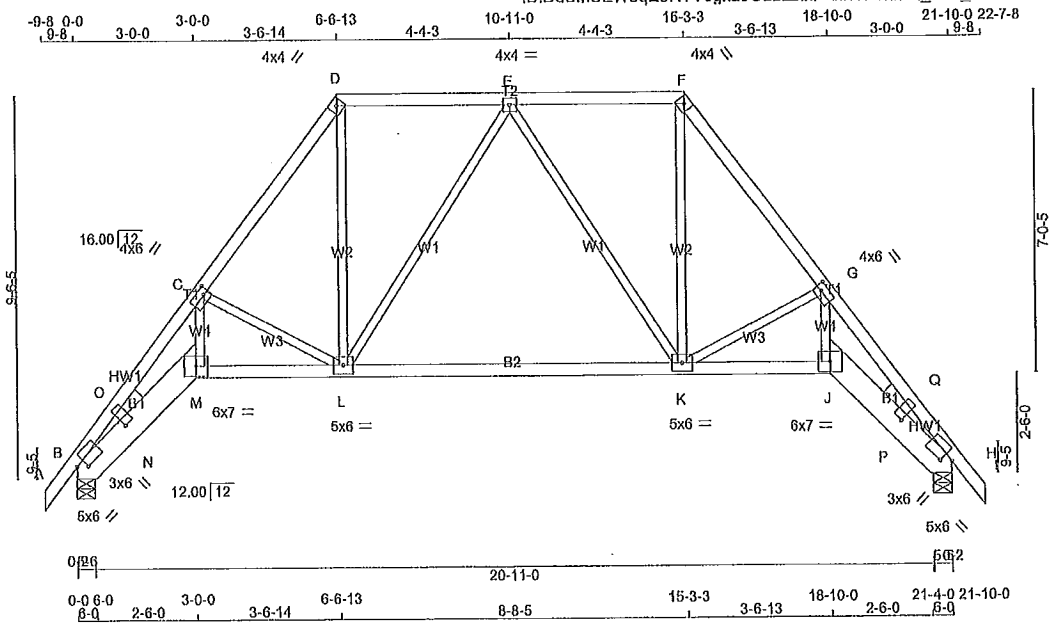

TOTAL WEIGHT = 2 X 115 = 229 lb (M)(F)

LUMBER

N. L. G. A. RULES

CHORDS	SIZE		LUMBER	DESCR.
A - D	2x4	DRY	No.2	SPF
D - F	2x4	DRY	No.2	SPF
F - I	2x4	DRY	No.2	SPF
B - M	2x8	DRY	No.2	SPF
M - J	2x4	DRY	No.2	SPF
J - H	2x8	DRY	No.2	SPF
ALL WEBS	2x3	DRY	No.2	SPF

DRY: SEASONED LUMBER.

PLATES (table is in inches)

JT	TYPE	PLATES	W	LEN	Y	X
B	TMB1-I	MT20	5.0	6.0	2.25	2.75
B	WP+I	MT20	3.0	6.0	1.75	19.00
C	TMWW-I	MT20	4.0	6.0	2.00	1.75
D	TTW-h	MT20	4.0	4.0		
E	TMWW-I	MT20	4.0	4.0		
F	TTW-h	MT20	4.0	4.0		
G	TMWW-I	MT20	4.0	6.0	2.00	1.75
H	TMB1-I	MT20	5.0	6.0	2.25	2.75
H	WP+I	MT20	3.0	6.0	1.75	19.00
J	BBW-I	MT20	6.0	7.0		
K	BMWWW-I	MT20	5.0	6.0		
L	BMWWW-I	MT20	5.0	6.0		
M	BBW-I	MT20	6.0	7.0		

NOTE: Lateral brace(s) shown shall be 1x4 for Part 9 design as per OBC 9.23.13.11, and no less than 2x4 for Part 4 design

REGISTERED PROFESSIONAL ENGINEER
02/18/2018
EDWIN C. FOK
PROVINCE OF ONTARIO

DIMENSIONS, SUPPORTS AND LOADINGS SPECIFIED BY FABRICATOR TO BE VERIFIED BY BUILDING DESIGNER

BEARINGS

JT	FACTORED GROSS REACTION VERT	HORZ	MAXIMUM FACTORED GROSS REACTION DOWN	HORZ	UPLIFT	INPUT BRG IN-SX	REQRD BRG IN-SX	HEEL WEDGE
B	1124	0	1124	0	0	5-8 (5-8)	1-8	2x4 L
H	1124	0	1124	0	0	5-8 (5-8)	1-8	2x4 R

VALUE IN PARENTHESIS INDICATES EFFECTIVE BEARING LENGTH

BEVELED PLATE OR SHIM REQUIRED TO PROVIDE FULL BEARING SURFACE WITH TRUSS CHORD AT JT(S): B , H

ALLOW FOR 0.3" OF HORIZONTAL MOVEMENT DUE TO TOTAL LOAD.

UNFACTORED REACTIONS

JT	1ST LCASE COMBINED	MAX./MIN. COMPONENT REACTIONS SNOW	LIVE	PERM.LIVE	WIND	DEAD	SOIL
B	800	496 / 0	0 / 0	0 / 0	0 / 0	303 / 0	0 / 0
H	800	496 / 0	0 / 0	0 / 0	0 / 0	303 / 0	0 / 0

BEARING MATERIAL TO BE SPF NO.2 OR BETTER AT JOINT(S) B, H

BRACING

TOP CHORD TO BE SHEATHED OR MAX. PURLIN SPACING = 3.76 FT.
MAX. UNBRACED BOTTOM CHORD LENGTH = 10.00 FT OR RIGID CEILING DIRECTLY APPLIED.

ALL PITCH BREAKS AND PERIMETER CORNER JOINTS MUST BE LATERALLY RESTRAINED.

LOADING

TOTAL LOAD CASES: (4)

CHORDS

MEMB. FR-TO	MAX. FACTORED FORCE (LBS)	FACTORED VERT. LOAD LC1 (PLF) FROM	TO	MAX CSI (LC)	MAX. UNBRAC LENGTH
A- B	0 / 20	-78.0	-78.0	0.05 (1)	10.00
B- O	-3287 / 0	-78.0	-78.0	0.17 (1)	3.76
O- C	-2628 / 0	-78.0	-78.0	0.14 (1)	4.18
C- D	-1224 / 0	-78.0	-78.0	0.18 (1)	5.62
D- E	-739 / 0	-78.0	-78.0	0.19 (1)	6.25
E- F	-739 / 0	-78.0	-78.0	0.19 (1)	6.25
F- G	-1224 / 0	-78.0	-78.0	0.18 (1)	5.62
G- Q	-2628 / 0	-78.0	-78.0	0.14 (1)	4.18
Q- H	-3287 / 0	-78.0	-78.0	0.17 (1)	3.76
H- I	0 / 20	-78.0	-78.0	0.05 (1)	10.00
B- N	0 / 2444	-18.5	-18.5	0.40 (1)	10.00
N- M	0 / 2004	-18.5	-18.5	0.35 (1)	10.00
M- L	0 / 1489	-18.5	-18.5	0.36 (1)	10.00
L- K	0 / 866	-18.5	-18.5	0.30 (4)	10.00
K- J	0 / 1489	-18.5	-18.5	0.36 (1)	10.00
J- P	0 / 2004	-18.5	-18.5	0.35 (1)	10.00
P- H	0 / 2444	-18.5	-18.5	0.40 (1)	10.00

WEBS

MEMB. FR-TO	MAX. FACTORED FORCE (LBS)	MAX CSI (LC)
M- C	0 / 1347	0.30 (1)
C- L	-673 / 0	0.25 (1)
L- D	0 / 710	0.16 (1)
K- F	0 / 710	0.16 (1)
K- G	-673 / 0	0.25 (1)
J- G	0 / 1347	0.30 (1)
L- E	-237 / 0	0.31 (1)
E- K	-237 / 0	0.31 (1)
N- O	0 / 659	0.00 (1)
P- Q	0 / 659	0.00 (1)

DESIGN CRITERIA

SPECIFIED LOADS:

TOP CH.	LL	=	21.0	PSF
	DL	=	6.0	PSF
BOT CH.	LL	=	0.0	PSF
	DL	=	7.4	PSF
TOTAL LOAD		=	34.4	PSF

SPACING = 24.0 IN. C/C

LOADING IN FLAT SECTION BASED ON A SLOPE OF 2.00/12 MINIMUM

THIS TRUSS IS DESIGNED FOR RESIDENTIAL OR SMALL BUILDING REQUIREMENTS OF PART 9, NBCC 2010, NBCC 2015

THIS DESIGN COMPLIES WITH:
- PART 9 OF OBC 2012, OBC 2018
- CSA 086-09, CSA 086-14
- TPIC 2011, TPIC 2014

(65 % OF 23.0 P.S.F. G.S.L. PLUS 8.4 P.S.F. RAIN LOAD) EQUALS 21.0 P.S.F. SPECIFIED ROOF LIVE LOAD

ALLOWABLE DEFL.(LL)= L/360 (0.73")
CALCULATED VERT. DEFL.(LL) = L/ 999 (0.08")
ALLOWABLE DEFL.(TL)= L/360 (0.73")
CALCULATED VERT. DEFL.(TL) = L/ 999 (0.24")

CSI: TC=0.19/1.00 (D-E:1) , BC=0.40/1.00 (B-N:1) , WB=0.31/1.00 (E-L:1) , SSI=0.16/1.00 (D-E:1)

DOL LUMBER=1.00 NAIL=1.00 LS BEND=1.10 COMP=1.10 SHEAR=1.10 TENS= 1.10

COMPANION LIVE LOAD FACTOR = 1.00

TRUSS PLATE MANUFACTURER IS NOT RESPONSIBLE FOR QUALITY CONTROL IN THE TRUSS MANUFACTURING PLANT .

NAIL VALUES

PLATE	GRIP(DRY) (PSI) MAX	MIN	SHEAR (PLI) MAX	MIN	SECTION (PLI) MAX	MIN
MT20	618	354	1667	788	1987	1656

PLATE PLACEMENT TOL. = 0.250 Inches

PLATE ROTATION TOL. = 5.0 Deg.

JSI GRIP= 0.88 (K) (INPUT = 0.90)
JSI METAL= 0.67 (H) (INPUT = 1.00)

A-18023812

JOB NAME	TRUSS NAME	QUANTITY	PLY	JOB DESC.	DRWG NO.
292651	H33A	3	1	TRUSS DESC.	

Alpa Roof Truss, Maple

Version 8.200 S Jan 6 2018 MiTek Industries, Inc. Sun Feb 18 16:27:04 2018 Page 1

ID:DdSMSEW8qE9HTV0gkasOLLzzSIP-JxlekAx4o7bx63yZwE2tUjADLgV?WglsVGA7YQzjsdL

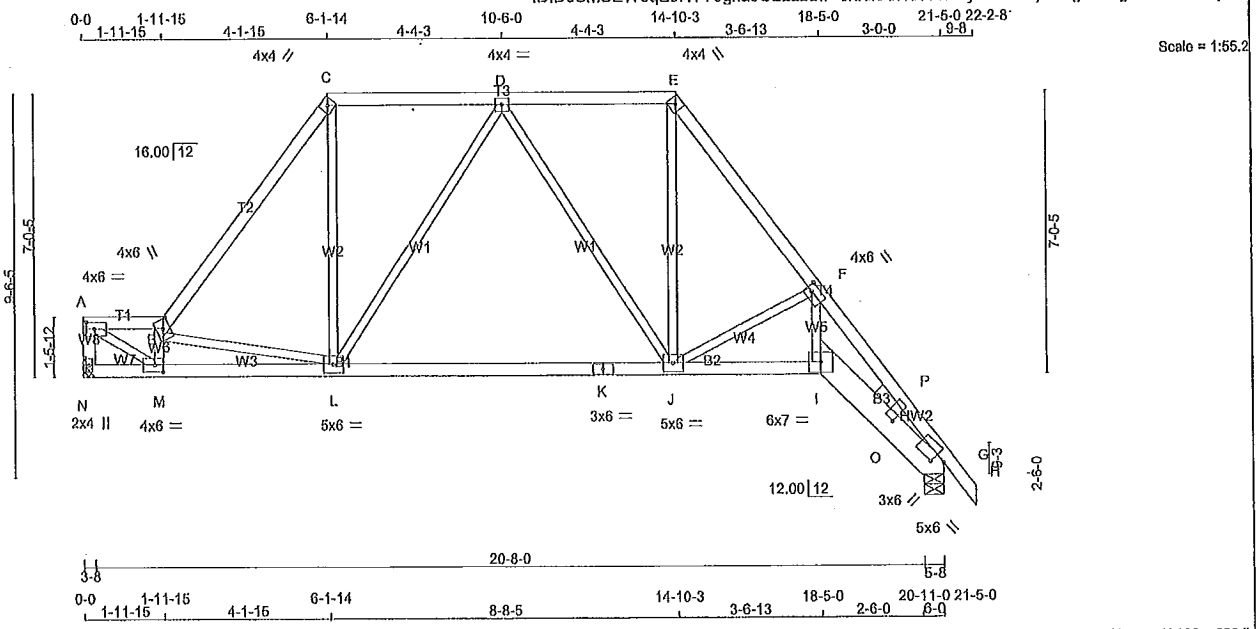

TOTAL WEIGHT = 3 X 103 = 309 lb

[M]

LUMBER

N. L. G. A. RULES

CHORDS	SIZE		LUMBER	DESCR.
N - A	2x4	DRY	No.2	SPF
A - B	2x4	DRY	No.2	SPF
B - C	2x4	DRY	No.2	SPF
C - E	2x4	DRY	No.2	SPF
E - H	2x4	DRY	No.2	SPF
N - K	2x4	DRY	No.2	SPF
K - I	2x4	DRY	No.2	SPF
I - G	2x8	DRY	No.2	SPF
ALL WEBS	2x3	DRY	No.2	SPF

DRY: SEASONED LUMBER.

PLATES (table is in inches)

JT	TYPE	PLATES	W	LEN	Y	X
A	TMVW-t	MT20	4.0	6.0	2.00	2.50
B	TTWW+m	MT20	4.0	6.0	2.75	2.00
C	TTW-h	MT20	4.0	4.0		
D	TMWW-t	MT20	4.0	4.0		
E	TTW-h	MT20	4.0	4.0		
F	TMWW-t	MT20	4.0	6.0	2.00	1.75
G	TMB1-t	MT20	5.0	6.0	2.25	3.00
G	WP+l	MT20	3.0	6.0	1.50	19.25
I	BBW-l	MT20	6.0	7.0		
J	BMWWW-t	MT20	5.0	6.0		
K	BS-t	MT20	3.0	6.0		
L	BMWWW-t	MT20	5.0	6.0		
M	BMWW-t	MT20	4.0	6.0	2.00	2.50
N	BMV1+p	MT20	2.0	4.0		

NOTE: Lateral brace(s) shown shall be 1x4 for Part 9 design as per OBC 9.23.13.11, and no less than 2x4 for Part 4 design

REGISTERED PROFESSIONAL ENGINEER
02/18/2018
EDWIN C. FOK
PROVINCE OF ONTARIO

DIMENSIONS, SUPPORTS AND LOADINGS SPECIFIED BY FABRICATOR TO BE VERIFIED BY BUILDING DESIGNER

BEARINGS

JT	FACTORED GROSS REACTION VERT	HORZ	MAXIMUM FACTORED GROSS REACTION DOWN	HORZ	UPLIFT	INPUT BRG IN-SX	REQRD BRG IN-SX	HEEL WEDGE
N	1033	0	1033	0	0	HANGER BY OTHERS MIN. SEAT SIZE: 1-8		
G	1104	0	1104	0	0	5-8	1-8	2x4 R

UNFACTORED REACTIONS

JT	1ST LCASE COMBINED	MAX./MIN. COMPONENT REACTIONS SNOW	LIVE	PERM.LIVE	WIND	DEAD	SOIL
N	737	450 / 0	0 / 0	0 / 0	0 / 0	287 / 0	0 / 0
G	786	488 / 0	0 / 0	0 / 0	0 / 0	298 / 0	0 / 0

BEARING MATERIAL TO BE SPF NO.2 OR BETTER AT JOINT(S) G

BRACING

TOP CHORD TO BE SHEATHED OR MAX. PURLIN SPACING = 3.77 FT.
MAX. UNBRACED BOTTOM CHORD LENGTH = 10.00 FT OR RIGID CEILING DIRECTLY APPLIED.

ALL PITCH BREAKS AND PERIMETER CORNER JOINTS MUST BE LATERALLY RESTRAINED.

LOADING

TOTAL LOAD CASES: (4)

CHORDS

MEMB. FR-TO	MAX. FACTORED FORCE (LBS)	FACTORED VERT. LOAD LC1 (PLF) FROM	TO	MAX CSI (LC)	MAX. UNBRAC LENGTH
N- A	-980 / 0	0.0	0.0	0.10 (1)	7.81
A- B	-1493 / 0	-78.0	-78.0	0.08 (1)	5.30
B- C	-1142 / 0	-78.0	-78.0	0.28 (1)	5.63
C- D	-700 / 0	-78.0	-78.0	0.24 (1)	6.25
D- E	-720 / 0	-78.0	-78.0	0.25 (1)	6.25
E- F	-1192 / 0	-78.0	-78.0	0.19 (1)	5.65
F- P	-2679 / 0	-78.0	-78.0	0.15 (1)	4.19
P- G	-3220 / 0	-78.0	-78.0	0.19 (1)	3.77
G- H	0 / 20	-78.0	-78.0	0.05 (1)	10.00
N- M	0 / 0	-18.5	-18.5	0.09 (1)	10.00
M- L	0 / 1579	-18.5	-18.5	0.39 (1)	10.00
L- K	0 / 836	-18.5	-18.5	0.30 (4)	10.00
K- J	0 / 836	-18.5	-18.5	0.30 (4)	10.00
J- I	0 / 1462	-18.5	-18.5	0.35 (1)	10.00
I- O	0 / 1970	-18.5	-18.5	0.35 (1)	10.00
O- G	0 / 2394	-18.5	-18.5	0.39 (1)	10.00

WEBS

MEMB. FR-TO	MAX. FACTORED FORCE (LBS)	MAX CSI (LC)
A- M	0 / 1763	0.40 (1)
M- B	-958 / 0	0.14 (1)
B- L	-925 / 0	0.31 (1)
L- C	0 / 613	0.14 (1)
L- D	-267 / 0	0.34 (1)
D- J	-217 / 0	0.29 (1)
J- E	0 / 685	0.15 (1)
J- F	-864 / 0	0.25 (1)
I- F	0 / 1328	0.30 (1)
O- P	0 / 637	0.00 (1)

DESIGN CRITERIA

SPECIFIED LOADS:

TOP CH.	LL =	21.0	PSF
	DL =	6.0	PSF
BOT CH.	LL =	0.0	PSF
	DL =	7.4	PSF
TOTAL LOAD	=	34.4	PSF

SPACING = 24.0 IN. C/C

LOADING IN ALL FLAT SECTIONS BASED ON A SLOPE OF 2.00/12 MINIMUM

THIS TRUSS IS DESIGNED FOR RESIDENTIAL OR SMALL BUILDING REQUIREMENTS OF PART 9, NBCC 2010, NBCC 2015

THIS DESIGN COMPLIES WITH:
- PART 9 OF OBC 2012, OBC 2018
- CSA 086-09, CSA 086-14
- TPIC 2011, TPIC 2014

(55 % OF 23.0 P.S.F. G.S.L. PLUS 8.4 P.S.F. RAIN LOAD) EQUALS 21.0 P.S.F. SPECIFIED ROOF LIVE LOAD

ALLOWABLE DEFL.(LL)= L/360 (0.71")
CALCULATED VERT. DEFL..(LL) = L/ 999 (0.07")
ALLOWABLE DEFL.(TL)= L/360 (0.71")
CALCULATED VERT. DEFL.(TL) = L/ 999 (0.20")

CSI: TC=0.28/1.00 (B-C:1) , BC=0.39/1.00 (L-M:1) , WB=0.40/1.00 (A-M:1) , SSI=0.16/1.00 (C-D:1)

DOL LUMBER=1.00 NAIL=1.00 LS BEND=1.10 COMP=1.10 SHEAR=1.10 TENS= 1.10

COMPANION LIVE LOAD FACTOR = 1.00

TRUSS PLATE MANUFACTURER IS NOT RESPONSIBLE FOR QUALITY CONTROL IN THE TRUSS MANUFACTURING PLANT .

NAIL VALUES

PLATE	GRIP(DRY) (PSI) MAX	MIN	SHEAR (PLI) MAX	MIN	SECTION (PLI) MAX	MIN
MT20	618	354	1667	788	1987	1666

PLATE PLACEMENT TOL. = 0.250 Inches

PLATE ROTATION TOL. = 6.0 Deg.

JSI GRIP= 0.88 (J) (INPUT = 0.90)
JSI METAL= 0.66 (G) (INPUT = 1.00)

A-18023813

JOB NAME	TRUSS NAME	QUANTITY	PLY	JOB DESC.	DRWG NO.
292651	H33T	1	1	TRUSS DESC.	

Alpa Roof Truss, Maple

Version 8.200 S Jan 6 2018 MiTek Industries, Inc. Sun Feb 18 16:27:11 2018 Page 1

ID:DdSMSEW8qE9HTV0gkasOLLzzSIP-cHDHCZ0T8HTxS8?vqChWGCyRBVulfrFu6sN?IWzjsdE

Scale = 1:56.1

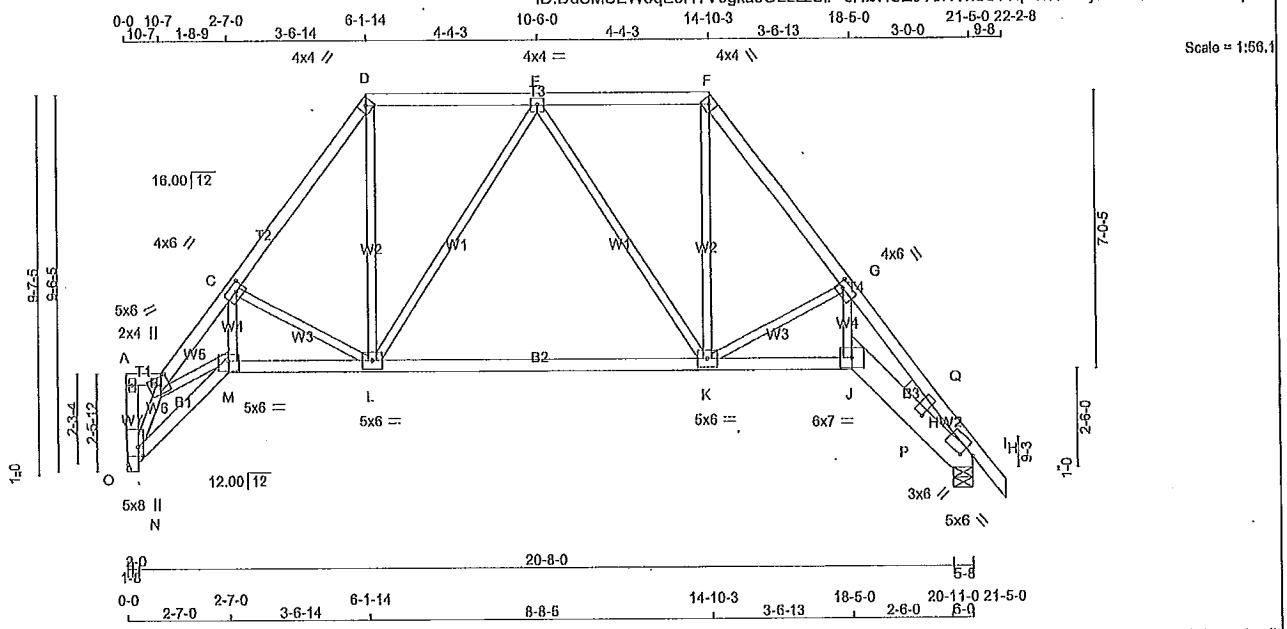

TOTAL WEIGHT = 108 lb

[M]

LUMBER

N. L. G. A. RULES

CHORDS	SIZE		LUMBER	DESCR.
O - A	2x4	DRY	No.2	SPF
A - B	2x4	DRY	No.2	SPF
B - D	2x4	DRY	No.2	SPF
D - F	2x4	DRY	No.2	SPF
F - I	2x4	DRY	No.2	SPF
N - M	2x4	DRY	No.2	SPF
M - J	2x4	DRY	No.2	SPF
J - H	2x8	DRY	No.2	SPF
ALL WEBS	2x3	DRY	No.2	SPF

DRY: SEASONED LUMBER.

PLATES (table is in inches)

JT	TYPE	PLATES	W	LEN	Y	X
A	TMV+p	MT20	2.0	4.0		
B	TTWW-m	MT20	5.0	6.0	2.50	2.50
C	TMWW-t	MT20	4.0	6.0	2.00	2.50
D	TTW-h	MT20	4.0	4.0		
E	TMWW-t	MT20	4.0	4.0		
F	TTW-h	MT20	4.0	4.0		
G	TMWW-t	MT20	4.0	6.0	2.00	1.75
H	TMB1-l	MT20	5.0	6.0	2.25	3.00
H	WP+l	MT20	3.0	6.0	1.50	19.25
J	BBW-l	MT20	6.0	7.0		
K	BMWWW-t	MT20	5.0	6.0		
L	BMWWW-t	MT20	5.0	6.0		
M	BBWW-l	MT20	5.0	6.0	3.00	3.00
N	BVMW+p	MT20	5.0	8.0	2.75	1.50

NOTE: Lateral brace(s) shown shall be 1x4 for Part 9 design as per OBC 9.23.13.11, and no less than 2x4 for Part 4 design

REGISTERED PROFESSIONAL ENGINEER
02/18/2018
EDWIN C. FOK
PROVINCE OF ONTARIO

DIMENSIONS, SUPPORTS AND LOADINGS SPECIFIED BY FABRICATOR TO BE VERIFIED BY BUILDING DESIGNER

BEARINGS

JT	FACTORED GROSS REACTION VERT	HORZ	MAXIMUM FACTORED GROSS REACTION DOWN	HORZ	UPLIFT	INPUT BRG	REQRD BRG	HEEL WEDGE
O	1033	0	1033	0	0	IN-SX	IN-SX	
						HANGER BY OTHERS		
						MIN. SEAT SIZE: 1-8		
H	1104	0	1104	0	0	5-8	1-8	2x4 R

ALLOW FOR 0.3" OF HORIZONTAL MOVEMENT DUE TO TOTAL LOAD

UNFACTORED REACTIONS

JT	1ST LCASE COMBINED	MAX./MIN. COMPONENT REACTIONS SNOW	LIVE	PERM.LIVE	WIND	DEAD	SOIL
O	737	450 / 0	0 / 0	0 / 0	0 / 0	287 / 0	0 / 0
H	786	488 / 0	0 / 0	0 / 0	0 / 0	298 / 0	0 / 0

BEARING MATERIAL TO BE SPF NO.2 OR BETTER AT JOINT(S) H

BRACING

TOP CHORD TO BE SHEATHED OR MAX. PURLIN SPACING = 3.77 FT.
MAX. UNBRACED BOTTOM CHORD LENGTH = 10.00 FT OR RIGID CEILING DIRECTLY APPLIED.

ALL PITCH BREAKS AND PERIMETER CORNER JOINTS MUST BE LATERALLY RESTRAINED.

LOADING

TOTAL LOAD CASES: (4)

CHORDS

MEMB. FR-TO	MAX. FACTORED FORCE (LBS)	FACTORED VERT. LOAD LC1 (PLF) FROM	TO	MAX CSI (LC)	MAX. UNBRAC LENGTH
O- N	-1033 / 0	0.0	0.0	0.10 (1)	7.72
N- A	-34 / 0	0.0	0.0	0.00 (1)	7.81
A- B	0 / 0	-78.0	-78.0	0.01 (1)	10.00
B- C	-2106 / 0	-78.0	-78.0	0.13 (1)	4.57
C- D	-1164 / 0	-78.0	-78.0	0.15 (1)	5.75
D- E	-695 / 0	-78.0	-78.0	0.24 (1)	6.25
E- F	-721 / 0	-78.0	-78.0	0.25 (1)	6.25
F- G	-1194 / 0	-78.0	-78.0	0.19 (1)	5.65
G- Q	-2579 / 0	-78.0	-78.0	0.15 (1)	4.19
Q- H	-3220 / 0	-78.0	-78.0	0.19 (1)	3.77
H- I	0 / 20	-78.0	-78.0	0.05 (1)	10.00
N- M	0 / 914	-18.5	-18.5	0.17 (1)	10.00
M- L	0 / 1252	-18.5	-18.5	0.33 (4)	10.00
L- K	0 / 835	-18.5	-18.5	0.29 (4)	10.00
K- J	0 / 1462	-18.5	-18.5	0.36 (1)	10.00
J- P	0 / 1970	-18.5	-18.5	0.35 (1)	10.00
P- H	0 / 2394	-18.5	-18.5	0.39 (1)	10.00

WEBS

MEMB. FR-TO	MAX. FACTORED FORCE (LBS)	MAX CSI (LC)
N- B	-1744 / 0	0.27 (1)
B- M	0 / 662	0.16 (1)
M- C	0 / 835	0.19 (1)
C- L	-651 / 0	0.19 (1)
L- D	0 / 668	0.15 (1)
K- F	0 / 686	0.15 (1)
K- G	-863 / 0	0.25 (1)
J- G	0 / 1326	0.30 (1)
L- E	-261 / 0	0.35 (1)
E- K	-213 / 0	0.28 (1)
P- Q	0 / 637	0.00 (1)

DESIGN CRITERIA

SPECIFIED LOADS:

TOP CH.	LL =	21.0	PSF
	DL =	6.0	PSF
BOT CH.	LL =	0.0	PSF
	DL =	7.4	PSF
TOTAL LOAD	=	34.4	PSF

SPACING = 24.0 IN. C/C

LOADING IN ALL FLAT SECTIONS BASED ON A SLOPE OF 2.00/12 MINIMUM

THIS TRUSS IS DESIGNED FOR RESIDENTIAL OR SMALL BUILDING REQUIREMENTS OF PART 9, NBCC 2010, NBCC 2015

THIS DESIGN COMPLIES WITH:
- PART 9 OF OBC 2012, OBC 2018
- CSA 086-09, CSA 086-14
- TPIC 2011, TPIC 2014

(55 % OF 23.0 P.S.F. G.S.L. PLUS 8.4 P.S.F. RAIN LOAD) EQUALS 21.0 P.S.F. SPECIFIED ROOF LIVE LOAD

ALLOWABLE DEFL.(LL)= L/360 (0.71")
CALCULATED VERT. DEFL.(LL) = L/ 999 (0.07")
ALLOWABLE DEFL.(TL)= L/360 (0.71")
CALCULATED VERT. DEFL.(TL) = L/ 999 (0.21")

CSI: TC=0.25/1.00 (E-F:1) , BC=0.39/1.00 (H-P:1) , WB=0.35/1.00 (E-L:1) , SSI=0.16/1.00 (D-E:1)

DOL LUMBER=1.00 NAIL=1.00 LS BEND=1.10 COMP=1.10 SHEAR=1.10 TENS= 1.10

COMPANION LIVE LOAD FACTOR = 1.00

TRUSS PLATE MANUFACTURER IS NOT RESPONSIBLE FOR QUALITY CONTROL IN THE TRUSS MANUFACTURING PLANT .

NAIL VALUES

PLATE	GRIP(DRY) (PSI) MAX	MIN	SHEAR (PLI) MAX	MIN	SECTION (PLI) MAX	MIN
MT20	618	354	1667	788	1987	1656

PLATE PLACEMENT TOL. = 0.250 Inches

PLATE ROTATION TOL. = 5.0 Deg.

JSI GRIP= 0.89 (N) (INPUT = 0.90)
JSI METAL= 0.66 (H) (INPUT = 1.00)

A-18023814

JOB NAME	TRUSS NAME	QUANTITY	PLY	JOB DESC.	DRWG NO.
292651	H34P	6	1	TRUSS DESC.	

Alpa Roof Truss, Maple

Version 8.200 S Jan 6 2018 MiTek Industries, Inc. Sun Feb 18 16:27:17 2018 Page 1
ID:DdSMSEW8qE9HTV0gkasOLLzzSIP-RRaZSd5Dk7D5A3S3BTnwWTCSNw0q3eCmVoqJVAzjsd8

Scale = 1:37.1

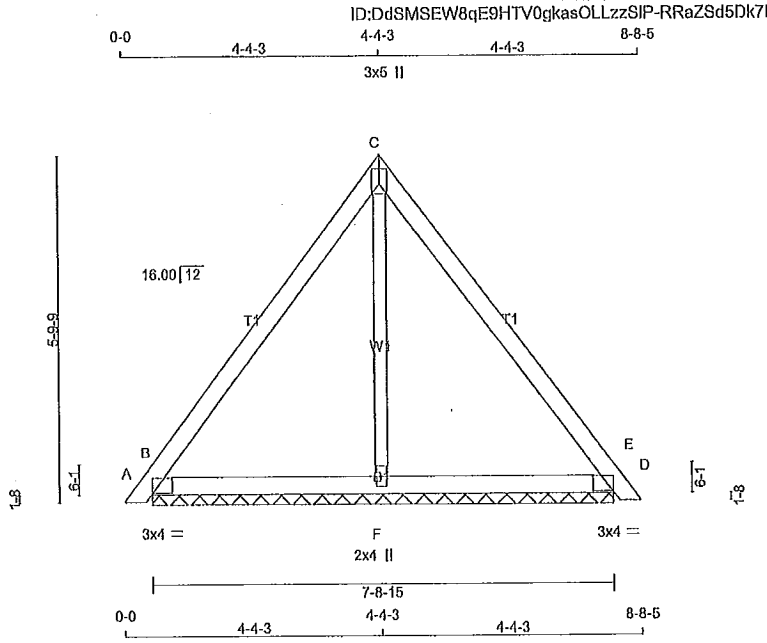

TOTAL WEIGHT = 6 X 29 = 176 lb

(M)

LUMBER
N. L. G. A. RULES

CHORDS	SIZE		LUMBER	DESCR.
A - C	2x4	DRY	No.2	SPF
C - E	2x4	DRY	No.2	SPF
B - D	2x4	DRY	No.2	SPF
ALL WEBS	2x3	DRY	No.2	SPF

DRY: SEASONED LUMBER.

PLATES (table is in inches)

JT	TYPE	PLATES	W	LEN	Y	X
B	TMB1-I	MT20	3.0	4.0	1.50	2.75
C	TTW+p	MT20	3.0	5.0	2.00	Edge
D	TMB1-I	MT20	3.0	4.0	1.50	2.75
F	BMW1+w	MT20	2.0	4.0		

Edge - INDICATES REFERENCE CORNER OF PLATE TOUCHES EDGE OF CHORD.

NOTE: Lateral brace(s) shown shall be 1x4 for Part 9 design as per OBC 9.23.13.11, and no less than 2x4 for Part 4 design

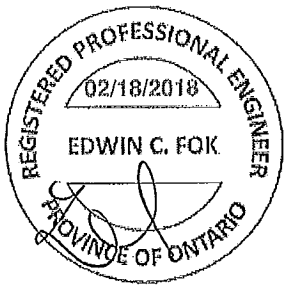

DIMENSIONS, SUPPORTS AND LOADINGS SPECIFIED BY FABRICATOR TO BE VERIFIED BY BUILDING DESIGNER

BEARINGS

JT	FACTORED GROSS REACTION VERT	HORZ	MAXIMUM FACTORED GROSS REACTION DOWN	HORZ	UPLIFT	INPUT BRG IN-SX	REQRD BRG IN-SX
B	288	0	288	0	0	7-8-15	7-15
D	288	0	288	0	0	7-8-15	7-15
F	226	0	226	0	0	7-8-15	7-15

UNFACTORED REACTIONS

JT	1ST LCASE COMBINED	MAX./MIN. COMPONENT REACTIONS SNOW	LIVE	PERM.LIVE	WIND	DEAD	SOIL
B	202	141 / 0	0 / 0	0 / 0	0 / 0	62 / 0	0 / 0
D	202	141 / 0	0 / 0	0 / 0	0 / 0	62 / 0	0 / 0
F	166	73 / 0	0 / 0	0 / 0	0 / 0	93 / 0	0 / 0

BEARING MATERIAL TO BE SPF NO.2 OR BETTER AT JOINT(S) B, D, F

BRACING
TOP CHORD TO BE SHEATHED OR MAX. PURLIN SPACING = 6.25 FT.
MAX. UNBRACED BOTTOM CHORD LENGTH = 10.00 FT OR RIGID CEILING DIRECTLY APPLIED.

ALL PITCH BREAKS AND PERIMETER CORNER JOINTS MUST BE LATERALLY RESTRAINED.

LOADING
TOTAL LOAD CASES: (4)

CHORDS

MEMB. FR-TO	MAX. FACTORED FORCE (LBS)	FACTORED VERT. LOAD LC1 (PLF) FROM	TO	MAX CSI (LC)	MAX. UNBRAC LENGTH
A- B	0 / 10	-78.0	-78.0	0.01 (1)	10.00
B- C	-103 / 0	-78.0	-78.0	0.20 (1)	6.25
C- D	-103 / 0	-78.0	-78.0	0.20 (1)	6.25
D- E	0 / 10	-78.0	-78.0	0.01 (1)	10.00
B- F	0 / 61	-18.5	-18.5	0.08 (4)	10.00
F- D	0 / 61	-18.5	-18.5	0.08 (4)	10.00

WEBS

MEMB. FR-TO	MAX. FACTORED FORCE (LBS)	MAX CSI (LC)
F- C	-136 / 0	0.06 (1)

DESIGN CRITERIA

SPECIFIED LOADS:

TOP CH.	LL	=	21.0	PSF
	DL	=	6.0	PSF
BOT CH.	LL	=	0.0	PSF
	DL	=	7.4	PSF
TOTAL LOAD		=	34.4	PSF

SPACING = 24.0 IN. C/C

THIS TRUSS IS DESIGNED FOR RESIDENTIAL OR SMALL BUILDING REQUIREMENTS OF PART 9, NBCC 2010, NBCC 2015

THIS DESIGN COMPLIES WITH:
- PART 9 OF OBC 2012, OBC 2018
- CSA 086-09, CSA 086-14
- TPIC 2011, TPIC 2014

(55 % OF 23.0 P.S.F. G.S.L. PLUS 8.4 P.S.F. RAIN LOAD) EQUALS 21.0 P.S.F. SPECIFIED ROOF LIVE LOAD

CSI: TC=0.20/1.00 (B-C:1) , BC=0.08/1.00 (D-F:4) , WB=0.06/1.00 (C-F:1) , SSI=0.07/1.00 (B-C:1)

DOL LUMBER=1.00 NAIL=1.00 LS BEND=1.10 COMP=1.10 SHEAR=1.10 TENS= 1.10

COMPANION LIVE LOAD FACTOR = 1.00

TRUSS PLATE MANUFACTURER IS NOT RESPONSIBLE FOR QUALITY CONTROL IN THE TRUSS MANUFACTURING PLANT .

NAIL VALUES

PLATE	GRIP(DRY) (PSI) MAX	MIN	SHEAR (PLI) MAX	MIN	SECTION (PLI) MAX	MIN
MT20	618	354	1667	788	1987	1656

PLATE PLACEMENT TOL. = 0.250 Inches

PLATE ROTATION TOL. = 5.0 Deg.

JSI GRIP= 0.34 (B) (INPUT = 0.90)
JSI METAL= 0.13 (D) (INPUT = 1.00)

A-18023815

JOB NAME	TRUSS NAME	QUANTITY	PLY	JOB DESC.	DRWG NO.
292651	H35T	1	1	TRUSS DESC.	

Alpa Roof Truss, Maple

Version 8.200 S Jan 6 2018 MiTek Industries, Inc. Sun Feb 18 16:27:24 2018 Page 1
ID:DdSMSEW8qE9HTV0gkasOLLzzSIP-knWCw0Ac5G65V8UP5RPZIx?flkOZCnSo6N0BFGz|sd1

Scale = 1:49.7

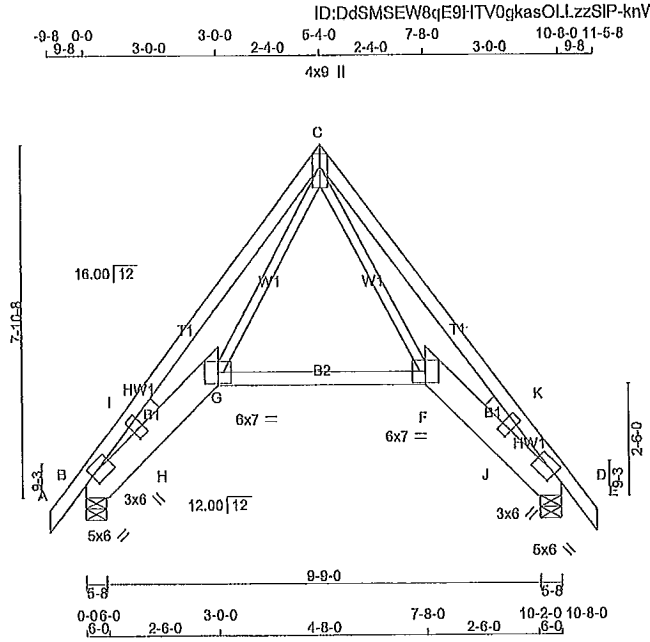

TOTAL WEIGHT = 64 lb

[M][F]

LUMBER
N. L. G. A. RULES

CHORDS	SIZE		LUMBER	DESCR.
A - C	2x4	DRY	No.2	SPF
C - E	2x4	DRY	No.2	SPF
B - G	2x8	DRY	No.2	SPF
G - F	2x4	DRY	No.2	SPF
F - D	2x8	DRY	No.2	SPF
ALL WEBS	2x3	DRY	No.2	SPF

DRY: SEASONED LUMBER.

PLATES (table is in inches)

JT	TYPE	PLATES	W	LEN	Y	X
B	TMB1-I	MT20	5.0	6.0	2.25	3.00
B	WP+I	MT20	3.0	6.0	1.50	19.25
C	TTWW+p	MT20	4.0	9.0	3.25	Edge
D	TMB1-I	MT20	5.0	6.0	2.25	3.00
D	WP+I	MT20	3.0	6.0	1.50	19.25
F	BBW-I	MT20	6.0	7.0		
G	BBW-I	MT20	6.0	7.0		

Edge - INDICATES REFERENCE CORNER OF PLATE TOUCHES EDGE OF CHORD.

NOTE: Lateral brace(s) shown shall be 1x4 for Part 9 design as per OBC 9.23.13.11, and no less than 2x4 for Part 4 design

REGISTERED PROFESSIONAL ENGINEER
02/18/2018
EDWIN C. FOK
PROVINCE OF ONTARIO

DIMENSIONS, SUPPORTS AND LOADINGS SPECIFIED BY FABRICATOR TO BE VERIFIED BY BUILDING DESIGNER

BEARINGS

JT	FACTORED GROSS REACTION VERT	HORZ	MAXIMUM FACTORED GROSS REACTION DOWN	HORZ	UPLIFT	INPUT BRG IN-SX	REQRD BRG IN-SX	HEEL WEDGE
B	585	0	585	0	0	5-8	1-8	2x4 L
D	585	0	585	0	0	5-8	1-8	2x4 R

UNFACTORED REACTIONS

JT	1ST LCASE COMBINED	MAX./MIN. COMPONENT REACTIONS SNOW	LIVE	PERM.LIVE	WIND	DEAD	SOIL
B	416	262 / 0	0 / 0	0 / 0	0 / 0	154 / 0	0 / 0
D	416	262 / 0	0 / 0	0 / 0	0 / 0	154 / 0	0 / 0

BEARING MATERIAL TO BE SPF NO.2 OR BETTER AT JOINT(S) B, D

BRACING
TOP CHORD TO BE SHEATHED OR MAX. PURLIN SPACING = 5.83 FT.
MAX. UNBRACED BOTTOM CHORD LENGTH = 10.00 FT OR RIGID CEILING DIRECTLY APPLIED.

ALL PITCH BREAKS AND PERIMETER CORNER JOINTS MUST BE LATERALLY RESTRAINED.

LOADING
TOTAL LOAD CASES: (4)

CHORDS

MEMB. FR-TO	MAX. FACTORED FORCE (LBS)	FACTORED VERT. LOAD LC1 (PLF) FROM	TO	MAX CSI (LC)	MAX. UNBRAC LENGTH
A- B	0 / 20	-78.0	-78.0	0.05 (1)	10.00
B- I	-1132 / 0	-78.0	-78.0	0.13 (1)	5.83
I- C	-979 / 0	-78.0	-78.0	0.19 (1)	6.09
C- K	-979 / 0	-78.0	-78.0	0.19 (1)	6.09
K- D	-1132 / 0	-78.0	-78.0	0.13 (1)	5.83
D- E	0 / 20	-78.0	-78.0	0.05 (1)	10.00
B- H	0 / 770	-18.5	-18.5	0.10 (1)	10.00
H- G	0 / 806	-18.5	-18.5	0.11 (1)	10.00
G- F	0 / 273	-18.5	-18.5	0.14 (4)	10.00
F- J	0 / 806	-18.5	-18.5	0.11 (1)	10.00
J- D	0 / 770	-18.5	-18.5	0.10 (1)	10.00

WEBS

MEMB. FR-TO	MAX. FACTORED FORCE (LBS)	MAX CSI (LC)
G- C	0 / 696	0.16 (1)
C- F	0 / 696	0.16 (1)
H- I	-24 / 59	0.00 (1)
J- K	-24 / 59	0.00 (1)

DESIGN CRITERIA

SPECIFIED LOADS:

TOP CH.	LL	=	21.0	PSF
	DL	=	6.0	PSF
BOT CH.	LL	=	0.0	PSF
	DL	=	7.4	PSF
TOTAL LOAD		=	34.4	PSF

SPACING = 24.0 IN. C/C

THIS TRUSS IS DESIGNED FOR RESIDENTIAL OR SMALL BUILDING REQUIREMENTS OF PART 9, NBCC 2010, NBCC 2015

THIS DESIGN COMPLIES WITH:
- PART 9 OF OBC 2012, OBC 2018
- CSA 086-09, CSA 086-14
- TPIC 2011, TPIC 2014

(55 % OF 23.0 P.S.F. G.S.L. PLUS 8.4 P.S.F. RAIN LOAD) EQUALS 21.0 P.S.F. SPECIFIED ROOF LIVE LOAD

ALLOWABLE DEFL.(LL)= L/360 (0.36")
CALCULATED VERT. DEFL.(LL) = L/ 999 (0.03")
ALLOWABLE DEFL.(TL)= L/360 (0.36")
CALCULATED VERT. DEFL.(TL) = L/ 999 (0.09")

CSI: TC=0.19/1.00 (C-I:1) , BC=0.14/1.00 (F-G:4) , WB=0.16/1.00 (C-G:1) , SSI=0.09/1.00 (C-K:1)

DOL LUMBER=1.00 NAIL=1.00 LS BEND=1.10 COMP=1.10 SHEAR=1.10 TENS= 1.10

COMPANION LIVE LOAD FACTOR = 1.00

TRUSS PLATE MANUFACTURER IS NOT RESPONSIBLE FOR QUALITY CONTROL IN THE TRUSS MANUFACTURING PLANT .

NAIL VALUES

PLATE	GRIP(DRY) (PSI) MAX	MIN	SHEAR (PLI) MAX	MIN	SECTION (PLI) MAX	MIN
MT20	618	354	1667	788	1987	1656

PLATE PLACEMENT TOL. = 0.250 Inches

PLATE ROTATION TOL. = 5.0 Deg.

JSI GRIP= 0.36 (G) (INPUT = 0.90)
JSI METAL= 0.28 (D) (INPUT = 1.00)

A-18023816

JOB NAME	TRUSS NAME	QUANTITY	PLY	JOB DESC.	DRWG NO.
292651	H36A	1	1	TRUSS DESC.	

Alpa Roof Truss, Maple

Version 8.200 S Jan 6 2018 MiTek Industries, Inc. Sun Feb 18 16:32:24 2018 Page 1

ID:DdSMSEW8qE9HTV0gkasOLLzzSlP-xVecubpoRSvXVEQ3gRovSCQsGgjVVTNy52h2ntzjsYL

Scale = 1:57.1

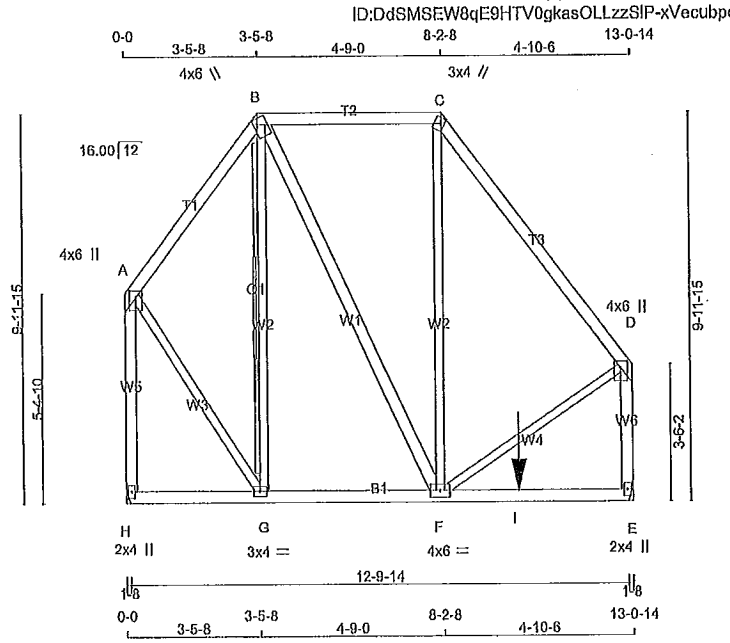

TOTAL WEIGHT = 83 lb

[M]

LUMBER

N. L. G. A. RULES

CHORDS	SIZE		LUMBER	DESCR.
A - B	2x4	DRY	No.2	SPF
B - C	2x4	DRY	No.2	SPF
C - D	2x4	DRY	No.2	SPF
H - A	2x4	DRY	No.2	SPF
E - D	2x4	DRY	No.2	SPF
H - E	2x4	DRY	No.2	SPF
ALL WEBS	2x3	DRY	No.2	SPF
EXCEPT				
B - F	2x4	DRY	No.2	SPF

DRY: SEASONED LUMBER.

PLATES (table is in inches)

JT	TYPE	PLATES	W	LEN	Y	X
A	TMVW+p	MT20	4.0	6.0	2.00	2.00
B	TTWW+m	MT20	4.0	6.0	1.75	1.00
C	TTW+m	MT20	3.0	4.0	1.75	1.00
D	TMVW+p	MT20	4.0	6.0	2.00	2.00
E	BMV1+p	MT20	2.0	4.0		
F	BMWWW-t	MT20	4.0	6.0		
G	BMWW-t	MT20	3.0	4.0		
H	BMV1+p	MT20	2.0	4.0		

HANGERS NOTES

1) SPECIAL HANGER(S) OR CONNECTION(S) REQUIRED TO SUPPORT CONCENTRATED LOAD(S) 256.7 lbs FACTORED DOWN AT 10-1-12 ON BOTTOM CHORD. DESIGN FOR UNSPECIFIED CONNECTION(S) IS DELEGATED TO THE BUILDING DESIGNER.

NOTE: Lateral brace(s) shown shall be 1x4 for Part 9 design as per OBC 9.23.13.11, and no less than 2x4 for Part 4 design

REGISTERED PROFESSIONAL ENGINEER
02/18/2018
EDWIN C. FOK
PROVINCE OF ONTARIO

DIMENSIONS, SUPPORTS AND LOADINGS SPECIFIED BY FABRICATOR TO BE VERIFIED BY BUILDING DESIGNER

BEARINGS

JT	FACTORED GROSS REACTION VERT	HORZ	MAXIMUM FACTORED GROSS REACTION DOWN	HORZ	UPLIFT	INPUT BRG IN-SX	REQRD BRG IN-SX
H	969	0	969	0	0	HANGER BY OTHERS MIN. SEAT SIZE: 1-8	
E	1008	0	1008	0	0	HANGER BY OTHERS MIN. SEAT SIZE: 1-8	

UNFACTORED REACTIONS

JT	1ST LCASE COMBINED	MAX./MIN. COMPONENT REACTIONS SNOW	LIVE	PERM.LIVE	WIND	DEAD	SOIL
H	691	422 / 0	0 / 0	0 / 0	0 / 0	269 / 0	0 / 0
E	719	439 / 0	0 / 0	0 / 0	0 / 0	280 / 0	0 / 0

BRACING

TOP CHORD TO BE SHEATHED OR MAX. PURLIN SPACING = 6.25 FT.
MAX. UNBRACED BOTTOM CHORD LENGTH = 10.00 FT OR RIGID CEILING DIRECTLY APPLIED.

ALL PITCH BREAKS AND PERIMETER CORNER JOINTS MUST BE LATERALLY RESTRAINED.

2x4 DRY SPF No.2 T-BRACE AT B-G

FASTEN T AND I-BRACES TO NARROW EDGE OF WEB WITH ONE ROW PER PLY OF 3" COMMON WIRE NAILS @ 6" O.C. WITH 3" MINIMUM END DISTANCE. BRACE MUST COVER 90% OF WEB LENGTH.

END VERTICAL(S) MUST BE SHEATHED OR HAVE BRACES AS INDICATED IN THE MAX. UNBRACED LENGTH COLUMN OF THE TABLE BELOW

LOADING

TOTAL LOAD CASES: (4)

CHORDS

MEMB. FR-TO	MAX. FACTORED FORCE (LBS)	FACTORED VERT. LOAD (PLF) FROM	TO	LC1	MAX CSI (LC)	MAX. UNBRAC LENGTH
A- B	-461 / 0	-78.0	-78.0	0.18 (1)	6.25	
B- C	-355 / 0	-78.0	-78.0	0.34 (1)	6.25	
C- D	-592 / 0	-78.0	-78.0	0.39 (1)	6.25	
H- A	-873 / 0	0.0	0.0	0.50 (1)	7.81	
E- D	-887 / 0	0.0	0.0	0.20 (1)	7.81	
H- G	0 / 0	-63.7	-63.7	0.11 (1)	10.00	
G- F	0 / 267	-63.7	-63.7	0.41 (1)	10.00	
F- I	0 / 0	-63.7	-63.7	0.41 (1)	10.00	
I- E	0 / 0	-18.5	-18.5	0.41 (1)	10.00	

WEBS

MEMB. FR-TO	MAX. FACTORED FORCE (LBS)	MAX CSI (LC)
G- B	-140 / 0	0.11 (1)
B- F	0 / 202	0.04 (1)
F- C	0 / 108	0.04 (4)
A- G	0 / 463	0.11 (1)
F- D	0 / 418	0.10 (1)

FACTORED CONCENTRATED LOADS (LBS)

JT	LOC.	LC1	MAX-	MAX+	FACE	DIR.	TYPE
I	10-1-12	-257	-257	--	FRONT	VERT	TOTAL

DESIGN CRITERIA

*** SPECIAL LOADS ANALYSIS ***
GEOMETRY AND/OR BASIC LOADS CHANGED BY USER.
LOADS WERE DERIVED FROM USER INPUT
NO FURTHER MODIFICATIONS WERE MADE

SPECIFIED LOADS:

TOP CH.	LL =	21.0	PSF
	DL =	6.0	PSF
BOT CH.	LL =	0.0	PSF
	DL =	7.4	PSF
TOTAL LOAD	=	34.4	PSF

SPACING = 24.0 IN. C/C

LOADING IN FLAT SECTION BASED ON A SLOPE OF 2.00/12 MINIMUM

GIRDER TYPE: CSIdGirder
START DISTANCE = 0-0
START SPAN CARRIED = 3-10-8
END DISTANCE = 10-1-12
END SPAN CARRIED = 3-10-8
END WALL WIDTH = 0-0
APPLIED TO FRONT SIDE OF BOTTOM CHORD.
- ADDT'L LOADS BASED ON 55 % OF GSL.

*** NON STANDARD GIRDER ***
ADDT'L USER-DEFINED LOADS APPLIED TO ALL LOAD CASES.

THIS TRUSS IS DESIGNED FOR RESIDENTIAL OR SMALL BUILDING REQUIREMENTS OF PART 9, NBCC 2010, NBCC 2015

THIS DESIGN COMPLIES WITH:
- PART 9 OF OBC 2012, OBC 2018
- CSA 086-09, CSA 086-14
- TPIC 2011, TPIC 2014

(55 % OF 23.0 P.S.F. G.S.L. PLUS 8.4 P.S.F. RAIN LOAD) EQUALS 21.0 P.S.F. SPECIFIED ROOF LIVE LOAD

ALLOWABLE DEFL.(LL)= L/360 (0.44")
CALCULATED VERT. DEFL.(LL) = L/ 999 (0.05")
ALLOWABLE DEFL.(TL)= L/360 (0.44")
CALCULATED VERT. DEFL.(TL) = L/ 999 (0.11")

CSI: TC=0.50/1.00 (A-H:1) , BC=0.41/1.00 (F-G:1) , WB=0.11/1.00 (A-G:1) , SSI=0.27/1.00 (E-F:1)

DOL LUMBER=1.00 NAIL=1.00 LS BEND=1.00 COMP=1.00 SHEAR=1.00 TENS= 1.00

COMPANION LIVE LOAD FACTOR = 1.00

TRUSS PLATE MANUFACTURER IS NOT RESPONSIBLE FOR QUALITY CONTROL IN THE TRUSS MANUFACTURING PLANT .

NAIL VALUES

PLATE	GRIP(DRY) (PSI) MAX	MIN	SHEAR (PLI) MAX	MIN	SECTION (PLI) MAX	MIN
MT20	618	354	1667	788	1987	1656

A-18023817

CONTINUED ON PAGE 2

JOB NAME	TRUSS NAME	QUANTITY	PLY	JOB DESC.	DRWG NO.
292651	H37	1	1	TRUSS DESC.	

Alpa Roof Truss, Maple

Version 8.200 S Jan 6 2018 MiTek Industries, Inc. Sun Feb 18 16:28:23 2018 Page 1
ID:DdSMSEW8qE9HTV0gkasOLLzzSIP-V8aVJBudBPYj4CVl2KzOBOxidWWBXSJUg3ppqLzjsc6

Scale = 1:58.4

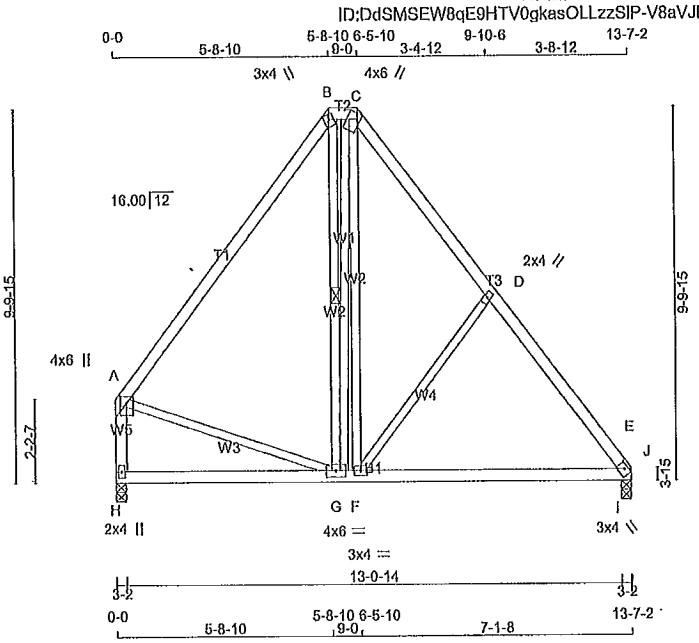

TOTAL WEIGHT = 75 lb

[M][F]

LUMBER
N. L. G. A. RULES

CHORDS	SIZE		LUMBER	DESCR.
A - B	2x4	DRY	No.2	SPF
B - C	2x4	DRY	No.2	SPF
C - E	2x4	DRY	No.2	SPF
H - A	2x4	DRY	No.2	SPF
H - E	2x4	DRY	No.2	SPF
ALL WEBS EXCEPT	2x3	DRY	No.2	SPF

DRY: SEASONED LUMBER.

PLATES (table is in inches)

JT	TYPE	PLATES	W	LEN	Y	X
A	TMVW+p	MT20	4.0	6.0	2.00	2.00
B	TTW+m	MT20	3.0	4.0	Edge	
C	TTWW+m	MT20	4.0	6.0	1.75	1.00
D	TMW+w	MT20	2.0	4.0		
E	TBM1-h	MT20	3.0	4.0	1.00	2.00
F	BMWW-t	MT20	3.0	4.0		
G	BMWWW-t	MT20	4.0	6.0		
H	BMV1+p	MT20	2.0	4.0		

Edge - INDICATES REFERENCE CORNER OF PLATE TOUCHES EDGE OF CHORD.

NOTE: Lateral brace(s) shown shall be 1x4 for Part 9 design as per OBC 9.23.13.11, and no less than 2x4 for Part 4 design

REGISTERED PROFESSIONAL ENGINEER
02/18/2018
EDWIN C. FOK
PROVINCE OF ONTARIO

DIMENSIONS, SUPPORTS AND LOADINGS SPECIFIED BY FABRICATOR TO BE VERIFIED BY BUILDING DESIGNER

BEARINGS

JT	FACTORED GROSS REACTION VERT	HORZ	MAXIMUM FACTORED GROSS REACTION DOWN	HORZ	UPLIFT	INPUT BRG IN-SX	REQRD BRG IN-SX
E	656	0	656	0	0	3-2	1-8
H	656	0	656	0	0	3-2	1-8

UNFACTORED REACTIONS

JT	1ST LCASE COMBINED	MAX./MIN. COMPONENT REACTIONS SNOW	LIVE	PERM.LIVE	WIND	DEAD	SOIL
E	467	285 / 0	0 / 0	0 / 0	0 / 0	182 / 0	0 / 0
H	467	285 / 0	0 / 0	0 / 0	0 / 0	182 / 0	0 / 0

BEARING MATERIAL TO BE SPF NO.2 OR BETTER AT JOINT(S) E, H

BRACING
TOP CHORD TO BE SHEATHED OR MAX. PURLIN SPACING = 6.25 FT.
MAX. UNBRACED BOTTOM CHORD LENGTH = 10.00 FT OR RIGID CEILING DIRECTLY APPLIED.

ALL PITCH BREAKS AND PERIMETER CORNER JOINTS MUST BE LATERALLY RESTRAINED.

1 LATERAL BRACE(S) AT 1/ 2 LENGTH OF C-G.

END VERTICAL(S) MUST BE SHEATHED OR HAVE BRACES AS INDICATED IN THE MAX. UNBRACED LENGTH COLUMN OF THE TABLE BELOW

LOADING
TOTAL LOAD CASES; (4)

CHORDS

MEMB. FR-TO	MAX. FACTORED FORCE (LBS)	FACTORED VERT. LOAD LC1 (PLF) FROM	TO	MAX CSI (LC)	MAX. UNBRAC LENGTH
A- B	-399 / 0	-78.0	-78.0	0.33 (1)	6.25
B- C	-239 / 0	-78.0	-78.0	0.01 (1)	6.25
C- D	-431 / 0	-78.0	-78.0	0.13 (1)	6.25
D- J	-584 / 0	-78.0	-78.0	0.14 (1)	6.25
J- E	-699 / 0	-78.0	-78.0	0.09 (4)	6.25
H- A	-817 / 0	0.0	0.0	0.08 (1)	7.81
H- G	0 / 0	-18.5	-18.5	0.18 (4)	10.00
G- F	0 / 243	-18.5	-18.5	0.21 (4)	10.00
F- I	0 / 375	-18.5	-18.5	0.22 (4)	10.00
I- E	0 / 375	-18.5	-18.5	0.09 (4)	10.00

WEBS

MEMB. FR-TO	MAX. FACTORED FORCE (LBS)	MAX CSI (LC)
G- B	0 / 77	0.03 (4)
G- C	-55 / 0	0.04 (1)
F- C	0 / 248	0.06 (1)
F- D	-223 / 0	0.14 (1)
A- G	0 / 250	0.06 (1)
I- J	0 / 182	0.00 (1)

DESIGN CRITERIA

SPECIFIED LOADS:

TOP CH.	LL	=	21.0	PSF
	DL	=	6.0	PSF
BOT CH.	LL	=	0.0	PSF
	DL	=	7.4	PSF
TOTAL LOAD		=	34.4	PSF

SPACING = 24.0 IN. C/C

LOADING IN FLAT SECTION BASED ON A SLOPE OF 2.00/12 MINIMUM

THIS TRUSS IS DESIGNED FOR RESIDENTIAL OR SMALL BUILDING REQUIREMENTS OF PART 9, NBCC 2010, NBCC 2015

THIS DESIGN COMPLIES WITH:
- PART 9 OF OBC 2012, OBC 2018
- CSA 086-09, CSA 086-14
- TPIC 2011, TPIC 2014

(55 % OF 23.0 P.S.F. G.S.L. PLUS 8.4 P.S.F. RAIN LOAD) EQUALS 21.0 P.S.F. SPECIFIED ROOF LIVE LOAD

ALLOWABLE DEFL.(LL)= L/360 (0.45")
CALCULATED VERT. DEFL.(LL) = L/ 999 (0.02")
ALLOWABLE DEFL.(TL)= L/360 (0.45")
CALCULATED VERT. DEFL.(TL) = L/ 999 (0.06")

CSI: TC=0.33/1.00 (A-B:1) , BC=0.22/1.00 (F-I:4) , WB=0.14/1.00 (D-F:1) , SSI=0.18/1.00 (E-J:4)

DOL LUMBER=1.00 NAIL=1.00 LS BEND=1.10 COMP=1.10 SHEAR=1.10 TENS= 1.10

COMPANION LIVE LOAD FACTOR = 1.00

AUTOSOLVE RIGHT HEEL ONLY

TRUSS PLATE MANUFACTURER IS NOT RESPONSIBLE FOR QUALITY CONTROL IN THE TRUSS MANUFACTURING PLANT .

NAIL VALUES

PLATE	GRIP(DRY) (PSI) MAX	MIN	SHEAR (PLI) MAX	MIN	SECTION (PLI) MAX	MIN
MT20	618	354	1667	788	1987	1656

PLATE PLACEMENT TOL. = 0.250 Inches

PLATE ROTATION TOL. = 5.0 Deg.

JSI GRIP= 0.56 (E) (INPUT = 0.90)
JSI METAL= 0.20 (E) (INPUT = 1.00)

A-18023818

JOB NAME	TRUSS NAME	QUANTITY	PLY	JOB DESC.	DRWG NO.
292651	H38	1	1	TRUSS DESC.	

Alpa Roof Truss, Maple

Version 8.200 S Jan 6 2018 MiTek Industries, Inc. Sun Feb 18 16:28:30 2018 Page 1
ID:DdSMSEW8qE9HTV0gkasOLLzzSIP-oUV9naz0YYQkQHX5ylb1zsjxDLu9gdjWHe?gZRz|sc?

Scale = 1:63.0

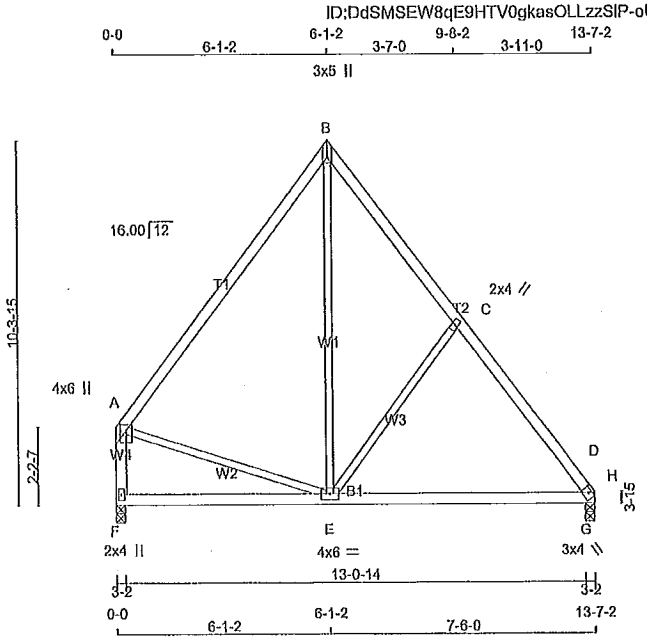

TOTAL WEIGHT = 61 lb

(M)(F)

LUMBER
N. L. G. A. RULES

CHORDS	SIZE		LUMBER	DESCR.
A - B	2x4	DRY	2100F 1.8E	SPF
B - D	2x4	DRY	No.2	SPF
F - A	2x4	DRY	No.2	SPF
F - D	2x4	DRY	No.2	SPF
ALL WEBS EXCEPT	2x3	DRY	No.2	SPF

DRY: SEASONED LUMBER.

PLATES (table is in inches)

JT	TYPE	PLATES	W	LEN	Y	X
A	TMW+p	MT20	4.0	6.0	2.00	2.00
B	TTW+p	MT20	3.0	5.0	2.00	Edge
C	TMW+w	MT20	2.0	4.0		
D	TBM1-h	MT20	3.0	4.0	1.00	2.00
E	BMWWW-t	MT20	4.0	6.0		
F	BMV1+p	MT20	2.0	4.0		

Edge - INDICATES REFERENCE CORNER OF PLATE TOUCHES EDGE OF CHORD.

NOTE: Lateral brace(s) shown shall be 1x4 for Part 9 design as per OBC 9.23.13.11, and no less than 2x4 for Part 4 design

REGISTERED PROFESSIONAL ENGINEER
02/18/2018
EDWIN C. FOK
PROVINCE OF ONTARIO

DIMENSIONS, SUPPORTS AND LOADINGS SPECIFIED BY FABRICATOR TO BE VERIFIED BY BUILDING DESIGNER

BEARINGS

JT	FACTORED GROSS REACTION VERT	HORZ	MAXIMUM FACTORED GROSS REACTION DOWN	HORZ	UPLIFT	INPUT BRG IN-SX	REQRD BRG IN-SX
D	656	0	656	0	0	3-2	1-8
F	656	0	656	0	0	3-2	1-8

UNFACTORED REACTIONS

JT	1ST LCASE COMBINED	MAX./MIN. COMPONENT REACTIONS SNOW	LIVE	PERM.LIVE	WIND	DEAD	SOIL
D	467	285 / 0	0 / 0	0 / 0	0 / 0	182 / 0	0 / 0
F	467	285 / 0	0 / 0	0 / 0	0 / 0	182 / 0	0 / 0

BEARING MATERIAL TO BE SPF NO.2 OR BETTER AT JOINT(S) D, F

BRACING
TOP CHORD TO BE SHEATHED OR MAX. PURLIN SPACING = 6.25 FT.
MAX. UNBRACED BOTTOM CHORD LENGTH = 10.00 FT OR RIGID CEILING DIRECTLY APPLIED.

ALL PITCH BREAKS AND PERIMETER CORNER JOINTS MUST BE LATERALLY RESTRAINED.

LOADING
TOTAL LOAD CASES: (4)

CHORDS

MEMB. FR-TO	MAX. FACTORED FORCE (LBS)	FACTORED VERT. LOAD LC1 (PLF) FROM	TO	MAX CSI (LC)	MAX. UNBRAC LENGTH
A- B	-367 / 0	-78.0	-78.0	0.25 (1)	6.25
B- C	-417 / 0	-78.0	-78.0	0.15 (1)	6.25
C- H	-576 / 0	-78.0	-78.0	0.15 (1)	6.25
H- D	-679 / 0	-78.0	-78.0	0.09 (4)	6.25
F- A	-617 / 0	0.0	0.0	0.08 (1)	7.81
F- E	0 / 0	-18.5	-18.5	0.23 (4)	10.00
E- G	0 / 370	-18.5	-18.5	0.26 (4)	10.00
G- D	0 / 370	-18.5	-18.5	0.09 (4)	10.00

WEBS

MEMB. FR-TO	MAX. FACTORED FORCE (LBS)	MAX CSI (LC)
E- B	0 / 275	0.06 (4)
E- C	-232 / 0	0.16 (1)
A- E	0 / 242	0.05 (1)
G- H	-9 / 177	0.00 (1)

DESIGN CRITERIA

SPECIFIED LOADS:

TOP CH.	LL	=	21.0	PSF
	DL	=	6.0	PSF
BOT CH.	LL	=	0.0	PSF
	DL	=	7.4	PSF
TOTAL LOAD		=	34.4	PSF

SPACING = 24.0 IN. C/C

THIS TRUSS IS DESIGNED FOR RESIDENTIAL OR SMALL BUILDING REQUIREMENTS OF PART 9, NBCC 2010, NBCC 2015

THIS DESIGN COMPLIES WITH:
- PART 9 OF OBC 2012, OBC 2018
- CSA 086-09, CSA 086-14
- TPIC 2011, TPIC 2014

(55 % OF 23.0 P.S.F. G.S.L. PLUS 8.4 P.S.F. RAIN LOAD) EQUALS 21.0 P.S.F. SPECIFIED ROOF LIVE LOAD

ALLOWABLE DEFL.(LL)= L/360 (0.45")
CALCULATED VERT. DEFL.(LL) = L/ 999 (0.02")
ALLOWABLE DEFL.(TL)= L/360 (0.45")
CALCULATED VERT. DEFL.(TL) = L/ 999 (0.09")

CSI: TC=0.25/1.00 (A-B:1) , BC=0.26/1.00 (E-G:4) , WB=0.16/1.00 (C-E:1) , SSI=0.18/1.00 (D-H:4)

DOL LUMBER=1.00 NAIL=1.00 LS BEND=1.10 COMP=1.10 SHEAR=1.10 TENS= 1.10

COMPANION LIVE LOAD FACTOR = 1.00

TRUSS PLATE MANUFACTURER IS NOT RESPONSIBLE FOR QUALITY CONTROL IN THE TRUSS MANUFACTURING PLANT .

NAIL VALUES

PLATE	GRIP(DRY) (PSI) MAX	MIN	SHEAR (PLI) MAX	MIN	SECTION (PLI) MAX	MIN
MT20	618	354	1667	788	1987	1656

PLATE PLACEMENT TOL. = 0.250 Inches

PLATE ROTATION TOL. = 5.0 Deg.

JSI GRIP= 0.56 (D) (INPUT = 0.90)
JSI METAL= 0.20 (D) (INPUT = 1.00)

A-18023819

JOB NAME	TRUSS NAME	QUANTITY	PLY	JOB DESC.	DRWG NO.
292651	H39T	4	1	TRUSS DESC.	

Alpa Roof Truss, Maple

Version 8.200 S Jan 6 2018 MiTek Industries, Inc. Sun Feb 18 16:28:37 2018 Page 1

ID:DdSMSEW8qE9HTV0gkasOLLzzSIP-5qQoFz3PulJkmMZRsGDglLW96AJRpqMYuECXlXzJsbu

Scale = 1:64.9

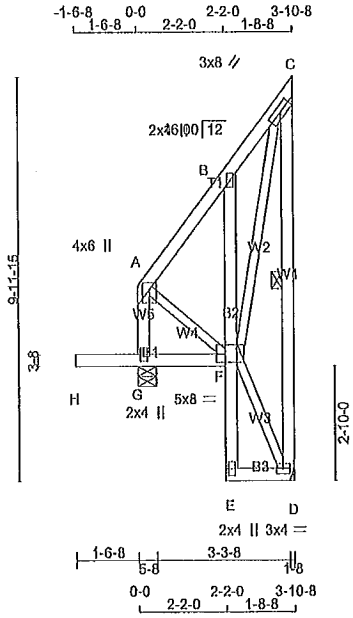

TOTAL WEIGHT = 4 X 44 = 178 lb

[M]

LUMBER

N. L. G. A. RULES

CHORDS	SIZE		LUMBER	DESCR.
G - A	2x4	DRY	No.2	SPF
A - C	2x4	DRY	No.2	SPF
D - C	2x4	DRY	No.2	SPF
H - F	2x4	DRY	No.2	SPF
E - B	2x4	DRY	No.2	SPF
E - D	2x4	DRY	No.2	SPF
ALL WEBS	2x3	DRY	No.2	SPF

DRY: SEASONED LUMBER.

PLATES (table is in inches)

JT	TYPE	PLATES	W	LEN	Y	X
A	TMVW+p	MT20	4.0	6.0	2.00	2.00
B	TMV+p	MT20	2.0	4.0		
C	TMVW-t	MT20	3.0	8.0	1.50	3.75
D	BMVW1-t	MT20	3.0	4.0		
E	BMV+p	MT20	2.0	4.0		
F	BVMWWW-t	MT20	6.0	8.0	2.25	2.50
G	BMV1+p	MT20	2.0	4.0		

NOTE: Lateral brace(s) shown shall be 1x4 for Part 9 design as per OBC 9.23.13.11, and no less than 2x4 for Part 4 design

REGISTERED PROFESSIONAL ENGINEER
02/18/2018
EDWIN C. FOK
PROVINCE OF ONTARIO

DIMENSIONS, SUPPORTS AND LOADINGS SPECIFIED BY FABRICATOR TO BE VERIFIED BY BUILDING DESIGNER

BEARINGS

JT	FACTORED GROSS REACTION VERT	HORZ	MAXIMUM FACTORED GROSS REACTION DOWN	HORZ	UPLIFT	INPUT BRG IN-SX	REQRD BRG IN-SX
G	336	0	336	0	0	5-8	1-8
D	187	0	187	0	0	HANGER BY OTHERS MIN. SEAT SIZE: 1-8	

UNFACTORED REACTIONS

JT	1ST LCASE COMBINED	MAX./MIN. COMPONENT REACTIONS SNOW	LIVE	PERM.LIVE	WIND	DEAD	SOIL
G	239	146 / 0	0 / 0	0 / 0	0 / 0	93 / 0	0 / 0
D	133	81 / 0	0 / 0	0 / 0	0 / 0	52 / 0	0 / 0

BEARING MATERIAL TO BE SPF NO.2 OR BETTER AT JOINT(S) G

BRACING

TOP CHORD TO BE SHEATHED OR MAX. PURLIN SPACING = 6.25 FT.
MAX. UNBRACED BOTTOM CHORD LENGTH = 7.81 FT OR RIGID CEILING DIRECTLY APPLIED.

ALL PITCH BREAKS AND PERIMETER CORNER JOINTS MUST BE LATERALLY RESTRAINED.

1 LATERAL BRACE(S) AT 1/ 2 LENGTH OF C-D.

END VERTICAL(S) MUST BE SHEATHED OR HAVE BRACES AS INDICATED IN THE MAX. UNBRACED LENGTH COLUMN OF THE TABLE BELOW

LOADING

TOTAL LOAD CASES: (5)

CHORDS

MEMB. FR-TO	MAX. FACTORED FORCE (LBS)	FACTORED VERT. LOAD (PLF) FROM	TO	LC1 MAX CSI (LC)	MAX. UNBRAC LENGTH
G- A	-166 / 0	0.0	0.0	0.02 (1)	7.81
A- B	-66 / 0	-78.0	-78.0	0.05 (1)	6.25
B- C	-81 / 0	-78.0	-78.0	0.04 (1)	6.25
D- C	-167 / 0	0.0	0.0	0.08 (1)	6.25
H- G	0 / 0	-96.5	-96.5	0.16 (1)	10.00
G- F	0 / 0	-18.5	-18.5	0.03 (4)	10.00
E- F	0 / 16	0.0	0.0	0.01 (1)	10.00
F- B	-174 / 0	0.0	0.0	0.02 (1)	7.81
E- D	0 / 3	-18.5	-18.5	0.01 (4)	10.00

WEBS

MEMB. FR-TO	MAX. FACTORED FORCE (LBS)	MAX CSI (I.C)
A- F	0 / 56	0.01 (1)
F- D	-6 / 0	0.00 (1)
F- C	0 / 177	0.04 (1)

CANTILEVER ANALYSIS HAS BEEN CONSIDERED IN THIS DESIGN

DESIGN CRITERIA

SPECIFIED LOADS:

TOP CH.	LL	=	21.0	PSF
	DL	=	6.0	PSF
BOT CH.	LL	=	0.0	PSF
	DL	=	7.4	PSF
TOTAL LOAD		=	34.4	PSF

SPACING = 24.0 IN. C/C

THIS TRUSS IS DESIGNED FOR RESIDENTIAL OR SMALL BUILDING REQUIREMENTS OF PART 9, NBCC 2010, NBCC 2015

THIS DESIGN COMPLIES WITH:
- PART 9 OF OBC 2012, OBC 2018
- CSA 086-09, CSA 086-14
- TPIC 2011, TPIC 2014

(65 % OF 23.0 P.S.F. G.S.L. PLUS 8.4 P.S.F. RAIN LOAD) EQUALS 21.0 P.S.F. SPECIFIED ROOF LIVE LOAD

ALLOWABLE DEFL.(LL)= L/360 (0.19")
CALCULATED VERT. DEFL.(LL) = L/ 999 (0.00")
ALLOWABLE DEFL.(TL)= L/360 (0.19")
CALCULATED VERT. DEFL.(TL) = L/ 999 (0.00")

CANTILEVER DEFLECTION:
ALLOWABLE DEFL.(LL)= L/120 (0.19")
CALCULATED VERT. DEFL.(LL) = L/ 999 (0.01")
ALLOWABLE DEFL.(TL)= L/120 (0.19")
CALCULATED VERT. DEFL.(TL) = L/ 999 (0.01")

CSI: TC=0.08/1.00 (C-D:1) , BC=0.16/1.00 (G-H:1) , WB=0.04/1.00 (C-F:1) , SSI=0.12/1.00 (G-H:1)

DOL LUMBER=1.00 NAIL=1.00 LS BEND=1.10 COMP=1.10 SHEAR=1.10 TENS= 1.10

COMPANION LIVE LOAD FACTOR = 1.00

TRUSS PLATE MANUFACTURER IS NOT RESPONSIBLE FOR QUALITY CONTROL IN THE TRUSS MANUFACTURING PLANT.

NAIL VALUES

PLATE	GRIP(DRY) (PSI) MAX	MIN	SHEAR (PLI) MAX	MIN	SECTION (PLI) MAX	MIN
MT20	618	364	1667	788	1987	1656

PLATE PLACEMENT TOL. = 0.250 Inches

PLATE ROTATION TOL. = 5.0 Deg.

JSI GRIP= 0.25 (F) (INPUT = 0.90)
JSI METAL= 0.08 (B) (INPUT = 1.00)

A-18023820

JOB NAME	TRUSS NAME	QUANTITY	PLY	JOB DESC.	DRWG NO.
292651	H39TA	2	1	TRUSS DESC.	

Alpa Roof Truss, Maple

Version 8.200 S Jan 6 2018 MiTek Industries, Inc. Sun Feb 18 16:27:47 2018 Page 1
ID:DdSMSEW8qE9HTV0gkasOLLzzSIP-YDOultS2gL?qmglqxmKykoRd?0EV5CyBOS5vYQzjscg

Scale = 1:40.9

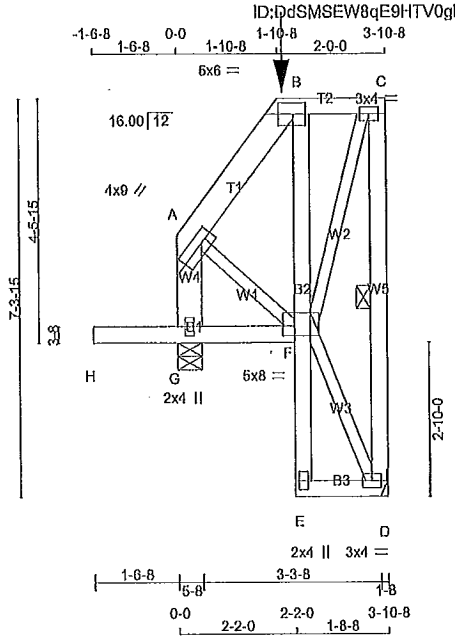

TOTAL WEIGHT = 2 X 41 = 83 lb

(M)

LUMBER
N. L. G. A. RULES

CHORDS	SIZE		LUMBER	DESCR.
A - B	2x6	DRY	No.2	SPF
B - C	2x4	DRY	No.2	SPF
D - C	2x4	DRY	No.2	SPF
G - A	2x6	DRY	No.2	SPF
H - F	2x4	DRY	No.2	SPF
E - B	2x4	DRY	No.2	SPF
E - D	2x4	DRY	No.2	SPF
ALL WEBS EXCEPT	2x3	DRY	No.2	SPF

DRY: SEASONED LUMBER.

PLATES (table is in inches)

JT	TYPE	PLATES	W	LEN	Y	X
A	TMVW-I	MT20	4.0	9.0	2.00	3.00
B	TMTV*-I	MT20	5.0	6.0	2.50	2.75
C	TMVW-I	MT20	3.0	4.0		
D	BMVW1-I	MT20	3.0	4.0		
E	BMV+p	MT20	2.0	4.0		
F	BVMWWW-I	MT20	5.0	8.0	2.00	2.50
G	BMV1+p	MT20	2.0	4.0		

HANGERS NOTES

1) SPECIAL HANGER(S) OR CONNECTION(S) REQUIRED TO SUPPORT CONCENTRATED LOAD(S) 51.3 lbs FACTORED DOWN AT 2-3-12 ON TOP CHORD. DESIGN FOR UNSPECIFIED CONNECTION(S) IS DELEGATED TO THE BUILDING DESIGNER.

NOTE: Lateral brace(s) shown shall be 1x4 for Part 9 design as per OBC 9.23.13.11, and no less than 2x4 for Part 4 design

REGISTERED PROFESSIONAL ENGINEER
02/18/2018
EDWIN C. FOK
PROVINCE OF ONTARIO

DIMENSIONS, SUPPORTS AND LOADINGS SPECIFIED BY FABRICATOR TO BE VERIFIED BY BUILDING DESIGNER

BEARINGS

JT	FACTORED GROSS REACTION VERT	HORZ	MAXIMUM FACTORED GROSS REACTION DOWN	HORZ	UPLIFT	INPUT BRG	REQRD BRG
D	258	0	258	0	0	IN-SX	IN-SX
						HANGER BY OTHERS	
						MIN. SEAT SIZE: 1-8	
G	375	0	375	0	0	5-8	1-8

UNFACTORED REACTIONS

JT	1ST LCASE COMBINED	MAX./MIN. COMPONENT REACTIONS SNOW	LIVE	PERM.LIVE	WIND	DEAD	SOIL
D	183	114 / 0	0 / 0	0 / 0	0 / 0	70 / 0	0 / 0
G	267	161 / 0	0 / 0	0 / 0	0 / 0	106 / 0	0 / 0

BEARING MATERIAL TO BE SPF NO.2 OR BETTER AT JOINT(S) G

BRACING

TOP CHORD TO BE SHEATHED OR MAX. PURLIN SPACING = 6.25 FT.
MAX. UNBRACED BOTTOM CHORD LENGTH = 7.81 FT OR RIGID CEILING DIRECTLY APPLIED.

ALL PITCH BREAKS AND PERIMETER CORNER JOINTS MUST BE LATERALLY RESTRAINED.

1 LATERAL BRACE(S) AT 1/2 LENGTH OF C-D.

END VERTICAL(S) MUST BE SHEATHED OR HAVE BRACES AS INDICATED IN THE MAX. UNBRACED LENGTH COLUMN OF THE TABLE BELOW

LOADING

TOTAL LOAD CASES: (5)

CHORDS

MEMB. FR-TO	MAX. FACTORED FORCE (LBS)	FACTORED VERT. LOAD (PLF) FROM	TO	LC1	MAX CSI (I.C)	MAX. UNBRAC LENGTH
A- B	-92 / 0	-78.0	-78.0	0.04 (1)	6.25	
B- C	-58 / 0	-101.5	-101.5	0.05 (1)	6.25	
D- C	-235 / 0	0.0	0.0	0.06 (1)	6.25	
G- A	-196 / 0	0.0	0.0	0.02 (1)	7.81	
H- G	0 / 0	-96.5	-96.5	0.17 (1)	10.00	
G- F	0 / 0	-24.1	-24.1	0.04 (4)	10.00	
E- F	0 / 21	0.0	0.0	0.01 (1)	10.00	
F- B	-151 / 0	0.0	0.0	0.01 (1)	7.81	
E- D	0 / 2	-24.1	-24.1	0.02 (4)	10.00	

WEBS

MEMB. FR-TO	MAX. FACTORED FORCE (LBS)	MAX CSI (I.C)
F- D	-4 / 0	0.00 (1)
F- C	0 / 167	0.04 (1)
A- F	0 / 70	0.02 (1)

FACTORED CONCENTRATED LOADS (LBS)

JT	LOC.	LC1	MAX-	MAX+	FACE	DIR.	TYPE
B	2-3-12	-51	-51	—	FRONT	VERT	TOTAL

CANTILEVER ANALYSIS HAS BEEN CONSIDERED IN THIS DESIGN

DESIGN CRITERIA

SPECIFIED LOADS:

TOP CH.	LL	=	21.0	PSF
	DL	=	6.0	PSF
BOT CH.	LL	=	0.0	PSF
	DL	=	7.4	PSF
TOTAL LOAD		=	34.4	PSF

SPACING = 24.0 IN. C/C

LOADING IN FLAT SECTION BASED ON A SLOPE OF 2.00/12 MINIMUM

GIRDER TYPE: CPrimeHip
LEFT SETBACK = 2-3-12
RIGHT SETBACK = 0-0
END SETBACK = 3-2-8
END WALL WIDTH = 0-0
CORNER FRAMING TYPE: CONVENTIONAL
END JACK TYPE: CONVENTIONAL
APPLIED TO FRONT SIDE
- ADDT'L LOADS BASED ON 55 % OF GSL.

THIS TRUSS IS DESIGNED FOR RESIDENTIAL OR SMALL BUILDING REQUIREMENTS OF PART 9, NBCC 2010, NBCC 2015

THIS DESIGN COMPLIES WITH:
- PART 9 OF OBC 2012, OBC 2018
- CSA 086-09, CSA 086-14
- TPIC 2011, TPIC 2014

(55 % OF 23.0 P.S.F. G.S.L. PLUS 8.4 P.S.F. RAIN LOAD) EQUALS 21.0 P.S.F. SPECIFIED ROOF LIVE LOAD

ALLOWABLE DEFL.(LL)= L/360 (0.19")
CALCULATED VERT. DEFL.(LL) = L/ 999 (0.00")
ALLOWABLE DEFL.(TL)= L/360 (0.19")
CALCULATED VERT. DEFL.(TL) = L/ 999 (0.00")

CANTILEVER DEFLECTION:
ALLOWABLE DEFL.(LL)= L/120 (0.19")
CALCULATED VERT. DEFL.(LL) = L/ 999 (0.01")
ALLOWABLE DEFL.(TL)= L/120 (0.19")
CALCULATED VERT. DEFL.(TL) = L/ 999 (0.01")

CSI: TC=0.06/1.00 (C-D:1) , BC=0.17/1.00 (G-H:1) , WB=0.04/1.00 (C-F:1) , SSI=0.13/1.00 (G-H:1)

DOL LUMBER=1.00 NAIL=1.00 LS BEND=1.00 COMP=1.00 SHEAR=1.00 TENS= 1.00

COMPANION LIVE LOAD FACTOR = 1.00

AUTOSOLVE RIGHT HEEL ONLY

TRUSS PLATE MANUFACTURER IS NOT RESPONSIBLE FOR QUALITY CONTROL IN THE TRUSS MANUFACTURING PLANT.

NAIL VALUES

PLATE	GRIP(DRY) (PSI) MAX	MIN	SHEAR (PLI) MAX	MIN	SECTION (PLI) MAX	MIN
MT20	618	354	1667	788	1987	1656

A-18023821

CONTINUED ON PAGE 2

JOB NAME	TRUSS NAME	QUANTITY	PLY	JOB DESC.	DRWG NO.
292651	H40A	1	2	TRUSS DESC.	

Alpa Roof Truss, Maple

Version 8.200 S Jan 6 2018 MiTek Industries, Inc. Sun Feb 18 16:33:40 2018 Page 1
ID:DdSMSEW8qE9HTV0gkasOLL.zzSIP-j7ELrajTXoUlcwEg6P9kXEZrAJhLIku8Zt53STzjsX9

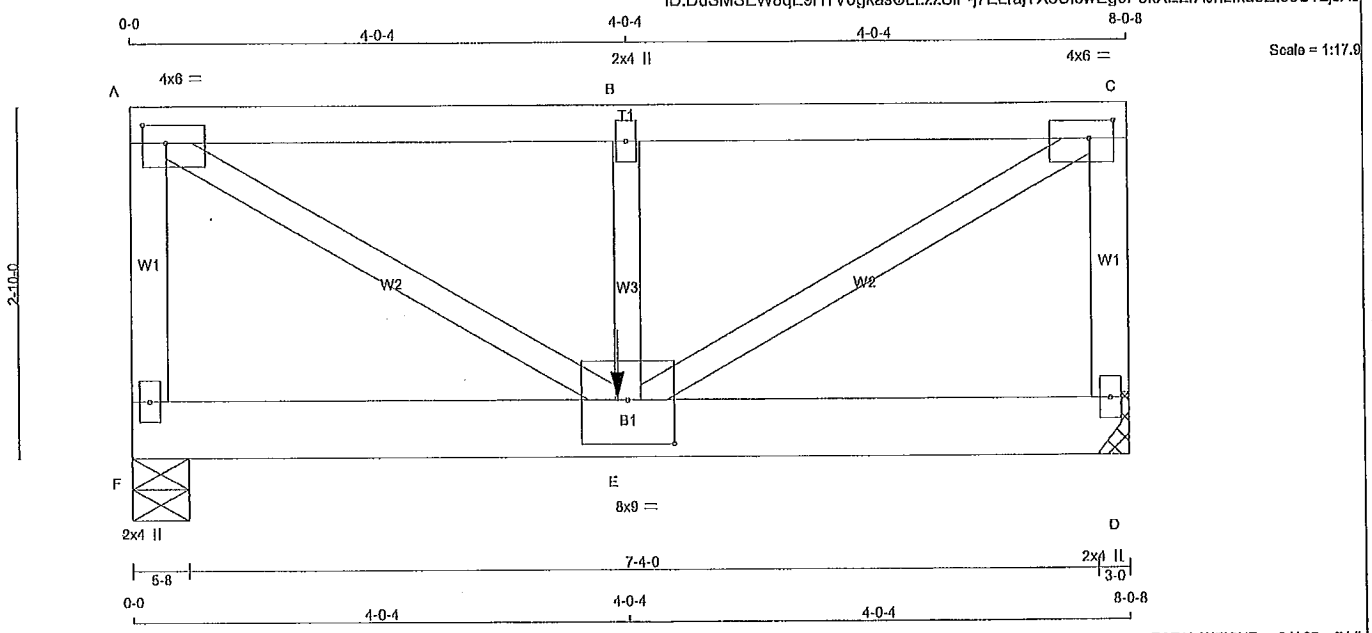

TOTAL WEIGHT = 2 X 37 = 74 lb

[M]

LUMBER
N. L. G. A. RULES

CHORDS	SIZE		LUMBER	DESCR.
F - A	2x4	DRY	No.2	SPF
A - C	2x4	DRY	No.2	SPF
D - C	2x4	DRY	No.2	SPF
F - D	2x6	DRY	No.2	SPF
ALL WEBS	2x3	DRY	No.2	SPF

DRY: SEASONED LUMBER.

DESIGN CONSISTS OF 2 TRUSSES BUILT SEPARATELY THEN FASTENED TOGETHER AS FOLLOWS:

CHORDS	#ROWS	SURFACE SPACING (IN)	LOAD(PLF)
TOP CHORDS : (0.122"X3") SPIRAL NAILS			
F- A	1	12	TOP
A- C	1	8	SIDE(139.8)
C- D	1	12	TOP
BOTTOM CHORDS : (0.122"X3") SPIRAL NAILS			
F- D	2	9	SIDE(248.7)
WEBS : (0.122"X3") SPIRAL NAILS			
B- E	1	6	SIDE(133.3)
2x3	1	6	

NAILS TO BE DRIVEN FROM ONE SIDE ONLY.

GIRDER NAILING ASSUMES NAILED HANGERS ARE FASTENED WITH MIN. 3-0 INCH NAILS.

TOP - COMPONENTS ARE LOADED FROM THE TOP AND MUST BE PLACED ON TOP EDGE OF ALL PLIES FOR THE LOAD TO BE TRANSFERRED TO EACH PLY.

SIDE - PLF SHOWN IS THE EQUIVALENT UDL APPLIED TO ONE SIDE THAT THE CORRESPONDING NAILING PATTERN SHALL BE CAPABLE OF TRANSFERING. REMAINING PLF MUST BE APPLIED ON THE OPPOSITE SIDE OR ON THE TOP.

PLATES (table is in inches)

JT	TYPE	PLATES	W	LEN	Y	X
A	TMVW-I	MT20	4.0	6.0	1.75	2.25
B	TMW+w	MT20	2.0	4.0		

NOTE: Lateral brace(s) shown shall be 1x4 for Part 9 design as per OBC 9.23.13.11, and no less than 2x4 for Part 4 design

REGISTERED PROFESSIONAL ENGINEER
02/18/2018
EDWIN C. FOK
PROVINCE OF ONTARIO

DIMENSIONS, SUPPORTS AND LOADINGS SPECIFIED BY FABRICATOR TO BE VERIFIED BY BUILDING DESIGNER

BEARINGS

JT	FACTORED GROSS REACTION VERT	HORZ	MAXIMUM FACTORED GROSS REACTION DOWN	HORZ	UPLIFT	INPUT BRG	REQRD BRG
F	3144	0	3144	0	0	5-8	2-5
D	3647	0	3647	0	0	HANGER BY OTHERS MIN. SEAT SIZE: 2-7	

UNFACTORED REACTIONS

JT	1ST LCASE COMBINED	SNOW	MAX./MIN. COMPONENT REACTIONS LIVE	PERM.LIVE	WIND	DEAD	SOIL
F	2242	1368 / 0	0 / 0	0 / 0	0 / 0	873 / 0	0 / 0
D	2601	1587 / 0	0 / 0	0 / 0	0 / 0	1013 / 0	0 / 0

BEARING MATERIAL TO BE SPF NO.2 OR BETTER AT JOINT(S) F

BRACING
TOP CHORD TO BE SHEATHED OR MAX. PURLIN SPACING = 4.34 FT.
MAX. UNBRACED BOTTOM CHORD LENGTH = 10.00 FT OR RIGID CEILING DIRECTLY APPLIED.

ALL PITCH BREAKS AND PERIMETER CORNER JOINTS MUST BE LATERALLY RESTRAINED.

LOADING
TOTAL LOAD CASES: (4)

CHORDS

MEMB. FR-TO	MAX. FACTORED FORCE (LBS)	FACTORED VERT. LOAD (PLF) FROM	TO	LC1	MAX CSI (LC)	MAX. UNBRAC LENGTH
F- A	-2254 / 0	0.0	0.0	0.16 (1)	7.45	
A- B	-3566 / 0	-78.0	-78.0	0.31 (1)	4.63	
B- C	-3566 / 0	-367.6	-367.6	0.49 (1)	4.34	
D- C	-2816 / 0	0.0	0.0	0.20 (1)	6.83	
F- E	0 / 0	-515.9	-515.9	0.28 (1)	10.00	
E- D	0 / 0	-486.8	-486.8	0.26 (1)	10.00	

WEBS

MEMB. FR-TO	MAX. FACTORED FORCE (LBS)	MAX CSI (LC)
A- E	0 / 4180	0.52 (1)
E- B	-1042 / 0	0.09 (1)
E- C	0 / 4180	0.52 (1)

FACTORED CONCENTRATED LOADS (LBS)

JT	LOC.	LC1	MAX-	MAX+	FACE	DIR.	TYPE
E	3-11-4	-1008	-1008	—	FRONT	VERT	TOTAL.

DESIGN CRITERIA

*** SPECIAL LOADS ANALYSIS ***
GEOMETRY AND/OR BASIC LOADS CHANGED BY USER.
LOADS WERE DERIVED FROM USER INPUT
NO FURTHER MODIFICATIONS WERE MADE

SPECIFIED LOADS:

TOP CH.	LL =	21.0	PSF
	DL =	6.0	PSF
BOT CH.	LL =	0.0	PSF
	DL =	7.4	PSF
TOTAL LOAD	=	34.4	PSF

SPACING = 24.0 IN. C/C

LOADING IN FLAT SECTION BASED ON A SLOPE OF 2.00/12 MINIMUM

GIRDER TYPE: CStdGirder
START DISTANCE = 3-11-3
START SPAN CARRIED = 13-7-2
END DISTANCE = 8-0-8
END SPAN CARRIED = 13-7-2
END WALL WIDTH = 0-0
APPLIED TO FRONT SIDE OF TOP CHORD.
- ADDT'L LOADS BASED ON 55 % OF GSL.

GIRDER TYPE: CStdGirder
START DISTANCE = 0-0
START SPAN CARRIED = 3-2-8
END DISTANCE = 3-11-4
END SPAN CARRIED = 3-2-8
END WALL WIDTH = 0-0
APPLIED TO FRONT SIDE OF BOTTOM CHORD.
- ADDT'L LOADS BASED ON 55 % OF GSL.

GIRDER TYPE: CStdGirder
START DISTANCE = 0-0
START SPAN CARRIED = 21-5-0
END DISTANCE = 8-0-8
END SPAN CARRIED = 21-5-0
END WALL WIDTH = 0-0
APPLIED TO FRONT SIDE OF BOTTOM CHORD.
- ADDT'L LOADS BASED ON 55 % OF GSL.

*** NON STANDARD GIRDER ***
ADDT'L USER-DEFINED LOADS APPLIED TO ALL LOAD CASES.

THIS TRUSS IS DESIGNED FOR RESIDENTIAL OR SMALL BUILDING REQUIREMENTS OF PART 9, NBCC 2010, NBCC 2015

THIS DESIGN COMPLIES WITH:
- PART 9 OF OBC 2012, OBC 2018
- CSA 086-09, CSA 086-14
- TPIC 2011, TPIC 2014

(55 % OF 23.0 P.S.F. G.S.L. PLUS 8.4 P.S.F. RAIN LOAD) EQUALS 21.0 P.S.F. SPECIFIED ROOF LIVE LOAD

ALLOWABLE DEFL.(LL)= L/360 (0.27")
CALCULATED VERT. DEFL.(LL) = L/ 999 (0.03")
ALLOWABLE DEFL.(TL)= L/360 (0.27")
CALCULATED VERT. DEFL.(TL) = L/ 999 (0.06")

A-18023822

CONTINUED ON PAGE 2

JOB NAME	TRUSS NAME	QUANTITY	PLY	JOB DESC.	DRWG NO.
292651	H40A	1	2	TRUSS DESC.	

Alpa Roof Truss, Maple

Version 8.200 S Jan 6 2018 MiTek Industries, Inc. Sun Feb 18 16:33:40 2018 Page 2
ID:DdSMSEW8qE9HTV0gkasOLLzzSIP-j7ELraTXoUlcwEq6P9kXEZrAJhLIku8Zt53STzlsX9

PLATES (table is in inches)

JT	TYPE	PLATES	W	LEN	Y	X
C	TMVW-t	MT20	4.0	6.0	1.75	2.25
D	BMV1+p	MT20	2.0	4.0		
E	BMWWW-t	MT20	6.0	9.0	4.25	4.50
F	BMV1+p	MT20	2.0	4.0		

HANGERS NOTES

1) SPECIAL HANGER(S) OR CONNECTION(S) REQUIRED TO SUPPORT CONCENTRATED LOAD(S) 1008.5 lbs FACTORED DOWN AT 3-11-4 ON BOTTOM CHORD. DESIGN FOR UNSPECIFIED CONNECTION(S) IS DELEGATED TO THE BUILDING DESIGNER.

NOTE: Lateral brace(s) shown shall be 1x4 for Part 9 design as per OBC 9.23.13.11, and no less than 2x4 for Part 4 design

REGISTERED PROFESSIONAL ENGINEER
02/18/2018
EDWIN C. FOK
PROVINCE OF ONTARIO

CSI: TC=0.49/1.00 (B-C:1) , BC=0.28/1.00 (E-F:1) , WB=0.52/1.00 (A-E:1) , SSI=0.39/1.00 (E-F:1)

DOL LUMBER=1.00 NAIL=1.00 LS BEND=1.00 COMP=1.00 SHEAR=1.00 TENS= 1.00

COMPANION LIVE LOAD FACTOR = 1.00

TRUSS PLATE MANUFACTURER IS NOT RESPONSIBLE FOR QUALITY CONTROL IN THE TRUSS MANUFACTURING PLANT .

NAIL VALUES

PLATE	GRIP(DRY) (PSI)		SHEAR (PLI)		SECTION (PLI)	
	MAX	MIN	MAX	MIN	MAX	MIN
MT20	618	354	1667	788	1987	1656

PLATE PLACEMENT TOL. = 0.250 Inches

PLATE ROTATION TOL. = 5.0 Deg.

JSI GRIP= 0.85 (A) (INPUT = 0.90)
JSI METAL= 0.45 (C) (INPUT = 1.00)

A-180238226(2)

STRACON ENGINEERING INC.

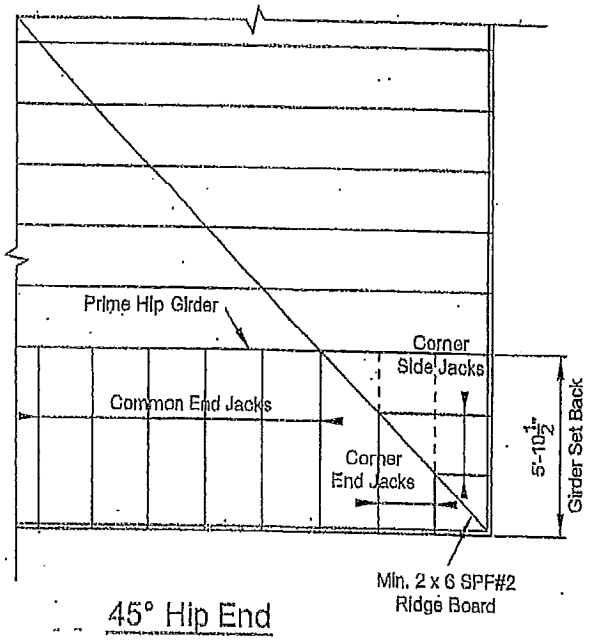

45° Hip End

LUMBER SPECIFICATION

TOP CHORD : 2 x 4 SPF#2
BOTTOM CHORD : 2 x 4 SPF#2
WEBS : 2 x 3 SPF#2
UNLESS OTHERWISE SHOWN

DESIGN LOAD

TOP CHORD SNOW LOAD	:	40.5 P.S.F.
TOP CHORD DEAD LOAD	:	3.0 P.S.F.
BOTTOM CHORD LIVE LOAD	:	0.0 P.S.F.
BOTTOM CHORD DEAD LOAD	:	7.0 P.S.F.
TOTAL LOAD	:	50.5 P.S.F

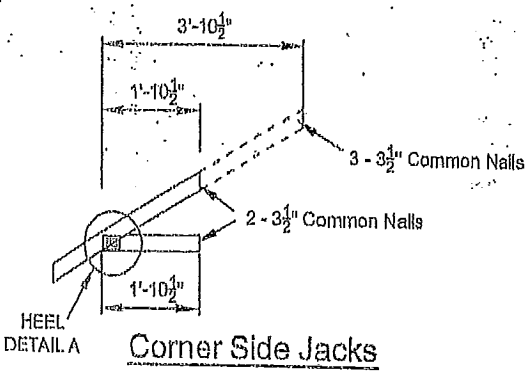

Corner Side Jacks

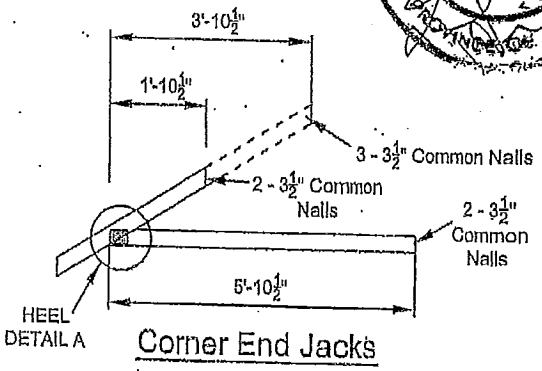

Corner End Jacks

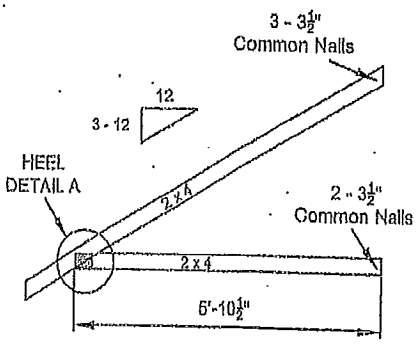

Common End Jacks

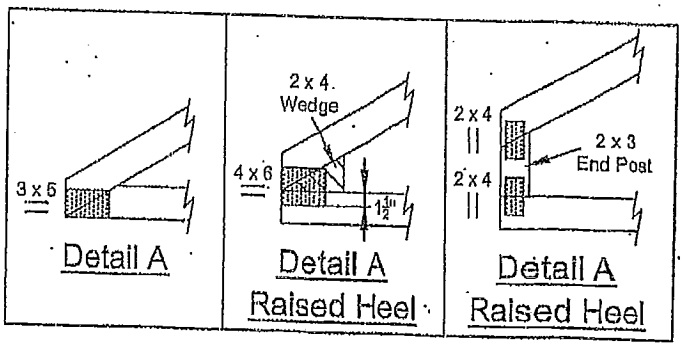

NOTE: DESIGN CONFORMS TO PART 9, O.B.C. 2012 (L.S.D. DESIGN)

CS-51008

TECHNICAL BULLETIN

LUS – Double Shear Joist Hangers

SIMPSON Strong-Tie®

All LUS hangers have double shear nailing. This patented innovation distributes the load through two points on each joist nail for greater strength. It also allows the use of fewer nails, faster installation and the use of common nails for all connections.

Material: 18 gauge

Finish: G90 galvanized

Design:

- Factored resistances are in accordance with CSA O86-14.
- Uplift resistances have been increased 15%. No further increase is permitted.
- Wood shear is not considered in the factored resistances given. The specifier must ensure that the joist and header capacities are capable of withstanding these loads.

Installation:

- Use all specified fasteners.
- Nails: 16d = 0.162" dia. x 3½" long common wire, 10d = 0.148" x 3" long common wire.
- Double shear nails must be driven at an angle through the joist or truss into the header to achieve the table loads.
- Not designed for welded or nailer applications.

Options:

- These hangers cannot be modified

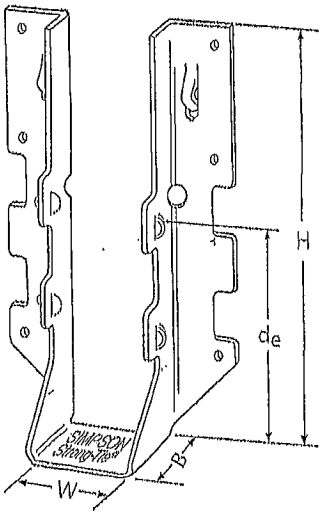

LUS28

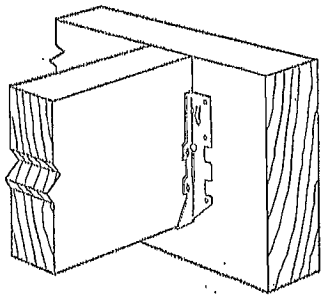

Typical LUS Installation

Model No.	Ga.	Dimensions (in.)				Fasteners		Factored Resistance (lb.)			
								D.Fir-L.		S-P-F	
		W	H	B	d_e[1]	Face	Joist	Uplift (K_D=1.15)	Normal (K_D=1.00)	Uplift (K_D=1.15)	Normal (K_D=1.00)
LUS24	18	1 9/16	3 1/8	1 3/4	1 15/16	(4) 10d	(2) 10d	710	1630	645	1155
LUS24-2	18	3 1/8	3 1/8	2	1 15/16	(4) 16d	(2) 16d	835	2020	590	1435
LUS26	18	1 9/16	4 3/4	1 3/4	3 5/8	(4) 10d	(4) 10d	1420	2170	1290	1630
LUS26-2	18	3 1/8	4 7/8	2	4	(4) 16d	(4) 16d	1720	2595	1545	1920
LUS26-3	18	4 5/8	4 9/16	2	3 1/4	(4) 16d	(4) 16d	1720	2595	1545	2340
LUS28	18	1 9/16	6 5/8	1 3/4	3 3/4	(6) 10d	(6) 10d	1420	2520	1290	1790
LUS28-2	18	3 1/8	7	2	4	(6) 16d	(4) 16d	1720	3325	1545	2575
LUS28-3	18	4 5/8	6 1/4	2	3 1/4	(6) 16d	(4) 16d	1720	3325	1545	2375
LUS210	18	1 9/16	7 13/16	1 3/4	3 7/8	(8) 10d	(4) 10d	1420	2785	1290	2210
LUS210-2	18	3 1/8	9	2	6	(8) 16d	(6) 16d	2580	4500	2320	3195
LUS210-3	18	4 5/8	8 9/16	2	5 1/4	(8) 16d	(6) 16d	2580	3345	2320	2375

1. d_e is the distance from the seat of the hanger to the highest joist nail.

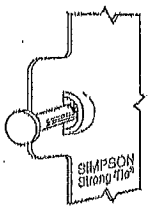

Dome Double Shear Nailing prevents tabs breaking off (available on some models).

U.S. Patent 5,603,580

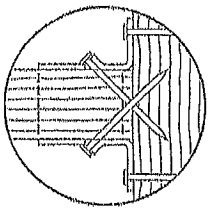

Double Shear Nailing Top View.

LICENSED PROFESSIONAL ENGINEER
4/5/2017
B. D. BUNTING
PROVINCE OF ONTARIO

© 2017 Simpson Strong-Tie Company Inc. T-SPECLUS17 3/17 exp. 6/18

(800) 999-5099
strongtie.com

TECHNICAL BULLETIN

HUS/LJS – Double Shear Joist Hangers

SIMPSON Strong-Tie®

All hangers have double shear nailing. This patented innovation distributes the load through two points on each joist nail for greater strength. It also allows the use of fewer nails, faster installation and the use of common nails for all connections. Do not bend or remove tabs.

Material: See table

Finish: G90 galvanized

Design:

- Factored resistances are in accordance with CSA O86 -14.
- Uplift resistances have been increased 15%. No further increase is permitted.
- Wood shear is not considered in the factored resistances given. The specifier must ensure that the joist and header capacities are capable of withstanding these loads.

Installation:

- Use all specified fasteners
- Nails: 16d = 0.162" dia. x 3½" long common wire
- Double shear nails must be driven at an angle through the joist or truss into the header to achieve the table loads
- Not designed for welded or nailer applications

Options:

- See current catalogue for options

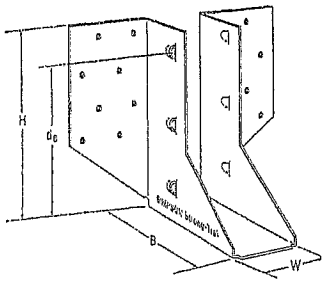

LJS26DS

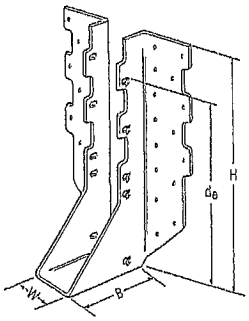

HUS210
(HUS26, HUS28, similar)

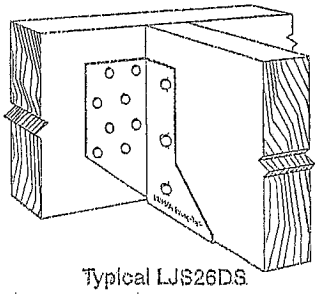

Typical LJS26DS Installation

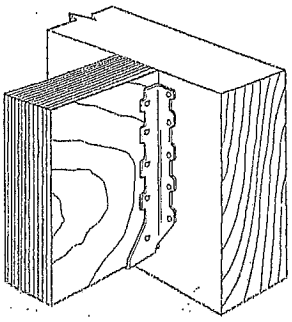

Typical HUS Installation

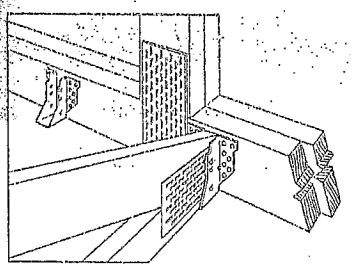

Typical HUS Installation
(Truss Designer to provide fastener quantity for connecting multiple members together)

Model No.	Ga.	Dimensions (in.)				Fasteners		Factored Resistance (lb.)			
								D.Fir-L		S-P-F	
		W	H	B	d_a[1]	Face	Joist	Uplift (K_D=1.15) lb.	Normal (K_D=1.00) lb.	Uplift (K_D=1.15) lb.	Normal (K_D=1.00) lb.
LJS26DS	18	1 9/16	5	3½	4⅝	(16) 16d	(6) 16d	2055	4265	1460	4115
HUS26	16	1⅝	5⅝	3	3 15/16	(14) 16d	(6) 16d	2705	4940	2065	3875
HUS28	16	1⅝	7 3/32	3	6 3/32	(22) 16d	(8) 16d	3605	5365	2675	4345
HUS210	16	1⅝	9 3/32	3	7 31/32	(30) 16d	(10) 16d	4505	5795	4010	4740
HUS1.81/10	16	1 13/16	9	3	8	(30) 16d	(10) 16d	4505	6450	4010	5200

1. d_a is the distance from the seat of the hanger to the highest joist nail.

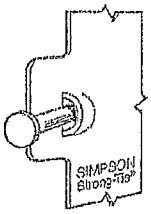

Dome Double Shear Nailing prevents tabs breaking off (available on some models).

U.S. Patent 5,603,580

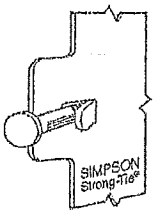

Double Shear Nailing Side View. Do not bend tab back.

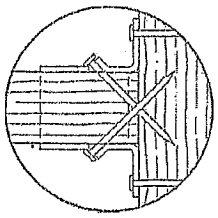

Double Shear Nailing Top View.

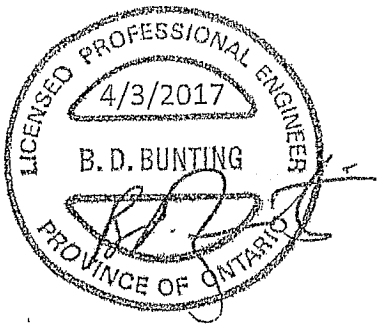

LIMIT STATES DESIGN

This technical bulletin is effective until June 30, 2019, and reflects information available as of March 1, 2017. This information is updated periodically and should not be relied upon after June 30, 2019. Contact Simpson Strong-Tie for current information and limited warranty. For see strongtie.com

© 2017 Simpson Strong-Tie Company Inc.

T-SPECHUS17 3/17 exp. 6/19

(800) 999-5099
strongtie.com

TECHNICAL BULLETIN

HHUS – Double Shear Joist Hangers

SIMPSON Strong-Tie®

All HHUS hangers have double shear nailing. This patented innovation distributes the load through two points on each joist nail for greater strength. It also allows the use of fewer nails, faster installation and the use of common nails for all connections. Do not bend or remove tabs.

Material: 14 gauge

Finish: G90 galvanized

Design:

- Factored resistances are in accordance with CSA O86-14.
- Uplift resistances have been increased 15%. No further increase is permitted.
- Wood shear is not considered in the factored resistances given. The specifier must ensure that the joist and header capacities are capable of withstanding these loads.

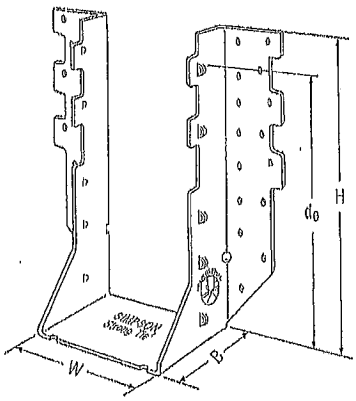

HHUS410

Installation:

- Use all specified fasteners
- Nails: 16d = 0.162" dia. x 3½" long common wire
- Double shear nails must be driven at an angle through the joist or truss into the header to achieve the table loads
- Not designed for welded or nailer applications

Options:

- See current catalogue for options

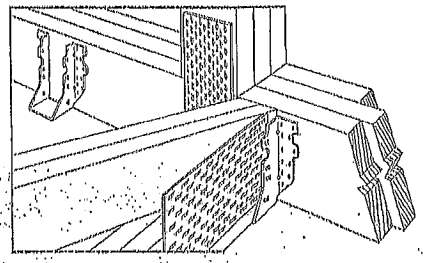

Typical HHUS Installation (Truss Designer to provide fastener quantity for connecting multiple members together)

Model No.	Ga.	Dimensions (in.)				Fasteners		Factored Resistance (lb.)			
								D.Fir-L		S-P-F	
		W	H	B	d_0[1]	Face	Joist	Uplift (K_D=1.15)	Normal (K_D=1.00)	Uplift (K_D=1.15)	Normal (K_D=1.00)
HHUS26-2	14	3 5/16	5 13/16	3	3 15/16	(14) 16d	(6) 16d	2850	7335	2065	5205
HHUS28-2	14	3 5/16	7 7/32	3	6 5/32	(22) 16d	(8) 16d	3765	8940	2675	6345
HHUS210-2	14	3 5/16	9 3/32	3	8	(30) 16d	(10) 16d	4745	9660	4310	7000
HHUS210-3	14	4 11/16	9	3	7 15/16	(30) 16d	(10) 16d	4745	10545	4310	7485
HHUS210-4	14	6 1/8	8 29/32	3	7 27/32	(30) 16d	(10) 16d	4745	10545	4310	7485
HHUS46	14	3 5/8	5 13/32	3	3 15/16	(14) 16d	(6) 16d	2540	7335	2065	5205
HHUS48	14	3 5/8	7 1/8	3	6 1/8	(22) 16d	(8) 16d	3765	8945	2267	6345
HHUS410	14	3 5/8	9	3	8	(30) 16d	(10) 16d	4745	9855	4310	7000
HHUS5.50/10	14	5 1/2	9	3	8	(30) 16d	(10) 16d	4745	10545	4310	7485
HHUS7.25/10	14	7 1/4	9	3 5/16	7 29/32	(30) 16d	(10) 16d	4745	10770	4310	7650

1. d_0 is the distance from the seat of the hanger to the highest joist nail.

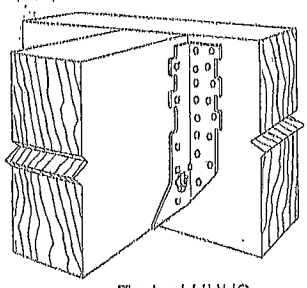

Typical HHUS Installation

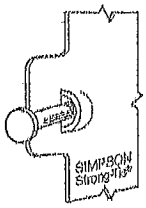

Dome Double Shear Nailing prevents tabs breaking off (available on some models).

U.S. Patent 6,603,680

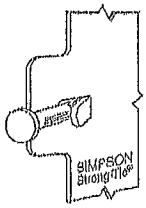

Double Shear Nailing Side View. Do not bend tab back.

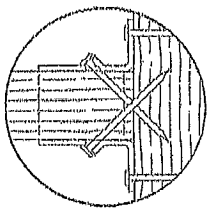

Double Shear Nailing Top View.

LICENSED PROFESSIONAL ENGINEER
4/3/2017
B. D. BUNTING
PROVINCE OF ONTARIO