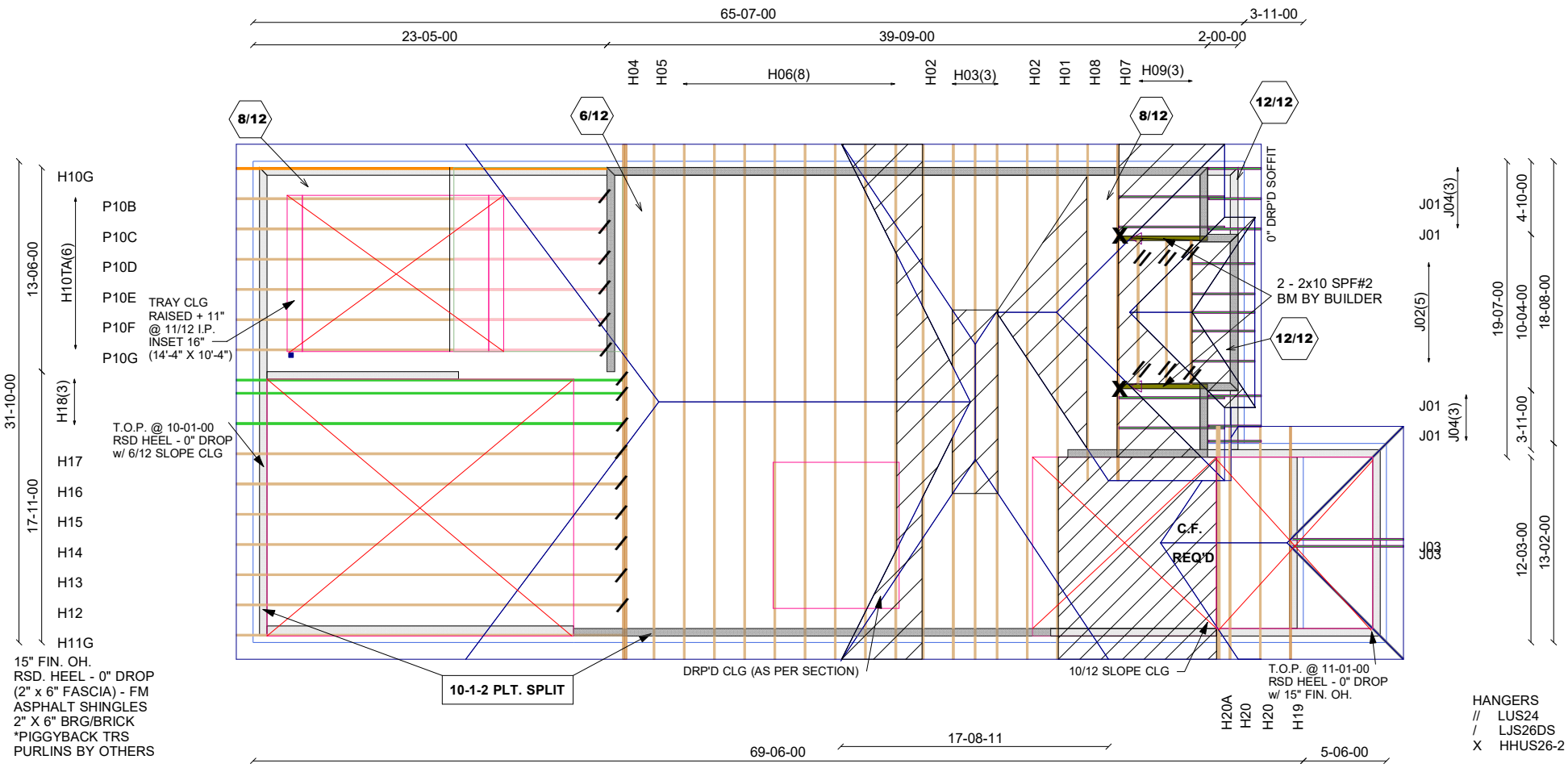

LOFT WALLS SUPPORTED BY OTHERS

10-01-02 (1ST FLOOR PLT)
11-14 (FLOOR JOIST)
12 (SUBFLOOR)

E22051986
E22051988 - E22052018

Mitek V. 8.5.3.233

ALL CONVENTIONAL FRAMING TO CONFORM WITH PART 9 O.B.C. LATEST EDITION. ROOF RAFTERS THAT CROSS OVER TRUSSES TO BE 2X4 SPF #2 @ 24" O.C WITH A VERT. POST TO THE TRUSS UNDERNEATH AT EACH CROSS POINT. VERT. POSTS LONGER THAN 6' TO HAVE LATERAL BRACING SO THAT THE DISTANCE BETWEEN END POINTS & BETWEEN ROWS OF BRACING DOES NOT EXCEED 6'

CONVENTIONAL FRAMING BY OTHERS

Job Track: 45147	Builder / Location: GOLD PARK HOMES / VAUGHAN	Model / Elevation: 4000 / C OPT GRD TRAY	
Layout ID: 345250	Project: PINE VALLEY PH 2	THESE DRAWINGS CONSTITUTE THE PROPERTY OF ALPA ROOF TRUSSES INC., SHALL NOT BE REPRODUCED, PUBLISHED, OR REDISTRIBUTED IN ANY MANNER OR UTILIZED FOR ANY PURPOSE OTHER THAN THE MANUFACTURE OF TRUSSES BY ALPA ROOF TRUSSES INC AND WILL BE RETRACTED BY ALPA ROOF TRUSSES INC IF UTLILZED FOR ANY OTHER PURPOSE.	
Plan Log: 116406	Date: 2022-06-14 / Designer: AMANDA / Ref:		

EWP DESIGN INC.

(905) 832-2250 FAX (905) 832-0286

RESPONSIBILITIES AND SPECIFICATIONS

RESPONSIBILITIES

1. EWP DESIGN INC. is responsible for the design of trusses as individual components.
2. It is the responsibility of others to ascertain that the design loads utilized on each drawing meet or exceed the actual dead load imposed by the structure, the live load imposed by the intended use and the snow load imposed by local building code or authorities with jurisdictions.
3. All dimensions are to be verified by the owner, contractor, architect or other authorities with jurisdictions before truss fabrication.
4. EWP DESIGN INC. bears no responsibility for the erection of trusses. Persons erecting trusses are cautioned to seek professional advice regarding the temporary and permanent bracing for the system. Bracing shown on EWP DESIGN INC. drawing is specified for the truss as a component only and forms an integral part of the truss design.
5. It is the truss manufacturer's responsibility to ensure that trusses are manufactured in conformance with specifications of EWP DESIGN INC. as outlined below.

SPECIFICATIONS

1. Trusses designed by EWP DESIGN INC. conform to the relevant section of the Ontario Building Code of Canada (Part 9 or Part 4) or to the Canadian code for farm buildings, whichever applies to the building type, as indicated on the EWP DESIGN INC. drawings, and conform to the design procedures established by the Truss Plate Institute of Canada. Unit stresses used for truss designs are as per the edition of CSA-O86 shown on EWP DESIGN INC. drawings.
2. Lumber is to be the size, species and grade as specified on EWP DESIGN INC. drawings.
3. Moisture content of lumber shall not exceed 19% in service unless specified otherwise.
4. Metal connector plates shall be applied to both faces of truss at each joint and shall be positioned as specified.
5. Top chords of trusses are assumed to be continuously braced laterally by roof sheathing or by purlins at intervals not exceeding 12.5 times the thickness of top chord member.
6. Bottom chords shall be laterally braced at intervals not exceeding 3M (10') o.c., where rigid ceiling is not applied directly to the underside of chords.

THESE DRAWINGS CONSTITUTE THE PROPERTY OF EWP DESIGN INC., SHALL NOT BE REPRODUCED, PUBLISHED, OR REDISTRIBUTED IN ANY MANNER OR UTILIZED FOR ANY PURPOSE OTHER THAN THE MANUFACTURE OF TRUSSES BY THE ALPA LUMBER GROUP, AND WILL BE RETRACTED BY EWP DESIGN INC. IF UTILIZED FOR ANY OTHER PURPOSE.

JOB NAME	TRUSS NAME	QUANTITY	PLY	JOB DESC.	DRWG NO.
345250	H10TA		1	TRUSS DESC. JT 45147	E22051986

Alpa Roof Truss, Maple

Version 8.530 S Feb 23 2022 MiTek Industries, Inc. Fri Jun 17 14:10:42 2022 Page 1

ID:wceEj9xaBTOj6r9Q4a6qjtzAj6D-uu78vfPxvy410YGh?2mFuXfa8ATIssTV7ixAkhz5MzR

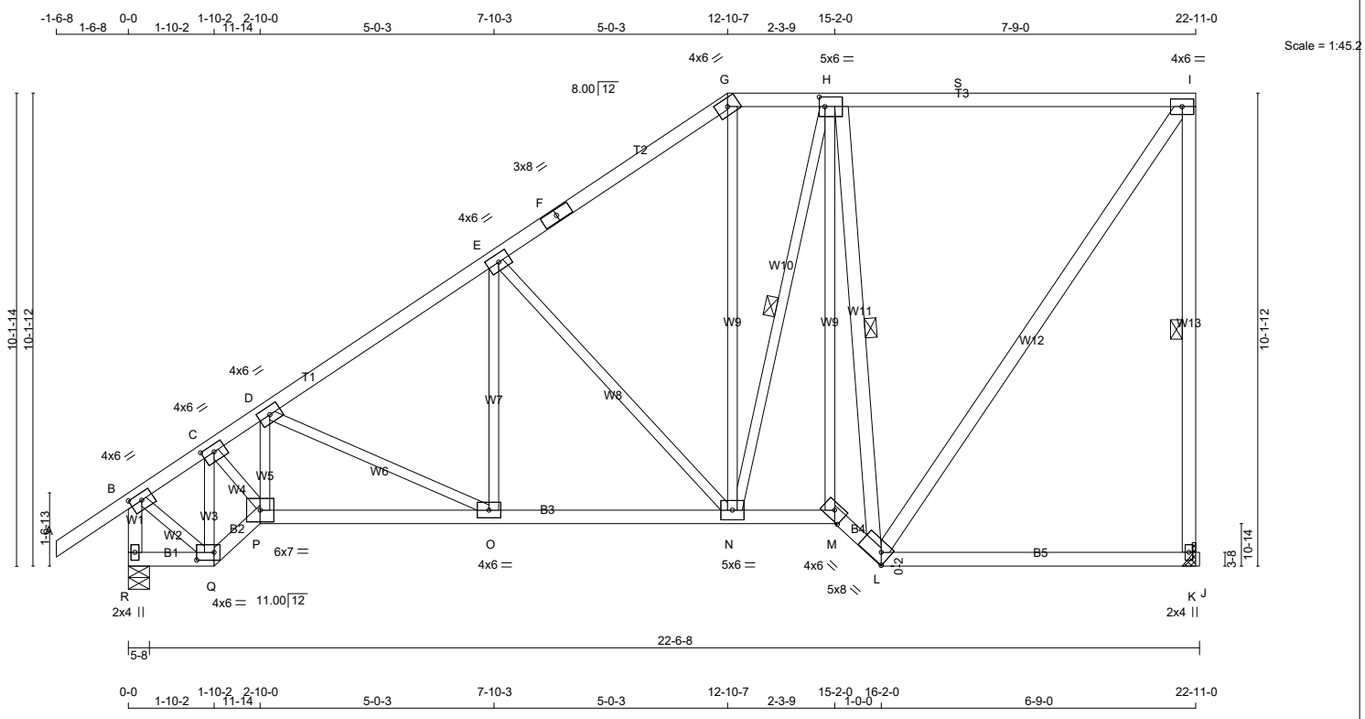

TOTAL WEIGHT = 6 X 137 = 822 lb

[M][F]

LUMBER

N. L. G. A. RULES

CHORDS	SIZE		LUMBER	DESCR.
A - F	2x4	DRY	No.2	SPF
F - G	2x4	DRY	No.2	SPF
G - I	2x4	DRY	No.2	SPF
K - I	2x4	DRY	No.2	SPF
R - B	2x4	DRY	No.2	SPF
R - Q	2x4	DRY	No.2	SPF
Q - P	2x4	DRY	No.2	SPF
P - M	2x4	DRY	No.2	SPF
M - L	2x4	DRY	No.2	SPF
L - J	2x4	DRY	No.2	SPF
ALL WEBS	2x3	DRY	No.2	SPF
EXCEPT				
H - L	2x4	DRY	No.2	SPF
L - I	2x4	DRY	No.2	SPF

DRY: SEASONED LUMBER.

PLATES (table is in inches)

JT	TYPE	PLATES	W	LEN	Y	X
B	TMVW-t	MT20	4.0	6.0	1.75	3.00
C	TMWW-t	MT20	4.0	6.0	1.75	3.00
D	TMWW-t	MT20	4.0	6.0		
E	TMWW-t	MT20	4.0	6.0		
F	TS-t	MT20	3.0	8.0		
G	TTW-h	MT20	4.0	6.0		
H	TMWWW-t	MT20	5.0	6.0	2.50	1.50
I	TMVW-t	MT20	4.0	6.0		
K	BMV1+p	MT20	2.0	4.0		
L	BBWW-h	MT20	5.0	8.0		Edge
M	BBW-h	MT20	4.0	6.0	2.25	3.00
N	BMWWW-t	MT20	5.0	6.0		
O	BMWW-t	MT20	4.0	6.0		
P	BBWW-l	MT20	6.0	7.0		
Q	BBWW-l	MT20	4.0	6.0	2.00	4.50
R	BMV1+p	MT20	2.0	4.0		

Edge - INDICATES REFERENCE CORNER OF PLATE TOUCHES EDGE OF CHORD.

LATERAL BRACE(S) SHOWN SHALL BE 2X4 SPF#2

DIMENSIONS, SUPPORTS AND LOADINGS SPECIFIED BY FABRICATOR TO BE VERIFIED BY BUILDING DESIGNER

BEARINGS

JT	FACTORED GROSS REACTION VERT	HORZ	MAXIMUM FACTORED GROSS REACTION DOWN	HORZ	UPLIFT	INPUT BRG	REQRD BRG
K	1222	0	1222	0	0	MECHANICAL	
R	1269	0	1269	0	0	5-8	1-8

A SUITABLE HANGER/MECHANICAL CONNECTION IS REQUIRED AT JOINT K. MINIMUM BEARING LENGTH AT JOINT K = 1-8.

UNFACTORED REACTIONS

	1ST LCASE	MAX./MIN. COMPONENT REACTIONS					
JT	COMBINED	SNOW	LIVE	PERM.LIVE	WIND	DEAD	SOIL
K	882	479 / 0	0 / 0	0 / 0	0 / 0	403 / 0	0 / 0
R	905	552 / 0	0 / 0	0 / 0	0 / 0	354 / 0	0 / 0

BEARING MATERIAL TO BE SPF NO.2 OR BETTER AT JOINT(S) R

BRACING

FOR SECTION G-I, MAX. PURLIN SPACING = 2.00 FT.
FOR OTHER SECTIONS, TOP CHORD TO BE SHEATHED OR MAX. PURLIN SPACING = 5.29 FT.
MAX. UNBRACED BOTTOM CHORD LENGTH = 10.00 FT OR RIGID CEILING DIRECTLY APPLIED.

ALL PITCH BREAKS AND PERIMETER CORNER JOINTS MUST BE LATERALLY RESTRAINED.

1 LATERAL BRACE(S) AT 1/ 2 LENGTH OF I-K, H-N, H-L.

END VERTICAL(S) MUST BE SHEATHED OR HAVE BRACES AS INDICATED IN THE MAX. UNBRACED LENGTH COLUMN OF THE TABLE BELOW

LOADING

TOTAL LOAD CASES: (4)

CHORDS MEMB. FR-TO	MAX. FACTORED FORCE (LBS)	VERT. LOAD (PLF) FROM	TO	MAX CSI (LC)	MAX. UNBRAC LENGTH	WEBS MEMB. FR-TO	MAX. FACTORED FORCE (LBS)	MAX CSI (LC)
A- B	0 / 35	-78.0	-78.0	0.15 (1)	10.00	Q- C	-1084 / 0	0.18 (1)
B- C	-927 / 0	-78.0	-78.0	0.12 (1)	6.25	C- P	0 / 1006	0.23 (1)
C- D	-1474 / 0	-78.0	-78.0	0.12 (1)	5.29	P- D	-128 / 0	0.02 (1)
D- E	-1312 / 0	-78.0	-78.0	0.25 (1)	5.38	D- O	-204 / 0	0.10 (1)
E- F	-914 / 0	-78.0	-78.0	0.24 (1)	6.16	O- E	0 / 180	0.05 (4)
F- G	-914 / 0	-78.0	-78.0	0.24 (1)	6.16	E- N	-535 / 0	0.61 (1)
G- H	-744 / 0	-93.0	-93.0	0.58 (1)	2.00	N- G	0 / 486	0.11 (1)
H- S	-591 / 0	-93.0	-93.0	0.68 (1)	2.00	N- H	-13 / 2	0.01 (1)
S- I	-591 / 0	-93.0	-93.0	0.68 (1)	2.00	M- H	0 / 709	0.16 (1)
K- I	-1156 / 0	0.0	0.0	0.58 (1)	5.92	H- L	-1489 / 0	0.74 (1)
R- B	-1252 / 0	0.0	0.0	0.13 (1)	7.19	L- I	0 / 1045	0.17 (1)
						B- Q	0 / 876	0.20 (1)
R- Q	0 / 0	-18.5	-18.5	0.02 (4)	10.00			
Q- P	0 / 927	-18.5	-18.5	0.15 (1)	10.00			
P- O	0 / 1288	-18.5	-18.5	0.26 (1)	10.00			
O- N	0 / 1103	-18.5	-18.5	0.24 (1)	10.00			
N- M	0 / 749	-18.5	-18.5	0.18 (1)	10.00			
M- L	0 / 1025	-18.5	-18.5	0.17 (1)	10.00			
L- K	0 / 0	-18.5	-18.5	0.25 (4)	10.00			
K- J	0 / 0	-18.5	-18.5	0.00 (4)	10.00			

DESIGN CRITERIA

SPECIFIED LOADS:

TOP CH.	LL	=	21.0	PSF
	DL	=	6.0	PSF
BOT CH.	LL	=	0.0	PSF
	DL	=	7.4	PSF
TOTAL LOAD		=	34.4	PSF

SPACING = 24.0 IN. C/C

LOADING IN FLAT SECTION BASED ON PIGGYBACK TRUSS WITH SLOPES OF 6.00/12 AND -6.00/12 AND RESPECTIVE HEEL HEIGHTS OF 0-0 AND 0-0 AND AN ADDITIONAL DEAD LOAD OF 6.0 P.S.F.

THIS TRUSS IS DESIGNED FOR RESIDENTIAL OR SMALL BUILDING REQUIREMENTS OF PART 9, NBCC 2015

THIS DESIGN COMPLIES WITH:
- PART 9 OF BCBC 2018 , ABC 2019
- PART 9 OF OBC 2012 (2019 AMENDMENT)
- CSA 086-14
- TPIC 2014

DESIGN ASSUMPTIONS
-OVERHANG NOT TO BE ALTERED OR CUT OFF.

(55 % OF 23.0 P.S.F. G.S.L. PLUS 8.4 P.S.F. RAIN LOAD) EQUALS 21.0 P.S.F. SPECIFIED ROOF LIVE LOAD

ALLOWABLE DEFL.(LL)= L/360 (0.76")
CALCULATED VERT. DEFL.(LL) = L/ 999 (0.05")
ALLOWABLE DEFL.(TL)= L/360 (0.76")
CALCULATED VERT. DEFL.(TL) = L/ 999 (0.13")

CANTILEVER DEFLECTION:
ALLOWABLE DEFL.(TL)= L/120 (0.19")
CALCULATED VERT. DEFL.(TL) = L/ 999 (0.00")

CSI: TC=0.68/1.00 (H-I:1) , BC=0.26/1.00 (O-P:1) , WB=0.74/1.00 (H-L:1) , SSI=0.34/1.00 (H-I:1)

DOL LUMBER=1.00 NAIL=1.00 LS BEND=1.10 COMP=1.10 SHEAR=1.10 TENS= 1.10

COMPANION LIVE LOAD FACTOR = 1.00

TRUSS PLATE MANUFACTURER IS NOT RESPONSIBLE FOR QUALITY CONTROL IN THE TRUSS MANUFACTURING PLANT .

NAIL VALUES

PLATE	GRIP(DRY) (PSI) MAX	MIN	SHEAR (PLI) MAX	MIN	SECTION (PLI) MAX	MIN
MT20	650	371	1747	788	1987	1873

PLATE PLACEMENT TOL. = 0.250 inches

PLATE ROTATION TOL. = 5.0 Deg.

JSI GRIP= 0.88 (C) (INPUT = 0.90)
JSI METAL= 0.28 (Q) (INPUT = 1.00)

JOB NAME	TRUSS NAME	QUANTITY	PLY	JOB DESC.	DRWG NO.
345248	H01		1	TRUSS DESC. JT 45147	E22051988

Alpha Roof Truss, Maple

Version 8.530 S Feb 23 2022 MiTek Industries, Inc. Fri Jun 17 13:55:03 2022 Page 1

ID:wceEj9xaBTOj6r9Q4a6gjtzAj6D-tEuAqa1x2SnFsE DULQ2KWG17frfM9TIC6z?Hcz5NC6

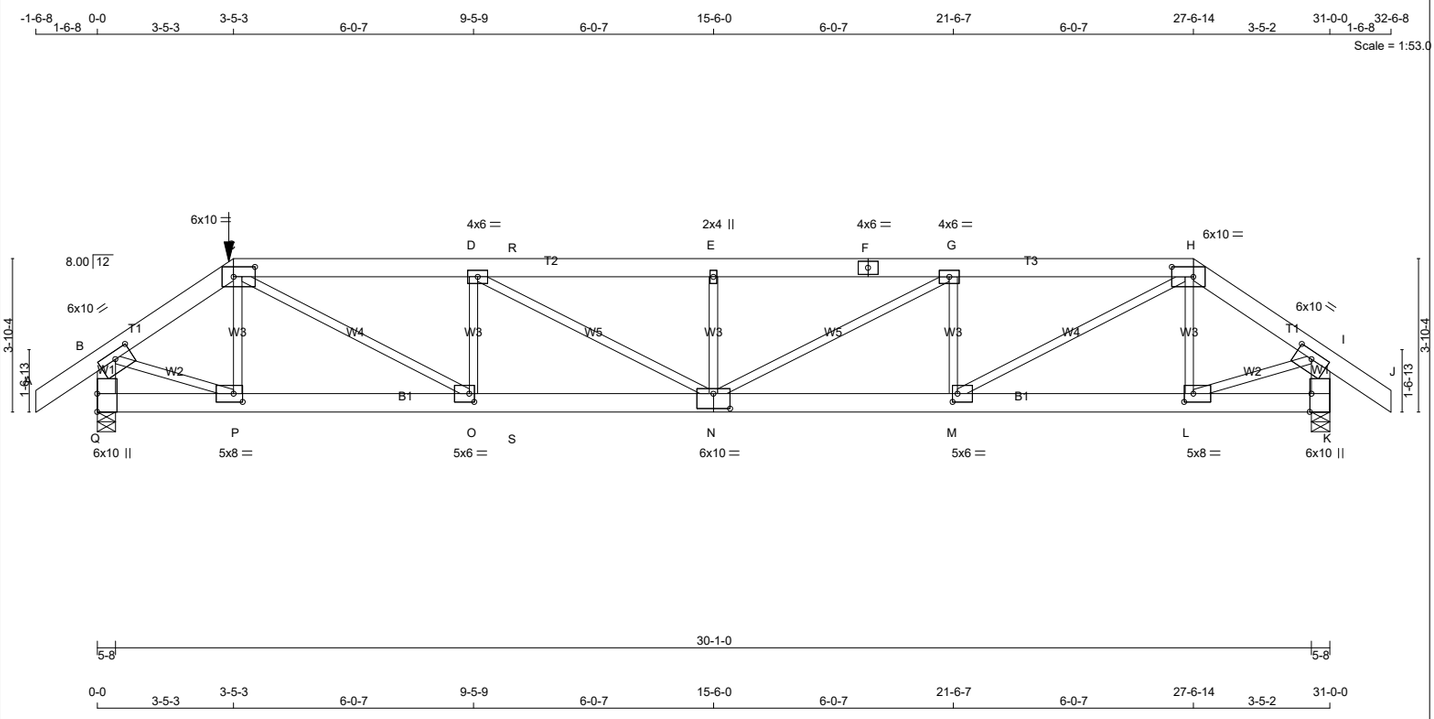

TOTAL WEIGHT = 163 lb

[M]

LUMBER

N. L. G. A. RULES

CHORDS	SIZE		LUMBER	DESCR.
A - C	2x6	DRY	No.2	SPF
C - F	2x6	DRY	No.2	SPF
F - H	2x6	DRY	No.2	SPF
H - J	2x6	DRY	No.2	SPF
Q - B	2x6	DRY	No.2	SPF
K - I	2x6	DRY	No.2	SPF
Q - N	2x6	DRY	No.2	SPF
N - K	2x6	DRY	No.2	SPF
ALL WEBS EXCEPT	2x3	DRY	No.2	SPF

DRY: SEASONED LUMBER.

PLATES (table is in inches)

JT	TYPE	PLATES	W	LEN	Y	X
B	TMVW-t	MT20	6.0	10.0	2.25	5.00
C	TTWW-l	MT20	6.0	10.0	3.00	6.50
D	TMWW-t	MT20	4.0	6.0		
E	TMW+w	MT20	2.0	4.0		
F	TS-t	MT20	4.0	6.0		
G	TMWW-t	MT20	4.0	6.0		
H	TTWW-l	MT20	6.0	10.0	3.00	6.50
I	TMVW-t	MT20	6.0	10.0	2.25	5.00
K	BMV1+t	MT20	6.0	10.0	Edge	0.50
L	BMWW-t	MT20	5.0	8.0	2.50	2.75
M	BMWW-t	MT20	5.0	6.0	2.50	1.50
N	BSWWW-l	MT20	6.0	10.0	4.50	5.00
O	BMWW-t	MT20	5.0	6.0	2.50	1.50
P	BMWW-t	MT20	5.0	8.0	2.50	2.75
Q	BMV1+t	MT20	6.0	10.0	5.50	

Edge - INDICATES REFERENCE CORNER OF PLATE TOUCHES EDGE OF CHORD.

LATERAL BRACE(S) SHOWN SHALL BE 2X4 SPF#2

DIMENSIONS, SUPPORTS AND LOADINGS SPECIFIED BY FABRICATOR TO BE VERIFIED BY BUILDING DESIGNER

BEARINGS

JT	FACTORED GROSS REACTION VERT	HORZ	MAXIMUM FACTORED GROSS REACTION DOWN	HORZ	UPLIFT	INPUT BRG IN-SX	REQRD BRG IN-SX
Q	3483	0	3483	0	0	5-8	5-8
K	2062	0	2062	0	0	5-8	2-4

UNFACTORED REACTIONS

JT	1ST LCASE COMBINED	MAX./MIN. COMPONENT REACTIONS SNOW	LIVE	PERM.LIVE	WIND	DEAD	SOIL
Q	2485	1507 / 0	0 / 0	0 / 0	0 / 0	978 / 0	0 / 0
K	1467	912 / 0	0 / 0	0 / 0	0 / 0	555 / 0	0 / 0

BEARING MATERIAL TO BE SPF NO.2 OR BETTER AT JOINT(S) Q, K
BEARING SIZE FACTOR = 1.15 AT JNT(S) Q (BASED ON SUPPORT DEPTH = 1-8)

BRACING

TOP CHORD TO BE SHEATHED OR MAX. PURLIN SPACING = 2.23 FT.
MAX. UNBRACED BOTTOM CHORD LENGTH = 10.00 FT OR RIGID CEILING DIRECTLY APPLIED.

ALL PITCH BREAKS AND PERIMETER CORNER JOINTS MUST BE LATERALLY RESTRAINED.

LOADING

TOTAL LOAD CASES: (4)

CHORDS

MEMB. FR-TO	MAX. FACTORED FORCE (LBS)	FROM	TO	VERT. LOAD LC1 (PLF)	MAX CSI (LC)	MAX. UNBRAC LENGTH
A- B	0 / 36	-78.0	-78.0	0.08 (1)	10.00	
B- C	-3913 / 0	-78.0	-78.0	0.17 (1)	4.21	
C- D	-5810 / 0	-269.6	-269.6	1.00 (1)	2.23	
D- R	-5418 / 0	-269.6	-269.6	0.74 (1)	2.97	
R- E	-5418 / 0	-78.0	-78.0	0.74 (1)	2.97	
E- F	-5418 / 0	-78.0	-78.0	0.41 (1)	3.45	
F- G	-5418 / 0	-78.0	-78.0	0.41 (1)	3.45	
G- H	-4175 / 0	-78.0	-78.0	0.32 (1)	3.97	
H- I	-2216 / 0	-78.0	-78.0	0.11 (1)	5.36	
I- J	0 / 36	-78.0	-78.0	0.08 (1)	10.00	
Q- B	-3426 / 0	0.0	0.0	0.24 (1)	5.70	
K- I	-2055 / 0	0.0	0.0	0.15 (1)	7.03	
Q- P	0 / 0	-64.0	-64.0	0.22 (4)	10.00	
P- O	0 / 3228	-64.0	-64.0	0.57 (1)	10.00	
O- S	0 / 5810	-64.0	-64.0	0.83 (1)	10.00	
S- N	0 / 5810	-18.5	-18.5	0.83 (1)	10.00	
N- M	0 / 4175	-18.5	-18.5	0.62 (1)	10.00	
M- L	0 / 1825	-18.5	-18.5	0.30 (1)	10.00	
L- K	0 / 0	-18.5	-18.5	0.07 (4)	10.00	

WEBS

MEMB. FR-TO	MAX. FACTORED FORCE (LBS)	MAX CSI (LC)
P- C	-580 / 26	0.13 (1)
C- O	0 / 2958	0.73 (1)
O- D	-1196 / 0	0.26 (1)
D- N	-451 / 0	0.40 (1)
N- E	-354 / 0	0.08 (1)
N- G	0 / 1426	0.35 (1)
M- G	-1228 / 0	0.27 (1)
M- H	0 / 2692	0.67 (1)
L- H	-420 / 0	0.09 (1)
B- P	0 / 3390	0.84 (1)
L- I	0 / 1919	0.48 (1)

FACTORED CONCENTRATED LOADS (LBS)

JT	LOC.	LC1	MAX-	MAX+	FACE	DIR.	TYPE	HEEL	CONN.
C	3-5-3	-461	-461	---	FRONT	VERT	TOTAL	---	C1

CONNECTION REQUIREMENTS

1) **C1:** A SUITABLE HANGER/MECHANICAL CONNECTION IS REQUIRED.

DESIGN CRITERIA

SPECIFIED LOADS:

TOP CH.	LL	=	21.0	PSF
	DL	=	6.0	PSF
BOT CH.	LL	=	0.0	PSF
	DL	=	7.4	PSF
TOTAL LOAD		=	34.4	PSF

SPACING = 24.0 IN. C/C

LOADING IN FLAT SECTION BASED ON A SLOPE OF 2.00/12 MINIMUM

GIRDER TYPE: CPrimeHip
LEFT SETBACK = 3-5-3
RIGHT SETBACK = 3-5-2
END SETBACK = 11-10-0
END WALL WIDTH = 0-0
CORNER FRAMING TYPE: CONVENTIONAL
END JACK TYPE: CONVENTIONAL
APPLIED TO FRONT SIDE
- ADDT'L LOADS BASED ON 55 % OF GSL.
LOADS APPLIED TO FIRST 10-6-0 OF SPAN MEASURED FROM THE LEFT.

THIS TRUSS IS DESIGNED FOR RESIDENTIAL OR SMALL BUILDING REQUIREMENTS OF PART 9, NBCC 2015

THIS DESIGN COMPLIES WITH:
- PART 9 OF BCBC 2018 , ABC 2019
- PART 9 OF OBC 2012 (2019 AMENDMENT)
- CSA 086-14
- TPIC 2014

(55 % OF 23.0 P.S.F. G.S.L. PLUS 8.4 P.S.F. RAIN LOAD) EQUALS 21.0 P.S.F. SPECIFIED ROOF LIVE LOAD

ALLOWABLE DEFL.(LL)= L/360 (1.03")
CALCULATED VERT. DEFL.(LL) = L/ 999 (0.23")
ALLOWABLE DEFL.(TL)= L/360 (1.03")
CALCULATED VERT. DEFL.(TL) = L/ 835 (0.45")

CSI: TC=1.00/1.00 (C-D:1) , BC=0.83/1.00 (N-O:1) , WB=0.84/1.00 (B-P:1) , SSI=0.61/1.00 (C-D:1)

DOL LUMBER=1.00 NAIL=1.00 LS BEND=1.00 COMP=1.00 SHEAR=1.00 TENS= 1.00

COMPANION LIVE LOAD FACTOR = 1.00

AUTOSOLVE HEELS OFF

TRUSS PLATE MANUFACTURER IS NOT RESPONSIBLE FOR QUALITY CONTROL IN THE TRUSS MANUFACTURING PLANT .

NAIL VALUES

PLATE	GRIP(DRY) (PSI) MAX	MIN	SHEAR (PLI) MAX	MIN	SECTION (PLI) MAX	MIN
MT20	650	371	1747	788	1987	1873

PLATE PLACEMENT TOL. = 0.250 inches

PLATE ROTATION TOL. = 5.0 Deg.

JSI GRIP= 0.89 (N) (INPUT = 0.90)
JSI METAL= 0.96 (N) (INPUT = 1.00)

JOB NAME	TRUSS NAME	QUANTITY	PLY	JOB DESC.	DRWG NO.
345248	H02		1	TRUSS DESC. JT 45147	E22051989

Alpha Roof Truss, Maple

Version 8.530 S Feb 23 2022 MiTek Industries, Inc. Fri Jun 17 13:55:05 2022 Page 1

ID:wceEj9xaBTOj6r9Q4a6qjtzAj6D-pd?wFG3Ca31z5Y8bcmSWPxLRTSe4qC6bfQS6MVz5NC4

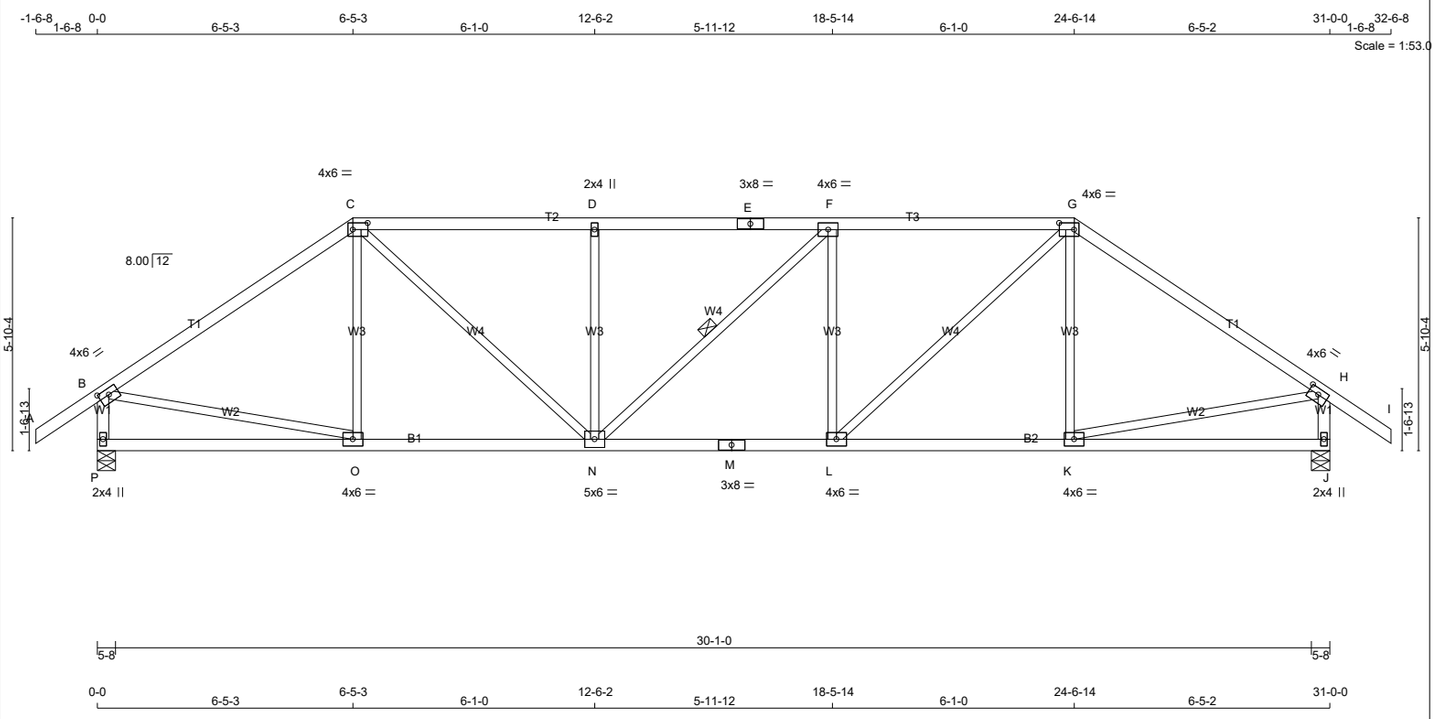

TOTAL WEIGHT = 2 X 127 = 255 lb [M]

LUMBER

N. L. G. A. RULES

CHORDS	SIZE		LUMBER	DESCR.
A - C	2x4	DRY	No.2	SPF
C - E	2x4	DRY	No.2	SPF
E - G	2x4	DRY	No.2	SPF
G - I	2x4	DRY	No.2	SPF
P - B	2x4	DRY	No.2	SPF
J - H	2x4	DRY	No.2	SPF
P - M	2x4	DRY	No.2	SPF
M - J	2x4	DRY	No.2	SPF
ALL WEBS EXCEPT	2x3	DRY	No.2	SPF

DRY: SEASONED LUMBER.

PLATES (table is in inches)

JT	TYPE	PLATES	W	LEN	Y	X
B	TMVW-t	MT20	4.0	6.0	1.75	3.00
C	TTWW-l	MT20	4.0	6.0	2.00	4.50
D	TMW+w	MT20	2.0	4.0		
E	TS-t	MT20	3.0	8.0		
F	TMWW-t	MT20	4.0	6.0		
G	TTWW-l	MT20	4.0	6.0	2.00	4.50
H	TMVW-t	MT20	4.0	6.0	1.75	3.00
J	BMV1+p	MT20	2.0	4.0		
K, L, O						
K	BMWW-t	MT20	4.0	6.0		
M	BS-t	MT20	3.0	8.0		
N	BMWWW-t	MT20	5.0	6.0		
P	BMV1+p	MT20	2.0	4.0		

LATERAL BRACE(S) SHOWN SHALL BE 2X4 SPF#2

DIMENSIONS, SUPPORTS AND LOADINGS SPECIFIED BY FABRICATOR TO BE VERIFIED BY BUILDING DESIGNER

BEARINGS

JT	FACTORED GROSS REACTION VERT	HORZ	MAXIMUM FACTORED GROSS REACTION DOWN	HORZ	UPLIFT	INPUT BRG IN-SX	REQRD BRG IN-SX
P	1622	0	1622	0	0	5-8	1-12
J	1622	0	1622	0	0	5-8	1-12

UNFACTORED REACTIONS

JT	1ST LCASE COMBINED	MAX./MIN. COMPONENT REACTIONS SNOW	LIVE	PERM.LIVE	WIND	DEAD	SOIL
P	1154	719 / 0	0 / 0	0 / 0	0 / 0	435 / 0	0 / 0
J	1154	719 / 0	0 / 0	0 / 0	0 / 0	435 / 0	0 / 0

BEARING MATERIAL TO BE SPF NO.2 OR BETTER AT JOINT(S) P, J

BRACING

TOP CHORD TO BE SHEATHED OR MAX. PURLIN SPACING = 4.19 FT.
MAX. UNBRACED BOTTOM CHORD LENGTH = 10.00 FT OR RIGID CEILING DIRECTLY APPLIED.

ALL PITCH BREAKS AND PERIMETER CORNER JOINTS MUST BE LATERALLY RESTRAINED.

1 LATERAL BRACE(S) AT 1/ 2 LENGTH OF F-N.

END VERTICAL(S) MUST BE SHEATHED OR HAVE BRACES AS INDICATED IN THE MAX. UNBRACED LENGTH COLUMN OF THE TABLE BELOW

LOADING

TOTAL LOAD CASES: (4)

CHORDS

MEMB. FR-TO	MAX. FACTORED FORCE (LBS)	FACTORED VERT. LOAD LC1 (PLF) FROM	TO	MAX CSI (LC)	MAX. UNBRAC LENGTH
A- B	0 / 35	-78.0	-78.0	0.15 (1)	10.00
B- C	-1673 / 0	-78.0	-78.0	0.75 (1)	4.24
C- D	-2062 / 0	-78.0	-78.0	0.51 (1)	4.20
D- E	-2062 / 0	-78.0	-78.0	0.51 (1)	4.19
E- F	-2062 / 0	-78.0	-78.0	0.51 (1)	4.19
F- G	-2063 / 0	-78.0	-78.0	0.51 (1)	4.19
G- H	-1673 / 0	-78.0	-78.0	0.75 (1)	4.24
H- I	0 / 35	-78.0	-78.0	0.15 (1)	10.00
P- B	-1573 / 0	0.0	0.0	0.17 (1)	6.58
J- H	-1573 / 0	0.0	0.0	0.17 (1)	6.58
P- O	0 / 0	-18.5	-18.5	0.18 (4)	10.00
O- N	0 / 1388	-18.5	-18.5	0.32 (1)	10.00
N- M	0 / 2063	-18.5	-18.5	0.39 (1)	10.00
M- L	0 / 2063	-18.5	-18.5	0.39 (1)	10.00
L- K	0 / 1388	-18.5	-18.5	0.32 (1)	10.00
K- J	0 / 0	-18.5	-18.5	0.18 (4)	10.00

WEBS

MEMB. FR-TO	MAX. FACTORED FORCE (LBS)	MAX CSI (LC)
O- C	-132 / 43	0.07 (1)
C- N	0 / 912	0.21 (1)
N- D	-509 / 0	0.27 (1)
N- F	-2 / 0	0.00 (1)
L- F	-510 / 0	0.27 (1)
L- G	0 / 914	0.21 (1)
K- G	-133 / 43	0.07 (1)
B- O	0 / 1416	0.32 (1)
K- H	0 / 1416	0.32 (1)

DESIGN CRITERIA

SPECIFIED LOADS:

TOP CH.	LL	=	21.0	PSF
	DL	=	6.0	PSF
BOT CH.	LL	=	0.0	PSF
	DL	=	7.4	PSF
TOTAL LOAD		=	34.4	PSF

SPACING = 24.0 IN. C/C

LOADING IN FLAT SECTION BASED ON A SLOPE OF 2.00/12 MINIMUM

THIS TRUSS IS DESIGNED FOR RESIDENTIAL OR SMALL BUILDING REQUIREMENTS OF PART 9, NBCC 2015

THIS DESIGN COMPLIES WITH:
- PART 9 OF BCBC 2018 , ABC 2019
- PART 9 OF OBC 2012 (2019 AMENDMENT)
- CSA 086-14
- TPIC 2014

(55 % OF 23.0 P.S.F. G.S.L. PLUS 8.4 P.S.F. RAIN LOAD) EQUALS 21.0 P.S.F. SPECIFIED ROOF LIVE LOAD

ALLOWABLE DEFL.(LL)= L/360 (1.03")
CALCULATED VERT. DEFL.(LL) = L/ 999 (0.09")
ALLOWABLE DEFL.(TL)= L/360 (1.03")
CALCULATED VERT. DEFL.(TL) = L/ 999 (0.19")

CSI: TC=0.75/1.00 (B-C:1) , BC=0.39/1.00 (L-N:1) , WB=0.32/1.00 (B-O:1) , SSI=0.22/1.00 (F-G:1)

DOL LUMBER=1.00 NAIL=1.00 LS BEND=1.10 COMP=1.10 SHEAR=1.10 TENS= 1.10

COMPANION LIVE LOAD FACTOR = 1.00

TRUSS PLATE MANUFACTURER IS NOT RESPONSIBLE FOR QUALITY CONTROL IN THE TRUSS MANUFACTURING PLANT .

NAIL VALUES

PLATE	GRIP(DRY) (PSI) MAX	MIN	SHEAR (PLI) MAX	MIN	SECTION (PLI) MAX	MIN
MT20	650	371	1747	788	1987	1873

PLATE PLACEMENT TOL. = 0.250 inches

PLATE ROTATION TOL. = 5.0 Deg.

JSI GRIP= 0.89 (O) (INPUT = 0.90)
JSI METAL= 0.68 (M) (INPUT = 1.00)

JOB NAME	TRUSS NAME	QUANTITY	PLY	JOB DESC.	DRWG NO.
345248	H03		1	TRUSS DESC. JT 45147	E22051990

Alpha Roof Truss, Maple

Version 8.530 S Feb 23 2022 MiTek Industries, Inc. Fri Jun 17 13:55:07 2022 Page 1

ID:wceEj9xaBTOj6r9Q4a6gjtzAj6D-m07gfx4S6gHhKrI_jAU_VMQsNGLpI05u7kxDQNz5NC2

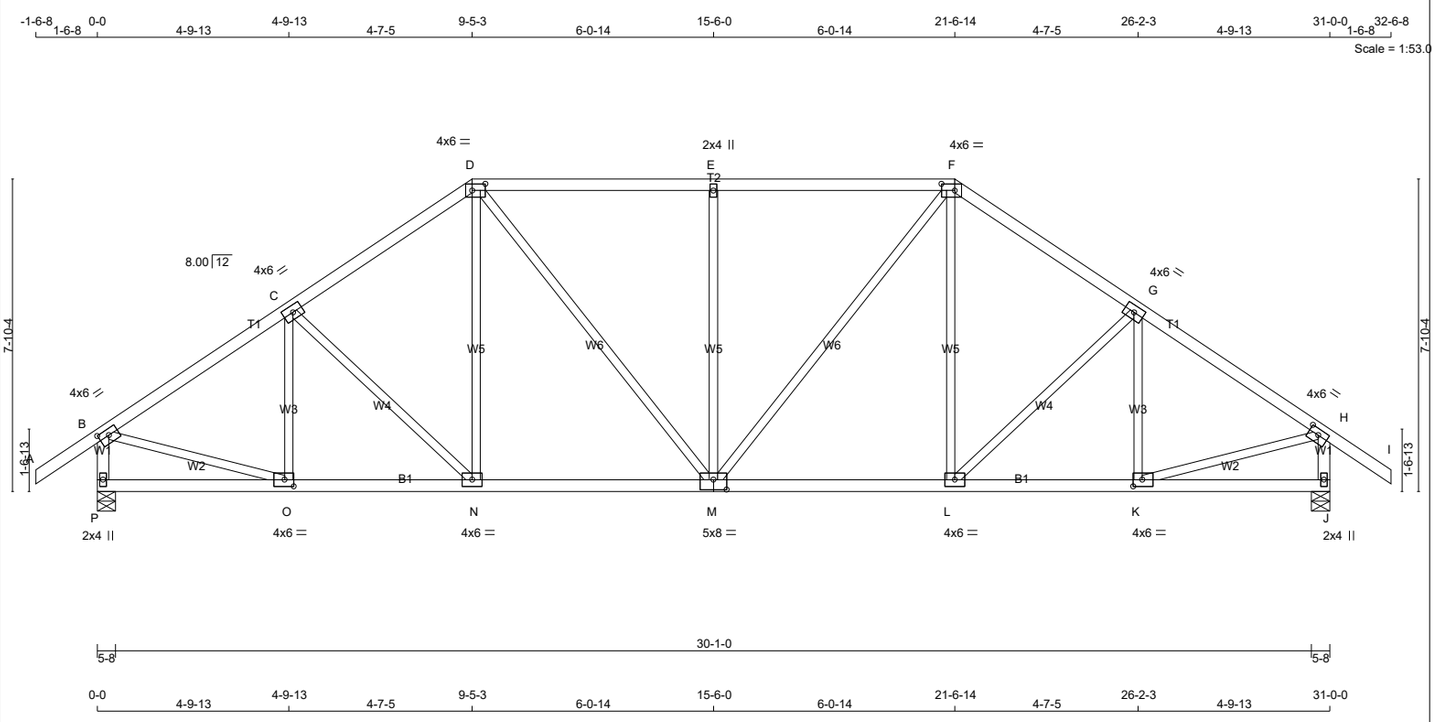

TOTAL WEIGHT = 3 X 139 = 418 lb

[M][F]

LUMBER

N. L. G. A. RULES

CHORDS	SIZE		LUMBER	DESCR.
A - D	2x4	DRY	No.2	SPF
D - F	2x4	DRY	No.2	SPF
F - I	2x4	DRY	No.2	SPF
P - B	2x4	DRY	No.2	SPF
J - H	2x4	DRY	No.2	SPF
P - M	2x4	DRY	No.2	SPF
M - J	2x4	DRY	No.2	SPF
ALL WEBS EXCEPT	2x3	DRY	No.2	SPF

DRY: SEASONED LUMBER.

PLATES (table is in inches)

JT	TYPE	PLATES	W	LEN	Y	X
B	TMVW-t	MT20	4.0	6.0	1.75	3.00
C	TMWW-t	MT20	4.0	6.0		
D	TTWW-l	MT20	4.0	6.0	2.00	4.00
E	TMW+w	MT20	2.0	4.0		
F	TTWW-l	MT20	4.0	6.0	2.00	4.00
G	TMWW-t	MT20	4.0	6.0		
H	TMVW-t	MT20	4.0	6.0	1.75	3.00
J	BMV1+p	MT20	2.0	4.0		
K	BMWW-t	MT20	4.0	6.0	2.00	2.75
L	BMWW-t	MT20	4.0	6.0		
M	BSWWW-l	MT20	5.0	8.0	3.00	4.00
N	BMWW-t	MT20	4.0	6.0		
O	BMWW-t	MT20	4.0	6.0	2.00	2.75
P	BMV1+p	MT20	2.0	4.0		

LATERAL BRACE(S) SHOWN SHALL BE 2X4 SPF#2

LICENSED PROFESSIONAL ENGINEER
V. WIDYA
100225448
06/17/2022
PROVINCE OF ONTARIO

DIMENSIONS, SUPPORTS AND LOADINGS SPECIFIED BY FABRICATOR TO BE VERIFIED BY BUILDING DESIGNER

BEARINGS

JT	FACTORED GROSS REACTION VERT	HORZ	MAXIMUM FACTORED GROSS REACTION DOWN	HORZ	UPLIFT	INPUT BRG IN-SX	REQRD BRG IN-SX
P	1622	0	1622	0	0	5-8	1-12
J	1622	0	1622	0	0	5-8	1-12

UNFACTORED REACTIONS

JT	1ST LCASE COMBINED	MAX./MIN. COMPONENT REACTIONS SNOW	LIVE	PERM.LIVE	WIND	DEAD	SOIL
P	1154	719 / 0	0 / 0	0 / 0	0 / 0	435 / 0	0 / 0
J	1154	719 / 0	0 / 0	0 / 0	0 / 0	435 / 0	0 / 0

BEARING MATERIAL TO BE SPF NO.2 OR BETTER AT JOINT(S) P, J

BRACING

TOP CHORD TO BE SHEATHED OR MAX. PURLIN SPACING = 4.80 FT.
MAX. UNBRACED BOTTOM CHORD LENGTH = 10.00 FT OR RIGID CEILING DIRECTLY APPLIED.

ALL PITCH BREAKS AND PERIMETER CORNER JOINTS MUST BE LATERALLY RESTRAINED.

LOADING

TOTAL LOAD CASES: (4)

CHORDS

MEMB. FR-TO	MAX. FACTORED FORCE (LBS)	FACTORED VERT. LOAD (PLF) FROM	TO	LC1 CSI (LC)	MAX UNBRAC LENGTH
A- B	0 / 35	-78.0	-78.0	0.15 (1)	10.00
B- C	-1678 / 0	-78.0	-78.0	0.26 (1)	4.89
C- D	-1596 / 0	-78.0	-78.0	0.25 (1)	4.99
D- E	-1578 / 0	-78.0	-78.0	0.41 (1)	4.80
E- F	-1578 / 0	-78.0	-78.0	0.41 (1)	4.80
F- G	-1596 / 0	-78.0	-78.0	0.25 (1)	4.99
G- H	-1678 / 0	-78.0	-78.0	0.26 (1)	4.89
H- I	0 / 35	-78.0	-78.0	0.15 (1)	10.00
P- B	-1582 / 0	0.0	0.0	0.17 (1)	6.56
J- H	-1582 / 0	0.0	0.0	0.17 (1)	6.56
P- O	0 / 0	-18.5	-18.5	0.09 (4)	10.00
O- N	0 / 1415	-18.5	-18.5	0.31 (1)	10.00
N- M	0 / 1309	-18.5	-18.5	0.29 (1)	10.00
M- L	0 / 1309	-18.5	-18.5	0.29 (1)	10.00
L- K	0 / 1415	-18.5	-18.5	0.31 (1)	10.00
K- J	0 / 0	-18.5	-18.5	0.09 (4)	10.00

WEBS

MEMB. FR-TO	MAX. FACTORED FORCE (LBS)	MAX CSI (LC)
O- C	-281 / 0	0.09 (1)
C- N	-151 / 0	0.11 (1)
N- D	0 / 220	0.06 (4)
D- M	0 / 430	0.10 (1)
M- E	-580 / 0	0.67 (1)
M- F	0 / 430	0.10 (1)
L- F	0 / 220	0.06 (4)
L- G	-151 / 0	0.11 (1)
K- G	-281 / 0	0.09 (1)
B- O	0 / 1462	0.33 (1)
K- H	0 / 1462	0.33 (1)

DESIGN CRITERIA

SPECIFIED LOADS:

TOP CH.	LL	=	21.0	PSF
	DL	=	6.0	PSF
BOT CH.	LL	=	0.0	PSF
	DL	=	7.4	PSF
TOTAL LOAD		=	34.4	PSF

SPACING = 24.0 IN. C/C

LOADING IN FLAT SECTION BASED ON A SLOPE OF 2.00/12 MINIMUM

THIS TRUSS IS DESIGNED FOR RESIDENTIAL OR SMALL BUILDING REQUIREMENTS OF PART 9, NBCC 2015

THIS DESIGN COMPLIES WITH:
- PART 9 OF BCBC 2018 , ABC 2019
- PART 9 OF OBC 2012 (2019 AMENDMENT)
- CSA 086-14
- TPIC 2014

(55 % OF 23.0 P.S.F. G.S.L. PLUS 8.4 P.S.F. RAIN LOAD) EQUALS 21.0 P.S.F. SPECIFIED ROOF LIVE LOAD

ALLOWABLE DEFL.(LL)= L/360 (1.03")
CALCULATED VERT. DEFL.(LL) = L/ 999 (0.06")
ALLOWABLE DEFL.(TL)= L/360 (1.03")
CALCULATED VERT. DEFL.(TL) = L/ 999 (0.14")

CSI: TC=0.41/1.00 (D-E:1) , BC=0.31/1.00 (N-O:1) , WB=0.67/1.00 (E-M:1) , SSI=0.23/1.00 (E-F:1)

DOL LUMBER=1.00 NAIL=1.00 LS BEND=1.10 COMP=1.10 SHEAR=1.10 TENS= 1.10

COMPANION LIVE LOAD FACTOR = 1.00

TRUSS PLATE MANUFACTURER IS NOT RESPONSIBLE FOR QUALITY CONTROL IN THE TRUSS MANUFACTURING PLANT .

NAIL VALUES

PLATE	GRIP(DRY) (PSI) MAX	MIN	SHEAR (PLI) MAX	MIN	SECTION (PLI) MAX	MIN
MT20	650	371	1747	788	1987	1873

PLATE PLACEMENT TOL. = 0.250 inches

PLATE ROTATION TOL. = 5.0 Deg.

JSI GRIP= 0.84 (O) (INPUT = 0.90)
JSI METAL= 0.44 (B) (INPUT = 1.00)

JOB NAME	TRUSS NAME	QUANTITY	PLY	JOB DESC.	DRWG NO.
345248	H04		2	TRUSS DESC. JT 45147	E22051991

Alpha Roof Truss, Maple

Version 8.530 S Feb 23 2022 MiTek Industries, Inc. Fri Jun 17 13:55:08 2022 Page 1

ID:wceEj9xaBTOj6r9Q4a6gjtzAj6D-ECh3tH54t PYy?tAHu0D1azy5gYH1Oe1MOhmzqz5NC1

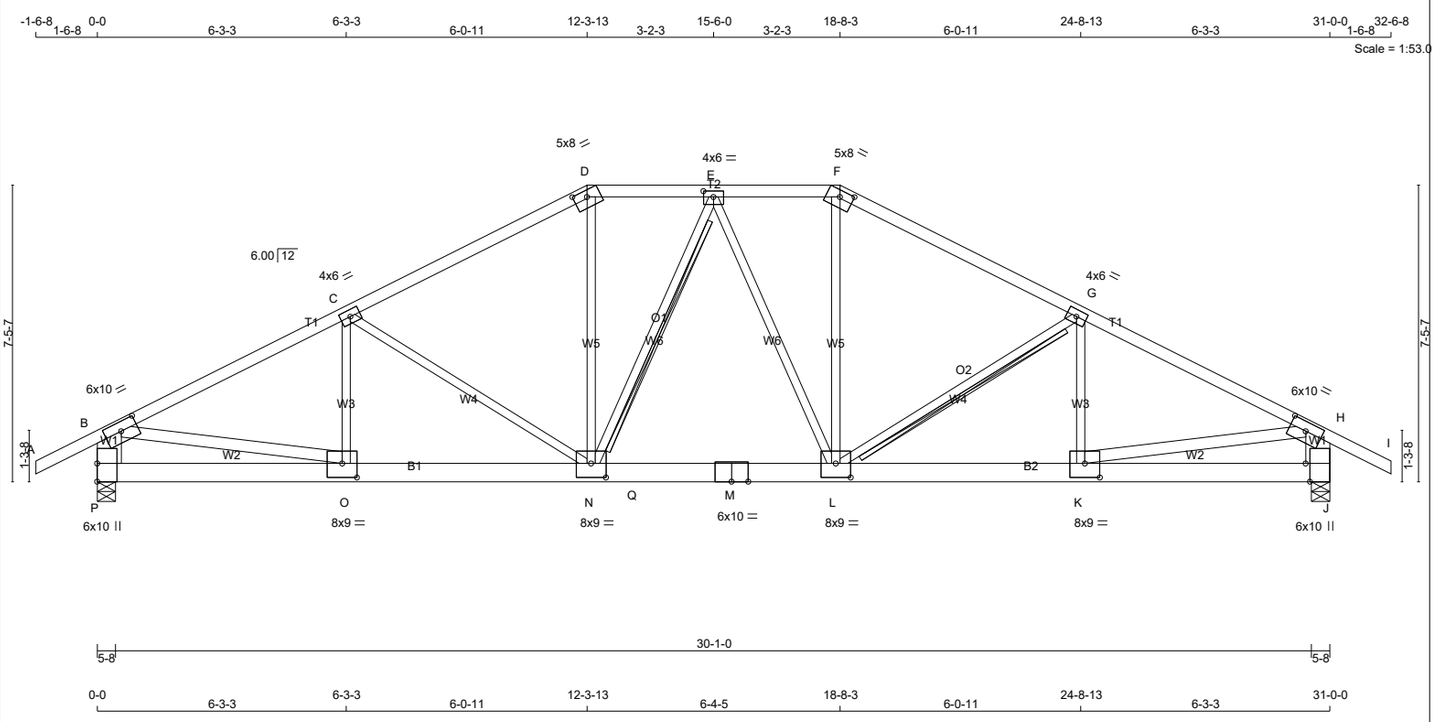

TOTAL WEIGHT = 2 X 155 = 311 lb

[M]

LUMBER

N. L. G. A. RULES

CHORDS	SIZE		LUMBER	DESCR.
A - D	2x4	DRY	1650F 1.5E	SPF
D - F	2x4	DRY	No.2	SPF
F - I	2x4	DRY	1650F 1.5E	SPF
P - B	2x8	DRY	No.2	SPF
J - H	2x8	DRY	No.2	SPF
P - M	2x6	DRY	1650F 1.5E	SPF
M - J	2x6	DRY	1650F 1.5E	SPF
ALL WEBS	2x3	DRY	No.2	SPF
EXCEPT				
B - O	2x4	DRY	No.2	SPF
K - H	2x4	DRY	No.2	SPF

DRY: SEASONED LUMBER.

DESIGN CONSISTS OF 2 TRUSSES BUILT SEPARATELY THEN FASTENED TOGETHER AS FOLLOWS:

CHORDS	#ROWS	SURFACE SPACING (IN)	LOAD(PLF)
TOP CHORDS : (0.122"X3") SPIRAL NAILS			
A- D	1	12	TOP
D- F	1	12	TOP
F- I	1	12	TOP
P- B	2	12	TOP
J- H	2	12	TOP
BOTTOM CHORDS : (0.122"X3") SPIRAL NAILS			
P- M	2	9	SIDE(265.9)
M- J	2	9	SIDE(265.9)
WEBS : (0.122"X3") SPIRAL NAILS			
2x3	1	6	
2x4	1	6	

NAILS TO BE DRIVEN FROM ONE SIDE ONLY.

TOP - COMPONENTS ARE LOADED FROM THE TOP AND MUST BE PLACED ON TOP EDGE OF ALL PLIES FOR THE LOAD TO BE TRANSFERRED TO EACH PLY.

SIDE - PLF SHOWN IS THE EQUIVALENT UDL APPLIED TO ONE SIDE THAT THE CORRESPONDING NAILING PATTERN SHALL BE CAPABLE OF TRANSFERING. REMAINING PLF MUST BE APPLIED ON THE OPPOSITE SIDE OR ON THE TOP.

PLATES (table is in inches)

JT	TYPE	PLATES	W	LEN	Y	X
B	TMVW-t	MT20	6.0	10.0	2.75	5.00
C	TMWW-t	MT20	4.0	6.0		
D	TTW-h	MT20	5.0	8.0	2.00	4.00
E	TMWW-t	MT20	4.0	6.0	1.75	3.00
F	TTW-h	MT20	5.0	8.0	2.00	4.00
G	TMWW-t	MT20	4.0	6.0		
H	TMVW-t	MT20	6.0	10.0	2.75	5.00
J	BMV1+t	MT20	6.0	10.0	Edge	1.25
K	BMWW-t	MT20	8.0	9.0	4.25	4.50
L	BMWWW-t	MT20	8.0	9.0	4.25	4.50
M	BS-t	MT20	6.0	10.0		
N	BMWWW-t	MT20	8.0	9.0	4.25	4.50
O	BMWW-t	MT20	8.0	9.0	4.25	4.50
P	BMV1+t	MT20	6.0	10.0	5.50	

Edge - INDICATES REFERENCE CORNER OF PLATE TOUCHES EDGE OF CHORD.

LATERAL BRACE(S) SHOWN SHALL BE 2X4 SPF#2

DIMENSIONS, SUPPORTS AND LOADINGS SPECIFIED BY FABRICATOR TO BE VERIFIED BY BUILDING DESIGNER

BEARINGS

JT	FACTORED GROSS REACTION VERT	HORZ	MAXIMUM FACTORED GROSS REACTION DOWN	HORZ	UPLIFT	INPUT BRG IN-SX	REQRD BRG IN-SX
P	4247	0	4247	0	0	5-8	2-5
J	8299	0	8299	0	0	5-8	5-8

UNFACTORED REACTIONS

JT	1ST LCASE COMBINED	SNOW	MAX./MIN. COMPONENT REACTIONS LIVE	PERM.LIVE	WIND	DEAD	SOIL
P	3025	1861 / 0	0 / 0	0 / 0	0 / 0	1164 / 0	0 / 0
J	5914	3624 / 0	0 / 0	0 / 0	0 / 0	2290 / 0	0 / 0

BEARING MATERIAL TO BE SPF NO.2 OR BETTER AT JOINT(S) P, J
BEARING SIZE FACTOR = 1.15 AT JNT(S) J (BASED ON SUPPORT DEPTH = 1-8)

BRACING

TOP CHORD TO BE SHEATHED OR MAX. PURLIN SPACING = 3.16 FT.
MAX. UNBRACED BOTTOM CHORD LENGTH = 10.00 FT OR RIGID CEILING DIRECTLY APPLIED.

ALL PITCH BREAKS AND PERIMETER CORNER JOINTS MUST BE LATERALLY RESTRAINED.

2x4 DRY SPF No.2 T-BRACE AT E-N, G-L

FASTEN T AND I-BRACES TO NARROW EDGE OF WEB WITH ONE ROW PER PLY OF 3" COMMON WIRE NAILS @ 6" O.C. WITH 3" MINIMUM END DISTANCE. BRACE MUST COVER 90% OF WEB LENGTH.

END VERTICAL(S) MUST BE SHEATHED OR HAVE BRACES AS INDICATED IN THE MAX. UNBRACED LENGTH COLUMN OF THE TABLE BELOW

LOADING

TOTAL LOAD CASES: (4)

CHORDS

MEMB. FR-TO	MAX. FACTORED FORCE (LBS)	FACTORED VERT. LOAD (PLF) FROM	TO	LC1 MAX CSI (LC)	MAX. UNBRAC LENGTH
A- B	0 / 28	-78.0	-78.0	0.07 (1)	10.00
B- C	-6623 / 0	-78.0	-78.0	0.39 (1)	4.10
C- D	-7026 / 0	-78.0	-78.0	0.40 (1)	3.99
D- E	-6301 / 0	-78.0	-78.0	0.20 (1)	3.76
E- F	-7757 / 0	-78.0	-78.0	0.27 (1)	3.35
F- G	-8639 / 0	-78.0	-78.0	0.45 (1)	3.66
G- H	-11335 / 0	-78.0	-78.0	0.67 (1)	3.16
H- I	0 / 28	-78.0	-78.0	0.07 (1)	10.00
P- B	-4144 / 0	0.0	0.0	0.11 (1)	7.78
J- H	-6862 / 0	0.0	0.0	0.19 (1)	6.40
P- O	0 / 0	-18.5	-18.5	0.07 (1)	10.00
O- N	0 / 5944	-18.5	-18.5	0.44 (1)	10.00
N- Q	0 / 7077	-18.5	-18.5	0.74 (1)	10.00
Q- M	0 / 7077	-550.2	-550.2	0.74 (1)	10.00
M- L	0 / 7077	-550.2	-550.2	0.74 (1)	10.00
L- K	0 / 10156	-550.2	-550.2	0.87 (1)	10.00
K- J	0 / 0	-550.2	-550.2	0.48 (1)	10.00

WEBS

MEMB. FR-TO	MAX. FACTORED FORCE (LBS)	MAX CSI (LC)
O- C	-957 / 0	0.14 (1)
C- N	0 / 377	0.05 (1)
N- D	0 / 2820	0.35 (1)
N- E	-1946 / 0	0.57 (1)
E- L	0 / 1706	0.21 (1)
L- F	0 / 3533	0.44 (1)
L- G	-2929 / 0	0.77 (1)
K- G	0 / 2250	0.28 (1)
B- O	0 / 6005	0.53 (1)
K- H	0 / 10260	0.91 (1)

DESIGN CRITERIA

SPECIFIED LOADS:

TOP CH.	LL	=	21.0	PSF
	DL	=	6.0	PSF
BOT CH.	LL	=	0.0	PSF
	DL	=	7.4	PSF
TOTAL LOAD		=	34.4	PSF

SPACING = 24.0 IN. C/C

LOADING IN FLAT SECTION BASED ON A SLOPE OF 2.00/12 MINIMUM

GIRDER TYPE: CStdGirder
START DISTANCE = 13-6-0
START SPAN CARRIED = 24-0-9
END DISTANCE = 31-0-0
END SPAN CARRIED = 24-0-9
END WALL WIDTH = 0-0
APPLIED TO FRONT SIDE OF BOTTOM CHORD.
- ADDT'L LOADS BASED ON 55 % OF GSL.

THIS TRUSS IS DESIGNED FOR RESIDENTIAL OR SMALL BUILDING REQUIREMENTS OF PART 9, NBCC 2015

THIS DESIGN COMPLIES WITH:
- PART 9 OF BCBC 2018 , ABC 2019
- PART 9 OF OBC 2012 (2019 AMENDMENT)
- CSA 086-14
- TPIC 2014

(55 % OF 23.0 P.S.F. G.S.L. PLUS 8.4 P.S.F. RAIN LOAD) EQUALS 21.0 P.S.F. SPECIFIED ROOF LIVE LOAD

ALLOWABLE DEFL.(LL)= L/360 (1.03")
CALCULATED VERT. DEFL.(LL) = L/ 999 (0.19")
ALLOWABLE DEFL.(TL)= L/360 (1.03")
CALCULATED VERT. DEFL.(TL) = L/ 991 (0.38")

CSI: TC=0.67/1.00 (G-H:1) , BC=0.87/1.00 (K-L:1) , WB=0.91/1.00 (H-K:1) , SSI=0.67/1.00 (J-K:1)

DOL LUMBER=1.00 NAIL=1.00 LS BEND=1.00 COMP=1.00 SHEAR=1.00 TENS= 1.00

COMPANION LIVE LOAD FACTOR = 1.00

AUTOSOLVE HEELS OFF

TRUSS PLATE MANUFACTURER IS NOT RESPONSIBLE FOR QUALITY CONTROL IN THE TRUSS MANUFACTURING PLANT .

NAIL VALUES

PLATE	GRIP(DRY) (PSI) MAX	MIN	SHEAR (PLI) MAX	MIN	SECTION (PLI) MAX	MIN
MT20	650	371	1747	788	1987	1873

PLATE PLACEMENT TOL. = 0.250 inches

PLATE ROTATION TOL. = 5.0 Deg.

JSI GRIP= 0.89 (C) (INPUT = 0.90)
JSI METAL= 0.92 (M) (INPUT = 1.00)

JOB NAME	TRUSS NAME	QUANTITY	PLY	JOB DESC.		DRWG NO.
345248	H05		1	TRUSS DESC.	JT 45147	E22051992

Alpa Roof Truss, Maple

Version 8.530 S Feb 23 2022 MiTek Industries, Inc. Fri Jun 17 13:55:10 2022 Page 1
ID:wceEj9xaBTOj6r9Q4a6gjtzAj6D-AappIz7KPbfGCJ1ZPJ2i6?2HGTKtVQUKpiAt1iz5NC?

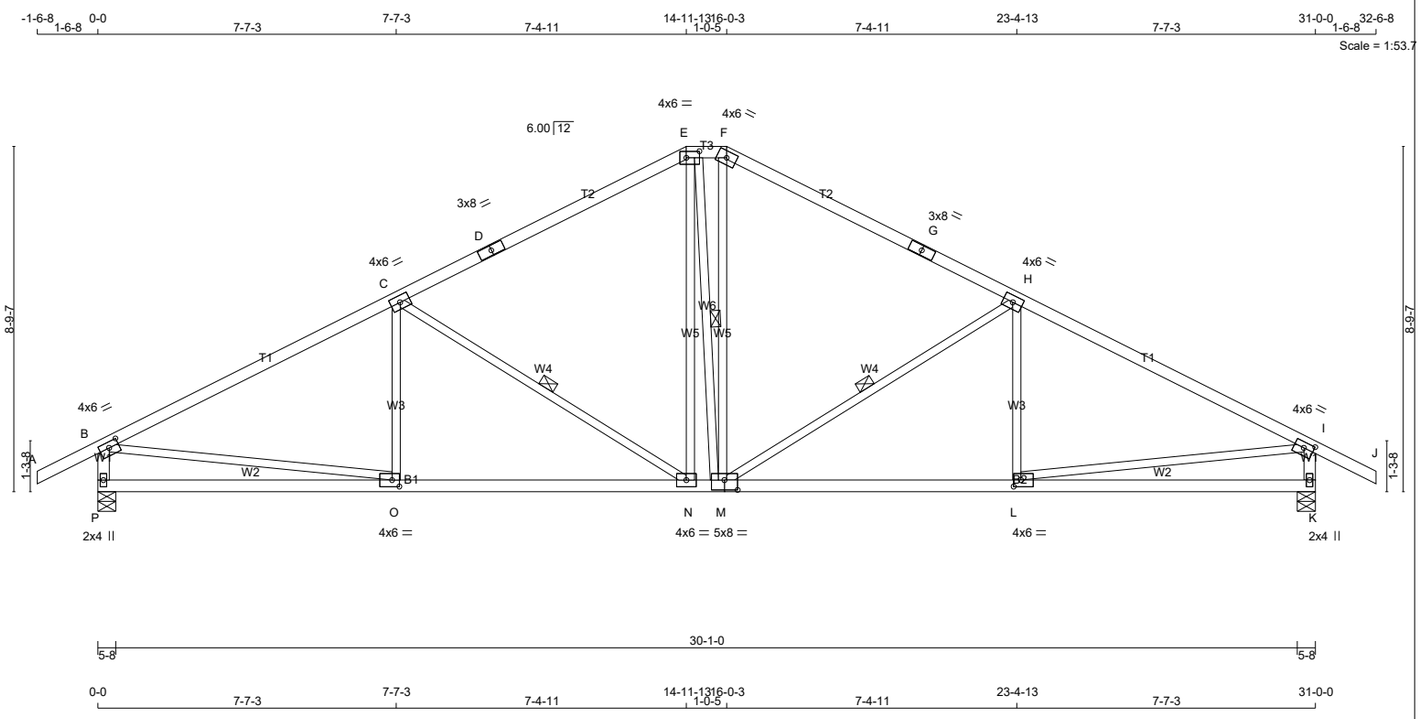

TOTAL WEIGHT = 134 lb

LUMBER

N. L. G. A. RULES

CHORDS	SIZE		LUMBER	DESCR.
A - D	2x4	DRY	No.2	SPF
D - E	2x4	DRY	No.2	SPF
E - F	2x4	DRY	No.2	SPF
F - G	2x4	DRY	No.2	SPF
G - J	2x4	DRY	No.2	SPF
P - B	2x4	DRY	No.2	SPF
K - I	2x4	DRY	No.2	SPF
P - M	2x4	DRY	No.2	SPF
M - K	2x4	DRY	No.2	SPF
ALL WEBS EXCEPT	2x3	DRY	No.2	SPF

DRY: SEASONED LUMBER.

PLATES (table is in inches)

JT	TYPE	PLATES	W	LEN	Y	X
B	TMVW-t	MT20	4.0	6.0	1.75	3.00
C	TMWW-t	MT20	4.0	6.0		
D	TS-t	MT20	3.0	8.0		
E	TTWW-l	MT20	4.0	6.0	2.00	4.00
F	TTW-h	MT20	4.0	6.0		
G	TS-t	MT20	3.0	8.0		
H	TMWW-t	MT20	4.0	6.0		
I	TMVW-t	MT20	4.0	6.0	1.75	3.00
K	BMV1+p	MT20	2.0	4.0		
L	BMWW-t	MT20	4.0	6.0	2.00	2.25
M	BSWWW-l	MT20	5.0	8.0	3.00	4.00
N	BMWW-t	MT20	4.0	6.0		
O	BMWW-t	MT20	4.0	6.0	2.00	2.25
P	BMV1+p	MT20	2.0	4.0		

LATERAL BRACE(S) SHOWN SHALL BE 2X4 SPF#2

DIMENSIONS, SUPPORTS AND LOADINGS SPECIFIED BY FABRICATOR TO BE VERIFIED BY BUILDING DESIGNER

BEARINGS

JT	FACTORED GROSS REACTION VERT	HORZ	MAXIMUM FACTORED GROSS REACTION DOWN	HORZ	UPLIFT	INPUT BRG IN-SX	REQRD BRG IN-SX
P	1621	0	1621	0	0	5-8	1-12
K	1621	0	1621	0	0	5-8	1-12

UNFACTORED REACTIONS

JT	1ST LCASE COMBINED	MAX./MIN. COMPONENT REACTIONS SNOW	LIVE	PERM.LIVE	WIND	DEAD	SOIL
P	1153	718 / 0	0 / 0	0 / 0	0 / 0	435 / 0	0 / 0
K	1153	718 / 0	0 / 0	0 / 0	0 / 0	435 / 0	0 / 0

BEARING MATERIAL TO BE SPF NO.2 OR BETTER AT JOINT(S) P, K

BRACING

TOP CHORD TO BE SHEATHED OR MAX. PURLIN SPACING = 3.83 FT.
MAX. UNBRACED BOTTOM CHORD LENGTH = 10.00 FT OR RIGID CEILING DIRECTLY APPLIED.

ALL PITCH BREAKS AND PERIMETER CORNER JOINTS MUST BE LATERALLY RESTRAINED.

1 LATERAL BRACE(S) AT 1/ 2 LENGTH OF C-N, E-M, H-M.

END VERTICAL(S) MUST BE SHEATHED OR HAVE BRACES AS INDICATED IN THE MAX. UNBRACED LENGTH COLUMN OF THE TABLE BELOW

LOADING

TOTAL LOAD CASES: (4)

CHORDS

MEMB. FR-TO	MAX. FACTORED FORCE (LBS)	FACTORED VERT. LOAD LC1 (PLF) FROM	TO	MAX CSI (LC)	MAX. UNBRAC LENGTH
A- B	0 / 28	-78.0	-78.0	0.14 (1)	10.00
B- C	-2122 / 0	-78.0	-78.0	0.75 (1)	3.83
C- D	-1559 / 0	-78.0	-78.0	0.65 (1)	4.44
D- E	-1559 / 0	-78.0	-78.0	0.65 (1)	4.44
E- F	-1364 / 0	-78.0	-78.0	0.03 (1)	5.55
F- G	-1552 / 0	-78.0	-78.0	0.65 (1)	4.46
G- H	-1552 / 0	-78.0	-78.0	0.65 (1)	4.46
H- I	-2125 / 0	-78.0	-78.0	0.75 (1)	3.83
I- J	0 / 28	-78.0	-78.0	0.14 (1)	10.00
P- B	-1563 / 0	0.0	0.0	0.16 (1)	6.59
K- I	-1565 / 0	0.0	0.0	0.16 (1)	6.59
P- O	0 / 0	-18.5	-18.5	0.26 (4)	10.00
O- N	0 / 1926	-18.5	-18.5	0.45 (1)	10.00
N- M	0 / 1371	-18.5	-18.5	0.29 (1)	10.00
M- L	0 / 1928	-18.5	-18.5	0.48 (4)	10.00
L- K	0 / 0	-18.5	-18.5	0.29 (4)	10.00

WEBS

MEMB. FR-TO	FORCE (LBS)	MAX CSI (LC)
O- C	-89 / 85	0.03 (1)
C- N	-665 / 0	0.36 (1)
N- E	0 / 488	0.11 (1)
E- M	-75 / 0	0.04 (4)
M- F	0 / 425	0.10 (1)
M- H	-675 / 0	0.37 (1)
L- H	-80 / 96	0.03 (4)
B- O	0 / 1942	0.44 (1)
L- I	0 / 1944	0.44 (1)

[M][F]

DESIGN CRITERIA

SPECIFIED LOADS:

TOP CH.	LL	=	21.0	PSF
	DL	=	6.0	PSF
BOT CH.	LL	=	0.0	PSF
	DL	=	7.4	PSF
TOTAL LOAD		=	34.4	PSF

SPACING = 24.0 IN. C/C

LOADING IN FLAT SECTION BASED ON A SLOPE OF 2.00/12 MINIMUM

THIS TRUSS IS DESIGNED FOR RESIDENTIAL OR SMALL BUILDING REQUIREMENTS OF PART 9, NBCC 2015

THIS DESIGN COMPLIES WITH:
- PART 9 OF BCBC 2018 , ABC 2019
- PART 9 OF OBC 2012 (2019 AMENDMENT)
- CSA 086-14
- TPIC 2014

(55 % OF 23.0 P.S.F. G.S.L. PLUS 8.4 P.S.F. RAIN LOAD) EQUALS 21.0 P.S.F. SPECIFIED ROOF LIVE LOAD

ALLOWABLE DEFL.(LL)= L/360 (1.03")
CALCULATED VERT. DEFL.(LL) = L/ 999 (0.09")
ALLOWABLE DEFL.(TL)= L/360 (1.03")
CALCULATED VERT. DEFL.(TL) = L/ 999 (0.23")

CSI: TC=0.75/1.00 (H-I:1) , BC=0.48/1.00 (L-M:4) , WB=0.44/1.00 (I-L:1) , SSI=0.26/1.00 (H-I:1)

DOL LUMBER=1.00 NAIL=1.00 LS BEND=1.10 COMP=1.10 SHEAR=1.10 TENS= 1.10

COMPANION LIVE LOAD FACTOR = 1.00

TRUSS PLATE MANUFACTURER IS NOT RESPONSIBLE FOR QUALITY CONTROL IN THE TRUSS MANUFACTURING PLANT .

NAIL VALUES

PLATE	GRIP(DRY) (PSI) MAX	MIN	SHEAR (PLI) MAX	MIN	SECTION (PLI) MAX	MIN
MT20	650	371	1747	788	1987	1873

PLATE PLACEMENT TOL. = 0.250 inches

PLATE ROTATION TOL. = 5.0 Deg.

JSI GRIP= 0.90 (I) (INPUT = 0.90)
JSI METAL= 0.55 (I) (INPUT = 1.00)

JOB NAME	TRUSS NAME	QUANTITY	PLY	JOB DESC.	DRWG NO.
345248	H06		1	TRUSS DESC. JT 45147	E22051993

Alpa Roof Truss, Maple

Version 8.530 S Feb 23 2022 MiTek Industries, Inc. Fri Jun 17 13:55:11 2022 Page 1

ID:wceEj9xaBTOj6r9Q4a6qjtzAj6D-enNBVJ7zAvn7pTbly0ZxfCbR4tqrEtlT2MvQZ8z5NC_

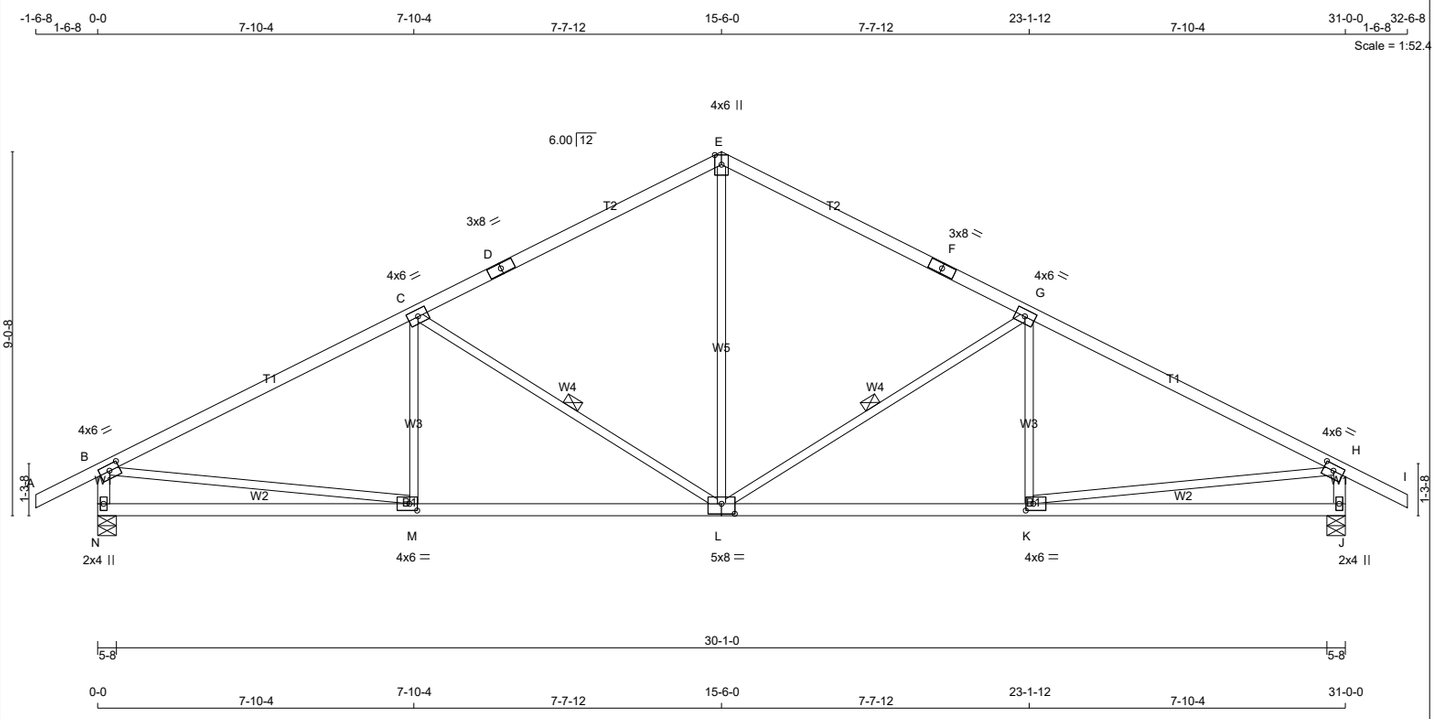

TOTAL WEIGHT = 8 X 122 = 976 lb

[M][F]

LUMBER

N. L. G. A. RULES

CHORDS	SIZE		LUMBER	DESCR.
A - D	2x4	DRY	No.2	SPF
D - E	2x4	DRY	No.2	SPF
E - F	2x4	DRY	No.2	SPF
F - I	2x4	DRY	No.2	SPF
N - B	2x4	DRY	No.2	SPF
J - H	2x4	DRY	No.2	SPF
N - L	2x4	DRY	No.2	SPF
L - J	2x4	DRY	No.2	SPF
ALL WEBS EXCEPT	2x3	DRY	No.2	SPF

DRY: SEASONED LUMBER.

PLATES (table is in inches)

JT	TYPE	PLATES	W	LEN	Y	X
B	TMVW-t	MT20	4.0	6.0	1.75	3.00
C	TMWW-t	MT20	4.0	6.0		
D	TS-t	MT20	3.0	8.0		
E	TTW+p	MT20	4.0	6.0	Edge	
F	TS-t	MT20	3.0	8.0		
G	TMWW-t	MT20	4.0	6.0		
H	TMVW-t	MT20	4.0	6.0	1.75	3.00
J	BMV1+p	MT20	2.0	4.0		
K	BMWW-t	MT20	4.0	6.0	2.00	2.25
L	BSWWW-l	MT20	5.0	8.0	3.00	4.00
M	BMWW-t	MT20	4.0	6.0	2.00	2.25
N	BMV1+p	MT20	2.0	4.0		

Edge - INDICATES REFERENCE CORNER OF PLATE TOUCHES EDGE OF CHORD.

LATERAL BRACE(S) SHOWN SHALL BE 2X4 SPF#2

DIMENSIONS, SUPPORTS AND LOADINGS SPECIFIED BY FABRICATOR TO BE VERIFIED BY BUILDING DESIGNER

BEARINGS

JT	FACTORED GROSS REACTION VERT	HORZ	MAXIMUM FACTORED GROSS REACTION DOWN	HORZ	UPLIFT	INPUT BRG IN-SX	REQRD BRG IN-SX
N	1621	0	1621	0	0	5-8	1-12
J	1621	0	1621	0	0	5-8	1-12

UNFACTORED REACTIONS

JT	1ST LCASE COMBINED	MAX./MIN. COMPONENT REACTIONS SNOW	LIVE	PERM.LIVE	WIND	DEAD	SOIL
N	1153	718 / 0	0 / 0	0 / 0	0 / 0	435 / 0	0 / 0
J	1153	718 / 0	0 / 0	0 / 0	0 / 0	435 / 0	0 / 0

BEARING MATERIAL TO BE SPF NO.2 OR BETTER AT JOINT(S) N, J

BRACING

TOP CHORD TO BE SHEATHED OR MAX. PURLIN SPACING = 3.74 FT.
MAX. UNBRACED BOTTOM CHORD LENGTH = 10.00 FT OR RIGID CEILING DIRECTLY APPLIED.

ALL PITCH BREAKS AND PERIMETER CORNER JOINTS MUST BE LATERALLY RESTRAINED.

1 LATERAL BRACE(S) AT 1/ 2 LENGTH OF G-L, C-L.

END VERTICAL(S) MUST BE SHEATHED OR HAVE BRACES AS INDICATED IN THE MAX. UNBRACED LENGTH COLUMN OF THE TABLE BELOW

LOADING

TOTAL LOAD CASES: (4)

CHORDS MEMB. FR-TO	MAX. FACTORED FORCE (LBS)	FACTORED VERT. LOAD (PLF) FROM	TO	LC1 CSI (LC)	MAX. UNBRAC LENGTH	WEBS MEMB. FR-TO	MAX. FACTORED FORCE (LBS)	MAX CSI (LC)
A- B	0 / 28	-78.0	-78.0	0.14 (1)	10.00	L- E	0 / 879	0.20 (1)
B- C	-2121 / 0	-78.0	-78.0	0.81 (1)	3.74	L- G	-712 / 0	0.41 (1)
C- D	-1517 / 0	-78.0	-78.0	0.70 (1)	4.41	K- G	-67 / 105	0.04 (4)
D- E	-1517 / 0	-78.0	-78.0	0.70 (1)	4.41	C- L	-712 / 0	0.41 (1)
E- F	-1517 / 0	-78.0	-78.0	0.70 (1)	4.41	M- C	-67 / 105	0.04 (4)
F- G	-1517 / 0	-78.0	-78.0	0.70 (1)	4.41	B- M	0 / 1941	0.44 (1)
G- H	-2121 / 0	-78.0	-78.0	0.81 (1)	3.74	K- H	0 / 1941	0.44 (1)
H- I	0 / 28	-78.0	-78.0	0.14 (1)	10.00			
N- B	-1563 / 0	0.0	0.0	0.16 (1)	6.59			
J- H	-1563 / 0	0.0	0.0	0.16 (1)	6.59			
N- M	0 / 0	-18.5	-18.5	0.31 (4)	10.00			
M- L	0 / 1926	-18.5	-18.5	0.49 (4)	10.00			
L- K	0 / 1926	-18.5	-18.5	0.49 (4)	10.00			
K- J	0 / 0	-18.5	-18.5	0.31 (4)	10.00			

DESIGN CRITERIA

SPECIFIED LOADS:

TOP CH.	LL	=	21.0	PSF
	DL	=	6.0	PSF
BOT CH.	LL	=	0.0	PSF
	DL	=	7.4	PSF
TOTAL LOAD		=	34.4	PSF

SPACING = 24.0 IN. C/C

THIS TRUSS IS DESIGNED FOR RESIDENTIAL OR SMALL BUILDING REQUIREMENTS OF PART 9, NBCC 2015

THIS DESIGN COMPLIES WITH:
- PART 9 OF BCBC 2018 , ABC 2019
- PART 9 OF OBC 2012 (2019 AMENDMENT)
- CSA 086-14
- TPIC 2014

(55 % OF 23.0 P.S.F. G.S.L. PLUS 8.4 P.S.F. RAIN LOAD) EQUALS 21.0 P.S.F. SPECIFIED ROOF LIVE LOAD

ALLOWABLE DEFL.(LL)= L/360 (1.03")
CALCULATED VERT. DEFL.(LL) = L/ 999 (0.09")
ALLOWABLE DEFL.(TL)= L/360 (1.03")
CALCULATED VERT. DEFL.(TL) = L/ 999 (0.25")

CSI: TC=0.81/1.00 (B-C:1) , BC=0.49/1.00 (L-M:4) , WB=0.44/1.00 (B-M:1) , SSI=0.26/1.00 (B-C:1)

DOL LUMBER=1.00 NAIL=1.00 LS BEND=1.10 COMP=1.10 SHEAR=1.10 TENS= 1.10

COMPANION LIVE LOAD FACTOR = 1.00

TRUSS PLATE MANUFACTURER IS NOT RESPONSIBLE FOR QUALITY CONTROL IN THE TRUSS MANUFACTURING PLANT .

NAIL VALUES

PLATE	GRIP(DRY) (PSI) MAX	MIN	SHEAR (PLI) MAX	MIN	SECTION (PLI) MAX	MIN
MT20	650	371	1747	788	1987	1873

PLATE PLACEMENT TOL. = 0.250 inches

PLATE ROTATION TOL. = 5.0 Deg.

JSI GRIP= 0.89 (H) (INPUT = 0.90)
JSI METAL= 0.55 (H) (INPUT = 1.00)

JOB NAME	TRUSS NAME	QUANTITY	PLY	JOB DESC.	DRWG NO.
345248	H07		1	TRUSS DESC. JT 45147	E22051994

Alpha Roof Truss, Maple

Version 8.530 S Feb 23 2022 MiTek Industries, Inc. Fri Jun 17 13:55:13 2022 Page 1

ID:wceEj9xaBTOj6r9Q4a6gjtzAj6D-a9Uyw?9DhW1r3ml84RbPkdgpOhJdillmVgOWd1z5NBy

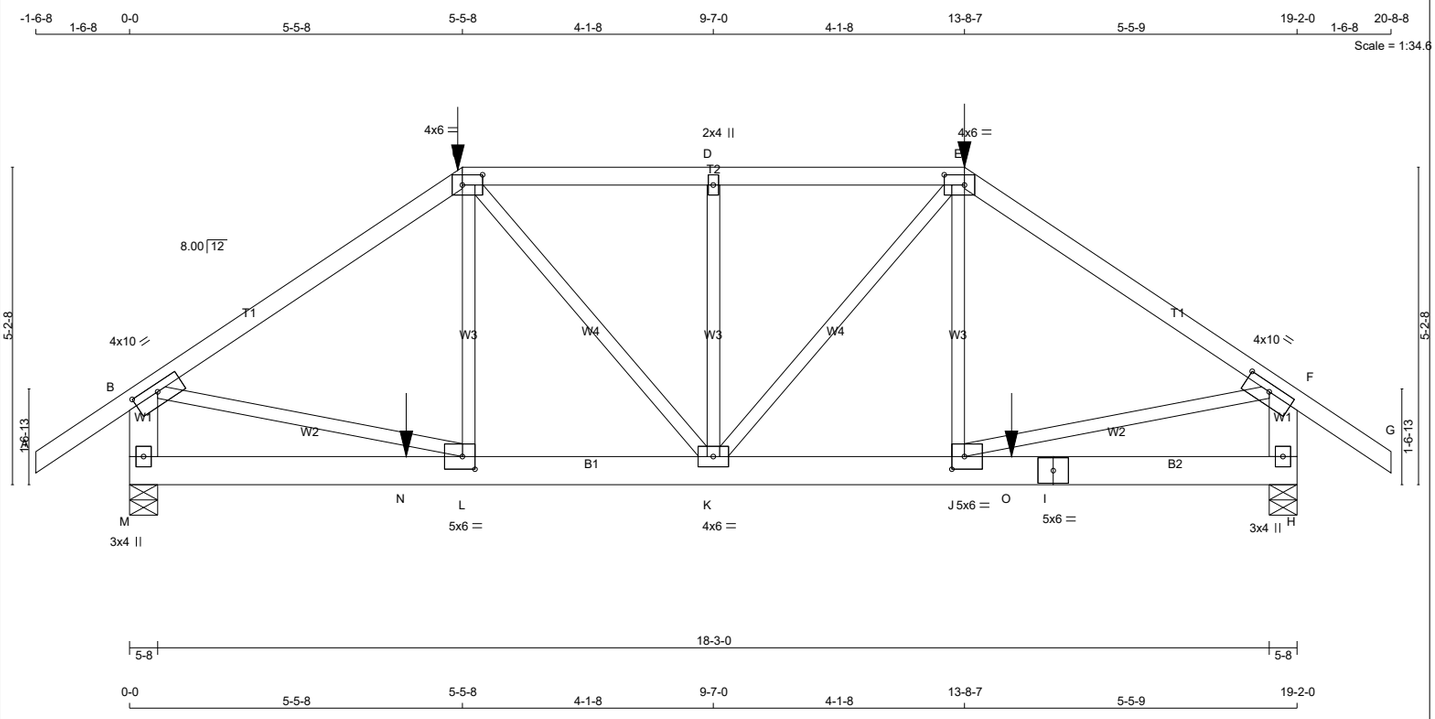

TOTAL WEIGHT = 96 lb

[M]

LUMBER

N. L. G. A. RULES

CHORDS	SIZE		LUMBER	DESCR.
A - C	2x4	DRY	No.2	SPF
C - E	2x4	DRY	No.2	SPF
E - G	2x4	DRY	No.2	SPF
M - B	2x6	DRY	No.2	SPF
H - F	2x6	DRY	No.2	SPF
M - I	2x6	DRY	No.2	SPF
I - H	2x6	DRY	No.2	SPF
ALL WEBS EXCEPT	2x3	DRY	No.2	SPF

DRY: SEASONED LUMBER.

PLATES (table is in inches)

JT	TYPE	PLATES	W	LEN	Y	X
B	TMVW-t	MT20	4.0	10.0	1.50	5.00
C	TTWW-l	MT20	4.0	6.0	2.00	4.00
D	TMW+w	MT20	2.0	4.0		
E	TTWW-l	MT20	4.0	6.0	2.00	4.00
F	TMVW-t	MT20	4.0	10.0	1.50	5.00
H	BMV1+p	MT20	3.0	4.0		
I	BS-t	MT20	5.0	6.0		
J	BMWW-t	MT20	5.0	6.0	2.50	2.50
K	BMWWW-t	MT20	4.0	6.0		
L	BMWW-t	MT20	5.0	6.0	2.50	2.50
M	BMV1+p	MT20	3.0	4.0		

LATERAL BRACE(S) SHOWN SHALL BE 2X4 SPF#2

LICENSED PROFESSIONAL ENGINEER
V. WIDYA
100225448
06/17/2022
PROVINCE OF ONTARIO

DIMENSIONS, SUPPORTS AND LOADINGS SPECIFIED BY FABRICATOR TO BE VERIFIED BY BUILDING DESIGNER

BEARINGS

JT	FACTORED GROSS REACTION VERT	HORZ	MAXIMUM FACTORED GROSS REACTION DOWN	HORZ	UPLIFT	INPUT BRG IN-SX	REQRD BRG IN-SX
M	2373	0	2373	0	0	5-8	2-9
H	2359	0	2359	0	0	5-8	2-9

UNFACTORED REACTIONS

JT	1ST LCASE COMBINED	MAX./MIN. COMPONENT REACTIONS SNOW	LIVE	PERM.LIVE	WIND	DEAD	SOIL
M	1691	1034 / 0	0 / 0	0 / 0	0 / 0	657 / 0	0 / 0
H	1682	1028 / 0	0 / 0	0 / 0	0 / 0	653 / 0	0 / 0

BEARING MATERIAL TO BE SPF NO.2 OR BETTER AT JOINT(S) M, H

BRACING

TOP CHORD TO BE SHEATHED OR MAX. PURLIN SPACING = 3.63 FT.
MAX. UNBRACED BOTTOM CHORD LENGTH = 10.00 FT OR RIGID CEILING DIRECTLY APPLIED.

ALL PITCH BREAKS AND PERIMETER CORNER JOINTS MUST BE LATERALLY RESTRAINED.

LOADING

TOTAL LOAD CASES: (4)

CHORDS

MEMB. FR-TO	MAX. FACTORED FORCE (LBS)	FACTORED VERT. LOAD (PLF) FROM	TO	LC1 CSI (LC)	MAX UNBRAC LENGTH
A- B	0 / 35	-78.0	-78.0	0.16 (1)	10.00
B- C	-2529 / 0	-78.0	-78.0	0.69 (1)	3.63
C- D	-2179 / 0	-78.0	-78.0	0.31 (1)	4.27
D- E	-2179 / 0	-78.0	-78.0	0.31 (1)	4.27
E- F	-2532 / 0	-78.0	-78.0	0.69 (1)	3.63
F- G	0 / 35	-78.0	-78.0	0.16 (1)	10.00
M- B	-2185 / 0	0.0	0.0	0.16 (1)	6.87
H- F	-2188 / 0	0.0	0.0	0.16 (1)	6.86
M- N	0 / 0	-36.4	-36.4	0.35 (1)	10.00
N- L	0 / 0	-36.4	-36.4	0.35 (1)	10.00
L- K	0 / 2116	-18.5	-18.5	0.60 (1)	10.00
K- J	0 / 2119	-18.5	-18.5	0.57 (1)	10.00
J- O	0 / 0	-36.4	-36.4	0.30 (1)	10.00
O- I	0 / 0	-36.4	-36.4	0.30 (1)	10.00
I- H	0 / 0	-36.4	-36.4	0.30 (1)	10.00

WEBS

MEMB. FR-TO	MAX. FACTORED FORCE (LBS)	MAX CSI (LC)
L- C	0 / 677	0.17 (1)
K- D	-379 / 0	0.15 (1)
K- E	0 / 93	0.02 (1)
J- E	0 / 683	0.17 (1)
B- L	0 / 2147	0.53 (1)
J- F	0 / 2150	0.53 (1)

FACTORED CONCENTRATED LOADS (LBS)

JT	LOC.	LC1	MAX-	MAX+	FACE	DIR.	TYPE	HEEL	CONN.
C	5-5-8	-310	-310	---	FRONT	VERT	TOTAL	---	C1
E	13-8-7	-311	-311	---	FRONT	VERT	TOTAL	---	C1
N	4-6-8	-905	-905	---	FRONT	VERT	TOTAL	---	C1
O	14-5-12	-905	-905	---	FRONT	VERT	TOTAL	---	C1

CONNECTION REQUIREMENTS

1) **C1:** A SUITABLE HANGER/MECHANICAL CONNECTION IS REQUIRED.

DESIGN CRITERIA

*** SPECIAL LOADS ANALYSIS ***
GEOMETRY AND/OR BASIC LOADS CHANGED BY USER.
LOADS WERE DERIVED FROM USER INPUT
NO FURTHER MODIFICATIONS WERE MADE

SPECIFIED LOADS:

TOP	CH.	LL	=	21.0	PSF
		DL	=	6.0	PSF
BOT	CH.	LL	=	0.0	PSF
		DL	=	7.4	PSF
TOTAL	LOAD		=	34.4	PSF

SPACING = 24.0 IN. C/C

LOADING IN FLAT SECTION BASED ON A SLOPE OF 2.00/12 MINIMUM

GIRDER TYPE: CPrimeHip
LEFT SETBACK = 5-5-8
RIGHT SETBACK = 5-5-9
END SETBACK = 5-10-8
END WALL WIDTH = 0-0
CORNER FRAMING TYPE: CONVENTIONAL
END JACK TYPE: CONVENTIONAL
APPLIED TO FRONT SIDE
- ADDT'L LOADS BASED ON 55 % OF GSL.
LOADS APPLIED TO FIRST 5-5-8 OF SPAN MEASURED FROM THE LEFT.

GIRDER TYPE: CPrimeHip
LEFT SETBACK = 5-5-8
RIGHT SETBACK = 5-5-9
END SETBACK = 5-10-8
END WALL WIDTH = 0-0
CORNER FRAMING TYPE: CONVENTIONAL
END JACK TYPE: CONVENTIONAL
APPLIED TO FRONT SIDE
- ADDT'L LOADS BASED ON 55 % OF GSL.
LOADS APPLIED TO FIRST 5-5-9 OF SPAN MEASURED FROM THE RIGHT.

*** NON STANDARD GIRDER ***
ADDT'L USER-DEFINED LOADS APPLIED TO ALL LOAD CASES.

THIS TRUSS IS DESIGNED FOR RESIDENTIAL OR SMALL BUILDING REQUIREMENTS OF PART 9, NBCC 2015

THIS DESIGN COMPLIES WITH:
- PART 9 OF BCBC 2018 , ABC 2019
- PART 9 OF OBC 2012 (2019 AMENDMENT)
- CSA 086-14
- TPIC 2014

(55 % OF 23.0 P.S.F. G.S.L. PLUS 8.4 P.S.F. RAIN LOAD) EQUALS 21.0 P.S.F. SPECIFIED ROOF LIVE LOAD

ALLOWABLE DEFL.(LL)= L/360 (0.64")
CALCULATED VERT. DEFL.(LL) = L/ 999 (0.06")
ALLOWABLE DEFL.(TL)= L/360 (0.64")
CALCULATED VERT. DEFL.(TL) = L/ 999 (0.12")

CSI: TC=0.69/1.00 (E-F:1) , BC=0.60/1.00 (K-L:1) , WB=0.53/1.00 (F-J:1) , SSI=0.62/1.00 (H-J:1)

DOL LUMBER=1.00 NAIL=1.00 LS BEND=1.00 COMP=1.00 SHEAR=1.00 TENS= 1.00

COMPANION LIVE LOAD FACTOR = 1.00

AUTOSOLVE HEELS OFF

TRUSS PLATE MANUFACTURER IS NOT RESPONSIBLE FOR QUALITY CONTROL IN THE TRUSS MANUFACTURING PLANT .

NAIL VALUES

PLATE	GRIP(DRY) (PSI) MAX	MIN	SHEAR (PLI) MAX	MIN	SECTION (PLI) MAX	MIN
MT20	650	371	1747	788	1987	1873

PLATE PLACEMENT TOL. = 0.250 inches

PLATE ROTATION TOL. = 5.0 Deg.

JSI GRIP= 0.85 (B) (INPUT = 0.90)
JSI METAL= 0.48 (L) (INPUT = 1.00)

JOB NAME	TRUSS NAME	QUANTITY	PLY	JOB DESC.	DRWG NO.
345248	H08		1	TRUSS DESC. JT 45147	E22051995

Alpa Roof Truss, Maple

Version 8.530 S Feb 23 2022 MiTek Industries, Inc. Fri Jun 17 13:55:15 2022 Page 1

ID:wceEj9xaBTOj6r9Q4a6gjtzAj6D-XYciLqBTD8IYI4vWBsetp2lHqU40Ag83z tdiwz5NBw

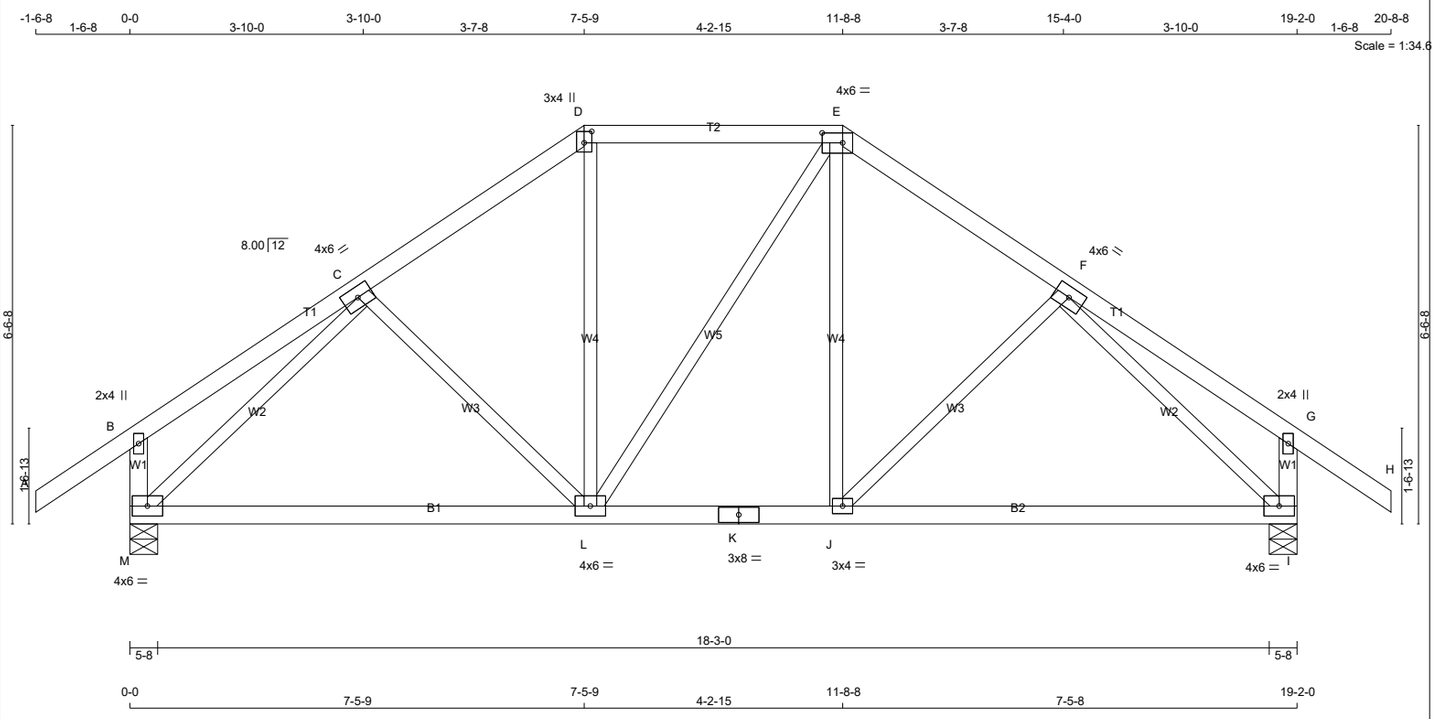

TOTAL WEIGHT = 86 lb

[M][F]

LUMBER

N. L. G. A. RULES

CHORDS	SIZE		LUMBER	DESCR.
A - D	2x4	DRY	No.2	SPF
D - E	2x4	DRY	No.2	SPF
E - H	2x4	DRY	No.2	SPF
M - B	2x4	DRY	No.2	SPF
I - G	2x4	DRY	No.2	SPF
M - K	2x4	DRY	No.2	SPF
K - I	2x4	DRY	No.2	SPF
ALL WEBS EXCEPT	2x3	DRY	No.2	SPF

DRY: SEASONED LUMBER.

PLATES (table is in inches)

JT	TYPE	PLATES	W	LEN	Y	X
B	TMV+p	MT20	2.0	4.0		
C	TMWW-t	MT20	4.0	6.0		
D	TTW+p	MT20	3.0	4.0	2.25	1.50
E	TTWW-l	MT20	4.0	6.0	2.00	4.00
F	TMWW-t	MT20	4.0	6.0		
G	TMV+p	MT20	2.0	4.0		
I	BMVW1-t	MT20	4.0	6.0		
J	BMWW-t	MT20	3.0	4.0		
K	BS-t	MT20	3.0	8.0		
L	BMWWW-t	MT20	4.0	6.0		
M	BMVW1-t	MT20	4.0	6.0		

LATERAL BRACE(S) SHOWN SHALL BE 2X4 SPF#2

DIMENSIONS, SUPPORTS AND LOADINGS SPECIFIED BY FABRICATOR TO BE VERIFIED BY BUILDING DESIGNER

BEARINGS

JT	FACTORED GROSS REACTION VERT	HORZ	MAXIMUM FACTORED GROSS REACTION DOWN	HORZ	UPLIFT	INPUT BRG IN-SX	REQRD BRG IN-SX
M	1051	0	1051	0	0	5-8	1-8
I	1051	0	1051	0	0	5-8	1-8

UNFACTORED REACTIONS

JT	1ST LCASE COMBINED	MAX./MIN. COMPONENT REACTIONS SNOW	LIVE	PERM.LIVE	WIND	DEAD	SOIL
M	747	470 / 0	0 / 0	0 / 0	0 / 0	276 / 0	0 / 0
I	747	470 / 0	0 / 0	0 / 0	0 / 0	276 / 0	0 / 0

BEARING MATERIAL TO BE SPF NO.2 OR BETTER AT JOINT(S) M, I

BRACING

TOP CHORD TO BE SHEATHED OR MAX. PURLIN SPACING = 6.25 FT.

MAX. UNBRACED BOTTOM CHORD LENGTH = 10.00 FT OR RIGID CEILING DIRECTLY APPLIED.

ALL PITCH BREAKS AND PERIMETER CORNER JOINTS MUST BE LATERALLY RESTRAINED.

LOADING

TOTAL LOAD CASES: (4)

CHORDS

MEMB. FR-TO	MAX. FACTORED FORCE (LBS)	FACTORED VERT. LOAD (PLF) FROM	TO	LC1 CSI (LC)	MAX UNBRAC LENGTH
A- B	0 / 35	-78.0	-78.0	0.15 (1)	10.00
B- C	0 / 18	-78.0	-78.0	0.17 (1)	10.00
C- D	-844 / 0	-78.0	-78.0	0.14 (1)	6.25
D- E	-689 / 0	-78.0	-78.0	0.19 (1)	6.25
E- F	-844 / 0	-78.0	-78.0	0.14 (1)	6.25
F- G	0 / 18	-78.0	-78.0	0.17 (1)	10.00
G- H	0 / 35	-78.0	-78.0	0.15 (1)	10.00
M- B	-239 / 0	0.0	0.0	0.03 (1)	7.81
I- G	-239 / 0	0.0	0.0	0.03 (1)	7.81
M- L	0 / 752	-18.5	-18.5	0.29 (4)	10.00
L- K	0 / 689	-18.5	-18.5	0.26 (4)	10.00
K- J	0 / 689	-18.5	-18.5	0.26 (4)	10.00
J- I	0 / 751	-18.5	-18.5	0.29 (4)	10.00

WEBS

MEMB. FR-TO	MAX. FACTORED FORCE (LBS)	MAX CSI (LC)
C- L	-91 / 11	0.04 (1)
L- D	0 / 181	0.04 (4)
L- E	0 / 0	0.00 (1)
J- E	0 / 181	0.04 (4)
J- F	-91 / 11	0.04 (1)
M- C	-1064 / 0	0.47 (1)
F- I	-1064 / 0	0.47 (1)

DESIGN CRITERIA

SPECIFIED LOADS:

TOP CH.	LL	=	21.0	PSF
	DL	=	6.0	PSF
BOT CH.	LL	=	0.0	PSF
	DL	=	7.4	PSF
TOTAL LOAD		=	34.4	PSF

SPACING = 24.0 IN. C/C

LOADING IN FLAT SECTION BASED ON A SLOPE OF 2.00/12 MINIMUM

THIS TRUSS IS DESIGNED FOR RESIDENTIAL OR SMALL BUILDING REQUIREMENTS OF PART 9, NBCC 2015

THIS DESIGN COMPLIES WITH:
- PART 9 OF BCBC 2018 , ABC 2019
- PART 9 OF OBC 2012 (2019 AMENDMENT)
- CSA 086-14
- TPIC 2014

(55 % OF 23.0 P.S.F. G.S.L. PLUS 8.4 P.S.F. RAIN LOAD) EQUALS 21.0 P.S.F. SPECIFIED ROOF LIVE LOAD

ALLOWABLE DEFL.(LL)= L/360 (0.64")
CALCULATED VERT. DEFL.(LL) = L/ 999 (0.02")
ALLOWABLE DEFL.(TL)= L/360 (0.64")
CALCULATED VERT. DEFL.(TL) = L/ 999 (0.12")

CSI: TC=0.19/1.00 (D-E:1) , BC=0.29/1.00 (I-J:4) , WB=0.47/1.00 (C-M:1) , SSI=0.13/1.00 (D-E:1)

DOL LUMBER=1.00 NAIL=1.00 LS BEND=1.10 COMP=1.10 SHEAR=1.10 TENS= 1.10

COMPANION LIVE LOAD FACTOR = 1.00

TRUSS PLATE MANUFACTURER IS NOT RESPONSIBLE FOR QUALITY CONTROL IN THE TRUSS MANUFACTURING PLANT .

NAIL VALUES

PLATE	GRIP(DRY) (PSI) MAX	MIN	SHEAR (PLI) MAX	MIN	SECTION (PLI) MAX	MIN
MT20	650	371	1747	788	1987	1873

PLATE PLACEMENT TOL. = 0.250 inches

PLATE ROTATION TOL. = 5.0 Deg.

JSI GRIP= 0.85 (D) (INPUT = 0.90)
JSI METAL= 0.33 (K) (INPUT = 1.00)

JOB NAME	TRUSS NAME	QUANTITY	PLY	JOB DESC.	DRWG NO.
345248	H09		1	TRUSS DESC. JT 45147	E22051996

Alpa Roof Truss, Maple

Version 8.530 S Feb 23 2022 MiTek Industries, Inc. Fri Jun 17 13:55:16 2022 Page 1
ID:wceEj9xaBTOj6r9Q4a6gjtzAj6D-?kA4Y0B5 RQPwEUjlZ96MGIP6uSCvDJCBedAEMz5NBv

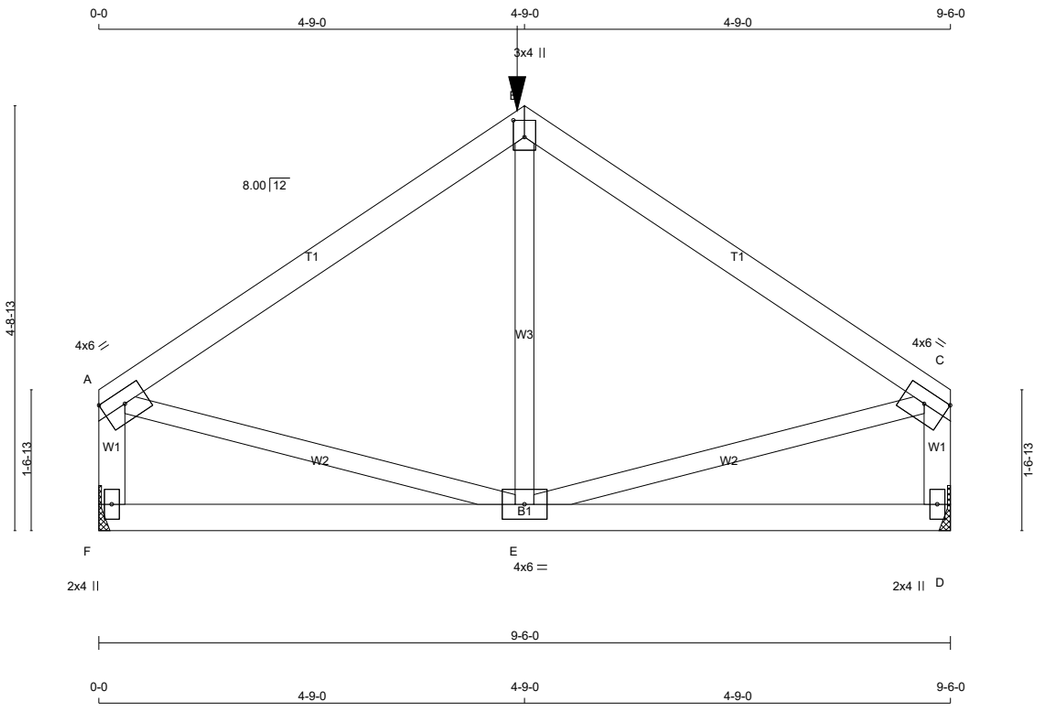

TOTAL WEIGHT = 3 X 38 = 113 lb [M]

LUMBER
N. L. G. A. RULES

CHORDS	SIZE		LUMBER	DESCR.
A - B	2x4	DRY	No.2	SPF
B - C	2x4	DRY	No.2	SPF
F - A	2x4	DRY	No.2	SPF
D - C	2x4	DRY	No.2	SPF
F - D	2x4	DRY	No.2	SPF
ALL WEBS	2x3	DRY	No.2	SPF

EXCEPT

DRY: SEASONED LUMBER.

PLATES (table is in inches)

JT	TYPE	PLATES	W	LEN	Y	X
A	TMVW-t	MT20	4.0	6.0	1.75	Edge
B	TTW+p	MT20	3.0	4.0	2.25	1.50
C	TMVW-t	MT20	4.0	6.0	1.75	Edge
D	BMV1+p	MT20	2.0	4.0		
E	BMWWW-t	MT20	4.0	6.0		
F	BMV1+p	MT20	2.0	4.0		

Edge - INDICATES REFERENCE CORNER OF PLATE TOUCHES EDGE OF CHORD.

LATERAL BRACE(S) SHOWN SHALL BE 2X4 SPF#2

DIMENSIONS, SUPPORTS AND LOADINGS SPECIFIED BY FABRICATOR TO BE VERIFIED BY BUILDING DESIGNER

BEARINGS

JT	FACTORED GROSS REACTION VERT	HORZ	MAXIMUM GROSS REACTION DOWN	HORZ	FACTORED UPLIFT	INPUT BRG IN-SX	REQRD BRG IN-SX
F	575	0	575	0	0	MECHANICAL	
D	575	0	575	0	0	MECHANICAL	

A SUITABLE HANGER/MECHANICAL CONNECTION IS REQUIRED AT JOINT F, D. MINIMUM BEARING LENGTH AT JOINT F = 1-8, JOINT D = 1-8.

UNFACTORED REACTIONS

JT	1ST LCASE COMBINED	MAX./MIN. COMPONENT REACTIONS SNOW	LIVE	PERM.LIVE	WIND	DEAD	SOIL
F	410	250 / 0	0 / 0	0 / 0	0 / 0	160 / 0	0 / 0
D	410	250 / 0	0 / 0	0 / 0	0 / 0	160 / 0	0 / 0

BRACING
TOP CHORD TO BE SHEATHED OR MAX. PURLIN SPACING = 6.25 FT.
MAX. UNBRACED BOTTOM CHORD LENGTH = 10.00 FT OR RIGID CEILING DIRECTLY APPLIED.

ALL PITCH BREAKS AND PERIMETER CORNER JOINTS MUST BE LATERALLY RESTRAINED.

LOADING
TOTAL LOAD CASES: (4)

CHORDS

MEMB. FR-TO	MAX. FACTORED FORCE (LBS)	FACTORED VERT. LOAD (PLF) FROM	TO	LC1	MAX CSI (LC)	MAX. UNBRAC LENGTH
A- B	-449 / 0	-78.0	-78.0	0.34 (1)	6.25	
B- C	-449 / 0	-78.0	-78.0	0.34 (1)	6.25	
F- A	-532 / 0	0.0	0.0	0.06 (1)	7.81	
D- C	-532 / 0	0.0	0.0	0.06 (1)	7.81	
F- E	0 / 0	-23.2	-23.2	0.16 (4)	10.00	
E- D	0 / 0	-23.2	-23.2	0.16 (4)	10.00	

WEBS

MEMB. FR-TO	MAX. FACTORED FORCE (LBS)	MAX CSI (LC)
E- B	-61 / 76	0.03 (4)
A- E	0 / 386	0.10 (1)
E- C	0 / 386	0.10 (1)

FACTORED CONCENTRATED LOADS (LBS)

JT	LOC.	LC1	MAX-	MAX+	FACE	DIR.	TYPE	HEEL	CONN.
B	4-9-0	-188	-188	---	FRONT	VERT	TOTAL	---	C1

CONNECTION REQUIREMENTS

1) **C1:** A SUITABLE HANGER/MECHANICAL CONNECTION IS REQUIRED.

DESIGN CRITERIA

SPECIFIED LOADS:

TOP CH.	LL	=	21.0	PSF
	DL	=	6.0	PSF
BOT CH.	LL	=	0.0	PSF
	DL	=	7.4	PSF
TOTAL LOAD		=	34.4	PSF

SPACING = 24.0 IN. C/C

GIRDER TYPE: CPrimeHip
SIDE SETBACK = 4-9-0
END SETBACK = 3-0-5
END WALL WIDTH = 0-0
CORNER FRAMING TYPE: CONVENTIONAL
END JACK TYPE: CONVENTIONAL
APPLIED TO FRONT SIDE
- ADDT'L LOADS BASED ON 55 % OF GSL.

THIS TRUSS IS DESIGNED FOR RESIDENTIAL OR SMALL BUILDING REQUIREMENTS OF PART 9, NBCC 2015

THIS DESIGN COMPLIES WITH:
- PART 9 OF BCBC 2018 , ABC 2019
- PART 9 OF OBC 2012 (2019 AMENDMENT)
- CSA 086-14
- TPIC 2014

(55 % OF 23.0 P.S.F. G.S.L. PLUS 8.4 P.S.F. RAIN LOAD) EQUALS 21.0 P.S.F. SPECIFIED ROOF LIVE LOAD

ALLOWABLE DEFL.(LL)= L/360 (0.32")
CALCULATED VERT. DEFL.(LL) = L/ 999 (0.00")
ALLOWABLE DEFL.(TL)= L/360 (0.32")
CALCULATED VERT. DEFL.(TL) = L/ 999 (0.02")

CSI: TC=0.34/1.00 (B-C:1) , BC=0.16/1.00 (E-F:4) , WB=0.10/1.00 (A-E:1) , SSI=0.13/1.00 (B-C:1)

DOL LUMBER=1.00 NAIL=1.00 LS BEND=1.00 COMP=1.00 SHEAR=1.00 TENS= 1.00

COMPANION LIVE LOAD FACTOR = 1.00

TRUSS PLATE MANUFACTURER IS NOT RESPONSIBLE FOR QUALITY CONTROL IN THE TRUSS MANUFACTURING PLANT .

NAIL VALUES

PLATE	GRIP(DRY) (PSI) MAX	MIN	SHEAR (PLI) MAX	MIN	SECTION (PLI) MAX	MIN
MT20	650	371	1747	788	1987	1873

PLATE PLACEMENT TOL. = 0.250 inches

PLATE ROTATION TOL. = 5.0 Deg.

JSI GRIP= 0.65 (E) (INPUT = 0.90)
JSI METAL= 0.13 (C) (INPUT = 1.00)

JOB NAME	TRUSS NAME	QUANTITY	PLY	JOB DESC.		DRWG NO.
345248	H10G		1	TRUSS DESC.	JT 45147	E22051997

Alpa Roof Truss, Maple

Version 8.530 S Feb 23 2022 MiTek Industries, Inc. Fri Jun 17 13:55:20 2022 Page 1

ID:wceEj9xaBTOj6r9Q4a6qjtzAj6D-tWPbOOEc2gwrOrnU PD2W6T8BVr r?lo6GbON7z5NBr

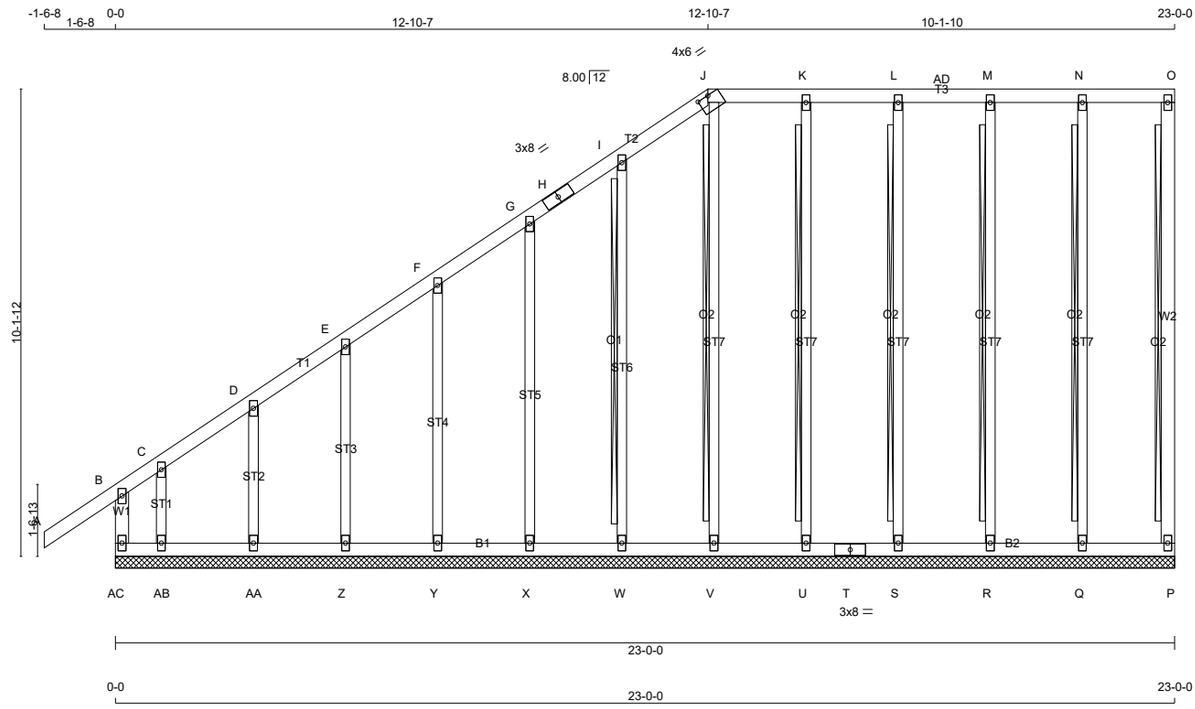

TOTAL WEIGHT = 133 lb [M]

LUMBER

N. L. G. A. RULES

CHORDS	SIZE		LUMBER	DESCR.
AC- B	2x4	DRY	No.2	SPF
A - H	2x4	DRY	No.2	SPF
H - J	2x4	DRY	No.2	SPF
J - O	2x4	DRY	No.2	SPF
P - O	2x4	DRY	No.2	SPF
AC- T	2x4	DRY	No.2	SPF
T - P	2x4	DRY	No.2	SPF
ALL WEBS	2x3	DRY	No.2	SPF
ALL GABLE WEBS	2x3	DRY	No.2	SPF

DRY: SEASONED LUMBER.

GABLE STUDS SPACED AT 2-0-0 OC.

PLATES (table is in inches)

JT	TYPE	PLATES	W	LEN	Y	X
B	TMV+p	MT20	2.0	4.0		
C, D, E, F, G, I, K, L, M, N						
C	TMW+w	MT20	2.0	4.0		
H	TS-t	MT20	3.0	8.0		
J	TTW-h	MT20	4.0	6.0		3.00
O	TMV+p	MT20	2.0	4.0		
P	BMV1+p	MT20	2.0	4.0		
Q, R, S, U, V, W, X, Y, Z, AA, AB						
Q	BMW1+w	MT20	2.0	4.0		
T	BS-t	MT20	3.0	8.0		
AC	BMV1+p	MT20	2.0	4.0		

LATERAL BRACE(S) SHOWN SHALL BE 2X4 SPF#2

LICENSED PROFESSIONAL ENGINEER
V. WIDYA
100225448
06/17/2022
PROVINCE OF ONTARIO

DIMENSIONS, SUPPORTS AND LOADINGS SPECIFIED BY FABRICATOR TO BE VERIFIED BY BUILDING DESIGNER

BEARINGS

THIS TRUSS DESIGNED FOR CONTINUOUS BEARINGS.

THIS TRUSS REQUIRES RIGID SHEATHING ON EXPOSED FACE.

BEARING MATERIAL TO BE SPF NO.2 OR BETTER AT JOINT(S)

BRACING

FOR SECTION J-O, MAX. PURLIN SPACING = 2.00 FT.
FOR OTHER SECTIONS, TOP CHORD TO BE SHEATHED OR MAX. PURLIN SPACING = 6.25 FT.
MAX. UNBRACED BOTTOM CHORD LENGTH = 10.00 FT OR RIGID CEILING DIRECTLY APPLIED.

ALL PITCH BREAKS AND PERIMETER CORNER JOINTS MUST BE LATERALLY RESTRAINED.

2x4 DRY SPF No.2 T-BRACE AT O-P, N-Q, M-R, L-S, K-U, J-V
2x3 DRY SPF No.2 T-BRACE AT I-W

FASTEN T AND I-BRACES TO NARROW EDGE OF WEB WITH ONE ROW PER PLY OF 3" COMMON WIRE NAILS @ 6" O.C. WITH 3" MINIMUM END DISTANCE. BRACE MUST COVER 90% OF WEB LENGTH.

END VERTICAL(S) MUST BE SHEATHED OR HAVE BRACES AS INDICATED IN THE MAX. UNBRACED LENGTH COLUMN OF THE TABLE BELOW

LOADING

TOTAL LOAD CASES: (4)

CHORDS MEMB. FR-TO	MAX. FACTORED FORCE (LBS)	FACTORED VERT. LOAD (PLF) FROM	TO	LC1	MAX CSI (LC)	MAX. UNBRAC LENGTH	WEBS MEMB. FR-TO	MAX. FACTORED FORCE (LBS)	MAX CSI (LC)
AC- B	-266 / 0	0.0	0.0		0.04 (1)	7.81	Q- N	-197 / 0	0.16 (1)
A- B	0 / 35	-78.0	-78.0		0.15 (1)	10.00	R- M	-186 / 0	0.15 (1)
B- C	-71 / 0	-78.0	-78.0		0.13 (1)	6.25	S- L	-184 / 0	0.15 (1)
C- D	-13 / 0	-78.0	-78.0		0.04 (1)	6.25	U- K	-196 / 0	0.16 (1)
D- E	-15 / 0	-78.0	-78.0		0.04 (1)	6.25	V- J	-173 / 0	0.14 (1)
E- F	-10 / 0	-78.0	-78.0		0.04 (1)	6.25	W- I	-150 / 0	0.19 (1)
F- G	-8 / 0	-78.0	-78.0		0.04 (1)	10.00	X- G	-155 / 0	0.16 (1)
G- H	-6 / 0	-78.0	-78.0		0.04 (1)	10.00	Y- F	-155 / 0	0.10 (1)
H- I	-6 / 0	-78.0	-78.0		0.04 (1)	10.00	Z- E	-151 / 0	0.05 (1)
I- J	-3 / 0	-78.0	-78.0		0.04 (1)	10.00	AA- D	-167 / 0	0.04 (1)
J- K	-1 / 0	-93.0	-93.0		0.05 (1)	2.00	AB- C	-9 / 0	0.00 (1)
K- L	-1 / 0	-93.0	-93.0		0.05 (1)	2.00			
L-AD	-1 / 0	-93.0	-93.0		0.04 (1)	2.00			
AD- M	-1 / 0	-93.0	-93.0		0.04 (1)	2.00			
M- N	-1 / 0	-93.0	-93.0		0.04 (1)	2.00			
N- O	-1 / 0	-93.0	-93.0		0.04 (1)	2.00			
P- O	-81 / 0	0.0	0.0		0.01 (1)	7.81			
AC-AB	0 / 16	-18.5	-18.5		0.04 (1)	10.00			
AB-AA	0 / 16	-18.5	-18.5		0.02 (4)	10.00			
AA- Z	0 / 12	-18.5	-18.5		0.02 (4)	10.00			
Z- Y	0 / 9	-18.5	-18.5		0.02 (4)	10.00			
Y- X	0 / 7	-18.5	-18.5		0.02 (4)	10.00			
X- W	0 / 5	-18.5	-18.5		0.01 (4)	10.00			
W- V	0 / 4	-18.5	-18.5		0.01 (4)	10.00			
V- U	0 / 1	-18.5	-18.5		0.01 (4)	10.00			
U- T	0 / 1	-18.5	-18.5		0.01 (4)	10.00			
T- S	0 / 1	-18.5	-18.5		0.01 (4)	10.00			
S- R	0 / 1	-18.5	-18.5		0.01 (4)	10.00			
R- Q	0 / 1	-18.5	-18.5		0.02 (4)	10.00			
Q- P	0 / 1	-18.5	-18.5		0.02 (4)	10.00			

DESIGN CRITERIA

SPECIFIED LOADS:

TOP CH.	LL	=	21.0	PSF
	DL	=	6.0	PSF
BOT CH.	LL	=	0.0	PSF
	DL	=	7.4	PSF
TOTAL LOAD		=	34.4	PSF

SPACING = 24.0 IN. C/C

LOADING IN FLAT SECTION BASED ON PIGGYBACK TRUSS WITH SLOPES OF 6.00/12 AND -6.00/12 AND RESPECTIVE HEEL HEIGHTS OF 0-0 AND 0-0 AND AN ADDITIONAL DEAD LOAD OF 6.0 P.S.F.

THIS TRUSS IS DESIGNED FOR RESIDENTIAL OR SMALL BUILDING REQUIREMENTS OF PART 9, NBCC 2015

THIS DESIGN COMPLIES WITH:
- PART 9 OF BCBC 2018 , ABC 2019
- PART 9 OF OBC 2012 (2019 AMENDMENT)
- CSA 086-14
- TPIC 2014

DESIGN ASSUMPTIONS
-OVERHANG NOT TO BE ALTERED OR CUT OFF.

(55 % OF 23.0 P.S.F. G.S.L. PLUS 8.4 P.S.F. RAIN LOAD) EQUALS 21.0 P.S.F. SPECIFIED ROOF LIVE LOAD

CSI: TC=0.15/1.00 (A-B:1) , BC=0.04/1.00 (AB-AC:1) , WB=0.19/1.00 (I-W:1) , SSI=0.08/1.00 (B-C:1)

DOL LUMBER=1.00 NAIL=1.00 LS BEND=1.10 COMP=1.10 SHEAR=1.10 TENS= 1.10

COMPANION LIVE LOAD FACTOR = 1.00

TRUSS PLATE MANUFACTURER IS NOT RESPONSIBLE FOR QUALITY CONTROL IN THE TRUSS MANUFACTURING PLANT .

NAIL VALUES

PLATE	GRIP(DRY) (PSI) MAX	MIN	SHEAR (PLI) MAX	MIN	SECTION (PLI) MAX	MIN
MT20	650	371	1747	788	1987	1873

PLATE PLACEMENT TOL. = 0.250 inches

PLATE ROTATION TOL. = 5.0 Deg.

JSI GRIP= 0.38 (I) (INPUT = 0.90)
JSI METAL= 0.15 (B) (INPUT = 1.00)

JOB NAME	TRUSS NAME	QUANTITY	PLY	JOB DESC.	DRWG NO.
345248	H11G		1	TRUSS DESC. JT 45147	E22051998

Alpa Roof Truss, Maple

Version 8.530 S Feb 23 2022 MiTek Industries, Inc. Fri Jun 17 13:55:24 2022 Page 1

ID:wceEj9xaBTOj6r9Q4a6qjtzAj6D-mHf6EIl66vQHtT5FDFI hydpA6Dzns3O1tZbWuz5NBn

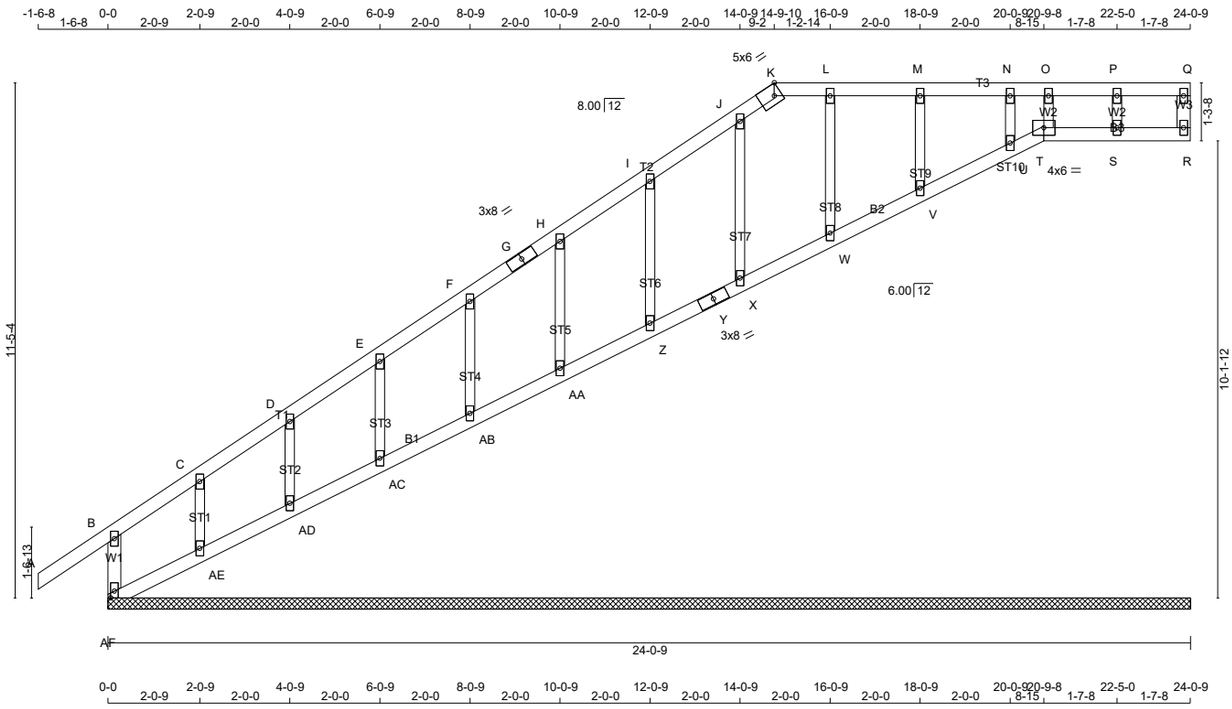

TOTAL WEIGHT = 87 lb

[M]

LUMBER

N. L. G. A. RULES

CHORDS	SIZE		LUMBER	DESCR.
A - G	2x4	DRY	No.2	SPF
G - K	2x4	DRY	No.2	SPF
K - Q	2x4	DRY	No.2	SPF
R - Q	2x4	DRY	No.2	SPF
AF- B	2x4	DRY	No.2	SPF
AF- Y	2x4	DRY	No.2	SPF
Y - T	2x4	DRY	No.2	SPF
T - R	2x4	DRY	No.2	SPF
ALL WEBS	2x3	DRY	No.2	SPF
ALL GABLE WEBS	2x3	DRY	No.2	SPF

DRY: SEASONED LUMBER.

GABLE STUDS SPACED AT 2-0-0 OC.

PLATES (table is in inches)

JT	TYPE	PLATES	W	LEN	Y	X
B	TMV+p	MT20	2.0	4.0		
C, D, E, F, H, I, J, L, M, N, O, P						
C	TMW+w	MT20	2.0	4.0		
G	TS-t	MT20	3.0	8.0		
K	TT-h	MT20	5.0	6.0	Edge	2.00
Q	TMV+p	MT20	2.0	4.0		
R	BMV1+p	MT20	2.0	4.0		
S, U, V, W, X, Z, AA, AB, AC, AD, AE						
S	BMW1+w	MT20	2.0	4.0		
T	BBW1-l	MT20	4.0	6.0		
Y	BS-t	MT20	3.0	8.0		
AF	BMV1+p	MT20	2.0	4.0	Edge	

Edge - INDICATES REFERENCE CORNER OF PLATE TOUCHES EDGE OF CHORD.

LATERAL BRACE(S) SHOWN SHALL BE 2X4 SPF#2

DIMENSIONS, SUPPORTS AND LOADINGS SPECIFIED BY FABRICATOR TO BE VERIFIED BY BUILDING DESIGNER

BEARINGS

THIS TRUSS DESIGNED FOR CONTINUOUS BEARINGS.

THIS TRUSS REQUIRES RIGID SHEATHING ON EXPOSED FACE.

BEVELED PLATE OR SHIM REQUIRED TO PROVIDE FULL BEARING SURFACE WITH TRUSS CHORD AT JT(S): R , T , U , V , W , X , S

BEARING MATERIAL TO BE SPF NO.2 OR BETTER AT JOINT(S)

BRACING

TOP CHORD TO BE SHEATHED OR MAX. PURLIN SPACING = 6.25 FT.

MAX. UNBRACED BOTTOM CHORD LENGTH = 6.25 FT OR RIGID CEILING DIRECTLY APPLIED.

ALL PITCH BREAKS AND PERIMETER CORNER JOINTS MUST BE LATERALLY RESTRAINED.

LOADING

TOTAL LOAD CASES: (4)

C H O R D S

MEMB. FR-TO	MAX. FACTORED FORCE (LBS)	FACTORED VERT. LOAD (PLF) FROM	TO	LC1 CSI (LC)	MAX UNBRAC LENGTH
A- B	0 / 35	-78.0	-78.0	0.15 (1)	10.00
B- C	-34 / 0	-78.0	-78.0	0.12 (1)	6.25
C- D	-1 / 5	-78.0	-78.0	0.04 (1)	10.00
D- E	0 / 11	-78.0	-78.0	0.04 (1)	10.00
E- F	0 / 24	-78.0	-78.0	0.04 (1)	10.00
F- G	0 / 33	-78.0	-78.0	0.04 (1)	10.00
G- H	0 / 33	-78.0	-78.0	0.04 (1)	10.00
H- I	0 / 41	-78.0	-78.0	0.04 (1)	10.00
I- J	0 / 51	-78.0	-78.0	0.05 (1)	10.00
J- K	0 / 20	-78.0	-78.0	0.05 (1)	10.00
K- L	0 / 48	-78.0	-78.0	0.05 (1)	10.00
L- M	0 / 51	-78.0	-78.0	0.05 (1)	10.00
M- N	0 / 56	-78.0	-78.0	0.05 (1)	10.00
N- O	0 / 61	-78.0	-78.0	0.03 (1)	10.00
O- P	0 / 51	-78.0	-78.0	0.04 (1)	10.00
P- Q	0 / 51	-78.0	-78.0	0.05 (1)	10.00
R- Q	-36 / 0	0.0	0.0	0.04 (1)	7.81
AF- B	-251 / 0	0.0	0.0	0.04 (1)	7.81
AF-AE	0 / 5	-18.5	-18.5	0.04 (1)	10.00
AE-AD	0 / 3	-18.5	-18.5	0.02 (4)	10.00
AD-AC	-12 / 0	-18.5	-18.5	0.01 (4)	6.25
AC-AB	-22 / 0	-18.5	-18.5	0.01 (4)	6.25
AB-AA	-31 / 0	-18.5	-18.5	0.01 (4)	6.25
AA- Z	-39 / 0	-18.5	-18.5	0.01 (4)	6.25
Z- Y	-46 / 0	-18.5	-18.5	0.01 (4)	6.25
Y- X	-46 / 0	-18.5	-18.5	0.01 (4)	6.25
X- W	-54 / 0	-18.5	-18.5	0.01 (4)	6.25
W- V	-57 / 0	-18.5	-18.5	0.02 (4)	6.25
V- U	-63 / 0	-18.5	-18.5	0.02 (4)	6.25
U- T	-71 / 0	-18.5	-18.5	0.01 (4)	6.25
T- S	-51 / 0	-18.5	-18.5	0.02 (1)	6.25
S- R	-51 / 0	-18.5	-18.5	0.04 (1)	6.25

W E B S

MEMB. FR-TO	MAX. FACTORED FORCE (LBS)	MAX CSI (LC)
U- N	-100 / 0	0.01 (1)
V- M	-161 / 0	0.03 (1)
W- L	-175 / 0	0.04 (1)
X- J	-176 / 0	0.05 (1)
Z- I	-148 / 0	0.03 (1)
AA- H	-152 / 0	0.03 (1)
AB- F	-151 / 0	0.03 (1)
AC- E	-147 / 0	0.03 (1)
AD- D	-162 / 0	0.03 (1)
AE- C	-97 / 0	0.01 (1)
T- O	-92 / 0	0.01 (1)
S- P	-155 / 0	0.02 (1)

DESIGN CRITERIA

SPECIFIED LOADS:

TOP	CH.	LL	=	21.0	PSF
		DL	=	6.0	PSF
BOT	CH.	LL	=	0.0	PSF
		DL	=	7.4	PSF
TOTAL	LOAD		=	34.4	PSF

SPACING = 24.0 IN. C/C

LOADING IN FLAT SECTION BASED ON A SLOPE OF 2.00/12 MINIMUM

THIS TRUSS IS DESIGNED FOR RESIDENTIAL OR SMALL BUILDING REQUIREMENTS OF PART 9, NBCC 2015

THIS DESIGN COMPLIES WITH:
- PART 9 OF BCBC 2018 , ABC 2019
- PART 9 OF OBC 2012 (2019 AMENDMENT)
- CSA 086-14
- TPIC 2014

DESIGN ASSUMPTIONS
-OVERHANG NOT TO BE ALTERED OR CUT OFF.

(55 % OF 23.0 P.S.F. G.S.L. PLUS 8.4 P.S.F. RAIN LOAD) EQUALS 21.0 P.S.F. SPECIFIED ROOF LIVE LOAD

CSI: TC=0.15/1.00 (A-B:1) , BC=0.04/1.00 (R-S:1) , WB=0.05/1.00 (J-X:1) , SSI=0.08/1.00 (A-B:1)

DOL LUMBER=1.00 NAIL=1.00 LS BEND=1.10 COMP=1.10 SHEAR=1.10 TENS= 1.10

COMPANION LIVE LOAD FACTOR = 1.00

TRUSS PLATE MANUFACTURER IS NOT RESPONSIBLE FOR QUALITY CONTROL IN THE TRUSS MANUFACTURING PLANT .

NAIL VALUES

PLATE	GRIP(DRY) (PSI) MAX	MIN	SHEAR (PLI) MAX	MIN	SECTION (PLI) MAX	MIN
MT20	650	371	1747	788	1987	1873

PLATE PLACEMENT TOL. = 0.250 inches

PLATE ROTATION TOL. = 5.0 Deg.

JSI GRIP= 0.78 (K) (INPUT = 0.90)
JSI METAL= 0.13 (B) (INPUT = 1.00)

JOB NAME	TRUSS NAME	QUANTITY	PLY	JOB DESC.	DRWG NO.
345248	H12		1	TRUSS DESC. JT 45147	E22051999

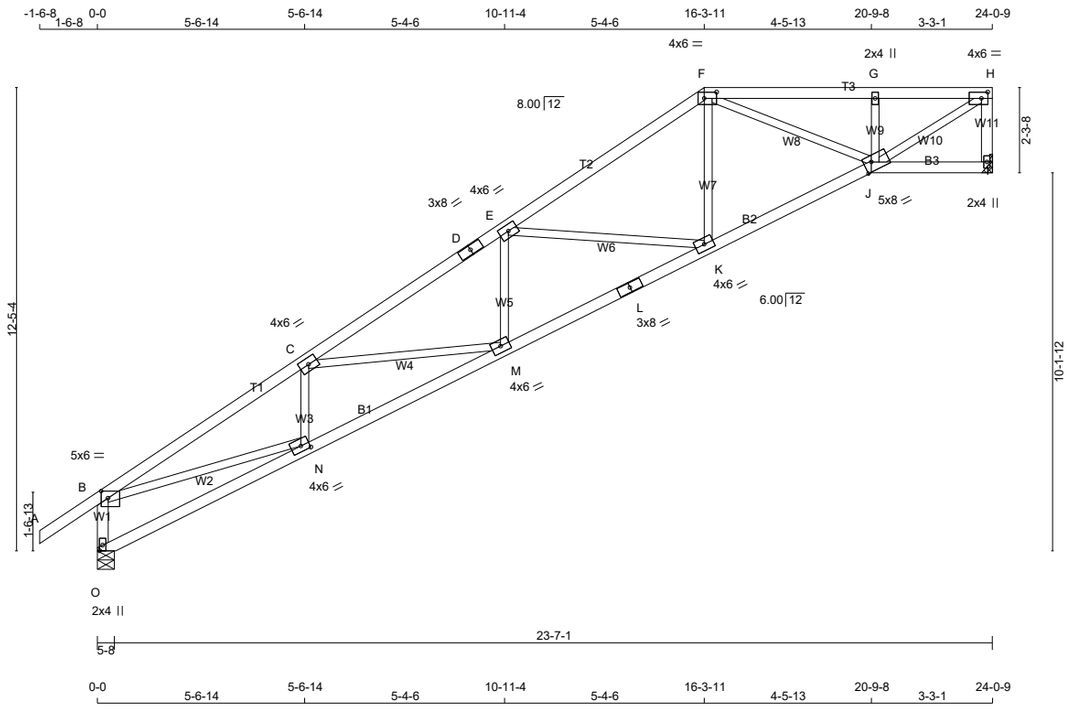

TOTAL WEIGHT = 95 lb

LUMBER
N. L. G. A. RULES

CHORDS	SIZE		LUMBER	DESCR.
A - D	2x4	DRY	No.2	SPF
D - F	2x4	DRY	No.2	SPF
F - H	2x4	DRY	No.2	SPF
I - H	2x4	DRY	No.2	SPF
O - B	2x4	DRY	No.2	SPF
O - L	2x4	DRY	No.2	SPF
L - J	2x4	DRY	No.2	SPF
J - I	2x4	DRY	No.2	SPF
ALL WEBS EXCEPT	2x3	DRY	No.2	SPF

DRY: SEASONED LUMBER.

PLATES (table is in inches)

JT	TYPE	PLATES	W	LEN	Y	X
B	TMVW-p	MT20	5.0	6.0	2.25	2.25
C	TMWW-t	MT20	4.0	6.0		
D	TS-t	MT20	3.0	8.0		
E	TMWW-t	MT20	4.0	6.0		
F	TTWW-l	MT20	4.0	6.0	2.00	4.00
G	TMW+w	MT20	2.0	4.0		
H	TMVW-t	MT20	4.0	6.0	2.00	2.00
I	BMV1+p	MT20	2.0	4.0		
J	BBWWW-h	MT20	5.0	8.0	3.00	2.50
K	BMWW-t	MT20	4.0	6.0		
L	BS-t	MT20	3.0	8.0		
M	BMWW-t	MT20	4.0	6.0		
N	BMWW-t	MT20	4.0	6.0	1.75	2.75
O	BMV1+p	MT20	2.0	4.0	Edge	

Edge - INDICATES REFERENCE CORNER OF PLATE TOUCHES EDGE OF CHORD.

LATERAL BRACE(S) SHOWN SHALL BE 2X4 SPF#2

DIMENSIONS, SUPPORTS AND LOADINGS SPECIFIED BY FABRICATOR TO BE VERIFIED BY BUILDING DESIGNER

BEARINGS

JT	FACTORED GROSS REACTION VERT	HORZ	MAXIMUM FACTORED GROSS REACTION DOWN	HORZ	UPLIFT	INPUT BRG	REQRD BRG
I	1160	0	1160	0	0	MECHANICAL	
O	1286	0	1286	0	0	5-8	1-8

A SUITABLE HANGER/MECHANICAL CONNECTION IS REQUIRED AT JOINT I. MINIMUM BEARING LENGTH AT JOINT I = 1-8.

VALUE IN PARENTHESIS INDICATES EFFECTIVE BEARING LENGTH

UNFACTORED REACTIONS

JT	1ST LCASE COMBINED	MAX./MIN. COMPONENT REACTIONS SNOW	LIVE	PERM.LIVE	WIND	DEAD	SOIL
I	827	505 / 0	0 / 0	0 / 0	0 / 0	322 / 0	0 / 0
O	914	573 / 0	0 / 0	0 / 0	0 / 0	342 / 0	0 / 0

BEARING MATERIAL TO BE SPF NO.2 OR BETTER AT JOINT(S) O

BRACING
TOP CHORD TO BE SHEATHED OR MAX. PURLIN SPACING = 3.94 FT.
MAX. UNBRACED BOTTOM CHORD LENGTH = 10.00 FT OR RIGID CEILING DIRECTLY APPLIED.

ALL PITCH BREAKS AND PERIMETER CORNER JOINTS MUST BE LATERALLY RESTRAINED.

LOADING
TOTAL LOAD CASES: (4)

CHORDS

MEMB. FR-TO	MAX. FACTORED FORCE (LBS)	VERT. LOAD FROM	TO	LC1 MAX CSI (LC)	MAX. UNBRAC LENGTH
A- B	0 / 35	-78.0	-78.0	0.15 (1)	10.00
B- C	-2594 / 0	-78.0	-78.0	0.44 (1)	3.94
C- D	-2602 / 0	-78.0	-78.0	0.36 (1)	4.03
D- E	-2602 / 0	-78.0	-78.0	0.36 (1)	4.03
E- F	-1758 / 0	-78.0	-78.0	0.32 (1)	4.74
F- G	-1689 / 0	-78.0	-78.0	0.23 (1)	4.90
G- H	-1708 / 0	-78.0	-78.0	0.16 (1)	4.96
I- H	-1130 / 0	0.0	0.0	0.13 (1)	7.47
O- B	-1238 / 0	0.0	0.0	0.13 (1)	7.22
O- N	0 / 4	-18.5	-18.5	0.12 (4)	10.00
N- M	0 / 2413	-18.5	-18.5	0.44 (1)	10.00
M- L	0 / 2422	-18.5	-18.5	0.45 (1)	10.00
L- K	0 / 2422	-18.5	-18.5	0.45 (1)	10.00
K- J	0 / 1623	-18.5	-18.5	0.32 (1)	10.00
J- I	0 / 0	-18.5	-18.5	0.06 (4)	10.00

WEBS

MEMB. FR-TO	MAX. FACTORED FORCE (LBS)	MAX CSI (LC)
N- C	-455 / 0	0.08 (1)
C- M	-2 / 7	0.00 (1)
M- E	0 / 108	0.04 (4)
E- K	-726 / 0	0.38 (1)
K- F	0 / 536	0.12 (1)
F- J	0 / 254	0.06 (1)
J- G	-362 / 0	0.06 (1)
J- H	0 / 2002	0.45 (1)
B- N	0 / 2236	0.50 (1)

[M][F]

DESIGN CRITERIA

SPECIFIED LOADS:

TOP CH.	LL	=	21.0	PSF
	DL	=	6.0	PSF
BOT CH.	LL	=	0.0	PSF
	DL	=	7.4	PSF
TOTAL LOAD		=	34.4	PSF

SPACING = 24.0 IN. C/C

LOADING IN FLAT SECTION BASED ON A SLOPE OF 2.00/12 MINIMUM

THIS TRUSS IS DESIGNED FOR RESIDENTIAL OR SMALL BUILDING REQUIREMENTS OF PART 9, NBCC 2015

THIS DESIGN COMPLIES WITH:
- PART 9 OF BCBC 2018 , ABC 2019
- PART 9 OF OBC 2012 (2019 AMENDMENT)
- CSA 086-14
- TPIC 2014

(55 % OF 23.0 P.S.F. G.S.L. PLUS 8.4 P.S.F. RAIN LOAD) EQUALS 21.0 P.S.F. SPECIFIED ROOF LIVE LOAD

ALLOWABLE DEFL.(LL)= L/360 (0.80")
CALCULATED VERT. DEFL.(LL) = L/ 999 (0.13")
ALLOWABLE DEFL.(TL)= L/360 (0.80")
CALCULATED VERT. DEFL.(TL) = L/ 999 (0.27")

CSI: TC=0.44/1.00 (B-C:1) , BC=0.45/1.00 (K-M:1) , WB=0.50/1.00 (B-N:1) , SSI=0.16/1.00 (B-C:1)

DOL LUMBER=1.00 NAIL=1.00 LS BEND=1.10 COMP=1.10 SHEAR=1.10 TENS= 1.10

COMPANION LIVE LOAD FACTOR = 1.00

TRUSS PLATE MANUFACTURER IS NOT RESPONSIBLE FOR QUALITY CONTROL IN THE TRUSS MANUFACTURING PLANT .

NAIL VALUES

PLATE	GRIP(DRY) (PSI) MAX	MIN	SHEAR (PLI) MAX	MIN	SECTION (PLI) MAX	MIN
MT20	650	371	1747	788	1987	1873

PLATE PLACEMENT TOL. = 0.250 inches

PLATE ROTATION TOL. = 5.0 Deg.

JSI GRIP= 0.90 (J) (INPUT = 0.90)
JSI METAL= 0.76 (L) (INPUT = 1.00)

JOB NAME	TRUSS NAME	QUANTITY	PLY	JOB DESC.	DRWG NO.
345248	H13		1	TRUSS DESC. JT 45147	E22052000

Alpa Roof Truss, Maple

Version 8.530 S Feb 23 2022 MiTek Industries, Inc. Fri Jun 17 13:55:27 2022 Page 1

ID:wceEj9xaBTOj6r9Q4a6qjtzAj6D-AsKEsnK?OqorkwqquNrhIaFEKK7B 3PqjrnF7Dz5NBk

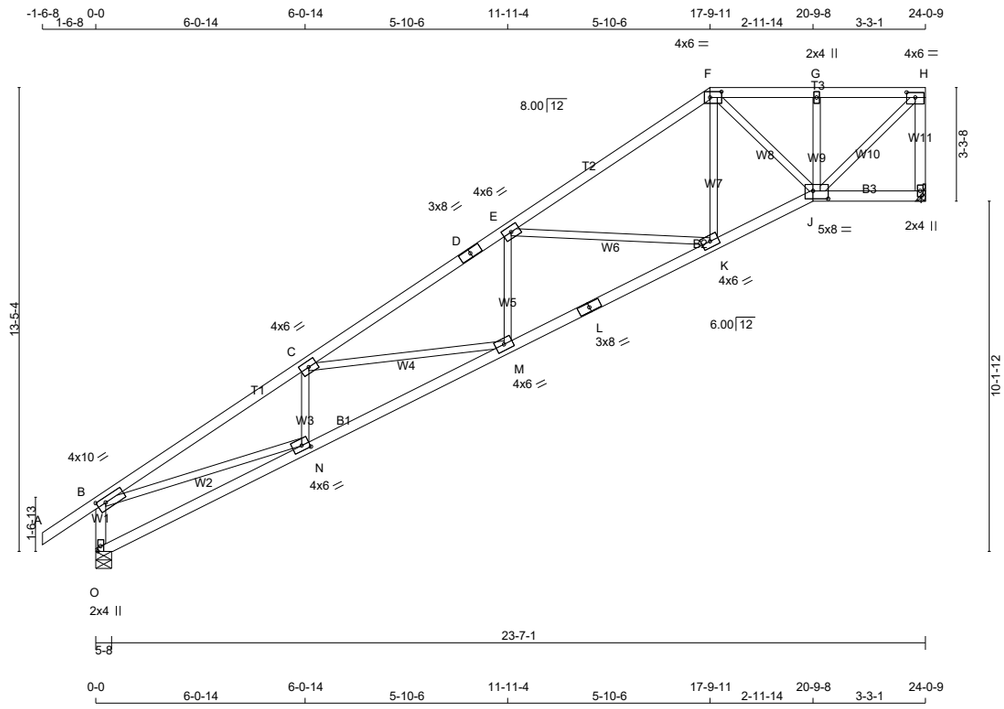

TOTAL WEIGHT = 99 lb

[M][F]

LUMBER

N. L. G. A. RULES

CHORDS	SIZE		LUMBER	DESCR.
A - D	2x4	DRY	No.2	SPF
D - F	2x4	DRY	No.2	SPF
F - H	2x4	DRY	No.2	SPF
I - H	2x4	DRY	No.2	SPF
O - B	2x4	DRY	No.2	SPF
O - L	2x4	DRY	No.2	SPF
L - J	2x4	DRY	No.2	SPF
J - I	2x4	DRY	No.2	SPF
ALL WEBS EXCEPT	2x3	DRY	No.2	SPF

DRY: SEASONED LUMBER.

PLATES (table is in inches)

JT	TYPE	PLATES	W	LEN	Y	X
B	TMVW-t	MT20	4.0	10.0	1.75	3.00
C	TMWW-t	MT20	4.0	6.0		
D	TS-t	MT20	3.0	8.0		
E	TMWW-t	MT20	4.0	6.0		
F	TTWW-l	MT20	4.0	6.0	2.00	4.00
G	TMW+w	MT20	2.0	4.0		
H	TMVW-t	MT20	4.0	6.0	1.75	3.00
I	BMV1+p	MT20	2.0	4.0		
J	BBWWW-p	MT20	5.0	8.0	2.75	5.25
K	BMWW-t	MT20	4.0	6.0		
L	BS-t	MT20	3.0	8.0		
M	BMWW-t	MT20	4.0	6.0		
N	BMWW-t	MT20	4.0	6.0	1.75	2.75
O	BMV1+p	MT20	2.0	4.0	Edge	

Edge - INDICATES REFERENCE CORNER OF PLATE TOUCHES EDGE OF CHORD.

LATERAL BRACE(S) SHOWN SHALL BE 2X4 SPF#2

LICENSED PROFESSIONAL ENGINEER
V. WIDYA
100225448
06/17/2022
PROVINCE OF ONTARIO

DIMENSIONS, SUPPORTS AND LOADINGS SPECIFIED BY FABRICATOR TO BE VERIFIED BY BUILDING DESIGNER

BEARINGS

JT	FACTORED GROSS REACTION VERT	HORZ	MAXIMUM FACTORED GROSS REACTION DOWN	HORZ	UPLIFT	INPUT BRG	REQRD BRG
I	1160	0	1160	0	0	MECHANICAL	
O	1286	0	1286	0	0	5-8	1-8

A SUITABLE HANGER/MECHANICAL CONNECTION IS REQUIRED AT JOINT I. MINIMUM BEARING LENGTH AT JOINT I = 1-8.

VALUE IN PARENTHESIS INDICATES EFFECTIVE BEARING LENGTH

UNFACTORED REACTIONS

JT	1ST LCASE COMBINED	MAX./MIN. COMPONENT REACTIONS SNOW	LIVE	PERM.LIVE	WIND	DEAD	SOIL
I	827	505 / 0	0 / 0	0 / 0	0 / 0	322 / 0	0 / 0
O	914	573 / 0	0 / 0	0 / 0	0 / 0	342 / 0	0 / 0

BEARING MATERIAL TO BE SPF NO.2 OR BETTER AT JOINT(S) O

BRACING

TOP CHORD TO BE SHEATHED OR MAX. PURLIN SPACING = 3.81 FT.
MAX. UNBRACED BOTTOM CHORD LENGTH = 10.00 FT OR RIGID CEILING DIRECTLY APPLIED.

ALL PITCH BREAKS AND PERIMETER CORNER JOINTS MUST BE LATERALLY RESTRAINED.

LOADING

TOTAL LOAD CASES: (4)

CHORDS

MEMB. FR-TO	MAX. FACTORED FORCE (LBS)	VERT. LOAD (PLF) FROM	TO	LC1 CSI (LC)	MAX UNBRAC LENGTH
A- B	0 / 35	-78.0	-78.0	0.15 (1)	10.00
B- C	-2673 / 0	-78.0	-78.0	0.54 (1)	3.81
C- D	-2516 / 0	-78.0	-78.0	0.42 (1)	4.03
D- E	-2516 / 0	-78.0	-78.0	0.42 (1)	4.03
E- F	-1464 / 0	-78.0	-78.0	0.36 (1)	5.04
F- G	-1109 / 0	-78.0	-78.0	0.09 (1)	5.93
G- H	-1119 / 0	-78.0	-78.0	0.09 (1)	5.91
I- H	-1130 / 0	0.0	0.0	0.20 (1)	7.47
O- B	-1235 / 0	0.0	0.0	0.13 (1)	7.22
O- N	0 / 5	-18.5	-18.5	0.15 (4)	10.00
N- M	0 / 2491	-18.5	-18.5	0.46 (1)	10.00
M- L	0 / 2341	-18.5	-18.5	0.43 (1)	10.00
L- K	0 / 2341	-18.5	-18.5	0.43 (1)	10.00
K- J	0 / 1346	-18.5	-18.5	0.27 (1)	10.00
J- I	0 / 0	-18.5	-18.5	0.06 (4)	10.00

WEBS

MEMB. FR-TO	MAX. FACTORED FORCE (LBS)	MAX CSI (LC)
N- C	-416 / 0	0.07 (1)
C- M	-134 / 0	0.08 (1)
M- E	0 / 166	0.05 (4)
E- K	-901 / 0	0.58 (1)
K- F	0 / 614	0.14 (1)
F- J	-143 / 0	0.04 (1)
J- G	-283 / 0	0.05 (1)
J- H	0 / 1521	0.34 (1)
B- N	0 / 2317	0.52 (1)

DESIGN CRITERIA

SPECIFIED LOADS:

TOP	CH.	LL	=	21.0	PSF
		DL	=	6.0	PSF
BOT	CH.	LL	=	0.0	PSF
		DL	=	7.4	PSF
TOTAL	LOAD		=	34.4	PSF

SPACING = 24.0 IN. C/C

LOADING IN FLAT SECTION BASED ON A SLOPE OF 2.00/12 MINIMUM

THIS TRUSS IS DESIGNED FOR RESIDENTIAL OR SMALL BUILDING REQUIREMENTS OF PART 9, NBCC 2015

THIS DESIGN COMPLIES WITH:
- PART 9 OF BCBC 2018 , ABC 2019
- PART 9 OF OBC 2012 (2019 AMENDMENT)
- CSA 086-14
- TPIC 2014

(55 % OF 23.0 P.S.F. G.S.L. PLUS 8.4 P.S.F. RAIN LOAD) EQUALS 21.0 P.S.F. SPECIFIED ROOF LIVE LOAD

ALLOWABLE DEFL.(LL)= L/360 (0.80")
CALCULATED VERT. DEFL.(LL) = L/ 999 (0.14")
ALLOWABLE DEFL.(TL)= L/360 (0.80")
CALCULATED VERT. DEFL.(TL) = L/ 999 (0.27")

CSI: TC=0.54/1.00 (B-C:1) , BC=0.46/1.00 (M-N:1) , WB=0.58/1.00 (E-K:1) , SSI=0.18/1.00 (B-C:1)

DOL LUMBER=1.00 NAIL=1.00 LS BEND=1.10 COMP=1.10 SHEAR=1.10 TENS= 1.10

COMPANION LIVE LOAD FACTOR = 1.00

TRUSS PLATE MANUFACTURER IS NOT RESPONSIBLE FOR QUALITY CONTROL IN THE TRUSS MANUFACTURING PLANT .

NAIL VALUES

PLATE	GRIP(DRY) (PSI) MAX	MIN	SHEAR (PLI) MAX	MIN	SECTION (PLI) MAX	MIN
MT20	650	371	1747	788	1987	1873

PLATE PLACEMENT TOL. = 0.250 inches

PLATE ROTATION TOL. = 5.0 Deg.

JSI GRIP= 0.89 (N) (INPUT = 0.90)
JSI METAL= 0.76 (L) (INPUT = 1.00)

JOB NAME	TRUSS NAME	QUANTITY	PLY	JOB DESC.	DRWG NO.
345248	H14		1	TRUSS DESC. JT 45147	E22052001

Alpa Roof Truss, Maple

Version 8.530 S Feb 23 2022 MiTek Industries, Inc. Fri Jun 17 13:55:28 2022 Page 1

ID:wceEj9xaBTOj6r9Q4a6qjtzAj6D-e2uc47Ld97wiM4P0S5MwrooNNjT1jSVzyVXpffz5NBj

Scale = 1:65.5

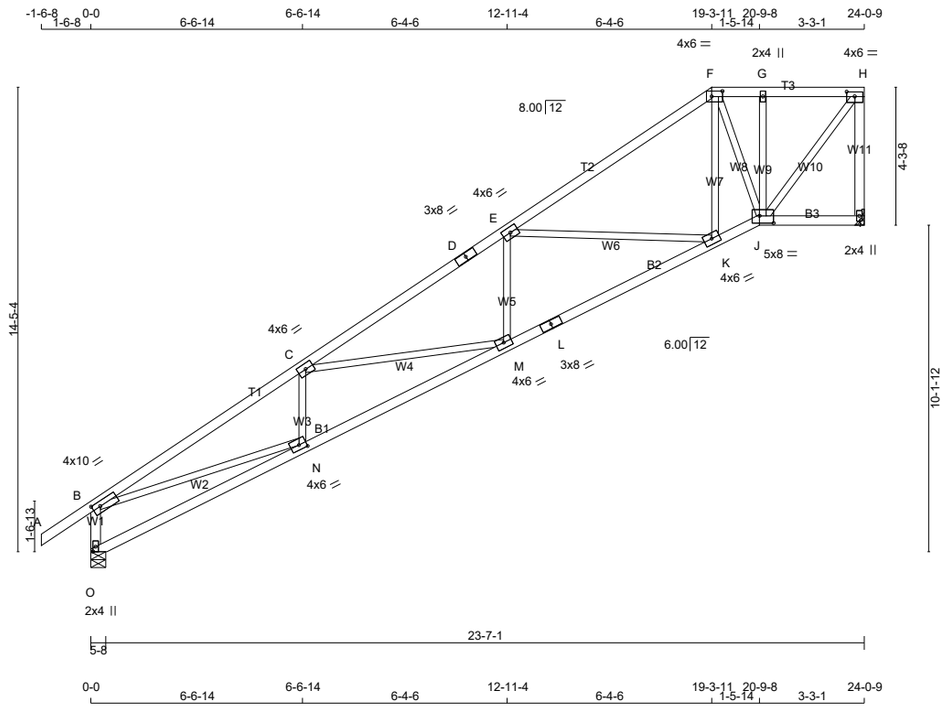

TOTAL WEIGHT = 104 lb

[M][F]

LUMBER

N. L. G. A. RULES

CHORDS	SIZE		LUMBER	DESCR.
A - D	2x4	DRY	No.2	SPF
D - F	2x4	DRY	No.2	SPF
F - H	2x4	DRY	No.2	SPF
I - H	2x4	DRY	No.2	SPF
O - B	2x4	DRY	No.2	SPF
O - L	2x4	DRY	No.2	SPF
L - J	2x4	DRY	No.2	SPF
J - I	2x4	DRY	No.2	SPF
ALL WEBS EXCEPT	2x3	DRY	No.2	SPF

DRY: SEASONED LUMBER.

PLATES (table is in inches)

JT	TYPE	PLATES	W	LEN	Y	X
B	TMVW-t	MT20	4.0	10.0	1.75	3.00
C	TMWW-t	MT20	4.0	6.0		
D	TS-t	MT20	3.0	8.0		
E	TMWW-t	MT20	4.0	6.0		
F	TTWW-l	MT20	4.0	6.0	2.00	4.00
G	TMW+w	MT20	2.0	4.0		
H	TMVW-t	MT20	4.0	6.0	1.75	3.00
I	BMV1+p	MT20	2.0	4.0		
J	BBWWW-p	MT20	5.0	8.0	2.75	5.25
K	BMWW-t	MT20	4.0	6.0		
L	BS-t	MT20	3.0	8.0		
M	BMWW-t	MT20	4.0	6.0		
N	BMWW-t	MT20	4.0	6.0	1.75	2.75
O	BMV1+p	MT20	2.0	4.0	Edge	

Edge - INDICATES REFERENCE CORNER OF PLATE TOUCHES EDGE OF CHORD.

LATERAL BRACE(S) SHOWN SHALL BE 2X4 SPF#2

LICENSED PROFESSIONAL ENGINEER
V. WIDYA
100225448
06/17/2022
PROVINCE OF ONTARIO

DIMENSIONS, SUPPORTS AND LOADINGS SPECIFIED BY FABRICATOR TO BE VERIFIED BY BUILDING DESIGNER

BEARINGS

JT	FACTORED GROSS REACTION VERT	HORZ	MAXIMUM FACTORED GROSS REACTION DOWN	HORZ	UPLIFT	INPUT BRG	REQRD BRG
I	1160	0	1160	0	0	MECHANICAL	
O	1286	0	1286	0	0	5-8	1-8

A SUITABLE HANGER/MECHANICAL CONNECTION IS REQUIRED AT JOINT I. MINIMUM BEARING LENGTH AT JOINT I = 1-8.

VALUE IN PARENTHESIS INDICATES EFFECTIVE BEARING LENGTH

UNFACTORED REACTIONS

JT	1ST LCASE COMBINED	MAX./MIN. COMPONENT REACTIONS SNOW	LIVE	PERM.LIVE	WIND	DEAD	SOIL
I	827	505 / 0	0 / 0	0 / 0	0 / 0	322 / 0	0 / 0
O	914	573 / 0	0 / 0	0 / 0	0 / 0	342 / 0	0 / 0

BEARING MATERIAL TO BE SPF NO.2 OR BETTER AT JOINT(S) O

BRACING

TOP CHORD TO BE SHEATHED OR MAX. PURLIN SPACING = 3.68 FT.
MAX. UNBRACED BOTTOM CHORD LENGTH = 10.00 FT OR RIGID CEILING DIRECTLY APPLIED.

ALL PITCH BREAKS AND PERIMETER CORNER JOINTS MUST BE LATERALLY RESTRAINED.

LOADING

TOTAL LOAD CASES: (4)

CHORDS

MEMB. FR-TO	MAX. FACTORED FORCE (LBS)	VERT. LOAD (PLF) FROM	TO	LC1 CSI (LC)	MAX UNBRAC LENGTH
A- B	0 / 35	-78.0	-78.0	0.15 (1)	10.00
B- C	-2738 / 0	-78.0	-78.0	0.64 (1)	3.68
C- D	-2407 / 0	-78.0	-78.0	0.49 (1)	4.05
D- E	-2407 / 0	-78.0	-78.0	0.49 (1)	4.05
E- F	-1148 / 0	-78.0	-78.0	0.41 (1)	5.44
F- G	-828 / 0	-78.0	-78.0	0.06 (1)	6.25
G- H	-834 / 0	-78.0	-78.0	0.10 (1)	6.25
I- H	-1130 / 0	0.0	0.0	0.33 (1)	7.47
O- B	-1231 / 0	0.0	0.0	0.13 (1)	7.23
O- N	0 / 5	-18.5	-18.5	0.17 (4)	10.00
N- M	0 / 2555	-18.5	-18.5	0.48 (1)	10.00
M- L	0 / 2240	-18.5	-18.5	0.43 (1)	10.00
L- K	0 / 2240	-18.5	-18.5	0.43 (1)	10.00
K- J	0 / 1042	-18.5	-18.5	0.23 (1)	10.00
J- I	0 / 0	-18.5	-18.5	0.06 (4)	10.00

WEBS

MEMB. FR-TO	MAX. FACTORED FORCE (LBS)	MAX CSI (LC)
N- C	-379 / 0	0.07 (1)
C- M	-283 / 0	0.22 (1)
M- E	0 / 234	0.06 (4)
E- K	-1074 / 0	0.85 (1)
K- F	0 / 705	0.16 (1)
F- J	-341 / 0	0.10 (1)
J- G	-226 / 0	0.06 (1)
J- H	0 / 1320	0.30 (1)
B- N	0 / 2386	0.54 (1)

DESIGN CRITERIA

SPECIFIED LOADS:

TOP CH.	LL	=	21.0	PSF
	DL	=	6.0	PSF
BOT CH.	LL	=	0.0	PSF
	DL	=	7.4	PSF
TOTAL LOAD		=	34.4	PSF

SPACING = 24.0 IN. C/C

LOADING IN FLAT SECTION BASED ON A SLOPE OF 2.00/12 MINIMUM

THIS TRUSS IS DESIGNED FOR RESIDENTIAL OR SMALL BUILDING REQUIREMENTS OF PART 9, NBCC 2015

THIS DESIGN COMPLIES WITH:
- PART 9 OF BCBC 2018 , ABC 2019
- PART 9 OF OBC 2012 (2019 AMENDMENT)
- CSA 086-14
- TPIC 2014

(55 % OF 23.0 P.S.F. G.S.L. PLUS 8.4 P.S.F. RAIN LOAD) EQUALS 21.0 P.S.F. SPECIFIED ROOF LIVE LOAD

ALLOWABLE DEFL.(LL)= L/360 (0.80")
CALCULATED VERT. DEFL.(LL) = L/ 999 (0.14")
ALLOWABLE DEFL.(TL)= L/360 (0.80")
CALCULATED VERT. DEFL.(TL) = L/ 992 (0.29")

CSI: TC=0.64/1.00 (B-C:1) , BC=0.48/1.00 (M-N:1) , WB=0.85/1.00 (E-K:1) , SSI=0.20/1.00 (B-C:1)

DOL LUMBER=1.00 NAIL=1.00 LS BEND=1.10 COMP=1.10 SHEAR=1.10 TENS= 1.10

COMPANION LIVE LOAD FACTOR = 1.00

TRUSS PLATE MANUFACTURER IS NOT RESPONSIBLE FOR QUALITY CONTROL IN THE TRUSS MANUFACTURING PLANT .

NAIL VALUES

PLATE	GRIP(DRY) (PSI) MAX	MIN	SHEAR (PLI) MAX	MIN	SECTION (PLI) MAX	MIN
MT20	650	371	1747	788	1987	1873

PLATE PLACEMENT TOL. = 0.250 inches

PLATE ROTATION TOL. = 5.0 Deg.

JSI GRIP= 0.90 (N) (INPUT = 0.90)
JSI METAL= 0.66 (L) (INPUT = 1.00)

JOB NAME	TRUSS NAME	QUANTITY	PLY	JOB DESC.	DRWG NO.
345248	H15		1	TRUSS DESC. JT 45147	E22052002

Alpa Roof Truss, Maple

Version 8.530 S Feb 23 2022 MiTek Industries, Inc. Fri Jun 17 13:55:30 2022 Page 1

ID:wceEj9xaBTOj6r9Q4a6qjtzAj6D-bR0NUpMthlAQbOYPaWPOwDthpX8sBRhGPp0wjYz5NBh

Scale = 1:69.6

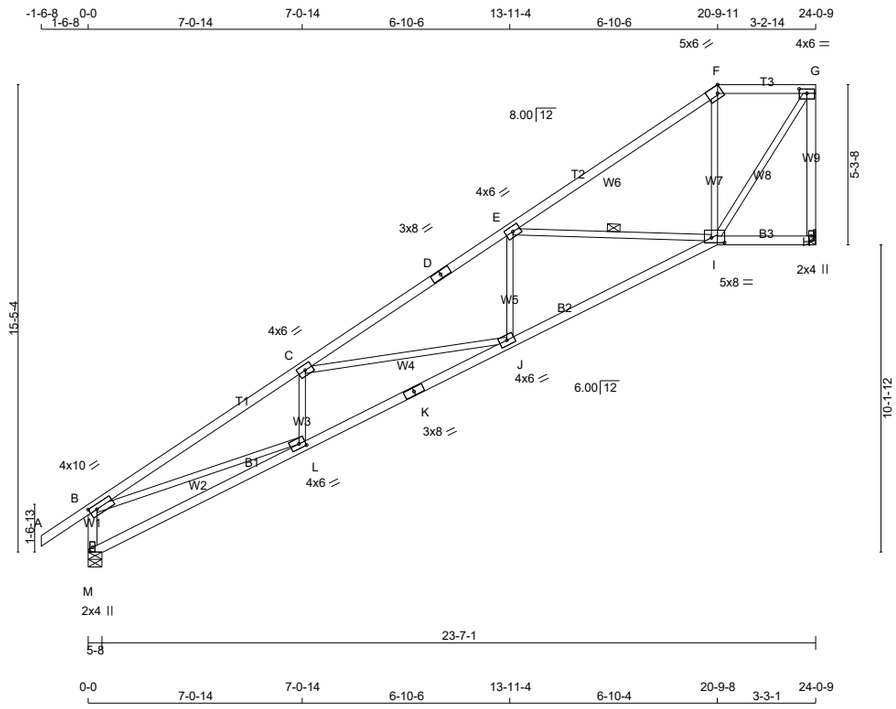

TOTAL WEIGHT = 102 lb

[M][F]

LUMBER

N. L. G. A. RULES

CHORDS	SIZE		LUMBER	DESCR.
A - D	2x4	DRY	No.2	SPF
D - F	2x4	DRY	No.2	SPF
F - G	2x4	DRY	No.2	SPF
H - G	2x4	DRY	No.2	SPF
M - B	2x4	DRY	No.2	SPF
M - K	2x4	DRY	No.2	SPF
K - I	2x4	DRY	No.2	SPF
I - H	2x4	DRY	No.2	SPF
ALL WEBS EXCEPT	2x3	DRY	No.2	SPF

DRY: SEASONED LUMBER.

PLATES (table is in inches)

JT	TYPE	PLATES	W	LEN	Y	X
B	TMVW-t	MT20	4.0	10.0	1.75	3.00
C	TMWW-t	MT20	4.0	6.0		
D	TS-t	MT20	3.0	8.0		
E	TMWW-t	MT20	4.0	6.0		
F	TTW-h	MT20	5.0	6.0	Edge	2.00
G	TMVW-t	MT20	4.0	6.0	1.75	3.00
H	BMV1+p	MT20	2.0	4.0		
I	BBWWW-p	MT20	5.0	8.0	2.00	5.25
J	BMWW-t	MT20	4.0	6.0		
K	BS-t	MT20	3.0	8.0		
L	BMWW-t	MT20	4.0	6.0	1.75	2.50
M	BMV1+p	MT20	2.0	4.0	Edge	

Edge - INDICATES REFERENCE CORNER OF PLATE TOUCHES EDGE OF CHORD.

LATERAL BRACE(S) SHOWN SHALL BE 2X4 SPF#2

DIMENSIONS, SUPPORTS AND LOADINGS SPECIFIED BY FABRICATOR TO BE VERIFIED BY BUILDING DESIGNER

BEARINGS

JT	FACTORED GROSS REACTION VERT	HORZ	MAXIMUM FACTORED GROSS REACTION DOWN	HORZ	UPLIFT	INPUT BRG	REQRD BRG
H	1160	0	1160	0	0	MECHANICAL	
M	1286	0	1286	0	0	5-8	1-8

A SUITABLE HANGER/MECHANICAL CONNECTION IS REQUIRED AT JOINT H. MINIMUM BEARING LENGTH AT JOINT H = 1-8.

VALUE IN PARENTHESIS INDICATES EFFECTIVE BEARING LENGTH

UNFACTORED REACTIONS

JT	1ST LCASE COMBINED	MAX./MIN. COMPONENT REACTIONS SNOW	LIVE	PERM.LIVE	WIND	DEAD	SOIL
H	827	505 / 0	0 / 0	0 / 0	0 / 0	322 / 0	0 / 0
M	914	573 / 0	0 / 0	0 / 0	0 / 0	342 / 0	0 / 0

BEARING MATERIAL TO BE SPF NO.2 OR BETTER AT JOINT(S) M

BRACING

TOP CHORD TO BE SHEATHED OR MAX. PURLIN SPACING = 3.54 FT.
MAX. UNBRACED BOTTOM CHORD LENGTH = 10.00 FT OR RIGID CEILING DIRECTLY APPLIED.

ALL PITCH BREAKS AND PERIMETER CORNER JOINTS MUST BE LATERALLY RESTRAINED.

1 LATERAL BRACE(S) AT 1/ 2 LENGTH OF E-I.

END VERTICAL(S) MUST BE SHEATHED OR HAVE BRACES AS INDICATED IN THE MAX. UNBRACED LENGTH COLUMN OF THE TABLE BELOW

LOADING

TOTAL LOAD CASES: (4)

CHORDS

MEMB. FR-TO	MAX. FACTORED FORCE (LBS)	FACTORED VERT. LOAD (PLF) FROM	TO	LC1 MAX CSI (LC)	MAX. UNBRAC LENGTH
A- B	0 / 35	-78.0	-78.0	0.15 (1)	10.00
B- C	-2788 / 0	-78.0	-78.0	0.78 (1)	3.54
C- D	-2283 / 0	-78.0	-78.0	0.57 (1)	4.06
D- E	-2283 / 0	-78.0	-78.0	0.57 (1)	4.06
E- F	-818 / 0	-78.0	-78.0	0.46 (1)	6.07
F- G	-656 / 0	-78.0	-78.0	0.11 (1)	6.25
H- G	-1130 / 0	0.0	0.0	0.55 (1)	7.47
M- B	-1228 / 0	0.0	0.0	0.13 (1)	7.23
M- L	0 / 6	-18.5	-18.5	0.19 (4)	10.00
L- K	0 / 2608	-18.5	-18.5	0.52 (1)	10.00
K- J	0 / 2608	-18.5	-18.5	0.52 (1)	10.00
J- I	0 / 2119	-18.5	-18.5	0.44 (1)	10.00
I- H	0 / 0	-18.5	-18.5	0.06 (4)	10.00

WEBS

MEMB. FR-TO	MAX. FACTORED FORCE (LBS)	MAX CSI (LC)
L- C	-345 / 0	0.06 (1)
C- J	-433 / 0	0.42 (1)
J- E	0 / 309	0.08 (4)
E- I	-1246 / 0	0.40 (1)
I- F	0 / 96	0.03 (4)
I- G	0 / 1201	0.27 (1)
B- L	0 / 2441	0.55 (1)

DESIGN CRITERIA

SPECIFIED LOADS:

TOP CH.	LL	=	21.0	PSF
	DL	=	6.0	PSF
BOT CH.	LL	=	0.0	PSF
	DL	=	7.4	PSF
TOTAL LOAD		=	34.4	PSF

SPACING = 24.0 IN. C/C

LOADING IN FLAT SECTION BASED ON A SLOPE OF 2.00/12 MINIMUM

THIS TRUSS IS DESIGNED FOR RESIDENTIAL OR SMALL BUILDING REQUIREMENTS OF PART 9, NBCC 2015

THIS DESIGN COMPLIES WITH:
- PART 9 OF BCBC 2018 , ABC 2019
- PART 9 OF OBC 2012 (2019 AMENDMENT)
- CSA 086-14
- TPIC 2014

(55 % OF 23.0 P.S.F. G.S.L. PLUS 8.4 P.S.F. RAIN LOAD) EQUALS 21.0 P.S.F. SPECIFIED ROOF LIVE LOAD

ALLOWABLE DEFL.(LL)= L/360 (0.80")
CALCULATED VERT. DEFL.(LL) = L/ 999 (0.15")
ALLOWABLE DEFL.(TL)= L/360 (0.80")
CALCULATED VERT. DEFL.(TL) = L/ 961 (0.30")

CSI: TC=0.78/1.00 (B-C:1) , BC=0.52/1.00 (J-L:1) , WB=0.55/1.00 (B-L:1) , SSI=0.21/1.00 (B-C:1)

DOL LUMBER=1.00 NAIL=1.00 LS BEND=1.10 COMP=1.10 SHEAR=1.10 TENS= 1.10

COMPANION LIVE LOAD FACTOR = 1.00

TRUSS PLATE MANUFACTURER IS NOT RESPONSIBLE FOR QUALITY CONTROL IN THE TRUSS MANUFACTURING PLANT .

NAIL VALUES

PLATE	GRIP(DRY) (PSI) MAX	MIN	SHEAR (PLI) MAX	MIN	SECTION (PLI) MAX	MIN
MT20	650	371	1747	788	1987	1873

PLATE PLACEMENT TOL. = 0.250 inches

PLATE ROTATION TOL. = 5.0 Deg.

JSI GRIP= 0.90 (I) (INPUT = 0.90)
JSI METAL= 0.84 (K) (INPUT = 1.00)

JOB NAME	TRUSS NAME	QUANTITY	PLY	JOB DESC.	DRWG NO.
345248	H16		1	TRUSS DESC. JT 45147	E22052003

Alpa Roof Truss, Maple

Version 8.530 S Feb 23 2022 MiTek Industries, Inc. Fri Jun 17 13:55:31 2022 Page 1

ID:wceEj9xaBTOj6r9Q4a6qjtzAj6D-3dali8NVS2JHDX7b7DwdTQQqbxU3vtYQeTITG z5NBg

Scale = 1:73.6

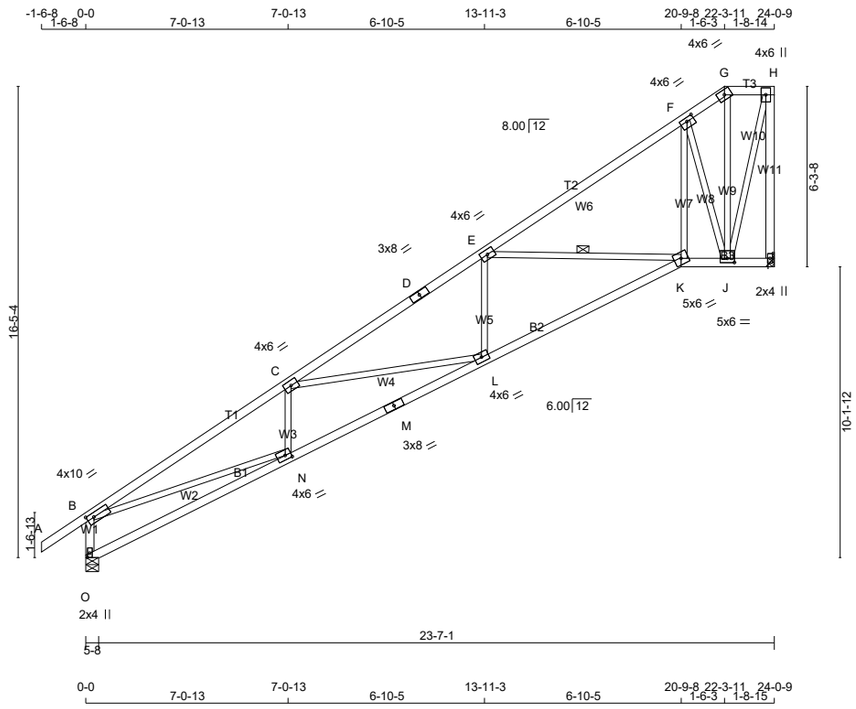

TOTAL WEIGHT = 112 lb

[M][F]

LUMBER

N. L. G. A. RULES

CHORDS	SIZE		LUMBER	DESCR.
A - D	2x4	DRY	No.2	SPF
D - G	2x4	DRY	No.2	SPF
G - H	2x4	DRY	No.2	SPF
I - H	2x4	DRY	No.2	SPF
O - B	2x4	DRY	No.2	SPF
O - M	2x4	DRY	No.2	SPF
M - K	2x4	DRY	No.2	SPF
K - I	2x4	DRY	No.2	SPF
ALL WEBS EXCEPT	2x3	DRY	No.2	SPF

DRY: SEASONED LUMBER.

PLATES (table is in inches)

JT	TYPE	PLATES	W	LEN	Y	X
B	TMVW-t	MT20	4.0	10.0	1.75	3.00
C	TMWW-t	MT20	4.0	6.0		
D	TS-t	MT20	3.0	8.0		
E	TMWW-t	MT20	4.0	6.0		
F	TMWW-t	MT20	4.0	6.0	1.50	3.00
G	TTW-h	MT20	4.0	6.0		
H	TMVW+p	MT20	4.0	6.0		
I	BMV1+p	MT20	2.0	4.0		
J	BMWWW-t	MT20	5.0	6.0	1.75	3.00
K	BBWW-h	MT20	5.0	6.0		
L	BMWW-t	MT20	4.0	6.0		
M	BS-t	MT20	3.0	8.0		
N	BMWW-t	MT20	4.0	6.0	1.75	2.50
O	BMV1+p	MT20	2.0	4.0	Edge	

Edge - INDICATES REFERENCE CORNER OF PLATE TOUCHES EDGE OF CHORD.

LATERAL BRACE(S) SHOWN SHALL BE 2X4 SPF#2

DIMENSIONS, SUPPORTS AND LOADINGS SPECIFIED BY FABRICATOR TO BE VERIFIED BY BUILDING DESIGNER

BEARINGS

JT	FACTORED GROSS REACTION VERT	HORZ	MAXIMUM FACTORED GROSS REACTION DOWN	HORZ	UPLIFT	INPUT BRG	REQRD BRG
I	1160	0	1160	0	0	MECHANICAL	
O	1286	0	1286	0	0	5-8	1-8

A SUITABLE HANGER/MECHANICAL CONNECTION IS REQUIRED AT JOINT I. MINIMUM BEARING LENGTH AT JOINT I = 1-8.

VALUE IN PARENTHESIS INDICATES EFFECTIVE BEARING LENGTH

UNFACTORED REACTIONS

JT	1ST LCASE COMBINED	MAX./MIN. COMPONENT REACTIONS SNOW	LIVE	PERM.LIVE	WIND	DEAD	SOIL
I	827	505 / 0	0 / 0	0 / 0	0 / 0	322 / 0	0 / 0
O	914	573 / 0	0 / 0	0 / 0	0 / 0	342 / 0	0 / 0

BEARING MATERIAL TO BE SPF NO.2 OR BETTER AT JOINT(S) O

BRACING

TOP CHORD TO BE SHEATHED OR MAX. PURLIN SPACING = 3.55 FT.
MAX. UNBRACED BOTTOM CHORD LENGTH = 10.00 FT OR RIGID CEILING DIRECTLY APPLIED.

ALL PITCH BREAKS AND PERIMETER CORNER JOINTS MUST BE LATERALLY RESTRAINED.

1 LATERAL BRACE(S) AT 1/ 2 LENGTH OF E-K.

END VERTICAL(S) MUST BE SHEATHED OR HAVE BRACES AS INDICATED IN THE MAX. UNBRACED LENGTH COLUMN OF THE TABLE BELOW

LOADING

TOTAL LOAD CASES: (4)

CHORDS

MEMB. FR-TO	MAX. FACTORED FORCE (LBS)	FACTORED VERT. LOAD LC1 (PLF) FROM	TO	MAX CSI (LC)	MAX. UNBRAC LENGTH
A- B	0 / 35	-78.0	-78.0	0.15 (1)	10.00
B- C	-2793 / 0	-78.0	-78.0	0.77 (1)	3.55
C- D	-2271 / 0	-78.0	-78.0	0.57 (1)	4.07
D- E	-2271 / 0	-78.0	-78.0	0.57 (1)	4.07
E- F	-850 / 0	-78.0	-78.0	0.36 (1)	6.18
F- G	-452 / 0	-78.0	-78.0	0.27 (1)	6.25
G- H	-294 / 0	-78.0	-78.0	0.03 (1)	6.25
I- H	-1145 / 0	0.0	0.0	0.90 (1)	7.43
O- B	-1228 / 0	0.0	0.0	0.13 (1)	7.23
O- N	0 / 6	-18.5	-18.5	0.19 (4)	10.00
N- M	0 / 2613	-18.5	-18.5	0.52 (1)	10.00
M- L	0 / 2613	-18.5	-18.5	0.52 (1)	10.00
L- K	0 / 2102	-18.5	-18.5	0.44 (1)	10.00
K- J	0 / 682	-18.5	-18.5	0.12 (1)	10.00
J- I	0 / 0	-18.5	-18.5	0.01 (4)	10.00

WEBS

MEMB. FR-TO	MAX. FACTORED FORCE (LBS)	MAX CSI (LC)
N- C	-346 / 0	0.06 (1)
C- L	-453 / 0	0.43 (1)
L- E	0 / 317	0.08 (4)
E- K	-1183 / 0	0.40 (1)
K- F	0 / 1077	0.24 (1)
F- J	-1363 / 0	0.64 (1)
J- G	0 / 253	0.06 (1)
J- H	0 / 1119	0.25 (1)
B- N	0 / 2447	0.55 (1)

DESIGN CRITERIA

SPECIFIED LOADS:

TOP CH.	LL	=	21.0	PSF
	DL	=	6.0	PSF
BOT CH.	LL	=	0.0	PSF
	DL	=	7.4	PSF
TOTAL LOAD		=	34.4	PSF

SPACING = 24.0 IN. C/C

LOADING IN FLAT SECTION BASED ON A SLOPE OF 2.00/12 MINIMUM

THIS TRUSS IS DESIGNED FOR RESIDENTIAL OR SMALL BUILDING REQUIREMENTS OF PART 9, NBCC 2015

THIS DESIGN COMPLIES WITH:
- PART 9 OF BCBC 2018 , ABC 2019
- PART 9 OF OBC 2012 (2019 AMENDMENT)
- CSA 086-14
- TPIC 2014

(55 % OF 23.0 P.S.F. G.S.L. PLUS 8.4 P.S.F. RAIN LOAD) EQUALS 21.0 P.S.F. SPECIFIED ROOF LIVE LOAD

ALLOWABLE DEFL.(LL)= L/360 (0.80")
CALCULATED VERT. DEFL.(LL) = L/ 999 (0.16")
ALLOWABLE DEFL.(TL)= L/360 (0.80")
CALCULATED VERT. DEFL.(TL) = L/ 923 (0.31")

CSI: TC=0.90/1.00 (H-I:1) , BC=0.52/1.00 (L-N:1) , WB=0.64/1.00 (F-J:1) , SSI=0.21/1.00 (B-C:1)

DOL LUMBER=1.00 NAIL=1.00 LS BEND=1.10 COMP=1.10 SHEAR=1.10 TENS= 1.10

COMPANION LIVE LOAD FACTOR = 1.00

TRUSS PLATE MANUFACTURER IS NOT RESPONSIBLE FOR QUALITY CONTROL IN THE TRUSS MANUFACTURING PLANT .

NAIL VALUES

PLATE	GRIP(DRY) (PSI) MAX	MIN	SHEAR (PLI) MAX	MIN	SECTION (PLI) MAX	MIN
MT20	650	371	1747	788	1987	1873

PLATE PLACEMENT TOL. = 0.250 inches

PLATE ROTATION TOL. = 5.0 Deg.

JSI GRIP= 0.90 (K) (INPUT = 0.90)
JSI METAL= 0.84 (M) (INPUT = 1.00)

JOB NAME	TRUSS NAME	QUANTITY	PLY	JOB DESC.	DRWG NO.
345248	H17		1	TRUSS DESC. JT 45147	E22052004

Alpa Roof Truss, Maple

Version 8.530 S Feb 23 2022 MiTek Industries, Inc. Fri Jun 17 13:55:33 2022 Page 1

ID:wceEj9xaBTOj6r9Q4a6gjtzAj6D-?0iV7qPm_gZ?SrH_Fey5YrVC?k9bNlGi6nEaKtz5NBe

Scale = 1:76.8

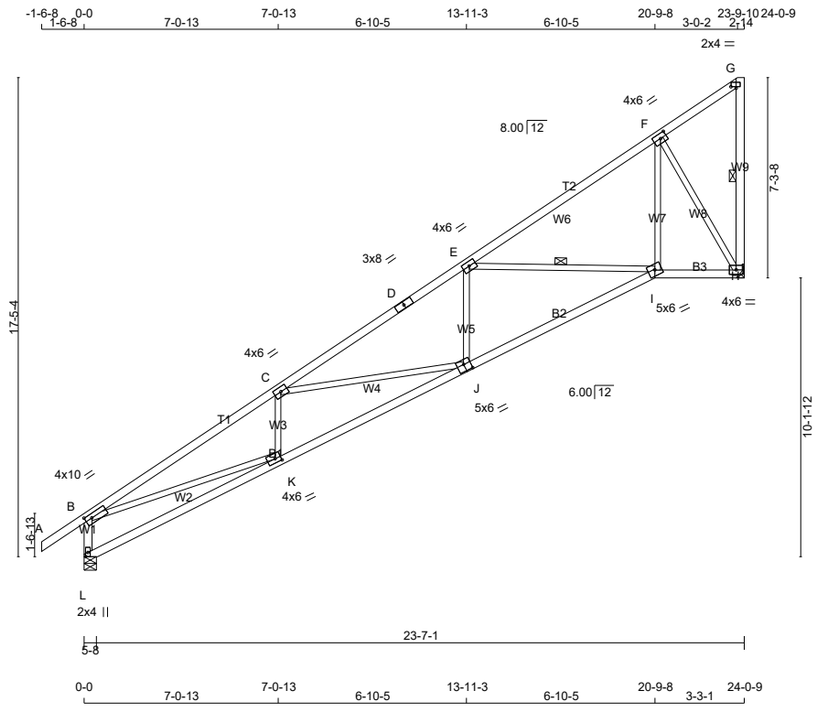

0-0 7-0-13 7-0-13 6-10-5 13-11-3 6-10-5 20-9-8 3-3-1 24-0-9

TOTAL WEIGHT = 105 lb

[M][F]

LUMBER

N. L. G. A. RULES

CHORDS	SIZE		LUMBER	DESCR.
A - D	2x4	DRY	No.2	SPF
D - G	2x4	DRY	No.2	SPF
H - G	2x4	DRY	No.2	SPF
L - B	2x4	DRY	No.2	SPF
L - J	2x4	DRY	No.2	SPF
J - I	2x4	DRY	No.2	SPF
I - H	2x4	DRY	No.2	SPF
ALL WEBS EXCEPT	2x3	DRY	No.2	SPF

DRY: SEASONED LUMBER.

PLATES (table is in inches)

JT	TYPE	PLATES	W	LEN	Y	X
B	TMVW-t	MT20	4.0	10.0	1.75	3.00
C	TMWW-t	MT20	4.0	6.0		
D	TS-t	MT20	3.0	8.0		
E	TMWW-t	MT20	4.0	6.0		
F	TMWW-t	MT20	4.0	6.0	2.00	2.75
G	TVM-p	MT20	2.0	4.0	0.50	2.25
H	BMVW1-t	MT20	4.0	6.0		
I	BBWW-h	MT20	5.0	6.0		
J	BSWW-l	MT20	5.0	6.0	3.00	3.00
K	BMWW-t	MT20	4.0	6.0	1.75	2.50
L	BMV1+p	MT20	2.0	4.0	Edge	

Edge - INDICATES REFERENCE CORNER OF PLATE TOUCHES EDGE OF CHORD.

LATERAL BRACE(S) SHOWN SHALL BE 2X4 SPF#2

DIMENSIONS, SUPPORTS AND LOADINGS SPECIFIED BY FABRICATOR TO BE VERIFIED BY BUILDING DESIGNER

BEARINGS

JT	FACTORED GROSS REACTION VERT	HORZ	MAXIMUM FACTORED GROSS REACTION DOWN	HORZ	UPLIFT	INPUT BRG	REQRD BRG
H	1160	0	1160	0	0	MECHANICAL	
L	1286	0	1286	0	0	5-8	1-8

A SUITABLE HANGER/MECHANICAL CONNECTION IS REQUIRED AT JOINT H. MINIMUM BEARING LENGTH AT JOINT H = 1-8.

VALUE IN PARENTHESIS INDICATES EFFECTIVE BEARING LENGTH

UNFACTORED REACTIONS

JT	1ST LCASE COMBINED	MAX./MIN. COMPONENT REACTIONS SNOW	LIVE	PERM.LIVE	WIND	DEAD	SOIL
H	827	505 / 0	0 / 0	0 / 0	0 / 0	322 / 0	0 / 0
L	914	573 / 0	0 / 0	0 / 0	0 / 0	342 / 0	0 / 0

BEARING MATERIAL TO BE SPF NO.2 OR BETTER AT JOINT(S) L

BRACING

TOP CHORD TO BE SHEATHED OR MAX. PURLIN SPACING = 3.54 FT.
MAX. UNBRACED BOTTOM CHORD LENGTH = 10.00 FT OR RIGID CEILING DIRECTLY APPLIED.

ALL PITCH BREAKS AND PERIMETER CORNER JOINTS MUST BE LATERALLY RESTRAINED.

1 LATERAL BRACE(S) AT 1/ 2 LENGTH OF G-H, E-I.

END VERTICAL(S) MUST BE SHEATHED OR HAVE BRACES AS INDICATED IN THE MAX. UNBRACED LENGTH COLUMN OF THE TABLE BELOW

LOADING

TOTAL LOAD CASES: (4)

CHORDS

MEMB. FR-TO	MAX. FACTORED FORCE (LBS)	FACTORED VERT. LOAD LC1 (PLF) FROM	TO	MAX CSI (LC)	MAX. UNBRAC LENGTH
A- B	0 / 35	-78.0	-78.0	0.15 (1)	10.00
B- C	-2801 / 0	-78.0	-78.0	0.78 (1)	3.54
C- D	-2248 / 0	-78.0	-78.0	0.57 (1)	4.09
D- E	-2248 / 0	-78.0	-78.0	0.57 (1)	4.09
E- F	-849 / 0	-78.0	-78.0	0.36 (1)	6.17
F- G	-44 / 0	-78.0	-78.0	0.26 (1)	6.25
H- G	-44 / 0	0.0	0.0	0.01 (1)	6.25
L- B	-1230 / 0	0.0	0.0	0.13 (1)	7.23
L- K	0 / 7	-18.5	-18.5	0.23 (4)	10.00
K- J	0 / 2615	-18.5	-18.5	0.52 (1)	10.00
J- I	0 / 2086	-18.5	-18.5	0.48 (1)	10.00
I- H	0 / 680	-18.5	-18.5	0.14 (1)	10.00

WEBS

MEMB. FR-TO	MAX. FACTORED FORCE (LBS)	MAX CSI (LC)
K- C	-332 / 0	0.06 (1)
C- J	-480 / 0	0.46 (1)
J- E	0 / 303	0.07 (4)
E- I	-1165 / 0	0.40 (1)
I- F	0 / 1091	0.25 (1)
F- H	-1283 / 0	0.75 (1)
B- K	0 / 2454	0.55 (1)

DESIGN CRITERIA

SPECIFIED LOADS:

TOP CH.	LL	=	21.0	PSF
	DL	=	6.0	PSF
BOT CH.	LL	=	0.0	PSF
	DL	=	7.4	PSF
TOTAL LOAD		=	34.4	PSF

SPACING = 24.0 IN. C/C

THIS TRUSS IS DESIGNED FOR RESIDENTIAL OR SMALL BUILDING REQUIREMENTS OF PART 9, NBCC 2015

THIS DESIGN COMPLIES WITH:
- PART 9 OF BCBC 2018 , ABC 2019
- PART 9 OF OBC 2012 (2019 AMENDMENT)
- CSA 086-14
- TPIC 2014

(55 % OF 23.0 P.S.F. G.S.L. PLUS 8.4 P.S.F. RAIN LOAD) EQUALS 21.0 P.S.F. SPECIFIED ROOF LIVE LOAD

ALLOWABLE DEFL.(LL)= L/360 (0.80")
CALCULATED VERT. DEFL.(LL) = L/ 999 (0.15")
ALLOWABLE DEFL.(TL)= L/360 (0.80")
CALCULATED VERT. DEFL.(TL) = L/ 861 (0.34")

CSI: TC=0.78/1.00 (B-C:1) , BC=0.52/1.00 (J-K:1) , WB=0.75/1.00 (F-H:1) , SSI=0.21/1.00 (B-C:1)

DOL LUMBER=1.00 NAIL=1.00 LS BEND=1.10 COMP=1.10 SHEAR=1.10 TENS= 1.10

COMPANION LIVE LOAD FACTOR = 1.00

TRUSS PLATE MANUFACTURER IS NOT RESPONSIBLE FOR QUALITY CONTROL IN THE TRUSS MANUFACTURING PLANT .

NAIL VALUES

PLATE	GRIP(DRY) (PSI) MAX	MIN	SHEAR (PLI) MAX	MIN	SECTION (PLI) MAX	MIN
MT20	650	371	1747	788	1987	1873

PLATE PLACEMENT TOL. = 0.250 inches

PLATE ROTATION TOL. = 5.0 Deg.

JSI GRIP= 0.89 (I) (INPUT = 0.90)
JSI METAL= 0.61 (K) (INPUT = 1.00)

JOB NAME	TRUSS NAME	QUANTITY	PLY	JOB DESC.		DRWG NO.
345248	H18		1	TRUSS DESC.	JT 45147	E22052005

Alpa Roof Truss, Maple

Version 8.530 S Feb 23 2022 MiTek Industries, Inc. Fri Jun 17 13:55:34 2022 Page 1

ID:wceEj9xaBTOj6r9Q4a6gjtzAj6D-TCGuKAPOlzhs4?sApLTK532Nl8Vq6CWsKR 7tJz5NBd

Scale = 1:76.8

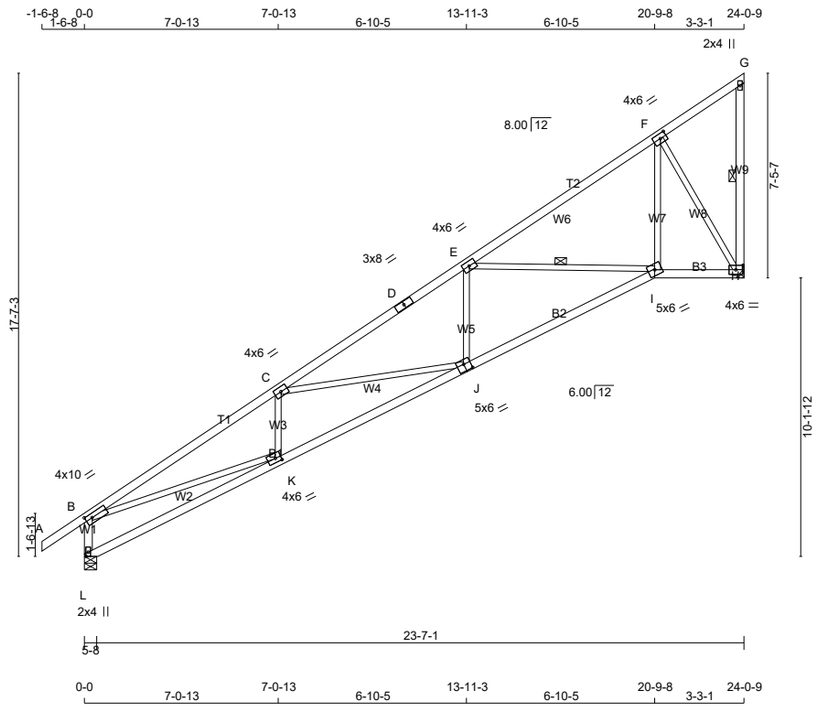

TOTAL WEIGHT = 3 X 105 = 315 lb

LUMBER

N. L. G. A. RULES

CHORDS	SIZE		LUMBER	DESCR.
L - B	2x4	DRY	No.2	SPF
A - D	2x4	DRY	No.2	SPF
D - G	2x4	DRY	No.2	SPF
H - G	2x4	DRY	No.2	SPF
L - J	2x4	DRY	No.2	SPF
J - I	2x4	DRY	No.2	SPF
I - H	2x4	DRY	No.2	SPF
ALL WEBS	2x3	DRY	No.2	SPF

DRY: SEASONED LUMBER.

PLATES (table is in inches)

JT	TYPE	PLATES	W	LEN	Y	X
B	TMVW-t	MT20	4.0	10.0	1.75	3.00
C	TMWW-t	MT20	4.0	6.0		
D	TS-t	MT20	3.0	8.0		
E	TMWW-t	MT20	4.0	6.0		
F	TMWW-t	MT20	4.0	6.0	2.00	2.75
G	TMV+p	MT20	2.0	4.0		
H	BMVW1-t	MT20	4.0	6.0		
I	BBWW-h	MT20	5.0	6.0		
J	BSWW-l	MT20	5.0	6.0	3.00	3.00
K	BMWW-t	MT20	4.0	6.0	1.75	2.50
L	BMV1+p	MT20	2.0	4.0	Edge	

Edge - INDICATES REFERENCE CORNER OF PLATE TOUCHES EDGE OF CHORD.

LATERAL BRACE(S) SHOWN SHALL BE 2X4 SPF#2

LICENSED PROFESSIONAL ENGINEER
V. WIDYA
100225448
06/17/2022
PROVINCE OF ONTARIO

DIMENSIONS, SUPPORTS AND LOADINGS SPECIFIED BY FABRICATOR TO BE VERIFIED BY BUILDING DESIGNER

BEARINGS

JT	FACTORED GROSS REACTION VERT	HORZ	MAXIMUM FACTORED GROSS REACTION DOWN	HORZ	UPLIFT	INPUT BRG	REQRD BRG
L	1286	0	1286	0	0	5-8	1-8
H	1160	0	1160	0	0	MECHANICAL	

A SUITABLE HANGER/MECHANICAL CONNECTION IS REQUIRED AT JOINT H. MINIMUM BEARING LENGTH AT JOINT H = 1-8.

VALUE IN PARENTHESIS INDICATES EFFECTIVE BEARING LENGTH

UNFACTORED REACTIONS

JT	1ST LCASE COMBINED	MAX./MIN. COMPONENT REACTIONS SNOW	LIVE	PERM.LIVE	WIND	DEAD	SOIL
L	914	573 / 0	0 / 0	0 / 0	0 / 0	342 / 0	0 / 0
H	827	505 / 0	0 / 0	0 / 0	0 / 0	322 / 0	0 / 0

BEARING MATERIAL TO BE SPF NO.2 OR BETTER AT JOINT(S) L

BRACING

TOP CHORD TO BE SHEATHED OR MAX. PURLIN SPACING = 3.54 FT.
MAX. UNBRACED BOTTOM CHORD LENGTH = 10.00 FT OR RIGID CEILING DIRECTLY APPLIED.

ALL PITCH BREAKS AND PERIMETER CORNER JOINTS MUST BE LATERALLY RESTRAINED.

1 LATERAL BRACE(S) AT 1/ 2 LENGTH OF G-H, E-I.

END VERTICAL(S) MUST BE SHEATHED OR HAVE BRACES AS INDICATED IN THE MAX. UNBRACED LENGTH COLUMN OF THE TABLE BELOW

LOADING

TOTAL LOAD CASES: (4)

CHORDS

MEMB. FR-TO	MAX. FACTORED FORCE (LBS)	FACTORED VERT. LOAD (PLF) FROM	TO	LC1 MAX CSI (LC)	MAX. UNBRAC LENGTH
L- B	-1230 / 0	0.0	0.0	0.13 (1)	7.23
A- B	0 / 35	-78.0	-78.0	0.15 (1)	10.00
B- C	-2801 / 0	-78.0	-78.0	0.78 (1)	3.54
C- D	-2248 / 0	-78.0	-78.0	0.57 (1)	4.09
D- E	-2248 / 0	-78.0	-78.0	0.57 (1)	4.09
E- F	-849 / 0	-78.0	-78.0	0.36 (1)	6.17
F- G	-44 / 0	-78.0	-78.0	0.26 (1)	6.25
H- G	-44 / 0	0.0	0.0	0.01 (1)	6.25
L- K	0 / 7	-18.5	-18.5	0.23 (4)	10.00
K- J	0 / 2615	-18.5	-18.5	0.52 (1)	10.00
J- I	0 / 2086	-18.5	-18.5	0.48 (1)	10.00
I- H	0 / 680	-18.5	-18.5	0.14 (1)	10.00

WEBS

MEMB. FR-TO	MAX. FACTORED FORCE (LBS)	MAX CSI (LC)
B- K	0 / 2454	0.55 (1)
K- C	-332 / 0	0.06 (1)
C- J	-480 / 0	0.46 (1)
J- E	0 / 303	0.07 (4)
E- I	-1165 / 0	0.40 (1)
I- F	0 / 1091	0.25 (1)
F- H	-1283 / 0	0.75 (1)

[M][F]

DESIGN CRITERIA

SPECIFIED LOADS:

TOP CH.	LL	=	21.0	PSF
	DL	=	6.0	PSF
BOT CH.	LL	=	0.0	PSF
	DL	=	7.4	PSF
TOTAL LOAD		=	34.4	PSF

SPACING = 24.0 IN. C/C

THIS TRUSS IS DESIGNED FOR RESIDENTIAL OR SMALL BUILDING REQUIREMENTS OF PART 9, NBCC 2015

THIS DESIGN COMPLIES WITH:
- PART 9 OF BCBC 2018 , ABC 2019
- PART 9 OF OBC 2012 (2019 AMENDMENT)
- CSA 086-14
- TPIC 2014

(55 % OF 23.0 P.S.F. G.S.L. PLUS 8.4 P.S.F. RAIN LOAD) EQUALS 21.0 P.S.F. SPECIFIED ROOF LIVE LOAD

ALLOWABLE DEFL.(LL)= L/360 (0.80")
CALCULATED VERT. DEFL.(LL) = L/ 999 (0.15")
ALLOWABLE DEFL.(TL)= L/360 (0.80")
CALCULATED VERT. DEFL.(TL) = L/ 861 (0.34")

CSI: TC=0.78/1.00 (B-C:1) , BC=0.52/1.00 (J-K:1) , WB=0.75/1.00 (F-H:1) , SSI=0.21/1.00 (B-C:1)

DOL LUMBER=1.00 NAIL=1.00 LS BEND=1.10 COMP=1.10 SHEAR=1.10 TENS= 1.10

COMPANION LIVE LOAD FACTOR = 1.00

TRUSS PLATE MANUFACTURER IS NOT RESPONSIBLE FOR QUALITY CONTROL IN THE TRUSS MANUFACTURING PLANT .

NAIL VALUES

PLATE	GRIP(DRY) (PSI) MAX	MIN	SHEAR (PLI) MAX	MIN	SECTION (PLI) MAX	MIN
MT20	650	371	1747	788	1987	1873

PLATE PLACEMENT TOL. = 0.250 inches

PLATE ROTATION TOL. = 5.0 Deg.

JSI GRIP= 0.89 (I) (INPUT = 0.90)
JSI METAL= 0.61 (K) (INPUT = 1.00)

JOB NAME	TRUSS NAME	QUANTITY	PLY	JOB DESC.	DRWG NO.
345248	H19		1	TRUSS DESC. JT 45147	E22052006

Alpha Roof Truss, Maple

Version 8.530 S Feb 23 2022 MiTek Industries, Inc. Fri Jun 17 13:55:36 2022 Page 1

ID:wceEj9xaBTOj6r9Q4a6qjtzAj6D-PbNelsReHbxaJJ0ZwmWoAU7mWyDbaFm9olTExCz5NBb

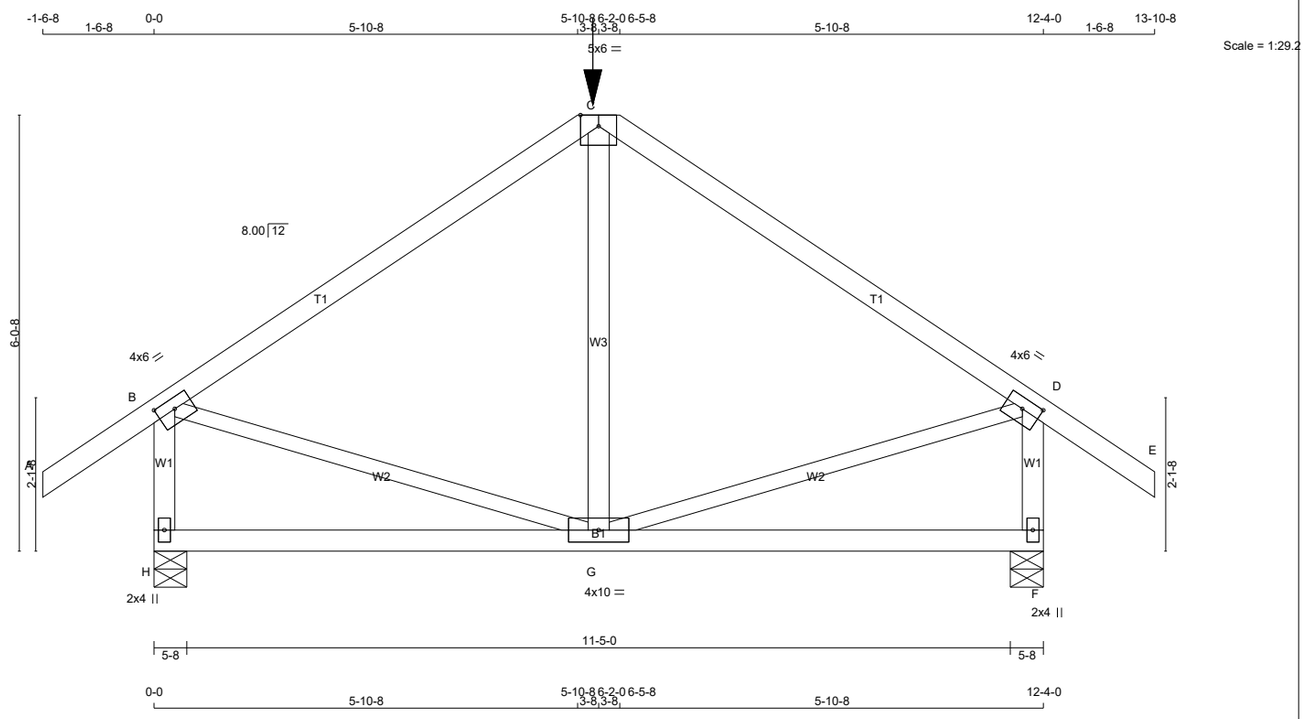

TOTAL WEIGHT = 55 lb

[M]

LUMBER

N. L. G. A. RULES

CHORDS	SIZE		LUMBER	DESCR.
A - C	2x4	DRY	No.2	SPF
C - E	2x4	DRY	No.2	SPF
H - B	2x4	DRY	No.2	SPF
F - D	2x4	DRY	No.2	SPF
H - F	2x4	DRY	No.2	SPF
ALL WEBS	2x3	DRY	No.2	SPF
EXCEPT				
G - C	2x4	DRY	No.2	SPF

DRY: SEASONED LUMBER.

PLATES (table is in inches)

JT	TYPE	PLATES	W	LEN	Y	X
B	TMVW-t	MT20	4.0	6.0	1.75	3.00
C	TMTMW+m	MT20	5.0	6.0		Edge
D	TMVW-t	MT20	4.0	6.0	1.75	3.00
F	BMV1+p	MT20	2.0	4.0		
G	BMWWW-t	MT20	4.0	10.0		
H	BMV1+p	MT20	2.0	4.0		

Edge - INDICATES REFERENCE CORNER OF PLATE TOUCHES EDGE OF CHORD.

LATERAL BRACE(S) SHOWN SHALL BE 2X4 SPF#2

DIMENSIONS, SUPPORTS AND LOADINGS SPECIFIED BY FABRICATOR TO BE VERIFIED BY BUILDING DESIGNER

BEARINGS

JT	FACTORED GROSS REACTION VERT	HORZ	MAXIMUM FACTORED GROSS REACTION DOWN	HORZ	UPLIFT	INPUT BRG IN-SX	REQRD BRG IN-SX
H	1166	0	1166	0	0	5-8	1-8
F	1166	0	1166	0	0	5-8	1-8

UNFACTORED REACTIONS

JT	1ST LCASE COMBINED	MAX./MIN. COMPONENT REACTIONS SNOW	LIVE	PERM.LIVE	WIND	DEAD	SOIL
H	831	507 / 0	0 / 0	0 / 0	0 / 0	325 / 0	0 / 0
F	831	507 / 0	0 / 0	0 / 0	0 / 0	325 / 0	0 / 0

BEARING MATERIAL TO BE SPF NO.2 OR BETTER AT JOINT(S) H, F

BRACING

TOP CHORD TO BE SHEATHED OR MAX. PURLIN SPACING = 5.47 FT.
MAX. UNBRACED BOTTOM CHORD LENGTH = 10.00 FT OR RIGID CEILING DIRECTLY APPLIED.

ALL PITCH BREAKS AND PERIMETER CORNER JOINTS MUST BE LATERALLY RESTRAINED.

LOADING

TOTAL LOAD CASES: (4)

CHORDS

MEMB. FR-TO	MAX. FACTORED FORCE (LBS)	FACTORED VERT. LOAD (PLF) FROM	TO	LC1 MAX CSI (LC)	MAX. UNBRAC LENGTH
A- B	0 / 35	-78.0	-78.0	0.16 (1)	10.00
B- C	-894 / 0	-78.0	-78.0	0.63 (1)	5.47
C- D	-894 / 0	-78.0	-78.0	0.63 (1)	5.47
D- E	0 / 35	-78.0	-78.0	0.16 (1)	10.00
H- B	-1080 / 0	0.0	0.0	0.14 (1)	7.57
F- D	-1080 / 0	0.0	0.0	0.14 (1)	7.57
H- G	0 / 0	-36.4	-36.4	0.44 (4)	10.00
G- F	0 / 0	-36.4	-36.4	0.44 (4)	10.00

WEBS

MEMB. FR-TO	MAX. FACTORED FORCE (LBS)	MAX CSI (LC)
B- G	0 / 775	0.19 (1)
G- D	0 / 775	0.19 (1)
G- C	-157 / 142	0.07 (1)

FACTORED CONCENTRATED LOADS (LBS)

JT	LOC.	LC1	MAX-	MAX+	FACE	DIR.	TYPE	HEEL	CONN.
C	6-2-0	-668	-668	---	FRONT	VERT	TOTAL	---	C1

CONNECTION REQUIREMENTS

1) **C1:** A SUITABLE HANGER/MECHANICAL CONNECTION IS REQUIRED.

DESIGN CRITERIA

SPECIFIED LOADS:

TOP CH.	LL	=	21.0	PSF
	DL	=	6.0	PSF
BOT CH.	LL	=	0.0	PSF
	DL	=	7.4	PSF
TOTAL LOAD		=	34.4	PSF

SPACING = 24.0 IN. C/C

GIRDER TYPE: CPrimeHip
SIDE SETBACK = 5-10-8
END SETBACK = 5-10-8
END WALL WIDTH = 0-0
CORNER FRAMING TYPE: CONVENTIONAL
END JACK TYPE: CONVENTIONAL
APPLIED TO FRONT SIDE
- ADDT'L LOADS BASED ON 55 % OF GSL.

THIS TRUSS IS DESIGNED FOR RESIDENTIAL OR SMALL BUILDING REQUIREMENTS OF PART 9, NBCC 2015

THIS DESIGN COMPLIES WITH:
- PART 9 OF BCBC 2018 , ABC 2019
- PART 9 OF OBC 2012 (2019 AMENDMENT)
- CSA 086-14
- TPIC 2014

(55 % OF 23.0 P.S.F. G.S.L. PLUS 8.4 P.S.F. RAIN LOAD) EQUALS 21.0 P.S.F. SPECIFIED ROOF LIVE LOAD

ALLOWABLE DEFL.(LL)= L/360 (0.41")
CALCULATED VERT. DEFL.(LL) = L/ 999 (0.01")
ALLOWABLE DEFL.(TL)= L/360 (0.41")
CALCULATED VERT. DEFL.(TL) = L/ 999 (0.07")

CSI: TC=0.63/1.00 (C-D:1) , BC=0.44/1.00 (G-H:4) , WB=0.19/1.00 (B-G:1) , SSI=0.21/1.00 (F-G:4)

DOL LUMBER=1.00 NAIL=1.00 LS BEND=1.00 COMP=1.00 SHEAR=1.00 TENS= 1.00

COMPANION LIVE LOAD FACTOR = 1.00

AUTOSOLVE HEELS OFF

TRUSS PLATE MANUFACTURER IS NOT RESPONSIBLE FOR QUALITY CONTROL IN THE TRUSS MANUFACTURING PLANT .

NAIL VALUES

PLATE	GRIP(DRY) (PSI) MAX	MIN	SHEAR (PLI) MAX	MIN	SECTION (PLI) MAX	MIN
MT20	650	371	1747	788	1987	1873

PLATE PLACEMENT TOL. = 0.250 inches

PLATE ROTATION TOL. = 5.0 Deg.

JSI GRIP= 0.57 (B) (INPUT = 0.90)
JSI METAL= 0.26 (D) (INPUT = 1.00)

JOB NAME	TRUSS NAME	QUANTITY	PLY	JOB DESC.	DRWG NO.
345248	H20		1	TRUSS DESC. JT 45147	E22052007

Alpa Roof Truss, Maple

Version 8.530 S Feb 23 2022 MiTek Industries, Inc. Fri Jun 17 13:55:37 2022 Page 1
ID:wceEj9xaBTOj6r9Q4a6gjtzAj6D-tnx0yCSG2u3RxSblUU11ihg2FMeAJjoI0PCnTez5NBa

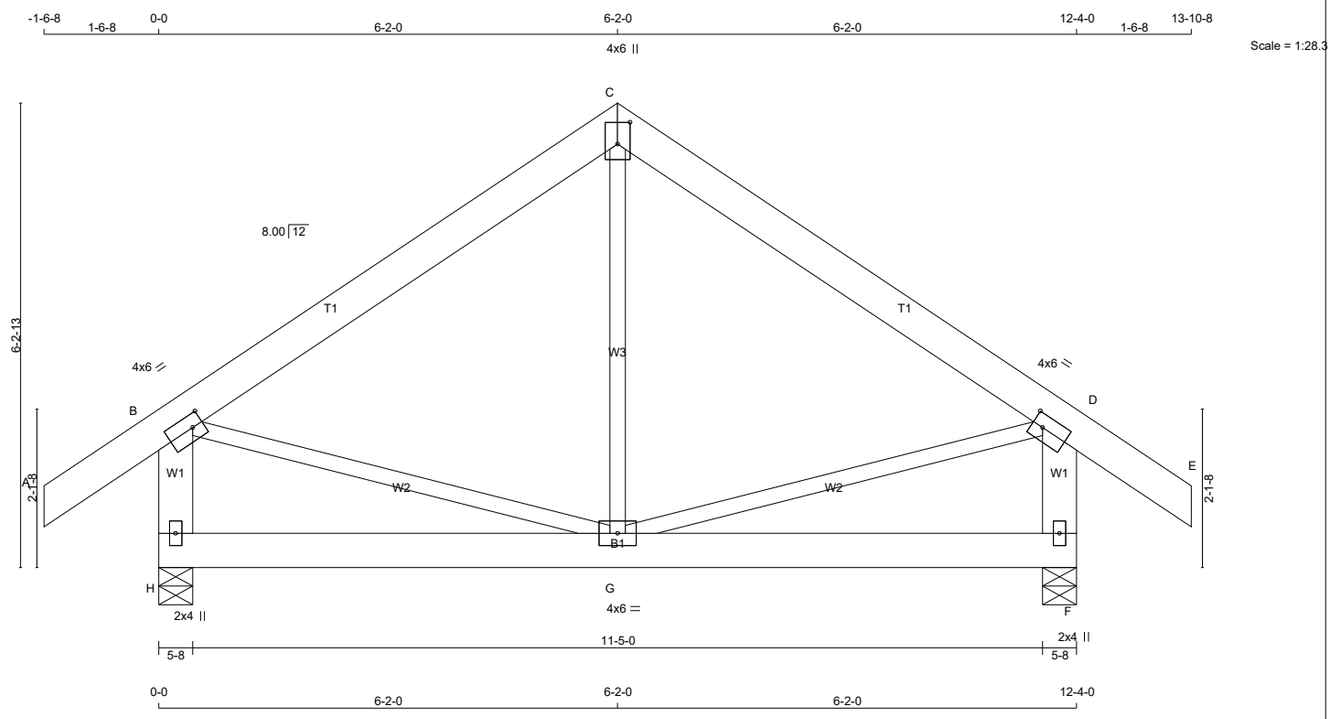

TOTAL WEIGHT = 2 X 75 = 150 lb

[M][F]

LUMBER

N. L. G. A. RULES

CHORDS	SIZE		LUMBER	DESCR.
A - C	2x6	DRY	No.2	SPF
C - E	2x6	DRY	No.2	SPF
H - B	2x6	DRY	No.2	SPF
F - D	2x6	DRY	No.2	SPF
H - F	2x6	DRY	No.2	SPF
ALL WEBS EXCEPT	2x3	DRY	No.2	SPF

DRY: SEASONED LUMBER.

PLATES (table is in inches)

JT	TYPE	PLATES	W	LEN	Y	X
B	TMVW-t	MT20	4.0	6.0	2.00	1.75
C	TTW+p	MT20	4.0	6.0	3.50	2.00
D	TMVW-t	MT20	4.0	6.0	2.00	1.75
F	BMV1+p	MT20	2.0	4.0		
G	BMWWW-t	MT20	4.0	6.0		
H	BMV1+p	MT20	2.0	4.0		

LATERAL BRACE(S) SHOWN SHALL BE 2X4 SPF#2

DIMENSIONS, SUPPORTS AND LOADINGS SPECIFIED BY FABRICATOR TO BE VERIFIED BY BUILDING DESIGNER

BEARINGS

JT	FACTORED GROSS REACTION VERT	HORZ	MAXIMUM FACTORED GROSS REACTION DOWN	HORZ	UPLIFT	INPUT BRG IN-SX	REQRD BRG IN-SX
H	725	0	725	0	0	5-8	1-8
F	725	0	725	0	0	5-8	1-8

UNFACTORED REACTIONS

JT	1ST LCASE COMBINED	MAX./MIN. COMPONENT REACTIONS SNOW	LIVE	PERM.LIVE	WIND	DEAD	SOIL
H	514	329 / 0	0 / 0	0 / 0	0 / 0	185 / 0	0 / 0
F	514	329 / 0	0 / 0	0 / 0	0 / 0	185 / 0	0 / 0

BEARING MATERIAL TO BE SPF NO.2 OR BETTER AT JOINT(S) H, F

BRACING

TOP CHORD TO BE SHEATHED OR MAX. PURLIN SPACING = 6.25 FT.
MAX. UNBRACED BOTTOM CHORD LENGTH = 10.00 FT OR RIGID CEILING DIRECTLY APPLIED.

ALL PITCH BREAKS AND PERIMETER CORNER JOINTS MUST BE LATERALLY RESTRAINED.

LOADING

TOTAL LOAD CASES: (4)

CHORDS

MEMB. FR-TO	MAX. FACTORED FORCE (LBS)	FACTORED VERT. LOAD LC1 (PLF) FROM	TO	MAX CSI (LC)	MAX. UNBRAC LENGTH
A- B	0 / 36	-78.0	-78.0	0.08 (1)	10.00
B- C	-400 / 0	-78.0	-78.0	0.19 (1)	6.25
C- D	-400 / 0	-78.0	-78.0	0.19 (1)	6.25
D- E	0 / 36	-78.0	-78.0	0.08 (1)	10.00
H- B	-680 / 0	0.0	0.0	0.05 (1)	7.81
F- D	-680 / 0	0.0	0.0	0.05 (1)	7.81
H- G	0 / 0	-18.5	-18.5	0.09 (4)	10.00
G- F	0 / 0	-18.5	-18.5	0.09 (4)	10.00

WEBS

MEMB. FR-TO	MAX. FACTORED FORCE (LBS)	MAX CSI (LC)
G- C	-37 / 84	0.03 (4)
B- G	0 / 344	0.08 (1)
G- D	0 / 344	0.08 (1)

DESIGN CRITERIA

SPECIFIED LOADS:

TOP CH.	LL	=	21.0	PSF
	DL	=	6.0	PSF
BOT CH.	LL	=	0.0	PSF
	DL	=	7.4	PSF
TOTAL LOAD		=	34.4	PSF

SPACING = 24.0 IN. C/C

THIS TRUSS IS DESIGNED FOR RESIDENTIAL OR SMALL BUILDING REQUIREMENTS OF PART 9, NBCC 2015

THIS DESIGN COMPLIES WITH:
- PART 9 OF BCBC 2018 , ABC 2019
- PART 9 OF OBC 2012 (2019 AMENDMENT)
- CSA 086-14
- TPIC 2014

(55 % OF 23.0 P.S.F. G.S.L. PLUS 8.4 P.S.F. RAIN LOAD) EQUALS 21.0 P.S.F. SPECIFIED ROOF LIVE LOAD

ALLOWABLE DEFL.(LL)= L/360 (0.41")
CALCULATED VERT. DEFL.(LL) = L/ 999 (0.00")
ALLOWABLE DEFL.(TL)= L/360 (0.41")
CALCULATED VERT. DEFL.(TL) = L/ 999 (0.01")

CSI: TC=0.19/1.00 (C-D:1) , BC=0.09/1.00 (F-G:4) , WB=0.08/1.00 (B-G:1) , SSI=0.12/1.00 (C-D:1)

DOL LUMBER=1.00 NAIL=1.00 LS BEND=1.10 COMP=1.10 SHEAR=1.10 TENS= 1.10

COMPANION LIVE LOAD FACTOR = 1.00

AUTOSOLVE HEELS OFF

TRUSS PLATE MANUFACTURER IS NOT RESPONSIBLE FOR QUALITY CONTROL IN THE TRUSS MANUFACTURING PLANT .

NAIL VALUES

PLATE	GRIP(DRY) (PSI) MAX	MIN	SHEAR (PLI) MAX	MIN	SECTION (PLI) MAX	MIN
MT20	650	371	1747	788	1987	1873

PLATE PLACEMENT TOL. = 0.250 inches

PLATE ROTATION TOL. = 5.0 Deg.

JSI GRIP= 0.58 (G) (INPUT = 0.90)
JSI METAL= 0.14 (H) (INPUT = 1.00)

JOB NAME	TRUSS NAME	QUANTITY	PLY	JOB DESC.		DRWG NO.
345248	H20A		2	TRUSS DESC.	JT 45147	E22052008

Alpa Roof Truss, Maple

Version 8.530 S Feb 23 2022 MiTek Industries, Inc. Fri Jun 17 13:55:39 2022 Page 1

ID:wceEj9xaBTOj6r9Q4a6gjtzAj6D-qA3nNuTXaWJ9Amk8bv3Vo6lNR9FMnc9bUjhuYXz5NBY

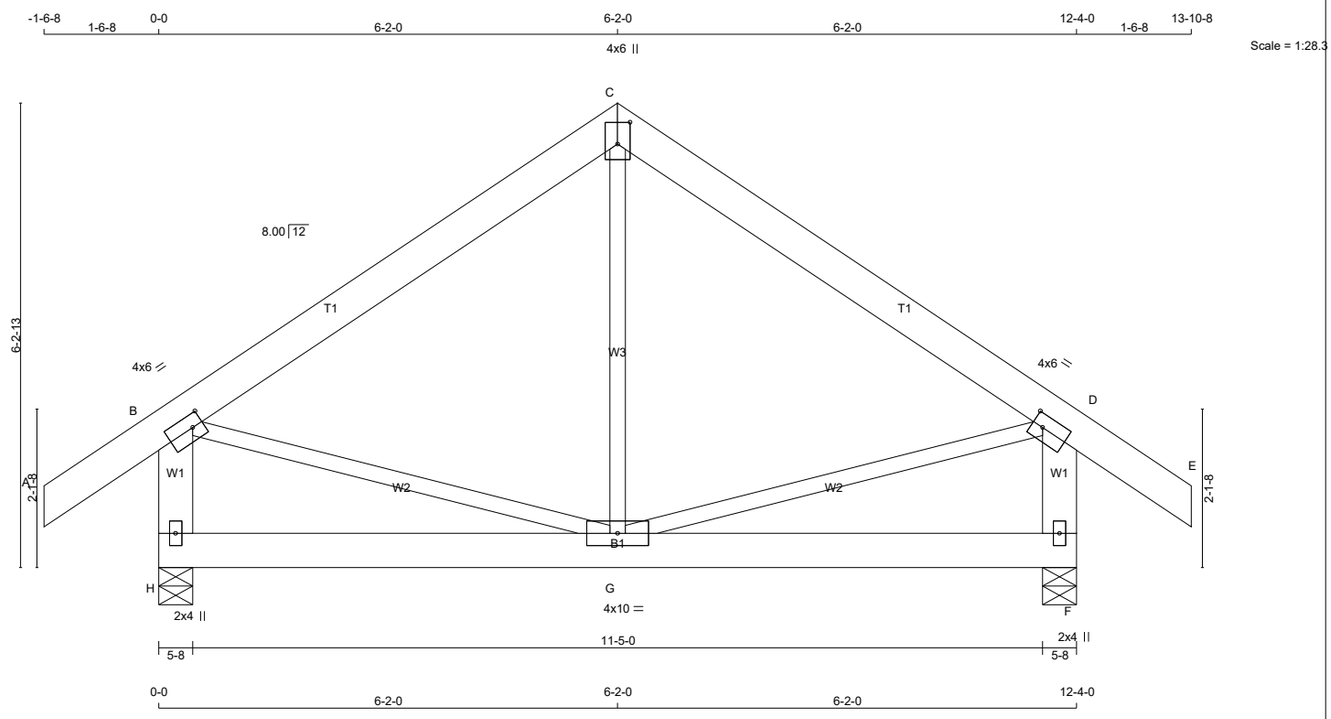

TOTAL WEIGHT = 2 X 75 = 150 lb [M]

LUMBER

N. L. G. A. RULES

CHORDS	SIZE		LUMBER	DESCR.
A - C	2x6	DRY	No.2	SPF
C - E	2x6	DRY	No.2	SPF
H - B	2x6	DRY	No.2	SPF
F - D	2x6	DRY	No.2	SPF
H - F	2x6	DRY	No.2	SPF
ALL WEBS EXCEPT	2x3	DRY	No.2	SPF

DRY: SEASONED LUMBER.

DESIGN CONSISTS OF **2** TRUSSES BUILT SEPARATELY THEN FASTENED TOGETHER AS FOLLOWS:

CHORDS	#ROWS	SURFACE SPACING (IN)	LOAD(PLF)
TOP CHORDS : (0.122"X3") SPIRAL NAILS			
A- C	2	12	TOP
C- E	2	12	TOP
H- B	2	12	TOP
F- D	2	12	TOP
BOTTOM CHORDS : (0.122"X3") SPIRAL NAILS			
H- F	2	12	SIDE(102.5)
WEBS : (0.122"X3") SPIRAL NAILS			
2x3	1	6	

NAILS TO BE DRIVEN FROM ONE SIDE ONLY.

TOP - COMPONENTS ARE LOADED FROM THE TOP AND MUST BE PLACED ON TOP EDGE OF ALL PLIES FOR THE LOAD TO BE TRANSFERRED TO EACH PLY.

SIDE - PLF SHOWN IS THE EQUIVALENT UDL APPLIED TO ONE SIDE THAT THE CORRESPONDING NAILING PATTERN SHALL BE CAPABLE OF TRANSFERING. REMAINING PLF MUST BE APPLIED ON THE OPPOSITE SIDE OR ON THE TOP.

PLATES (table is in inches)

JT	TYPE	PLATES	W	LEN	Y	X
B	TMVW-t	MT20	4.0	6.0	2.00	1.75
C	TTW+p	MT20	4.0	6.0	3.50	2.00
D	TMVW-t	MT20	4.0	6.0	2.00	1.75
F	BMV1+p	MT20	2.0	4.0		
G	BMWWW-t	MT20	4.0	10.0		
H	BMV1+p	MT20	2.0	4.0		

LATERAL BRACE(S) SHOWN SHALL BE 2X4 SPF#2

DIMENSIONS, SUPPORTS AND LOADINGS SPECIFIED BY FABRICATOR TO BE VERIFIED BY BUILDING DESIGNER

BEARINGS

JT	FACTORED GROSS REACTION VERT	HORZ	MAXIMUM FACTORED GROSS REACTION DOWN	HORZ	UPLIFT	INPUT BRG IN-SX	REQRD BRG IN-SX
H	1989	0	1989	0	0	5-8	1-8
F	1989	0	1989	0	0	5-8	1-8

UNFACTORED REACTIONS

JT	1ST LCASE COMBINED	MAX./MIN. COMPONENT REACTIONS SNOW	LIVE	PERM.LIVE	WIND	DEAD	SOIL
H	1416	879 / 0	0 / 0	0 / 0	0 / 0	536 / 0	0 / 0
F	1416	879 / 0	0 / 0	0 / 0	0 / 0	536 / 0	0 / 0

BEARING MATERIAL TO BE SPF NO.2 OR BETTER AT JOINT(S) H, F

BRACING

TOP CHORD TO BE SHEATHED OR MAX. PURLIN SPACING = 6.25 FT.
MAX. UNBRACED BOTTOM CHORD LENGTH = 10.00 FT OR RIGID CEILING DIRECTLY APPLIED.

ALL PITCH BREAKS AND PERIMETER CORNER JOINTS MUST BE LATERALLY RESTRAINED.

LOADING

TOTAL LOAD CASES: (4)

CHORDS MEMB. FR-TO	MAX. FACTORED FORCE (LBS)	FACTORED VERT. LOAD (PLF) FROM	TO	LC1 CSI (LC)	MAX UNBRAC LENGTH	WEBS MEMB. FR-TO	MAX. FACTORED FORCE (LBS)	MAX CSI (LC)
A- B	0 / 36	-78.0	-78.0	0.04 (1)	10.00	G- C	0 / 1085	0.13 (1)
B- C	-1412 / 0	-78.0	-78.0	0.14 (1)	6.25	B- G	0 / 1215	0.15 (1)
C- D	-1412 / 0	-78.0	-78.0	0.14 (1)	6.25	G- D	0 / 1215	0.15 (1)
D- E	0 / 36	-78.0	-78.0	0.04 (1)	10.00			
H- B	-1462 / 0	0.0	0.0	0.06 (1)	7.81			
F- D	-1462 / 0	0.0	0.0	0.06 (1)	7.81			
H- G	0 / 0	-223.5	-223.5	0.37 (1)	10.00			
G- F	0 / 0	-223.5	-223.5	0.37 (1)	10.00			

DESIGN CRITERIA

SPECIFIED LOADS:

TOP CH.	LL	=	21.0	PSF
	DL	=	6.0	PSF
BOT CH.	LL	=	0.0	PSF
	DL	=	7.4	PSF
TOTAL LOAD		=	34.4	PSF

SPACING = 24.0 IN. C/C

GIRDER TYPE: CStdGirder
START DISTANCE = 0-0
START SPAN CARRIED = 10-6-0
END DISTANCE = 12-4-0
END SPAN CARRIED = 10-6-0
END WALL WIDTH = 0-0
APPLIED TO FRONT SIDE OF BOTTOM CHORD.
- ADDT'L LOADS BASED ON 55 % OF GSL.

THIS TRUSS IS DESIGNED FOR RESIDENTIAL OR SMALL BUILDING REQUIREMENTS OF PART 9, NBCC 2015

THIS DESIGN COMPLIES WITH:
- PART 9 OF BCBC 2018 , ABC 2019
- PART 9 OF OBC 2012 (2019 AMENDMENT)
- CSA 086-14
- TPIC 2014

(55 % OF 23.0 P.S.F. G.S.L. PLUS 8.4 P.S.F. RAIN LOAD) EQUALS 21.0 P.S.F. SPECIFIED ROOF LIVE LOAD

ALLOWABLE DEFL.(LL)= L/360 (0.41")
CALCULATED VERT. DEFL.(LL) = L/ 999 (0.03")
ALLOWABLE DEFL.(TL)= L/360 (0.41")
CALCULATED VERT. DEFL.(TL) = L/ 999 (0.06")

CSI: TC=0.14/1.00 (C-D:1) , BC=0.37/1.00 (F-G:1) , WB=0.15/1.00 (B-G:1) , SSI=0.28/1.00 (F-G:1)

DOL LUMBER=1.00 NAIL=1.00 LS BEND=1.00 COMP=1.00 SHEAR=1.00 TENS= 1.00

COMPANION LIVE LOAD FACTOR = 1.00

AUTOSOLVE HEELS OFF

TRUSS PLATE MANUFACTURER IS NOT RESPONSIBLE FOR QUALITY CONTROL IN THE TRUSS MANUFACTURING PLANT .

NAIL VALUES

PLATE	GRIP(DRY) (PSI) MAX	MIN	SHEAR (PLI) MAX	MIN	SECTION (PLI) MAX	MIN
MT20	650	371	1747	788	1987	1873

PLATE PLACEMENT TOL. = 0.250 inches

PLATE ROTATION TOL. = 5.0 Deg.

JSI GRIP= 0.57 (D) (INPUT = 0.90)
JSI METAL= 0.18 (D) (INPUT = 1.00)

JOB NAME	TRUSS NAME	QUANTITY	PLY	JOB DESC.		DRWG NO.
345248	J01		1	TRUSS DESC.	JT 45147	E22052009

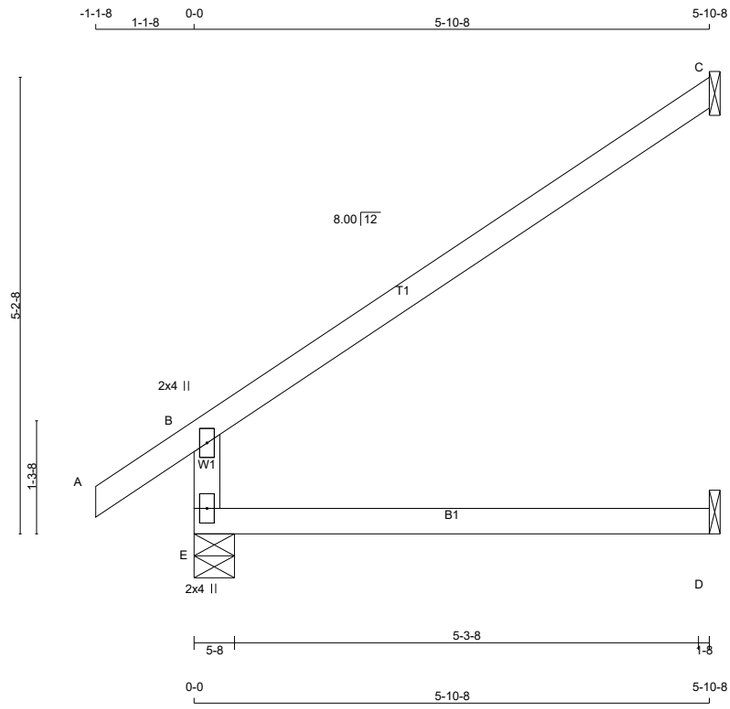

TOTAL WEIGHT = 4 X 17 = 70 lb

[M][F]

LUMBER

N. L. G. A. RULES

CHORDS	SIZE		LUMBER	DESCR.
E - B	2x4	DRY	No.2	SPF
A - C	2x4	DRY	No.2	SPF
E - D	2x4	DRY	No.2	SPF

DRY: SEASONED LUMBER.

PLATES (table is in inches)

JT	TYPE	PLATES	W	LEN	Y	X
B	TMV+p	MT20	2.0	4.0		
E	BMV1+p	MT20	2.0	4.0		

LATERAL BRACE(S) SHOWN SHALL BE 2X4 SPF#2

DIMENSIONS, SUPPORTS AND LOADINGS SPECIFIED BY FABRICATOR TO BE VERIFIED BY BUILDING DESIGNER

BEARINGS

JT	FACTORED GROSS REACTION VERT	HORZ	MAXIMUM FACTORED GROSS REACTION DOWN	HORZ	UPLIFT	INPUT BRG IN-SX	REQRD BRG IN-SX
E	444	0	444	0	0	5-8	1-8
C	172	0	172	0	0	1-8	1-8
D	45	0	51	0	0	1-8	1-8

SEE MITEK STANDARD DETAIL MSD2015-H FOR CONNECTION TO JOINT(S) C , D

UNFACTORED REACTIONS

JT	1ST LCASE COMBINED	MAX./MIN. COMPONENT REACTIONS SNOW	LIVE	PERM.LIVE	WIND	DEAD	SOIL
E	314	205 / 0	0 / 0	0 / 0	0 / 0	109 / 0	0 / 0
C	119	93 / 0	0 / 0	0 / 0	0 / 0	26 / 0	0 / 0
D	36	0 / 0	0 / 0	0 / 0	0 / 0	36 / 0	0 / 0

BEARING MATERIAL TO BE SPF NO.2 OR BETTER AT JOINT(S) E, C

BRACING

TOP CHORD TO BE SHEATHED OR MAX. PURLIN SPACING = 6.25 FT.
MAX. UNBRACED BOTTOM CHORD LENGTH = 10.00 FT OR RIGID CEILING DIRECTLY APPLIED.

ALL PITCH BREAKS AND PERIMETER CORNER JOINTS MUST BE LATERALLY RESTRAINED.

LOADING

TOTAL LOAD CASES: (4)

C H O R D S

MEMB. FR-TO	MAX. FACTORED FORCE (LBS)	VERT. LOAD (PLF) FROM	TO	LC1 MAX CSI (LC)	MAX. UNBRAC LENGTH
E- B	-380 / 0	0.0	0.0	0.11 (4)	7.81
A- B	0 / 26	-78.0	-78.0	0.08 (1)	10.00
B- C	-32 / 0	-78.0	-78.0	0.35 (1)	6.25
E- D	0 / 0	-18.5	-18.5	0.13 (4)	10.00

W E B S

MEMB. FR-TO	MAX. FACTORED FORCE (LBS)	MAX CSI (LC)

DESIGN CRITERIA

SPECIFIED LOADS:

TOP CH.	LL	=	21.0	PSF
	DL	=	6.0	PSF
BOT CH.	LL	=	0.0	PSF
	DL	=	7.4	PSF
TOTAL LOAD		=	34.4	PSF

SPACING = 24.0 IN. C/C

THIS TRUSS IS DESIGNED FOR RESIDENTIAL OR SMALL BUILDING REQUIREMENTS OF PART 9, NBCC 2015

THIS DESIGN COMPLIES WITH:
- PART 9 OF BCBC 2018 , ABC 2019
- PART 9 OF OBC 2012 (2019 AMENDMENT)
- CSA 086-14
- TPIC 2014

DESIGN ASSUMPTIONS
-OVERHANG NOT TO BE ALTERED OR CUT OFF.

(55 % OF 23.0 P.S.F. G.S.L. PLUS 8.4 P.S.F. RAIN LOAD) EQUALS 21.0 P.S.F. SPECIFIED ROOF LIVE LOAD

ALLOWABLE DEFL.(LL)= L/360 (0.20")
CALCULATED VERT. DEFL.(LL) = L/ 999 (0.00")
ALLOWABLE DEFL.(TL)= L/360 (0.20")
CALCULATED VERT. DEFL.(TL) = L/ 999 (0.03")

CSI: TC=0.35/1.00 (B-C:1) , BC=0.13/1.00 (D-E:4) , WB=0.00/1.00 (n/a:0) , SSI=0.19/1.00 (B-C:1)

DOL LUMBER=1.00 NAIL=1.00 LS BEND=1.10 COMP=1.10 SHEAR=1.10 TENS= 1.10

COMPANION LIVE LOAD FACTOR = 1.00

AUTOSOLVE RIGHT HEEL ONLY

TRUSS PLATE MANUFACTURER IS NOT RESPONSIBLE FOR QUALITY CONTROL IN THE TRUSS MANUFACTURING PLANT .

NAIL VALUES

PLATE	GRIP(DRY) (PSI) MAX	MIN	SHEAR (PLI) MAX	MIN	SECTION (PLI) MAX	MIN
MT20	650	371	1747	788	1987	1873

PLATE PLACEMENT TOL. = 0.250 inches

PLATE ROTATION TOL. = 5.0 Deg.

JSI GRIP= 0.23 (B) (INPUT = 0.90)
JSI METAL= 0.19 (B) (INPUT = 1.00)

JOB NAME	TRUSS NAME	QUANTITY	PLY	JOB DESC.	DRWG NO.
345248	J02		1	TRUSS DESC. JT 45147	E22052010

ID:wceEj9xaBTOj6r9Q4a6qjtzAj6D-mYBXoZVn57ZsQ4uWjJ5ztXqkHz0zFY ux1A?cPz5NBW

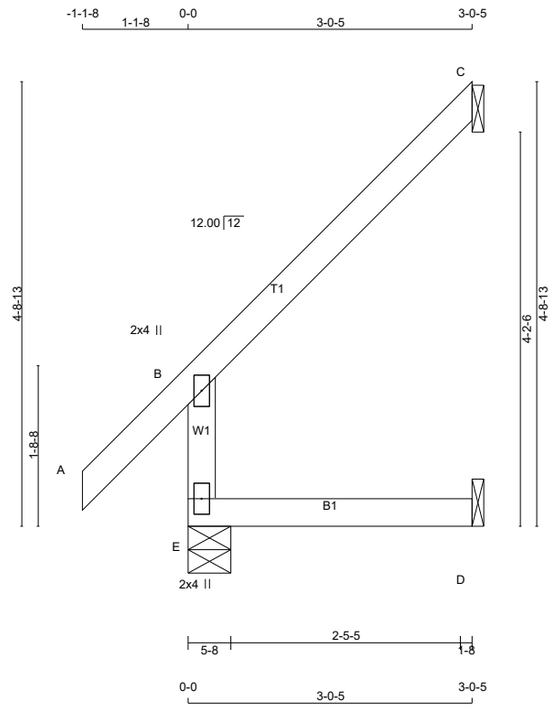

TOTAL WEIGHT = 5 X 12 = 60 lb
[M]

LUMBER
N. L. G. A. RULES

CHORDS	SIZE		LUMBER	DESCR.
E - B	2x4	DRY	No.2	SPF
A - C	2x4	DRY	No.2	SPF
E - D	2x4	DRY	No.2	SPF

DRY: SEASONED LUMBER.

PLATES (table is in inches)

JT	TYPE	PLATES	W	LEN	Y	X
B	TMV+p	MT20	2.0	4.0		
E	BMV1+p	MT20	2.0	4.0		

LATERAL BRACE(S) SHOWN SHALL BE 2X4 SPF#2

DIMENSIONS, SUPPORTS AND LOADINGS SPECIFIED BY FABRICATOR TO BE VERIFIED BY BUILDING DESIGNER

BEARINGS

JT	FACTORED GROSS REACTION VERT	HORZ	MAXIMUM FACTORED GROSS REACTION DOWN	HORZ	UPLIFT	INPUT BRG IN-SX	REQRD BRG IN-SX
E	274	0	274	0	0	5-8	1-8
C	89	0	89	0	0	1-8	1-8
D	25	0	28	0	0	1-8	1-8

SEE MITEK STANDARD DETAIL MSD2015-H FOR CONNECTION TO JOINT(S) C , D

UNFACTORED REACTIONS

JT	1ST LCASE COMBINED	MAX./MIN. COMPONENT REACTIONS SNOW	LIVE	PERM.LIVE	WIND	DEAD	SOIL
E	193	131 / 0	0 / 0	0 / 0	0 / 0	62 / 0	0 / 0
C	61	48 / 0	0 / 0	0 / 0	0 / 0	14 / 0	0 / 0
D	20	0 / 0	0 / 0	0 / 0	0 / 0	20 / 0	0 / 0

BEARING MATERIAL TO BE SPF NO.2 OR BETTER AT JOINT(S) E

BRACING
TOP CHORD TO BE SHEATHED OR MAX. PURLIN SPACING = 6.25 FT.
MAX. UNBRACED BOTTOM CHORD LENGTH = 10.00 FT OR RIGID CEILING DIRECTLY APPLIED.

ALL PITCH BREAKS AND PERIMETER CORNER JOINTS MUST BE LATERALLY RESTRAINED.

LOADING
TOTAL LOAD CASES: (7)

CHORDS

MEMB. FR-TO	MAX. FACTORED FORCE (LBS)	FACTORED VERT. LOAD (PLF) FROM	TO	LC1 CSI (LC)	MAX UNBRAC LENGTH
E- B	-243 / 0	0.0	0.0	0.02 (4)	7.81
A- B	0 / 34	-78.0	-78.0	0.10 (5)	10.00
B- C	-21 / 0	-78.0	-78.0	0.12 (6)	6.25
E- D	0 / 0	-18.5	-18.5	0.04 (4)	10.00

WEBS

MEMB. FR-TO	MAX. FACTORED FORCE (LBS)	MAX CSI (LC)

CANTILEVER ANALYSIS HAS BEEN CONSIDERED IN THIS DESIGN

PATTERN-LOADING CHECK APPLIED TO THIS TRUSS.

DESIGN CRITERIA

SPECIFIED LOADS:

TOP CH.	LL	=	21.0	PSF
	DL	=	6.0	PSF
BOT CH.	LL	=	0.0	PSF
	DL	=	7.4	PSF
TOTAL LOAD		=	34.4	PSF

SPACING = 24.0 IN. C/C

THIS TRUSS IS DESIGNED FOR RESIDENTIAL OR SMALL BUILDING REQUIREMENTS OF PART 9, NBCC 2015

THIS DESIGN COMPLIES WITH:
- PART 9 OF BCBC 2018 , ABC 2019
- PART 9 OF OBC 2012 (2019 AMENDMENT)
- CSA 086-14
- TPIC 2014

DESIGN ASSUMPTIONS
-OVERHANG NOT TO BE ALTERED OR CUT OFF.

(55 % OF 23.0 P.S.F. G.S.L. PLUS 8.4 P.S.F. RAIN LOAD) EQUALS 21.0 P.S.F. SPECIFIED ROOF LIVE LOAD

ALLOWABLE DEFL.(LL)= L/360 (0.19")
CALCULATED VERT. DEFL.(LL) = L/ 999 (0.00")
ALLOWABLE DEFL.(TL)= L/360 (0.19")
CALCULATED VERT. DEFL.(TL) = L/ 999 (0.00")

CSI: TC=0.12/1.00 (B-C:6) , BC=0.04/1.00 (D-E:4) , WB=0.00/1.00 (n/a:0) , SSI=0.08/1.00 (B-C:6)

DOL LUMBER=1.00 NAIL=1.00 LS BEND=1.10 COMP=1.10 SHEAR=1.10 TENS= 1.10

COMPANION LIVE LOAD FACTOR = 1.00

AUTOSOLVE RIGHT HEEL ONLY

TRUSS PLATE MANUFACTURER IS NOT RESPONSIBLE FOR QUALITY CONTROL IN THE TRUSS MANUFACTURING PLANT .

NAIL VALUES

PLATE	GRIP(DRY) (PSI) MAX	MIN	SHEAR (PLI) MAX	MIN	SECTION (PLI) MAX	MIN
MT20	650	371	1747	788	1987	1873

PLATE PLACEMENT TOL. = 0.250 inches

PLATE ROTATION TOL. = 5.0 Deg.

JSI GRIP= 0.18 (B) (INPUT = 0.90)
JSI METAL= 0.13 (B) (INPUT = 1.00)

JOB NAME	TRUSS NAME	QUANTITY	PLY	JOB DESC.	DRWG NO.
345248	J03		1	TRUSS DESC. JT 45147	E22052011

Alpa Roof Truss, Maple

Version 8.530 S Feb 23 2022 MiTek Industries, Inc. Fri Jun 17 13:55:42 2022 Page 1

ID:wceEj9xaBTOj6r9Q4a6qjtzAj6D-Ekkv0vVPsRhj1ETjH1dCPlNplNKc ?E1AhwY9rz5NBV

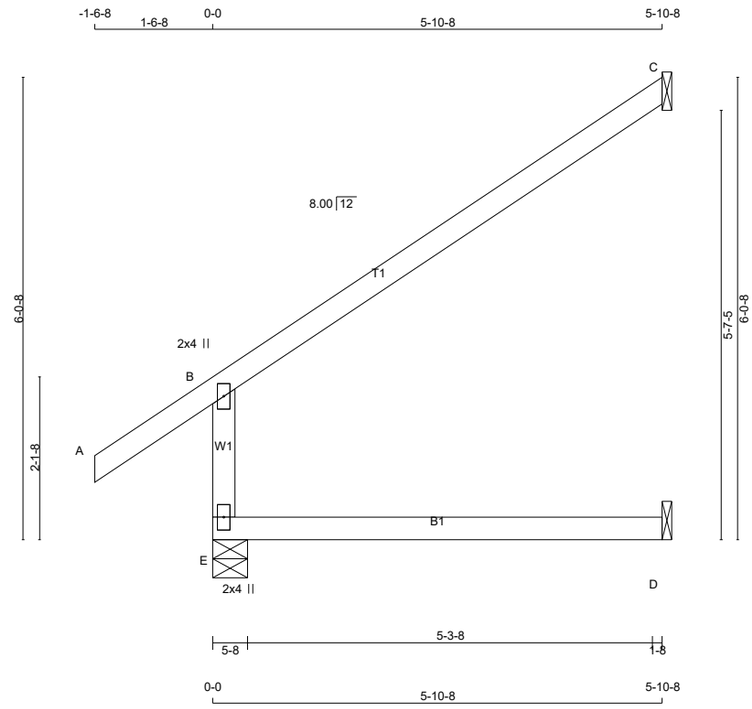

TOTAL WEIGHT = 2 X 19 = 38 lb

[M]

LUMBER

N. L. G. A. RULES

CHORDS	SIZE		LUMBER	DESCR.
E - B	2x4	DRY	No.2	SPF
A - C	2x4	DRY	No.2	SPF
E - D	2x4	DRY	No.2	SPF

DRY: SEASONED LUMBER.

PLATES (table is in inches)

JT	TYPE	PLATES	W	LEN	Y	X
B	TMV+p	MT20	2.0	4.0		
E	BMV1+p	MT20	2.0	4.0		

LATERAL BRACE(S) SHOWN SHALL BE 2X4 SPF#2

DIMENSIONS, SUPPORTS AND LOADINGS SPECIFIED BY FABRICATOR TO BE VERIFIED BY BUILDING DESIGNER

BEARINGS

JT	FACTORED GROSS REACTION VERT	HORZ	MAXIMUM FACTORED GROSS REACTION DOWN	HORZ	UPLIFT	INPUT BRG IN-SX	REQRD BRG IN-SX
E	474	0	474	0	0	5-8	1-8
C	172	0	172	0	0	1-8	1-8
D	47	0	53	0	0	1-8	1-8

SEE MITEK STANDARD DETAIL MSD2015-H FOR CONNECTION TO JOINT(S) C , D

UNFACTORED REACTIONS

JT	1ST LCASE COMBINED	MAX./MIN. COMPONENT REACTIONS SNOW	LIVE	PERM.LIVE	WIND	DEAD	SOIL
E	335	222 / 0	0 / 0	0 / 0	0 / 0	113 / 0	0 / 0
C	119	93 / 0	0 / 0	0 / 0	0 / 0	26 / 0	0 / 0
D	38	0 / 0	0 / 0	0 / 0	0 / 0	38 / 0	0 / 0

BEARING MATERIAL TO BE SPF NO.2 OR BETTER AT JOINT(S) E

BRACING

TOP CHORD TO BE SHEATHED OR MAX. PURLIN SPACING = 6.25 FT.
MAX. UNBRACED BOTTOM CHORD LENGTH = 10.00 FT OR RIGID CEILING DIRECTLY APPLIED.

ALL PITCH BREAKS AND PERIMETER CORNER JOINTS MUST BE LATERALLY RESTRAINED.

LOADING

TOTAL LOAD CASES: (4)

C H O R D S

MEMB. FR-TO	MAX. FACTORED FORCE (LBS)	FACTORED VERT. LOAD (PLF) FROM	TO	LC1 CSI (LC)	MAX UNBRAC LENGTH
E- B	-413 / 0	0.0	0.0	0.10 (4)	7.81
A- B	0 / 35	-78.0	-78.0	0.15 (1)	10.00
B- C	-32 / 0	-78.0	-78.0	0.46 (1)	6.25
E- D	0 / 0	-18.5	-18.5	0.14 (4)	10.00

W E B S

MEMB. FR-TO	MAX. FACTORED FORCE (LBS)	MAX CSI (LC)

DESIGN CRITERIA

SPECIFIED LOADS:

TOP CH.	LL	=	21.0	PSF
	DL	=	6.0	PSF
BOT CH.	LL	=	0.0	PSF
	DL	=	7.4	PSF
TOTAL LOAD		=	34.4	PSF

SPACING = 24.0 IN. C/C

THIS TRUSS IS DESIGNED FOR RESIDENTIAL OR SMALL BUILDING REQUIREMENTS OF PART 9, NBCC 2015

THIS DESIGN COMPLIES WITH:
- PART 9 OF BCBC 2018 , ABC 2019
- PART 9 OF OBC 2012 (2019 AMENDMENT)
- CSA 086-14
- TPIC 2014

DESIGN ASSUMPTIONS
-OVERHANG NOT TO BE ALTERED OR CUT OFF.

(55 % OF 23.0 P.S.F. G.S.L. PLUS 8.4 P.S.F. RAIN LOAD) EQUALS 21.0 P.S.F. SPECIFIED ROOF LIVE LOAD

ALLOWABLE DEFL.(LL)= L/360 (0.20")
CALCULATED VERT. DEFL.(LL) = L/ 999 (0.00")
ALLOWABLE DEFL.(TL)= L/360 (0.20")
CALCULATED VERT. DEFL.(TL) = L/ 999 (0.04")

CSI: TC=0.46/1.00 (B-C:1) , BC=0.14/1.00 (D-E:4) , WB=0.00/1.00 (n/a:0) , SSI=0.19/1.00 (B-C:1)

DOL LUMBER=1.00 NAIL=1.00 LS BEND=1.10 COMP=1.10 SHEAR=1.10 TENS= 1.10

COMPANION LIVE LOAD FACTOR = 1.00

TRUSS PLATE MANUFACTURER IS NOT RESPONSIBLE FOR QUALITY CONTROL IN THE TRUSS MANUFACTURING PLANT .

NAIL VALUES

PLATE	GRIP(DRY) (PSI) MAX	MIN	SHEAR (PLI) MAX	MIN	SECTION (PLI) MAX	MIN
MT20	650	371	1747	788	1987	1873

PLATE PLACEMENT TOL. = 0.250 inches

PLATE ROTATION TOL. = 5.0 Deg.

JSI GRIP= 0.25 (B) (INPUT = 0.90)
JSI METAL= 0.21 (B) (INPUT = 1.00)

JOB NAME	TRUSS NAME	QUANTITY	PLY	JOB DESC.		DRWG NO.
345248	J04		1	TRUSS DESC.	JT 45147	E22052012

Alpa Roof Truss, Maple

Version 8.530 S Feb 23 2022 MiTek Industries, Inc. Fri Jun 17 13:55:44 2022 Page 1

ID:wceEj9xaBTOj6r9Q4a6qjtzAj6D-A7sqQbXfO2xRHXd5OSfqUASEwA2fSukKd?PfDkz5NBT

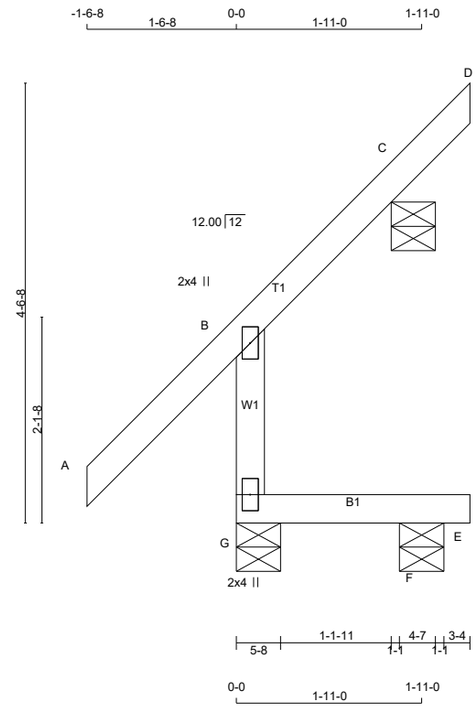

TOTAL WEIGHT = 6 X 11 = 69 lb

[M]

LUMBER

N. L. G. A. RULES

CHORDS	SIZE		LUMBER	DESCR.
G - B	2x4	DRY	No.2	SPF
A - D	2x4	DRY	No.2	SPF
G - E	2x4	DRY	No.2	SPF

DRY: SEASONED LUMBER.

PLATES (table is in inches)

JT	TYPE	PLATES	W	LEN	Y	X
B	TMV+p	MT20	2.0	4.0		
G	BMV1+p	MT20	2.0	4.0		

LATERAL BRACE(S) SHOWN SHALL BE 2X4 SPF#2

DIMENSIONS, SUPPORTS AND LOADINGS SPECIFIED BY FABRICATOR TO BE VERIFIED BY BUILDING DESIGNER

BEARINGS

JT	FACTORED GROSS REACTION VERT	HORZ	MAXIMUM FACTORED GROSS REACTION DOWN	HORZ	UPLIFT	INPUT BRG IN-SX	REQRD BRG IN-SX
G	274	0	274	0	0	5-8	1-8
F	16	0	27	0	0	5-8	1-8
C	79	0	79	0	-25	5-8	5-8

BEVELED PLATE OR SHIM REQUIRED TO PROVIDE FULL BEARING SURFACE WITH TRUSS CHORD AT JT(S): C

PROVIDE ANCHORAGE AT BEARING JOINT C FOR 150 LBS FACTORED UPLIFT

UNFACTORED REACTIONS

JT	1ST LCASE COMBINED	MAX./MIN. COMPONENT REACTIONS SNOW	LIVE	PERM.LIVE	WIND	DEAD	SOIL
G	192	138 / 0	0 / 0	0 / 0	0 / 0	54 / 0	0 / 0
F	14	0 / -8	0 / 0	0 / 0	0 / 0	19 / 0	0 / 0
C	55	42 / -23	0 / 0	0 / 0	0 / 0	13 / 0	0 / 0

BEARING MATERIAL TO BE SPF NO.2 OR BETTER AT JOINT(S) G, F, C

BRACING

TOP CHORD TO BE SHEATHED OR MAX. PURLIN SPACING = 6.25 FT.
MAX. UNBRACED BOTTOM CHORD LENGTH = 10.00 FT OR RIGID CEILING DIRECTLY APPLIED.

ALL PITCH BREAKS AND PERIMETER CORNER JOINTS MUST BE LATERALLY RESTRAINED.

LOADING

TOTAL LOAD CASES: (5)

CHORDS

MEMB. FR-TO	MAX. FACTORED FORCE (LBS)	VERT. LOAD LC1 (PLF) FROM	TO	MAX CSI (LC)	MAX. UNBRAC LENGTH
G- B	-246 / 0	0.0	0.0	0.04 (5)	7.81
A- B	0 / 45	-78.0	-78.0	0.16 (5)	10.00
B- C	-32 / 0	-78.0	-78.0	0.11 (1)	6.25
C- D	-19 / 0	-78.0	-78.0	0.03 (1)	6.25
G- F	0 / 0	-18.5	-18.5	0.04 (5)	10.00
F- E	0 / 0	-18.5	-18.5	0.01 (4)	10.00

WEBS

MEMB. FR-TO	MAX. FACTORED FORCE (LBS)	MAX CSI (LC)

CANTILEVER ANALYSIS HAS BEEN CONSIDERED IN THIS DESIGN

PATTERN-LOADING CHECK APPLIED TO THIS TRUSS.

DESIGN CRITERIA

SPECIFIED LOADS:

TOP CH.	LL	=	21.0	PSF
	DL	=	6.0	PSF
BOT CH.	LL	=	0.0	PSF
	DL	=	7.4	PSF
TOTAL LOAD		=	34.4	PSF

SPACING = 24.0 IN. C/C

THIS TRUSS IS DESIGNED FOR RESIDENTIAL OR SMALL BUILDING REQUIREMENTS OF PART 9, NBCC 2015

THIS DESIGN COMPLIES WITH:
- PART 9 OF BCBC 2018 , ABC 2019
- PART 9 OF OBC 2012 (2019 AMENDMENT)
- CSA 086-14
- TPIC 2014

DESIGN ASSUMPTIONS
-OVERHANG NOT TO BE ALTERED OR CUT OFF.

(55 % OF 23.0 P.S.F. G.S.L. PLUS 8.4 P.S.F. RAIN LOAD) EQUALS 21.0 P.S.F. SPECIFIED ROOF LIVE LOAD

ALLOWABLE DEFL.(LL)= L/360 (0.19")
CALCULATED VERT. DEFL.(LL) = L/ 999 (0.00")
ALLOWABLE DEFL.(TL)= L/360 (0.19")
CALCULATED VERT. DEFL.(TL) = L/ 999 (0.00")

CANTILEVER DEFLECTION:
ALLOWABLE DEFL.(TL)= L/120 (0.19")
CALCULATED VERT. DEFL.(TL) = L/ 999 (0.00")

CSI: TC=0.16/1.00 (A-B:5) , BC=0.04/1.00 (F-G:5) , WB=0.00/1.00 (n/a:0) , SSI=0.07/1.00 (A-B:5)

DOL LUMBER=1.00 NAIL=1.00 LS BEND=1.10 COMP=1.10 SHEAR=1.10 TENS= 1.10

COMPANION LIVE LOAD FACTOR = 1.00

AUTOSOLVE RIGHT HEEL ONLY

TRUSS PLATE MANUFACTURER IS NOT RESPONSIBLE FOR QUALITY CONTROL IN THE TRUSS MANUFACTURING PLANT .

NAIL VALUES

PLATE	GRIP(DRY) (PSI) MAX	MIN	SHEAR (PLI) MAX	MIN	SECTION (PLI) MAX	MIN
MT20	650	371	1747	788	1987	1873

PLATE PLACEMENT TOL. = 0.250 inches

PLATE ROTATION TOL. = 5.0 Deg.

JSI GRIP= 0.18 (B) (INPUT = 0.90)
JSI METAL= 0.13 (B) (INPUT = 1.00)

JOB NAME	TRUSS NAME	QUANTITY	PLY	JOB DESC.	DRWG NO.
345248	P10B		1	TRUSS DESC. JT 45147	E22052013

Alpha Roof Truss, Maple

Version 8.530 S Feb 23 2022 MiTek Industries, Inc. Fri Jun 17 13:55:45 2022 Page 1

ID:wceEj9xaBTOj6r9Q4a6gjtzAj6D-eJQ2exYH9M3IuhCHy9Av1N?PvaNXBLETsf8ClAz5NBS

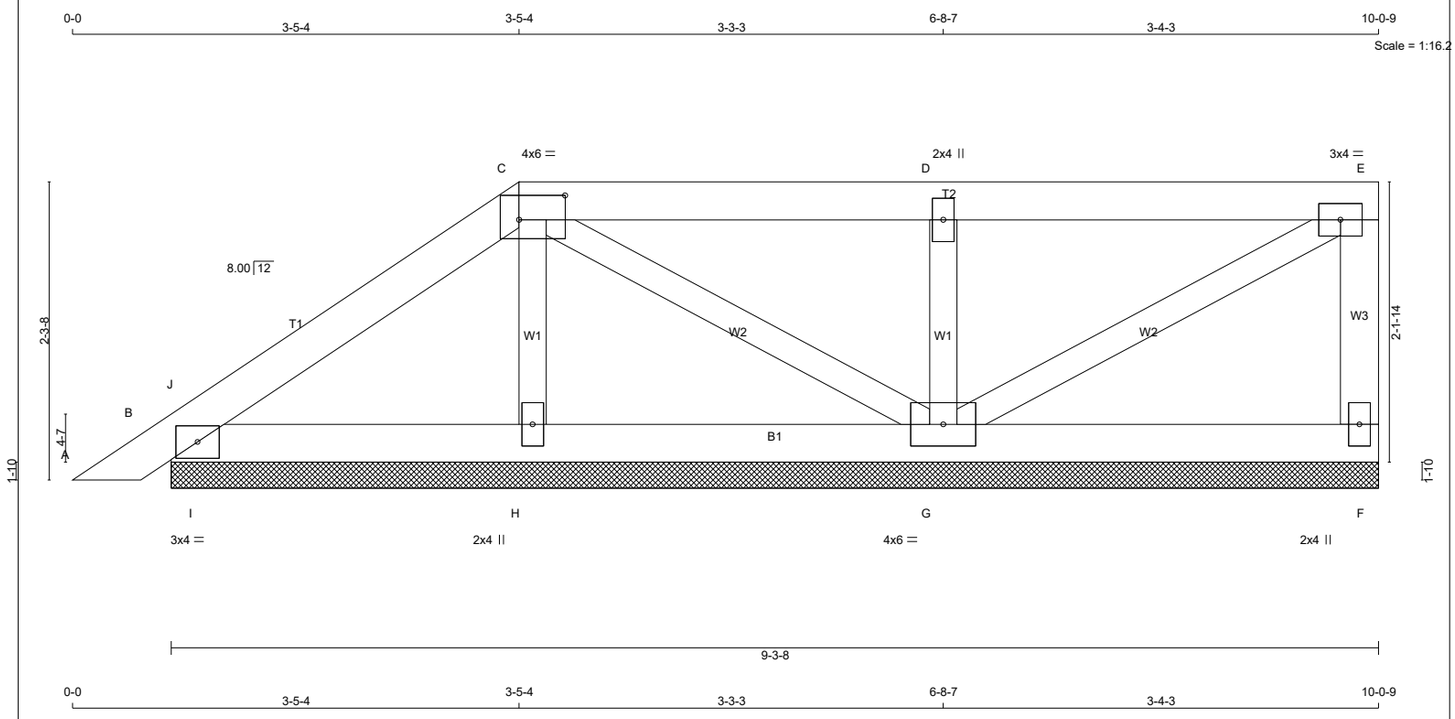

TOTAL WEIGHT = 33 lb

[M]

LUMBER

N. L. G. A. RULES

CHORDS	SIZE		LUMBER	DESCR.
A - C	2x4	DRY	No.2	SPF
C - E	2x4	DRY	No.2	SPF
F - E	2x4	DRY	No.2	SPF
B - F	2x4	DRY	No.2	SPF
ALL WEBS	2x3	DRY	No.2	SPF

DRY: SEASONED LUMBER.

PLATES (table is in inches)

JT	TYPE	PLATES	W	LEN	Y	X
B	TMB1-I	MT20	3.0	4.0		
C	TTWW-I	MT20	4.0	6.0	2.25	4.25
D	TMW+w	MT20	2.0	4.0		
E	TMVW-t	MT20	3.0	4.0		
F	BMV1+p	MT20	2.0	4.0		
G	BMWWW1-t	MT20	4.0	6.0		
H	BMW1+w	MT20	2.0	4.0		

LATERAL BRACE(S) SHOWN SHALL BE 2X4 SPF#2

LICENSED PROFESSIONAL ENGINEER
V. WIDYA
100225448
06/17/2022
PROVINCE OF ONTARIO

DIMENSIONS, SUPPORTS AND LOADINGS SPECIFIED BY FABRICATOR TO BE VERIFIED BY BUILDING DESIGNER

BEARINGS

JT	FACTORED GROSS REACTION VERT	HORZ	MAXIMUM FACTORED GROSS REACTION DOWN	HORZ	UPLIFT	INPUT BRG IN-SX	REQRD BRG IN-SX
F	123	0	123	0	0	9-3-8	1-8
B	203	0	203	0	0	9-3-8	1-8
H	216	0	216	0	0	9-3-8	1-8
G	407	0	407	0	0	9-3-8	1-8

UNFACTORED REACTIONS

JT	1ST LCASE COMBINED	MAX./MIN. COMPONENT REACTIONS SNOW	LIVE	PERM.LIVE	WIND	DEAD	SOIL
F	88	53 / 0	0 / 0	0 / 0	0 / 0	35 / 0	0 / 0
B	143	97 / 0	0 / 0	0 / 0	0 / 0	46 / 0	0 / 0
H	155	87 / 0	0 / 0	0 / 0	0 / 0	69 / 0	0 / 0
G	289	182 / 0	0 / 0	0 / 0	0 / 0	107 / 0	0 / 0

BEARING MATERIAL TO BE SPF NO.2 OR BETTER AT JOINT(S) F, B, H, G

BRACING

TOP CHORD TO BE SHEATHED OR MAX. PURLIN SPACING = 6.25 FT.
MAX. UNBRACED BOTTOM CHORD LENGTH = 10.00 FT OR RIGID CEILING DIRECTLY APPLIED.

ALL PITCH BREAKS AND PERIMETER CORNER JOINTS MUST BE LATERALLY RESTRAINED.

LOADING

TOTAL LOAD CASES: (4)

C H O R D S

MEMB. FR-TO	MAX. FORCE (LBS)	FACTORED VERT. LOAD (PLF) FROM	TO	LC1 CSI (LC)	MAX UNBRAC LENGTH
A- B	0 / 14	-78.0	-78.0	0.03 (1)	10.00
B- J	-30 / 0	-78.0	-78.0	0.02 (1)	6.25
J- C	-52 / 0	-78.0	-78.0	0.07 (1)	6.25
C- D	0 / 3	-78.0	-78.0	0.14 (1)	10.00
D- E	0 / 3	-78.0	-78.0	0.14 (1)	10.00
F- E	-97 / 0	0.0	0.0	0.01 (1)	7.81
B- I	0 / 41	-18.5	-18.5	0.06 (1)	10.00
I- H	0 / 41	-18.5	-18.5	0.06 (1)	10.00
H- G	0 / 34	-18.5	-18.5	0.05 (4)	10.00
G- F	0 / 0	-18.5	-18.5	0.05 (4)	10.00

W E B S

MEMB. FR-TO	MAX. FORCE (LBS)	MAX CSI (LC)
H- C	-134 / 0	0.02 (1)
C- G	-42 / 0	0.01 (1)
G- D	-322 / 0	0.05 (1)
G- E	-3 / 0	0.00 (1)
I- J	-139 / 0	0.00 (1)

DESIGN CRITERIA

SPECIFIED LOADS:

TOP CH.	LL	=	21.0	PSF
	DL	=	6.0	PSF
BOT CH.	LL	=	0.0	PSF
	DL	=	7.4	PSF
TOTAL LOAD		=	34.4	PSF

SPACING = 24.0 IN. C/C

LOADING IN FLAT SECTION BASED ON A SLOPE OF 2.00/12 MINIMUM

THIS TRUSS IS DESIGNED FOR RESIDENTIAL OR SMALL BUILDING REQUIREMENTS OF PART 9, NBCC 2015

THIS DESIGN COMPLIES WITH:
- PART 9 OF BCBC 2018 , ABC 2019
- PART 9 OF OBC 2012 (2019 AMENDMENT)
- CSA 086-14
- TPIC 2014

(55 % OF 23.0 P.S.F. G.S.L. PLUS 8.4 P.S.F. RAIN LOAD) EQUALS 21.0 P.S.F. SPECIFIED ROOF LIVE LOAD

CSI: TC=0.14/1.00 (C-D:1) , BC=0.06/1.00 (B-I:1) , WB=0.05/1.00 (D-G:1) , SSI=0.13/1.00 (D-E:1)

DOL LUMBER=1.00 NAIL=1.00 LS BEND=1.10 COMP=1.10 SHEAR=1.10 TENS= 1.10

COMPANION LIVE LOAD FACTOR = 1.00

TRUSS PLATE MANUFACTURER IS NOT RESPONSIBLE FOR QUALITY CONTROL IN THE TRUSS MANUFACTURING PLANT .

NAIL VALUES

PLATE	GRIP(DRY) (PSI) MAX	MIN	SHEAR (PLI) MAX	MIN	SECTION (PLI) MAX	MIN
MT20	650	371	1747	788	1987	1873

PLATE PLACEMENT TOL. = 0.250 inches

PLATE ROTATION TOL. = 5.0 Deg.

JSI GRIP= 0.16 (D) (INPUT = 0.90)
JSI METAL= 0.07 (D) (INPUT = 1.00)

JOB NAME	TRUSS NAME	QUANTITY	PLY	JOB DESC.	DRWG NO.
345248	P10C		1	TRUSS DESC. JT 45147	E22052014

Alpa Roof Truss, Maple

Version 8.530 S Feb 23 2022 MiTek Industries, Inc. Fri Jun 17 13:55:47 2022 Page 1

ID:wceEj9xaBTOj6r9Q4a6gjtzAj6D-biYo3dZYhzK08?Mg3aCN6o4iEO1hfFnmKydJq3z5NBQ

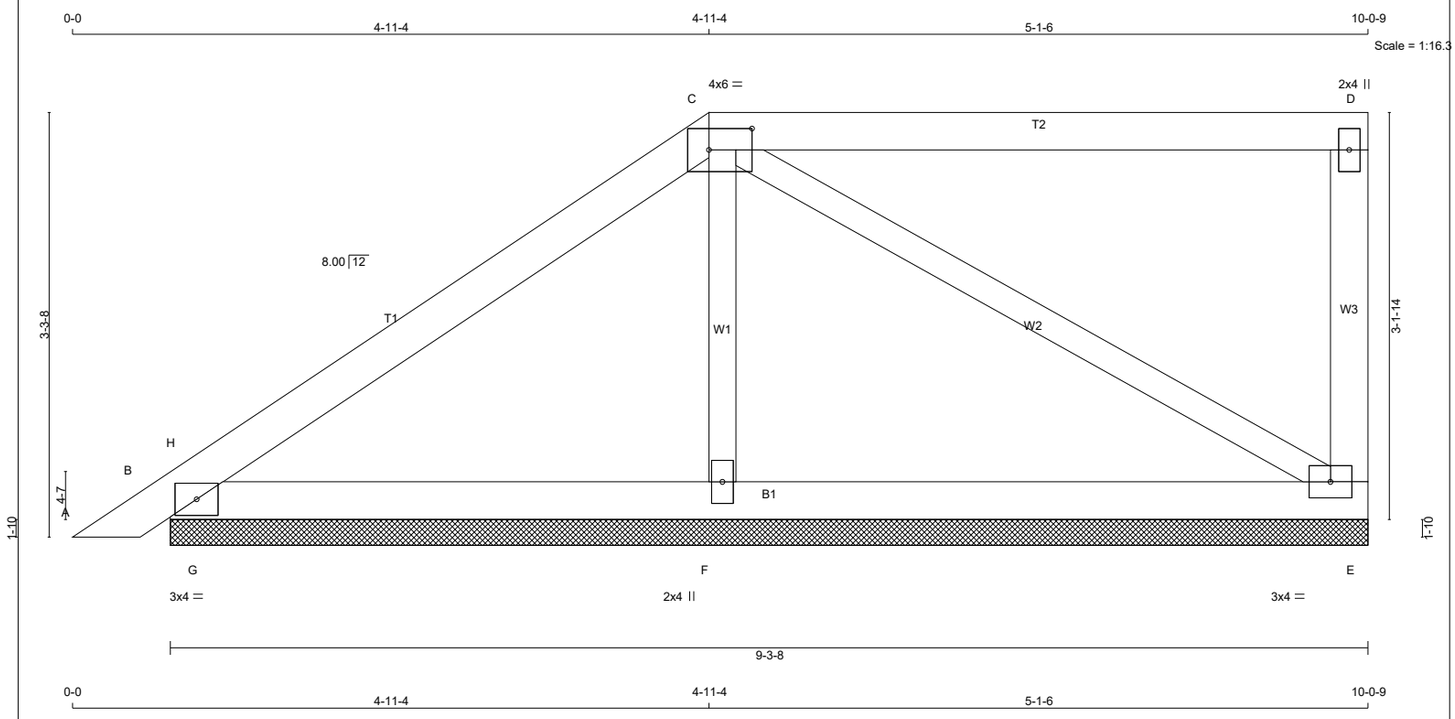

TOTAL WEIGHT = 33 lb

[M]

LUMBER

N. L. G. A. RULES

CHORDS	SIZE		LUMBER	DESCR.
A - C	2x4	DRY	No.2	SPF
C - D	2x4	DRY	No.2	SPF
E - D	2x4	DRY	No.2	SPF
B - E	2x4	DRY	No.2	SPF
ALL WEBS	2x3	DRY	No.2	SPF

DRY: SEASONED LUMBER.

PLATES (table is in inches)

JT	TYPE	PLATES	W	LEN	Y	X
B	TMB1-I	MT20	3.0	4.0		
C	TTWW-I	MT20	4.0	6.0	2.00	4.00
D	TMV+p	MT20	2.0	4.0		
E	BMVW1-t	MT20	3.0	4.0		
F	BMW1+w	MT20	2.0	4.0		

LATERAL BRACE(S) SHOWN SHALL BE 2X4 SPF#2

DIMENSIONS, SUPPORTS AND LOADINGS SPECIFIED BY FABRICATOR TO BE VERIFIED BY BUILDING DESIGNER

BEARINGS

JT	FACTORED GROSS REACTION VERT	HORZ	MAXIMUM FACTORED GROSS REACTION DOWN	HORZ	UPLIFT	INPUT BRG IN-SX	REQRD BRG IN-SX
E	271	0	271	0	0	9-3-8	1-8
B	294	0	294	0	0	9-3-8	1-8
F	383	0	383	0	0	9-3-8	1-8

UNFACTORED REACTIONS

JT	1ST LCASE COMBINED	MAX./MIN. COMPONENT REACTIONS SNOW	LIVE	PERM.LIVE	WIND	DEAD	SOIL
E	192	125 / 0	0 / 0	0 / 0	0 / 0	66 / 0	0 / 0
B	207	142 / 0	0 / 0	0 / 0	0 / 0	65 / 0	0 / 0
F	277	151 / 0	0 / 0	0 / 0	0 / 0	126 / 0	0 / 0

BEARING MATERIAL TO BE SPF NO.2 OR BETTER AT JOINT(S) E, B, F

BRACING

TOP CHORD TO BE SHEATHED OR MAX. PURLIN SPACING = 6.25 FT.
MAX. UNBRACED BOTTOM CHORD LENGTH = 10.00 FT OR RIGID CEILING DIRECTLY APPLIED.

ALL PITCH BREAKS AND PERIMETER CORNER JOINTS MUST BE LATERALLY RESTRAINED.

LOADING

TOTAL LOAD CASES: (4)

CHORDS

MEMB. FR-TO	MAX. FACTORED FORCE (LBS)	FACTORED VERT. LOAD (PLF) FROM	TO	LC1 MAX CSI (LC)	MAX. UNBRAC LENGTH
A- B	0 / 14	-78.0	-78.0	0.03 (1)	10.00
B- H	-20 / 0	-78.0	-78.0	0.07 (1)	6.25
H- C	-105 / 0	-78.0	-78.0	0.17 (1)	6.25
C- D	0 / 0	-78.0	-78.0	0.35 (1)	10.00
E- D	-199 / 0	0.0	0.0	0.03 (1)	7.81
B- G	0 / 81	-18.5	-18.5	0.15 (1)	10.00
G- F	0 / 81	-18.5	-18.5	0.15 (1)	10.00
F- E	0 / 73	-18.5	-18.5	0.13 (4)	10.00

WEBS

MEMB. FR-TO	MAX. FACTORED FORCE (LBS)	MAX CSI (LC)
F- C	-242 / 0	0.04 (1)
C- E	-83 / 0	0.04 (1)
G- H	-329 / 0	0.00 (1)

DESIGN CRITERIA

SPECIFIED LOADS:

TOP CH.	LL	=	21.0	PSF
	DL	=	6.0	PSF
BOT CH.	LL	=	0.0	PSF
	DL	=	7.4	PSF
TOTAL LOAD		=	34.4	PSF

SPACING = 24.0 IN. C/C

LOADING IN FLAT SECTION BASED ON A SLOPE OF 2.00/12 MINIMUM

THIS TRUSS IS DESIGNED FOR RESIDENTIAL OR SMALL BUILDING REQUIREMENTS OF PART 9, NBCC 2015

THIS DESIGN COMPLIES WITH:
- PART 9 OF BCBC 2018 , ABC 2019
- PART 9 OF OBC 2012 (2019 AMENDMENT)
- CSA 086-14
- TPIC 2014

(55 % OF 23.0 P.S.F. G.S.L. PLUS 8.4 P.S.F. RAIN LOAD) EQUALS 21.0 P.S.F. SPECIFIED ROOF LIVE LOAD

CSI: TC=0.35/1.00 (C-D:1) , BC=0.15/1.00 (B-G:1) , WB=0.04/1.00 (C-F:1) , SSI=0.26/1.00 (B-G:1)

DOL LUMBER=1.00 NAIL=1.00 LS BEND=1.10 COMP=1.10 SHEAR=1.10 TENS= 1.10

COMPANION LIVE LOAD FACTOR = 1.00

TRUSS PLATE MANUFACTURER IS NOT RESPONSIBLE FOR QUALITY CONTROL IN THE TRUSS MANUFACTURING PLANT .

NAIL VALUES

PLATE	GRIP(DRY) (PSI) MAX	MIN	SHEAR (PLI) MAX	MIN	SECTION (PLI) MAX	MIN
MT20	650	371	1747	788	1987	1873

PLATE PLACEMENT TOL. = 0.250 inches

PLATE ROTATION TOL. = 5.0 Deg.

JSI GRIP= 0.24 (B) (INPUT = 0.90)
JSI METAL= 0.05 (B) (INPUT = 1.00)

JOB NAME	TRUSS NAME	QUANTITY	PLY	JOB DESC.	DRWG NO.
345248	P10D		1	TRUSS DESC. JT 45147	E22052015

Alpa Roof Truss, Maple

Version 8.530 S Feb 23 2022 MiTek Industries, Inc. Fri Jun 17 13:55:48 2022 Page 1
ID:wceEj9xaBTOj6r9Q4a6gjtzAj6D-3u6AGzaASHStl9wsdIjcf0duRnMFOhjwYcNtMVz5NBP

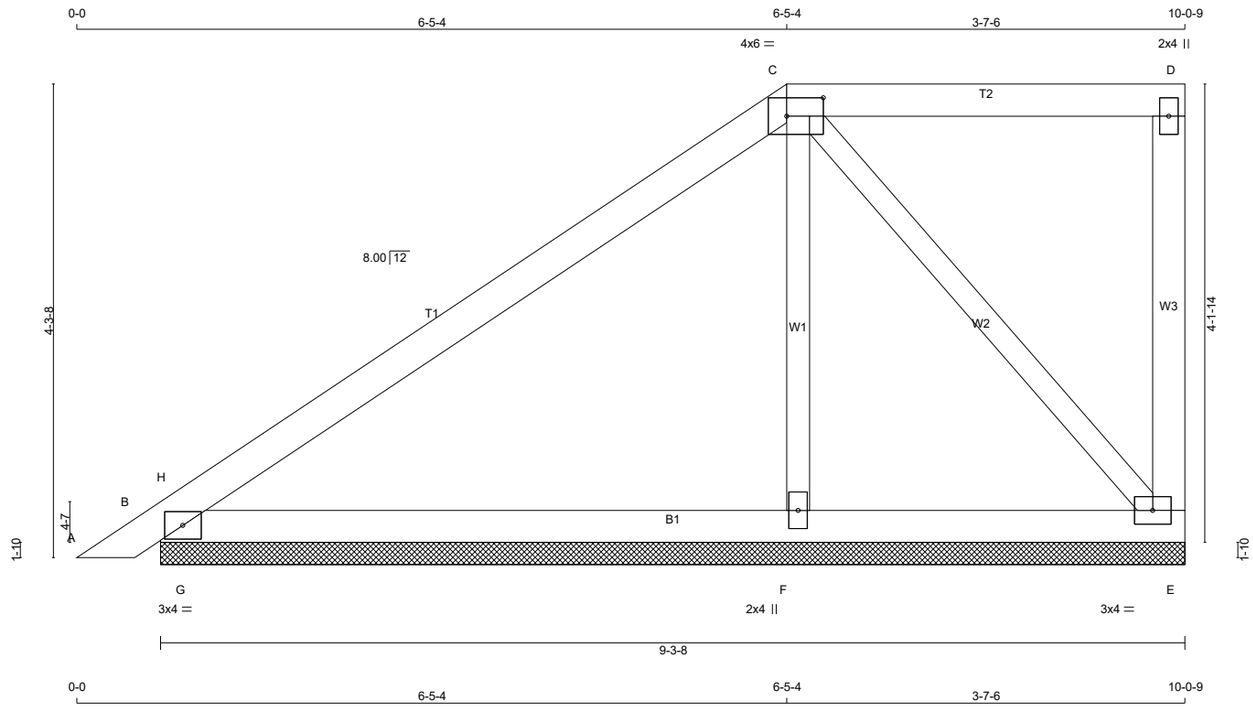

TOTAL WEIGHT = 34 lb
[M]

LUMBER
N. L. G. A. RULES

CHORDS	SIZE		LUMBER	DESCR.
A - C	2x4	DRY	No.2	SPF
C - D	2x4	DRY	No.2	SPF
E - D	2x4	DRY	No.2	SPF
B - E	2x4	DRY	No.2	SPF
ALL WEBS	2x3	DRY	No.2	SPF

DRY: SEASONED LUMBER.

PLATES (table is in inches)

JT	TYPE	PLATES	W	LEN	Y	X
B	TMB1-I	MT20	3.0	4.0		
C	TTWW-I	MT20	4.0	6.0	2.00	4.00
D	TMV+p	MT20	2.0	4.0		
E	BMVW1-t	MT20	3.0	4.0		
F	BMW1+w	MT20	2.0	4.0		

LATERAL BRACE(S) SHOWN SHALL BE 2X4 SPF#2

DIMENSIONS, SUPPORTS AND LOADINGS SPECIFIED BY FABRICATOR TO BE VERIFIED BY BUILDING DESIGNER

BEARINGS

JT	FACTORED GROSS REACTION VERT	HORZ	MAXIMUM FACTORED GROSS REACTION DOWN	HORZ	UPLIFT	INPUT BRG IN-SX	REQRD BRG IN-SX
E	253	0	253	0	0	9-3-8	1-8
B	383	0	383	0	0	9-3-8	1-8
F	314	0	314	0	0	9-3-8	1-8

UNFACTORED REACTIONS

JT	1ST LCASE COMBINED	MAX./MIN. COMPONENT REACTIONS SNOW	LIVE	PERM.LIVE	WIND	DEAD	SOIL
E	178	122 / 0	0 / 0	0 / 0	0 / 0	56 / 0	0 / 0
B	270	179 / 0	0 / 0	0 / 0	0 / 0	91 / 0	0 / 0
F	228	117 / 0	0 / 0	0 / 0	0 / 0	110 / 0	0 / 0

BEARING MATERIAL TO BE SPF NO.2 OR BETTER AT JOINT(S) E, B, F

BRACING
TOP CHORD TO BE SHEATHED OR MAX. PURLIN SPACING = 6.25 FT.
MAX. UNBRACED BOTTOM CHORD LENGTH = 10.00 FT OR RIGID CEILING DIRECTLY APPLIED.

ALL PITCH BREAKS AND PERIMETER CORNER JOINTS MUST BE LATERALLY RESTRAINED.

LOADING
TOTAL LOAD CASES: (4)

CHORDS

MEMB. FR-TO	MAX. FACTORED FORCE (LBS)	FACTORED VERT. LOAD LC1 (PLF) FROM	TO	MAX CSI (LC)	MAX. UNBRAC LENGTH
A- B	0 / 14	-78.0	-78.0	0.03 (1)	10.00
B- H	-38 / 81	-78.0	-78.0	0.16 (1)	6.25
H- C	-142 / 0	-78.0	-78.0	0.32 (1)	6.25
C- D	0 / 0	-78.0	-78.0	0.17 (1)	10.00
E- D	-141 / 0	0.0	0.0	0.04 (1)	7.81
B- G	0 / 109	-18.5	-18.5	0.25 (1)	10.00
G- F	0 / 109	-18.5	-18.5	0.25 (1)	10.00
F- E	0 / 105	-18.5	-18.5	0.17 (1)	10.00

WEBS

MEMB. FR-TO	MAX. FACTORED FORCE (LBS)	MAX CSI (LC)
F- C	-146 / 0	0.04 (1)
C- E	-153 / 0	0.06 (1)
G- H	-571 / 0	0.00 (1)

DESIGN CRITERIA

SPECIFIED LOADS:

TOP CH.	LL	=	21.0	PSF
	DL	=	6.0	PSF
BOT CH.	LL	=	0.0	PSF
	DL	=	7.4	PSF
TOTAL LOAD		=	34.4	PSF

SPACING = 24.0 IN. C/C

LOADING IN FLAT SECTION BASED ON A SLOPE OF 2.00/12 MINIMUM

THIS TRUSS IS DESIGNED FOR RESIDENTIAL OR SMALL BUILDING REQUIREMENTS OF PART 9, NBCC 2015

THIS DESIGN COMPLIES WITH:
- PART 9 OF BCBC 2018 , ABC 2019
- PART 9 OF OBC 2012 (2019 AMENDMENT)
- CSA 086-14
- TPIC 2014

(55 % OF 23.0 P.S.F. G.S.L. PLUS 8.4 P.S.F. RAIN LOAD) EQUALS 21.0 P.S.F. SPECIFIED ROOF LIVE LOAD

CSI: TC=0.32/1.00 (C-H:1) , BC=0.25/1.00 (F-G:1) , WB=0.06/1.00 (C-E:1) , SSI=0.45/1.00 (B-G:1)

DOL LUMBER=1.00 NAIL=1.00 LS BEND=1.10 COMP=1.10 SHEAR=1.10 TENS= 1.10

COMPANION LIVE LOAD FACTOR = 1.00

TRUSS PLATE MANUFACTURER IS NOT RESPONSIBLE FOR QUALITY CONTROL IN THE TRUSS MANUFACTURING PLANT .

NAIL VALUES

PLATE	GRIP(DRY) (PSI) MAX	MIN	SHEAR (PLI) MAX	MIN	SECTION (PLI) MAX	MIN
MT20	650	371	1747	788	1987	1873

PLATE PLACEMENT TOL. = 0.250 inches

PLATE ROTATION TOL. = 5.0 Deg.

JSI GRIP= 0.31 (B) (INPUT = 0.90)
JSI METAL= 0.07 (B) (INPUT = 1.00)

JOB NAME	TRUSS NAME	QUANTITY	PLY	JOB DESC.	DRWG NO.
345248	P10E		1	TRUSS DESC. JT 45147	E22052016

Alpa Roof Truss, Maple

ID:wceEj9xaBTOj6r9Q4a6gjtzAj6D-X5gZUIboDaakNIV3B?FrBDA0CBfJ78D3nG6Quyz5NBO

Scale = 1:23.3

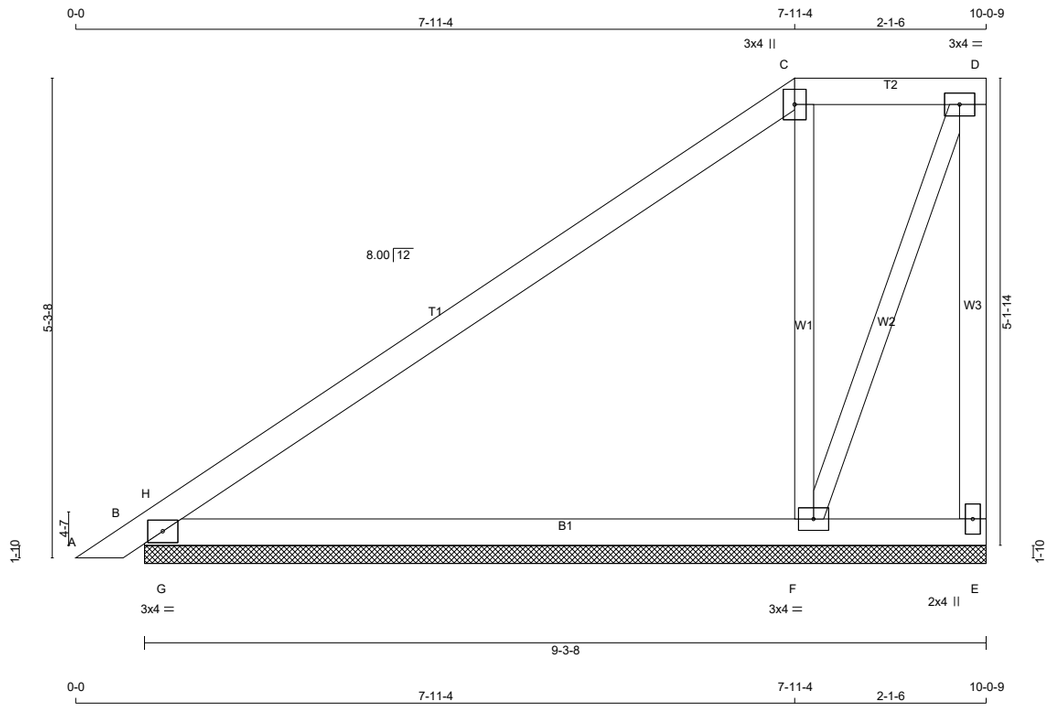

TOTAL WEIGHT = 37 lb

LUMBER

N. L. G. A. RULES

CHORDS	SIZE		LUMBER	DESCR.
A - C	2x4	DRY	No.2	SPF
C - D	2x4	DRY	No.2	SPF
E - D	2x4	DRY	No.2	SPF
B - E	2x4	DRY	No.2	SPF
ALL WEBS	2x3	DRY	No.2	SPF

DRY: SEASONED LUMBER.

PLATES (table is in inches)

JT	TYPE	PLATES	W	LEN	Y	X
B	TMB1-l	MT20	3.0	4.0		
C	TTW+p	MT20	3.0	4.0		
D	TMVW-t	MT20	3.0	4.0		
E	BMV1+p	MT20	2.0	4.0		
F	BMWW1-t	MT20	3.0	4.0		

LATERAL BRACE(S) SHOWN SHALL BE 2X4 SPF#2

DIMENSIONS, SUPPORTS AND LOADINGS SPECIFIED BY FABRICATOR TO BE VERIFIED BY BUILDING DESIGNER

BEARINGS

JT	FACTORED GROSS REACTION VERT	HORZ	MAXIMUM FACTORED GROSS REACTION DOWN	HORZ	UPLIFT	INPUT BRG IN-SX	REQRD BRG IN-SX
E	115	0	115	0	0	9-3-8	1-8
B	409	0	409	0	0	9-3-8	1-8
F	425	0	425	0	0	9-3-8	1-8

UNFACTORED REACTIONS

JT	1ST LCASE COMBINED	MAX./MIN. COMPONENT REACTIONS SNOW	LIVE	PERM.LIVE	WIND	DEAD	SOIL
E	79	65 / 0	0 / 0	0 / 0	0 / 0	14 / 0	0 / 0
B	290	188 / 0	0 / 0	0 / 0	0 / 0	102 / 0	0 / 0
F	307	166 / 0	0 / 0	0 / 0	0 / 0	140 / 0	0 / 0

BEARING MATERIAL TO BE SPF NO.2 OR BETTER AT JOINT(S) E, B, F

BRACING

TOP CHORD TO BE SHEATHED OR MAX. PURLIN SPACING = 6.25 FT.
MAX. UNBRACED BOTTOM CHORD LENGTH = 10.00 FT OR RIGID CEILING DIRECTLY APPLIED.

ALL PITCH BREAKS AND PERIMETER CORNER JOINTS MUST BE LATERALLY RESTRAINED.

LOADING

TOTAL LOAD CASES: (4)

CHORDS

MEMB. FR-TO	MAX. FACTORED FORCE (LBS)	FACTORED VERT. LOAD LC1 (PLF) FROM	TO	MAX CSI (LC)	MAX. UNBRAC LENGTH
A- B	0 / 14	-78.0	-78.0	0.03 (1)	10.00
B- H	-9 / 333	-78.0	-78.0	0.32 (1)	10.00
H- C	-82 / 0	-78.0	-78.0	0.51 (1)	6.25
C- D	-49 / 0	-78.0	-78.0	0.06 (1)	6.25
E- D	-201 / 0	0.0	0.0	0.09 (1)	7.81
B- G	0 / 55	-18.5	-18.5	0.39 (1)	10.00
G- F	0 / 55	-18.5	-18.5	0.39 (1)	10.00
F- E	0 / 0	-18.5	-18.5	0.28 (1)	10.00

WEBS

MEMB. FR-TO	MAX. FACTORED FORCE (LBS)	MAX CSI (LC)
F- C	-286 / 0	0.11 (1)
F- D	0 / 128	0.03 (1)
G- H	-932 / 0	0.00 (1)

DESIGN CRITERIA

SPECIFIED LOADS:

TOP CH.	LL	=	21.0	PSF
	DL	=	6.0	PSF
BOT CH.	LL	=	0.0	PSF
	DL	=	7.4	PSF
TOTAL LOAD		=	34.4	PSF

SPACING = 24.0 IN. C/C

LOADING IN FLAT SECTION BASED ON A SLOPE OF 2.00/12 MINIMUM

THIS TRUSS IS DESIGNED FOR RESIDENTIAL OR SMALL BUILDING REQUIREMENTS OF PART 9, NBCC 2015

THIS DESIGN COMPLIES WITH:
- PART 9 OF BCBC 2018 , ABC 2019
- PART 9 OF OBC 2012 (2019 AMENDMENT)
- CSA 086-14
- TPIC 2014

(55 % OF 23.0 P.S.F. G.S.L. PLUS 8.4 P.S.F. RAIN LOAD) EQUALS 21.0 P.S.F. SPECIFIED ROOF LIVE LOAD

CSI: TC=0.51/1.00 (C-H:1) , BC=0.39/1.00 (B-G:1) , WB=0.11/1.00 (C-F:1) , SSI=0.73/1.00 (B-G:1)

DOL LUMBER=1.00 NAIL=1.00 LS BEND=1.10 COMP=1.10 SHEAR=1.10 TENS= 1.10

COMPANION LIVE LOAD FACTOR = 1.00

TRUSS PLATE MANUFACTURER IS NOT RESPONSIBLE FOR QUALITY CONTROL IN THE TRUSS MANUFACTURING PLANT .

NAIL VALUES

PLATE	GRIP(DRY) (PSI) MAX	MIN	SHEAR (PLI) MAX	MIN	SECTION (PLI) MAX	MIN
MT20	650	371	1747	788	1987	1873

PLATE PLACEMENT TOL. = 0.250 inches

PLATE ROTATION TOL. = 5.0 Deg.

JSI GRIP= 0.35 (B) (INPUT = 0.90)
JSI METAL= 0.09 (C) (INPUT = 1.00)

JOB NAME	TRUSS NAME	QUANTITY	PLY	JOB DESC.	DRWG NO.
345248	P10F		1	TRUSS DESC. JT 45147	E22052017

Alpa Roof Truss, Maple

Version 8.530 S Feb 23 2022 MiTek Industries, Inc. Fri Jun 17 13:55:51 2022 Page 1

ID:wceEj9xaBTOj6r9Q4a6qjtzAj6D-TTnJu_c2lCqSccfRIQHJHeFPW?Q0b3VMEabXzqz5NBM

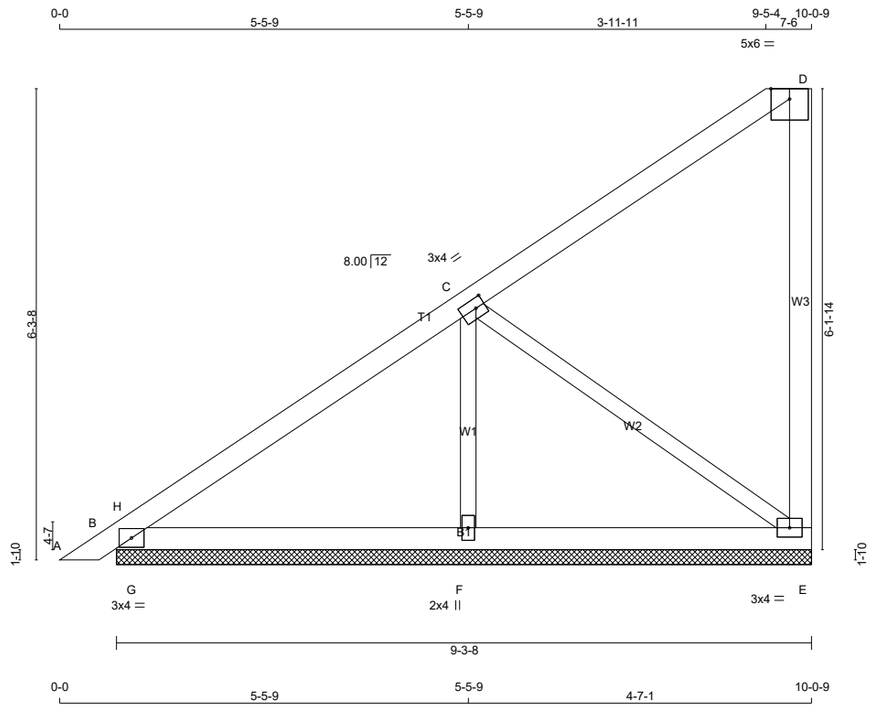

TOTAL WEIGHT = 37 lb

[M]

LUMBER

N. L. G. A. RULES

CHORDS	SIZE		LUMBER	DESCR.
A - D	2x4	DRY	No.2	SPF
E - D	2x4	DRY	No.2	SPF
B - E	2x4	DRY	No.2	SPF
ALL WEBS	2x3	DRY	No.2	SPF

DRY: SEASONED LUMBER.

PLATES (table is in inches)

JT	TYPE	PLATES	W	LEN	Y	X
B	TMB1-l	MT20	3.0	4.0		
C	TMWW-t	MT20	3.0	4.0	1.50	1.50
D	TMVM*-p	MT20	5.0	6.0	Edge	
E	BMVW1-t	MT20	3.0	4.0		
F	BMW1+w	MT20	2.0	4.0		

Edge - INDICATES REFERENCE CORNER OF PLATE TOUCHES EDGE OF CHORD.

LATERAL BRACE(S) SHOWN SHALL BE 2X4 SPF#2

DIMENSIONS, SUPPORTS AND LOADINGS SPECIFIED BY FABRICATOR TO BE VERIFIED BY BUILDING DESIGNER

BEARINGS

JT	FACTORED GROSS REACTION VERT	HORZ	MAXIMUM FACTORED GROSS REACTION DOWN	HORZ	UPLIFT	INPUT BRG IN-SX	REQRD BRG IN-SX
E	231	0	231	0	0	9-3-8	1-8
B	290	0	290	0	0	9-3-8	1-8
F	428	0	428	0	0	9-3-8	1-8

UNFACTORED REACTIONS

JT	1ST LCASE COMBINED	MAX./MIN. COMPONENT REACTIONS SNOW	LIVE	PERM.LIVE	WIND	DEAD	SOIL
E	164	106 / 0	0 / 0	0 / 0	0 / 0	58 / 0	0 / 0
B	204	136 / 0	0 / 0	0 / 0	0 / 0	68 / 0	0 / 0
F	307	176 / 0	0 / 0	0 / 0	0 / 0	131 / 0	0 / 0

BEARING MATERIAL TO BE SPF NO.2 OR BETTER AT JOINT(S) E, B, F

BRACING

TOP CHORD TO BE SHEATHED OR MAX. PURLIN SPACING = 6.25 FT.
MAX. UNBRACED BOTTOM CHORD LENGTH = 10.00 FT OR RIGID CEILING DIRECTLY APPLIED.

ALL PITCH BREAKS AND PERIMETER CORNER JOINTS MUST BE LATERALLY RESTRAINED.

LOADING

TOTAL LOAD CASES: (4)

CHORDS

MEMB. FR-TO	MAX. FACTORED FORCE (LBS)	FACTORED VERT. LOAD LC1 (PLF) FROM	TO	MAX CSI (LC)	MAX. UNBRAC LENGTH
A- B	0 / 14	-78.0	-78.0	0.03 (1)	10.00
B- H	-78 / 0	-78.0	-78.0	0.03 (1)	6.25
H- C	-94 / 0	-78.0	-78.0	0.26 (1)	6.25
C- D	-23 / 0	-78.0	-78.0	0.26 (1)	6.25
E- D	-137 / 0	0.0	0.0	0.12 (1)	7.81
B- G	0 / 96	-18.5	-18.5	0.10 (1)	10.00
G- F	0 / 96	-18.5	-18.5	0.12 (4)	10.00
F- E	0 / 96	-18.5	-18.5	0.12 (4)	10.00

WEBS

MEMB. FR-TO	MAX. FACTORED FORCE (LBS)	MAX CSI (LC)
F- C	-301 / 0	0.06 (1)
C- E	-117 / 0	0.06 (1)
G- H	-202 / 3	0.00 (1)

DESIGN CRITERIA

SPECIFIED LOADS:

TOP CH.	LL	=	21.0	PSF
	DL	=	6.0	PSF
BOT CH.	LL	=	0.0	PSF
	DL	=	7.4	PSF
TOTAL LOAD		=	34.4	PSF

SPACING = 24.0 IN. C/C

THIS TRUSS IS DESIGNED FOR RESIDENTIAL OR SMALL BUILDING REQUIREMENTS OF PART 9, NBCC 2015

THIS DESIGN COMPLIES WITH:
- PART 9 OF BCBC 2018 , ABC 2019
- PART 9 OF OBC 2012 (2019 AMENDMENT)
- CSA 086-14
- TPIC 2014

(55 % OF 23.0 P.S.F. G.S.L. PLUS 8.4 P.S.F. RAIN LOAD) EQUALS 21.0 P.S.F. SPECIFIED ROOF LIVE LOAD

CSI: TC=0.26/1.00 (C-H:1) , BC=0.12/1.00 (F-G:4) , WB=0.06/1.00 (C-F:1) , SSI=0.17/1.00 (B-G:1)

DOL LUMBER=1.00 NAIL=1.00 LS BEND=1.10 COMP=1.10 SHEAR=1.10 TENS= 1.10

COMPANION LIVE LOAD FACTOR = 1.00

TRUSS PLATE MANUFACTURER IS NOT RESPONSIBLE FOR QUALITY CONTROL IN THE TRUSS MANUFACTURING PLANT .

NAIL VALUES

PLATE	GRIP(DRY) (PSI) MAX	MIN	SHEAR (PLI) MAX	MIN	SECTION (PLI) MAX	MIN
MT20	650	371	1747	788	1987	1873

PLATE PLACEMENT TOL. = 0.250 inches

PLATE ROTATION TOL. = 5.0 Deg.

JSI GRIP= 0.36 (C) (INPUT = 0.90)
JSI METAL= 0.06 (C) (INPUT = 1.00)

JOB NAME	TRUSS NAME	QUANTITY	PLY	JOB DESC.	DRWG NO.
345248	P10G		1	TRUSS DESC. JT 45147	E22052018

Alpa Roof Truss, Maple

Version 8.530 S Feb 23 2022 MiTek Industries, Inc. Fri Jun 17 13:55:52 2022 Page 1

ID:wceEj9xaBTOj6r9Q4a6gjtzAj6D-xgLh6KdgWVyIEmEes7oYpsoaRPhhKTMVTEL4VGz5NBL

Scale = 1:28.7

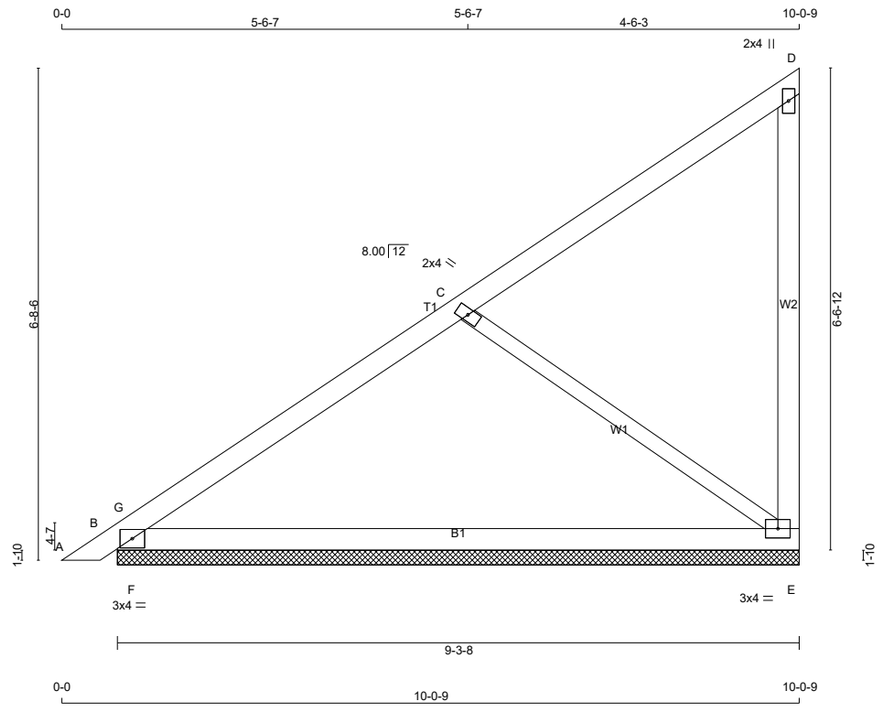

TOTAL WEIGHT = 35 lb

[M]

LUMBER

N. L. G. A. RULES

CHORDS	SIZE		LUMBER	DESCR.
A - D	2x4	DRY	No.2	SPF
E - D	2x4	DRY	No.2	SPF
B - E	2x4	DRY	No.2	SPF
ALL WEBS	2x3	DRY	No.2	SPF

DRY: SEASONED LUMBER.

PLATES (table is in inches)

JT	TYPE	PLATES	W	LEN	Y	X
B	TMB1-l	MT20	3.0	4.0		
C	TMW+w	MT20	2.0	4.0		
D	TMV+p	MT20	2.0	4.0		
E	BMVW1-t	MT20	3.0	4.0		

LATERAL BRACE(S) SHOWN SHALL BE 2X4 SPF#2

DIMENSIONS, SUPPORTS AND LOADINGS SPECIFIED BY FABRICATOR TO BE VERIFIED BY BUILDING DESIGNER

BEARINGS

JT	FACTORED GROSS REACTION VERT	HORZ	MAXIMUM FACTORED GROSS REACTION DOWN	HORZ	UPLIFT	INPUT BRG IN-SX	REQRD BRG IN-SX
E	448	0	448	0	0	9-3-8	1-8
B	501	0	501	0	0	9-3-8	1-8

UNFACTORED REACTIONS

JT	1ST LCASE COMBINED	MAX./MIN. COMPONENT REACTIONS SNOW	LIVE	PERM.LIVE	WIND	DEAD	SOIL
E	319	195 / 0	0 / 0	0 / 0	0 / 0	124 / 0	0 / 0
B	356	223 / 0	0 / 0	0 / 0	0 / 0	133 / 0	0 / 0

BEARING MATERIAL TO BE SPF NO.2 OR BETTER AT JOINT(S) E, B

BRACING

TOP CHORD TO BE SHEATHED OR MAX. PURLIN SPACING = 6.25 FT.
MAX. UNBRACED BOTTOM CHORD LENGTH = 10.00 FT OR RIGID CEILING DIRECTLY APPLIED.

ALL PITCH BREAKS AND PERIMETER CORNER JOINTS MUST BE LATERALLY RESTRAINED.

LOADING

TOTAL LOAD CASES: (4)

CHORDS

MEMB. FR-TO	MAX. FACTORED FORCE (LBS)	FACTORED VERT. LOAD LC1 (PLF) FROM	TO	MAX CSI (LC)	MAX. UNBRAC LENGTH
A- B	0 / 14	-78.0	-78.0	0.03 (1)	10.00
B- G	-692 / 0	-78.0	-78.0	0.30 (4)	6.25
G- C	-379 / 0	-78.0	-78.0	0.32 (1)	6.25
C- D	-27 / 0	-78.0	-78.0	0.31 (1)	6.25
E- D	-130 / 0	0.0	0.0	0.11 (1)	7.81
B- F	0 / 351	-18.5	-18.5	0.27 (4)	10.00
F- E	0 / 351	-18.5	-18.5	0.35 (4)	10.00

WEBS

MEMB. FR-TO	MAX. FACTORED FORCE (LBS)	MAX CSI (LC)
C- E	-427 / 0	0.22 (1)
F- G	0 / 493	0.00 (1)

DESIGN CRITERIA

SPECIFIED LOADS:

TOP CH.	LL	=	21.0	PSF
	DL	=	6.0	PSF
BOT CH.	LL	=	0.0	PSF
	DL	=	7.4	PSF
TOTAL LOAD		=	34.4	PSF

SPACING = 24.0 IN. C/C

THIS TRUSS IS DESIGNED FOR RESIDENTIAL OR SMALL BUILDING REQUIREMENTS OF PART 9, NBCC 2015

THIS DESIGN COMPLIES WITH:
- PART 9 OF BCBC 2018 , ABC 2019
- PART 9 OF OBC 2012 (2019 AMENDMENT)
- CSA 086-14
- TPIC 2014

(55 % OF 23.0 P.S.F. G.S.L. PLUS 8.4 P.S.F. RAIN LOAD) EQUALS 21.0 P.S.F. SPECIFIED ROOF LIVE LOAD

CSI: TC=0.32/1.00 (C-G:1) , BC=0.35/1.00 (E-F:4) , WB=0.22/1.00 (C-E:1) , SSI=0.46/1.00 (B-F:4)

DOL LUMBER=1.00 NAIL=1.00 LS BEND=1.10 COMP=1.10 SHEAR=1.10 TENS= 1.10

COMPANION LIVE LOAD FACTOR = 1.00

TRUSS PLATE MANUFACTURER IS NOT RESPONSIBLE FOR QUALITY CONTROL IN THE TRUSS MANUFACTURING PLANT .

NAIL VALUES

PLATE	GRIP(DRY) (PSI) MAX	MIN	SHEAR (PLI) MAX	MIN	SECTION (PLI) MAX	MIN
MT20	650	371	1747	788	1987	1873

PLATE PLACEMENT TOL. = 0.250 inches

PLATE ROTATION TOL. = 5.0 Deg.

JSI GRIP= 0.54 (E) (INPUT = 0.90)
JSI METAL= 0.13 (C) (INPUT = 1.00)

LUS – Double Shear Joist Hangers

SIMPSON Strong-Tie®

All LUS hangers have double shear nailing. This patented innovation distributes the load through two points on each joist nail for greater strength. It also allows the use of fewer nails, faster installation and the use of common nails for all connections.

Material: 18 gauge

Finish: G90 galvanized

Design:

- Factored resistances are in accordance with CSA O86-14.
- Uplift resistances have been increased 15%. No further increase is permitted.
- Wood shear is not considered in the factored resistances given. The specifier must ensure that the joist and header capacities are capable of withstanding these loads.

Installation:

- Use all specified fasteners.
- Nails: 16d = 0.162" dia. x 3½" long common wire, 10d = 0.148" x 3" long common wire.
- Double shear nails must be driven at an angle through the joist or truss into the header to achieve the table loads.
- Not designed for welded or nailer applications.

Options:

- These hangers cannot be modified

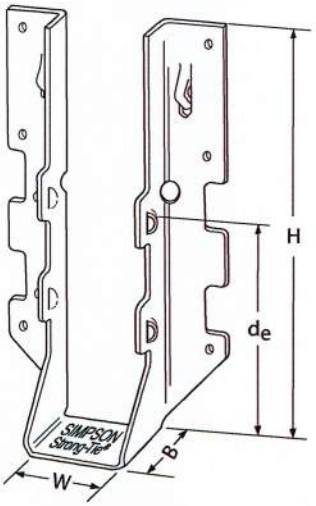

LUS28

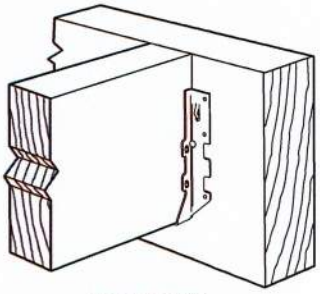

Typical LUS Installation

Model No.	Ga.	Dimensions (in.)				Fasteners		Factored Resistance (lb.)			
								D.Fir-L		S-P-F	
		W	H	B	d_e[1]	Face	Joist	Uplift (K_D=1.15)	Normal (K_D=1.00)	Uplift (K_D=1.15)	Normal (K_D=1.00)
LUS24	18	1 9/16	3 1/8	1 3/4	1 15/16	(4) 10d	(2) 10d	710	1630	645	1155
LUS24-2	18	3 1/8	3 1/8	2	1 13/16	(4) 16d	(2) 16d	835	2020	590	1435
LUS26	18	1 9/16	4 3/4	1 3/4	3 5/8	(4) 10d	(4) 10d	1420	2170	1290	1630
LUS26-2	18	3 1/8	4 7/8	2	4	(4) 16d	(4) 16d	1720	2595	1545	1920
LUS26-3	18	4 5/8	4 3/16	2	3 1/4	(4) 16d	(4) 16d	1720	2595	1545	2340
LUS28	18	1 9/16	6 5/8	1 3/4	3 3/4	(6) 10d	(6) 10d	1420	2520	1290	1790
LUS28-2	18	3 1/8	7	2	4	(6) 16d	(4) 16d	1720	3325	1545	2575
LUS28-3	18	4 5/8	6 1/4	2	3 1/4	(6) 16d	(4) 16d	1720	3325	1545	2375
LUS210	18	1 9/16	7 13/16	1 3/4	3 7/8	(8) 10d	(4) 10d	1420	2785	1290	2210
LUS210-2	18	3 1/8	9	2	6	(8) 16d	(6) 16d	2580	4500	2320	3195
LUS210-3	18	4 5/8	8 3/16	2	5 1/4	(8) 16d	(6) 16d	2580	3345	2320	2375

1. d_e is the distance from the seat of the hanger to the highest joist nail.

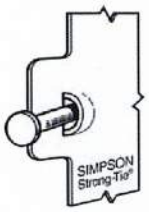

Dome Double Shear Nailing prevents tabs breaking off (available on some models).

U.S. Patent 5,603,580

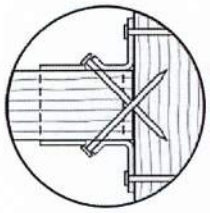

Double Shear Nailing Top View.

LICENSED PROFESSIONAL ENGINEER
04/01/2020
B. D. BUNTING
PROVINCE OF ONTARIO

LIMIT STATES DESIGN

This technical bulletin is effective until June 30, 2022, and reflects information available as of April 1, 2020. This information is updated periodically and should not be relied upon after June 30, 2022. Contact Simpson Strong-Tie for current information and limited warranty or see strongtie.com.

© 2020 Simpson Strong-Tie Company Inc.

(800) 999-5099
strongtie.com

TECHNICAL BULLETIN

HUS/LJS – Double Shear Joist Hangers

SIMPSON Strong-Tie®

All hangers have double shear nailing. This patented innovation distributes the load through two points on each joist nail for greater strength. It also allows the use of fewer nails, faster installation and the use of common nails for all connections. Do not bend or remove tabs.

Material: See table

Finish: G90 galvanized

Design:

- Factored resistances are in accordance with CSA O86 -14.
- Uplift resistances have been increased 15%. No further increase is permitted.
- Wood shear is not considered in the factored resistances given. The specifier must ensure that the joist and header capacities are capable of withstanding these loads.

Installation:

- Use all specified fasteners
- Nails: 16d = 0.162" dia. x 3½" long common wire
- Double shear nails must be driven at an angle through the joist or truss into the header to achieve the table loads
- Not designed for welded or nailer applications

Options:

- See current catalogue for options

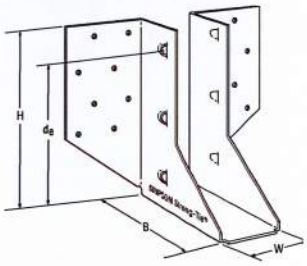

LJS26DS

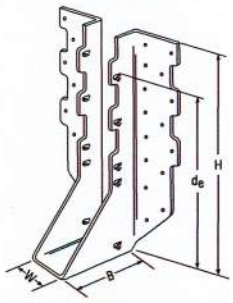

HUS210
(HUS26, HUS28, similar)

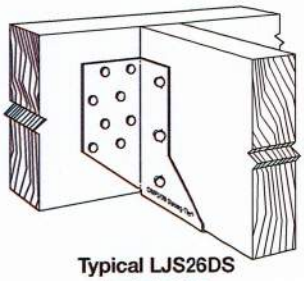

Typical LJS26DS Installation

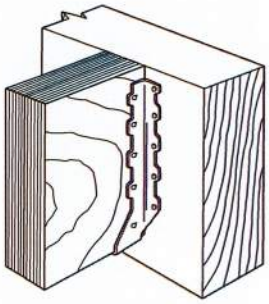

Typical HUS Installation

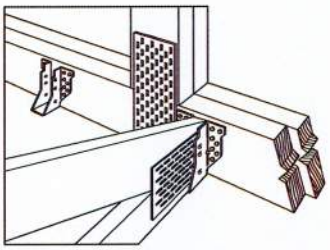

Typical HUS Installation
(Truss Designer to provide fastener quantity for connecting multiple members together)

Model No.	Ga.	Dimensions (in.)				Fasteners		Factored Resistance (lb.)			
								D.Fir-L		S-P-F	
		W	H	B	d_e[1]	Face	Joist	Uplift (K_D=1.15) lb.	Normal (K_D=1.00) lb.	Uplift (K_D=1.15) lb.	Normal (K_D=1.00) lb.
LJS26DS	18	1 9/16	5	3½	4⅝	(16) 16d	(6) 16d	2055	4265	1460	4115
HUS26	16	1⅝	5⅜	3	3 15/16	(14) 16d	(6) 16d	2705	4940	2065	3875
HUS28	16	1⅝	7 3/32	3	6 3/32	(22) 16d	(8) 16d	3605	5365	2675	4345
HUS210	16	1⅝	9 3/32	3	7 31/32	(30) 16d	(10) 16d	4505	5795	4010	4740
HUS1.81/10	16	1 13/16	9	3	8	(30) 16d	(10) 16d	4505	6450	4010	5200

1. d_e is the distance from the seat of the hanger to the highest joist nail.

Dome Double Shear Nailing prevents tabs breaking off (available on some models).

U.S. Patent 5,603,580

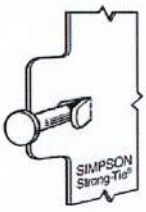

Double Shear Nailing Side View. Do not bend tab back.

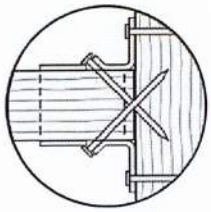

Double Shear Nailing Top View.

LIMIT STATES DESIGN

This technical bulletin is effective until June 30, 2022, and reflects information available as of April 1, 2020. This information is updated periodically and should not be relied upon after June 30, 2022. Contact Simpson Strong-Tie for current information and limited warranty or see strongtie.com.

© 2020 Simpson Strong-Tie Company Inc.

(800) 999-5099
strongtie.com

TECHNICAL BULLETIN

HHUS – Double Shear Joist Hangers

SIMPSON Strong-Tie®

All HHUS hangers have double shear nailing. This patented innovation distributes the load through two points on each joist nail for greater strength. It also allows the use of fewer nails, faster installation and the use of common nails for all connections. Do not bend or remove tabs.

Material: 14 gauge

Finish: G90 galvanized

Design:

- Factored resistances are in accordance with CSA O86-14.
- Uplift resistances have been increased 15%. No further increase is permitted.
- Wood shear is not considered in the factored resistances given. The specifier must ensure that the joist and header capacities are capable of withstanding these loads.

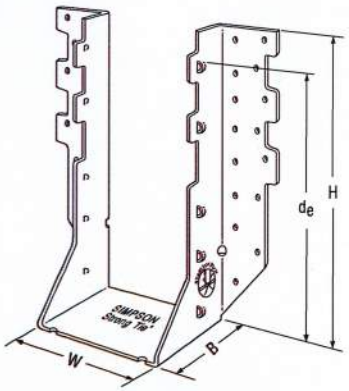

HHUS410

Installation:

- Use all specified fasteners
- Nails: 16d = 0.162" dia. x 3½" long common wire
- Double shear nails must be driven at an angle through the joist or truss into the header to achieve the table loads
- Not designed for welded or nailer applications

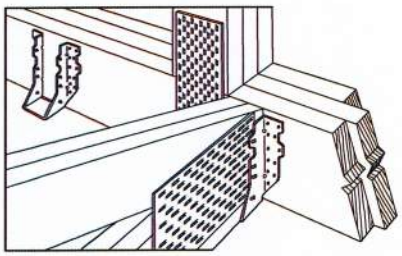

Typical HHUS Installation (Truss Designer to provide fastener quantity for connecting multiple members together)

Options:

- See current catalogue for options

Model No.	Ga.	Dimensions (in.)				Fasteners		Factored Resistance (lb.)			
								D.Fir-L		S-P-F	
		W	H	B	d_e[1]	Face	Joist	Uplift (K_D=1.15)	Normal (K_D=1.00)	Uplift (K_D=1.15)	Normal (K_D=1.00)
HHUS26-2	14	3 5/16	5 13/16	3	3 15/16	(14) 16d	(6) 16d	2850	7335	2065	5205
HHUS28-2	14	3 5/16	7 7/32	3	6 5/32	(22) 16d	(8) 16d	3765	8940	2675	6345
HHUS210-2	14	3 5/16	9 3/32	3	8	(30) 16d	(10) 16d	4670	9660	4235	7000
HHUS210-3	14	4 11/16	9	3	7 15/16	(30) 16d	(10) 16d	4670	9670	4235	6865
HHUS210-4	14	6 1/8	8 29/32	3	7 27/32	(30) 16d	(10) 16d	4670	10155	4235	7210
HHUS46	14	3 5/8	5 13/32	3	3 15/16	(14) 16d	(6) 16d	2540	7335	2065	5205
HHUS48	14	3 5/8	7 1/8	3	6 1/8	(22) 16d	(8) 16d	3765	8940	2675	6345
HHUS410	14	3 5/8	9	3	8	(30) 16d	(10) 16d	4670	9855	4235	7000
HHUS5.50/10	14	5 1/2	9	3	8	(30) 16d	(10) 16d	4670	10155	4235	7210
HHUS7.25/10	14	7 1/4	9	3 5/16	7 29/32	(30) 16d	(10) 16d	4670	10155	3370	7210

1. d_e is the distance from the seat of the hanger to the highest joist nail.

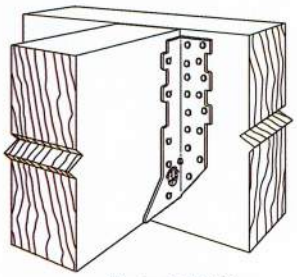

Typical HHUS Installation

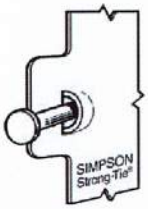

Dome Double Shear Nailing prevents tabs breaking off (available on some models).

U.S. Patent 5,603,580

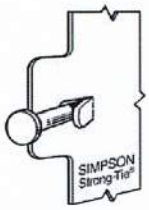

Double Shear Nailing Side View. Do not bend tab back.

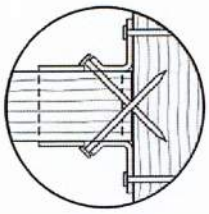

Double Shear Nailing Top View.

LIMIT STATES DESIGN

This technical bulletin is effective until June 30, 2022, and reflects information available as of April 1, 2020. This information is updated periodically and should not be relied upon after June 30, 2022. Contact Simpson Strong-Tie for current information and limited warranty or see strongtie.com.

© 2020 Simpson Strong-Tie Company Inc.

T-SPECHHUS20 3/20 exp. 6/22

(800) 999-5099
strongtie.com

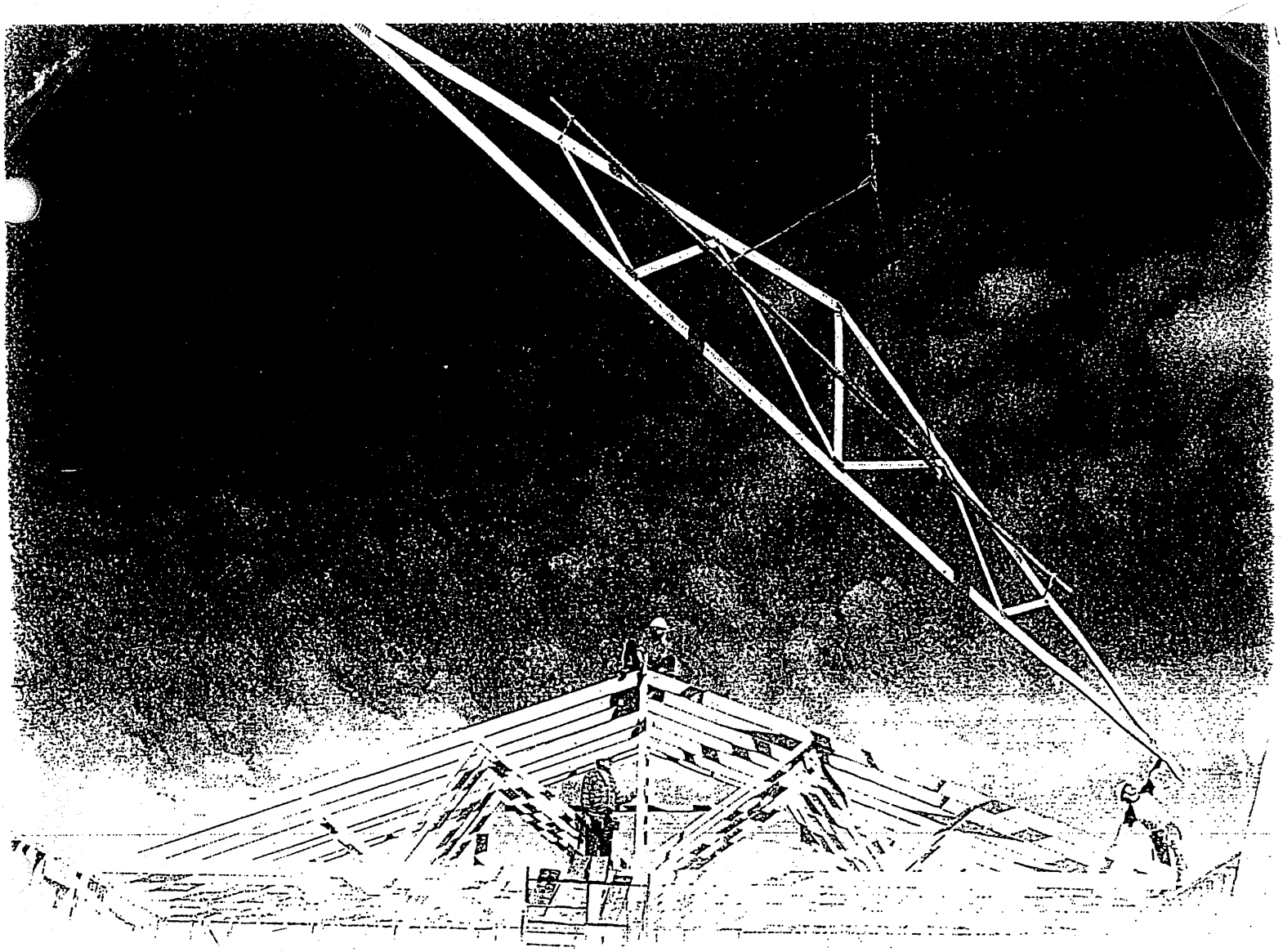

Wood Truss Installation

A Guide to proper handling, erecting and bracing metal plate connected wood trusses

Table of Content

Warning.....4

1 Unloading & Lifting.....5

2 Job Site Handling.....5

3 Hoisting.....6

4 Beginning the Erection Process.....7

5 Erection Tolerance.....8

6 Bracing.....8

7 Bracing Requirements for 3 Planes of Roof.....9

8 Stacking Materials.....10

Caution Notes.....11

Warning

General

Familiarity with the **Construction Design Documents**, the **Truss Design Drawings**, and **Truss Placement Plans** (if required by the **Construction Design Documents**) is required to properly erect, brace, and connect the trusses to the building system.

All of the care and quality involved in the design and manufacture of wood trusses can be jeopardized if the trusses are not properly handled, erected, and braced.

The consequences of improper handling, erecting, and bracing may be a collapse of the structure, which at best is a substantial loss of time and materials, and at worst is a loss of life. The majority of truss accidents occur during truss installation and not as a result of improper design or manufacture.

Prior to truss erection, the builder/erector shall meet with the erection crew for a safety and planning meeting, making sure each crew member understands his or her roles and responsibilities during the erection process.

Temporary Erection Bracing

Trusses are not marked in any way to identify the frequency, or location of temporary erection bracing.

All temporary bracing shall comply with the latest edition of *Commentary and Recommendations for Handling, Installing & Bracing Metal Plate Connected Wood Trusses* (HIB), published by the Truss Plate Institute, and/or as specified in the **Construction Design Documents** prepared by the building designer.

Permanent Truss Bracing

Permanent bracing for the roof or floor trusses is the responsibility of the building designer and should be shown on the **Construction Design Documents**. Permanent bracing locations for individual compression members of a wood truss are shown on the **Truss Design Drawings**, and shall be installed by the building or erection contractor. This bracing is needed for the proper performance of individual trusses within the roof or floor system. The design and connection of the bracing to the truss and then to the overall building system is the responsibility of the building designer, and is in addition to the permanent bracing plan, which is also specified by the building designer.

Special Design Requirements

Special design requirements, such as wind bracing, portal bracing, seismic bracing, diaphragms, shear walls, or other load transfer elements and their connections to wood trusses must be considered separately by the building designer, who shall determine size, location, and method of connections for all bracing as needed to resist these forces.

1 Unloading & Lifting

Never handle trusses flat

Beginning with the unloading process, and throughout all phases of construction, care must be taken to avoid **lateral bending** of trusses, which can cause damage to the lumber and metal connector plates at the joints.

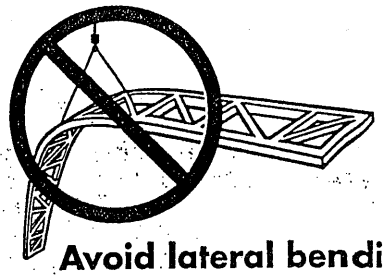

Avoid lateral bending

- **Use special care in windy weather.**
- **If using a crane within 10 feet of an electric line, contact the local power company.**
- **If using a crane within 5 miles of an airport, contact the airport 30 days prior to erection to learn about any safety regulations that must be followed.**

2 Job Site Handling

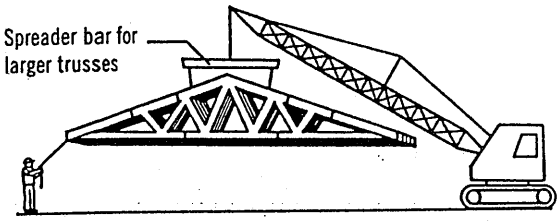

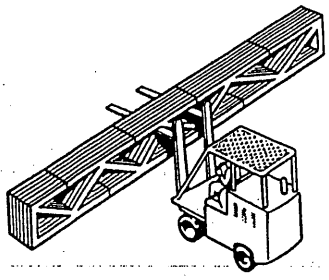

All trusses should be picked up at the top chords in a vertical position only

Proper banding and smooth ground allow for unloading of trusses without damage. This should be done as close to the building site as possible to minimize handling. **Do not** break banding until installation begins. Hand erection of trusses is allowed, provided excessive lateral bending is prevented.

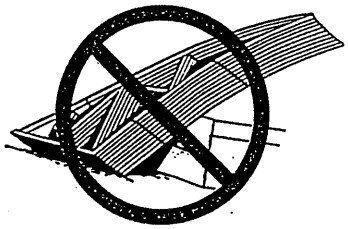

Do not store unbraced bundles upright

If trusses are stored vertically they shall be braced in a manner that will prevent tipping or topping. Generally cuting of the banding is done just prior to installation.

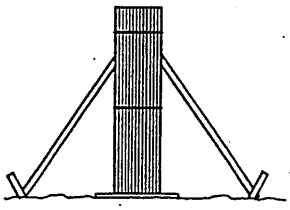

Do not store on uneven ground

If trusses are stored horizontally, blocking should be used on eight to ten foot centers, or as required, to minimize lateral bending and moisture gain.

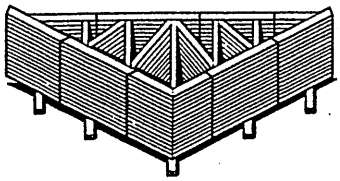

Care should be exercised when removing banding to avoid damaging trusses.

During long term storage, trusses shall be protected from the environment in a manner that provides for adequate ventilation of the trusses. If tarpaulins or other material is used, the ends shall be left open for ventilation. Plastic is not recommended, since it can trap moisture.

3 Hoisting

All trusses that are erected one at a time shall be held safely in position by the erection equipment until such time as all necessary bracing has been installed and the ends of the trusses are securely fastened to the building.

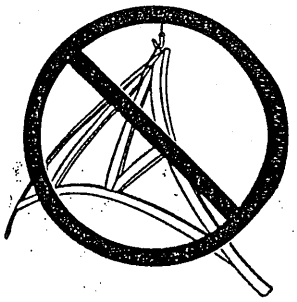

Avoid lateral bending

L ≤ 30'

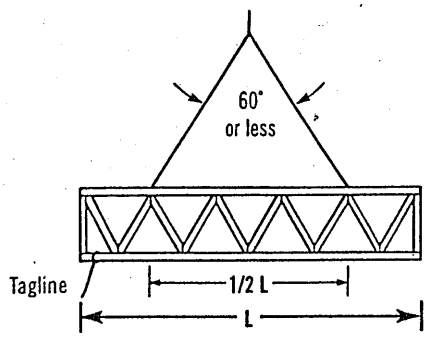

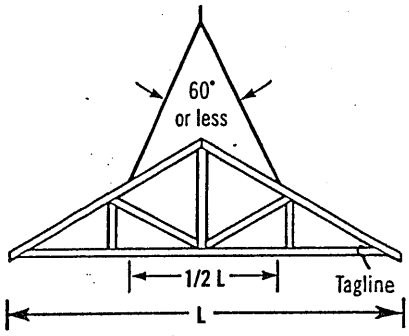

Truss sling is acceptable where these criteria are met.

30' < L ≤ 60'

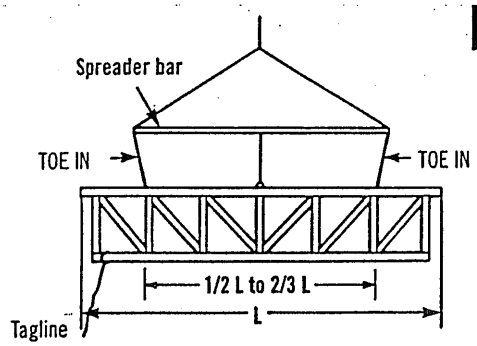

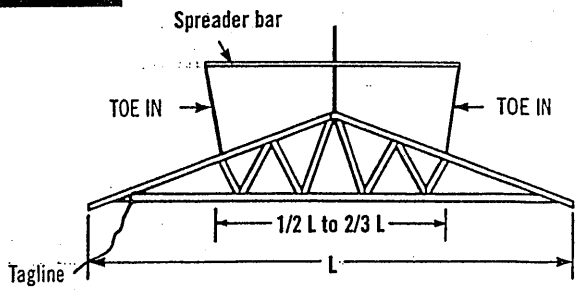

Use spreader bar in all other cases. It should be noted that the lines from the ends of the spreader bar "**TOE IN**"; if these lines should "**TOE OUT**" the truss may fold in half.

L > 60'

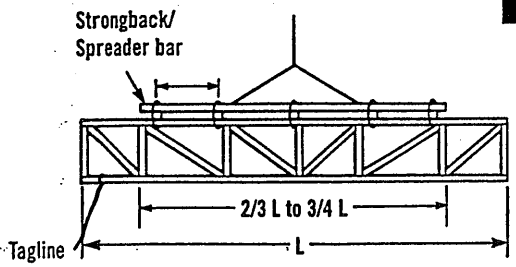

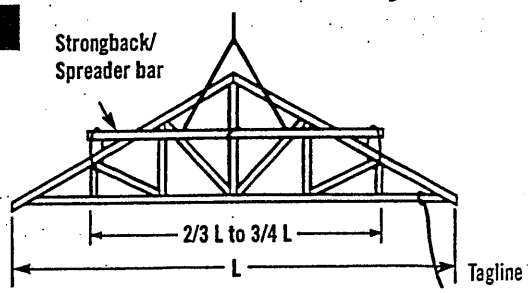

For lifting trusses with spans in excess of 60 feet, it is recommended that a strongback/spreader bar be used as illustrated. The strongback/spreader bar should be attached to the top chord and web members at intervals of approximately 10 feet. Further, the strongback/spreader bar should be at or above the mid-height of the truss to prevent overturning. The strongback/spreader bar can be of any material with sufficient strength to safely carry the weight of the truss and sufficient rigidity to adequately resist bending of the truss.

4 Beginning the Erection Process

It is important for the builder or erection contractor to provide substantial bracing for the first truss erected. The two or more trusses making up the rest of the first set are tied to and rely upon the first truss for stability. Likewise, after this first set of trusses is adequately cross-braced, the remaining trusses installed rely upon this first set for stability. Thus, the performance of the truss bracing system depends to a great extent on how well the first group of trusses is braced.

Ground Brace – Exterior

One satisfactory method ties the first unit of trusses off to a series of braces that are attached to a stake driven into the ground and securely anchored. The ground brace itself should be supported as shown below or it is apt to buckle. Additional ground braces in the opposite direction, inside the building, are also recommended.

Ground Brace – Interior

Another satisfactory method where height of building or ground conditions prohibit bracing from the exterior is to tie the first truss rigidly in place from the interior at the floor level, provided the floor is substantially completed and capable of supporting the ground bracing forces. Securely fasten the first truss to the middle of the building. Brace the bracing similar to exterior ground bracing shown at left. Set trusses from the middle toward the end of the building. Properly cross-brace the first set of trusses before removing floor braces and setting remaining trusses.

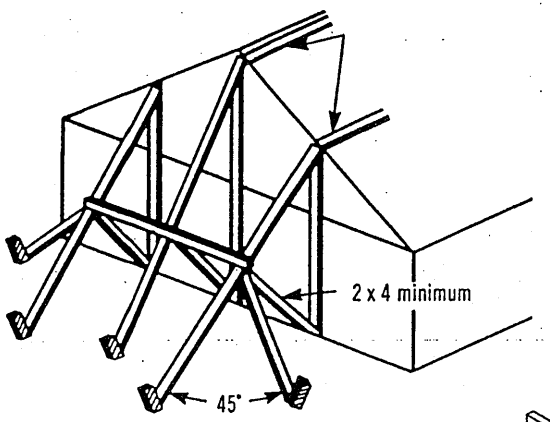

Note: Locate ground braces for first truss directly in line with all rows of top chord continuous lateral bracing (either temporary or permanent).

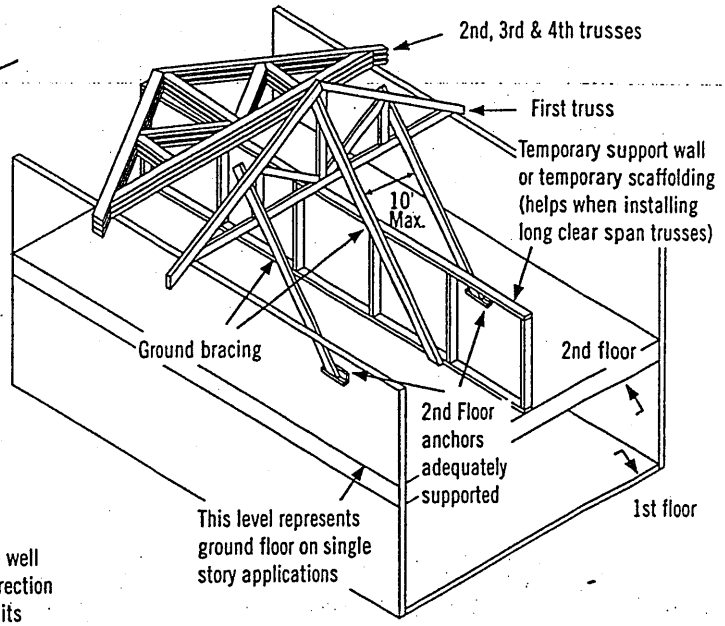

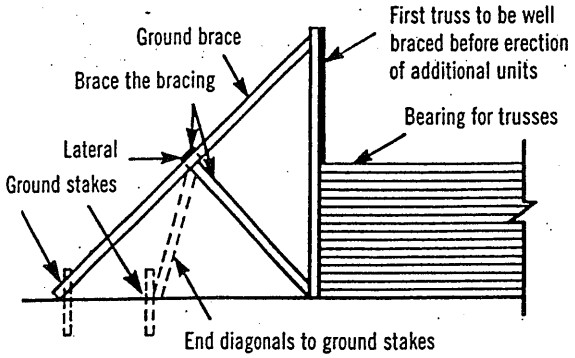

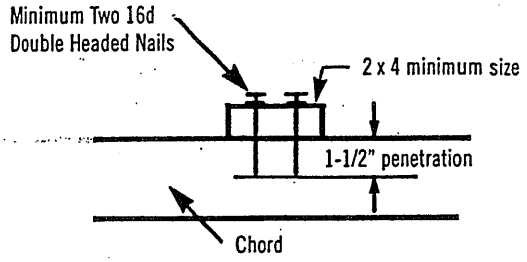

Inadequate size of bracing material or inadequate fastening is a major cause of erection dominoing.

5 Erection Tolerance

Complying with erection tolerances is critical to achieving an acceptable roof or floor line, and to accomplishing effective bracing. Setting trusses within tolerance the first time will prevent the need for the hazardous practice of respacing or adjusting trusses when roof sheathing or roof purlins are installed. Trusses leaning or bowing can cause nails to miss the top chords when sheathing is applied, and create cumulative stresses on the bracing, which is a frequent cause of dominoing.

When sheathing, make sure nails are driven into the top chord of the trusses.

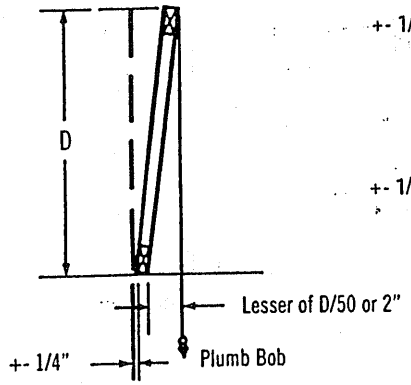

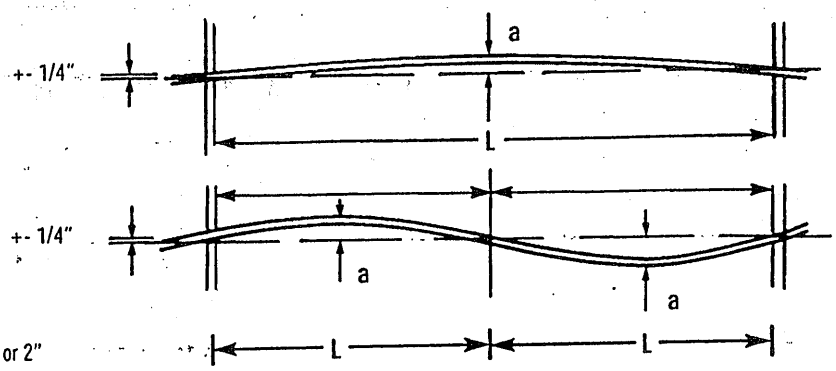

L = 16' to 32', a = 1"
L = 32' & over, a = 2"

6 Bracing

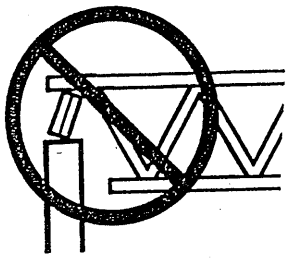

Do not install trusses on temporarily connected supports

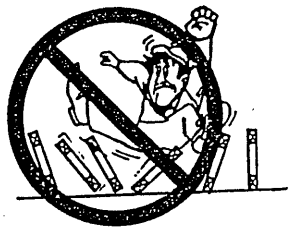

Do not walk on unbraced trusses

Do not walk on trusses or gable ends lying flat

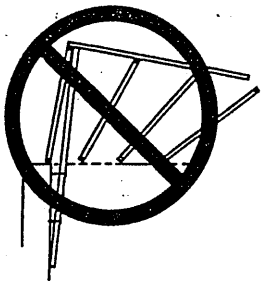

Nails in withdrawal (parallel to force)

All anchors, hangers, tie-downs, seats, bearing ledgers, etc., that are part of the supporting structure shall be accurately and properly placed and permanently attached before truss installation begins. No trusses shall ever be installed on anchors or ties that have temporary connections to the supporting structure.

Nailing scabs to the end of the building to brace the first truss is not recommended.
All nailing of bracing should be done so that nails are driven perpendicular to the direction of force, as shown at right.

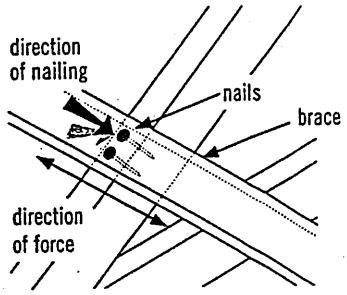

Well nailed (perpendicular to force)

7 Bracing Requirements for 3 Planes of Roof

Temporary erection bracing must be applied to three planes of the roof system to ensure stability: Plane 1) **Top Chord** (sheathing), Plane 2) **Bottom Chord** (ceiling plane), and Plane 3) **Web Member** plane or vertical plane perpendicular to trusses.

1) Top Chord Plane

Most important to the builder or erection contractor is bracing in the plane of the top chord. Truss top chords are susceptible to lateral buckling before they are braced or sheathed.

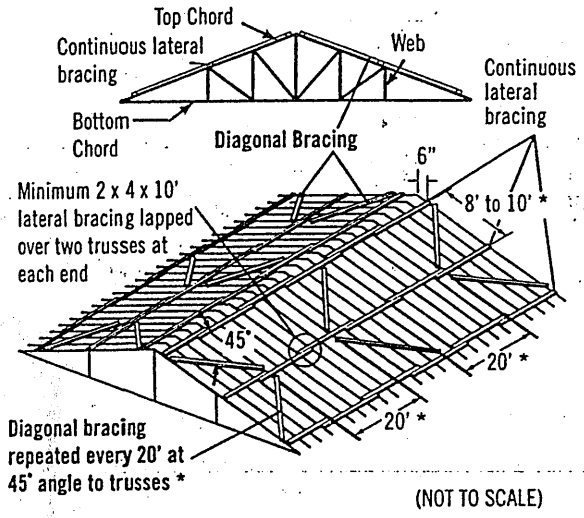

(NOT TO SCALE)

Exact spacing between trusses should be maintained as bracing is installed to avoid the hazardous practice of removing bracing to adjust spacing. This act of "adjusting spacing" can cause trusses to topple if connections are removed at the wrong time.

2) Bottom Chord Plane

In order to hold proper spacing on the bottom chord, temporary bracing is recommended on the top of the bottom chord.

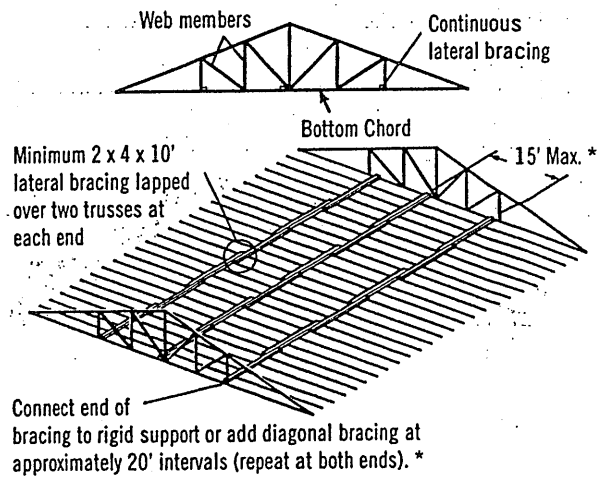

* Long spans, heavy loads or other spacing configurations may require closer spacing between lateral bracing and closer intervals between diagonals. Consult the building designer or HIB and DSB (*Recommended Design Specification for Temporary Bracing of Metal-Plate Connected Wood Trusses*) for details.

Diagonal or cross-bracing is very important!

3) Web Member Plane

"X" bracing, as shown, is critical in preventing trusses from leaning or dominoing. Repeat as shown to create a succession of rigid units.

X-bracing should be installed on vertical web members wherever possible, at or near lateral bracing. Plywood or OSB may be substituted for X-bracing.

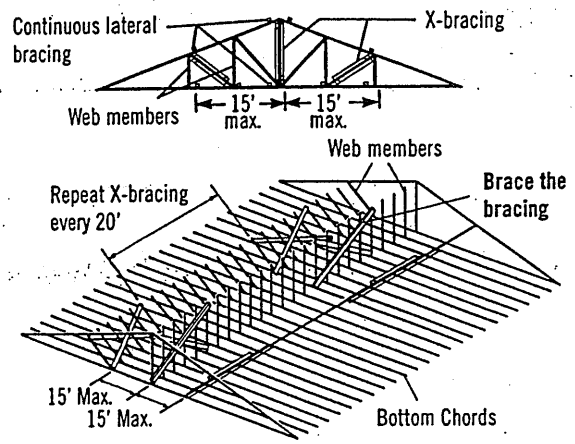

Note: Top chords and some web members are not shown, in order to make drawings more readable.

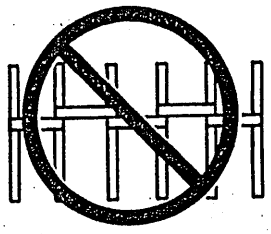

Do not use short blocks to brace individual trusses without a specific bracing plan detailing their use

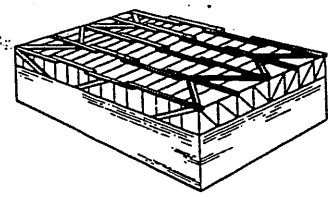

Bracing requirements using the same principles apply to parallel chord trusses

8 Stacking Materials

Do not proceed with building completion until all bracing is securely and properly in place

Never stack materials on unbraced or inadequately braced trusses

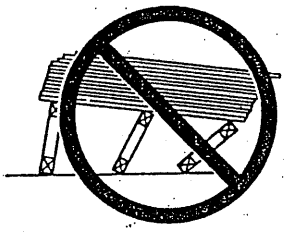

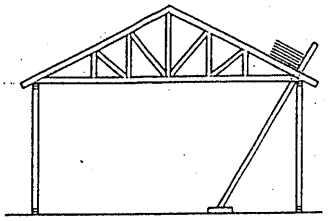

Proper distribution of construction materials is a must during construction.

Never stack materials near a peak

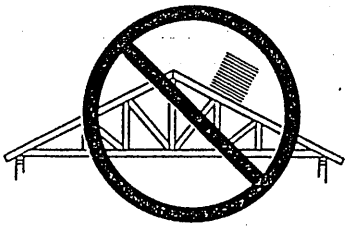

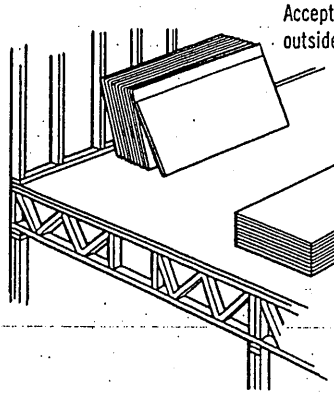

Never stack materials on the cantilever of a truss

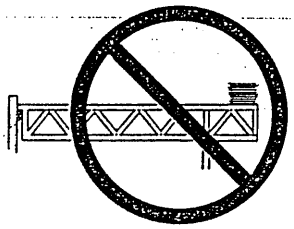

Always stack materials over two or more trusses.

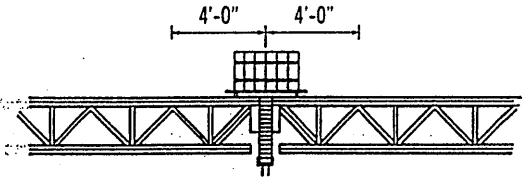

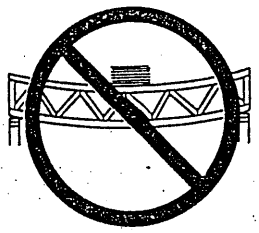

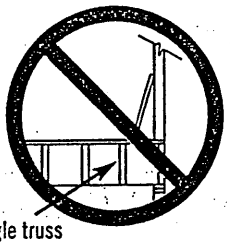

Roofing and mechanical contractors are cautioned to stack materials only along outside supporting members or directly over inside supporting members. Trusses are not designed for dynamic loads (i.e., moving vehicles). Extreme care should be taken when loading and stacking construction materials (rolled roofing, mechanical equipment, etc.) on the roof or floor system.

Never overload small groups or single trusses. Position load over as many trusses as possible.

Never cut any structural member of a truss.

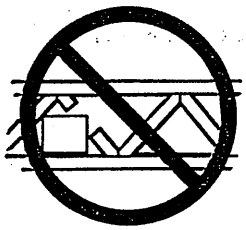

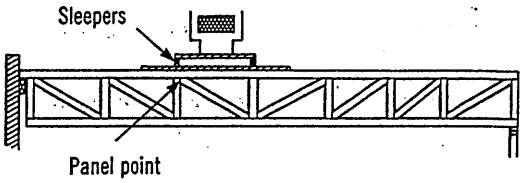

Sleepers for mechanical equipment should be located at panel points (joints) or over main supporting members, and only on trusses that have been designed for such loads.

Caution Notes

Errors in building lines and/or dimensions, or errors by others shall be corrected by the contractor or responsible construction trade subcontractor or supplier **before** erection of trusses begins.

Cutting of nonstructural overhangs is considered a part of normal erection and shall be done by the builder or erection contractor.

Any field modification that involves the cutting, drilling, or relocation of any structural truss member or connector plate shall not be done without the approval of the truss manufacturer or a licensed design professional.

The methods and procedures outlined are intended to ensure that the overall construction techniques employed will put floor and roof trusses **safely** in place in a completed structure. These recommendations for bracing wood trusses originate from the collective experience of leading technical personnel in the wood truss industry, but must, due to the nature of responsibilities involved, be presented only as a **guide** for use by a qualified building designer, builder, or erection contractor. Thus, the Wood Truss Council of America expressly disclaims any responsibility for damages arising from the use, application, or reliance on the recommendations and information contained herein.

[Selected text and figures referenced or reproduced from HIB and DSB by permission of the Truss Plate Institute, Madison, WI.]

THE CANADIAN WOOD TRUSS ASSOCIATION

L'ASSOCIATION CANADIENNE DES FABRICANTS DE FERMES DE BOIS

1400 Blair Place, Suite 210, Ottawa, ON K1J 9B8
Tel.: 613-747-5544 Fax: 613-747-6264

Wood Truss Council of America

One WTCA Center
6300 Enterprise Lane, Madison, WI 53719-1140
Tel.: 608-274-4849 Fax: 608-274-3329
wtca@woodtruss.com www.woodtruss.com