ALPA-BARRIE

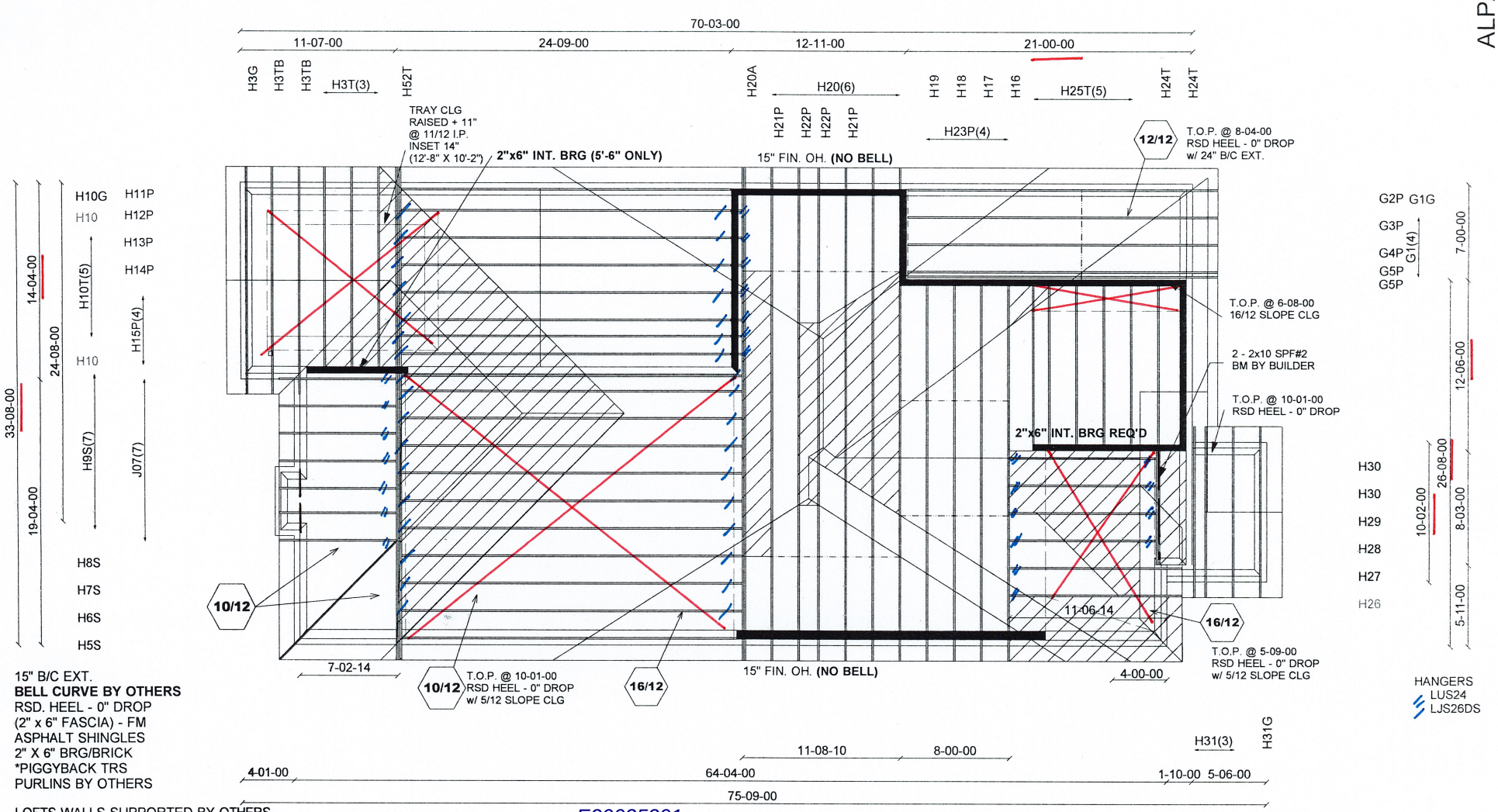

15" B/C EXT.
BELL CURVE BY OTHERS
RSD. HEEL - 0" DROP
(2" x 6" FASCIA) - FM
ASPHALT SHINGLES
2" X 6" BRG/BRICK
*PIGGYBACK TRS
PURLINS BY OTHERS

LOFTS WALLS SUPPORTED BY OTHERS

HANGERS
LUS24
LJS26DS

E20035291
E20035295 - E20035335
E20035284, E20035288
E20035338, E20035340

MAPLEWOOD

Mitek V. 8.2.0

ALL CONVENTIONAL FRAMING TO CONFORM WITH PART 9 O.B.C. LATEST EDITION. ROOF RAFTERS THAT CROSS OVER TRUSSES TO BE 2X4 SPF #2 @ 24" O.C WITH A VERT. POST TO THE TRUSS UNDERNEATH AT EACH CROSS POINT. VERT. POSTS LONGER THAN 6' TO HAVE LATERAL BRACING SO THAT THE DISTANCE BETWEEN END POINTS & BETWEEN ROWS OF BRACING DOES NOT EXCEED 6'

CONVENTIONAL FRAMING BY OTHERS

Job Track: 45147	Builder / Location: GOLD PARK HOMES / VAUGHAN	Model / Elevation: 4201 / B RU OPT TRAY	
Layout ID: 318445	Project: PINE VALLEY	THESE DRAWINGS CONSTITUTE THE PROPERTY OF ALPA ROOF TRUSSES INC., SHALL NOT BE REPRODUCED, PUBLISHED, OR REDISTRIBUTED IN ANY MANNER OR UTILIZED FOR ANY PURPOSE OTHER THAN THE MANUFACTURE OF TRUSSES BY ALPA ROOF TRUSSES INC AND WILL BE RETRACTED BY ALPA ROOF TRUSSES INC IF UTLILZED FOR ANY OTHER PURPOSE.	
Plan Log: 105728	Date: 2020-03-16	Designer: AMANDA	

EWP DESIGN INC.

(905) 832-2250 FAX (905) 832-0286

RESPONSIBILITIES AND SPECIFICATIONS

RESPONSIBILITIES

1. EWP DESIGN INC. is responsible for the design of trusses as individual components.
2. It is the responsibility of others to ascertain that the design loads utilized on each drawing meet or exceed the actual dead load imposed by the structure, the live load imposed by the intended use and the snow load imposed by local building code or authorities with jurisdictions.
3. All dimensions are to be verified by the owner, contractor, architect or other authorities with jurisdictions before truss fabrication.
4. EWP DESIGN INC. bears no responsibility for the erection of trusses. Persons erecting trusses are cautioned to seek professional advice regarding the temporary and permanent bracing for the system. Bracing shown on EWP DESIGN INC. drawing is specified for the truss as a component only and forms an integral part of the truss design.
5. It is the truss manufacturer's responsibility to ensure that trusses are manufactured in conformance with specifications of EWP DESIGN INC. as outlined below.

SPECIFICATIONS

1. Trusses designed by EWP DESIGN INC. conform to the relevant section of the Ontario Building Code of Canada (Part 9 or Part 4) or to the Canadian code for farm buildings, whichever applies to the building type, as indicated on the EWP DESIGN INC. drawings, and conform to the design procedures established by the Truss Plate Institute of Canada. Unit stresses used for truss designs are as per the edition of CSA-O86 shown on EWP DESIGN INC. drawings.
2. Lumber is to be the size, species and grade as specified on EWP DESIGN INC. drawings.
3. Moisture content of lumber shall not exceed 19% in service unless specified otherwise.
4. Metal connector plates shall be applied to both faces of truss at each joint and shall be positioned as specified.
5. Top chords of trusses are assumed to be continuously braced laterally by roof sheathing or by purlins at intervals not exceeding 12.5 times the thickness of top chord member.
6. Bottom chords shall be laterally braced at intervals not exceeding 3M (10') o.c., where rigid ceiling is not applied directly to the underside of chords.

THESE DRAWINGS CONSTITUTE THE PROPERTY OF EWP DESIGN INC., SHALL NOT BE REPRODUCED, PUBLISHED, OR REDISTRIBUTED IN ANY MANNER OR UTILIZED FOR ANY PURPOSE OTHER THAN THE MANUFACTURE OF TRUSSES BY THE ALPA LUMBER GROUP, AND WILL BE RETRACTED BY EWP DESIGN INC. IF UTILIZED FOR ANY OTHER PURPOSE.

JOB NAME	TRUSS NAME	QUANTITY	PLY	JOB DESC.	DRWG NO.
318443	H52T		3	TRUSS DESC. JT 45147	E20035291

Alpha Roof Truss, Maple

Version 8.310 S Oct 29 2019 MiTek Industries, Inc. Tue Mar 24 14:28:08 2020 Page 1

ID:MF8iiriaTok7DlbpT4B71Xys4PG-oBbqNkH Ehmo 4UHQzED4zIvGRWchZPcou5gdJzXin5

Scale = 1:57.3

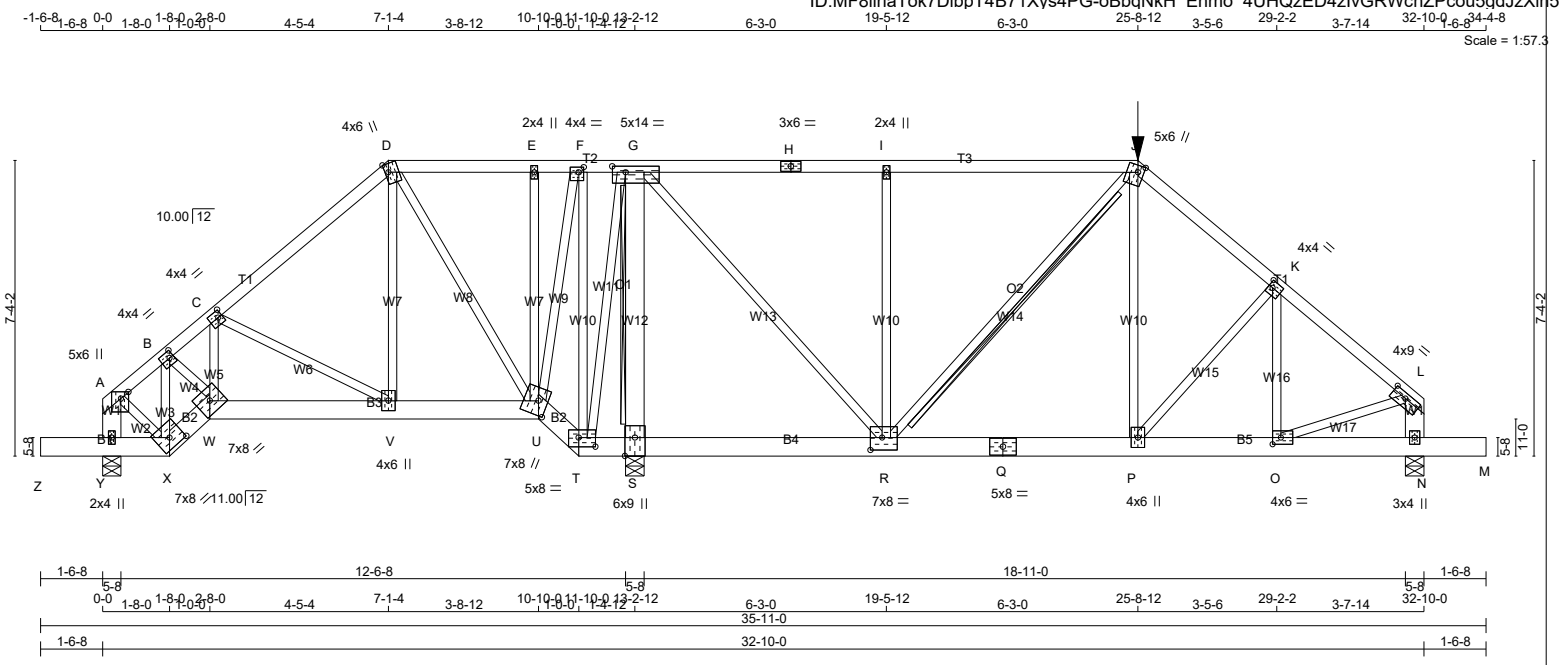

TOTAL WEIGHT = 3 X 200 = 599 lb

[M]

LUMBER

N. L. G. A. RULES

CHORDS	SIZE		LUMBER	DESCR.
A - D	2x4	DRY	No.2	SPF
D - H	2x4	DRY	No.2	SPF
H - J	2x4	DRY	No.2	SPF
J - L	2x4	DRY	No.2	SPF
Y - A	2x6	DRY	No.2	SPF
N - L	2x6	DRY	No.2	SPF
Z - X	2x6	DRY	No.2	SPF
X - W	2x6	DRY	No.2	SPF
W - U	2x6	DRY	No.2	SPF
U - T	2x6	DRY	No.2	SPF
T - Q	2x6	DRY	No.2	SPF
Q - M	2x6	DRY	No.2	SPF
ALL WEBS EXCEPT	2x3	DRY	No.2	SPF
S - G	2x6	DRY	No.2	SPF

DRY: SEASONED LUMBER.

DESIGN CONSISTS OF 3 TRUSSES BUILT SEPARATELY THEN FASTENED TOGETHER AS FOLLOWS:

CHORDS	#ROWS	SURFACE SPACING (IN)	LOAD(PLF)
TOP CHORDS : (0.122"X3") SPIRAL NAILS			
A- D	1	12	TOP
D- H	1	12	SIDE(20.2)
H- J	1	12	SIDE(75.0)
J- L	1	12	SIDE(91.5)
Y- A	2	12	TOP
N- L	2	12	TOP
BOTTOM CHORDS : (0.122"X3") SPIRAL NAILS			
Z- X	2	6	SIDE(376.5)
X- W	2	9	SIDE(277.6)
W- U	2	6	SIDE(376.6)
U- T	2	9	SIDE(277.6)
T- Q	2	6	SIDE(376.6)
Q- M	2	6	SIDE(376.6)
WEBS : (0.122"X3") SPIRAL NAILS			
P- J	1	6	SIDE(149.8)
2x3	1	6	
2x6	2	6	

LATERAL BRACE(S) SHOWN SHALL BE 2X4 SPF#2

LICENSED PROFESSIONAL ENGINEER
V. WIDYA
100225448
03/24/2020
PROVINCE OF ONTARIO

DIMENSIONS, SUPPORTS AND LOADINGS SPECIFIED BY FABRICATOR TO BE VERIFIED BY BUILDING DESIGNER

BEARINGS

JT	FACTORED GROSS REACTION VERT	HORZ	MAXIMUM FACTORED GROSS REACTION DOWN	HORZ	UPLIFT	INPUT BRG IN-SX	REQRD BRG IN-SX
S	13588	0	13588	0	0	5-8	5-8
Y	3651	0	3651	0	0	5-8	1-8
N	6990	0	6990	0	0	5-8	2-7

UNFACTORED REACTIONS

JT	1ST LCASE COMBINED	MAX./MIN. COMPONENT REACTIONS SNOW	LIVE	PERM.LIVE	WIND	DEAD	SOIL
S	9687	5918 / 0	0 / 0	0 / 0	0 / 0	3769 / 0	0 / 0
Y	2603	1589 / 0	0 / 0	0 / 0	0 / 0	1013 / 0	0 / 0
N	4989	3016 / 0	0 / 0	0 / 0	0 / 0	1973 / 0	0 / 0

BEARING MATERIAL TO BE SPF NO.2 OR BETTER AT JOINT(S) S, Y, N
BEARING SIZE FACTOR = 1.15 AT JNT(S) S (BASED ON SUPPORT DEPTH = 1-8)

BRACING

TOP CHORD TO BE SHEATHED OR MAX. PURLIN SPACING = 4.49 FT.
MAX. UNBRACED BOTTOM CHORD LENGTH = 6.25 FT OR RIGID CEILING DIRECTLY APPLIED.

ALL PITCH BREAKS AND PERIMETER CORNER JOINTS MUST BE LATERALLY RESTRAINED.

2x6 DRY SPF No.2 T-BRACE AT G-S, J-R

FASTEN T AND I-BRACES TO NARROW EDGE OF WEB WITH ONE ROW PER PLY OF 3" COMMON WIRE NAILS @ 6" O.C. WITH 3" MINIMUM END DISTANCE. BRACE MUST COVER 90% OF WEB LENGTH.

END VERTICAL(S) MUST BE SHEATHED OR HAVE BRACES AS INDICATED IN THE MAX. UNBRACED LENGTH COLUMN OF THE TABLE BELOW

LOADING

TOTAL LOAD CASES: (6)

CHORDS

MEMB. FR-TO	MAX. FACTORED FORCE (LBS)	FACTORED VERT. LOAD LC1 (PLF) FROM	TO	MAX CSI (LC)	MAX. UNBRAC LENGTH
A- B	-2707 / 0	-78.0	-78.0	0.05 (5)	6.25
B- C	-3962 / 0	-78.0	-78.0	0.06 (5)	5.57
C- D	-1985 / 0	-78.0	-78.0	0.07 (5)	6.25
D- E	0 / 215	-78.0	-78.0	0.06 (1)	10.00
E- F	0 / 219	-78.0	-78.0	0.13 (1)	10.00
F- G	0 / 765	-78.0	-78.0	0.26 (1)	10.00
G- H	-4016 / 0	-108.2	-108.2	0.28 (1)	5.32
H- I	-4016 / 0	-108.2	-108.2	0.28 (1)	5.32
I- J	-4016 / 0	-108.2	-108.2	0.22 (6)	5.38
J- K	-6184 / 0	-78.0	-78.0	0.10 (6)	4.66
K- L	-6720 / 0	-78.0	-78.0	0.12 (6)	4.49
Y- A	-3014 / 0	0.0	0.0	0.07 (5)	7.81
N- L	-5854 / 0	0.0	0.0	0.13 (6)	7.20
Z- Y	0 / 0	-96.5	-96.5	0.03 (1)	10.00
Y- X	-2 / 0	-583.4	-583.4	0.04 (5)	10.00
X- W	0 / 2642	-583.4	-583.4	0.12 (5)	10.00
W- V	0 / 3045	-583.4	-583.4	0.35 (5)	10.00
V- U	0 / 1570	-583.4	-583.4	0.29 (5)	10.00
U- T	-1094 / 0	-583.4	-583.4	0.02 (1)	6.25
T- S	-1273 / 0	-583.4	-583.4	0.60 (1)	6.25
S- R	-1216 / 0	-676.2	-676.2	0.61 (1)	6.25
R- Q	0 / 4787	-676.2	-676.2	0.64 (6)	10.00
Q- P	0 / 4787	-676.2	-676.2	0.64 (6)	10.00
P- O	0 / 5169	-607.0	-607.0	0.54 (6)	10.00
O- N	0 / 0	-607.0	-607.0	0.19 (1)	10.00
N- M	0 / 0	-96.5	-96.5	0.03 (1)	10.00

WEBS

MEMB. FR-TO	MAX. FACTORED FORCE (LBS)	MAX CSI (LC)
X- B	-2216 / 0	0.12 (5)
B- W	0 / 1858	0.14 (5)
W- C	0 / 1784	0.13 (6)
C- V	-1748 / 0	0.24 (5)
V- D	0 / 3681	0.28 (5)
D- U	-3193 / 0	0.95 (1)
U- E	-461 / 0	0.10 (1)
U- F	0 / 3580	0.27 (5)
T- F	-2917 / 0	0.87 (5)
T- G	0 / 2425	0.18 (5)
S- G	-8995 / 0	0.43 (1)
G- R	0 / 7740	0.58 (1)
R- I	-704 / 0	0.21 (6)
R- J	-1201 / 0	0.22 (1)
P- J	0 / 3905	0.29 (1)
P- K	-672 / 0	0.11 (1)
O- K	0 / 679	0.05 (5)
A- X	0 / 2366	0.18 (5)
O- L	0 / 5360	0.40 (6)

DESIGN CRITERIA

SPECIFIED LOADS:

TOP	CH.	LL =	21.0	PSF
		DL =	6.0	PSF
BOT	CH.	LL =	0.0	PSF
		DL =	7.4	PSF
TOTAL	LOAD	=	34.4	PSF

SPACING = 24.0 IN. C/C

LOADING IN FLAT SECTION BASED ON A SLOPE OF 2.00/12 MINIMUM

GIRDER TYPE: CStdGirder
START DISTANCE = 0-0
START SPAN CARRIED = 25-5-1
END DISTANCE = 32-10-0
END SPAN CARRIED = 25-5-1
END WALL WIDTH = 0-0
APPLIED TO BACK SIDE OF BOTTOM CHORD.
- ADDT'L LOADS BASED ON 55 % OF GSL.

GIRDER TYPE: CPrimeHip
SIDE SETBACK = 7-1-4
END SETBACK = 7-1-4
END WALL WIDTH = 0-0
CORNER FRAMING TYPE: CONVENTIONAL
END JACK TYPE: PARTIAL
APPLIED TO FRONT SIDE
- ADDT'L LOADS BASED ON 55 % OF GSL.
LOADS APPLIED TO FIRST 19-10-0 OF SPAN MEASURED FROM THE RIGHT.

THIS TRUSS IS DESIGNED FOR RESIDENTIAL OR SMALL BUILDING REQUIREMENTS OF PART 9, NBCC 2015

THIS DESIGN COMPLIES WITH:
- PART 9 OF BCBC 2018 , ABC 2019
- PART 9 OF OBC 2012 (2019 AMENDMENT)
- CSA 086-14
- TPIC 2014

DESIGN ASSUMPTIONS
-OVERHANG NOT TO BE ALTERED OR CUT OFF.

(55 % OF 23.0 P.S.F. G.S.L. PLUS 8.4 P.S.F. RAIN LOAD) EQUALS 21.0 P.S.F. SPECIFIED ROOF LIVE LOAD

ALLOWABLE DEFL.(LL)= L/360 (0.65")
CALCULATED VERT. DEFL.(LL) = L/ 999 (0.08")
ALLOWABLE DEFL.(TL)= L/360 (0.65")
CALCULATED VERT. DEFL.(TL) = L/ 999 (0.17")

CANTILEVER DEFLECTION:
ALLOWABLE DEFL.(LL)= L/120 (0.19")
CALCULATED VERT. DEFL.(LL) = L/ 999 (0.02")
ALLOWABLE DEFL.(TL)= L/120 (0.19")
CALCULATED VERT. DEFL.(TL) = L/ 635 (0.03")

CSI: TC=0.28/1.00 (G-I:1) , BC=0.64/1.00 (P-R:6) , WB=0.95/1.00 (D-U:1) , SSI=0.47/1.00 (S-T:1)

DOL LUMBER=1.00 NAIL=1.00 LS BEND=1.10 COMP=1.10 SHEAR=1.10 TENS= 1.10

COMPANION LIVE LOAD FACTOR = 1.00

CONTINUED ON PAGE 2

STAGGER NAILS BY HALF THE SURFACE SPACING IN ADJACENT PLIES.

GIRDER NAILING ASSUMES NAILED HANGERS ARE FASTENED WITH MIN. 3-0 INCH NAILS.

PLATES (table is in inches)

JT	TYPE	PLATES	W	LEN	Y	X
A	TMVW+p	MT20	5.0	6.0	2.00	2.25
B, C, K						
B	TMWW-t	MT20	4.0	4.0	2.00	1.25
D	TTWW+m	MT20	4.0	6.0	Edge	1.00
E	TMW+w	MT20	2.0	4.0		
F	TMWW-t	MT20	4.0	4.0	1.50	1.50
G	TMWWW-t	MT20	5.0	14.0	1.75	4.00
H	TS-t	MT20	3.0	6.0		
I	TMW+w	MT20	2.0	4.0		
J	TTWW+m	MT20	5.0	6.0	2.00	1.75
L	TMVW-t	MT20	4.0	9.0	1.50	4.25
N	BMV1+p	MT20	3.0	4.0		
O	BMWW-t	MT20	4.0	6.0	2.00	2.50
P	BMWW+t	MT20	4.0	6.0		
Q	BS-t	MT20	5.0	8.0		
R	BMWWW-t	MT20	7.0	8.0	3.75	3.50
S	BMW1+t	MT20	6.0	9.0	Edge	3.00
T	BBWW-l	MT20	5.0	8.0	2.75	5.00
U	BBWWW+m	MT20	7.0	8.0	4.25	2.75
V	BMWW+t	MT20	4.0	6.0		
W	BBWW-h	MT20	7.0	8.0		
X	BBWW-h	MT20	7.0	8.0	3.00	4.00
Y	BMV1+p	MT20	2.0	4.0		

Edge - INDICATES REFERENCE CORNER OF PLATE TOUCHES EDGE OF CHORD.

LATERAL BRACE(S) SHOWN SHALL BE 2X4 SPF#2

FACTORED CONCENTRATED LOADS (LBS)

JT	LOC.	LC1	MAX-	MAX+	FACE	DIR.	TYPE	HEEL	CONN.
J	25-8-12	-517	-517	---	FRONT	VERT	TOTAL	---	C1

PATTERN-LOADING CHECK APPLIED TO THIS TRUSS.

AUTOSOLVE HEELS OFF

TRUSS PLATE MANUFACTURER IS NOT RESPONSIBLE FOR QUALITY CONTROL IN THE TRUSS MANUFACTURING PLANT .

NAIL VALUES

PLATE	GRIP(DRY) (PSI)		SHEAR (PLI)		SECTION (PLI)	
	MAX	MIN	MAX	MIN	MAX	MIN
MT20	650	371	1747	788	1987	1873

PLATE PLACEMENT TOL. = 0.250 inches

PLATE ROTATION TOL. = 5.0 Deg.

JSI GRIP= 0.90 (L) (INPUT = 0.90)
JSI METAL= 0.71 (Q) (INPUT = 1.00)

JOB NAME	TRUSS NAME	QUANTITY	PLY	JOB DESC.	DRWG NO.
318404	H1		1	TRUSS DESC. JT 45147	E20035295

Alpa Roof Truss, Maple

Version 8.310 S Oct 29 2019 MiTek Industries, Inc. Tue Mar 24 15:04:28 2020 Page 1

ID:MF8iiriaTok7DlbpT4B71Xys4PG-zaJyv9qQqUQUW58F7oLRRhaRhCeyTqhU53A28yzXiF1

Scale = 1:29.7

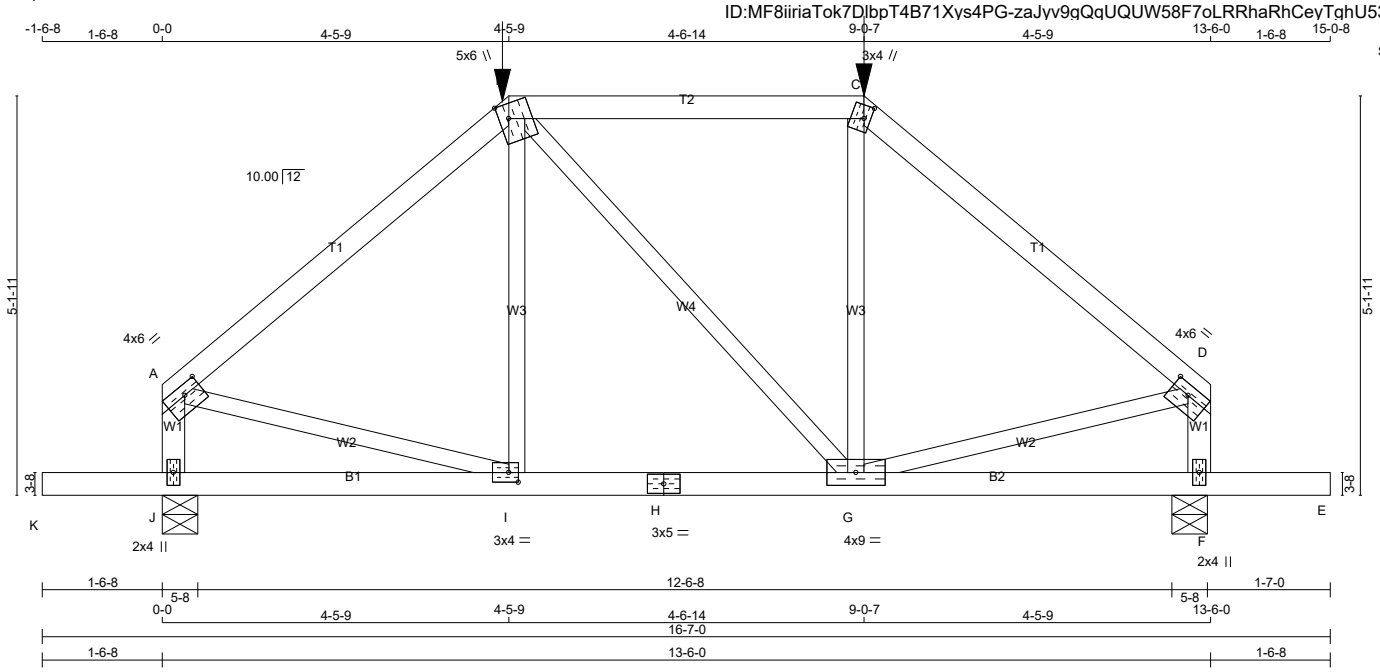

TOTAL WEIGHT = 60 lb

LUMBER

N. L. G. A. RULES

CHORDS	SIZE		LUMBER	DESCR.
A - B	2x4	DRY	No.2	SPF
B - C	2x4	DRY	No.2	SPF
C - D	2x4	DRY	No.2	SPF
J - A	2x4	DRY	No.2	SPF
F - D	2x4	DRY	No.2	SPF
K - H	2x4	DRY	No.2	SPF
H - E	2x4	DRY	No.2	SPF
ALL WEBS EXCEPT	2x3	DRY	No.2	SPF

DRY: SEASONED LUMBER.

PLATES (table is in inches)

JT	TYPE	PLATES	W	LEN	Y	X
A	TMVW-t	MT20	4.0	6.0	1.50	2.75
B	TTWW+m	MT20	5.0	6.0	2.25	1.50
C	TTW+m	MT20	3.0	4.0	2.00	1.00
D	TMVW-t	MT20	4.0	6.0	1.50	2.75
F	BMV1+p	MT20	2.0	4.0		
G	BMWWW-t	MT20	4.0	9.0		
H	BS-t	MT20	3.0	5.0		
I	BMWW-t	MT20	3.0	4.0	1.50	1.50
J	BMV1+p	MT20	2.0	4.0		

LATERAL BRACE(S) SHOWN SHALL BE 2X4 SPF#2

LICENSED PROFESSIONAL ENGINEER
Y. WIDYA
100225448
03/24/2020
PROVINCE OF ONTARIO

DIMENSIONS, SUPPORTS AND LOADINGS SPECIFIED BY FABRICATOR TO BE VERIFIED BY BUILDING DESIGNER

BEARINGS

JT	FACTORED GROSS REACTION VERT	HORZ	MAXIMUM FACTORED GROSS REACTION DOWN	HORZ	UPLIFT	INPUT BRG IN-SX	REQRD BRG IN-SX
J	1244	0	1244	0	0	5-8	1-13
F	1244	0	1244	0	0	5-8	1-13

UNFACTORED REACTIONS

JT	1ST LCASE COMBINED	MAX./MIN. COMPONENT REACTIONS SNOW	LIVE	PERM.LIVE	WIND	DEAD	SOIL
J	888	534 / 0	0 / 0	0 / 0	0 / 0	354 / 0	0 / 0
F	888	534 / 0	0 / 0	0 / 0	0 / 0	354 / 0	0 / 0

BEARING MATERIAL TO BE SPF NO.2 OR BETTER AT JOINT(S) J, F

BRACING

TOP CHORD TO BE SHEATHED OR MAX. PURLIN SPACING = 5.68 FT.
MAX. UNBRACED BOTTOM CHORD LENGTH = 10.00 FT OR RIGID CEILING DIRECTLY APPLIED.

ALL PITCH BREAKS AND PERIMETER CORNER JOINTS MUST BE LATERALLY RESTRAINED.

LOADING

TOTAL LOAD CASES: (4)

CHORDS

MEMB. FR-TO	MAX. FACTORED FORCE (LBS)	FACTORED VERT. LOAD (PLF) FROM	TO	LC1	MAX CSI (LC)	MAX. UNBRAC LENGTH
A- B	-1054 / 0	-78.0	-78.0	0.33 (1)	5.68	
B- C	-810 / 0	-89.1	-89.1	0.37 (1)	6.16	
C- D	-1054 / 0	-78.0	-78.0	0.33 (1)	5.68	
J- A	-1043 / 0	0.0	0.0	0.12 (1)	7.66	
F- D	-1043 / 0	0.0	0.0	0.12 (1)	7.66	
K- J	0 / 0	-96.5	-96.5	0.17 (1)	10.00	
J- I	0 / 0	-33.0	-33.0	0.19 (4)	10.00	
I- H	0 / 809	-83.1	-83.1	0.30 (1)	10.00	
H- G	0 / 809	-83.1	-83.1	0.30 (1)	10.00	
G- F	0 / 0	-33.0	-33.0	0.19 (4)	10.00	
F- E	0 / 0	-96.5	-96.5	0.17 (1)	10.00	

WEBS

MEMB. FR-TO	MAX. FACTORED FORCE (LBS)	MAX CSI (LC)
I- B	0 / 133	0.05 (4)
B- G	0 / 0	0.00 (1)
G- C	0 / 133	0.05 (4)
A- I	0 / 830	0.21 (1)
G- D	0 / 830	0.21 (1)

FACTORED CONCENTRATED LOADS (LBS)

JT	LOC.	LC1	MAX-	MAX+	FACE	DIR.	TYPE	HEEL	CONN.
B	4-5-9	-211	-211	---	FRONT	VERT	TOTAL	---	C1
C	9-0-7	-211	-211	---	FRONT	VERT	TOTAL	---	C1

[M]

DESIGN CRITERIA

SPECIFIED LOADS:

TOP CH.	LL	=	21.0	PSF
	DL	=	6.0	PSF
BOT CH.	LL	=	0.0	PSF
	DL	=	7.4	PSF
TOTAL LOAD		=	34.4	PSF

SPACING = 24.0 IN. C/C

LOADING IN FLAT SECTION BASED ON A SLOPE OF 2.00/12 MINIMUM

GIRDER TYPE: CPrimeHip
SIDE SETBACK = 4-5-9
END SETBACK = 5-1-11
END WALL WIDTH = 0-0
CORNER FRAMING TYPE: CONVENTIONAL
END JACK TYPE: PARTIAL
APPLIED TO FRONT SIDE
- ADDT'L LOADS BASED ON 55 % OF GSL.

THIS TRUSS IS DESIGNED FOR RESIDENTIAL OR SMALL BUILDING REQUIREMENTS OF PART 9, NBCC 2015

THIS DESIGN COMPLIES WITH:
- PART 9 OF BCBC 2018 , ABC 2019
- PART 9 OF OBC 2012 (2019 AMENDMENT)
- CSA 086-14
- TPIC 2014

(55 % OF 23.0 P.S.F. G.S.L. PLUS 8.4 P.S.F. RAIN LOAD) EQUALS 21.0 P.S.F. SPECIFIED ROOF LIVE LOAD

ALLOWABLE DEFL.(LL)= L/360 (0.45")
CALCULATED VERT. DEFL.(LL) = L/ 999 (0.03")
ALLOWABLE DEFL.(TL)= L/360 (0.45")
CALCULATED VERT. DEFL.(TL) = L/ 999 (0.05")

CANTILEVER DEFLECTION:
ALLOWABLE DEFL.(LL)= L/120 (0.19")
CALCULATED VERT. DEFL.(LL) = L/ 999 (0.01")
ALLOWABLE DEFL.(TL)= L/120 (0.19")
CALCULATED VERT. DEFL.(TL) = L/ 999 (0.01")

CSI: TC=0.37/1.00 (B-C:1) , BC=0.30/1.00 (G-I:1) , WB=0.21/1.00 (D-G:1) , SSI=0.17/1.00 (B-C:1)

DOL LUMBER=1.00 NAIL=1.00 LS BEND=1.00 COMP=1.00 SHEAR=1.00 TENS= 1.00

COMPANION LIVE LOAD FACTOR = 1.00

TRUSS PLATE MANUFACTURER IS NOT RESPONSIBLE FOR QUALITY CONTROL IN THE TRUSS MANUFACTURING PLANT .

NAIL VALUES

PLATE	GRIP(DRY) (PSI) MAX	MIN	SHEAR (PLI) MAX	MIN	SECTION (PLI) MAX	MIN
MT20	650	371	1747	788	1987	1873

PLATE PLACEMENT TOL. = 0.250 inches

PLATE ROTATION TOL. = 5.0 Deg.

CONTINUED ON PAGE 2

JOB NAME	TRUSS NAME	QUANTITY	PLY	JOB DESC.	DRWG NO.
318404	H2		1	TRUSS DESC. JT 45147	E20035296

Alpa Roof Truss, Maple

Version 8.310 S Oct 29 2019 MiTek Industries, Inc. Tue Mar 24 15:04:29 2020 Page 1

ID:MF8iiriaTok7DlbpT4B71Xys4PG-RntK6Vh2boYL8FjShWsq_u7cPc?qC9rdJjvbqPzXiF0

Scale = 1:36.2

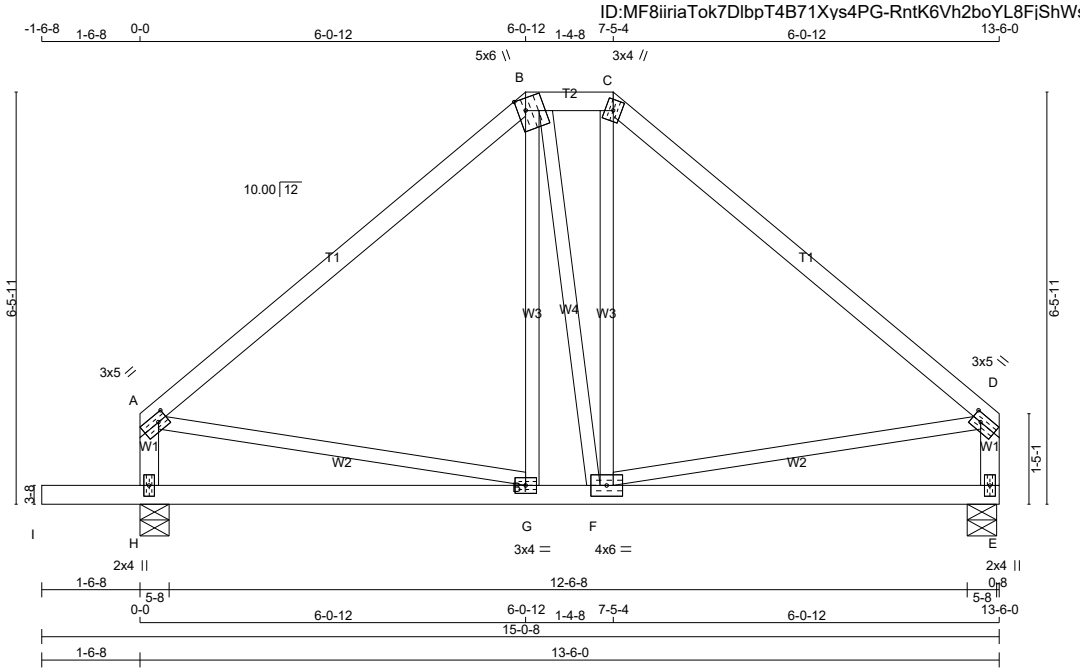

TOTAL WEIGHT = 64 lb

LUMBER

N. L. G. A. RULES

CHORDS	SIZE		LUMBER	DESCR.
A - B	2x4	DRY	No.2	SPF
B - C	2x4	DRY	No.2	SPF
C - D	2x4	DRY	No.2	SPF
H - A	2x4	DRY	No.2	SPF
E - D	2x4	DRY	No.2	SPF
I - E	2x4	DRY	No.2	SPF
ALL WEBS EXCEPT	2x3	DRY	No.2	SPF

DRY: SEASONED LUMBER.

PLATES (table is in inches)

JT	TYPE	PLATES	W	LEN	Y	X
A	TMVW-t	MT20	3.0	5.0	1.50	1.75
B	TTWW+m	MT20	5.0	6.0	2.25	1.50
C	TTW+m	MT20	3.0	4.0		
D	TMVW-t	MT20	3.0	5.0	1.50	1.75
E	BMV1+p	MT20	2.0	4.0		
F	BMWWW-t	MT20	4.0	6.0		
G	BMWW-t	MT20	3.0	4.0		
H	BMV1+p	MT20	2.0	4.0		

LATERAL BRACE(S) SHOWN SHALL BE 2X4 SPF#2

DIMENSIONS, SUPPORTS AND LOADINGS SPECIFIED BY FABRICATOR TO BE VERIFIED BY BUILDING DESIGNER

BEARINGS

JT	FACTORED GROSS REACTION VERT	HORZ	MAXIMUM FACTORED GROSS REACTION DOWN	HORZ	UPLIFT	INPUT BRG IN-SX	REQRD BRG IN-SX
E	651	0	651	0	0	5-8	1-8
H	800	0	800	0	0	5-8	1-8

UNFACTORED REACTIONS

JT	1ST LCASE COMBINED	MAX./MIN. COMPONENT REACTIONS SNOW	LIVE	PERM.LIVE	WIND	DEAD	SOIL
E	464	283 / 0	0 / 0	0 / 0	0 / 0	181 / 0	0 / 0
H	570	348 / 0	0 / 0	0 / 0	0 / 0	222 / 0	0 / 0

BEARING MATERIAL TO BE SPF NO.2 OR BETTER AT JOINT(S) E, H

BRACING

TOP CHORD TO BE SHEATHED OR MAX. PURLIN SPACING = 6.25 FT.
MAX. UNBRACED BOTTOM CHORD LENGTH = 10.00 FT OR RIGID CEILING DIRECTLY APPLIED.

ALL PITCH BREAKS AND PERIMETER CORNER JOINTS MUST BE LATERALLY RESTRAINED.

LOADING

TOTAL LOAD CASES: (4)

CHORDS

MEMB. FR-TO	MAX. FACTORED FORCE (LBS)	FACTORED VERT. LOAD (PLF) FROM	TO	LC1	MAX CSI (LC)	MAX. UNBRAC LENGTH
A- B	-474 / 0	-78.0	-78.0	0.37 (1)	6.25	
B- C	-365 / 0	-78.0	-78.0	0.02 (1)	6.25	
C- D	-475 / 0	-78.0	-78.0	0.37 (1)	6.25	
H- A	-605 / 0	0.0	0.0	0.06 (1)	7.81	
E- D	-604 / 0	0.0	0.0	0.06 (1)	7.81	
I- H	0 / 0	-96.5	-96.5	0.16 (1)	10.00	
H- G	0 / 0	-18.5	-18.5	0.16 (4)	10.00	
G- F	0 / 364	-18.5	-18.5	0.21 (4)	10.00	
F- E	0 / 0	-18.5	-18.5	0.17 (4)	10.00	

WEBS

MEMB. FR-TO	MAX. FACTORED FORCE (LBS)	MAX CSI (LC)
G- B	0 / 55	0.02 (4)
B- F	0 / 7	0.00 (4)
F- C	0 / 62	0.02 (4)
A- G	0 / 369	0.08 (1)
F- D	0 / 370	0.08 (1)

[M][F]

DESIGN CRITERIA

SPECIFIED LOADS:

TOP CH.	LL	=	21.0	PSF
	DL	=	6.0	PSF
BOT CH.	LL	=	0.0	PSF
	DL	=	7.4	PSF
TOTAL LOAD		=	34.4	PSF

SPACING = 24.0 IN. C/C

LOADING IN FLAT SECTION BASED ON A SLOPE OF 2.00/12 MINIMUM

THIS TRUSS IS DESIGNED FOR RESIDENTIAL OR SMALL BUILDING REQUIREMENTS OF PART 9, NBCC 2015

THIS DESIGN COMPLIES WITH:
- PART 9 OF BCBC 2018 , ABC 2019
- PART 9 OF OBC 2012 (2019 AMENDMENT)
- CSA 086-14
- TPIC 2014

(55 % OF 23.0 P.S.F. G.S.L. PLUS 8.4 P.S.F. RAIN LOAD) EQUALS 21.0 P.S.F. SPECIFIED ROOF LIVE LOAD

ALLOWABLE DEFL.(LL)= L/360 (0.45")
CALCULATED VERT. DEFL.(LL) = L/ 999 (0.01")
ALLOWABLE DEFL.(TL)= L/360 (0.45")
CALCULATED VERT. DEFL.(TL) = L/ 999 (0.04")

CANTILEVER DEFLECTION:
ALLOWABLE DEFL.(LL)= L/120 (0.19")
CALCULATED VERT. DEFL.(LL) = L/ 999 (0.01")
ALLOWABLE DEFL.(TL)= L/120 (0.19")
CALCULATED VERT. DEFL.(TL) = L/ 999 (0.01")

CSI: TC=0.37/1.00 (C-D:1) , BC=0.21/1.00 (F-G:4) , WB=0.08/1.00 (D-F:1) , SSI=0.14/1.00 (C-D:1)

DOL LUMBER=1.00 NAIL=1.00 LS BEND=1.10 COMP=1.10 SHEAR=1.10 TENS= 1.10

COMPANION LIVE LOAD FACTOR = 1.00

TRUSS PLATE MANUFACTURER IS NOT RESPONSIBLE FOR QUALITY CONTROL IN THE TRUSS MANUFACTURING PLANT .

NAIL VALUES

PLATE	GRIP(DRY) (PSI) MAX	MIN	SHEAR (PLI) MAX	MIN	SECTION (PLI) MAX	MIN
MT20	650	371	1747	788	1987	1873

PLATE PLACEMENT TOL. = 0.250 inches

PLATE ROTATION TOL. = 5.0 Deg.

JSI GRIP= 0.62 (G) (INPUT = 0.90)
JSI METAL= 0.18 (D) (INPUT = 1.00)

JOB NAME	TRUSS NAME	QUANTITY	PLY	JOB DESC.	DRWG NO.
318404	H3		1	TRUSS DESC. JT 45147	E20035297

Alpa Roof Truss, Maple

Version 8.310 S Oct 29 2019 MiTek Industries, Inc. Tue Mar 24 15:04:30 2020 Page 1

ID:MF8iiriaTok7DlbpT4B71Xys4PG-vzRjKrhqM6qCmPIeEDNvW6qoF0KMxcAnYMf9DrzXiF?

Scale = 1:41.0

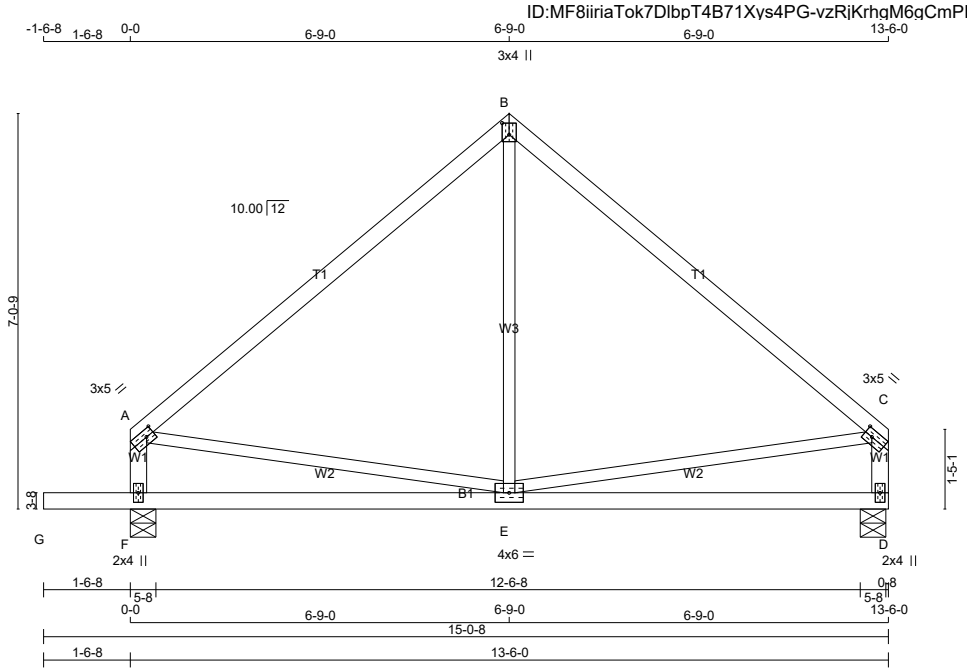

TOTAL WEIGHT = 56 lb

[M][F]

LUMBER

N. L. G. A. RULES

CHORDS	SIZE		LUMBER	DESCR.
A - B	2x4	DRY	2100F 1.8E	SPF
B - C	2x4	DRY	2100F 1.8E	SPF
F - A	2x4	DRY	No.2	SPF
D - C	2x4	DRY	No.2	SPF
G - D	2x4	DRY	No.2	SPF
ALL WEBS EXCEPT	2x3	DRY	No.2	SPF

DRY: SEASONED LUMBER.

PLATES (table is in inches)

JT	TYPE	PLATES	W	LEN	Y	X
A	TMVW-t	MT20	3.0	5.0	1.50	1.75
B	TTW+p	MT20	3.0	4.0	2.50	1.50
C	TMVW-t	MT20	3.0	5.0	1.50	1.75
D	BMV1+p	MT20	2.0	4.0		
E	BMWWW-t	MT20	4.0	6.0		
F	BMV1+p	MT20	2.0	4.0		

LATERAL BRACE(S) SHOWN SHALL BE 2X4 SPF#2

DIMENSIONS, SUPPORTS AND LOADINGS SPECIFIED BY FABRICATOR TO BE VERIFIED BY BUILDING DESIGNER

BEARINGS

JT	FACTORED GROSS REACTION VERT	HORZ	MAXIMUM FACTORED GROSS REACTION DOWN	HORZ	UPLIFT	INPUT BRG IN-SX	REQRD BRG IN-SX
D	651	0	651	0	0	5-8	1-8
F	800	0	800	0	0	5-8	1-8

UNFACTORED REACTIONS

JT	1ST LCASE COMBINED	MAX./MIN. COMPONENT REACTIONS SNOW	LIVE	PERM.LIVE	WIND	DEAD	SOIL
D	464	283 / 0	0 / 0	0 / 0	0 / 0	181 / 0	0 / 0
F	570	348 / 0	0 / 0	0 / 0	0 / 0	222 / 0	0 / 0

BEARING MATERIAL TO BE SPF NO.2 OR BETTER AT JOINT(S) D, F

BRACING

TOP CHORD TO BE SHEATHED OR MAX. PURLIN SPACING = 6.25 FT.
MAX. UNBRACED BOTTOM CHORD LENGTH = 10.00 FT OR RIGID CEILING DIRECTLY APPLIED.

ALL PITCH BREAKS AND PERIMETER CORNER JOINTS MUST BE LATERALLY RESTRAINED.

LOADING

TOTAL LOAD CASES: (4)

CHORDS

MEMB. FR-TO	MAX. FACTORED FORCE (LBS)	FACTORED VERT. LOAD LC1 (PLF) FROM	TO	MAX CSI (LC)	MAX. UNBRAC LENGTH
A- B	-446 / 0	-78.0	-78.0	0.30 (1)	6.25
B- C	-446 / 0	-78.0	-78.0	0.30 (1)	6.25
F- A	-604 / 0	0.0	0.0	0.06 (1)	7.81
D- C	-604 / 0	0.0	0.0	0.06 (1)	7.81
G- F	0 / 0	-96.5	-96.5	0.16 (1)	10.00
F- E	0 / 0	-18.5	-18.5	0.24 (4)	10.00
E- D	0 / 0	-18.5	-18.5	0.24 (4)	10.00

WEBS

MEMB. FR-TO	MAX. FACTORED FORCE (LBS)	MAX CSI (LC)
E- B	0 / 128	0.04 (4)
A- E	0 / 347	0.08 (1)
E- C	0 / 347	0.08 (1)

DESIGN CRITERIA

SPECIFIED LOADS:

TOP	CH.	LL =	21.0	PSF
		DL =	6.0	PSF
BOT	CH.	LL =	0.0	PSF
		DL =	7.4	PSF
TOTAL	LOAD	=	34.4	PSF

SPACING = 24.0 IN. C/C

THIS TRUSS IS DESIGNED FOR RESIDENTIAL OR SMALL BUILDING REQUIREMENTS OF PART 9, NBCC 2015

THIS DESIGN COMPLIES WITH:
- PART 9 OF BCBC 2018 , ABC 2019
- PART 9 OF OBC 2012 (2019 AMENDMENT)
- CSA 086-14
- TPIC 2014

(55 % OF 23.0 P.S.F. G.S.L. PLUS 8.4 P.S.F. RAIN LOAD) EQUALS 21.0 P.S.F. SPECIFIED ROOF LIVE LOAD

ALLOWABLE DEFL.(LL)= L/360 (0.45")
CALCULATED VERT. DEFL.(LL) = L/ 999 (0.00")
ALLOWABLE DEFL.(TL)= L/360 (0.45")
CALCULATED VERT. DEFL.(TL) = L/ 999 (0.05")

CANTILEVER DEFLECTION:
ALLOWABLE DEFL.(LL)= L/120 (0.19")
CALCULATED VERT. DEFL.(LL) = L/ 999 (0.01")
ALLOWABLE DEFL.(TL)= L/120 (0.19")
CALCULATED VERT. DEFL.(TL) = L/ 999 (0.01")

CSI: TC=0.30/1.00 (A-B:1) , BC=0.24/1.00 (E-F:4) , WB=0.08/1.00 (C-E:1) , SSI=0.16/1.00 (B-C:1)

DOL LUMBER=1.00 NAIL=1.00 LS BEND=1.10 COMP=1.10 SHEAR=1.10 TENS= 1.10

COMPANION LIVE LOAD FACTOR = 1.00

TRUSS PLATE MANUFACTURER IS NOT RESPONSIBLE FOR QUALITY CONTROL IN THE TRUSS MANUFACTURING PLANT .

NAIL VALUES

PLATE	GRIP(DRY) (PSI) MAX	MIN	SHEAR (PLI) MAX	MIN	SECTION (PLI) MAX	MIN
MT20	650	371	1747	788	1987	1873

PLATE PLACEMENT TOL. = 0.250 inches

PLATE ROTATION TOL. = 5.0 Deg.

JSI GRIP= 0.51 (A) (INPUT = 0.90)
JSI METAL= 0.18 (A) (INPUT = 1.00)

JOB NAME	TRUSS NAME	QUANTITY	PLY	JOB DESC.	DRWG NO.
318404	H41A		3	TRUSS DESC. JT 45147	E20035298

Alpa Roof Truss, Maple

Version 8.310 S Oct 29 2019 MiTek Industries, Inc. Tue Mar 24 15:05:03 2020 Page 1

ID:MF8iiriaTok7DlbpT4B71Xys4PG-RJxBF75NbFqWDTJ qfTfM3XSqJVYAPmd8?8OsRzXiEU

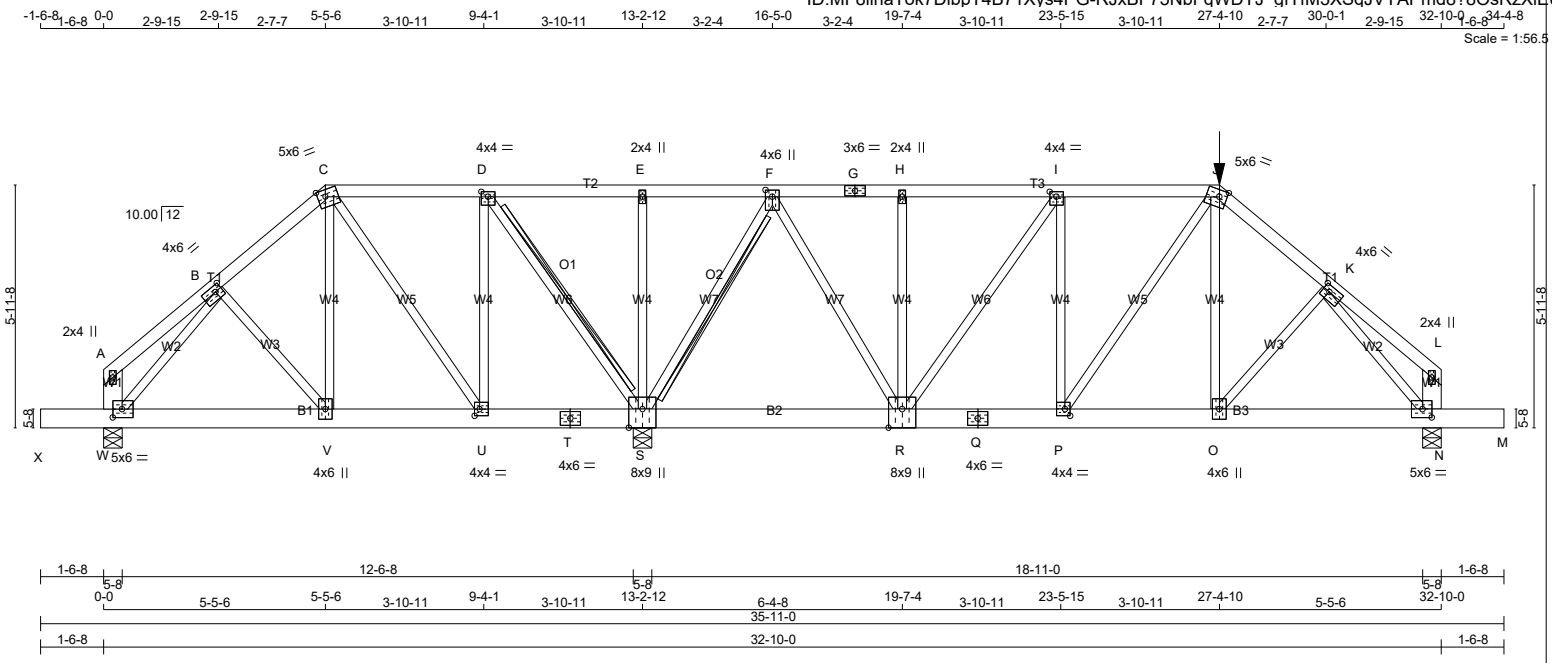

TOTAL WEIGHT = 3 X 178 = 534 lb

[M]

LUMBER

N. L. G. A. RULES

CHORDS	SIZE		LUMBER	DESCR.
A - C	2x4	DRY	No.2	SPF
C - G	2x4	DRY	No.2	SPF
G - J	2x4	DRY	No.2	SPF
J - L	2x4	DRY	No.2	SPF
W - A	2x6	DRY	No.2	SPF
N - L	2x6	DRY	No.2	SPF
X - T	2x6	DRY	No.2	SPF
T - Q	2x6	DRY	No.2	SPF
Q - M	2x6	DRY	No.2	SPF
ALL WEBS EXCEPT	2x3	DRY	No.2	SPF

DRY: SEASONED LUMBER.

DESIGN CONSISTS OF 3 TRUSSES BUILT SEPARATELY THEN FASTENED TOGETHER AS FOLLOWS:

CHORDS	#ROWS	SURFACE SPACING (IN)	LOAD(PLF)
TOP CHORDS : (0.122"X3") SPIRAL NAILS			
A- C	1	12	TOP
C- G	1	12	SIDE(20.2)
G- J	1	12	SIDE(75.0)
J- L	1	12	SIDE(91.5)
W- A	2	12	TOP
N- L	2	12	TOP
BOTTOM CHORDS : (0.122"X3") SPIRAL NAILS			
X- T	2	6	SIDE(371.8)
T- Q	2	6	SIDE(371.8)
Q- M	2	6	SIDE(371.8)
WEBS : (0.122"X3") SPIRAL NAILS			
O- J	1	6	SIDE(107.8)
2x3	1	6	

STAGGER NAILS BY HALF THE SURFACE SPACING IN ADJACENT PLIES.

GIRDER NAILING ASSUMES NAILED HANGERS ARE FASTENED WITH MIN. 3-0 INCH NAILS.

TOP - COMPONENTS ARE LOADED FROM THE TOP AND MUST BE PLACED ON TOP EDGE OF ALL PLIES FOR THE LOAD TO BE TRANSFERRED TO EACH PLY.

LATERAL BRACE(S) SHOWN SHALL BE 2X4 SPF#2

DIMENSIONS, SUPPORTS AND LOADINGS SPECIFIED BY FABRICATOR TO BE VERIFIED BY BUILDING DESIGNER

BEARINGS

JT	FACTORED GROSS REACTION VERT	HORZ	MAXIMUM FACTORED GROSS REACTION DOWN	HORZ	UPLIFT	INPUT BRG IN-SX	REQRD BRG IN-SX
S	13471	0	13471	0	0	5-8	5-8
W	3585	0	3585	0	0	5-8	1-8
N	6981	0	6981	0	0	5-8	2-7

UNFACTORED REACTIONS

JT	1ST LCASE COMBINED	MAX./MIN. COMPONENT REACTIONS SNOW	LIVE	PERM.LIVE	WIND	DEAD	SOIL
S	9603	5872 / 0	0 / 0	0 / 0	0 / 0	3730 / 0	0 / 0
W	2557	1556 / 0	0 / 0	0 / 0	0 / 0	1001 / 0	0 / 0
N	4982	3016 / 0	0 / 0	0 / 0	0 / 0	1966 / 0	0 / 0

BEARING MATERIAL TO BE SPF NO.2 OR BETTER AT JOINT(S) S, W, N
BEARING SIZE FACTOR = 1.15 AT JNT(S) S (BASED ON SUPPORT DEPTH = 1-8)

BRACING

TOP CHORD TO BE SHEATHED OR MAX. PURLIN SPACING = 4.50 FT.
MAX. UNBRACED BOTTOM CHORD LENGTH = 10.00 FT OR RIGID CEILING DIRECTLY APPLIED.

ALL PITCH BREAKS AND PERIMETER CORNER JOINTS MUST BE LATERALLY RESTRAINED.

2x6 DRY SPF No.2 T-BRACE AT D-S, F-S

FASTEN T AND I-BRACES TO NARROW EDGE OF WEB WITH ONE ROW PER PLY OF 3" COMMON WIRE NAILS @ 6" O.C. WITH 3" MINIMUM END DISTANCE. BRACE MUST COVER 90% OF WEB LENGTH.

END VERTICAL(S) MUST BE SHEATHED OR HAVE BRACES AS INDICATED IN THE MAX. UNBRACED LENGTH COLUMN OF THE TABLE BELOW

LOADING

TOTAL LOAD CASES: (6)

CHORDS

MEMB. FR-TO	MAX. FACTORED FORCE (LBS)	FACTORED VERT. LOAD (PLF) FROM	TO	LC1	MAX CSI (LC)	MAX. UNBRAC LENGTH
A- B	-9 / 4	-78.0	-78.0	0.03 (5)	10.00	
B- C	-2531 / 0	-78.0	-78.0	0.04 (5)	6.25	
C- D	-787 / 0	-78.0	-78.0	0.05 (5)	6.25	
D- E	0 / 1656	-78.0	-78.0	0.18 (1)	10.00	
E- F	0 / 1656	-108.2	-108.2	0.18 (1)	10.00	
F- G	-4818 / 0	-108.2	-108.2	0.07 (6)	5.17	
G- H	-4818 / 0	-108.2	-108.2	0.07 (6)	5.17	
H- I	-4818 / 0	-108.2	-108.2	0.11 (6)	5.13	
I- J	-5833 / 0	-108.2	-108.2	0.13 (6)	4.74	
J- K	-6733 / 0	-78.0	-78.0	0.10 (6)	4.50	
K- L	-19 / 0	-78.0	-78.0	0.04 (6)	6.25	
W- A	-100 / 0	0.0	0.0	0.00 (5)	7.81	
N- L	-117 / 0	0.0	0.0	0.00 (6)	7.81	
X- W	0 / 0	-96.5	-96.5	0.03 (1)	10.00	
W- V	0 / 1729	-576.2	-576.2	0.41 (5)	10.00	
V- U	0 / 1993	-576.2	-576.2	0.42 (5)	10.00	
U- T	0 / 787	-576.2	-576.2	0.55 (1)	10.00	
T- S	0 / 787	-576.2	-576.2	0.55 (1)	10.00	
S- R	0 / 1696	-669.1	-669.1	0.59 (1)	10.00	
R- Q	0 / 5833	-669.1	-669.1	0.60 (6)	10.00	
Q- P	0 / 5833	-669.1	-669.1	0.60 (6)	10.00	
P- O	0 / 5209	-669.1	-669.1	0.56 (6)	10.00	
O- N	0 / 4437	-599.8	-599.8	0.53 (6)	10.00	
N- M	0 / 0	-96.5	-96.5	0.03 (1)	10.00	

WEBS

MEMB. FR-TO	MAX. FACTORED FORCE (LBS)	MAX CSI (LC)
B- V	0 / 378	0.03 (6)
V- C	0 / 3134	0.24 (1)
C- U	-2196 / 0	0.59 (1)
U- D	0 / 3029	0.23 (1)
D- S	-4056 / 0	0.39 (1)
S- E	-391 / 0	0.07 (1)
S- F	-6682 / 0	0.59 (6)
F- R	0 / 6316	0.47 (1)
R- H	-345 / 0	0.06 (1)
R- I	-1793 / 0	0.49 (1)
P- I	0 / 1134	0.09 (5)
P- J	0 / 1089	0.08 (6)
O- J	0 / 2732	0.20 (1)
O- K	0 / 1132	0.08 (5)
W- B	-2708 / 0	0.24 (5)
K- N	-6950 / 0	0.63 (6)

FACTORED CONCENTRATED LOADS (LBS)

JT	LOC.	LC1	MAX-	MAX+	FACE	DIR.	TYPE	HEEL	CONN.
J	27-4-10	-397	-397	---	FRONT	VERT	TOTAL	---	C1

DESIGN CRITERIA

SPECIFIED LOADS:

TOP	CH.	LL =	21.0	PSF
		DL =	6.0	PSF
BOT	CH.	LL =	0.0	PSF
		DL =	7.4	PSF
TOTAL	LOAD	=	34.4	PSF

SPACING = 24.0 IN. C/C

LOADING IN FLAT SECTION BASED ON A SLOPE OF 2.00/12 MINIMUM

GIRDER TYPE: CStdGirder
START DISTANCE = 0-0
START SPAN CARRIED = 25-1-8
END DISTANCE = 32-10-0
END SPAN CARRIED = 25-1-8
END WALL WIDTH = 0-0
APPLIED TO BACK SIDE OF BOTTOM CHORD.
- ADDT'L LOADS BASED ON 55 % OF GSL.

GIRDER TYPE: CPrimeHip
SIDE SETBACK = 5-5-6
END SETBACK = 7-1-4
END WALL WIDTH = 0-0
CORNER FRAMING TYPE: CONVENTIONAL
END JACK TYPE: PARTIAL
APPLIED TO FRONT SIDE
- ADDT'L LOADS BASED ON 55 % OF GSL.
LOADS APPLIED TO FIRST 19-10-0 OF SPAN MEASURED FROM THE RIGHT.

THIS TRUSS IS DESIGNED FOR RESIDENTIAL OR SMALL BUILDING REQUIREMENTS OF PART 9, NBCC 2015

THIS DESIGN COMPLIES WITH:
- PART 9 OF BCBC 2018 , ABC 2019
- PART 9 OF OBC 2012 (2019 AMENDMENT)
- CSA 086-14
- TPIC 2014

(55 % OF 23.0 P.S.F. G.S.L. PLUS 8.4 P.S.F. RAIN LOAD) EQUALS 21.0 P.S.F. SPECIFIED ROOF LIVE LOAD

ALLOWABLE DEFL.(LL)= L/360 (0.65")
CALCULATED VERT. DEFL.(LL) = L/ 999 (0.06")
ALLOWABLE DEFL.(TL)= L/360 (0.65")
CALCULATED VERT. DEFL.(TL) = L/ 999 (0.12")

CANTILEVER DEFLECTION:
ALLOWABLE DEFL.(LL)= L/120 (0.19")
CALCULATED VERT. DEFL.(LL) = L/ 999 (0.00")
ALLOWABLE DEFL.(TL)= L/120 (0.19")
CALCULATED VERT. DEFL.(TL) = L/ 999 (0.00")

CSI: TC=0.18/1.00 (D-E:1) , BC=0.60/1.00 (P-R:6) , WB=0.63/1.00 (K-N:6) , SSI=0.45/1.00 (R-S:1)

DOL LUMBER=1.00 NAIL=1.00 LS BEND=1.10 COMP=1.10 SHEAR=1.10 TENS= 1.10

COMPANION LIVE LOAD FACTOR = 1.00

AUTOSOLVE HEELS OFF

CONTINUED ON PAGE 2

JOB NAME	TRUSS NAME	QUANTITY	PLY	JOB DESC.	DRWG NO.
318404	H41A		3	TRUSS DESC. JT 45147	E20035298(2)

PLATES (table is in inches)

JT	TYPE	PLATES	W	LEN	Y	X
A	TMV+p	MT20	2.0	4.0		
B	TMWW-t	MT20	4.0	6.0	1.75	2.00
C	TTWW-m	MT20	5.0	6.0	2.00	2.25
D	TMWW-t	MT20	4.0	4.0	1.50	2.00
E	TMW+w	MT20	2.0	4.0		
F	TMWW+t	MT20	4.0	6.0	2.00	2.00
G	TS-t	MT20	3.0	6.0		
H	TMW+w	MT20	2.0	4.0		
I	TMWW-t	MT20	4.0	4.0	1.50	2.00
J	TTWW-m	MT20	5.0	6.0	2.00	2.25
K	TMWW-t	MT20	4.0	6.0	1.75	2.00
L	TMV+p	MT20	2.0	4.0		
N	BMVW1-t	MT20	5.0	6.0	2.50	2.75
O	BMWW+t	MT20	4.0	6.0		
P	BMWW-t	MT20	4.0	4.0	2.00	1.50
Q	BS-t	MT20	4.0	6.0		
R	BMWWW+t	MT20	8.0	9.0	Edge	4.00
S	BMWWW1+t	MT20	8.0	9.0	Edge	4.00
T	BS-t	MT20	4.0	6.0		
U	BMWW-t	MT20	4.0	4.0	2.00	1.50
V	BMWW+t	MT20	4.0	6.0		
W	BMVW1-t	MT20	5.0	6.0	2.50	2.75

Edge - INDICATES REFERENCE CORNER OF PLATE TOUCHES EDGE OF CHORD.

LATERAL BRACE(S) SHOWN SHALL BE 2X4 SPF#2

PATTERN-LOADING CHECK APPLIED TO THIS TRUSS.

TRUSS PLATE MANUFACTURER IS NOT RESPONSIBLE FOR QUALITY CONTROL IN THE TRUSS MANUFACTURING PLANT .

NAIL VALUES

PLATE	GRIP(DRY) (PSI) MAX	MIN	SHEAR (PLI) MAX	MIN	SECTION (PLI) MAX	MIN
MT20	650	371	1747	788	1987	1873

PLATE PLACEMENT TOL. = 0.250 inches

PLATE ROTATION TOL. = 5.0 Deg.

JSI GRIP= 0.89 (B) (INPUT = 0.90)
JSI METAL= 0.94 (F) (INPUT = 1.00)

JOB NAME	TRUSS NAME	QUANTITY	PLY	JOB DESC.	DRWG NO.
318404	G1		1	TRUSS DESC. JT 45147	E20035299

Alpa Roof Truss, Maple

Version 8.310 S Oct 29 2019 MiTek Industries, Inc. Tue Mar 24 15:04:17 2020 Page 1

ID:MF8iiriaTok7DlbpT4B71Xys4PG-nT9obOXWQ612iPo8 ?esVMdWYmt?OXxsZr?zF5zXiFC

Scale = 1:54.5

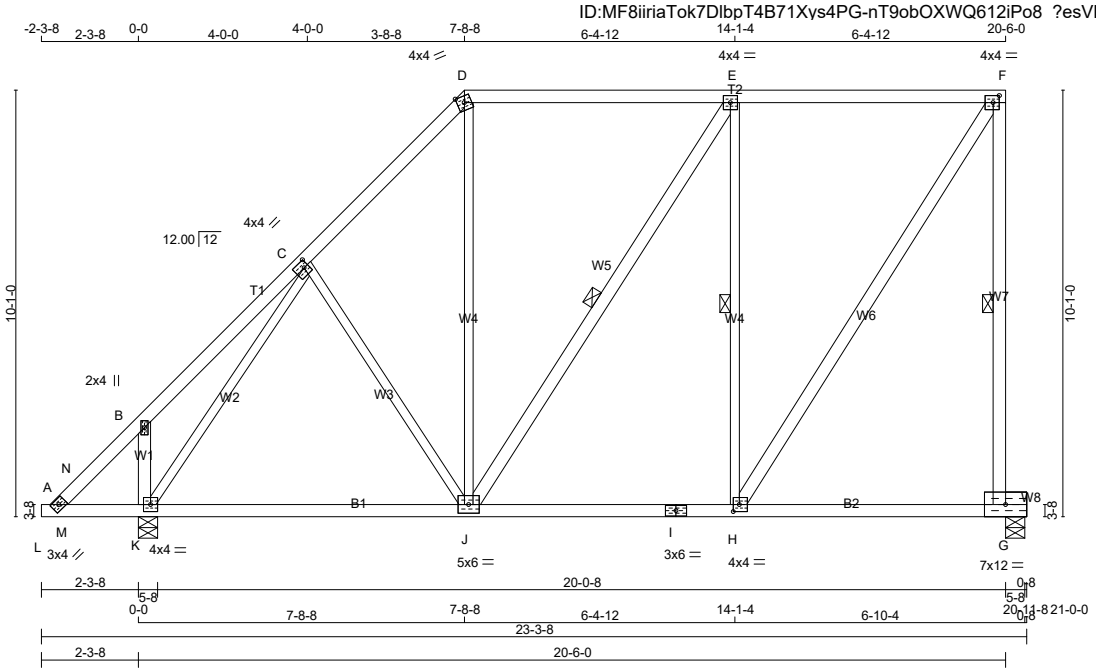

TOTAL WEIGHT = 4 X 123 = 491 lb

LUMBER

N. L. G. A. RULES

CHORDS	SIZE		LUMBER	DESCR.
A - D	2x4	DRY	No.2	SPF
D - F	2x4	DRY	No.2	SPF
G - F	2x4	DRY	No.2	SPF
K - B	2x4	DRY	No.2	SPF
L - I	2x4	DRY	No.2	SPF
I - G	2x4	DRY	No.2	SPF
ALL WEBS	2x3	DRY	No.2	SPF
EXCEPT				
J - E	2x4	DRY	No.2	SPF
H - F	2x4	DRY	No.2	SPF

DRY: SEASONED LUMBER.

PLATES (table is in inches)

JT	TYPE	PLATES	W	LEN	Y	X
A	TBM-h	MT20	3.0	4.0		
B	TMV+p	MT20	2.0	4.0		
C	TMWW-t	MT20	4.0	4.0	2.00	1.25
D	TTW-m	MT20	4.0	4.0	Edge	
E	TMWW-t	MT20	4.0	4.0		
F	TMVW-t	MT20	4.0	4.0	2.00	1.75
G	BMVW1-t	MT20	7.0	12.0		
H	BMWW-t	MT20	4.0	4.0	2.00	1.75
I	BS-t	MT20	3.0	6.0		
J	BMWWW-t	MT20	5.0	6.0		
K	BMVW1-t	MT20	4.0	4.0		

Edge - INDICATES REFERENCE CORNER OF PLATE TOUCHES EDGE OF CHORD.

LATERAL BRACE(S) SHOWN SHALL BE 2X4 SPF#2

DIMENSIONS, SUPPORTS AND LOADINGS SPECIFIED BY FABRICATOR TO BE VERIFIED BY BUILDING DESIGNER

BEARINGS

JT	FACTORED GROSS REACTION VERT	HORZ	MAXIMUM FACTORED GROSS REACTION DOWN	HORZ	UPLIFT	INPUT BRG	REQRD BRG
G	1044	0	1044	0	0	5-8	1-9
K	1238	0	1238	0	0	5-8	1-8

UNFACTORED REACTIONS

JT	1ST LCASE COMBINED	MAX./MIN. COMPONENT REACTIONS SNOW	LIVE	PERM.LIVE	WIND	DEAD	SOIL
G	750	426 / 0	0 / 0	0 / 0	0 / 0	324 / 0	0 / 0
K	886	522 / 0	0 / 0	0 / 0	0 / 0	363 / 0	0 / 0

BEARING MATERIAL TO BE SPF NO.2 OR BETTER AT JOINT(S) G, K

BRACING

FOR SECTION D-F, MAX. PURLIN SPACING = 2.00 FT.
FOR OTHER SECTIONS, TOP CHORD TO BE SHEATHED OR MAX. PURLIN SPACING = 6.25 FT.
MAX. UNBRACED BOTTOM CHORD LENGTH = 6.25 FT OR RIGID CEILING DIRECTLY APPLIED.

ALL PITCH BREAKS AND PERIMETER CORNER JOINTS MUST BE LATERALLY RESTRAINED.

1 LATERAL BRACE(S) AT 1/ 2 LENGTH OF F-G, E-J, E-H.

END VERTICAL(S) MUST BE SHEATHED OR HAVE BRACES AS INDICATED IN THE MAX. UNBRACED LENGTH COLUMN OF THE TABLE BELOW

LOADING

TOTAL LOAD CASES: (4)

CHORDS

MEMB. FR-TO	MAX. FACTORED FORCE (LBS)	FACTORED VERT. LOAD (PLF) FROM	TO	LC1 CSI (LC)	MAX UNBRAC LENGTH
A- N	0 / 41	-78.0	-78.0	0.04 (4)	10.00
N- B	-15 / 52	-78.0	-78.0	0.13 (1)	6.25
B- C	-16 / 25	-78.0	-78.0	0.16 (1)	6.25
C- D	-734 / 0	-78.0	-78.0	0.14 (1)	6.25
D- E	-504 / 0	-85.5	-85.5	0.45 (1)	2.00
E- F	-516 / 0	-85.5	-85.5	0.45 (1)	2.00
G- F	-996 / 0	0.0	0.0	0.49 (1)	6.25
K- B	-258 / 0	0.0	0.0	0.03 (1)	7.81
L- A	0 / 0	-33.5	-33.5	0.00 (4)	10.00
A- M	-15 / 12	-18.5	-18.5	0.02 (4)	6.25
M- K	-15 / 12	-18.5	-18.5	0.21 (4)	6.25
K- J	0 / 525	-18.5	-18.5	0.26 (4)	10.00
J- I	0 / 516	-18.5	-18.5	0.23 (4)	10.00
I- H	0 / 516	-18.5	-18.5	0.23 (4)	10.00
H- G	0 / 0	-18.5	-18.5	0.17 (4)	10.00

WEBS

MEMB. FR-TO	MAX. FACTORED FORCE (LBS)	MAX CSI (LC)
J- D	0 / 177	0.05 (4)
J- E	-21 / 0	0.02 (1)
H- E	-661 / 0	0.46 (1)
H- F	0 / 943	0.15 (1)
K- C	-984 / 0	0.91 (1)
C- J	-40 / 21	0.04 (1)
M- N	-70 / 0	0.00 (1)

[M][F]

DESIGN CRITERIA

SPECIFIED LOADS:

TOP CH.	LL	=	21.0	PSF
	DL	=	6.0	PSF
BOT CH.	LL	=	0.0	PSF
	DL	=	7.4	PSF
TOTAL LOAD		=	34.4	PSF

SPACING = 24.0 IN. C/C

LOADING IN FLAT SECTION BASED ON PIGGYBACK TRUSS WITH SLOPES OF 6.00/12 AND -6.00/12 AND RESPECTIVE WALL HEIGHTS OF 0-0 AND 0-0 AND AN ADDITIONAL DEAD LOAD OF 3.0 P.S.F.

THIS TRUSS IS DESIGNED FOR RESIDENTIAL OR SMALL BUILDING REQUIREMENTS OF PART 9, NBCC 2015

THIS DESIGN COMPLIES WITH:
- PART 9 OF BCBC 2018 , ABC 2019
- PART 9 OF OBC 2012 (2019 AMENDMENT)
- CSA 086-14
- TPIC 2014

(55 % OF 23.0 P.S.F. G.S.L. PLUS 8.4 P.S.F. RAIN LOAD) EQUALS 21.0 P.S.F. SPECIFIED ROOF LIVE LOAD

ALLOWABLE DEFL.(LL)= L/360 (0.68")
CALCULATED VERT. DEFL.(LL) = L/ 999 (0.02")
ALLOWABLE DEFL.(TL)= L/360 (0.68")
CALCULATED VERT. DEFL.(TL) = L/ 999 (0.07")

CANTILEVER DEFLECTION:
ALLOWABLE DEFL.(LL)= L/1319 (0.19")
CALCULATED VERT. DEFL.(LL) = L/ 999 (0.01")
ALLOWABLE DEFL.(TL)= L/1319 (0.19")
CALCULATED VERT. DEFL.(TL) = L/ 999 (0.01")

CSI: TC=0.49/1.00 (F-G:1) , BC=0.26/1.00 (J-K:4) , WB=0.91/1.00 (C-K:1) , SSI=0.27/1.00 (E-F:1)

DOL LUMBER=1.00 NAIL=1.00 LS BEND=1.10 COMP=1.10 SHEAR=1.10 TENS= 1.10

COMPANION LIVE LOAD FACTOR = 1.00

AUTOSOLVE RIGHT HEEL ONLY

TRUSS PLATE MANUFACTURER IS NOT RESPONSIBLE FOR QUALITY CONTROL IN THE TRUSS MANUFACTURING PLANT .

NAIL VALUES

PLATE	GRIP(DRY) (PSI) MAX	MIN	SHEAR (PLI) MAX	MIN	SECTION (PLI) MAX	MIN
MT20	650	371	1747	788	1987	1873

PLATE PLACEMENT TOL. = 0.250 inches

PLATE ROTATION TOL. = 5.0 Deg.

JSI GRIP= 0.81 (C) (INPUT = 0.90)
JSI METAL= 0.33 (C) (INPUT = 1.00)

JOB NAME	TRUSS NAME	QUANTITY	PLY	JOB DESC.	DRWG NO.
318404	G1G		1	TRUSS DESC. JT 45147	E20035300

Alpa Roof Truss, Maple

Version 8.310 S Oct 29 2019 MiTek Industries, Inc. Tue Mar 24 15:04:19 2020 Page 1

ID:MF8iiriaTok7DlbpT4B71Xys4PG-jsHY04ZnyjHmxjyX5PhKanixWabrsdJ909U3K zXiFA

Scale = 1:55.4

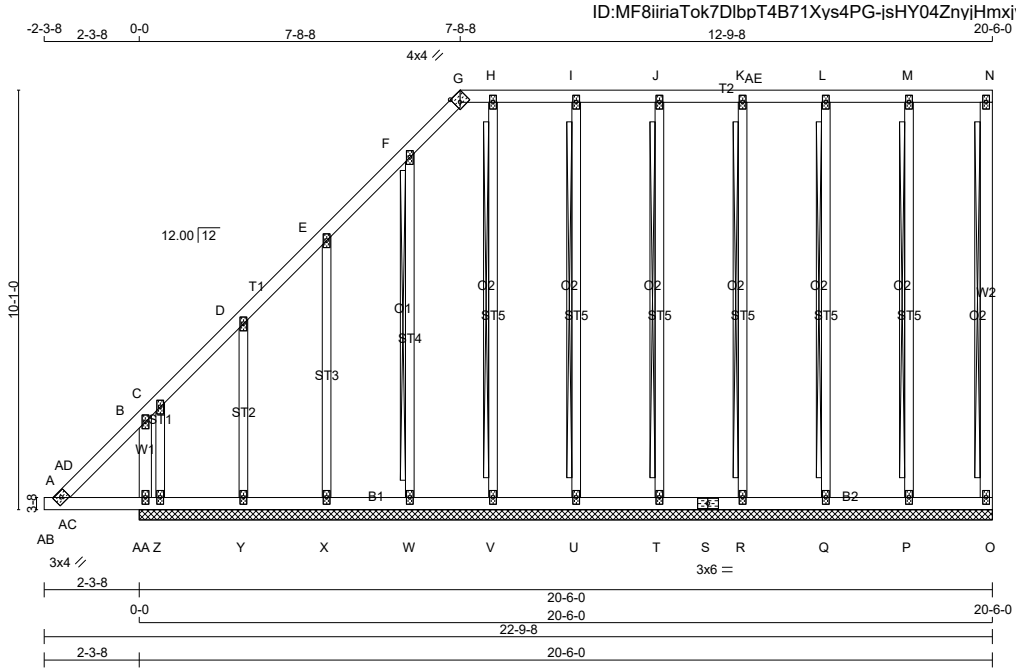

TOTAL WEIGHT = 133 lb

[M]

LUMBER

N. L. G. A. RULES

CHORDS	SIZE		LUMBER	DESCR.
AA- B	2x4	DRY	No.2	SPF
A - G	2x4	DRY	No.2	SPF
G - N	2x4	DRY	No.2	SPF
O - N	2x4	DRY	No.2	SPF
AB- S	2x4	DRY	No.2	SPF
S - O	2x4	DRY	No.2	SPF
ALL WEBS	2x3	DRY	No.2	SPF
ALL GABLE WEBS	2x3	DRY	No.2	SPF

DRY: SEASONED LUMBER.

GABLE STUDS SPACED AT 2-0-0 OC.

PLATES (table is in inches)

JT	TYPE	PLATES	W	LEN	Y	X
A	TBM-h	MT20	3.0	4.0		
B	TMV+p	MT20	2.0	4.0		
C, D, E, F, H, I, J, K, L, M						
C	TMW+w	MT20	2.0	4.0		
G	TT-h	MT20	4.0	4.0	Edge 1.50	
N	TMV+p	MT20	2.0	4.0		
O	BMV1+p	MT20	2.0	4.0		
P, Q, R, T, U, V, W, X, Y, Z						
P	BMW1+w	MT20	2.0	4.0		
S	BS-t	MT20	3.0	6.0		
AA	BMV1+p	MT20	2.0	4.0		

Edge - INDICATES REFERENCE CORNER OF PLATE TOUCHES EDGE OF CHORD.

LATERAL BRACE(S) SHOWN SHALL BE 2X4 SPF#2

DIMENSIONS, SUPPORTS AND LOADINGS SPECIFIED BY FABRICATOR TO BE VERIFIED BY BUILDING DESIGNER

BEARINGS

THIS TRUSS DESIGNED FOR CONTINUOUS BEARINGS.

THIS TRUSS REQUIRES RIGID SHEATHING ON EXPOSED FACE.

PROVIDE ANCHORAGE AT BEARING JOINT Z FOR 382 LBS FACTORED UPLIFT
BEARING MATERIAL TO BE SPF NO.2 OR BETTER AT JOINT(S)

BRACING

FOR SECTION G-N, MAX. PURLIN SPACING = 2.00 FT.
FOR OTHER SECTIONS, TOP CHORD TO BE SHEATHED OR MAX. PURLIN SPACING = 6.25 FT.
MAX. UNBRACED BOTTOM CHORD LENGTH = 10.00 FT OR RIGID CEILING DIRECTLY APPLIED.

ALL PITCH BREAKS AND PERIMETER CORNER JOINTS MUST BE LATERALLY RESTRAINED.

2x4 DRY SPF No.2 T-BRACE AT N-O, M-P, L-Q, K-R, J-T, I-U, H-V, F-W

FASTEN T AND I-BRACES TO NARROW EDGE OF WEB WITH ONE ROW PER PLY OF 3" COMMON WIRE NAILS @ 6" O.C. WITH 3" MINIMUM END DISTANCE. BRACE MUST COVER 90% OF WEB LENGTH.

END VERTICAL(S) MUST BE SHEATHED OR HAVE BRACES AS INDICATED IN THE MAX. UNBRACED LENGTH COLUMN OF THE TABLE BELOW

LOADING

TOTAL LOAD CASES: (4)

CHORDS

MEMB. FR-TO	MAX. FACTORED FORCE (LBS)	FACTORED VERT. LOAD LC1 (PLF) FROM	TO	MAX CSI (LC)	MAX. UNBRAC LENGTH
AA- B	-347 / 0	0.0	0.0	0.04 (1)	7.81
A-AD	0 / 26	-78.0	-78.0	0.02 (1)	10.00
AD- B	0 / 31	-78.0	-78.0	0.14 (1)	10.00
B- C	-155 / 0	-78.0	-78.0	0.14 (1)	6.25
C- D	-8 / 0	-78.0	-78.0	0.04 (1)	10.00
D- E	-7 / 0	-78.0	-78.0	0.04 (1)	10.00
E- F	0 / 0	-78.0	-78.0	0.04 (1)	10.00
F- G	-18 / 0	-78.0	-78.0	0.04 (1)	6.25
G- H	0 / 2	-85.5	-85.5	0.07 (1)	2.00
H- I	0 / 0	-85.5	-85.5	0.06 (1)	10.00
I- J	0 / 0	-85.5	-85.5	0.04 (1)	10.00
J-AE	0 / 0	-85.5	-85.5	0.04 (1)	10.00
AE- K	0 / 0	-85.5	-85.5	0.04 (1)	10.00
K- L	0 / 0	-85.5	-85.5	0.04 (1)	10.00
L- M	0 / 0	-85.5	-85.5	0.04 (1)	10.00
M- N	0 / 0	-85.5	-85.5	0.04 (1)	10.00
O- N	-70 / 0	0.0	0.0	0.05 (1)	7.81
AB- A	0 / 0	-33.5	-33.5	0.00 (4)	10.00
A-AC	-1 / 3	-18.5	-18.5	0.01 (1)	10.00
AC-AA	-1 / 3	-18.5	-18.5	0.17 (1)	10.00
AA- Z	-1 / 3	-18.5	-18.5	0.17 (1)	10.00
Z- Y	0 / 8	-18.5	-18.5	0.02 (4)	10.00
Y- X	0 / 4	-18.5	-18.5	0.02 (4)	10.00
X- W	0 / 2	-18.5	-18.5	0.01 (4)	10.00
W- V	0 / 0	-18.5	-18.5	0.01 (4)	10.00
V- U	0 / 0	-18.5	-18.5	0.01 (4)	10.00
U- T	0 / 0	-18.5	-18.5	0.01 (4)	10.00
T- S	0 / 0	-18.5	-18.5	0.01 (4)	10.00
S- R	0 / 0	-18.5	-18.5	0.01 (4)	10.00
R- Q	0 / 0	-18.5	-18.5	0.01 (4)	10.00
Q- P	0 / 0	-18.5	-18.5	0.02 (4)	10.00
P- O	0 / 0	-18.5	-18.5	0.02 (4)	10.00

WEBS

MEMB. FR-TO	MAX. FACTORED FORCE (LBS)	MAX CSI (LC)
P- M	-187 / 0	0.15 (1)
Q- L	-170 / 0	0.14 (1)
R- K	-171 / 0	0.14 (1)
T- J	-173 / 0	0.14 (1)
U- I	-158 / 0	0.13 (1)
V- H	-190 / 0	0.15 (1)
W- F	-156 / 0	0.09 (1)
X- E	-148 / 0	0.12 (1)
Y- D	-159 / 0	0.06 (1)
Z- C	0 / 121	0.03 (1)
AC-AD	-80 / 0	0.00 (1)

DESIGN CRITERIA

SPECIFIED LOADS:

TOP CH.	LL	=	21.0	PSF
	DL	=	6.0	PSF
BOT CH.	LL	=	0.0	PSF
	DL	=	7.4	PSF
TOTAL LOAD		=	34.4	PSF

SPACING = 24.0 IN. C/C

LOADING IN FLAT SECTION BASED ON PIGGYBACK TRUSS WITH SLOPES OF 6.00/12 AND -6.00/12 AND RESPECTIVE WALL HEIGHTS OF 0-0 AND 0-0 AND AN ADDITIONAL DEAD LOAD OF 3.0 P.S.F.

THIS TRUSS IS DESIGNED FOR RESIDENTIAL OR SMALL BUILDING REQUIREMENTS OF PART 9, NBCC 2015

THIS DESIGN COMPLIES WITH:
- PART 9 OF BCBC 2018 , ABC 2019
- PART 9 OF OBC 2012 (2019 AMENDMENT)
- CSA 086-14
- TPIC 2014

(55 % OF 23.0 P.S.F. G.S.L. PLUS 8.4 P.S.F. RAIN LOAD) EQUALS 21.0 P.S.F. SPECIFIED ROOF LIVE LOAD

CSI: TC=0.14/1.00 (B-AD:1) , BC=0.17/1.00 (AA-AC:1) , WB=0.15/1.00 (H-V:1) , SSI=0.22/1.00 (Z-AA:1)

DOL LUMBER=1.00 NAIL=1.00 LS BEND=1.10 COMP=1.10 SHEAR=1.10 TENS= 1.10

COMPANION LIVE LOAD FACTOR = 1.00

TRUSS PLATE MANUFACTURER IS NOT RESPONSIBLE FOR QUALITY CONTROL IN THE TRUSS MANUFACTURING PLANT .

NAIL VALUES

PLATE	GRIP(DRY) (PSI) MAX	MIN	SHEAR (PLI) MAX	MIN	SECTION (PLI) MAX	MIN
MT20	650	371	1747	788	1987	1873

PLATE PLACEMENT TOL. = 0.250 inches

PLATE ROTATION TOL. = 5.0 Deg.

JSI GRIP= 0.41 (G) (INPUT = 0.90)
JSI METAL= 0.18 (B) (INPUT = 1.00)

JOB NAME	TRUSS NAME	QUANTITY	PLY	JOB DESC.	DRWG NO.
318404	G2P		1	TRUSS DESC. JT 45147	E20035301

Alpa Roof Truss, Maple

Version 8.310 S Oct 29 2019 MiTek Industries, Inc. Tue Mar 24 15:04:22 2020 Page 1

ID:MF8iiriaTok7DlbpT4B71Xys4PG-8Ryhe6bfFeqLoAh6mYE1CQKULnfz30fbi7jjxJzXiF7

Scale = 1:25.4

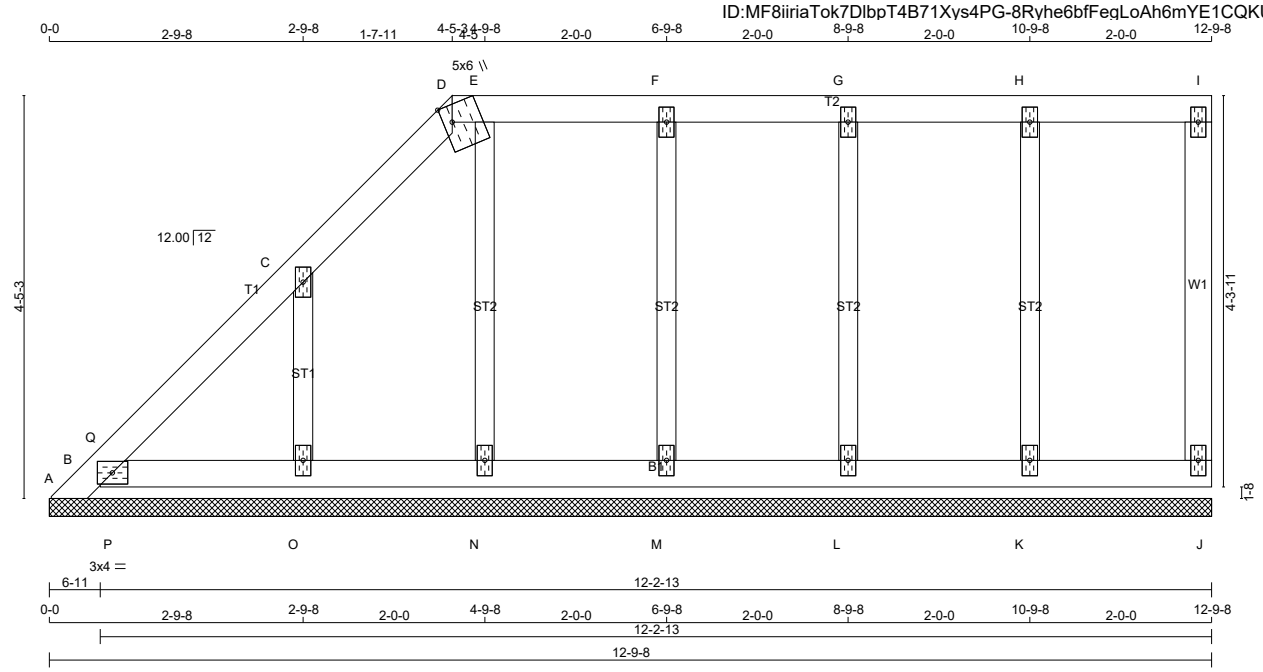

TOTAL WEIGHT = 49 lb

[M]

LUMBER

N. L. G. A. RULES

CHORDS	SIZE		LUMBER	DESCR.
A - D	2x4	DRY	No.2	SPF
D - I	2x4	DRY	No.2	SPF
J - I	2x4	DRY	No.2	SPF
B - J	2x4	DRY	No.2	SPF
ALL WEBS	2x3	DRY	No.2	SPF
ALL GABLE WEBS	2x3	DRY	No.2	SPF

DRY: SEASONED LUMBER.

GABLE STUDS SPACED AT 2-0-0 OC.

PLATES (table is in inches)

JT	TYPE	PLATES	W	LEN	Y	X
B	TMB1-l	MT20	3.0	4.0		
C, F, G, H						
C	TMW+w	MT20	2.0	4.0		
D						
D	TTW+m	MT20	5.0	6.0	Edge	1.25
E						
I	TMV+p	MT20	2.0	4.0		
J	BMV1+p	MT20	2.0	4.0		
K, L, M, N, O						
K	BMW1+w	MT20	2.0	4.0		

Edge - INDICATES REFERENCE CORNER OF PLATE TOUCHES EDGE OF CHORD.

LATERAL BRACE(S) SHOWN SHALL BE 2X4 SPF#2

DIMENSIONS, SUPPORTS AND LOADINGS SPECIFIED BY FABRICATOR TO BE VERIFIED BY BUILDING DESIGNER

BEARINGS

THIS TRUSS DESIGNED FOR CONTINUOUS BEARINGS.

THIS TRUSS REQUIRES RIGID SHEATHING ON EXPOSED FACE.

BEVELED PLATE OR SHIM REQUIRED TO PROVIDE FULL BEARING SURFACE WITH TRUSS CHORD AT JT(S): J , K , L , M , N , O

PROVIDE ANCHORAGE AT BEARING JOINT A FOR 150 LBS FACTORED UPLIFT
BEARING MATERIAL TO BE SPF NO.2 OR BETTER AT JOINT(S)

BRACING

TOP CHORD TO BE SHEATHED OR MAX. PURLIN SPACING = 6.25 FT.
MAX. UNBRACED BOTTOM CHORD LENGTH = 10.00 FT OR RIGID CEILING DIRECTLY APPLIED.

ALL PITCH BREAKS AND PERIMETER CORNER JOINTS MUST BE LATERALLY RESTRAINED.

LOADING

TOTAL LOAD CASES: (4)

CHORDS

MEMB. FR-TO	MAX. FACTORED FORCE (LBS)	FACTORED VERT. LOAD LC1 (PLF) FROM	TO	MAX CSI (LC)	MAX. UNBRAC LENGTH
A- B	0 / 31	-96.5	-96.5	0.03 (1)	10.00
B- Q	-53 / 0	-78.0	-78.0	0.03 (1)	6.25
Q- C	-4 / 0	-78.0	-78.0	0.04 (1)	10.00
C- D	-12 / 0	-78.0	-78.0	0.04 (1)	6.25
D- E	0 / 5	-78.0	-78.0	0.03 (1)	10.00
E- F	0 / 0	-78.0	-78.0	0.04 (1)	10.00
F- G	0 / 0	-78.0	-78.0	0.04 (1)	10.00
G- H	0 / 0	-78.0	-78.0	0.04 (1)	10.00
H- I	0 / 0	-78.0	-78.0	0.04 (1)	10.00
J- I	-63 / 0	0.0	0.0	0.02 (1)	7.81
B- P	0 / 8	-18.5	-18.5	0.01 (1)	10.00
P- O	0 / 8	-18.5	-18.5	0.02 (4)	10.00
O- N	0 / 0	-18.5	-18.5	0.02 (4)	10.00
N- M	0 / 0	-18.5	-18.5	0.02 (4)	10.00
M- L	0 / 0	-18.5	-18.5	0.02 (4)	10.00
L- K	0 / 0	-18.5	-18.5	0.02 (4)	10.00
K- J	0 / 0	-18.5	-18.5	0.02 (4)	10.00

WEBS

MEMB. FR-TO	MAX. FACTORED FORCE (LBS)	MAX CSI (LC)
K- H	-174 / 0	0.05 (1)
L- G	-152 / 0	0.04 (1)
M- F	-159 / 0	0.04 (1)
N- E	-155 / 0	0.04 (1)
O- C	-163 / 0	0.03 (1)
P- Q	-21 / 24	0.00 (1)

DESIGN CRITERIA

SPECIFIED LOADS:

TOP	CH.	LL	=	21.0	PSF
		DL	=	6.0	PSF
BOT	CH.	LL	=	0.0	PSF
		DL	=	7.4	PSF
TOTAL	LOAD		=	34.4	PSF

SPACING = 24.0 IN. C/C

LOADING IN FLAT SECTION BASED ON A SLOPE OF 2.00/12 MINIMUM

THIS TRUSS IS DESIGNED FOR RESIDENTIAL OR SMALL BUILDING REQUIREMENTS OF PART 9, NBCC 2015

THIS DESIGN COMPLIES WITH:
- PART 9 OF BCBC 2018 , ABC 2019
- PART 9 OF OBC 2012 (2019 AMENDMENT)
- CSA 086-14
- TPIC 2014

(55 % OF 23.0 P.S.F. G.S.L. PLUS 8.4 P.S.F. RAIN LOAD) EQUALS 21.0 P.S.F. SPECIFIED ROOF LIVE LOAD

CSI: TC=0.04/1.00 (C-D:1) , BC=0.02/1.00 (O-P:4) , WB=0.05/1.00 (H-K:1) , SSI=0.07/1.00 (H-I:1)

DOL LUMBER=1.00 NAIL=1.00 LS BEND=1.10 COMP=1.10 SHEAR=1.10 TENS= 1.10

COMPANION LIVE LOAD FACTOR = 1.00

TRUSS PLATE MANUFACTURER IS NOT RESPONSIBLE FOR QUALITY CONTROL IN THE TRUSS MANUFACTURING PLANT .

NAIL VALUES

PLATE	GRIP(DRY) (PSI) MAX	MIN	SHEAR (PLI) MAX	MIN	SECTION (PLI) MAX	MIN
MT20	650	371	1747	788	1987	1873

PLATE PLACEMENT TOL. = 0.250 inches

PLATE ROTATION TOL. = 5.0 Deg.

JSI GRIP= 0.12 (C) (INPUT = 0.90)
JSI METAL= 0.09 (C) (INPUT = 1.00)

JOB NAME	TRUSS NAME	QUANTITY	PLY	JOB DESC.	DRWG NO.
318404	G3P		1	TRUSS DESC. JT 45147	E20035302

Alpa Roof Truss, Maple

Version 8.310 S Oct 29 2019 MiTek Industries, Inc. Tue Mar 24 15:04:23 2020 Page 1
ID:MF8iiriaTok7DlbpT4B71Xys4PG-cdW3sScH0yoCQKGIKFlGkdtZ?ByToPUlxnSHTlzXiF6

Scale = 1:38.1

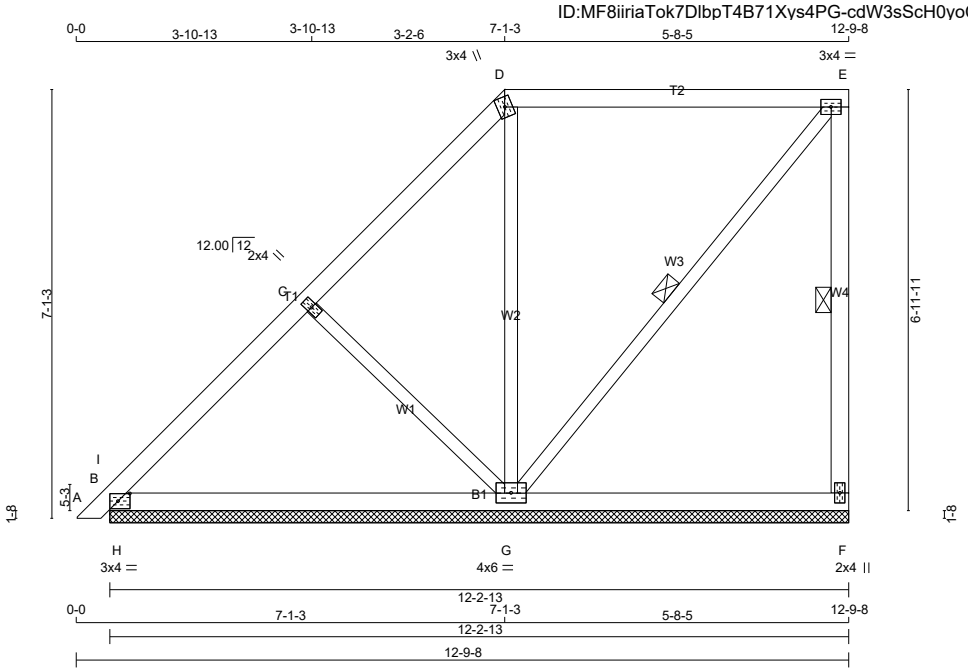

TOTAL WEIGHT = 55 lb

LUMBER
N. L. G. A. RULES

CHORDS	SIZE		LUMBER	DESCR.
A - D	2x4	DRY	No.2	SPF
D - E	2x4	DRY	No.2	SPF
F - E	2x4	DRY	No.2	SPF
B - F	2x4	DRY	No.2	SPF
ALL WEBS	2x3	DRY	No.2	SPF

DRY: SEASONED LUMBER.

PLATES (table is in inches)

JT	TYPE	PLATES	W	LEN	Y	X
B	TMB1-l	MT20	3.0	4.0	1.50	2.50
C	TMW+w	MT20	2.0	4.0		
D	TTW+m	MT20	3.0	4.0		
E	TMVW-t	MT20	3.0	4.0		
F	BMV1+p	MT20	2.0	4.0		
G	BMWWW1-t	MT20	4.0	6.0		

LATERAL BRACE(S) SHOWN SHALL BE 2X4 SPF#2

DIMENSIONS, SUPPORTS AND LOADINGS SPECIFIED BY FABRICATOR TO BE VERIFIED BY BUILDING DESIGNER

BEARINGS

JT	FACTORED GROSS REACTION VERT	HORZ	MAXIMUM FACTORED GROSS REACTION DOWN	HORZ	UPLIFT	INPUT BRG IN-SX	REQRD BRG IN-SX
F	249	0	249	0	0	12-2-13	1-2-11
B	338	0	338	0	0	12-2-13	1-2-11
G	628	0	628	0	0	12-2-13	1-2-11

UNFACTORED REACTIONS

JT	1ST LCASE COMBINED	MAX./MIN. COMPONENT REACTIONS SNOW	LIVE	PERM.LIVE	WIND	DEAD	SOIL
F	177	111 / 0	0 / 0	0 / 0	0 / 0	66 / 0	0 / 0
B	240	153 / 0	0 / 0	0 / 0	0 / 0	87 / 0	0 / 0
G	448	268 / 0	0 / 0	0 / 0	0 / 0	180 / 0	0 / 0

BEARING MATERIAL TO BE SPF NO.2 OR BETTER AT JOINT(S) F, B, G

BRACING
TOP CHORD TO BE SHEATHED OR MAX. PURLIN SPACING = 6.25 FT.
MAX. UNBRACED BOTTOM CHORD LENGTH = 10.00 FT OR RIGID CEILING DIRECTLY APPLIED.

ALL PITCH BREAKS AND PERIMETER CORNER JOINTS MUST BE LATERALLY RESTRAINED.

1 LATERAL BRACE(S) AT 1/ 2 LENGTH OF E-F, E-G.

END VERTICAL(S) MUST BE SHEATHED OR HAVE BRACES AS INDICATED IN THE MAX. UNBRACED LENGTH COLUMN OF THE TABLE BELOW

LOADING
TOTAL LOAD CASES: (4)

CHORDS

MEMB. FR-TO	MAX. FACTORED FORCE (LBS)	FACTORED VERT. LOAD LC1 (PLF) FROM	TO	MAX CSI (LC)	MAX. UNBRAC LENGTH
A- B	0 / 11	-78.0	-78.0	0.01 (1)	10.00
B- I	-372 / 0	-78.0	-78.0	0.08 (4)	6.25
I- C	-196 / 0	-78.0	-78.0	0.15 (1)	6.25
C- D	-19 / 0	-78.0	-78.0	0.14 (1)	6.25
D- E	-2 / 8	-78.0	-78.0	0.43 (1)	10.00
F- E	-212 / 0	0.0	0.0	0.05 (1)	6.25
B- H	0 / 160	-18.5	-18.5	0.08 (4)	10.00
H- G	0 / 160	-18.5	-18.5	0.19 (4)	10.00
G- F	0 / 0	-18.5	-18.5	0.18 (4)	10.00

WEBS

MEMB. FR-TO	MAX. FACTORED FORCE (LBS)	MAX CSI (LC)
C- G	-228 / 0	0.08 (1)
G- D	-321 / 0	0.27 (1)
G- E	-13 / 3	0.01 (1)
H- I	0 / 211	0.00 (1)

DESIGN CRITERIA

SPECIFIED LOADS:

TOP	CH.	LL	=	21.0	PSF
		DL	=	6.0	PSF
BOT	CH.	LL	=	0.0	PSF
		DL	=	7.4	PSF
TOTAL	LOAD		=	34.4	PSF

SPACING = 24.0 IN. C/C

LOADING IN FLAT SECTION BASED ON A SLOPE OF 2.00/12 MINIMUM

THIS TRUSS IS DESIGNED FOR RESIDENTIAL OR SMALL BUILDING REQUIREMENTS OF PART 9, NBCC 2015

THIS DESIGN COMPLIES WITH:
- PART 9 OF BCBC 2018 , ABC 2019
- PART 9 OF OBC 2012 (2019 AMENDMENT)
- CSA 086-14
- TPIC 2014

(55 % OF 23.0 P.S.F. G.S.L. PLUS 8.4 P.S.F. RAIN LOAD) EQUALS 21.0 P.S.F. SPECIFIED ROOF LIVE LOAD

CSI: TC=0.43/1.00 (D-E:1) , BC=0.19/1.00 (G-H:4) , WB=0.27/1.00 (D-G:1) , SSI=0.18/1.00 (B-H:4)

DOL LUMBER=1.00 NAIL=1.00 LS BEND=1.10 COMP=1.10 SHEAR=1.10 TENS= 1.10

COMPANION LIVE LOAD FACTOR = 1.00

TRUSS PLATE MANUFACTURER IS NOT RESPONSIBLE FOR QUALITY CONTROL IN THE TRUSS MANUFACTURING PLANT .

NAIL VALUES

PLATE	GRIP(DRY) (PSI) MAX	MIN	SHEAR (PLI) MAX	MIN	SECTION (PLI) MAX	MIN
MT20	650	371	1747	788	1987	1873

PLATE PLACEMENT TOL. = 0.250 inches

PLATE ROTATION TOL. = 5.0 Deg.

JSI GRIP= 0.49 (D) (INPUT = 0.90)
JSI METAL= 0.11 (D) (INPUT = 1.00)

JOB NAME	TRUSS NAME	QUANTITY	PLY	JOB DESC.	DRWG NO.
318404	G4P		1	TRUSS DESC. JT 45147	E20035303

Alpa Roof Truss, Maple

Version 8.310 S Oct 29 2019 MiTek Industries, Inc. Tue Mar 24 15:04:24 2020 Page 1
ID:MF8iiriaTok7DlbpT4B71Xys4PG-4p4R3ndwnGw22UrUuzGVHrQmQbJ0XuSuARCq?BzXiF5

Scale = 1:52.7

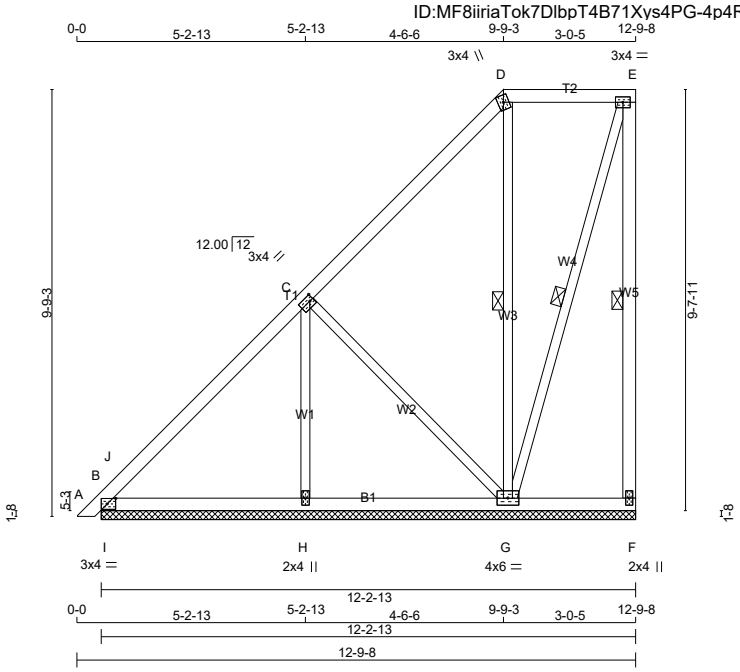

TOTAL WEIGHT = 67 lb

LUMBER

N. L. G. A. RULES

CHORDS	SIZE		LUMBER	DESCR.
A - D	2x4	DRY	No.2	SPF
D - E	2x4	DRY	No.2	SPF
F - E	2x4	DRY	No.2	SPF
B - F	2x4	DRY	No.2	SPF
ALL WEBS	2x3	DRY	No.2	SPF

DRY: SEASONED LUMBER.

PLATES (table is in inches)

JT	TYPE	PLATES	W	LEN	Y	X
B	TMB1-l	MT20	3.0	4.0	1.50	2.50
C	TMWW-t	MT20	3.0	4.0	1.50	1.00
D	TTW+m	MT20	3.0	4.0		
E	TMVW-t	MT20	3.0	4.0		
F	BMV1+p	MT20	2.0	4.0		
G	BMWWW1-t	MT20	4.0	6.0		
H	BMW1+w	MT20	2.0	4.0		

LATERAL BRACE(S) SHOWN SHALL BE 2X4 SPF#2

DIMENSIONS, SUPPORTS AND LOADINGS SPECIFIED BY FABRICATOR TO BE VERIFIED BY BUILDING DESIGNER

BEARINGS

JT	FACTORED GROSS REACTION VERT	HORZ	MAXIMUM FACTORED GROSS REACTION DOWN	HORZ	UPLIFT	INPUT BRG IN-SX	REQRD BRG IN-SX
F	123	0	123	0	0	12-2-13	1-6-3
B	315	0	315	0	0	12-2-13	1-6-3
H	329	0	329	0	0	12-2-13	1-6-3
G	449	0	449	0	0	12-2-13	1-6-3

UNFACTORED REACTIONS

JT	1ST LCASE COMBINED	MAX./MIN. COMPONENT REACTIONS SNOW	LIVE	PERM.LIVE	WIND	DEAD	SOIL
F	87	55 / 0	0 / 0	0 / 0	0 / 0	32 / 0	0 / 0
B	222	148 / 0	0 / 0	0 / 0	0 / 0	74 / 0	0 / 0
H	237	129 / 0	0 / 0	0 / 0	0 / 0	108 / 0	0 / 0
G	319	200 / 0	0 / 0	0 / 0	0 / 0	119 / 0	0 / 0

BEARING MATERIAL TO BE SPF NO.2 OR BETTER AT JOINT(S) F, B, H, G

BRACING

TOP CHORD TO BE SHEATHED OR MAX. PURLIN SPACING = 6.25 FT.
MAX. UNBRACED BOTTOM CHORD LENGTH = 10.00 FT OR RIGID CEILING DIRECTLY APPLIED.

ALL PITCH BREAKS AND PERIMETER CORNER JOINTS MUST BE LATERALLY RESTRAINED.

1 LATERAL BRACE(S) AT 1/ 2 LENGTH OF E-F, D-G, E-G.

END VERTICAL(S) MUST BE SHEATHED OR HAVE BRACES AS INDICATED IN THE MAX. UNBRACED LENGTH COLUMN OF THE TABLE BELOW

LOADING

TOTAL LOAD CASES: (4)

CHORDS

MEMB. FR-TO	MAX. FACTORED FORCE (LBS)	FACTORED VERT. LOAD LC1 (PLF) FROM	TO	MAX CSI (LC)	MAX. UNBRAC LENGTH
A- B	0 / 11	-78.0	-78.0	0.01 (1)	10.00
B- J	-63 / 0	-78.0	-78.0	0.05 (1)	6.25
J- C	-126 / 0	-78.0	-78.0	0.26 (1)	6.25
C- D	-27 / 0	-78.0	-78.0	0.26 (1)	6.25
D- E	0 / 5	-78.0	-78.0	0.12 (1)	10.00
F- E	-102 / 0	0.0	0.0	0.05 (1)	6.25
B- I	0 / 106	-18.5	-18.5	0.10 (1)	10.00
I- H	0 / 106	-18.5	-18.5	0.11 (1)	10.00
H- G	0 / 106	-18.5	-18.5	0.11 (4)	10.00
G- F	0 / 0	-18.5	-18.5	0.06 (4)	10.00

WEBS

MEMB. FR-TO	MAX. FACTORED FORCE (LBS)	MAX CSI (LC)
H- C	-208 / 0	0.08 (1)
C- G	-155 / 0	0.13 (1)
G- D	-255 / 0	0.16 (1)
G- E	-16 / 0	0.01 (1)
I- J	-298 / 1	0.00 (1)

DESIGN CRITERIA [M]

SPECIFIED LOADS:

TOP CH.	LL	=	21.0	PSF
	DL	=	6.0	PSF
BOT CH.	LL	=	0.0	PSF
	DL	=	7.4	PSF
TOTAL LOAD		=	34.4	PSF

SPACING = 24.0 IN. C/C

LOADING IN FLAT SECTION BASED ON A SLOPE OF 2.00/12 MINIMUM

THIS TRUSS IS DESIGNED FOR RESIDENTIAL OR SMALL BUILDING REQUIREMENTS OF PART 9, NBCC 2015

THIS DESIGN COMPLIES WITH:
- PART 9 OF BCBC 2018 , ABC 2019
- PART 9 OF OBC 2012 (2019 AMENDMENT)
- CSA 086-14
- TPIC 2014

(55 % OF 23.0 P.S.F. G.S.L. PLUS 8.4 P.S.F. RAIN LOAD) EQUALS 21.0 P.S.F. SPECIFIED ROOF LIVE LOAD

CSI: TC=0.26/1.00 (C-J:1) , BC=0.11/1.00 (H-I:1) , WB=0.16/1.00 (D-G:1) , SSI=0.25/1.00 (B-I:1)

DOL LUMBER=1.00 NAIL=1.00 LS BEND=1.10 COMP=1.10 SHEAR=1.10 TENS= 1.10

COMPANION LIVE LOAD FACTOR = 1.00

TRUSS PLATE MANUFACTURER IS NOT RESPONSIBLE FOR QUALITY CONTROL IN THE TRUSS MANUFACTURING PLANT .

NAIL VALUES

PLATE	GRIP(DRY) (PSI) MAX	MIN	SHEAR (PLI) MAX	MIN	SECTION (PLI) MAX	MIN
MT20	650	371	1747	788	1987	1873

PLATE PLACEMENT TOL. = 0.250 inches

PLATE ROTATION TOL. = 5.0 Deg.

JSI GRIP= 0.29 (B) (INPUT = 0.90)
JSI METAL= 0.07 (D) (INPUT = 1.00)

JOB NAME	TRUSS NAME	QUANTITY	PLY	JOB DESC.	DRWG NO.
318404	G5P		1	TRUSS DESC. JT 45147	E20035304

Alpa Roof Truss, Maple

Version 8.310 S Oct 29 2019 MiTek Industries, Inc. Tue Mar 24 15:04:25 2020 Page 1

ID:MF8iiriaTok7DlbpT4B71Xys4PG-Y?eqH7eYYZ2vfePqSqnkp2yus?deGLG1P5xOXezXiF4

Scale = 1:67.8

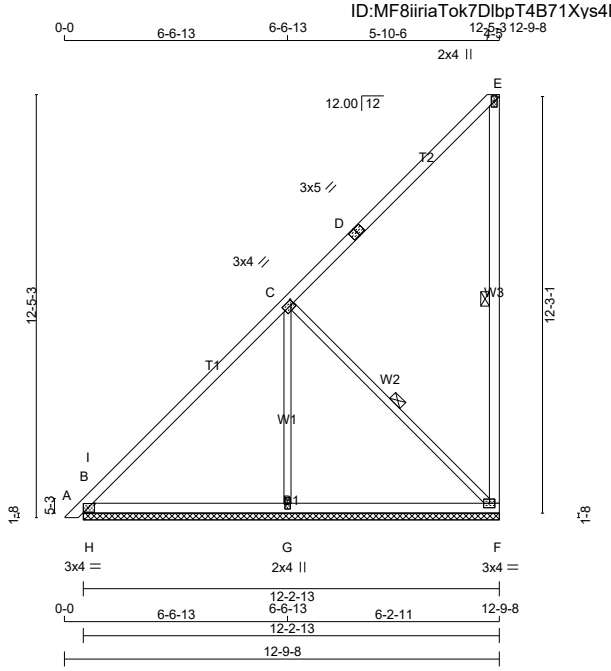

TOTAL WEIGHT = 59 lb

[M]

LUMBER

N. L. G. A. RULES

CHORDS	SIZE		LUMBER	DESCR.
A - D	2x4	DRY	No.2	SPF
D - E	2x4	DRY	No.2	SPF
F - E	2x4	DRY	No.2	SPF
B - F	2x4	DRY	No.2	SPF
ALL WEBS	2x3	DRY	No.2	SPF

DRY: SEASONED LUMBER.

PLATES (table is in inches)

JT	TYPE	PLATES	W	LEN	Y	X
B	TMB1-l	MT20	3.0	4.0	1.50	2.50
C	TMWW-t	MT20	3.0	4.0	1.50	1.00
D	TS-t	MT20	3.0	5.0		
E	TMV+p	MT20	2.0	4.0		
F	BMVW1-t	MT20	3.0	4.0		
G	BMW1+w	MT20	2.0	4.0		

LATERAL BRACE(S) SHOWN SHALL BE 2X4 SPF#2

DIMENSIONS, SUPPORTS AND LOADINGS SPECIFIED BY FABRICATOR TO BE VERIFIED BY BUILDING DESIGNER

BEARINGS

JT	FACTORED GROSS REACTION VERT	HORZ	MAXIMUM FACTORED GROSS REACTION DOWN	HORZ	UPLIFT	INPUT BRG IN-SX	REQRD BRG IN-SX
F	373	0	373	0	0	12-2-13	2-0-7
B	400	0	400	0	0	12-2-13	2-0-7
G	442	0	442	0	0	12-2-13	2-0-7

UNFACTORED REACTIONS

JT	1ST LCASE COMBINED	MAX./MIN. COMPONENT REACTIONS SNOW	LIVE	PERM.LIVE	WIND	DEAD	SOIL
F	264	174 / 0	0 / 0	0 / 0	0 / 0	90 / 0	0 / 0
B	282	189 / 0	0 / 0	0 / 0	0 / 0	93 / 0	0 / 0
G	319	169 / 0	0 / 0	0 / 0	0 / 0	150 / 0	0 / 0

BEARING MATERIAL TO BE SPF NO.2 OR BETTER AT JOINT(S) F, B, G

BRACING

TOP CHORD TO BE SHEATHED OR MAX. PURLIN SPACING = 6.25 FT.
MAX. UNBRACED BOTTOM CHORD LENGTH = 10.00 FT OR RIGID CEILING DIRECTLY APPLIED.

ALL PITCH BREAKS AND PERIMETER CORNER JOINTS MUST BE LATERALLY RESTRAINED.

1 LATERAL BRACE(S) AT 1/ 2 LENGTH OF E-F, C-F.

END VERTICAL(S) MUST BE SHEATHED OR HAVE BRACES AS INDICATED IN THE MAX. UNBRACED LENGTH COLUMN OF THE TABLE BELOW

LOADING

TOTAL LOAD CASES: (4)

CHORDS MEMB. FR-TO	MAX. FACTORED FORCE (LBS)	FACTORED VERT. LOAD LC1 (PLF) FROM	TO	MAX CSI (LC)	MAX. UNBRAC LENGTH	WEBS MEMB. FR-TO	MAX. FACTORED FORCE (LBS)	MAX CSI (LC)
A- B	0 / 11	-78.0	-78.0	0.01 (1)	10.00	G- C	-277 / 0	0.19 (1)
B- I	-76 / 15	-78.0	-78.0	0.09 (1)	6.25	C- F	-207 / 0	0.10 (1)
I- C	-176 / 0	-78.0	-78.0	0.47 (1)	6.25	H- I	-460 / 0	0.00 (1)
C- D	-38 / 0	-78.0	-78.0	0.46 (1)	6.25			
D- E	-38 / 0	-78.0	-78.0	0.46 (1)	6.25			
F- E	-188 / 0	0.0	0.0	0.17 (1)	6.25			
B- H	0 / 148	-18.5	-18.5	0.16 (1)	10.00			
H- G	0 / 148	-18.5	-18.5	0.21 (4)	10.00			
G- F	0 / 148	-18.5	-18.5	0.21 (4)	10.00			

DESIGN CRITERIA

SPECIFIED LOADS:

TOP CH.	LL =	21.0	PSF
	DL =	6.0	PSF
BOT CH.	LL =	0.0	PSF
	DL =	7.4	PSF
TOTAL LOAD	=	34.4	PSF

SPACING = 24.0 IN. C/C

THIS TRUSS IS DESIGNED FOR RESIDENTIAL OR SMALL BUILDING REQUIREMENTS OF PART 9, NBCC 2015

THIS DESIGN COMPLIES WITH:
- PART 9 OF BCBC 2018 , ABC 2019
- PART 9 OF OBC 2012 (2019 AMENDMENT)
- CSA 086-14
- TPIC 2014

(55 % OF 23.0 P.S.F. G.S.L. PLUS 8.4 P.S.F. RAIN LOAD) EQUALS 21.0 P.S.F. SPECIFIED ROOF LIVE LOAD

CSI: TC=0.47/1.00 (C-I:1) , BC=0.21/1.00 (G-H:4) , WB=0.19/1.00 (C-G:1) , SSI=0.38/1.00 (B-H:1)

DOL LUMBER=1.00 NAIL=1.00 LS BEND=1.10 COMP=1.10 SHEAR=1.10 TENS= 1.10

COMPANION LIVE LOAD FACTOR = 1.00

TRUSS PLATE MANUFACTURER IS NOT RESPONSIBLE FOR QUALITY CONTROL IN THE TRUSS MANUFACTURING PLANT .

NAIL VALUES

PLATE	GRIP(DRY) (PSI) MAX	MIN	SHEAR (PLI) MAX	MIN	SECTION (PLI) MAX	MIN
MT20	650	371	1747	788	1987	1873

PLATE PLACEMENT TOL. = 0.250 inches

PLATE ROTATION TOL. = 5.0 Deg.

JSI GRIP= 0.72 (D) (INPUT = 0.90)
JSI METAL= 0.25 (D) (INPUT = 1.00)

JOB NAME	TRUSS NAME	QUANTITY	PLY	JOB DESC.	DRWG NO.
318404	G6P		1	TRUSS DESC. JT 45147	E20035305

Alpa Roof Truss, Maple

Version 8.310 S Oct 29 2019 MiTek Industries, Inc. Tue Mar 24 15:04:27 2020 Page 1

ID:MF8iiriaTok7DlbpT4B71Xys4PG-VOmahpfo4BIdvxZ3Z5qCuT2EOoJ6kElKsPQUcWzXiF2

Scale = 1:68.1

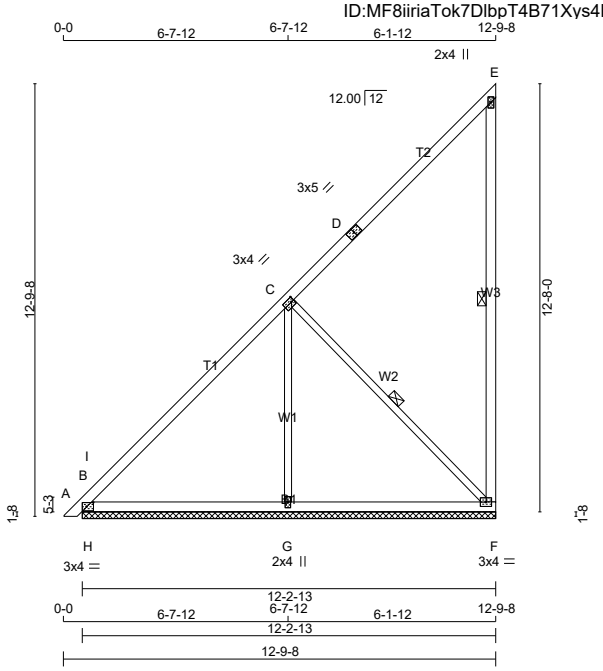

TOTAL WEIGHT = 60 lb

LUMBER

N. L. G. A. RULES

CHORDS	SIZE		LUMBER	DESCR.
A - D	2x4	DRY	No.2	SPF
D - E	2x4	DRY	No.2	SPF
F - E	2x4	DRY	No.2	SPF
B - F	2x4	DRY	No.2	SPF
ALL WEBS	2x3	DRY	No.2	SPF

DRY: SEASONED LUMBER.

PLATES (table is in inches)

JT	TYPE	PLATES	W	LEN	Y	X
B	TMB1-I	MT20	3.0	4.0	1.50	2.50
C	TMWW-t	MT20	3.0	4.0	1.50	1.00
D	TS-t	MT20	3.0	5.0		
E	TMV+p	MT20	2.0	4.0		
F	BMVW1-t	MT20	3.0	4.0		
G	BMW1+w	MT20	2.0	4.0		

LATERAL BRACE(S) SHOWN SHALL BE 2X4 SPF#2

DIMENSIONS, SUPPORTS AND LOADINGS SPECIFIED BY FABRICATOR TO BE VERIFIED BY BUILDING DESIGNER

BEARINGS

	FACTORED GROSS REACTION		MAXIMUM FACTORED GROSS REACTION			INPUT BRG	REQRD BRG
JT	VERT	HORZ	DOWN	HORZ	UPLIFT	IN-SX	IN-SX
F	373	0	373	0	0	12-2-13	2-0-2
B	406	0	406	0	0	12-2-13	2-0-2
G	436	0	436	0	0	12-2-13	2-0-2

UNFACTORED REACTIONS

JT	1ST LCASE COMBINED	MAX./MIN. COMPONENT REACTIONS SNOW	LIVE	PERM.LIVE	WIND	DEAD	SOIL
F	264	174 / 0	0 / 0	0 / 0	0 / 0	90 / 0	0 / 0
B	286	192 / 0	0 / 0	0 / 0	0 / 0	94 / 0	0 / 0
G	315	166 / 0	0 / 0	0 / 0	0 / 0	149 / 0	0 / 0

BEARING MATERIAL TO BE SPF NO.2 OR BETTER AT JOINT(S) F, B, G

BRACING

TOP CHORD TO BE SHEATHED OR MAX. PURLIN SPACING = 6.25 FT.
MAX. UNBRACED BOTTOM CHORD LENGTH = 10.00 FT OR RIGID CEILING DIRECTLY APPLIED.

ALL PITCH BREAKS AND PERIMETER CORNER JOINTS MUST BE LATERALLY RESTRAINED.

1 LATERAL BRACE(S) AT 1/ 2 LENGTH OF E-F, C-F.

END VERTICAL(S) MUST BE SHEATHED OR HAVE BRACES AS INDICATED IN THE MAX. UNBRACED LENGTH COLUMN OF THE TABLE BELOW

LOADING

TOTAL LOAD CASES: (4)

CHORDS MEMB. FR-TO	MAX. FACTORED FORCE (LBS)	FACTORED VERT. LOAD LC1 (PLF) FROM	TO	MAX CSI (LC)	MAX. UNBRAC LENGTH	WEBS MEMB. FR-TO	MAX. FACTORED FORCE (LBS)	MAX CSI (LC)
A- B	0 / 11	-78.0	-78.0	0.01 (1)	10.00	G- C	-270 / 0	0.19 (1)
B- I	-77 / 31	-78.0	-78.0	0.10 (1)	6.25	C- F	-211 / 0	0.11 (1)
I- C	-179 / 0	-78.0	-78.0	0.47 (1)	6.25	H- I	-487 / 0	0.00 (1)
C- D	-39 / 0	-78.0	-78.0	0.46 (1)	6.25			
D- E	-39 / 0	-78.0	-78.0	0.46 (1)	6.25			
F- E	-185 / 0	0.0	0.0	0.16 (1)	6.25			
B- H	0 / 149	-18.5	-18.5	0.16 (1)	10.00			
H- G	0 / 149	-18.5	-18.5	0.21 (4)	10.00			
G- F	0 / 149	-18.5	-18.5	0.21 (4)	10.00			

[M]

DESIGN CRITERIA

SPECIFIED LOADS:

TOP CH.	LL	=	21.0	PSF
	DL	=	6.0	PSF
BOT CH.	LL	=	0.0	PSF
	DL	=	7.4	PSF
TOTAL LOAD		=	34.4	PSF

SPACING = 24.0 IN. C/C

THIS TRUSS IS DESIGNED FOR RESIDENTIAL OR SMALL BUILDING REQUIREMENTS OF PART 9, NBCC 2015

THIS DESIGN COMPLIES WITH:
- PART 9 OF BCBC 2018 , ABC 2019
- PART 9 OF OBC 2012 (2019 AMENDMENT)
- CSA 086-14
- TPIC 2014

(55 % OF 23.0 P.S.F. G.S.L. PLUS 8.4 P.S.F. RAIN LOAD) EQUALS 21.0 P.S.F. SPECIFIED ROOF LIVE LOAD

CSI: TC=0.47/1.00 (C-I:1) , BC=0.21/1.00 (G-H:4) , WB=0.19/1.00 (C-G:1) , SSI=0.40/1.00 (B-H:1)

DOL LUMBER=1.00 NAIL=1.00 LS BEND=1.10 COMP=1.10 SHEAR=1.10 TENS= 1.10

COMPANION LIVE LOAD FACTOR = 1.00

TRUSS PLATE MANUFACTURER IS NOT RESPONSIBLE FOR QUALITY CONTROL IN THE TRUSS MANUFACTURING PLANT .

NAIL VALUES

PLATE	GRIP(DRY) (PSI) MAX	MIN	SHEAR (PLI) MAX	MIN	SECTION (PLI) MAX	MIN
MT20	650	371	1747	788	1987	1873

PLATE PLACEMENT TOL. = 0.250 inches

PLATE ROTATION TOL. = 5.0 Deg.

JSI GRIP= 0.63 (D) (INPUT = 0.90)
JSI METAL= 0.21 (D) (INPUT = 1.00)

JOB NAME	TRUSS NAME	QUANTITY	PLY	JOB DESC.	DRWG NO.
318404	H5S		1	TRUSS DESC. JT 45147	E20035306

Alpa Roof Truss, Maple

Version 8.310 S Oct 29 2019 MiTek Industries, Inc. Tue Mar 24 15:04:31 2020 Page 1

ID:MF8iiriaTok7DlbpT4B71Xys4PG-N9?5XBiJ7Po3NZtqoxu83JCrHPeXqu6wn0OilHzXiF_

Scale: 3/16"=1'

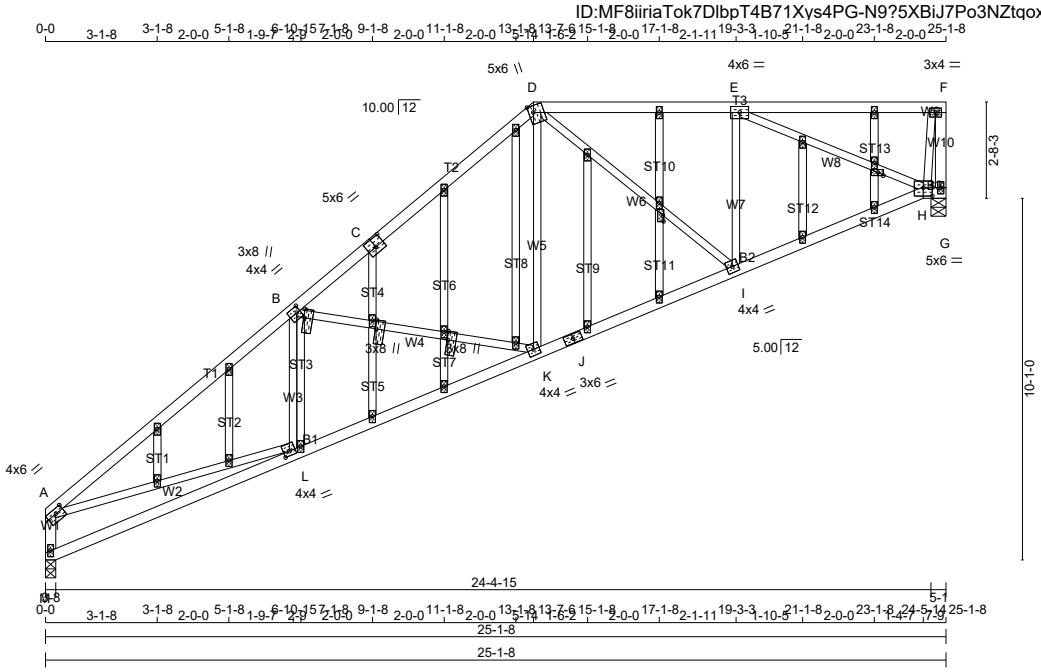

TOTAL WEIGHT = 135 lb

LUMBER

N. L. G. A. RULES

CHORDS	SIZE		LUMBER	DESCR.
A - C	2x4	DRY	1650F 1.5E	SPF
C - D	2x4	DRY	1650F 1.5E	SPF
D - F	2x4	DRY	No.2	SPF
G - F	2x4	DRY	No.2	SPF
M - A	2x4	DRY	No.2	SPF
M - J	2x4	DRY	No.2	SPF
J - H	2x4	DRY	No.2	SPF
H - G	2x4	DRY	No.2	SPF
ALL WEBS EXCEPT	2x3	DRY	No.2	SPF
ALL GABLE WEBS	2x3	DRY	No.2	SPF

DRY: SEASONED LUMBER.

GABLE STUDS SPACED AT 2-0-0 OC.

PLATES (table is in inches)

JT	TYPE	PLATES	W	LEN	Y	X
A	TMVW-t	MT20	4.0	6.0	1.50	2.75
B	TMWW-t	MT20	4.0	4.0	2.00	1.25
B, Z, AC						
B	NP+t	MT20	3.0	8.0	3.00	0.25
C	TSW-l	MT20	5.0	6.0	3.00	3.00
D	TTWW+m	MT20	5.0	6.0	2.25	1.50
E	TMWW-t	MT20	4.0	6.0		
F	TMVW-t	MT20	3.0	4.0		
G	BMV1+p	MT20	2.0	4.0		
H	BBWW1-l	MT20	5.0	6.0	2.75	3.00
I	BMWW-t	MT20	4.0	4.0		
J	BS-t	MT20	3.0	6.0		
K	BMWW-t	MT20	4.0	4.0		
L	BMWW-t	MT20	4.0	4.0	1.50	2.00
L, N, O, P, Q, R, S, T, U, V, W, X, Y, Z, AA, AB, AC, AD, AE, AF, AG, AH						
L	NP+w	MT20	2.0	4.0		
M	BMV1+p	MT20	2.0	4.0		
P	NP-p	MT20	2.0	4.0	1.00	1.75
U	NP+w	MT20	2.0	4.0	2.00	0.25

LATERAL BRACE(S) SHOWN SHALL BE 2X4 SPF#2

DIMENSIONS, SUPPORTS AND LOADINGS SPECIFIED BY FABRICATOR TO BE VERIFIED BY BUILDING DESIGNER

BEARINGS

	FACTORED GROSS REACTION		MAXIMUM FACTORED GROSS REACTION			INPUT BRG	REQRD BRG
JT	VERT	HORZ	DOWN	HORZ	UPLIFT	IN-SX	IN-SX
G	-348	0	0	0	-348	5-1	3-1
H	1600	0	1600	0	0	5-1	3-1
M	1172	0	1172	0	0	3-8	1-8

PROVIDE ANCHORAGE AT BEARING JOINT G FOR 348 LBS FACTORED UPLIFT

UNFACTORED REACTIONS

JT	1ST LCASE COMBINED	MAX./MIN. COMPONENT REACTIONS SNOW	LIVE	PERM.LIVE	WIND	DEAD	SOIL
G	-249	0 / -148	0 / 0	0 / 0	0 / 0	0 / -101	0 / 0
H	1141	693 / 0	0 / 0	0 / 0	0 / 0	449 / 0	0 / 0
M	835	510 / 0	0 / 0	0 / 0	0 / 0	325 / 0	0 / 0

BEARING MATERIAL TO BE SPF NO.2 OR BETTER AT JOINT(S) G, H, M

BRACING

TOP CHORD TO BE SHEATHED OR MAX. PURLIN SPACING = 4.61 FT.
MAX. UNBRACED BOTTOM CHORD LENGTH = 10.00 FT OR RIGID CEILING DIRECTLY APPLIED.

ALL PITCH BREAKS AND PERIMETER CORNER JOINTS MUST BE LATERALLY RESTRAINED.

LOADING

TOTAL LOAD CASES: (4)

CHORDS

MEMB. FR-TO	FORCE (LBS)	FACTORED VERT. LOAD (PLF) FROM	TO	CSI (LC)	MAX. UNBRAC LENGTH
A- B	-1979 / 0	-78.0	-78.0	0.73 (1)	4.61
B- C	-1371 / 0	-78.0	-78.0	0.62 (1)	5.33
C- D	-1371 / 0	-78.0	-78.0	0.62 (1)	5.33
D- E	-1103 / 0	-78.0	-78.0	0.48 (1)	5.35
E- F	0 / 140	-78.0	-78.0	0.45 (1)	10.00
G- F	0 / 354	0.0	0.0	0.06 (1)	10.00
M- A	-1118 / 0	0.0	0.0	0.12 (1)	7.49
M- L	0 / 6	-18.5	-18.5	0.21 (4)	10.00
L- K	0 / 1677	-18.5	-18.5	0.37 (1)	10.00
K- J	0 / 1111	-18.5	-18.5	0.25 (1)	10.00
J- I	0 / 1111	-18.5	-18.5	0.25 (1)	10.00
I- H	0 / 1192	-18.5	-18.5	0.25 (1)	10.00
H- G	0 / 0	-18.5	-18.5	0.00 (4)	10.00

WEBS

MEMB. FR-TO	FORCE (LBS)	MAX. FACTORED MAX CSI (LC)
L- B	-123 / 60	0.04 (1)
B- K	-538 / 0	0.50 (1)
K- D	0 / 426	0.10 (1)
D- I	0 / 99	0.02 (1)
I- E	0 / 98	0.03 (4)
E- H	-1367 / 0	0.80 (1)
H- F	-547 / 0	0.09 (1)
A- L	0 / 1597	0.36 (1)

[M]

DESIGN CRITERIA

SPECIFIED LOADS:

TOP CH.	LL	=	21.0	PSF
	DL	=	6.0	PSF
BOT CH.	LL	=	0.0	PSF
	DL	=	7.4	PSF
TOTAL LOAD		=	34.4	PSF

SPACING = 24.0 IN. C/C

LOADING IN FLAT SECTION BASED ON A SLOPE OF 2.00/12 MINIMUM

THIS TRUSS IS DESIGNED FOR RESIDENTIAL OR SMALL BUILDING REQUIREMENTS OF PART 9, NBCC 2015

THIS DESIGN COMPLIES WITH:
- PART 9 OF BCBC 2018 , ABC 2019
- PART 9 OF OBC 2012 (2019 AMENDMENT)
- CSA 086-14
- TPIC 2014

(55 % OF 23.0 P.S.F. G.S.L. PLUS 8.4 P.S.F. RAIN LOAD) EQUALS 21.0 P.S.F. SPECIFIED ROOF LIVE LOAD

ALLOWABLE DEFL.(LL)= L/360 (0.82")
CALCULATED VERT. DEFL.(LL) = L/ 999 (0.07")
ALLOWABLE DEFL.(TL)= L/360 (0.82")
CALCULATED VERT. DEFL.(TL) = L/ 999 (0.14")

CSI: TC=0.73/1.00 (A-B:1) , BC=0.37/1.00 (K-L:1) , WB=0.80/1.00 (E-H:1) , SSI=0.22/1.00 (E-F:1)

DOL LUMBER=1.00 NAIL=1.00 LS BEND=1.10 COMP=1.10 SHEAR=1.10 TENS= 1.10

COMPANION LIVE LOAD FACTOR = 1.00

TRUSS PLATE MANUFACTURER IS NOT RESPONSIBLE FOR QUALITY CONTROL IN THE TRUSS MANUFACTURING PLANT .

NAIL VALUES

PLATE	GRIP(DRY) (PSI) MAX	MIN	SHEAR (PLI) MAX	MIN	SECTION (PLI) MAX	MIN
MT20	650	371	1747	788	1987	1873

PLATE PLACEMENT TOL. = 0.250 inches

PLATE ROTATION TOL. = 5.0 Deg.

JSI GRIP= 0.84 (A) (INPUT = 0.90)
JSI METAL= 0.55 (L) (INPUT = 1.00)

JOB NAME	TRUSS NAME	QUANTITY	PLY	JOB DESC.	DRWG NO.
318404	H6S		1	TRUSS DESC. JT 45147	E20035307

Alpa Roof Truss, Maple

ID:MF8iiriaTok7DlbpT4B71Xys4PG-rMZTlXjxujww?iS1MePNbXl23py0PIs30q8FGkzXiEz

Scale = 1:85.5

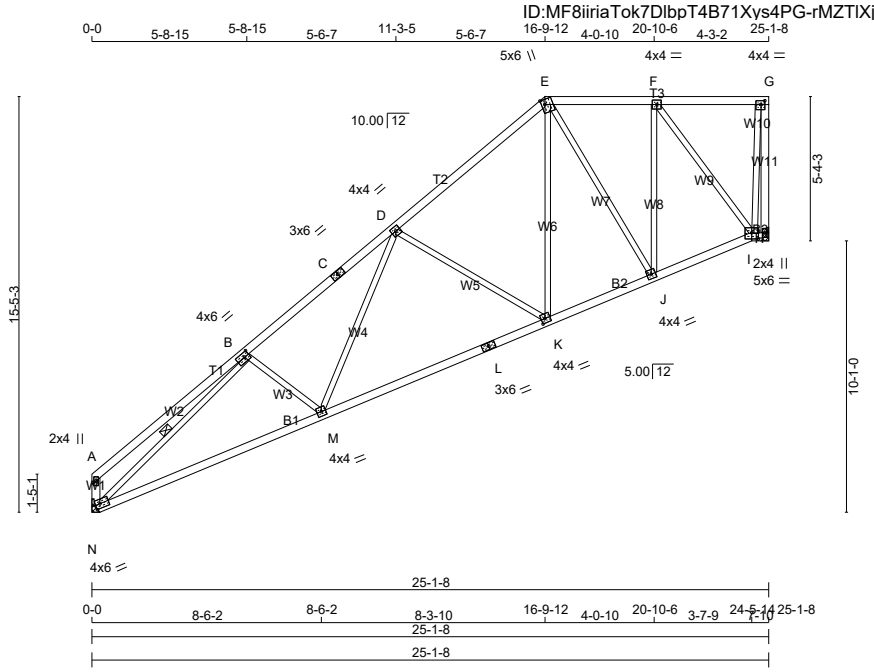

TOTAL WEIGHT = 119 lb

LUMBER

N. L. G. A. RULES

CHORDS	SIZE		LUMBER	DESCR.
A - C	2x4	DRY	No.2	SPF
C - E	2x4	DRY	No.2	SPF
E - G	2x4	DRY	No.2	SPF
H - G	2x4	DRY	No.2	SPF
N - A	2x4	DRY	No.2	SPF
N - L	2x4	DRY	No.2	SPF
L - I	2x4	DRY	No.2	SPF
I - H	2x4	DRY	No.2	SPF
ALL WEBS EXCEPT	2x3	DRY	No.2	SPF

DRY: SEASONED LUMBER.

PLATES (table is in inches)

JT	TYPE	PLATES	W	LEN	Y	X
A	TMV+p	MT20	2.0	4.0		
B	TMWW-t	MT20	4.0	6.0	2.00	2.25
C	TS-t	MT20	3.0	6.0		
D	TMWW-t	MT20	4.0	4.0		
E	TTWW+m	MT20	5.0	6.0	2.25	1.50
F	TMWW-t	MT20	4.0	4.0		
G	TMVW-t	MT20	4.0	4.0	1.75	1.75
H	BMV1+p	MT20	2.0	4.0		
I	BBWW-l	MT20	5.0	6.0	2.75	3.00
J	BMWW-t	MT20	4.0	4.0		
K	BMWW-t	MT20	4.0	4.0	2.00	1.75
L	BS-t	MT20	3.0	6.0		
M	BMWW-t	MT20	4.0	4.0		
N	BMVW1-t	MT20	4.0	6.0	2.00	2.00

LATERAL BRACE(S) SHOWN SHALL BE 2X4 SPF#2

DIMENSIONS, SUPPORTS AND LOADINGS SPECIFIED BY FABRICATOR TO BE VERIFIED BY BUILDING DESIGNER

BEARINGS

JT	FACTORED GROSS REACTION VERT	HORZ	MAXIMUM FACTORED GROSS REACTION DOWN	HORZ	UPLIFT	INPUT BRG IN-SX	REQRD BRG IN-SX
H	1212	0	1212	0	0	MECHANICAL	
N	1212	0	1212	0	0	MECHANICAL	

A SUITABLE HANGER/MECHANICAL CONNECTION IS REQUIRED AT JOINT H, N. MINIMUM BEARING LENGTH AT JOINT H = 1-8, JOINT N = 3-8.

UNFACTORED REACTIONS

JT	1ST LCASE COMBINED	MAX./MIN. COMPONENT REACTIONS SNOW	LIVE	PERM.LIVE	WIND	DEAD	SOIL
H	864	527 / 0	0 / 0	0 / 0	0 / 0	337 / 0	0 / 0
N	864	527 / 0	0 / 0	0 / 0	0 / 0	337 / 0	0 / 0

BRACING

TOP CHORD TO BE SHEATHED OR MAX. PURLIN SPACING = 4.61 FT.
MAX. UNBRACED BOTTOM CHORD LENGTH = 10.00 FT OR RIGID CEILING DIRECTLY APPLIED.

ALL PITCH BREAKS AND PERIMETER CORNER JOINTS MUST BE LATERALLY RESTRAINED.

1 LATERAL BRACE(S) AT 1/ 2 LENGTH OF B-N.

END VERTICAL(S) MUST BE SHEATHED OR HAVE BRACES AS INDICATED IN THE MAX. UNBRACED LENGTH COLUMN OF THE TABLE BELOW

LOADING

TOTAL LOAD CASES: (4)

CHORDS

MEMB. FR-TO	MAX. FACTORED FORCE (LBS)	FACTORED VERT. LOAD LC1 (PLF) FROM	TO	MAX CSI (LC)	MAX. UNBRAC LENGTH
A- B	0 / 25	-78.0	-78.0	0.30 (1)	10.00
B- C	-1883 / 0	-78.0	-78.0	0.35 (1)	4.61
C- D	-1883 / 0	-78.0	-78.0	0.35 (1)	4.61
D- E	-1098 / 0	-78.0	-78.0	0.31 (1)	5.68
E- F	-680 / 0	-78.0	-78.0	0.18 (1)	6.25
F- G	-135 / 0	-78.0	-78.0	0.17 (1)	6.25
H- G	-1206 / 0	0.0	0.0	0.60 (1)	7.29
N- A	-180 / 0	0.0	0.0	0.02 (1)	7.81
N- M	0 / 1672	-18.5	-18.5	0.49 (4)	10.00
M- L	0 / 1419	-18.5	-18.5	0.46 (4)	10.00
L- K	0 / 1419	-18.5	-18.5	0.46 (4)	10.00
K- J	0 / 892	-18.5	-18.5	0.25 (4)	10.00
J- I	0 / 735	-18.5	-18.5	0.15 (1)	10.00
I- H	0 / 0	-18.5	-18.5	0.00 (4)	10.00

WEBS

MEMB. FR-TO	MAX. FACTORED FORCE (LBS)	MAX CSI (LC)
B- M	-116 / 17	0.03 (1)
M- D	0 / 371	0.08 (1)
D- K	-581 / 0	0.49 (1)
K- E	0 / 633	0.14 (1)
E- J	-282 / 0	0.33 (1)
J- F	0 / 361	0.08 (1)
F- I	-935 / 0	0.64 (1)
I- G	0 / 1086	0.24 (1)
N- B	-2226 / 0	0.96 (1)

[M][F]

DESIGN CRITERIA

SPECIFIED LOADS:

TOP CH.	LL	=	21.0	PSF
	DL	=	6.0	PSF
BOT CH.	LL	=	0.0	PSF
	DL	=	7.4	PSF
TOTAL LOAD		=	34.4	PSF

SPACING = 24.0 IN. C/C

LOADING IN FLAT SECTION BASED ON A SLOPE OF 2.00/12 MINIMUM

THIS TRUSS IS DESIGNED FOR RESIDENTIAL OR SMALL BUILDING REQUIREMENTS OF PART 9, NBCC 2015

THIS DESIGN COMPLIES WITH:
- PART 9 OF BCBC 2018 , ABC 2019
- PART 9 OF OBC 2012 (2019 AMENDMENT)
- CSA 086-14
- TPIC 2014

(55 % OF 23.0 P.S.F. G.S.L. PLUS 8.4 P.S.F. RAIN LOAD) EQUALS 21.0 P.S.F. SPECIFIED ROOF LIVE LOAD

ALLOWABLE DEFL.(LL)= L/360 (0.84")
CALCULATED VERT. DEFL.(LL) = L/ 999 (0.08")
ALLOWABLE DEFL.(TL)= L/360 (0.84")
CALCULATED VERT. DEFL.(TL) = L/ 999 (0.22")

CSI: TC=0.60/1.00 (G-H:1) , BC=0.49/1.00 (M-N:4) , WB=0.96/1.00 (B-N:1) , SSI=0.16/1.00 (F-G:1)

DOL LUMBER=1.00 NAIL=1.00 LS BEND=1.10 COMP=1.10 SHEAR=1.10 TENS= 1.10

COMPANION LIVE LOAD FACTOR = 1.00

TRUSS PLATE MANUFACTURER IS NOT RESPONSIBLE FOR QUALITY CONTROL IN THE TRUSS MANUFACTURING PLANT .

NAIL VALUES

PLATE	GRIP(DRY) (PSI) MAX	MIN	SHEAR (PLI) MAX	MIN	SECTION (PLI) MAX	MIN
MT20	650	371	1747	788	1987	1873

PLATE PLACEMENT TOL. = 0.250 inches

PLATE ROTATION TOL. = 5.0 Deg.

JSI GRIP= 0.89 (G) (INPUT = 0.90)
JSI METAL= 0.51 (L) (INPUT = 1.00)

JOB NAME	TRUSS NAME	QUANTITY	PLY	JOB DESC.	DRWG NO.
318404	H7S		1	TRUSS DESC. JT 45147	E20035308

Alpa Roof Truss, Maple

Version 8.310 S Oct 29 2019 MiTek Industries, Inc. Tue Mar 24 15:04:33 2020 Page 1

ID:MF8iiriaTok7DlbpT4B71Xys4PG-JY7ryskZf12nds1DwMxc8kHDYDK28lyDEKtpoAzXiEy

Scale = 1:99.5

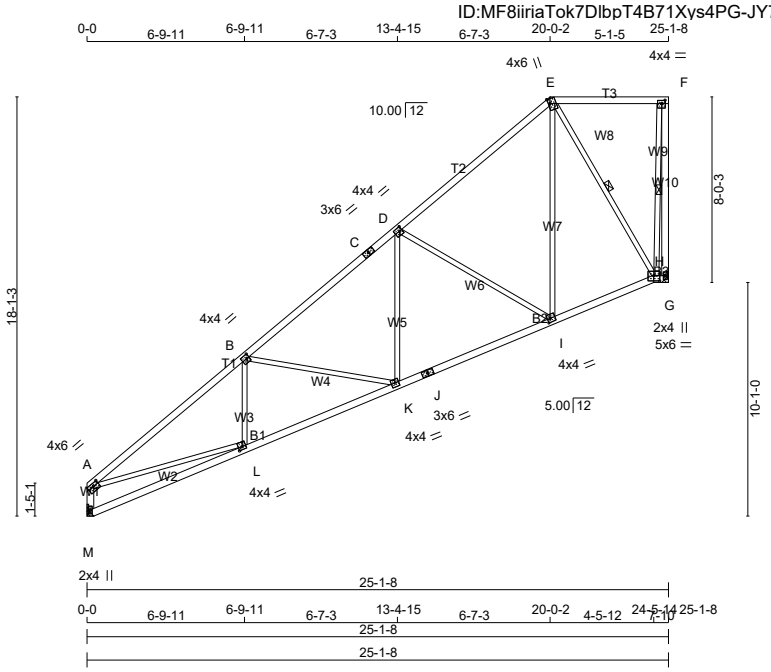

TOTAL WEIGHT = 122 lb

LUMBER

N. L. G. A. RULES

CHORDS	SIZE		LUMBER	DESCR.
A - C	2x4	DRY	No.2	SPF
C - E	2x4	DRY	No.2	SPF
E - F	2x4	DRY	No.2	SPF
G - F	2x4	DRY	No.2	SPF
M - A	2x4	DRY	No.2	SPF
M - J	2x4	DRY	No.2	SPF
J - H	2x4	DRY	No.2	SPF
H - G	2x4	DRY	No.2	SPF
ALL WEBS EXCEPT	2x3	DRY	No.2	SPF

DRY: SEASONED LUMBER.

PLATES (table is in inches)

JT	TYPE	PLATES	W	LEN	Y	X
A	TMVW-t	MT20	4.0	6.0	1.50	2.75
B	TMWW-t	MT20	4.0	4.0	2.00	1.25
C	TS-t	MT20	3.0	6.0		
D	TMWW-t	MT20	4.0	4.0	2.00	1.25
E	TTWW+m	MT20	4.0	6.0	Edge	1.00
F	TMVW-t	MT20	4.0	4.0	1.75	1.75
G	BMV1+p	MT20	2.0	4.0		
H	BBWW-l	MT20	5.0	6.0	2.75	3.00
I	BMWW-t	MT20	4.0	4.0	2.00	1.50
J	BS-t	MT20	3.0	6.0		
K	BMWW-t	MT20	4.0	4.0		
L	BMWW-t	MT20	4.0	4.0	1.50	2.00
M	BMV1+p	MT20	2.0	4.0		

Edge - INDICATES REFERENCE CORNER OF PLATE TOUCHES EDGE OF CHORD.

LATERAL BRACE(S) SHOWN SHALL BE 2X4 SPF#2

DIMENSIONS, SUPPORTS AND LOADINGS SPECIFIED BY FABRICATOR TO BE VERIFIED BY BUILDING DESIGNER

BEARINGS

JT	FACTORED GROSS REACTION VERT	HORZ	MAXIMUM FACTORED GROSS REACTION DOWN	HORZ	UPLIFT	INPUT BRG IN-SX	REQRD BRG IN-SX
G	1212	0	1212	0	0	MECHANICAL	
M	1212	0	1212	0	0	MECHANICAL	

A SUITABLE HANGER/MECHANICAL CONNECTION IS REQUIRED AT JOINT G, M. MINIMUM BEARING LENGTH AT JOINT G = 1-8, JOINT M = 3-8.

UNFACTORED REACTIONS

JT	1ST LCASE COMBINED	MAX./MIN. COMPONENT REACTIONS SNOW	LIVE	PERM.LIVE	WIND	DEAD	SOIL
G	864	527 / 0	0 / 0	0 / 0	0 / 0	337 / 0	0 / 0
M	864	527 / 0	0 / 0	0 / 0	0 / 0	337 / 0	0 / 0

BRACING

TOP CHORD TO BE SHEATHED OR MAX. PURLIN SPACING = 4.19 FT.
MAX. UNBRACED BOTTOM CHORD LENGTH = 10.00 FT OR RIGID CEILING DIRECTLY APPLIED.

ALL PITCH BREAKS AND PERIMETER CORNER JOINTS MUST BE LATERALLY RESTRAINED.

1 LATERAL BRACE(S) AT 1/ 2 LENGTH OF F-G, E-H.

END VERTICAL(S) MUST BE SHEATHED OR HAVE BRACES AS INDICATED IN THE MAX. UNBRACED LENGTH COLUMN OF THE TABLE BELOW

LOADING

TOTAL LOAD CASES: (4)

CHORDS

MEMB. FR-TO	MAX. FACTORED FORCE (LBS)	FACTORED VERT. LOAD LC1 (PLF) FROM	TO	MAX CSI (LC)	MAX. UNBRAC LENGTH
A- B	-2047 / 0	-78.0	-78.0	0.62 (1)	4.19
B- C	-1530 / 0	-78.0	-78.0	0.45 (1)	4.88
C- D	-1530 / 0	-78.0	-78.0	0.45 (1)	4.88
D- E	-702 / 0	-78.0	-78.0	0.42 (1)	6.25
E- F	-82 / 0	-78.0	-78.0	0.26 (1)	6.25
G- F	-1206 / 0	0.0	0.0	0.35 (1)	5.83
M- A	-1158 / 0	0.0	0.0	0.12 (1)	7.40
M- L	0 / 5	-18.5	-18.5	0.19 (4)	10.00
L- K	0 / 1726	-18.5	-18.5	0.37 (1)	10.00
K- J	0 / 1273	-18.5	-18.5	0.29 (1)	10.00
J- I	0 / 1273	-18.5	-18.5	0.29 (1)	10.00
I- H	0 / 561	-18.5	-18.5	0.19 (4)	10.00
H- G	0 / 0	-18.5	-18.5	0.00 (4)	10.00

WEBS

MEMB. FR-TO	MAX. FACTORED FORCE (LBS)	MAX CSI (LC)
L- B	-141 / 47	0.04 (1)
B- K	-427 / 0	0.37 (1)
K- D	0 / 378	0.09 (1)
D- I	-770 / 0	0.97 (1)
I- E	0 / 779	0.18 (1)
E- H	-875 / 0	0.48 (1)
H- F	0 / 1010	0.23 (1)
A- L	0 / 1643	0.37 (1)

DESIGN CRITERIA [M][F]

SPECIFIED LOADS:

TOP CH.	LL	=	21.0	PSF
	DL	=	6.0	PSF
BOT CH.	LL	=	0.0	PSF
	DL	=	7.4	PSF
TOTAL LOAD		=	34.4	PSF

SPACING = 24.0 IN. C/C

LOADING IN FLAT SECTION BASED ON A SLOPE OF 2.00/12 MINIMUM

THIS TRUSS IS DESIGNED FOR RESIDENTIAL OR SMALL BUILDING REQUIREMENTS OF PART 9, NBCC 2015

THIS DESIGN COMPLIES WITH:
- PART 9 OF BCBC 2018 , ABC 2019
- PART 9 OF OBC 2012 (2019 AMENDMENT)
- CSA 086-14
- TPIC 2014

(55 % OF 23.0 P.S.F. G.S.L. PLUS 8.4 P.S.F. RAIN LOAD) EQUALS 21.0 P.S.F. SPECIFIED ROOF LIVE LOAD

ALLOWABLE DEFL.(LL)= L/360 (0.84")
CALCULATED VERT. DEFL.(LL) = L/ 999 (0.08")
ALLOWABLE DEFL.(TL)= L/360 (0.84")
CALCULATED VERT. DEFL.(TL) = L/ 999 (0.16")

CSI: TC=0.62/1.00 (A-B:1) , BC=0.37/1.00 (K-L:1) , WB=0.97/1.00 (D-I:1) , SSI=0.19/1.00 (A-B:1)

DOL LUMBER=1.00 NAIL=1.00 LS BEND=1.10 COMP=1.10 SHEAR=1.10 TENS= 1.10

COMPANION LIVE LOAD FACTOR = 1.00

TRUSS PLATE MANUFACTURER IS NOT RESPONSIBLE FOR QUALITY CONTROL IN THE TRUSS MANUFACTURING PLANT .

NAIL VALUES

PLATE	GRIP(DRY) (PSI) MAX	MIN	SHEAR (PLI) MAX	MIN	SECTION (PLI) MAX	MIN
MT20	650	371	1747	788	1987	1873

PLATE PLACEMENT TOL. = 0.250 inches

PLATE ROTATION TOL. = 5.0 Deg.

JSI GRIP= 0.86 (A) (INPUT = 0.90)
JSI METAL= 0.57 (L) (INPUT = 1.00)

JOB NAME	TRUSS NAME	QUANTITY	PLY	JOB DESC.	DRWG NO.
318404	H8S		1	TRUSS DESC. JT 45147	E20035309

Alpa Roof Truss, Maple

Version 8.310 S Oct 29 2019 MiTek Industries, Inc. Tue Mar 24 15:04:34 2020 Page 1

ID:MF8iiriaTok7DlbpT4B71Xys4PG-nkhD9ClBQKAeE0cPT3SrhyqN6dfOtGfMT dMLczXiEx

Scale = 1:114.3

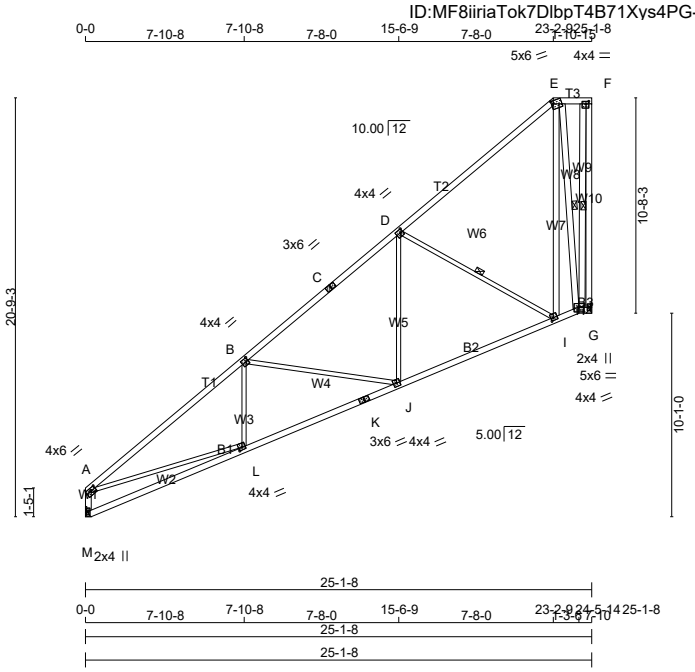

TOTAL WEIGHT = 145 lb

LUMBER

N. L. G. A. RULES

CHORDS	SIZE		LUMBER	DESCR.
A - C	2x4	DRY	2100F 1.8E	SPF
C - E	2x4	DRY	2100F 1.8E	SPF
E - F	2x4	DRY	No.2	SPF
G - F	2x4	DRY	No.2	SPF
M - A	2x4	DRY	No.2	SPF
M - K	2x4	DRY	No.2	SPF
K - H	2x4	DRY	No.2	SPF
H - G	2x4	DRY	No.2	SPF
ALL WEBS	2x3	DRY	No.2	SPF
EXCEPT				
I - E	2x4	DRY	No.2	SPF
E - H	2x4	DRY	No.2	SPF
H - F	2x4	DRY	No.2	SPF

DRY: SEASONED LUMBER.

PLATES (table is in inches)

JT	TYPE	PLATES	W	LEN	Y	X
A	TMVW-t	MT20	4.0	6.0	1.50	2.75
B	TMWW-t	MT20	4.0	4.0	2.00	1.25
C	TS-t	MT20	3.0	6.0		
D	TMWW-t	MT20	4.0	4.0	2.00	1.25
E	TTWW-m	MT20	5.0	6.0	1.75	1.00
F	TMVW-t	MT20	4.0	4.0	1.50	1.75
G	BMV1+p	MT20	2.0	4.0		
H	BBWW-l	MT20	5.0	6.0	2.75	3.00
I	BMWW-t	MT20	4.0	4.0	1.75	1.50
J	BMWW-t	MT20	4.0	4.0		
K	BS-t	MT20	3.0	6.0		
L	BMWW-t	MT20	4.0	4.0	1.50	2.00
M	BMV1+p	MT20	2.0	4.0		

LATERAL BRACE(S) SHOWN SHALL BE 2X4 SPF#2

DIMENSIONS, SUPPORTS AND LOADINGS SPECIFIED BY FABRICATOR TO BE VERIFIED BY BUILDING DESIGNER

BEARINGS

JT	FACTORED GROSS REACTION VERT	HORZ	MAXIMUM FACTORED GROSS REACTION DOWN	HORZ	UPLIFT	INPUT BRG IN-SX	REQRD BRG IN-SX
G	1212	0	1212	0	0	MECHANICAL	
M	1212	0	1212	0	0	MECHANICAL	

A SUITABLE HANGER/MECHANICAL CONNECTION IS REQUIRED AT JOINT G, M. MINIMUM BEARING LENGTH AT JOINT G = 1-8, JOINT M = 3-8.

UNFACTORED REACTIONS

JT	1ST LCASE COMBINED	MAX./MIN. COMPONENT REACTIONS SNOW	LIVE	PERM.LIVE	WIND	DEAD	SOIL
G	864	527 / 0	0 / 0	0 / 0	0 / 0	337 / 0	0 / 0
M	864	527 / 0	0 / 0	0 / 0	0 / 0	337 / 0	0 / 0

BRACING

TOP CHORD TO BE SHEATHED OR MAX. PURLIN SPACING = 5.18 FT.
MAX. UNBRACED BOTTOM CHORD LENGTH = 10.00 FT OR RIGID CEILING DIRECTLY APPLIED.

ALL PITCH BREAKS AND PERIMETER CORNER JOINTS MUST BE LATERALLY RESTRAINED.

1 LATERAL BRACE(S) AT 1/ 2 LENGTH OF F-G, D-I, E-H.

END VERTICAL(S) MUST BE SHEATHED OR HAVE BRACES AS INDICATED IN THE MAX. UNBRACED LENGTH COLUMN OF THE TABLE BELOW

LOADING

TOTAL LOAD CASES: (4)

CHORDS

MEMB. FR-TO	MAX. FACTORED FORCE (LBS)	FACTORED VERT. LOAD LC1 (PLF) FROM	TO	MAX CSI (LC)	MAX. UNBRAC LENGTH
A- B	-2033 / 0	-78.0	-78.0	0.50 (1)	5.18
B- C	-1312 / 0	-78.0	-78.0	0.37 (1)	6.24
C- D	-1312 / 0	-78.0	-78.0	0.37 (1)	6.24
D- E	-284 / 0	-78.0	-78.0	0.37 (1)	6.25
E- F	-69 / 0	-78.0	-78.0	0.04 (1)	6.25
G- F	-1206 / 0	0.0	0.0	0.69 (1)	5.83
M- A	-1151 / 0	0.0	0.0	0.12 (1)	7.42
M- L	0 / 6	-18.5	-18.5	0.26 (4)	10.00
L- K	0 / 1721	-18.5	-18.5	0.43 (4)	10.00
K- J	0 / 1721	-18.5	-18.5	0.43 (4)	10.00
J- I	0 / 1089	-18.5	-18.5	0.31 (4)	10.00
I- H	0 / 203	-18.5	-18.5	0.18 (4)	10.00
H- G	0 / 0	-18.5	-18.5	0.00 (4)	10.00

WEBS

MEMB. FR-TO	MAX. FACTORED FORCE (LBS)	MAX CSI (LC)
L- B	-81 / 87	0.03 (4)
B- J	-590 / 0	0.75 (1)
J- D	0 / 488	0.11 (1)
D- I	-940 / 0	0.53 (1)
I- E	0 / 915	0.15 (1)
E- H	-1080 / 0	0.64 (1)
H- F	0 / 1134	0.18 (1)
A- L	0 / 1646	0.37 (1)

[M][F]

DESIGN CRITERIA

SPECIFIED LOADS:

TOP CH.	LL	=	21.0	PSF
	DL	=	6.0	PSF
BOT CH.	LL	=	0.0	PSF
	DL	=	7.4	PSF
TOTAL LOAD		=	34.4	PSF

SPACING = 24.0 IN. C/C

LOADING IN FLAT SECTION BASED ON A SLOPE OF 2.00/12 MINIMUM

THIS TRUSS IS DESIGNED FOR RESIDENTIAL OR SMALL BUILDING REQUIREMENTS OF PART 9, NBCC 2015

THIS DESIGN COMPLIES WITH:
- PART 9 OF BCBC 2018 , ABC 2019
- PART 9 OF OBC 2012 (2019 AMENDMENT)
- CSA 086-14
- TPIC 2014

(55 % OF 23.0 P.S.F. G.S.L. PLUS 8.4 P.S.F. RAIN LOAD) EQUALS 21.0 P.S.F. SPECIFIED ROOF LIVE LOAD

ALLOWABLE DEFL.(LL)= L/360 (0.84")
CALCULATED VERT. DEFL.(LL) = L/ 999 (0.08")
ALLOWABLE DEFL.(TL)= L/360 (0.84")
CALCULATED VERT. DEFL.(TL) = L/ 999 (0.19")

CSI: TC=0.69/1.00 (F-G:1) , BC=0.43/1.00 (J-L:4) , WB=0.75/1.00 (B-J:1) , SSI=0.22/1.00 (A-B:1)

DOL LUMBER=1.00 NAIL=1.00 LS BEND=1.10 COMP=1.10 SHEAR=1.10 TENS= 1.10

COMPANION LIVE LOAD FACTOR = 1.00

TRUSS PLATE MANUFACTURER IS NOT RESPONSIBLE FOR QUALITY CONTROL IN THE TRUSS MANUFACTURING PLANT .

NAIL VALUES

PLATE	GRIP(DRY) (PSI) MAX	MIN	SHEAR (PLI) MAX	MIN	SECTION (PLI) MAX	MIN
MT20	650	371	1747	788	1987	1873

PLATE PLACEMENT TOL. = 0.250 inches

PLATE ROTATION TOL. = 5.0 Deg.

JSI GRIP= 0.88 (A) (INPUT = 0.90)
JSI METAL= 0.57 (L) (INPUT = 1.00)

JOB NAME	TRUSS NAME	QUANTITY	PLY	JOB DESC.	DRWG NO.
318404	H9S		1	TRUSS DESC. JT 45147	E20035310

Alpa Roof Truss, Maple

Version 8.310 S Oct 29 2019 MiTek Industries, Inc. Tue Mar 24 15:04:36 2020 Page 1

ID:MF8iiriaTok7DlbpT4B71Xys4PG-k7o aumRyyRLUKlobUUJmNve QLyLBXfwI6TPVzXiEv

Scale = 1:119.9

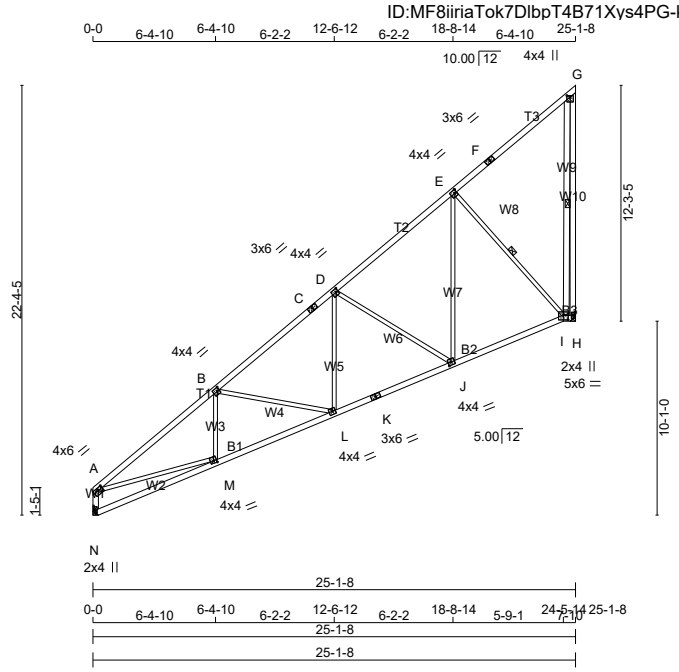

TOTAL WEIGHT = 7 X 134 = 937 lb

LUMBER

N. L. G. A. RULES

CHORDS	SIZE		LUMBER	DESCR.
N - A	2x4	DRY	No.2	SPF
A - C	2x4	DRY	No.2	SPF
C - F	2x4	DRY	No.2	SPF
F - G	2x4	DRY	No.2	SPF
H - G	2x4	DRY	No.2	SPF
N - K	2x4	DRY	No.2	SPF
K - I	2x4	DRY	No.2	SPF
I - H	2x4	DRY	No.2	SPF
ALL WEBS	2x3	DRY	No.2	SPF
EXCEPT				
I - G	2x4	DRY	No.2	SPF

DRY: SEASONED LUMBER.

PLATES (table is in inches)

JT	TYPE	PLATES	W	LEN	Y	X
A	TMVW-t	MT20	4.0	6.0	1.50	2.75
B, D, E						
B	TMWW-t	MT20	4.0	4.0	2.00	1.25
C	TS-t	MT20	3.0	6.0		
F	TS-t	MT20	3.0	6.0		
G	TMVW+p	MT20	4.0	4.0	1.00	2.00
H	BMV1+p	MT20	2.0	4.0		
I	BBWW-l	MT20	5.0	6.0	2.75	3.00
J	BMWW-t	MT20	4.0	4.0	2.00	1.75
K	BS-t	MT20	3.0	6.0		
L	BMWW-t	MT20	4.0	4.0		
M	BMWW-t	MT20	4.0	4.0	1.50	2.00
N	BMV1+p	MT20	2.0	4.0		

LATERAL BRACE(S) SHOWN SHALL BE 2X4 SPF#2

DIMENSIONS, SUPPORTS AND LOADINGS SPECIFIED BY FABRICATOR TO BE VERIFIED BY BUILDING DESIGNER

BEARINGS

	FACTORED GROSS REACTION		MAXIMUM FACTORED GROSS REACTION			INPUT BRG	REQRD BRG
JT	VERT	HORZ	DOWN	HORZ	UPLIFT	IN-SX	IN-SX
N	1212	0	1212	0	0	MECHANICAL	
H	1212	0	1212	0	0	MECHANICAL	

A SUITABLE HANGER/MECHANICAL CONNECTION IS REQUIRED AT JOINT N, H. MINIMUM BEARING LENGTH AT JOINT N = 3-8, JOINT H = 1-8.

UNFACTORED REACTIONS

	1ST LCASE	MAX./MIN. COMPONENT REACTIONS					
JT	COMBINED	SNOW	LIVE	PERM.LIVE	WIND	DEAD	SOIL
N	864	527 / 0	0 / 0	0 / 0	0 / 0	337 / 0	0 / 0
H	864	527 / 0	0 / 0	0 / 0	0 / 0	337 / 0	0 / 0

BRACING

TOP CHORD TO BE SHEATHED OR MAX. PURLIN SPACING = 4.27 FT.
MAX. UNBRACED BOTTOM CHORD LENGTH = 10.00 FT OR RIGID CEILING DIRECTLY APPLIED.

ALL PITCH BREAKS AND PERIMETER CORNER JOINTS MUST BE LATERALLY RESTRAINED.

1 LATERAL BRACE(S) AT 1/ 2 LENGTH OF G-H, E-I.

END VERTICAL(S) MUST BE SHEATHED OR HAVE BRACES AS INDICATED IN THE MAX. UNBRACED LENGTH COLUMN OF THE TABLE BELOW

LOADING

TOTAL LOAD CASES: (4)

CHORDS MEMB. FR-TO	MAX. FACTORED FORCE (LBS)	FACTORED VERT. LOAD (PLF) FROM	TO	LC1 MAX CSI (LC)	MAX. UNBRAC LENGTH	WEBS MEMB. FR-TO	MAX. FACTORED FORCE (LBS)	MAX CSI (LC)
N- A	-1161 / 0	0.0	0.0	0.12 (1)	7.39	A- M	0 / 1641	0.37 (1)
A- B	-2049 / 0	-78.0	-78.0	0.54 (1)	4.27	M- B	-167 / 32	0.04 (1)
B- C	-1603 / 0	-78.0	-78.0	0.42 (1)	4.82	B- L	-381 / 0	0.28 (1)
C- D	-1603 / 0	-78.0	-78.0	0.42 (1)	4.82	L- D	0 / 342	0.08 (1)
D- E	-878 / 0	-78.0	-78.0	0.37 (1)	6.07	D- J	-634 / 0	0.66 (1)
E- F	-106 / 0	-78.0	-78.0	0.38 (1)	6.25	J- E	0 / 685	0.15 (1)
F- G	-106 / 0	-78.0	-78.0	0.38 (1)	6.25	E- I	-958 / 0	0.51 (1)
H- G	-1206 / 0	0.0	0.0	0.99 (1)	5.83	I- G	0 / 1057	0.17 (1)
N- M	0 / 5	-18.5	-18.5	0.17 (4)	10.00			
M- L	0 / 1727	-18.5	-18.5	0.36 (1)	10.00			
L- K	0 / 1326	-18.5	-18.5	0.30 (1)	10.00			
K- J	0 / 1326	-18.5	-18.5	0.30 (1)	10.00			
J- I	0 / 737	-18.5	-18.5	0.23 (4)	10.00			
I- H	0 / 0	-18.5	-18.5	0.00 (4)	10.00			

[M][F]

DESIGN CRITERIA

SPECIFIED LOADS:

TOP	CH.	LL =	21.0	PSF
		DL =	6.0	PSF
BOT	CH.	LL =	0.0	PSF
		DL =	7.4	PSF
TOTAL	LOAD	=	34.4	PSF

SPACING = 24.0 IN. C/C

THIS TRUSS IS DESIGNED FOR RESIDENTIAL OR SMALL BUILDING REQUIREMENTS OF PART 9, NBCC 2015

THIS DESIGN COMPLIES WITH:
- PART 9 OF BCBC 2018 , ABC 2019
- PART 9 OF OBC 2012 (2019 AMENDMENT)
- CSA 086-14
- TPIC 2014

(55 % OF 23.0 P.S.F. G.S.L. PLUS 8.4 P.S.F. RAIN LOAD) EQUALS 21.0 P.S.F. SPECIFIED ROOF LIVE LOAD

ALLOWABLE DEFL.(LL)= L/360 (0.84")
CALCULATED VERT. DEFL.(LL) = L/ 999 (0.08")
ALLOWABLE DEFL.(TL)= L/360 (0.84")
CALCULATED VERT. DEFL.(TL) = L/ 999 (0.16")

CSI: TC=0.99/1.00 (G-H:1) , BC=0.36/1.00 (L-M:1) , WB=0.66/1.00 (D-J:1) , SSI=0.18/1.00 (E-G:1)

DOL LUMBER=1.00 NAIL=1.00 LS BEND=1.10 COMP=1.10 SHEAR=1.10 TENS= 1.10

COMPANION LIVE LOAD FACTOR = 1.00

TRUSS PLATE MANUFACTURER IS NOT RESPONSIBLE FOR QUALITY CONTROL IN THE TRUSS MANUFACTURING PLANT .

NAIL VALUES

PLATE	GRIP(DRY) (PSI) MAX	MIN	SHEAR (PLI) MAX	MIN	SECTION (PLI) MAX	MIN
MT20	650	371	1747	788	1987	1873

PLATE PLACEMENT TOL. = 0.250 inches

PLATE ROTATION TOL. = 5.0 Deg.

JSI GRIP= 0.86 (M) (INPUT = 0.90)
JSI METAL= 0.57 (M) (INPUT = 1.00)

JOB NAME	TRUSS NAME	QUANTITY	PLY	JOB DESC.	DRWG NO.
318404	H10		1	TRUSS DESC. JT 45147	E20035311

Alpa Roof Truss, Maple

Version 8.310 S Oct 29 2019 MiTek Industries, Inc. Tue Mar 24 15:06:30 2020 Page 1

ID:MF8iiriaTok7DlbpT4B71Xys4PG-O3h4Wt8y6zoA9rTiGQX2OPeBzNDL2nHR81jVQuzXiD7

Scale = 1:53.8

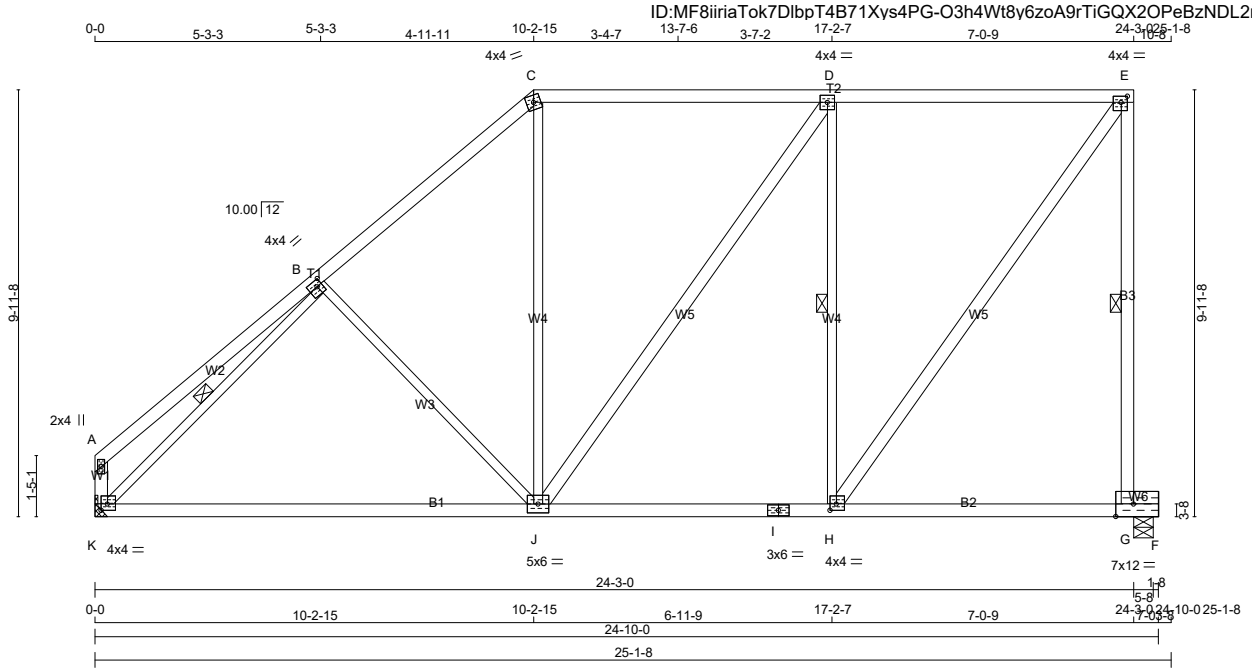

TOTAL WEIGHT = 7 X 125 = 877 lb

[M]

LUMBER

N. L. G. A. RULES

CHORDS	SIZE		LUMBER	DESCR.
K - A	2x4	DRY	No.2	SPF
A - C	2x4	DRY	No.2	SPF
C - E	2x4	DRY	No.2	SPF
K - I	2x4	DRY	No.2	SPF
I - F	2x4	DRY	No.2	SPF
G - F	2x4	DRY	No.2	SPF
G - E	2x4	DRY	No.2	SPF
ALL WEBS	2x3	DRY	No.2	SPF
EXCEPT				
J - D	2x4	DRY	No.2	SPF
H - E	2x4	DRY	No.2	SPF

DRY: SEASONED LUMBER.

PLATES (table is in inches)

JT	TYPE	PLATES	W	LEN	Y	X
A	TMV+p	MT20	2.0	4.0		
B	TMWW-t	MT20	4.0	4.0	1.75	1.50
C	TTW-m	MT20	4.0	4.0		
D	TMWW-t	MT20	4.0	4.0		
E	TMVW-t	MT20	4.0	4.0	1.75	1.75
G	BMVW1-t	MT20	7.0	12.0	Edge	5.00
H	BMWW-t	MT20	4.0	4.0	1.75	1.75
I	BS-t	MT20	3.0	6.0		
J	BMWWW-t	MT20	5.0	6.0		
K	BMVW1-t	MT20	4.0	4.0	1.75	1.75

Edge - INDICATES REFERENCE CORNER OF PLATE TOUCHES EDGE OF CHORD.

LATERAL BRACE(S) SHOWN SHALL BE 2X4 SPF#2

DIMENSIONS, SUPPORTS AND LOADINGS SPECIFIED BY FABRICATOR TO BE VERIFIED BY BUILDING DESIGNER

BEARINGS

JT	FACTORED GROSS REACTION VERT	HORZ	MAXIMUM FACTORED GROSS REACTION DOWN	HORZ	UPLIFT	INPUT BRG IN-SX	REQRD BRG IN-SX
K	1193	0	1193	0	0	MECHANICAL	
G	1307	0	1307	0	0	5-8	1-15

A SUITABLE HANGER/MECHANICAL CONNECTION IS REQUIRED AT JOINT K. MINIMUM BEARING LENGTH AT JOINT K = 1-8.

UNFACTORED REACTIONS

JT	1ST LCASE COMBINED	MAX./MIN. COMPONENT REACTIONS SNOW	LIVE	PERM.LIVE	WIND	DEAD	SOIL
K	853	506 / 0	0 / 0	0 / 0	0 / 0	347 / 0	0 / 0
G	938	536 / 0	0 / 0	0 / 0	0 / 0	402 / 0	0 / 0

BEARING MATERIAL TO BE SPF NO.2 OR BETTER AT JOINT(S) G

BRACING

FOR SECTION C-E, MAX. PURLIN SPACING = 2.00 FT.
FOR OTHER SECTIONS, TOP CHORD TO BE SHEATHED OR MAX. PURLIN SPACING = 5.71 FT.
MAX. UNBRACED BOTTOM CHORD LENGTH = 5.87 FT OR RIGID CEILING DIRECTLY APPLIED.

ALL PITCH BREAKS AND PERIMETER CORNER JOINTS MUST BE LATERALLY RESTRAINED.

1 LATERAL BRACE(S) AT 1/ 2 LENGTH OF B-K, D-H.

END VERTICAL(S) MUST BE SHEATHED OR HAVE BRACES AS INDICATED IN THE MAX. UNBRACED LENGTH COLUMN OF THE TABLE BELOW

LOADING

TOTAL LOAD CASES: (4)

CHORDS

MEMB. FR-TO	MAX. FACTORED FORCE (LBS)	FACTORED VERT. LOAD LC1 (PLF) FROM	TO	MAX CSI (LC)	MAX. UNBRAC LENGTH
K- A	-153 / 0	0.0	0.0	0.02 (1)	7.81
A- B	0 / 30	-78.0	-78.0	0.34 (1)	10.00
B- C	-1018 / 0	-78.0	-78.0	0.38 (1)	5.71
C- D	-759 / 0	-85.5	-85.5	0.75 (1)	2.00
D- E	-685 / 0	-85.5	-85.5	0.74 (1)	2.00
K- J	0 / 919	-18.5	-18.5	0.50 (4)	10.00
J- I	0 / 685	-18.5	-18.5	0.49 (4)	10.00
I- H	0 / 685	-18.5	-18.5	0.49 (4)	10.00
H- G	0 / 0	-18.5	-18.5	0.19 (4)	10.00
G- F	0 / 0	-96.5	-96.5	0.01 (1)	10.00
G- E	-1182 / 0	0.0	0.0	0.57 (1)	5.87

WEBS

MEMB. FR-TO	MAX. FACTORED FORCE (LBS)	MAX CSI (LC)
J- C	0 / 255	0.06 (4)
K- B	-1330 / 0	0.49 (1)
B- J	-234 / 0	0.26 (1)
J- D	0 / 128	0.02 (1)
H- D	-840 / 0	0.56 (1)
H- E	0 / 1180	0.19 (1)

DESIGN CRITERIA

SPECIFIED LOADS:

TOP	CH.	LL =	21.0	PSF
		DL =	6.0	PSF
BOT	CH.	LL =	0.0	PSF
		DL =	7.4	PSF
TOTAL	LOAD	=	34.4	PSF

SPACING = 24.0 IN. C/C

LOADING IN FLAT SECTION BASED ON PIGGYBACK TRUSS WITH SLOPES OF 6.00/12 AND -6.00/12 AND RESPECTIVE WALL HEIGHTS OF 0-0 AND 0-0 AND AN ADDITIONAL DEAD LOAD OF 3.0 P.S.F.

THIS TRUSS IS DESIGNED FOR RESIDENTIAL OR SMALL BUILDING REQUIREMENTS OF PART 9, NBCC 2015

THIS DESIGN COMPLIES WITH:
- PART 9 OF BCBC 2018 , ABC 2019
- PART 9 OF OBC 2012 (2019 AMENDMENT)
- CSA 086-14
- TPIC 2014

(55 % OF 23.0 P.S.F. G.S.L. PLUS 8.4 P.S.F. RAIN LOAD) EQUALS 21.0 P.S.F. SPECIFIED ROOF LIVE LOAD

ALLOWABLE DEFL.(LL)= L/360 (0.80")
CALCULATED VERT. DEFL.(LL) = L/ 999 (0.03")
ALLOWABLE DEFL.(TL)= L/360 (0.80")
CALCULATED VERT. DEFL.(TL) = L/ 860 (0.34")

CANTILEVER DEFLECTION:
ALLOWABLE DEFL.(LL)= L/120 (0.19")
CALCULATED VERT. DEFL.(LL) = L/ 999 (0.00")
ALLOWABLE DEFL.(TL)= L/120 (0.19")
CALCULATED VERT. DEFL.(TL) = L/ 999 (0.00")

CSI: TC=0.75/1.00 (C-D:1) , BC=0.57/1.00 (E-G:1) , WB=0.56/1.00 (D-H:1) , SSI=0.29/1.00 (C-D:1)

DOL LUMBER=1.00 NAIL=1.00 LS BEND=1.10 COMP=1.10 SHEAR=1.10 TENS= 1.10

COMPANION LIVE LOAD FACTOR = 1.00

TRUSS PLATE MANUFACTURER IS NOT RESPONSIBLE FOR QUALITY CONTROL IN THE TRUSS MANUFACTURING PLANT .

NAIL VALUES

PLATE	GRIP(DRY) (PSI) MAX	MIN	SHEAR (PLI) MAX	MIN	SECTION (PLI) MAX	MIN
MT20	650	371	1747	788	1987	1873

PLATE PLACEMENT TOL. = 0.250 inches

PLATE ROTATION TOL. = 5.0 Deg.

JSI GRIP= 0.84 (E) (INPUT = 0.90)
JSI METAL= 0.44 (B) (INPUT = 1.00)

JOB NAME	TRUSS NAME	QUANTITY	PLY	JOB DESC.	DRWG NO.
318404	H10G		1	TRUSS DESC. JT 45147	E20035312

Alpa Roof Truss, Maple

Version 8.310 S Oct 29 2019 MiTek Industries, Inc. Tue Mar 24 15:04:38 2020 Page 1

ID:MF8iiriaTok7DlbpT4B71Xys4PG-gWwk?aoiUZh3jdvAivWnro?DNE6lpD3yOcbaUNzXiEt

Scale = 1:54.6

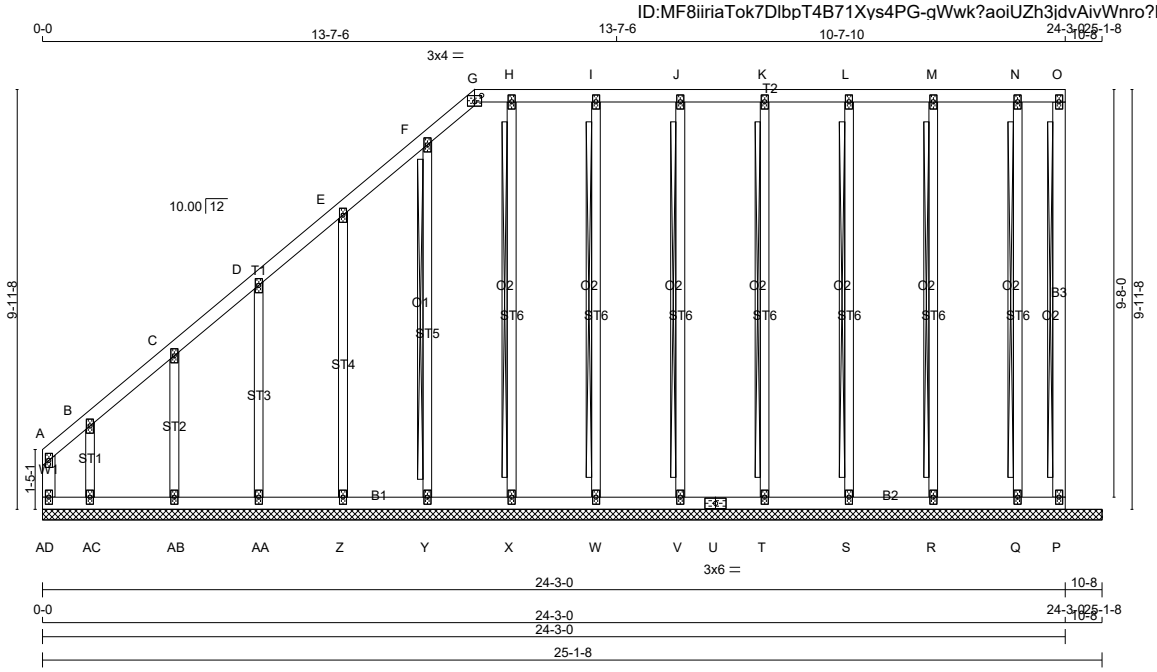

TOTAL WEIGHT = 145 lb

[M]

LUMBER

N. L. G. A. RULES

CHORDS	SIZE		LUMBER	DESCR.
AD- A	2x4	DRY	No.2	SPF
A - G	2x4	DRY	No.2	SPF
G - O	2x4	DRY	No.2	SPF
AD- U	2x4	DRY	No.2	SPF
U - P	2x4	DRY	No.2	SPF
P - O	2x4	DRY	No.2	SPF
ALL WEBS	2x3	DRY	No.2	SPF

EXCEPT

ALL GABLE WEBS

2x3 DRY No.2 SPF

DRY: SEASONED LUMBER.

GABLE STUDS SPACED AT 2-0-0 OC.

PLATES (table is in inches)

JT	TYPE	PLATES	W	LEN	Y	X
A	TMV+p	MT20	2.0	4.0		
B, C, D, E, F, H, I, J, K, L, M, N						
B	TMW+w	MT20	2.0	4.0		
G	TT-l	MT20	3.0	4.0	1.75	2.00
O	TMV+p	MT20	2.0	4.0		
P	BMV1+p	MT20	2.0	4.0		
Q, R, S, T, V, W, X, Y, Z, AA, AB, AC						
Q	BMW1+w	MT20	2.0	4.0		
U	BS-t	MT20	3.0	6.0		
AD	BMV1+p	MT20	2.0	4.0		

LATERAL BRACE(S) SHOWN SHALL BE 2X4 SPF#2

DIMENSIONS, SUPPORTS AND LOADINGS SPECIFIED BY FABRICATOR TO BE VERIFIED BY BUILDING DESIGNER

BEARINGS

THIS TRUSS DESIGNED FOR CONTINUOUS BEARINGS.

THIS TRUSS REQUIRES RIGID SHEATHING ON EXPOSED FACE.

BEARING MATERIAL TO BE SPF NO.2 OR BETTER AT JOINT(S)

BRACING

TOP CHORD TO BE SHEATHED OR MAX. PURLIN SPACING = 6.25 FT.
MAX. UNBRACED BOTTOM CHORD LENGTH = 10.00 FT OR RIGID CEILING DIRECTLY APPLIED.

ALL PITCH BREAKS AND PERIMETER CORNER JOINTS MUST BE LATERALLY RESTRAINED.

2x4 DRY SPF No.2 T-BRACE AT O-P, N-Q, M-R, L-S, K-T, J-V, I-W, H-X, F-Y

FASTEN T AND I-BRACES TO NARROW EDGE OF WEB WITH ONE ROW PER PLY OF 3" COMMON WIRE NAILS @ 6" O.C. WITH 3" MINIMUM END DISTANCE. BRACE MUST COVER 90% OF WEB LENGTH.

END VERTICAL(S) MUST BE SHEATHED OR HAVE BRACES AS INDICATED IN THE MAX. UNBRACED LENGTH COLUMN OF THE TABLE BELOW

LOADING

TOTAL LOAD CASES: (4)

CHORDS

MEMB. FR-TO	MAX. FACTORED FORCE (LBS)	FACTORED VERT. LOAD LC1 (PLF) FROM	TO	MAX CSI (LC)	MAX. UNBRAC LENGTH
AD- A	-46 / 0	0.0	0.0	0.01 (1)	7.81
A- B	-17 / 0	-78.0	-78.0	0.02 (1)	6.25
B- C	-12 / 0	-78.0	-78.0	0.04 (1)	6.25
C- D	-10 / 0	-78.0	-78.0	0.04 (1)	10.00
D- E	-6 / 0	-78.0	-78.0	0.04 (1)	10.00
E- F	-3 / 0	-78.0	-78.0	0.04 (1)	10.00
F- G	-23 / 0	-78.0	-78.0	0.04 (1)	6.25
G- H	0 / 0	-78.0	-78.0	0.04 (1)	10.00
H- I	0 / 0	-78.0	-78.0	0.04 (1)	10.00
I- J	0 / 0	-78.0	-78.0	0.04 (1)	10.00
J- K	0 / 0	-78.0	-78.0	0.04 (1)	10.00
K- L	0 / 0	-78.0	-78.0	0.04 (1)	10.00
L- M	0 / 0	-78.0	-78.0	0.04 (1)	10.00
M- N	0 / 0	-78.0	-78.0	0.04 (1)	10.00
N- O	0 / 0	-78.0	-78.0	0.02 (1)	10.00
AD-AC	0 / 17	-18.5	-18.5	0.01 (1)	10.00
AC-AB	0 / 11	-18.5	-18.5	0.02 (4)	10.00
AB-AA	0 / 7	-18.5	-18.5	0.02 (4)	10.00
AA- Z	0 / 4	-18.5	-18.5	0.01 (4)	10.00
Z- Y	0 / 2	-18.5	-18.5	0.01 (4)	10.00
Y- X	0 / 0	-18.5	-18.5	0.01 (4)	10.00
X- W	0 / 0	-18.5	-18.5	0.01 (4)	10.00
W- V	0 / 0	-18.5	-18.5	0.01 (4)	10.00
V- U	0 / 0	-18.5	-18.5	0.01 (4)	10.00
U- T	0 / 0	-18.5	-18.5	0.01 (4)	10.00
T- S	0 / 0	-18.5	-18.5	0.01 (4)	10.00
S- R	0 / 0	-18.5	-18.5	0.02 (4)	10.00
R- Q	0 / 0	-18.5	-18.5	0.02 (4)	10.00
Q- P	0 / 0	-18.5	-18.5	0.01 (4)	10.00
P- O	-30 / 0	0.0	0.0	0.01 (1)	7.81

WEBS

MEMB. FR-TO	MAX. FACTORED FORCE (LBS)	MAX CSI (LC)
Q- N	-117 / 0	0.09 (1)
R- M	-164 / 0	0.13 (1)
S- L	-155 / 0	0.12 (1)
T- K	-156 / 0	0.12 (1)
V- J	-156 / 0	0.12 (1)
W- I	-155 / 0	0.12 (1)
X- H	-160 / 0	0.12 (1)
Y- F	-158 / 0	0.09 (1)
Z- E	-154 / 0	0.15 (1)
AA- D	-153 / 0	0.08 (1)
AB- C	-158 / 0	0.04 (1)
AC- B	-117 / 0	0.02 (1)

DESIGN CRITERIA

SPECIFIED LOADS:

TOP	CH.	LL	=	21.0	PSF
		DL	=	6.0	PSF
BOT	CH.	LL	=	0.0	PSF
		DL	=	7.4	PSF
TOTAL	LOAD		=	34.4	PSF

SPACING = 24.0 IN. C/C

LOADING IN FLAT SECTION BASED ON A SLOPE OF 2.00/12 MINIMUM

THIS TRUSS IS DESIGNED FOR RESIDENTIAL OR SMALL BUILDING REQUIREMENTS OF PART 9, NBCC 2015

THIS DESIGN COMPLIES WITH:
- PART 9 OF BCBC 2018 , ABC 2019
- PART 9 OF OBC 2012 (2019 AMENDMENT)
- CSA 086-14
- TPIC 2014

(55 % OF 23.0 P.S.F. G.S.L. PLUS 8.4 P.S.F. RAIN LOAD) EQUALS 21.0 P.S.F. SPECIFIED ROOF LIVE LOAD

CSI: TC=0.04/1.00 (B-C:1) , BC=0.02/1.00 (AB-AC:4) , WB=0.15/1.00 (E-Z:1) , SSI=0.07/1.00 (M-N:1)

DOL LUMBER=1.00 NAIL=1.00 LS BEND=1.10 COMP=1.10 SHEAR=1.10 TENS= 1.10

COMPANION LIVE LOAD FACTOR = 1.00

TRUSS PLATE MANUFACTURER IS NOT RESPONSIBLE FOR QUALITY CONTROL IN THE TRUSS MANUFACTURING PLANT .

NAIL VALUES

PLATE	GRIP(DRY) (PSI) MAX	MIN	SHEAR (PLI) MAX	MIN	SECTION (PLI) MAX	MIN
MT20	650	371	1747	788	1987	1873

PLATE PLACEMENT TOL. = 0.250 inches

PLATE ROTATION TOL. = 5.0 Deg.

JSI GRIP= 0.64 (G) (INPUT = 0.90)
JSI METAL= 0.08 (C) (INPUT = 1.00)

JOB NAME	TRUSS NAME	QUANTITY	PLY	JOB DESC.	DRWG NO.
318404	H11P		1	TRUSS DESC. JT 45147	E20035313

Alpa Roof Truss, Maple

Version 8.310 S Oct 29 2019 MiTek Industries, Inc. Tue Mar 24 15:04:39 2020 Page 1

ID:MF8iiriaTok7DlbpT4B71Xys4PG-8iU6DwoKFtpwLnUNGc20O?XOweSqYiC5dGK70qzXiEs

Scale = 1:24.4

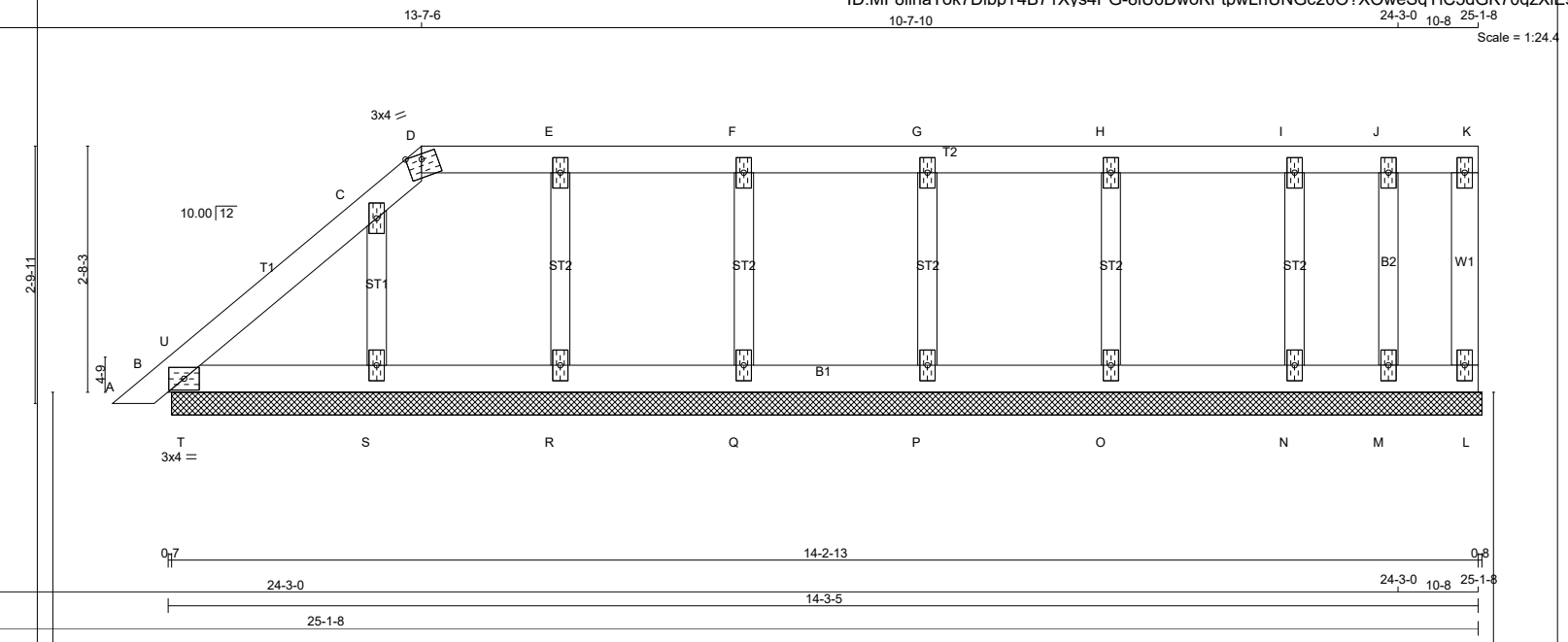

TOTAL WEIGHT = 48 lb [M]

LUMBER

N. L. G. A. RULES

CHORDS	SIZE		LUMBER	DESCR.
A - D	2x4	DRY	No.2	SPF
D - K	2x4	DRY	No.2	SPF
L - K	2x4	DRY	No.2	SPF
M - J	2x3	DRY	No.2	SPF
B - L	2x4	DRY	No.2	SPF
ALL WEBS	2x3	DRY	No.2	SPF
ALL GABLE WEBS	2x3	DRY	No.2	SPF

DRY: SEASONED LUMBER.

GABLE STUDS SPACED AT 2-0-0 OC.

PLATES (table is in inches)

JT	TYPE	PLATES	W	LEN	Y	X
B	TMB1-I	MT20	3.0	4.0		
C, E, F, G, H, I						
C	TMW+w	MT20	2.0	4.0		
D	TT-m	MT20	3.0	4.0	Edge	
J	TMV+p	MT20	2.0	4.0		
K	TMV+p	MT20	2.0	4.0		
L	BMV1+p	MT20	2.0	4.0		
M	BMV1+p	MT20	2.0	4.0		
N, O, P, Q, R, S						
N	BMW1+w	MT20	2.0	4.0		

Edge - INDICATES REFERENCE CORNER OF PLATE TOUCHES EDGE OF CHORD.

LATERAL BRACE(S) SHOWN SHALL BE 2X4 SPF#2

DIMENSIONS, SUPPORTS AND LOADINGS SPECIFIED BY FABRICATOR TO BE VERIFIED BY BUILDING DESIGNER

BEARINGS

THIS TRUSS DESIGNED FOR CONTINUOUS BEARINGS.

THIS TRUSS REQUIRES RIGID SHEATHING ON EXPOSED FACE.

BEARING MATERIAL TO BE SPF NO.2 OR BETTER AT JOINT(S)

BRACING

TOP CHORD TO BE SHEATHED OR MAX. PURLIN SPACING = 6.25 FT.
MAX. UNBRACED BOTTOM CHORD LENGTH = 7.81 FT OR RIGID CEILING DIRECTLY APPLIED.

ALL PITCH BREAKS AND PERIMETER CORNER JOINTS MUST BE LATERALLY RESTRAINED.

LOADING

TOTAL LOAD CASES: (4)

CHORDS

MEMB. FR-TO	MAX. FORCE (LBS)	FACTORED VERT. LOAD (PLF) FROM	TO	LC1 MAX CSI (LC)	MAX. UNBRAC LENGTH
A- B	0 / 12	-78.0	-78.0	0.02 (1)	10.00
B- U	-12 / 0	-78.0	-78.0	0.01 (4)	6.25
U- C	0 / 1	-78.0	-78.0	0.05 (1)	10.00
C- D	-42 / 0	-78.0	-78.0	0.05 (1)	6.25
D- E	0 / 0	-78.0	-78.0	0.04 (1)	10.00
E- F	0 / 0	-78.0	-78.0	0.04 (1)	10.00
F- G	0 / 0	-78.0	-78.0	0.04 (1)	10.00
G- H	0 / 0	-78.0	-78.0	0.04 (1)	10.00
H- I	0 / 0	-78.0	-78.0	0.04 (1)	10.00
I- J	0 / 0	-78.0	-78.0	0.02 (1)	10.00
J- K	0 / 0	-78.0	-78.0	0.01 (1)	10.00
L- K	-33 / 0	0.0	0.0	0.00 (1)	7.81
M- J	-71 / 0	0.0	0.0	0.01 (1)	7.81
B- T	0 / 9	-18.5	-18.5	0.03 (1)	10.00
T- S	0 / 9	-18.5	-18.5	0.03 (1)	10.00
S- R	0 / 0	-18.5	-18.5	0.02 (4)	10.00
R- Q	0 / 0	-18.5	-18.5	0.02 (4)	10.00
Q- P	0 / 0	-18.5	-18.5	0.02 (4)	10.00
P- O	0 / 0	-18.5	-18.5	0.02 (4)	10.00
O- N	0 / 0	-18.5	-18.5	0.02 (4)	10.00
N- M	0 / 0	-18.5	-18.5	0.01 (4)	10.00
M- L	0 / 0	-18.5	-18.5	0.00 (4)	10.00

WEBS

MEMB. FR-TO	MAX. FORCE (LBS)	MAX CSI (LC)
N- I	-126 / 0	0.02 (1)
O- H	-161 / 0	0.03 (1)
P- G	-155 / 0	0.03 (1)
Q- F	-155 / 0	0.03 (1)
R- E	-156 / 0	0.03 (1)
S- C	-173 / 0	0.03 (1)
T- U	-65 / 0	0.00 (1)

DESIGN CRITERIA

SPECIFIED LOADS:

TOP CH.	LL	=	21.0	PSF
	DL	=	6.0	PSF
BOT CH.	LL	=	0.0	PSF
	DL	=	7.4	PSF
TOTAL LOAD		=	34.4	PSF

SPACING = 24.0 IN. C/C

LOADING IN FLAT SECTION BASED ON A SLOPE OF 2.00/12 MINIMUM

THIS TRUSS IS DESIGNED FOR RESIDENTIAL OR SMALL BUILDING REQUIREMENTS OF PART 9, NBCC 2015

THIS DESIGN COMPLIES WITH:
- PART 9 OF BCBC 2018 , ABC 2019
- PART 9 OF OBC 2012 (2019 AMENDMENT)
- CSA 086-14
- TPIC 2014

(55 % OF 23.0 P.S.F. G.S.L. PLUS 8.4 P.S.F. RAIN LOAD) EQUALS 21.0 P.S.F. SPECIFIED ROOF LIVE LOAD

CSI: TC=0.05/1.00 (C-U:1) , BC=0.03/1.00 (S-T:1) , WB=0.03/1.00 (H-O:1) , SSI=0.06/1.00 (H-I:1)

DOL LUMBER=1.00 NAIL=1.00 LS BEND=1.10 COMP=1.10 SHEAR=1.10 TENS= 1.10

COMPANION LIVE LOAD FACTOR = 1.00

AUTOSOLVE RIGHT HEEL ONLY

TRUSS PLATE MANUFACTURER IS NOT RESPONSIBLE FOR QUALITY CONTROL IN THE TRUSS MANUFACTURING PLANT .

NAIL VALUES

PLATE	GRIP(DRY) (PSI) MAX	MIN	SHEAR (PLI) MAX	MIN	SECTION (PLI) MAX	MIN
MT20	650	371	1747	788	1987	1873

PLATE PLACEMENT TOL. = 0.250 inches

PLATE ROTATION TOL. = 5.0 Deg.

JSI GRIP= 0.12 (C) (INPUT = 0.90)
JSI METAL= 0.09 (C) (INPUT = 1.00)

JOB NAME	TRUSS NAME	QUANTITY	PLY	JOB DESC.	DRWG NO.
318404	H12P		1	TRUSS DESC. JT 45147	E20035314

Alpa Roof Truss, Maple

Version 8.310 S Oct 29 2019 MiTek Industries, Inc. Tue Mar 24 15:04:40 2020 Page 1

ID:MF8iiriaTok7DlbpT4B71Xys4PG-cu2UQGpy0Axnyx3ZqKZFwD4VI2juH66Frw4gYGzXiEr

Scale = 1:27.4

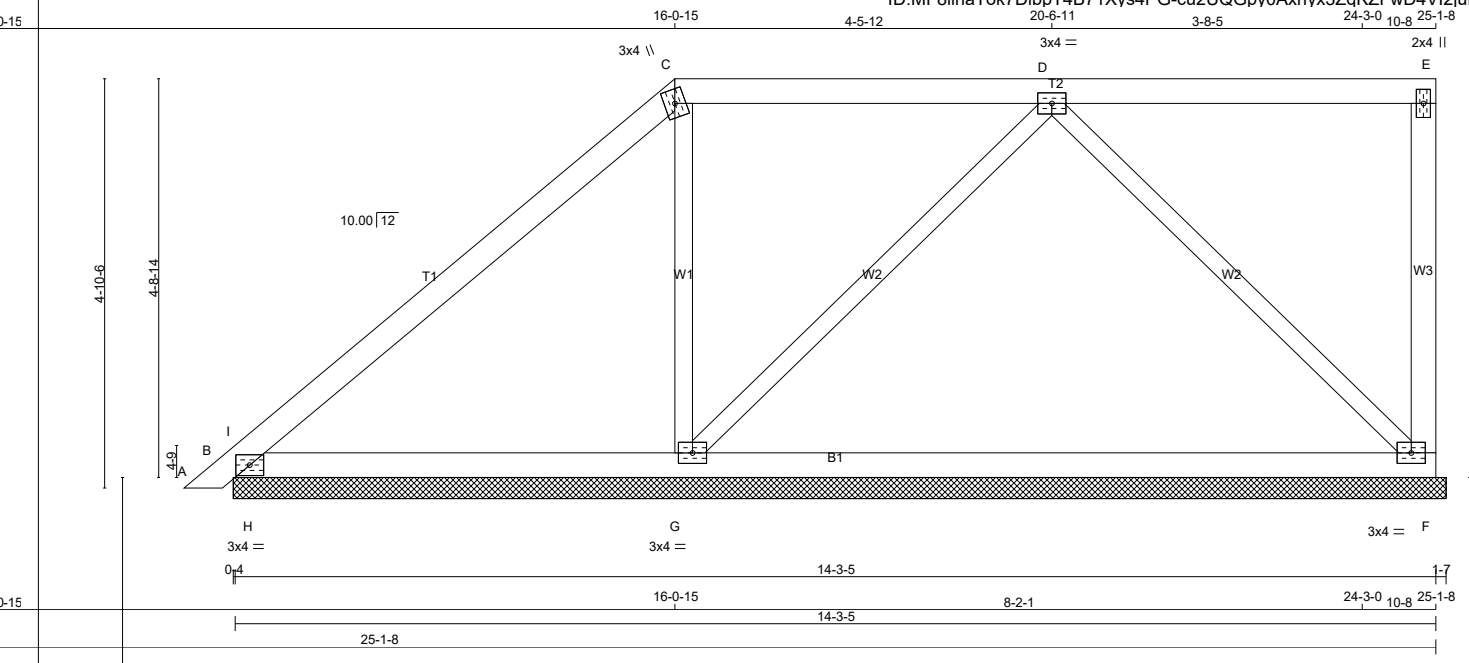

TOTAL WEIGHT = 53 lb

[M]

LUMBER

N. L. G. A. RULES

CHORDS	SIZE		LUMBER	DESCR.
A - C	2x4	DRY	No.2	SPF
C - E	2x4	DRY	No.2	SPF
F - E	2x4	DRY	No.2	SPF
B - F	2x4	DRY	No.2	SPF
ALL WEBS	2x3	DRY	No.2	SPF

DRY: SEASONED LUMBER.

PLATES (table is in inches)

JT	TYPE	PLATES	W	LEN	Y	X
B	TMB1-I	MT20	3.0	4.0		
C	TTW+m	MT20	3.0	4.0		
D	TMWW-t	MT20	3.0	4.0		
E	TMV+p	MT20	2.0	4.0		
F	BMVW1-t	MT20	3.0	4.0		
G	BMWW1-t	MT20	3.0	4.0		

DIMENSIONS, SUPPORTS AND LOADINGS SPECIFIED BY FABRICATOR TO BE VERIFIED BY BUILDING DESIGNER

BEARINGS

JT	FACTORED GROSS REACTION VERT	HORZ	MAXIMUM FACTORED GROSS REACTION DOWN	HORZ	UPLIFT	INPUT BRG IN-SX	REQRD BRG IN-SX
F	439	0	439	0	0	14-5-0 (14-3-5)	1-2
B	310	0	310	0	0	14-5-0 (14-3-5)	1-2
G	669	0	669	0	0	14-5-0 (14-3-5)	1-2

VALUE IN PARENTHESIS INDICATES EFFECTIVE BEARING LENGTH

UNFACTORED REACTIONS

JT	1ST LCASE COMBINED	MAX./MIN. COMPONENT REACTIONS SNOW	LIVE	PERM.LIVE	WIND	DEAD	SOIL
F	311	200 / 0	0 / 0	0 / 0	0 / 0	111 / 0	0 / 0
B	217	155 / 0	0 / 0	0 / 0	0 / 0	62 / 0	0 / 0
G	482	266 / 0	0 / 0	0 / 0	0 / 0	216 / 0	0 / 0

BEARING MATERIAL TO BE SPF NO.2 OR BETTER AT JOINT(S) F, B, G

BRACING

TOP CHORD TO BE SHEATHED OR MAX. PURLIN SPACING = 6.25 FT.
MAX. UNBRACED BOTTOM CHORD LENGTH = 10.00 FT OR RIGID CEILING DIRECTLY APPLIED.

ALL PITCH BREAKS AND PERIMETER CORNER JOINTS MUST BE LATERALLY RESTRAINED.

LOADING

TOTAL LOAD CASES: (4)

CHORDS

MEMB. FR-TO	MAX. FACTORED FORCE (LBS)	FACTORED VERT. LOAD (PLF) FROM	TO	LC1	MAX CSI (LC)	MAX. UNBRAC LENGTH
A- B	0 / 12	-78.0	-78.0	0.02 (1)	10.00	
B- I	0 / 229	-78.0	-78.0	0.19 (1)	10.00	
I- C	-89 / 0	-78.0	-78.0	0.26 (1)	6.25	
C- D	-51 / 0	-78.0	-78.0	0.27 (1)	6.25	
D- E	0 / 0	-78.0	-78.0	0.27 (1)	10.00	
F- E	-135 / 0	0.0	0.0	0.05 (1)	7.81	
B- H	0 / 57	-18.5	-18.5	0.24 (1)	10.00	
H- G	0 / 57	-18.5	-18.5	0.35 (4)	10.00	
G- F	0 / 246	-18.5	-18.5	0.36 (4)	10.00	

WEBS

MEMB. FR-TO	MAX. FACTORED FORCE (LBS)	MAX CSI (LC)
G- C	-254 / 0	0.08 (1)
G- D	-279 / 0	0.20 (1)
D- F	-344 / 0	0.24 (1)
H- I	-655 / 0	0.00 (1)

DESIGN CRITERIA

SPECIFIED LOADS:

TOP CH.	LL	=	21.0	PSF
	DL	=	6.0	PSF
BOT CH.	LL	=	0.0	PSF
	DL	=	7.4	PSF
TOTAL LOAD		=	34.4	PSF

SPACING = 24.0 IN. C/C

LOADING IN FLAT SECTION BASED ON A SLOPE OF 2.00/12 MINIMUM

THIS TRUSS IS DESIGNED FOR RESIDENTIAL OR SMALL BUILDING REQUIREMENTS OF PART 9, NBCC 2015

THIS DESIGN COMPLIES WITH:
- PART 9 OF BCBC 2018 , ABC 2019
- PART 9 OF OBC 2012 (2019 AMENDMENT)
- CSA 086-14
- TPIC 2014

(55 % OF 23.0 P.S.F. G.S.L. PLUS 8.4 P.S.F. RAIN LOAD) EQUALS 21.0 P.S.F. SPECIFIED ROOF LIVE LOAD

CSI: TC=0.27/1.00 (C-D:1) , BC=0.36/1.00 (F-G:4) , WB=0.24/1.00 (D-F:1) , SSI=0.50/1.00 (B-H:1)

DOL LUMBER=1.00 NAIL=1.00 LS BEND=1.10 COMP=1.10 SHEAR=1.10 TENS= 1.10

COMPANION LIVE LOAD FACTOR = 1.00

AUTOSOLVE RIGHT HEEL ONLY

TRUSS PLATE MANUFACTURER IS NOT RESPONSIBLE FOR QUALITY CONTROL IN THE TRUSS MANUFACTURING PLANT .

NAIL VALUES

PLATE	GRIP(DRY) (PSI) MAX	MIN	SHEAR (PLI) MAX	MIN	SECTION (PLI) MAX	MIN
MT20	650	371	1747	788	1987	1873

PLATE PLACEMENT TOL. = 0.250 inches

PLATE ROTATION TOL. = 5.0 Deg.

JSI GRIP= 0.42 (F) (INPUT = 0.90)
JSI METAL= 0.09 (F) (INPUT = 1.00)

LATERAL BRACE(S) SHOWN SHALL BE 2X4 SPF#2

JOB NAME	TRUSS NAME	QUANTITY	PLY	JOB DESC.	DRWG NO.
318404	H13P		1	TRUSS DESC. JT 45147	E20035315

Alpa Roof Truss, Maple

Version 8.310 S Oct 29 2019 MiTek Industries, Inc. Tue Mar 24 15:04:40 2020 Page 1

ID:MF8iiriaTok7DlbpT4B71Xys4PG-cu2UQGpy0Axnyx3ZqKZFwD4SJ2kAH4FFrw4qYGzXiEr

Scale = 1:40.9

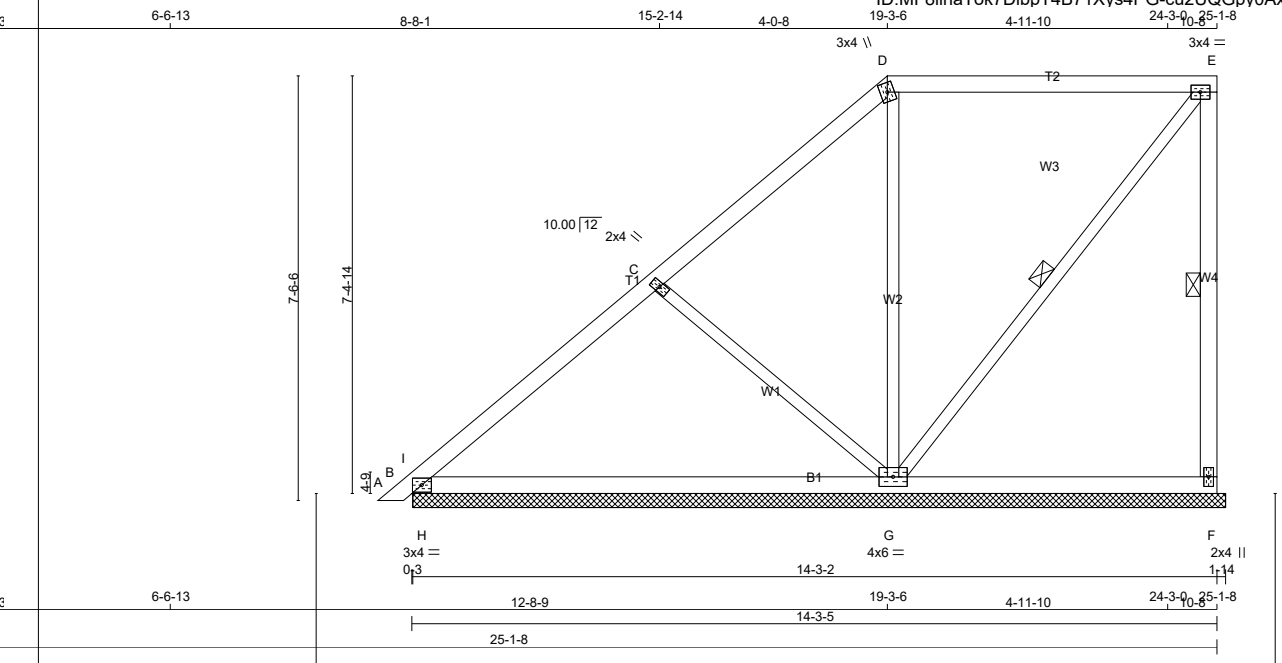

TOTAL WEIGHT = 61 lb

[M]

LUMBER

N. L. G. A. RULES

CHORDS	SIZE		LUMBER	DESCR.
A - D	2x4	DRY	No.2	SPF
D - E	2x4	DRY	No.2	SPF
F - E	2x4	DRY	No.2	SPF
B - F	2x4	DRY	No.2	SPF
ALL WEBS	2x3	DRY	No.2	SPF

DRY: SEASONED LUMBER.

PLATES (table is in inches)

JT	TYPE	PLATES	W	LEN Y	X
B	TMB1-I	MT20	3.0	4.0	
C	TMW+w	MT20	2.0	4.0	
D	TTW+m	MT20	3.0	4.0	
E	TMVW-t	MT20	3.0	4.0	
F	BMV1+p	MT20	2.0	4.0	
G	BMWWW1-t	MT20	4.0	6.0	

LATERAL BRACE(S) SHOWN SHALL BE 2X4 SPF#2

DIMENSIONS, SUPPORTS AND LOADINGS SPECIFIED BY FABRICATOR TO BE VERIFIED BY BUILDING DESIGNER

BEARINGS

JT	FACTORED GROSS REACTION VERT	HORZ	MAXIMUM FACTORED GROSS REACTION DOWN	HORZ	UPLIFT	INPUT BRG IN-SX	REQRD BRG IN-SX
F	222	0	222	0	0	14-5-0 (14-3-2)	2-8-13
B	415	0	415	0	0	14-5-0 (14-3-2)	2-8-13
G	780	0	780	0	0	14-5-0 (14-3-2)	2-8-13

VALUE IN PARENTHESIS INDICATES EFFECTIVE BEARING LENGTH

UNFACTORED REACTIONS

JT	1ST LCASE COMBINED	MAX./MIN. COMPONENT REACTIONS SNOW	LIVE	PERM.LIVE	WIND	DEAD	SOIL
F	158	98 / 0	0 / 0	0 / 0	0 / 0	60 / 0	0 / 0
B	295	186 / 0	0 / 0	0 / 0	0 / 0	109 / 0	0 / 0
G	557	336 / 0	0 / 0	0 / 0	0 / 0	220 / 0	0 / 0

BEARING MATERIAL TO BE SPF NO.2 OR BETTER AT JOINT(S) F, B, G

BRACING

TOP CHORD TO BE SHEATHED OR MAX. PURLIN SPACING = 6.25 FT.
MAX. UNBRACED BOTTOM CHORD LENGTH = 10.00 FT OR RIGID CEILING DIRECTLY APPLIED.

ALL PITCH BREAKS AND PERIMETER CORNER JOINTS MUST BE LATERALLY RESTRAINED.

1 LATERAL BRACE(S) AT 1/ 2 LENGTH OF E-F, E-G.

END VERTICAL(S) MUST BE SHEATHED OR HAVE BRACES AS INDICATED IN THE MAX. UNBRACED LENGTH COLUMN OF THE TABLE BELOW

LOADING

TOTAL LOAD CASES: (4)

CHORDS

MEMB. FR-TO	MAX. FACTORED FORCE (LBS)	FACTORED VERT. LOAD LC1 (PLF) FROM	TO	MAX CSI (LC)	MAX. UNBRAC LENGTH
A- B	0 / 12	-78.0	-78.0	0.02 (1)	10.00
B- I	-458 / 0	-78.0	-78.0	0.16 (4)	6.25
I- C	-253 / 0	-78.0	-78.0	0.25 (1)	6.25
C- D	-6 / 5	-78.0	-78.0	0.24 (1)	10.00
D- E	0 / 30	-78.0	-78.0	0.46 (1)	10.00
F- E	-190 / 0	0.0	0.0	0.05 (1)	6.25
B- H	0 / 223	-18.5	-18.5	0.14 (4)	10.00
H- G	0 / 223	-18.5	-18.5	0.28 (4)	10.00
G- F	0 / 0	-18.5	-18.5	0.26 (4)	10.00

WEBS

MEMB. FR-TO	MAX. FACTORED FORCE (LBS)	MAX CSI (LC)
G- D	-367 / 0	0.36 (1)
C- G	-326 / 0	0.17 (1)
G- E	-48 / 0	0.03 (1)
H- I	0 / 300	0.00 (1)

DESIGN CRITERIA

SPECIFIED LOADS:

TOP	CH.	LL	=	21.0	PSF
		DL	=	6.0	PSF
BOT	CH.	LL	=	0.0	PSF
		DL	=	7.4	PSF
TOTAL	LOAD		=	34.4	PSF

SPACING = 24.0 IN. C/C

LOADING IN FLAT SECTION BASED ON A SLOPE OF 2.00/12 MINIMUM

THIS TRUSS IS DESIGNED FOR RESIDENTIAL OR SMALL BUILDING REQUIREMENTS OF PART 9, NBCC 2015

THIS DESIGN COMPLIES WITH:
- PART 9 OF BCBC 2018 , ABC 2019
- PART 9 OF OBC 2012 (2019 AMENDMENT)
- CSA 086-14
- TPIC 2014

(55 % OF 23.0 P.S.F. G.S.L. PLUS 8.4 P.S.F. RAIN LOAD) EQUALS 21.0 P.S.F. SPECIFIED ROOF LIVE LOAD

CSI: TC=0.46/1.00 (D-E:1) , BC=0.28/1.00 (G-H:4) , WB=0.36/1.00 (D-G:1) , SSI=0.27/1.00 (B-H:4)

DOL LUMBER=1.00 NAIL=1.00 LS BEND=1.10 COMP=1.10 SHEAR=1.10 TENS= 1.10

COMPANION LIVE LOAD FACTOR = 1.00

AUTOSOLVE RIGHT HEEL ONLY

TRUSS PLATE MANUFACTURER IS NOT RESPONSIBLE FOR QUALITY CONTROL IN THE TRUSS MANUFACTURING PLANT .

NAIL VALUES

PLATE	GRIP(DRY) (PSI) MAX	MIN	SHEAR (PLI) MAX	MIN	SECTION (PLI) MAX	MIN
MT20	650	371	1747	788	1987	1873

PLATE PLACEMENT TOL. = 0.250 inches

PLATE ROTATION TOL. = 5.0 Deg.

JSI GRIP= 0.45 (D) (INPUT = 0.90)
JSI METAL= 0.11 (D) (INPUT = 1.00)

JOB NAME	TRUSS NAME	QUANTITY	PLY	JOB DESC.	DRWG NO.
318404	H14P		1	TRUSS DESC. JT 45147	E20035316

Alpa Roof Truss, Maple

Version 8.310 S Oct 29 2019 MiTek Industries, Inc. Tue Mar 24 15:04:41 2020 Page 1

ID:MF8iiriaTok7DlbpT4B71Xys4PG-44ctdcqanU3ea5elO14UTQdeeR6?0ZyO4apE5izXiEq

Scale = 1:55.0

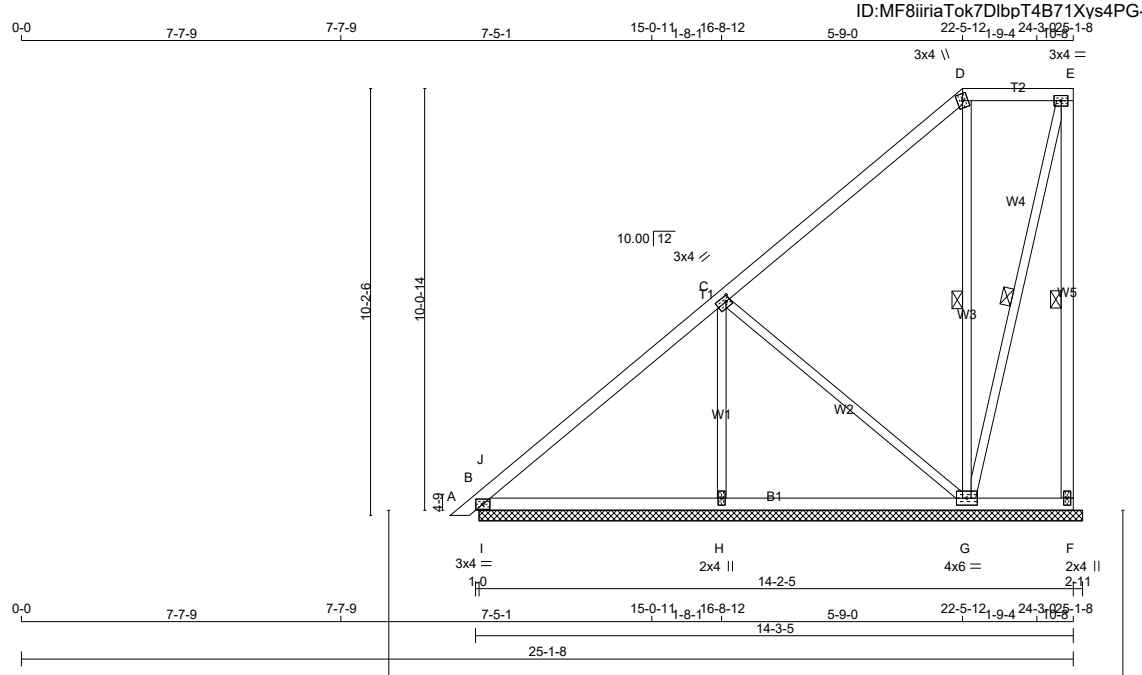

TOTAL WEIGHT = 74 lb

LUMBER

N. L. G. A. RULES

CHORDS	SIZE		LUMBER	DESCR.
A - D	2x4	DRY	No.2	SPF
D - E	2x4	DRY	No.2	SPF
F - E	2x4	DRY	No.2	SPF
B - F	2x4	DRY	No.2	SPF
ALL WEBS	2x3	DRY	No.2	SPF

DRY: SEASONED LUMBER.

PLATES (table is in inches)

JT	TYPE	PLATES	W	LEN	Y	X
B	TMB1-I	MT20	3.0	4.0		
C	TMWW-t	MT20	3.0	4.0	1.50	1.25
D	TTW+m	MT20	3.0	4.0		
E	TMVW-t	MT20	3.0	4.0		
F	BMV1+p	MT20	2.0	4.0		
G	BMWWW1-t	MT20	4.0	6.0		
H	BMW1+w	MT20	2.0	4.0		

LATERAL BRACE(S) SHOWN SHALL BE 2X4 SPF#2

DIMENSIONS, SUPPORTS AND LOADINGS SPECIFIED BY FABRICATOR TO BE VERIFIED BY BUILDING DESIGNER

BEARINGS

JT	FACTORED GROSS REACTION VERT	HORZ	MAXIMUM FACTORED GROSS REACTION DOWN	HORZ	UPLIFT	INPUT BRG IN-SX	REQRD BRG IN-SX
F	92	0	92	0	0	14-5-0 (14-2-5)	2-6-9
B	362	0	362	0	0	14-5-0 (14-2-5)	2-6-9
G	488	0	488	0	0	14-5-0 (14-2-5)	2-6-9
H	476	0	476	0	0	14-5-0 (14-2-5)	2-6-9

VALUE IN PARENTHESIS INDICATES EFFECTIVE BEARING LENGTH

UNFACTORED REACTIONS

JT	1ST LCASE COMBINED	MAX./MIN. COMPONENT REACTIONS SNOW	LIVE	PERM.LIVE	WIND	DEAD	SOIL
F	64	44 / 0	0 / 0	0 / 0	0 / 0	21 / 0	0 / 0
B	256	169 / 0	0 / 0	0 / 0	0 / 0	86 / 0	0 / 0
G	347	214 / 0	0 / 0	0 / 0	0 / 0	133 / 0	0 / 0
H	342	194 / 0	0 / 0	0 / 0	0 / 0	148 / 0	0 / 0

BEARING MATERIAL TO BE SPF NO.2 OR BETTER AT JOINT(S) F, B, G, H

BRACING

TOP CHORD TO BE SHEATHED OR MAX. PURLIN SPACING = 6.25 FT.
MAX. UNBRACED BOTTOM CHORD LENGTH = 10.00 FT OR RIGID CEILING DIRECTLY APPLIED.

ALL PITCH BREAKS AND PERIMETER CORNER JOINTS MUST BE LATERALLY RESTRAINED.

1 LATERAL BRACE(S) AT 1/ 2 LENGTH OF E-F, D-G, E-G.

END VERTICAL(S) MUST BE SHEATHED OR HAVE BRACES AS INDICATED IN THE MAX. UNBRACED LENGTH COLUMN OF THE TABLE BELOW

LOADING

TOTAL LOAD CASES: (4)

CHORDS

MEMB. FR-TO	MAX. FACTORED FORCE (LBS)	FACTORED VERT. LOAD (PLF) FROM	TO	LC1 CSI (LC)	MAX. UNBRAC LENGTH
A- B	0 / 12	-78.0	-78.0	0.02 (1)	10.00
B- J	-71 / 0	-78.0	-78.0	0.07 (1)	6.25
J- C	-136 / 0	-78.0	-78.0	0.42 (1)	6.25
C- D	-29 / 0	-78.0	-78.0	0.42 (1)	6.25
D- E	0 / 6	-78.0	-78.0	0.09 (1)	10.00
F- E	-78 / 0	0.0	0.0	0.04 (1)	6.25
B- I	0 / 127	-18.5	-18.5	0.16 (1)	10.00
I- H	0 / 127	-18.5	-18.5	0.17 (4)	10.00
H- G	0 / 127	-18.5	-18.5	0.17 (4)	10.00
G- F	0 / 0	-18.5	-18.5	0.08 (4)	10.00

WEBS

MEMB. FR-TO	MAX. FACTORED FORCE (LBS)	MAX CSI (LC)
G- D	-277 / 0	0.19 (1)
H- C	-322 / 0	0.13 (1)
C- G	-170 / 0	0.20 (1)
G- E	-26 / 0	0.02 (1)
I- J	-364 / 6	0.00 (1)

DESIGN CRITERIA

SPECIFIED LOADS:

TOP CH.	LL	=	21.0	PSF
	DL	=	6.0	PSF
BOT CH.	LL	=	0.0	PSF
	DL	=	7.4	PSF
TOTAL LOAD		=	34.4	PSF

SPACING = 24.0 IN. C/C

LOADING IN FLAT SECTION BASED ON A SLOPE OF 2.00/12 MINIMUM

THIS TRUSS IS DESIGNED FOR RESIDENTIAL OR SMALL BUILDING REQUIREMENTS OF PART 9, NBCC 2015

THIS DESIGN COMPLIES WITH:
- PART 9 OF BCBC 2018 , ABC 2019
- PART 9 OF OBC 2012 (2019 AMENDMENT)
- CSA 086-14
- TPIC 2014

(55 % OF 23.0 P.S.F. G.S.L. PLUS 8.4 P.S.F. RAIN LOAD) EQUALS 21.0 P.S.F. SPECIFIED ROOF LIVE LOAD

CSI: TC=0.42/1.00 (C-J:1) , BC=0.17/1.00 (H-I:4) , WB=0.20/1.00 (C-G:1) , SSI=0.30/1.00 (B-I:1)

DOL LUMBER=1.00 NAIL=1.00 LS BEND=1.10 COMP=1.10 SHEAR=1.10 TENS= 1.10

COMPANION LIVE LOAD FACTOR = 1.00

AUTOSOLVE RIGHT HEEL ONLY

TRUSS PLATE MANUFACTURER IS NOT RESPONSIBLE FOR QUALITY CONTROL IN THE TRUSS MANUFACTURING PLANT .

NAIL VALUES

PLATE	GRIP(DRY) (PSI) MAX	MIN	SHEAR (PLI) MAX	MIN	SECTION (PLI) MAX	MIN
MT20	650	371	1747	788	1987	1873

PLATE PLACEMENT TOL. = 0.250 inches

PLATE ROTATION TOL. = 5.0 Deg.

JSI GRIP= 0.36 (C) (INPUT = 0.90)
JSI METAL= 0.09 (D) (INPUT = 1.00)

JOB NAME	TRUSS NAME	QUANTITY	PLY	JOB DESC.	DRWG NO.
318404	H15P		1	TRUSS DESC. JT 45147	E20035317

Alpa Roof Truss, Maple

Version 8.310 S Oct 29 2019 MiTek Industries, Inc. Tue Mar 24 15:04:42 2020 Page 1

ID:MF8iiriaTok7DlbpT4B71Xys4PG-YHAFrxrCXoBVCFDyxlbj?e9lrrQSl0UYJEZnd8zXiEp

Scale = 1:66.2

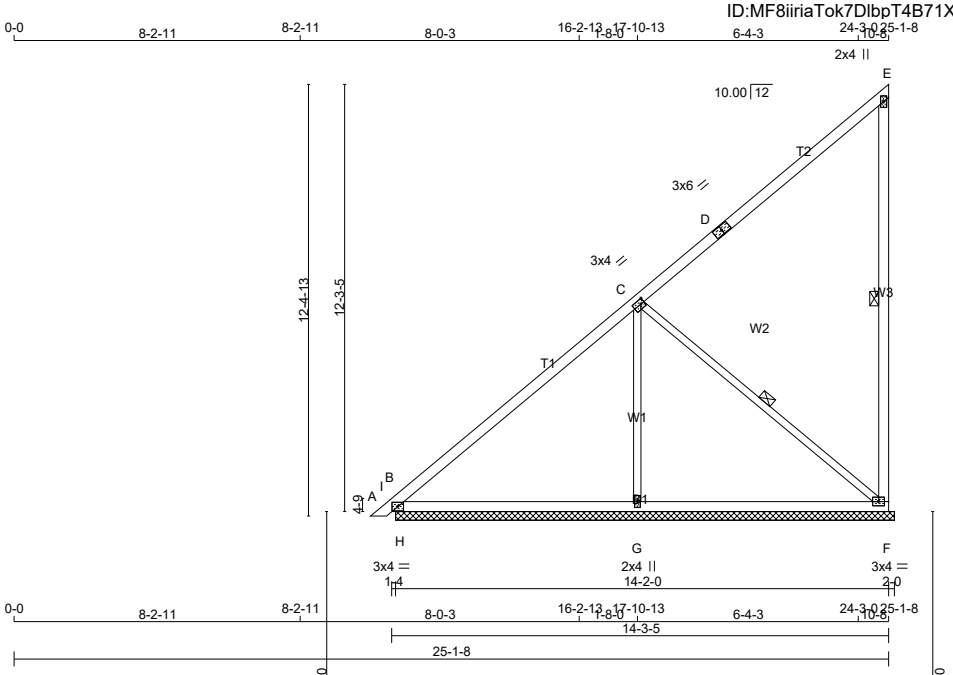

TOTAL WEIGHT = 4 X 63 = 254 lb

LUMBER

N. L. G. A. RULES

CHORDS	SIZE		LUMBER	DESCR.
A - D	2x4	DRY	No.2	SPF
D - E	2x4	DRY	No.2	SPF
F - E	2x4	DRY	No.2	SPF
B - F	2x4	DRY	No.2	SPF
ALL WEBS	2x3	DRY	No.2	SPF

DRY: SEASONED LUMBER.

PLATES (table is in inches)

JT	TYPE	PLATES	W	LEN	Y	X
B	TMB1-I	MT20	3.0	4.0		
C	TMWW-t	MT20	3.0	4.0	1.50	1.25
D	TS-t	MT20	3.0	6.0		
E	TMV+p	MT20	2.0	4.0		
F	BMVW1-t	MT20	3.0	4.0		
G	BMW1+w	MT20	2.0	4.0		

LATERAL BRACE(S) SHOWN SHALL BE 2X4 SPF#2

DIMENSIONS, SUPPORTS AND LOADINGS SPECIFIED BY FABRICATOR TO BE VERIFIED BY BUILDING DESIGNER

BEARINGS

JT	FACTORED GROSS REACTION VERT	HORZ	MAXIMUM FACTORED GROSS REACTION DOWN	HORZ	UPLIFT	INPUT BRG IN-SX	REQRD BRG IN-SX
F	396	0	396	0	0	14-4-0 (14-2-0)	1-15
B	429	0	429	0	0	14-4-0 (14-2-0)	1-15
G	592	0	592	0	0	14-4-0 (14-2-0)	1-15

VALUE IN PARENTHESIS INDICATES EFFECTIVE BEARING LENGTH

UNFACTORED REACTIONS

JT	1ST LCASE COMBINED	MAX./MIN. COMPONENT REACTIONS SNOW	LIVE	PERM.LIVE	WIND	DEAD	SOIL
F	280	183 / 0	0 / 0	0 / 0	0 / 0	97 / 0	0 / 0
B	303	202 / 0	0 / 0	0 / 0	0 / 0	101 / 0	0 / 0
G	426	236 / 0	0 / 0	0 / 0	0 / 0	190 / 0	0 / 0

BEARING MATERIAL TO BE SPF NO.2 OR BETTER AT JOINT(S) F, B, G

BRACING

TOP CHORD TO BE SHEATHED OR MAX. PURLIN SPACING = 6.25 FT.
MAX. UNBRACED BOTTOM CHORD LENGTH = 10.00 FT OR RIGID CEILING DIRECTLY APPLIED.

ALL PITCH BREAKS AND PERIMETER CORNER JOINTS MUST BE LATERALLY RESTRAINED.

1 LATERAL BRACE(S) AT 1/ 2 LENGTH OF E-F, C-F.

END VERTICAL(S) MUST BE SHEATHED OR HAVE BRACES AS INDICATED IN THE MAX. UNBRACED LENGTH COLUMN OF THE TABLE BELOW

LOADING

TOTAL LOAD CASES: (4)

CHORDS

MEMB. FR-TO	MAX. FACTORED FORCE (LBS)	FACTORED VERT. LOAD LC1 (PLF) FROM	TO	MAX CSI (LC)	MAX. UNBRAC LENGTH
A- B	0 / 12	-78.0	-78.0	0.02 (1)	10.00
B- I	-81 / 0	-78.0	-78.0	0.11 (1)	6.25
I- C	-174 / 0	-78.0	-78.0	0.65 (1)	6.25
C- D	-41 / 0	-78.0	-78.0	0.63 (1)	6.25
D- E	-41 / 0	-78.0	-78.0	0.63 (1)	6.25
F- E	-217 / 0	0.0	0.0	0.18 (1)	6.25
B- H	0 / 162	-18.5	-18.5	0.21 (1)	10.00
H- G	0 / 162	-18.5	-18.5	0.29 (4)	10.00
G- F	0 / 162	-18.5	-18.5	0.29 (4)	10.00

WEBS

MEMB. FR-TO	MAX. FACTORED FORCE (LBS)	MAX CSI (LC)
G- C	-399 / 0	0.25 (1)
C- F	-209 / 0	0.12 (1)
H- I	-500 / 0	0.00 (1)

[M]

DESIGN CRITERIA

SPECIFIED LOADS:

TOP CH.	LL	=	21.0	PSF
	DL	=	6.0	PSF
BOT CH.	LL	=	0.0	PSF
	DL	=	7.4	PSF
TOTAL LOAD		=	34.4	PSF

SPACING = 24.0 IN. C/C

THIS TRUSS IS DESIGNED FOR RESIDENTIAL OR SMALL BUILDING REQUIREMENTS OF PART 9, NBCC 2015

THIS DESIGN COMPLIES WITH:
- PART 9 OF BCBC 2018 , ABC 2019
- PART 9 OF OBC 2012 (2019 AMENDMENT)
- CSA 086-14
- TPIC 2014

(55 % OF 23.0 P.S.F. G.S.L. PLUS 8.4 P.S.F. RAIN LOAD) EQUALS 21.0 P.S.F. SPECIFIED ROOF LIVE LOAD

CSI: TC=0.65/1.00 (C-I:1) , BC=0.29/1.00 (G-H:4) , WB=0.25/1.00 (C-G:1) , SSI=0.41/1.00 (B-H:1)

DOL LUMBER=1.00 NAIL=1.00 LS BEND=1.10 COMP=1.10 SHEAR=1.10 TENS= 1.10

COMPANION LIVE LOAD FACTOR = 1.00

TRUSS PLATE MANUFACTURER IS NOT RESPONSIBLE FOR QUALITY CONTROL IN THE TRUSS MANUFACTURING PLANT .

NAIL VALUES

PLATE	GRIP(DRY) (PSI) MAX	MIN	SHEAR (PLI) MAX	MIN	SECTION (PLI) MAX	MIN
MT20	650	371	1747	788	1987	1873

PLATE PLACEMENT TOL. = 0.250 inches

PLATE ROTATION TOL. = 5.0 Deg.

JSI GRIP= 0.77 (D) (INPUT = 0.90)
JSI METAL= 0.36 (D) (INPUT = 1.00)

JOB NAME	TRUSS NAME	QUANTITY	PLY	JOB DESC.	DRWG NO.
318404	H16		1	TRUSS DESC. JT 45147	E20035318

Alpa Roof Truss, Maple

ID:MF8iiriaTok7DlbpT4B71Xys4PG-1Tkd2HsqI5JMpPo8VS6yYriw FdnUHUhXuIL9bzXiEo

Scale = 1:59.9

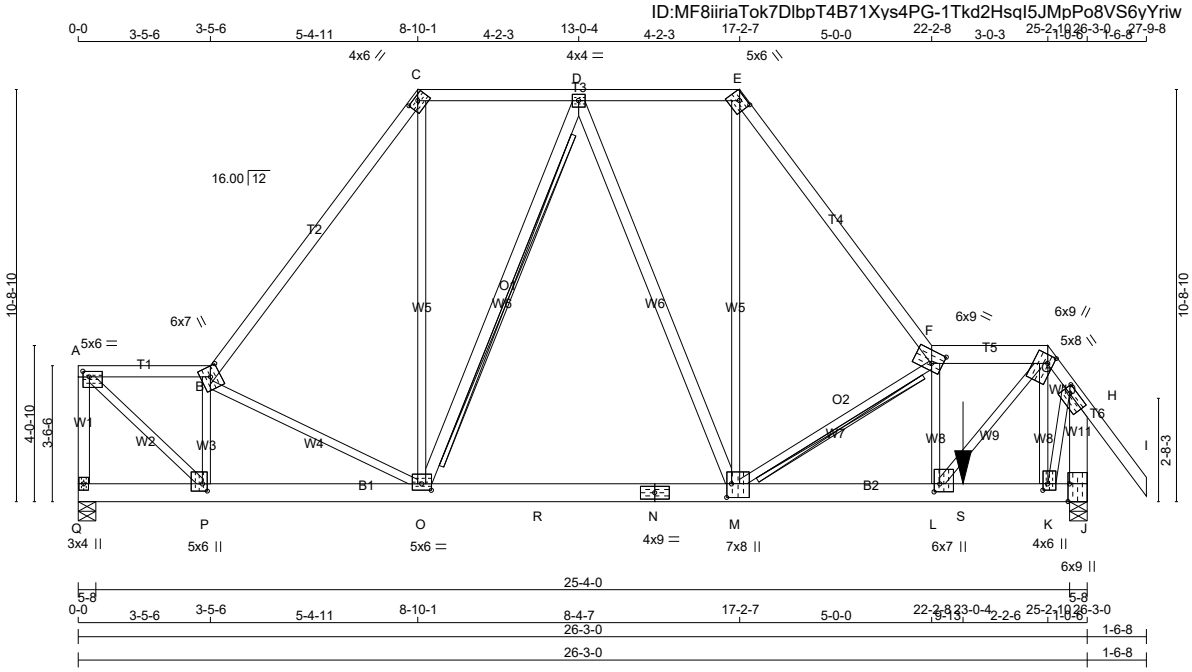

TOTAL WEIGHT = 166 lb

LUMBER

N. L. G. A. RULES

CHORDS	SIZE		LUMBER	DESCR.
Q - A	2x4	DRY	No.2	SPF
A - B	2x4	DRY	No.2	SPF
B - C	2x4	DRY	1650F 1.5E	SPF
C - E	2x4	DRY	No.2	SPF
E - F	2x4	DRY	1650F 1.5E	SPF
F - G	2x6	DRY	No.2	SPF
G - I	2x4	DRY	No.2	SPF
J - H	2x6	DRY	No.2	SPF
Q - N	2x6	DRY	1650F 1.5E	SPF
N - J	2x6	DRY	1650F 1.5E	SPF
ALL WEBS	2x3	DRY	No.2	SPF
EXCEPT				
O - D	2x4	DRY	No.2	SPF
D - M	2x4	DRY	No.2	SPF

DRY: SEASONED LUMBER.

PLATES (table is in inches)

JT	TYPE	PLATES	W	LEN	Y	X
A	TMVW-t	MT20	5.0	6.0	1.75	2.00
B	TTWW+m	MT20	6.0	7.0	3.25	3.00
C	TTW-h	MT20	4.0	6.0	1.25	3.00
D	TMWW-t	MT20	4.0	4.0		
E	TTW-h	MT20	5.0	6.0	1.75	3.00
F	TTWW-m	MT20	6.0	9.0	3.75	3.25
G	TTWW+m	MT20	6.0	9.0	2.50	1.75
H	TMVW-t	MT20	5.0	8.0	2.00	2.00
J	BMV1+t	MT20	6.0	9.0	Edge	0.50
K	BMWW+t	MT20	4.0	6.0	2.00	1.50
L	BMWW+t	MT20	6.0	7.0	2.50	1.75
M	BMWWW+t	MT20	7.0	8.0	4.25	1.50
N	BS-t	MT20	4.0	9.0		
O	BMWWW-t	MT20	5.0	6.0	2.00	3.00
P	BMWW+t	MT20	5.0	6.0	2.25	1.50
Q	BMV1+p	MT20	3.0	4.0		

Edge - INDICATES REFERENCE CORNER OF PLATE TOUCHES EDGE OF CHORD.

LATERAL BRACE(S) SHOWN SHALL BE 2X4 SPF#2

DIMENSIONS, SUPPORTS AND LOADINGS SPECIFIED BY FABRICATOR TO BE VERIFIED BY BUILDING DESIGNER

BEARINGS

	FACTORED GROSS REACTION		MAXIMUM FACTORED GROSS REACTION			INPUT BRG	REQRD BRG
JT	VERT	HORZ	DOWN	HORZ	UPLIFT	IN-SX	IN-SX
Q	2191	0	2191	0	0	5-8	3-10
J	3672	0	3672	0	0	5-8	5-8

UNFACTORED REACTIONS

	1ST LCASE	MAX./MIN. COMPONENT REACTIONS					
JT	COMBINED	SNOW	LIVE	PERM.LIVE	WIND	DEAD	SOIL
Q	1565	939 / 0	0 / 0	0 / 0	0 / 0	626 / 0	0 / 0
J	2618	1598 / 0	0 / 0	0 / 0	0 / 0	1020 / 0	0 / 0

BEARING MATERIAL TO BE SPF NO.2 OR BETTER AT JOINT(S) Q, J
BEARING SIZE FACTOR = 1.15 AT JNT(S) J (BASED ON SUPPORT DEPTH = 1-8)

BRACING

FOR SECTION C-E, MAX. PURLIN SPACING = 2.00 FT.
FOR OTHER SECTIONS, TOP CHORD TO BE SHEATHED OR MAX. PURLIN SPACING = 3.90 FT.
MAX. UNBRACED BOTTOM CHORD LENGTH = 10.00 FT OR RIGID CEILING DIRECTLY APPLIED.

ALL PITCH BREAKS AND PERIMETER CORNER JOINTS MUST BE LATERALLY RESTRAINED.

2x4 DRY SPF No.2 T-BRACE AT D-O, F-M

FASTEN T AND I-BRACES TO NARROW EDGE OF WEB WITH ONE ROW PER PLY OF 3" COMMON WIRE NAILS @ 6" O.C. WITH 3" MINIMUM END DISTANCE. BRACE MUST COVER 90% OF WEB LENGTH.

END VERTICAL(S) MUST BE SHEATHED OR HAVE BRACES AS INDICATED IN THE MAX. UNBRACED LENGTH COLUMN OF THE TABLE BELOW

LOADING

TOTAL LOAD CASES: (4)

CHORDS

MEMB. FR-TO	MAX. FACTORED FORCE (LBS)	FACTORED VERT. LOAD (PLF) FROM	TO	LC1	MAX CSI (LC)	MAX. UNBRAC LENGTH
Q- A	-2081 / 0	0.0	0.0	0.39 (1)	5.81	
A- B	-2091 / 0	-78.0	-78.0	0.24 (1)	4.43	
B- C	-2599 / 0	-78.0	-78.0	0.67 (1)	4.33	
C- D	-1576 / 0	-85.5	-85.5	0.27 (1)	2.00	
D- E	-2058 / 0	-85.5	-85.5	0.30 (1)	2.00	
E- F	-3405 / 0	-78.0	-78.0	0.69 (1)	3.90	
F- G	-3507 / 0	-78.0	-78.0	0.13 (1)	4.44	
G- H	-1767 / 0	-78.0	-78.0	0.20 (1)	4.78	
H- I	0 / 52	-78.0	-78.0	0.17 (1)	10.00	
J- H	-3946 / 0	0.0	0.0	0.40 (1)	5.35	
Q- P	0 / 0	-18.5	-18.5	0.13 (1)	10.00	
P- O	0 / 2162	-18.5	-18.5	0.44 (1)	10.00	
O- R	0 / 1894	-18.5	-18.5	0.66 (1)	10.00	
R- N	0 / 1894	-239.3	-239.3	0.66 (1)	10.00	
N- M	0 / 1894	-239.3	-239.3	0.66 (1)	10.00	
M- L	0 / 3565	-239.3	-239.3	0.79 (1)	10.00	
L- S	0 / 1041	-239.3	-239.3	0.25 (1)	10.00	
S- K	0 / 1041	-18.5	-18.5	0.25 (1)	10.00	
K- J	0 / 0	-18.5	-18.5	0.14 (1)	10.00	

WEBS

MEMB. FR-TO	MAX. FACTORED FORCE (LBS)	MAX CSI (LC)
A- P	0 / 2877	0.71 (1)
P- B	-2113 / 0	0.45 (1)
B- O	-692 / 0	0.50 (1)
O- C	0 / 1707	0.42 (1)
O- D	-864 / 0	0.78 (1)
D- M	0 / 450	0.08 (1)
M- E	0 / 2367	0.59 (1)
M- F	-1870 / 0	0.58 (1)
L- F	-1968 / 0	0.46 (1)
L- G	0 / 3914	0.97 (1)
K- G	-1744 / 0	0.41 (1)
K- H	0 / 2531	0.63 (1)

FACTORED CONCENTRATED LOADS (LBS)

JT	LOC.	LC1	MAX-	MAX+	FACE	DIR.	TYPE	HEEL	CONN.
S	23-0-4	-704	-704	---	FRONT	VERT	TOTAL	---	C1

CONNECTION REQUIREMENTS

1) **C1:** A SUITABLE HANGER/MECHANICAL CONNECTION IS REQUIRED.

[M]

DESIGN CRITERIA

*** SPECIAL LOADS ANALYSIS ***
GEOMETRY AND/OR BASIC LOADS CHANGED BY USER.
LOADS WERE DERIVED FROM USER INPUT
NO FURTHER MODIFICATIONS WERE MADE

SPECIFIED LOADS:

TOP	CH.	LL	=	21.0	PSF
		DL	=	6.0	PSF
BOT	CH.	LL	=	0.0	PSF
		DL	=	7.4	PSF
TOTAL	LOAD		=	34.4	PSF

SPACING = 24.0 IN. C/C

LOADING IN HIGHEST FLAT SECTION BASED ON PIGGYBACK TRUSS WITH SLOPES OF 6.00/12 AND -6.00/12 AND RESPECTIVE WALL HEIGHTS OF 0-0 AND 0-0 AND AN ADDITIONAL DEAD LOAD OF 3.0 P.S.F.

LOADING IN OTHER FLAT SECTIONS BASED ON A SLOPE OF 6.00/12 AND 6.00/12

GIRDER TYPE: CStdGirder
START DISTANCE = 12-0-0
START SPAN CARRIED = 11-1-14
END DISTANCE = 23-0-4
END SPAN CARRIED = 11-1-14
END WALL WIDTH = 0-0
APPLIED TO FRONT SIDE OF BOTTOM CHORD.
- ADDT'L LOADS BASED ON 55 % OF GSL.

*** NON STANDARD GIRDER ***
ADDT'L USER-DEFINED LOADS APPLIED TO ALL LOAD CASES.

THIS TRUSS IS DESIGNED FOR RESIDENTIAL OR SMALL BUILDING REQUIREMENTS OF PART 9, NBCC 2015

THIS DESIGN COMPLIES WITH:
- PART 9 OF BCBC 2018 , ABC 2019
- PART 9 OF OBC 2012 (2019 AMENDMENT)
- CSA 086-14
- TPIC 2014

DESIGN ASSUMPTIONS
-OVERHANG NOT TO BE ALTERED OR CUT OFF.

(55 % OF 23.0 P.S.F. G.S.L. PLUS 8.4 P.S.F. RAIN LOAD) EQUALS 21.0 P.S.F. SPECIFIED ROOF LIVE LOAD

ALLOWABLE DEFL.(LL)= L/360 (0.87")
CALCULATED VERT. DEFL.(LL) = L/ 999 (0.19")
ALLOWABLE DEFL.(TL)= L/360 (0.87")
CALCULATED VERT. DEFL.(TL) = L/ 808 (0.39")

CSI: TC=0.69/1.00 (E-F:1) , BC=0.79/1.00 (L-M:1) , WB=0.97/1.00 (G-L:1) , SSI=0.60/1.00 (M-O:1)

DOL LUMBER=1.00 NAIL=1.00 LS BEND=1.00 COMP=1.00 SHEAR=1.00 TENS= 1.00

COMPANION LIVE LOAD FACTOR = 1.00

AUTOSOLVE LEFT HEEL ONLY

CONTINUED ON PAGE 2

JOB NAME	TRUSS NAME	QUANTITY	PLY	JOB DESC.	DRWG NO.
318404	H17		1	TRUSS DESC. JT 45147	E20035319

Alpa Roof Truss, Maple

Version 8.310 S Oct 29 2019 MiTek Industries, Inc. Tue Mar 24 15:04:44 2020 Page 1

ID:MF8iiriaTok7DlbpT4B71Xys4PG-VfH?GdsS3PRDRYMK39dB53F5kf5qDrhqmY2uh1zXiEn

Scale = 1:57.8

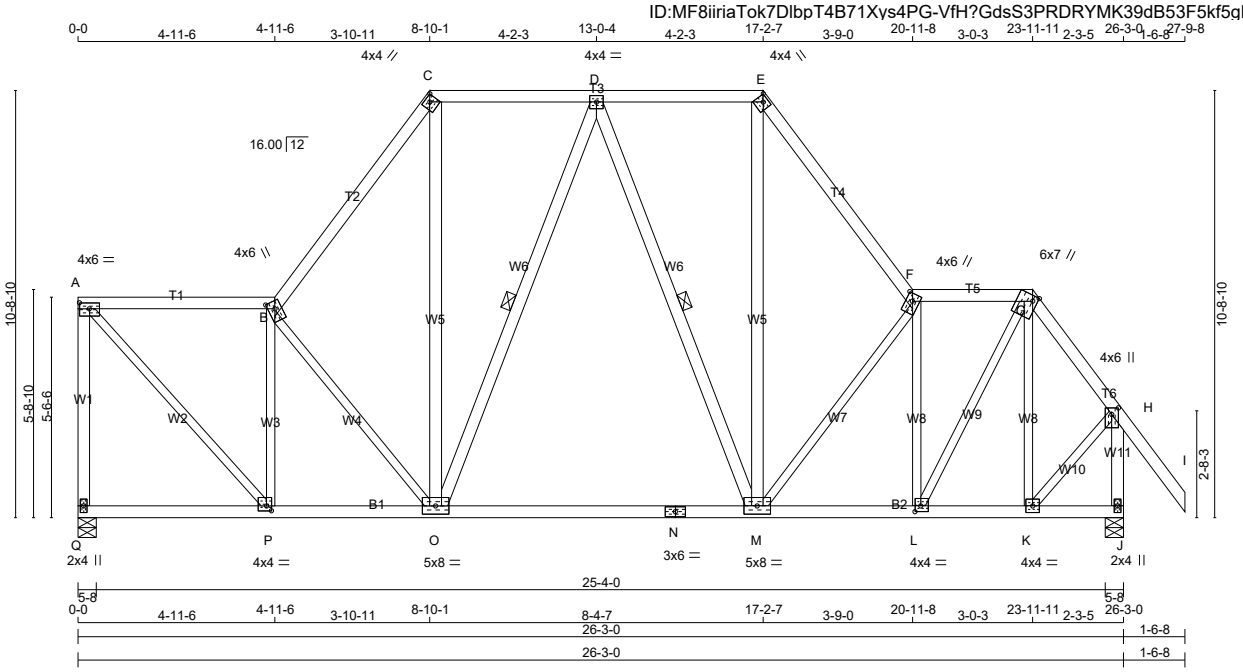

TOTAL WEIGHT = 163 lb

[M][F]

LUMBER

N. L. G. A. RULES

CHORDS	SIZE		LUMBER	DESCR.
Q - A	2x4	DRY	No.2	SPF
A - B	2x4	DRY	No.2	SPF
B - C	2x4	DRY	No.2	SPF
C - E	2x4	DRY	No.2	SPF
E - F	2x4	DRY	No.2	SPF
F - G	2x4	DRY	No.2	SPF
G - I	2x4	DRY	No.2	SPF
J - H	2x4	DRY	No.2	SPF
Q - N	2x4	DRY	No.2	SPF
N - J	2x4	DRY	No.2	SPF
ALL WEBS	2x3	DRY	No.2	SPF
EXCEPT				
O - C	2x4	DRY	No.2	SPF
O - D	2x4	DRY	No.2	SPF
D - M	2x4	DRY	No.2	SPF
M - E	2x4	DRY	No.2	SPF

DRY: SEASONED LUMBER.

PLATES (table is in inches)

JT	TYPE	PLATES	W	LEN	Y	X
A	TMVW-t	MT20	4.0	6.0	1.75	3.00
B	TTWW+m	MT20	4.0	6.0	2.25	2.00
C	TTW-h	MT20	4.0	4.0	Edge	
D	TMWW-t	MT20	4.0	4.0		
E	TTW-h	MT20	4.0	4.0	Edge	
F	TTWW+m	MT20	4.0	6.0	2.25	2.00
G	TTWW+m	MT20	6.0	7.0	Edge	1.50
H	TMVW+p	MT20	4.0	6.0	2.00	2.00
J	BMV1+p	MT20	2.0	4.0		
K	BMWW-t	MT20	4.0	4.0		
L	BMWW-t	MT20	4.0	4.0	1.75	1.75
M	BMWWW-t	MT20	5.0	8.0		
N	BS-t	MT20	3.0	6.0		
O	BMWWW-t	MT20	5.0	8.0		
P	BMWW-t	MT20	4.0	4.0	1.50	1.50
Q	BMV1+p	MT20	2.0	4.0		

Edge - INDICATES REFERENCE CORNER OF PLATE TOUCHES EDGE OF CHORD.

LATERAL BRACE(S) SHOWN SHALL BE 2X4 SPF#2

DIMENSIONS, SUPPORTS AND LOADINGS SPECIFIED BY FABRICATOR TO BE VERIFIED BY BUILDING DESIGNER

BEARINGS

JT	FACTORED GROSS REACTION VERT	HORZ	MAXIMUM FACTORED GROSS REACTION DOWN	HORZ	UPLIFT	INPUT BRG IN-SX	REQRD BRG IN-SX
Q	1294	0	1294	0	0	5-8	1-15
J	1431	0	1431	0	0	5-8	2-2

UNFACTORED REACTIONS

JT	1ST LCASE COMBINED	MAX./MIN. COMPONENT REACTIONS SNOW	LIVE	PERM.LIVE	WIND	DEAD	SOIL
Q	925	549 / 0	0 / 0	0 / 0	0 / 0	376 / 0	0 / 0
J	1020	623 / 0	0 / 0	0 / 0	0 / 0	397 / 0	0 / 0

BEARING MATERIAL TO BE SPF NO.2 OR BETTER AT JOINT(S) Q, J

BRACING

FOR SECTION C-E, MAX. PURLIN SPACING = 2.00 FT.
FOR OTHER SECTIONS, TOP CHORD TO BE SHEATHED OR MAX. PURLIN SPACING = 5.60 FT.
MAX. UNBRACED BOTTOM CHORD LENGTH = 10.00 FT OR RIGID CEILING DIRECTLY APPLIED.

ALL PITCH BREAKS AND PERIMETER CORNER JOINTS MUST BE LATERALLY RESTRAINED.

1 LATERAL BRACE(S) AT 1/ 2 LENGTH OF D-O, D-M.

END VERTICAL(S) MUST BE SHEATHED OR HAVE BRACES AS INDICATED IN THE MAX. UNBRACED LENGTH COLUMN OF THE TABLE BELOW

LOADING

TOTAL LOAD CASES: (4)

CHORDS

MEMB. FR-TO	MAX. FACTORED FORCE (LBS)	FACTORED VERT. LOAD (PLF) FROM	TO	LC1 CSI (LC)	MAX UNBRAC LENGTH
Q- A	-1252 / 0	0.0	0.0	0.69 (1)	7.19
A- B	-987 / 0	-78.0	-78.0	0.26 (1)	5.97
B- C	-1234 / 0	-78.0	-78.0	0.18 (1)	5.60
C- D	-749 / 0	-85.5	-85.5	0.19 (1)	2.00
D- E	-755 / 0	-85.5	-85.5	0.19 (1)	2.00
E- F	-1243 / 0	-78.0	-78.0	0.17 (1)	5.60
F- G	-988 / 0	-78.0	-78.0	0.10 (1)	6.17
G- H	-878 / 0	-78.0	-78.0	0.12 (1)	6.25
H- I	0 / 52	-78.0	-78.0	0.15 (1)	10.00
J- H	-1421 / 0	0.0	0.0	0.21 (1)	6.84
Q- P	0 / 0	-18.5	-18.5	0.10 (4)	10.00
P- O	0 / 1007	-18.5	-18.5	0.29 (4)	10.00
O- N	0 / 835	-18.5	-18.5	0.28 (4)	10.00
N- M	0 / 835	-18.5	-18.5	0.28 (4)	10.00
M- L	0 / 1006	-18.5	-18.5	0.30 (4)	10.00
L- K	0 / 491	-18.5	-18.5	0.12 (1)	10.00
K- J	0 / 0	-18.5	-18.5	0.05 (4)	10.00

WEBS

MEMB. FR-TO	MAX. FACTORED FORCE (LBS)	MAX CSI (LC)
A- P	0 / 1455	0.33 (1)
P- B	-998 / 0	0.46 (1)
B- O	-435 / 0	0.33 (1)
O- C	0 / 689	0.11 (1)
O- D	-235 / 0	0.16 (1)
D- M	-219 / 0	0.15 (1)
M- E	0 / 702	0.11 (1)
M- F	-443 / 0	0.35 (1)
L- F	-899 / 0	0.45 (1)
L- G	0 / 1045	0.24 (1)
K- G	-403 / 0	0.20 (1)
K- H	0 / 692	0.16 (1)

DESIGN CRITERIA

SPECIFIED LOADS:

TOP CH.	LL	=	21.0	PSF
	DL	=	6.0	PSF
BOT CH.	LL	=	0.0	PSF
	DL	=	7.4	PSF
TOTAL LOAD		=	34.4	PSF

SPACING = 24.0 IN. C/C

LOADING IN HIGHEST FLAT SECTION BASED ON PIGGYBACK TRUSS WITH SLOPES OF 6.00/12 AND -6.00/12 AND RESPECTIVE WALL HEIGHTS OF 0-0 AND 0-0 AND AN ADDITIONAL DEAD LOAD OF 3.0 P.S.F.

LOADING IN OTHER FLAT SECTIONS BASED ON A SLOPE OF 6.00/12 AND 6.00/12

THIS TRUSS IS DESIGNED FOR RESIDENTIAL OR SMALL BUILDING REQUIREMENTS OF PART 9, NBCC 2015

THIS DESIGN COMPLIES WITH:
- PART 9 OF BCBC 2018 , ABC 2019
- PART 9 OF OBC 2012 (2019 AMENDMENT)
- CSA 086-14
- TPIC 2014

DESIGN ASSUMPTIONS
-OVERHANG NOT TO BE ALTERED OR CUT OFF.

(55 % OF 23.0 P.S.F. G.S.L. PLUS 8.4 P.S.F. RAIN LOAD) EQUALS 21.0 P.S.F. SPECIFIED ROOF LIVE LOAD

ALLOWABLE DEFL.(LL)= L/360 (0.87")
CALCULATED VERT. DEFL.(LL) = L/ 999 (0.05")
ALLOWABLE DEFL.(TL)= L/360 (0.87")
CALCULATED VERT. DEFL.(TL) = L/ 999 (0.16")

CSI: TC=0.69/1.00 (A-Q:1) , BC=0.30/1.00 (L-M:4) , WB=0.46/1.00 (B-P:1) , SSI=0.17/1.00 (C-D:1)

DOL LUMBER=1.00 NAIL=1.00 LS BEND=1.10 COMP=1.10 SHEAR=1.10 TENS= 1.10

COMPANION LIVE LOAD FACTOR = 1.00

TRUSS PLATE MANUFACTURER IS NOT RESPONSIBLE FOR QUALITY CONTROL IN THE TRUSS MANUFACTURING PLANT .

NAIL VALUES

PLATE	GRIP(DRY) (PSI) MAX	MIN	SHEAR (PLI) MAX	MIN	SECTION (PLI) MAX	MIN
MT20	650	371	1747	788	1987	1873

PLATE PLACEMENT TOL. = 0.250 inches

PLATE ROTATION TOL. = 5.0 Deg.

JSI GRIP= 0.90 (L) (INPUT = 0.90)
JSI METAL= 0.34 (E) (INPUT = 1.00)

JOB NAME	TRUSS NAME	QUANTITY	PLY	JOB DESC.	DRWG NO.
318404	H18		1	TRUSS DESC. JT 45147	E20035320

Alpha Roof Truss, Maple

Version 8.310 S Oct 29 2019 MiTek Industries, Inc. Tue Mar 24 15:04:45 2020 Page 1

ID:MF8iiriaTok7DlbpT4B71Xys4PG-zsrNTzt5qjZ43ixWdt8QdGnKV3R yBK ?CnRETzXiEm

Scale = 1:57.8

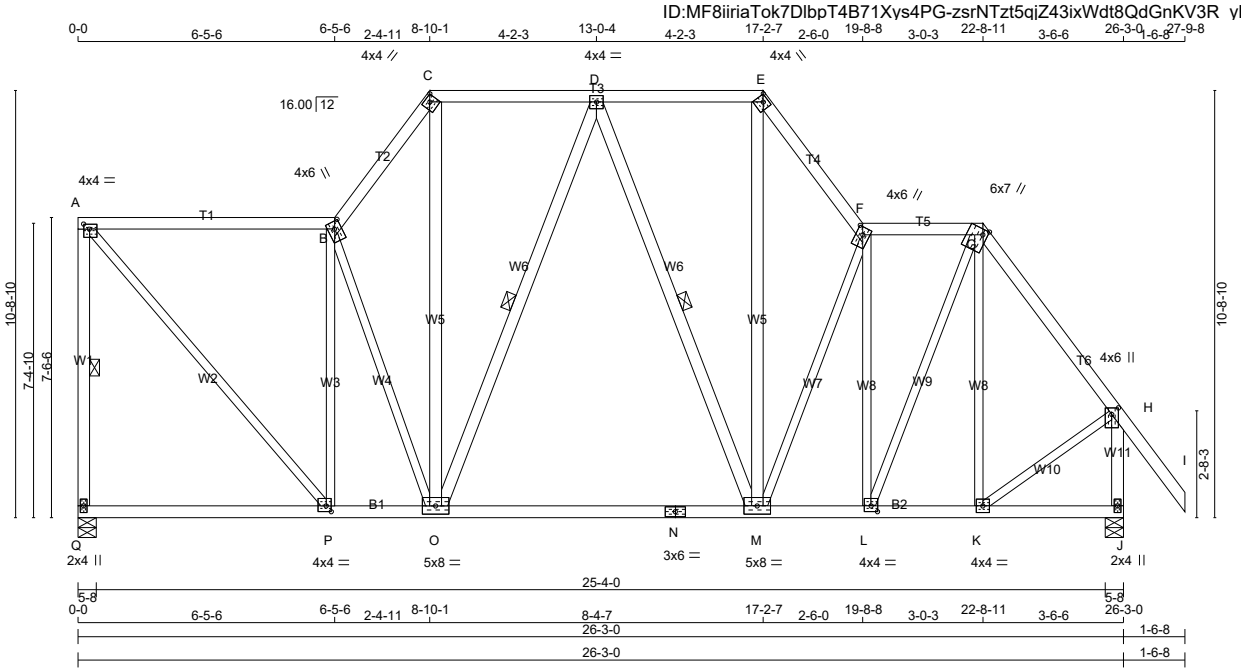

TOTAL WEIGHT = 174 lb

[M][F]

LUMBER

N. L. G. A. RULES

CHORDS	SIZE		LUMBER	DESCR.
Q - A	2x4	DRY	No.2	SPF
A - B	2x4	DRY	No.2	SPF
B - C	2x4	DRY	No.2	SPF
C - E	2x4	DRY	No.2	SPF
E - F	2x4	DRY	No.2	SPF
F - G	2x4	DRY	No.2	SPF
G - I	2x4	DRY	No.2	SPF
J - H	2x4	DRY	No.2	SPF
Q - N	2x4	DRY	No.2	SPF
N - J	2x4	DRY	No.2	SPF
ALL WEBS	2x3	DRY	No.2	SPF
EXCEPT				
O - C	2x4	DRY	No.2	SPF
O - D	2x4	DRY	No.2	SPF
D - M	2x4	DRY	No.2	SPF
M - E	2x4	DRY	No.2	SPF

DRY: SEASONED LUMBER.

PLATES (table is in inches)

JT	TYPE	PLATES	W	LEN	Y	X
A	TMVW-t	MT20	4.0	4.0	1.50	1.75
B	TTWW+m	MT20	4.0	6.0	2.25	2.00
C	TTW-h	MT20	4.0	4.0	Edge	
D	TMWW-t	MT20	4.0	4.0		
E	TTW-h	MT20	4.0	4.0	Edge	
F	TTWW+m	MT20	4.0	6.0	2.25	2.00
G	TTWW+m	MT20	6.0	7.0	Edge	1.50
H	TMVW+p	MT20	4.0	6.0	2.00	2.00
J	BMV1+p	MT20	2.0	4.0		
K	BMWW-t	MT20	4.0	4.0		
L	BMWW-t	MT20	4.0	4.0	1.75	2.00
M	BMWWW-t	MT20	5.0	8.0		
N	BS-t	MT20	3.0	6.0		
O	BMWWW-t	MT20	5.0	8.0		
P	BMWW-t	MT20	4.0	4.0	1.75	1.50
Q	BMV1+p	MT20	2.0	4.0		

Edge - INDICATES REFERENCE CORNER OF PLATE TOUCHES EDGE OF CHORD.

LATERAL BRACE(S) SHOWN SHALL BE 2X4 SPF#2

DIMENSIONS, SUPPORTS AND LOADINGS SPECIFIED BY FABRICATOR TO BE VERIFIED BY BUILDING DESIGNER

BEARINGS

JT	FACTORED GROSS REACTION VERT	HORZ	MAXIMUM FACTORED GROSS REACTION DOWN	HORZ	UPLIFT	INPUT BRG IN-SX	REQRD BRG IN-SX
Q	1298	0	1298	0	0	5-8	1-15
J	1427	0	1427	0	0	5-8	2-2

UNFACTORED REACTIONS

JT	1ST LCASE COMBINED	MAX./MIN. COMPONENT REACTIONS SNOW	LIVE	PERM.LIVE	WIND	DEAD	SOIL
Q	928	551 / 0	0 / 0	0 / 0	0 / 0	377 / 0	0 / 0
J	1017	621 / 0	0 / 0	0 / 0	0 / 0	397 / 0	0 / 0

BEARING MATERIAL TO BE SPF NO.2 OR BETTER AT JOINT(S) Q, J

BRACING

FOR SECTION C-E, MAX. PURLIN SPACING = 2.00 FT.
FOR OTHER SECTIONS, TOP CHORD TO BE SHEATHED OR MAX. PURLIN SPACING = 5.68 FT.
MAX. UNBRACED BOTTOM CHORD LENGTH = 10.00 FT OR RIGID CEILING DIRECTLY APPLIED.

ALL PITCH BREAKS AND PERIMETER CORNER JOINTS MUST BE LATERALLY RESTRAINED.

1 LATERAL BRACE(S) AT 1/ 2 LENGTH OF A-Q, D-O, D-M.

END VERTICAL(S) MUST BE SHEATHED OR HAVE BRACES AS INDICATED IN THE MAX. UNBRACED LENGTH COLUMN OF THE TABLE BELOW

LOADING

TOTAL LOAD CASES: (4)

CHORDS

MEMB. FR-TO	MAX. FACTORED FORCE (LBS)	FACTORED VERT. LOAD (PLF) FROM	TO	LC1	MAX CSI (LC)	MAX. UNBRAC LENGTH
Q- A	-1247 / 0	0.0	0.0	0.32 (1)	5.76	
A- B	-878 / 0	-78.0	-78.0	0.43 (1)	5.95	
B- C	-1237 / 0	-78.0	-78.0	0.08 (1)	5.71	
C- D	-752 / 0	-85.5	-85.5	0.19 (1)	2.00	
D- E	-762 / 0	-85.5	-85.5	0.19 (1)	2.00	
E- F	-1253 / 0	-78.0	-78.0	0.08 (1)	5.68	
F- G	-896 / 0	-78.0	-78.0	0.10 (1)	6.25	
G- H	-964 / 0	-78.0	-78.0	0.14 (1)	6.19	
H- I	0 / 52	-78.0	-78.0	0.15 (1)	10.00	
J- H	-1403 / 0	0.0	0.0	0.20 (1)	6.87	
Q- P	0 / 0	-18.5	-18.5	0.16 (4)	10.00	
P- O	0 / 891	-18.5	-18.5	0.27 (4)	10.00	
O- N	0 / 839	-18.5	-18.5	0.29 (4)	10.00	
N- M	0 / 839	-18.5	-18.5	0.29 (4)	10.00	
M- L	0 / 908	-18.5	-18.5	0.30 (4)	10.00	
L- K	0 / 570	-18.5	-18.5	0.14 (1)	10.00	
K- J	0 / 0	-18.5	-18.5	0.07 (4)	10.00	

WEBS

MEMB. FR-TO	MAX. FACTORED FORCE (LBS)	MAX CSI (LC)
A- P	0 / 1332	0.30 (1)
P- B	-920 / 0	0.95 (1)
B- O	-447 / 0	0.51 (1)
O- C	0 / 750	0.12 (1)
O- D	-240 / 0	0.17 (1)
D- M	-213 / 0	0.15 (1)
M- E	0 / 759	0.12 (1)
M- F	-444 / 0	0.49 (1)
L- F	-802 / 0	0.78 (1)
L- G	0 / 852	0.19 (1)
K- G	-269 / 0	0.26 (1)
K- H	0 / 679	0.15 (1)

DESIGN CRITERIA

SPECIFIED LOADS:

TOP	CH.	LL =	21.0	PSF
		DL =	6.0	PSF
BOT	CH.	LL =	0.0	PSF
		DL =	7.4	PSF
TOTAL	LOAD	=	34.4	PSF

SPACING = 24.0 IN. C/C

LOADING IN HIGHEST FLAT SECTION BASED ON PIGGYBACK TRUSS WITH SLOPES OF 6.00/12 AND -6.00/12 AND RESPECTIVE WALL HEIGHTS OF 0-0 AND 0-0 AND AN ADDITIONAL DEAD LOAD OF 3.0 P.S.F.

LOADING IN OTHER FLAT SECTIONS BASED ON A SLOPE OF 6.00/12 AND 6.00/12

THIS TRUSS IS DESIGNED FOR RESIDENTIAL OR SMALL BUILDING REQUIREMENTS OF PART 9, NBCC 2015

THIS DESIGN COMPLIES WITH:
- PART 9 OF BCBC 2018 , ABC 2019
- PART 9 OF OBC 2012 (2019 AMENDMENT)
- CSA 086-14
- TPIC 2014

(55 % OF 23.0 P.S.F. G.S.L. PLUS 8.4 P.S.F. RAIN LOAD) EQUALS 21.0 P.S.F. SPECIFIED ROOF LIVE LOAD

ALLOWABLE DEFL.(LL)= L/360 (0.88")
CALCULATED VERT. DEFL.(LL) = L/ 999 (0.05")
ALLOWABLE DEFL.(TL)= L/360 (0.88")
CALCULATED VERT. DEFL.(TL) = L/ 999 (0.17")

CSI: TC=0.43/1.00 (A-B:1) , BC=0.30/1.00 (L-M:4) , WB=0.95/1.00 (B-P:1) , SSI=0.20/1.00 (A-B:1)

DOL LUMBER=1.00 NAIL=1.00 LS BEND=1.10 COMP=1.10 SHEAR=1.10 TENS= 1.10

COMPANION LIVE LOAD FACTOR = 1.00

TRUSS PLATE MANUFACTURER IS NOT RESPONSIBLE FOR QUALITY CONTROL IN THE TRUSS MANUFACTURING PLANT .

NAIL VALUES

PLATE	GRIP(DRY) (PSI) MAX	MIN	SHEAR (PLI) MAX	MIN	SECTION (PLI) MAX	MIN
MT20	650	371	1747	788	1987	1873

PLATE PLACEMENT TOL. = 0.250 inches

PLATE ROTATION TOL. = 5.0 Deg.

JSI GRIP= 0.88 (P) (INPUT = 0.90)
JSI METAL= 0.37 (E) (INPUT = 1.00)

JOB NAME	TRUSS NAME	QUANTITY	PLY	JOB DESC.	DRWG NO.
318404	H19		1	TRUSS DESC. JT 45147	E20035321

Alpa Roof Truss, Maple

Version 8.310 S Oct 29 2019 MiTek Industries, Inc. Tue Mar 24 15:04:46 2020 Page 1

ID:MF8iiriaTok7DlbpT4B71Xys4PG-R2PmhJujb0hxhsWjAaqfAUKXvSmNhfR7EsX?mwzXiEl

Scale = 1:57.8

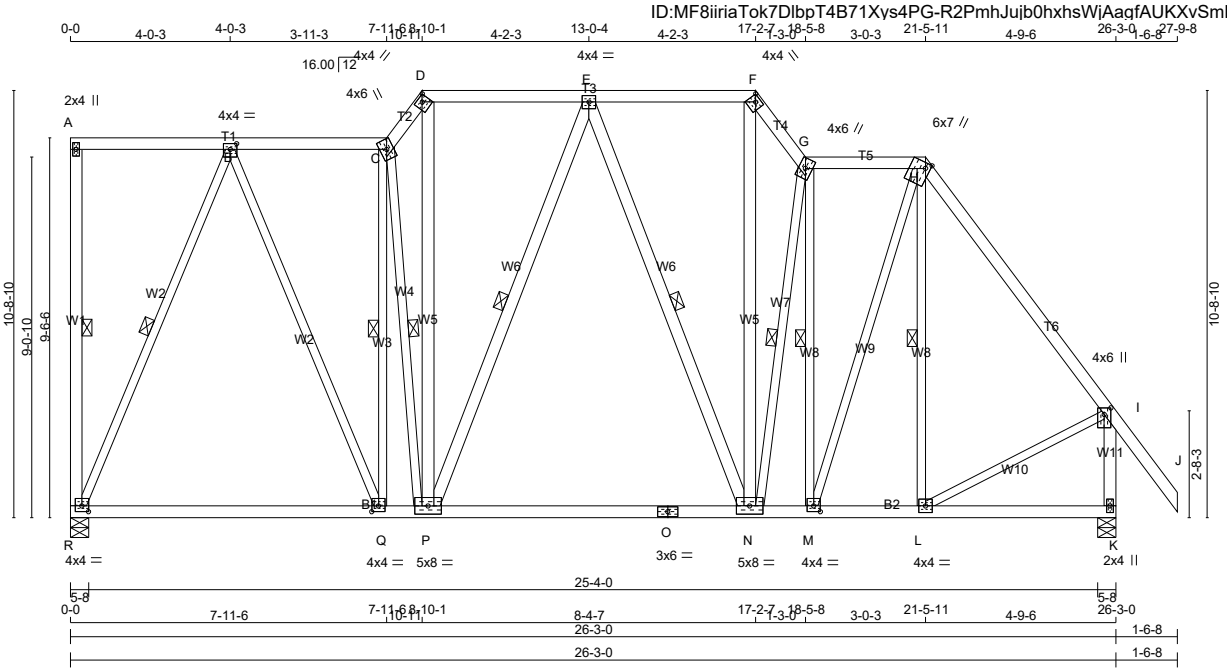

TOTAL WEIGHT = 193 lb

[M][F]

LUMBER

N. L. G. A. RULES

CHORDS	SIZE		LUMBER	DESCR.
R - A	2x4	DRY	No.2	SPF
A - C	2x4	DRY	No.2	SPF
C - D	2x4	DRY	No.2	SPF
D - F	2x4	DRY	No.2	SPF
F - G	2x4	DRY	No.2	SPF
G - H	2x4	DRY	No.2	SPF
H - J	2x4	DRY	No.2	SPF
K - I	2x4	DRY	No.2	SPF
R - O	2x4	DRY	No.2	SPF
O - K	2x4	DRY	No.2	SPF
ALL WEBS	2x3	DRY	No.2	SPF
EXCEPT				
P - D	2x4	DRY	No.2	SPF
P - E	2x4	DRY	No.2	SPF
E - N	2x4	DRY	No.2	SPF
N - F	2x4	DRY	No.2	SPF

DRY: SEASONED LUMBER.

PLATES (table is in inches)

JT	TYPE	PLATES	W	LEN	Y	X
A	TMV+p	MT20	2.0	4.0		
B	TMWW-t	MT20	4.0	4.0	1.75	2.00
C	TTWW+m	MT20	4.0	6.0		
D	TTW-h	MT20	4.0	4.0	Edge	
E	TMWW-t	MT20	4.0	4.0		
F	TTW-h	MT20	4.0	4.0	Edge	
G	TTWW+m	MT20	4.0	6.0		
H	TTWW+m	MT20	6.0	7.0	Edge	1.50
I	TMVW+p	MT20	4.0	6.0	2.00	2.00
K	BMV1+p	MT20	2.0	4.0		
L	BMWW-t	MT20	4.0	4.0		
M	BMWW-t	MT20	4.0	4.0	1.75	2.00
N	BMWWW-t	MT20	5.0	8.0		
O	BS-t	MT20	3.0	6.0		
P	BMWWW-t	MT20	5.0	8.0		
Q	BMWW-t	MT20	4.0	4.0	1.75	2.00
R	BMVW1-t	MT20	4.0	4.0	1.75	2.00

Edge - INDICATES REFERENCE CORNER OF PLATE TOUCHES EDGE OF CHORD.

LATERAL BRACE(S) SHOWN SHALL BE 2X4 SPF#2

DIMENSIONS, SUPPORTS AND LOADINGS SPECIFIED BY FABRICATOR TO BE VERIFIED BY BUILDING DESIGNER

BEARINGS

JT	FACTORED GROSS REACTION VERT	HORZ	MAXIMUM FACTORED GROSS REACTION DOWN	HORZ	UPLIFT	INPUT BRG IN-SX	REQRD BRG IN-SX
R	1298	0	1298	0	0	5-8	1-8
K	1427	0	1427	0	0	5-8	2-2

UNFACTORED REACTIONS

JT	1ST LCASE COMBINED	MAX./MIN. COMPONENT REACTIONS SNOW	LIVE	PERM.LIVE	WIND	DEAD	SOIL
R	928	551 / 0	0 / 0	0 / 0	0 / 0	377 / 0	0 / 0
K	1017	621 / 0	0 / 0	0 / 0	0 / 0	397 / 0	0 / 0

BEARING MATERIAL TO BE SPF NO.2 OR BETTER AT JOINT(S) R, K

BRACING

FOR SECTION D-F, MAX. PURLIN SPACING = 2.00 FT.
FOR OTHER SECTIONS, TOP CHORD TO BE SHEATHED OR MAX. PURLIN SPACING = 5.73 FT.
MAX. UNBRACED BOTTOM CHORD LENGTH = 10.00 FT OR RIGID CEILING DIRECTLY APPLIED.

ALL PITCH BREAKS AND PERIMETER CORNER JOINTS MUST BE LATERALLY RESTRAINED.

1 LATERAL BRACE(S) AT 1/ 2 LENGTH OF A-R, C-Q, C-P, E-P, E-N, G-N, G-M, H-L, B-R.

END VERTICAL(S) MUST BE SHEATHED OR HAVE BRACES AS INDICATED IN THE MAX. UNBRACED LENGTH COLUMN OF THE TABLE BELOW

LOADING

TOTAL LOAD CASES: (4)

CHORDS

MEMB. FR-TO	MAX. FACTORED FORCE (LBS)	FACTORED VERT. LOAD (PLF) FROM	TO	LC1 CSI (LC)	MAX UNBRAC LENGTH
R- A	-118 / 0	0.0	0.0	0.05 (1)	6.25
A- B	0 / 0	-78.0	-78.0	0.21 (1)	10.00
B- C	-795 / 0	-78.0	-78.0	0.17 (1)	6.25
C- D	-1237 / 0	-78.0	-78.0	0.02 (1)	5.76
D- E	-753 / 0	-85.5	-85.5	0.19 (1)	2.00
E- F	-762 / 0	-85.5	-85.5	0.19 (1)	2.00
F- G	-1252 / 0	-78.0	-78.0	0.03 (1)	5.73
G- H	-813 / 0	-78.0	-78.0	0.10 (1)	6.25
H- I	-994 / 0	-78.0	-78.0	0.26 (1)	5.98
I- J	0 / 52	-78.0	-78.0	0.15 (1)	10.00
K- I	-1392 / 0	0.0	0.0	0.20 (1)	6.90
R- Q	0 / 487	-18.5	-18.5	0.32 (4)	10.00
Q- P	0 / 802	-18.5	-18.5	0.35 (4)	10.00
P- O	0 / 840	-18.5	-18.5	0.29 (4)	10.00
O- N	0 / 840	-18.5	-18.5	0.29 (4)	10.00
N- M	0 / 822	-18.5	-18.5	0.29 (4)	10.00
M- L	0 / 592	-18.5	-18.5	0.17 (4)	10.00
L- K	0 / 0	-18.5	-18.5	0.11 (4)	10.00

WEBS

MEMB. FR-TO	MAX. FACTORED FORCE (LBS)	MAX CSI (LC)
Q- C	-619 / 0	0.37 (1)
C- P	-532 / 0	0.33 (1)
P- D	0 / 809	0.13 (1)
P- E	-238 / 0	0.16 (1)
E- N	-215 / 0	0.15 (1)
N- F	0 / 806	0.13 (1)
N- G	-446 / 0	0.24 (1)
M- G	-728 / 0	0.39 (1)
M- H	0 / 698	0.16 (1)
L- H	-169 / 0	0.09 (1)
L- I	0 / 656	0.15 (1)
R- B	-1223 / 0	0.89 (1)
B- Q	0 / 805	0.18 (1)

DESIGN CRITERIA

SPECIFIED LOADS:

TOP CH.	LL	=	21.0	PSF
	DL	=	6.0	PSF
BOT CH.	LL	=	0.0	PSF
	DL	=	7.4	PSF
TOTAL LOAD		=	34.4	PSF

SPACING = 24.0 IN. C/C

LOADING IN HIGHEST FLAT SECTION BASED ON PIGGYBACK TRUSS WITH SLOPES OF 6.00/12 AND -6.00/12 AND RESPECTIVE WALL HEIGHTS OF 0-0 AND 0-0 AND AN ADDITIONAL DEAD LOAD OF 3.0 P.S.F.

LOADING IN OTHER FLAT SECTIONS BASED ON A SLOPE OF 6.00/12 AND 6.00/12

THIS TRUSS IS DESIGNED FOR RESIDENTIAL OR SMALL BUILDING REQUIREMENTS OF PART 9, NBCC 2015

THIS DESIGN COMPLIES WITH:
- PART 9 OF BCBC 2018 , ABC 2019
- PART 9 OF OBC 2012 (2019 AMENDMENT)
- CSA 086-14
- TPIC 2014

(55 % OF 23.0 P.S.F. G.S.L. PLUS 8.4 P.S.F. RAIN LOAD) EQUALS 21.0 P.S.F. SPECIFIED ROOF LIVE LOAD

ALLOWABLE DEFL.(LL)= L/360 (0.88")
CALCULATED VERT. DEFL.(LL) = L/ 999 (0.05")
ALLOWABLE DEFL.(TL)= L/360 (0.88")
CALCULATED VERT. DEFL.(TL) = L/ 999 (0.15")

CSI: TC=0.26/1.00 (H-I:1) , BC=0.35/1.00 (P-Q:4) , WB=0.89/1.00 (B-R:1) , SSI=0.17/1.00 (E-F:1)

DOL LUMBER=1.00 NAIL=1.00 LS BEND=1.10 COMP=1.10 SHEAR=1.10 TENS= 1.10

COMPANION LIVE LOAD FACTOR = 1.00

TRUSS PLATE MANUFACTURER IS NOT RESPONSIBLE FOR QUALITY CONTROL IN THE TRUSS MANUFACTURING PLANT .

NAIL VALUES

PLATE	GRIP(DRY) (PSI) MAX	MIN	SHEAR (PLI) MAX	MIN	SECTION (PLI) MAX	MIN
MT20	650	371	1747	788	1987	1873

PLATE PLACEMENT TOL. = 0.250 inches

PLATE ROTATION TOL. = 5.0 Deg.

JSI GRIP= 0.79 (M) (INPUT = 0.90)
JSI METAL= 0.39 (I) (INPUT = 1.00)

JOB NAME	TRUSS NAME	QUANTITY	PLY	JOB DESC.	DRWG NO.
318404	H20		1	TRUSS DESC. JT 45147	E20035322

Alpa Roof Truss, Maple

Version 8.310 S Oct 29 2019 MiTek Industries, Inc. Tue Mar 24 15:04:47 2020 Page 1

ID:MF8iiriaTok7DlbpT4B71Xys4PG-vEz8ufvLMKpoI05vkIBuihtdcs7MQEoHSWGYIMzXiEk

Scale = 1:60.3

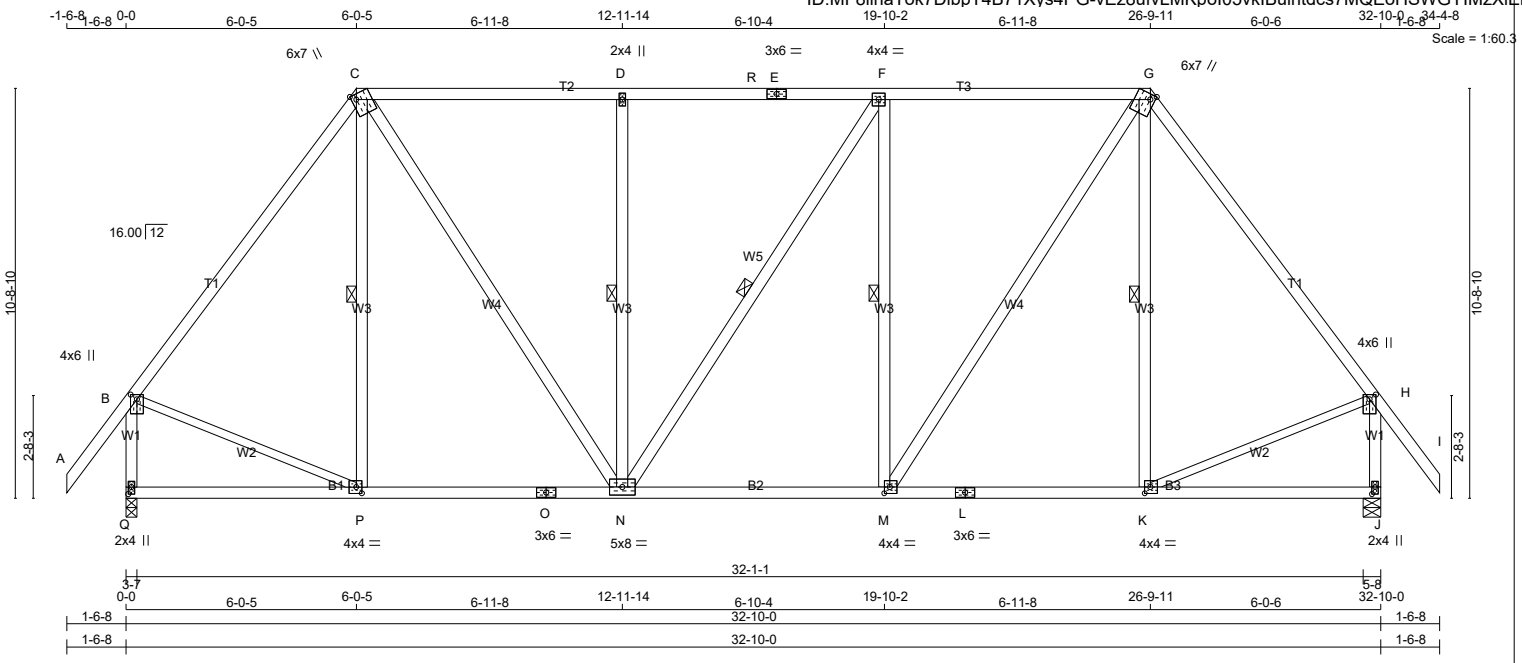

TOTAL WEIGHT = 6 X 194 = 1162 lb

[M][F]

LUMBER

N. L. G. A. RULES

CHORDS	SIZE		LUMBER	DESCR.
A - C	2x4	DRY	2100F 1.8E	SPF
C - E	2x4	DRY	No.2	SPF
E - G	2x4	DRY	No.2	SPF
G - I	2x4	DRY	2100F 1.8E	SPF
Q - B	2x4	DRY	No.2	SPF
J - H	2x4	DRY	No.2	SPF
Q - O	2x4	DRY	No.2	SPF
O - L	2x4	DRY	No.2	SPF
L - J	2x4	DRY	No.2	SPF
ALL WEBS	2x4	DRY	No.2	SPF
EXCEPT				
B - P	2x3	DRY	No.2	SPF
K - H	2x3	DRY	No.2	SPF

DRY: SEASONED LUMBER.

PLATES (table is in inches)

JT	TYPE	PLATES	W	LEN	Y	X
B	TMVW+p	MT20	4.0	6.0	1.50	2.00
C	TTWW+m	MT20	6.0	7.0	Edge	1.50
D	TMW+w	MT20	2.0	4.0		
E	TS-t	MT20	3.0	6.0		
F	TMWW-t	MT20	4.0	4.0		
G	TTWW+m	MT20	6.0	7.0	Edge	1.50
H	TMVW+p	MT20	4.0	6.0	1.50	2.00
J	BMV1+p	MT20	2.0	4.0	2.25	1.00
K, M, P						
K	BMWW-t	MT20	4.0	4.0	2.00	1.75
L	BS-t	MT20	3.0	6.0		
N	BMWWW-t	MT20	5.0	8.0		
O	BS-t	MT20	3.0	6.0		
Q	BMV1+p	MT20	2.0	4.0	2.25	1.00

Edge - INDICATES REFERENCE CORNER OF PLATE TOUCHES EDGE OF CHORD.

LATERAL BRACE(S) SHOWN SHALL BE 2X4 SPF#2

DIMENSIONS, SUPPORTS AND LOADINGS SPECIFIED BY FABRICATOR TO BE VERIFIED BY BUILDING DESIGNER

BEARINGS

JT	FACTORED GROSS REACTION VERT	HORZ	MAXIMUM FACTORED GROSS REACTION DOWN	HORZ	UPLIFT	INPUT BRG IN-SX	REQRD BRG IN-SX
Q	1791	0	1791	0	0	3-7	2-5
J	1791	0	1791	0	0	5-8	2-10

UNFACTORED REACTIONS

JT	1ST LCASE COMBINED	MAX./MIN. COMPONENT REACTIONS SNOW	LIVE	PERM.LIVE	WIND	DEAD	SOIL
Q	1281	759 / 0	0 / 0	0 / 0	0 / 0	522 / 0	0 / 0
J	1281	759 / 0	0 / 0	0 / 0	0 / 0	522 / 0	0 / 0

BEARING MATERIAL TO BE SPF NO.2 OR BETTER AT JOINT(S) Q, J

BRACING

FOR SECTION C-G, MAX. PURLIN SPACING = 2.00 FT.
FOR OTHER SECTIONS, TOP CHORD TO BE SHEATHED OR MAX. PURLIN SPACING = 6.25 FT.
MAX. UNBRACED BOTTOM CHORD LENGTH = 10.00 FT OR RIGID CEILING DIRECTLY APPLIED.

ALL PITCH BREAKS AND PERIMETER CORNER JOINTS MUST BE LATERALLY RESTRAINED.

1 LATERAL BRACE(S) AT 1/ 2 LENGTH OF C-P, D-N, F-N, F-M, G-K.

END VERTICAL(S) MUST BE SHEATHED OR HAVE BRACES AS INDICATED IN THE MAX. UNBRACED LENGTH COLUMN OF THE TABLE BELOW

LOADING

TOTAL LOAD CASES: (4)

CHORDS

MEMB. FR-TO	MAX. FACTORED FORCE (LBS)	FACTORED VERT. LOAD (PLF) FROM	TO	LC1 CSI (LC)	MAX UNBRAC LENGTH
A- B	0 / 52	-78.0	-78.0	0.10 (1)	10.00
B- C	-1350 / 0	-78.0	-78.0	0.28 (1)	6.25
C- D	-1316 / 0	-85.5	-85.5	0.52 (1)	2.00
D- R	-1316 / 0	-85.5	-85.5	0.46 (1)	2.00
R- E	-1316 / 0	-85.5	-85.5	0.46 (1)	2.00
E- F	-1316 / 0	-85.5	-85.5	0.46 (1)	2.00
F- G	-1317 / 0	-85.5	-85.5	0.52 (1)	2.00
G- H	-1350 / 0	-78.0	-78.0	0.28 (1)	6.25
H- I	0 / 52	-78.0	-78.0	0.10 (1)	10.00
Q- B	-1747 / 0	0.0	0.0	0.25 (1)	6.30
J- H	-1747 / 0	0.0	0.0	0.25 (1)	6.30
Q- P	0 / 0	-18.5	-18.5	0.19 (4)	10.00
P- O	0 / 805	-18.5	-18.5	0.27 (4)	10.00
O- N	0 / 805	-18.5	-18.5	0.27 (4)	10.00
N- M	0 / 1317	-18.5	-18.5	0.30 (4)	10.00
M- L	0 / 805	-18.5	-18.5	0.27 (4)	10.00
L- K	0 / 805	-18.5	-18.5	0.27 (4)	10.00
K- J	0 / 0	-18.5	-18.5	0.19 (4)	10.00

WEBS

MEMB. FR-TO	MAX. FACTORED FORCE (LBS)	MAX CSI (LC)
P- C	-164 / 20	0.10 (1)
C- N	0 / 918	0.15 (1)
N- D	-638 / 0	0.37 (1)
N- F	-1 / 0	0.00 (1)
M- F	-639 / 0	0.37 (1)
M- G	0 / 920	0.15 (1)
K- G	-165 / 20	0.10 (1)
B- P	0 / 861	0.19 (1)
K- H	0 / 861	0.19 (1)

DESIGN CRITERIA

SPECIFIED LOADS:

TOP	CH.	LL =	21.0	PSF
		DL =	6.0	PSF
BOT	CH.	LL =	0.0	PSF
		DL =	7.4	PSF
TOTAL	LOAD	=	34.4	PSF

SPACING = 24.0 IN. C/C

LOADING IN FLAT SECTION BASED ON PIGGYBACK TRUSS WITH SLOPES OF 6.00/12 AND -6.00/12 AND RESPECTIVE WALL HEIGHTS OF 0-0 AND 0-0 AND AN ADDITIONAL DEAD LOAD OF 3.0 P.S.F.

THIS TRUSS IS DESIGNED FOR RESIDENTIAL OR SMALL BUILDING REQUIREMENTS OF PART 9, NBCC 2015

THIS DESIGN COMPLIES WITH:
- PART 9 OF BCBC 2018 , ABC 2019
- PART 9 OF OBC 2012 (2019 AMENDMENT)
- CSA 086-14
- TPIC 2014

(55 % OF 23.0 P.S.F. G.S.L. PLUS 8.4 P.S.F. RAIN LOAD) EQUALS 21.0 P.S.F. SPECIFIED ROOF LIVE LOAD

ALLOWABLE DEFL.(LL)= L/360 (1.09")
CALCULATED VERT. DEFL.(LL) = L/ 999 (0.04")
ALLOWABLE DEFL.(TL)= L/360 (1.09")
CALCULATED VERT. DEFL.(TL) = L/ 999 (0.11")

CSI: TC=0.52/1.00 (F-G:1) , BC=0.30/1.00 (M-N:4) , WB=0.37/1.00 (F-M:1) , SSI=0.28/1.00 (F-G:1)

DOL LUMBER=1.00 NAIL=1.00 LS BEND=1.10 COMP=1.10 SHEAR=1.10 TENS= 1.10

COMPANION LIVE LOAD FACTOR = 1.00

TRUSS PLATE MANUFACTURER IS NOT RESPONSIBLE FOR QUALITY CONTROL IN THE TRUSS MANUFACTURING PLANT .

NAIL VALUES

PLATE	GRIP(DRY) (PSI) MAX	MIN	SHEAR (PLI) MAX	MIN	SECTION (PLI) MAX	MIN
MT20	650	371	1747	788	1987	1873

PLATE PLACEMENT TOL. = 0.250 inches

PLATE ROTATION TOL. = 5.0 Deg.

JSI GRIP= 0.81 (B) (INPUT = 0.90)
JSI METAL= 0.57 (B) (INPUT = 1.00)

JOB NAME	TRUSS NAME	QUANTITY	PLY	JOB DESC.	DRWG NO.
318404	H20A		2	TRUSS DESC. JT 45147	E20035323

Alpa Roof Truss, Maple

Version 8.310 S Oct 29 2019 MiTek Industries, Inc. Tue Mar 24 15:04:49 2020 Page 1

ID:MF8iiriaTok7DlbpT4B71Xys4PG-rd5uJLwbux3VYKFIsjDMo6yxGgiiu4qawqlfNFzXlEi

Scale = 1:65.8

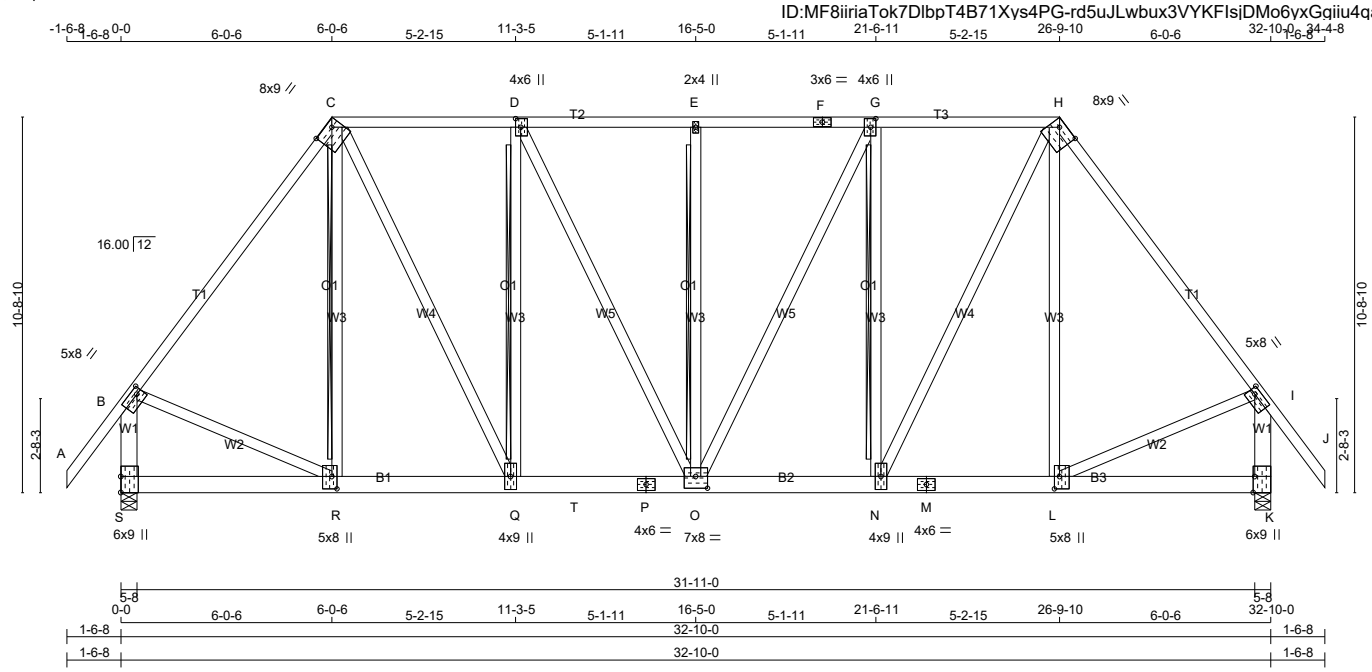

TOTAL WEIGHT = 2 X 242 = 484 lb

[M]

LUMBER

N. L. G. A. RULES

CHORDS	SIZE		LUMBER	DESCR.
A - C	2x4	DRY	2100F 1.8E	SPF
C - F	2x4	DRY	No.2	SPF
F - H	2x4	DRY	No.2	SPF
H - J	2x4	DRY	2100F 1.8E	SPF
S - B	2x6	DRY	No.2	SPF
K - I	2x6	DRY	No.2	SPF
S - P	2x6	DRY	1650F 1.5E	SPF
P - M	2x6	DRY	1650F 1.5E	SPF
M - K	2x6	DRY	1650F 1.5E	SPF
ALL WEBS EXCEPT	2x4	DRY	No.2	SPF

DRY: SEASONED LUMBER.

DESIGN CONSISTS OF 2 TRUSSES BUILT SEPARATELY THEN FASTENED TOGETHER AS FOLLOWS:

CHORDS	#ROWS	SURFACE SPACING (IN)	LOAD(PLF)
TOP CHORDS : (0.122"X3") SPIRAL NAILS			
A- C	1	12	TOP
C- F	1	12	TOP
F- H	1	12	TOP
H- J	1	12	TOP
S- B	2	12	TOP
K- I	2	12	TOP
BOTTOM CHORDS : (0.122"X3") SPIRAL NAILS			
S- P	2	9	SIDE(278.9)
P- M	2	9	SIDE(278.9)
M- K	2	9	SIDE(278.9)
WEBS : (0.122"X3") SPIRAL NAILS			
2x4	1	6	

NAILS TO BE DRIVEN FROM ONE SIDE ONLY.

TOP - COMPONENTS ARE LOADED FROM THE TOP AND MUST BE PLACED ON TOP EDGE OF ALL PLIES FOR THE LOAD TO BE TRANSFERRED TO EACH PLY.

LATERAL BRACE(S) SHOWN SHALL BE 2X4 SPF#2

DIMENSIONS, SUPPORTS AND LOADINGS SPECIFIED BY FABRICATOR TO BE VERIFIED BY BUILDING DESIGNER

BEARINGS

JT	FACTORED GROSS REACTION VERT	HORZ	MAXIMUM FACTORED GROSS REACTION DOWN	HORZ	UPLIFT	INPUT BRG IN-SX	REQRD BRG IN-SX
S	5054	0	5054	0	0	5-8	2-12
K	9433	0	9433	0	0	5-8	5-8

UNFACTORED REACTIONS

JT	1ST LCASE COMBINED	MAX./MIN. COMPONENT REACTIONS SNOW	LIVE	PERM.LIVE	WIND	DEAD	SOIL
S	3601	2213 / 0	0 / 0	0 / 0	0 / 0	1388 / 0	0 / 0
K	6723	4118 / 0	0 / 0	0 / 0	0 / 0	2605 / 0	0 / 0

BEARING MATERIAL TO BE SPF NO.2 OR BETTER AT JOINT(S) S, K
BEARING SIZE FACTOR = 1.15 AT JNT(S) K (BASED ON SUPPORT DEPTH = 1-8)

BRACING

TOP CHORD TO BE SHEATHED OR MAX. PURLIN SPACING = 3.63 FT.
MAX. UNBRACED BOTTOM CHORD LENGTH = 10.00 FT OR RIGID CEILING DIRECTLY APPLIED.

ALL PITCH BREAKS AND PERIMETER CORNER JOINTS MUST BE LATERALLY RESTRAINED.

2x6 DRY SPF No.2 T-BRACE AT C-R, D-Q, E-O, G-N

FASTEN T AND I-BRACES TO NARROW EDGE OF WEB WITH ONE ROW PER PLY OF 3" COMMON WIRE NAILS @ 6" O.C. WITH 3" MINIMUM END DISTANCE. BRACE MUST COVER 90% OF WEB LENGTH.

END VERTICAL(S) MUST BE SHEATHED OR HAVE BRACES AS INDICATED IN THE MAX. UNBRACED LENGTH COLUMN OF THE TABLE BELOW

LOADING

TOTAL LOAD CASES: (4)

CHORDS MEMB. FR-TO	MAX. FACTORED FORCE (LBS)	FACTORED VERT. LOAD (PLF) FROM	TO	LC1 MAX CSI (LC)	MAX. UNBRAC LENGTH	WEBS MEMB. FR-TO	MAX. FACTORED FORCE (LBS)	MAX CSI (LC)
A- B	0 / 52	-78.0	-78.0	0.06 (1)	10.00	R- C	-937 / 0	0.16 (1)
B- C	-4566 / 0	-78.0	-78.0	0.38 (1)	5.19	C- Q	0 / 4661	0.41 (1)
C- D	-4831 / 0	-78.0	-78.0	0.29 (1)	4.17	Q- D	-3503 / 0	0.59 (1)
D- E	-6366 / 0	-78.0	-78.0	0.37 (1)	3.63	D- O	0 / 3447	0.30 (1)
E- F	-6366 / 0	-78.0	-78.0	0.37 (1)	3.63	O- E	-367 / 0	0.06 (1)
F- G	-6366 / 0	-78.0	-78.0	0.37 (1)	3.63	O- G	0 / 282	0.02 (1)
G- H	-6240 / 0	-78.0	-78.0	0.37 (1)	3.67	N- G	-655 / 0	0.11 (1)
H- I	-7499 / 0	-78.0	-78.0	0.70 (1)	4.21	N- H	0 / 3805	0.34 (1)
I- J	0 / 52	-78.0	-78.0	0.06 (1)	10.00	L- H	0 / 2164	0.19 (1)
S- B	-5002 / 0	0.0	0.0	0.25 (1)	6.50	B- R	0 / 2899	0.26 (1)
K- I	-7981 / 0	0.0	0.0	0.40 (1)	5.33	L- I	0 / 4761	0.42 (1)
S- R	0 / 0	-18.5	-18.5	0.03 (4)	10.00			
R- Q	0 / 2716	-18.5	-18.5	0.21 (1)	10.00			
Q- T	0 / 4832	-18.5	-18.5	0.49 (1)	10.00			
T- P	0 / 4832	-576.2	-576.2	0.49 (1)	10.00			
P- O	0 / 4832	-576.2	-576.2	0.49 (1)	10.00			
O- N	0 / 6240	-576.2	-576.2	0.55 (1)	10.00			
N- M	0 / 4513	-576.2	-576.2	0.70 (1)	10.00			
M- L	0 / 4513	-576.2	-576.2	0.70 (1)	10.00			
L- K	0 / 0	-576.2	-576.2	0.51 (1)	10.00			

DESIGN CRITERIA

SPECIFIED LOADS:

TOP	CH.	LL =	21.0	PSF
		DL =	6.0	PSF
BOT	CH.	LL =	0.0	PSF
		DL =	7.4	PSF
TOTAL	LOAD	=	34.4	PSF

SPACING = 24.0 IN. C/C

LOADING IN FLAT SECTION BASED ON A SLOPE OF 2.00/12 MINIMUM

GIRDER TYPE: CStdGirder
START DISTANCE = 13-0-0
START SPAN CARRIED = 25-1-8
END DISTANCE = 32-10-0
END SPAN CARRIED = 25-1-8
END WALL WIDTH = 0-0
APPLIED TO FRONT SIDE OF BOTTOM CHORD.
- ADDT'L LOADS BASED ON 55 % OF GSL.

THIS TRUSS IS DESIGNED FOR RESIDENTIAL OR SMALL BUILDING REQUIREMENTS OF PART 9, NBCC 2015

THIS DESIGN COMPLIES WITH:
- PART 9 OF BCBC 2018 , ABC 2019
- PART 9 OF OBC 2012 (2019 AMENDMENT)
- CSA 086-14
- TPIC 2014

(55 % OF 23.0 P.S.F. G.S.L. PLUS 8.4 P.S.F. RAIN LOAD) EQUALS 21.0 P.S.F. SPECIFIED ROOF LIVE LOAD

ALLOWABLE DEFL.(LL)= L/360 (1.09")
CALCULATED VERT. DEFL.(LL) = L/ 999 (0.11")
ALLOWABLE DEFL.(TL)= L/360 (1.09")
CALCULATED VERT. DEFL.(TL) = L/ 999 (0.23")

CSI: TC=0.70/1.00 (H-I:1) , BC=0.70/1.00 (L-N:1) , WB=0.59/1.00 (D-Q:1) , SSI=0.70/1.00 (K-L:1)

DOL LUMBER=1.00 NAIL=1.00 LS BEND=1.00 COMP=1.00 SHEAR=1.00 TENS= 1.00

COMPANION LIVE LOAD FACTOR = 1.00

AUTOSOLVE HEELS OFF

TRUSS PLATE MANUFACTURER IS NOT RESPONSIBLE FOR QUALITY CONTROL IN THE TRUSS MANUFACTURING PLANT .

NAIL VALUES

PLATE	GRIP(DRY) (PSI) MAX	MIN	SHEAR (PLI) MAX	MIN	SECTION (PLI) MAX	MIN
MT20	650	371	1747	788	1987	1873

PLATE PLACEMENT TOL. = 0.250 inches

PLATE ROTATION TOL. = 5.0 Deg.

JSI GRIP= 0.89 (L) (INPUT = 0.90)
JSI METAL= 0.96 (P) (INPUT = 1.00)

CONTINUED ON PAGE 2

PLATES (table is in inches)

JT	TYPE	PLATES	W	LEN	Y	X
B	TMVW-t	MT20	5.0	8.0	2.00	2.00
C	TTWW-h	MT20	8.0	9.0	2.00	6.25
D	TMWW+t	MT20	4.0	6.0	3.00	1.75
E	TMW+w	MT20	2.0	4.0		
F	TS-t	MT20	3.0	6.0		
G	TMWW+t	MT20	4.0	6.0	3.00	1.75
H	TTWW-h	MT20	8.0	9.0	2.00	6.25
I	TMVW-t	MT20	5.0	8.0	2.00	2.00
K	BMV1+t	MT20	6.0	9.0	Edge	0.50
L	BMWW+t	MT20	5.0	8.0	4.25	1.75
M	BS-t	MT20	4.0	6.0		
N	BMWW+t	MT20	4.0	9.0		
O	BMWWW-t	MT20	7.0	8.0	4.00	4.00
P	BS-t	MT20	4.0	6.0		
Q	BMWW+t	MT20	4.0	9.0		
R	BMWW+t	MT20	5.0	8.0	4.25	1.75
S	BMV1+t	MT20	6.0	9.0	5.50	

Edge - INDICATES REFERENCE CORNER OF PLATE TOUCHES EDGE OF CHORD.

LATERAL BRACE(S) SHOWN SHALL BE 2X4 SPF#2

JOB NAME	TRUSS NAME	QUANTITY	PLY	JOB DESC.	DRWG NO.
318404	H21P		1	TRUSS DESC. JT 45147	E20035324

Alpa Roof Truss, Maple

Version 8.310 S Oct 29 2019 MiTek Industries, Inc. Tue Mar 24 15:04:50 2020 Page 1

ID:MF8iiriaTok7DlbpT4B71Xys4PG-JpfGWqxDfFBM9TqUPQkbKKV4149yde5j8UVCvhzXiEh

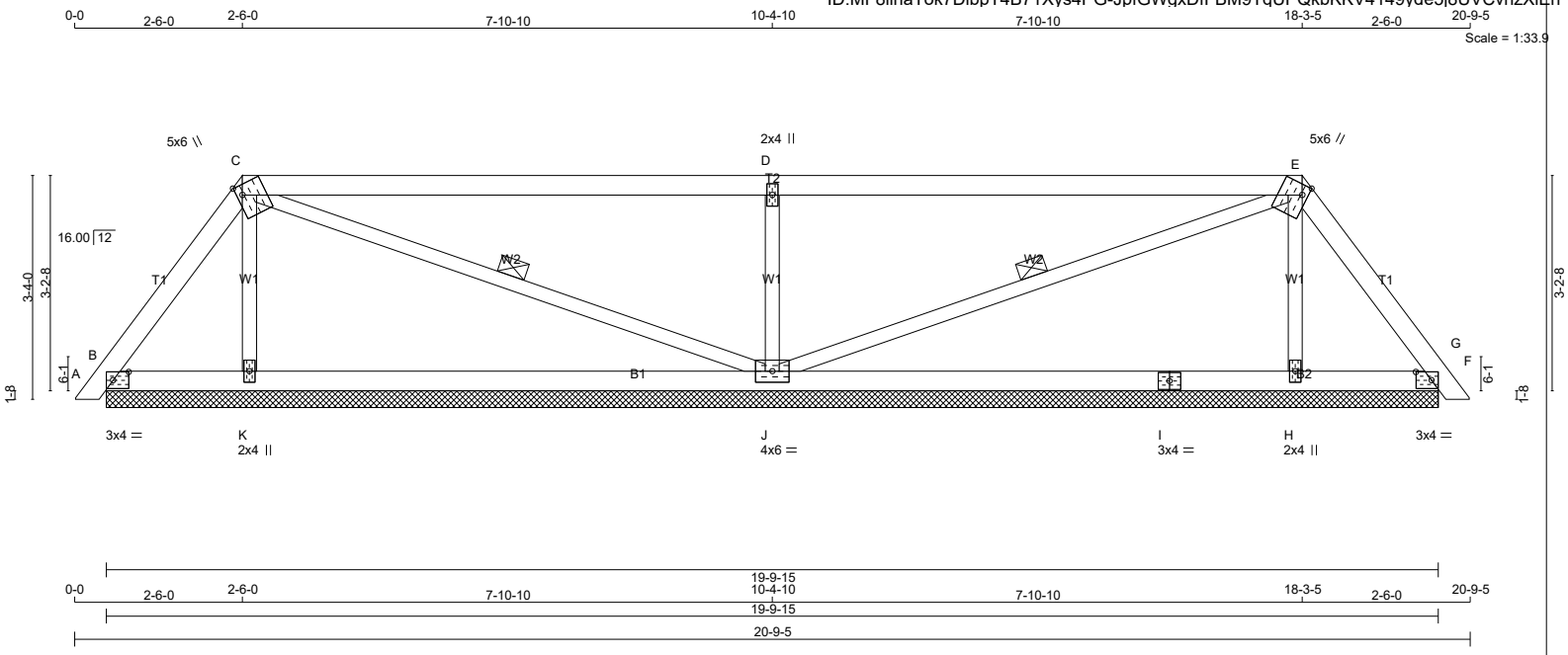

TOTAL WEIGHT = 2 X 70 = 139 lb

[M]

LUMBER

N. L. G. A. RULES

CHORDS	SIZE		LUMBER	DESCR.
A - C	2x4	DRY	No.2	SPF
C - E	2x4	DRY	No.2	SPF
E - G	2x4	DRY	No.2	SPF
B - I	2x4	DRY	No.2	SPF
I - F	2x4	DRY	No.2	SPF
ALL WEBS	2x3	DRY	No.2	SPF

DRY: SEASONED LUMBER.

PLATES (table is in inches)

JT	TYPE	PLATES	W	LEN	Y	X
B	TMB1-l	MT20	3.0	4.0	1.50	2.75
C	TTWW+m	MT20	5.0	6.0	1.75	1.00
D	TMW+w	MT20	2.0	4.0		
E	TTWW+m	MT20	5.0	6.0	1.75	1.00
F	TMB1-l	MT20	3.0	4.0	1.50	2.75
H	BMW1+w	MT20	2.0	4.0		
I	BS-t	MT20	3.0	4.0		
J	BMWWW1-t	MT20	4.0	6.0		
K	BMW1+w	MT20	2.0	4.0		

LATERAL BRACE(S) SHOWN SHALL BE 2X4 SPF#2

DIMENSIONS, SUPPORTS AND LOADINGS SPECIFIED BY FABRICATOR TO BE VERIFIED BY BUILDING DESIGNER

BEARINGS

JT	FACTORED GROSS REACTION VERT	HORZ	MAXIMUM FACTORED GROSS REACTION DOWN	HORZ	UPLIFT	INPUT BRG IN-SX	REQRD BRG IN-SX
B	173	0	173	0	0	19-9-15 (4-0-0)	2-0-4
K	339	0	339	0	0	19-9-15 (4-0-0)	2-0-4
J	944	0	944	0	0	19-9-15 (4-0-0)	2-0-4
H	339	0	339	0	0	19-9-15 (4-0-0)	2-0-4
F	173	0	173	0	0	19-9-15 (4-0-0)	2-0-4

VALUE IN PARENTHESIS INDICATES EFFECTIVE BEARING LENGTH

UNFACTORED REACTIONS

JT	1ST LCASE COMBINED	MAX./MIN. COMPONENT REACTIONS SNOW	LIVE	PERM.LIVE	WIND	DEAD	SOIL
B	118	101 / 0	0 / 0	0 / 0	0 / 0	18 / 0	0 / 0
K	247	117 / 0	0 / 0	0 / 0	0 / 0	130 / 0	0 / 0
J	670	426 / 0	0 / 0	0 / 0	0 / 0	244 / 0	0 / 0
H	247	117 / 0	0 / 0	0 / 0	0 / 0	130 / 0	0 / 0
F	118	101 / 0	0 / 0	0 / 0	0 / 0	18 / 0	0 / 0

BEARING MATERIAL TO BE SPF NO.2 OR BETTER AT JOINT(S) B, K, J, H, F

BRACING

TOP CHORD TO BE SHEATHED OR MAX. PURLIN SPACING = 6.25 FT.
MAX. UNBRACED BOTTOM CHORD LENGTH = 10.00 FT OR RIGID CEILING DIRECTLY APPLIED.

ALL PITCH BREAKS AND PERIMETER CORNER JOINTS MUST BE LATERALLY RESTRAINED.

1 LATERAL BRACE(S) AT 1/ 2 LENGTH OF C-J, E-J.

LOADING

TOTAL LOAD CASES: (4)

CHORDS

MEMB. FR-TO	MAX. FACTORED FORCE (LBS)	FACTORED VERT. LOAD (PLF) FROM	TO	LC1	MAX CSI (LC)	MAX. UNBRAC LENGTH
A- B	0 / 10	-78.0	-78.0	0.01 (1)	10.00	
B- C	-98 / 0	-78.0	-78.0	0.05 (1)	6.25	
C- D	-16 / 0	-78.0	-78.0	0.83 (1)	6.25	
D- E	-16 / 0	-78.0	-78.0	0.83 (1)	6.25	
E- F	-98 / 0	-78.0	-78.0	0.05 (1)	6.25	
F- G	0 / 10	-78.0	-78.0	0.01 (1)	10.00	
B- K	0 / 57	-18.5	-18.5	0.17 (4)	10.00	
K- J	0 / 49	-18.5	-18.5	0.25 (4)	10.00	
J- I	0 / 49	-18.5	-18.5	0.25 (4)	10.00	
I- H	0 / 49	-18.5	-18.5	0.25 (4)	10.00	
H- F	0 / 57	-18.5	-18.5	0.17 (4)	10.00	

WEBS

MEMB. FR-TO	MAX. FACTORED FORCE (LBS)	MAX CSI (LC)
K- C	-218 / 0	0.04 (1)
C- J	-34 / 0	0.02 (1)
J- D	-768 / 0	0.14 (1)
J- E	-34 / 0	0.02 (1)
H- E	-218 / 0	0.04 (1)

DESIGN CRITERIA

SPECIFIED LOADS:

TOP	CH.	LL =	21.0	PSF
		DL =	6.0	PSF
BOT	CH.	LL =	0.0	PSF
		DL =	7.4	PSF
TOTAL	LOAD	=	34.4	PSF

SPACING = 24.0 IN. C/C

LOADING IN FLAT SECTION BASED ON A SLOPE OF 2.00/12 MINIMUM

THIS TRUSS IS DESIGNED FOR RESIDENTIAL OR SMALL BUILDING REQUIREMENTS OF PART 9, NBCC 2015

THIS DESIGN COMPLIES WITH:
- PART 9 OF BCBC 2018 , ABC 2019
- PART 9 OF OBC 2012 (2019 AMENDMENT)
- CSA 086-14
- TPIC 2014

(55 % OF 23.0 P.S.F. G.S.L. PLUS 8.4 P.S.F. RAIN LOAD) EQUALS 21.0 P.S.F. SPECIFIED ROOF LIVE LOAD

CSI: TC=0.83/1.00 (D-E:1) , BC=0.25/1.00 (H-J:4) , WB=0.14/1.00 (D-J:1) , SSI=0.30/1.00 (C-D:1)

DOL LUMBER=1.00 NAIL=1.00 LS BEND=1.10 COMP=1.10 SHEAR=1.10 TENS= 1.10

COMPANION LIVE LOAD FACTOR = 1.00

TRUSS PLATE MANUFACTURER IS NOT RESPONSIBLE FOR QUALITY CONTROL IN THE TRUSS MANUFACTURING PLANT .

NAIL VALUES

PLATE	GRIP(DRY) (PSI) MAX	MIN	SHEAR (PLI) MAX	MIN	SECTION (PLI) MAX	MIN
MT20	650	371	1747	788	1987	1873

PLATE PLACEMENT TOL. = 0.250 inches

PLATE ROTATION TOL. = 5.0 Deg.

JSI GRIP= 0.88 (J) (INPUT = 0.90)
JSI METAL= 0.16 (D) (INPUT = 1.00)

JOB NAME	TRUSS NAME	QUANTITY	PLY	JOB DESC.	DRWG NO.
318404	H22P		1	TRUSS DESC. JT 45147	E20035325

Alpa Roof Truss, Maple

Version 8.310 S Oct 29 2019 MiTek Industries, Inc. Tue Mar 24 15:04:51 2020 Page 1

ID:MF8iiriaTok7DlbpT4B71Xys4PG-o0Cfk0yrQZKDndPqz8FqtX1laTWIM44sN8EmR7zXiEg

Scale = 1:34.1

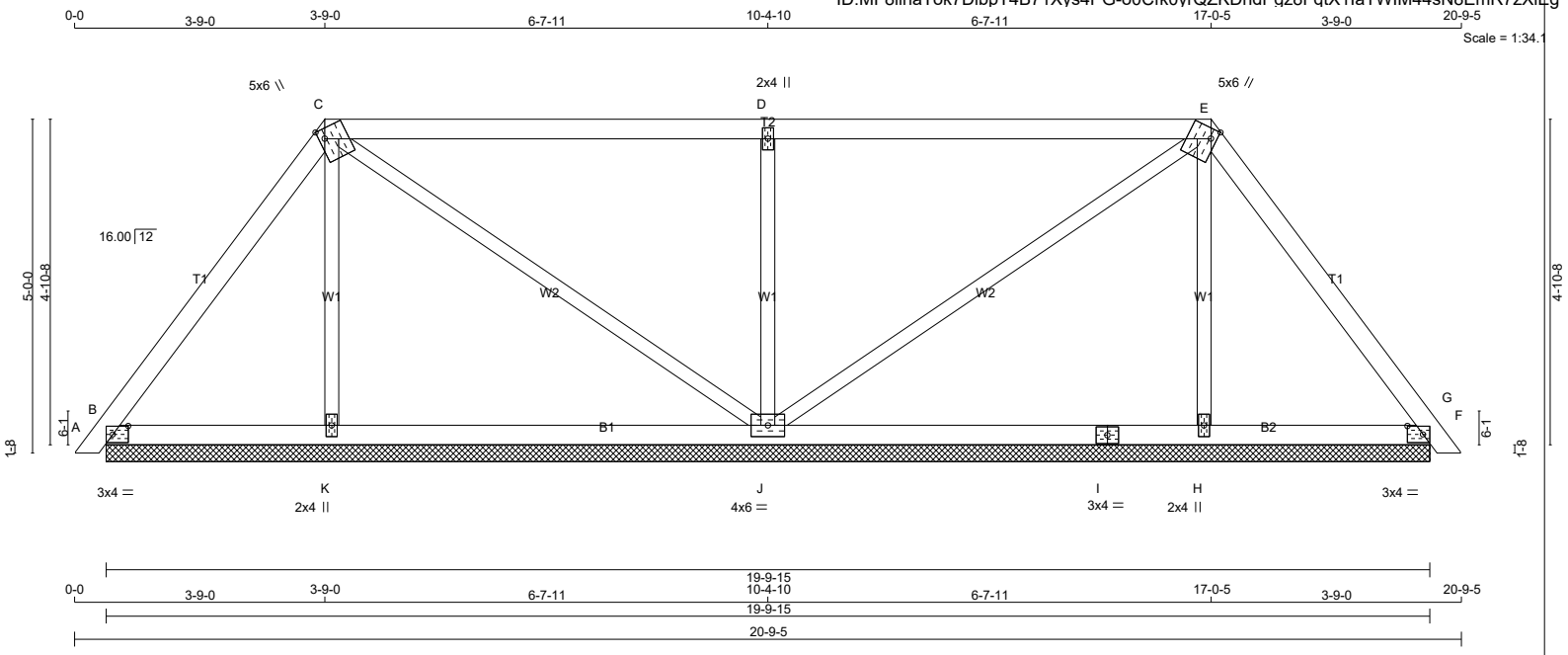

TOTAL WEIGHT = 2 X 75 = 150 lb

[M]

LUMBER

N. L. G. A. RULES

CHORDS	SIZE		LUMBER	DESCR.
A - C	2x4	DRY	No.2	SPF
C - E	2x4	DRY	No.2	SPF
E - G	2x4	DRY	No.2	SPF
B - I	2x4	DRY	No.2	SPF
I - F	2x4	DRY	No.2	SPF
ALL WEBS	2x3	DRY	No.2	SPF

DRY: SEASONED LUMBER.

PLATES (table is in inches)

JT	TYPE	PLATES	W	LEN	Y	X
B	TMB1-I	MT20	3.0	4.0	1.50	2.75
C	TTWW+m	MT20	5.0	6.0	1.75	1.00
D	TMW+w	MT20	2.0	4.0		
E	TTWW+m	MT20	5.0	6.0	1.75	1.00
F	TMB1-I	MT20	3.0	4.0	1.50	2.75
H	BMW1+w	MT20	2.0	4.0		
I	BS-t	MT20	3.0	4.0		
J	BMWWW1-t	MT20	4.0	6.0		
K	BMW1+w	MT20	2.0	4.0		

LATERAL BRACE(S) SHOWN SHALL BE 2X4 SPF#2

DIMENSIONS, SUPPORTS AND LOADINGS SPECIFIED BY FABRICATOR TO BE VERIFIED BY BUILDING DESIGNER

BEARINGS

JT	FACTORED GROSS REACTION VERT	HORZ	MAXIMUM FACTORED GROSS REACTION DOWN	HORZ	UPLIFT	INPUT BRG IN-SX	REQRD BRG IN-SX
B	262	0	262	0	0	19-9-15 (4-9-15)	1-3-11
K	299	0	299	0	0	19-9-15 (4-9-15)	1-3-11
J	847	0	847	0	0	19-9-15 (4-9-15)	1-3-11
H	299	0	299	0	0	19-9-15 (4-9-15)	1-3-11
F	262	0	262	0	0	19-9-15 (4-9-15)	1-3-11

VALUE IN PARENTHESIS INDICATES EFFECTIVE BEARING LENGTH

UNFACTORED REACTIONS

JT	1ST LCASE COMBINED	MAX./MIN. COMPONENT REACTIONS SNOW	LIVE	PERM.LIVE	WIND	DEAD	SOIL
B	183	132 / 0	0 / 0	0 / 0	0 / 0	51 / 0	0 / 0
K	218	105 / 0	0 / 0	0 / 0	0 / 0	112 / 0	0 / 0
J	600	387 / 0	0 / 0	0 / 0	0 / 0	213 / 0	0 / 0
H	218	105 / 0	0 / 0	0 / 0	0 / 0	112 / 0	0 / 0
F	183	132 / 0	0 / 0	0 / 0	0 / 0	51 / 0	0 / 0

BEARING MATERIAL TO BE SPF NO.2 OR BETTER AT JOINT(S) B, K, J, H, F

BRACING

TOP CHORD TO BE SHEATHED OR MAX. PURLIN SPACING = 6.25 FT.
MAX. UNBRACED BOTTOM CHORD LENGTH = 10.00 FT OR RIGID CEILING DIRECTLY APPLIED.

ALL PITCH BREAKS AND PERIMETER CORNER JOINTS MUST BE LATERALLY RESTRAINED.

LOADING

TOTAL LOAD CASES: (4)

CHORDS

MEMB. FR-TO	MAX. FORCE (LBS)	FACTORED VERT. LOAD (PLF) FROM	TO	LC1	MAX CSI (LC)	MAX. UNBRAC LENGTH
A- B	0 / 10	-78.0	-78.0	0.01 (1)	10.00	
B- C	-111 / 0	-78.0	-78.0	0.14 (1)	6.25	
C- D	-7 / 0	-78.0	-78.0	0.58 (1)	10.00	
D- E	-7 / 0	-78.0	-78.0	0.58 (1)	10.00	
E- F	-111 / 0	-78.0	-78.0	0.14 (1)	6.25	
F- G	0 / 10	-78.0	-78.0	0.01 (1)	10.00	
B- K	0 / 65	-18.5	-18.5	0.12 (4)	10.00	
K- J	0 / 61	-18.5	-18.5	0.18 (4)	10.00	
J- I	0 / 61	-18.5	-18.5	0.18 (4)	10.00	
I- H	0 / 61	-18.5	-18.5	0.18 (4)	10.00	
H- F	0 / 65	-18.5	-18.5	0.12 (4)	10.00	

WEBS

MEMB. FR-TO	MAX. FORCE (LBS)	MAX CSI (LC)
K- C	-196 / 0	0.07 (1)
C- J	-64 / 0	0.08 (1)
J- D	-646 / 0	0.23 (1)
J- E	-64 / 0	0.08 (1)
H- E	-196 / 0	0.07 (1)

DESIGN CRITERIA

SPECIFIED LOADS:

TOP CH.	LL	=	21.0	PSF
	DL	=	6.0	PSF
BOT CH.	LL	=	0.0	PSF
	DL	=	7.4	PSF
TOTAL LOAD		=	34.4	PSF

SPACING = 24.0 IN. C/C

LOADING IN FLAT SECTION BASED ON A SLOPE OF 2.00/12 MINIMUM

THIS TRUSS IS DESIGNED FOR RESIDENTIAL OR SMALL BUILDING REQUIREMENTS OF PART 9, NBCC 2015

THIS DESIGN COMPLIES WITH:
- PART 9 OF BCBC 2018 , ABC 2019
- PART 9 OF OBC 2012 (2019 AMENDMENT)
- CSA 086-14
- TPIC 2014

(55 % OF 23.0 P.S.F. G.S.L. PLUS 8.4 P.S.F. RAIN LOAD) EQUALS 21.0 P.S.F. SPECIFIED ROOF LIVE LOAD

CSI: TC=0.58/1.00 (C-D:1) , BC=0.18/1.00 (H-J:4) , WB=0.23/1.00 (D-J:1) , SSI=0.25/1.00 (C-D:1)

DOL LUMBER=1.00 NAIL=1.00 LS BEND=1.10 COMP=1.10 SHEAR=1.10 TENS= 1.10

COMPANION LIVE LOAD FACTOR = 1.00

TRUSS PLATE MANUFACTURER IS NOT RESPONSIBLE FOR QUALITY CONTROL IN THE TRUSS MANUFACTURING PLANT .

NAIL VALUES

PLATE	GRIP(DRY) (PSI) MAX	MIN	SHEAR (PLI) MAX	MIN	SECTION (PLI) MAX	MIN
MT20	650	371	1747	788	1987	1873

PLATE PLACEMENT TOL. = 0.250 inches

PLATE ROTATION TOL. = 5.0 Deg.

JSI GRIP= 0.64 (J) (INPUT = 0.90)
JSI METAL= 0.14 (D) (INPUT = 1.00)

JOB NAME	TRUSS NAME	QUANTITY	PLY	JOB DESC.	DRWG NO.
318404	H23P		1	TRUSS DESC. JT 45147	E20035326

Alpa Roof Truss, Maple

Version 8.310 S Oct 29 2019 MiTek Industries, Inc. Tue Mar 24 15:04:52 2020 Page 1

ID:MF8iiriaTok7DlbpT4B71Xys4PG-GCm1xMzUBsS4Pn tXrm3PlaaYtt45a?0co JzZzXiEf

Scale = 1:34.0

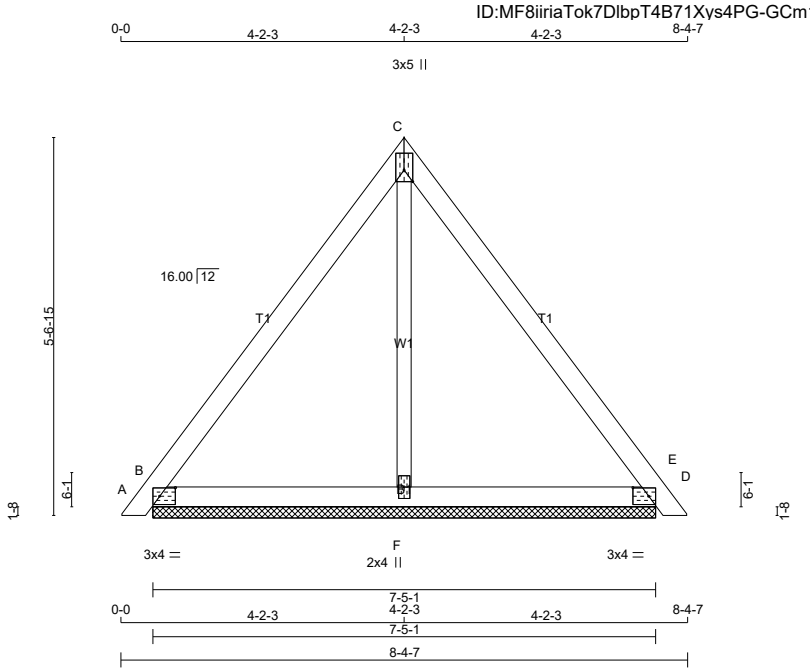

TOTAL WEIGHT = 4 X 28 = 113 lb

LUMBER

N. L. G. A. RULES

CHORDS	SIZE		LUMBER	DESCR.
A - C	2x4	DRY	No.2	SPF
C - E	2x4	DRY	No.2	SPF
B - D	2x4	DRY	No.2	SPF
ALL WEBS	2x3	DRY	No.2	SPF

DRY: SEASONED LUMBER.

PLATES (table is in inches)

JT	TYPE	PLATES	W	LEN	Y	X
B	TMB1-I	MT20	3.0	4.0	1.50	2.75
C	TTW+p	MT20	3.0	5.0	2.00	Edge
D	TMB1-I	MT20	3.0	4.0	1.50	2.75
F	BMW1+w	MT20	2.0	4.0		

Edge - INDICATES REFERENCE CORNER OF PLATE TOUCHES EDGE OF CHORD.

LATERAL BRACE(S) SHOWN SHALL BE 2X4 SPF#2

DIMENSIONS, SUPPORTS AND LOADINGS SPECIFIED BY FABRICATOR TO BE VERIFIED BY BUILDING DESIGNER

BEARINGS

JT	FACTORED GROSS REACTION VERT	HORZ	MAXIMUM FACTORED GROSS REACTION DOWN	HORZ	UPLIFT	INPUT BRG IN-SX	REQRD BRG IN-SX
B	277	0	277	0	0	7-5-1	7-4
D	277	0	277	0	0	7-5-1	7-4
F	216	0	216	0	0	7-5-1	7-4

UNFACTORED REACTIONS

JT	1ST LCASE COMBINED	MAX./MIN. COMPONENT REACTIONS SNOW	LIVE	PERM.LIVE	WIND	DEAD	SOIL
B	195	135 / 0	0 / 0	0 / 0	0 / 0	59 / 0	0 / 0
D	195	135 / 0	0 / 0	0 / 0	0 / 0	59 / 0	0 / 0
F	159	70 / 0	0 / 0	0 / 0	0 / 0	89 / 0	0 / 0

BEARING MATERIAL TO BE SPF NO.2 OR BETTER AT JOINT(S) B, D, F

BRACING

TOP CHORD TO BE SHEATHED OR MAX. PURLIN SPACING = 6.25 FT.
MAX. UNBRACED BOTTOM CHORD LENGTH = 10.00 FT OR RIGID CEILING DIRECTLY APPLIED.

ALL PITCH BREAKS AND PERIMETER CORNER JOINTS MUST BE LATERALLY RESTRAINED.

LOADING

TOTAL LOAD CASES: (4)

CHORDS

MEMB. FR-TO	MAX. FACTORED FORCE (LBS)	FACTORED VERT. LOAD LC1 (PLF) FROM	TO	MAX CSI (LC)	MAX. UNBRAC LENGTH
A- B	0 / 10	-78.0	-78.0	0.01 (1)	10.00
B- C	-98 / 0	-78.0	-78.0	0.18 (1)	6.25
C- D	-98 / 0	-78.0	-78.0	0.18 (1)	6.25
D- E	0 / 10	-78.0	-78.0	0.01 (1)	10.00
B- F	0 / 58	-18.5	-18.5	0.08 (4)	10.00
F- D	0 / 58	-18.5	-18.5	0.08 (4)	10.00

WEBS

MEMB. FR-TO	MAX. FACTORED FORCE (LBS)	MAX CSI (LC)
F- C	-130 / 0	0.05 (1)

DESIGN CRITERIA [M]

SPECIFIED LOADS:

TOP CH.	LL	=	21.0	PSF
	DL	=	6.0	PSF
BOT CH.	LL	=	0.0	PSF
	DL	=	7.4	PSF
TOTAL LOAD		=	34.4	PSF

SPACING = 24.0 IN. C/C

THIS TRUSS IS DESIGNED FOR RESIDENTIAL OR SMALL BUILDING REQUIREMENTS OF PART 9, NBCC 2015

THIS DESIGN COMPLIES WITH:
- PART 9 OF BCBC 2018 , ABC 2019
- PART 9 OF OBC 2012 (2019 AMENDMENT)
- CSA 086-14
- TPIC 2014

(55 % OF 23.0 P.S.F. G.S.L. PLUS 8.4 P.S.F. RAIN LOAD) EQUALS 21.0 P.S.F. SPECIFIED ROOF LIVE LOAD

CSI: TC=0.18/1.00 (B-C:1) , BC=0.08/1.00 (B-F:4) , WB=0.05/1.00 (C-F:1) , SSI=0.07/1.00 (B-C:1)

DOL LUMBER=1.00 NAIL=1.00 LS BEND=1.10 COMP=1.10 SHEAR=1.10 TENS= 1.10

COMPANION LIVE LOAD FACTOR = 1.00

TRUSS PLATE MANUFACTURER IS NOT RESPONSIBLE FOR QUALITY CONTROL IN THE TRUSS MANUFACTURING PLANT .

NAIL VALUES

PLATE	GRIP(DRY) (PSI) MAX	MIN	SHEAR (PLI) MAX	MIN	SECTION (PLI) MAX	MIN
MT20	650	371	1747	788	1987	1873

PLATE PLACEMENT TOL. = 0.250 inches

PLATE ROTATION TOL. = 5.0 Deg.

JSI GRIP= 0.31 (D) (INPUT = 0.90)
JSI METAL= 0.12 (D) (INPUT = 1.00)

JOB NAME	TRUSS NAME	QUANTITY	PLY	JOB DESC.	DRWG NO.
318404	H24T		1	TRUSS DESC. JT 45147	E20035327

Alpa Roof Truss, Maple

Version 8.310 S Oct 29 2019 MiTek Industries, Inc. Tue Mar 24 15:04:54 2020 Page 1

ID:MF8iiriaTok7DlbpT4B71Xys4PG-kOKP9iz6yAax0xY35YIIyy6i5HB7qxc9rSjsW?zXiEe

Scale = 1:70.8

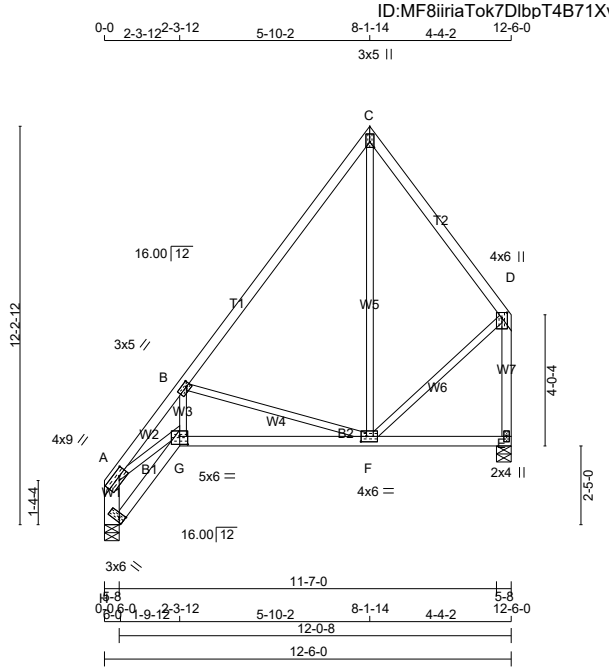

TOTAL WEIGHT = 2 X 67 = 133 lb

LUMBER

N. L. G. A. RULES

CHORDS	SIZE		LUMBER	DESCR.
A - C	2x4	DRY	No.2	SPF
C - D	2x4	DRY	No.2	SPF
H - A	2x6	DRY	No.2	SPF
E - D	2x4	DRY	No.2	SPF
H - G	2x4	DRY	No.2	SPF
G - E	2x4	DRY	No.2	SPF
ALL WEBS EXCEPT	2x3	DRY	No.2	SPF

DRY: SEASONED LUMBER.

PLATES (table is in inches)

JT	TYPE	PLATES	W	LEN	Y	X
A	TMVW-t	MT20	4.0	9.0	2.00	3.00
B	TMWW-t	MT20	3.0	5.0	1.50	1.50
C	TTW+p	MT20	3.0	5.0	2.00	Edge
D	TMVW+p	MT20	4.0	6.0	2.00	2.00
E	BMV1+p	MT20	2.0	4.0		
F	BMWWW-t	MT20	4.0	6.0	2.00	2.00
G	BBWW-l	MT20	5.0	6.0	3.00	3.00
H	BVM1+l	MT20	3.0	6.0	Edge	

Edge - INDICATES REFERENCE CORNER OF PLATE TOUCHES EDGE OF CHORD.

LATERAL BRACE(S) SHOWN SHALL BE 2X4 SPF#2

DIMENSIONS, SUPPORTS AND LOADINGS SPECIFIED BY FABRICATOR TO BE VERIFIED BY BUILDING DESIGNER

BEARINGS

JT	FACTORED GROSS REACTION VERT	HORZ	MAXIMUM FACTORED GROSS REACTION DOWN	HORZ	UPLIFT	INPUT BRG IN-SX	REQRD BRG IN-SX
H	603	0	603	0	0	5-8	5-8
E	603	0	603	0	0	5-8	1-8

UNFACTORED REACTIONS

JT	1ST LCASE COMBINED	MAX./MIN. COMPONENT REACTIONS SNOW	LIVE	PERM.LIVE	WIND	DEAD	SOIL
H	430	262 / 0	0 / 0	0 / 0	0 / 0	167 / 0	0 / 0
E	430	262 / 0	0 / 0	0 / 0	0 / 0	168 / 0	0 / 0

BEARING MATERIAL TO BE SPF NO.2 OR BETTER AT JOINT(S) H, E
BEARING SIZE FACTOR = 1.15 AT JNT(S) H (BASED ON SUPPORT DEPTH = 1-8)

BRACING

TOP CHORD TO BE SHEATHED OR MAX. PURLIN SPACING = 5.33 FT.
MAX. UNBRACED BOTTOM CHORD LENGTH = 10.00 FT OR RIGID CEILING DIRECTLY APPLIED.

ALL PITCH BREAKS AND PERIMETER CORNER JOINTS MUST BE LATERALLY RESTRAINED.

LOADING

TOTAL LOAD CASES: (4)

CHORDS

MEMB. FR-TO	MAX. FACTORED FORCE (LBS)	FACTORED VERT. LOAD LC1 (PLF) FROM	TO	MAX CSI (LC)	MAX. UNBRAC LENGTH
A- B	-1334 / 0	-78.0	-78.0	0.25 (1)	5.33
B- C	-344 / 0	-78.0	-78.0	0.33 (1)	6.25
C- D	-313 / 0	-78.0	-78.0	0.19 (1)	6.25
H- A	-582 / 0	0.0	0.0	0.04 (1)	7.81
E- D	-577 / 0	0.0	0.0	0.16 (1)	7.81
H- G	0 / 0	-18.5	-18.5	0.03 (4)	10.00
G- F	0 / 807	-18.5	-18.5	0.22 (4)	10.00
F- E	0 / 0	-18.5	-18.5	0.15 (4)	10.00

WEBS

MEMB. FR-TO	MAX. FACTORED FORCE (LBS)	MAX CSI (LC)
G- B	0 / 620	0.14 (1)
B- F	-648 / 0	0.41 (1)
F- C	0 / 146	0.05 (4)
F- D	0 / 245	0.06 (1)
A- G	0 / 1006	0.23 (1)

[M][F]

DESIGN CRITERIA

SPECIFIED LOADS:

TOP CH.	LL	=	21.0	PSF
	DL	=	6.0	PSF
BOT CH.	LL	=	0.0	PSF
	DL	=	7.4	PSF
TOTAL LOAD		=	34.4	PSF

SPACING = 24.0 IN. C/C

THIS TRUSS IS DESIGNED FOR RESIDENTIAL OR SMALL BUILDING REQUIREMENTS OF PART 9, NBCC 2015

THIS DESIGN COMPLIES WITH:
- PART 9 OF BCBC 2018 , ABC 2019
- PART 9 OF OBC 2012 (2019 AMENDMENT)
- CSA 086-14
- TPIC 2014

(55 % OF 23.0 P.S.F. G.S.L. PLUS 8.4 P.S.F. RAIN LOAD) EQUALS 21.0 P.S.F. SPECIFIED ROOF LIVE LOAD

ALLOWABLE DEFL.(LL)= L/360 (0.42")
CALCULATED VERT. DEFL.(LL) = L/ 999 (0.02")
ALLOWABLE DEFL.(TL)= L/360 (0.42")
CALCULATED VERT. DEFL.(TL) = L/ 999 (0.07")

CSI: TC=0.33/1.00 (B-C:1) , BC=0.22/1.00 (F-G:4) , WB=0.41/1.00 (B-F:1) , SSI=0.12/1.00 (B-C:1)

DOL LUMBER=1.00 NAIL=1.00 LS BEND=1.10 COMP=1.10 SHEAR=1.10 TENS= 1.10

COMPANION LIVE LOAD FACTOR = 1.00

AUTOSOLVE RIGHT HEEL ONLY

TRUSS PLATE MANUFACTURER IS NOT RESPONSIBLE FOR QUALITY CONTROL IN THE TRUSS MANUFACTURING PLANT .

NAIL VALUES

PLATE	GRIP(DRY) (PSI) MAX	MIN	SHEAR (PLI) MAX	MIN	SECTION (PLI) MAX	MIN
MT20	650	371	1747	788	1987	1873

PLATE PLACEMENT TOL. = 0.250 inches

PLATE ROTATION TOL. = 5.0 Deg.

JSI GRIP= 0.80 (F) (INPUT = 0.90)
JSI METAL= 0.42 (G) (INPUT = 1.00)

JOB NAME	TRUSS NAME	QUANTITY	PLY	JOB DESC.	DRWG NO.
318404	H25T		1	TRUSS DESC. JT 45147	E20035328

Alpa Roof Truss, Maple

Version 8.310 S Oct 29 2019 MiTek Industries, Inc. Tue Mar 24 15:04:55 2020 Page 1

ID:MF8iiriaTok7DlbpT4B71Xys4PG-gnS9aO?MUnqfGFiRCzKm1NC3c5trIsVSlICzauzXiEc

Scale = 1:101.7

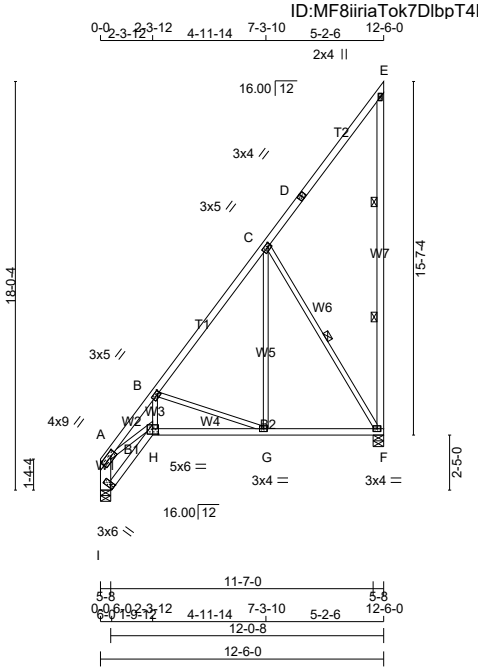

TOTAL WEIGHT = 5 X 81 = 404 lb

LUMBER

N. L. G. A. RULES

CHORDS	SIZE		LUMBER	DESCR.
A - D	2x4	DRY	No.2	SPF
D - E	2x4	DRY	No.2	SPF
F - E	2x4	DRY	No.2	SPF
I - A	2x6	DRY	No.2	SPF
I - H	2x4	DRY	No.2	SPF
H - F	2x4	DRY	No.2	SPF
ALL WEBS EXCEPT	2x3	DRY	No.2	SPF

DRY: SEASONED LUMBER.

PLATES (table is in inches)

JT	TYPE	PLATES	W	LEN	Y	X
A	TMVW-t	MT20	4.0	9.0	2.00	3.00
B	TMWW-t	MT20	3.0	5.0	1.50	1.50
C	TMWW-t	MT20	3.0	5.0	1.50	1.50
D	TS-t	MT20	3.0	4.0		
E	TMV+p	MT20	2.0	4.0		
F	BMVW1-t	MT20	3.0	4.0		
G	BMWW-t	MT20	3.0	4.0		
H	BBWW-l	MT20	5.0	6.0	3.00	3.00
I	BVM1+l	MT20	3.0	6.0	Edge	

Edge - INDICATES REFERENCE CORNER OF PLATE TOUCHES EDGE OF CHORD.

LATERAL BRACE(S) SHOWN SHALL BE 2X4 SPF#2

DIMENSIONS, SUPPORTS AND LOADINGS SPECIFIED BY FABRICATOR TO BE VERIFIED BY BUILDING DESIGNER

BEARINGS

JT	FACTORED GROSS REACTION VERT	HORZ	MAXIMUM FACTORED GROSS REACTION DOWN	HORZ	UPLIFT	INPUT BRG IN-SX	REQRD BRG IN-SX
F	603	0	603	0	0	5-8	1-8
I	603	0	603	0	0	5-8	5-8

UNFACTORED REACTIONS

JT	1ST LCASE COMBINED	MAX./MIN. COMPONENT REACTIONS SNOW	LIVE	PERM.LIVE	WIND	DEAD	SOIL
F	430	262 / 0	0 / 0	0 / 0	0 / 0	168 / 0	0 / 0
I	430	262 / 0	0 / 0	0 / 0	0 / 0	168 / 0	0 / 0

BEARING MATERIAL TO BE SPF NO.2 OR BETTER AT JOINT(S) F, I
BEARING SIZE FACTOR = 1.15 AT JNT(S) I (BASED ON SUPPORT DEPTH = 1-8)

BRACING

TOP CHORD TO BE SHEATHED OR MAX. PURLIN SPACING = 5.68 FT.
MAX. UNBRACED BOTTOM CHORD LENGTH = 10.00 FT OR RIGID CEILING DIRECTLY APPLIED.

ALL PITCH BREAKS AND PERIMETER CORNER JOINTS MUST BE LATERALLY RESTRAINED.

2 LATERAL BRACE(S) AT 1/ 3 LENGTH OF E-F.
1 LATERAL BRACE(S) AT 1/ 2 LENGTH OF C-F.

END VERTICAL(S) MUST BE SHEATHED OR HAVE BRACES AS INDICATED IN THE MAX. UNBRACED LENGTH COLUMN OF THE TABLE BELOW

LOADING

TOTAL LOAD CASES: (4)

CHORDS

MEMB. FR-TO	MAX. FACTORED FORCE (LBS)	FACTORED VERT. LOAD LC1 (PLF) FROM	TO	MAX CSI (LC)	MAX. UNBRAC LENGTH
A- B	-1237 / 0	-78.0	-78.0	0.10 (1)	5.68
B- C	-400 / 0	-78.0	-78.0	0.25 (1)	6.25
C- D	-35 / 0	-78.0	-78.0	0.26 (1)	6.25
D- E	-35 / 0	-78.0	-78.0	0.26 (1)	6.25
F- E	-159 / 0	0.0	0.0	0.09 (1)	6.25
I- A	-582 / 0	0.0	0.0	0.04 (1)	7.81
I- H	0 / 0	-18.5	-18.5	0.03 (4)	10.00
H- G	0 / 724	-18.5	-18.5	0.20 (4)	10.00
G- F	0 / 255	-18.5	-18.5	0.16 (4)	10.00

WEBS

MEMB. FR-TO	MAX. FACTORED FORCE (LBS)	MAX CSI (LC)
H- B	0 / 556	0.13 (1)
G- C	-499 / 0	0.23 (1)
C- F	0 / 279	0.07 (4)
A- H	-480 / 0	0.33 (1)
	0 / 903	0.20 (1)

[M][F]

DESIGN CRITERIA

SPECIFIED LOADS:

TOP CH.	LL	=	21.0	PSF
	DL	=	6.0	PSF
BOT CH.	LL	=	0.0	PSF
	DL	=	7.4	PSF
TOTAL LOAD		=	34.4	PSF

SPACING = 24.0 IN. C/C

THIS TRUSS IS DESIGNED FOR RESIDENTIAL OR SMALL BUILDING REQUIREMENTS OF PART 9, NBCC 2015

THIS DESIGN COMPLIES WITH:
- PART 9 OF BCBC 2018 , ABC 2019
- PART 9 OF OBC 2012 (2019 AMENDMENT)
- CSA 086-14
- TPIC 2014

(55 % OF 23.0 P.S.F. G.S.L. PLUS 8.4 P.S.F. RAIN LOAD) EQUALS 21.0 P.S.F. SPECIFIED ROOF LIVE LOAD

ALLOWABLE DEFL.(LL)= L/360 (0.42")
CALCULATED VERT. DEFL.(LL) = L/ 999 (0.02")
ALLOWABLE DEFL.(TL)= L/360 (0.42")
CALCULATED VERT. DEFL.(TL) = L/ 999 (0.05")

CSI: TC=0.26/1.00 (C-E:1) , BC=0.20/1.00 (G-H:4) , WB=0.33/1.00 (C-F:1) , SSI=0.12/1.00 (C-E:1)

DOL LUMBER=1.00 NAIL=1.00 LS BEND=1.10 COMP=1.10 SHEAR=1.10 TENS= 1.10

COMPANION LIVE LOAD FACTOR = 1.00

AUTOSOLVE RIGHT HEEL ONLY

TRUSS PLATE MANUFACTURER IS NOT RESPONSIBLE FOR QUALITY CONTROL IN THE TRUSS MANUFACTURING PLANT .

NAIL VALUES

PLATE	GRIP(DRY) (PSI) MAX	MIN	SHEAR (PLI) MAX	MIN	SECTION (PLI) MAX	MIN
MT20	650	371	1747	788	1987	1873

PLATE PLACEMENT TOL. = 0.250 inches

PLATE ROTATION TOL. = 5.0 Deg.

JSI GRIP= 0.67 (G) (INPUT = 0.90)
JSI METAL= 0.38 (H) (INPUT = 1.00)

JOB NAME	TRUSS NAME	QUANTITY	PLY	JOB DESC.	DRWG NO.
318404	H26		1	TRUSS DESC. JT 45147	E20035329

Alpa Roof Truss, Maple

Version 8.310 S Oct 29 2019 MiTek Industries, Inc. Tue Mar 24 15:04:56 2020 Page 1

ID:MF8iiriaTok7DlbpT4B71Xys4PG-8z0Ynk0_E5yWtOHemhr?abkCzUC61LFbXPyX6LzXiEb

Scale = 1:35.3

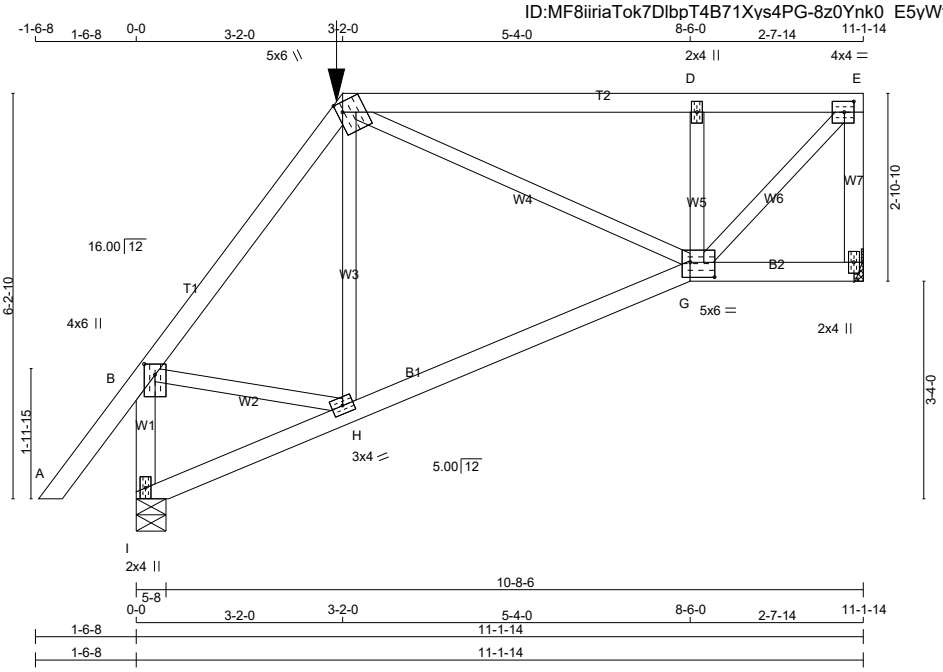

TOTAL WEIGHT = 51 lb

[M]

LUMBER

N. L. G. A. RULES

CHORDS	SIZE		LUMBER	DESCR.
A - C	2x4	DRY	No.2	SPF
C - E	2x4	DRY	No.2	SPF
F - E	2x4	DRY	No.2	SPF
I - B	2x4	DRY	No.2	SPF
I - G	2x4	DRY	No.2	SPF
G - F	2x4	DRY	No.2	SPF
ALL WEBS EXCEPT	2x3	DRY	No.2	SPF

DRY: SEASONED LUMBER.

PLATES (table is in inches)

JT	TYPE	PLATES	W	LEN	Y	X
B	TMVW+p	MT20	4.0	6.0	2.00	2.00
C	TTWW+m	MT20	5.0	6.0	1.75	1.00
D	TMW+w	MT20	2.0	4.0		
E	TMVW-t	MT20	4.0	4.0	2.00	1.75
F	BMV1+p	MT20	2.0	4.0		
G	BBWWW-p	MT20	5.0	6.0	2.75	4.50
H	BMWW-t	MT20	3.0	4.0		
I	BMV1+p	MT20	2.0	4.0		

LATERAL BRACE(S) SHOWN SHALL BE 2X4 SPF#2

DIMENSIONS, SUPPORTS AND LOADINGS SPECIFIED BY FABRICATOR TO BE VERIFIED BY BUILDING DESIGNER

BEARINGS

JT	FACTORED GROSS REACTION VERT	HORZ	MAXIMUM FACTORED GROSS REACTION DOWN	HORZ	UPLIFT	INPUT BRG IN-SX	REQRD BRG IN-SX
F	704	0	704	0	0	MECHANICAL	
I	790	0	790	0	0	5-8	1-8

A SUITABLE HANGER/MECHANICAL CONNECTION IS REQUIRED AT JOINT F. MINIMUM BEARING LENGTH AT JOINT F = 1-8.

UNFACTORED REACTIONS

JT	1ST LCASE COMBINED	MAX./MIN. COMPONENT REACTIONS SNOW	LIVE	PERM.LIVE	WIND	DEAD	SOIL
F	502	307 / 0	0 / 0	0 / 0	0 / 0	195 / 0	0 / 0
I	561	354 / 0	0 / 0	0 / 0	0 / 0	208 / 0	0 / 0

BEARING MATERIAL TO BE SPF NO.2 OR BETTER AT JOINT(S) I

BRACING

TOP CHORD TO BE SHEATHED OR MAX. PURLIN SPACING = 6.25 FT.
MAX. UNBRACED BOTTOM CHORD LENGTH = 10.00 FT OR RIGID CEILING DIRECTLY APPLIED.

ALL PITCH BREAKS AND PERIMETER CORNER JOINTS MUST BE LATERALLY RESTRAINED.

LOADING

TOTAL LOAD CASES: (4)

CHORDS

MEMB. FR-TO	MAX. FACTORED FORCE (LBS)	FACTORED VERT. LOAD LC1 (PLF) FROM	TO	MAX CSI (LC)	MAX. UNBRAC LENGTH
A- B	0 / 43	-78.0	-78.0	0.12 (1)	10.00
B- C	-609 / 0	-78.0	-78.0	0.16 (1)	6.25
C- D	-641 / 0	-100.7	-100.7	0.41 (1)	6.25
D- E	-664 / 0	-100.7	-100.7	0.40 (1)	6.25
F- E	-673 / 0	0.0	0.0	0.10 (1)	7.81
I- B	-769 / 0	0.0	0.0	0.10 (1)	7.81
I- H	0 / 8	-23.9	-23.9	0.16 (4)	10.00
H- G	0 / 387	-23.9	-23.9	0.20 (4)	10.00
G- F	0 / 0	-23.9	-23.9	0.05 (4)	10.00

WEBS

MEMB. FR-TO	MAX. FACTORED FORCE (LBS)	MAX CSI (LC)
H- C	-68 / 66	0.03 (1)
C- G	0 / 310	0.08 (1)
G- D	-547 / 0	0.10 (1)
G- E	0 / 926	0.23 (1)
B- H	0 / 366	0.09 (1)

FACTORED CONCENTRATED LOADS (LBS)

JT	LOC.	LC1	MAX-	MAX+	FACE	DIR.	TYPE	HEEL	CONN.
C	3-2-0	-69	-69	---	FRONT	VERT	TOTAL	---	C1

DESIGN CRITERIA

SPECIFIED LOADS:

TOP	CH.	LL =	21.0	PSF
		DL =	6.0	PSF
BOT	CH.	LL =	0.0	PSF
		DL =	7.4	PSF
TOTAL	LOAD	=	34.4	PSF

SPACING = 24.0 IN. C/C

LOADING IN FLAT SECTION BASED ON A SLOPE OF 2.00/12 MINIMUM

GIRDER TYPE: CPrimeHip
LEFT SETBACK = 3-2-0
RIGHT SETBACK = 0-0
END SETBACK = 3-2-0
END WALL WIDTH = 0-0
CORNER FRAMING TYPE: CONVENTIONAL
END JACK TYPE: CONVENTIONAL
APPLIED TO FRONT SIDE
- ADDT'L LOADS BASED ON 55 % OF GSL.

THIS TRUSS IS DESIGNED FOR RESIDENTIAL OR SMALL BUILDING REQUIREMENTS OF PART 9, NBCC 2015

THIS DESIGN COMPLIES WITH:
- PART 9 OF BCBC 2018 , ABC 2019
- PART 9 OF OBC 2012 (2019 AMENDMENT)
- CSA 086-14
- TPIC 2014

(55 % OF 23.0 P.S.F. G.S.L. PLUS 8.4 P.S.F. RAIN LOAD) EQUALS 21.0 P.S.F. SPECIFIED ROOF LIVE LOAD

ALLOWABLE DEFL.(LL)= L/360 (0.37")
CALCULATED VERT. DEFL.(LL) = L/ 999 (0.01")
ALLOWABLE DEFL.(TL)= L/360 (0.37")
CALCULATED VERT. DEFL.(TL) = L/ 999 (0.04")

CSI: TC=0.41/1.00 (C-D:1) , BC=0.20/1.00 (G-H:4) , WB=0.23/1.00 (E-G:1) , SSI=0.28/1.00 (C-D:1)

DOL LUMBER=1.00 NAIL=1.00 LS BEND=1.00 COMP=1.00 SHEAR=1.00 TENS= 1.00

COMPANION LIVE LOAD FACTOR = 1.00

TRUSS PLATE MANUFACTURER IS NOT RESPONSIBLE FOR QUALITY CONTROL IN THE TRUSS MANUFACTURING PLANT .

NAIL VALUES

PLATE	GRIP(DRY) (PSI) MAX	MIN	SHEAR (PLI) MAX	MIN	SECTION (PLI) MAX	MIN
MT20	650	371	1747	788	1987	1873

PLATE PLACEMENT TOL. = 0.250 inches

PLATE ROTATION TOL. = 5.0 Deg.

JSI GRIP= 0.78 (E) (INPUT = 0.90)
JSI METAL= 0.32 (G) (INPUT = 1.00)

JOB NAME	TRUSS NAME	QUANTITY	PLY	JOB DESC.	DRWG NO.
318404	H27		1	TRUSS DESC. JT 45147	E20035330

Alpa Roof Truss, Maple

Version 8.310 S Oct 29 2019 MiTek Industries, Inc. Tue Mar 24 15:04:57 2020 Page 1

ID:MF8iiriaTok7DlbpT4B71Xys4PG-c9aw 40c?P4NVYsqKOME6oHODuZMmp0ll3h4fnzXiEa

Scale = 1:49.6

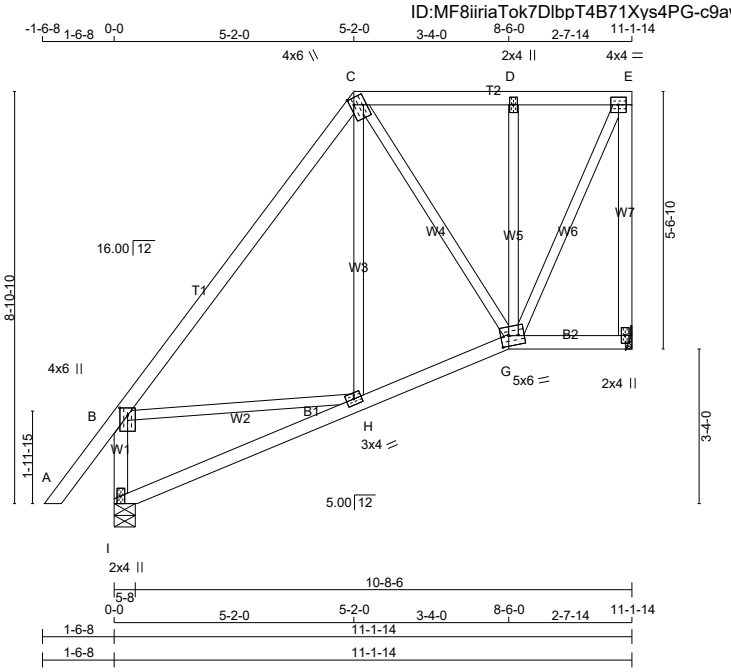

TOTAL WEIGHT = 63 lb

[M]

LUMBER

N. L. G. A. RULES

CHORDS	SIZE		LUMBER	DESCR.
A - C	2x4	DRY	No.2	SPF
C - E	2x4	DRY	No.2	SPF
F - E	2x4	DRY	No.2	SPF
I - B	2x4	DRY	No.2	SPF
I - G	2x4	DRY	No.2	SPF
G - F	2x4	DRY	No.2	SPF
ALL WEBS EXCEPT	2x3	DRY	No.2	SPF

DRY: SEASONED LUMBER.

PLATES (table is in inches)

JT	TYPE	PLATES	W	LEN	Y	X
B	TMVW+p	MT20	4.0	6.0	2.00	2.00
C	TTWW+m	MT20	4.0	6.0	1.75	1.00
D	TMW+w	MT20	2.0	4.0		
E	TMVW-t	MT20	4.0	4.0		
F	BMV1+p	MT20	2.0	4.0		
G	BBWWW-m	MT20	5.0	6.0	2.75	2.00
H	BMWW-t	MT20	3.0	4.0		
I	BMV1+p	MT20	2.0	4.0		

LATERAL BRACE(S) SHOWN SHALL BE 2X4 SPF#2

DIMENSIONS, SUPPORTS AND LOADINGS SPECIFIED BY FABRICATOR TO BE VERIFIED BY BUILDING DESIGNER

BEARINGS

JT	FACTORED GROSS REACTION VERT	HORZ	MAXIMUM FACTORED GROSS REACTION DOWN	HORZ	UPLIFT	INPUT BRG IN-SX	REQRD BRG IN-SX
F	538	0	538	0	0	MECHANICAL	
I	646	0	646	0	0	5-8	1-8

A SUITABLE HANGER/MECHANICAL CONNECTION IS REQUIRED AT JOINT F. MINIMUM BEARING LENGTH AT JOINT F = 1-8.

UNFACTORED REACTIONS

JT	1ST LCASE COMBINED	MAX./MIN. COMPONENT REACTIONS SNOW	LIVE	PERM.LIVE	WIND	DEAD	SOIL
F	384	234 / 0	0 / 0	0 / 0	0 / 0	150 / 0	0 / 0
I	458	292 / 0	0 / 0	0 / 0	0 / 0	166 / 0	0 / 0

BEARING MATERIAL TO BE SPF NO.2 OR BETTER AT JOINT(S) I

BRACING

TOP CHORD TO BE SHEATHED OR MAX. PURLIN SPACING = 6.25 FT.
MAX. UNBRACED BOTTOM CHORD LENGTH = 10.00 FT OR RIGID CEILING DIRECTLY APPLIED.

ALL PITCH BREAKS AND PERIMETER CORNER JOINTS MUST BE LATERALLY RESTRAINED.

LOADING

TOTAL LOAD CASES: (4)

CHORDS

MEMB. FR-TO	MAX. FACTORED FORCE (LBS)	FACTORED VERT. LOAD LC1 (PLF) FROM	TO	MAX CSI (LC)	MAX. UNBRAC LENGTH
A- B	0 / 43	-78.0	-78.0	0.11 (1)	10.00
B- C	-392 / 0	-78.0	-78.0	0.38 (1)	6.25
C- D	-220 / 0	-78.0	-78.0	0.11 (1)	6.25
D- E	-226 / 0	-78.0	-78.0	0.11 (1)	6.25
F- E	-514 / 0	0.0	0.0	0.28 (1)	7.81
I- B	-606 / 0	0.0	0.0	0.07 (1)	7.81
I- H	0 / 4	-18.5	-18.5	0.11 (4)	10.00
H- G	0 / 248	-18.5	-18.5	0.13 (4)	10.00
G- F	0 / 0	-18.5	-18.5	0.04 (4)	10.00

WEBS

MEMB. FR-TO	MAX. FACTORED FORCE (LBS)	MAX CSI (LC)
H- C	0 / 81	0.03 (4)
C- G	-27 / 0	0.02 (4)
G- D	-286 / 0	0.13 (1)
G- E	0 / 500	0.11 (1)
B- H	0 / 235	0.05 (1)

DESIGN CRITERIA

SPECIFIED LOADS:

TOP	CH.	LL =	21.0	PSF
		DL =	6.0	PSF
BOT	CH.	LL =	0.0	PSF
		DL =	7.4	PSF
TOTAL	LOAD	=	34.4	PSF

SPACING = 24.0 IN. C/C

LOADING IN FLAT SECTION BASED ON A SLOPE OF 2.00/12 MINIMUM

THIS TRUSS IS DESIGNED FOR RESIDENTIAL OR SMALL BUILDING REQUIREMENTS OF PART 9, NBCC 2015

THIS DESIGN COMPLIES WITH:
- PART 9 OF BCBC 2018 , ABC 2019
- PART 9 OF OBC 2012 (2019 AMENDMENT)
- CSA 086-14
- TPIC 2014

(55 % OF 23.0 P.S.F. G.S.L. PLUS 8.4 P.S.F. RAIN LOAD) EQUALS 21.0 P.S.F. SPECIFIED ROOF LIVE LOAD

ALLOWABLE DEFL.(LL)= L/360 (0.37")
CALCULATED VERT. DEFL.(LL) = L/ 999 (0.01")
ALLOWABLE DEFL.(TL)= L/360 (0.37")
CALCULATED VERT. DEFL.(TL) = L/ 999 (0.03")

CSI: TC=0.38/1.00 (B-C:1) , BC=0.13/1.00 (G-H:4) , WB=0.13/1.00 (D-G:1) , SSI=0.12/1.00 (C-D:1)

DOL LUMBER=1.00 NAIL=1.00 LS BEND=1.10 COMP=1.10 SHEAR=1.10 TENS= 1.10

COMPANION LIVE LOAD FACTOR = 1.00

TRUSS PLATE MANUFACTURER IS NOT RESPONSIBLE FOR QUALITY CONTROL IN THE TRUSS MANUFACTURING PLANT .

NAIL VALUES

PLATE	GRIP(DRY) (PSI) MAX	MIN	SHEAR (PLI) MAX	MIN	SECTION (PLI) MAX	MIN
MT20	650	371	1747	788	1987	1873

PLATE PLACEMENT TOL. = 0.250 inches

PLATE ROTATION TOL. = 5.0 Deg.

JSI GRIP= 0.59 (E) (INPUT = 0.90)
JSI METAL= 0.22 (I) (INPUT = 1.00)

JOB NAME	TRUSS NAME	QUANTITY	PLY	JOB DESC.	DRWG NO.
318404	H28		1	TRUSS DESC. JT 45147	E20035331

Alpa Roof Truss, Maple

Version 8.310 S Oct 29 2019 MiTek Industries, Inc. Tue Mar 24 15:04:58 2020 Page 1

ID:MF8iiriaTok7DlbpT4B71Xys4PG-4M8ICQ1EmiCE7iR0t6tTf0qcYIuCVAiu jRdBDzXiEZ

Scale = 1:63.1

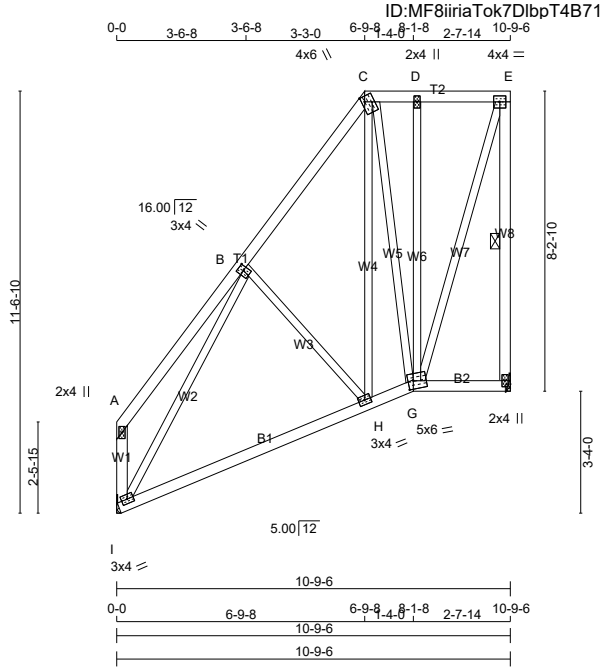

TOTAL WEIGHT = 78 lb

LUMBER

N. L. G. A. RULES

CHORDS	SIZE		LUMBER	DESCR.
A - C	2x4	DRY	No.2	SPF
C - E	2x4	DRY	No.2	SPF
F - E	2x4	DRY	No.2	SPF
I - A	2x4	DRY	No.2	SPF
I - G	2x4	DRY	No.2	SPF
G - F	2x4	DRY	No.2	SPF
ALL WEBS EXCEPT	2x3	DRY	No.2	SPF

DRY: SEASONED LUMBER.

PLATES (table is in inches)

JT	TYPE	PLATES	W	LEN	Y	X
A	TMV+p	MT20	2.0	4.0		
B	TMWW+t	MT20	3.0	4.0	1.75	1.25
C	TTWW+m	MT20	4.0	6.0	1.75	1.00
D	TMW+w	MT20	2.0	4.0		
E	TMVW-t	MT20	4.0	4.0		
F	BMV1+p	MT20	2.0	4.0		
G	BBWWW-m	MT20	5.0	6.0	2.75	1.75
H	BMWW-t	MT20	3.0	4.0		
I	BMVW1-t	MT20	3.0	4.0		

LATERAL BRACE(S) SHOWN SHALL BE 2X4 SPF#2

DIMENSIONS, SUPPORTS AND LOADINGS SPECIFIED BY FABRICATOR TO BE VERIFIED BY BUILDING DESIGNER

BEARINGS

JT	FACTORED GROSS REACTION VERT	HORZ	MAXIMUM FACTORED GROSS REACTION DOWN	HORZ	UPLIFT	INPUT BRG IN-SX	REQRD BRG IN-SX
F	520	0	520	0	0	MECHANICAL	
I	520	0	520	0	0	MECHANICAL	

A SUITABLE HANGER/MECHANICAL CONNECTION IS REQUIRED AT JOINT F, I. MINIMUM BEARING LENGTH AT JOINT F = 1-8, JOINT I = 1-8.

UNFACTORED REACTIONS

JT	1ST LCASE COMBINED	MAX./MIN. COMPONENT REACTIONS SNOW	LIVE	PERM.LIVE	WIND	DEAD	SOIL
F	371	226 / 0	0 / 0	0 / 0	0 / 0	144 / 0	0 / 0
I	371	226 / 0	0 / 0	0 / 0	0 / 0	144 / 0	0 / 0

BRACING

TOP CHORD TO BE SHEATHED OR MAX. PURLIN SPACING = 6.25 FT.
MAX. UNBRACED BOTTOM CHORD LENGTH = 10.00 FT OR RIGID CEILING DIRECTLY APPLIED.

ALL PITCH BREAKS AND PERIMETER CORNER JOINTS MUST BE LATERALLY RESTRAINED.

1 LATERAL BRACE(S) AT 1/ 2 LENGTH OF E-F.

END VERTICAL(S) MUST BE SHEATHED OR HAVE BRACES AS INDICATED IN THE MAX. UNBRACED LENGTH COLUMN OF THE TABLE BELOW

LOADING

TOTAL LOAD CASES: (4)

CHORDS MEMB. FR-TO	MAX. FACTORED FORCE (LBS)	FACTORED VERT. LOAD (PLF) FROM	TO	LC1 MAX CSI (LC)	MAX. UNBRAC LENGTH	WEBS MEMB. FR-TO	MAX. FACTORED FORCE (LBS)	MAX CSI (LC)
A- B	0 / 25	-78.0	-78.0	0.15 (1)	10.00	H- C	0 / 261	0.07 (4)
B- C	-297 / 0	-78.0	-78.0	0.11 (1)	6.25	C- G	-185 / 0	0.25 (1)
C- D	-134 / 0	-78.0	-78.0	0.03 (1)	6.25	G- D	-186 / 0	0.25 (1)
D- E	-137 / 0	-78.0	-78.0	0.06 (1)	6.25	G- E	0 / 431	0.10 (1)
F- E	-496 / 0	0.0	0.0	0.15 (1)	6.25	I- B	-522 / 0	0.55 (1)
I- A	-101 / 0	0.0	0.0	0.01 (1)	7.81	B- H	-109 / 0	0.05 (1)
I- H	0 / 261	-18.5	-18.5	0.22 (4)	10.00			
H- G	0 / 155	-18.5	-18.5	0.21 (4)	10.00			
G- F	0 / 0	-18.5	-18.5	0.04 (4)	10.00			

[M][F]

DESIGN CRITERIA

SPECIFIED LOADS:

TOP	CH.	LL	=	21.0	PSF
		DL	=	6.0	PSF
BOT	CH.	LL	=	0.0	PSF
		DL	=	7.4	PSF
TOTAL	LOAD		=	34.4	PSF

SPACING = 24.0 IN. C/C

LOADING IN FLAT SECTION BASED ON A SLOPE OF 2.00/12 MINIMUM

THIS TRUSS IS DESIGNED FOR RESIDENTIAL OR SMALL BUILDING REQUIREMENTS OF PART 9, NBCC 2015

THIS DESIGN COMPLIES WITH:
- PART 9 OF BCBC 2018 , ABC 2019
- PART 9 OF OBC 2012 (2019 AMENDMENT)
- CSA 086-14
- TPIC 2014

(55 % OF 23.0 P.S.F. G.S.L. PLUS 8.4 P.S.F. RAIN LOAD) EQUALS 21.0 P.S.F. SPECIFIED ROOF LIVE LOAD

ALLOWABLE DEFL.(LL)= L/360 (0.36")
CALCULATED VERT. DEFL.(LL) = L/ 999 (0.01")
ALLOWABLE DEFL.(TL)= L/360 (0.36")
CALCULATED VERT. DEFL.(TL) = L/ 999 (0.07")

CSI: TC=0.15/1.00 (E-F:1) , BC=0.22/1.00 (H-I:4) , WB=0.55/1.00 (B-I:1) , SSI=0.10/1.00 (G-H:4)

DOL LUMBER=1.00 NAIL=1.00 LS BEND=1.10 COMP=1.10 SHEAR=1.10 TENS= 1.10

COMPANION LIVE LOAD FACTOR = 1.00

AUTOSOLVE RIGHT HEEL ONLY

TRUSS PLATE MANUFACTURER IS NOT RESPONSIBLE FOR QUALITY CONTROL IN THE TRUSS MANUFACTURING PLANT .

NAIL VALUES

PLATE	GRIP(DRY) (PSI) MAX	MIN	SHEAR (PLI) MAX	MIN	SECTION (PLI) MAX	MIN
MT20	650	371	1747	788	1987	1873

PLATE PLACEMENT TOL. = 0.250 inches

PLATE ROTATION TOL. = 5.0 Deg.

JSI GRIP= 0.88 (B) (INPUT = 0.90)
JSI METAL= 0.31 (B) (INPUT = 1.00)

JOB NAME	TRUSS NAME	QUANTITY	PLY	JOB DESC.	DRWG NO.
318404	H29		1	TRUSS DESC. JT 45147	E20035332

Alpa Roof Truss, Maple

Version 8.310 S Oct 29 2019 MiTek Industries, Inc. Tue Mar 24 15:04:59 2020 Page 1

ID:MF8iiriaTok7DlbpT4B71Xys4PG-ZYhqPl2tX0K5ks0DRpOjBDMmTiG9Eia2DNABjfzXiEY

Scale = 1:76.6

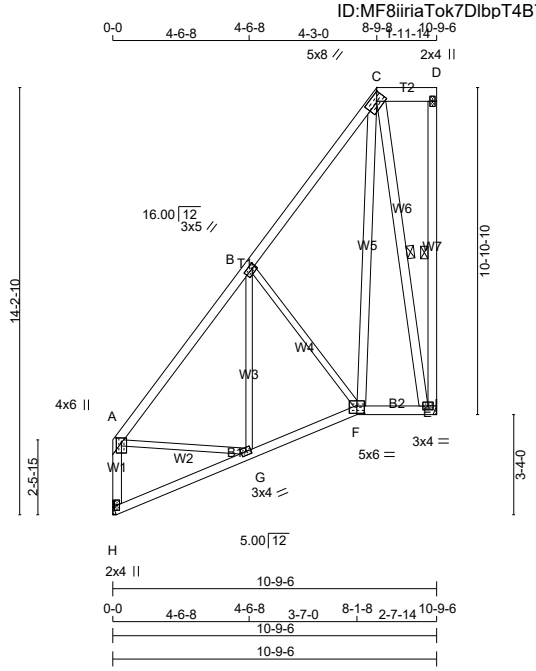

TOTAL WEIGHT = 84 lb

LUMBER

N. L. G. A. RULES

CHORDS	SIZE		LUMBER	DESCR.
A - C	2x4	DRY	No.2	SPF
C - D	2x6	DRY	No.2	SPF
E - D	2x4	DRY	No.2	SPF
H - A	2x4	DRY	No.2	SPF
H - F	2x4	DRY	No.2	SPF
F - E	2x4	DRY	No.2	SPF
ALL WEBS	2x3	DRY	No.2	SPF
EXCEPT				
F - C	2x4	DRY	No.2	SPF
C - E	2x4	DRY	No.2	SPF

DRY: SEASONED LUMBER.

PLATES (table is in inches)

JT	TYPE	PLATES	W	LEN	Y	X
A	TMVW+p	MT20	4.0	6.0	2.00	2.00
B	TMWW-t	MT20	3.0	5.0	1.50	1.50
C	TTWW-h	MT20	5.0	8.0	2.50	3.25
D	TMV+p	MT20	2.0	4.0		
E	BMVW1-t	MT20	3.0	4.0		
F	BBWW-l	MT20	5.0	6.0	3.00	3.00
G	BMWW-t	MT20	3.0	4.0		
H	BMV1+p	MT20	2.0	4.0		

LATERAL BRACE(S) SHOWN SHALL BE 2X4 SPF#2

DIMENSIONS, SUPPORTS AND LOADINGS SPECIFIED BY FABRICATOR TO BE VERIFIED BY BUILDING DESIGNER

BEARINGS

	FACTORED GROSS REACTION		MAXIMUM FACTORED GROSS REACTION			INPUT BRG	REQRD BRG
JT	VERT	HORZ	DOWN	HORZ	UPLIFT	IN-SX	IN-SX
E	520	0	520	0	0	MECHANICAL	
H	520	0	520	0	0	MECHANICAL	

A SUITABLE HANGER/MECHANICAL CONNECTION IS REQUIRED AT JOINT E, H. MINIMUM BEARING LENGTH AT JOINT E = 1-8, JOINT H = 1-8.

UNFACTORED REACTIONS

	1ST LCASE	MAX./MIN. COMPONENT REACTIONS					
JT	COMBINED	SNOW	LIVE	PERM.LIVE	WIND	DEAD	SOIL
E	371	226 / 0	0 / 0	0 / 0	0 / 0	144 / 0	0 / 0
H	371	226 / 0	0 / 0	0 / 0	0 / 0	144 / 0	0 / 0

BRACING

TOP CHORD TO BE SHEATHED OR MAX. PURLIN SPACING = 6.25 FT.
MAX. UNBRACED BOTTOM CHORD LENGTH = 10.00 FT OR RIGID CEILING DIRECTLY APPLIED.

ALL PITCH BREAKS AND PERIMETER CORNER JOINTS MUST BE LATERALLY RESTRAINED.

1 LATERAL BRACE(S) AT 1/ 2 LENGTH OF D-E, C-E.

END VERTICAL(S) MUST BE SHEATHED OR HAVE BRACES AS INDICATED IN THE MAX. UNBRACED LENGTH COLUMN OF THE TABLE BELOW

LOADING

TOTAL LOAD CASES: (4)

CHORDS MEMB. FR-TO	MAX. FACTORED FORCE (LBS)	FACTORED VERT. LOAD LC1 (PLF) FROM	TO	MAX CSI (LC)	MAX. UNBRAC LENGTH	WEBS MEMB. FR-TO	MAX. FACTORED FORCE (LBS)	MAX CSI (LC)
A- B	-387 / 0	-78.0	-78.0	0.20 (1)	6.25	A- G	0 / 252	0.06 (1)
B- C	-205 / 0	-78.0	-78.0	0.19 (1)	6.25	G- B	-26 / 59	0.02 (4)
C- D	0 / 0	-78.0	-78.0	0.03 (1)	10.00	B- F	-251 / 0	0.16 (1)
E- D	-78 / 0	0.0	0.0	0.05 (1)	6.25	F- C	0 / 355	0.06 (1)
H- A	-486 / 0	0.0	0.0	0.07 (1)	7.81	C- E	-426 / 0	0.26 (1)
H- G	0 / 4	-18.5	-18.5	0.09 (4)	10.00			
G- F	0 / 269	-18.5	-18.5	0.11 (4)	10.00			
F- E	0 / 79	-18.5	-18.5	0.05 (4)	10.00			

[M][F]

DESIGN CRITERIA

SPECIFIED LOADS:

TOP CH.	LL	=	21.0	PSF
	DL	=	6.0	PSF
BOT CH.	LL	=	0.0	PSF
	DL	=	7.4	PSF
TOTAL LOAD		=	34.4	PSF

SPACING = 24.0 IN. C/C

LOADING IN FLAT SECTION BASED ON A SLOPE OF 2.00/12 MINIMUM

THIS TRUSS IS DESIGNED FOR RESIDENTIAL OR SMALL BUILDING REQUIREMENTS OF PART 9, NBCC 2015

THIS DESIGN COMPLIES WITH:
- PART 9 OF BCBC 2018 , ABC 2019
- PART 9 OF OBC 2012 (2019 AMENDMENT)
- CSA 086-14
- TPIC 2014

(55 % OF 23.0 P.S.F. G.S.L. PLUS 8.4 P.S.F. RAIN LOAD) EQUALS 21.0 P.S.F. SPECIFIED ROOF LIVE LOAD

ALLOWABLE DEFL.(LL)= L/360 (0.36")
CALCULATED VERT. DEFL.(LL) = L/ 999 (0.01")
ALLOWABLE DEFL.(TL)= L/360 (0.36")
CALCULATED VERT. DEFL.(TL) = L/ 999 (0.02")

CSI: TC=0.20/1.00 (A-B:1) , BC=0.11/1.00 (F-G:4) , WB=0.26/1.00 (C-E:1) , SSI=0.10/1.00 (A-B:1)

DOL LUMBER=1.00 NAIL=1.00 LS BEND=1.10 COMP=1.10 SHEAR=1.10 TENS= 1.10

COMPANION LIVE LOAD FACTOR = 1.00

TRUSS PLATE MANUFACTURER IS NOT RESPONSIBLE FOR QUALITY CONTROL IN THE TRUSS MANUFACTURING PLANT .

NAIL VALUES

PLATE	GRIP(DRY) (PSI) MAX	MIN	SHEAR (PLI) MAX	MIN	SECTION (PLI) MAX	MIN
MT20	650	371	1747	788	1987	1873

PLATE PLACEMENT TOL. = 0.250 inches

PLATE ROTATION TOL. = 5.0 Deg.

JSI GRIP= 0.43 (E) (INPUT = 0.90)
JSI METAL= 0.17 (H) (INPUT = 1.00)

JOB NAME	TRUSS NAME	QUANTITY	PLY	JOB DESC.	DRWG NO.
318404	H30		1	TRUSS DESC. JT 45147	E20035333

Alpa Roof Truss, Maple

ID:MF8iiriaTok7DlbpT4B71Xys4PG-1kF2d53VIKSyM0bP?XwykRvyr6cRz7eBS1wkG6zXiEX

Scale = 1:90.1

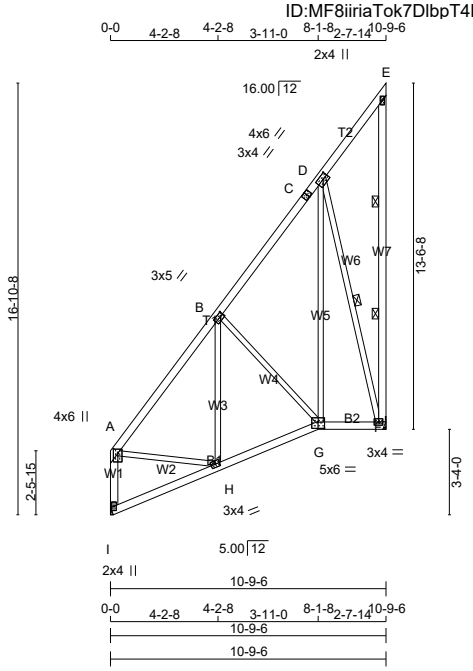

TOTAL WEIGHT = 2 X 79 = 159 lb

LUMBER

N. L. G. A. RULES

CHORDS	SIZE		LUMBER	DESCR.
I - A	2x4	DRY	No.2	SPF
A - C	2x4	DRY	No.2	SPF
C - E	2x4	DRY	No.2	SPF
F - E	2x4	DRY	No.2	SPF
I - G	2x4	DRY	No.2	SPF
G - F	2x4	DRY	No.2	SPF
ALL WEBS	2x3	DRY	No.2	SPF

DRY: SEASONED LUMBER.

PLATES (table is in inches)

JT	TYPE	PLATES	W	LEN	Y	X
A	TMVW+p	MT20	4.0	6.0	2.00	2.00
B	TMWW-t	MT20	3.0	5.0	1.50	1.50
C	TS-t	MT20	3.0	4.0		
D	TMWW-t	MT20	4.0	6.0	2.00	2.50
E	TMV+p	MT20	2.0	4.0		
F	BMVW1-t	MT20	3.0	4.0		
G	BBWW-l	MT20	5.0	6.0	3.00	3.00
H	BMWW-t	MT20	3.0	4.0		
I	BMV1+p	MT20	2.0	4.0		

LATERAL BRACE(S) SHOWN SHALL BE 2X4 SPF#2

DIMENSIONS, SUPPORTS AND LOADINGS SPECIFIED BY FABRICATOR TO BE VERIFIED BY BUILDING DESIGNER

BEARINGS

JT	FACTORED GROSS REACTION VERT	HORZ	MAXIMUM FACTORED GROSS REACTION DOWN	HORZ	UPLIFT	INPUT BRG IN-SX	REQRD BRG IN-SX
I	520	0	520	0	0	MECHANICAL	
F	520	0	520	0	0	MECHANICAL	

A SUITABLE HANGER/MECHANICAL CONNECTION IS REQUIRED AT JOINT I, F. MINIMUM BEARING LENGTH AT JOINT I = 1-8, JOINT F = 1-8.

UNFACTORED REACTIONS

JT	1ST LCASE COMBINED	MAX./MIN. COMPONENT REACTIONS SNOW	LIVE	PERM.LIVE	WIND	DEAD	SOIL
I	371	226 / 0	0 / 0	0 / 0	0 / 0	144 / 0	0 / 0
F	371	226 / 0	0 / 0	0 / 0	0 / 0	144 / 0	0 / 0

BRACING

TOP CHORD TO BE SHEATHED OR MAX. PURLIN SPACING = 6.25 FT.
MAX. UNBRACED BOTTOM CHORD LENGTH = 10.00 FT OR RIGID CEILING DIRECTLY APPLIED.

ALL PITCH BREAKS AND PERIMETER CORNER JOINTS MUST BE LATERALLY RESTRAINED.

2 LATERAL BRACE(S) AT 1/ 3 LENGTH OF E-F.
1 LATERAL BRACE(S) AT 1/ 2 LENGTH OF D-F.

END VERTICAL(S) MUST BE SHEATHED OR HAVE BRACES AS INDICATED IN THE MAX. UNBRACED LENGTH COLUMN OF THE TABLE BELOW

LOADING

TOTAL LOAD CASES: (4)

CHORDS

MEMB. FR-TO	MAX. FACTORED FORCE (LBS)	FACTORED VERT. LOAD LC1 (PLF) FROM	TO	MAX CSI (LC)	MAX. UNBRAC LENGTH
I- A	-489 / 0	0.0	0.0	0.07 (1)	7.81
A- B	-393 / 0	-78.0	-78.0	0.16 (1)	6.25
B- C	-205 / 0	-78.0	-78.0	0.15 (1)	6.25
C- D	-205 / 0	-78.0	-78.0	0.15 (1)	6.25
D- E	-23 / 0	-78.0	-78.0	0.08 (1)	6.25
F- E	-70 / 0	0.0	0.0	0.03 (1)	6.25
I- H	0 / 4	-18.5	-18.5	0.09 (4)	10.00
H- G	0 / 269	-18.5	-18.5	0.11 (4)	10.00
G- F	0 / 111	-18.5	-18.5	0.05 (4)	10.00

WEBS

MEMB. FR-TO	MAX. FACTORED FORCE (LBS)	MAX CSI (LC)
G- D	0 / 310	0.07 (1)
D- F	-440 / 0	0.33 (1)
A- H	0 / 253	0.06 (1)
H- B	-36 / 54	0.02 (1)
B- G	-206 / 0	0.13 (1)

[M][F]

DESIGN CRITERIA

SPECIFIED LOADS:

TOP CH.	LL	=	21.0	PSF
	DL	=	6.0	PSF
BOT CH.	LL	=	0.0	PSF
	DL	=	7.4	PSF
TOTAL LOAD		=	34.4	PSF

SPACING = 24.0 IN. C/C

THIS TRUSS IS DESIGNED FOR RESIDENTIAL OR SMALL BUILDING REQUIREMENTS OF PART 9, NBCC 2015

THIS DESIGN COMPLIES WITH:
- PART 9 OF BCBC 2018 , ABC 2019
- PART 9 OF OBC 2012 (2019 AMENDMENT)
- CSA 086-14
- TPIC 2014

(55 % OF 23.0 P.S.F. G.S.L. PLUS 8.4 P.S.F. RAIN LOAD) EQUALS 21.0 P.S.F. SPECIFIED ROOF LIVE LOAD

ALLOWABLE DEFL.(LL)= L/360 (0.36")
CALCULATED VERT. DEFL.(LL) = L/ 999 (0.01")
ALLOWABLE DEFL.(TL)= L/360 (0.36")
CALCULATED VERT. DEFL.(TL) = L/ 999 (0.02")

CSI: TC=0.16/1.00 (A-B:1) , BC=0.11/1.00 (G-H:4) , WB=0.33/1.00 (D-F:1) , SSI=0.09/1.00 (A-B:1)

DOL LUMBER=1.00 NAIL=1.00 LS BEND=1.10 COMP=1.10 SHEAR=1.10 TENS= 1.10

COMPANION LIVE LOAD FACTOR = 1.00

TRUSS PLATE MANUFACTURER IS NOT RESPONSIBLE FOR QUALITY CONTROL IN THE TRUSS MANUFACTURING PLANT .

NAIL VALUES

PLATE	GRIP(DRY) (PSI) MAX	MIN	SHEAR (PLI) MAX	MIN	SECTION (PLI) MAX	MIN
MT20	650	371	1747	788	1987	1873

PLATE PLACEMENT TOL. = 0.250 inches

PLATE ROTATION TOL. = 5.0 Deg.

JSI GRIP= 0.65 (F) (INPUT = 0.90)
JSI METAL= 0.18 (I) (INPUT = 1.00)

JOB NAME	TRUSS NAME	QUANTITY	PLY	JOB DESC.	DRWG NO.
318404	H31		1	TRUSS DESC. JT 45147	E20035334

Alpa Roof Truss, Maple

Version 8.310 S Oct 29 2019 MiTek Industries, Inc. Tue Mar 24 15:05:01 2020 Page 1

ID:MF8iiriaTok7DlbpT4B71Xys4PG-VxpRqR373dao AAbZERBHeS6kVxzifYLghfloYzXiEW

Scale = 1:50.0

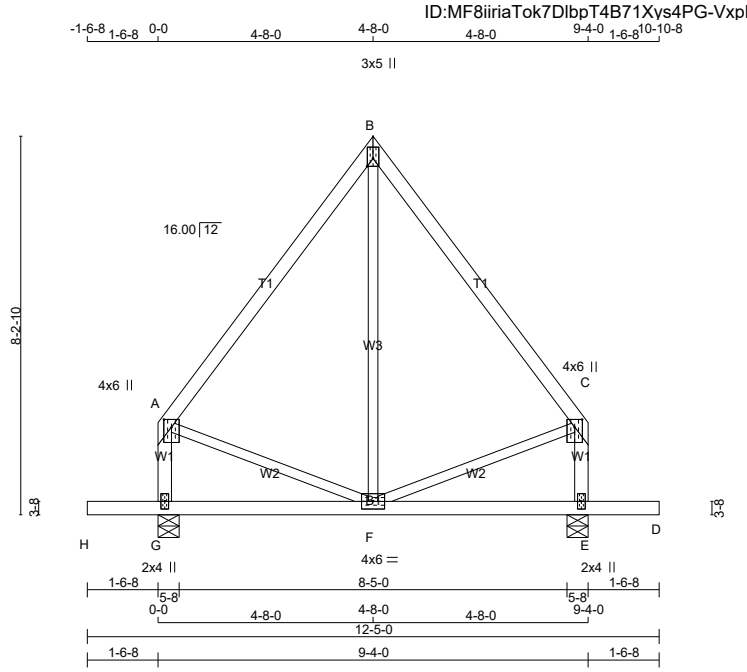

TOTAL WEIGHT = 3 X 50 = 150 lb

LUMBER

N. L. G. A. RULES

CHORDS	SIZE		LUMBER	DESCR.
A - B	2x4	DRY	No.2	SPF
B - C	2x4	DRY	No.2	SPF
G - A	2x4	DRY	No.2	SPF
E - C	2x4	DRY	No.2	SPF
H - D	2x4	DRY	No.2	SPF
ALL WEBS EXCEPT	2x3	DRY	No.2	SPF

DRY: SEASONED LUMBER.

PLATES (table is in inches)

JT	TYPE	PLATES	W	LEN	Y	X
A	TMVW+p	MT20	4.0	6.0	2.00	2.00
B	TTW+p	MT20	3.0	5.0	2.00	Edge
C	TMVW+p	MT20	4.0	6.0	2.00	2.00
E	BMV1+p	MT20	2.0	4.0		
F	BMWWW-t	MT20	4.0	6.0		
G	BMV1+p	MT20	2.0	4.0		

Edge - INDICATES REFERENCE CORNER OF PLATE TOUCHES EDGE OF CHORD.

LATERAL BRACE(S) SHOWN SHALL BE 2X4 SPF#2

DIMENSIONS, SUPPORTS AND LOADINGS SPECIFIED BY FABRICATOR TO BE VERIFIED BY BUILDING DESIGNER

BEARINGS

JT	FACTORED GROSS REACTION VERT	HORZ	MAXIMUM FACTORED GROSS REACTION DOWN	HORZ	UPLIFT	INPUT BRG IN-SX	REQRD BRG IN-SX
G	599	0	599	0	0	5-8	1-8
E	599	0	599	0	0	5-8	1-8

UNFACTORED REACTIONS

JT	1ST LCASE COMBINED	MAX./MIN. COMPONENT REACTIONS SNOW	LIVE	PERM.LIVE	WIND	DEAD	SOIL
G	427	261 / 0	0 / 0	0 / 0	0 / 0	166 / 0	0 / 0
E	427	261 / 0	0 / 0	0 / 0	0 / 0	166 / 0	0 / 0

BEARING MATERIAL TO BE SPF NO.2 OR BETTER AT JOINT(S) G, E

BRACING

TOP CHORD TO BE SHEATHED OR MAX. PURLIN SPACING = 6.25 FT.
MAX. UNBRACED BOTTOM CHORD LENGTH = 10.00 FT OR RIGID CEILING DIRECTLY APPLIED.

ALL PITCH BREAKS AND PERIMETER CORNER JOINTS MUST BE LATERALLY RESTRAINED.

LOADING

TOTAL LOAD CASES: (4)

CHORDS MEMB. FR-TO	MAX. FACTORED FORCE (LBS)	FACTORED VERT. LOAD (PLF) FROM	TO	LC1 MAX CSI (LC)	MAX. UNBRAC LENGTH	WEBS MEMB. FR-TO	MAX. FACTORED FORCE (LBS)	MAX CSI (LC)
A- B	-234 / 0	-78.0	-78.0	0.22 (1)	6.25	F- B	0 / 79	0.03 (4)
B- C	-234 / 0	-78.0	-78.0	0.22 (1)	6.25	A- F	0 / 148	0.03 (1)
G- A	-417 / 0	0.0	0.0	0.05 (1)	7.81	F- C	0 / 148	0.03 (1)
E- C	-417 / 0	0.0	0.0	0.05 (1)	7.81			
H- G	0 / 0	-96.5	-96.5	0.16 (1)	10.00			
G- F	0 / 0	-18.5	-18.5	0.11 (4)	10.00			
F- E	0 / 0	-18.5	-18.5	0.11 (4)	10.00			
E- D	0 / 0	-96.5	-96.5	0.16 (1)	10.00			

[M][F]

DESIGN CRITERIA

SPECIFIED LOADS:

TOP CH.	LL	=	21.0	PSF
	DL	=	6.0	PSF
BOT CH.	LL	=	0.0	PSF
	DL	=	7.4	PSF
TOTAL LOAD		=	34.4	PSF

SPACING = 24.0 IN. C/C

THIS TRUSS IS DESIGNED FOR RESIDENTIAL OR SMALL BUILDING REQUIREMENTS OF PART 9, NBCC 2015

THIS DESIGN COMPLIES WITH:
- PART 9 OF BCBC 2018 , ABC 2019
- PART 9 OF OBC 2012 (2019 AMENDMENT)
- CSA 086-14
- TPIC 2014

(55 % OF 23.0 P.S.F. G.S.L. PLUS 8.4 P.S.F. RAIN LOAD) EQUALS 21.0 P.S.F. SPECIFIED ROOF LIVE LOAD

ALLOWABLE DEFL.(LL)= L/360 (0.31")
CALCULATED VERT. DEFL.(LL) = L/ 999 (0.00")
ALLOWABLE DEFL.(TL)= L/360 (0.31")
CALCULATED VERT. DEFL.(TL) = L/ 999 (0.01")

CANTILEVER DEFLECTION:
ALLOWABLE DEFL.(LL)= L/120 (0.19")
CALCULATED VERT. DEFL.(LL) = L/ 999 (0.01")
ALLOWABLE DEFL.(TL)= L/120 (0.19")
CALCULATED VERT. DEFL.(TL) = L/ 999 (0.01")

CSI: TC=0.22/1.00 (B-C:1) , BC=0.16/1.00 (D-E:1) , WB=0.03/1.00 (C-F:1) , SSI=0.12/1.00 (G-H:1)

DOL LUMBER=1.00 NAIL=1.00 LS BEND=1.10 COMP=1.10 SHEAR=1.10 TENS= 1.10

COMPANION LIVE LOAD FACTOR = 1.00

TRUSS PLATE MANUFACTURER IS NOT RESPONSIBLE FOR QUALITY CONTROL IN THE TRUSS MANUFACTURING PLANT .

NAIL VALUES

PLATE	GRIP(DRY) (PSI) MAX	MIN	SHEAR (PLI) MAX	MIN	SECTION (PLI) MAX	MIN
MT20	650	371	1747	788	1987	1873

PLATE PLACEMENT TOL. = 0.250 inches

PLATE ROTATION TOL. = 5.0 Deg.

JSI GRIP= 0.23 (A) (INPUT = 0.90)
JSI METAL= 0.12 (C) (INPUT = 1.00)

JOB NAME	TRUSS NAME	QUANTITY	PLY	JOB DESC.	DRWG NO.
318404	H31G		1	TRUSS DESC. JT 45147	E20035335

Alpa Roof Truss, Maple

Version 8.310 S Oct 29 2019 MiTek Industries, Inc. Tue Mar 24 15:05:02 2020 Page 1

ID:MF8iiriaTok7DlbpT4B71Xys4PG-z7Np2n4lqxifbJlo6xyQps KDvGCR2vUvLPrK zXiEV

Scale = 1:49.0

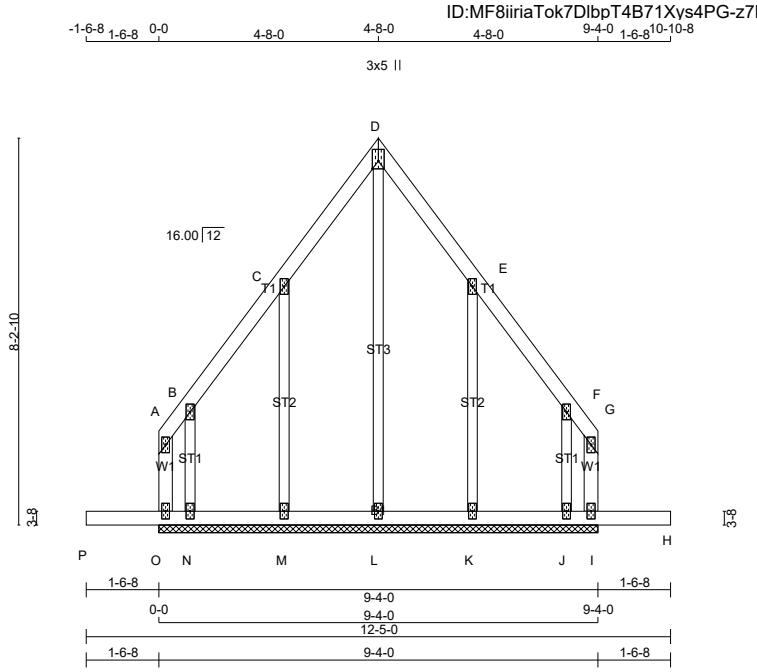

TOTAL WEIGHT = 54 lb

[M]

LUMBER

N. L. G. A. RULES

CHORDS	SIZE		LUMBER	DESCR.
O - A	2x4	DRY	No.2	SPF
A - D	2x4	DRY	No.2	SPF
D - G	2x4	DRY	No.2	SPF
I - G	2x4	DRY	No.2	SPF
P - H	2x4	DRY	No.2	SPF
ALL WEBS	2x3	DRY	No.2	SPF
ALL GABLE WEBS	2x3	DRY	No.2	SPF

DRY: SEASONED LUMBER.

GABLE STUDS SPACED AT 2-0-0 OC.

PLATES (table is in inches)

JT	TYPE	PLATES	W	LEN	Y	X
A	TMV+p	MT20	2.0	4.0		
B, C, E, F						
B	TMW+w	MT20	2.0	4.0		
D	TTW+p	MT20	3.0	5.0	2.00	Edge
G	TMV+p	MT20	2.0	4.0		
I	BMV1+p	MT20	2.0	4.0		
J, K, L, M, N						
J	BMW1+w	MT20	2.0	4.0		
O	BMV1+p	MT20	2.0	4.0		

Edge - INDICATES REFERENCE CORNER OF PLATE TOUCHES EDGE OF CHORD.

LATERAL BRACE(S) SHOWN SHALL BE 2X4 SPF#2

DIMENSIONS, SUPPORTS AND LOADINGS SPECIFIED BY FABRICATOR TO BE VERIFIED BY BUILDING DESIGNER

BEARINGS

THIS TRUSS DESIGNED FOR CONTINUOUS BEARINGS.

THIS TRUSS REQUIRES RIGID SHEATHING ON EXPOSED FACE.

PROVIDE ANCHORAGE AT BEARING JOINT N FOR 150 LBS FACTORED UPLIFT
PROVIDE ANCHORAGE AT BEARING JOINT J FOR 150 LBS FACTORED UPLIFT
BEARING MATERIAL TO BE SPF NO.2 OR BETTER AT JOINT(S)

BRACING

TOP CHORD TO BE SHEATHED OR MAX. PURLIN SPACING = 10.00 FT.
MAX. UNBRACED BOTTOM CHORD LENGTH = 10.00 FT OR RIGID CEILING DIRECTLY APPLIED.

ALL PITCH BREAKS AND PERIMETER CORNER JOINTS MUST BE LATERALLY RESTRAINED.

LOADING

TOTAL LOAD CASES: (4)

CHORDS

MEMB. FR-TO	MAX. FORCE (LBS)	FACTORED VERT. LOAD (PLF) FROM	TO	LC1	MAX CSI (LC)	MAX. UNBRAC LENGTH
O- A	-20 / 0	0.0	0.0	0.02 (1)	7.81	
A- B	0 / 5	-78.0	-78.0	0.02 (1)	10.00	
B- C	0 / 10	-78.0	-78.0	0.04 (1)	10.00	
C- D	0 / 9	-78.0	-78.0	0.04 (1)	10.00	
D- E	0 / 9	-78.0	-78.0	0.04 (1)	10.00	
E- F	0 / 10	-78.0	-78.0	0.04 (1)	10.00	
F- G	0 / 5	-78.0	-78.0	0.02 (1)	10.00	
I- G	-20 / 0	0.0	0.0	0.02 (1)	7.81	
P- O	0 / 0	-96.5	-96.5	0.16 (1)	10.00	
O- N	-3 / 2	-18.5	-18.5	0.14 (1)	10.00	
N- M	-4 / 0	-18.5	-18.5	0.02 (4)	10.00	
M- L	-6 / 0	-18.5	-18.5	0.02 (4)	10.00	
L- K	-6 / 0	-18.5	-18.5	0.02 (4)	10.00	
K- J	-4 / 0	-18.5	-18.5	0.02 (4)	10.00	
J- I	-3 / 2	-18.5	-18.5	0.14 (1)	10.00	
I- H	0 / 0	-96.5	-96.5	0.16 (1)	10.00	

WEBS

MEMB. FR-TO	MAX. FORCE (LBS)	MAX CSI (LC)
L- D	-178 / 0	0.22 (1)
M- C	-165 / 0	0.07 (1)
N- B	-90 / 0	0.02 (1)
K- E	-165 / 0	0.07 (1)
J- F	-90 / 0	0.02 (1)

DESIGN CRITERIA

SPECIFIED LOADS:

TOP CH.	LL	=	21.0	PSF
	DL	=	6.0	PSF
BOT CH.	LL	=	0.0	PSF
	DL	=	7.4	PSF
TOTAL LOAD		=	34.4	PSF

SPACING = 24.0 IN. C/C

THIS TRUSS IS DESIGNED FOR RESIDENTIAL OR SMALL BUILDING REQUIREMENTS OF PART 9, NBCC 2015

THIS DESIGN COMPLIES WITH:
- PART 9 OF BCBC 2018 , ABC 2019
- PART 9 OF OBC 2012 (2019 AMENDMENT)
- CSA 086-14
- TPIC 2014

DESIGN ASSUMPTIONS
-OVERHANG NOT TO BE ALTERED OR CUT OFF.

(55 % OF 23.0 P.S.F. G.S.L. PLUS 8.4 P.S.F. RAIN LOAD) EQUALS 21.0 P.S.F. SPECIFIED ROOF LIVE LOAD

CSI: TC=0.04/1.00 (B-C:1) , BC=0.16/1.00 (H-I:1) , WB=0.22/1.00 (D-L:1) , SSI=0.14/1.00 (I-J:1)

DOL LUMBER=1.00 NAIL=1.00 LS BEND=1.10 COMP=1.10 SHEAR=1.10 TENS= 1.10

COMPANION LIVE LOAD FACTOR = 1.00

TRUSS PLATE MANUFACTURER IS NOT RESPONSIBLE FOR QUALITY CONTROL IN THE TRUSS MANUFACTURING PLANT .

NAIL VALUES

PLATE	GRIP(DRY) (PSI) MAX	MIN	SHEAR (PLI) MAX	MIN	SECTION (PLI) MAX	MIN
MT20	650	371	1747	788	1987	1873

PLATE PLACEMENT TOL. = 0.250 inches

PLATE ROTATION TOL. = 5.0 Deg.

JSI GRIP= 0.17 (D) (INPUT = 0.90)
JSI METAL= 0.08 (E) (INPUT = 1.00)

JOB NAME	TRUSS NAME	QUANTITY	PLY	JOB DESC.	DRWG NO.
318442	H3		1	TRUSS DESC. JT 45147	E20035284

Alpa Roof Truss, Maple

Version 8.310 S Oct 29 2019 MiTek Industries, Inc. Tue Mar 24 14:12:14 2020 Page 1

ID:MF8iiriaTok7DlbpT4B71Xys4PG-jfyA8XlauZaAXTZwXc6VQnntft0gAIpBQT?C8czXj0?

Scale = 1:41.0

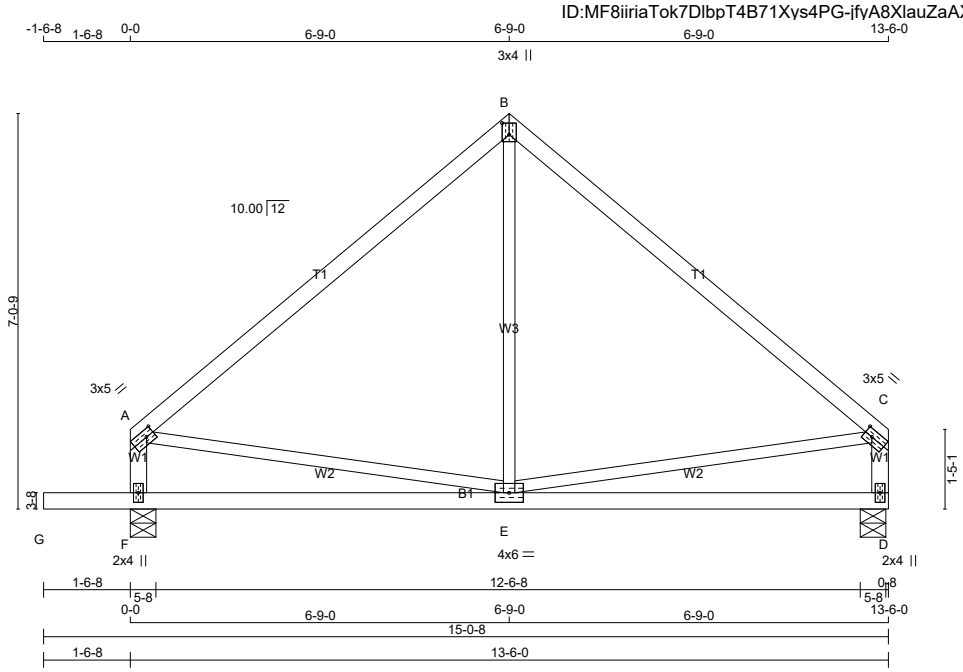

TOTAL WEIGHT = 2 X 56 = 111 lb

[M][F]

LUMBER

N. L. G. A. RULES

CHORDS	SIZE		LUMBER	DESCR.
A - B	2x4	DRY	2100F 1.8E	SPF
B - C	2x4	DRY	2100F 1.8E	SPF
F - A	2x4	DRY	No.2	SPF
D - C	2x4	DRY	No.2	SPF
G - D	2x4	DRY	No.2	SPF
ALL WEBS EXCEPT	2x3	DRY	No.2	SPF

DRY: SEASONED LUMBER.

PLATES (table is in inches)

JT	TYPE	PLATES	W	LEN	Y	X
A	TMVW-t	MT20	3.0	5.0	1.50	1.75
B	TTW+p	MT20	3.0	4.0	2.50	1.50
C	TMVW-t	MT20	3.0	5.0	1.50	1.75
D	BMV1+p	MT20	2.0	4.0		
E	BMWWW-t	MT20	4.0	6.0		
F	BMV1+p	MT20	2.0	4.0		

LATERAL BRACE(S) SHOWN SHALL BE 2X4 SPF#2

DIMENSIONS, SUPPORTS AND LOADINGS SPECIFIED BY FABRICATOR TO BE VERIFIED BY BUILDING DESIGNER

BEARINGS

JT	FACTORED GROSS REACTION VERT	HORZ	MAXIMUM FACTORED GROSS REACTION DOWN	HORZ	UPLIFT	INPUT BRG IN-SX	REQRD BRG IN-SX
D	651	0	651	0	0	5-8	1-8
F	800	0	800	0	0	5-8	1-8

UNFACTORED REACTIONS

JT	1ST LCASE COMBINED	MAX./MIN. COMPONENT REACTIONS SNOW	LIVE	PERM.LIVE	WIND	DEAD	SOIL
D	464	283 / 0	0 / 0	0 / 0	0 / 0	181 / 0	0 / 0
F	570	348 / 0	0 / 0	0 / 0	0 / 0	222 / 0	0 / 0

BEARING MATERIAL TO BE SPF NO.2 OR BETTER AT JOINT(S) D, F

BRACING

TOP CHORD TO BE SHEATHED OR MAX. PURLIN SPACING = 6.25 FT.
MAX. UNBRACED BOTTOM CHORD LENGTH = 10.00 FT OR RIGID CEILING DIRECTLY APPLIED.

ALL PITCH BREAKS AND PERIMETER CORNER JOINTS MUST BE LATERALLY RESTRAINED.

LOADING

TOTAL LOAD CASES: (4)

CHORDS

MEMB. FR-TO	MAX. FACTORED FORCE (LBS)	FACTORED VERT. LOAD LC1 (PLF) FROM	TO	MAX CSI (LC)	MAX. UNBRAC LENGTH
A- B	-446 / 0	-78.0	-78.0	0.30 (1)	6.25
B- C	-446 / 0	-78.0	-78.0	0.30 (1)	6.25
F- A	-604 / 0	0.0	0.0	0.06 (1)	7.81
D- C	-604 / 0	0.0	0.0	0.06 (1)	7.81
G- F	0 / 0	-96.5	-96.5	0.16 (1)	10.00
F- E	0 / 0	-18.5	-18.5	0.24 (4)	10.00
E- D	0 / 0	-18.5	-18.5	0.24 (4)	10.00

WEBS

MEMB. FR-TO	MAX. FACTORED FORCE (LBS)	MAX CSI (LC)
E- B	0 / 128	0.04 (4)
A- E	0 / 347	0.08 (1)
E- C	0 / 347	0.08 (1)

DESIGN CRITERIA

SPECIFIED LOADS:

TOP	CH.	LL =	21.0	PSF
		DL =	6.0	PSF
BOT	CH.	LL =	0.0	PSF
		DL =	7.4	PSF
TOTAL	LOAD	=	34.4	PSF

SPACING = 24.0 IN. C/C

THIS TRUSS IS DESIGNED FOR RESIDENTIAL OR SMALL BUILDING REQUIREMENTS OF PART 9, NBCC 2015

THIS DESIGN COMPLIES WITH:
- PART 9 OF BCBC 2018 , ABC 2019
- PART 9 OF OBC 2012 (2019 AMENDMENT)
- CSA 086-14
- TPIC 2014

(55 % OF 23.0 P.S.F. G.S.L. PLUS 8.4 P.S.F. RAIN LOAD) EQUALS 21.0 P.S.F. SPECIFIED ROOF LIVE LOAD

ALLOWABLE DEFL.(LL)= L/360 (0.45")
CALCULATED VERT. DEFL.(LL) = L/ 999 (0.00")
ALLOWABLE DEFL.(TL)= L/360 (0.45")
CALCULATED VERT. DEFL.(TL) = L/ 999 (0.05")

CANTILEVER DEFLECTION:
ALLOWABLE DEFL.(LL)= L/120 (0.19")
CALCULATED VERT. DEFL.(LL) = L/ 999 (0.01")
ALLOWABLE DEFL.(TL)= L/120 (0.19")
CALCULATED VERT. DEFL.(TL) = L/ 999 (0.01")

CSI: TC=0.30/1.00 (A-B:1) , BC=0.24/1.00 (E-F:4) , WB=0.08/1.00 (C-E:1) , SSI=0.16/1.00 (B-C:1)

DOL LUMBER=1.00 NAIL=1.00 LS BEND=1.10 COMP=1.10 SHEAR=1.10 TENS= 1.10

COMPANION LIVE LOAD FACTOR = 1.00

TRUSS PLATE MANUFACTURER IS NOT RESPONSIBLE FOR QUALITY CONTROL IN THE TRUSS MANUFACTURING PLANT .

NAIL VALUES

PLATE	GRIP(DRY) (PSI) MAX	MIN	SHEAR (PLI) MAX	MIN	SECTION (PLI) MAX	MIN
MT20	650	371	1747	788	1987	1873

PLATE PLACEMENT TOL. = 0.250 inches

PLATE ROTATION TOL. = 5.0 Deg.

JSI GRIP= 0.51 (A) (INPUT = 0.90)
JSI METAL= 0.18 (A) (INPUT = 1.00)

JOB NAME	TRUSS NAME	QUANTITY	PLY	JOB DESC.	DRWG NO.
318442	J07		1	TRUSS DESC. JT 45147	E20035288

Alpa Roof Truss, Maple

Version 8.310 S Oct 29 2019 MiTek Industries, Inc. Tue Mar 24 14:12:19 2020 Page 1

ID:MF8iiriaTok7DlbpT4B71Xys4PG-4cl3BFoji6CSdERuK9iq7rUlXujJrZWwalizpqzXj?w

Scale = 1:40.0

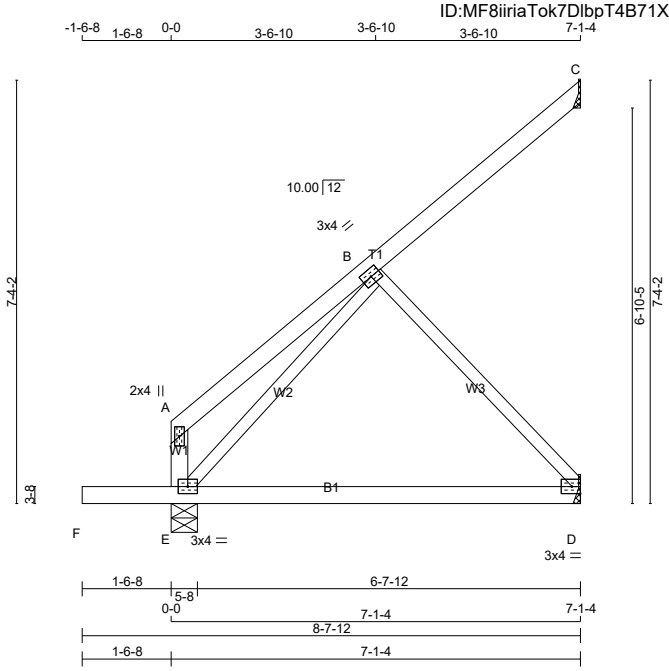

TOTAL WEIGHT = 7 X 30 = 210 lb

LUMBER

N. L. G. A. RULES

CHORDS	SIZE		LUMBER	DESCR.
E - A	2x4	DRY	No.2	SPF
A - C	2x4	DRY	No.2	SPF
F - D	2x4	DRY	No.2	SPF
ALL WEBS	2x3	DRY	No.2	SPF

DRY: SEASONED LUMBER.

PLATES (table is in inches)

JT	TYPE	PLATES	W	LEN	Y	X
A	TMV+p	MT20	2.0	4.0		
B	TMWW-t	MT20	3.0	4.0		
D	BMW1-t	MT20	3.0	4.0		Edge
E	BMVW1-t	MT20	3.0	4.0		

Edge - INDICATES REFERENCE CORNER OF PLATE TOUCHES EDGE OF CHORD.

LATERAL BRACE(S) SHOWN SHALL BE 2X4 SPF#2

DIMENSIONS, SUPPORTS AND LOADINGS SPECIFIED BY FABRICATOR TO BE VERIFIED BY BUILDING DESIGNER

BEARINGS

JT	FACTORED GROSS REACTION VERT	HORZ	MAXIMUM FACTORED GROSS REACTION DOWN	HORZ	UPLIFT	INPUT BRG IN-SX	REQRD BRG IN-SX
E	489	0	489	0	0	5-8	1-8
C	111	0	111	0	0	MECHANICAL	
D	233	0	233	0	0	MECHANICAL	

A SUITABLE HANGER/MECHANICAL CONNECTION IS REQUIRED AT JOINT C, D. MINIMUM BEARING LENGTH AT JOINT C = 1-8, JOINT D = 1-8.

BEVELED PLATE OR SHIM REQUIRED TO PROVIDE FULL BEARING SURFACE WITH TRUSS CHORD AT JT(S): C

UNFACTORED REACTIONS

JT	1ST LCASE COMBINED	MAX./MIN. COMPONENT REACTIONS SNOW	LIVE	PERM.LIVE	WIND	DEAD	SOIL
E	349	213 / 0	0 / 0	0 / 0	0 / 0	136 / 0	0 / 0
C	77	60 / 0	0 / 0	0 / 0	0 / 0	17 / 0	0 / 0
D	168	90 / 0	0 / 0	0 / 0	0 / 0	78 / 0	0 / 0

BEARING MATERIAL TO BE SPF NO.2 OR BETTER AT JOINT(S) E

BRACING

TOP CHORD TO BE SHEATHED OR MAX. PURLIN SPACING = 6.25 FT.
MAX. UNBRACED BOTTOM CHORD LENGTH = 10.00 FT OR RIGID CEILING DIRECTLY APPLIED.

ALL PITCH BREAKS AND PERIMETER CORNER JOINTS MUST BE LATERALLY RESTRAINED.

LOADING

TOTAL LOAD CASES: (4)

CHORDS

MEMB. FR-TO	MAX. FACTORED FORCE (LBS)	FACTORED VERT. LOAD LC1 (PLF) FROM	TO	MAX CSI (LC)	MAX. UNBRAC LENGTH
E- A	-98 / 0	0.0	0.0	0.01 (1)	7.81
A- B	0 / 22	-78.0	-78.0	0.17 (1)	10.00
B- C	-21 / 0	-78.0	-78.0	0.13 (1)	6.25
F- E	0 / 0	-96.5	-96.5	0.16 (1)	10.00
E- D	0 / 154	-18.5	-18.5	0.28 (4)	10.00

WEBS

MEMB. FR-TO	MAX. FACTORED FORCE (LBS)	MAX CSI (LC)
E- B	-234 / 0	0.10 (1)
B- D	-227 / 0	0.11 (1)

[M][F]

DESIGN CRITERIA

SPECIFIED LOADS:

TOP CH.	LL	=	21.0	PSF
	DL	=	6.0	PSF
BOT CH.	LL	=	0.0	PSF
	DL	=	7.4	PSF
TOTAL LOAD		=	34.4	PSF

SPACING = 24.0 IN. C/C

THIS TRUSS IS DESIGNED FOR RESIDENTIAL OR SMALL BUILDING REQUIREMENTS OF PART 9, NBCC 2015

THIS DESIGN COMPLIES WITH:
- PART 9 OF BCBC 2018 , ABC 2019
- PART 9 OF OBC 2012 (2019 AMENDMENT)
- CSA 086-14
- TPIC 2014

(55 % OF 23.0 P.S.F. G.S.L. PLUS 8.4 P.S.F. RAIN LOAD) EQUALS 21.0 P.S.F. SPECIFIED ROOF LIVE LOAD

ALLOWABLE DEFL.(TL)= L/360 (0.23")
CALCULATED VERT. DEFL.(TL) = L/ 765 (0.11")

CANTILEVER DEFLECTION:
ALLOWABLE DEFL.(LL)= L/120 (0.19")
CALCULATED VERT. DEFL.(LL) = L/ 999 (0.01")
ALLOWABLE DEFL.(TL)= L/120 (0.19")
CALCULATED VERT. DEFL.(TL) = L/ 999 (0.01")

CSI: TC=0.17/1.00 (A-B:1) , BC=0.28/1.00 (D-E:4) , WB=0.11/1.00 (B-D:1) , SSI=0.12/1.00 (E-F:1)

DOL LUMBER=1.00 NAIL=1.00 LS BEND=1.10 COMP=1.10 SHEAR=1.10 TENS= 1.10

COMPANION LIVE LOAD FACTOR = 1.00

TRUSS PLATE MANUFACTURER IS NOT RESPONSIBLE FOR QUALITY CONTROL IN THE TRUSS MANUFACTURING PLANT .

NAIL VALUES

PLATE	GRIP(DRY) (PSI) MAX	MIN	SHEAR (PLI) MAX	MIN	SECTION (PLI) MAX	MIN
MT20	650	371	1747	788	1987	1873

PLATE PLACEMENT TOL. = 0.250 inches

PLATE ROTATION TOL. = 5.0 Deg.

JSI GRIP= 0.34 (B) (INPUT = 0.90)
JSI METAL= 0.08 (B) (INPUT = 1.00)

JOB NAME	TRUSS NAME	QUANTITY	PLY	JOB DESC.	DRWG NO.
318405	H10T	5	1	TRUSS DESC. JT 45147	E20035338

Alpa Roof Truss, Maple

Version 8.310 S Oct 29 2019 MiTek Industries, Inc. Tue Mar 24 15:51:59 2020 Page 1

ID:MF8iiriaTok7DlbpT4B71Xys4PG- 35lG0AlQSdz3EbBe3 0Uv9bXSfez0p7q6IPiDzXhYU

Scale = 1:53.8

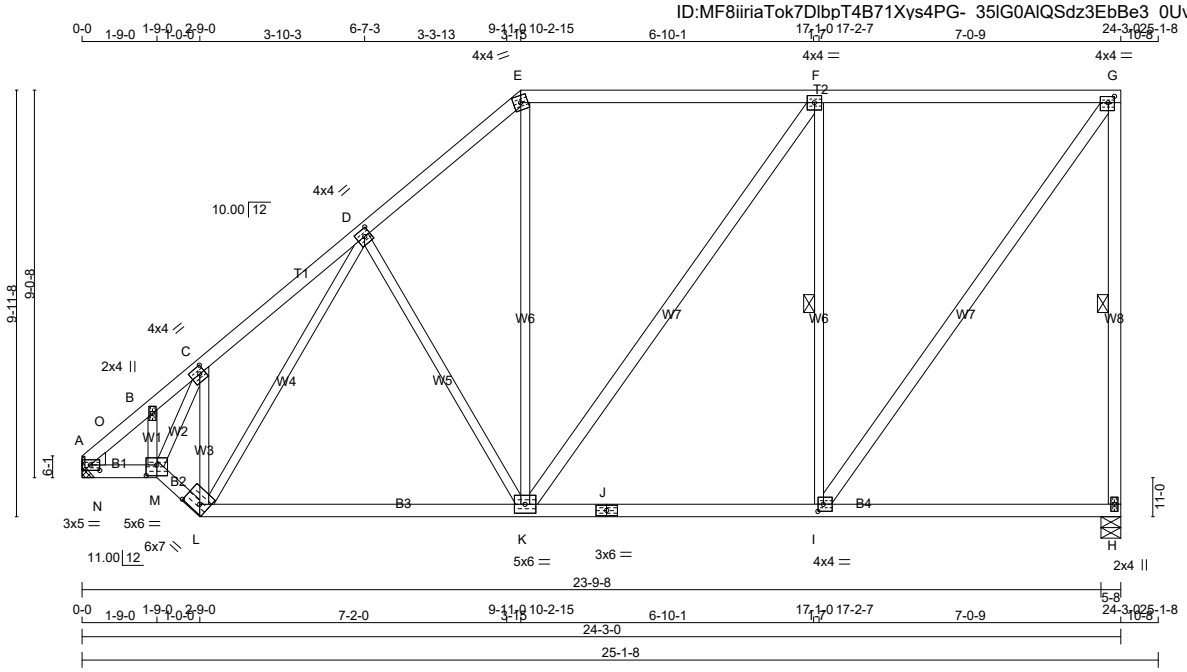

TOTAL WEIGHT = 5 X 130 = 649 lb

LUMBER

N. L. G. A. RULES

CHORDS	SIZE		LUMBER	DESCR.
A - E	2x4	DRY	No.2	SPF
E - G	2x4	DRY	No.2	SPF
A - M	2x4	DRY	No.2	SPF
M - L	2x4	DRY	No.2	SPF
L - J	2x4	DRY	No.2	SPF
J - H	2x4	DRY	No.2	SPF
ALL WEBS EXCEPT	2x3	DRY	No.2	SPF
H - G	2x4	DRY	No.2	SPF
K - F	2x4	DRY	No.2	SPF
I - G	2x4	DRY	No.2	SPF

DRY: SEASONED LUMBER.

PLATES (table is in inches)

JT	TYPE	PLATES	W	LEN	Y	X
A	TMBH1-l	MT20	3.0	5.0	1.50	2.50
B	TMW+w	MT20	2.0	4.0		
C	TMWW-t	MT20	4.0	4.0	2.00	1.50
D	TMWW-t	MT20	4.0	4.0	2.00	1.75
E	TTW-m	MT20	4.0	4.0		
F	TMWW-t	MT20	4.0	4.0		
G	TMWW-t	MT20	4.0	4.0	1.75	1.75
H	BMW1+w	MT20	2.0	4.0		
I	BMWW-t	MT20	4.0	4.0	2.00	1.50
J	BS-t	MT20	3.0	6.0		
K	BMWWW-t	MT20	5.0	6.0		
L	BBWW-h	MT20	6.0	7.0	2.25	4.50
M	BBWW-l	MT20	5.0	6.0	3.00	3.00

LATERAL BRACE(S) SHOWN SHALL BE 2X4 SPF#2

DIMENSIONS, SUPPORTS AND LOADINGS SPECIFIED BY FABRICATOR TO BE VERIFIED BY BUILDING DESIGNER

BEARINGS

JT	FACTORED GROSS REACTION VERT	HORZ	MAXIMUM FACTORED GROSS REACTION DOWN	HORZ	UPLIFT	INPUT BRG IN-SX	REQRD BRG IN-SX	HEEL WEDGE
H	1237	0	1237	0	0	5-8	1-13	
A	1193	0	1193	0	0	MECHANICAL		2x4 L

A SUITABLE HANGER/MECHANICAL CONNECTION IS REQUIRED AT JOINT A. MINIMUM BEARING LENGTH AT JOINT A = 3-8.

UNFACTORED REACTIONS

JT	1ST LCASE COMBINED	MAX./MIN. COMPONENT REACTIONS SNOW	LIVE	PERM.LIVE	WIND	DEAD	SOIL
H	888	506 / 0	0 / 0	0 / 0	0 / 0	382 / 0	0 / 0
A	853	506 / 0	0 / 0	0 / 0	0 / 0	347 / 0	0 / 0

BEARING MATERIAL TO BE SPF NO.2 OR BETTER AT JOINT(S) H

BRACING

FOR SECTION E-G, MAX. PURLIN SPACING = 2.00 FT.
FOR OTHER SECTIONS, TOP CHORD TO BE SHEATHED OR MAX. PURLIN SPACING = 5.04 FT.
MAX. UNBRACED BOTTOM CHORD LENGTH = 10.00 FT OR RIGID CEILING DIRECTLY APPLIED.

ALL PITCH BREAKS AND PERIMETER CORNER JOINTS MUST BE LATERALLY RESTRAINED.

1 LATERAL BRACE(S) AT 1/ 2 LENGTH OF G-H, F-I.

LOADING

TOTAL LOAD CASES: (4)

CHORDS

MEMB. FR-TO	MAX. FACTORED FORCE (LBS)	FACTORED VERT. LOAD (PLF) FROM	TO	LC1 CSI (LC)	MAX UNBRAC LENGTH
A- O	-1682 / 0	-78.0	-78.0	0.11 (1)	5.04
O- B	-1581 / 0	-78.0	-78.0	0.12 (1)	5.15
B- C	-1441 / 0	-78.0	-78.0	0.12 (1)	5.34
C- D	-1151 / 0	-78.0	-78.0	0.14 (1)	5.79
D- E	-997 / 0	-78.0	-78.0	0.13 (1)	6.12
E- F	-751 / 0	-85.5	-85.5	0.54 (1)	2.00
F- G	-687 / 0	-85.5	-85.5	0.54 (1)	2.00
A- N	0 / 1143	-18.5	-18.5	0.22 (1)	10.00
N- M	0 / 1143	-18.5	-18.5	0.22 (1)	10.00
M- L	0 / 1179	-18.5	-18.5	0.19 (1)	10.00
L- K	0 / 882	-18.5	-18.5	0.32 (4)	10.00
K- J	0 / 687	-18.5	-18.5	0.31 (4)	10.00
J- I	0 / 687	-18.5	-18.5	0.31 (4)	10.00
I- H	0 / 0	-18.5	-18.5	0.19 (4)	10.00

WEBS

MEMB. FR-TO	MAX. FACTORED FORCE (LBS)	MAX CSI (LC)
M- B	0 / 149	0.03 (1)
M- C	0 / 734	0.17 (1)
L- C	-743 / 0	0.17 (1)
H- G	-1185 / 0	0.57 (1)
K- E	0 / 290	0.07 (1)
K- F	0 / 111	0.02 (1)
I- F	-827 / 0	0.56 (1)
I- G	0 / 1183	0.19 (1)
L- D	0 / 18	0.01 (4)
D- K	-271 / 0	0.31 (1)
N- O	0 / 82	0.00 (1)

[M][F]

DESIGN CRITERIA

SPECIFIED LOADS:

TOP CH.	LL	=	21.0	PSF
	DL	=	6.0	PSF
BOT CH.	LL	=	0.0	PSF
	DL	=	7.4	PSF
TOTAL LOAD		=	34.4	PSF

SPACING = 24.0 IN. C/C

LOADING IN FLAT SECTION BASED ON PIGGYBACK TRUSS WITH SLOPES OF 6.00/12 AND -6.00/12 AND RESPECTIVE WALL HEIGHTS OF 0-0 AND 0-0 AND AN ADDITIONAL DEAD LOAD OF 3.0 P.S.F.

THIS TRUSS IS DESIGNED FOR RESIDENTIAL OR SMALL BUILDING REQUIREMENTS OF PART 9, NBCC 2015

THIS DESIGN COMPLIES WITH:
- PART 9 OF BCBC 2018 , ABC 2019
- PART 9 OF OBC 2012 (2019 AMENDMENT)
- CSA 086-14
- TPIC 2014

(55 % OF 23.0 P.S.F. G.S.L. PLUS 8.4 P.S.F. RAIN LOAD) EQUALS 21.0 P.S.F. SPECIFIED ROOF LIVE LOAD

ALLOWABLE DEFL.(LL)= L/360 (0.80")
CALCULATED VERT. DEFL.(LL) = L/ 999 (0.03")
ALLOWABLE DEFL.(TL)= L/360 (0.80")
CALCULATED VERT. DEFL.(TL) = L/ 999 (0.14")

CSI: TC=0.54/1.00 (E-F:1) , BC=0.32/1.00 (K-L:4) , WB=0.57/1.00 (G-H:1) , SSI=0.29/1.00 (E-F:1)

DOL LUMBER=1.00 NAIL=1.00 LS BEND=1.10 COMP=1.10 SHEAR=1.10 TENS= 1.10

COMPANION LIVE LOAD FACTOR = 1.00

TRUSS PLATE MANUFACTURER IS NOT RESPONSIBLE FOR QUALITY CONTROL IN THE TRUSS MANUFACTURING PLANT .

NAIL VALUES

PLATE	GRIP(DRY) (PSI) MAX	MIN	SHEAR (PLI) MAX	MIN	SECTION (PLI) MAX	MIN
MT20	650	371	1747	788	1987	1873

PLATE PLACEMENT TOL. = 0.250 inches

PLATE ROTATION TOL. = 5.0 Deg.

JSI GRIP= 0.88 (I) (INPUT = 0.90)
JSI METAL= 0.38 (A) (INPUT = 1.00)

JOB NAME	TRUSS NAME	QUANTITY	PLY	JOB DESC.	DRWG NO.
318444	H3G		1	TRUSS DESC. JT 45147	E20035340

Alpa Roof Truss, Maple

Version 8.310 S Oct 29 2019 MiTek Industries, Inc. Tue Mar 24 16:07:57 2020 Page 1

ID:MF8iiriaTok7DlbpT4B71Xys4PG-xNzwKamgpoJ1 SqJmGAqJwrRaegNQOO7z9M5KhzXhJW

Scale = 1:40.9

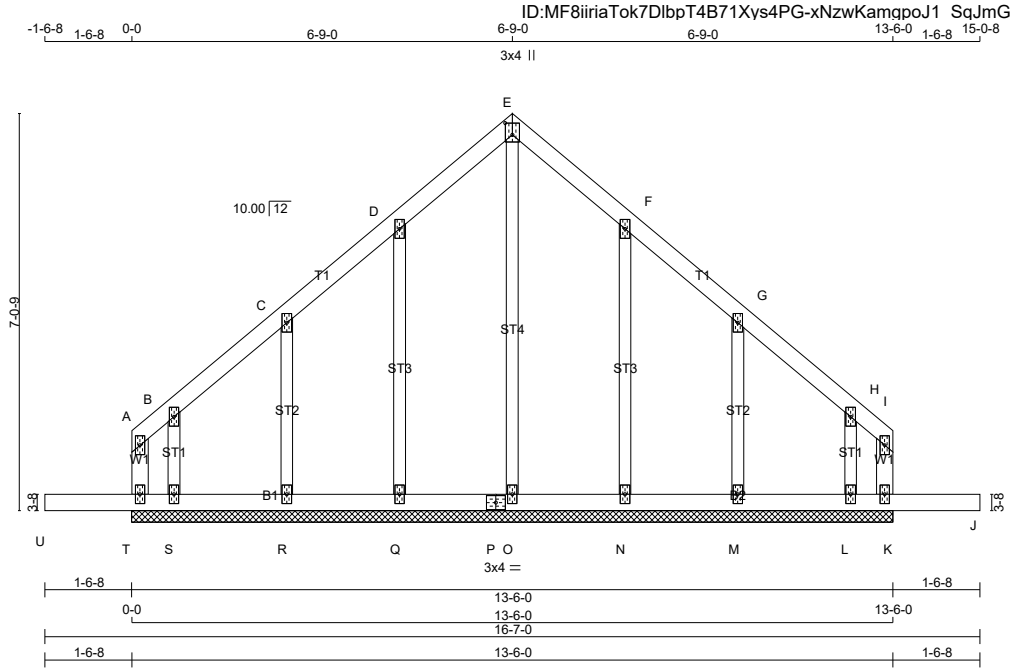

TOTAL WEIGHT = 62 lb

[M]

LUMBER

N. L. G. A. RULES

CHORDS	SIZE		LUMBER	DESCR.
T - A	2x4	DRY	No.2	SPF
A - E	2x4	DRY	No.2	SPF
E - I	2x4	DRY	No.2	SPF
K - I	2x4	DRY	No.2	SPF
U - P	2x4	DRY	No.2	SPF
P - J	2x4	DRY	No.2	SPF
ALL WEBS	2x3	DRY	No.2	SPF
ALL GABLE WEBS	2x3	DRY	No.2	SPF

DRY: SEASONED LUMBER.

GABLE STUDS SPACED AT 2-0-0 OC.

PLATES (table is in inches)

JT	TYPE	PLATES	W	LEN	Y	X
A	TMV+p	MT20	2.0	4.0		
B, C, D, F, G, H						
B	TMW+w	MT20	2.0	4.0		
E	TTW+p	MT20	3.0	4.0	2.50	1.50
I	TMV+p	MT20	2.0	4.0		
K	BMV1+p	MT20	2.0	4.0		
L, M, N, O, Q, R, S						
L	BMW1+w	MT20	2.0	4.0		
P	BS-t	MT20	3.0	4.0		
T	BMV1+p	MT20	2.0	4.0		

LATERAL BRACE(S) SHOWN SHALL BE 2X4 SPF#2

DIMENSIONS, SUPPORTS AND LOADINGS SPECIFIED BY FABRICATOR TO BE VERIFIED BY BUILDING DESIGNER

BEARINGS

THIS TRUSS DESIGNED FOR CONTINUOUS BEARINGS.

THIS TRUSS REQUIRES RIGID SHEATHING ON EXPOSED FACE.

PROVIDE ANCHORAGE AT BEARING JOINT S FOR 150 LBS FACTORED UPLIFT
PROVIDE ANCHORAGE AT BEARING JOINT L FOR 150 LBS FACTORED UPLIFT
BEARING MATERIAL TO BE SPF NO.2 OR BETTER AT JOINT(S)

BRACING

TOP CHORD TO BE SHEATHED OR MAX. PURLIN SPACING = 10.00 FT.
MAX. UNBRACED BOTTOM CHORD LENGTH = 6.25 FT OR RIGID CEILING DIRECTLY APPLIED.

ALL PITCH BREAKS AND PERIMETER CORNER JOINTS MUST BE LATERALLY RESTRAINED.

LOADING

TOTAL LOAD CASES: (4)

CHORDS

MEMB. FR-TO	MAX. FORCE (LBS)	FACTORED VERT. LOAD (PLF) FROM	TO	LC1	MAX CSI (LC)	MAX. UNBRAC LENGTH
T- A	-19 / 0	0.0	0.0	0.03 (1)	7.81	
A- B	0 / 8	-78.0	-78.0	0.02 (1)	10.00	
B- C	0 / 17	-78.0	-78.0	0.04 (1)	10.00	
C- D	0 / 20	-78.0	-78.0	0.04 (1)	10.00	
D- E	0 / 23	-78.0	-78.0	0.04 (1)	10.00	
E- F	0 / 23	-78.0	-78.0	0.04 (1)	10.00	
F- G	0 / 20	-78.0	-78.0	0.04 (1)	10.00	
G- H	0 / 17	-78.0	-78.0	0.04 (1)	10.00	
H- I	0 / 8	-78.0	-78.0	0.02 (1)	10.00	
K- I	-19 / 0	0.0	0.0	0.03 (1)	7.81	
U- T	0 / 0	-96.5	-96.5	0.16 (1)	10.00	
T- S	-6 / 0	-18.5	-18.5	0.13 (1)	10.00	
S- R	-11 / 0	-18.5	-18.5	0.02 (4)	6.25	
R- Q	-15 / 0	-18.5	-18.5	0.02 (4)	6.25	
Q- P	-18 / 0	-18.5	-18.5	0.02 (4)	6.25	
P- O	-18 / 0	-18.5	-18.5	0.02 (4)	6.25	
O- N	-18 / 0	-18.5	-18.5	0.02 (4)	6.25	
N- M	-15 / 0	-18.5	-18.5	0.02 (4)	6.25	
M- L	-11 / 0	-18.5	-18.5	0.02 (4)	6.25	
L- K	-6 / 0	-18.5	-18.5	0.13 (1)	10.00	
K- J	0 / 0	-96.5	-96.5	0.16 (1)	10.00	

WEBS

MEMB. FR-TO	MAX. FORCE (LBS)	MAX CSI (LC)
O- E	-191 / 0	0.16 (1)
Q- D	-158 / 0	0.07 (1)
R- C	-157 / 0	0.03 (1)
S- B	-96 / 0	0.01 (1)
N- F	-158 / 0	0.07 (1)
M- G	-157 / 0	0.03 (1)
L- H	-96 / 0	0.01 (1)

DESIGN CRITERIA

SPECIFIED LOADS:

TOP	CH.	LL	=	21.0	PSF
		DL	=	6.0	PSF
BOT	CH.	LL	=	0.0	PSF
		DL	=	7.4	PSF
TOTAL	LOAD		=	34.4	PSF

SPACING = 24.0 IN. C/C

THIS TRUSS IS DESIGNED FOR RESIDENTIAL OR SMALL BUILDING REQUIREMENTS OF PART 9, NBCC 2015

THIS DESIGN COMPLIES WITH:
- PART 9 OF BCBC 2018 , ABC 2019
- PART 9 OF OBC 2012 (2019 AMENDMENT)
- CSA 086-14
- TPIC 2014

DESIGN ASSUMPTIONS
-OVERHANG NOT TO BE ALTERED OR CUT OFF.

(55 % OF 23.0 P.S.F. G.S.L. PLUS 8.4 P.S.F. RAIN LOAD) EQUALS 21.0 P.S.F. SPECIFIED ROOF LIVE LOAD

CSI: TC=0.04/1.00 (D-E:1) , BC=0.16/1.00 (J-K:1) , WB=0.16/1.00 (E-O:1) , SSI=0.12/1.00 (T-U:1)

DOL LUMBER=1.00 NAIL=1.00 LS BEND=1.10 COMP=1.10 SHEAR=1.10 TENS= 1.10

COMPANION LIVE LOAD FACTOR = 1.00

TRUSS PLATE MANUFACTURER IS NOT RESPONSIBLE FOR QUALITY CONTROL IN THE TRUSS MANUFACTURING PLANT .

NAIL VALUES

PLATE	GRIP(DRY) (PSI) MAX	MIN	SHEAR (PLI) MAX	MIN	SECTION (PLI) MAX	MIN
MT20	650	371	1747	788	1987	1873

PLATE PLACEMENT TOL. = 0.250 inches

PLATE ROTATION TOL. = 5.0 Deg.

JSI GRIP= 0.24 (E) (INPUT = 0.90)
JSI METAL= 0.08 (D) (INPUT = 1.00)

SIMPSON Strong-Tie®

December 18, 2019

Re: Expiration Date for Technical Bulletins Extended to 4/1/2020

Please be advised that the expiration date of the Technical Bulletins listed below has been extended until April 1, 2020.

T-SPECCP17	T-SPECH17	T-SPECDSHGUS17R
T-SPECHGUS17-R	T-SPECHHUS17-R	T-SPECHUS17
T-SPECLF17	T-SPECLT17	T-SPECLU17
T-SPECCLUL17	T-SPECLUS17	T-SPECSUR17
T-SPECTBE17	T-SPECTC17	T-SPECTHGB17
T-SPECTHGBHV17	T-SPECTHGQ17	T-SPECTHGW17
T-SPECLSULSSU17	T-SPECHTHGQ17	T-SPECSTHGQ17

Should you have any questions or concerns regarding the above, please contact me at your convenience.

Sincerely,

Brent Bunting, P.Eng.
Simpson Strong-Tie Canada, Ltd.

LICENSED PROFESSIONAL ENGINEER
12/18/2019
B. D. BUNTING
PROVINCE OF ONTARIO

LUS – Double Shear Joist Hangers

SIMPSON Strong-Tie®

All LUS hangers have double shear nailing. This patented innovation distributes the load through two points on each joist nail for greater strength. It also allows the use of fewer nails, faster installation and the use of common nails for all connections.

Material: 18 gauge

Finish: G90 galvanized

Design:

- Factored resistances are in accordance with CSA O86-14.
- Uplift resistances have been increased 15%. No further increase is permitted.
- Wood shear is not considered in the factored resistances given. The specifier must ensure that the joist and header capacities are capable of withstanding these loads.

Installation:

- Use all specified fasteners.
- Nails: 16d = 0.162" dia. x 3½" long common wire, 10d = 0.148" x 3" long common wire.
- Double shear nails must be driven at an angle through the joist or truss into the header to achieve the table loads.
- Not designed for welded or nailer applications.

Options:

- These hangers cannot be modified

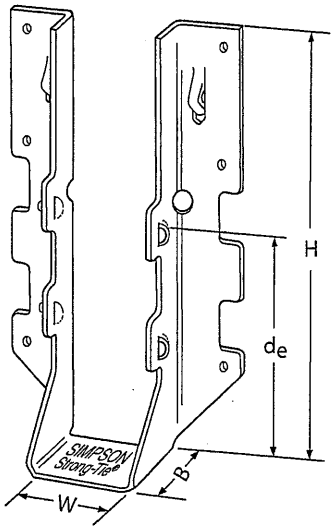

LUS28

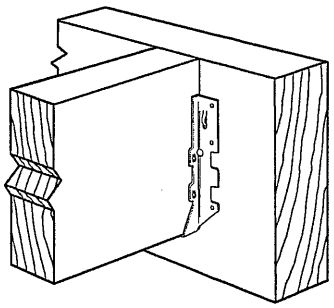

Typical LUS Installation

Model No.	Ga.	Dimensions (in.)				Fasteners		Factored Resistance (lb.)			
								D.Fir-L.		S-P-F	
		W	H	B	d_e[1]	Face	Joist	Uplift (K_D=1.15)	Normal (K_D=1.00)	Uplift (K_D=1.15)	Normal (K_D=1.00)
LUS24	18	1 9/16	3 1/8	1 3/4	1 15/16	(4) 10d	(2) 10d	710	1630	645	1155
LUS24-2	18	3 1/8	3 1/8	2	1 13/16	(4) 16d	(2) 16d	835	2020	590	1435
LUS26	18	1 9/16	4 3/4	1 3/4	3 5/8	(4) 10d	(4) 10d	1420	2170	1290	1630
LUS26-2	18	3 1/8	4 7/8	2	4	(4) 16d	(4) 16d	1720	2595	1545	1920
LUS26-3	18	4 5/8	4 3/16	2	3 1/4	(4) 16d	(4) 16d	1720	2595	1545	2340
LUS28	18	1 9/16	6 5/8	1 3/4	3 3/4	(6) 10d	(6) 10d	1420	2520	1290	1790
LUS28-2	18	3 1/8	7	2	4	(6) 16d	(4) 16d	1720	3325	1545	2575
LUS28-3	18	4 5/8	6 1/4	2	3 1/4	(6) 16d	(4) 16d	1720	3325	1545	2375
LUS210	18	1 9/16	7 13/16	1 3/4	3 7/8	(8) 10d	(4) 10d	1420	2785	1290	2210
LUS210-2	18	3 1/8	9	2	6	(8) 16d	(6) 16d	2580	4500	2320	3195
LUS210-3	18	4 5/8	8 3/16	2	5 1/4	(8) 16d	(6) 16d	2580	3345	2320	2375

1. d_e is the distance from the seat of the hanger to the highest joist nail.

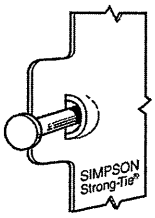

Dome Double Shear Nailing prevents tabs breaking off (available on some models).

U.S. Patent 5,603,580

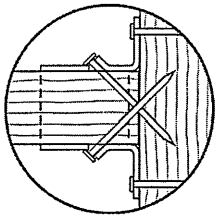

Double Shear Nailing Top View.

LICENSED PROFESSIONAL ENGINEER
4/5/2017
B. D. BUNTING
PROVINCE OF ONTARIO

LIMIT STATES DESIGN

This technical bulletin is effective until June 30, 2019, and reflects information available as of March 1, 2017. This information is updated periodically and should not be relied upon after June 30, 2019. Contact Simpson Strong-Tie for current information and limited warranty or see strongtie.com.

© 2017 Simpson Strong-Tie Company Inc.

(800) 999-5099
strongtie.com

TECHNICAL BULLETIN

HUS/LJS – Double Shear Joist Hangers

SIMPSON Strong-Tie®

All hangers have double shear nailing. This patented innovation distributes the load through two points on each joist nail for greater strength. It also allows the use of fewer nails, faster installation and the use of common nails for all connections. Do not bend or remove tabs.

Material: See table

Finish: G90 galvanized

Design:

- Factored resistances are in accordance with CSA O86 -14.
- Uplift resistances have been increased 15%. No further increase is permitted.
- Wood shear is not considered in the factored resistances given. The specifier must ensure that the joist and header capacities are capable of withstanding these loads.

Installation:

- Use all specified fasteners
- Nails: 16d = 0.162" dia. x 3½" long common wire
- Double shear nails must be driven at an angle through the joist or truss into the header to achieve the table loads
- Not designed for welded or nailer applications

Options:

- See current catalogue for options

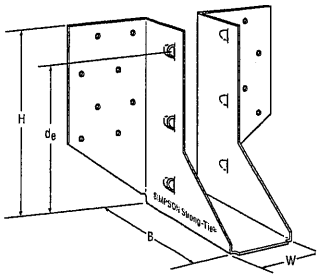

LJS26DS

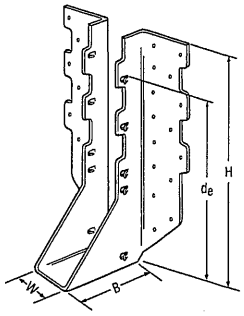

HUS210
(HUS26, HUS28, similar)

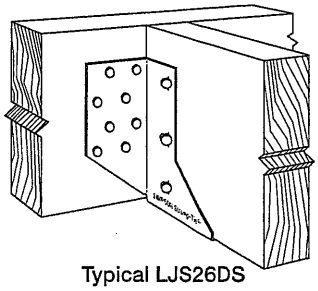

Typical LJS26DS Installation

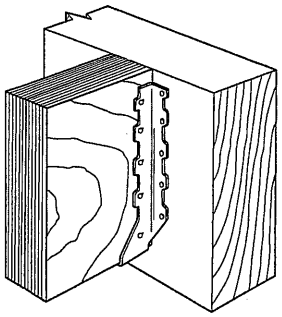

Typical HUS Installation

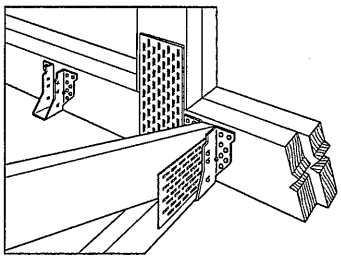

Typical HUS Installation
(Truss Designer to provide fastener quantity for connecting multiple members together)

Model No.	Ga.	Dimensions (in.)				Fasteners		Factored Resistance (lb.)			
								D.Fir-L		S-P-F	
		W	H	B	d_e[1]	Face	Joist	Uplift (K_D=1.15) lb.	Normal (K_D=1.00) lb.	Uplift (K_D=1.15) lb.	Normal (K_D=1.00) lb.
LJS26DS	18	1 9/16	5	3½	4⅝	(16) 16d	(6) 16d	2055	4265	1460	4115
HUS26	16	1⅝	5⅜	3	3 15/16	(14) 16d	(6) 16d	2705	4940	2065	3875
HUS28	16	1⅝	7 3/32	3	6 3/32	(22) 16d	(8) 16d	3605	5365	2675	4345
HUS210	16	1⅝	9 3/32	3	7 31/32	(30) 16d	(10) 16d	4505	5795	4010	4740
HUS1.81/10	16	1 13/16	9	3	8	(30) 16d	(10) 16d	4505	6450	4010	5200

1. d_e is the distance from the seat of the hanger to the highest joist nail.

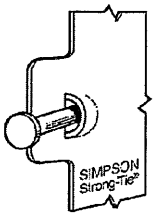

Dome Double Shear Nailing prevents tabs breaking off (available on some models).

U.S. Patent 5,603,580

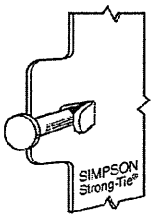

Double Shear Nailing Side View. Do not bend tab back.

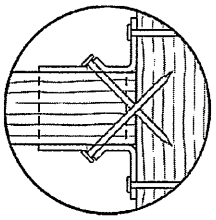

Double Shear Nailing Top View.

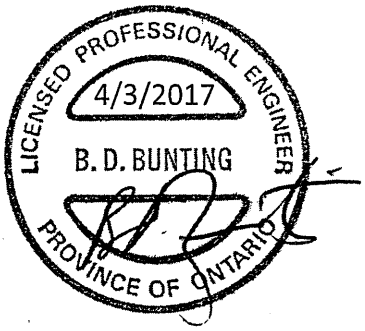

LIMIT STATES DESIGN

This technical bulletin is effective until June 30, 2019, and reflects information available as of March 1, 2017. This information is updated periodically and should not be relied upon after June 30, 2019. Contact Simpson Strong-Tie for current information and limited warranty or see strongtie.com.

© 2017 Simpson Strong-Tie Company Inc.

T-SPECHUS17 3/17 exp. 6/19

(800) 999-5099
strongtie.com

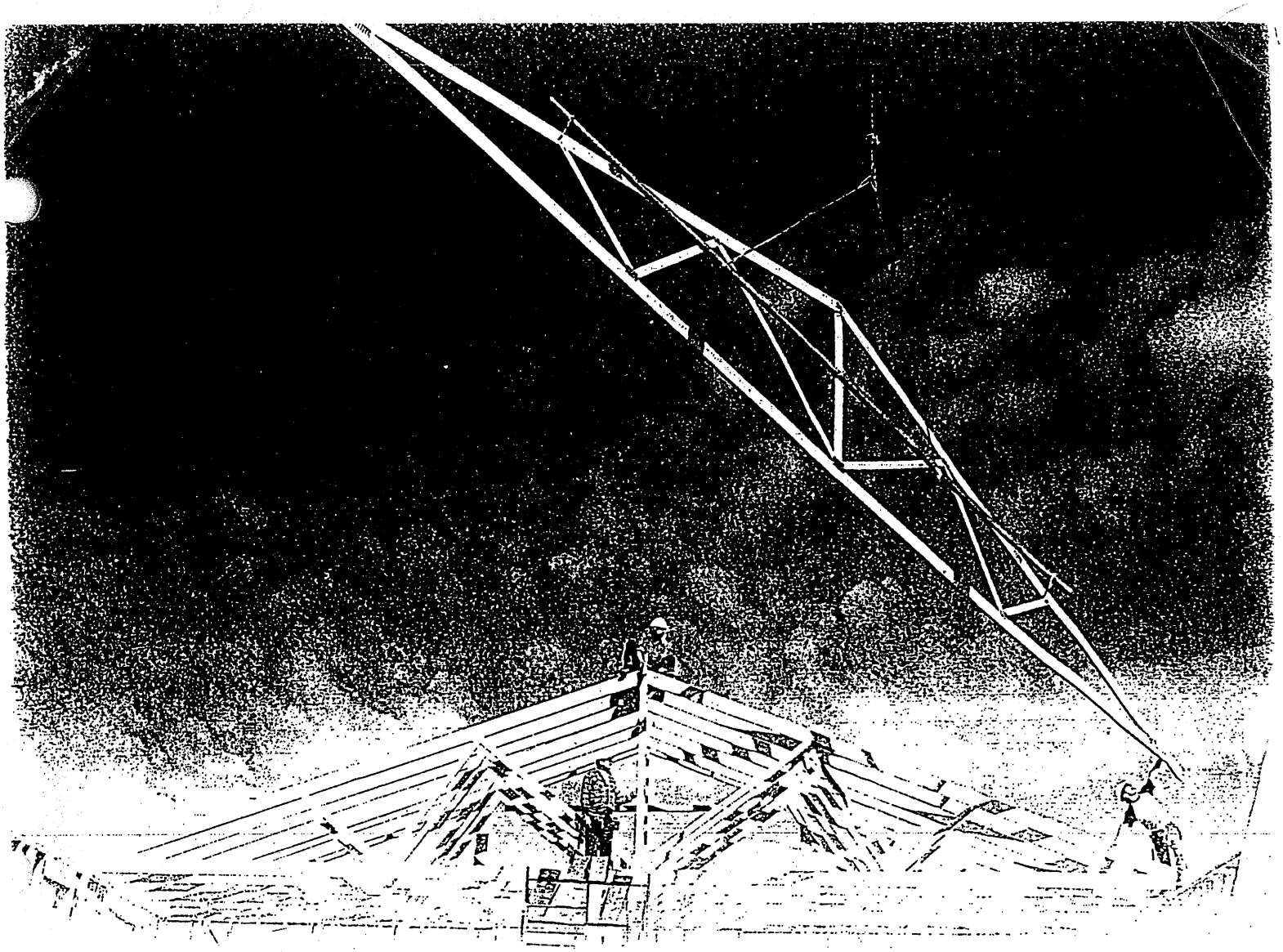

Wood Truss Installation

A Guide to proper handling, erecting and bracing metal plate connected wood trusses

Table of Content

Warning.....4

1 Unloading & Lifting.....5

2 Job Site Handling.....5

3 Hoisting.....6

4 Beginning the Erection Process.....7

5 Erection Tolerance.....8

6 Bracing.....8

7 Bracing Requirements for 3 Planes of Roof.....9

8 Stacking Materials.....10

Caution Notes.....11

Warning

General

Familiarity with the **Construction Design Documents**, the **Truss Design Drawings**, and **Truss Placement Plans** (if required by the **Construction Design Documents**) is required to properly erect, brace, and connect the trusses to the building system.

All of the care and quality involved in the design and manufacture of wood trusses can be jeopardized if the trusses are not properly handled, erected, and braced.

The consequences of improper handling, erecting, and bracing may be a collapse of the structure, which at best is a substantial loss of time and materials, and at worst is a loss of life. The majority of truss accidents occur during truss installation and not as a result of improper design or manufacture.

Prior to truss erection, the builder/erector shall meet with the erection crew for a safety and planning meeting, making sure each crew member understands his or her roles and responsibilities during the erection process.

Temporary Erection Bracing

Trusses are not marked in any way to identify the frequency, or location of temporary erection bracing.

All temporary bracing shall comply with the latest edition of *Commentary and Recommendations for Handling, Installing & Bracing Metal Plate Connected Wood Trusses* (HIB), published by the Truss Plate Institute, and/or as specified in the **Construction Design Documents** prepared by the building designer.

Permanent Truss Bracing

Permanent bracing for the roof or floor trusses is the responsibility of the building designer and should be shown on the **Construction Design Documents**. Permanent bracing locations for individual compression members of a wood truss are shown on the **Truss Design Drawings**, and shall be installed by the building or erection contractor. This bracing is needed for the proper performance of individual trusses within the roof or floor system. The design and connection of the bracing to the truss and then to the overall building system is the responsibility of the building designer, and is in addition to the permanent bracing plan, which is also specified by the building designer.

Special Design Requirements

Special design requirements, such as wind bracing, portal bracing, seismic bracing, diaphragms, shear walls, or other load transfer elements and their connections to wood trusses must be considered separately by the building designer, who shall determine size, location, and method of connections for all bracing as needed to resist these forces.

1 Unloading & Lifting

Never handle trusses flat

Beginning with the unloading process, and throughout all phases of construction, care must be taken to avoid **lateral bending** of trusses, which can cause damage to the lumber and metal connector plates at the joints.

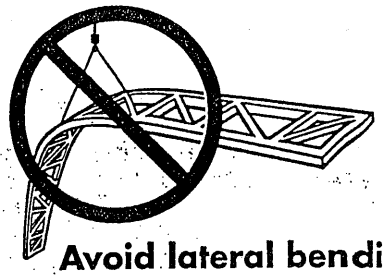

Avoid lateral bending

- **Use special care in windy weather.**
- **If using a crane within 10 feet of an electric line, contact the local power company.**
- **If using a crane within 5 miles of an airport, contact the airport 30 days prior to erection to learn about any safety regulations that must be followed.**

2 Job Site Handling

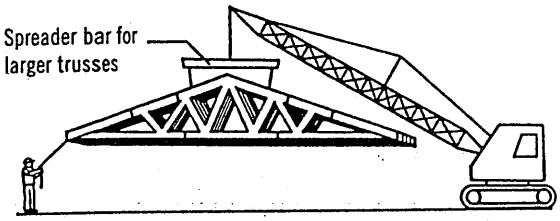

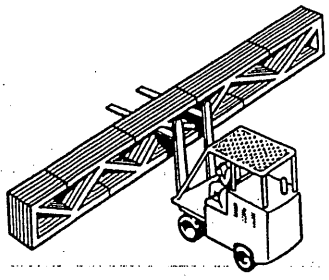

All trusses should be picked up at the top chords in a vertical position only

Proper banding and smooth ground allow for unloading of trusses without damage. This should be done as close to the building site as possible to minimize handling. **Do not** break banding until installation begins. Hand erection of trusses is allowed, provided excessive lateral bending is prevented.

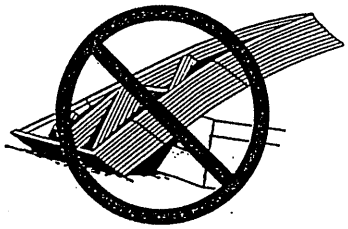

Do not store unbraced bundles upright

If trusses are stored vertically they shall be braced in a manner that will prevent tipping or topping. Generally cuting of the banding is done just prior to installation.

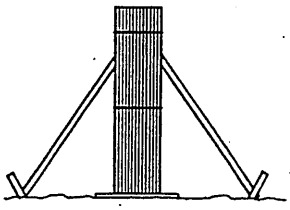

Do not store on uneven ground

If trusses are stored horizontally, blocking should be used on eight to ten foot centers, or as required, to minimize lateral bending and moisture gain.

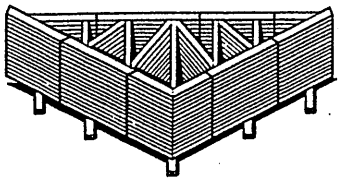

Care should be exercised when removing banding to avoid damaging trusses.

During long term storage, trusses shall be protected from the environment in a manner that provides for adequate ventilation of the trusses. If tarpaulins or other material is used, the ends shall be left open for ventilation. Plastic is not recommended, since it can trap moisture.

3 Hoisting

All trusses that are erected one at a time shall be held safely in position by the erection equipment until such time as all necessary bracing has been installed and the ends of the trusses are securely fastened to the building.

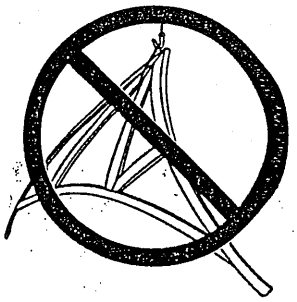

Avoid lateral bending

L ≤ 30'

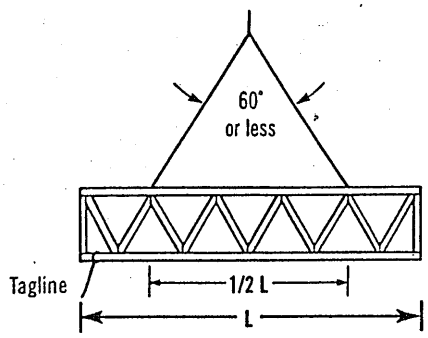

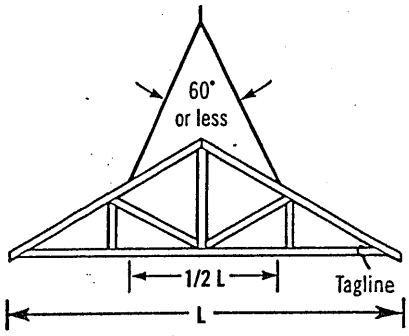

Truss sling is acceptable where these criteria are met.

30' < L ≤ 60'

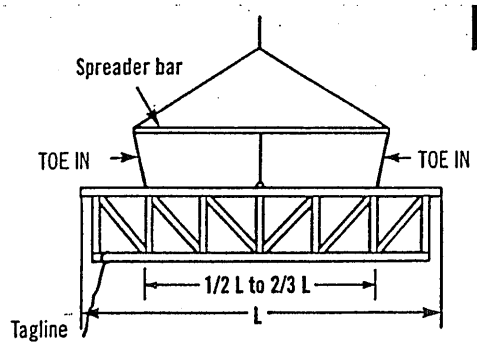

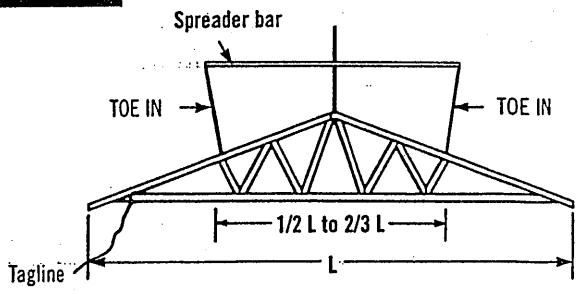

Use spreader bar in all other cases. It should be noted that the lines from the ends of the spreader bar "**TOE IN**"; if these lines should "**TOE OUT**" the truss may fold in half.

L > 60'

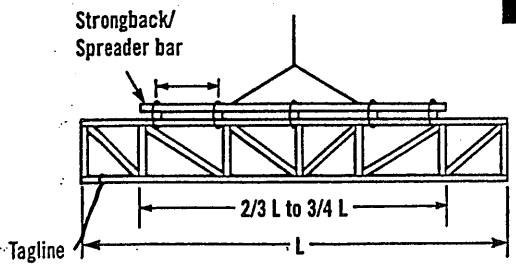

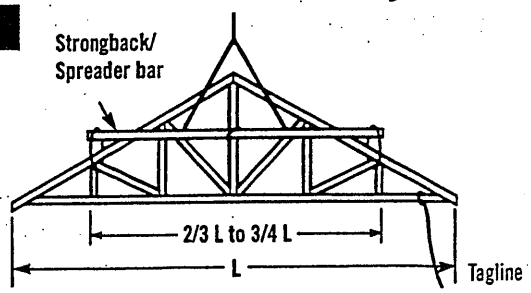

For lifting trusses with spans in excess of 60 feet, it is recommended that a strongback/spreader bar be used as illustrated. The strongback/spreader bar should be attached to the top chord and web members at intervals of approximately 10 feet. Further, the strongback/spreader bar should be at or above the mid-height of the truss to prevent overturning. The strongback/spreader bar can be of any material with sufficient strength to safely carry the weight of the truss and sufficient rigidity to adequately resist bending of the truss.

4 Beginning the Erection Process

It is important for the builder or erection contractor to provide substantial bracing for the first truss erected. The two or more trusses making up the rest of the first set are tied to and rely upon the first truss for stability. Likewise, after this first set of trusses is adequately cross-braced, the remaining trusses installed rely upon this first set for stability. Thus, the performance of the truss bracing system depends to a great extent on how well the first group of trusses is braced.

Ground Brace – Exterior

One satisfactory method ties the first unit of trusses off to a series of braces that are attached to a stake driven into the ground and securely anchored. The ground brace itself should be supported as shown below or it is apt to buckle. Additional ground braces in the opposite direction, inside the building, are also recommended.

Ground Brace – Interior

Another satisfactory method where height of building or ground conditions prohibit bracing from the exterior is to tie the first truss rigidly in place from the interior at the floor level, provided the floor is substantially completed and capable of supporting the ground bracing forces. Securely fasten the first truss to the middle of the building. Brace the bracing similar to exterior ground bracing shown at left. Set trusses from the middle toward the end of the building. Properly cross-brace the first set of trusses before removing floor braces and setting remaining trusses.

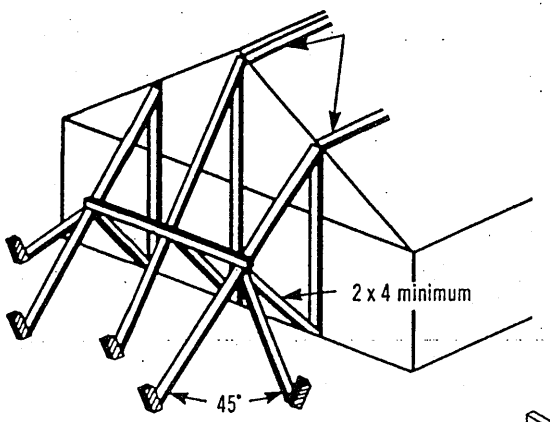

Note: Locate ground braces for first truss directly in line with all rows of top chord continuous lateral bracing (either temporary or permanent).

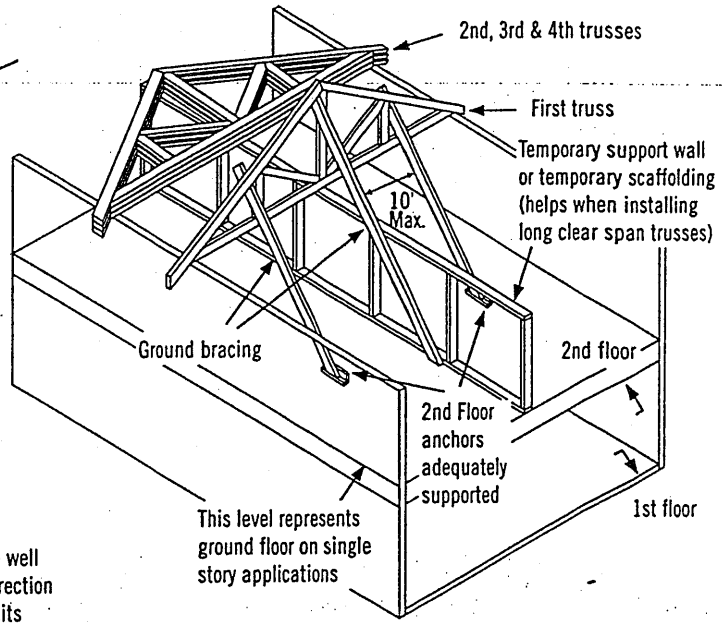

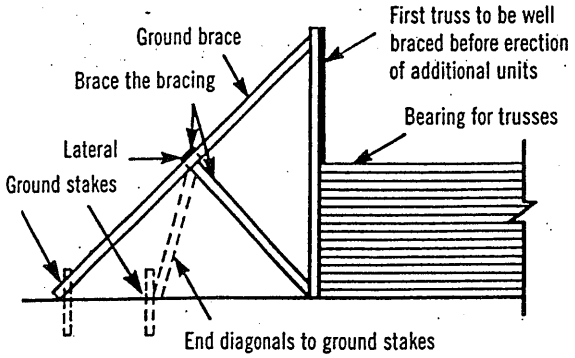

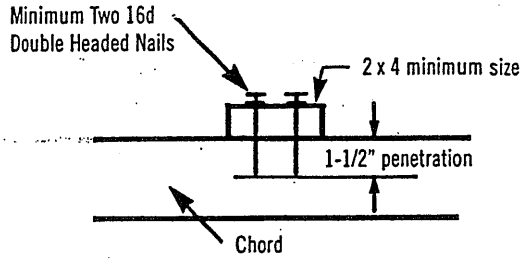

Inadequate size of bracing material or inadequate fastening is a major cause of erection dominoing.

5 Erection Tolerance

Complying with erection tolerances is critical to achieving an acceptable roof or floor line, and to accomplishing effective bracing. Setting trusses within tolerance the first time will prevent the need for the hazardous practice of respacing or adjusting trusses when roof sheathing or roof purlins are installed. Trusses leaning or bowing can cause nails to miss the top chords when sheathing is applied, and create cumulative stresses on the bracing, which is a frequent cause of dominoing.

When sheathing, make sure nails are driven into the top chord of the trusses.

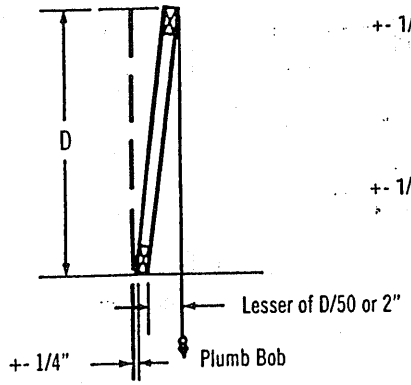

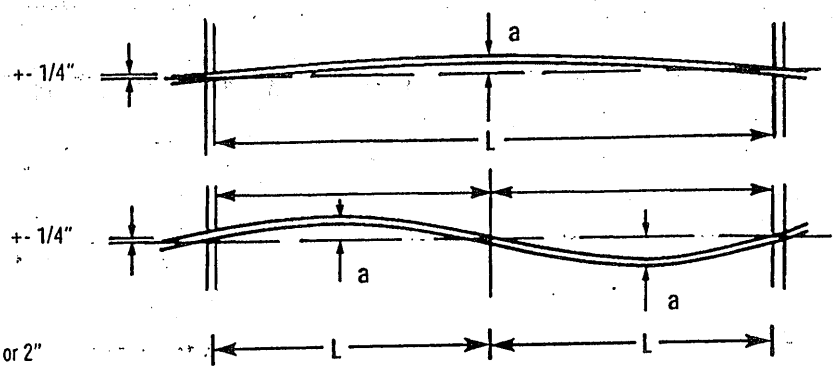

L = 16' to 32', a = 1"
L = 32' & over, a = 2"

6 Bracing

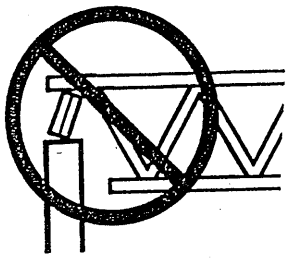

Do not install trusses on temporarily connected supports

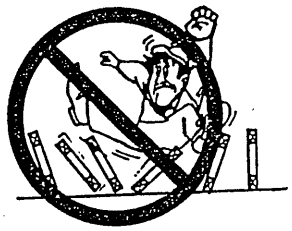

Do not walk on unbraced trusses

Do not walk on trusses or gable ends lying flat

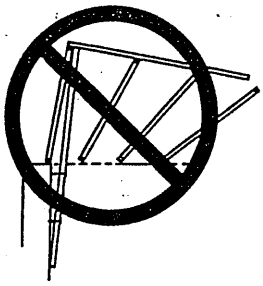

Nails in withdrawal (parallel to force)

All anchors, hangers, tie-downs, seats, bearing ledgers, etc., that are part of the supporting structure shall be accurately and properly placed and permanently attached before truss installation begins. No trusses shall ever be installed on anchors or ties that have temporary connections to the supporting structure.

Nailing scabs to the end of the building to brace the first truss is not recommended.
All nailing of bracing should be done so that nails are driven perpendicular to the direction of force, as shown at right.

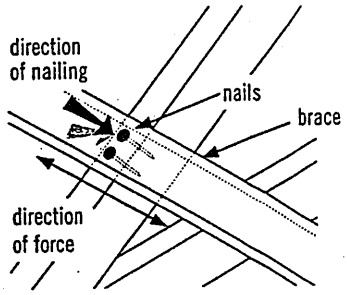

Well nailed (perpendicular to force)

7 Bracing Requirements for 3 Planes of Roof

Temporary erection bracing must be applied to three planes of the roof system to ensure stability: Plane 1) **Top Chord** (sheathing), Plane 2) **Bottom Chord** (ceiling plane), and Plane 3) **Web Member** plane or vertical plane perpendicular to trusses.

1) Top Chord Plane

Most important to the builder or erection contractor is bracing in the plane of the top chord. Truss top chords are susceptible to lateral buckling before they are braced or sheathed.

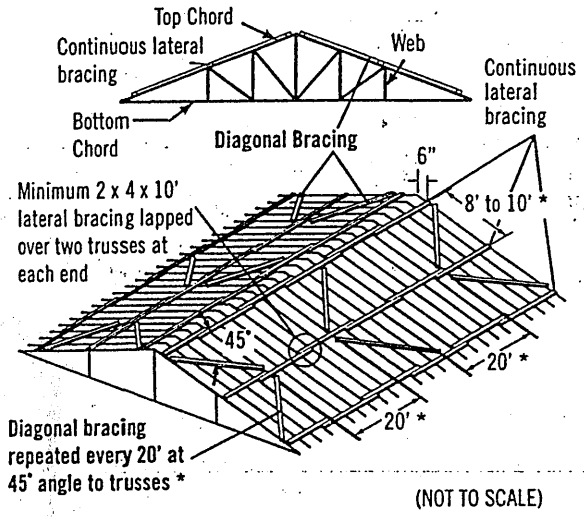

(NOT TO SCALE)

Exact spacing between trusses should be maintained as bracing is installed to avoid the hazardous practice of removing bracing to adjust spacing. This act of "adjusting spacing" can cause trusses to topple if connections are removed at the wrong time.

2) Bottom Chord Plane

In order to hold proper spacing on the bottom chord, temporary bracing is recommended on the top of the bottom chord.

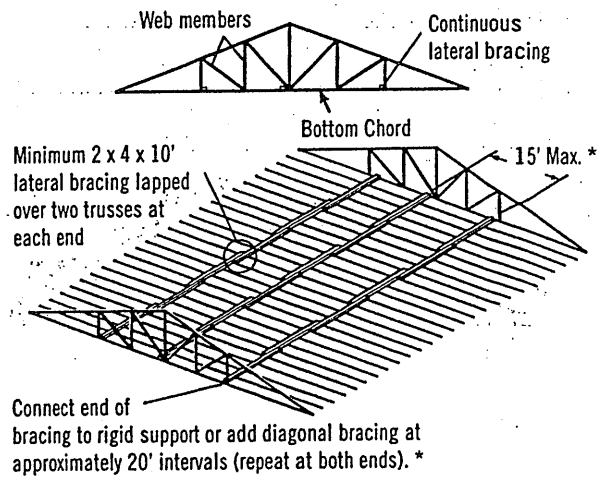

* Long spans, heavy loads or other spacing configurations may require closer spacing between lateral bracing and closer intervals between diagonals. Consult the building designer or HIB and DSB (*Recommended Design Specification for Temporary Bracing of Metal-Plate Connected Wood Trusses*) for details.

Diagonal or cross-bracing is very important!

3) Web Member Plane

"X" bracing, as shown, is critical in preventing trusses from leaning or dominoing. Repeat as shown to create a succession of rigid units.

X-bracing should be installed on vertical web members wherever possible, at or near lateral bracing. Plywood or OSB may be substituted for X-bracing.

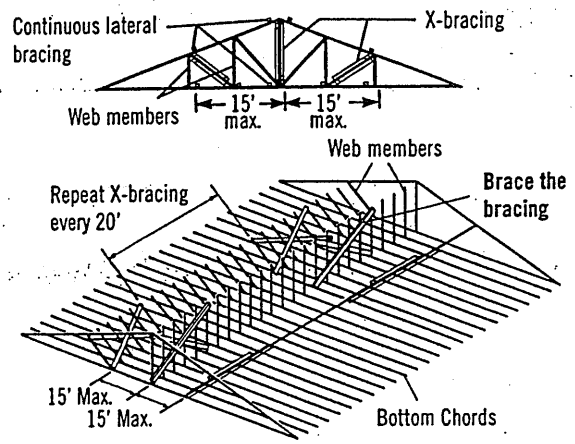

Note: Top chords and some web members are not shown, in order to make drawings more readable.

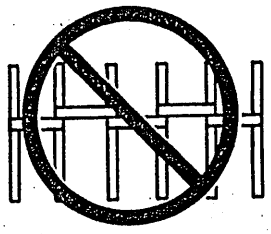

Do not use short blocks to brace individual trusses without a specific bracing plan detailing their use

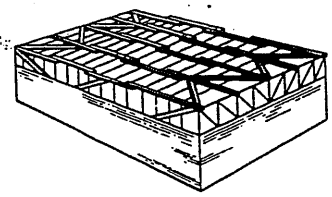

Bracing requirements using the same principles apply to parallel chord trusses

8 Stacking Materials

Do not proceed with building completion until all bracing is securely and properly in place

Never stack materials on unbraced or inadequately braced trusses

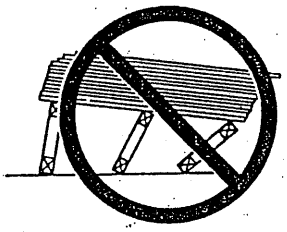

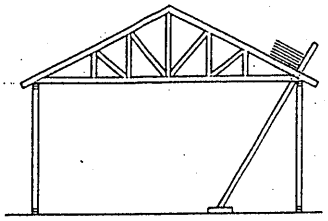

Proper distribution of construction materials is a must during construction.

Never stack materials near a peak

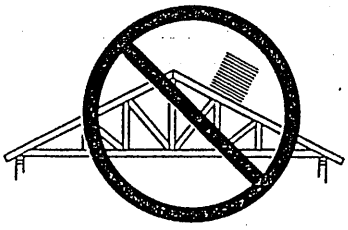

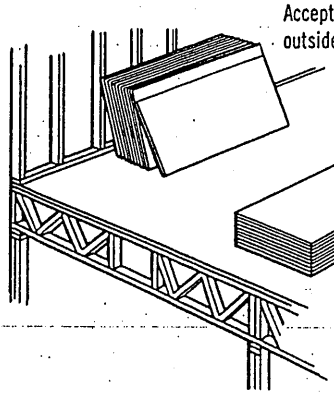

Never stack materials on the cantilever of a truss

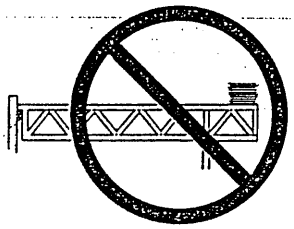

Always stack materials over two or more trusses.

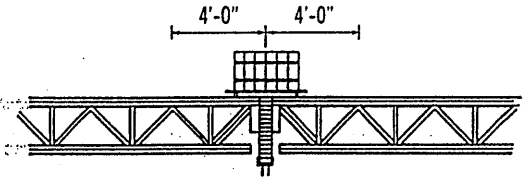

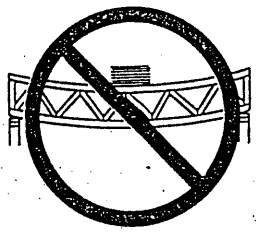

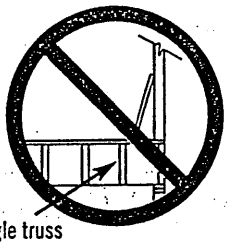

Roofing and mechanical contractors are cautioned to stack materials only along outside supporting members or directly over inside supporting members. Trusses are not designed for dynamic loads (i.e., moving vehicles). Extreme care should be taken when loading and stacking construction materials (rolled roofing, mechanical equipment, etc.) on the roof or floor system.

Never overload small groups or single trusses. Position load over as many trusses as possible.

Never cut any structural member of a truss.

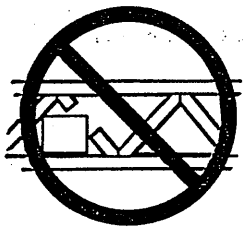

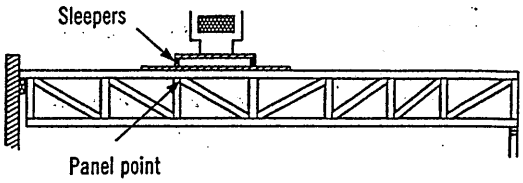

Sleepers for mechanical equipment should be located at panel points (joints) or over main supporting members, and only on trusses that have been designed for such loads.

Caution Notes

Errors in building lines and/or dimensions, or errors by others shall be corrected by the contractor or responsible construction trade subcontractor or supplier **before** erection of trusses begins.

Cutting of nonstructural overhangs is considered a part of normal erection and shall be done by the builder or erection contractor.

Any field modification that involves the cutting, drilling, or relocation of any structural truss member or connector plate shall not be done without the approval of the truss manufacturer or a licensed design professional.

The methods and procedures outlined are intended to ensure that the overall construction techniques employed will put floor and roof trusses **safely** in place in a completed structure. These recommendations for bracing wood trusses originate from the collective experience of leading technical personnel in the wood truss industry, but must, due to the nature of responsibilities involved, be presented only as a **guide** for use by a qualified building designer, builder, or erection contractor. Thus, the Wood Truss Council of America expressly disclaims any responsibility for damages arising from the use, application, or reliance on the recommendations and information contained herein.

[Selected text and figures referenced or reproduced from HIB and DSB by permission of the Truss Plate Institute, Madison, WI.]

THE CANADIAN WOOD TRUSS ASSOCIATION

L'ASSOCIATION CANADIENNE DES FABRICANTS DE FERMES DE BOIS

1400 Blair Place, Suite 210, Ottawa, ON K1J 9B8
Tel.: 613-747-5544 Fax: 613-747-6264

Wood Truss Council of America

One WTCA Center
6300 Enterprise Lane, Madison, WI 53719-1140
Tel.: 608-274-4849 Fax: 608-274-3329
wtca@woodtruss.com www.woodtruss.com