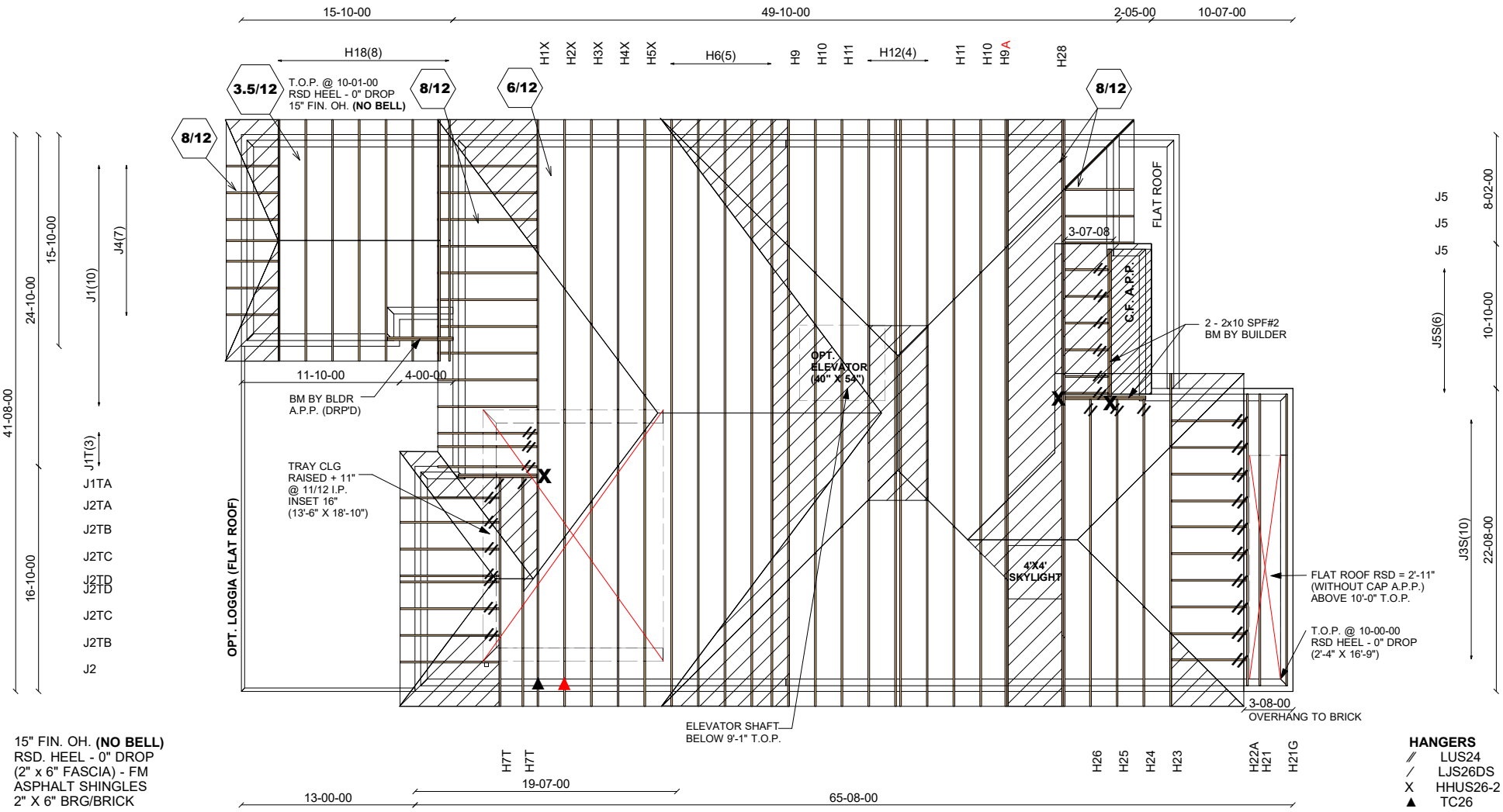

E22104511 - E22104543

Mitek V. 8.5.3.233

ALL CONVENTIONAL FRAMING TO CONFORM WITH PART 9 O.B.C. LATEST EDITION. ROOF RAFTERS THAT CROSS OVER TRUSSES TO BE 2X4 SPF #2 @ 24" O.C WITH A VERT. POST TO THE TRUSS UNDERNEATH AT EACH CROSS POINT. VERT. POSTS LONGER THAN 6' TO HAVE LATERAL BRACING SO THAT THE DISTANCE BETWEEN END POINTS & BETWEEN ROWS OF BRACING DOES NOT EXCEED 6'

CONVENTIONAL FRAMING BY OTHERS

Job Track: **45147**	Builder / Location: **GOLD PARK HOMES / VAUGHAN**	Model / Elevation: **5005 / C SKYLIGHT**	
Layout ID: **349186**	Project: **PINE VALLEY PH 2**	THESE DRAWINGS CONSTITUTE THE PROPERTY OF ALPA ROOF TRUSSES INC., SHALL NOT BE REPRODUCED, PUBLISHED, OR REDISTRIBUTED IN ANY MANNER OR UTILIZED FOR ANY PURPOSE OTHER THAN THE MANUFACTURE OF TRUSSES BY ALPA ROOF TRUSSES INC AND WILL BE RETRACTED BY ALPA ROOF TRUSSES INC IF UTLILZED FOR ANY OTHER PURPOSE.	
Plan Log: **118913**	Date: **10/5/2022** Designer: CAWHITE Ref: **292660**		

EWP DESIGN INC.

(905) 832-2250 FAX (905) 832-0286

RESPONSIBILITIES AND SPECIFICATIONS

RESPONSIBILITIES

1. EWP DESIGN INC. is responsible for the design of trusses as individual components.
2. It is the responsibility of others to ascertain that the design loads utilized on each drawing meet or exceed the actual dead load imposed by the structure, the live load imposed by the intended use and the snow load imposed by local building code or authorities with jurisdictions.
3. All dimensions are to be verified by the owner, contractor, architect or other authorities with jurisdictions before truss fabrication.
4. EWP DESIGN INC. bears no responsibility for the erection of trusses. Persons erecting trusses are cautioned to seek professional advice regarding the temporary and permanent bracing for the system. Bracing shown on EWP DESIGN INC. drawing is specified for the truss as a component only and forms an integral part of the truss design.
5. It is the truss manufacturer's responsibility to ensure that trusses are manufactured in conformance with specifications of EWP DESIGN INC. as outlined below.

SPECIFICATIONS

1. Trusses designed by EWP DESIGN INC. conform to the relevant section of the Ontario Building Code of Canada (Part 9 or Part 4) or to the Canadian code for farm buildings, whichever applies to the building type, as indicated on the EWP DESIGN INC. drawings, and conform to the design procedures established by the Truss Plate Institute of Canada. Unit stresses used for truss designs are as per the edition of CSA-O86 shown on EWP DESIGN INC. drawings.
2. Lumber is to be the size, species and grade as specified on EWP DESIGN INC. drawings.
3. Moisture content of lumber shall not exceed 19% in service unless specified otherwise.
4. Metal connector plates shall be applied to both faces of truss at each joint and shall be positioned as specified.
5. Top chords of trusses are assumed to be continuously braced laterally by roof sheathing or by purlins at intervals not exceeding 12.5 times the thickness of top chord member.
6. Bottom chords shall be laterally braced at intervals not exceeding 3M (10') o.c., where rigid ceiling is not applied directly to the underside of chords.

THESE DRAWINGS CONSTITUTE THE PROPERTY OF EWP DESIGN INC., SHALL NOT BE REPRODUCED, PUBLISHED, OR REDISTRIBUTED IN ANY MANNER OR UTILIZED FOR ANY PURPOSE OTHER THAN THE MANUFACTURE OF TRUSSES BY THE ALPA LUMBER GROUP, AND WILL BE RETRACTED BY EWP DESIGN INC. IF UTILIZED FOR ANY OTHER PURPOSE.

JOB NAME	TRUSS NAME	QUANTITY	PLY	JOB DESC.	DRWG NO.
349186	H1X		2	TRUSS DESC. JT 45147	E22104511

Alpha Roof Truss, Maple

Version 8.530 S Feb 23 2022 MiTek Industries, Inc. Mon Oct 24 08:33:31 2022 Page 1

ID:HSVaWIlDnhr?B6oeweH9vbyNdls-v319tfxkDnJT8xzOzvvki 7LvkB1Q?Q75KwobAyQGdY

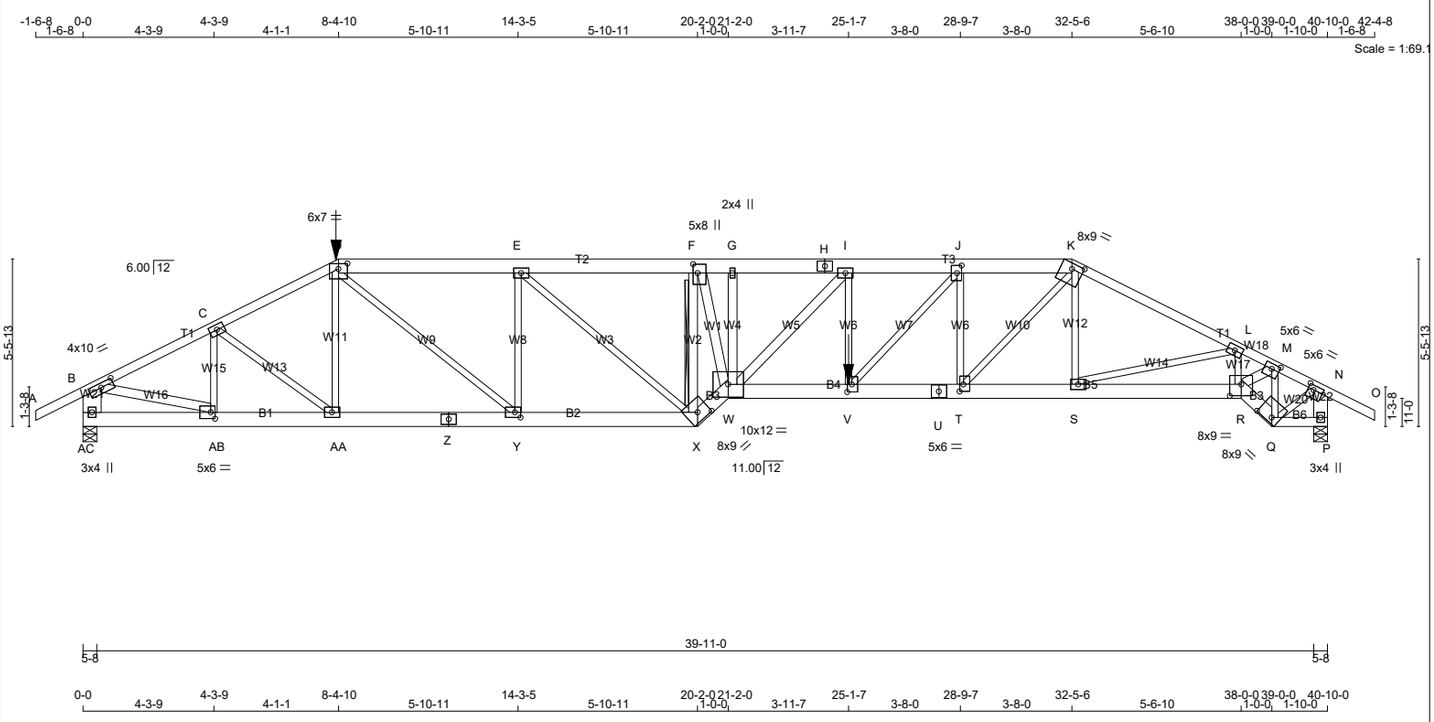

TOTAL WEIGHT = 2 X 222 = 445 lb

[M]

LUMBER

N. L. G. A. RULES

CHORDS	SIZE		LUMBER	DESCR.
A - D	2x4	DRY	No.2	SPF
D - H	2x6	DRY	No.2	SPF
H - K	2x6	DRY	No.2	SPF
K - O	2x4	DRY	No.2	SPF
AC- B	2x8	DRY	No.2	SPF
P - N	2x6	DRY	No.2	SPF
AC- Z	2x6	DRY	No.2	SPF
Z - X	2x6	DRY	No.2	SPF
X - W	2x6	DRY	No.2	SPF
W - U	2x6	DRY	No.2	SPF
U - R	2x6	DRY	No.2	SPF
R - Q	2x6	DRY	No.2	SPF
Q - P	2x4	DRY	No.2	SPF
ALL WEBS	2x3	DRY	No.2	SPF
EXCEPT				
X - F	2x4	DRY	No.2	SPF
F - W	2x4	DRY	No.2	SPF
W - G	2x4	DRY	No.2	SPF
W - I	2x4	DRY	No.2	SPF
R - M	2x4	DRY	No.2	SPF
B - AB	2x4	DRY	No.2	SPF

DRY: SEASONED LUMBER.

DESIGN CONSISTS OF 2 TRUSSES BUILT SEPARATELY THEN FASTENED TOGETHER AS FOLLOWS:

CHORDS #ROWS		SURFACE SPACING (IN)	LOAD(PLF)
TOP CHORDS : (0.122"X3") SPIRAL NAILS			
A- D	1	12	SIDE(61.0)
K- O	1	12	TOP
D- H	2	12	SIDE(37.8)
H- K	2	12	TOP
P- N	2	12	TOP
AC- B	2	12	TOP
BOTTOM CHORDS : (0.122"X3") SPIRAL NAILS			
AC- Z	2	12	SIDE(10.0)
Z- X	2	12	SIDE(10.0)
X- W	2	12	SIDE(7.4)
W- U	2	12	SIDE(146.6)
U- R	2	12	TOP
R- Q	2	12	TOP
Q- P	1	12	TOP
WEBS : (0.122"X3") SPIRAL NAILS			
AA- D	1	6	SIDE(86.7)
I- V	1	6	SIDE(324.3)
2x3	1	6	
2x4	1	6	

NAILS TO BE DRIVEN FROM ONE SIDE ONLY.

GIRDER NAILING ASSUMES NAILED HANGERS ARE FASTENED WITH MIN. 3-0 INCH NAILS.

TOP - COMPONENTS ARE LOADED FROM THE TOP AND MUST BE PLACED ON TOP EDGE OF ALL PLIES FOR THE LOAD TO BE TRANSFERRED TO EACH PLY.

SIDE - PLF SHOWN IS THE EQUIVALENT UDL APPLIED TO ONE SIDE THAT THE CORRESPONDING NAILING PATTERN SHALL BE CAPABLE OF TRANSFERING. REMAINING PLF MUST BE APPLIED ON THE OPPOSITE SIDE OR ON THE TOP.

PLATES (table is in inches)

JT	TYPE	PLATES	W	LEN	Y	X
B	TMVW-t	MT20	4.0	10.0	1.75	5.00

LATERAL BRACE(S) SHOWN SHALL BE 2X4 SPF#2

DIMENSIONS, SUPPORTS AND LOADINGS SPECIFIED BY FABRICATOR TO BE VERIFIED BY BUILDING DESIGNER

BEARINGS

JT	FACTORED GROSS REACTION VERT	HORZ	MAXIMUM FACTORED GROSS REACTION DOWN	HORZ	UPLIFT	INPUT BRG IN-SX	REQRD BRG IN-SX
AC	4213	0	4213	0	0	5-8	2-5
P	3944	0	3944	0	0	5-8	2-2

ALLOW FOR 0.3" OF HORIZONTAL MOVEMENT DUE TO TOTAL LOAD

UNFACTORED REACTIONS

1ST LCASE MAX./MIN. COMPONENT REACTIONS

JT	COMBINED	SNOW	LIVE	PERM.LIVE	WIND	DEAD	SOIL
AC	3005	1827 / 0	0 / 0	0 / 0	0 / 0	1178 / 0	0 / 0
P	2809	1734 / 0	0 / 0	0 / 0	0 / 0	1075 / 0	0 / 0

BEARING MATERIAL TO BE SPF NO.2 OR BETTER AT JOINT(S) AC, P

BRACING

TOP CHORD TO BE SHEATHED OR MAX. PURLIN SPACING = 3.07 FT.
MAX. UNBRACED BOTTOM CHORD LENGTH = 10.00 FT OR RIGID CEILING DIRECTLY APPLIED.

ALL PITCH BREAKS AND PERIMETER CORNER JOINTS MUST BE LATERALLY RESTRAINED.

2x4 DRY SPF No.2 T-BRACE AT F-X

FASTEN T AND I-BRACES TO NARROW EDGE OF WEB WITH ONE ROW PER PLY OF 3" COMMON WIRE NAILS @ 6" O.C. WITH 3" MINIMUM END DISTANCE. BRACE MUST COVER 90% OF WEB LENGTH.

END VERTICAL(S) MUST BE SHEATHED OR HAVE BRACES AS INDICATED IN THE MAX. UNBRACED LENGTH COLUMN OF THE TABLE BELOW

LOADING

TOTAL LOAD CASES: (4)

CHORDS

MEMB. FR-TO	MAX. FACTORED FORCE (LBS)	FACTORED VERT. LOAD (PLF) FROM	TO	LC1	MAX CSI (LC)	MAX. UNBRAC LENGTH
A- B	0 / 28	-78.0	-78.0	0.08 (1)	10.00	
B- C	-6035 / 0	-78.0	-78.0	0.25 (1)	3.81	
C- D	-6697 / 0	-78.0	-78.0	0.28 (1)	3.61	
D- E	-8578 / 0	-153.5	-153.5	0.33 (1)	3.91	
E- F	-9753 / 0	-153.5	-153.5	0.37 (1)	3.66	
F- G	-11842 / 0	-153.5	-153.5	0.42 (1)	3.26	
G- H	-11825 / 0	-78.0	-78.0	0.43 (1)	3.26	
H- I	-11825 / 0	-78.0	-78.0	0.43 (1)	3.26	
I- J	-11650 / 0	-78.0	-78.0	0.28 (1)	3.46	
J- K	-9452 / 0	-78.0	-78.0	0.21 (1)	3.86	
K- L	-7702 / 0	-78.0	-78.0	0.53 (1)	3.23	
L- M	-8470 / 0	-78.0	-78.0	0.36 (1)	3.07	
M- N	-4097 / 0	-78.0	-78.0	0.20 (1)	4.50	
N- O	0 / 28	-78.0	-78.0	0.08 (1)	10.00	
AC- B	-4101 / 0	0.0	0.0	0.11 (1)	7.81	
P- N	-3927 / 0	0.0	0.0	0.14 (1)	7.16	
AC-AB	0 / 0	-36.4	-36.4	0.06 (1)	10.00	
AB-AA	0 / 5409	-36.4	-36.4	0.40 (1)	10.00	
AA- Z	0 / 6001	-36.4	-36.4	0.43 (1)	10.00	
Z- Y	0 / 6001	-36.4	-36.4	0.43 (1)	10.00	
Y- X	0 / 8577	-36.4	-36.4	0.61 (1)	10.00	
X- W	0 / 12854	-36.4	-36.4	0.84 (1)	10.00	
W- V	0 / 11651	-112.0	-112.0	0.87 (1)	10.00	
V- U	0 / 9452	-18.5	-18.5	0.67 (1)	10.00	
U- T	0 / 9452	-18.5	-18.5	0.67 (1)	10.00	
T- S	0 / 6889	-18.5	-18.5	0.46 (1)	10.00	
S- R	0 / 7683	-18.5	-18.5	0.52 (1)	10.00	
R- Q	0 / 4580	-18.5	-18.5	0.30 (1)	10.00	
Q- P	0 / 0	-18.5	-18.5	0.01 (4)	10.00	

WEBS

MEMB. FR-TO	MAX. FACTORED FORCE (LBS)	MAX CSI (LC)
AB- C	-1081 / 0	0.11 (1)
C-AA	0 / 741	0.09 (1)
AA- D	-186 / 81	0.04 (1)
D- Y	0 / 3395	0.42 (1)
Y- E	-2068 / 0	0.42 (1)
E- X	0 / 1541	0.19 (1)
X- F	-9504 / 0	0.95 (1)
F- W	0 / 8732	0.77 (1)
W- G	0 / 499	0.04 (1)
W- I	0 / 251	0.02 (1)
V- I	-638 / 0	0.09 (1)
V- J	0 / 3302	0.41 (1)
T- J	-2800 / 0	0.40 (1)
T- K	0 / 3869	0.48 (1)
S- K	0 / 250	0.03 (4)
S- L	-816 / 0	0.22 (1)
R- L	0 / 104	0.02 (4)
R- M	0 / 5426	0.48 (1)
Q- M	-4918 / 0	0.40 (1)
B-AB	0 / 5526	0.49 (1)
Q- N	0 / 4007	0.50 (1)

FACTORED CONCENTRATED LOADS (LBS)

JT	LOC.	LC1	MAX-	MAX+	FACE	DIR.	TYPE	HEEL	CONN.
D	8-4-10	-477	-477	---	FRONT	VERT	TOTAL	---	C1
V	25-1-7	-1766	-1766	---	FRONT	VERT	TOTAL	---	C1

CONNECTION REQUIREMENTS

1) **C1:** A SUITABLE HANGER/MECHANICAL CONNECTION IS REQUIRED.

DESIGN CRITERIA

*** SPECIAL LOADS ANALYSIS ***
GEOMETRY AND/OR BASIC LOADS CHANGED BY USER.
LOADS WERE DERIVED FROM USER INPUT
NO FURTHER MODIFICATIONS WERE MADE

SPECIFIED LOADS:

TOP	CH.	LL	=	21.0	PSF
		DL	=	6.0	PSF
BOT	CH.	LL	=	0.0	PSF
		DL	=	7.4	PSF
TOTAL	LOAD		=	34.4	PSF

SPACING = 24.0 IN. C/C

LOADING IN FLAT SECTION BASED ON A SLOPE OF 2.00/12 MINIMUM

GIRDER TYPE: CStdGirder
START DISTANCE = 21-2-0
START SPAN CARRIED = 5-10-8
END DISTANCE = 25-1-7
END SPAN CARRIED = 5-10-8
END WALL WIDTH = 0-0
APPLIED TO FRONT SIDE OF BOTTOM CHORD.
- ADDT'L LOADS BASED ON 55 % OF GSL. (DEFINED BY USER)

GIRDER TYPE: CPrimeHip
SIDE SETBACK = 8-4-10
END SETBACK = 5-10-8
END WALL WIDTH = 0-0
CORNER FRAMING TYPE: CONVENTIONAL
END JACK TYPE: CONVENTIONAL
APPLIED TO FRONT SIDE
- ADDT'L LOADS BASED ON 55 % OF GSL.
LOADS APPLIED TO FIRST 21-2-0 OF SPAN MEASURED FROM THE LEFT.

*** NON STANDARD GIRDER ***
ADDT'L USER-DEFINED LOADS APPLIED TO ALL LOAD CASES.

THIS TRUSS IS DESIGNED FOR RESIDENTIAL OR SMALL BUILDING REQUIREMENTS OF PART 9, NBCC 2015

THIS DESIGN COMPLIES WITH:
- PART 9 OF BCBC 2018 , ABC 2019
- PART 9 OF OBC 2012 (2019 AMENDMENT)
- CSA 086-14
- TPIC 2014

DESIGN ASSUMPTIONS
-OVERHANG NOT TO BE ALTERED OR CUT OFF.

(55 % OF 23.0 P.S.F. G.S.L. PLUS 8.4 P.S.F. RAIN LOAD) EQUALS 21.0 P.S.F. SPECIFIED ROOF LIVE LOAD

ALLOWABLE DEFL.(LL)= L/360 (1.36")
CALCULATED VERT. DEFL.(LL) = L/ 999 (0.36")
ALLOWABLE DEFL.(TL)= L/360 (1.36")
CALCULATED VERT. DEFL.(TL) = L/ 696 (0.70")

CSI: TC=0.53/1.00 (K-L:1) , BC=0.87/1.00 (V-W:1) , WB=0.95/1.00 (F-X:1) , SSI=0.23/1.00 (F-G:1)

DOL LUMBER=1.00 NAIL=1.00 LS BEND=1.00 COMP=1.00 SHEAR=1.00 TENS= 1.00

COMPANION LIVE LOAD FACTOR = 1.00

AUTOSOLVE HEELS OFF

TRUSS PLATE MANUFACTURER IS NOT RESPONSIBLE FOR QUALITY CONTROL IN THE TRUSS MANUFACTURING PLANT .

NAIL VALUES

PLATE	GRIP(DRY) (PSI) MAX	MIN	SHEAR (PLI) MAX	MIN	SECTION (PLI) MAX	MIN
MT20	650	371	1747	788	1987	1873

PLATE PLACEMENT TOL. = 0.250 inches

PLATE ROTATION TOL. = 5.0 Deg.

JSI GRIP= 0.90 (F) (INPUT = 0.90)
JSI METAL= 0.82 (U) (INPUT = 1.00)

CONTINUED ON PAGE 2

JOB NAME	TRUSS NAME	QUANTITY	PLY	JOB DESC.	DRWG NO.
349186	H1X		2	TRUSS DESC. JT 45147	E22104511(2)

PLATES (table is in inches)

JT	TYPE	PLATES	W	LEN	Y	X
C, E, I, L						
C	TMWW-t	MT20	4.0	6.0		
D	TTWW-l	MT20	6.0	7.0	2.25	3.50
F	TMWW+t	MT20	5.0	8.0	3.50	1.75
G	TMW+w	MT20	2.0	4.0		
H	TS-t	MT20	4.0	6.0		
J	TMWW+t	MT20	4.0	6.0	3.00	1.75
K	TTWW-h	MT20	8.0	9.0	2.25	4.50
M	TMWW-t	MT20	5.0	6.0	2.00	3.00
N	TMVW-t	MT20	5.0	6.0	1.75	2.25
P	BMV1+p	MT20	3.0	4.0		
Q	BBWW-h	MT20	8.0	9.0	2.00	6.00
R	BBWW-l	MT20	8.0	9.0	4.50	4.50
S	BMWW-t	MT20	4.0	6.0		
T	BMWW+t	MT20	4.0	6.0	2.75	1.50
U	BS-t	MT20	5.0	6.0		
V	BMWW+t	MT20	4.0	6.0	3.00	1.75
W	BBWWW-p	MT20	10.0	12.0		
X	BBWW-h	MT20	8.0	9.0	3.25	4.50
Y	BMWW-t	MT20	4.0	6.0	2.00	2.25
Z	BS-t	MT20	4.0	6.0		
AA	BMWW-t	MT20	4.0	6.0		
AB	BMWW-t	MT20	5.0	6.0	2.50	1.75
AC	BMV1+p	MT20	3.0	4.0		

LATERAL BRACE(S) SHOWN SHALL BE
2X4 SPF#2

JOB NAME	TRUSS NAME	QUANTITY	PLY	JOB DESC.	DRWG NO.
349186	H2X		1	TRUSS DESC. JT 45147	E22104512

Alpha Roof Truss, Maple

Version 8.530 S Feb 23 2022 MiTek Industries, Inc. Mon Oct 24 08:33:33 2022 Page 1

ID:HSVaWIIDnhr?B6oeweH9vbyNdls-sR9vIKz?lOaBNF7m4KxCnPCdqXunuwbQZePvq2yQGdW

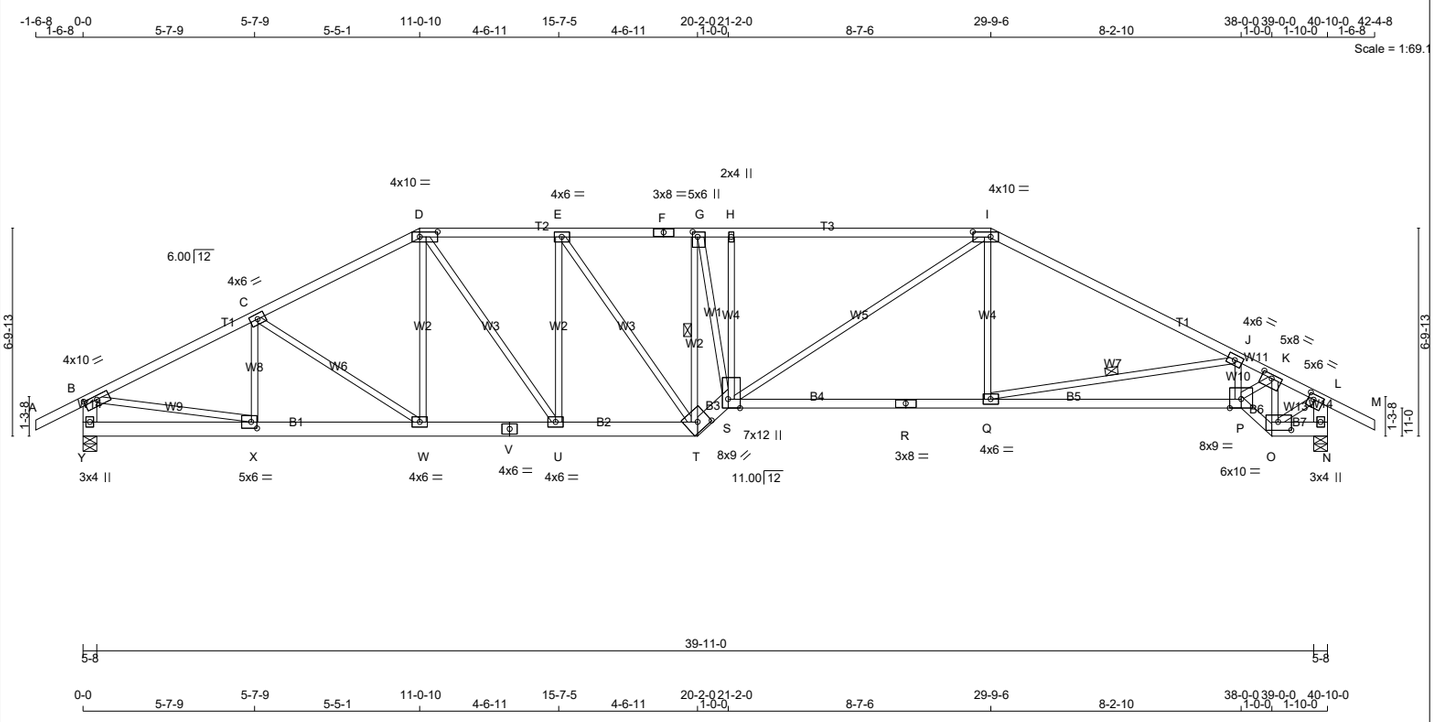

TOTAL WEIGHT = 191 lb

[M][F]

LUMBER

N. L. G. A. RULES

CHORDS	SIZE		LUMBER	DESCR.
A - D	2x4	DRY	1650F 1.5E	SPF
D - F	2x4	DRY	1650F 1.5E	SPF
F - I	2x4	DRY	1650F 1.5E	SPF
I - M	2x4	DRY	1650F 1.5E	SPF
Y - B	2x6	DRY	No.2	SPF
N - L	2x6	DRY	No.2	SPF
Y - V	2x6	DRY	No.2	SPF
V - T	2x6	DRY	No.2	SPF
T - S	2x6	DRY	No.2	SPF
S - R	2x4	DRY	No.2	SPF
R - P	2x4	DRY	No.2	SPF
P - O	2x4	DRY	No.2	SPF
O - N	2x6	DRY	No.2	SPF
ALL WEBS EXCEPT	2x3	DRY	No.2	SPF

DRY: SEASONED LUMBER.

PLATES (table is in inches)

JT	TYPE	PLATES	W	LEN	Y	X
B	TMVW-t	MT20	4.0	10.0	1.50	5.00
C, E, J						
C	TMWW-t	MT20	4.0	6.0		
D	TTWW-l	MT20	4.0	10.0	2.00	7.00
F	TS-t	MT20	3.0	8.0		
G	TMWW+t	MT20	5.0	6.0	2.00	2.00
H	TMW+w	MT20	2.0	4.0		
I	TTWW-l	MT20	4.0	10.0	2.00	7.00
K	TMWW-t	MT20	5.0	8.0	1.50	4.00
L	TMVW-t	MT20	5.0	6.0	2.00	2.25
N	BMV1+p	MT20	3.0	4.0		
O	BBWW-l	MT20	6.0	10.0	3.25	5.25
P	BBWW-l	MT20	8.0	9.0	Edge	
Q, U, W						
Q	BMWW-t	MT20	4.0	6.0		
R	BS-t	MT20	3.0	8.0		
S	BBWWW+p	MT20	7.0	12.0	Edge	4.75
T	BBWW-h	MT20	8.0	9.0	3.25	4.50
V	BS-t	MT20	4.0	6.0		
X	BMWW-t	MT20	5.0	6.0	2.50	2.25
Y	BMV1+p	MT20	3.0	4.0		

Edge - INDICATES REFERENCE CORNER OF PLATE TOUCHES EDGE OF CHORD.

LATERAL BRACE(S) SHOWN SHALL BE 2X4 SPF#2

DIMENSIONS, SUPPORTS AND LOADINGS SPECIFIED BY FABRICATOR TO BE VERIFIED BY BUILDING DESIGNER

BEARINGS

JT	FACTORED GROSS REACTION VERT	HORZ	MAXIMUM FACTORED GROSS REACTION DOWN	HORZ	UPLIFT	INPUT BRG IN-SX	REQRD BRG IN-SX
Y	2092	0	2092	0	0	5-8	2-4
N	2097	0	2097	0	0	5-8	2-4

ALLOW FOR 0.3" OF HORIZONTAL MOVEMENT DUE TO TOTAL LOAD

UNFACTORED REACTIONS

JT	1ST LCASE COMBINED	MAX./MIN. COMPONENT REACTIONS SNOW	LIVE	PERM.LIVE	WIND	DEAD	SOIL
Y	1489	923 / 0	0 / 0	0 / 0	0 / 0	566 / 0	0 / 0
N	1493	926 / 0	0 / 0	0 / 0	0 / 0	567 / 0	0 / 0

BEARING MATERIAL TO BE SPF NO.2 OR BETTER AT JOINT(S) Y, N

BRACING

TOP CHORD TO BE SHEATHED OR MAX. PURLIN SPACING = 3.44 FT.
MAX. UNBRACED BOTTOM CHORD LENGTH = 10.00 FT OR RIGID CEILING DIRECTLY APPLIED.

ALL PITCH BREAKS AND PERIMETER CORNER JOINTS MUST BE LATERALLY RESTRAINED.

1 LATERAL BRACE(S) AT 1/ 2 LENGTH OF G-T, J-Q.

END VERTICAL(S) MUST BE SHEATHED OR HAVE BRACES AS INDICATED IN THE MAX. UNBRACED LENGTH COLUMN OF THE TABLE BELOW

LOADING

TOTAL LOAD CASES: (4)

CHORDS

MEMB. FR-TO	FORCE (LBS)	VERT. LOAD LC1 FROM (PLF)	TO	MAX CSI (LC)	MAX. UNBRAC LENGTH
A- B	0 / 28	-78.0	-78.0	0.12 (1)	10.00
B- C	-2921 / 0	-78.0	-78.0	0.32 (1)	4.36
C- D	-2785 / 0	-78.0	-78.0	0.30 (1)	4.46
D- E	-2970 / 0	-78.0	-78.0	0.21 (1)	4.43
E- F	-3148 / 0	-78.0	-78.0	0.21 (1)	4.32
F- G	-3148 / 0	-78.0	-78.0	0.21 (1)	4.32
G- H	-3710 / 0	-78.0	-78.0	0.52 (1)	3.63
H- I	-3726 / 0	-78.0	-78.0	0.82 (1)	3.44
I- J	-3203 / 0	-78.0	-78.0	0.75 (1)	3.80
J- K	-3997 / 0	-78.0	-78.0	0.49 (1)	3.55
K- L	-2006 / 0	-78.0	-78.0	0.17 (1)	5.19
L- M	0 / 28	-78.0	-78.0	0.12 (1)	10.00
Y- B	-2033 / 0	0.0	0.0	0.13 (1)	7.10
N- L	-2080 / 0	0.0	0.0	0.13 (1)	7.03
Y- X	0 / 0	-18.5	-18.5	0.07 (4)	10.00
X- W	0 / 2631	-18.5	-18.5	0.36 (1)	10.00
W- V	0 / 2473	-18.5	-18.5	0.33 (1)	10.00
V- U	0 / 2473	-18.5	-18.5	0.33 (1)	10.00
U- T	0 / 2970	-18.5	-18.5	0.38 (1)	10.00
T- S	0 / 4234	-18.5	-18.5	0.50 (1)	10.00
S- R	0 / 2846	-18.5	-18.5	0.63 (4)	10.00
R- Q	0 / 2846	-18.5	-18.5	0.63 (4)	10.00
Q- P	0 / 3816	-18.5	-18.5	0.78 (1)	10.00
P- O	0 / 2126	-18.5	-18.5	0.34 (1)	10.00
O- N	0 / 0	-18.5	-18.5	0.01 (4)	10.00

WEBS

MEMB. FR-TO	FORCE (LBS)	MAX CSI (LC)
X- C	-343 / 0	0.08 (1)
C- W	-196 / 0	0.16 (1)
W- D	0 / 231	0.05 (1)
D- U	0 / 860	0.19 (1)
U- E	-656 / 0	0.48 (1)
E- T	0 / 307	0.07 (1)
T- G	-2961 / 0	0.84 (1)
G- S	0 / 3201	0.72 (1)
S- H	-833 / 0	0.45 (1)
S- I	0 / 1046	0.24 (1)
Q- I	0 / 329	0.09 (4)
Q- J	-994 / 0	0.48 (1)
P- J	-316 / 0	0.05 (1)
P- K	0 / 2837	0.64 (1)
O- K	-2242 / 0	0.33 (1)
B- X	0 / 2665	0.60 (1)
O- L	0 / 1935	0.44 (1)

DESIGN CRITERIA

SPECIFIED LOADS:

TOP CH.	LL	=	21.0	PSF
	DL	=	6.0	PSF
BOT CH.	LL	=	0.0	PSF
	DL	=	7.4	PSF
TOTAL LOAD		=	34.4	PSF

SPACING = 24.0 IN. C/C

LOADING IN FLAT SECTION BASED ON A SLOPE OF 2.00/12 MINIMUM

THIS TRUSS IS DESIGNED FOR RESIDENTIAL OR SMALL BUILDING REQUIREMENTS OF PART 9, NBCC 2015

THIS DESIGN COMPLIES WITH:
- PART 9 OF BCBC 2018 , ABC 2019
- PART 9 OF OBC 2012 (2019 AMENDMENT)
- CSA 086-14
- TPIC 2014

DESIGN ASSUMPTIONS
-OVERHANG NOT TO BE ALTERED OR CUT OFF.

(55 % OF 23.0 P.S.F. G.S.L. PLUS 8.4 P.S.F. RAIN LOAD) EQUALS 21.0 P.S.F. SPECIFIED ROOF LIVE LOAD

ALLOWABLE DEFL.(LL)= L/360 (1.36")
CALCULATED VERT. DEFL.(LL) = L/ 999 (0.29")
ALLOWABLE DEFL.(TL)= L/360 (1.36")
CALCULATED VERT. DEFL.(TL) = L/ 841 (0.58")

CSI: TC=0.82/1.00 (H-I:1) , BC=0.78/1.00 (P-Q:1) , WB=0.84/1.00 (G-T:1) , SSI=0.42/1.00 (J-K:1)

DOL LUMBER=1.00 NAIL=1.00 LS BEND=1.10 COMP=1.10 SHEAR=1.10 TENS= 1.10

COMPANION LIVE LOAD FACTOR = 1.00

AUTOSOLVE HEELS OFF

TRUSS PLATE MANUFACTURER IS NOT RESPONSIBLE FOR QUALITY CONTROL IN THE TRUSS MANUFACTURING PLANT .

NAIL VALUES

PLATE	GRIP(DRY) (PSI) MAX	MIN	SHEAR (PLI) MAX	MIN	SECTION (PLI) MAX	MIN
MT20	650	371	1747	788	1987	1873

PLATE PLACEMENT TOL. = 0.250 inches

PLATE ROTATION TOL. = 5.0 Deg.

JSI GRIP= 0.90 (L) (INPUT = 0.90)
JSI METAL= 0.84 (R) (INPUT = 1.00)

JOB NAME	TRUSS NAME	QUANTITY	PLY	JOB DESC.	DRWG NO.
349186	H3X		1	TRUSS DESC. JT 45147	E22104513

Alpha Roof Truss, Maple

Version 8.530 S Feb 23 2022 MiTek Industries, Inc. Mon Oct 24 08:33:35 2022 Page 1

ID:HSVaWIlDnhr?B6oeweH9vbyNdls-oqHfj0?FH?qvcZG9ClzgsqH ILcUMqMj0yu0kxyQGdU

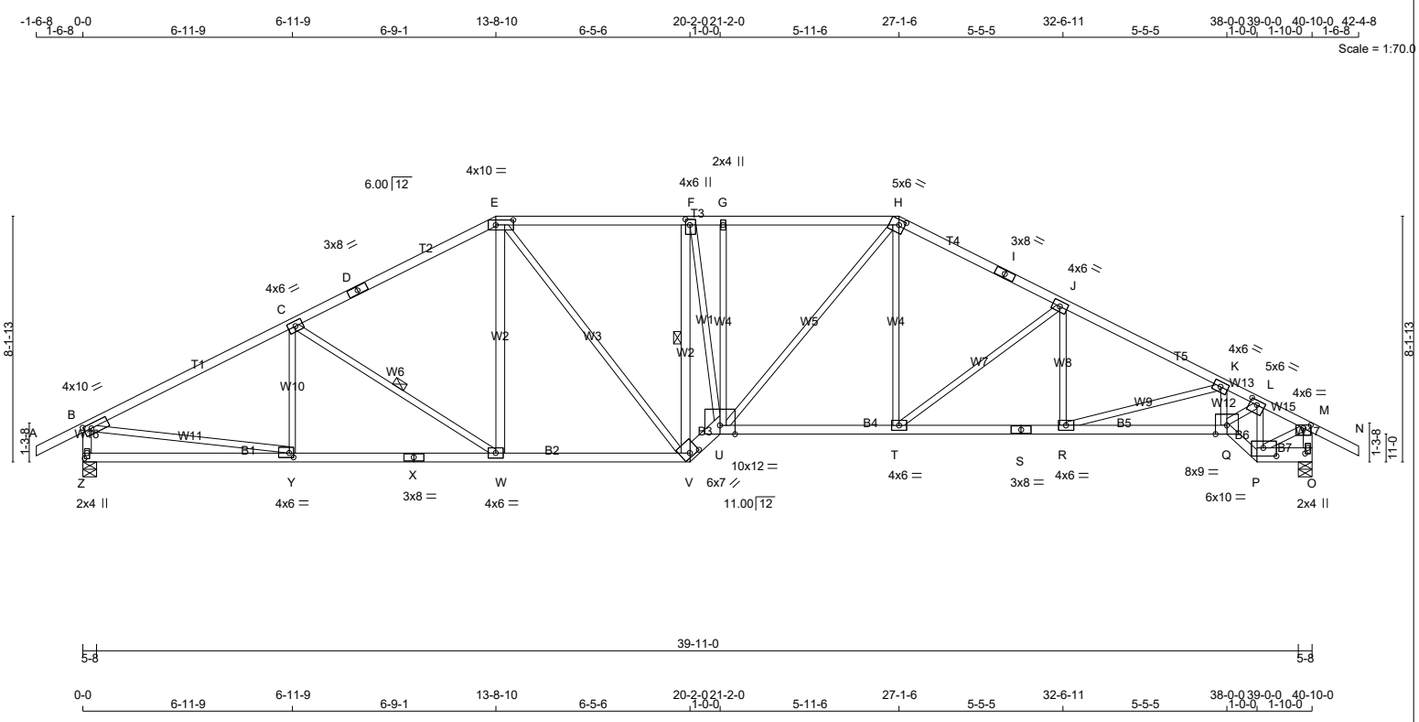

TOTAL WEIGHT = 187 lb

[M][F]

LUMBER

N. L. G. A. RULES

CHORDS	SIZE		LUMBER	DESCR.
A - D	2x4	DRY	No.2	SPF
D - E	2x4	DRY	No.2	SPF
E - H	2x4	DRY	No.2	SPF
H - I	2x4	DRY	No.2	SPF
I - N	2x4	DRY	No.2	SPF
Z - B	2x4	DRY	No.2	SPF
O - M	2x4	DRY	No.2	SPF
Z - X	2x4	DRY	No.2	SPF
X - V	2x4	DRY	No.2	SPF
V - U	2x6	DRY	No.2	SPF
U - S	2x4	DRY	No.2	SPF
S - Q	2x4	DRY	No.2	SPF
Q - P	2x4	DRY	No.2	SPF
P - O	2x6	DRY	No.2	SPF
ALL WEBS	2x3	DRY	No.2	SPF
EXCEPT				
W - E	2x4	DRY	No.2	SPF
V - F	2x4	DRY	No.2	SPF

DRY: SEASONED LUMBER.

PLATES (table is in inches)

JT	TYPE	PLATES	W	LEN	Y	X
B	TMVW-t	MT20	4.0	10.0	1.75	3.00
C, J, K						
C	TMWW-t	MT20	4.0	6.0		
D	TS-t	MT20	3.0	8.0		
E	TTWW-l	MT20	4.0	10.0	2.00	7.00
F	TMWW+t	MT20	4.0	6.0	2.25	1.75
G	TMW+w	MT20	2.0	4.0		
H	TTWW-h	MT20	5.0	6.0	2.00	2.25
I	TS-t	MT20	3.0	8.0		
L	TMWW-t	MT20	5.0	6.0	1.75	3.00
M	TMVW-p	MT20	4.0	6.0	1.25	3.00
O	BMV1+p	MT20	2.0	4.0	2.25	1.00
P	BBWW-l	MT20	6.0	10.0	3.25	5.25
Q	BBWW-l	MT20	8.0	9.0	Edge	
R, T, W						
R	BMWW-t	MT20	4.0	6.0		
S	BS-t	MT20	3.0	8.0		
U	BBWWW-p	MT20	10.0	12.0	Edge	
V	BBWW-h	MT20	6.0	7.0	1.50	3.50
X	BS-t	MT20	3.0	8.0		
Y	BMWW-t	MT20	4.0	6.0	1.75	1.75
Z	BMV1+p	MT20	2.0	4.0	2.25	1.00

Edge - INDICATES REFERENCE CORNER OF PLATE TOUCHES EDGE OF CHORD.

LATERAL BRACE(S) SHOWN SHALL BE 2X4 SPF#2

LICENSED PROFESSIONAL ENGINEER
V. WIDYA
100225448
10/24/2022
PROVINCE OF ONTARIO

DIMENSIONS, SUPPORTS AND LOADINGS SPECIFIED BY FABRICATOR TO BE VERIFIED BY BUILDING DESIGNER

BEARINGS

JT	FACTORED GROSS REACTION VERT	HORZ	MAXIMUM FACTORED GROSS REACTION DOWN	HORZ	UPLIFT	INPUT BRG IN-SX	REQRD BRG IN-SX
Z	2092	0	2092	0	0	5-8	3-5
O	2097	0	2097	0	0	5-8	3-5

UNFACTORED REACTIONS

JT	1ST LCASE COMBINED	MAX./MIN. COMPONENT REACTIONS SNOW	LIVE	PERM.LIVE	WIND	DEAD	SOIL
Z	1489	923 / 0	0 / 0	0 / 0	0 / 0	566 / 0	0 / 0
O	1493	926 / 0	0 / 0	0 / 0	0 / 0	567 / 0	0 / 0

BEARING MATERIAL TO BE SPF NO.2 OR BETTER AT JOINT(S) Z, O

BRACING

TOP CHORD TO BE SHEATHED OR MAX. PURLIN SPACING = 3.40 FT.
MAX. UNBRACED BOTTOM CHORD LENGTH = 10.00 FT OR RIGID CEILING DIRECTLY APPLIED.

ALL PITCH BREAKS AND PERIMETER CORNER JOINTS MUST BE LATERALLY RESTRAINED.

1 LATERAL BRACE(S) AT 1/ 2 LENGTH OF C-W, F-V.

END VERTICAL(S) MUST BE SHEATHED OR HAVE BRACES AS INDICATED IN THE MAX. UNBRACED LENGTH COLUMN OF THE TABLE BELOW

LOADING

TOTAL LOAD CASES: (4)

CHORDS

MEMB. FR-TO	MAX. FACTORED FORCE (LBS)	FACTORED VERT. LOAD (PLF) FROM	TO	LC1 CSI (LC)	MAX. UNBRAC LENGTH
A- B	0 / 28	-78.0	-78.0	0.14 (1)	10.00
B- C	-2942 / 0	-78.0	-78.0	0.73 (1)	3.42
C- D	-2585 / 0	-78.0	-78.0	0.65 (1)	3.69
D- E	-2585 / 0	-78.0	-78.0	0.65 (1)	3.69
E- F	-2624 / 0	-78.0	-78.0	0.54 (1)	3.77
F- G	-2947 / 0	-78.0	-78.0	0.48 (1)	3.55
G- H	-2948 / 0	-78.0	-78.0	0.48 (1)	3.64
H- I	-2906 / 0	-78.0	-78.0	0.42 (1)	3.75
I- J	-2906 / 0	-78.0	-78.0	0.42 (1)	3.75
J- K	-3495 / 0	-78.0	-78.0	0.48 (1)	3.42
K- L	-3894 / 0	-78.0	-78.0	0.25 (1)	3.40
L- M	-2038 / 0	-78.0	-78.0	0.15 (1)	4.63
M- N	0 / 28	-78.0	-78.0	0.14 (1)	10.00
Z- B	-2037 / 0	0.0	0.0	0.21 (1)	5.92
O- M	-2080 / 0	0.0	0.0	0.21 (1)	5.87
Z- Y	0 / 0	-18.5	-18.5	0.19 (4)	10.00
Y- X	0 / 2657	-18.5	-18.5	0.53 (1)	10.00
X- W	0 / 2657	-18.5	-18.5	0.53 (1)	10.00
W- V	0 / 2292	-18.5	-18.5	0.48 (1)	10.00
V- U	0 / 3601	-18.5	-18.5	0.43 (1)	10.00
U- T	0 / 2587	-18.5	-18.5	0.50 (1)	10.00
T- S	0 / 3139	-18.5	-18.5	0.59 (1)	10.00
S- R	0 / 3139	-18.5	-18.5	0.59 (1)	10.00
R- Q	0 / 3539	-18.5	-18.5	0.64 (1)	10.00
Q- P	0 / 2184	-18.5	-18.5	0.35 (1)	10.00
P- O	0 / 0	-18.5	-18.5	0.01 (4)	10.00

WEBS

MEMB. FR-TO	MAX. FACTORED FORCE (LBS)	MAX CSI (LC)
Y- C	-239 / 12	0.08 (1)
C- W	-442 / 0	0.20 (1)
W- E	0 / 347	0.06 (1)
E- V	0 / 519	0.12 (1)
V- F	-2748 / 0	0.82 (1)
F- U	0 / 2219	0.50 (1)
U- G	-93 / 2	0.09 (1)
U- H	0 / 551	0.12 (1)
T- H	0 / 509	0.11 (1)
T- J	-702 / 0	0.64 (1)
R- J	0 / 200	0.05 (4)
R- K	-416 / 0	0.22 (1)
Q- K	-42 / 42	0.01 (4)
Q- L	0 / 2447	0.55 (1)
P- L	-2303 / 0	0.34 (1)
B- Y	0 / 2683	0.60 (1)
P- M	0 / 1987	0.45 (1)

DESIGN CRITERIA

SPECIFIED LOADS:

TOP CH.	LL	=	21.0	PSF
	DL	=	6.0	PSF
BOT CH.	LL	=	0.0	PSF
	DL	=	7.4	PSF
TOTAL LOAD		=	34.4	PSF

SPACING = 24.0 IN. C/C

LOADING IN FLAT SECTION BASED ON A SLOPE OF 2.00/12 MINIMUM

THIS TRUSS IS DESIGNED FOR RESIDENTIAL OR SMALL BUILDING REQUIREMENTS OF PART 9, NBCC 2015

THIS DESIGN COMPLIES WITH:
- PART 9 OF BCBC 2018 , ABC 2019
- PART 9 OF OBC 2012 (2019 AMENDMENT)
- CSA 086-14
- TPIC 2014

DESIGN ASSUMPTIONS
-OVERHANG NOT TO BE ALTERED OR CUT OFF.

(55 % OF 23.0 P.S.F. G.S.L. PLUS 8.4 P.S.F. RAIN LOAD) EQUALS 21.0 P.S.F. SPECIFIED ROOF LIVE LOAD

ALLOWABLE DEFL.(LL)= L/360 (1.36")
CALCULATED VERT. DEFL.(LL) = L/ 999 (0.25")
ALLOWABLE DEFL.(TL)= L/360 (1.36")
CALCULATED VERT. DEFL.(TL) = L/ 992 (0.49")

CSI: TC=0.73/1.00 (B-C:1) , BC=0.64/1.00 (Q-R:1) , WB=0.82/1.00 (F-V:1) , SSI=0.24/1.00 (E-F:1)

DOL LUMBER=1.00 NAIL=1.00 LS BEND=1.10 COMP=1.10 SHEAR=1.10 TENS= 1.10

COMPANION LIVE LOAD FACTOR = 1.00

TRUSS PLATE MANUFACTURER IS NOT RESPONSIBLE FOR QUALITY CONTROL IN THE TRUSS MANUFACTURING PLANT .

NAIL VALUES

PLATE	GRIP(DRY) (PSI) MAX	MIN	SHEAR (PLI) MAX	MIN	SECTION (PLI) MAX	MIN
MT20	650	371	1747	788	1987	1873

PLATE PLACEMENT TOL. = 0.250 inches

PLATE ROTATION TOL. = 5.0 Deg.

JSI GRIP= 0.89 (B) (INPUT = 0.90)
JSI METAL= 0.92 (S) (INPUT = 1.00)

JOB NAME	TRUSS NAME	QUANTITY	PLY	JOB DESC.	DRWG NO.
349186	H4X		1	TRUSS DESC. JT 45147	E22104514

Alpha Roof Truss, Maple

Version 8.530 S Feb 23 2022 MiTek Industries, Inc. Mon Oct 24 08:33:37 2022 Page 1

ID:HSVaWIlDnhr?B6oeweH9vbyNdls-kCOQ8i0Vpd4cssQXJ908yFMJ19HLqiv0TGN6pqyQGdS

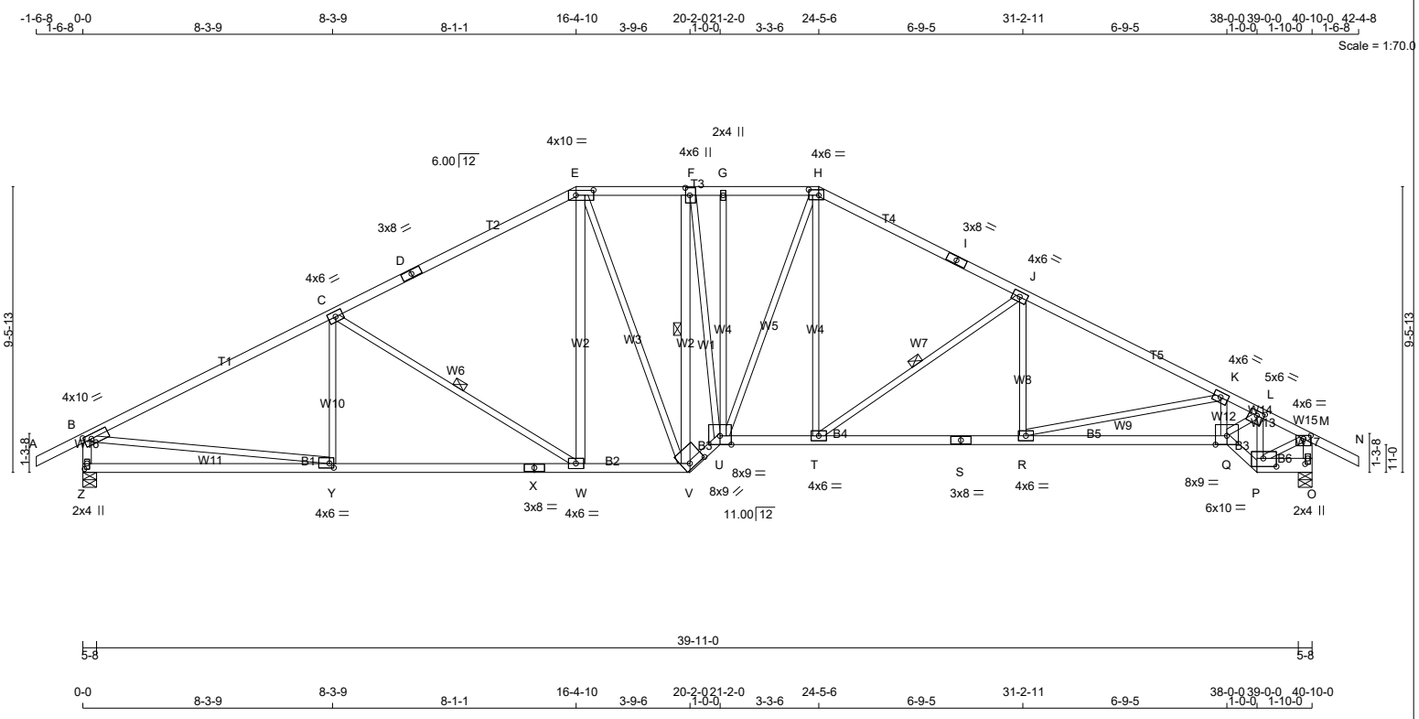

TOTAL WEIGHT = 199 lb

[M][F]

LUMBER

N. L. G. A. RULES

CHORDS	SIZE		LUMBER	DESCR.
A - D	2x4	DRY	1650F 1.5E	SPF
D - E	2x4	DRY	1650F 1.5E	SPF
E - H	2x4	DRY	No.2	SPF
H - I	2x4	DRY	No.2	SPF
I - N	2x4	DRY	No.2	SPF
Z - B	2x4	DRY	No.2	SPF
O - M	2x4	DRY	No.2	SPF
Z - X	2x4	DRY	No.2	SPF
X - V	2x4	DRY	No.2	SPF
V - U	2x4	DRY	No.2	SPF
U - S	2x4	DRY	No.2	SPF
S - Q	2x4	DRY	No.2	SPF
Q - P	2x4	DRY	No.2	SPF
P - O	2x6	DRY	No.2	SPF
ALL WEBS	2x3	DRY	No.2	SPF
EXCEPT				
W - E	2x4	DRY	No.2	SPF
V - F	2x4	DRY	No.2	SPF

DRY: SEASONED LUMBER.

PLATES (table is in inches)

JT	TYPE	PLATES	W	LEN	Y	X
B	TMVW-t	MT20	4.0	10.0	1.75	3.00
C, J, K						
C	TMWW-t	MT20	4.0	6.0		
D	TS-t	MT20	3.0	8.0		
E	TTWW-l	MT20	4.0	10.0	2.00	7.00
F	TMWW+t	MT20	4.0	6.0	3.00	1.75
G	TMW+w	MT20	2.0	4.0		
H	TTWW-l	MT20	4.0	6.0	2.25	4.00
I	TS-t	MT20	3.0	8.0		
L	TMWW-t	MT20	5.0	6.0	1.75	2.75
M	TMVW-p	MT20	4.0	6.0	1.25	3.00
O	BMV1+p	MT20	2.0	4.0	2.25	1.00
P	BBWW-l	MT20	6.0	10.0	3.25	5.25
Q	BBWW-l	MT20	8.0	9.0	Edge	
R, T, W						
R	BMWW-t	MT20	4.0	6.0		
S	BS-t	MT20	3.0	8.0		
U	BBWWW-p	MT20	8.0	9.0	Edge	
V	BBWW-h	MT20	8.0	9.0	2.00	6.00
X	BS-t	MT20	3.0	8.0		
Y	BMWW-t	MT20	4.0	6.0	1.75	1.75
Z	BMV1+p	MT20	2.0	4.0	2.25	1.00

Edge - INDICATES REFERENCE CORNER OF PLATE TOUCHES EDGE OF CHORD.

LATERAL BRACE(S) SHOWN SHALL BE 2X4 SPF#2

DIMENSIONS, SUPPORTS AND LOADINGS SPECIFIED BY FABRICATOR TO BE VERIFIED BY BUILDING DESIGNER

BEARINGS

JT	FACTORED GROSS REACTION VERT	HORZ	MAXIMUM FACTORED GROSS REACTION DOWN	HORZ	UPLIFT	INPUT BRG IN-SX	REQRD BRG IN-SX
Z	2092	0	2092	0	0	5-8	3-5
O	2097	0	2097	0	0	5-8	3-5

UNFACTORED REACTIONS

JT	1ST LCASE COMBINED	MAX./MIN. COMPONENT REACTIONS SNOW	LIVE	PERM.LIVE	WIND	DEAD	SOIL
Z	1489	923 / 0	0 / 0	0 / 0	0 / 0	566 / 0	0 / 0
O	1493	926 / 0	0 / 0	0 / 0	0 / 0	567 / 0	0 / 0

BEARING MATERIAL TO BE SPF NO.2 OR BETTER AT JOINT(S) Z, O

BRACING

TOP CHORD TO BE SHEATHED OR MAX. PURLIN SPACING = 3.26 FT.
MAX. UNBRACED BOTTOM CHORD LENGTH = 10.00 FT OR RIGID CEILING DIRECTLY APPLIED.

ALL PITCH BREAKS AND PERIMETER CORNER JOINTS MUST BE LATERALLY RESTRAINED.

1 LATERAL BRACE(S) AT 1/ 2 LENGTH OF C-W, F-V, J-T.

END VERTICAL(S) MUST BE SHEATHED OR HAVE BRACES AS INDICATED IN THE MAX. UNBRACED LENGTH COLUMN OF THE TABLE BELOW

LOADING

TOTAL LOAD CASES: (4)

CHORDS

MEMB. FR-TO	MAX. FACTORED FORCE (LBS)	FACTORED VERT. LOAD (PLF) FROM	TO	LC1 CSI (LC)	MAX. UNBRAC LENGTH
A- B	0 / 28	-78.0	-78.0	0.12 (1)	10.00
B- C	-2962 / 0	-78.0	-78.0	0.81 (1)	3.79
C- D	-2384 / 0	-78.0	-78.0	0.71 (1)	4.20
D- E	-2384 / 0	-78.0	-78.0	0.71 (1)	4.20
E- F	-2203 / 0	-78.0	-78.0	0.22 (1)	4.41
F- G	-2423 / 0	-78.0	-78.0	0.22 (1)	4.22
G- H	-2422 / 0	-78.0	-78.0	0.23 (1)	4.23
H- I	-2630 / 0	-78.0	-78.0	0.63 (1)	3.70
I- J	-2630 / 0	-78.0	-78.0	0.63 (1)	3.70
J- K	-3395 / 0	-78.0	-78.0	0.72 (1)	3.26
K- L	-3913 / 0	-78.0	-78.0	0.32 (1)	3.33
L- M	-2032 / 0	-78.0	-78.0	0.16 (1)	4.63
M- N	0 / 28	-78.0	-78.0	0.14 (1)	10.00
Z- B	-2030 / 0	0.0	0.0	0.21 (1)	5.93
O- M	-2080 / 0	0.0	0.0	0.21 (1)	5.87
Z- Y	0 / 0	-18.5	-18.5	0.31 (4)	10.00
Y- X	0 / 2680	-18.5	-18.5	0.59 (1)	10.00
X- W	0 / 2680	-18.5	-18.5	0.59 (1)	10.00
W- V	0 / 2108	-18.5	-18.5	0.44 (1)	10.00
V- U	0 / 3018	-18.5	-18.5	0.49 (1)	10.00
U- T	0 / 2336	-18.5	-18.5	0.44 (1)	10.00
T- S	0 / 3051	-18.5	-18.5	0.59 (1)	10.00
S- R	0 / 3051	-18.5	-18.5	0.59 (1)	10.00
R- Q	0 / 3589	-18.5	-18.5	0.68 (1)	10.00
Q- P	0 / 2174	-18.5	-18.5	0.35 (1)	10.00
P- O	0 / 0	-18.5	-18.5	0.01 (4)	10.00

WEBS

MEMB. FR-TO	MAX. FACTORED FORCE (LBS)	MAX CSI (LC)
Y- C	-145 / 74	0.06 (1)
C- W	-682 / 0	0.46 (1)
W- E	0 / 471	0.08 (1)
E- V	0 / 249	0.06 (1)
V- F	-2232 / 0	0.95 (1)
F- U	0 / 1807	0.41 (1)
U- G	0 / 69	0.02 (4)
U- H	0 / 233	0.05 (1)
T- H	0 / 597	0.13 (1)
T- J	-885 / 0	0.43 (1)
R- J	0 / 251	0.07 (4)
R- K	-552 / 0	0.49 (1)
Q- K	-89 / 38	0.01 (4)
Q- L	0 / 2517	0.57 (1)
P- L	-2293 / 0	0.34 (1)
B- Y	0 / 2699	0.61 (1)
P- M	0 / 1978	0.45 (1)

DESIGN CRITERIA

SPECIFIED LOADS:

TOP CH.	LL	=	21.0	PSF
	DL	=	6.0	PSF
BOT CH.	LL	=	0.0	PSF
	DL	=	7.4	PSF
TOTAL LOAD		=	34.4	PSF

SPACING = 24.0 IN. C/C

LOADING IN FLAT SECTION BASED ON A SLOPE OF 2.00/12 MINIMUM

THIS TRUSS IS DESIGNED FOR RESIDENTIAL OR SMALL BUILDING REQUIREMENTS OF PART 9, NBCC 2015

THIS DESIGN COMPLIES WITH:
- PART 9 OF BCBC 2018 , ABC 2019
- PART 9 OF OBC 2012 (2019 AMENDMENT)
- CSA 086-14
- TPIC 2014

DESIGN ASSUMPTIONS
-OVERHANG NOT TO BE ALTERED OR CUT OFF.

(55 % OF 23.0 P.S.F. G.S.L. PLUS 8.4 P.S.F. RAIN LOAD) EQUALS 21.0 P.S.F. SPECIFIED ROOF LIVE LOAD

ALLOWABLE DEFL.(LL)= L/360 (1.36")
CALCULATED VERT. DEFL.(LL) = L/ 999 (0.22")
ALLOWABLE DEFL.(TL)= L/360 (1.36")
CALCULATED VERT. DEFL.(TL) = L/ 999 (0.44")

CSI: TC=0.81/1.00 (B-C:1) , BC=0.68/1.00 (Q-R:1) , WB=0.95/1.00 (F-V:1) , SSI=0.28/1.00 (B-C:1)

DOL LUMBER=1.00 NAIL=1.00 LS BEND=1.10 COMP=1.10 SHEAR=1.10 TENS= 1.10

COMPANION LIVE LOAD FACTOR = 1.00

TRUSS PLATE MANUFACTURER IS NOT RESPONSIBLE FOR QUALITY CONTROL IN THE TRUSS MANUFACTURING PLANT .

NAIL VALUES

PLATE	GRIP(DRY) (PSI) MAX	MIN	SHEAR (PLI) MAX	MIN	SECTION (PLI) MAX	MIN
MT20	650	371	1747	788	1987	1873

PLATE PLACEMENT TOL. = 0.250 inches

PLATE ROTATION TOL. = 5.0 Deg.

JSI GRIP= 0.89 (B) (INPUT = 0.90)
JSI METAL= 0.92 (S) (INPUT = 1.00)

JOB NAME	TRUSS NAME	QUANTITY	PLY	JOB DESC.	DRWG NO.
349186	H5X		1	TRUSS DESC. JT 45147	E22104515

Alpha Roof Truss, Maple

Version 8.530 S Feb 23 2022 MiTek Industries, Inc. Mon Oct 24 08:33:39 2022 Page 1

ID:HSVaWIIDnhr?B6oeweH9vbyNdls-gbWAZO2lLEKK5AawRa2c1gSfayyYIbDJxasDtiyQGdQ

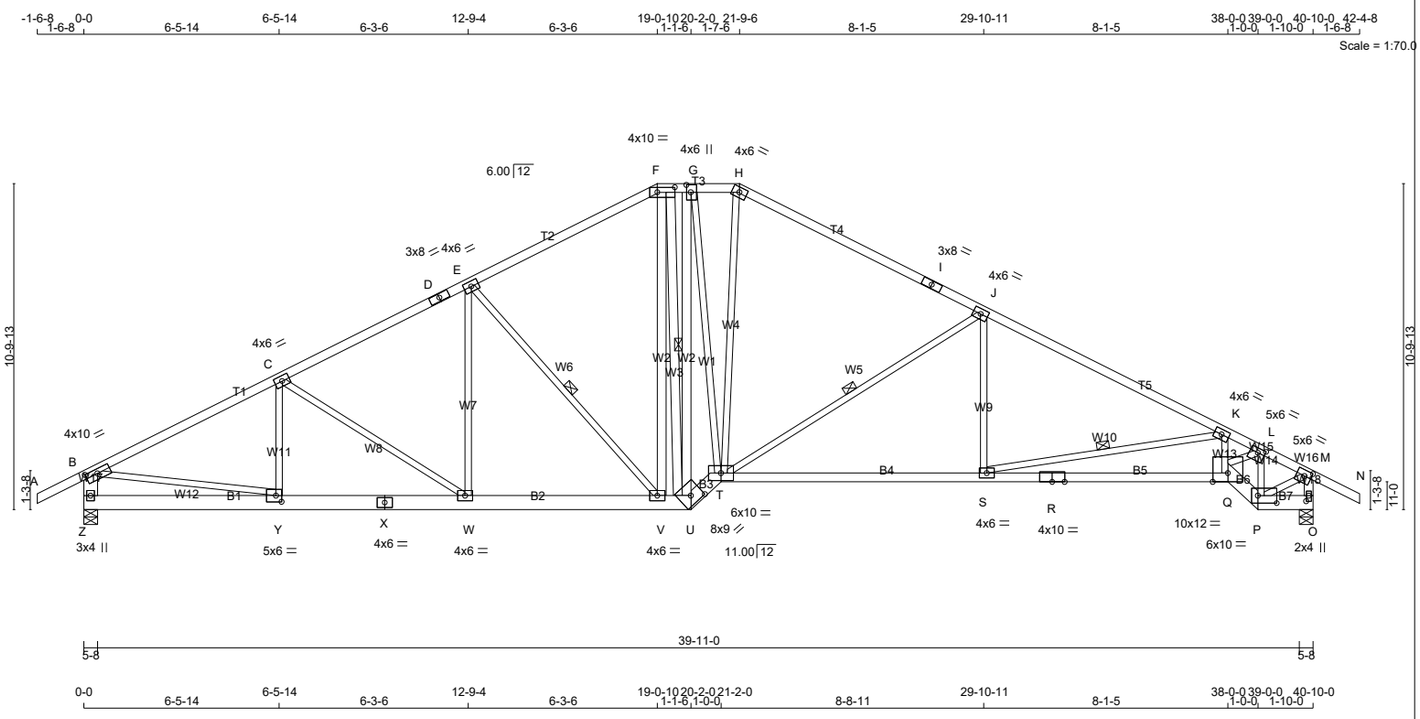

LUMBER

N. L. G. A. RULES

CHORDS	SIZE		LUMBER	DESCR.
A - D	2x4	DRY	No.2	SPF
D - F	2x4	DRY	No.2	SPF
F - H	2x4	DRY	No.2	SPF
H - I	2x4	DRY	1650F 1.5E	SPF
I - N	2x4	DRY	1650F 1.5E	SPF
Z - B	2x6	DRY	No.2	SPF
O - M	2x4	DRY	No.2	SPF
Z - X	2x6	DRY	No.2	SPF
X - U	2x6	DRY	No.2	SPF
U - T	2x6	DRY	No.2	SPF
T - R	2x4	DRY	No.2	SPF
R - Q	2x4	DRY	No.2	SPF
Q - P	2x6	DRY	No.2	SPF
P - O	2x6	DRY	No.2	SPF
ALL WEBS	2x3	DRY	No.2	SPF
EXCEPT				
V - F	2x4	DRY	No.2	SPF
F - U	2x4	DRY	No.2	SPF
U - G	2x4	DRY	No.2	SPF

DRY: SEASONED LUMBER.

PLATES (table is in inches)

JT	TYPE	PLATES	W	LEN	Y	X
B	TMVW-t	MT20	4.0	10.0	1.75	4.75
C, E, J, K						
C	TMWW-t	MT20	4.0	6.0		
D	TS-t	MT20	3.0	8.0		
F	TTWW-l	MT20	4.0	10.0	2.00	7.00
G	TMWW+t	MT20	4.0	6.0	3.00	1.75
H	TTW-h	MT20	4.0	6.0		
I	TS-t	MT20	3.0	8.0		
L	TMWW-t	MT20	5.0	6.0	1.75	2.75
M	TMVW-t	MT20	5.0	6.0	2.25	2.75
O	BMV1+p	MT20	2.0	4.0	2.25	1.00
P	BBWW-l	MT20	6.0	10.0	3.00	7.50
Q	BBWW-l	MT20	10.0	12.0	Edge	
R	BS-t	MT20	4.0	10.0		
S, V, W						
S	BMWW-t	MT20	4.0	6.0		
T	BBWWW-p	MT20	6.0	10.0		
U	BBWW-h	MT20	8.0	9.0	3.25	4.50
X	BS-t	MT20	4.0	6.0		
Y	BMWW-t	MT20	5.0	6.0	2.50	2.25
Z	BMV1+p	MT20	3.0	4.0		

Edge - INDICATES REFERENCE CORNER OF PLATE TOUCHES EDGE OF CHORD.

LATERAL BRACE(S) SHOWN SHALL BE 2X4 SPF#2

DIMENSIONS, SUPPORTS AND LOADINGS SPECIFIED BY FABRICATOR TO BE VERIFIED BY BUILDING DESIGNER

BEARINGS

JT	FACTORED GROSS REACTION VERT	HORZ	MAXIMUM FACTORED GROSS REACTION DOWN	HORZ	UPLIFT	INPUT BRG IN-SX	REQRD BRG IN-SX
Z	2092	0	2092	0	0	5-8	2-4
O	2097	0	2097	0	0	5-8	3-5

UNFACTORED REACTIONS

JT	1ST LCASE COMBINED	MAX./MIN. COMPONENT REACTIONS SNOW	LIVE	PERM.LIVE	WIND	DEAD	SOIL
Z	1489	923 / 0	0 / 0	0 / 0	0 / 0	566 / 0	0 / 0
O	1493	926 / 0	0 / 0	0 / 0	0 / 0	567 / 0	0 / 0

BEARING MATERIAL TO BE SPF NO.2 OR BETTER AT JOINT(S) Z, O

BRACING

TOP CHORD TO BE SHEATHED OR MAX. PURLIN SPACING = 3.57 FT.
MAX. UNBRACED BOTTOM CHORD LENGTH = 10.00 FT OR RIGID CEILING DIRECTLY APPLIED.

ALL PITCH BREAKS AND PERIMETER CORNER JOINTS MUST BE LATERALLY RESTRAINED.

1 LATERAL BRACE(S) AT 1/ 2 LENGTH OF E-V, G-U, J-T, K-S.

END VERTICAL(S) MUST BE SHEATHED OR HAVE BRACES AS INDICATED IN THE MAX. UNBRACED LENGTH COLUMN OF THE TABLE BELOW

LOADING

TOTAL LOAD CASES: (4)

CHORDS

MEMB. FR-TO	MAX. FACTORED FORCE (LBS)	FACTORED VERT. LOAD (PLF) FROM	TO	LC1	MAX CSI (LC)	MAX. UNBRAC LENGTH
A- B	0 / 28	-78.0	-78.0	0.14 (1)		10.00
B- C	-2952 / 0	-78.0	-78.0	0.61 (1)		3.57
C- D	-2702 / 0	-78.0	-78.0	0.50 (1)		3.83
D- E	-2702 / 0	-78.0	-78.0	0.50 (1)		3.83
E- F	-2153 / 0	-78.0	-78.0	0.47 (1)		4.21
F- G	-1923 / 0	-78.0	-78.0	0.10 (1)		4.79
G- H	-2099 / 0	-78.0	-78.0	0.12 (1)		4.60
H- I	-2329 / 0	-78.0	-78.0	0.66 (1)		4.33
I- J	-2329 / 0	-78.0	-78.0	0.66 (1)		4.33
J- K	-3288 / 0	-78.0	-78.0	0.74 (1)		3.78
K- L	-4096 / 0	-78.0	-78.0	0.28 (1)		3.80
L- M	-2088 / 0	-78.0	-78.0	0.13 (1)		5.16
M- N	0 / 28	-78.0	-78.0	0.12 (1)		10.00
Z- B	-2030 / 0	0.0	0.0	0.13 (1)		7.10
O- M	-2080 / 0	0.0	0.0	0.21 (1)		5.87
Z- Y	0 / 0	-18.5	-18.5	0.09 (4)		10.00
Y- X	0 / 2659	-18.5	-18.5	0.36 (1)		10.00
X- W	0 / 2659	-18.5	-18.5	0.36 (1)		10.00
W- V	0 / 2417	-18.5	-18.5	0.33 (1)		10.00
V- U	0 / 1915	-18.5	-18.5	0.23 (1)		10.00
U- T	0 / 2574	-18.5	-18.5	0.31 (1)		10.00
T- S	0 / 2958	-18.5	-18.5	0.64 (1)		10.00
S- R	0 / 3783	-18.5	-18.5	0.76 (1)		10.00
R- Q	0 / 3783	-18.5	-18.5	0.76 (1)		10.00
Q- P	0 / 2229	-18.5	-18.5	0.26 (1)		10.00
P- O	0 / 0	-18.5	-18.5	0.01 (4)		10.00

WEBS

MEMB. FR-TO	MAX. FACTORED FORCE (LBS)	MAX CSI (LC)
Y- C	-263 / 0	0.08 (1)
C- W	-290 / 0	0.32 (1)
W- E	0 / 295	0.07 (4)
E- V	-773 / 0	0.51 (1)
V- F	0 / 564	0.09 (1)
F- U	0 / 84	0.01 (1)
U- G	-1684 / 0	0.96 (1)
G- T	0 / 1700	0.38 (1)
T- H	0 / 674	0.15 (1)
T- J	-1065 / 0	0.82 (1)
S- J	0 / 274	0.08 (4)
S- K	-840 / 0	0.39 (1)
Q- K	-39 / 72	0.03 (4)
Q- L	0 / 2651	0.60 (1)
P- L	-2296 / 0	0.34 (1)
B- Y	0 / 2685	0.60 (1)
P- M	0 / 2005	0.45 (1)

DESIGN CRITERIA

SPECIFIED LOADS:

TOP CH.	LL	=	21.0	PSF
	DL	=	6.0	PSF
BOT CH.	LL	=	0.0	PSF
	DL	=	7.4	PSF
TOTAL LOAD		=	34.4	PSF

SPACING = 24.0 IN. C/C

LOADING IN FLAT SECTION BASED ON A SLOPE OF 2.00/12 MINIMUM

THIS TRUSS IS DESIGNED FOR RESIDENTIAL OR SMALL BUILDING REQUIREMENTS OF PART 9, NBCC 2015

THIS DESIGN COMPLIES WITH:
- PART 9 OF BCBC 2018 , ABC 2019
- PART 9 OF OBC 2012 (2019 AMENDMENT)
- CSA 086-14
- TPIC 2014

DESIGN ASSUMPTIONS
-OVERHANG NOT TO BE ALTERED OR CUT OFF.

(55 % OF 23.0 P.S.F. G.S.L. PLUS 8.4 P.S.F. RAIN LOAD) EQUALS 21.0 P.S.F. SPECIFIED ROOF LIVE LOAD

ALLOWABLE DEFL.(LL)= L/360 (1.36")
CALCULATED VERT. DEFL.(LL) = L/ 999 (0.23")
ALLOWABLE DEFL.(TL)= L/360 (1.36")
CALCULATED VERT. DEFL.(TL) = L/ 869 (0.56")

CSI: TC=0.74/1.00 (J-K:1) , BC=0.76/1.00 (Q-S:1) , WB=0.96/1.00 (G-U:1) , SSI=0.27/1.00 (H-J:1)

DOL LUMBER=1.00 NAIL=1.00 LS BEND=1.10 COMP=1.10 SHEAR=1.10 TENS= 1.10

COMPANION LIVE LOAD FACTOR = 1.00

AUTOSOLVE RIGHT HEEL ONLY

TRUSS PLATE MANUFACTURER IS NOT RESPONSIBLE FOR QUALITY CONTROL IN THE TRUSS MANUFACTURING PLANT .

NAIL VALUES

PLATE	GRIP(DRY) (PSI) MAX	MIN	SHEAR (PLI) MAX	MIN	SECTION (PLI) MAX	MIN
MT20	650	371	1747	788	1987	1873

PLATE PLACEMENT TOL. = 0.250 inches

PLATE ROTATION TOL. = 5.0 Deg.

JSI GRIP= 0.89 (B) (INPUT = 0.90)
JSI METAL= 0.87 (R) (INPUT = 1.00)

JOB NAME	TRUSS NAME	QUANTITY	PLY	JOB DESC.	DRWG NO.
349186	H6		1	TRUSS DESC. JT 45147	E22104516

Alpa Roof Truss, Maple

Version 8.530 S Feb 23 2022 MiTek Industries, Inc. Mon Oct 24 08:33:40 2022 Page 1

ID:HSVaWIlDnhr?B6oeweH9vbyNdls-9n4Ymj2O6YSBjK96 lZrZt qsMLa17QSAEcnP8yQGdP

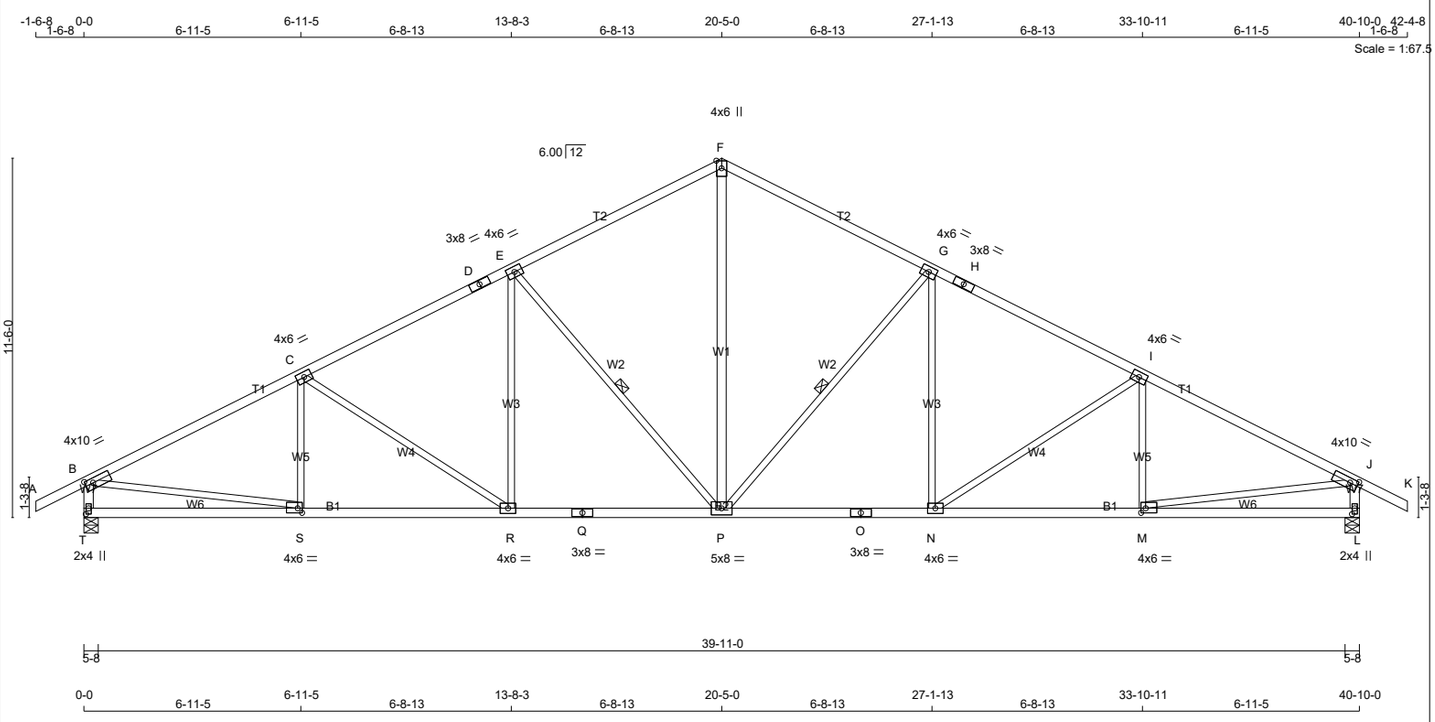

TOTAL WEIGHT = 5 X 176 = 880 lb

[M][F]

LUMBER

N. L. G. A. RULES

CHORDS	SIZE		LUMBER	DESCR.
A - D	2x4	DRY	No.2	SPF
D - F	2x4	DRY	No.2	SPF
F - H	2x4	DRY	No.2	SPF
H - K	2x4	DRY	No.2	SPF
T - B	2x4	DRY	No.2	SPF
L - J	2x4	DRY	No.2	SPF
T - Q	2x4	DRY	No.2	SPF
Q - O	2x4	DRY	No.2	SPF
O - L	2x4	DRY	No.2	SPF
ALL WEBS	2x3	DRY	No.2	SPF
EXCEPT				
P - F	2x4	DRY	No.2	SPF

DRY: SEASONED LUMBER.

PLATES (table is in inches)

JT	TYPE	PLATES	W	LEN	Y	X
B	TMVW-t	MT20	4.0	10.0	1.75	3.00
C, E, G, I						
C	TMWW-t	MT20	4.0	6.0		
D	TS-t	MT20	3.0	8.0		
F	TTW+p	MT20	4.0	6.0	Edge	
H	TS-t	MT20	3.0	8.0		
J	TMVW-t	MT20	4.0	10.0	1.75	3.00
L	BMV1+p	MT20	2.0	4.0	2.25	1.00
M	BMWW-t	MT20	4.0	6.0	1.75	1.75
N	BMWW-t	MT20	4.0	6.0		
O	BS-t	MT20	3.0	8.0		
P	BMWWW-t	MT20	5.0	8.0		
Q	BS-t	MT20	3.0	8.0		
R	BMWW-t	MT20	4.0	6.0		
S	BMWW-t	MT20	4.0	6.0	1.75	1.75
T	BMV1+p	MT20	2.0	4.0	2.25	1.00

Edge - INDICATES REFERENCE CORNER OF PLATE TOUCHES EDGE OF CHORD.

LATERAL BRACE(S) SHOWN SHALL BE 2X4 SPF#2

LICENSED PROFESSIONAL ENGINEER
V. WIDYA
100225448
10/24/2022
PROVINCE OF ONTARIO

DIMENSIONS, SUPPORTS AND LOADINGS SPECIFIED BY FABRICATOR TO BE VERIFIED BY BUILDING DESIGNER

BEARINGS

JT	FACTORED GROSS REACTION VERT	HORZ	MAXIMUM FACTORED GROSS REACTION DOWN	HORZ	UPLIFT	INPUT BRG IN-SX	REQRD BRG IN-SX
T	2095	0	2095	0	0	5-8	3-5
L	2095	0	2095	0	0	5-8	3-5

UNFACTORED REACTIONS

JT	1ST LCASE COMBINED	MAX./MIN. COMPONENT REACTIONS SNOW	LIVE	PERM.LIVE	WIND	DEAD	SOIL
T	1491	925 / 0	0 / 0	0 / 0	0 / 0	566 / 0	0 / 0
L	1491	925 / 0	0 / 0	0 / 0	0 / 0	566 / 0	0 / 0

BEARING MATERIAL TO BE SPF NO.2 OR BETTER AT JOINT(S) T, L

BRACING

TOP CHORD TO BE SHEATHED OR MAX. PURLIN SPACING = 3.49 FT.
MAX. UNBRACED BOTTOM CHORD LENGTH = 10.00 FT OR RIGID CEILING DIRECTLY APPLIED.

ALL PITCH BREAKS AND PERIMETER CORNER JOINTS MUST BE LATERALLY RESTRAINED.

1 LATERAL BRACE(S) AT 1/ 2 LENGTH OF G-P, E-P.

END VERTICAL(S) MUST BE SHEATHED OR HAVE BRACES AS INDICATED IN THE MAX. UNBRACED LENGTH COLUMN OF THE TABLE BELOW

LOADING

TOTAL LOAD CASES: (4)

CHORDS MEMB. FR-TO	MAX. FACTORED FORCE (LBS)	FACTORED VERT. LOAD (PLF) FROM	TO	LC1	MAX CSI (LC)	MAX. UNBRAC LENGTH
A- B	0 / 28	-78.0	-78.0	0.14 (1)	10.00	
B- C	-2931 / 0	-78.0	-78.0	0.71 (1)	3.49	
C- D	-2618 / 0	-78.0	-78.0	0.56 (1)	3.82	
D- E	-2618 / 0	-78.0	-78.0	0.56 (1)	3.82	
E- F	-2039 / 0	-78.0	-78.0	0.53 (1)	4.22	
F- G	-2039 / 0	-78.0	-78.0	0.53 (1)	4.22	
G- H	-2618 / 0	-78.0	-78.0	0.56 (1)	3.82	
H- I	-2618 / 0	-78.0	-78.0	0.56 (1)	3.82	
I- J	-2931 / 0	-78.0	-78.0	0.71 (1)	3.49	
J- K	0 / 28	-78.0	-78.0	0.14 (1)	10.00	
T- B	-2040 / 0	0.0	0.0	0.21 (1)	5.92	
L- J	-2040 / 0	0.0	0.0	0.21 (1)	5.92	
T- S	0 / 0	-18.5	-18.5	0.20 (4)	10.00	
S- R	0 / 2641	-18.5	-18.5	0.52 (1)	10.00	
R- Q	0 / 2342	-18.5	-18.5	0.48 (1)	10.00	
Q- P	0 / 2342	-18.5	-18.5	0.48 (1)	10.00	
P- O	0 / 2342	-18.5	-18.5	0.48 (1)	10.00	
O- N	0 / 2342	-18.5	-18.5	0.48 (1)	10.00	
N- M	0 / 2641	-18.5	-18.5	0.52 (1)	10.00	
M- L	0 / 0	-18.5	-18.5	0.20 (4)	10.00	

WEBS MEMB. FR-TO	MAX. FACTORED FORCE (LBS)	MAX CSI (LC)
P- F	0 / 1380	0.22 (1)
P- G	-825 / 0	0.64 (1)
N- G	0 / 318	0.07 (4)
N- I	-360 / 0	0.50 (1)
M- I	-236 / 14	0.08 (1)
E- P	-825 / 0	0.64 (1)
R- E	0 / 318	0.07 (4)
C- R	-360 / 0	0.50 (1)
S- C	-236 / 14	0.08 (1)
B- S	0 / 2668	0.60 (1)
M- J	0 / 2668	0.60 (1)

DESIGN CRITERIA

SPECIFIED LOADS:

TOP CH.	LL	=	21.0	PSF
	DL	=	6.0	PSF
BOT CH.	LL	=	0.0	PSF
	DL	=	7.4	PSF
TOTAL LOAD		=	34.4	PSF

SPACING = 24.0 IN. C/C

THIS TRUSS IS DESIGNED FOR RESIDENTIAL OR SMALL BUILDING REQUIREMENTS OF PART 9, NBCC 2015

THIS DESIGN COMPLIES WITH:
- PART 9 OF BCBC 2018 , ABC 2019
- PART 9 OF OBC 2012 (2019 AMENDMENT)
- CSA 086-14
- TPIC 2014

(55 % OF 23.0 P.S.F. G.S.L. PLUS 8.4 P.S.F. RAIN LOAD) EQUALS 21.0 P.S.F. SPECIFIED ROOF LIVE LOAD

ALLOWABLE DEFL.(LL)= L/360 (1.36")
CALCULATED VERT. DEFL.(LL) = L/ 999 (0.16")
ALLOWABLE DEFL.(TL)= L/360 (1.36")
CALCULATED VERT. DEFL.(TL) = L/ 999 (0.33")

CSI: TC=0.71/1.00 (I-J:1) , BC=0.52/1.00 (M-N:1) , WB=0.64/1.00 (G-P:1) , SSI=0.22/1.00 (I-J:1)

DOL LUMBER=1.00 NAIL=1.00 LS BEND=1.10 COMP=1.10 SHEAR=1.10 TENS= 1.10

COMPANION LIVE LOAD FACTOR = 1.00

TRUSS PLATE MANUFACTURER IS NOT RESPONSIBLE FOR QUALITY CONTROL IN THE TRUSS MANUFACTURING PLANT .

NAIL VALUES

PLATE	GRIP(DRY) (PSI) MAX	MIN	SHEAR (PLI) MAX	MIN	SECTION (PLI) MAX	MIN
MT20	650	371	1747	788	1987	1873

PLATE PLACEMENT TOL. = 0.250 inches

PLATE ROTATION TOL. = 5.0 Deg.

JSI GRIP= 0.90 (B) (INPUT = 0.90)
JSI METAL= 0.74 (Q) (INPUT = 1.00)

JOB NAME	TRUSS NAME	QUANTITY	PLY	JOB DESC.	DRWG NO.
349186	H7T		1	TRUSS DESC. JT 45147	E22104517

Alpha Roof Truss, Maple

Version 8.530 S Feb 23 2022 MiTek Industries, Inc. Mon Oct 24 08:33:42 2022 Page 1

ID:HSVaWlIDnhr?B6oeweH9vbyNdls-5ACJBP4ee9ivyeJV6jbJeI4GgAwxV3SldY5tU1yQGdN

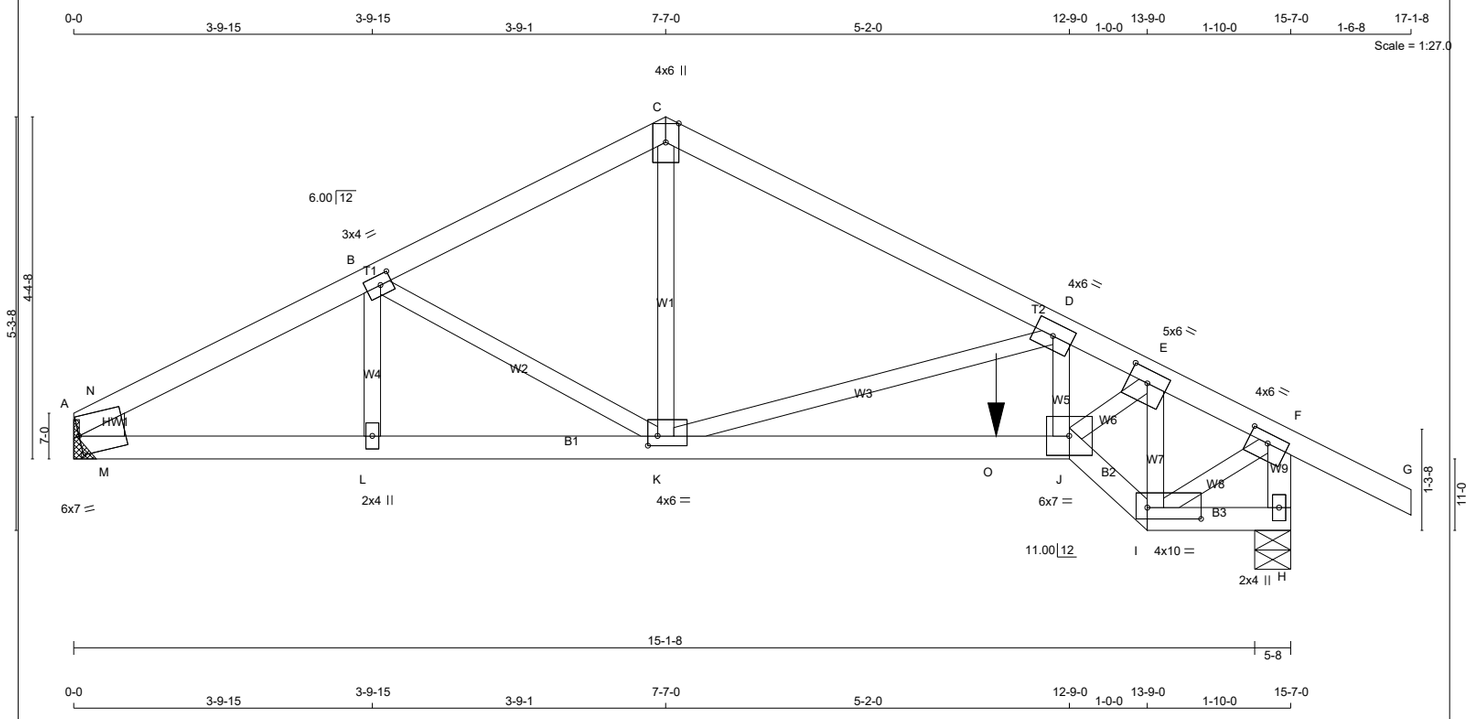

TOTAL WEIGHT = 2 X 59 = 118 lb

[M]

LUMBER

N. L. G. A. RULES

CHORDS	SIZE		LUMBER	DESCR.
A - C	2x4	DRY	No.2	SPF
C - G	2x4	DRY	No.2	SPF
H - F	2x4	DRY	No.2	SPF
A - J	2x4	DRY	1650F 1.5E	SPF
J - I	2x4	DRY	No.2	SPF
I - H	2x4	DRY	No.2	SPF
ALL WEBS EXCEPT	2x3	DRY	No.2	SPF

DRY: SEASONED LUMBER.

PLATES (table is in inches)

JT	TYPE	PLATES	W	LEN	Y	X
A	TMBH1-m	MT20	6.0	7.0	3.00	
B	TMWW-t	MT20	3.0	4.0	1.50	1.75
C	TTW+p	MT20	4.0	6.0	Edge	
D	TMWW-t	MT20	4.0	6.0		
E	TMWW-t	MT20	5.0	6.0	2.00	3.00
F	TMVW-t	MT20	4.0	6.0	1.50	3.00
H	BMV1+p	MT20	2.0	4.0		
I	BBWW-l	MT20	4.0	10.0	1.75	8.25
J	BBWW-l	MT20	6.0	7.0		
K	BMWWW-t	MT20	4.0	6.0	1.50	1.50
L	BMW+w	MT20	2.0	4.0		

Edge - INDICATES REFERENCE CORNER OF PLATE TOUCHES EDGE OF CHORD.

LATERAL BRACE(S) SHOWN SHALL BE 2X4 SPF#2

DIMENSIONS, SUPPORTS AND LOADINGS SPECIFIED BY FABRICATOR TO BE VERIFIED BY BUILDING DESIGNER

BEARINGS

JT	FACTORED GROSS REACTION VERT	HORZ	MAXIMUM FACTORED GROSS REACTION DOWN	HORZ	UPLIFT	INPUT BRG IN-SX	REQRD BRG IN-SX	HEEL WEDGE
H	1679	0	1679	0	0	5-8	1-15	
A	1540	0	1540	0	0	MECHANICAL		2x4 L

A SUITABLE HANGER/MECHANICAL CONNECTION IS REQUIRED AT JOINT A. MINIMUM BEARING LENGTH AT JOINT A = 3-8.

UNFACTORED REACTIONS

JT	1ST LCASE COMBINED	MAX./MIN. COMPONENT REACTIONS SNOW	LIVE	PERM.LIVE	WIND	DEAD	SOIL
H	1200	717 / 0	0 / 0	0 / 0	0 / 0	482 / 0	0 / 0
A	1099	666 / 0	0 / 0	0 / 0	0 / 0	433 / 0	0 / 0

BEARING MATERIAL TO BE SPF NO.2 OR BETTER AT JOINT(S) H

BRACING

TOP CHORD TO BE SHEATHED OR MAX. PURLIN SPACING = 3.68 FT.
MAX. UNBRACED BOTTOM CHORD LENGTH = 10.00 FT OR RIGID CEILING DIRECTLY APPLIED.

ALL PITCH BREAKS AND PERIMETER CORNER JOINTS MUST BE LATERALLY RESTRAINED.

LOADING

TOTAL LOAD CASES: (4)

CHORDS

MEMB. FR-TO	MAX. FACTORED FORCE (LBS)	FACTORED VERT. LOAD (PLF) FROM	TO	LC1 CSI (LC)	MAX UNBRAC LENGTH
A- N	-2813 / 0	-78.0	-78.0	0.29 (1)	3.81
N- B	-2319 / 0	-78.0	-78.0	0.28 (1)	4.19
B- C	-1823 / 0	-78.0	-78.0	0.23 (1)	4.70
C- D	-1831 / 0	-78.0	-78.0	0.36 (1)	4.55
D- E	-2950 / 0	-78.0	-78.0	0.33 (1)	3.68
E- F	-1515 / 0	-78.0	-78.0	0.18 (1)	5.11
F- G	0 / 28	-78.0	-78.0	0.16 (1)	10.00
H- F	-1645 / 0	0.0	0.0	0.18 (1)	6.42
A- M	0 / 2064	-112.0	-112.0	0.53 (1)	10.00
M- L	0 / 2064	-112.0	-112.0	0.53 (1)	10.00
L- K	0 / 2064	-112.0	-112.0	0.76 (1)	10.00
K- O	0 / 2694	-112.0	-112.0	0.91 (1)	10.00
O- J	0 / 2694	-37.2	-37.2	0.91 (1)	10.00
J- I	0 / 1642	-37.3	-37.3	0.30 (1)	10.00
I- H	0 / 0	-37.3	-37.3	0.04 (4)	10.00

WEBS

MEMB. FR-TO	MAX. FACTORED FORCE (LBS)	MAX CSI (LC)
L- B	0 / 212	0.05 (1)
B- K	-507 / 0	0.17 (1)
K- C	0 / 1324	0.33 (1)
K- D	-1116 / 0	0.55 (1)
J- D	0 / 394	0.10 (1)
J- E	0 / 1953	0.48 (1)
I- E	-1743 / 0	0.29 (1)
I- F	0 / 1477	0.37 (1)
M- N	0 / 713	0.00 (1)

FACTORED CONCENTRATED LOADS (LBS)

JT	LOC.	LC1	MAX-	MAX+	FACE	DIR.	TYPE	HEEL	CONN.
O	11-9-12	-415	-415	---	FRONT	VERT	TOTAL	---	C1

CONNECTION REQUIREMENTS

1) **C1:** A SUITABLE HANGER/MECHANICAL CONNECTION IS REQUIRED.

DESIGN CRITERIA

*** SPECIAL LOADS ANALYSIS ***
GEOMETRY AND/OR BASIC LOADS CHANGED BY USER.
LOADS WERE DERIVED FROM USER INPUT
NO FURTHER MODIFICATIONS WERE MADE

SPECIFIED LOADS:

TOP CH.	LL	=	21.0	PSF
	DL	=	6.0	PSF
BOT CH.	LL	=	0.0	PSF
	DL	=	7.4	PSF
TOTAL LOAD		=	34.4	PSF

SPACING = 24.0 IN. C/C

GIRDER TYPE: CStdGirder
START DISTANCE = 0-0
START SPAN CARRIED = 5-10-8
END DISTANCE = 11-9-12
END SPAN CARRIED = 5-10-8
END WALL WIDTH = 0-0
APPLIED TO FRONT SIDE OF BOTTOM CHORD.
- ADDT'L LOADS BASED ON 55 % OF GSL. (DEFINED BY USER)

*** NON STANDARD GIRDER ***
ADDT'L USER-DEFINED LOADS APPLIED TO ALL LOAD CASES.

THIS TRUSS IS DESIGNED FOR RESIDENTIAL OR SMALL BUILDING REQUIREMENTS OF PART 9, NBCC 2015

THIS DESIGN COMPLIES WITH:
- PART 9 OF BCBC 2018 , ABC 2019
- PART 9 OF OBC 2012 (2019 AMENDMENT)
- CSA 086-14
- TPIC 2014

DESIGN ASSUMPTIONS
-OVERHANG NOT TO BE ALTERED OR CUT OFF.

(55 % OF 23.0 P.S.F. G.S.L. PLUS 8.4 P.S.F. RAIN LOAD) EQUALS 21.0 P.S.F. SPECIFIED ROOF LIVE LOAD

ALLOWABLE DEFL.(LL)= L/360 (0.52")
CALCULATED VERT. DEFL.(LL) = L/ 999 (0.14")
ALLOWABLE DEFL.(TL)= L/360 (0.52")
CALCULATED VERT. DEFL.(TL) = L/ 645 (0.29")

CSI: TC=0.36/1.00 (C-D:1) , BC=0.91/1.00 (J-K:1) , WB=0.55/1.00 (D-K:1) , SSI=0.42/1.00 (J-K:1)

DOL LUMBER=1.00 NAIL=1.00 LS BEND=1.00 COMP=1.00 SHEAR=1.00 TENS= 1.00

COMPANION LIVE LOAD FACTOR = 1.00

TRUSS PLATE MANUFACTURER IS NOT RESPONSIBLE FOR QUALITY CONTROL IN THE TRUSS MANUFACTURING PLANT .

NAIL VALUES

PLATE	GRIP(DRY) (PSI) MAX	MIN	SHEAR (PLI) MAX	MIN	SECTION (PLI) MAX	MIN
MT20	650	371	1747	788	1987	1873

PLATE PLACEMENT TOL. = 0.250 inches

PLATE ROTATION TOL. = 5.0 Deg.

JSI GRIP= 0.88 (A) (INPUT = 0.90)
JSI METAL= 0.49 (I) (INPUT = 1.00)

JOB NAME	TRUSS NAME	QUANTITY	PLY	JOB DESC.	DRWG NO.
349186	H9		1	TRUSS DESC. JT 45147	E22104518

Alpa Roof Truss, Maple

Version 8.530 S Feb 23 2022 MiTek Industries, Inc. Mon Oct 24 08:33:44 2022 Page 1

ID:HSVaWIIDnhr?B6oeweH9vbyNdls-1ZJ3c56u9mydCxSuD8enkj9VrzhxzyS25sa YwyQGdL

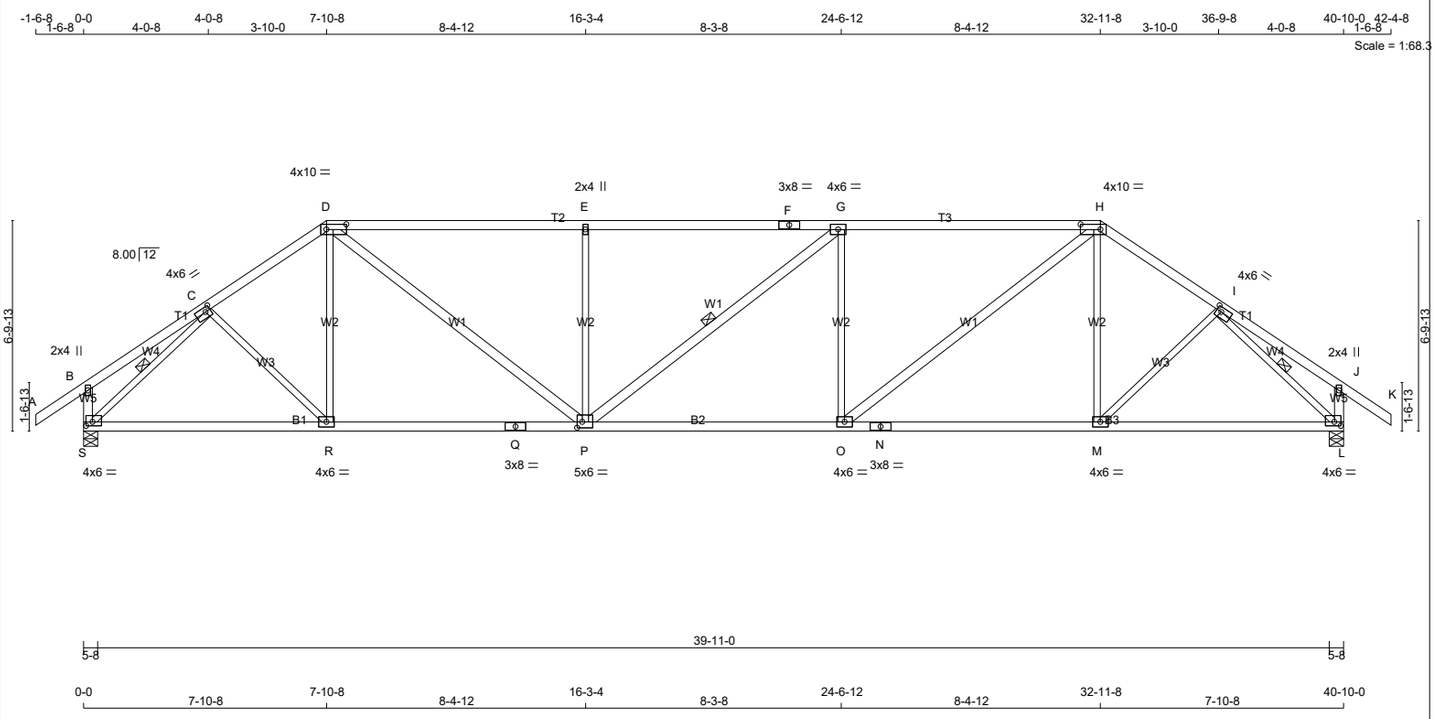

TOTAL WEIGHT = 176 lb

LUMBER

N. L. G. A. RULES

CHORDS	SIZE		LUMBER	DESCR.
A - D	2x4	DRY	No.2	SPF
D - F	2x4	DRY	2100F 1.8E	SPF
F - H	2x4	DRY	2100F 1.8E	SPF
H - K	2x4	DRY	No.2	SPF
S - B	2x4	DRY	No.2	SPF
L - J	2x4	DRY	No.2	SPF
S - Q	2x4	DRY	No.2	SPF
Q - N	2x4	DRY	No.2	SPF
N - L	2x4	DRY	No.2	SPF
ALL WEBS	2x3	DRY	No.2	SPF
EXCEPT				
D - P	2x4	DRY	No.2	SPF
P - G	2x4	DRY	No.2	SPF
O - H	2x4	DRY	No.2	SPF

DRY: SEASONED LUMBER.

PLATES (table is in inches)

JT	TYPE	PLATES	W	LEN	Y	X
B	TMV+p	MT20	2.0	4.0		
C	TMWW-t	MT20	4.0	6.0	1.75	2.00
D	TTWW-l	MT20	4.0	10.0	2.00	7.75
E	TMW+w	MT20	2.0	4.0		
F	TS-t	MT20	3.0	8.0		
G	TMWW-t	MT20	4.0	6.0		
H	TTWW-l	MT20	4.0	10.0	2.00	7.75
I	TMWW-t	MT20	4.0	6.0	1.75	2.00
J	TMV+p	MT20	2.0	4.0		
L	BMVW1-t	MT20	4.0	6.0	1.50	2.50
M, O, R						
M	BMWW-t	MT20	4.0	6.0		
N	BS-t	MT20	3.0	8.0		
P	BMWWW-t	MT20	5.0	6.0	2.25	2.00
Q	BS-t	MT20	3.0	8.0		
S	BMVW1-t	MT20	4.0	6.0	1.50	2.50

LATERAL BRACE(S) SHOWN SHALL BE 2X4 SPF#2

DIMENSIONS, SUPPORTS AND LOADINGS SPECIFIED BY FABRICATOR TO BE VERIFIED BY BUILDING DESIGNER

BEARINGS

JT	FACTORED GROSS REACTION VERT	HORZ	MAXIMUM FACTORED GROSS REACTION DOWN	HORZ	UPLIFT	INPUT BRG IN-SX	REQRD BRG IN-SX
S	2096	0	2096	0	0	5-8	2-4
L	2096	0	2096	0	0	5-8	2-4

UNFACTORED REACTIONS

JT	1ST LCASE COMBINED	SNOW	MAX./MIN. COMPONENT REACTIONS LIVE	PERM.LIVE	WIND	DEAD	SOIL
S	1492	925 / 0	0 / 0	0 / 0	0 / 0	567 / 0	0 / 0
L	1492	925 / 0	0 / 0	0 / 0	0 / 0	567 / 0	0 / 0

BEARING MATERIAL TO BE SPF NO.2 OR BETTER AT JOINT(S) S, L

BRACING

TOP CHORD TO BE SHEATHED OR MAX. PURLIN SPACING = 4.15 FT.
MAX. UNBRACED BOTTOM CHORD LENGTH = 10.00 FT OR RIGID CEILING DIRECTLY APPLIED.

ALL PITCH BREAKS AND PERIMETER CORNER JOINTS MUST BE LATERALLY RESTRAINED.

1 LATERAL BRACE(S) AT 1/ 2 LENGTH OF G-P, C-S, I-L.

END VERTICAL(S) MUST BE SHEATHED OR HAVE BRACES AS INDICATED IN THE MAX. UNBRACED LENGTH COLUMN OF THE TABLE BELOW

LOADING

TOTAL LOAD CASES: (4)

CHORDS

MEMB. FR-TO	MAX. FACTORED FORCE (LBS)	FACTORED VERT. LOAD (PLF) FROM	TO	LC1	MAX CSI (LC)	MAX. UNBRAC LENGTH
A- B	0 / 35	-78.0	-78.0	0.15 (1)	10.00	
B- C	0 / 18	-78.0	-78.0	0.17 (1)	10.00	
C- D	-2355 / 0	-78.0	-78.0	0.26 (1)	4.25	
D- E	-3049 / 0	-78.0	-78.0	0.77 (1)	4.16	
E- F	-3049 / 0	-78.0	-78.0	0.76 (1)	4.16	
F- G	-3049 / 0	-78.0	-78.0	0.76 (1)	4.16	
G- H	-3050 / 0	-78.0	-78.0	0.77 (1)	4.15	
H- I	-2355 / 0	-78.0	-78.0	0.26 (1)	4.25	
I- J	0 / 18	-78.0	-78.0	0.17 (1)	10.00	
J- K	0 / 35	-78.0	-78.0	0.15 (1)	10.00	
S- B	-248 / 0	0.0	0.0	0.03 (1)	7.81	
L- J	-248 / 0	0.0	0.0	0.03 (1)	7.81	
S- R	0 / 1818	-18.5	-18.5	0.46 (4)	10.00	
R- Q	0 / 1942	-18.5	-18.5	0.48 (4)	10.00	
Q- P	0 / 1942	-18.5	-18.5	0.48 (4)	10.00	
P- O	0 / 3050	-18.5	-18.5	0.62 (1)	10.00	
O- N	0 / 1942	-18.5	-18.5	0.48 (4)	10.00	
N- M	0 / 1942	-18.5	-18.5	0.48 (4)	10.00	
M- L	0 / 1818	-18.5	-18.5	0.46 (4)	10.00	

WEBS

MEMB. FR-TO	MAX. FACTORED FORCE (LBS)	MAX CSI (LC)
C- R	0 / 170	0.04 (4)
R- D	0 / 109	0.04 (4)
D- P	0 / 1401	0.23 (1)
P- E	-708 / 0	0.55 (1)
P- G	0 / 0	0.00 (1)
O- G	-708 / 0	0.55 (1)
O- H	0 / 1401	0.23 (1)
M- H	0 / 109	0.04 (4)
M- I	0 / 170	0.04 (4)
S- C	-2551 / 0	0.58 (1)
I- L	-2551 / 0	0.58 (1)

[M]

DESIGN CRITERIA

SPECIFIED LOADS:

TOP CH.	LL	=	21.0	PSF
	DL	=	6.0	PSF
BOT CH.	LL	=	0.0	PSF
	DL	=	7.4	PSF
TOTAL LOAD		=	34.4	PSF

SPACING = 24.0 IN. C/C

LOADING IN FLAT SECTION BASED ON A SLOPE OF 2.00/12 MINIMUM

THIS TRUSS IS DESIGNED FOR RESIDENTIAL OR SMALL BUILDING REQUIREMENTS OF PART 9, NBCC 2015

THIS DESIGN COMPLIES WITH:
- PART 9 OF BCBC 2018 , ABC 2019
- PART 9 OF OBC 2012 (2019 AMENDMENT)
- CSA 086-14
- TPIC 2014

(55 % OF 23.0 P.S.F. G.S.L. PLUS 8.4 P.S.F. RAIN LOAD) EQUALS 21.0 P.S.F. SPECIFIED ROOF LIVE LOAD

ALLOWABLE DEFL.(LL)= L/360 (1.36")
CALCULATED VERT. DEFL.(LL) = L/ 999 (0.16")
ALLOWABLE DEFL.(TL)= L/360 (1.36")
CALCULATED VERT. DEFL.(TL) = L/ 999 (0.36")

CSI: TC=0.77/1.00 (G-H:1) , BC=0.62/1.00 (O-P:1) , WB=0.58/1.00 (C-S:1) , SSI=0.30/1.00 (G-H:1)

DOL LUMBER=1.00 NAIL=1.00 LS BEND=1.10 COMP=1.10 SHEAR=1.10 TENS= 1.10

COMPANION LIVE LOAD FACTOR = 1.00

TRUSS PLATE MANUFACTURER IS NOT RESPONSIBLE FOR QUALITY CONTROL IN THE TRUSS MANUFACTURING PLANT .

NAIL VALUES

PLATE	GRIP(DRY) (PSI) MAX	MIN	SHEAR (PLI) MAX	MIN	SECTION (PLI) MAX	MIN
MT20	650	371	1747	788	1987	1873

PLATE PLACEMENT TOL. = 0.250 inches

PLATE ROTATION TOL. = 5.0 Deg.

JSI GRIP= 0.90 (S) (INPUT = 0.90)
JSI METAL= 0.61 (Q) (INPUT = 1.00)

JOB NAME	TRUSS NAME	QUANTITY	PLY	JOB DESC.		DRWG NO.
349186	H9A		2	TRUSS DESC.	JT 45147	E22104519

Alpa Roof Truss, Maple

Version 8.530 S Feb 23 2022 MiTek Industries, Inc. Mon Oct 24 08:33:46 2022 Page 1

ID:HSVaWlIDnhr?B6oeweH9vbyNdls-zxRp1n79hOCLRFcGLYqFp8EvVnP5RmlKYA35doyQGdJ

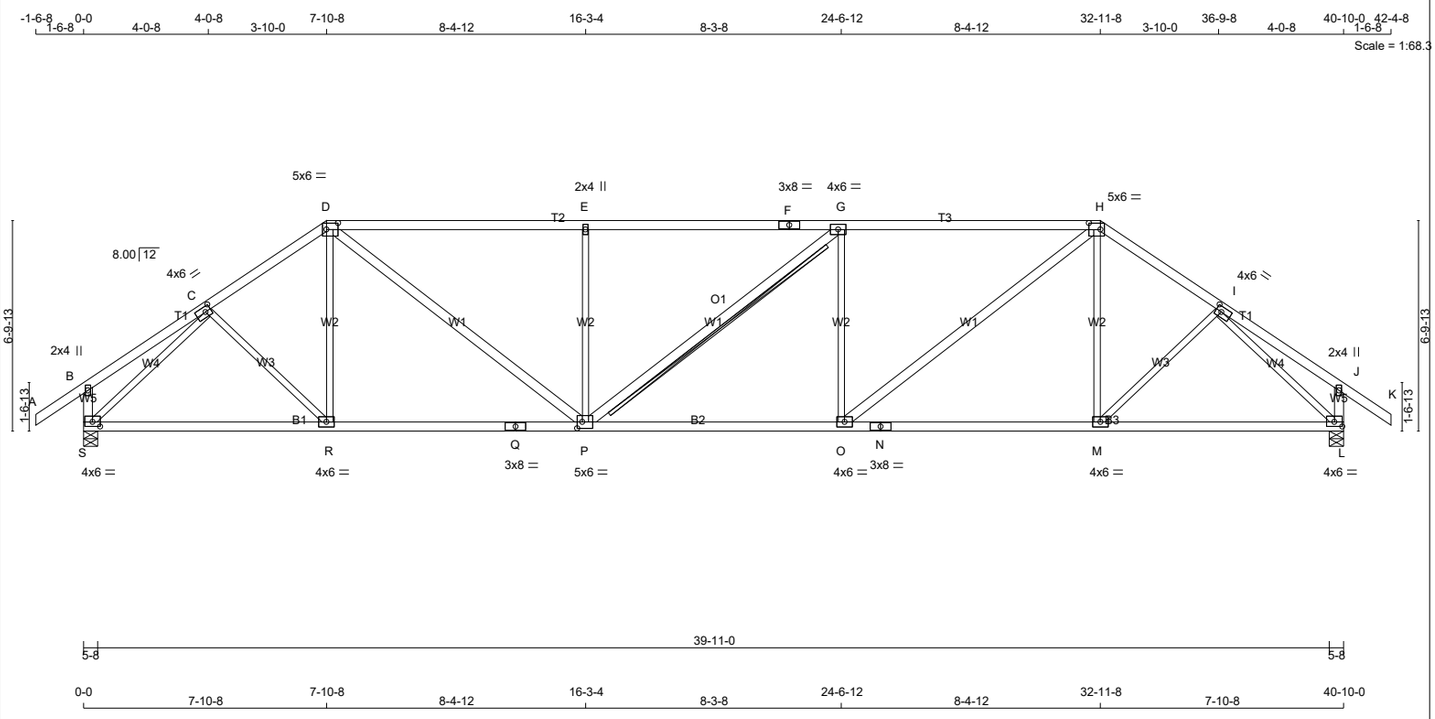

TOTAL WEIGHT = 2 X 176 = 352 lb

[M]

LUMBER

N. L. G. A. RULES

CHORDS	SIZE		LUMBER	DESCR.
A - D	2x4	DRY	No.2	SPF
D - F	2x4	DRY	2100F 1.8E	SPF
F - H	2x4	DRY	2100F 1.8E	SPF
H - K	2x4	DRY	No.2	SPF
S - B	2x4	DRY	No.2	SPF
L - J	2x4	DRY	No.2	SPF
S - Q	2x4	DRY	No.2	SPF
Q - N	2x4	DRY	No.2	SPF
N - L	2x4	DRY	No.2	SPF
ALL WEBS	2x3	DRY	No.2	SPF
EXCEPT				
D - P	2x4	DRY	No.2	SPF
P - G	2x4	DRY	No.2	SPF
O - H	2x4	DRY	No.2	SPF

DRY: SEASONED LUMBER.

DESIGN CONSISTS OF 2 TRUSSES BUILT SEPARATELY THEN FASTENED TOGETHER AS FOLLOWS:

CHORDS #ROWS		SURFACE SPACING (IN)	LOAD(PLF)
TOP CHORDS : (0.122"X3") SPIRAL NAILS			
A- D	1	12	SIDE(16.2)
D- F	1	12	SIDE(19.5)
F- H	1	12	SIDE(19.5)
H- K	1	12	SIDE(16.2)
S- B	1	12	TOP
L- J	1	12	TOP
BOTTOM CHORDS : (0.122"X3") SPIRAL NAILS			
S- Q	1	12	SIDE(5.2)
Q- N	1	12	SIDE(5.2)
N- L	1	12	SIDE(5.2)
WEBS : (0.122"X3") SPIRAL NAILS			
2x3	1	6	
2x4	1	6	

NAILS TO BE DRIVEN FROM ONE SIDE ONLY.

TOP - COMPONENTS ARE LOADED FROM THE TOP AND MUST BE PLACED ON TOP EDGE OF ALL PLIES FOR THE LOAD TO BE TRANSFERRED TO EACH PLY.

SIDE - PLF SHOWN IS THE EQUIVALENT UDL APPLIED TO ONE SIDE THAT THE CORRESPONDING NAILING PATTERN SHALL BE CAPABLE OF TRANSFERING. REMAINING PLF MUST BE APPLIED ON THE OPPOSITE SIDE OR ON THE TOP.

PLATES (table is in inches)

JT	TYPE	PLATES	W	LEN	Y	X
B	TMV+p	MT20	2.0	4.0		
C	TMWW-t	MT20	4.0	6.0	2.00	2.25
D	TTWW-l	MT20	5.0	6.0	2.50	4.50
E	TMW+w	MT20	2.0	4.0		
F	TS-t	MT20	3.0	8.0		
G	TMWW-t	MT20	4.0	6.0		
H	TTWW-l	MT20	5.0	6.0	2.50	4.50
I	TMWW-t	MT20	4.0	6.0	2.00	2.25
J	TMV+p	MT20	2.0	4.0		
L	BMVW1-t	MT20	4.0	6.0	1.75	3.00
M, O, R						
M	BMWW-t	MT20	4.0	6.0		
N	BS-t	MT20	3.0	8.0		
P	BMWWW-t	MT20	5.0	6.0	2.50	2.00
Q	BS-t	MT20	3.0	8.0		
S	BMVW1-t	MT20	4.0	6.0	1.75	3.00

LATERAL BRACE(S) SHOWN SHALL BE 2X4 SPF#2

DIMENSIONS, SUPPORTS AND LOADINGS SPECIFIED BY FABRICATOR TO BE VERIFIED BY BUILDING DESIGNER

BEARINGS

JT	FACTORED GROSS REACTION VERT	HORZ	MAXIMUM FACTORED GROSS REACTION DOWN	HORZ	UPLIFT	INPUT BRG IN-SX	REQRD BRG IN-SX
S	3081	0	3081	0	0	5-8	1-11
L	3081	0	3081	0	0	5-8	1-11

UNFACTORED REACTIONS

JT	1ST LCASE COMBINED	SNOW	MAX./MIN. COMPONENT REACTIONS LIVE	PERM.LIVE	WIND	DEAD	SOIL
S	2194	1354 / 0	0 / 0	0 / 0	0 / 0	840 / 0	0 / 0
L	2194	1354 / 0	0 / 0	0 / 0	0 / 0	840 / 0	0 / 0

BEARING MATERIAL TO BE SPF NO.2 OR BETTER AT JOINT(S) S, L

BRACING

TOP CHORD TO BE SHEATHED OR MAX. PURLIN SPACING = 4.81 FT.
MAX. UNBRACED BOTTOM CHORD LENGTH = 10.00 FT OR RIGID CEILING DIRECTLY APPLIED.

ALL PITCH BREAKS AND PERIMETER CORNER JOINTS MUST BE LATERALLY RESTRAINED.

2x6 DRY SPF No.2 T-BRACE AT G-P

FASTEN T AND I-BRACES TO NARROW EDGE OF WEB WITH ONE ROW PER PLY OF 3" COMMON WIRE NAILS @ 6" O.C. WITH 3" MINIMUM END DISTANCE. BRACE MUST COVER 90% OF WEB LENGTH.

END VERTICAL(S) MUST BE SHEATHED OR HAVE BRACES AS INDICATED IN THE MAX. UNBRACED LENGTH COLUMN OF THE TABLE BELOW

LOADING

TOTAL LOAD CASES: (4)

CHORDS

MEMB. FR-TO	MAX. FACTORED FORCE (LBS)	FACTORED VERT. LOAD (PLF) FROM	TO	LC1 CSI (LC)	MAX MAX. UNBRAC LENGTH
A- B	0 / 35	-78.0	-78.0	0.08 (1)	10.00
B- C	0 / 26	-117.0	-117.0	0.14 (1)	10.00
C- D	-3533 / 0	-117.0	-117.0	0.20 (1)	4.81
D- E	-4574 / 0	-117.0	-117.0	0.57 (1)	4.83
E- F	-4574 / 0	-117.0	-117.0	0.56 (1)	4.83
F- G	-4574 / 0	-117.0	-117.0	0.56 (1)	4.83
G- H	-4574 / 0	-117.0	-117.0	0.57 (1)	4.83
H- I	-3532 / 0	-117.0	-117.0	0.20 (1)	4.81
I- J	0 / 26	-117.0	-117.0	0.14 (1)	10.00
J- K	0 / 35	-78.0	-78.0	0.08 (1)	10.00
S- B	-309 / 0	0.0	0.0	0.02 (1)	7.81
L- J	-309 / 0	0.0	0.0	0.02 (1)	7.81
S- R	0 / 2727	-27.7	-27.7	0.38 (4)	10.00
R- Q	0 / 2914	-27.7	-27.7	0.40 (4)	10.00
Q- P	0 / 2914	-27.7	-27.7	0.40 (4)	10.00
P- O	0 / 4574	-27.7	-27.7	0.51 (1)	10.00
O- N	0 / 2914	-27.7	-27.7	0.40 (4)	10.00
N- M	0 / 2914	-27.7	-27.7	0.40 (4)	10.00
M- L	0 / 2727	-27.7	-27.7	0.38 (4)	10.00

WEBS

MEMB. FR-TO	MAX. FACTORED FORCE (LBS)	MAX CSI (LC)
C- R	0 / 256	0.03 (4)
R- D	0 / 163	0.03 (4)
D- P	0 / 2101	0.19 (1)
P- E	-1062 / 0	0.42 (1)
P- G	0 / 0	0.00 (1)
O- G	-1062 / 0	0.42 (1)
O- H	0 / 2102	0.19 (1)
M- H	0 / 163	0.03 (4)
M- I	0 / 256	0.03 (4)
S- C	-3827 / 0	0.97 (1)
I- L	-3827 / 0	0.97 (1)

DESIGN CRITERIA

SPECIFIED LOADS:

TOP CH.	LL	=	21.0	PSF
	DL	=	6.0	PSF
BOT CH.	LL	=	0.0	PSF
	DL	=	7.4	PSF
TOTAL LOAD		=	34.4	PSF

SPACING = 24.0 IN. C/C

LOADING IN FLAT SECTION BASED ON A SLOPE OF 2.00/12 MINIMUM

GIRDER TYPE: CPrimeHip
SIDE SETBACK = 0-0
END SETBACK = 4-0-0
END WALL WIDTH = 0-0
CORNER FRAMING TYPE: CONVENTIONAL
END JACK TYPE: CONVENTIONAL
APPLIED TO FRONT SIDE
- ADDT'L LOADS BASED ON 55 % OF GSL.

THIS TRUSS IS DESIGNED FOR RESIDENTIAL OR SMALL BUILDING REQUIREMENTS OF PART 9, NBCC 2015

THIS DESIGN COMPLIES WITH:
- PART 9 OF BCBC 2018 , ABC 2019
- PART 9 OF OBC 2012 (2019 AMENDMENT)
- CSA 086-14
- TPIC 2014

(55 % OF 23.0 P.S.F. G.S.L. PLUS 8.4 P.S.F. RAIN LOAD) EQUALS 21.0 P.S.F. SPECIFIED ROOF LIVE LOAD

ALLOWABLE DEFL.(LL)= L/360 (1.36")
CALCULATED VERT. DEFL.(LL) = L/ 999 (0.12")
ALLOWABLE DEFL.(TL)= L/360 (1.36")
CALCULATED VERT. DEFL.(TL) = L/ 999 (0.27")

CSI: TC=0.57/1.00 (G-H:1) , BC=0.51/1.00 (O-P:1) , WB=0.97/1.00 (C-S:1) , SSI=0.25/1.00 (G-H:1)

DOL LUMBER=1.00 NAIL=1.00 LS BEND=1.00 COMP=1.00 SHEAR=1.00 TENS= 1.00

COMPANION LIVE LOAD FACTOR = 1.00

TRUSS PLATE MANUFACTURER IS NOT RESPONSIBLE FOR QUALITY CONTROL IN THE TRUSS MANUFACTURING PLANT .

NAIL VALUES

PLATE	GRIP(DRY) (PSI) MAX	MIN	SHEAR (PLI) MAX	MIN	SECTION (PLI) MAX	MIN
MT20	650	371	1747	788	1987	1873

PLATE PLACEMENT TOL. = 0.250 inches

PLATE ROTATION TOL. = 5.0 Deg.

JSI GRIP= 0.86 (D) (INPUT = 0.90)
JSI METAL= 0.46 (Q) (INPUT = 1.00)

JOB NAME	TRUSS NAME	QUANTITY	PLY	JOB DESC.	DRWG NO.
349186	H10		1	TRUSS DESC. JT 45147	E22104520

Alpha Roof Truss, Maple

Version 8.530 S Feb 23 2022 MiTek Industries, Inc. Mon Oct 24 08:33:47 2022 Page 1

ID:HSVaWIIDnhr?B6oeweH9vbyNdls-R8?CE78nShKC3PBSvGBULMn07BlOAHGUnqoe9EyQGdI

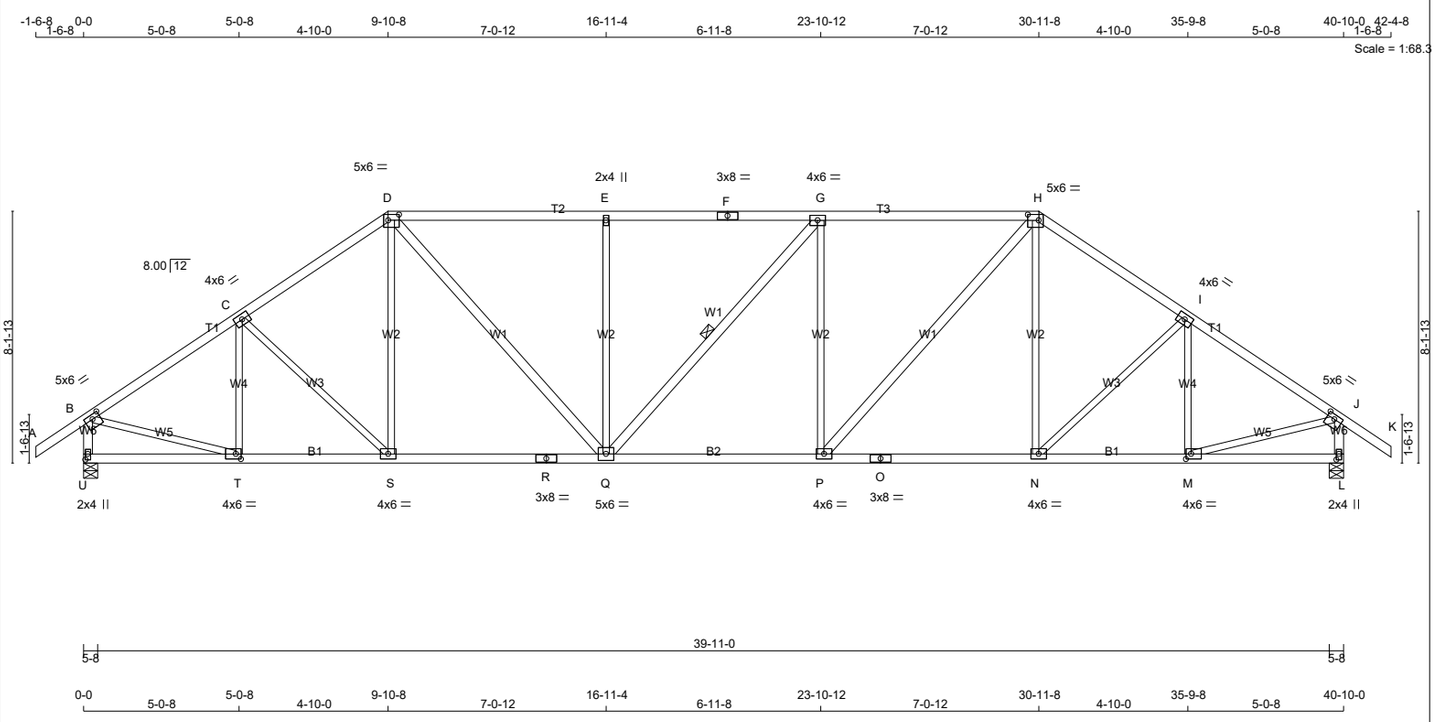

TOTAL WEIGHT = 2 X 190 = 379 lb

[M]

LUMBER

N. L. G. A. RULES

CHORDS	SIZE		LUMBER	DESCR.
A - D	2x4	DRY	No.2	SPF
D - F	2x4	DRY	No.2	SPF
F - H	2x4	DRY	No.2	SPF
H - K	2x4	DRY	No.2	SPF
U - B	2x4	DRY	No.2	SPF
L - J	2x4	DRY	No.2	SPF
U - R	2x4	DRY	No.2	SPF
R - O	2x4	DRY	No.2	SPF
O - L	2x4	DRY	No.2	SPF
ALL WEBS	2x3	DRY	No.2	SPF
EXCEPT				
D - Q	2x4	DRY	No.2	SPF
Q - G	2x4	DRY	No.2	SPF
P - H	2x4	DRY	No.2	SPF

DRY: SEASONED LUMBER.

PLATES (table is in inches)

JT	TYPE	PLATES	W	LEN	Y	X
B	TMVW-t	MT20	5.0	6.0	1.75	3.00
C, G, I						
C	TMWW-t	MT20	4.0	6.0		
D	TTWW-I	MT20	5.0	6.0	2.25	4.25
E	TMW+w	MT20	2.0	4.0		
F	TS-t	MT20	3.0	8.0		
H	TTWW-I	MT20	5.0	6.0	2.25	4.25
J	TMVW-t	MT20	5.0	6.0	1.75	3.00
L	BMV1+p	MT20	2.0	4.0	2.25	1.00
M	BMWW-t	MT20	4.0	6.0	2.00	2.00
N, P, S						
N	BMWW-t	MT20	4.0	6.0		
O	BS-t	MT20	3.0	8.0		
Q	BMWWW-t	MT20	5.0	6.0		
R	BS-t	MT20	3.0	8.0		
T	BMWW-t	MT20	4.0	6.0	2.00	2.00
U	BMV1+p	MT20	2.0	4.0	2.25	1.00

LATERAL BRACE(S) SHOWN SHALL BE 2X4 SPF#2

DIMENSIONS, SUPPORTS AND LOADINGS SPECIFIED BY FABRICATOR TO BE VERIFIED BY BUILDING DESIGNER

BEARINGS

JT	FACTORED GROSS REACTION VERT	HORZ	MAXIMUM FACTORED GROSS REACTION DOWN	HORZ	UPLIFT	INPUT BRG IN-SX	REQRD BRG IN-SX
U	2096	0	2096	0	0	5-8	3-5
L	2096	0	2096	0	0	5-8	3-5

UNFACTORED REACTIONS

JT	1ST LCASE COMBINED	SNOW	MAX./MIN. COMPONENT REACTIONS LIVE	PERM.LIVE	WIND	DEAD	SOIL
U	1492	925 / 0	0 / 0	0 / 0	0 / 0	567 / 0	0 / 0
L	1492	925 / 0	0 / 0	0 / 0	0 / 0	567 / 0	0 / 0

BEARING MATERIAL TO BE SPF NO.2 OR BETTER AT JOINT(S) U, L

BRACING

TOP CHORD TO BE SHEATHED OR MAX. PURLIN SPACING = 3.53 FT.
MAX. UNBRACED BOTTOM CHORD LENGTH = 10.00 FT OR RIGID CEILING DIRECTLY APPLIED.

ALL PITCH BREAKS AND PERIMETER CORNER JOINTS MUST BE LATERALLY RESTRAINED.

1 LATERAL BRACE(S) AT 1/ 2 LENGTH OF G-Q.

END VERTICAL(S) MUST BE SHEATHED OR HAVE BRACES AS INDICATED IN THE MAX. UNBRACED LENGTH COLUMN OF THE TABLE BELOW

LOADING

TOTAL LOAD CASES: (4)

CHORDS

MEMB. FR-TO	MAX. FACTORED FORCE (LBS)	FACTORED VERT. LOAD LC1 (PLF) FROM	TO	MAX CSI (LC)	MAX. UNBRAC LENGTH
A- B	0 / 35	-78.0	-78.0	0.15 (1)	10.00
B- C	-2310 / 0	-78.0	-78.0	0.45 (1)	4.10
C- D	-2295 / 0	-78.0	-78.0	0.44 (1)	4.11
D- E	-2540 / 0	-78.0	-78.0	0.82 (1)	3.54
E- F	-2540 / 0	-78.0	-78.0	0.82 (1)	3.53
F- G	-2540 / 0	-78.0	-78.0	0.82 (1)	3.53
G- H	-2541 / 0	-78.0	-78.0	0.83 (1)	3.53
H- I	-2295 / 0	-78.0	-78.0	0.44 (1)	4.11
I- J	-2310 / 0	-78.0	-78.0	0.45 (1)	4.10
J- K	0 / 35	-78.0	-78.0	0.15 (1)	10.00
U- B	-2054 / 0	0.0	0.0	0.22 (1)	5.90
L- J	-2054 / 0	0.0	0.0	0.22 (1)	5.90
U- T	0 / 0	-18.5	-18.5	0.10 (4)	10.00
T- S	0 / 1942	-18.5	-18.5	0.39 (1)	10.00
S- R	0 / 1888	-18.5	-18.5	0.40 (1)	10.00
R- Q	0 / 1888	-18.5	-18.5	0.40 (1)	10.00
Q- P	0 / 2541	-18.5	-18.5	0.51 (1)	10.00
P- O	0 / 1888	-18.5	-18.5	0.40 (1)	10.00
O- N	0 / 1888	-18.5	-18.5	0.40 (1)	10.00
N- M	0 / 1942	-18.5	-18.5	0.39 (1)	10.00
M- L	0 / 0	-18.5	-18.5	0.10 (4)	10.00

WEBS

MEMB. FR-TO	MAX. FACTORED FORCE (LBS)	MAX CSI (LC)
T- C	-390 / 0	0.14 (1)
C- S	-77 / 0	0.06 (1)
S- D	0 / 168	0.05 (4)
D- Q	0 / 974	0.16 (1)
Q- E	-594 / 0	0.76 (1)
Q- G	-2 / 0	0.00 (1)
P- G	-594 / 0	0.76 (1)
P- H	0 / 976	0.16 (1)
N- H	0 / 167	0.05 (4)
N- I	-77 / 0	0.07 (1)
M- I	-390 / 0	0.14 (1)
B- T	0 / 2001	0.45 (1)
M- J	0 / 2001	0.45 (1)

DESIGN CRITERIA

SPECIFIED LOADS:

TOP CH.	LL	=	21.0	PSF
	DL	=	6.0	PSF
BOT CH.	LL	=	0.0	PSF
	DL	=	7.4	PSF
TOTAL LOAD		=	34.4	PSF

SPACING = 24.0 IN. C/C

LOADING IN FLAT SECTION BASED ON A SLOPE OF 2.00/12 MINIMUM

THIS TRUSS IS DESIGNED FOR RESIDENTIAL OR SMALL BUILDING REQUIREMENTS OF PART 9, NBCC 2015

THIS DESIGN COMPLIES WITH:
- PART 9 OF BCBC 2018 , ABC 2019
- PART 9 OF OBC 2012 (2019 AMENDMENT)
- CSA 086-14
- TPIC 2014

(55 % OF 23.0 P.S.F. G.S.L. PLUS 8.4 P.S.F. RAIN LOAD) EQUALS 21.0 P.S.F. SPECIFIED ROOF LIVE LOAD

ALLOWABLE DEFL.(LL)= L/360 (1.36")
CALCULATED VERT. DEFL.(LL) = L/ 999 (0.13")
ALLOWABLE DEFL.(TL)= L/360 (1.36")
CALCULATED VERT. DEFL.(TL) = L/ 999 (0.28")

CSI: TC=0.83/1.00 (G-H:1) , BC=0.51/1.00 (P-Q:1) , WB=0.76/1.00 (G-P:1) , SSI=0.26/1.00 (G-H:1)

DOL LUMBER=1.00 NAIL=1.00 LS BEND=1.10 COMP=1.10 SHEAR=1.10 TENS= 1.10

COMPANION LIVE LOAD FACTOR = 1.00

TRUSS PLATE MANUFACTURER IS NOT RESPONSIBLE FOR QUALITY CONTROL IN THE TRUSS MANUFACTURING PLANT .

NAIL VALUES

PLATE	GRIP(DRY) (PSI) MAX	MIN	SHEAR (PLI) MAX	MIN	SECTION (PLI) MAX	MIN
MT20	650	371	1747	788	1987	1873

PLATE PLACEMENT TOL. = 0.250 inches

PLATE ROTATION TOL. = 5.0 Deg.

JSI GRIP= 0.89 (D) (INPUT = 0.90)
JSI METAL= 0.59 (R) (INPUT = 1.00)

JOB NAME	TRUSS NAME	QUANTITY	PLY	JOB DESC.	DRWG NO.
349186	H11		1	TRUSS DESC. JT 45147	E22104521

Alpha Roof Truss, Maple

Version 8.530 S Feb 23 2022 MiTek Industries, Inc. Mon Oct 24 08:33:49 2022 Page 1

ID:HSVaWIIDnhr?B6oeweH9vbyNdls-OW7yfo91 JbvIiLr0hDyRnsKm QYdF3nE8HlE7yQGdG

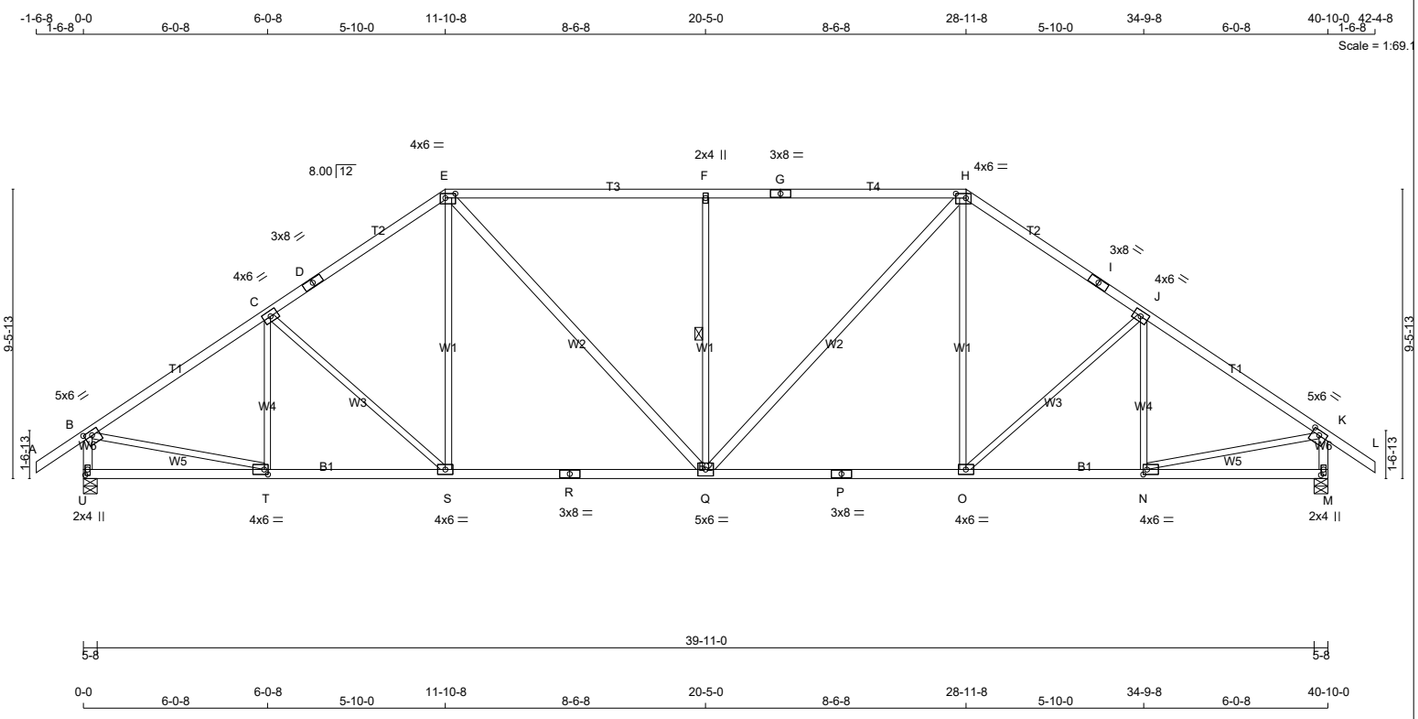

TOTAL WEIGHT = 2 X 185 = 370 lb

[M][F]

LUMBER

N. L. G. A. RULES

CHORDS	SIZE		LUMBER	DESCR.
A - D	2x4	DRY	No.2	SPF
D - E	2x4	DRY	No.2	SPF
E - G	2x4	DRY	No.2	SPF
G - H	2x4	DRY	No.2	SPF
H - I	2x4	DRY	No.2	SPF
I - L	2x4	DRY	No.2	SPF
U - B	2x4	DRY	No.2	SPF
M - K	2x4	DRY	No.2	SPF
U - R	2x4	DRY	No.2	SPF
R - P	2x4	DRY	No.2	SPF
P - M	2x4	DRY	No.2	SPF
ALL WEBS	2x3	DRY	No.2	SPF
EXCEPT				
E - Q	2x4	DRY	No.2	SPF
Q - H	2x4	DRY	No.2	SPF

DRY: SEASONED LUMBER.

PLATES (table is in inches)

JT	TYPE	PLATES	W	LEN	Y	X
B	TMVW-t	MT20	5.0	6.0	1.75	3.00
C	TMWW-t	MT20	4.0	6.0		
D, G, I						
D	TS-t	MT20	3.0	8.0		
E	TTWW-l	MT20	4.0	6.0	1.75	4.00
F	TMW+w	MT20	2.0	4.0		
H	TTWW-l	MT20	4.0	6.0	1.75	4.00
J	TMWW-t	MT20	4.0	6.0		
K	TMVW-t	MT20	5.0	6.0	1.75	3.00
M	BMV1+p	MT20	2.0	4.0	2.25	1.00
N	BMWW-t	MT20	4.0	6.0	2.00	1.50
O	BMWW-t	MT20	4.0	6.0		
P	BS-t	MT20	3.0	8.0		
Q	BMWWW-t	MT20	5.0	6.0		
R	BS-t	MT20	3.0	8.0		
S	BMWW-t	MT20	4.0	6.0		
T	BMWW-t	MT20	4.0	6.0	2.00	1.50
U	BMV1+p	MT20	2.0	4.0	2.25	1.00

LATERAL BRACE(S) SHOWN SHALL BE 2X4 SPF#2

LICENSED PROFESSIONAL ENGINEER
V. WIDYA
100225448
10/24/2022
PROVINCE OF ONTARIO

DIMENSIONS, SUPPORTS AND LOADINGS SPECIFIED BY FABRICATOR TO BE VERIFIED BY BUILDING DESIGNER

BEARINGS

JT	FACTORED GROSS REACTION VERT	HORZ	MAXIMUM FACTORED GROSS REACTION DOWN	HORZ	UPLIFT	INPUT BRG IN-SX	REQRD BRG IN-SX
U	2096	0	2096	0	0	5-8	3-5
M	2096	0	2096	0	0	5-8	3-5

UNFACTORED REACTIONS

JT	1ST LCASE COMBINED	MAX./MIN. COMPONENT REACTIONS SNOW	LIVE	PERM.LIVE	WIND	DEAD	SOIL
U	1492	925 / 0	0 / 0	0 / 0	0 / 0	567 / 0	0 / 0
M	1492	925 / 0	0 / 0	0 / 0	0 / 0	567 / 0	0 / 0

BEARING MATERIAL TO BE SPF NO.2 OR BETTER AT JOINT(S) U, M

BRACING

TOP CHORD TO BE SHEATHED OR MAX. PURLIN SPACING = 3.21 FT.
MAX. UNBRACED BOTTOM CHORD LENGTH = 10.00 FT OR RIGID CEILING DIRECTLY APPLIED.

ALL PITCH BREAKS AND PERIMETER CORNER JOINTS MUST BE LATERALLY RESTRAINED.

1 LATERAL BRACE(S) AT 1/ 2 LENGTH OF F-Q.

END VERTICAL(S) MUST BE SHEATHED OR HAVE BRACES AS INDICATED IN THE MAX. UNBRACED LENGTH COLUMN OF THE TABLE BELOW

LOADING

TOTAL LOAD CASES: (4)

CHORDS

MEMB. FR-TO	MAX. FORCE (LBS)	FACTORED VERT. LOAD (PLF) FROM	TO	LC1	MAX CSI (LC)	MAX. UNBRAC LENGTH
A- B	0 / 35	-78.0	-78.0	0.15 (1)	10.00	
B- C	-2366 / 0	-78.0	-78.0	0.49 (1)	4.03	
C- D	-2214 / 0	-78.0	-78.0	0.46 (1)	4.17	
D- E	-2214 / 0	-78.0	-78.0	0.46 (1)	4.17	
E- F	-2275 / 0	-78.0	-78.0	0.95 (1)	3.21	
F- G	-2276 / 0	-78.0	-78.0	0.95 (1)	3.22	
G- H	-2276 / 0	-78.0	-78.0	0.95 (1)	3.22	
H- I	-2214 / 0	-78.0	-78.0	0.46 (1)	4.17	
I- J	-2214 / 0	-78.0	-78.0	0.46 (1)	4.17	
J- K	-2366 / 0	-78.0	-78.0	0.49 (1)	4.03	
K- L	0 / 35	-78.0	-78.0	0.15 (1)	10.00	
U- B	-2048 / 0	0.0	0.0	0.22 (1)	5.91	
M- K	-2048 / 0	0.0	0.0	0.22 (1)	5.91	
U- T	0 / 0	-18.5	-18.5	0.14 (4)	10.00	
T- S	0 / 1993	-18.5	-18.5	0.43 (1)	10.00	
S- R	0 / 1817	-18.5	-18.5	0.46 (4)	10.00	
R- Q	0 / 1817	-18.5	-18.5	0.46 (4)	10.00	
Q- P	0 / 1817	-18.5	-18.5	0.46 (4)	10.00	
P- O	0 / 1817	-18.5	-18.5	0.46 (4)	10.00	
O- N	0 / 1993	-18.5	-18.5	0.43 (1)	10.00	
N- M	0 / 0	-18.5	-18.5	0.14 (4)	10.00	

WEBS

MEMB. FR-TO	MAX. FORCE (LBS)	MAX CSI (LC)
T- C	-299 / 0	0.14 (1)
C- S	-240 / 0	0.32 (1)
S- E	0 / 295	0.07 (4)
E- Q	0 / 673	0.11 (1)
Q- F	-821 / 0	0.49 (1)
Q- H	0 / 673	0.11 (1)
O- H	0 / 295	0.07 (4)
O- J	-240 / 0	0.32 (1)
N- J	-299 / 0	0.14 (1)
B- T	0 / 2035	0.46 (1)
N- K	0 / 2035	0.46 (1)

DESIGN CRITERIA

SPECIFIED LOADS:

TOP CH.	LL	=	21.0	PSF
	DL	=	6.0	PSF
BOT CH.	LL	=	0.0	PSF
	DL	=	7.4	PSF
TOTAL LOAD		=	34.4	PSF

SPACING = 24.0 IN. C/C

LOADING IN FLAT SECTION BASED ON A SLOPE OF 2.00/12 MINIMUM

THIS TRUSS IS DESIGNED FOR RESIDENTIAL OR SMALL BUILDING REQUIREMENTS OF PART 9, NBCC 2015

THIS DESIGN COMPLIES WITH:
- PART 9 OF BCBC 2018 , ABC 2019
- PART 9 OF OBC 2012 (2019 AMENDMENT)
- CSA 086-14
- TPIC 2014

(55 % OF 23.0 P.S.F. G.S.L. PLUS 8.4 P.S.F. RAIN LOAD) EQUALS 21.0 P.S.F. SPECIFIED ROOF LIVE LOAD

ALLOWABLE DEFL.(LL)= L/360 (1.36")
CALCULATED VERT. DEFL.(LL) = L/ 999 (0.11")
ALLOWABLE DEFL.(TL)= L/360 (1.36")
CALCULATED VERT. DEFL.(TL) = L/ 999 (0.27")

CSI: TC=0.95/1.00 (E-F:1) , BC=0.46/1.00 (Q-S:4) , WB=0.49/1.00 (F-Q:1) , SSI=0.32/1.00 (E-F:1)

DOL LUMBER=1.00 NAIL=1.00 LS BEND=1.10 COMP=1.10 SHEAR=1.10 TENS= 1.10

COMPANION LIVE LOAD FACTOR = 1.00

TRUSS PLATE MANUFACTURER IS NOT RESPONSIBLE FOR QUALITY CONTROL IN THE TRUSS MANUFACTURING PLANT .

NAIL VALUES

PLATE	GRIP(DRY) (PSI) MAX	MIN	SHEAR (PLI) MAX	MIN	SECTION (PLI) MAX	MIN
MT20	650	371	1747	788	1987	1873

PLATE PLACEMENT TOL. = 0.250 inches

PLATE ROTATION TOL. = 5.0 Deg.

JSI GRIP= 0.89 (T) (INPUT = 0.90)
JSI METAL= 0.68 (R) (INPUT = 1.00)

JOB NAME	TRUSS NAME	QUANTITY	PLY	JOB DESC.	DRWG NO.
349186	H12		1	TRUSS DESC. JT 45147	E22104522

Alpha Roof Truss, Maple

Version 8.530 S Feb 23 2022 MiTek Industries, Inc. Mon Oct 24 08:33:51 2022 Page 1

ID:HSVaWIlDnhr?B6oeweH9vbyNdls-KvEi4UBHWwrdX0VE86GQWCyjzo7S59 4iSmsI0yQGdE

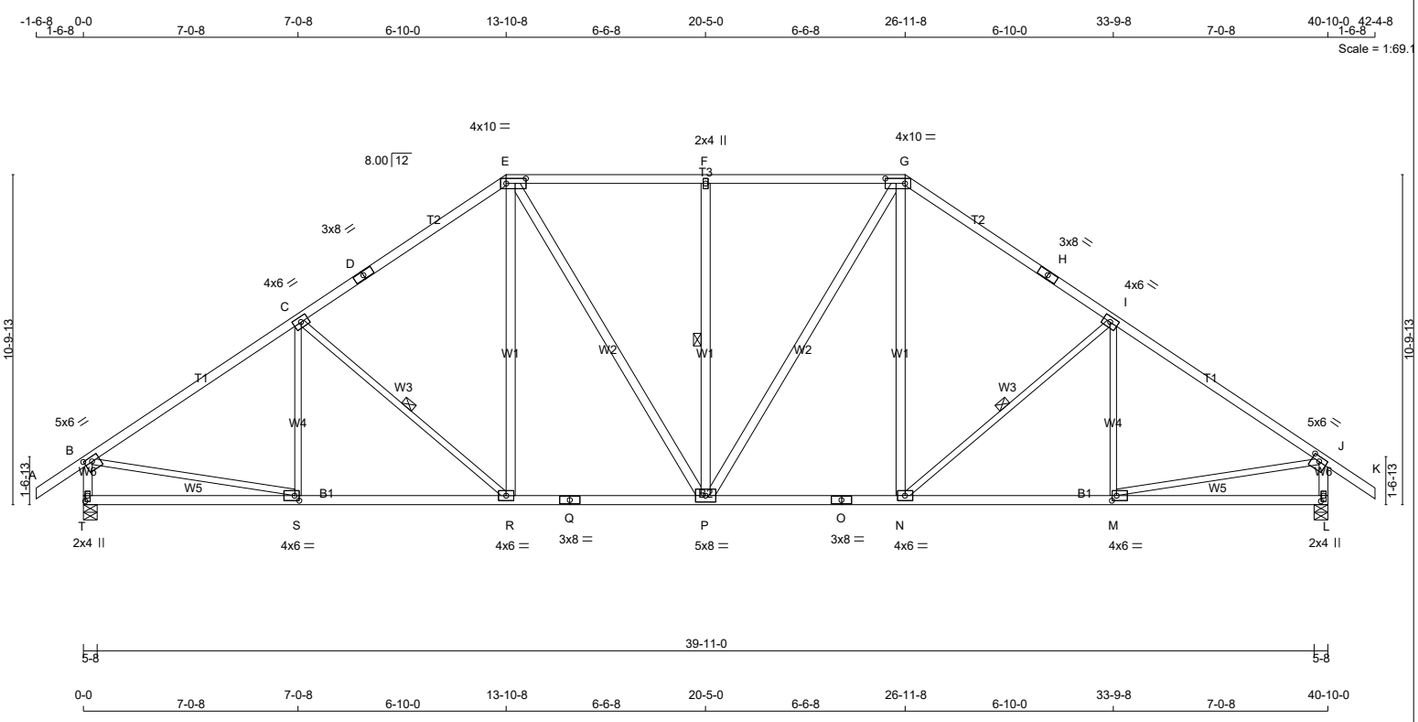

TOTAL WEIGHT = 4 X 204 = 814 lb

[M][F]

LUMBER

N. L. G. A. RULES

CHORDS	SIZE		LUMBER	DESCR.
A - D	2x4	DRY	No.2	SPF
D - E	2x4	DRY	No.2	SPF
E - G	2x4	DRY	No.2	SPF
G - H	2x4	DRY	No.2	SPF
H - K	2x4	DRY	No.2	SPF
T - B	2x4	DRY	No.2	SPF
L - J	2x4	DRY	No.2	SPF
T - Q	2x4	DRY	No.2	SPF
Q - O	2x4	DRY	No.2	SPF
O - L	2x4	DRY	No.2	SPF
ALL WEBS EXCEPT	2x4	DRY	No.2	SPF
S - C	2x3	DRY	No.2	SPF
C - R	2x3	DRY	No.2	SPF
N - I	2x3	DRY	No.2	SPF
M - I	2x3	DRY	No.2	SPF
B - S	2x3	DRY	No.2	SPF
M - J	2x3	DRY	No.2	SPF

DRY: SEASONED LUMBER.

PLATES (table is in inches)

JT	TYPE	PLATES	W	LEN	Y	X
B	TMVW-t	MT20	5.0	6.0	1.75	3.00
C	TMWW-t	MT20	4.0	6.0		
D	TS-t	MT20	3.0	8.0		
E	TTWW-l	MT20	4.0	10.0	2.00	7.75
F	TMW+w	MT20	2.0	4.0		
G	TTWW-l	MT20	4.0	10.0	2.00	7.75
H	TS-t	MT20	3.0	8.0		
I	TMWW-t	MT20	4.0	6.0		
J	TMVW-t	MT20	5.0	6.0	1.75	3.00
L	BMV1+p	MT20	2.0	4.0	2.25	1.00
M	BMWW-t	MT20	4.0	6.0	2.00	1.75
N	BMWW-t	MT20	4.0	6.0		
O	BS-t	MT20	3.0	8.0		
P	BMWWW-t	MT20	5.0	8.0		
Q	BS-t	MT20	3.0	8.0		
R	BMWW-t	MT20	4.0	6.0		
S	BMWW-t	MT20	4.0	6.0	2.00	1.75
T	BMV1+p	MT20	2.0	4.0	2.25	1.00

LATERAL BRACE(S) SHOWN SHALL BE 2X4 SPF#2

DIMENSIONS, SUPPORTS AND LOADINGS SPECIFIED BY FABRICATOR TO BE VERIFIED BY BUILDING DESIGNER

BEARINGS

JT	FACTORED GROSS REACTION VERT	HORZ	MAXIMUM FACTORED GROSS REACTION DOWN	HORZ	UPLIFT	INPUT BRG IN-SX	REQRD BRG IN-SX
T	2096	0	2096	0	0	5-8	3-5
L	2096	0	2096	0	0	5-8	3-5

UNFACTORED REACTIONS

	1ST LCASE	MAX./MIN. COMPONENT REACTIONS					
JT	COMBINED	SNOW	LIVE	PERM.LIVE	WIND	DEAD	SOIL
T	1492	925 / 0	0 / 0	0 / 0	0 / 0	567 / 0	0 / 0
L	1492	925 / 0	0 / 0	0 / 0	0 / 0	567 / 0	0 / 0

BEARING MATERIAL TO BE SPF NO.2 OR BETTER AT JOINT(S) T, L

BRACING

TOP CHORD TO BE SHEATHED OR MAX. PURLIN SPACING = 3.77 FT.
MAX. UNBRACED BOTTOM CHORD LENGTH = 10.00 FT OR RIGID CEILING DIRECTLY APPLIED.

ALL PITCH BREAKS AND PERIMETER CORNER JOINTS MUST BE LATERALLY RESTRAINED.

1 LATERAL BRACE(S) AT 1/ 2 LENGTH OF C-R, F-P, I-N.

END VERTICAL(S) MUST BE SHEATHED OR HAVE BRACES AS INDICATED IN THE MAX. UNBRACED LENGTH COLUMN OF THE TABLE BELOW

LOADING

TOTAL LOAD CASES: (4)

CHORDS MEMB. FR-TO	MAX. FACTORED FORCE (LBS)	FACTORED VERT. LOAD (PLF) FROM	TO	LC1 CSI (LC)	MAX UNBRAC LENGTH	WEBS MEMB. FR-TO	MAX. FACTORED FORCE (LBS)	MAX CSI (LC)
A- B	0 / 35	-78.0	-78.0	0.15 (1)	10.00	S- C	-215 / 25	0.13 (1)
B- C	-2395 / 0	-78.0	-78.0	0.71 (1)	3.77	C- R	-400 / 0	0.23 (1)
C- D	-2104 / 0	-78.0	-78.0	0.64 (1)	4.03	R- E	0 / 382	0.06 (1)
D- E	-2104 / 0	-78.0	-78.0	0.64 (1)	4.03	E- P	0 / 437	0.07 (1)
E- F	-1954 / 0	-78.0	-78.0	0.50 (1)	4.28	P- F	-626 / 0	0.37 (1)
F- G	-1954 / 0	-78.0	-78.0	0.50 (1)	4.28	P- G	0 / 437	0.07 (1)
G- H	-2104 / 0	-78.0	-78.0	0.64 (1)	4.03	N- G	0 / 382	0.06 (1)
H- I	-2104 / 0	-78.0	-78.0	0.64 (1)	4.03	N- I	-400 / 0	0.23 (1)
I- J	-2395 / 0	-78.0	-78.0	0.71 (1)	3.77	M- I	-215 / 25	0.13 (1)
J- K	0 / 35	-78.0	-78.0	0.15 (1)	10.00	B- S	0 / 2054	0.46 (1)
T- B	-2042 / 0	0.0	0.0	0.21 (1)	5.91	M- J	0 / 2054	0.46 (1)
L- J	-2042 / 0	0.0	0.0	0.21 (1)	5.91			
T- S	0 / 0	-18.5	-18.5	0.21 (4)	10.00			
S- R	0 / 2023	-18.5	-18.5	0.43 (1)	10.00			
R- Q	0 / 1724	-18.5	-18.5	0.37 (1)	10.00			
Q- P	0 / 1724	-18.5	-18.5	0.37 (1)	10.00			
P- O	0 / 1724	-18.5	-18.5	0.37 (1)	10.00			
O- N	0 / 1724	-18.5	-18.5	0.37 (1)	10.00			
N- M	0 / 2023	-18.5	-18.5	0.43 (1)	10.00			
M- L	0 / 0	-18.5	-18.5	0.21 (4)	10.00			

DESIGN CRITERIA

SPECIFIED LOADS:

TOP CH.	LL	=	21.0	PSF
	DL	=	6.0	PSF
BOT CH.	LL	=	0.0	PSF
	DL	=	7.4	PSF
TOTAL LOAD		=	34.4	PSF

SPACING = 24.0 IN. C/C

LOADING IN FLAT SECTION BASED ON A SLOPE OF 2.00/12 MINIMUM

THIS TRUSS IS DESIGNED FOR RESIDENTIAL OR SMALL BUILDING REQUIREMENTS OF PART 9, NBCC 2015

THIS DESIGN COMPLIES WITH:
- PART 9 OF BCBC 2018 , ABC 2019
- PART 9 OF OBC 2012 (2019 AMENDMENT)
- CSA 086-14
- TPIC 2014

(55 % OF 23.0 P.S.F. G.S.L. PLUS 8.4 P.S.F. RAIN LOAD) EQUALS 21.0 P.S.F. SPECIFIED ROOF LIVE LOAD

ALLOWABLE DEFL.(LL)= L/360 (1.36")
CALCULATED VERT. DEFL.(LL) = L/ 999 (0.11")
ALLOWABLE DEFL.(TL)= L/360 (1.36")
CALCULATED VERT. DEFL.(TL) = L/ 999 (0.22")

CSI: TC=0.71/1.00 (B-C:1) , BC=0.43/1.00 (R-S:1) , WB=0.46/1.00 (B-S:1) , SSI=0.25/1.00 (E-F:1)

DOL LUMBER=1.00 NAIL=1.00 LS BEND=1.10 COMP=1.10 SHEAR=1.10 TENS= 1.10

COMPANION LIVE LOAD FACTOR = 1.00

TRUSS PLATE MANUFACTURER IS NOT RESPONSIBLE FOR QUALITY CONTROL IN THE TRUSS MANUFACTURING PLANT .

NAIL VALUES

PLATE	GRIP(DRY) (PSI) MAX	MIN	SHEAR (PLI) MAX	MIN	SECTION (PLI) MAX	MIN
MT20	650	371	1747	788	1987	1873

PLATE PLACEMENT TOL. = 0.250 inches

PLATE ROTATION TOL. = 5.0 Deg.

JSI GRIP= 0.88 (S) (INPUT = 0.90)
JSI METAL= 0.62 (B) (INPUT = 1.00)

JOB NAME	TRUSS NAME	QUANTITY	PLY	JOB DESC.	DRWG NO.
349186	H18		1	TRUSS DESC. JT 45147	E22104523

Alpha Roof Truss, Maple

Version 8.530 S Feb 23 2022 MiTek Industries, Inc. Mon Oct 24 08:33:52 2022 Page 1

ID:HSVaWIlDnhr?B6oeweH9vbyNdls-o5o5IqCvHEzU9A3Qhpnf2PU0pCVuqetDw6WPqSyQGdD

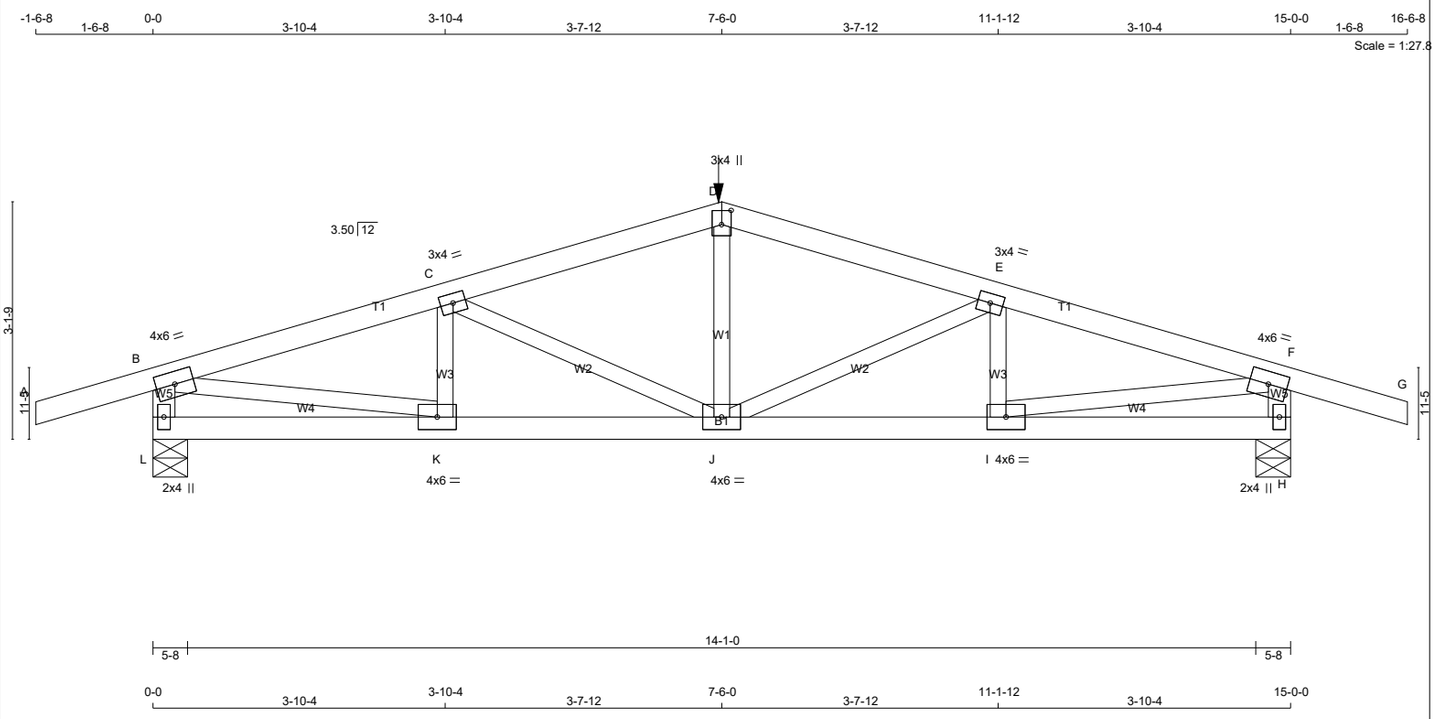

TOTAL WEIGHT = 8 X 56 = 448 lb [M]

LUMBER

N. L. G. A. RULES

CHORDS	SIZE		LUMBER	DESCR.
A - D	2x4	DRY	No.2	SPF
D - G	2x4	DRY	No.2	SPF
L - B	2x4	DRY	No.2	SPF
H - F	2x4	DRY	No.2	SPF
L - H	2x4	DRY	No.2	SPF
ALL WEBS EXCEPT	2x3	DRY	No.2	SPF

DRY: SEASONED LUMBER.

PLATES (table is in inches)

JT	TYPE	PLATES	W	LEN	Y	X
B	TMVW-t	MT20	4.0	6.0		
C	TMWW-t	MT20	3.0	4.0		
D	TTW+p	MT20	3.0	4.0	2.25	1.50
E	TMWW-t	MT20	3.0	4.0		
F	TMVW-t	MT20	4.0	6.0		
H	BMV1+p	MT20	2.0	4.0		
I	BMWW-t	MT20	4.0	6.0		
J	BMWWW-t	MT20	4.0	6.0		
K	BMWW-t	MT20	4.0	6.0		
L	BMV1+p	MT20	2.0	4.0		

LATERAL BRACE(S) SHOWN SHALL BE 2X4 SPF#2

LICENSED PROFESSIONAL ENGINEER
Y. WIDYA
100225448
10/24/2022
PROVINCE OF ONTARIO

DIMENSIONS, SUPPORTS AND LOADINGS SPECIFIED BY FABRICATOR TO BE VERIFIED BY BUILDING DESIGNER

BEARINGS

JT	FACTORED GROSS REACTION VERT	HORZ	MAXIMUM FACTORED GROSS REACTION DOWN	HORZ	UPLIFT	INPUT BRG IN-SX	REQRD BRG IN-SX
L	941	0	941	0	0	5-8	1-8
H	941	0	941	0	0	5-8	1-8

UNFACTORED REACTIONS

JT	1ST LCASE COMBINED	MAX./MIN. COMPONENT REACTIONS SNOW	LIVE	PERM.LIVE	WIND	DEAD	SOIL
L	668	426 / 0	0 / 0	0 / 0	0 / 0	242 / 0	0 / 0
H	668	426 / 0	0 / 0	0 / 0	0 / 0	242 / 0	0 / 0

BEARING MATERIAL TO BE SPF NO.2 OR BETTER AT JOINT(S) L, H

BRACING

TOP CHORD TO BE SHEATHED OR MAX. PURLIN SPACING = 5.16 FT.
MAX. UNBRACED BOTTOM CHORD LENGTH = 10.00 FT OR RIGID CEILING DIRECTLY APPLIED.

ALL PITCH BREAKS AND PERIMETER CORNER JOINTS MUST BE LATERALLY RESTRAINED.

LOADING

TOTAL LOAD CASES: (4)

CHORDS

MEMB. FR-TO	MAX. FACTORED FORCE (LBS)	FACTORED VERT. LOAD (PLF) FROM	TO	LC1	MAX CSI (LC)	MAX. UNBRAC LENGTH
A- B	0 / 17	-78.0	-78.0	0.15 (1)	10.00	
B- C	-1478 / 0	-78.0	-78.0	0.19 (1)	5.16	
C- D	-1259 / 0	-78.0	-78.0	0.18 (1)	5.50	
D- E	-1259 / 0	-78.0	-78.0	0.18 (1)	5.50	
E- F	-1478 / 0	-78.0	-78.0	0.19 (1)	5.16	
F- G	0 / 17	-78.0	-78.0	0.15 (1)	10.00	
L- B	-901 / 0	0.0	0.0	0.10 (1)	7.81	
H- F	-901 / 0	0.0	0.0	0.10 (1)	7.81	
L- K	0 / 0	-20.1	-20.1	0.07 (4)	10.00	
K- J	0 / 1426	-20.1	-20.1	0.29 (1)	10.00	
J- I	0 / 1426	-20.1	-20.1	0.29 (1)	10.00	
I- H	0 / 0	-20.1	-20.1	0.07 (4)	10.00	

WEBS

MEMB. FR-TO	MAX. FACTORED FORCE (LBS)	MAX CSI (LC)
J- D	0 / 309	0.08 (1)
I- E	-173 / 0	0.03 (1)
C- J	-250 / 0	0.07 (1)
K- C	-173 / 0	0.03 (1)
B- K	0 / 1446	0.36 (1)
I- F	0 / 1446	0.36 (1)

FACTORED CONCENTRATED LOADS (LBS)

JT	LOC.	LC1	MAX-	MAX+	FACE	DIR.	TYPE	HEEL	CONN.
D	7-6-0	-164	-164	---	FRONT	VERT	TOTAL	---	C1

CONNECTION REQUIREMENTS

1) **C1:** A SUITABLE HANGER/MECHANICAL CONNECTION IS REQUIRED.

DESIGN CRITERIA

SPECIFIED LOADS:

TOP CH.	LL	=	21.0	PSF
	DL	=	6.0	PSF
BOT CH.	LL	=	0.0	PSF
	DL	=	7.4	PSF
TOTAL LOAD		=	34.4	PSF

SPACING = 24.0 IN. C/C

GIRDER TYPE: CPrimeHip
SIDE SETBACK = 7-6-0
END SETBACK = 2-4-2
END WALL WIDTH = 0-0
CORNER FRAMING TYPE: CONVENTIONAL
END JACK TYPE: CONVENTIONAL
APPLIED TO FRONT SIDE
- ADDT'L LOADS BASED ON 55 % OF GSL.

THIS TRUSS IS DESIGNED FOR RESIDENTIAL OR SMALL BUILDING REQUIREMENTS OF PART 9, NBCC 2015

THIS DESIGN COMPLIES WITH:
- PART 9 OF BCBC 2018 , ABC 2019
- PART 9 OF OBC 2012 (2019 AMENDMENT)
- CSA 086-14
- TPIC 2014

(55 % OF 23.0 P.S.F. G.S.L. PLUS 8.4 P.S.F. RAIN LOAD) EQUALS 21.0 P.S.F. SPECIFIED ROOF LIVE LOAD

ALLOWABLE DEFL.(LL)= L/360 (0.50")
CALCULATED VERT. DEFL.(LL) = L/ 999 (0.04")
ALLOWABLE DEFL.(TL)= L/360 (0.50")
CALCULATED VERT. DEFL.(TL) = L/ 999 (0.08")

CSI: TC=0.19/1.00 (E-F:1) , BC=0.29/1.00 (J-K:1) , WB=0.36/1.00 (B-K:1) , SSI=0.15/1.00 (B-C:1)

DOL LUMBER=1.00 NAIL=1.00 LS BEND=1.00 COMP=1.00 SHEAR=1.00 TENS= 1.00

COMPANION LIVE LOAD FACTOR = 1.00

TRUSS PLATE MANUFACTURER IS NOT RESPONSIBLE FOR QUALITY CONTROL IN THE TRUSS MANUFACTURING PLANT .

NAIL VALUES

PLATE	GRIP(DRY) (PSI) MAX	MIN	SHEAR (PLI) MAX	MIN	SECTION (PLI) MAX	MIN
MT20	650	371	1747	788	1987	1873

PLATE PLACEMENT TOL. = 0.250 inches

PLATE ROTATION TOL. = 5.0 Deg.

JSI GRIP= 0.83 (D) (INPUT = 0.90)
JSI METAL= 0.35 (B) (INPUT = 1.00)

JOB NAME	TRUSS NAME	QUANTITY	PLY	JOB DESC.	DRWG NO.
349186	H21		1	TRUSS DESC. JT 45147	E22104524

Alpha Roof Truss, Maple

Version 8.530 S Feb 23 2022 MiTek Industries, Inc. Mon Oct 24 08:33:54 2022 Page 1

ID:HSVaWIlDnhr?B6oeweH9vbyNdls-kUwriWDAprDCOUDppEp78qaIU?8HISXWOP?WvKyQGdB

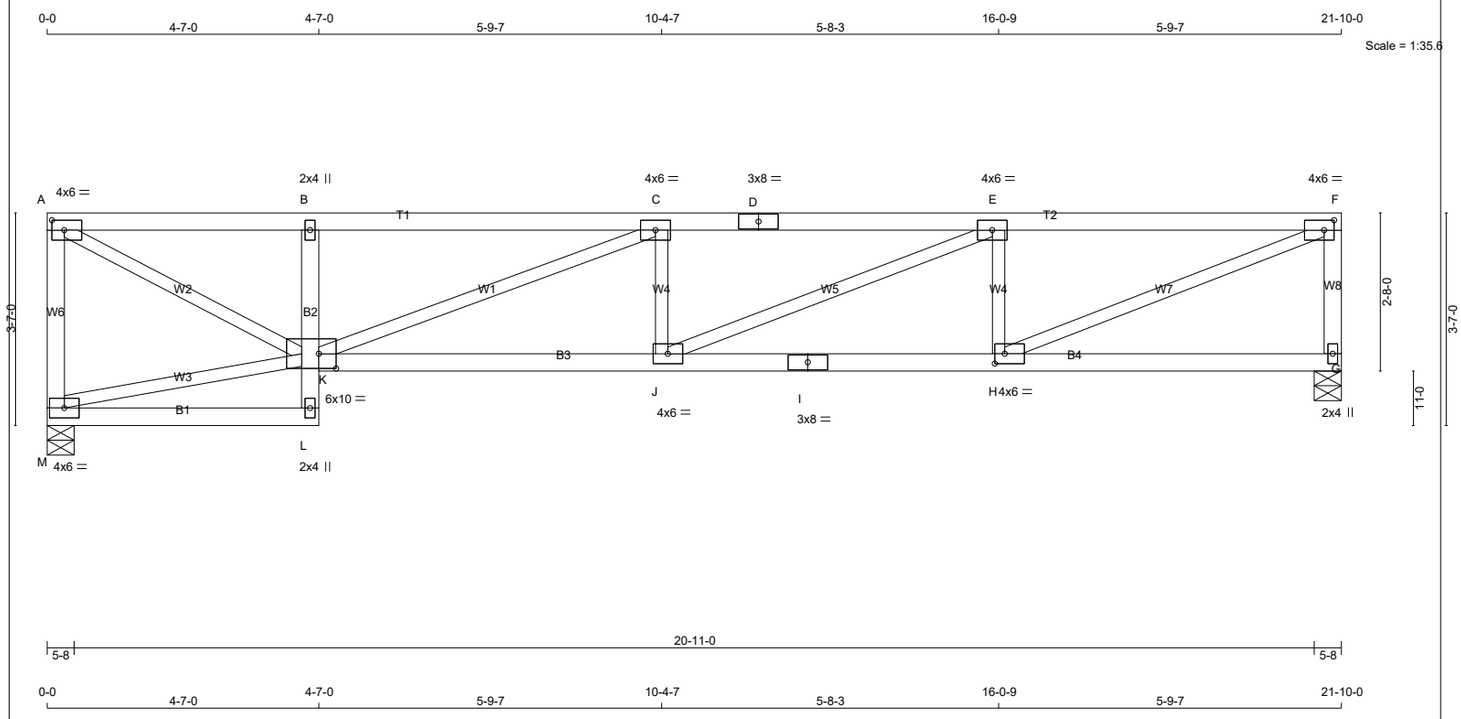

TOTAL WEIGHT = 84 lb

[M]

LUMBER

N. L. G. A. RULES

CHORDS	SIZE		LUMBER	DESCR.
M - A	2x4	DRY	No.2	SPF
A - D	2x4	DRY	No.2	SPF
D - F	2x4	DRY	No.2	SPF
G - F	2x4	DRY	No.2	SPF
M - L	2x4	DRY	No.2	SPF
L - B	2x4	DRY	No.2	SPF
K - I	2x4	DRY	No.2	SPF
I - G	2x4	DRY	No.2	SPF
ALL WEBS	2x3	DRY	No.2	SPF

DRY: SEASONED LUMBER.

PLATES (table is in inches)

JT	TYPE	PLATES	W	LEN	Y	X
A	TMVW-t	MT20	4.0	6.0	2.00	2.50
B	TMV+p	MT20	2.0	4.0		
C	TMWW-t	MT20	4.0	6.0		
D	TS-t	MT20	3.0	8.0		
E	TMWW-t	MT20	4.0	6.0		
F	TMVW-t	MT20	4.0	6.0	2.00	2.00
G	BMV1+p	MT20	2.0	4.0		
H	BMWW-t	MT20	4.0	6.0	2.00	2.00
I	BS-t	MT20	3.0	8.0		
J	BMWW-t	MT20	4.0	6.0		
K	BVMWWW-l	MT20	6.0	10.0	3.00	3.50
L	BMV+p	MT20	2.0	4.0		
M	BMVW1-t	MT20	4.0	6.0		

LATERAL BRACE(S) SHOWN SHALL BE 2X4 SPF#2

DIMENSIONS, SUPPORTS AND LOADINGS SPECIFIED BY FABRICATOR TO BE VERIFIED BY BUILDING DESIGNER

BEARINGS

JT	FACTORED GROSS REACTION VERT	HORZ	MAXIMUM FACTORED GROSS REACTION DOWN	HORZ	UPLIFT	INPUT BRG IN-SX	REQRD BRG IN-SX
M	1053	0	1053	0	0	5-8	1-8
G	1053	0	1053	0	0	5-8	1-8

UNFACTORED REACTIONS

JT	1ST LCASE COMBINED	MAX./MIN. COMPONENT REACTIONS SNOW	LIVE	PERM.LIVE	WIND	DEAD	SOIL
M	751	458 / 0	0 / 0	0 / 0	0 / 0	293 / 0	0 / 0
G	751	458 / 0	0 / 0	0 / 0	0 / 0	293 / 0	0 / 0

BEARING MATERIAL TO BE SPF NO.2 OR BETTER AT JOINT(S) M, G

BRACING

TOP CHORD TO BE SHEATHED OR MAX. PURLIN SPACING = 3.89 FT.

MAX. UNBRACED BOTTOM CHORD LENGTH = 7.81 FT OR RIGID CEILING DIRECTLY APPLIED.

ALL PITCH BREAKS AND PERIMETER CORNER JOINTS MUST BE LATERALLY RESTRAINED.

LOADING

TOTAL LOAD CASES: (4)

CHORDS

MEMB. FR-TO	MAX. FACTORED FORCE (LBS)	FACTORED VERT. LOAD LC1 (PLF) FROM	TO	MAX CSI (LC)	MAX. UNBRAC LENGTH
M- A	-999 / 0	0.0	0.0	0.20 (1)	7.81
A- B	-1629 / 0	-78.0	-78.0	0.33 (1)	4.81
B- C	-1654 / 0	-78.0	-78.0	0.36 (1)	4.78
C- D	-2506 / 0	-78.0	-78.0	0.50 (1)	3.89
D- E	-2506 / 0	-78.0	-78.0	0.50 (1)	3.89
E- F	-2004 / 0	-78.0	-78.0	0.45 (1)	4.32
G- F	-1006 / 0	0.0	0.0	0.13 (1)	7.80
M- L	0 / 65	-18.5	-18.5	0.11 (4)	10.00
L- K	0 / 46	0.0	0.0	0.09 (1)	10.00
K- B	-454 / 0	0.0	0.0	0.09 (1)	7.81
K- J	0 / 2506	-18.5	-18.5	0.49 (1)	10.00
J- I	0 / 2004	-18.5	-18.5	0.37 (1)	10.00
I- H	0 / 2004	-18.5	-18.5	0.37 (1)	10.00
H- G	0 / 0	-18.5	-18.5	0.13 (4)	10.00

WEBS

MEMB. FR-TO	MAX. FACTORED FORCE (LBS)	MAX CSI (LC)
M- K	-66 / 0	0.02 (1)
A- K	0 / 1848	0.42 (1)
K- C	-918 / 0	0.67 (1)
J- C	-97 / 47	0.02 (4)
J- E	0 / 545	0.12 (1)
H- E	-710 / 0	0.12 (1)
H- F	0 / 2166	0.49 (1)

DESIGN CRITERIA

SPECIFIED LOADS:

TOP CH.	LL	=	21.0	PSF
	DL	=	6.0	PSF
BOT CH.	LL	=	0.0	PSF
	DL	=	7.4	PSF
TOTAL LOAD		=	34.4	PSF

SPACING = 24.0 IN. C/C

LOADING IN FLAT SECTION BASED ON A SLOPE OF 2.00/12 MINIMUM

THIS TRUSS IS DESIGNED FOR RESIDENTIAL OR SMALL BUILDING REQUIREMENTS OF PART 9, NBCC 2015

THIS DESIGN COMPLIES WITH:
- PART 9 OF BCBC 2018 , ABC 2019
- PART 9 OF OBC 2012 (2019 AMENDMENT)
- CSA 086-14
- TPIC 2014

(55 % OF 23.0 P.S.F. G.S.L. PLUS 8.4 P.S.F. RAIN LOAD) EQUALS 21.0 P.S.F. SPECIFIED ROOF LIVE LOAD

ALLOWABLE DEFL.(LL)= L/360 (0.73")
CALCULATED VERT. DEFL.(LL) = L/ 999 (0.12")
ALLOWABLE DEFL.(TL)= L/360 (0.73")
CALCULATED VERT. DEFL.(TL) = L/ 999 (0.24")

CSI: TC=0.50/1.00 (C-E:1) , BC=0.49/1.00 (J-K:1) , WB=0.67/1.00 (C-K:1) , SSI=0.21/1.00 (E-F:1)

DOL LUMBER=1.00 NAIL=1.00 LS BEND=1.10 COMP=1.10 SHEAR=1.10 TENS= 1.10

COMPANION LIVE LOAD FACTOR = 1.00

TRUSS PLATE MANUFACTURER IS NOT RESPONSIBLE FOR QUALITY CONTROL IN THE TRUSS MANUFACTURING PLANT .

NAIL VALUES

PLATE	GRIP(DRY) (PSI) MAX	MIN	SHEAR (PLI) MAX	MIN	SECTION (PLI) MAX	MIN
MT20	650	371	1747	788	1987	1873

PLATE PLACEMENT TOL. = 0.250 inches

PLATE ROTATION TOL. = 5.0 Deg.

JSI GRIP= 0.85 (A) (INPUT = 0.90)
JSI METAL= 0.66 (I) (INPUT = 1.00)

JOB NAME	TRUSS NAME	QUANTITY	PLY	JOB DESC.	DRWG NO.
349186	H21G		1	TRUSS DESC. JT 45147	E22104525

Alpa Roof Truss, Maple

Version 8.530 S Feb 23 2022 MiTek Industries, Inc. Mon Oct 24 08:33:56 2022 Page 1

ID:HSVaWIIDnhr?B6oeweH9vbyNdls-hs2b7CFQLSTwenNBwfrbDFfkDpw8mWtprjUd DyQGd9

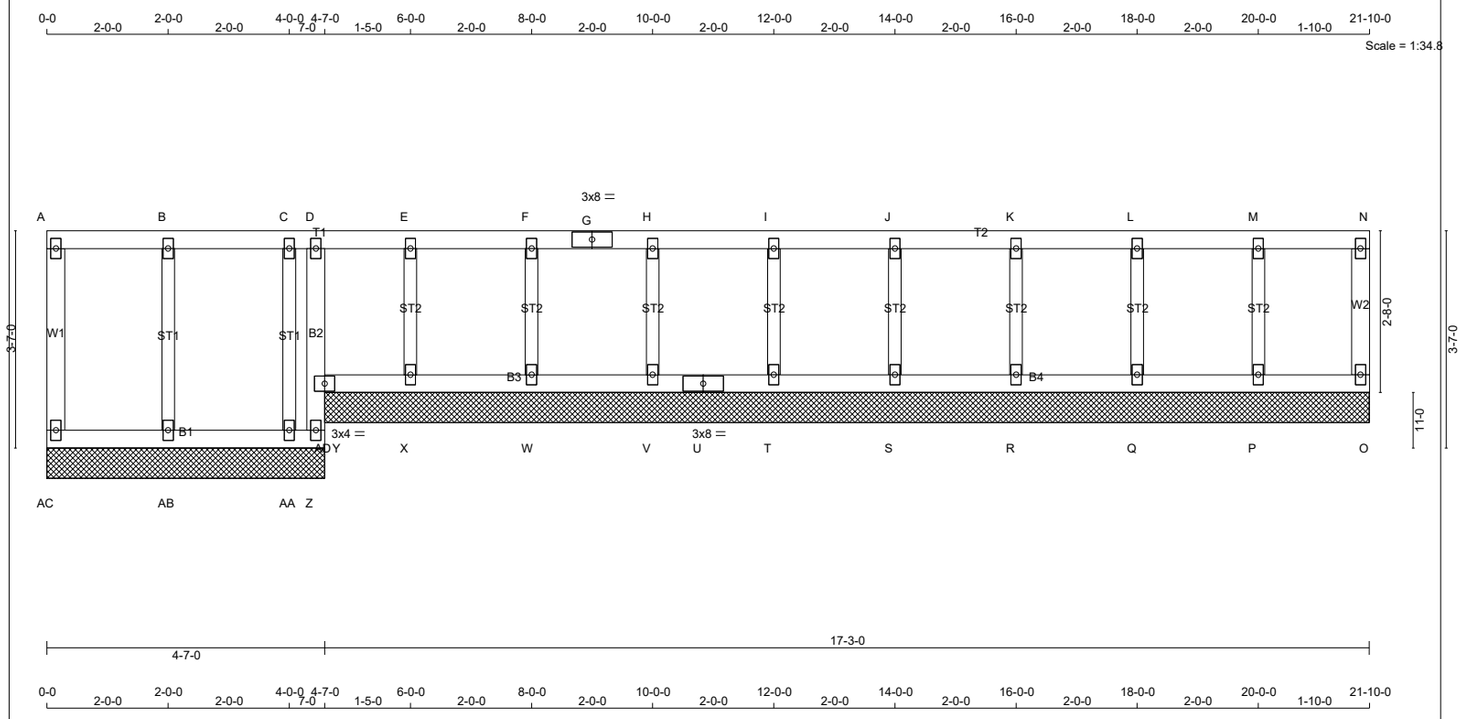

TOTAL WEIGHT = 77 lb [M]

LUMBER

N. L. G. A. RULES

CHORDS	SIZE		LUMBER	DESCR.
AC- A	2x4	DRY	No.2	SPF
A - G	2x4	DRY	No.2	SPF
G - N	2x4	DRY	No.2	SPF
O - N	2x4	DRY	No.2	SPF
AC- Z	2x4	DRY	No.2	SPF
Z - D	2x4	DRY	No.2	SPF
Y - U	2x4	DRY	No.2	SPF
U - O	2x4	DRY	No.2	SPF
ALL WEBS	2x3	DRY	No.2	SPF
ALL GABLE WEBS	2x3	DRY	No.2	SPF

DRY: SEASONED LUMBER.

GABLE STUDS SPACED AT 2-0-0 OC.

PLATES (table is in inches)

JT	TYPE	PLATES	W	LEN	Y	X
A, D, N						
A	TMV+p	MT20	2.0	4.0		
B, C, E, F, H, I, J, K, L, M						
B	TMW+w	MT20	2.0	4.0		
G	TS-t	MT20	3.0	8.0		
O, Z, AC						
O	BMV1+p	MT20	2.0	4.0		
P, Q, R, S, T, V, W, X, AA, AB						
P	BMW1+w	MT20	2.0	4.0		
U	BS-t	MT20	3.0	8.0		
Y	BVM-I	MT20	3.0	4.0		

LATERAL BRACE(S) SHOWN SHALL BE 2X4 SPF#2

DIMENSIONS, SUPPORTS AND LOADINGS SPECIFIED BY FABRICATOR TO BE VERIFIED BY BUILDING DESIGNER

BEARINGS

THIS TRUSS DESIGNED FOR CONTINUOUS BEARINGS.

THIS TRUSS REQUIRES RIGID SHEATHING ON EXPOSED FACE.

PROVIDE ANCHORAGE AT BEARING JOINT Z FOR 150 LBS FACTORED UPLIFT
BEARING MATERIAL TO BE SPF NO.2 OR BETTER AT JOINT(S)

BRACING

TOP CHORD TO BE SHEATHED OR MAX. PURLIN SPACING = 10.00 FT.
MAX. UNBRACED BOTTOM CHORD LENGTH = 7.81 FT OR RIGID CEILING DIRECTLY APPLIED.

ALL PITCH BREAKS AND PERIMETER CORNER JOINTS MUST BE LATERALLY RESTRAINED.

LOADING

TOTAL LOAD CASES: (4)

CHORDS MEMB. FR-TO	MAX. FORCE (LBS)	FACTORED VERT. LOAD (PLF) FROM	TO	LC1 MAX CSI (LC)	MAX. UNBRAC LENGTH	WEBS MEMB. FR-TO	MAX. FORCE (LBS)	MAX CSI (LC)
AC- A	-70 / 0	0.0	0.0	0.02 (1)	7.81	AB- B	-171 / 0	0.04 (1)
A- B	-6 / 0	-78.0	-78.0	0.04 (1)	10.00	AA- C	-90 / 0	0.02 (1)
B- C	-6 / 0	-78.0	-78.0	0.04 (1)	10.00	X- E	-138 / 0	0.02 (1)
C- D	-6 / 0	-78.0	-78.0	0.02 (1)	10.00	W- F	-160 / 0	0.03 (1)
D- E	-6 / 0	-78.0	-78.0	0.03 (1)	10.00	V- H	-155 / 0	0.03 (1)
E- F	-6 / 0	-78.0	-78.0	0.04 (1)	10.00	T- I	-156 / 0	0.03 (1)
F- G	-6 / 0	-78.0	-78.0	0.04 (1)	10.00	S- J	-156 / 0	0.03 (1)
G- H	-6 / 0	-78.0	-78.0	0.04 (1)	10.00	R- K	-156 / 0	0.03 (1)
H- I	-6 / 0	-78.0	-78.0	0.04 (1)	10.00	Q- L	-156 / 0	0.03 (1)
I- J	-6 / 0	-78.0	-78.0	0.04 (1)	10.00	P- M	-158 / 0	0.03 (1)
J- K	-6 / 0	-78.0	-78.0	0.04 (1)	10.00			
K- L	-6 / 0	-78.0	-78.0	0.04 (1)	10.00			
L- M	-6 / 0	-78.0	-78.0	0.04 (1)	10.00			
M- N	-6 / 0	-78.0	-78.0	0.03 (1)	10.00			
O- N	-63 / 0	0.0	0.0	0.01 (1)	7.81			
AC-AB	0 / 6	-18.5	-18.5	0.02 (4)	10.00			
AB-AA	0 / 6	-18.5	-18.5	0.02 (4)	10.00			
AA- Z	0 / 6	-18.5	-18.5	0.01 (4)	10.00			
Z- Y	-26 / 0	0.0	0.0	0.01 (1)	7.81			
Y- D	-74 / 0	0.0	0.0	0.00 (1)	7.81			
Y-AD	0 / 6	-18.5	-18.5	0.01 (1)	10.00			
AD- X	0 / 6	-18.5	-18.5	0.01 (4)	10.00			
X- W	0 / 6	-18.5	-18.5	0.02 (4)	10.00			
W- V	0 / 6	-18.5	-18.5	0.02 (4)	10.00			
V- U	0 / 6	-18.5	-18.5	0.02 (4)	10.00			
U- T	0 / 6	-18.5	-18.5	0.02 (4)	10.00			
T- S	0 / 6	-18.5	-18.5	0.02 (4)	10.00			
S- R	0 / 6	-18.5	-18.5	0.02 (4)	10.00			
R- Q	0 / 6	-18.5	-18.5	0.02 (4)	10.00			
Q- P	0 / 6	-18.5	-18.5	0.02 (4)	10.00			
P- O	0 / 6	-18.5	-18.5	0.02 (4)	10.00			

DESIGN CRITERIA

SPECIFIED LOADS:

TOP CH.	LL	=	21.0	PSF
	DL	=	6.0	PSF
BOT CH.	LL	=	0.0	PSF
	DL	=	7.4	PSF
TOTAL LOAD		=	34.4	PSF

SPACING = 24.0 IN. C/C

LOADING IN FLAT SECTION BASED ON A SLOPE OF 2.00/12 MINIMUM

THIS TRUSS IS DESIGNED FOR RESIDENTIAL OR SMALL BUILDING REQUIREMENTS OF PART 9, NBCC 2015

THIS DESIGN COMPLIES WITH:
- PART 9 OF BCBC 2018 , ABC 2019
- PART 9 OF OBC 2012 (2019 AMENDMENT)
- CSA 086-14
- TPIC 2014

(55 % OF 23.0 P.S.F. G.S.L. PLUS 8.4 P.S.F. RAIN LOAD) EQUALS 21.0 P.S.F. SPECIFIED ROOF LIVE LOAD

ALLOWABLE DEFL.(LL)= L/1080 (0.19")
CALCULATED VERT. DEFL.(LL) = L/ 999 (0.00")
ALLOWABLE DEFL.(TL)= L/1080 (0.19")
CALCULATED VERT. DEFL.(TL) = L/ 999 (0.00")

CSI: TC=0.04/1.00 (B-C:1) , BC=0.02/1.00 (AA-AB:4) , WB=0.04/1.00 (B-AB:1) , SSI=0.07/1.00 (A-B:1)

DOL LUMBER=1.00 NAIL=1.00 LS BEND=1.10 COMP=1.10 SHEAR=1.10 TENS= 1.10

COMPANION LIVE LOAD FACTOR = 1.00

TRUSS PLATE MANUFACTURER IS NOT RESPONSIBLE FOR QUALITY CONTROL IN THE TRUSS MANUFACTURING PLANT .

NAIL VALUES

PLATE	GRIP(DRY) (PSI) MAX	MIN	SHEAR (PLI) MAX	MIN	SECTION (PLI) MAX	MIN
MT20	650	371	1747	788	1987	1873

PLATE PLACEMENT TOL. = 0.250 inches

PLATE ROTATION TOL. = 5.0 Deg.

JSI GRIP= 0.37 (N) (INPUT = 0.90)
JSI METAL= 0.04 (AB) (INPUT = 1.00)

JOB NAME	TRUSS NAME	QUANTITY	PLY	JOB DESC.	DRWG NO.
349186	H22A		1	TRUSS DESC. JT 45147	E22104526

Alpa Roof Truss, Maple

Version 8.530 S Feb 23 2022 MiTek Industries, Inc. Mon Oct 24 08:33:57 2022 Page 1
ID:HSVaWIlDnhr?B6oeweH9vbyNdls-93c LYG25mbnFxyNUMNqlTBlYD2uVney4NDAWfyQGd8

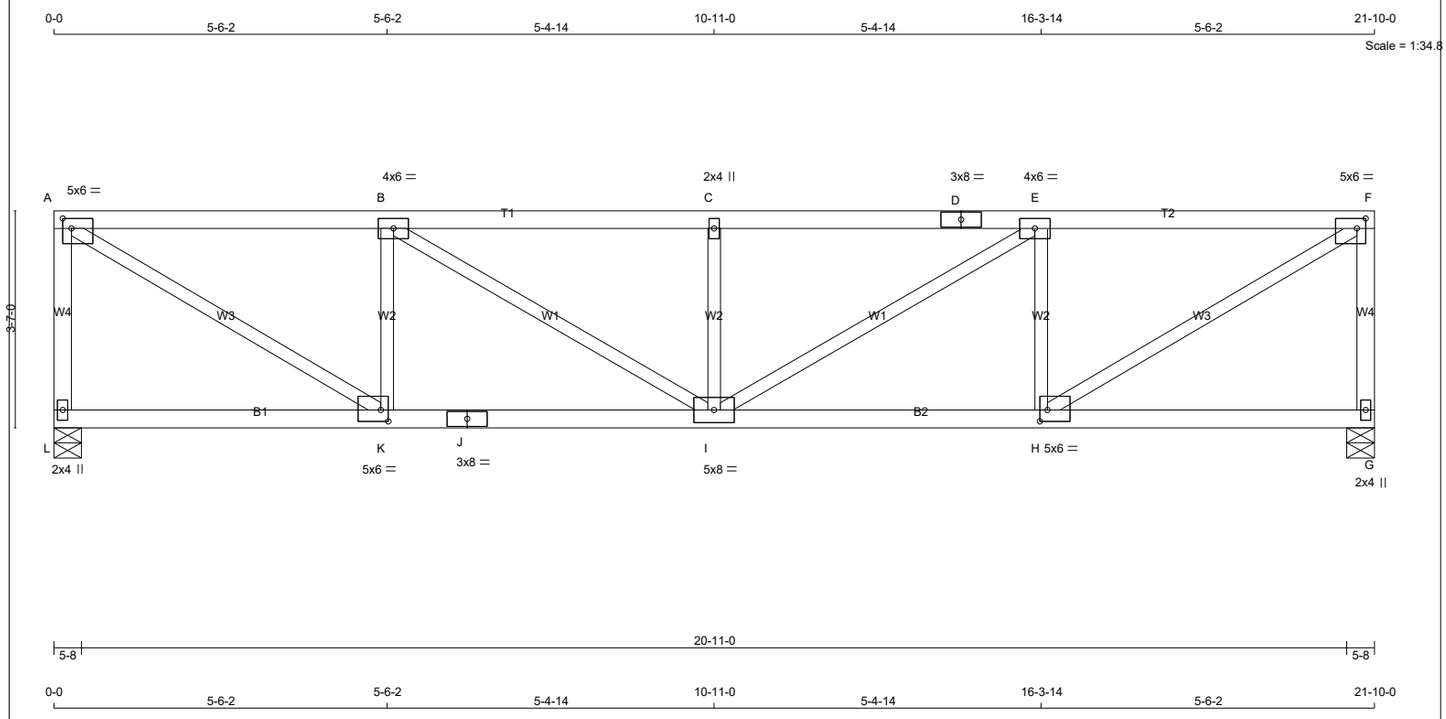

TOTAL WEIGHT = 83 lb

LUMBER
N. L. G. A. RULES

CHORDS	SIZE		LUMBER	DESCR.
L - A	2x4	DRY	No.2	SPF
A - D	2x4	DRY	No.2	SPF
D - F	2x4	DRY	No.2	SPF
G - F	2x4	DRY	No.2	SPF
L - J	2x4	DRY	No.2	SPF
J - G	2x4	DRY	No.2	SPF
ALL WEBS	2x3	DRY	No.2	SPF

DRY: SEASONED LUMBER.

PLATES (table is in inches)

JT	TYPE	PLATES	W	LEN	Y	X
A	TMVW-t	MT20	5.0	6.0	2.00	1.75
B	TMWW-t	MT20	4.0	6.0		
C	TMW+w	MT20	2.0	4.0		
D	TS-t	MT20	3.0	8.0		
E	TMWW-t	MT20	4.0	6.0		
F	TMVW-t	MT20	5.0	6.0	2.00	1.75
G	BMV1+p	MT20	2.0	4.0		
H	BMWW-t	MT20	5.0	6.0	2.25	1.50
I	BMWWW-t	MT20	5.0	8.0		
J	BS-t	MT20	3.0	8.0		
K	BMWW-t	MT20	5.0	6.0	2.25	1.50
L	BMV1+p	MT20	2.0	4.0		

LATERAL BRACE(S) SHOWN SHALL BE 2X4 SPF#2

DIMENSIONS, SUPPORTS AND LOADINGS SPECIFIED BY FABRICATOR TO BE VERIFIED BY BUILDING DESIGNER

BEARINGS

JT	FACTORED GROSS REACTION VERT	HORZ	MAXIMUM FACTORED GROSS REACTION DOWN	HORZ	UPLIFT	INPUT BRG	REQRD BRG
L	2008	0	2008	0	0	5-8	3-0
G	2008	0	2008	0	0	5-8	3-0

UNFACTORED REACTIONS

JT	1ST LCASE COMBINED	MAX./MIN. COMPONENT REACTIONS SNOW	LIVE	PERM.LIVE	WIND	DEAD	SOIL
L	1431	874 / 0	0 / 0	0 / 0	0 / 0	558 / 0	0 / 0
G	1431	874 / 0	0 / 0	0 / 0	0 / 0	558 / 0	0 / 0

BEARING MATERIAL TO BE SPF NO.2 OR BETTER AT JOINT(S) L, G

BRACING
TOP CHORD TO BE SHEATHED OR MAX. PURLIN SPACING = 3.21 FT.
MAX. UNBRACED BOTTOM CHORD LENGTH = 10.00 FT OR RIGID CEILING DIRECTLY APPLIED.

ALL PITCH BREAKS AND PERIMETER CORNER JOINTS MUST BE LATERALLY RESTRAINED.

LOADING
TOTAL LOAD CASES: (4)

CHORDS

MEMB. FR-TO	MAX. FACTORED FORCE (LBS)	FACTORED VERT. LOAD (PLF) FROM	TO	LC1	MAX CSI (LC)	MAX. UNBRAC LENGTH
L- A	-1773 / 0	0.0	0.0	0.37 (1)	6.23	
A- B	-2676 / 0	-78.0	-78.0	0.54 (1)	3.70	
B- C	-3430 / 0	-78.0	-78.0	0.64 (1)	3.21	
C- D	-3430 / 0	-78.0	-78.0	0.64 (1)	3.21	
D- E	-3430 / 0	-78.0	-78.0	0.64 (1)	3.21	
E- F	-2676 / 0	-78.0	-78.0	0.54 (1)	3.70	
G- F	-1773 / 0	0.0	0.0	0.37 (1)	6.23	
L- K	0 / 0	-105.9	-105.9	0.47 (1)	10.00	
K- J	0 / 2676	-105.9	-105.9	0.94 (1)	10.00	
J- I	0 / 2676	-105.9	-105.9	0.94 (1)	10.00	
I- H	0 / 2676	-105.9	-105.9	0.94 (1)	10.00	
H- G	0 / 0	-105.9	-105.9	0.47 (1)	10.00	

WEBS

MEMB. FR-TO	MAX. FACTORED FORCE (LBS)	MAX CSI (LC)
A- K	0 / 3117	0.77 (1)
K- B	-941 / 0	0.21 (1)
B- I	0 / 882	0.22 (1)
I- C	-390 / 0	0.09 (1)
I- E	0 / 882	0.22 (1)
H- E	-941 / 0	0.21 (1)
H- F	0 / 3117	0.77 (1)

DESIGN CRITERIA

SPECIFIED LOADS:

TOP CH.	LL	=	21.0	PSF
	DL	=	6.0	PSF
BOT CH.	LL	=	0.0	PSF
	DL	=	7.4	PSF
TOTAL LOAD		=	34.4	PSF

SPACING = 24.0 IN. C/C

LOADING IN FLAT SECTION BASED ON A SLOPE OF 2.00/12 MINIMUM

GIRDER TYPE: CStdGirder
START DISTANCE = 0-0
START SPAN CARRIED = 5-7-8
END DISTANCE = 21-10-0
END SPAN CARRIED = 5-7-8
END WALL WIDTH = 0-0
APPLIED TO FRONT SIDE OF BOTTOM CHORD.
- ADDT'L LOADS BASED ON 55 % OF GSL. (DEFINED BY USER)

THIS TRUSS IS DESIGNED FOR RESIDENTIAL OR SMALL BUILDING REQUIREMENTS OF PART 9, NBCC 2015

THIS DESIGN COMPLIES WITH:
- PART 9 OF BCBC 2018 , ABC 2019
- PART 9 OF OBC 2012 (2019 AMENDMENT)
- CSA 086-14
- TPIC 2014

(55 % OF 23.0 P.S.F. G.S.L. PLUS 8.4 P.S.F. RAIN LOAD) EQUALS 21.0 P.S.F. SPECIFIED ROOF LIVE LOAD

ALLOWABLE DEFL.(LL)= L/360 (0.73")
CALCULATED VERT. DEFL.(LL) = L/ 999 (0.15")
ALLOWABLE DEFL.(TL)= L/360 (0.73")
CALCULATED VERT. DEFL.(TL) = L/ 899 (0.29")

CSI: TC=0.64/1.00 (B-C:1) , BC=0.94/1.00 (I-K:1) , WB=0.77/1.00 (A-K:1) , SSI=0.30/1.00 (K-L:1)

DOL LUMBER=1.00 NAIL=1.00 LS BEND=1.00 COMP=1.00 SHEAR=1.00 TENS= 1.00

COMPANION LIVE LOAD FACTOR = 1.00

TRUSS PLATE MANUFACTURER IS NOT RESPONSIBLE FOR QUALITY CONTROL IN THE TRUSS MANUFACTURING PLANT .

NAIL VALUES

PLATE	GRIP(DRY) (PSI) MAX	MIN	SHEAR (PLI) MAX	MIN	SECTION (PLI) MAX	MIN
MT20	650	371	1747	788	1987	1873

PLATE PLACEMENT TOL. = 0.250 inches

PLATE ROTATION TOL. = 5.0 Deg.

JSI GRIP= 0.88 (G) (INPUT = 0.90)
JSI METAL= 0.75 (J) (INPUT = 1.00)

JOB NAME	TRUSS NAME	QUANTITY	PLY	JOB DESC.	DRWG NO.
349186	H23		1	TRUSS DESC. JT 45147	E22104527

Alpha Roof Truss, Maple

Version 8.530 S Feb 23 2022 MiTek Industries, Inc. Mon Oct 24 08:33:59 2022 Page 1

ID:HSVaWIlDnhr?B6oeweH9vbyNdls-5RjkmDHIdNrVVF6mcnPIruH4b0p7zmgFXhiHaYyQGd6

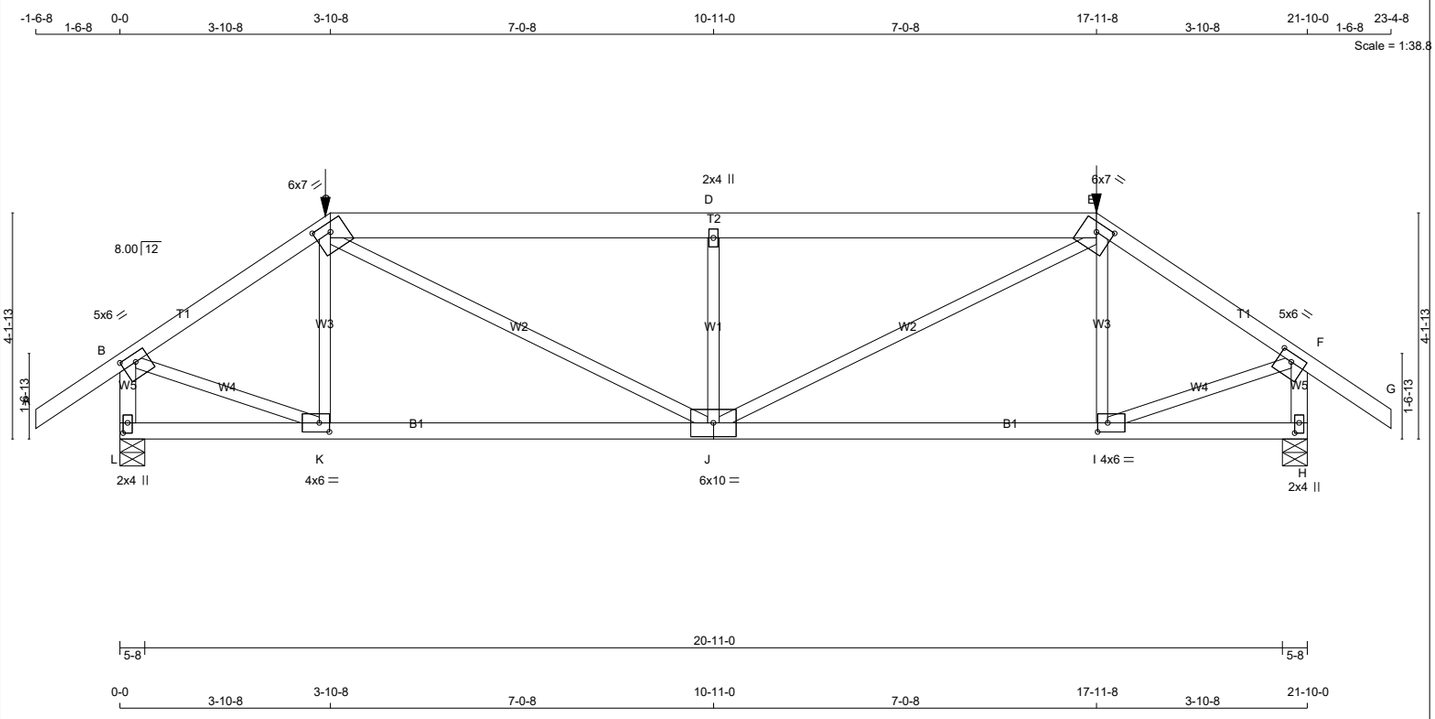

TOTAL WEIGHT = 95 lb

[M]

LUMBER

N. L. G. A. RULES

CHORDS	SIZE		LUMBER	DESCR.
A - C	2x4	DRY	No.2	SPF
C - E	2x6	DRY	No.2	SPF
E - G	2x4	DRY	No.2	SPF
L - B	2x4	DRY	No.2	SPF
H - F	2x4	DRY	No.2	SPF
L - J	2x4	DRY	No.2	SPF
J - H	2x4	DRY	No.2	SPF
ALL WEBS EXCEPT	2x3	DRY	No.2	SPF

DRY: SEASONED LUMBER.

PLATES (table is in inches)

JT	TYPE	PLATES	W	LEN	Y	X
B	TMVW-t	MT20	5.0	6.0	1.75	3.00
C	TTWW-h	MT20	6.0	7.0	2.00	3.50
D	TMW+w	MT20	2.0	4.0		
E	TTWW-h	MT20	6.0	7.0	2.00	3.50
F	TMVW-t	MT20	5.0	6.0	1.75	3.00
H	BMV1+p	MT20	2.0	4.0	2.25	1.00
I	BMWW-t	MT20	4.0	6.0	2.00	2.25
J	BSWWW-l	MT20	6.0	10.0		
K	BMWW-t	MT20	4.0	6.0	2.00	2.25
L	BMV1+p	MT20	2.0	4.0	2.25	1.00

LATERAL BRACE(S) SHOWN SHALL BE 2X4 SPF#2

DIMENSIONS, SUPPORTS AND LOADINGS SPECIFIED BY FABRICATOR TO BE VERIFIED BY BUILDING DESIGNER

BEARINGS

JT	FACTORED GROSS REACTION VERT	HORZ	MAXIMUM FACTORED GROSS REACTION DOWN	HORZ	UPLIFT	INPUT BRG IN-SX	REQRD BRG IN-SX
L	2127	0	2127	0	0	5-8	3-7
H	2127	0	2127	0	0	5-8	3-7

UNFACTORED REACTIONS

JT	1ST LCASE COMBINED	MAX./MIN. COMPONENT REACTIONS SNOW	LIVE	PERM.LIVE	WIND	DEAD	SOIL
L	1516	931 / 0	0 / 0	0 / 0	0 / 0	584 / 0	0 / 0
H	1516	931 / 0	0 / 0	0 / 0	0 / 0	584 / 0	0 / 0

BEARING MATERIAL TO BE SPF NO.2 OR BETTER AT JOINT(S) L, H

BRACING

TOP CHORD TO BE SHEATHED OR MAX. PURLIN SPACING = 3.67 FT.
MAX. UNBRACED BOTTOM CHORD LENGTH = 10.00 FT OR RIGID CEILING DIRECTLY APPLIED.

ALL PITCH BREAKS AND PERIMETER CORNER JOINTS MUST BE LATERALLY RESTRAINED.

LOADING

TOTAL LOAD CASES: (4)

CHORDS

MEMB. FR-TO	MAX. FACTORED FORCE (LBS)	FACTORED VERT. LOAD (PLF) FROM	TO	LC1 MAX CSI (LC)	MAX. UNBRAC LENGTH
A- B	0 / 35	-78.0	-78.0	0.16 (1)	10.00
B- C	-2208 / 0	-78.0	-78.0	0.32 (1)	4.25
C- D	-3293 / 0	-153.5	-153.5	0.74 (1)	3.67
D- E	-3293 / 0	-153.5	-153.5	0.74 (1)	3.67
E- F	-2208 / 0	-78.0	-78.0	0.32 (1)	4.25
F- G	0 / 35	-78.0	-78.0	0.16 (1)	10.00
L- B	-2103 / 0	0.0	0.0	0.24 (1)	5.79
H- F	-2103 / 0	0.0	0.0	0.24 (1)	5.79
L- K	0 / 0	-36.4	-36.4	0.44 (4)	10.00
K- J	0 / 1852	-36.4	-36.4	0.64 (4)	10.00
J- I	0 / 1852	-36.4	-36.4	0.64 (4)	10.00
I- H	0 / 0	-36.4	-36.4	0.44 (4)	10.00

WEBS

MEMB. FR-TO	MAX. FACTORED FORCE (LBS)	MAX CSI (LC)
K- C	-343 / 56	0.09 (1)
J- D	-1342 / 0	0.35 (1)
J- E	0 / 1637	0.41 (1)
I- E	-343 / 56	0.09 (1)
B- K	0 / 1941	0.48 (1)
I- F	0 / 1941	0.48 (1)

FACTORED CONCENTRATED LOADS (LBS)

JT	LOC.	LC1	MAX-	MAX+	FACE	DIR.	TYPE	HEEL	CONN.
C	3-10-8	-220	-220	---	FRONT	VERT	TOTAL	---	C1
E	17-11-8	-220	-220	---	FRONT	VERT	TOTAL	---	C1

CONNECTION REQUIREMENTS

1) **C1:** A SUITABLE HANGER/MECHANICAL CONNECTION IS REQUIRED.

DESIGN CRITERIA

SPECIFIED LOADS:

TOP	CH.	LL	=	21.0	PSF
		DL	=	6.0	PSF
BOT	CH.	LL	=	0.0	PSF
		DL	=	7.4	PSF
TOTAL	LOAD		=	34.4	PSF

SPACING = 24.0 IN. C/C

LOADING IN FLAT SECTION BASED ON A SLOPE OF 2.00/12 MINIMUM

GIRDER TYPE: CPrimeHip
SIDE SETBACK = 3-10-8
END SETBACK = 5-10-8
END WALL WIDTH = 0-0
CORNER FRAMING TYPE: CONVENTIONAL
END JACK TYPE: CONVENTIONAL
APPLIED TO FRONT SIDE
- ADDT'L LOADS BASED ON 55 % OF GSL.

THIS TRUSS IS DESIGNED FOR RESIDENTIAL OR SMALL BUILDING REQUIREMENTS OF PART 9, NBCC 2015

THIS DESIGN COMPLIES WITH:
- PART 9 OF BCBC 2018 , ABC 2019
- PART 9 OF OBC 2012 (2019 AMENDMENT)
- CSA 086-14
- TPIC 2014

(55 % OF 23.0 P.S.F. G.S.L. PLUS 8.4 P.S.F. RAIN LOAD) EQUALS 21.0 P.S.F. SPECIFIED ROOF LIVE LOAD

ALLOWABLE DEFL.(LL)= L/360 (0.73")
CALCULATED VERT. DEFL.(LL) = L/ 999 (0.09")
ALLOWABLE DEFL.(TL)= L/360 (0.73")
CALCULATED VERT. DEFL.(TL) = L/ 981 (0.27")

CSI: TC=0.74/1.00 (C-D:1) , BC=0.64/1.00 (I-J:4) , WB=0.48/1.00 (F-I:1) , SSI=0.44/1.00 (C-D:1)

DOL LUMBER=1.00 NAIL=1.00 LS BEND=1.00 COMP=1.00 SHEAR=1.00 TENS= 1.00

COMPANION LIVE LOAD FACTOR = 1.00

TRUSS PLATE MANUFACTURER IS NOT RESPONSIBLE FOR QUALITY CONTROL IN THE TRUSS MANUFACTURING PLANT .

NAIL VALUES

PLATE	GRIP(DRY) (PSI) MAX	MIN	SHEAR (PLI) MAX	MIN	SECTION (PLI) MAX	MIN
MT20	650	371	1747	788	1987	1873

PLATE PLACEMENT TOL. = 0.250 inches

PLATE ROTATION TOL. = 5.0 Deg.

JSI GRIP= 0.90 (L) (INPUT = 0.90)
JSI METAL= 0.56 (F) (INPUT = 1.00)

JOB NAME	TRUSS NAME	QUANTITY	PLY	JOB DESC.	DRWG NO.
349186	H24		1	TRUSS DESC. JT 45147	E22104528

Alpa Roof Truss, Maple

Version 8.530 S Feb 23 2022 MiTek Industries, Inc. Mon Oct 24 08:34:01 2022 Page 1

ID:HSVaWIIDnhr?B6oeweH9vbyNdls-1qrUAvJZ9?5DkYG9jCRmwJMWqqaORkIY??BOfQyQGd4

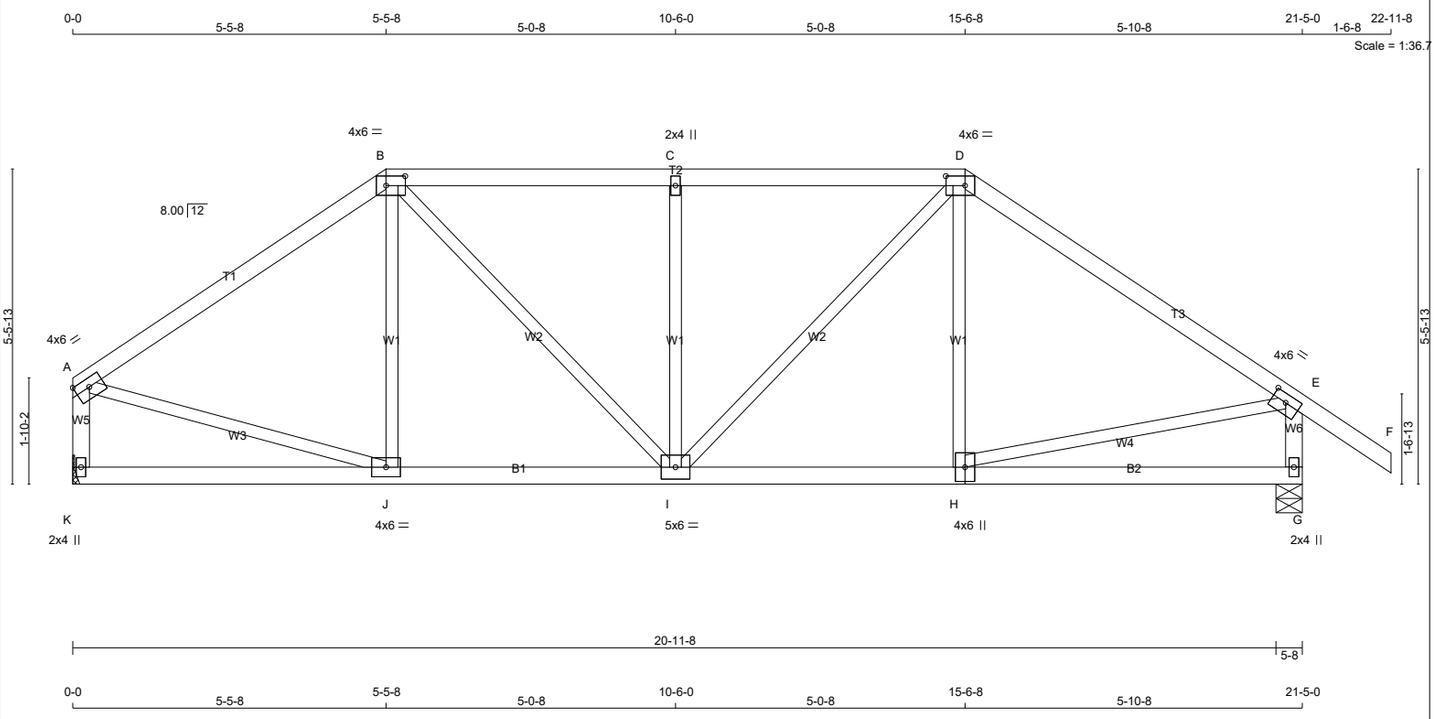

TOTAL WEIGHT = 89 lb

LUMBER

N. L. G. A. RULES

CHORDS	SIZE		LUMBER	DESCR.
A - B	2x4	DRY	No.2	SPF
B - D	2x4	DRY	No.2	SPF
D - F	2x4	DRY	No.2	SPF
K - A	2x4	DRY	No.2	SPF
G - E	2x4	DRY	No.2	SPF
K - H	2x4	DRY	No.2	SPF
H - G	2x4	DRY	No.2	SPF
ALL WEBS EXCEPT	2x3	DRY	No.2	SPF

DRY: SEASONED LUMBER.

PLATES (table is in inches)

JT	TYPE	PLATES	W	LEN	Y	X
A	TMVW-t	MT20	4.0	6.0	1.75	Edge
B	TTWW-I	MT20	4.0	6.0	2.00	4.00
C	TMW+w	MT20	2.0	4.0		
D	TTWW-I	MT20	4.0	6.0	2.00	4.00
E	TMVW-t	MT20	4.0	6.0	1.75	3.00
G	BMV1+p	MT20	2.0	4.0		
H	BSWW+I	MT20	4.0	6.0		
I	BMWWW-t	MT20	5.0	6.0		
J	BMWW-t	MT20	4.0	6.0		
K	BMV1+p	MT20	2.0	4.0		

Edge - INDICATES REFERENCE CORNER OF PLATE TOUCHES EDGE OF CHORD.

LATERAL BRACE(S) SHOWN SHALL BE 2X4 SPF#2

DIMENSIONS, SUPPORTS AND LOADINGS SPECIFIED BY FABRICATOR TO BE VERIFIED BY BUILDING DESIGNER

BEARINGS

JT	FACTORED GROSS REACTION VERT	HORZ	MAXIMUM FACTORED GROSS REACTION DOWN	HORZ	UPLIFT	INPUT BRG IN-SX	REQRD BRG IN-SX
K	1033	0	1033	0	0	MECHANICAL	
G	1160	0	1160	0	0	5-8	1-8

A SUITABLE HANGER/MECHANICAL CONNECTION IS REQUIRED AT JOINT K. MINIMUM BEARING LENGTH AT JOINT K = 1-8.

UNFACTORED REACTIONS

JT	1ST LCASE COMBINED	MAX./MIN. COMPONENT REACTIONS SNOW	LIVE	PERM.LIVE	WIND	DEAD	SOIL
K	737	450 / 0	0 / 0	0 / 0	0 / 0	287 / 0	0 / 0
G	824	518 / 0	0 / 0	0 / 0	0 / 0	306 / 0	0 / 0

BEARING MATERIAL TO BE SPF NO.2 OR BETTER AT JOINT(S) G

BRACING

TOP CHORD TO BE SHEATHED OR MAX. PURLIN SPACING = 5.69 FT.
MAX. UNBRACED BOTTOM CHORD LENGTH = 10.00 FT OR RIGID CEILING DIRECTLY APPLIED.

ALL PITCH BREAKS AND PERIMETER CORNER JOINTS MUST BE LATERALLY RESTRAINED.

LOADING

TOTAL LOAD CASES: (4)

CHORDS MEMB. FR-TO	MAX. FACTORED FORCE (LBS)	FACTORED VERT. LOAD (PLF) FROM	TO	LC1 MAX CSI (LC)	MAX. UNBRAC LENGTH	WEBS MEMB. FR-TO	MAX. FACTORED FORCE (LBS)	MAX CSI (LC)
A- B	-992 / 0	-78.0	-78.0	0.32 (1)	5.88	J- B	-116 / 33	0.05 (1)
B- C	-1116 / 0	-78.0	-78.0	0.26 (1)	5.69	B- I	0 / 422	0.09 (1)
C- D	-1116 / 0	-78.0	-78.0	0.26 (1)	5.69	I- C	-480 / 0	0.22 (1)
D- E	-1026 / 0	-78.0	-78.0	0.37 (1)	5.73	I- D	0 / 380	0.09 (1)
E- F	0 / 35	-78.0	-78.0	0.15 (1)	10.00	H- D	-84 / 35	0.04 (1)
K- A	-991 / 0	0.0	0.0	0.11 (1)	7.81	A- J	0 / 855	0.19 (1)
G- E	-1104 / 0	0.0	0.0	0.12 (1)	7.54	H- E	0 / 871	0.20 (1)
K- J	0 / 0	-18.5	-18.5	0.12 (4)	10.00			
J- I	0 / 822	-18.5	-18.5	0.20 (4)	10.00			
I- H	0 / 851	-18.5	-18.5	0.19 (1)	10.00			
H- G	0 / 0	-18.5	-18.5	0.19 (4)	10.00			

[M][F]

DESIGN CRITERIA

SPECIFIED LOADS:

TOP CH.	LL	=	21.0	PSF
	DL	=	6.0	PSF
BOT CH.	LL	=	0.0	PSF
	DL	=	7.4	PSF
TOTAL LOAD		=	34.4	PSF

SPACING = 24.0 IN. C/C

LOADING IN FLAT SECTION BASED ON A SLOPE OF 2.00/12 MINIMUM

THIS TRUSS IS DESIGNED FOR RESIDENTIAL OR SMALL BUILDING REQUIREMENTS OF PART 9, NBCC 2015

THIS DESIGN COMPLIES WITH:
- PART 9 OF BCBC 2018 , ABC 2019
- PART 9 OF OBC 2012 (2019 AMENDMENT)
- CSA 086-14
- TPIC 2014

(55 % OF 23.0 P.S.F. G.S.L. PLUS 8.4 P.S.F. RAIN LOAD) EQUALS 21.0 P.S.F. SPECIFIED ROOF LIVE LOAD

ALLOWABLE DEFL.(LL)= L/360 (0.71")
CALCULATED VERT. DEFL.(LL) = L/ 999 (0.03")
ALLOWABLE DEFL.(TL)= L/360 (0.71")
CALCULATED VERT. DEFL.(TL) = L/ 999 (0.08")

CSI: TC=0.37/1.00 (D-E:1) , BC=0.20/1.00 (I-J:4) , WB=0.22/1.00 (C-I:1) , SSI=0.19/1.00 (B-C:1)

DOL LUMBER=1.00 NAIL=1.00 LS BEND=1.10 COMP=1.10 SHEAR=1.10 TENS= 1.10

COMPANION LIVE LOAD FACTOR = 1.00

TRUSS PLATE MANUFACTURER IS NOT RESPONSIBLE FOR QUALITY CONTROL IN THE TRUSS MANUFACTURING PLANT .

NAIL VALUES

PLATE	GRIP(DRY) (PSI) MAX	MIN	SHEAR (PLI) MAX	MIN	SECTION (PLI) MAX	MIN
MT20	650	371	1747	788	1987	1873

PLATE PLACEMENT TOL. = 0.250 inches

PLATE ROTATION TOL. = 5.0 Deg.

JSI GRIP= 0.71 (H) (INPUT = 0.90)
JSI METAL= 0.39 (H) (INPUT = 1.00)

JOB NAME	TRUSS NAME	QUANTITY	PLY	JOB DESC.	DRWG NO.
349186	H25		1	TRUSS DESC. JT 45147	E22104529

Alpa Roof Truss, Maple

Version 8.530 S Feb 23 2022 MiTek Industries, Inc. Mon Oct 24 08:34:02 2022 Page 1

ID:HSVaWIlDnhr?B6oeweH9vbyNdls-V0PtOFKBwID3MiqLHvy?SWvhOEvsA5XhDfxxBtyQGd3

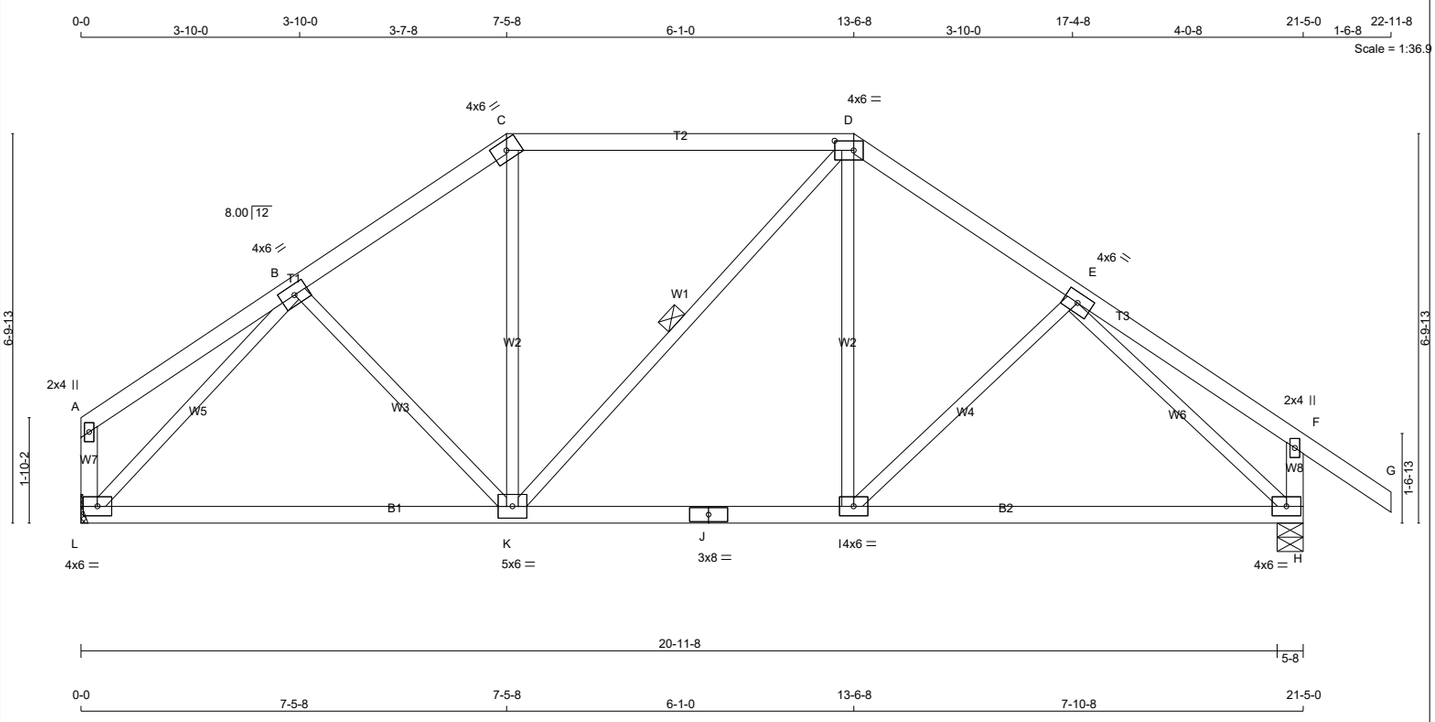

TOTAL WEIGHT = 92 lb

[M][F]

LUMBER

N. L. G. A. RULES

CHORDS	SIZE		LUMBER	DESCR.
A - C	2x4	DRY	No.2	SPF
C - D	2x4	DRY	No.2	SPF
D - G	2x4	DRY	No.2	SPF
L - A	2x4	DRY	No.2	SPF
H - F	2x4	DRY	No.2	SPF
L - J	2x4	DRY	No.2	SPF
J - H	2x4	DRY	No.2	SPF
ALL WEBS EXCEPT	2x3	DRY	No.2	SPF

DRY: SEASONED LUMBER.

PLATES (table is in inches)

JT	TYPE	PLATES	W	LEN	Y	X
A	TMV+p	MT20	2.0	4.0		
B	TMWW-t	MT20	4.0	6.0		
C	TTW-h	MT20	4.0	6.0		
D	TTWW-l	MT20	4.0	6.0	2.00	4.00
E	TMWW-t	MT20	4.0	6.0		
F	TMV+p	MT20	2.0	4.0		
H	BMVW1-t	MT20	4.0	6.0		
I	BMWW-t	MT20	4.0	6.0		
J	BS-t	MT20	3.0	8.0		
K	BMWWW-t	MT20	5.0	6.0		
L	BMVW1-t	MT20	4.0	6.0		

LATERAL BRACE(S) SHOWN SHALL BE 2X4 SPF#2

DIMENSIONS, SUPPORTS AND LOADINGS SPECIFIED BY FABRICATOR TO BE VERIFIED BY BUILDING DESIGNER

BEARINGS

JT	FACTORED GROSS REACTION VERT	HORZ	MAXIMUM FACTORED GROSS REACTION DOWN	HORZ	UPLIFT	INPUT BRG	REQRD BRG
L	1033	0	1033	0	0	MECHANICAL	
H	1160	0	1160	0	0	5-8	1-8

A SUITABLE HANGER/MECHANICAL CONNECTION IS REQUIRED AT JOINT L. MINIMUM BEARING LENGTH AT JOINT L = 1-8.

UNFACTORED REACTIONS

JT	1ST LCASE COMBINED	MAX./MIN. COMPONENT REACTIONS SNOW	LIVE	PERM.LIVE	WIND	DEAD	SOIL
L	737	450 / 0	0 / 0	0 / 0	0 / 0	287 / 0	0 / 0
H	824	518 / 0	0 / 0	0 / 0	0 / 0	306 / 0	0 / 0

BEARING MATERIAL TO BE SPF NO.2 OR BETTER AT JOINT(S) H

BRACING

TOP CHORD TO BE SHEATHED OR MAX. PURLIN SPACING = 6.11 FT.
MAX. UNBRACED BOTTOM CHORD LENGTH = 10.00 FT OR RIGID CEILING DIRECTLY APPLIED.

ALL PITCH BREAKS AND PERIMETER CORNER JOINTS MUST BE LATERALLY RESTRAINED.

1 LATERAL BRACE(S) AT 1/ 2 LENGTH OF D-K.

END VERTICAL(S) MUST BE SHEATHED OR HAVE BRACES AS INDICATED IN THE MAX. UNBRACED LENGTH COLUMN OF THE TABLE BELOW

LOADING

TOTAL LOAD CASES: (4)

CHORDS

MEMB. FR-TO	MAX. FACTORED FORCE (LBS)	FACTORED VERT. LOAD LC1 (PLF) FROM	TO	MAX CSI (LC)	MAX. UNBRAC LENGTH
A- B	0 / 18	-78.0	-78.0	0.17 (1)	10.00
B- C	-960 / 0	-78.0	-78.0	0.14 (1)	6.19
C- D	-785 / 0	-78.0	-78.0	0.38 (1)	6.25
D- E	-985 / 0	-78.0	-78.0	0.16 (1)	6.11
E- F	0 / 19	-78.0	-78.0	0.19 (1)	10.00
F- G	0 / 35	-78.0	-78.0	0.15 (1)	10.00
L- A	-113 / 0	0.0	0.0	0.01 (1)	7.81
H- F	-245 / 0	0.0	0.0	0.03 (1)	7.81
L- K	0 / 801	-18.5	-18.5	0.29 (4)	10.00
K- J	0 / 805	-18.5	-18.5	0.31 (4)	10.00
J- I	0 / 805	-18.5	-18.5	0.31 (4)	10.00
I- H	0 / 866	-18.5	-18.5	0.32 (4)	10.00

WEBS

MEMB. FR-TO	MAX. FACTORED FORCE (LBS)	MAX CSI (LC)
B- K	-27 / 35	0.01 (1)
K- C	0 / 175	0.05 (4)
K- D	-30 / 0	0.02 (1)
I- D	0 / 203	0.05 (4)
I- E	-89 / 15	0.05 (1)
L- B	-1176 / 0	0.57 (1)
E- H	-1216 / 0	0.60 (1)

DESIGN CRITERIA

SPECIFIED LOADS:

TOP CH.	LL	=	21.0	PSF
	DL	=	6.0	PSF
BOT CH.	LL	=	0.0	PSF
	DL	=	7.4	PSF
TOTAL LOAD		=	34.4	PSF

SPACING = 24.0 IN. C/C

LOADING IN FLAT SECTION BASED ON A SLOPE OF 2.00/12 MINIMUM

THIS TRUSS IS DESIGNED FOR RESIDENTIAL OR SMALL BUILDING REQUIREMENTS OF PART 9, NBCC 2015

THIS DESIGN COMPLIES WITH:
- PART 9 OF BCBC 2018 , ABC 2019
- PART 9 OF OBC 2012 (2019 AMENDMENT)
- CSA 086-14
- TPIC 2014

(55 % OF 23.0 P.S.F. G.S.L. PLUS 8.4 P.S.F. RAIN LOAD) EQUALS 21.0 P.S.F. SPECIFIED ROOF LIVE LOAD

ALLOWABLE DEFL.(LL)= L/360 (0.71")
CALCULATED VERT. DEFL.(LL) = L/ 999 (0.03")
ALLOWABLE DEFL.(TL)= L/360 (0.71")
CALCULATED VERT. DEFL.(TL) = L/ 999 (0.14")

CSI: TC=0.38/1.00 (C-D:1) , BC=0.32/1.00 (H-I:4) , WB=0.60/1.00 (E-H:1) , SSI=0.19/1.00 (C-D:1)

DOL LUMBER=1.00 NAIL=1.00 LS BEND=1.10 COMP=1.10 SHEAR=1.10 TENS= 1.10

COMPANION LIVE LOAD FACTOR = 1.00

TRUSS PLATE MANUFACTURER IS NOT RESPONSIBLE FOR QUALITY CONTROL IN THE TRUSS MANUFACTURING PLANT .

NAIL VALUES

PLATE	GRIP(DRY) (PSI) MAX	MIN	SHEAR (PLI) MAX	MIN	SECTION (PLI) MAX	MIN
MT20	650	371	1747	788	1987	1873

PLATE PLACEMENT TOL. = 0.250 inches

PLATE ROTATION TOL. = 5.0 Deg.

JSI GRIP= 0.71 (B) (INPUT = 0.90)
JSI METAL= 0.27 (E) (INPUT = 1.00)

JOB NAME	TRUSS NAME	QUANTITY	PLY	JOB DESC.	DRWG NO.
349186	H26		1	TRUSS DESC. JT 45147	E22104530

Alpa Roof Truss, Maple

Version 8.530 S Feb 23 2022 MiTek Industries, Inc. Mon Oct 24 08:34:04 2022 Page 1

ID:HSVaWIlDnhr?B6oeweH9vbyNdls-SPXdpxLRSvTnb0 kOK?TYx 2m1c7e5R hzQ2GlyQGd1

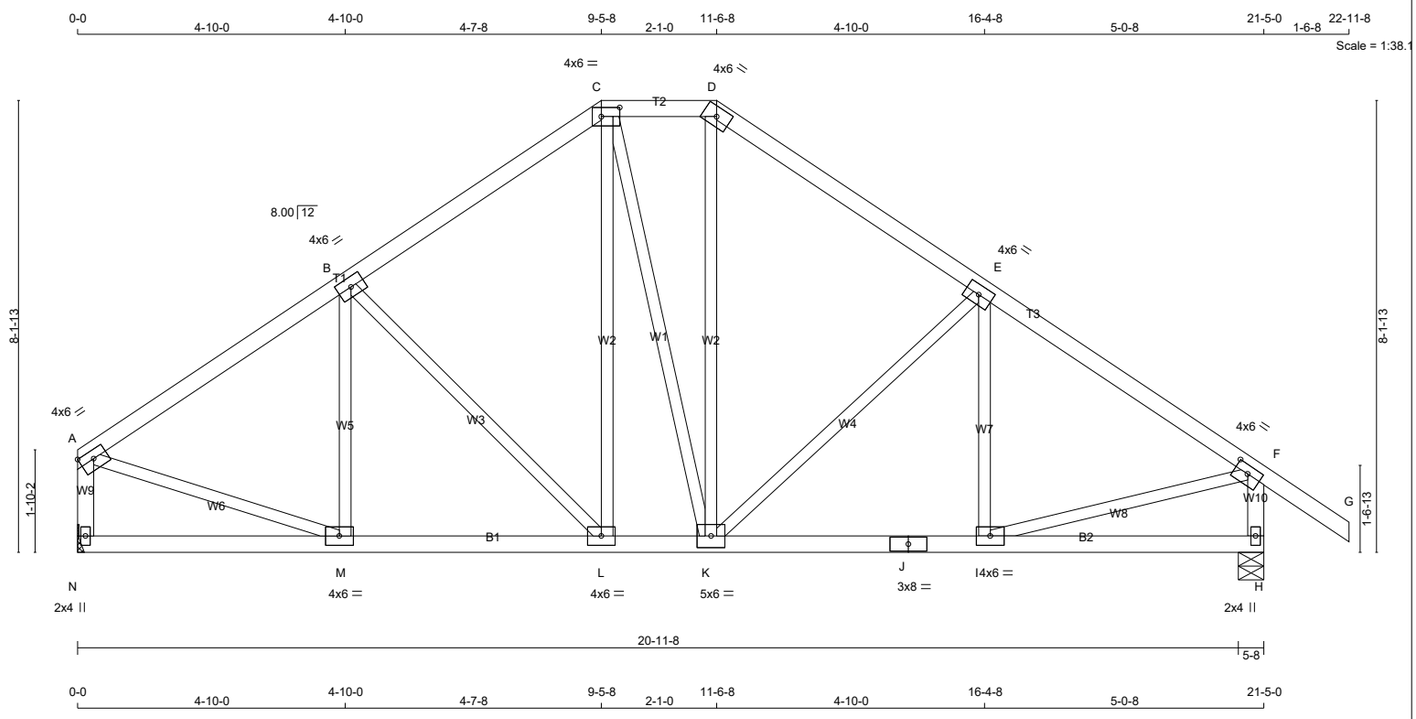

TOTAL WEIGHT = 103 lb

[M][F]

LUMBER

N. L. G. A. RULES

CHORDS	SIZE		LUMBER	DESCR.
A - C	2x4	DRY	No.2	SPF
C - D	2x4	DRY	No.2	SPF
D - G	2x4	DRY	No.2	SPF
N - A	2x4	DRY	No.2	SPF
H - F	2x4	DRY	No.2	SPF
N - J	2x4	DRY	No.2	SPF
J - H	2x4	DRY	No.2	SPF
ALL WEBS EXCEPT	2x3	DRY	No.2	SPF

DRY: SEASONED LUMBER.

PLATES (table is in inches)

JT	TYPE	PLATES	W	LEN	Y	X
A	TMVW-t	MT20	4.0	6.0	1.75	Edge
B	TMWW-t	MT20	4.0	6.0		
C	TTWW-l	MT20	4.0	6.0	2.00	4.00
D	TTW-h	MT20	4.0	6.0		
E	TMWW-t	MT20	4.0	6.0		
F	TMVW-t	MT20	4.0	6.0	1.75	3.00
H	BMV1+p	MT20	2.0	4.0		
I, L, M						
I	BMWW-t	MT20	4.0	6.0		
J	BS-t	MT20	3.0	8.0		
K	BMWWW-t	MT20	5.0	6.0		
N	BMV1+p	MT20	2.0	4.0		

Edge - INDICATES REFERENCE CORNER OF PLATE TOUCHES EDGE OF CHORD.

LATERAL BRACE(S) SHOWN SHALL BE 2X4 SPF#2

DIMENSIONS, SUPPORTS AND LOADINGS SPECIFIED BY FABRICATOR TO BE VERIFIED BY BUILDING DESIGNER

BEARINGS

JT	FACTORED GROSS REACTION VERT	HORZ	MAXIMUM FACTORED GROSS REACTION DOWN	HORZ	UPLIFT	INPUT BRG	REQRD BRG
N	1033	0	1033	0	0	MECHANICAL	
H	1160	0	1160	0	0	5-8	1-8

A SUITABLE HANGER/MECHANICAL CONNECTION IS REQUIRED AT JOINT N. MINIMUM BEARING LENGTH AT JOINT N = 1-8.

UNFACTORED REACTIONS

JT	1ST LCASE COMBINED	MAX./MIN. COMPONENT REACTIONS SNOW	LIVE	PERM.LIVE	WIND	DEAD	SOIL
N	737	450 / 0	0 / 0	0 / 0	0 / 0	287 / 0	0 / 0
H	824	518 / 0	0 / 0	0 / 0	0 / 0	306 / 0	0 / 0

BEARING MATERIAL TO BE SPF NO.2 OR BETTER AT JOINT(S) H

BRACING

TOP CHORD TO BE SHEATHED OR MAX. PURLIN SPACING = 5.77 FT.
MAX. UNBRACED BOTTOM CHORD LENGTH = 10.00 FT OR RIGID CEILING DIRECTLY APPLIED.

ALL PITCH BREAKS AND PERIMETER CORNER JOINTS MUST BE LATERALLY RESTRAINED.

LOADING

TOTAL LOAD CASES: (4)

CHORDS

MEMB. FR-TO	MAX. FACTORED FORCE (LBS)	VERT. LOAD (PLF) FROM	TO	LC1 CSI (LC)	MAX UNBRAC LENGTH
A- B	-1018 / 0	-78.0	-78.0	0.24 (1)	5.93
B- C	-861 / 0	-78.0	-78.0	0.23 (1)	6.25
C- D	-704 / 0	-78.0	-78.0	0.05 (1)	6.25
D- E	-870 / 0	-78.0	-78.0	0.25 (1)	6.25
E- F	-1083 / 0	-78.0	-78.0	0.26 (1)	5.77
F- G	0 / 35	-78.0	-78.0	0.15 (1)	10.00
N- A	-996 / 0	0.0	0.0	0.11 (1)	7.81
H- F	-1121 / 0	0.0	0.0	0.12 (1)	7.49
N- M	0 / 0	-18.5	-18.5	0.11 (4)	10.00
M- L	0 / 867	-18.5	-18.5	0.19 (1)	10.00
L- K	0 / 697	-18.5	-18.5	0.15 (1)	10.00
K- J	0 / 922	-18.5	-18.5	0.20 (1)	10.00
J- I	0 / 922	-18.5	-18.5	0.20 (1)	10.00
I- H	0 / 0	-18.5	-18.5	0.11 (4)	10.00

WEBS

MEMB. FR-TO	MAX. FACTORED FORCE (LBS)	MAX CSI (LC)
M- B	-172 / 10	0.07 (1)
B- L	-244 / 0	0.20 (1)
L- C	0 / 222	0.05 (1)
C- K	0 / 28	0.01 (1)
K- D	0 / 247	0.06 (1)
K- E	-303 / 0	0.26 (1)
I- E	-125 / 31	0.04 (1)
A- M	0 / 909	0.20 (1)
I- F	0 / 950	0.21 (1)

DESIGN CRITERIA

SPECIFIED LOADS:

TOP CH.	LL	=	21.0	PSF
	DL	=	6.0	PSF
BOT CH.	LL	=	0.0	PSF
	DL	=	7.4	PSF
TOTAL LOAD		=	34.4	PSF

SPACING = 24.0 IN. C/C

LOADING IN FLAT SECTION BASED ON A SLOPE OF 2.00/12 MINIMUM

THIS TRUSS IS DESIGNED FOR RESIDENTIAL OR SMALL BUILDING REQUIREMENTS OF PART 9, NBCC 2015

THIS DESIGN COMPLIES WITH:
- PART 9 OF BCBC 2018 , ABC 2019
- PART 9 OF OBC 2012 (2019 AMENDMENT)
- CSA 086-14
- TPIC 2014

(55 % OF 23.0 P.S.F. G.S.L. PLUS 8.4 P.S.F. RAIN LOAD) EQUALS 21.0 P.S.F. SPECIFIED ROOF LIVE LOAD

ALLOWABLE DEFL.(LL)= L/360 (0.71")
CALCULATED VERT. DEFL.(LL) = L/ 999 (0.02")
ALLOWABLE DEFL.(TL)= L/360 (0.71")
CALCULATED VERT. DEFL.(TL) = L/ 999 (0.05")

CSI: TC=0.26/1.00 (E-F:1) , BC=0.20/1.00 (I-K:1) , WB=0.26/1.00 (E-K:1) , SSI=0.16/1.00 (E-F:1)

DOL LUMBER=1.00 NAIL=1.00 LS BEND=1.10 COMP=1.10 SHEAR=1.10 TENS= 1.10

COMPANION LIVE LOAD FACTOR = 1.00

TRUSS PLATE MANUFACTURER IS NOT RESPONSIBLE FOR QUALITY CONTROL IN THE TRUSS MANUFACTURING PLANT .

NAIL VALUES

PLATE	GRIP(DRY) (PSI) MAX	MIN	SHEAR (PLI) MAX	MIN	SECTION (PLI) MAX	MIN
MT20	650	371	1747	788	1987	1873

PLATE PLACEMENT TOL. = 0.250 inches

PLATE ROTATION TOL. = 5.0 Deg.

JSI GRIP= 0.63 (I) (INPUT = 0.90)
JSI METAL= 0.30 (F) (INPUT = 1.00)

JOB NAME	TRUSS NAME	QUANTITY	PLY	JOB DESC.	DRWG NO.
349186	H28		2	TRUSS DESC. JT 45147	E22104531

Alpha Roof Truss, Maple

Version 8.530 S Feb 23 2022 MiTek Industries, Inc. Mon Oct 24 08:34:06 2022 Page 1

ID:HSVaWIlDnhr?B6oeweH9vbyNdls-OneNEcNh XkVqK86WI1xdM3JLrAk6sQH8Hv9KeyQGd?

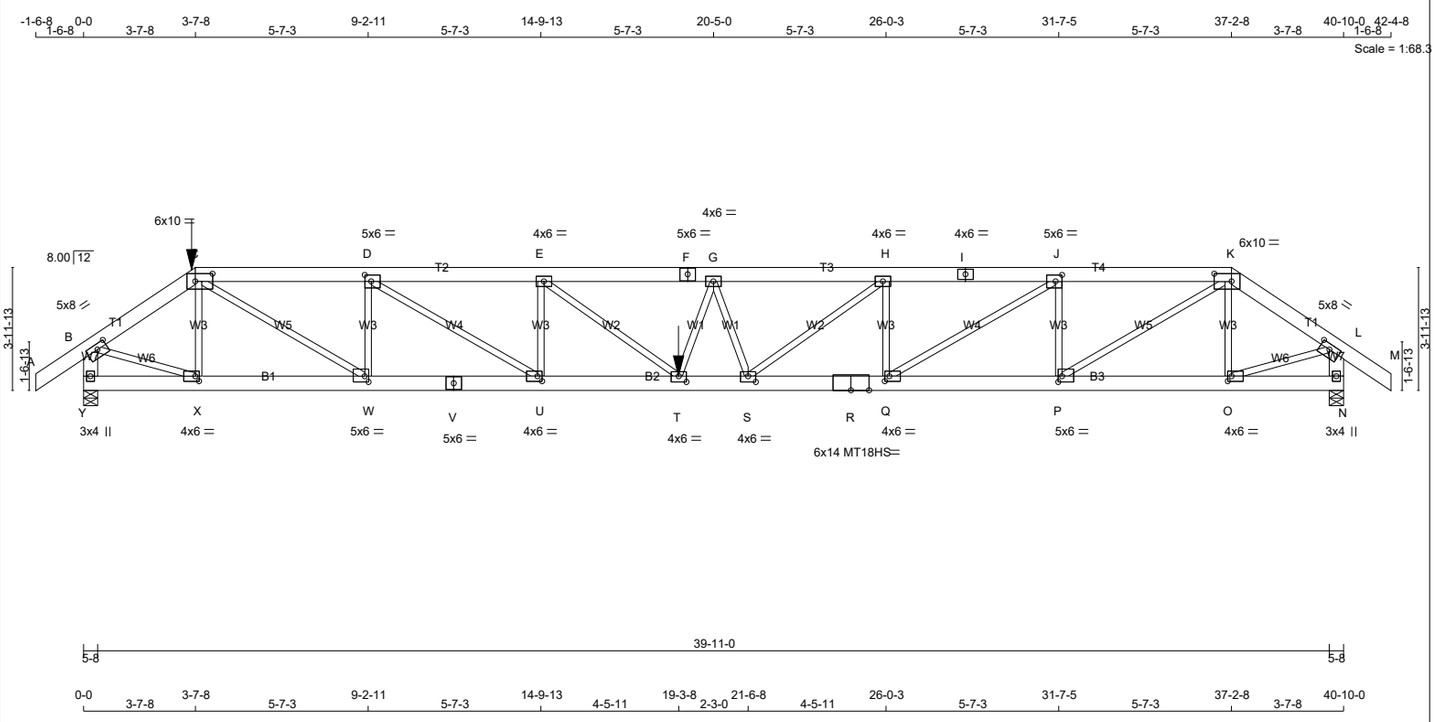

TOTAL WEIGHT = 2 X 214 = 428 lb

[M]

LUMBER

N. L. G. A. RULES

CHORDS	SIZE		LUMBER	DESCR.
A - C	2x6	DRY	No.2	SPF
C - F	2x6	DRY	No.2	SPF
F - I	2x6	DRY	No.2	SPF
I - K	2x6	DRY	No.2	SPF
K - M	2x6	DRY	No.2	SPF
Y - B	2x6	DRY	No.2	SPF
N - L	2x6	DRY	No.2	SPF
Y - V	2x6	DRY	1650F 1.5E	SPF
V - R	2x6	DRY	1650F 1.5E	SPF
R - N	2x6	DRY	1650F 1.5E	SPF
ALL WEBS EXCEPT	2x3	DRY	No.2	SPF

DRY: SEASONED LUMBER.

DESIGN CONSISTS OF 2 TRUSSES BUILT SEPARATELY THEN FASTENED TOGETHER AS FOLLOWS:

CHORDS #ROWS	SURFACE SPACING (IN)		LOAD(PLF)
TOP CHORDS : (0.122"X3") SPIRAL NAILS			
A- C	2	12	SIDE(122.0)
C- F	2	12	SIDE(49.5)
F- I	2	12	SIDE(19.5)
I- K	2	12	SIDE(19.5)
K- M	2	12	SIDE(16.2)
Y- B	2	12	TOP
N- L	2	12	TOP
BOTTOM CHORDS : (0.122"X3") SPIRAL NAILS			
Y- V	2	12	SIDE(5.2)
V- R	2	12	SIDE(5.2)
R- N	2	12	SIDE(5.2)
WEBS : (0.122"X3") SPIRAL NAILS			
2x3	1	6	

NAILS TO BE DRIVEN FROM ONE SIDE ONLY.

GIRDER NAILING ASSUMES NAILED HANGERS ARE FASTENED WITH MIN. 3-0 INCH NAILS.

TOP - COMPONENTS ARE LOADED FROM THE TOP AND MUST BE PLACED ON TOP EDGE OF ALL PLIES FOR THE LOAD TO BE TRANSFERRED TO EACH PLY.

SIDE - PLF SHOWN IS THE EQUIVALENT UDL APPLIED TO ONE SIDE THAT THE CORRESPONDING NAILING PATTERN SHALL BE CAPABLE OF TRANSFERING. REMAINING PLF MUST BE APPLIED ON THE OPPOSITE SIDE OR ON THE TOP.

PLATES (table is in inches)

JT	TYPE	PLATES	W	LEN	Y	X
B	TMVW-t	MT20	5.0	8.0	2.00	3.75
C	TTWW-l	MT20	6.0	10.0	3.00	6.75
D	TMWW-t	MT20	5.0	6.0	2.50	2.50
E, G, H						
E	TMWW-t	MT20	4.0	6.0		
F	TS-t	MT20	5.0	6.0		
I	TS-t	MT20	4.0	6.0		
J	TMWW-t	MT20	5.0	6.0	2.50	2.50
K	TTWW-l	MT20	6.0	10.0	3.00	6.75
L	TMVW-t	MT20	5.0	8.0	2.00	3.75
N	BMV1+p	MT20	3.0	4.0		
O	BMWW-t	MT20	4.0	6.0	2.00	1.50
P	BMWW-t	MT20	5.0	6.0	2.25	1.50
Q	BMWW-t	MT20	4.0	6.0	2.00	1.75
R	BS-t	MT18HS	6.0	14.0		
S	BMWW-t	MT20	4.0	6.0	2.25	3.00

LATERAL BRACE(S) SHOWN SHALL BE 2X4 SPF#2

DIMENSIONS, SUPPORTS AND LOADINGS SPECIFIED BY FABRICATOR TO BE VERIFIED BY BUILDING DESIGNER

BEARINGS

JT	FACTORED GROSS REACTION VERT	HORZ	MAXIMUM FACTORED GROSS REACTION DOWN	HORZ	UPLIFT	INPUT BRG IN-SX	REQRD BRG IN-SX
Y	4753	0	4753	0	0	5-8	2-9
N	4261	0	4261	0	0	5-8	2-5

UNFACTORED REACTIONS

JT	1ST LCASE COMBINED	MAX./MIN. COMPONENT REACTIONS SNOW	LIVE	PERM.LIVE	WIND	DEAD	SOIL
Y	3386	2080 / 0	0 / 0	0 / 0	0 / 0	1306 / 0	0 / 0
N	3035	1868 / 0	0 / 0	0 / 0	0 / 0	1166 / 0	0 / 0

BEARING MATERIAL TO BE SPF NO.2 OR BETTER AT JOINT(S) Y, N

BRACING

TOP CHORD TO BE SHEATHED OR MAX. PURLIN SPACING = 2.73 FT.
MAX. UNBRACED BOTTOM CHORD LENGTH = 10.00 FT OR RIGID CEILING DIRECTLY APPLIED.

ALL PITCH BREAKS AND PERIMETER CORNER JOINTS MUST BE LATERALLY RESTRAINED.

LOADING

TOTAL LOAD CASES: (4)

CHORDS

MEMB. FR-TO	MAX. FACTORED FORCE (LBS)	FACTORED VERT. LOAD (PLF) FROM	TO	LC1	MAX CSI (LC)	MAX. UNBRAC LENGTH
A- B	0 / 36	-78.0	-78.0	0.04 (1)		10.00
B- C	-5525 / 0	-117.0	-117.0	0.11 (1)		4.92
C- D	-10030 / 0	-148.6	-148.6	0.36 (1)		3.64
D- E	-13835 / 0	-148.6	-148.6	0.51 (1)		3.03
E- F	-15559 / 0	-148.6	-148.6	0.64 (1)		2.73
F- G	-15559 / 0	-117.0	-117.0	0.64 (1)		2.73
G- H	-14872 / 0	-117.0	-117.0	0.56 (1)		2.88
H- I	-12852 / 0	-117.0	-117.0	0.43 (1)		3.21
I- J	-12852 / 0	-117.0	-117.0	0.43 (1)		3.21
J- K	-9112 / 0	-117.0	-117.0	0.29 (1)		3.86
K- L	-4915 / 0	-117.0	-117.0	0.10 (1)		5.16
L- M	0 / 36	-78.0	-78.0	0.04 (1)		10.00
Y- B	-4733 / 0	0.0	0.0	0.17 (1)		6.65
N- L	-4249 / 0	0.0	0.0	0.15 (1)		6.94
Y- X	0 / 0	-35.3	-35.3	0.05 (4)		10.00
X- W	0 / 4552	-35.3	-35.3	0.23 (1)		10.00
W- V	0 / 10031	-35.3	-35.3	0.46 (1)		10.00
V- U	0 / 10031	-35.3	-35.3	0.46 (1)		10.00
U- T	0 / 13835	-35.3	-35.3	0.65 (1)		10.00
T- S	0 / 15330	-27.7	-27.7	0.71 (1)		10.00
S- R	0 / 12852	-27.7	-27.7	0.58 (1)		10.00
R- Q	0 / 12852	-27.7	-27.7	0.58 (1)		10.00
Q- P	0 / 9112	-27.7	-27.7	0.42 (1)		10.00
P- O	0 / 4049	-27.7	-27.7	0.20 (1)		10.00
O- N	0 / 0	-27.7	-27.7	0.04 (4)		10.00

WEBS

MEMB. FR-TO	MAX. FACTORED FORCE (LBS)	MAX CSI (LC)
X- C	-1053 / 0	0.12 (1)
W- C	0 / 6463	0.80 (1)
W- D	-3279 / 0	0.38 (1)
D- U	0 / 4496	0.56 (1)
U- E	-2165 / 0	0.25 (1)
E- T	0 / 2195	0.27 (1)
T- G	0 / 753	0.09 (1)
G- S	-1505 / 0	0.19 (1)
S- H	0 / 2572	0.32 (1)
Q- H	-2216 / 0	0.25 (1)
Q- J	0 / 4421	0.55 (1)
P- J	-3047 / 0	0.35 (1)
P- K	0 / 5973	0.74 (1)
O- K	-955 / 0	0.11 (1)
B- X	0 / 4766	0.59 (1)
O- L	0 / 4240	0.52 (1)

FACTORED CONCENTRATED LOADS (LBS)

JT	LOC.	LC1	MAX-	MAX+	FACE	DIR.	TYPE	HEEL	CONN.
C	3-7-8	-100	-100	---	FRONT	VERT	TOTAL	---	C1
T	19-3-7	-2094	-2094	---	FRONT	VERT	TOTAL	---	C1

CONNECTION REQUIREMENTS

1) **C1:** A SUITABLE HANGER/MECHANICAL CONNECTION IS REQUIRED.

DESIGN CRITERIA

*** SPECIAL LOADS ANALYSIS ***
GEOMETRY AND/OR BASIC LOADS CHANGED BY USER.
LOADS WERE DERIVED FROM USER INPUT
NO FURTHER MODIFICATIONS WERE MADE

SPECIFIED LOADS:

TOP CH.	LL	=	21.0	PSF
	DL	=	6.0	PSF
BOT CH.	LL	=	0.0	PSF
	DL	=	7.4	PSF
TOTAL LOAD		=	34.4	PSF

SPACING = 24.0 IN. C/C

LOADING IN FLAT SECTION BASED ON A SLOPE OF 2.00/12 MINIMUM

GIRDER TYPE: CPrimeHip
SIDE SETBACK = 0-0
END SETBACK = 4-0-0
END WALL WIDTH = 0-0
CORNER FRAMING TYPE: CONVENTIONAL
END JACK TYPE: CONVENTIONAL
APPLIED TO BACK SIDE
- ADDT'L LOADS BASED ON 55 % OF GSL.

GIRDER TYPE: CPrimeHip
SIDE SETBACK = 3-7-8
END SETBACK = 3-7-8
END WALL WIDTH = 0-0
CORNER FRAMING TYPE: CONVENTIONAL
END JACK TYPE: CONVENTIONAL
APPLIED TO FRONT SIDE
- ADDT'L LOADS BASED ON 55 % OF GSL.
LOADS APPLIED TO FIRST 19-3-8 OF SPAN MEASURED FROM THE LEFT.

*** NON STANDARD GIRDER ***
ADDT'L USER-DEFINED LOADS APPLIED TO ALL LOAD CASES.

THIS TRUSS IS DESIGNED FOR RESIDENTIAL OR SMALL BUILDING REQUIREMENTS OF PART 9, NBCC 2015

THIS DESIGN COMPLIES WITH:
- PART 9 OF BCBC 2018 , ABC 2019
- PART 9 OF OBC 2012 (2019 AMENDMENT)
- CSA 086-14
- TPIC 2014

(55 % OF 23.0 P.S.F. G.S.L. PLUS 8.4 P.S.F. RAIN LOAD) EQUALS 21.0 P.S.F. SPECIFIED ROOF LIVE LOAD

ALLOWABLE DEFL.(LL)= L/360 (1.36")
CALCULATED VERT. DEFL.(LL) = L/ 999 (0.43")
ALLOWABLE DEFL.(TL)= L/360 (1.36")
CALCULATED VERT. DEFL.(TL) = L/ 582 (0.84")

CSI: TC=0.64/1.00 (E-G:1) , BC=0.71/1.00 (S-T:1) , WB=0.80/1.00 (C-W:1) , SSI=0.16/1.00 (C-D:1)

DOL LUMBER=1.00 NAIL=1.00 LS BEND=1.00 COMP=1.00 SHEAR=1.00 TENS= 1.00

COMPANION LIVE LOAD FACTOR = 1.00

AUTOSOLVE HEELS OFF

TRUSS PLATE MANUFACTURER IS NOT RESPONSIBLE FOR QUALITY CONTROL IN THE TRUSS MANUFACTURING PLANT .

NAIL VALUES

PLATE	GRIP(DRY) (PSI) MAX	MIN	SHEAR (PLI) MAX	MIN	SECTION (PLI) MAX	MIN
MT20	650	371	1747	788	1987	1873
MT18HS	586	403	2455	1382	3163	3004

PLATE PLACEMENT TOL. = 0.250 inches

PLATE ROTATION TOL. = 5.0 Deg.

JSI GRIP= 0.90 (Q) (INPUT = 0.90)
JSI METAL= 0.95 (V) (INPUT = 1.00)

CONTINUED ON PAGE 2

JOB NAME	TRUSS NAME	QUANTITY	PLY	JOB DESC.	DRWG NO.
349186	H28		2	TRUSS DESC. JT 45147	E22104531(2)

PLATES (table is in inches)

JT	TYPE	PLATES	W	LEN	Y	X
T	BMWW-t	MT20	4.0	6.0	2.25	3.00
U	BMWW-t	MT20	4.0	6.0	2.00	1.75
V	BS-t	MT20	5.0	6.0		
W	BMWW-t	MT20	5.0	6.0	2.25	1.50
X	BMWW-t	MT20	4.0	6.0	2.00	1.50
Y	BMV1+p	MT20	3.0	4.0		

LATERAL BRACE(S) SHOWN SHALL BE
2X4 SPF#2

JOB NAME	TRUSS NAME	QUANTITY	PLY	JOB DESC.	DRWG NO.
349186	J1		1	TRUSS DESC. JT 45147	E22104532

Alpa Roof Truss, Maple

Version 8.530 S Feb 23 2022 MiTek Industries, Inc. Mon Oct 24 08:34:07 2022 Page 1

ID:HSVaWIlDnhr?B6oeweH9vbyNdls-s CmRyNKlqsMSTjl4TYA9acWuFfurV9QNxeis4yQGd_

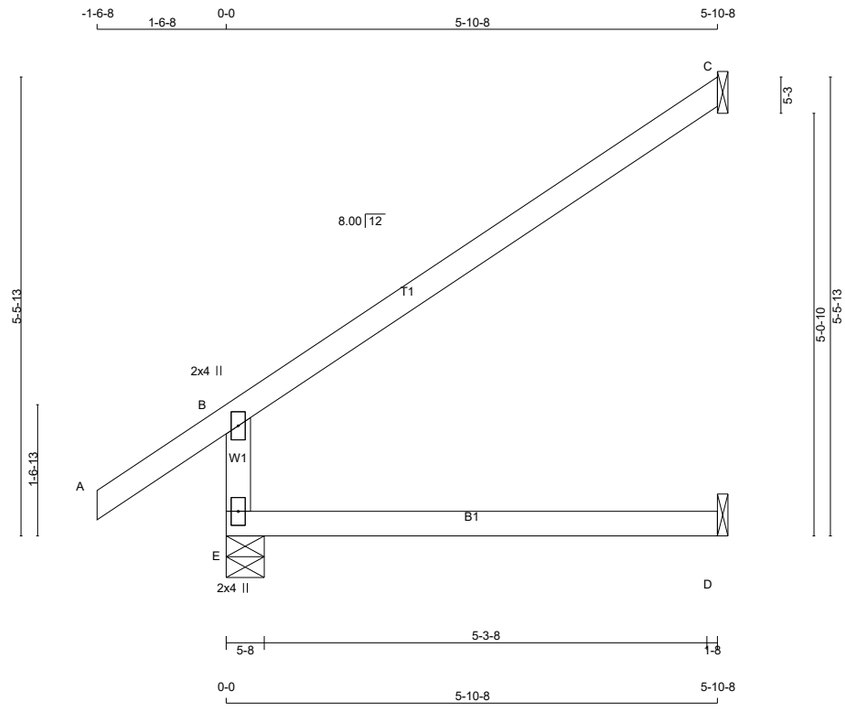

TOTAL WEIGHT = 10 X 18 = 184 lb

[M]

LUMBER

N. L. G. A. RULES

CHORDS	SIZE		LUMBER	DESCR.
E - B	2x4	DRY	No.2	SPF
A - C	2x4	DRY	No.2	SPF
E - D	2x4	DRY	No.2	SPF

DRY: SEASONED LUMBER.

PLATES (table is in inches)

JT	TYPE	PLATES	W	LEN	Y	X
B	TMV+p	MT20	2.0	4.0		
E	BMV1+p	MT20	2.0	4.0		

LATERAL BRACE(S) SHOWN SHALL BE 2X4 SPF#2

DIMENSIONS, SUPPORTS AND LOADINGS SPECIFIED BY FABRICATOR TO BE VERIFIED BY BUILDING DESIGNER

BEARINGS

JT	FACTORED GROSS REACTION VERT	HORZ	MAXIMUM FACTORED GROSS REACTION DOWN	HORZ	UPLIFT	INPUT BRG IN-SX	REQRD BRG IN-SX
E	475	0	475	0	0	5-8	1-8
C	172	0	172	0	0	1-8	1-8
D	46	0	52	0	0	1-8	1-8

SEE MITEK STANDARD DETAIL MSD2015-H FOR CONNECTION TO JOINT(S) C , D

UNFACTORED REACTIONS

JT	1ST LCASE COMBINED	MAX./MIN. COMPONENT REACTIONS SNOW	LIVE	PERM.LIVE	WIND	DEAD	SOIL
E	336	222 / 0	0 / 0	0 / 0	0 / 0	114 / 0	0 / 0
C	119	93 / 0	0 / 0	0 / 0	0 / 0	26 / 0	0 / 0
D	37	0 / 0	0 / 0	0 / 0	0 / 0	37 / 0	0 / 0

BEARING MATERIAL TO BE SPF NO.2 OR BETTER AT JOINT(S) E

BRACING

TOP CHORD TO BE SHEATHED OR MAX. PURLIN SPACING = 6.25 FT.
MAX. UNBRACED BOTTOM CHORD LENGTH = 10.00 FT OR RIGID CEILING DIRECTLY APPLIED.

ALL PITCH BREAKS AND PERIMETER CORNER JOINTS MUST BE LATERALLY RESTRAINED.

LOADING

TOTAL LOAD CASES: (4)

C H O R D S

MEMB. FR-TO	MAX. FACTORED FORCE (LBS)	FACTORED VERT. LOAD (PLF) FROM	TO	LC1	MAX CSI (LC)	MAX. UNBRAC LENGTH
E- B	-413 / 0	0.0	0.0	0.11 (4)		7.81
A- B	0 / 35	-78.0	-78.0	0.15 (1)		10.00
B- C	-32 / 0	-78.0	-78.0	0.46 (1)		6.25
E- D	0 / 0	-18.5	-18.5	0.13 (4)		10.00

W E B S

MEMB. FR-TO	MAX. FACTORED FORCE (LBS)	MAX CSI (LC)

DESIGN CRITERIA

SPECIFIED LOADS:

TOP CH.	LL	=	21.0	PSF
	DL	=	6.0	PSF
BOT CH.	LL	=	0.0	PSF
	DL	=	7.4	PSF
TOTAL LOAD		=	34.4	PSF

SPACING = 24.0 IN. C/C

THIS TRUSS IS DESIGNED FOR RESIDENTIAL OR SMALL BUILDING REQUIREMENTS OF PART 9, NBCC 2015

THIS DESIGN COMPLIES WITH:
- PART 9 OF BCBC 2018 , ABC 2019
- PART 9 OF OBC 2012 (2019 AMENDMENT)
- CSA 086-14
- TPIC 2014

DESIGN ASSUMPTIONS
-OVERHANG NOT TO BE ALTERED OR CUT OFF.

(55 % OF 23.0 P.S.F. G.S.L. PLUS 8.4 P.S.F. RAIN LOAD) EQUALS 21.0 P.S.F. SPECIFIED ROOF LIVE LOAD

ALLOWABLE DEFL.(LL)= L/360 (0.20")
CALCULATED VERT. DEFL.(LL) = L/ 999 (0.00")
ALLOWABLE DEFL.(TL)= L/360 (0.20")
CALCULATED VERT. DEFL.(TL) = L/ 999 (0.03")

CSI: TC=0.46/1.00 (B-C:1) , BC=0.13/1.00 (D-E:4) , WB=0.00/1.00 (n/a:0) , SSI=0.19/1.00 (B-C:1)

DOL LUMBER=1.00 NAIL=1.00 LS BEND=1.10 COMP=1.10 SHEAR=1.10 TENS= 1.10

COMPANION LIVE LOAD FACTOR = 1.00

AUTOSOLVE RIGHT HEEL ONLY

TRUSS PLATE MANUFACTURER IS NOT RESPONSIBLE FOR QUALITY CONTROL IN THE TRUSS MANUFACTURING PLANT .

NAIL VALUES

PLATE	GRIP(DRY) (PSI) MAX	MIN	SHEAR (PLI) MAX	MIN	SECTION (PLI) MAX	MIN
MT20	650	371	1747	788	1987	1873

PLATE PLACEMENT TOL. = 0.250 inches

PLATE ROTATION TOL. = 5.0 Deg.

JSI GRIP= 0.25 (B) (INPUT = 0.90)
JSI METAL= 0.21 (B) (INPUT = 1.00)

JOB NAME	TRUSS NAME	QUANTITY	PLY	JOB DESC.		DRWG NO.
349186	J1T		1	TRUSS DESC.	JT 45147	E22104533

Alpa Roof Truss, Maple

Version 8.530 S Feb 23 2022 MiTek Industries, Inc. Mon Oct 24 08:34:09 2022 Page 1

ID:HSVaWIIDnhr?B6oeweH9vbyNdls-oMKWsePaHS64hnthBuaeF?hxH2LPJPojqF7pwzyQGcy

Scale = 1:25.2

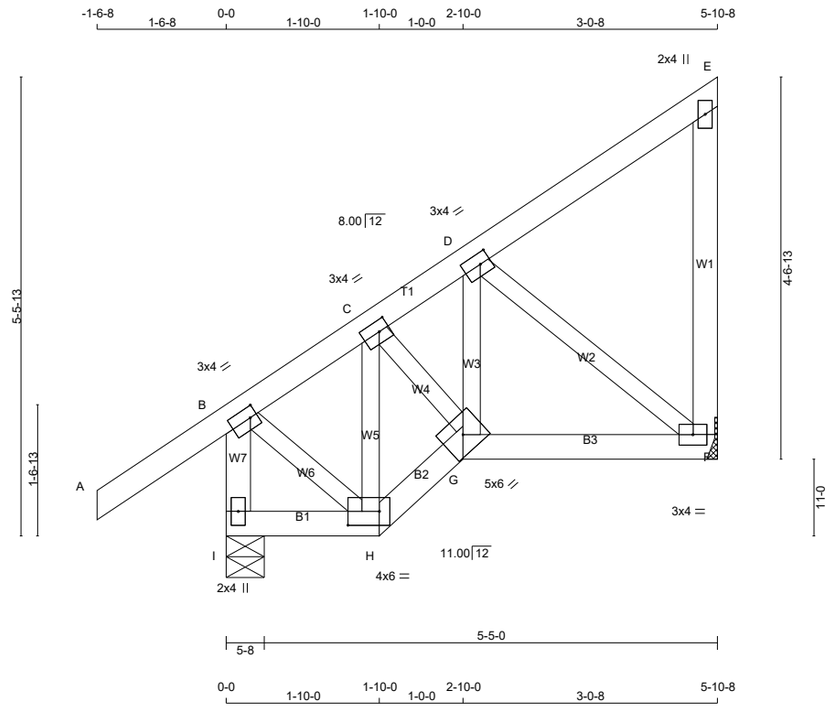

TOTAL WEIGHT = 3 X 32 = 97 lb

[M]

LUMBER

N. L. G. A. RULES

CHORDS	SIZE		LUMBER	DESCR.
I - B	2x4	DRY	No.2	SPF
A - E	2x4	DRY	No.2	SPF
F - E	2x4	DRY	No.2	SPF
I - H	2x4	DRY	No.2	SPF
H - G	2x4	DRY	No.2	SPF
G - F	2x4	DRY	No.2	SPF
ALL WEBS	2x3	DRY	No.2	SPF

DRY: SEASONED LUMBER.

PLATES (table is in inches)

JT	TYPE	PLATES	W	LEN	Y	X
B	TMVW-t	MT20	3.0	4.0	1.50	1.00
C	TMWW-t	MT20	3.0	4.0	1.50	1.50
D	TMWW-t	MT20	3.0	4.0	1.50	1.50
E	TMV+p	MT20	2.0	4.0		
F	BMVW1-t	MT20	3.0	4.0		
G	BBWW-h	MT20	5.0	6.0		
H	BBWW-l	MT20	4.0	6.0	2.00	4.50
I	BMV1+p	MT20	2.0	4.0		

LATERAL BRACE(S) SHOWN SHALL BE 2X4 SPF#2

LICENSED PROFESSIONAL ENGINEER
V. WIDYA
100225448
10/24/2022
PROVINCE OF ONTARIO

DIMENSIONS, SUPPORTS AND LOADINGS SPECIFIED BY FABRICATOR TO BE VERIFIED BY BUILDING DESIGNER

BEARINGS

JT	FACTORED GROSS REACTION VERT	HORZ	MAXIMUM FACTORED GROSS REACTION DOWN	HORZ	UPLIFT	INPUT BRG	REQRD BRG
I	427	0	427	0	0	5-8	1-8
F	266	0	266	0	0	MECHANICAL	

A SUITABLE HANGER/MECHANICAL CONNECTION IS REQUIRED AT JOINT F. MINIMUM BEARING LENGTH AT JOINT F = 1-8.

UNFACTORED REACTIONS

JT	1ST LCASE COMBINED	MAX./MIN. COMPONENT REACTIONS SNOW	LIVE	PERM.LIVE	WIND	DEAD	SOIL
I	302	201 / 0	0 / 0	0 / 0	0 / 0	101 / 0	0 / 0
F	190	114 / 0	0 / 0	0 / 0	0 / 0	76 / 0	0 / 0

BEARING MATERIAL TO BE SPF NO.2 OR BETTER AT JOINT(S) I

BRACING

TOP CHORD TO BE SHEATHED OR MAX. PURLIN SPACING = 6.25 FT.
MAX. UNBRACED BOTTOM CHORD LENGTH = 10.00 FT OR RIGID CEILING DIRECTLY APPLIED.

ALL PITCH BREAKS AND PERIMETER CORNER JOINTS MUST BE LATERALLY RESTRAINED.

LOADING

TOTAL LOAD CASES: (4)

CHORDS

MEMB. FR-TO	MAX. FACTORED FORCE (LBS)	FACTORED VERT. LOAD (PLF) FROM	TO	LC1 MAX CSI (LC)	MAX. UNBRAC LENGTH
I- B	-410 / 0	0.0	0.0	0.04 (1)	7.81
A- B	0 / 35	-78.0	-78.0	0.15 (1)	10.00
B- C	-170 / 0	-78.0	-78.0	0.14 (1)	6.25
C- D	-187 / 0	-78.0	-78.0	0.09 (1)	6.25
D- E	-12 / 0	-78.0	-78.0	0.09 (1)	6.25
F- E	-93 / 0	0.0	0.0	0.03 (1)	7.81
I- H	0 / 0	-18.5	-18.5	0.02 (4)	10.00
H- G	0 / 138	-18.5	-18.5	0.03 (1)	10.00
G- F	0 / 188	-18.5	-18.5	0.07 (4)	10.00

WEBS

MEMB. FR-TO	MAX. FACTORED FORCE (LBS)	MAX CSI (LC)
B- H	0 / 129	0.03 (1)
C- G	-138 / 0	0.02 (1)
G- D	0 / 144	0.03 (1)
D- F	0 / 49	0.02 (4)
	-238 / 0	0.06 (1)

DESIGN CRITERIA

SPECIFIED LOADS:

TOP	CH.	LL	=	21.0	PSF
		DL	=	6.0	PSF
BOT	CH.	LL	=	0.0	PSF
		DL	=	7.4	PSF
TOTAL	LOAD		=	34.4	PSF

SPACING = 24.0 IN. C/C

THIS TRUSS IS DESIGNED FOR RESIDENTIAL OR SMALL BUILDING REQUIREMENTS OF PART 9, NBCC 2015

THIS DESIGN COMPLIES WITH:
- PART 9 OF BCBC 2018 , ABC 2019
- PART 9 OF OBC 2012 (2019 AMENDMENT)
- CSA 086-14
- TPIC 2014

DESIGN ASSUMPTIONS
-OVERHANG NOT TO BE ALTERED OR CUT OFF.

(55 % OF 23.0 P.S.F. G.S.L. PLUS 8.4 P.S.F. RAIN LOAD) EQUALS 21.0 P.S.F. SPECIFIED ROOF LIVE LOAD

ALLOWABLE DEFL.(LL)= L/360 (0.20")
CALCULATED VERT. DEFL.(LL) = L/ 999 (0.00")
ALLOWABLE DEFL.(TL)= L/360 (0.20")
CALCULATED VERT. DEFL.(TL) = L/ 999 (0.01")

CSI: TC=0.15/1.00 (A-B:1) , BC=0.07/1.00 (F-G:4) , WB=0.06/1.00 (D-F:1) , SSI=0.09/1.00 (B-C:1)

DOL LUMBER=1.00 NAIL=1.00 LS BEND=1.10 COMP=1.10 SHEAR=1.10 TENS= 1.10

COMPANION LIVE LOAD FACTOR = 1.00

TRUSS PLATE MANUFACTURER IS NOT RESPONSIBLE FOR QUALITY CONTROL IN THE TRUSS MANUFACTURING PLANT .

NAIL VALUES

PLATE	GRIP(DRY) (PSI) MAX	MIN	SHEAR (PLI) MAX	MIN	SECTION (PLI) MAX	MIN
MT20	650	371	1747	788	1987	1873

PLATE PLACEMENT TOL. = 0.250 inches

PLATE ROTATION TOL. = 5.0 Deg.

JSI GRIP= 0.39 (B) (INPUT = 0.90)
JSI METAL= 0.09 (B) (INPUT = 1.00)

JOB NAME	TRUSS NAME	QUANTITY	PLY	JOB DESC.		DRWG NO.
349186	J1TA		2	TRUSS DESC.	JT 45147	E22104534

Alpa Roof Truss, Maple

Version 8.530 S Feb 23 2022 MiTek Industries, Inc. Mon Oct 24 08:34:10 2022 Page 1
ID:HSVaWIIDnhr?B6oeweH9vbyNdls-GZuu3 QC2lExJxStlb6tnCE76Sfs2p9t3vtMSPyQGcx

Scale = 1:25.2

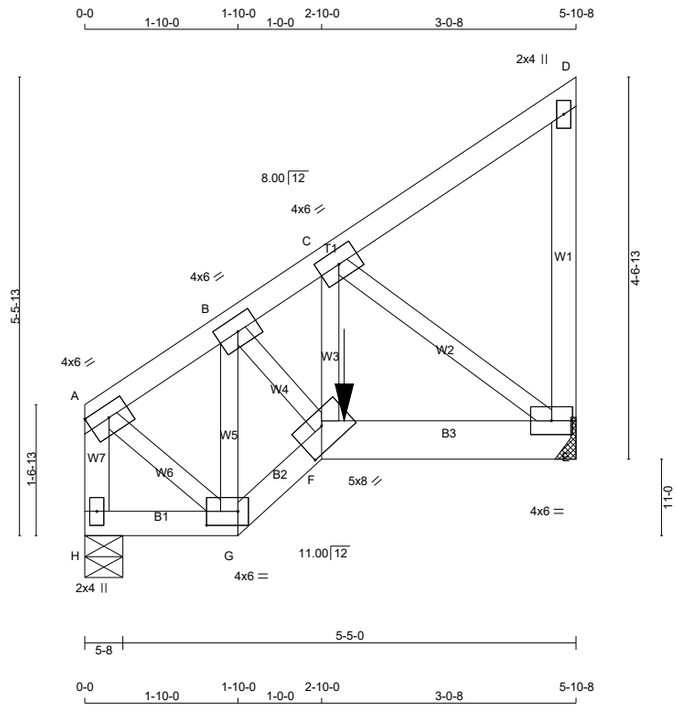

TOTAL WEIGHT = 2 X 32 = 63 lb
[M]

LUMBER

N. L. G. A. RULES

CHORDS	SIZE		LUMBER	DESCR.
H - A	2x4	DRY	No.2	SPF
A - D	2x4	DRY	No.2	SPF
E - D	2x4	DRY	No.2	SPF
H - G	2x4	DRY	No.2	SPF
G - F	2x4	DRY	No.2	SPF
F - E	2x6	DRY	No.2	SPF
ALL WEBS	2x3	DRY	No.2	SPF

DRY: SEASONED LUMBER.

DESIGN CONSISTS OF 2 TRUSSES BUILT SEPARATELY THEN FASTENED TOGETHER AS FOLLOWS:

CHORDS #ROWS	SURFACE SPACING (IN)	LOAD(PLF)
TOP CHORDS : (0.122"X3") SPIRAL NAILS		
H- A 1	12	TOP
A- D 1	12	TOP
D- E 1	12	TOP
BOTTOM CHORDS : (0.122"X3") SPIRAL NAILS		
H- G 1	12	TOP
G- F 1	12	SIDE(61.0)
F- E 2	12	SIDE(163.8)
WEBS : (0.122"X3") SPIRAL NAILS		
F- C 1	3	SIDE(238.4)
2x3 1	6	

NAILS TO BE DRIVEN FROM ONE SIDE ONLY.

GIRDER NAILING ASSUMES NAILED HANGERS ARE FASTENED WITH MIN. 3-0 INCH NAILS.

TOP - COMPONENTS ARE LOADED FROM THE TOP AND MUST BE PLACED ON TOP EDGE OF ALL PLIES FOR THE LOAD TO BE TRANSFERRED TO EACH PLY.

SIDE - PLF SHOWN IS THE EQUIVALENT UDL APPLIED TO ONE SIDE THAT THE CORRESPONDING NAILING PATTERN SHALL BE CAPABLE OF TRANSFERING. REMAINING PLF MUST BE APPLIED ON THE OPPOSITE SIDE OR ON THE TOP.

PLATES (table is in inches)

JT	TYPE	PLATES	W	LEN	Y	X
A	TMVW-t	MT20	4.0	6.0	1.75	Edge
B	TMWW-t	MT20	4.0	6.0		
C	TMWW-t	MT20	4.0	6.0		
D	TMV+p	MT20	2.0	4.0		
E	BMVW1-t	MT20	4.0	6.0		
F	BBWW-h	MT20	5.0	8.0	3.00	4.00
G	BBWW-l	MT20	4.0	6.0	2.00	4.50
H	BMV1+p	MT20	2.0	4.0		

Edge - INDICATES REFERENCE CORNER OF PLATE TOUCHES EDGE OF CHORD.

LATERAL BRACE(S) SHOWN SHALL BE 2X4 SPF#2

DIMENSIONS, SUPPORTS AND LOADINGS SPECIFIED BY FABRICATOR TO BE VERIFIED BY BUILDING DESIGNER

BEARINGS

JT	FACTORED GROSS REACTION VERT	HORZ	MAXIMUM FACTORED GROSS REACTION DOWN	HORZ	UPLIFT	INPUT BRG IN-SX	REQRD BRG IN-SX
H	1339	0	1339	0	0	5-8	1-8
E	1765	0	1765	0	0	MECHANICAL	

A SUITABLE HANGER/MECHANICAL CONNECTION IS REQUIRED AT JOINT E. MINIMUM BEARING LENGTH AT JOINT E = 1-8.

UNFACTORED REACTIONS

1ST LCASE MAX./MIN. COMPONENT REACTIONS

JT	COMBINED	SNOW	LIVE	PERM.LIVE	WIND	DEAD	SOIL
H	955	583 / 0	0 / 0	0 / 0	0 / 0	372 / 0	0 / 0
E	1259	768 / 0	0 / 0	0 / 0	0 / 0	490 / 0	0 / 0

BEARING MATERIAL TO BE SPF NO.2 OR BETTER AT JOINT(S) H

BRACING

TOP CHORD TO BE SHEATHED OR MAX. PURLIN SPACING = 6.25 FT.
MAX. UNBRACED BOTTOM CHORD LENGTH = 10.00 FT OR RIGID CEILING DIRECTLY APPLIED.

ALL PITCH BREAKS AND PERIMETER CORNER JOINTS MUST BE LATERALLY RESTRAINED.

LOADING

TOTAL LOAD CASES: (4)

CHORDS

MEMB. FR-TO	MAX. FACTORED FORCE (LBS)	FACTORED VERT. LOAD (PLF) FROM	TO	LC1 CSI (LC)	MAX UNBRAC LENGTH
H- A	-1322 / 0	0.0	0.0	0.08 (1)	7.81
A- B	-1121 / 0	-78.0	-78.0	0.05 (1)	6.25
B- C	-1877 / 0	-78.0	-78.0	0.05 (1)	6.25
C- D	-9 / 0	-78.0	-78.0	0.05 (1)	10.00
E- D	-98 / 0	0.0	0.0	0.02 (1)	7.81
H- G	0 / 0	-18.5	-18.5	0.01 (4)	10.00
G- F	0 / 1187	-18.5	-18.5	0.11 (1)	10.00
F- E	0 / 1509	-346.1	-346.1	0.25 (1)	10.00

WEBS

MEMB. FR-TO	MAX. FACTORED FORCE (LBS)	MAX CSI (LC)
A- G	0 / 1104	0.14 (1)
G- B	-1408 / 0	0.13 (1)
B- F	0 / 1208	0.15 (1)
F- C	0 / 1940	0.24 (1)
C- E	-1887 / 0	0.22 (1)

FACTORED CONCENTRATED LOADS (LBS)

JT	LOC.	LC1	MAX-	MAX+	FACE	DIR.	TYPE	HEEL	CONN.
F	3-1-4	-1541	-1541	---	FRONT	VERT	TOTAL	---	C1

CONNECTION REQUIREMENTS

1) **C1:** A SUITABLE HANGER/MECHANICAL CONNECTION IS REQUIRED.

DESIGN CRITERIA

*** SPECIAL LOADS ANALYSIS ***
GEOMETRY AND/OR BASIC LOADS CHANGED BY USER.
LOADS WERE DERIVED FROM USER INPUT
NO FURTHER MODIFICATIONS WERE MADE

SPECIFIED LOADS:

TOP CH.	LL	=	21.0	PSF
	DL	=	6.0	PSF
BOT CH.	LL	=	0.0	PSF
	DL	=	7.4	PSF
TOTAL LOAD		=	34.4	PSF

SPACING = 24.0 IN. C/C

GIRDER TYPE: CStdGirder
START DISTANCE = 3-1-4
START SPAN CARRIED = 15-7-0
END DISTANCE = 5-10-8
END SPAN CARRIED = 15-7-0
END WALL WIDTH = 0-0
APPLIED TO FRONT SIDE OF BOTTOM CHORD.
- ADDT'L LOADS BASED ON 55 % OF GSL. (DEFINED BY USER)

*** NON STANDARD GIRDER ***
ADDT'L USER-DEFINED LOADS APPLIED TO ALL LOAD CASES.

THIS TRUSS IS DESIGNED FOR RESIDENTIAL OR SMALL BUILDING REQUIREMENTS OF PART 9, NBCC 2015

THIS DESIGN COMPLIES WITH:
- PART 9 OF BCBC 2018 , ABC 2019
- PART 9 OF OBC 2012 (2019 AMENDMENT)
- CSA 086-14
- TPIC 2014

(55 % OF 23.0 P.S.F. G.S.L. PLUS 8.4 P.S.F. RAIN LOAD) EQUALS 21.0 P.S.F. SPECIFIED ROOF LIVE LOAD

ALLOWABLE DEFL.(LL)= L/360 (0.20")
CALCULATED VERT. DEFL.(LL) = L/ 999 (0.01")
ALLOWABLE DEFL.(TL)= L/360 (0.20")
CALCULATED VERT. DEFL.(TL) = L/ 999 (0.02")

CSI: TC=0.08/1.00 (A-H:1) , BC=0.25/1.00 (E-F:1) , WB=0.24/1.00 (C-F:1) , SSI=0.17/1.00 (E-F:1)

DOL LUMBER=1.00 NAIL=1.00 LS BEND=1.00 COMP=1.00 SHEAR=1.00 TENS= 1.00

COMPANION LIVE LOAD FACTOR = 1.00

TRUSS PLATE MANUFACTURER IS NOT RESPONSIBLE FOR QUALITY CONTROL IN THE TRUSS MANUFACTURING PLANT .

NAIL VALUES

PLATE	GRIP(DRY) (PSI) MAX	MIN	SHEAR (PLI) MAX	MIN	SECTION (PLI) MAX	MIN
MT20	650	371	1747	788	1987	1873

PLATE PLACEMENT TOL. = 0.250 inches

PLATE ROTATION TOL. = 5.0 Deg.

JSI GRIP= 0.82 (C) (INPUT = 0.90)
JSI METAL= 0.26 (F) (INPUT = 1.00)

JOB NAME	TRUSS NAME	QUANTITY	PLY	JOB DESC.	DRWG NO.
349186	J2		1	TRUSS DESC. JT 45147	E22104535

Alpa Roof Truss, Maple

Version 8.530 S Feb 23 2022 MiTek Industries, Inc. Mon Oct 24 08:34:11 2022 Page 1
ID:HSVaWlIDnhr?B6oeweH9vbyNdls-lISGHKQqo3Mox504JId6KQnBus0qnI90IZcw ryQGcw

Scale = 1:25.2

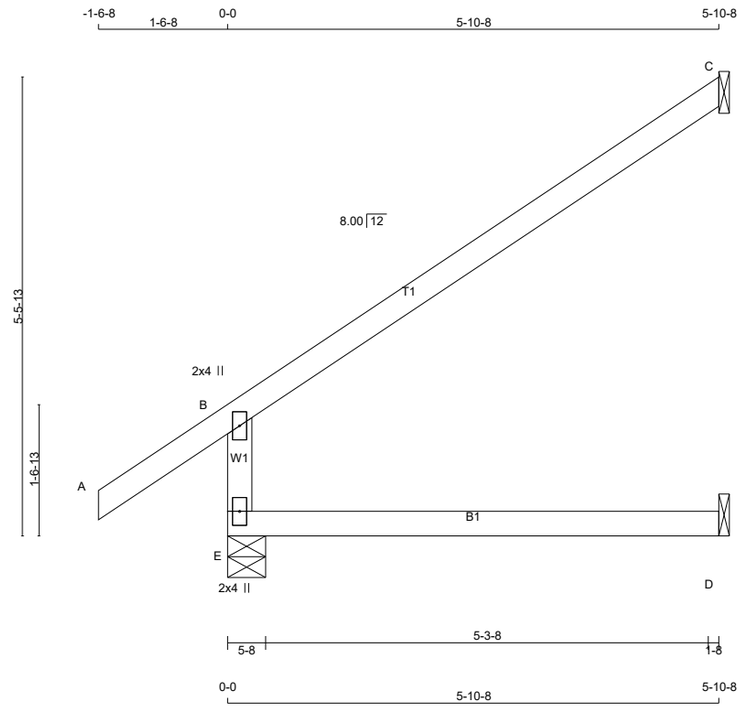

TOTAL WEIGHT = 18 lb

LUMBER
N. L. G. A. RULES

CHORDS	SIZE		LUMBER	DESCR.
E - B	2x4	DRY	No.2	SPF
A - C	2x4	DRY	No.2	SPF
E - D	2x4	DRY	No.2	SPF

DRY: SEASONED LUMBER.

PLATES (table is in inches)

JT	TYPE	PLATES	W	LEN	Y	X
B	TMV+p	MT20	2.0	4.0		
E	BMV1+p	MT20	2.0	4.0		

LATERAL BRACE(S) SHOWN SHALL BE 2X4 SPF#2

DIMENSIONS, SUPPORTS AND LOADINGS SPECIFIED BY FABRICATOR TO BE VERIFIED BY BUILDING DESIGNER

BEARINGS

JT	FACTORED GROSS REACTION VERT	HORZ	MAXIMUM FACTORED GROSS REACTION DOWN	HORZ	UPLIFT	INPUT BRG IN-SX	REQRD BRG IN-SX
E	475	0	475	0	0	5-8	1-8
C	172	0	172	0	0	1-8	1-8
D	46	0	52	0	0	1-8	1-8

SEE MITEK STANDARD DETAIL MSD2015-H FOR CONNECTION TO JOINT(S) C , D

UNFACTORED REACTIONS

JT	1ST LCASE COMBINED	MAX./MIN. COMPONENT REACTIONS SNOW	LIVE	PERM.LIVE	WIND	DEAD	SOIL
E	336	222 / 0	0 / 0	0 / 0	0 / 0	114 / 0	0 / 0
C	119	93 / 0	0 / 0	0 / 0	0 / 0	26 / 0	0 / 0
D	37	0 / 0	0 / 0	0 / 0	0 / 0	37 / 0	0 / 0

BEARING MATERIAL TO BE SPF NO.2 OR BETTER AT JOINT(S) E, C

BRACING
TOP CHORD TO BE SHEATHED OR MAX. PURLIN SPACING = 6.25 FT.
MAX. UNBRACED BOTTOM CHORD LENGTH = 10.00 FT OR RIGID CEILING DIRECTLY APPLIED.

ALL PITCH BREAKS AND PERIMETER CORNER JOINTS MUST BE LATERALLY RESTRAINED.

LOADING
TOTAL LOAD CASES: (4)

CHORDS MEMB. FR-TO	MAX. FACTORED FORCE (LBS)	VERT. LOAD (PLF) FROM	TO	LC1 MAX CSI (LC)	MAX. UNBRAC LENGTH
E- B	-413 / 0	0.0	0.0	0.11 (4)	7.81
A- B	0 / 35	-78.0	-78.0	0.15 (1)	10.00
B- C	-32 / 0	-78.0	-78.0	0.46 (1)	6.25
E- D	0 / 0	-18.5	-18.5	0.13 (4)	10.00

WEBS MEMB. FR-TO	MAX. FACTORED FORCE (LBS)	MAX CSI (LC)

DESIGN CRITERIA

SPECIFIED LOADS:

TOP CH.	LL	=	21.0	PSF
	DL	=	6.0	PSF
BOT CH.	LL	=	0.0	PSF
	DL	=	7.4	PSF
TOTAL LOAD		=	34.4	PSF

SPACING = 24.0 IN. C/C

THIS TRUSS IS DESIGNED FOR RESIDENTIAL OR SMALL BUILDING REQUIREMENTS OF PART 9, NBCC 2015

THIS DESIGN COMPLIES WITH:
- PART 9 OF BCBC 2018 , ABC 2019
- PART 9 OF OBC 2012 (2019 AMENDMENT)
- CSA 086-14
- TPIC 2014

DESIGN ASSUMPTIONS
-OVERHANG NOT TO BE ALTERED OR CUT OFF.

(55 % OF 23.0 P.S.F. G.S.L. PLUS 8.4 P.S.F. RAIN LOAD) EQUALS 21.0 P.S.F. SPECIFIED ROOF LIVE LOAD

ALLOWABLE DEFL.(LL)= L/360 (0.20")
CALCULATED VERT. DEFL.(LL) = L/ 999 (0.00")
ALLOWABLE DEFL.(TL)= L/360 (0.20")
CALCULATED VERT. DEFL.(TL) = L/ 999 (0.03")

CSI: TC=0.46/1.00 (B-C:1) , BC=0.13/1.00 (D-E:4) , WB=0.00/1.00 (n/a:0) , SSI=0.19/1.00 (B-C:1)

DOL LUMBER=1.00 NAIL=1.00 LS BEND=1.10 COMP=1.10 SHEAR=1.10 TENS= 1.10

COMPANION LIVE LOAD FACTOR = 1.00

AUTOSOLVE RIGHT HEEL ONLY

TRUSS PLATE MANUFACTURER IS NOT RESPONSIBLE FOR QUALITY CONTROL IN THE TRUSS MANUFACTURING PLANT .

NAIL VALUES

PLATE	GRIP(DRY) (PSI) MAX	MIN	SHEAR (PLI) MAX	MIN	SECTION (PLI) MAX	MIN
MT20	650	371	1747	788	1987	1873

PLATE PLACEMENT TOL. = 0.250 inches

PLATE ROTATION TOL. = 5.0 Deg.

JSI GRIP= 0.25 (B) (INPUT = 0.90)
JSI METAL= 0.21 (B) (INPUT = 1.00)

JOB NAME	TRUSS NAME	QUANTITY	PLY	JOB DESC.		DRWG NO.
349186	J2TA		1	TRUSS DESC.	JT 45147	E22104536

Alpa Roof Truss, Maple

Version 8.530 S Feb 23 2022 MiTek Industries, Inc. Mon Oct 24 08:34:13 2022 Page 1
ID:HSVaWIlDnhr?B6oeweH9vbyNdls-h8a1i0S4KgcWAOASQjfaPrscHfjUFC8Jlt503kyQGcu

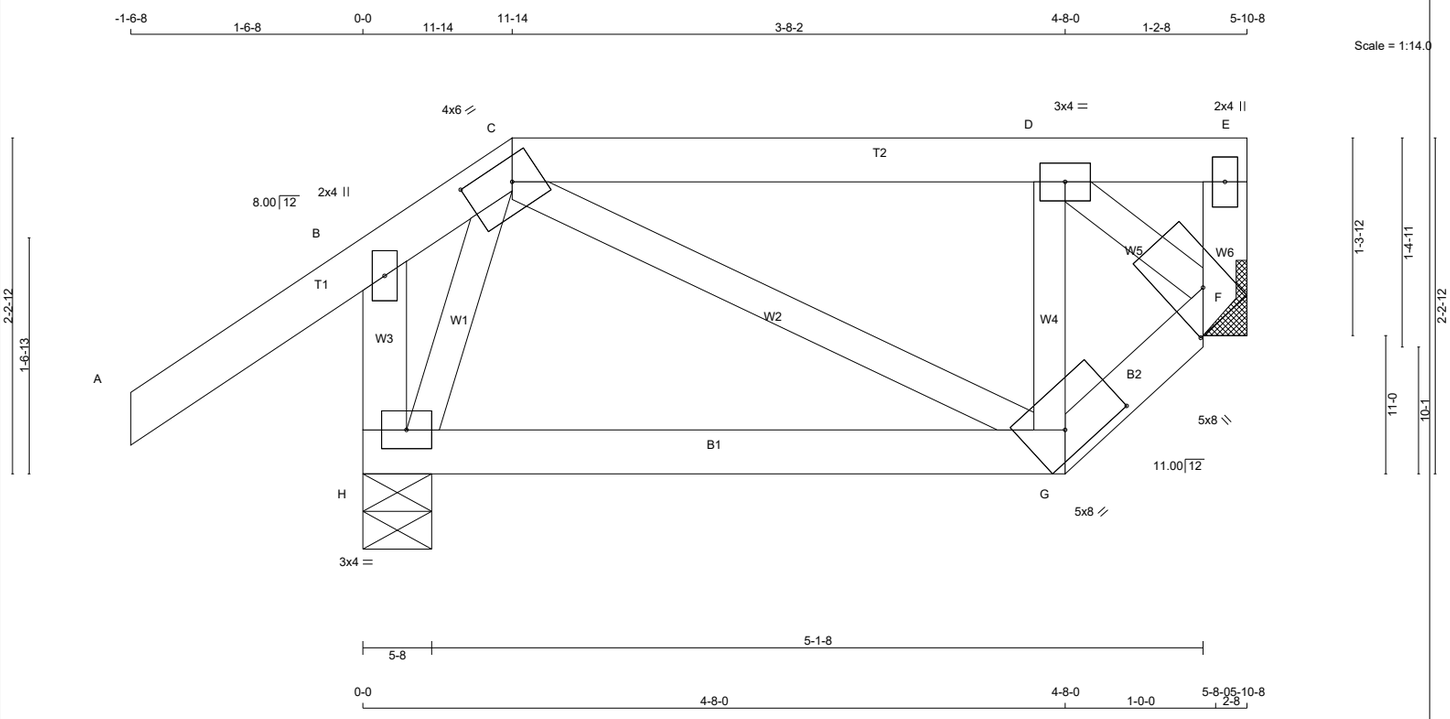

TOTAL WEIGHT = 26 lb
[M]

LUMBER
N. L. G. A. RULES

CHORDS	SIZE		LUMBER	DESCR.
A - C	2x4	DRY	No.2	SPF
C - E	2x4	DRY	No.2	SPF
F - E	2x4	DRY	No.2	SPF
H - B	2x4	DRY	No.2	SPF
H - G	2x4	DRY	No.2	SPF
G - F	2x4	DRY	No.2	SPF
ALL WEBS EXCEPT	2x3	DRY	No.2	SPF

DRY: SEASONED LUMBER.

PLATES (table is in inches)

JT	TYPE	PLATES	W	LEN	Y	X
B	TMV+p	MT20	2.0	4.0		
C	TTWW-h	MT20	4.0	6.0	1.75	3.75
D	TMWW-t	MT20	3.0	4.0		
E	TMV+p	MT20	2.0	4.0		
F	BVMW1+l	MT20	5.0	8.0	2.75	2.75
G	BBWW-h	MT20	5.0	8.0	2.00	5.00
H	BMVW1-t	MT20	3.0	4.0		

LATERAL BRACE(S) SHOWN SHALL BE 2X4 SPF#2

DIMENSIONS, SUPPORTS AND LOADINGS SPECIFIED BY FABRICATOR TO BE VERIFIED BY BUILDING DESIGNER

BEARINGS

JT	FACTORED GROSS REACTION VERT	HORZ	MAXIMUM FACTORED GROSS REACTION DOWN	HORZ	UPLIFT	INPUT BRG IN-SX	REQRD BRG IN-SX
H	427	0	427	0	0	5-8	1-8
F	266	0	266	0	0	MECHANICAL	

A SUITABLE HANGER/MECHANICAL CONNECTION IS REQUIRED AT JOINT F. MINIMUM BEARING LENGTH AT JOINT F = 3-8.

UNFACTORED REACTIONS

JT	1ST LCASE COMBINED	MAX./MIN. COMPONENT REACTIONS SNOW	LIVE	PERM.LIVE	WIND	DEAD	SOIL
H	302	201 / 0	0 / 0	0 / 0	0 / 0	101 / 0	0 / 0
F	190	114 / 0	0 / 0	0 / 0	0 / 0	76 / 0	0 / 0

BEARING MATERIAL TO BE SPF NO.2 OR BETTER AT JOINT(S) H

BRACING
TOP CHORD TO BE SHEATHED OR MAX. PURLIN SPACING = 6.25 FT.
MAX. UNBRACED BOTTOM CHORD LENGTH = 10.00 FT OR RIGID CEILING DIRECTLY APPLIED.

ALL PITCH BREAKS AND PERIMETER CORNER JOINTS MUST BE LATERALLY RESTRAINED.

LOADING
TOTAL LOAD CASES: (4)

CHORDS

MEMB. FR-TO	MAX. FACTORED FORCE (LBS)	FACTORED VERT. LOAD (PLF) FROM	TO	LC1 CSI (LC)	MAX UNBRAC LENGTH
A- B	0 / 35	-78.0	-78.0	0.15 (1)	10.00
B- C	-58 / 0	-78.0	-78.0	0.14 (1)	6.25
C- D	-186 / 0	-78.0	-78.0	0.12 (1)	6.25
D- E	0 / 0	-78.0	-78.0	0.12 (1)	10.00
F- E	0 / 16	0.0	0.0	0.00 (1)	10.00
H- B	-269 / 0	0.0	0.0	0.03 (1)	7.81
H- G	0 / 60	-18.5	-18.5	0.12 (4)	10.00
G- F	0 / 242	-18.5	-18.5	0.04 (1)	10.00

WEBS

MEMB. FR-TO	MAX. FACTORED FORCE (LBS)	MAX CSI (LC)
C- G	0 / 142	0.03 (1)
G- D	-177 / 0	0.03 (1)
H- C	-130 / 0	0.02 (1)
D- F	-205 / 0	0.03 (1)

DESIGN CRITERIA

SPECIFIED LOADS:

TOP CH.	LL	=	21.0	PSF
	DL	=	6.0	PSF
BOT CH.	LL	=	0.0	PSF
	DL	=	7.4	PSF
TOTAL LOAD		=	34.4	PSF

SPACING = 24.0 IN. C/C

LOADING IN FLAT SECTION BASED ON A SLOPE OF 2.00/12 MINIMUM

THIS TRUSS IS DESIGNED FOR RESIDENTIAL OR SMALL BUILDING REQUIREMENTS OF PART 9, NBCC 2015

THIS DESIGN COMPLIES WITH:
- PART 9 OF BCBC 2018 , ABC 2019
- PART 9 OF OBC 2012 (2019 AMENDMENT)
- CSA 086-14
- TPIC 2014

DESIGN ASSUMPTIONS
-OVERHANG NOT TO BE ALTERED OR CUT OFF.

(55 % OF 23.0 P.S.F. G.S.L. PLUS 8.4 P.S.F. RAIN LOAD) EQUALS 21.0 P.S.F. SPECIFIED ROOF LIVE LOAD

ALLOWABLE DEFL.(LL)= L/360 (0.20")
CALCULATED VERT. DEFL.(LL) = L/ 999 (0.00")
ALLOWABLE DEFL.(TL)= L/360 (0.20")
CALCULATED VERT. DEFL.(TL) = L/ 999 (0.02")

CSI: TC=0.15/1.00 (A-B:1) , BC=0.12/1.00 (G-H:4) , WB=0.03/1.00 (C-G:1) , SSI=0.13/1.00 (C-D:1)

DOL LUMBER=1.00 NAIL=1.00 LS BEND=1.10 COMP=1.10 SHEAR=1.10 TENS= 1.10

COMPANION LIVE LOAD FACTOR = 1.00

AUTOSOLVE RIGHT HEEL ONLY

TRUSS PLATE MANUFACTURER IS NOT RESPONSIBLE FOR QUALITY CONTROL IN THE TRUSS MANUFACTURING PLANT .

NAIL VALUES

PLATE	GRIP(DRY) (PSI) MAX	MIN	SHEAR (PLI) MAX	MIN	SECTION (PLI) MAX	MIN
MT20	650	371	1747	788	1987	1873

PLATE PLACEMENT TOL. = 0.250 inches

PLATE ROTATION TOL. = 5.0 Deg.

JSI GRIP= 0.64 (G) (INPUT = 0.90)
JSI METAL= 0.14 (B) (INPUT = 1.00)

JOB NAME	TRUSS NAME	QUANTITY	PLY	JOB DESC.	DRWG NO.
349186	J2TB		1	TRUSS DESC. JT 45147	E22104537

Alpa Roof Truss, Maple

Version 8.530 S Feb 23 2022 MiTek Industries, Inc. Mon Oct 24 08:34:14 2022 Page 1
ID:HSVaWIIDnhr?B6oeweH9vbyNdls-9K7PvMTj5 kMoYlf RApx2Pno33k fxS XrabAyQGct

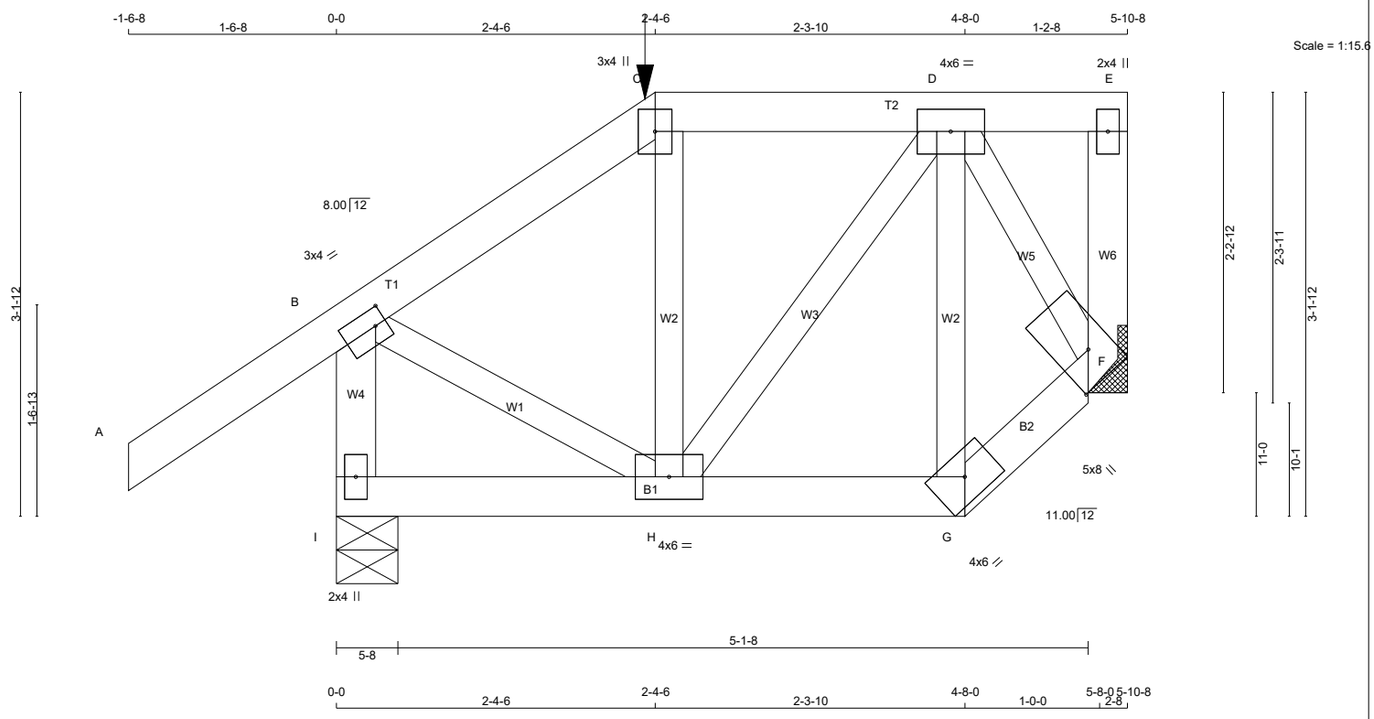

TOTAL WEIGHT = 2 X 30 = 61 lb
[M]

LUMBER
N. L. G. A. RULES

CHORDS	SIZE		LUMBER	DESCR.
A - C	2x4	DRY	No.2	SPF
C - E	2x4	DRY	No.2	SPF
F - E	2x4	DRY	No.2	SPF
I - B	2x4	DRY	No.2	SPF
I - G	2x4	DRY	No.2	SPF
G - F	2x4	DRY	No.2	SPF
ALL WEBS EXCEPT	2x3	DRY	No.2	SPF

DRY: SEASONED LUMBER.

PLATES (table is in inches)

JT	TYPE	PLATES	W	LEN	Y	X
B	TMVW-t	MT20	3.0	4.0	1.50	1.00
C	TTW+p	MT20	3.0	4.0		
D	TMWWW-t	MT20	4.0	6.0		
E	TMV+p	MT20	2.0	4.0		
F	BVMW1+l	MT20	5.0	8.0	2.75	2.75
G	BBW-h	MT20	4.0	6.0		
H	BMWWW-t	MT20	4.0	6.0		
I	BMV1+p	MT20	2.0	4.0		

LATERAL BRACE(S) SHOWN SHALL BE 2X4 SPF#2

DIMENSIONS, SUPPORTS AND LOADINGS SPECIFIED BY FABRICATOR TO BE VERIFIED BY BUILDING DESIGNER

BEARINGS

JT	FACTORED GROSS REACTION VERT	HORZ	MAXIMUM FACTORED GROSS REACTION DOWN	HORZ	UPLIFT	INPUT BRG	REQRD BRG
I	508	0	508	0	0	5-8	1-8
F	416	0	416	0	0	MECHANICAL	

A SUITABLE HANGER/MECHANICAL CONNECTION IS REQUIRED AT JOINT F. MINIMUM BEARING LENGTH AT JOINT F = 3-8.

UNFACTORED REACTIONS

JT	1ST LCASE COMBINED	MAX./MIN. COMPONENT REACTIONS SNOW	LIVE	PERM.LIVE	WIND	DEAD	SOIL
I	360	232 / 0	0 / 0	0 / 0	0 / 0	128 / 0	0 / 0
F	296	182 / 0	0 / 0	0 / 0	0 / 0	114 / 0	0 / 0

BEARING MATERIAL TO BE SPF NO.2 OR BETTER AT JOINT(S) I

BRACING
TOP CHORD TO BE SHEATHED OR MAX. PURLIN SPACING = 6.25 FT.
MAX. UNBRACED BOTTOM CHORD LENGTH = 10.00 FT OR RIGID CEILING DIRECTLY APPLIED.

ALL PITCH BREAKS AND PERIMETER CORNER JOINTS MUST BE LATERALLY RESTRAINED.

LOADING
TOTAL LOAD CASES: (4)

CHORDS

MEMB. FR-TO	MAX. FACTORED FORCE (LBS)	FACTORED VERT. LOAD (PLF) FROM	TO	LC1 CSI (LC)	MAX UNBRAC LENGTH
A- B	0 / 35	-78.0	-78.0	0.16 (1)	10.00
B- C	-268 / 0	-78.0	-78.0	0.08 (1)	6.25
C- D	-218 / 0	-111.3	-111.3	0.07 (1)	6.25
D- E	0 / 0	-111.3	-111.3	0.07 (1)	10.00
F- E	-36 / 0	0.0	0.0	0.00 (1)	7.81
I- B	-481 / 0	0.0	0.0	0.06 (1)	7.81
I- H	0 / 0	-26.4	-26.4	0.04 (4)	10.00
H- G	0 / 167	-26.4	-26.4	0.06 (4)	10.00
G- F	0 / 224	-26.4	-26.4	0.05 (1)	10.00

WEBS

MEMB. FR-TO	MAX. FACTORED FORCE (LBS)	MAX CSI (LC)
H- C	-112 / 2	0.02 (1)
H- D	0 / 86	0.02 (1)
G- D	-112 / 0	0.02 (1)
B- H	0 / 249	0.06 (1)
D- F	-267 / 0	0.05 (1)

FACTORED CONCENTRATED LOADS (LBS)

JT	LOC.	LC1	MAX-	MAX+	FACE	DIR.	TYPE	HEEL	CONN.
C	2-4-6	-68	-68	---	FRONT	VERT	TOTAL	---	C1

CONNECTION REQUIREMENTS

1) **C1:** A SUITABLE HANGER/MECHANICAL CONNECTION IS REQUIRED.

DESIGN CRITERIA

SPECIFIED LOADS:

TOP CH.	LL	=	21.0	PSF
	DL	=	6.0	PSF
BOT CH.	LL	=	0.0	PSF
	DL	=	7.4	PSF
TOTAL LOAD		=	34.4	PSF

SPACING = 24.0 IN. C/C

LOADING IN FLAT SECTION BASED ON A SLOPE OF 2.00/12 MINIMUM

GIRDER TYPE: CPrimeHip
LEFT SETBACK = 2-4-6
RIGHT SETBACK = 0-0
END SETBACK = 3-8-8
END WALL WIDTH = 0-0
CORNER FRAMING TYPE: CONVENTIONAL
END JACK TYPE: CONVENTIONAL
APPLIED TO FRONT SIDE
- ADDT'L LOADS BASED ON 55 % OF GSL.

THIS TRUSS IS DESIGNED FOR RESIDENTIAL OR SMALL BUILDING REQUIREMENTS OF PART 9, NBCC 2015

THIS DESIGN COMPLIES WITH:
- PART 9 OF BCBC 2018 , ABC 2019
- PART 9 OF OBC 2012 (2019 AMENDMENT)
- CSA 086-14
- TPIC 2014

(55 % OF 23.0 P.S.F. G.S.L. PLUS 8.4 P.S.F. RAIN LOAD) EQUALS 21.0 P.S.F. SPECIFIED ROOF LIVE LOAD

ALLOWABLE DEFL.(LL)= L/360 (0.20")
CALCULATED VERT. DEFL.(LL) = L/ 999 (0.00")
ALLOWABLE DEFL.(TL)= L/360 (0.20")
CALCULATED VERT. DEFL.(TL) = L/ 999 (0.00")

CSI: TC=0.16/1.00 (A-B:1) , BC=0.06/1.00 (G-H:4) , WB=0.06/1.00 (B-H:1) , SSI=0.12/1.00 (C-D:1)

DOL LUMBER=1.00 NAIL=1.00 LS BEND=1.00 COMP=1.00 SHEAR=1.00 TENS= 1.00

COMPANION LIVE LOAD FACTOR = 1.00

TRUSS PLATE MANUFACTURER IS NOT RESPONSIBLE FOR QUALITY CONTROL IN THE TRUSS MANUFACTURING PLANT .

NAIL VALUES

PLATE	GRIP(DRY) (PSI) MAX	MIN	SHEAR (PLI) MAX	MIN	SECTION (PLI) MAX	MIN
MT20	650	371	1747	788	1987	1873

PLATE PLACEMENT TOL. = 0.250 inches

PLATE ROTATION TOL. = 5.0 Deg.

JSI GRIP= 0.78 (B) (INPUT = 0.90)
JSI METAL= 0.13 (B) (INPUT = 1.00)

JOB NAME	TRUSS NAME	QUANTITY	PLY	JOB DESC.	DRWG NO.
349186	J2TC		1	TRUSS DESC. JT 45147	E22104538

Alpa Roof Truss, Maple

Version 8.530 S Feb 23 2022 MiTek Industries, Inc. Mon Oct 24 08:34:15 2022 Page 1

ID:HSVaWlIDnhr?B6oeweH9vbyNdls-dWhn6hULsIsDQiKrY8h2UGxxwTO0j6gcDBa78dyQGcs

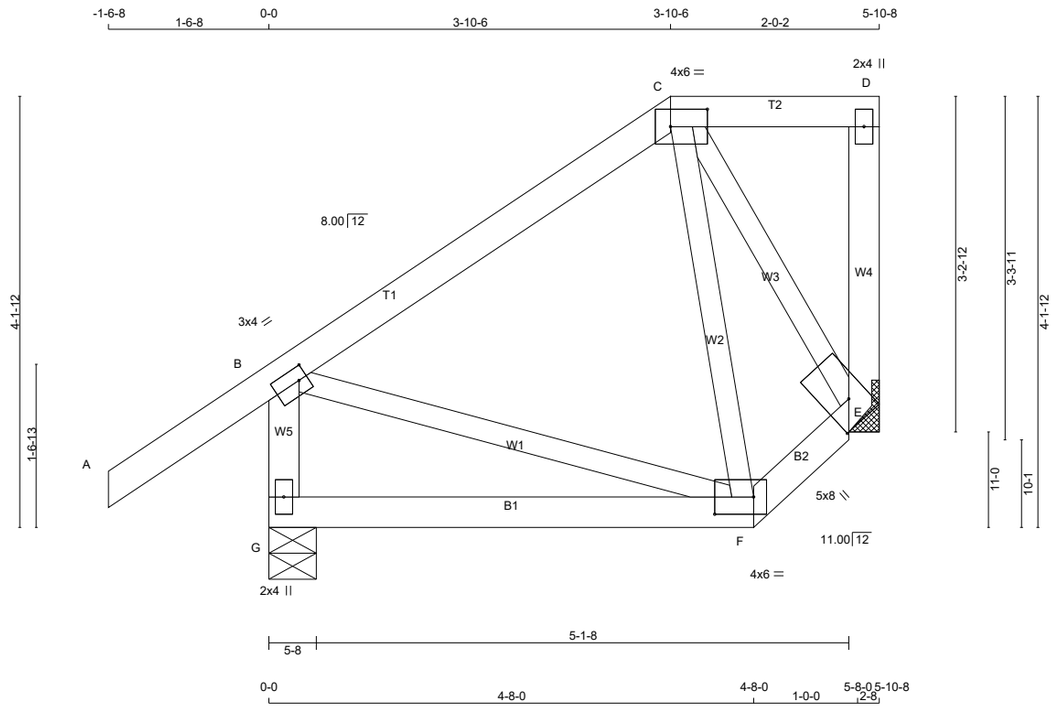

TOTAL WEIGHT = 2 X 31 = 61 lb [M]

LUMBER

N. L. G. A. RULES

CHORDS	SIZE		LUMBER	DESCR.
A - C	2x4	DRY	No.2	SPF
C - D	2x4	DRY	No.2	SPF
E - D	2x4	DRY	No.2	SPF
G - B	2x4	DRY	No.2	SPF
G - F	2x4	DRY	No.2	SPF
F - E	2x4	DRY	No.2	SPF
ALL WEBS EXCEPT	2x3	DRY	No.2	SPF

DRY: SEASONED LUMBER.

PLATES (table is in inches)

JT	TYPE	PLATES	W	LEN	Y	X
B	TMVW-t	MT20	3.0	4.0	1.50	1.00
C	TTWW-l	MT20	4.0	6.0	2.00	4.25
D	TMV+p	MT20	2.0	4.0		
E	BVMW1+l	MT20	5.0	8.0	2.75	2.75
F	BBWW-l	MT20	4.0	6.0	2.00	4.50
G	BMV1+p	MT20	2.0	4.0		

LATERAL BRACE(S) SHOWN SHALL BE 2X4 SPF#2

DIMENSIONS, SUPPORTS AND LOADINGS SPECIFIED BY FABRICATOR TO BE VERIFIED BY BUILDING DESIGNER

BEARINGS

JT	FACTORED GROSS REACTION VERT	HORZ	MAXIMUM FACTORED GROSS REACTION DOWN	HORZ	UPLIFT	INPUT BRG IN-SX	REQRD BRG IN-SX
G	410	0	410	0	0	5-8	1-8
E	283	0	283	0	0	MECHANICAL	

A SUITABLE HANGER/MECHANICAL CONNECTION IS REQUIRED AT JOINT E. MINIMUM BEARING LENGTH AT JOINT E = 3-8.

UNFACTORED REACTIONS

JT	1ST LCASE COMBINED	MAX./MIN. COMPONENT REACTIONS SNOW	LIVE	PERM.LIVE	WIND	DEAD	SOIL
G	290	191 / 0	0 / 0	0 / 0	0 / 0	98 / 0	0 / 0
E	202	123 / 0	0 / 0	0 / 0	0 / 0	79 / 0	0 / 0

BEARING MATERIAL TO BE SPF NO.2 OR BETTER AT JOINT(S) G

BRACING

TOP CHORD TO BE SHEATHED OR MAX. PURLIN SPACING = 6.25 FT.
MAX. UNBRACED BOTTOM CHORD LENGTH = 10.00 FT OR RIGID CEILING DIRECTLY APPLIED.

ALL PITCH BREAKS AND PERIMETER CORNER JOINTS MUST BE LATERALLY RESTRAINED.

LOADING

TOTAL LOAD CASES: (4)

CHORDS

MEMB. FR-TO	MAX. FACTORED FORCE (LBS)	VERT. LOAD (PLF) FROM	TO	LC1 CSI (LC)	MAX UNBRAC LENGTH
A- B	0 / 35	-78.0	-78.0	0.15 (1)	10.00
B- C	-116 / 0	-78.0	-78.0	0.20 (1)	6.25
C- D	0 / 0	-78.0	-78.0	0.05 (1)	10.00
E- D	-78 / 0	0.0	0.0	0.02 (1)	7.81
G- B	-367 / 0	0.0	0.0	0.04 (1)	7.81
G- F	0 / 0	-18.5	-18.5	0.12 (4)	10.00
F- E	0 / 117	-18.5	-18.5	0.02 (1)	10.00

WEBS

MEMB. FR-TO	MAX. FACTORED FORCE (LBS)	MAX CSI (LC)
C- F	-52 / 20	0.01 (1)
B- F	0 / 99	0.02 (1)
C- E	-142 / 0	0.03 (1)

DESIGN CRITERIA

SPECIFIED LOADS:

TOP CH.	LL	=	21.0	PSF
	DL	=	6.0	PSF
BOT CH.	LL	=	0.0	PSF
	DL	=	7.4	PSF
TOTAL LOAD		=	34.4	PSF

SPACING = 24.0 IN. C/C

LOADING IN FLAT SECTION BASED ON A SLOPE OF 2.00/12 MINIMUM

THIS TRUSS IS DESIGNED FOR RESIDENTIAL OR SMALL BUILDING REQUIREMENTS OF PART 9, NBCC 2015

THIS DESIGN COMPLIES WITH:
- PART 9 OF BCBC 2018 , ABC 2019
- PART 9 OF OBC 2012 (2019 AMENDMENT)
- CSA 086-14
- TPIC 2014

(55 % OF 23.0 P.S.F. G.S.L. PLUS 8.4 P.S.F. RAIN LOAD) EQUALS 21.0 P.S.F. SPECIFIED ROOF LIVE LOAD

ALLOWABLE DEFL.(LL)= L/360 (0.20")
CALCULATED VERT. DEFL.(LL) = L/ 999 (0.00")
ALLOWABLE DEFL.(TL)= L/360 (0.20")
CALCULATED VERT. DEFL.(TL) = L/ 999 (0.02")

CSI: TC=0.20/1.00 (B-C:1) , BC=0.12/1.00 (F-G:4) , WB=0.03/1.00 (C-E:1) , SSI=0.10/1.00 (B-C:1)

DOL LUMBER=1.00 NAIL=1.00 LS BEND=1.10 COMP=1.10 SHEAR=1.10 TENS= 1.10

COMPANION LIVE LOAD FACTOR = 1.00

TRUSS PLATE MANUFACTURER IS NOT RESPONSIBLE FOR QUALITY CONTROL IN THE TRUSS MANUFACTURING PLANT .

NAIL VALUES

PLATE	GRIP(DRY) (PSI) MAX	MIN	SHEAR (PLI) MAX	MIN	SECTION (PLI) MAX	MIN
MT20	650	371	1747	788	1987	1873

PLATE PLACEMENT TOL. = 0.250 inches

PLATE ROTATION TOL. = 5.0 Deg.

JSI GRIP= 0.32 (B) (INPUT = 0.90)
JSI METAL= 0.09 (B) (INPUT = 1.00)

JOB NAME	TRUSS NAME	QUANTITY	PLY	JOB DESC.		DRWG NO.
349186	J2TD		1	TRUSS DESC.	JT 45147	E22104539

Alpa Roof Truss, Maple

Version 8.530 S Feb 23 2022 MiTek Industries, Inc. Mon Oct 24 08:34:17 2022 Page 1

ID:HSVaWIlDnhr?B6oeweH9vbyNdls-ZvpYXNVbOv6xf0UDfZkWZh1HBG4TB?dvqU3ECVyQGcq

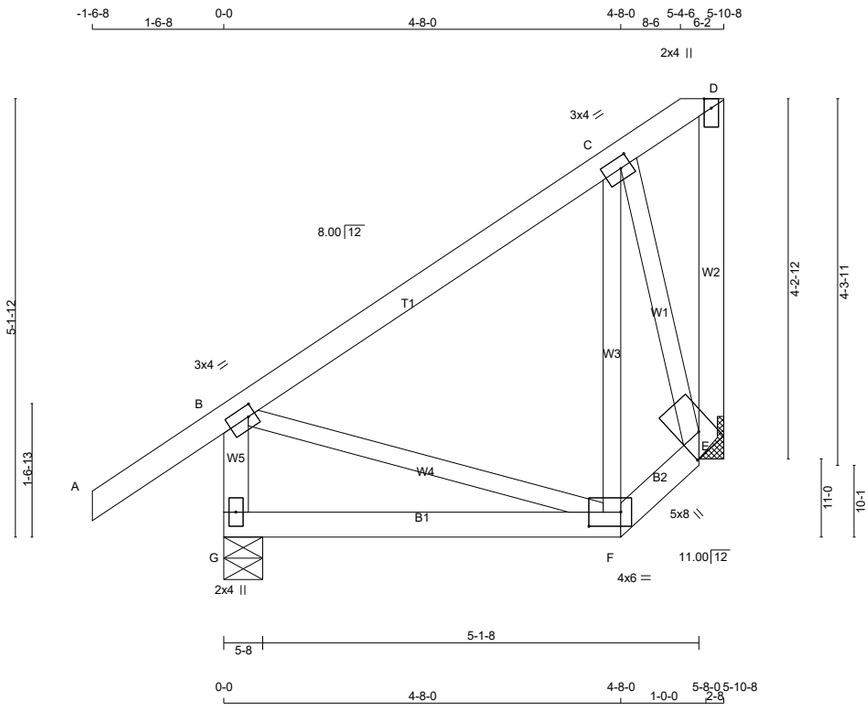

TOTAL WEIGHT = 2 X 33 = 66 lb

[M]

LUMBER

N. L. G. A. RULES

CHORDS	SIZE		LUMBER	DESCR.
A - D	2x4	DRY	No.2	SPF
E - D	2x4	DRY	No.2	SPF
G - B	2x4	DRY	No.2	SPF
G - F	2x4	DRY	No.2	SPF
F - E	2x4	DRY	No.2	SPF
ALL WEBS	2x3	DRY	No.2	SPF

DRY: SEASONED LUMBER.

PLATES (table is in inches)

JT	TYPE	PLATES	W	LEN	Y	X
B	TMVW-t	MT20	3.0	4.0	1.50	1.00
C	TMWW-t	MT20	3.0	4.0	1.50	1.50
D	TMV+p	MT20	2.0	4.0	Edge	
E	BVMW1+l	MT20	5.0	8.0	2.75	2.75
F	BBWW-l	MT20	4.0	6.0	2.00	4.50
G	BMV1+p	MT20	2.0	4.0		

Edge - INDICATES REFERENCE CORNER OF PLATE TOUCHES EDGE OF CHORD.

LATERAL BRACE(S) SHOWN SHALL BE 2X4 SPF#2

LICENSED PROFESSIONAL ENGINEER
V. WIDYA
100225448
10/24/2022
PROVINCE OF ONTARIO

DIMENSIONS, SUPPORTS AND LOADINGS SPECIFIED BY FABRICATOR TO BE VERIFIED BY BUILDING DESIGNER

BEARINGS

JT	FACTORED GROSS REACTION VERT	HORZ	MAXIMUM FACTORED GROSS REACTION DOWN	HORZ	UPLIFT	INPUT BRG IN-SX	REQRD BRG IN-SX
G	410	0	410	0	0	5-8	1-8
E	283	0	283	0	0	MECHANICAL	

A SUITABLE HANGER/MECHANICAL CONNECTION IS REQUIRED AT JOINT E. MINIMUM BEARING LENGTH AT JOINT E = 3-8.

UNFACTORED REACTIONS

JT	1ST LCASE COMBINED	MAX./MIN. COMPONENT REACTIONS SNOW	LIVE	PERM.LIVE	WIND	DEAD	SOIL
G	290	191 / 0	0 / 0	0 / 0	0 / 0	98 / 0	0 / 0
E	202	123 / 0	0 / 0	0 / 0	0 / 0	79 / 0	0 / 0

BEARING MATERIAL TO BE SPF NO.2 OR BETTER AT JOINT(S) G

BRACING

TOP CHORD TO BE SHEATHED OR MAX. PURLIN SPACING = 6.25 FT.
MAX. UNBRACED BOTTOM CHORD LENGTH = 10.00 FT OR RIGID CEILING DIRECTLY APPLIED.

ALL PITCH BREAKS AND PERIMETER CORNER JOINTS MUST BE LATERALLY RESTRAINED.

LOADING

TOTAL LOAD CASES: (4)

C H O R D S

MEMB. FR-TO	MAX. FACTORED FORCE (LBS)	VERT. LOAD (PLF) FROM	TO	LC1 CSI (LC)	MAX UNBRAC LENGTH
A- B	0 / 35	-78.0	-78.0	0.15 (1)	10.00
B- C	-106 / 0	-78.0	-78.0	0.21 (1)	6.25
C- D	-66 / 0	-78.0	-78.0	0.21 (1)	6.25
E- D	0 / 68	0.0	0.0	0.01 (1)	10.00
G- B	-367 / 0	0.0	0.0	0.04 (1)	7.81
G- F	0 / 0	-18.5	-18.5	0.12 (4)	10.00
F- E	0 / 141	-18.5	-18.5	0.03 (1)	10.00

W E B S

MEMB. FR-TO	MAX. FACTORED FORCE (LBS)	MAX CSI (LC)
F- C	-69 / 20	0.02 (1)
B- F	0 / 108	0.02 (1)
C- E	-265 / 0	0.07 (1)

DESIGN CRITERIA

SPECIFIED LOADS:

TOP CH.	LL	=	21.0	PSF
	DL	=	6.0	PSF
BOT CH.	LL	=	0.0	PSF
	DL	=	7.4	PSF
TOTAL LOAD		=	34.4	PSF

SPACING = 24.0 IN. C/C

THIS TRUSS IS DESIGNED FOR RESIDENTIAL OR SMALL BUILDING REQUIREMENTS OF PART 9, NBCC 2015

THIS DESIGN COMPLIES WITH:
- PART 9 OF BCBC 2018 , ABC 2019
- PART 9 OF OBC 2012 (2019 AMENDMENT)
- CSA 086-14
- TPIC 2014

(55 % OF 23.0 P.S.F. G.S.L. PLUS 8.4 P.S.F. RAIN LOAD) EQUALS 21.0 P.S.F. SPECIFIED ROOF LIVE LOAD

ALLOWABLE DEFL.(LL)= L/360 (0.20")
CALCULATED VERT. DEFL.(LL) = L/ 999 (0.00")
ALLOWABLE DEFL.(TL)= L/360 (0.20")
CALCULATED VERT. DEFL.(TL) = L/ 999 (0.02")

CSI: TC=0.21/1.00 (B-C:1) , BC=0.12/1.00 (F-G:4) , WB=0.07/1.00 (C-E:1) , SSI=0.14/1.00 (B-C:1)

DOL LUMBER=1.00 NAIL=1.00 LS BEND=1.10 COMP=1.10 SHEAR=1.10 TENS= 1.10

COMPANION LIVE LOAD FACTOR = 1.00

TRUSS PLATE MANUFACTURER IS NOT RESPONSIBLE FOR QUALITY CONTROL IN THE TRUSS MANUFACTURING PLANT .

NAIL VALUES

PLATE	GRIP(DRY) (PSI) MAX	MIN	SHEAR (PLI) MAX	MIN	SECTION (PLI) MAX	MIN
MT20	650	371	1747	788	1987	1873

PLATE PLACEMENT TOL. = 0.250 inches

PLATE ROTATION TOL. = 5.0 Deg.

JSI GRIP= 0.34 (B) (INPUT = 0.90)
JSI METAL= 0.10 (E) (INPUT = 1.00)

JOB NAME	TRUSS NAME	QUANTITY	PLY	JOB DESC.	DRWG NO.
349186	J3S		1	TRUSS DESC. JT 45147	E22104540

Alpa Roof Truss, Maple

Version 8.530 S Feb 23 2022 MiTek Industries, Inc. Mon Oct 24 08:34:18 2022 Page 1
ID:HSVaWIlDnhr?B6oeweH9vbyNdls-15NwljWD9DEoHA3QDHFl6uZQBgO2wTt2v8pnkxyQGcp

Scale = 1:19.6

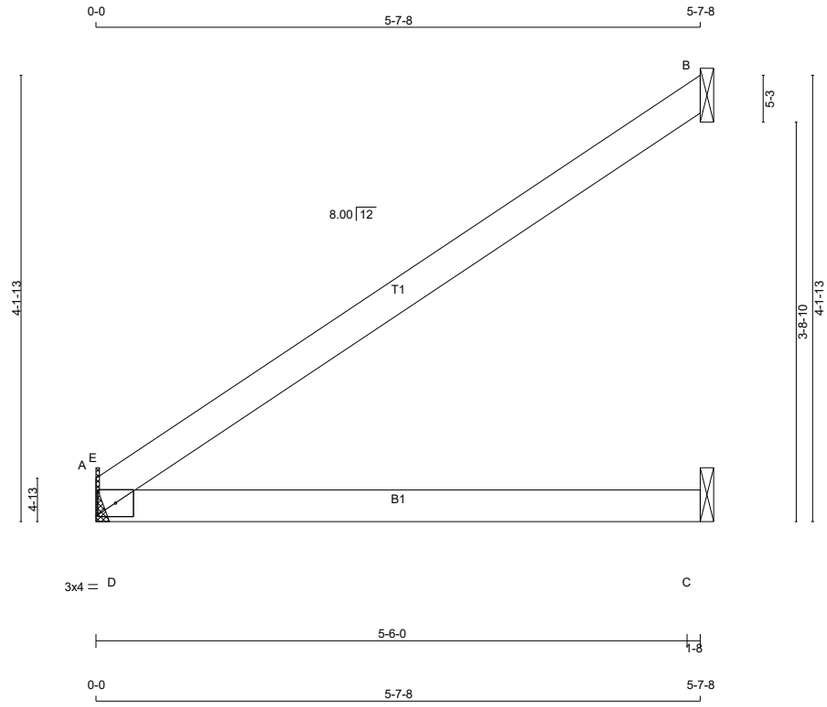

TOTAL WEIGHT = 10 X 14 = 143 lb

[M][F]

LUMBER
N. L. G. A. RULES

CHORDS	SIZE		LUMBER	DESCR.
A - B	2x4	DRY	No.2	SPF
A - C	2x4	DRY	No.2	SPF

DRY: SEASONED LUMBER.

PLATES (table is in inches)

JT	TYPE	PLATES	W	LEN	Y	X
A	TMB1-I	MT20	3.0	4.0		

DIMENSIONS, SUPPORTS AND LOADINGS SPECIFIED BY FABRICATOR TO BE VERIFIED BY BUILDING DESIGNER

BEARINGS

JT	FACTORED GROSS REACTION VERT	HORZ	MAXIMUM FACTORED GROSS REACTION DOWN	HORZ	UPLIFT	INPUT BRG IN-SX	REQRD BRG IN-SX
A	271	0	271	0	0	MECHANICAL	
B	193	0	193	0	0	1-8	1-8
C	78	0	78	0	0	1-8	1-8

A SUITABLE HANGER/MECHANICAL CONNECTION IS REQUIRED AT JOINT A. MINIMUM BEARING LENGTH AT JOINT A = 1-8.

SEE MITEK STANDARD DETAIL MSD2015-H FOR CONNECTION TO JOINT(S) B , C

UNFACTORED REACTIONS

JT	1ST LCASE COMBINED	MAX./MIN. COMPONENT REACTIONS SNOW	LIVE	PERM.LIVE	WIND	DEAD	SOIL
A	193	118 / 0	0 / 0	0 / 0	0 / 0	75 / 0	0 / 0
B	134	101 / 0	0 / 0	0 / 0	0 / 0	34 / 0	0 / 0
C	59	17 / 0	0 / 0	0 / 0	0 / 0	42 / 0	0 / 0

BRACING
TOP CHORD TO BE SHEATHED OR MAX. PURLIN SPACING = 6.25 FT.
MAX. UNBRACED BOTTOM CHORD LENGTH = 10.00 FT OR RIGID CEILING DIRECTLY APPLIED.

ALL PITCH BREAKS AND PERIMETER CORNER JOINTS MUST BE LATERALLY RESTRAINED.

LOADING
TOTAL LOAD CASES: (4)

CHORDS

MEMB. FR-TO	MAX. FACTORED FORCE (LBS)	FACTORED VERT. LOAD (PLF) FROM	TO	LC1 CSI (LC)	MAX UNBRAC LENGTH
A- E	-33 / 212	-78.0	-78.0	0.15 (1)	6.25
E- B	-9 / 1	-78.0	-78.0	0.33 (1)	10.00
A- D	0 / 0	-18.5	-18.5	0.21 (1)	10.00
D- C	0 / 0	-18.5	-18.5	0.22 (1)	10.00

WEBS

MEMB. FR-TO	MAX. FACTORED FORCE (LBS)	MAX CSI (LC)
D- E	-541 / 3	0.00 (1)

DESIGN CRITERIA

SPECIFIED LOADS:

TOP CH.	LL	=	21.0	PSF
	DL	=	6.0	PSF
BOT CH.	LL	=	0.0	PSF
	DL	=	7.4	PSF
TOTAL LOAD		=	34.4	PSF

SPACING = 24.0 IN. C/C

THIS TRUSS IS DESIGNED FOR RESIDENTIAL OR SMALL BUILDING REQUIREMENTS OF PART 9, NBCC 2015

THIS DESIGN COMPLIES WITH:
- PART 9 OF BCBC 2018 , ABC 2019
- PART 9 OF OBC 2012 (2019 AMENDMENT)
- CSA 086-14
- TPIC 2014

(55 % OF 23.0 P.S.F. G.S.L. PLUS 8.4 P.S.F. RAIN LOAD) EQUALS 21.0 P.S.F. SPECIFIED ROOF LIVE LOAD

ALLOWABLE DEFL.(LL)= L/360 (0.19")
CALCULATED VERT. DEFL.(LL) = L/ 999 (0.05")
ALLOWABLE DEFL.(TL)= L/360 (0.19")
CALCULATED VERT. DEFL.(TL) = L/ 636 (0.11")

CSI: TC=0.33/1.00 (B-E:1) , BC=0.22/1.00 (C-D:1) , WB=0.00/1.00 (D-E:1) , SSI=0.44/1.00 (A-D:1)

DOL LUMBER=1.00 NAIL=1.00 LS BEND=1.10 COMP=1.10 SHEAR=1.10 TENS= 1.10

COMPANION LIVE LOAD FACTOR = 1.00

TRUSS PLATE MANUFACTURER IS NOT RESPONSIBLE FOR QUALITY CONTROL IN THE TRUSS MANUFACTURING PLANT .

NAIL VALUES

PLATE	GRIP(DRY) (PSI) MAX	MIN	SHEAR (PLI) MAX	MIN	SECTION (PLI) MAX	MIN
MT20	650	371	1747	788	1987	1873

PLATE PLACEMENT TOL. = 0.250 inches

PLATE ROTATION TOL. = 5.0 Deg.

JSI GRIP= 0.21 (A) (INPUT = 0.90)
JSI METAL= 0.04 (A) (INPUT = 1.00)

LATERAL BRACE(S) SHOWN SHALL BE 2X4 SPF#2

LICENSED PROFESSIONAL ENGINEER
V. WIDYA
100225448
10/24/2022
PROVINCE OF ONTARIO

JOB NAME	TRUSS NAME	QUANTITY	PLY	JOB DESC.	DRWG NO.
349186	J4		1	TRUSS DESC. JT 45147	E22104541

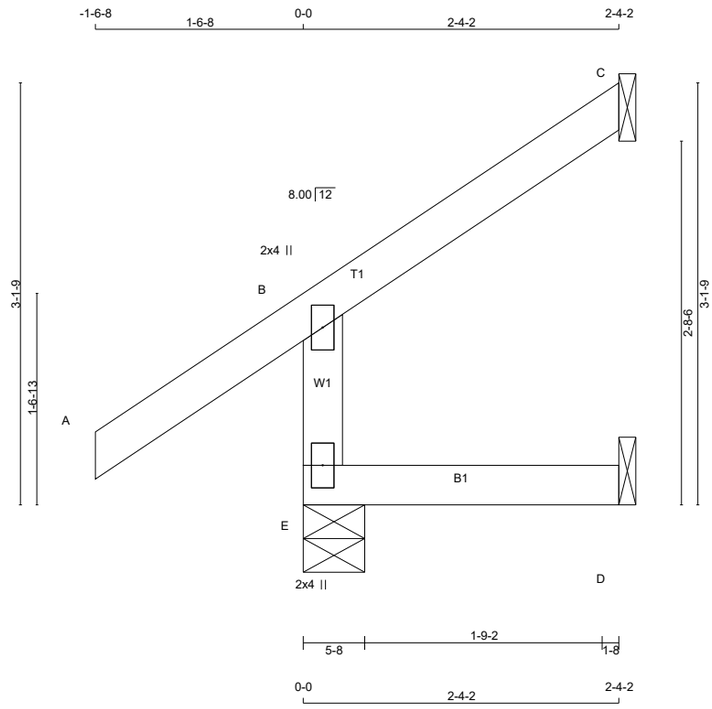

TOTAL WEIGHT = 7 X 9 = 66 lb
[M]

LUMBER
N. L. G. A. RULES

CHORDS	SIZE		LUMBER	DESCR.
E - B	2x4	DRY	No.2	SPF
A - C	2x4	DRY	No.2	SPF
E - D	2x4	DRY	No.2	SPF

DRY: SEASONED LUMBER.

PLATES (table is in inches)

JT	TYPE	PLATES	W	LEN	Y	X
B	TMV+p	MT20	2.0	4.0		
E	BMV1+p	MT20	2.0	4.0		

LATERAL BRACE(S) SHOWN SHALL BE 2X4 SPF#2

DIMENSIONS, SUPPORTS AND LOADINGS SPECIFIED BY FABRICATOR TO BE VERIFIED BY BUILDING DESIGNER

BEARINGS

JT	FACTORED GROSS REACTION VERT	HORZ	MAXIMUM FACTORED GROSS REACTION DOWN	HORZ	UPLIFT	INPUT BRG IN-SX	REQRD BRG IN-SX
E	264	0	264	0	0	5-8	1-8
C	69	0	69	0	0	1-8	1-8
D	20	0	22	0	0	1-8	1-8

SEE MITEK STANDARD DETAIL MSD2015-H FOR CONNECTION TO JOINT(S) C , D

UNFACTORED REACTIONS

JT	1ST LCASE COMBINED	MAX./MIN. COMPONENT REACTIONS SNOW	LIVE	PERM.LIVE	WIND	DEAD	SOIL
E	185	129 / 0	0 / 0	0 / 0	0 / 0	56 / 0	0 / 0
C	48	37 / 0	0 / 0	0 / 0	0 / 0	11 / 0	0 / 0
D	16	0 / 0	0 / 0	0 / 0	0 / 0	16 / 0	0 / 0

BEARING MATERIAL TO BE SPF NO.2 OR BETTER AT JOINT(S) E

BRACING
TOP CHORD TO BE SHEATHED OR MAX. PURLIN SPACING = 6.25 FT.
MAX. UNBRACED BOTTOM CHORD LENGTH = 10.00 FT OR RIGID CEILING DIRECTLY APPLIED.

ALL PITCH BREAKS AND PERIMETER CORNER JOINTS MUST BE LATERALLY RESTRAINED.

LOADING
TOTAL LOAD CASES: (7)

CHORDS

MEMB. FR-TO	MAX. FORCE (LBS)	FACTORED VERT. LOAD (PLF)	LC1 FROM	MAX TO	CSI (LC)	MAX. UNBRAC LENGTH
E- B	-240 / 0	0.0		0.0	0.01 (4)	7.81
A- B	0 / 35	-78.0		-78.0	0.15 (5)	10.00
B- C	-13 / 0	-78.0		-78.0	0.07 (6)	6.25
E- D	0 / 0	-18.5		-18.5	0.02 (4)	10.00

WEBS

MEMB. FR-TO	MAX. FORCE (LBS)	MAX CSI (LC)

CANTILEVER ANALYSIS HAS BEEN CONSIDERED IN THIS DESIGN

PATTERN-LOADING CHECK APPLIED TO THIS TRUSS.

DESIGN CRITERIA

SPECIFIED LOADS:

TOP CH.	LL	=	21.0	PSF
	DL	=	6.0	PSF
BOT CH.	LL	=	0.0	PSF
	DL	=	7.4	PSF
TOTAL LOAD		=	34.4	PSF

SPACING = 24.0 IN. C/C

THIS TRUSS IS DESIGNED FOR RESIDENTIAL OR SMALL BUILDING REQUIREMENTS OF PART 9, NBCC 2015

THIS DESIGN COMPLIES WITH:
- PART 9 OF BCBC 2018 , ABC 2019
- PART 9 OF OBC 2012 (2019 AMENDMENT)
- CSA 086-14
- TPIC 2014

DESIGN ASSUMPTIONS
-OVERHANG NOT TO BE ALTERED OR CUT OFF.

(55 % OF 23.0 P.S.F. G.S.L. PLUS 8.4 P.S.F. RAIN LOAD) EQUALS 21.0 P.S.F. SPECIFIED ROOF LIVE LOAD

ALLOWABLE DEFL.(LL)= L/360 (0.19")
CALCULATED VERT. DEFL.(LL) = L/ 999 (0.00")
ALLOWABLE DEFL.(TL)= L/360 (0.19")
CALCULATED VERT. DEFL.(TL) = L/ 999 (0.00")

CSI: TC=0.15/1.00 (A-B:5) , BC=0.02/1.00 (D-E:4) , WB=0.00/1.00 (n/a:0) , SSI=0.09/1.00 (A-B:5)

DOL LUMBER=1.00 NAIL=1.00 LS BEND=1.10 COMP=1.10 SHEAR=1.10 TENS= 1.10

COMPANION LIVE LOAD FACTOR = 1.00

AUTOSOLVE RIGHT HEEL ONLY

TRUSS PLATE MANUFACTURER IS NOT RESPONSIBLE FOR QUALITY CONTROL IN THE TRUSS MANUFACTURING PLANT .

NAIL VALUES

PLATE	GRIP(DRY) (PSI) MAX	MIN	SHEAR (PLI) MAX	MIN	SECTION (PLI) MAX	MIN
MT20	650	371	1747	788	1987	1873

PLATE PLACEMENT TOL. = 0.250 inches

PLATE ROTATION TOL. = 5.0 Deg.

JSI GRIP= 0.15 (B) (INPUT = 0.90)
JSI METAL= 0.12 (B) (INPUT = 1.00)

JOB NAME	TRUSS NAME	QUANTITY	PLY	JOB DESC.	DRWG NO.
349186	J5		1	TRUSS DESC. JT 45147	E22104542

Alpa Roof Truss, Maple

Version 8.530 S Feb 23 2022 MiTek Industries, Inc. Mon Oct 24 08:34:21 2022 Page 1

ID:HSVaWIlDnhr?B6oeweH9vbyNdls-Sq22NlY6S8dN8dn?uPoSkXB puSP7qdUb61SLGyQGcm

Scale = 1:19.2

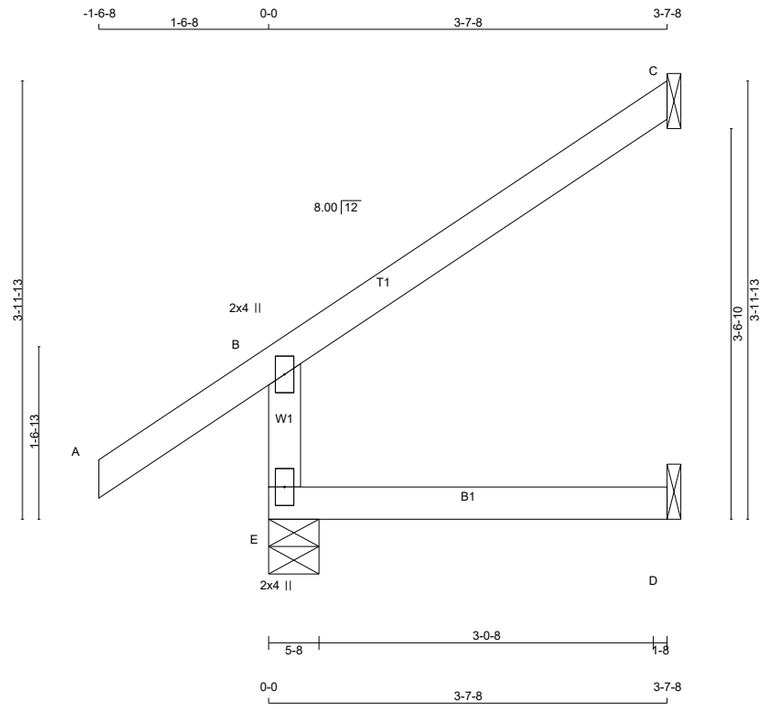

TOTAL WEIGHT = 3 X 13 = 38 lb

[M]

LUMBER

N. L. G. A. RULES

CHORDS	SIZE		LUMBER	DESCR.
E - B	2x4	DRY	No.2	SPF
A - C	2x4	DRY	No.2	SPF
E - D	2x4	DRY	No.2	SPF

DRY: SEASONED LUMBER.

PLATES (table is in inches)

JT	TYPE	PLATES	W	LEN	Y	X
B	TMV+p	MT20	2.0	4.0		
E	BMV1+p	MT20	2.0	4.0		

LATERAL BRACE(S) SHOWN SHALL BE 2X4 SPF#2

LICENSED PROFESSIONAL ENGINEER
V. WIDYA
100225448
10/24/2022
PROVINCE OF ONTARIO

DIMENSIONS, SUPPORTS AND LOADINGS SPECIFIED BY FABRICATOR TO BE VERIFIED BY BUILDING DESIGNER

BEARINGS

JT	FACTORED GROSS REACTION VERT	HORZ	MAXIMUM FACTORED GROSS REACTION DOWN	HORZ	UPLIFT	INPUT BRG IN-SX	REQRD BRG IN-SX
E	341	0	341	0	0	5-8	1-8
C	106	0	106	0	0	1-8	1-8
D	29	0	33	0	0	1-8	1-8

SEE MITEK STANDARD DETAIL MSD2015-H FOR CONNECTION TO JOINT(S) C , D

UNFACTORED REACTIONS

JT	1ST LCASE COMBINED	MAX./MIN. COMPONENT REACTIONS SNOW	LIVE	PERM.LIVE	WIND	DEAD	SOIL
E	240	163 / 0	0 / 0	0 / 0	0 / 0	77 / 0	0 / 0
C	73	57 / 0	0 / 0	0 / 0	0 / 0	16 / 0	0 / 0
D	24	0 / 0	0 / 0	0 / 0	0 / 0	24 / 0	0 / 0

BEARING MATERIAL TO BE SPF NO.2 OR BETTER AT JOINT(S) E

BRACING

TOP CHORD TO BE SHEATHED OR MAX. PURLIN SPACING = 6.25 FT.
MAX. UNBRACED BOTTOM CHORD LENGTH = 10.00 FT OR RIGID CEILING DIRECTLY APPLIED.

ALL PITCH BREAKS AND PERIMETER CORNER JOINTS MUST BE LATERALLY RESTRAINED.

LOADING

TOTAL LOAD CASES: (7)

CHORDS

MEMB. FR-TO	MAX. FACTORED FORCE (LBS)	VERT. LOAD (PLF) FROM	TO	LC1 MAX CSI (LC)	MAX. UNBRAC LENGTH
E- B	-303 / 0	0.0	0.0	0.04 (4)	7.81
A- B	0 / 35	-78.0	-78.0	0.17 (5)	10.00
B- C	-20 / 0	-78.0	-78.0	0.17 (6)	6.25
E- D	0 / 0	-18.5	-18.5	0.05 (4)	10.00

WEBS

MEMB. FR-TO	MAX. FACTORED FORCE (LBS)	MAX CSI (LC)

CANTILEVER ANALYSIS HAS BEEN CONSIDERED IN THIS DESIGN

PATTERN-LOADING CHECK APPLIED TO THIS TRUSS.

DESIGN CRITERIA

SPECIFIED LOADS:

TOP CH.	LL	=	21.0	PSF
	DL	=	6.0	PSF
BOT CH.	LL	=	0.0	PSF
	DL	=	7.4	PSF
TOTAL LOAD		=	34.4	PSF

SPACING = 24.0 IN. C/C

THIS TRUSS IS DESIGNED FOR RESIDENTIAL OR SMALL BUILDING REQUIREMENTS OF PART 9, NBCC 2015

THIS DESIGN COMPLIES WITH:
- PART 9 OF BCBC 2018 , ABC 2019
- PART 9 OF OBC 2012 (2019 AMENDMENT)
- CSA 086-14
- TPIC 2014

DESIGN ASSUMPTIONS
-OVERHANG NOT TO BE ALTERED OR CUT OFF.

(55 % OF 23.0 P.S.F. G.S.L. PLUS 8.4 P.S.F. RAIN LOAD) EQUALS 21.0 P.S.F. SPECIFIED ROOF LIVE LOAD

ALLOWABLE DEFL.(LL)= L/360 (0.19")
CALCULATED VERT. DEFL.(LL) = L/ 999 (0.00")
ALLOWABLE DEFL.(TL)= L/360 (0.19")
CALCULATED VERT. DEFL.(TL) = L/ 999 (0.01")

CSI: TC=0.17/1.00 (B-C:6) , BC=0.05/1.00 (D-E:4) , WB=0.00/1.00 (n/a:0) , SSI=0.11/1.00 (B-C:6)

DOL LUMBER=1.00 NAIL=1.00 LS BEND=1.10 COMP=1.10 SHEAR=1.10 TENS= 1.10

COMPANION LIVE LOAD FACTOR = 1.00

AUTOSOLVE RIGHT HEEL ONLY

TRUSS PLATE MANUFACTURER IS NOT RESPONSIBLE FOR QUALITY CONTROL IN THE TRUSS MANUFACTURING PLANT .

NAIL VALUES

PLATE	GRIP(DRY) (PSI) MAX	MIN	SHEAR (PLI) MAX	MIN	SECTION (PLI) MAX	MIN
MT20	650	371	1747	788	1987	1873

PLATE PLACEMENT TOL. = 0.250 inches

PLATE ROTATION TOL. = 5.0 Deg.

JSI GRIP= 0.19 (B) (INPUT = 0.90)
JSI METAL= 0.15 (B) (INPUT = 1.00)

JOB NAME	TRUSS NAME	QUANTITY	PLY	JOB DESC.		DRWG NO.
349186	J5S		1	TRUSS DESC.	JT 45147	E22104543

Alpa Roof Truss, Maple

Version 8.530 S Feb 23 2022 MiTek Industries, Inc. Mon Oct 24 08:34:22 2022 Page 1

ID:HSVaWlIDnhr?B6oeweH9vbyNdls-wscRa5ZkDRlElnMBS6JhGkkAZHodsHteqmn?tjyQGcl

Scale = 1:19.2

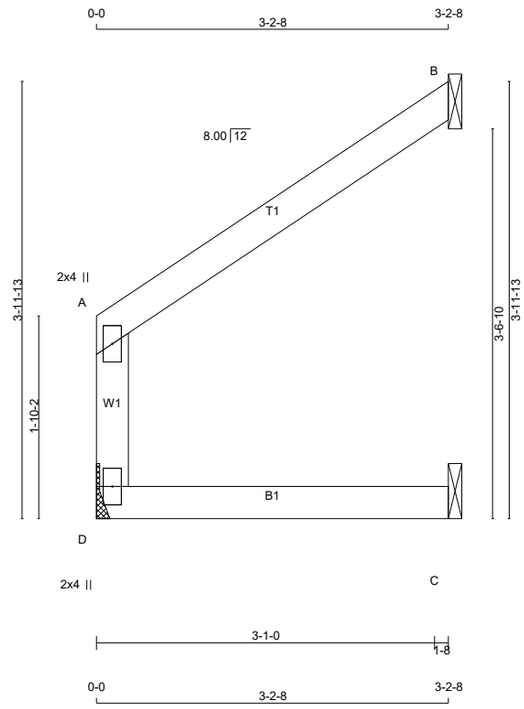

TOTAL WEIGHT = 6 X 10 = 59 lb

[M][F]

LUMBER

N. L. G. A. RULES

CHORDS	SIZE		LUMBER	DESCR.
D - A	2x4	DRY	No.2	SPF
A - B	2x4	DRY	No.2	SPF
D - C	2x4	DRY	No.2	SPF

DRY: SEASONED LUMBER.

PLATES (table is in inches)

JT	TYPE	PLATES	W	LEN	Y	X
A	TMV+p	MT20	2.0	4.0		
D	BMV1+p	MT20	2.0	4.0		

LATERAL BRACE(S) SHOWN SHALL BE 2X4 SPF#2

LICENSED PROFESSIONAL ENGINEER
V. WIDYA
100225448
10/24/2022
PROVINCE OF ONTARIO

DIMENSIONS, SUPPORTS AND LOADINGS SPECIFIED BY FABRICATOR TO BE VERIFIED BY BUILDING DESIGNER

BEARINGS

JT	FACTORED GROSS REACTION VERT	HORZ	MAXIMUM FACTORED GROSS REACTION DOWN	HORZ	UPLIFT	INPUT BRG IN-SX	REQRD BRG IN-SX
D	155	0	155	0	0	MECHANICAL	
B	117	0	117	0	0	1-8	1-8
C	38	0	38	0	0	1-8	1-8

A SUITABLE HANGER/MECHANICAL CONNECTION IS REQUIRED AT JOINT D. MINIMUM BEARING LENGTH AT JOINT D = 1-8.

SEE MITEK STANDARD DETAIL MSD2015-H FOR CONNECTION TO JOINT(S) B , C

UNFACTORED REACTIONS

JT	1ST LCASE COMBINED	MAX./MIN. COMPONENT REACTIONS SNOW	LIVE	PERM.LIVE	WIND	DEAD	SOIL
D	110	67 / 0	0 / 0	0 / 0	0 / 0	43 / 0	0 / 0
B	81	62 / 0	0 / 0	0 / 0	0 / 0	19 / 0	0 / 0
C	29	6 / 0	0 / 0	0 / 0	0 / 0	24 / 0	0 / 0

BRACING

TOP CHORD TO BE SHEATHED OR MAX. PURLIN SPACING = 10.00 FT.
MAX. UNBRACED BOTTOM CHORD LENGTH = 10.00 FT OR RIGID CEILING DIRECTLY APPLIED.

ALL PITCH BREAKS AND PERIMETER CORNER JOINTS MUST BE LATERALLY RESTRAINED.

LOADING

TOTAL LOAD CASES: (4)

CHORDS

MEMB. FR-TO	MAX. FACTORED FORCE (LBS)	VERT. LOAD (PLF) FROM	TO	LC1 MAX CSI (LC)	MAX. UNBRAC LENGTH
D- A	-133 / 0	0.0	0.0	0.03 (1)	7.81
A- B	-5 / 0	-78.0	-78.0	0.11 (1)	10.00
D- C	0 / 0	-18.5	-18.5	0.06 (4)	10.00

WEBS

MEMB. FR-TO	MAX. FACTORED FORCE (LBS)	MAX CSI (LC)

DESIGN CRITERIA

SPECIFIED LOADS:

TOP CH.	LL	=	21.0	PSF
	DL	=	6.0	PSF
BOT CH.	LL	=	0.0	PSF
	DL	=	7.4	PSF
TOTAL LOAD		=	34.4	PSF

SPACING = 24.0 IN. C/C

THIS TRUSS IS DESIGNED FOR RESIDENTIAL OR SMALL BUILDING REQUIREMENTS OF PART 9, NBCC 2015

THIS DESIGN COMPLIES WITH:
- PART 9 OF BCBC 2018 , ABC 2019
- PART 9 OF OBC 2012 (2019 AMENDMENT)
- CSA 086-14
- TPIC 2014

(55 % OF 23.0 P.S.F. G.S.L. PLUS 8.4 P.S.F. RAIN LOAD) EQUALS 21.0 P.S.F. SPECIFIED ROOF LIVE LOAD

ALLOWABLE DEFL.(LL)= L/360 (0.19")
CALCULATED VERT. DEFL.(LL) = L/ 999 (0.00")
ALLOWABLE DEFL.(TL)= L/360 (0.19")
CALCULATED VERT. DEFL.(TL) = L/ 999 (0.01")

CSI: TC=0.11/1.00 (A-B:1) , BC=0.06/1.00 (C-D:4) , WB=0.00/1.00 (n/a:0) , SSI=0.09/1.00 (A-B:1)

DOL LUMBER=1.00 NAIL=1.00 LS BEND=1.10 COMP=1.10 SHEAR=1.10 TENS= 1.10

COMPANION LIVE LOAD FACTOR = 1.00

TRUSS PLATE MANUFACTURER IS NOT RESPONSIBLE FOR QUALITY CONTROL IN THE TRUSS MANUFACTURING PLANT .

NAIL VALUES

PLATE	GRIP(DRY) (PSI) MAX	MIN	SHEAR (PLI) MAX	MIN	SECTION (PLI) MAX	MIN
MT20	650	371	1747	788	1987	1873

PLATE PLACEMENT TOL. = 0.250 inches

PLATE ROTATION TOL. = 5.0 Deg.

JSI GRIP= 0.08 (A) (INPUT = 0.90)
JSI METAL= 0.07 (A) (INPUT = 1.00)

TECHNICAL BULLETIN

LUS — Double-Shear Joist Hangers

SIMPSON Strong-Tie

All LUS hangers have double-shear nailing. This patented innovation distributes the load through two points on each joist nail for greater strength. It also allows the use of fewer nails, faster installation and the use of common nails for all connections.

Material: 18 gauge

Finish: G90 galvanized

Design:

- Factored resistances are in accordance with CSA O86-14 and CSA O86:19.
- Uplift resistances have been increased 15%. No further increase is permitted.
- Wood shear is not considered in the factored resistances given. The specifier must ensure that the joist and header capacities are capable of withstanding these loads.

Installation:

- Use all specified fasteners
- Nails: 16d = 0.162" dia. x 3½" long common wire, 10d = 0.148" x 3" long common wire
- Double-shear nails must be driven at an angle through the joist or truss into the header to achieve the table loads
- Not designed for welded or nailer applications

Options:

- These hangers cannot be modified

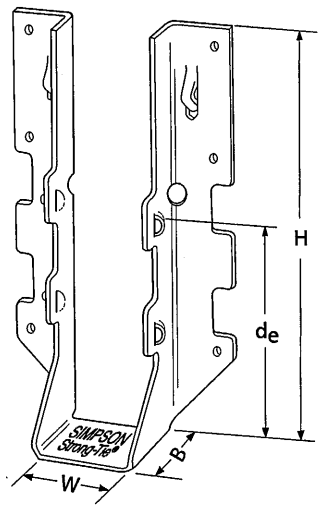

LUS28

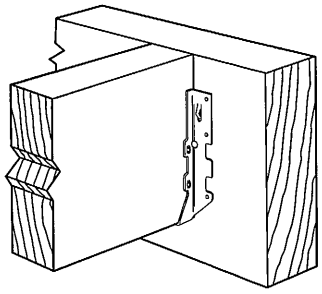

Typical LUS Installation

Model No.	Ga.	Dimensions (in.)				Fasteners		Factored Resistance (lb.)			
								D.Fir–L		S-P-F	
		W	H	B	d_e[1]	Face	Joist	Uplift (K_D=1.15)	Normal (K_D=1.00)	Uplift (K_D=1.15)	Normal (K_D=1.00)
LUS24	18	1 9/16	3 1/8	1 3/4	1 15/16	(4) 10d	(2) 10d	710	1630	645	1155
LUS24-2	18	3 1/8	3 1/8	2	1 13/16	(4) 16d	(2) 16d	835	2020	590	1435
LUS26	18	1 9/16	4 3/4	1 3/4	3 5/8	(4) 10d	(4) 10d	1420	2170	1290	1630
LUS26-2	18	3 1/8	4 7/8	2	4	(4) 16d	(4) 16d	1720	2595	1545	1920
LUS26-3	18	4 5/8	4 3/16	2	3 1/4	(4) 16d	(4) 16d	1720	2595	1545	2340
LUS28	18	1 9/16	6 5/8	1 3/4	3 3/4	(6) 10d	(6) 10d	1420	2520	1290	1790
LUS28-2	18	3 1/8	7	2	4	(6) 16d	(4) 16d	1720	3325	1545	2575
LUS28-3	18	4 5/8	6 1/4	2	3 1/4	(6) 16d	(4) 16d	1720	3325	1545	2375
LUS210	18	1 9/16	7 13/16	1 3/4	3 7/8	(8) 10d	(4) 10d	1420	2785	1290	2210
LUS210-2	18	3 1/8	9	2	6	(8) 16d	(6) 16d	2580	4500	2320	3195
LUS210-3	18	4 5/8	8 3/16	2	5 1/4	(8) 16d	(6) 16d	2580	3345	2320	2375

1. d_e is the distance from the seat of the hanger to the highest joist nail.

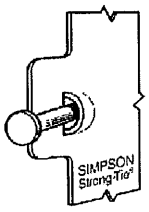

Dome double-shear nailing prevents tabs breaking off (available on some models).

US Patent 5,603,580

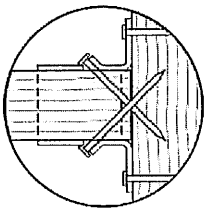

Double-shear nailing top view.

LICENSED PROFESSIONAL ENGINEER
07/19/2022
B. D. BUNTING
PROVINCE OF ONTARIO

This technical bulletin is effective until December 31, 2024, and reflects information available as of July 1, 2022.
This information is updated periodically and should not be relied upon after December 31, 2024.
Contact Simpson Strong-Tie for current information and limited warranty or see strongtie.com.

© 2022 Simpson Strong-Tie Company Inc. • P.O. Box 10789, Pleasanton, CA 94588

(800) 999-5099
strongtie.com

TECHNICAL BULLETIN

HUS/LJS — Double-Shear Joist Hangers

SIMPSON Strong-Tie

All hangers have double-shear nailing. This patented innovation distributes the load through two points on each joist nail for greater strength. It also allows the use of fewer nails, faster installation and the use of common nails for all connections. Do not bend or remove tabs.

Material: See table

Finish: G90 galvanized

Design:

- Factored resistances are in accordance with CSA O86-14 and CSA O86:19.
- Uplift resistances have been increased 15%. No further increase is permitted.
- Wood shear is not considered in the factored resistances given. The specifier must ensure that the joist and header capacities are capable of withstanding these loads.

Installation:

- Use all specified fasteners
- Nails: 16d = 0.162" dia. x 3½" long common wire
- Double-shear nails must be driven at an angle through the joist or truss into the header to achieve the table loads
- Not designed for welded or nailer applications

Options:

- See current catalogue for options

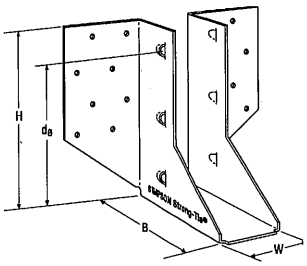

LJS26DS

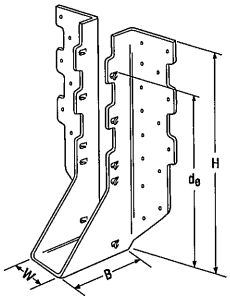

HUS210
(HUS26, HUS28, similar)

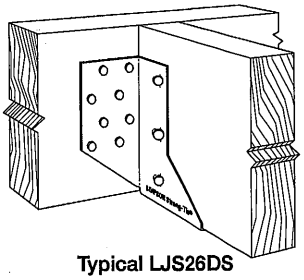

Typical LJS26DS Installation

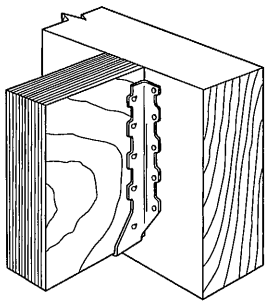

Typical HUS Installation

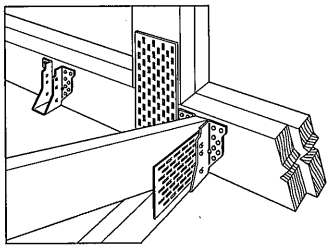

Typical HUS Installation
(Truss designer to provide fastener quantity for connecting multiple members together)

Model No.	Ga.	Dimensions (in.)				Fasteners		Factored Resistance (lb.)			
								D.Fir–L		S-P-F	
		W	H	B	d_e[1]	Face	Joist	Uplift (K_D=1.15) lb.	Normal (K_D=1.00) lb.	Uplift (K_D=1.15) lb.	Normal (K_D=1.00) lb.
LJS26DS	18	1 9/16	5	3½	4⅝	(16) 16d	(6) 16d	2055	4265	1460	4115
HUS26	16	1⅝	5⅜	3	3 15/16	(14) 16d	(6) 16d	2705	4940	2065	3875
HUS28	16	1⅝	7 3/32	3	6 3/32	(22) 16d	(8) 16d	3605	5365	2675	4345
HUS210	16	1⅝	9 3/32	3	7 31/32	(30) 16d	(10) 16d	4505	5795	4010	4740
HUS1.81/10	16	1 13/16	9	3	8	(30) 16d	(10) 16d	4505	6450	4010	5200

1. d_e is the distance from the seat of the hanger to the highest joist nail.

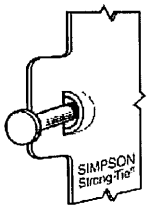

Dome double-shear nailing prevents tabs breaking off (available on some models).

US Patent 5,603,580

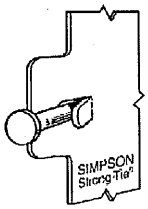

Double-shear nailing side view. Do not bend tab back.

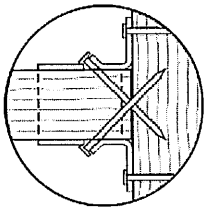

Double-shear nailing top view.

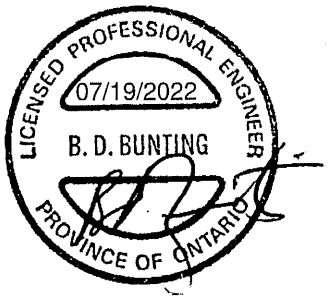

This technical bulletin is effective until December 31, 2024, and reflects information available as of July 1, 2022.
This information is updated periodically and should not be relied upon after December 31, 2024.
Contact Simpson Strong-Tie for current information and limited warranty or see strongtie.com.

© 2022 Simpson Strong-Tie Company Inc. • P.O. Box 10789, Pleasanton, CA 94588

(800) 999-5099
strongtie.com

TECHNICAL BULLETIN

HHUS — Double-Shear Joist Hangers

SIMPSON Strong-Tie

All HHUS hangers have double-shear nailing. This patented innovation distributes the load through two points on each joist nail for greater strength. It also allows the use of fewer nails, faster installation and the use of common nails for all connections. Do not bend or remove tabs.

Material: 14 gauge

Finish: G90 galvanized

Design:

- Factored resistances are in accordance with CSA O86-14 and CSA O86:19.
- Uplift resistances have been increased 15%. No further increase is permitted.
- Wood shear is not considered in the factored resistances given. The specifier must ensure that the joist and header capacities are capable of withstanding these loads.

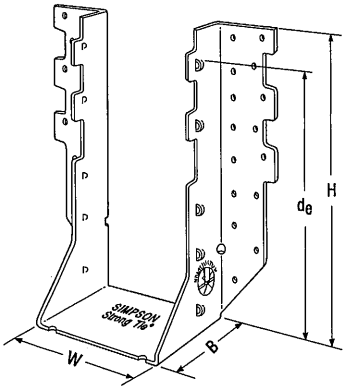

HHUS410

Installation:

- Use all specified fasteners
- Nails: 16d = 0.162" dia. x 3½" long common wire
- Double-shear nails must be driven at an angle through the joist or truss into the header to achieve the table loads
- Not designed for welded or nailer applications

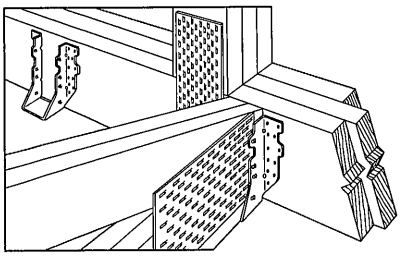

Typical HHUS Installation (Truss designer to provide fastener quantity for connecting multiple members together)

Options:

- See current catalogue for options

Model No.	Ga.	Dimensions (in.)				Fasteners		Factored Resistance (lb.)			
								D.Fir–L		S-P-F	
		W	H	B	d_e[1]	Face	Joist	Uplift (K_D=1.15)	Normal (K_D=1.00)	Uplift (K_D=1.15)	Normal (K_D=1.00)
HHUS26-2	14	3 5/16	5 13/16	3	3 15/16	(14) 16d	(6) 16d	2850	7335	2065	5205
HHUS28-2	14	3 5/16	7 7/32	3	6 5/32	(22) 16d	(8) 16d	3765	8940	2675	6345
HHUS210-2	14	3 5/16	9 3/32	3	8	(30) 16d	(10) 16d	4670	9660	4235	7000
HHUS210-3	14	4 11/16	9	3	7 15/16	(30) 16d	(10) 16d	4670	9670	4235	6865
HHUS210-4	14	6 1/8	8 29/32	3	7 27/32	(30) 16d	(10) 16d	4670	10155	4235	7210
HHUS46	14	3 5/8	5 13/32	3	3 15/16	(14) 16d	(6) 16d	2540	7335	2065	5205
HHUS48	14	3 5/8	7 1/8	3	6 1/8	(22) 16d	(8) 16d	3765	8945	2267	6345
HHUS410	14	3 5/8	9	3	8	(30) 16d	(10) 16d	4670	9855	4235	7000
HHUS5.50/10	14	5 1/2	9	3	8	(30) 16d	(10) 16d	4670	10155	4235	7210
HHUS7.25/10	14	7 1/4	9	3 5/16	7 29/32	(30) 16d	(10) 16d	4670	10155	3370	7210

1. d_e is the distance from the seat of the hanger to the highest joist nail.

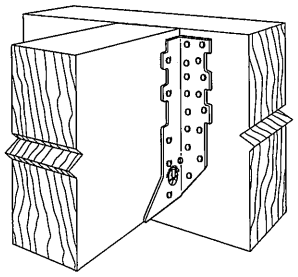

Typical HHUS Installation

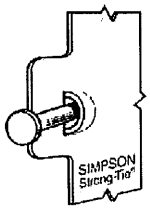

Dome double-shear nailing prevents tabs breaking off (available on some models).

US Patent 5,603,580

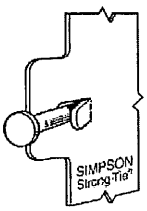

Double-shear nailing side view. Do not bend tab back.

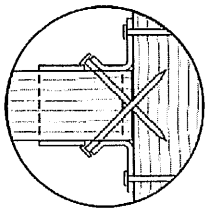

Double-shear nailing top view.

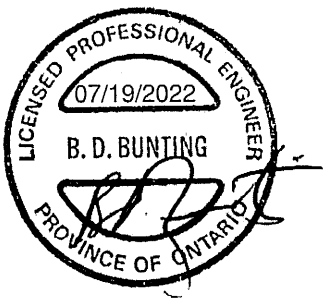

This technical bulletin is effective until December 31, 2024, and reflects information available as of July 1, 2022.
This information is updated periodically and should not be relied upon after December 31, 2024.
Contact Simpson Strong-Tie for current information and limited warranty or see strongtie.com.

© 2022 Simpson Strong-Tie Company Inc. • P.O. Box 10789, Pleasanton, CA 94588

T-SPECHHUS22 7/22 exp. 12/24

(800) 999-5099
strongtie.com

TECHNICAL BULLETIN

TC — Truss Connectors

SIMPSON Strong-Tie

The TC truss connector is an ideal connector for scissor trusses and can allow horizontal movement up to 1¼". The TC also attaches plated trusses to top plates or sill plates to resist uplift forces, and is typically used on one or both ends of truss as determined by the building designer.

Material: 16 gauge

Finish: G90 galvanized

Design: Factored resistances are in accordance with CSA O86-14 and CSA O86:19

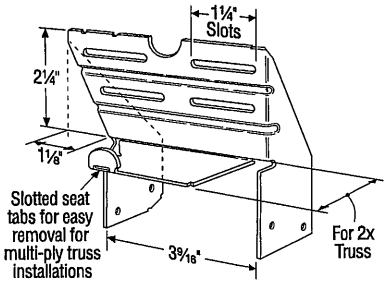

TC24
US Patent 4,932,173

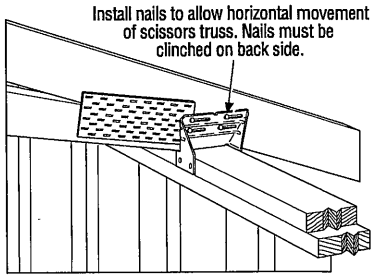

Typical TC24 Installation

Installation:

- Use all specified fasteners.
- Nails: 10d = 0.148" dia. x 3" long common wire, 10d x 1½ = 0.148" dia. x 1½" long.
- Drive 10d nails into the truss at the inside end of the slotted holes (inside end is towards the centre of the truss) and clinch on the back side. Do not seat these nails into the truss — allow room under the nail head for movement of the truss with respect to the wall.

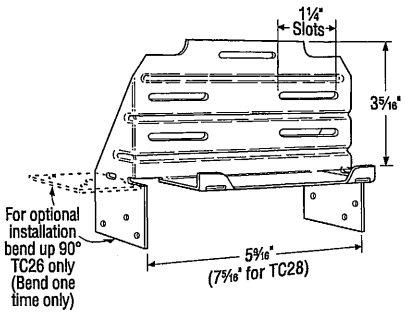

TC26
(TC28 Similar)

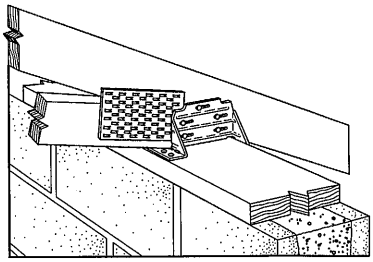

Optional TC26 Installation for Grouted Concrete Block using a Wood Nailer
(8", 10", 12" Wall Installation Similar)

Optional TC Installation:

- Bend one flange up 90°. Drive specified nails into the top and face of the top plates or install Titen® screws into the top and face of masonry wall. See optional load tables and installation details.

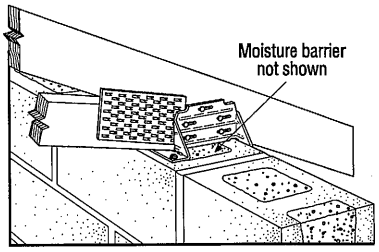

Optional TC26 Installation for Grouted Concrete Block using Titen Screws

Model No.	Fasteners		Factored Resistance	
	Truss	Wall Plates	D.Fir–L	S-P-F
			Uplift (K_D=1.15)	Uplift (K_D=1.15)
			lb.	lb.
TC24	(4) 10d	(4) 10d	605	430
TC26	(5) 10d	(6) 10d	1015	720
TC28	(5) 10d	(6) 10d	1015	720

1. Factored resistances have been increased 15% for earthquake or wind loading; no further increase allowed; reduce where other loads govern.
2. Grout strength is 15 MPa minimum.
3. Optional TC26 installation with 10d nails requires minimum 3" top plate thickness.
4. TC26 fastened to grouted concrete block with (6) – ⁹⁄₁₆" x 2¼" Titen screws has a factored uplift resistance of 275 lb.

Optional TC Installation Table

Model No.	Fasteners		Factored Resistance	
	Truss	Wall Plates	D.Fir–L	S-P-F
			Uplift (K_D=1.15)	Uplift (K_D=1.15)
			lb.	lb.
TC26	(5) 10d	(6) 10d x 1½"	810	660
	(5) 10d	(6) 10d	930	660

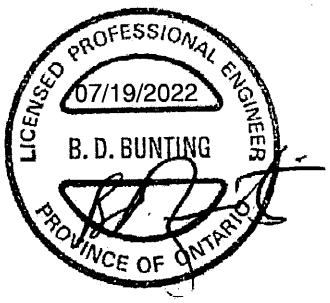

This technical bulletin is effective until December 31, 2024, and reflects information available as of July 1, 2022.
This information is updated periodically and should not be relied upon after December 31, 2024.
Contact Simpson Strong-Tie for current information and limited warranty or see strongtie.com.

© 2022 Simpson Strong-Tie Company Inc. • P.O. Box 10789, Pleasanton, CA 94588

(800) 999-5099
strongtie.com

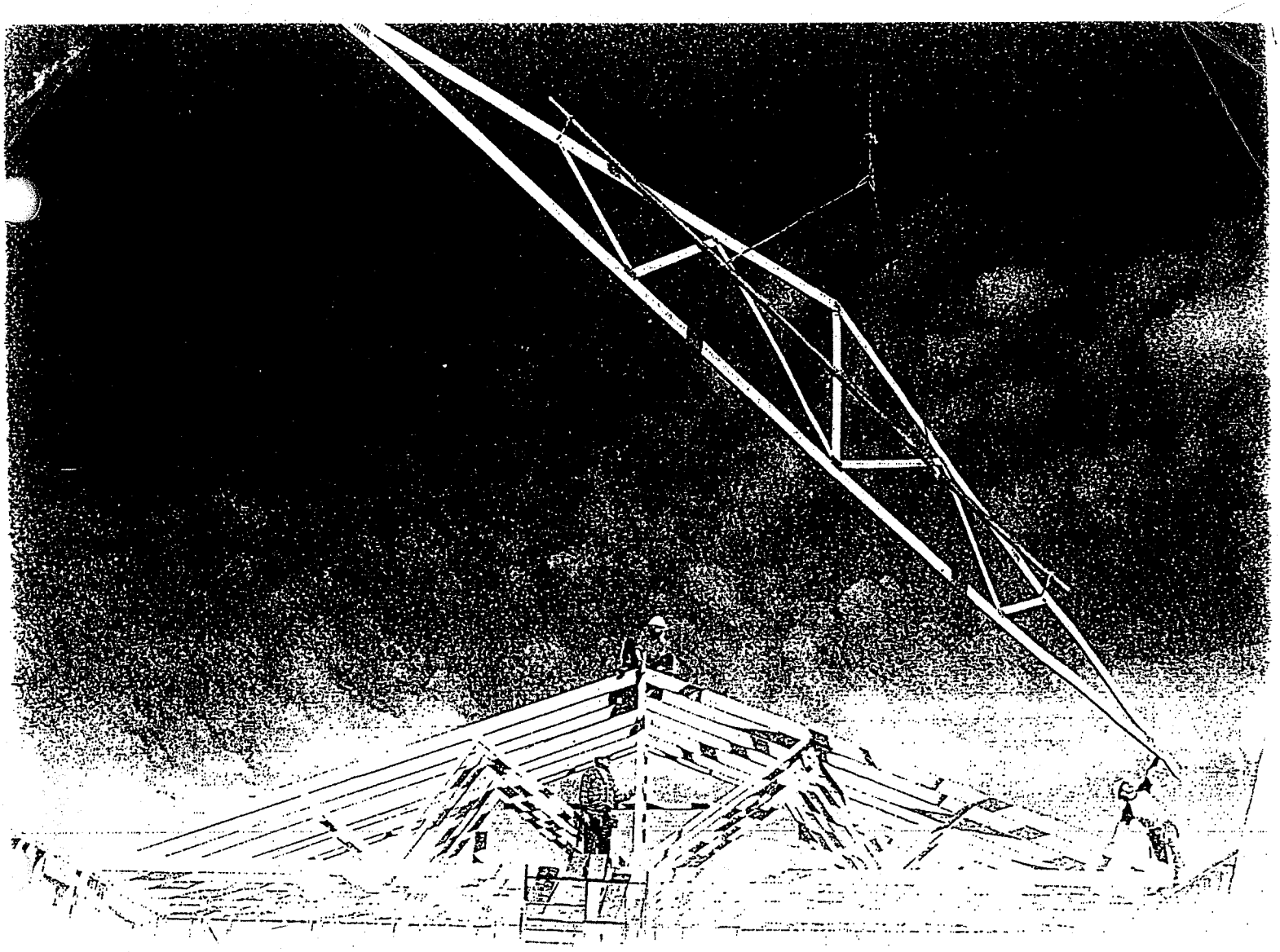

Wood Truss Installation

A Guide to proper handling, erecting and bracing metal plate connected wood trusses

Table of Content

Warning.....4

1 Unloading & Lifting.....5

2 Job Site Handling.....5

3 Hoisting.....6

4 Beginning the Erection Process.....7

5 Erection Tolerance.....8

6 Bracing.....8

7 Bracing Requirements for 3 Planes of Roof.....9

8 Stacking Materials.....10

Caution Notes.....11

Warning

General

Familiarity with the Construction Design Documents, the Truss Design Drawings, and Truss Placement Plans (if required by the Construction Design Documents) is required to properly erect, brace, and connect the trusses to the building system.

All of the care and quality involved in the design and manufacture of wood trusses can be jeopardized if the trusses are not properly handled, erected, and braced.

The consequences of improper handling, erecting, and bracing may be a collapse of the structure, which at best is a substantial loss of time and materials, and at worst is a loss of life. The majority of truss accidents occur during truss installation and not as a result of improper design or manufacture.

Prior to truss erection, the builder/erector shall meet with the erection crew for a safety and planning meeting, making sure each crew member understands his or her roles and responsibilities during the erection process.

Temporary Erection Bracing

Trusses are not marked in any way to identify the frequency, or location of temporary erection bracing.

All temporary bracing shall comply with the latest edition of *Commentary and Recommendations for Handling, Installing & Bracing Metal Plate Connected Wood Trusses* (HIB), published by the Truss Plate Institute, and/or as specified in the Construction Design Documents prepared by the building designer.

Permanent Truss Bracing

Permanent bracing for the roof or floor trusses is the responsibility of the building designer and should be shown on the Construction Design Documents. Permanent bracing locations for individual compression members of a wood truss are shown on the Truss Design Drawings, and shall be installed by the building or erection contractor. This bracing is needed for the proper performance of individual trusses within the roof or floor system. The design and connection of the bracing to the truss and then to the overall building system is the responsibility of the building designer, and is in addition to the permanent bracing plan, which is also specified by the building designer.

Special Design Requirements

Special design requirements, such as wind bracing, portal bracing, seismic bracing, diaphragms, shear walls, or other load transfer elements and their connections to wood trusses must be considered separately by the building designer, who shall determine size, location, and method of connections for all bracing as needed to resist these forces.

1 Unloading & Lifting

Never handle trusses flat

Beginning with the unloading process, and throughout all phases of construction, care must be taken to avoid lateral bending of trusses, which can cause damage to the lumber and metal connector plates at the joints.

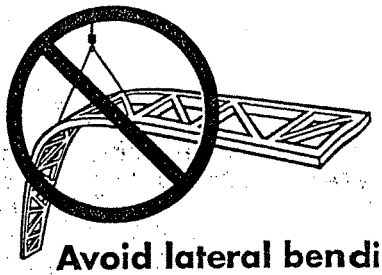

Avoid lateral bending

- **Use special care in windy weather.**
- **If using a crane within 10 feet of an electric line, contact the local power company.**
- **If using a crane within 5 miles of an airport, contact the airport 30 days prior to erection to learn about any safety regulations that must be followed.**

2 Job Site Handling

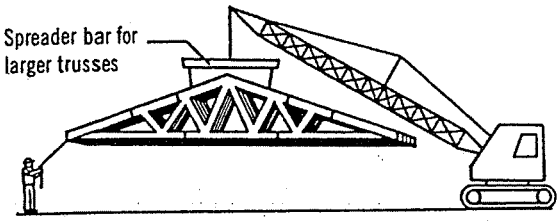

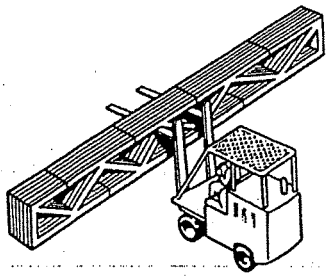

All trusses should be picked up at the top chords in a vertical position only

Proper banding and smooth ground allow for unloading of trusses without damage. This should be done as close to the building site as possible to minimize handling. Do not break banding until installation begins. Hand erection of trusses is allowed, provided excessive lateral bending is prevented.

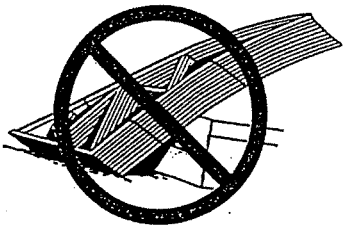

Do not store unbraced bundles upright

If trusses are stored vertically they shall be braced in a manner that will prevent tipping or topping. Generally cuting of the banding is done just prior to installation.

Do not store on uneven ground

If trusses are stored horizontally, blocking should be used on eight to ten foot centers, or as required, to minimize lateral bending and moisture gain.

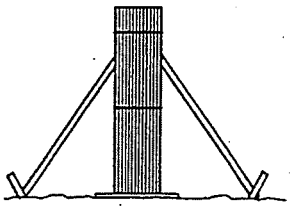

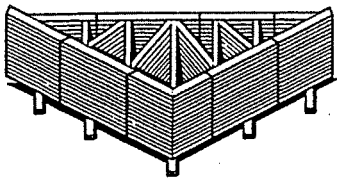

Care should be exercised when removing banding to avoid damaging trusses.

During long term storage, trusses shall be protected from the environment in a manner that provides for adequate ventilation of the trusses. If tarpaulins or other material is used, the ends shall be left open for ventilation. Plastic is not recommended, since it can trap moisture.

3 Hoisting

All trusses that are erected one at a time shall be held safely in position by the erection equipment until such time as all necessary bracing has been installed and the ends of the trusses are securely fastened to the building.

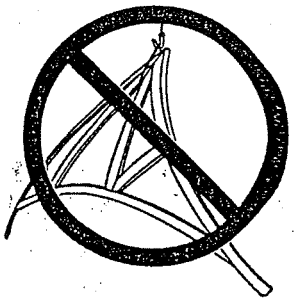

Avoid lateral bending

L ≤ 30'

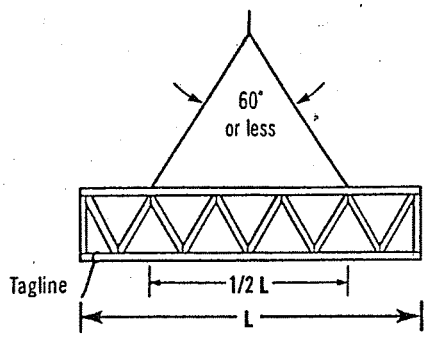

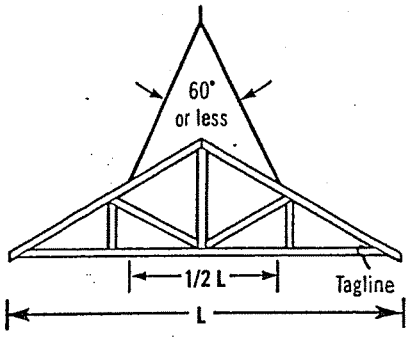

Truss sling is acceptable where these criteria are met.

30' < L ≤ 60'

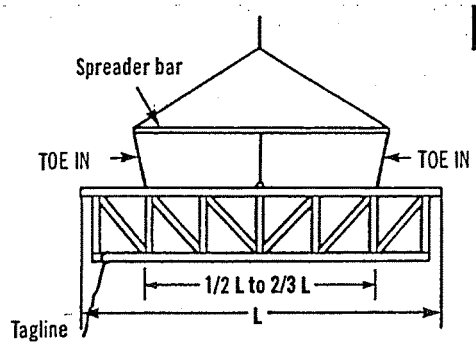

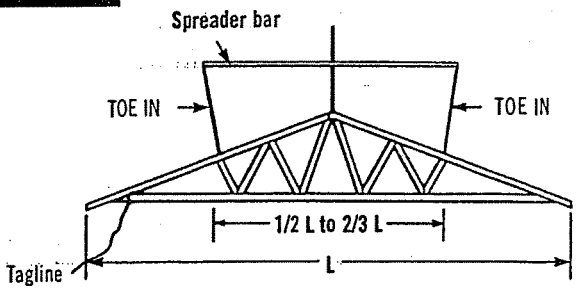

Use spreader bar in all other cases. It should be noted that the lines from the ends of the spreader bar "**TOE IN**"; if these lines should "**TOE OUT**" the truss may fold in half.

L > 60'

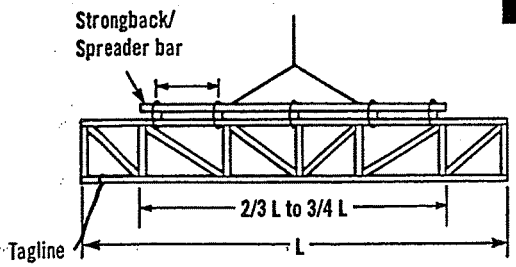

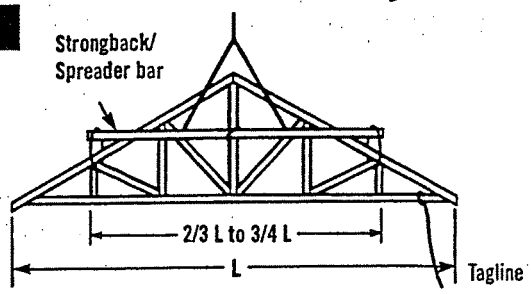

For lifting trusses with spans in excess of 60 feet, it is recommended that a strongback/spreader bar be used as illustrated. The strongback/spreader bar should be attached to the top chord and web members at intervals of approximately 10 feet. Further, the strongback/spreader bar should be at or above the mid-height of the truss to prevent overturning. The strongback/spreader bar can be of any material with sufficient strength to safely carry the weight of the truss and sufficient rigidity to adequately resist bending of the truss.

4 Beginning the Erection Process

It is important for the builder or erection contractor to provide substantial bracing for the first truss erected. The two or more trusses making up the rest of the first set are tied to and rely upon the first truss for stability. Likewise, after this first set of trusses is adequately cross-braced, the remaining trusses installed rely upon this first set for stability. Thus, the performance of the truss bracing system depends to a great extent on how well the first group of trusses is braced.

Ground Brace – Exterior

One satisfactory method ties the first unit of trusses off to a series of braces that are attached to a stake driven into the ground and securely anchored. The ground brace itself should be supported as shown below or it is apt to buckle. Additional ground braces in the opposite direction, inside the building, are also recommended.

Ground Brace – Interior

Another satisfactory method where height of building or ground conditions prohibit bracing from the exterior is to tie the first truss rigidly in place from the interior at the floor level, provided the floor is substantially completed and capable of supporting the ground bracing forces. Securely fasten the first truss to the middle of the building. Brace the bracing similar to exterior ground bracing shown at left. Set trusses from the middle toward the end of the building. Properly cross-brace the first set of trusses before removing floor braces and setting remaining trusses.

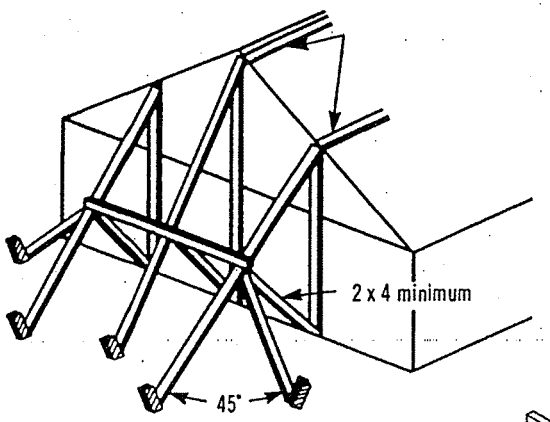

Note: Locate ground braces for first truss directly in line with all rows of top chord continuous lateral bracing (either temporary or permanent).

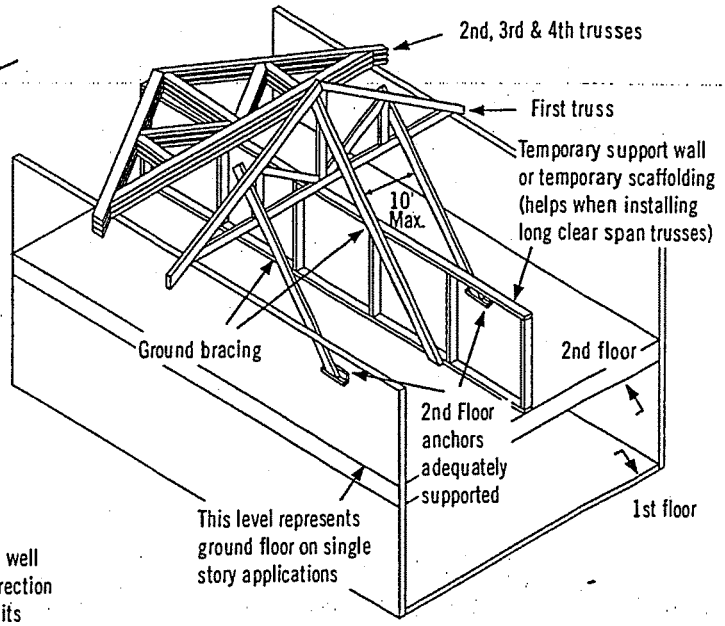

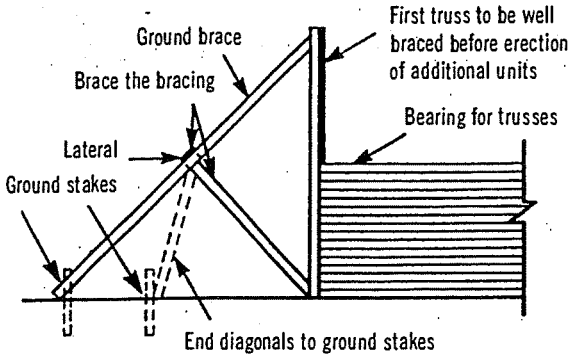

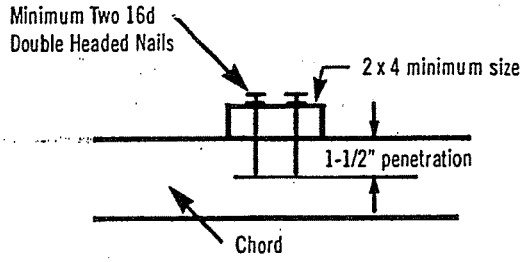

Inadequate size of bracing material or inadequate fastening is a major cause of erection dominoing.

5 Erection Tolerance

Complying with erection tolerances is critical to achieving an acceptable roof or floor line, and to accomplishing effective bracing. Setting trusses within tolerance the first time will prevent the need for the hazardous practice of respacing or adjusting trusses when roof sheathing or roof purlins are installed. Trusses leaning or bowing can cause nails to miss the top chords when sheathing is applied, and create cumulative stresses on the bracing, which is a frequent cause of dominoing.

When sheathing, make sure nails are driven into the top chord of the trusses.

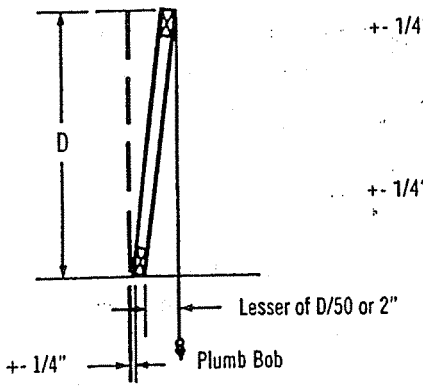

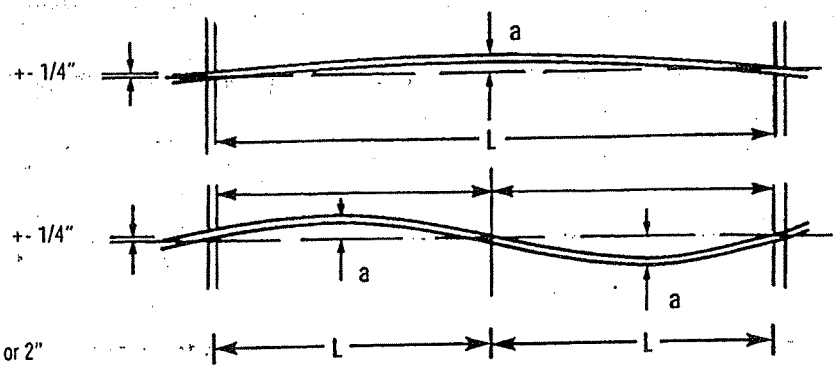

L = 16' to 32', a = 1"
L = 32' & over, a = 2"

6 Bracing

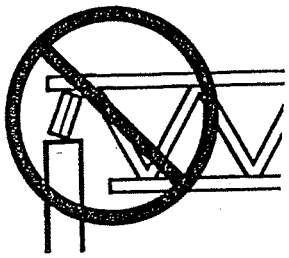

Do not install trusses on temporarily connected supports

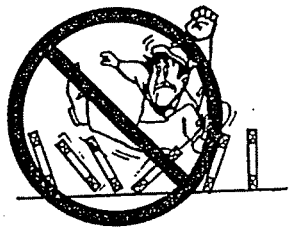

Do not walk on unbraced trusses

Do not walk on trusses or gable ends lying flat

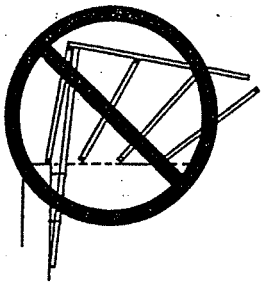

Nails in withdrawal (parallel to force)

All anchors, hangers, tie-downs, seats, bearing ledgers, etc., that are part of the supporting structure shall be accurately and properly placed and permanently attached before truss installation begins. No trusses shall ever be installed on anchors or ties that have temporary connections to the supporting structure.

Nailing scabs to the end of the building to brace the first truss is not recommended.
All nailing of bracing should be done so that nails are driven perpendicular to the direction of force, as shown at right.

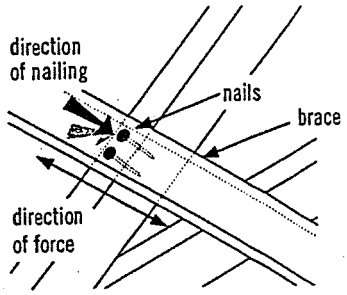

Well nailed (perpendicular to force)

7 Bracing Requirements for 3 Planes of Roof

Temporary erection bracing must be applied to three planes of the roof system to ensure stability: Plane 1) Top Chord (sheathing), Plane 2) Bottom Chord (ceiling plane), and Plane 3) Web Member plane or vertical plane perpendicular to trusses.

1) Top Chord Plane

Most important to the builder or erection contractor is bracing in the plane of the top chord. Truss top chords are susceptible to lateral buckling before they are braced or sheathed.

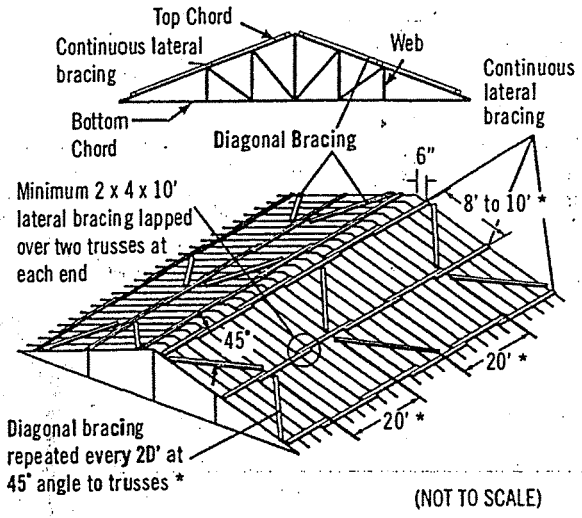

(NOT TO SCALE)

Exact spacing between trusses should be maintained as bracing is installed to avoid the hazardous practice of removing bracing to adjust spacing. This act of "adjusting spacing" can cause trusses to topple if connections are removed at the wrong time.

2) Bottom Chord Plane

In order to hold proper spacing on the bottom chord, temporary bracing is recommended on the top of the bottom chord.

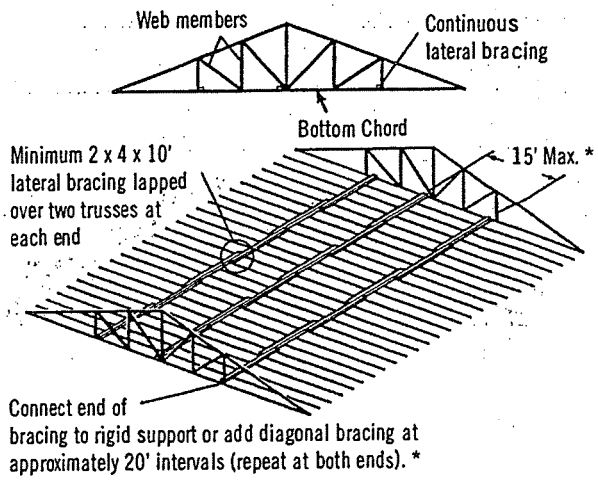

* Long spans, heavy loads or other spacing configurations may require closer spacing between lateral bracing and closer intervals between diagonals. Consult the building designer or HIB and DSB (*Recommended Design Specification for Temporary Bracing of Metal-Plate Connected Wood Trusses*) for details.

Diagonal or cross-bracing is very important!

3) Web Member Plane

"X" bracing, as shown, is critical in preventing trusses from leaning or dominoing. Repeat as shown to create a succession of rigid units.

X-bracing should be installed on vertical web members wherever possible, at or near lateral bracing. Plywood or OSB may be substituted for X-bracing.

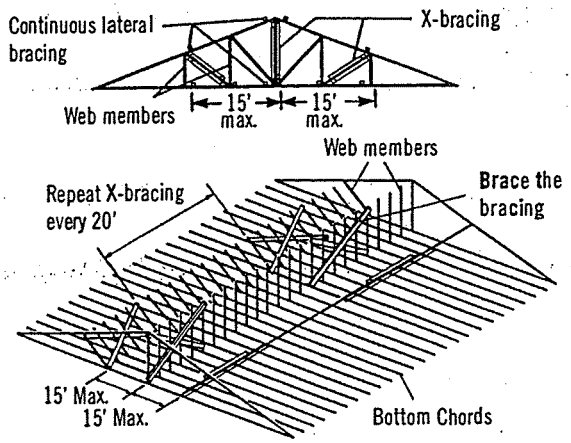

Note: Top chords and some web members are not shown, in order to make drawings more readable.

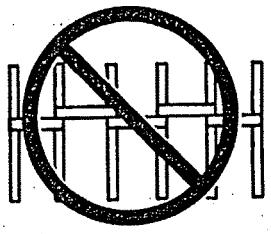

Do not use short blocks to brace individual trusses without a specific bracing plan detailing their use

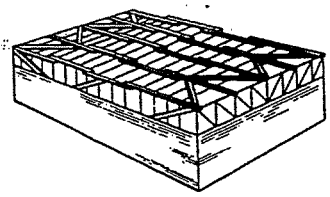

Bracing requirements using the same principles apply to parallel chord trusses

8 Stacking Materials

Do not proceed with building completion until all bracing is securely and properly in place

Never stack materials on unbraced or inadequately braced trusses

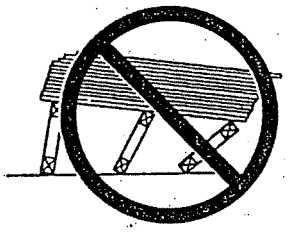

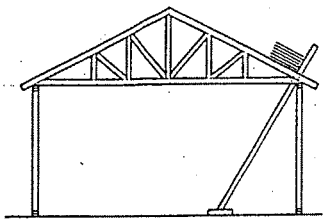

Proper distribution of construction materials is a must during construction.

Never stack materials near a peak

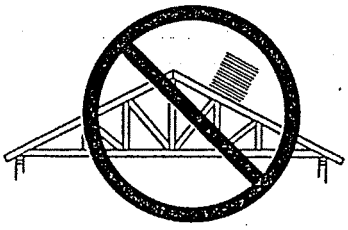

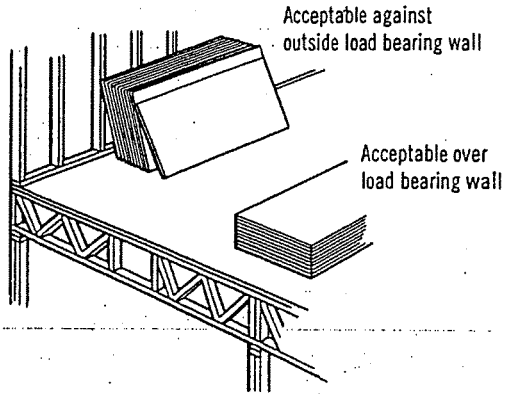

Never stack materials on the cantilever of a truss

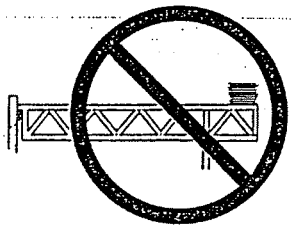

Always stack materials over two or more trusses.

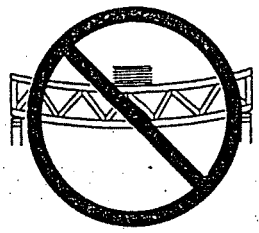

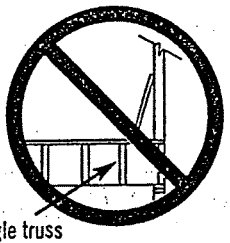

Never overload small groups or single trusses. Position load over as many trusses as possible.

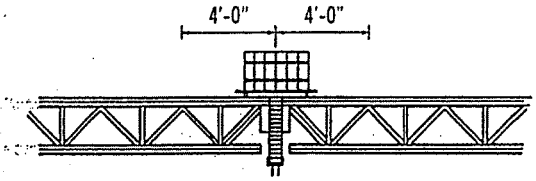

Roofing and mechanical contractors are cautioned to stack materials only along outside supporting members or directly over inside supporting members. Trusses are not designed for dynamic loads (i.e., moving vehicles). Extreme care should be taken when loading and stacking construction materials (rolled roofing, mechanical equipment, etc.) on the roof or floor system.

Never cut any structural member of a truss.

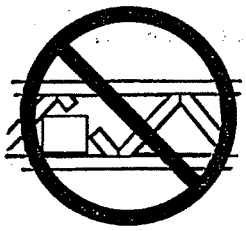

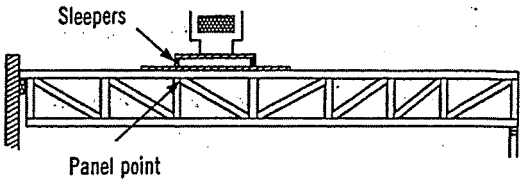

Sleepers for mechanical equipment should be located at panel points (joints) or over main supporting members, and only on trusses that have been designed for such loads.

Caution Notes

Errors in building lines and/or dimensions, or errors by others shall be corrected by the contractor or responsible construction trade subcontractor or supplier **before** erection of trusses begins.

Cutting of nonstructural overhangs is considered a part of normal erection and shall be done by the builder or erection contractor.

Any field modification that involves the cutting, drilling, or relocation of any structural truss member or connector plate shall not be done without the approval of the truss manufacturer or a licensed design professional.

The methods and procedures outlined are intended to ensure that the overall construction techniques employed will put floor and roof trusses safely in place in a completed structure. These recommendations for bracing wood trusses originate from the collective experience of leading technical personnel in the wood truss industry, but must, due to the nature of responsibilities involved, be presented only as a guide for use by a qualified building designer, builder, or erection contractor. Thus, the Wood Truss Council of America expressly disclaims any responsibility for damages arising from the use, application, or reliance on the recommendations and information contained herein.

[Selected text and figures referenced or reproduced from HIB and DSB by permission of the Truss Plate Institute, Madison, WI.]

THE CANADIAN WOOD TRUSS ASSOCIATION

L'ASSOCIATION CANADIENNE DES FABRICANTS DE FERMES DE BOIS

1400 Blair Place, Suite 210, Ottawa, ON K1J 9B8
Tel.: 613-747-5544 Fax: 613-747-6264

Wood Truss Council of America

One WTCA Center
6300 Enterprise Lane, Madison, WI 53719-1140
Tel.: 608-274-4849 Fax: 608-274-3329
wtca@woodtruss.com www.woodtruss.com