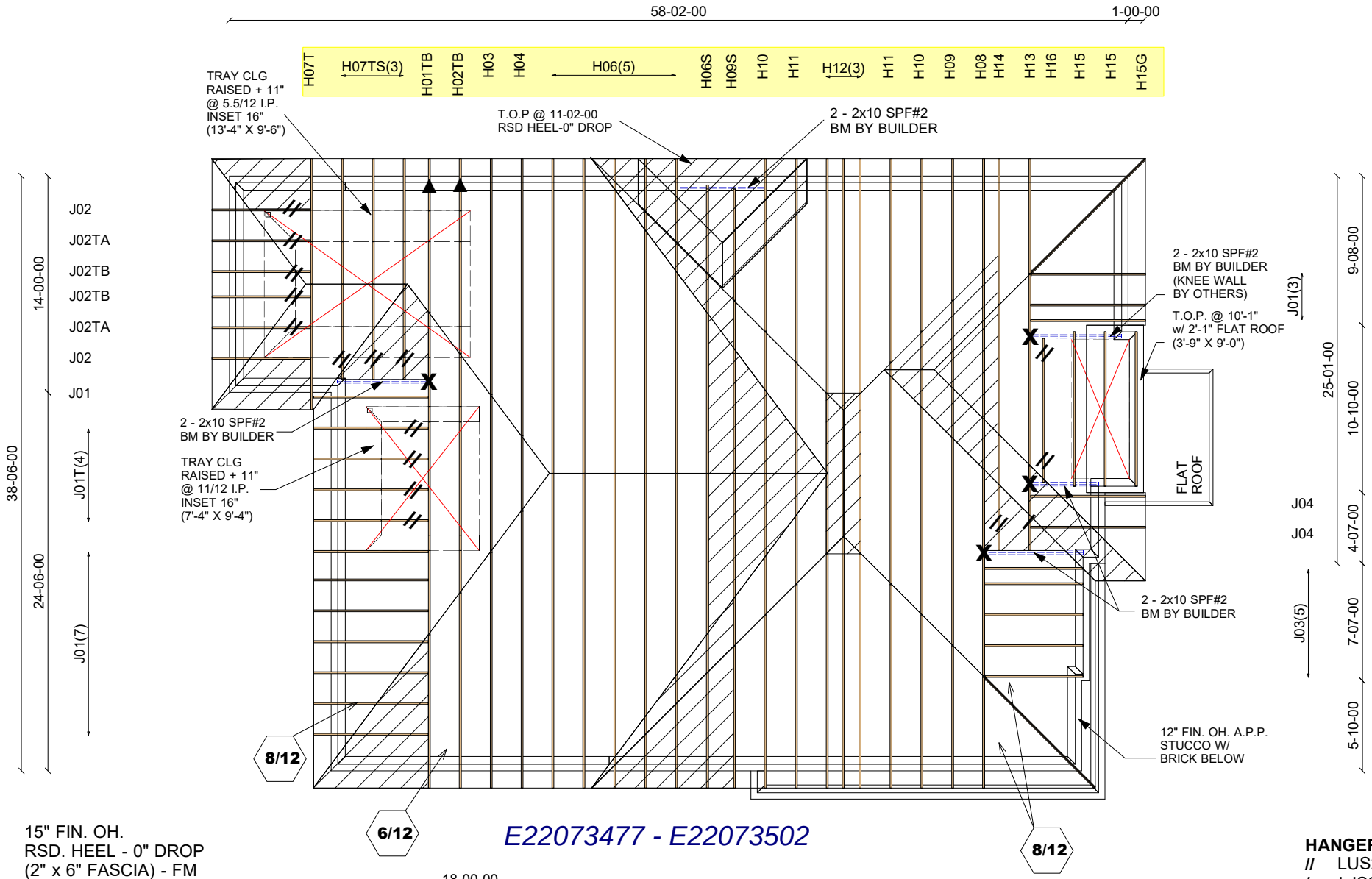


15" FIN. OH.
RSD. HEEL - 0" DROP
(2" x 6" FASCIA) - FM
ASPHALT SHINGLES
2" X 6" BRG/BRICK

**HANGERS**

| | |
|---|---|
| // | LUS24 |
| / | LJS26DS |
| X | HHUS26-2 |
| ▲ | TC26 |

Mitek V. 8.5.3.233

ALL CONVENTIONAL FRAMING TO CONFORM WITH PART 9 O.B.C. LATEST EDITION. ROOF RAFTERS THAT CROSS OVER TRUSSES TO BE 2X4 SPF #2 @ 24" O.C WITH A VERT. POST TO THE TRUSS UNDERNEATH AT EACH CROSS POINT. VERT. POSTS LONGER THAN 6' TO HAVE LATERAL BRACING SO THAT THE DISTANCE BETWEEN END POINTS & BETWEEN ROWS OF BRACING DOES NOT EXCEED 6'

CONVENTIONAL FRAMING BY OTHERS

| | | | |
|---|---|---|---|
| Job Track: **45147** | Builder / Location: **GOLD PARK HOMES / VAUGHAN** | Model / Elevation: **5003 MOD** | **/ C*LOT 50** |
| Layout ID: **345177** | Project: **PINE VALLEY PH 2** | THESE DRAWINGS CONSTITUTE THE PROPERTY OF ALPA ROOF TRUSSES INC., SHALL NOT BE REPRODUCED, PUBLISHED, OR REDISTRIBUTED IN ANY MANNER OR UTILIZED FOR ANY PURPOSE OTHER THAN THE MANUFACTURE OF TRUSSES BY ALPA ROOF TRUSSES INC AND WILL BE RETRACTED BY ALPA ROOF TRUSSES INC IF UTLILZED FOR ANY OTHER PURPOSE. | |
| Plan Log: **117714** | Date: **6/23/2022** Designer: JBURROWS | | |

# EWP DESIGN INC.

(905) 832-2250 FAX (905) 832-0286

## RESPONSIBILITIES AND SPECIFICATIONS

**RESPONSIBILITIES**

1. EWP DESIGN INC. is responsible for the design of trusses as individual components.
2. It is the responsibility of others to ascertain that the design loads utilized on each drawing meet or exceed the actual dead load imposed by the structure, the live load imposed by the intended use and the snow load imposed by local building code or authorities with jurisdictions.
3. All dimensions are to be verified by the owner, contractor, architect or other authorities with jurisdictions before truss fabrication.
4. EWP DESIGN INC. bears no responsibility for the erection of trusses. Persons erecting trusses are cautioned to seek professional advice regarding the temporary and permanent bracing for the system. Bracing shown on EWP DESIGN INC. drawing is specified for the truss as a component only and forms an integral part of the truss design.
5. It is the truss manufacturer's responsibility to ensure that trusses are manufactured in conformance with specifications of EWP DESIGN INC. as outlined below.

**SPECIFICATIONS**

1. Trusses designed by EWP DESIGN INC. conform to the relevant section of the Ontario Building Code of Canada (Part 9 or Part 4) or to the Canadian code for farm buildings, whichever applies to the building type, as indicated on the EWP DESIGN INC. drawings, and conform to the design procedures established by the Truss Plate Institute of Canada. Unit stresses used for truss designs are as per the edition of CSA-O86 shown on EWP DESIGN INC. drawings.
2. Lumber is to be the size, species and grade as specified on EWP DESIGN INC. drawings.
3. Moisture content of lumber shall not exceed 19% in service unless specified otherwise.
4. Metal connector plates shall be applied to both faces of truss at each joint and shall be positioned as specified.
5. Top chords of trusses are assumed to be continuously braced laterally by roof sheathing or by purlins at intervals not exceeding 12.5 times the thickness of top chord member.
6. Bottom chords shall be laterally braced at intervals not exceeding 3M (10') o.c., where rigid ceiling is not applied directly to the underside of chords.

THESE DRAWINGS CONSTITUTE THE PROPERTY OF EWP DESIGN INC., SHALL NOT BE REPRODUCED, PUBLISHED, OR REDISTRIBUTED IN ANY MANNER OR UTILIZED FOR ANY PURPOSE OTHER THAN THE MANUFACTURE OF TRUSSES BY THE ALPA LUMBER GROUP, AND WILL BE RETRACTED BY EWP DESIGN INC. IF UTILIZED FOR ANY OTHER PURPOSE.

| JOB NAME | TRUSS NAME | QUANTITY | PLY | JOB DESC. | DRWG NO. |
|---|---|---|---|---|---|
| 345177 | H01TB | | 1 | TRUSS DESC. JT 45147 | E22073477 |

Alpha Roof Truss, Maple

Version 8.530 S Feb 23 2022 MiTek Industries, Inc. Tue Jul 12 10:23:50 2022 Page 1

ID:RK?4zbbW6zKUfpVYHQwqmTz3QmS-ddt79LdTC8rQpC0gRQSJJOz7HaeBswYMxSzrqvyyrs7

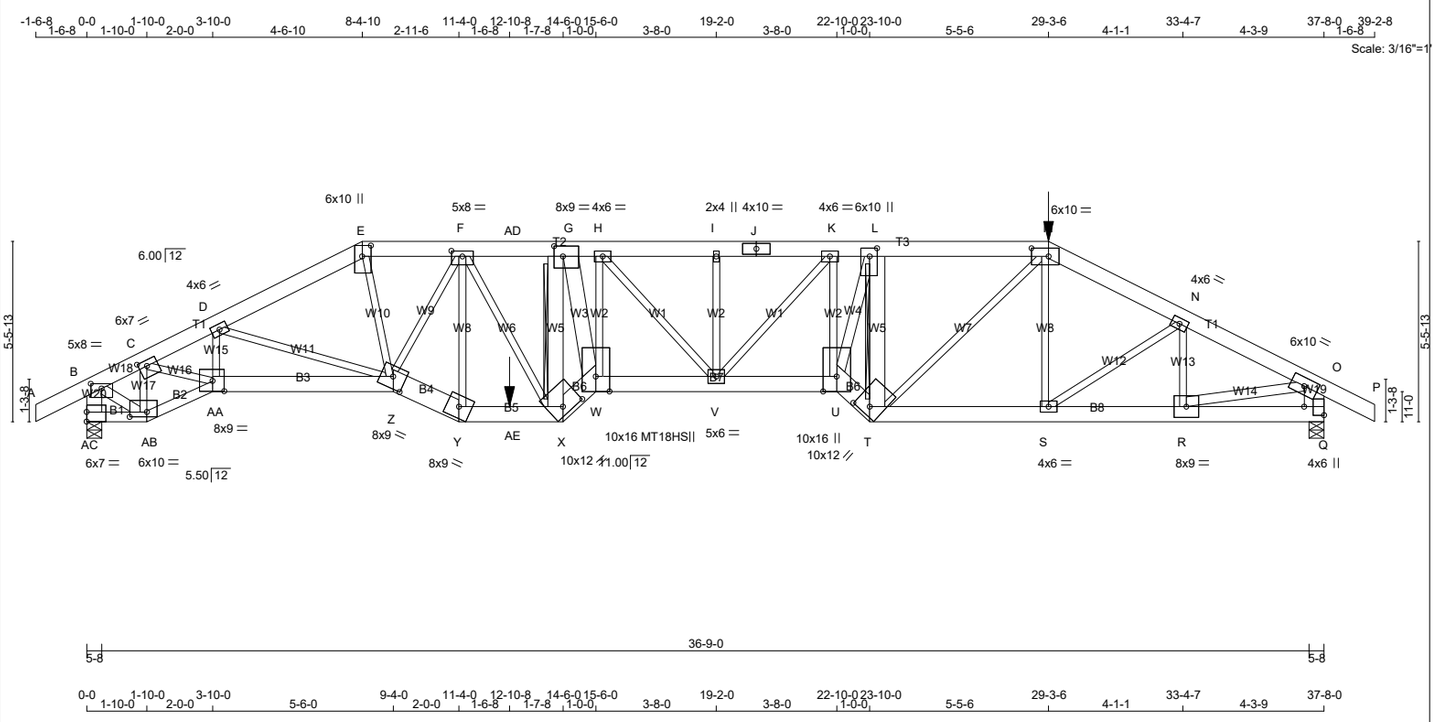


**LUMBER**

N. L. G. A. RULES

| CHORDS | SIZE | | LUMBER | DESCR. |
|---|---|---|---|---|
| A - E | 2x6 | DRY | No.2 | SPF |
| E - J | 2x6 | DRY | No.2 | SPF |
| J - M | 2x6 | DRY | No.2 | SPF |
| M - P | 2x6 | DRY | No.2 | SPF |
| AC- B | 2x6 | DRY | No.2 | SPF |
| Q - O | 2x8 | DRY | No.2 | SPF |
| AC- AB | 2x4 | DRY | No.2 | SPF |
| AB- AA | 2x4 | DRY | No.2 | SPF |
| AA- Z | 2x6 | DRY | No.2 | SPF |
| Z - Y | 2x8 | DRY | No.2 | SPF |
| Y - X | 2x6 | DRY | 1650F 1.5E | SPF |
| X - W | 2x8 | DRY | 1950F 1.7E | SPF |
| W - U | 2x6 | DRY | 1650F 1.5E | SPF |
| U - T | 2x8 | DRY | 1950F 1.7E | SPF |
| T - Q | 2x6 | DRY | No.2 | SPF |
| ALL WEBS | 2x3 | DRY | No.2 | SPF |
| EXCEPT | | | | |
| X - G | 2x6 | DRY | No.2 | SPF |
| G - W | 2x6 | DRY | No.2 | SPF |
| U - L | 2x4 | DRY | 1650F 1.5E | SPF |
| T - L | 2x6 | DRY | No.2 | SPF |
| B - AB | 2x4 | DRY | No.2 | SPF |
| R - O | 2x4 | DRY | No.2 | SPF |

DRY: SEASONED LUMBER.

**PLATES (table is in inches)**

| JT | TYPE | PLATES | W | LEN | Y | X |
|---|---|---|---|---|---|---|
| B | TMVW-p | MT20 | 5.0 | 8.0 | 1.75 | 4.00 |
| C | TMWW-t | MT20 | 6.0 | 7.0 | 2.00 | 3.00 |
| D, H, K, N | | | | | | |
| D | TMWW-t | MT20 | 4.0 | 6.0 | | |
| E | TTW+p | MT20 | 6.0 | 10.0 | 4.00 | 3.25 |
| F | TMWWW-t | MT20 | 5.0 | 8.0 | 2.00 | 4.00 |
| G | TMWW-t | MT20 | 8.0 | 9.0 | 3.75 | 3.25 |
| I | TMW+w | MT20 | 2.0 | 4.0 | | |
| J | TS-t | MT20 | 4.0 | 10.0 | | |
| L | TMWW+t | MT20 | 6.0 | 10.0 | 3.00 | 2.75 |
| M | TTWW-l | MT20 | 6.0 | 10.0 | 3.00 | 6.25 |
| O | TMVW-t | MT20 | 6.0 | 10.0 | | |
| Q | BMV1+p | MT20 | 4.0 | 6.0 | 3.25 | Edge |
| R | BMWW-t | MT20 | 8.0 | 9.0 | | |
| S | BMWW-t | MT20 | 4.0 | 6.0 | | |
| T | BBWW+h | MT20 | 10.0 | 12.0 | 3.00 | 5.25 |
| U | BBWW+p | MT20 | 10.0 | 16.0 | Edge | |
| V | BMWWW-t | MT20 | 5.0 | 6.0 | | |
| W | BBWW+p | MT18HS | 10.0 | 16.0 | Edge | |
| X | BBWW-h | MT20 | 10.0 | 12.0 | 2.75 | 7.00 |
| Y | BBW-h | MT20 | 8.0 | 9.0 | | |
| Z | BBWWW-h | MT20 | 8.0 | 9.0 | 4.25 | 4.50 |
| AA | BBWW-l | MT20 | 8.0 | 9.0 | 3.75 | 4.25 |
| AB | BBWW-l | MT20 | 6.0 | 10.0 | 1.75 | 6.25 |
| AC | BMV1-t | MT20 | 6.0 | 7.0 | 3.50 | |

Edge - INDICATES REFERENCE CORNER OF PLATE TOUCHES EDGE OF CHORD.

LATERAL BRACE(S) SHOWN SHALL BE 2X4 SPF#2

**DIMENSIONS, SUPPORTS AND LOADINGS SPECIFIED BY FABRICATOR TO BE VERIFIED BY BUILDING DESIGNER**

**BEARINGS**

| JT | FACTORED GROSS REACTION VERT | HORZ | MAXIMUM FACTORED GROSS REACTION DOWN | HORZ | UPLIFT | INPUT BRG IN-SX | REQRD BRG IN-SX |
|---|---|---|---|---|---|---|---|
| AC | 3518 | 0 | 3518 | 0 | 0 | 5-8 | 5-8 |
| Q | 3703 | 0 | 3703 | 0 | 0 | 5-8 | 4-13 |

ALLOW FOR 0.4" OF HORIZONTAL MOVEMENT DUE TO TOTAL LOAD

**UNFACTORED REACTIONS**

1ST LCASE MAX./MIN. COMPONENT REACTIONS

| JT | COMBINED | SNOW | LIVE | PERM.LIVE | WIND | DEAD | SOIL |
|---|---|---|---|---|---|---|---|
| AC | 2503 | 1557 / 0 | 0 / 0 | 0 / 0 | 0 / 0 | 946 / 0 | 0 / 0 |
| Q | 2641 | 1609 / 0 | 0 / 0 | 0 / 0 | 0 / 0 | 1032 / 0 | 0 / 0 |

BEARING MATERIAL TO BE SPF NO.2 OR BETTER AT JOINT(S) AC, Q
BEARING SIZE FACTOR = 1.15 AT JNT(S) AC ( BASED ON SUPPORT DEPTH = 1-8 )

**BRACING**

TOP CHORD TO BE SHEATHED OR MAX. PURLIN SPACING = 2.01 FT.
MAX. UNBRACED BOTTOM CHORD LENGTH = 10.00 FT OR RIGID CEILING DIRECTLY APPLIED.

ALL PITCH BREAKS AND PERIMETER CORNER JOINTS MUST BE LATERALLY RESTRAINED.

2x4 DRY SPF No.2 T-BRACE AT G-X, L-T

FASTEN T AND I-BRACES TO NARROW EDGE OF WEB WITH ONE ROW PER PLY OF 3" COMMON WIRE NAILS @ 6" O.C. WITH 3" MINIMUM END DISTANCE. BRACE MUST COVER 90% OF WEB LENGTH.

END VERTICAL(S) MUST BE SHEATHED OR HAVE BRACES AS INDICATED IN THE MAX. UNBRACED LENGTH COLUMN OF THE TABLE BELOW

**LOADING**

TOTAL LOAD CASES: (4)

CHORDS

| MEMB. FR-TO | MAX. FACTORED FORCE (LBS) | FACTORED VERT. LOAD (PLF) FROM | TO | LC1 MAX CSI (LC) | MAX. UNBRAC LENGTH |
|---|---|---|---|---|---|
| A- B | 0 / 29 | -78.0 | -78.0 | 0.08 (1) | 10.00 |
| B- C | -3663 / 0 | -78.0 | -78.0 | 0.18 (1) | 4.30 |
| C- D | -7300 / 0 | -78.0 | -78.0 | 0.42 (1) | 2.89 |
| D- E | -6809 / 0 | -78.0 | -78.0 | 0.48 (1) | 2.96 |
| E- F | -6744 / 0 | -78.0 | -78.0 | 0.40 (1) | 3.10 |
| F-AD | -7483 / 0 | -78.0 | -78.0 | 0.46 (1) | 2.88 |
| AD- G | -7483 / 0 | -156.0 | -156.0 | 0.46 (1) | 2.88 |
| G- H | -9248 / 0 | -78.0 | -78.0 | 0.83 (1) | 2.05 |
| H- I | -9288 / 0 | -78.0 | -78.0 | 0.86 (1) | 2.04 |
| I- J | -9288 / 0 | -78.0 | -78.0 | 0.88 (1) | 2.01 |
| J- K | -9288 / 0 | -78.0 | -78.0 | 0.88 (1) | 2.01 |
| K- L | -8820 / 0 | -78.0 | -78.0 | 0.79 (1) | 2.16 |
| L- M | -7145 / 0 | -153.5 | -153.5 | 0.64 (1) | 2.75 |
| M- N | -5829 / 0 | -78.0 | -78.0 | 0.30 (1) | 3.39 |
| N- O | -5383 / 0 | -78.0 | -78.0 | 0.29 (1) | 3.54 |
| O- P | 0 / 29 | -78.0 | -78.0 | 0.08 (1) | 10.00 |
| AC- B | -3501 / 0 | 0.0 | 0.0 | 0.25 (1) | 5.65 |
| Q- O | -3602 / 0 | 0.0 | 0.0 | 0.19 (1) | 6.27 |
| AC-AB | 0 / 0 | -18.5 | -18.5 | 0.02 (4) | 10.00 |
| AB-AA | 0 / 3371 | -18.5 | -18.5 | 0.61 (1) | 10.00 |
| AA- Z | 0 / 6523 | -18.5 | -18.5 | 0.90 (1) | 10.00 |
| Z- Y | 0 / 7121 | -18.5 | -18.5 | 0.76 (1) | 10.00 |
| Y-AE | 0 / 6525 | -18.5 | -18.5 | 1.00 (1) | 10.00 |
| AE- X | 0 / 6525 | -112.0 | -112.0 | 1.00 (1) | 10.00 |
| X- W | 0 / 10575 | -112.0 | -112.0 | 0.49 (1) | 10.00 |
| W- V | 0 / 9241 | -112.0 | -112.0 | 0.84 (1) | 10.00 |
| V- U | 0 / 8821 | -112.0 | -112.0 | 0.80 (1) | 10.00 |
| U- T | 0 / 9205 | -112.0 | -112.0 | 0.42 (1) | 10.00 |
| T- S | 0 / 5203 | -36.4 | -36.4 | 0.76 (1) | 10.00 |
| S- R | 0 / 4817 | -36.4 | -36.4 | 0.71 (1) | 10.00 |
| R- Q | 0 / 0 | -36.4 | -36.4 | 0.11 (4) | 10.00 |

WEBS

| MEMB. FR-TO | MAX. FACTORED FORCE (LBS) | MAX CSI (LC) |
|---|---|---|
| AB- C | -2975 / 0 | 0.48 (1) |
| C-AA | 0 / 3726 | 0.92 (1) |
| AA- D | 0 / 117 | 0.04 (4) |
| D- Z | -448 / 0 | 0.24 (1) |
| E- Z | 0 / 2834 | 0.70 (1) |
| Z- F | 0 / 588 | 0.15 (1) |
| Y- F | -2424 / 0 | 0.98 (1) |
| F- X | 0 / 1819 | 0.45 (1) |
| X- G | -7910 / 0 | 0.95 (1) |
| G- W | 0 / 7397 | 0.96 (1) |
| W- H | 0 / 369 | 0.09 (1) |
| H- V | 0 / 74 | 0.02 (1) |
| V- I | -607 / 0 | 0.17 (1) |
| V- K | 0 / 716 | 0.18 (1) |
| U- K | -6 / 36 | 0.01 (1) |
| U- L | 0 / 6955 | 0.89 (1) |
| T- L | -7765 / 0 | 0.93 (1) |
| T- M | 0 / 2619 | 0.65 (1) |
| S- M | -114 / 128 | 0.05 (4) |
| S- N | 0 / 474 | 0.12 (1) |
| R- N | -823 / 0 | 0.16 (1) |
| B-AB | 0 / 3570 | 0.63 (1) |
| R- O | 0 / 4901 | 0.87 (1) |

FACTORED CONCENTRATED LOADS (LBS)

| JT | LOC. | LC1 | MAX- | MAX+ | FACE | DIR. | TYPE | HEEL | CONN. |
|---|---|---|---|---|---|---|---|---|---|
| M | 29-3-6 | -477 | -477 | --- | FRONT | VERT | TOTAL | --- | C1 |
| AE | 12-10-8 | -1046 | -1046 | --- | FRONT | VERT | TOTAL | --- | C1 |

**CONNECTION REQUIREMENTS**

1) **C1:** A SUITABLE HANGER/MECHANICAL CONNECTION IS REQUIRED.

**DESIGN CRITERIA**

*** SPECIAL LOADS ANALYSIS ***
GEOMETRY AND/OR BASIC LOADS CHANGED BY USER.
LOADS WERE DERIVED FROM USER INPUT
NO FURTHER MODIFICATIONS WERE MADE

SPECIFIED LOADS:

| | | | | |
|---|---|---|---|---|
| TOP CH. | LL | = | 21.0 | PSF |
| | DL | = | 6.0 | PSF |
| BOT CH. | LL | = | 0.0 | PSF |
| | DL | = | 7.4 | PSF |
| TOTAL LOAD | | = | 34.4 | PSF |

**SPACING = 24.0 IN. C/C**

LOADING IN FLAT SECTION BASED ON A SLOPE OF 2.00/12 MINIMUM

GIRDER TYPE: CStdGirder
START DISTANCE = 12-10-8
START SPAN CARRIED = 5-10-8
END DISTANCE = 23-10-0
END SPAN CARRIED = 5-10-8
END WALL WIDTH = 0-0
APPLIED TO FRONT SIDE OF BOTTOM CHORD.
- ADDT'L LOADS BASED ON 55 % OF GSL.

GIRDER TYPE: CPrimeHip
SIDE SETBACK = 8-4-10
END SETBACK = 5-10-8
END WALL WIDTH = 0-0
CORNER FRAMING TYPE: CONVENTIONAL
END JACK TYPE: CONVENTIONAL
APPLIED TO FRONT SIDE
- ADDT'L LOADS BASED ON 55 % OF GSL.
LOADS APPLIED TO FIRST 13-10-0 OF SPAN MEASURED FROM THE RIGHT.

*** NON STANDARD GIRDER ***
ADDT'L USER-DEFINED LOADS APPLIED TO ALL LOAD CASES.

THIS TRUSS IS DESIGNED FOR RESIDENTIAL OR SMALL BUILDING REQUIREMENTS OF PART 9, NBCC 2015

THIS DESIGN COMPLIES WITH:
- PART 9 OF BCBC 2018 , ABC 2019
- PART 9 OF OBC 2012 (2019 AMENDMENT)
- CSA 086-14
- TPIC 2014

DESIGN ASSUMPTIONS
-OVERHANG NOT TO BE ALTERED OR CUT OFF.

(55 % OF 23.0 P.S.F. G.S.L. PLUS 8.4 P.S.F. RAIN LOAD) EQUALS 21.0 P.S.F. SPECIFIED ROOF LIVE LOAD

ALLOWABLE DEFL.(LL)= L/360 (1.26")
CALCULATED VERT. DEFL.(LL) = L/ 895 (0.51")
ALLOWABLE DEFL.(TL)= L/360 (1.26")
CALCULATED VERT. DEFL.(TL) = L/ 458 (0.99")

CSI: TC=0.88/1.00 (I-K:1) , BC=1.00/1.00 (X-Y:1) , WB=0.98/1.00 (F-Y:1) , SSI=0.43/1.00 (K-L:1)

DOL LUMBER=1.00 NAIL=1.00 LS BEND=1.00 COMP=1.00 SHEAR=1.00 TENS= 1.00

COMPANION LIVE LOAD FACTOR = 1.00

AUTOSOLVE HEELS OFF

TRUSS PLATE MANUFACTURER IS NOT RESPONSIBLE FOR QUALITY CONTROL IN THE TRUSS MANUFACTURING PLANT .

NAIL VALUES

| PLATE | GRIP(DRY) (PSI) MAX | MIN | SHEAR (PLI) MAX | MIN | SECTION (PLI) MAX | MIN |
|---|---|---|---|---|---|---|
| MT20 | 650 | 371 | 1747 | 788 | 1987 | 1873 |
| MT18HS | 586 | 403 | 2455 | 1382 | 3163 | 3004 |

PLATE PLACEMENT TOL. = 0.250 inches

PLATE ROTATION TOL. = 5.0 Deg.

JSI GRIP= 0.90 (O) (INPUT = 0.90 )
JSI METAL= 0.98 (U) (INPUT = 1.00 )

| JOB NAME | TRUSS NAME | QUANTITY | PLY | JOB DESC. | DRWG NO. |
|---|---|---|---|---|---|
| 345177 | H02TB | | 1 | TRUSS DESC. JT 45147 | E22073478 |

Alpha Roof Truss, Maple

Version 8.530 S Feb 23 2022 MiTek Industries, Inc. Tue Jul 12 10:23:52 2022 Page 1

ID:RK?4zbbW6zKUfpVYHQwqmTz3QmS-Z0?ta1ekkm583V93YrVnOp3XhNO6Ks2fOmSxvoyyrs5

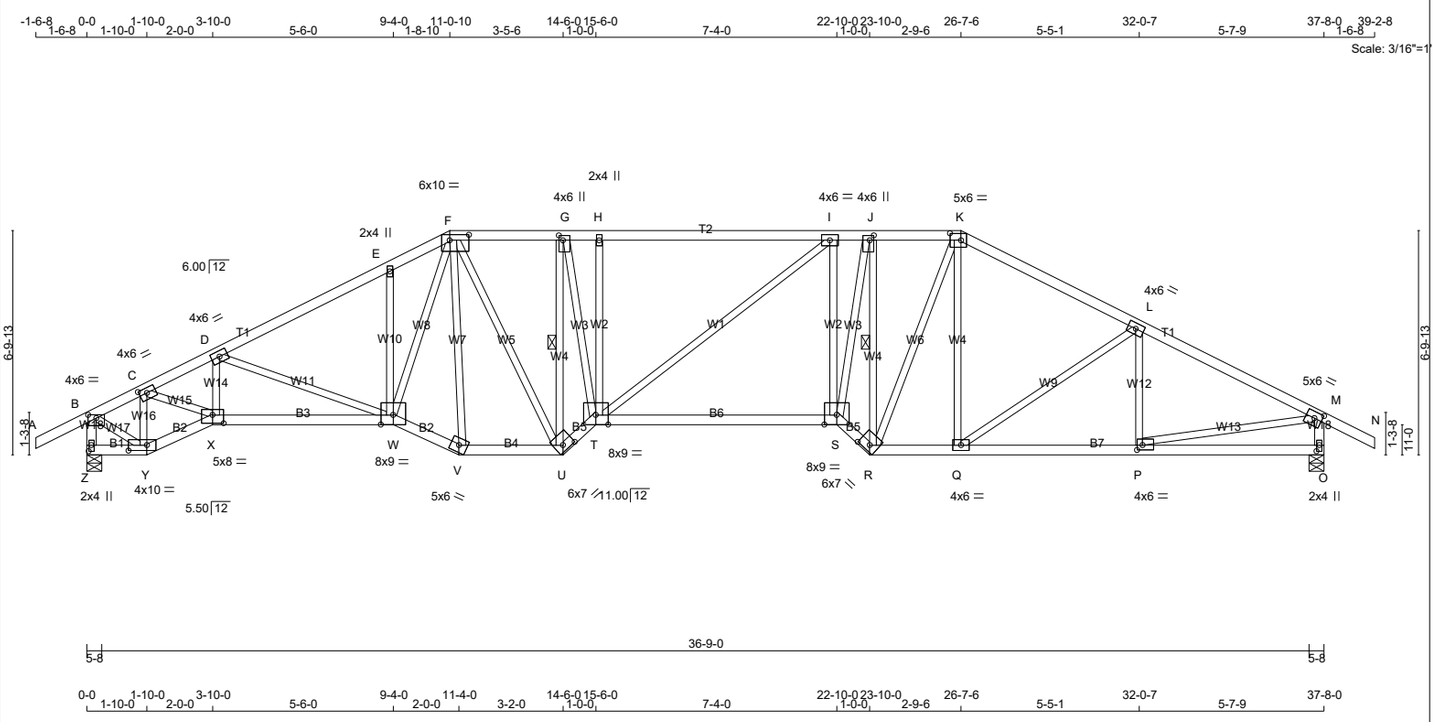


TOTAL WEIGHT = 184 lb

[M][F]

**LUMBER**

N. L. G. A. RULES

| CHORDS | SIZE | | LUMBER | DESCR. |
|---|---|---|---|---|
| A - F | 2x4 | DRY | No.2 | SPF |
| F - K | 2x4 | DRY | No.2 | SPF |
| K - N | 2x4 | DRY | No.2 | SPF |
| Z - B | 2x4 | DRY | No.2 | SPF |
| O - M | 2x4 | DRY | No.2 | SPF |
| Z - Y | 2x4 | DRY | No.2 | SPF |
| Y - X | 2x4 | DRY | No.2 | SPF |
| X - W | 2x4 | DRY | No.2 | SPF |
| W - V | 2x4 | DRY | No.2 | SPF |
| V - U | 2x4 | DRY | No.2 | SPF |
| U - T | 2x4 | DRY | No.2 | SPF |
| T - S | 2x4 | DRY | No.2 | SPF |
| S - R | 2x4 | DRY | No.2 | SPF |
| R - O | 2x4 | DRY | No.2 | SPF |
| ALL WEBS EXCEPT | 2x3 | DRY | No.2 | SPF |

DRY: SEASONED LUMBER.

**PLATES (table is in inches)**

| JT | TYPE | PLATES | W | LEN | Y | X |
|---|---|---|---|---|---|---|
| B | TMVW-p | MT20 | 4.0 | 6.0 | 1.25 | 3.00 |
| C | TMWW-t | MT20 | 4.0 | 6.0 | 1.75 | 2.75 |
| D, I, L | | | | | | |
| D | TMWW-t | MT20 | 4.0 | 6.0 | | |
| E | TMW+w | MT20 | 2.0 | 4.0 | | |
| F | TTWWW-p | MT20 | 6.0 | 10.0 | 2.00 | 7.00 |
| G | TMWW+t | MT20 | 4.0 | 6.0 | 1.75 | 1.50 |
| H | TMW+w | MT20 | 2.0 | 4.0 | | |
| J | TMWW+t | MT20 | 4.0 | 6.0 | 1.75 | 1.50 |
| K | TTWW-l | MT20 | 5.0 | 6.0 | 2.50 | 4.00 |
| M | TMVW-t | MT20 | 5.0 | 6.0 | 2.25 | 2.75 |
| O | BMV1+p | MT20 | 2.0 | 4.0 | 2.25 | 1.00 |
| P | BMWW-t | MT20 | 4.0 | 6.0 | 1.75 | 2.00 |
| Q | BMWW-t | MT20 | 4.0 | 6.0 | | |
| R | BBWW-h | MT20 | 6.0 | 7.0 | 2.00 | 4.00 |
| S | BBWW-l | MT20 | 8.0 | 9.0 | Edge | |
| T | BBWWW-p | MT20 | 8.0 | 9.0 | Edge | |
| U | BBWW-h | MT20 | 6.0 | 7.0 | 2.00 | 4.00 |
| V | BBW-h | MT20 | 5.0 | 6.0 | | |
| W | BBWWW-p | MT20 | 8.0 | 9.0 | Edge | |
| X | BBWW-l | MT20 | 5.0 | 8.0 | 3.00 | 4.00 |
| Y | BBWW-l | MT20 | 4.0 | 10.0 | 2.00 | 6.75 |
| Z | BMV1+p | MT20 | 2.0 | 4.0 | 2.25 | 1.00 |

Edge - INDICATES REFERENCE CORNER OF PLATE TOUCHES EDGE OF CHORD.

LATERAL BRACE(S) SHOWN SHALL BE 2X4 SPF#2

**DIMENSIONS, SUPPORTS AND LOADINGS SPECIFIED BY FABRICATOR TO BE VERIFIED BY BUILDING DESIGNER**

**BEARINGS**

| JT | FACTORED GROSS REACTION VERT | HORZ | MAXIMUM FACTORED GROSS REACTION DOWN | HORZ | UPLIFT | INPUT BRG IN-SX | REQRD BRG IN-SX |
|---|---|---|---|---|---|---|---|
| Z | 1945 | 0 | 1945 | 0 | 0 | 5-8 | 2-13 |
| O | 1939 | 0 | 1939 | 0 | 0 | 5-8 | 2-13 |

ALLOW FOR 0.3" OF HORIZONTAL MOVEMENT DUE TO TOTAL LOAD

**UNFACTORED REACTIONS**

| JT | 1ST LCASE COMBINED | SNOW | LIVE | PERM.LIVE | WIND | DEAD | SOIL |
|---|---|---|---|---|---|---|---|
| | | MAX./MIN. COMPONENT REACTIONS | | | | | |
| Z | 1384 | 860 / 0 | 0 / 0 | 0 / 0 | 0 / 0 | 524 / 0 | 0 / 0 |
| O | 1380 | 857 / 0 | 0 / 0 | 0 / 0 | 0 / 0 | 524 / 0 | 0 / 0 |

BEARING MATERIAL TO BE SPF NO.2 OR BETTER AT JOINT(S) Z, O

**BRACING**

TOP CHORD TO BE SHEATHED OR MAX. PURLIN SPACING = 3.56 FT.
MAX. UNBRACED BOTTOM CHORD LENGTH = 10.00 FT OR RIGID CEILING DIRECTLY APPLIED.

ALL PITCH BREAKS AND PERIMETER CORNER JOINTS MUST BE LATERALLY RESTRAINED.

1 LATERAL BRACE(S) AT 1/ 2 LENGTH OF G-U, J-R.

END VERTICAL(S) MUST BE SHEATHED OR HAVE BRACES AS INDICATED IN THE MAX. UNBRACED LENGTH COLUMN OF THE TABLE BELOW

**LOADING**

TOTAL LOAD CASES: (4)

CHORDS

| MEMB. FR-TO | FORCE (LBS) | VERT. LOAD LC1 FROM (PLF) | TO | MAX CSI (LC) | MAX. UNBRAC LENGTH |
|---|---|---|---|---|---|
| A- B | 0 / 28 | -78.0 | -78.0 | 0.14 (1) | 10.00 |
| B- C | -1823 / 0 | -78.0 | -78.0 | 0.14 (1) | 4.85 |
| C- D | -3513 / 0 | -78.0 | -78.0 | 0.26 (1) | 3.56 |
| D- E | -3037 / 0 | -78.0 | -78.0 | 0.35 (1) | 3.76 |
| E- F | -3056 / 0 | -78.0 | -78.0 | 0.22 (1) | 3.83 |
| F- G | -2497 / 0 | -78.0 | -78.0 | 0.18 (1) | 4.23 |
| G- H | -2997 / 0 | -78.0 | -78.0 | 0.34 (1) | 3.72 |
| H- I | -3005 / 0 | -78.0 | -78.0 | 0.56 (1) | 3.59 |
| I- J | -2960 / 0 | -78.0 | -78.0 | 0.36 (1) | 3.72 |
| J- K | -2446 / 0 | -78.0 | -78.0 | 0.13 (1) | 4.31 |
| K- L | -2456 / 0 | -78.0 | -78.0 | 0.39 (1) | 4.05 |
| L- M | -2626 / 0 | -78.0 | -78.0 | 0.42 (1) | 3.92 |
| M- N | 0 / 28 | -78.0 | -78.0 | 0.14 (1) | 10.00 |
| Z- B | -1928 / 0 | 0.0 | 0.0 | 0.20 (1) | 6.06 |
| O- M | -1894 / 0 | 0.0 | 0.0 | 0.19 (1) | 6.10 |
| Z- Y | 0 / 0 | -18.5 | -18.5 | 0.02 (4) | 10.00 |
| Y- X | 0 / 1660 | -18.5 | -18.5 | 0.28 (1) | 10.00 |
| X- W | 0 / 3173 | -18.5 | -18.5 | 0.61 (1) | 10.00 |
| W- V | 0 / 2433 | -18.5 | -18.5 | 0.40 (1) | 10.00 |
| V- U | 0 / 2169 | -18.5 | -18.5 | 0.38 (1) | 10.00 |
| U- T | 0 / 3437 | -18.5 | -18.5 | 0.56 (1) | 10.00 |
| T- S | 0 / 2970 | -18.5 | -18.5 | 0.65 (1) | 10.00 |
| S- R | 0 / 3258 | -18.5 | -18.5 | 0.53 (1) | 10.00 |
| R- Q | 0 / 2178 | -18.5 | -18.5 | 0.40 (1) | 10.00 |
| Q- P | 0 / 2368 | -18.5 | -18.5 | 0.43 (1) | 10.00 |
| P- O | 0 / 0 | -18.5 | -18.5 | 0.13 (4) | 10.00 |

WEBS

| MEMB. FR-TO | FORCE (LBS) | MAX CSI (LC) |
|---|---|---|
| Y- C | -1507 / 0 | 0.23 (1) |
| C- X | 0 / 1818 | 0.41 (1) |
| X- D | 0 / 75 | 0.03 (4) |
| D- W | -488 / 0 | 0.27 (1) |
| W- E | -346 / 0 | 0.13 (1) |
| W- F | 0 / 1674 | 0.38 (1) |
| F- V | -980 / 0 | 0.77 (1) |
| F- U | 0 / 698 | 0.16 (1) |
| U- G | -2888 / 0 | 0.86 (1) |
| G- T | 0 / 2857 | 0.64 (1) |
| T- H | -446 / 0 | 0.24 (1) |
| T- I | 0 / 44 | 0.01 (1) |
| S- I | -546 / 0 | 0.29 (1) |
| S- J | 0 / 2879 | 0.65 (1) |
| R- J | -2786 / 0 | 0.83 (1) |
| R- K | 0 / 680 | 0.15 (1) |
| Q- K | 0 / 201 | 0.05 (4) |
| Q- L | -234 / 0 | 0.19 (1) |
| P- L | -304 / 0 | 0.08 (1) |
| B- Y | 0 / 1806 | 0.41 (1) |
| P- M | 0 / 2404 | 0.54 (1) |

**DESIGN CRITERIA**

SPECIFIED LOADS:

| | | | | |
|---|---|---|---|---|
| TOP CH. | LL | = | 21.0 | PSF |
| | DL | = | 6.0 | PSF |
| BOT CH. | LL | = | 0.0 | PSF |
| | DL | = | 7.4 | PSF |
| TOTAL LOAD | | = | 34.4 | PSF |

**SPACING = 24.0 IN. C/C**

LOADING IN FLAT SECTION BASED ON A SLOPE OF 2.00/12 MINIMUM

THIS TRUSS IS DESIGNED FOR RESIDENTIAL OR SMALL BUILDING REQUIREMENTS OF PART 9, NBCC 2015

THIS DESIGN COMPLIES WITH:
- PART 9 OF BCBC 2018 , ABC 2019
- PART 9 OF OBC 2012 (2019 AMENDMENT)
- CSA 086-14
- TPIC 2014

DESIGN ASSUMPTIONS
-OVERHANG NOT TO BE ALTERED OR CUT OFF.

(55 % OF 23.0 P.S.F. G.S.L. PLUS 8.4 P.S.F. RAIN LOAD) EQUALS 21.0 P.S.F. SPECIFIED ROOF LIVE LOAD

ALLOWABLE DEFL.(LL)= L/360 (1.26")
CALCULATED VERT. DEFL.(LL) = L/ 999 (0.29")
ALLOWABLE DEFL.(TL)= L/360 (1.26")
CALCULATED VERT. DEFL.(TL) = L/ 652 (0.69")

CSI: TC=0.56/1.00 (H-I:1) , BC=0.65/1.00 (S-T:1) , WB=0.86/1.00 (G-U:1) , SSI=0.22/1.00 (H-I:1)

DOL LUMBER=1.00 NAIL=1.00 LS BEND=1.10 COMP=1.10 SHEAR=1.10 TENS= 1.10

COMPANION LIVE LOAD FACTOR = 1.00

TRUSS PLATE MANUFACTURER IS NOT RESPONSIBLE FOR QUALITY CONTROL IN THE TRUSS MANUFACTURING PLANT .

NAIL VALUES

| PLATE | GRIP(DRY) (PSI) MAX | MIN | SHEAR (PLI) MAX | MIN | SECTION (PLI) MAX | MIN |
|---|---|---|---|---|---|---|
| MT20 | 650 | 371 | 1747 | 788 | 1987 | 1873 |

PLATE PLACEMENT TOL. = 0.250 inches

PLATE ROTATION TOL. = 5.0 Deg.

JSI GRIP= 0.88 (P) (INPUT = 0.90 )
JSI METAL= 0.63 (M) (INPUT = 1.00 )

| JOB NAME | TRUSS NAME | QUANTITY | PLY | JOB DESC. | DRWG NO. |
|---|---|---|---|---|---|
| 345177 | H03 | | 1 | TRUSS DESC. JT 45147 | E22073479 |

Alpha Roof Truss, Maple

Version 8.530 S Feb 23 2022 MiTek Industries, Inc. Tue Jul 12 10:23:54 2022 Page 1

ID:RK?4zbbW6zKUfpVYHQwqmTz3QmS-WP7e_ig_FNLrIpJSqGXFTE8rDB73oqAys4x2zqyyrs3

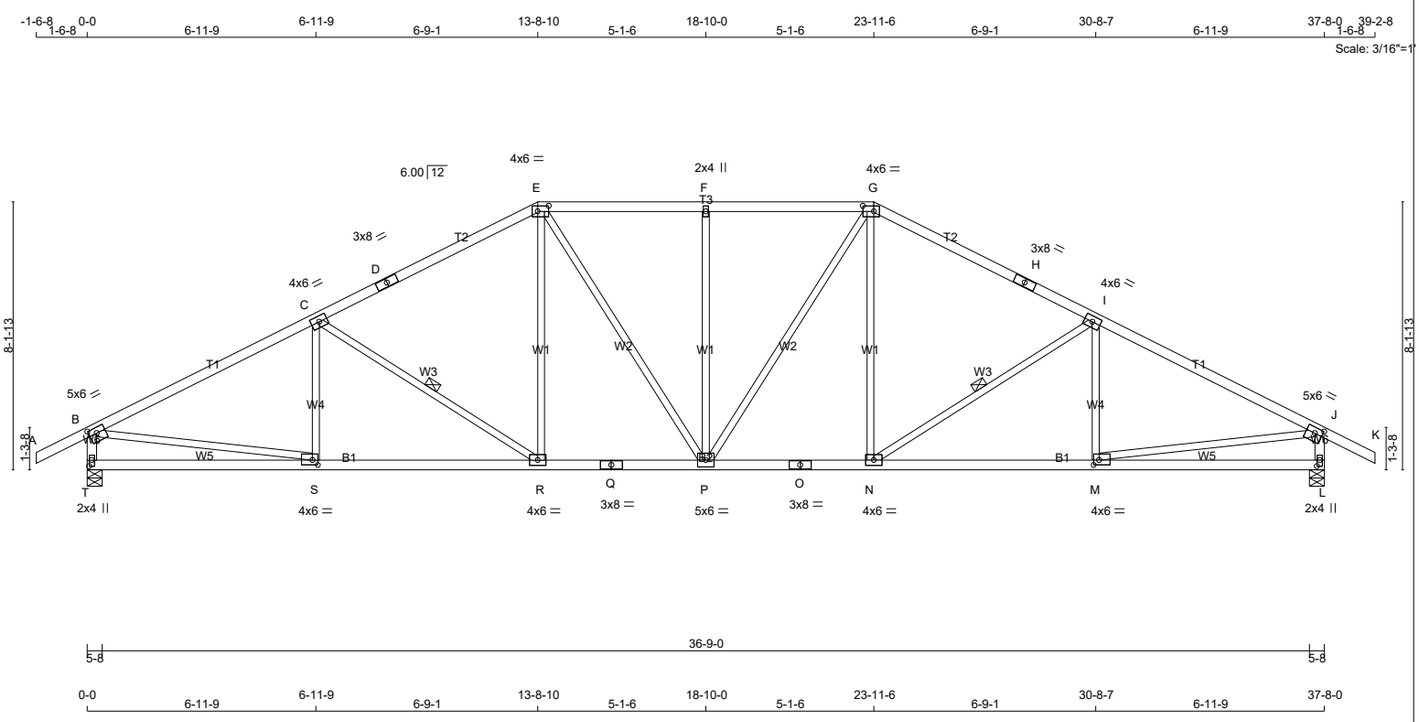


TOTAL WEIGHT = 159 lb

[M][F]

**LUMBER**

N. L. G. A. RULES

| CHORDS | SIZE | | LUMBER | DESCR. |
|---|---|---|---|---|
| A - D | 2x4 | DRY | No.2 | SPF |
| D - E | 2x4 | DRY | No.2 | SPF |
| E - G | 2x4 | DRY | No.2 | SPF |
| G - H | 2x4 | DRY | No.2 | SPF |
| H - K | 2x4 | DRY | No.2 | SPF |
| T - B | 2x4 | DRY | No.2 | SPF |
| L - J | 2x4 | DRY | No.2 | SPF |
| T - Q | 2x4 | DRY | No.2 | SPF |
| Q - O | 2x4 | DRY | No.2 | SPF |
| O - L | 2x4 | DRY | No.2 | SPF |
| ALL WEBS EXCEPT | 2x3 | DRY | No.2 | SPF |

DRY: SEASONED LUMBER.

**PLATES (table is in inches)**

| JT | TYPE | PLATES | W | LEN | Y | X |
|---|---|---|---|---|---|---|
| B | TMVW-t | MT20 | 5.0 | 6.0 | 2.00 | 2.75 |
| C | TMWW-t | MT20 | 4.0 | 6.0 | | |
| D | TS-t | MT20 | 3.0 | 8.0 | | |
| E | TTWW-l | MT20 | 4.0 | 6.0 | 2.00 | 4.00 |
| F | TMW+w | MT20 | 2.0 | 4.0 | | |
| G | TTWW-l | MT20 | 4.0 | 6.0 | 2.00 | 4.00 |
| H | TS-t | MT20 | 3.0 | 8.0 | | |
| I | TMWW-t | MT20 | 4.0 | 6.0 | | |
| J | TMVW-t | MT20 | 5.0 | 6.0 | 2.00 | 2.75 |
| L | BMV1+p | MT20 | 2.0 | 4.0 | 2.25 | 1.00 |
| M | BMWW-t | MT20 | 4.0 | 6.0 | 1.75 | 2.00 |
| N | BMWW-t | MT20 | 4.0 | 6.0 | | |
| O | BS-t | MT20 | 3.0 | 8.0 | | |
| P | BMWWW-t | MT20 | 5.0 | 6.0 | | |
| Q | BS-t | MT20 | 3.0 | 8.0 | | |
| R | BMWW-t | MT20 | 4.0 | 6.0 | | |
| S | BMWW-t | MT20 | 4.0 | 6.0 | 1.75 | 2.00 |
| T | BMV1+p | MT20 | 2.0 | 4.0 | 2.25 | 1.00 |

LATERAL BRACE(S) SHOWN SHALL BE 2X4 SPF#2

**DIMENSIONS, SUPPORTS AND LOADINGS SPECIFIED BY FABRICATOR TO BE VERIFIED BY BUILDING DESIGNER**

**BEARINGS**

| JT | FACTORED GROSS REACTION VERT | HORZ | MAXIMUM FACTORED GROSS REACTION DOWN | HORZ | UPLIFT | INPUT BRG IN-SX | REQRD BRG IN-SX |
|---|---|---|---|---|---|---|---|
| T | 1942 | 0 | 1942 | 0 | 0 | 5-8 | 2-13 |
| L | 1942 | 0 | 1942 | 0 | 0 | 5-8 | 2-13 |

**UNFACTORED REACTIONS**

| JT | 1ST LCASE COMBINED | MAX./MIN. COMPONENT REACTIONS SNOW | LIVE | PERM.LIVE | WIND | DEAD | SOIL |
|---|---|---|---|---|---|---|---|
| T | 1382 | 858 / 0 | 0 / 0 | 0 / 0 | 0 / 0 | 524 / 0 | 0 / 0 |
| L | 1382 | 858 / 0 | 0 / 0 | 0 / 0 | 0 / 0 | 524 / 0 | 0 / 0 |

BEARING MATERIAL TO BE SPF NO.2 OR BETTER AT JOINT(S) T, L

**BRACING**

TOP CHORD TO BE SHEATHED OR MAX. PURLIN SPACING = 3.60 FT.
MAX. UNBRACED BOTTOM CHORD LENGTH = 10.00 FT OR RIGID CEILING DIRECTLY APPLIED.

ALL PITCH BREAKS AND PERIMETER CORNER JOINTS MUST BE LATERALLY RESTRAINED.

1 LATERAL BRACE(S) AT 1/ 2 LENGTH OF C-R, I-N.

END VERTICAL(S) MUST BE SHEATHED OR HAVE BRACES AS INDICATED IN THE MAX. UNBRACED LENGTH COLUMN OF THE TABLE BELOW

**LOADING**

TOTAL LOAD CASES: (4)

CHORDS

| MEMB. FR-TO | MAX. FACTORED FORCE (LBS) | FACTORED VERT. LOAD (PLF) FROM | TO | LC1 CSI (LC) | MAX MAX. UNBRAC LENGTH |
|---|---|---|---|---|---|
| A- B | 0 / 28 | -78.0 | -78.0 | 0.14 (1) | 10.00 |
| B- C | -2682 / 0 | -78.0 | -78.0 | 0.69 (1) | 3.60 |
| C- D | -2290 / 0 | -78.0 | -78.0 | 0.61 (1) | 3.92 |
| D- E | -2290 / 0 | -78.0 | -78.0 | 0.61 (1) | 3.92 |
| E- F | -2210 / 0 | -78.0 | -78.0 | 0.32 (1) | 4.30 |
| F- G | -2210 / 0 | -78.0 | -78.0 | 0.32 (1) | 4.30 |
| G- H | -2290 / 0 | -78.0 | -78.0 | 0.61 (1) | 3.92 |
| H- I | -2290 / 0 | -78.0 | -78.0 | 0.61 (1) | 3.92 |
| I- J | -2682 / 0 | -78.0 | -78.0 | 0.69 (1) | 3.60 |
| J- K | 0 / 28 | -78.0 | -78.0 | 0.14 (1) | 10.00 |
| T- B | -1888 / 0 | 0.0 | 0.0 | 0.19 (1) | 6.11 |
| L- J | -1888 / 0 | 0.0 | 0.0 | 0.19 (1) | 6.11 |
| T- S | 0 / 0 | -18.5 | -18.5 | 0.21 (4) | 10.00 |
| S- R | 0 / 2424 | -18.5 | -18.5 | 0.49 (1) | 10.00 |
| R- Q | 0 / 2026 | -18.5 | -18.5 | 0.40 (1) | 10.00 |
| Q- P | 0 / 2026 | -18.5 | -18.5 | 0.40 (1) | 10.00 |
| P- O | 0 / 2026 | -18.5 | -18.5 | 0.40 (1) | 10.00 |
| O- N | 0 / 2026 | -18.5 | -18.5 | 0.40 (1) | 10.00 |
| N- M | 0 / 2424 | -18.5 | -18.5 | 0.49 (1) | 10.00 |
| M- L | 0 / 0 | -18.5 | -18.5 | 0.21 (4) | 10.00 |

WEBS

| MEMB. FR-TO | MAX. FACTORED FORCE (LBS) | MAX CSI (LC) |
|---|---|---|
| S- C | -202 / 30 | 0.07 (1) |
| C- R | -481 / 0 | 0.22 (1) |
| R- E | 0 / 376 | 0.08 (1) |
| E- P | 0 / 337 | 0.08 (1) |
| P- F | -485 / 0 | 0.62 (1) |
| P- G | 0 / 337 | 0.08 (1) |
| N- G | 0 / 376 | 0.08 (1) |
| N- I | -481 / 0 | 0.22 (1) |
| M- I | -202 / 30 | 0.07 (1) |
| B- S | 0 / 2448 | 0.55 (1) |
| M- J | 0 / 2448 | 0.55 (1) |

**DESIGN CRITERIA**

SPECIFIED LOADS:

| | | | | |
|---|---|---|---|---|
| TOP CH. | LL | = | 21.0 | PSF |
| | DL | = | 6.0 | PSF |
| BOT CH. | LL | = | 0.0 | PSF |
| | DL | = | 7.4 | PSF |
| TOTAL LOAD | | = | 34.4 | PSF |

**SPACING = 24.0 IN. C/C**

LOADING IN FLAT SECTION BASED ON A SLOPE OF 2.00/12 MINIMUM

THIS TRUSS IS DESIGNED FOR RESIDENTIAL OR SMALL BUILDING REQUIREMENTS OF PART 9, NBCC 2015

THIS DESIGN COMPLIES WITH:
- PART 9 OF BCBC 2018 , ABC 2019
- PART 9 OF OBC 2012 (2019 AMENDMENT)
- CSA 086-14
- TPIC 2014

(55 % OF 23.0 P.S.F. G.S.L. PLUS 8.4 P.S.F. RAIN LOAD) EQUALS 21.0 P.S.F. SPECIFIED ROOF LIVE LOAD

ALLOWABLE DEFL.(LL)= L/360 (1.26")
CALCULATED VERT. DEFL.(LL) = L/ 999 (0.13")
ALLOWABLE DEFL.(TL)= L/360 (1.26")
CALCULATED VERT. DEFL.(TL) = L/ 999 (0.26")

CSI: TC=0.69/1.00 (B-C:1) , BC=0.49/1.00 (R-S:1) , WB=0.62/1.00 (F-P:1) , SSI=0.23/1.00 (B-C:1)

DOL LUMBER=1.00 NAIL=1.00 LS BEND=1.10 COMP=1.10 SHEAR=1.10 TENS= 1.10

COMPANION LIVE LOAD FACTOR = 1.00

TRUSS PLATE MANUFACTURER IS NOT RESPONSIBLE FOR QUALITY CONTROL IN THE TRUSS MANUFACTURING PLANT .

NAIL VALUES

| PLATE | GRIP(DRY) (PSI) MAX | MIN | SHEAR (PLI) MAX | MIN | SECTION (PLI) MAX | MIN |
|---|---|---|---|---|---|---|
| MT20 | 650 | 371 | 1747 | 788 | 1987 | 1873 |

PLATE PLACEMENT TOL. = 0.250 inches

PLATE ROTATION TOL. = 5.0 Deg.

JSI GRIP= 0.87 (J) (INPUT = 0.90 )
JSI METAL= 0.65 (B) (INPUT = 1.00 )

| JOB NAME | TRUSS NAME | QUANTITY | PLY | JOB DESC. | DRWG NO. |
|---|---|---|---|---|---|
| 345177 | H04 | | 1 | TRUSS DESC. JT 45147 | E22073480 |

Alpha Roof Truss, Maple

Version 8.530 S Feb 23 2022 MiTek Industries, Inc. Tue Jul 12 10:23:56 2022 Page 1

ID:RK?4zbbW6zKUfpVYHQwqmTz3QmS-SnEOPOhEn bZX7TqnhZjYfDGn ojGgJFJOQ92Zyyrs1

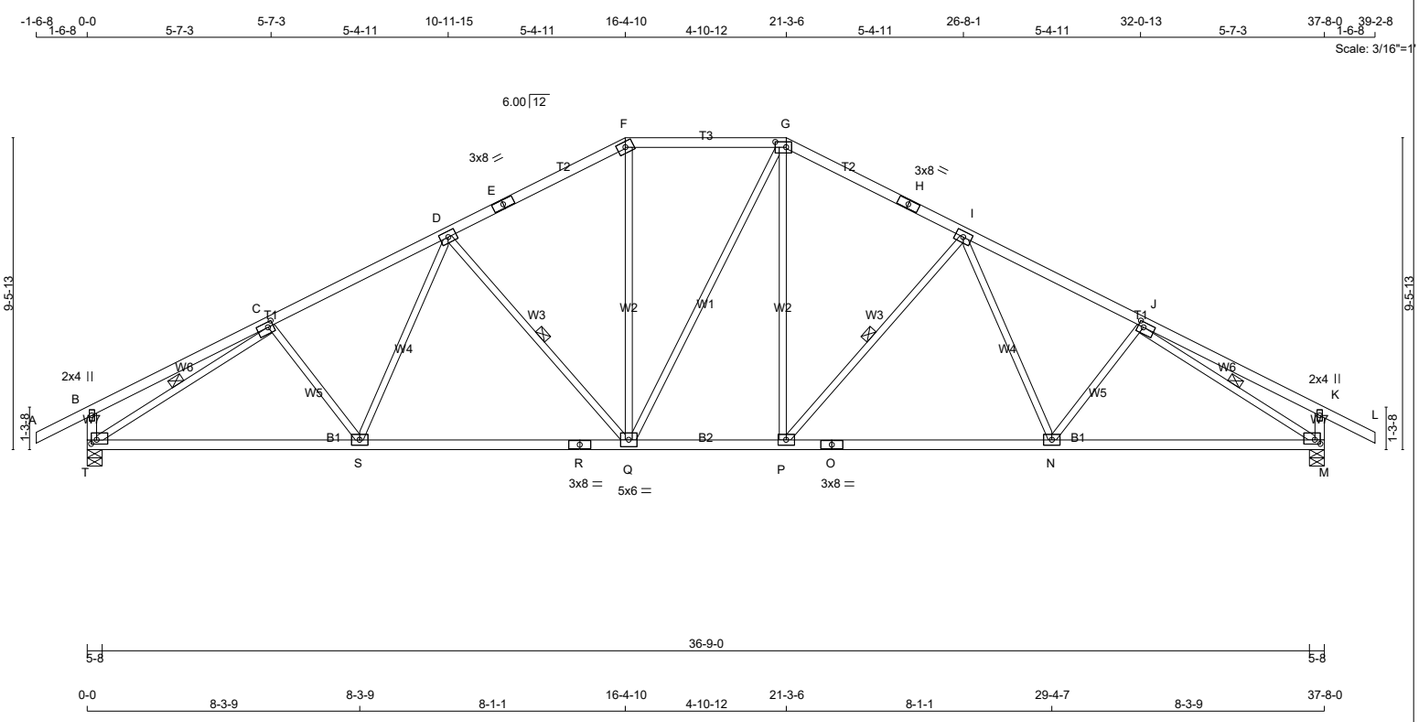





TOTAL WEIGHT = 161 lb

**LUMBER**

N. L. G. A. RULES

| CHORDS | SIZE | | LUMBER | DESCR. |
|---|---|---|---|---|
| A - E | 2x4 | DRY | No.2 | SPF |
| E - F | 2x4 | DRY | No.2 | SPF |
| F - G | 2x4 | DRY | No.2 | SPF |
| G - H | 2x4 | DRY | No.2 | SPF |
| H - L | 2x4 | DRY | No.2 | SPF |
| T - B | 2x4 | DRY | No.2 | SPF |
| M - K | 2x4 | DRY | No.2 | SPF |
| T - R | 2x4 | DRY | No.2 | SPF |
| R - O | 2x4 | DRY | No.2 | SPF |
| O - M | 2x4 | DRY | No.2 | SPF |
| ALL WEBS EXCEPT | 2x3 | DRY | No.2 | SPF |

DRY: SEASONED LUMBER.

**PLATES (table is in inches)**

| JT | TYPE | PLATES | W | LEN | Y | X |
|---|---|---|---|---|---|---|
| B | TMV+p | MT20 | 2.0 | 4.0 | | |
| C | TMWW-t | MT20 | 4.0 | 6.0 | 1.75 | 2.00 |
| D | TMWW-t | MT20 | 4.0 | 6.0 | | |
| E | TS-t | MT20 | 3.0 | 8.0 | | |
| F | TTW-h | MT20 | 4.0 | 6.0 | | |
| G | TTWW-l | MT20 | 4.0 | 6.0 | 2.00 | 4.00 |
| H | TS-t | MT20 | 3.0 | 8.0 | | |
| I | TMWW-t | MT20 | 4.0 | 6.0 | | |
| J | TMWW-t | MT20 | 4.0 | 6.0 | 1.75 | 2.00 |
| K | TMV+p | MT20 | 2.0 | 4.0 | | |
| M | BMVW1-t | MT20 | 4.0 | 6.0 | 1.50 | 2.00 |
| N, P, S | | | | | | |
| N | BMWW-t | MT20 | 4.0 | 6.0 | | |
| O | BS-t | MT20 | 3.0 | 8.0 | | |
| Q | BMWWW-t | MT20 | 5.0 | 6.0 | | |
| R | BS-t | MT20 | 3.0 | 8.0 | | |
| T | BMVW1-t | MT20 | 4.0 | 6.0 | 1.50 | 2.00 |

LATERAL BRACE(S) SHOWN SHALL BE 2X4 SPF#2

**DIMENSIONS, SUPPORTS AND LOADINGS SPECIFIED BY FABRICATOR TO BE VERIFIED BY BUILDING DESIGNER**

**BEARINGS**

| JT | FACTORED GROSS REACTION VERT | HORZ | MAXIMUM FACTORED GROSS REACTION DOWN | HORZ | UPLIFT | INPUT BRG IN-SX | REQRD BRG IN-SX |
|---|---|---|---|---|---|---|---|
| T | 1942 | 0 | 1942 | 0 | 0 | 5-8 | 2-2 |
| M | 1942 | 0 | 1942 | 0 | 0 | 5-8 | 2-2 |

**UNFACTORED REACTIONS**

| JT | 1ST LCASE COMBINED | MAX./MIN. COMPONENT REACTIONS SNOW | LIVE | PERM.LIVE | WIND | DEAD | SOIL |
|---|---|---|---|---|---|---|---|
| T | 1382 | 858 / 0 | 0 / 0 | 0 / 0 | 0 / 0 | 524 / 0 | 0 / 0 |
| M | 1382 | 858 / 0 | 0 / 0 | 0 / 0 | 0 / 0 | 524 / 0 | 0 / 0 |

BEARING MATERIAL TO BE SPF NO.2 OR BETTER AT JOINT(S) T, M

**BRACING**

TOP CHORD TO BE SHEATHED OR MAX. PURLIN SPACING = 4.03 FT.
MAX. UNBRACED BOTTOM CHORD LENGTH = 10.00 FT OR RIGID CEILING DIRECTLY APPLIED.

ALL PITCH BREAKS AND PERIMETER CORNER JOINTS MUST BE LATERALLY RESTRAINED.

1 LATERAL BRACE(S) AT 1/ 2 LENGTH OF D-Q, I-P, C-T, J-M.

END VERTICAL(S) MUST BE SHEATHED OR HAVE BRACES AS INDICATED IN THE MAX. UNBRACED LENGTH COLUMN OF THE TABLE BELOW

**LOADING**

TOTAL LOAD CASES: (4)

CHORDS

| MEMB. FR-TO | MAX. FACTORED FORCE (LBS) | FACTORED VERT. LOAD LC1 (PLF) FROM | TO | MAX CSI (LC) | MAX. UNBRAC LENGTH |
|---|---|---|---|---|---|
| A- B | 0 / 28 | -78.0 | -78.0 | 0.14 (1) | 10.00 |
| B- C | 0 / 17 | -78.0 | -78.0 | 0.29 (1) | 10.00 |
| C- D | -2569 / 0 | -78.0 | -78.0 | 0.36 (1) | 4.03 |
| D- E | -2069 / 0 | -78.0 | -78.0 | 0.34 (1) | 4.42 |
| E- F | -2069 / 0 | -78.0 | -78.0 | 0.34 (1) | 4.42 |
| F- G | -1839 / 0 | -78.0 | -78.0 | 0.28 (1) | 4.67 |
| G- H | -2068 / 0 | -78.0 | -78.0 | 0.34 (1) | 4.42 |
| H- I | -2068 / 0 | -78.0 | -78.0 | 0.34 (1) | 4.42 |
| I- J | -2569 / 0 | -78.0 | -78.0 | 0.36 (1) | 4.03 |
| J- K | 0 / 17 | -78.0 | -78.0 | 0.29 (1) | 10.00 |
| K- L | 0 / 28 | -78.0 | -78.0 | 0.14 (1) | 10.00 |
| T- B | -302 / 0 | 0.0 | 0.0 | 0.03 (1) | 7.81 |
| M- K | -302 / 0 | 0.0 | 0.0 | 0.03 (1) | 7.81 |
| T- S | 0 / 2325 | -18.5 | -18.5 | 0.54 (1) | 10.00 |
| S- R | 0 / 2212 | -18.5 | -18.5 | 0.53 (4) | 10.00 |
| R- Q | 0 / 2212 | -18.5 | -18.5 | 0.53 (4) | 10.00 |
| Q- P | 0 / 1838 | -18.5 | -18.5 | 0.39 (1) | 10.00 |
| P- O | 0 / 2212 | -18.5 | -18.5 | 0.53 (4) | 10.00 |
| O- N | 0 / 2212 | -18.5 | -18.5 | 0.53 (4) | 10.00 |
| N- M | 0 / 2326 | -18.5 | -18.5 | 0.54 (1) | 10.00 |

WEBS

| MEMB. FR-TO | MAX. FACTORED FORCE (LBS) | MAX CSI (LC) |
|---|---|---|
| C- S | -43 / 54 | 0.02 (4) |
| S- D | 0 / 226 | 0.06 (4) |
| D- Q | -587 / 0 | 0.29 (1) |
| Q- F | 0 / 560 | 0.13 (1) |
| Q- G | 0 / 2 | 0.00 (1) |
| P- G | 0 / 558 | 0.13 (1) |
| P- I | -588 / 0 | 0.29 (1) |
| I- N | 0 / 227 | 0.06 (4) |
| N- J | -43 / 54 | 0.02 (4) |
| T- C | -2810 / 0 | 0.84 (1) |
| J- M | -2810 / 0 | 0.84 (1) |

[M][F]

**DESIGN CRITERIA**

SPECIFIED LOADS:

| | | | | |
|---|---|---|---|---|
| TOP CH. | LL | = | 21.0 | PSF |
| | DL | = | 6.0 | PSF |
| BOT CH. | LL | = | 0.0 | PSF |
| | DL | = | 7.4 | PSF |
| TOTAL LOAD | | = | 34.4 | PSF |

**SPACING = 24.0 IN. C/C**

LOADING IN FLAT SECTION BASED ON A SLOPE OF 2.00/12 MINIMUM

THIS TRUSS IS DESIGNED FOR RESIDENTIAL OR SMALL BUILDING REQUIREMENTS OF PART 9, NBCC 2015

THIS DESIGN COMPLIES WITH:
- PART 9 OF BCBC 2018 , ABC 2019
- PART 9 OF OBC 2012 (2019 AMENDMENT)
- CSA 086-14
- TPIC 2014

(55 % OF 23.0 P.S.F. G.S.L. PLUS 8.4 P.S.F. RAIN LOAD) EQUALS 21.0 P.S.F. SPECIFIED ROOF LIVE LOAD

ALLOWABLE DEFL.(LL)= L/360 (1.26")
CALCULATED VERT. DEFL.(LL) = L/ 999 (0.13")
ALLOWABLE DEFL.(TL)= L/360 (1.26")
CALCULATED VERT. DEFL.(TL) = L/ 999 (0.31")

CSI: TC=0.36/1.00 (I-J:1) , BC=0.54/1.00 (M-N:1) , WB=0.84/1.00 (J-M:1) , SSI=0.18/1.00 (G-I:1)

DOL LUMBER=1.00 NAIL=1.00 LS BEND=1.10 COMP=1.10 SHEAR=1.10 TENS= 1.10

COMPANION LIVE LOAD FACTOR = 1.00

TRUSS PLATE MANUFACTURER IS NOT RESPONSIBLE FOR QUALITY CONTROL IN THE TRUSS MANUFACTURING PLANT .

NAIL VALUES

| PLATE | GRIP(DRY) (PSI) MAX | MIN | SHEAR (PLI) MAX | MIN | SECTION (PLI) MAX | MIN |
|---|---|---|---|---|---|---|
| MT20 | 650 | 371 | 1747 | 788 | 1987 | 1873 |

PLATE PLACEMENT TOL. = 0.250 inches

PLATE ROTATION TOL. = 5.0 Deg.

JSI GRIP= 0.88 (J) (INPUT = 0.90 )
JSI METAL= 0.68 (O) (INPUT = 1.00 )

| JOB NAME | TRUSS NAME | QUANTITY | PLY | JOB DESC. | DRWG NO. |
|---|---|---|---|---|---|
| 345177 | H06 | | 1 | TRUSS DESC. JT 45147 | E22073481 |

Alpha Roof Truss, Maple

Version 8.530 S Feb 23 2022 MiTek Industries, Inc. Tue Jul 12 10:23:57 2022 Page 1

ID:RK?4zbbW6zKUfpVYHQwqmTz3QmS-wzomdkisYIjQ9G20LO5y5smOaO8B?C9OY29ia?yyrs0

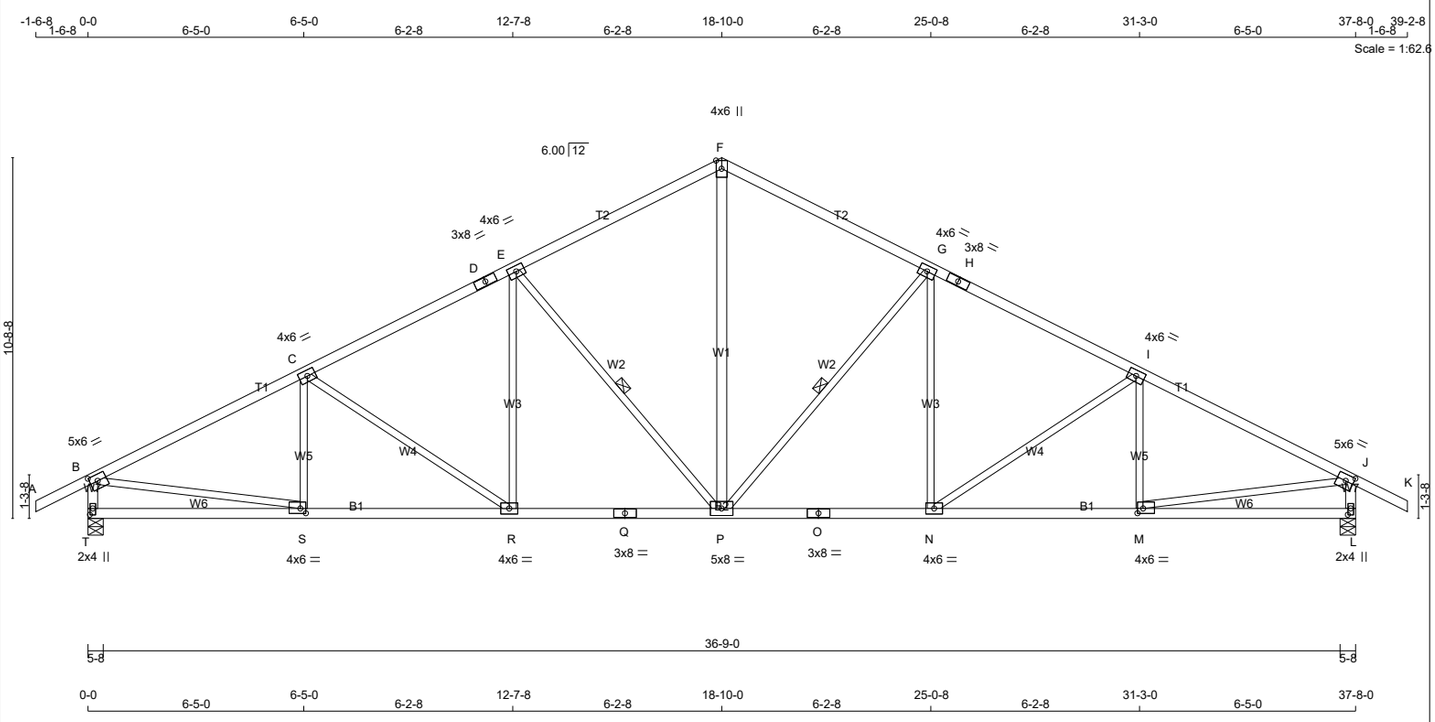


TOTAL WEIGHT = 5 X 163 = 815 lb

[M][F]

**LUMBER**

N. L. G. A. RULES

| CHORDS | SIZE | | LUMBER | DESCR. |
|---|---|---|---|---|
| A - D | 2x4 | DRY | No.2 | SPF |
| D - F | 2x4 | DRY | No.2 | SPF |
| F - H | 2x4 | DRY | No.2 | SPF |
| H - K | 2x4 | DRY | No.2 | SPF |
| T - B | 2x4 | DRY | No.2 | SPF |
| L - J | 2x4 | DRY | No.2 | SPF |
| T - Q | 2x4 | DRY | No.2 | SPF |
| Q - O | 2x4 | DRY | No.2 | SPF |
| O - L | 2x4 | DRY | No.2 | SPF |
| ALL WEBS | 2x3 | DRY | No.2 | SPF |
| EXCEPT | | | | |
| P - F | 2x4 | DRY | No.2 | SPF |

DRY: SEASONED LUMBER.

**PLATES (table is in inches)**

| JT | TYPE | PLATES | W | LEN | Y | X |
|---|---|---|---|---|---|---|
| B | TMVW-t | MT20 | 5.0 | 6.0 | 2.25 | 2.75 |
| C, E, G, I | | | | | | |
| C | TMWW-t | MT20 | 4.0 | 6.0 | | |
| D | TS-t | MT20 | 3.0 | 8.0 | | |
| F | TTW+p | MT20 | 4.0 | 6.0 | Edge | |
| H | TS-t | MT20 | 3.0 | 8.0 | | |
| J | TMVW-t | MT20 | 5.0 | 6.0 | 2.25 | 2.75 |
| L | BMV1+p | MT20 | 2.0 | 4.0 | 2.25 | 1.00 |
| M | BMWW-t | MT20 | 4.0 | 6.0 | 1.75 | 2.00 |
| N | BMWW-t | MT20 | 4.0 | 6.0 | | |
| O | BS-t | MT20 | 3.0 | 8.0 | | |
| P | BMWWW-t | MT20 | 5.0 | 8.0 | | |
| Q | BS-t | MT20 | 3.0 | 8.0 | | |
| R | BMWW-t | MT20 | 4.0 | 6.0 | | |
| S | BMWW-t | MT20 | 4.0 | 6.0 | 1.75 | 2.00 |
| T | BMV1+p | MT20 | 2.0 | 4.0 | 2.25 | 1.00 |

Edge - INDICATES REFERENCE CORNER OF PLATE TOUCHES EDGE OF CHORD.

LATERAL BRACE(S) SHOWN SHALL BE 2X4 SPF#2

LICENSED PROFESSIONAL ENGINEER
Y. WIDYA
100225448
07/12/2022
PROVINCE OF ONTARIO

**DIMENSIONS, SUPPORTS AND LOADINGS SPECIFIED BY FABRICATOR TO BE VERIFIED BY BUILDING DESIGNER**

**BEARINGS**

| JT | FACTORED GROSS REACTION VERT | HORZ | MAXIMUM FACTORED GROSS REACTION DOWN | HORZ | UPLIFT | INPUT BRG IN-SX | REQRD BRG IN-SX |
|---|---|---|---|---|---|---|---|
| T | 1942 | 0 | 1942 | 0 | 0 | 5-8 | 2-13 |
| L | 1942 | 0 | 1942 | 0 | 0 | 5-8 | 2-13 |

**UNFACTORED REACTIONS**

| JT | 1ST LCASE COMBINED | MAX./MIN. COMPONENT REACTIONS SNOW | LIVE | PERM.LIVE | WIND | DEAD | SOIL |
|---|---|---|---|---|---|---|---|
| T | 1382 | 858 / 0 | 0 / 0 | 0 / 0 | 0 / 0 | 524 / 0 | 0 / 0 |
| L | 1382 | 858 / 0 | 0 / 0 | 0 / 0 | 0 / 0 | 524 / 0 | 0 / 0 |

BEARING MATERIAL TO BE SPF NO.2 OR BETTER AT JOINT(S) T, L

**BRACING**

TOP CHORD TO BE SHEATHED OR MAX. PURLIN SPACING = 3.79 FT.
MAX. UNBRACED BOTTOM CHORD LENGTH = 10.00 FT OR RIGID CEILING DIRECTLY APPLIED.

ALL PITCH BREAKS AND PERIMETER CORNER JOINTS MUST BE LATERALLY RESTRAINED.

1 LATERAL BRACE(S) AT 1/ 2 LENGTH OF G-P, E-P.

END VERTICAL(S) MUST BE SHEATHED OR HAVE BRACES AS INDICATED IN THE MAX. UNBRACED LENGTH COLUMN OF THE TABLE BELOW

**LOADING**

TOTAL LOAD CASES: (4)

| CHORDS MEMB. FR-TO | MAX. FACTORED FORCE (LBS) | FACTORED VERT. LOAD (PLF) FROM | TO | LC1 MAX CSI (LC) | MAX. UNBRAC LENGTH | WEBS MEMB. FR-TO | MAX. FACTORED FORCE (LBS) | MAX CSI (LC) |
|---|---|---|---|---|---|---|---|---|
| A- B | 0 / 28 | -78.0 | -78.0 | 0.14 (1) | 10.00 | P- F | 0 / 1261 | 0.20 (1) |
| B- C | -2653 / 0 | -78.0 | -78.0 | 0.55 (1) | 3.79 | P- G | -749 / 0 | 0.48 (1) |
| C- D | -2389 / 0 | -78.0 | -78.0 | 0.45 (1) | 4.08 | N- G | 0 / 282 | 0.07 (4) |
| D- E | -2389 / 0 | -78.0 | -78.0 | 0.45 (1) | 4.08 | N- I | -307 / 0 | 0.34 (1) |
| E- F | -1867 / 0 | -78.0 | -78.0 | 0.43 (1) | 4.50 | M- I | -239 / 4 | 0.07 (1) |
| F- G | -1867 / 0 | -78.0 | -78.0 | 0.43 (1) | 4.50 | E- P | -749 / 0 | 0.48 (1) |
| G- H | -2389 / 0 | -78.0 | -78.0 | 0.45 (1) | 4.08 | R- E | 0 / 282 | 0.07 (4) |
| H- I | -2389 / 0 | -78.0 | -78.0 | 0.45 (1) | 4.08 | C- R | -307 / 0 | 0.34 (1) |
| I- J | -2653 / 0 | -78.0 | -78.0 | 0.55 (1) | 3.79 | S- C | -239 / 4 | 0.07 (1) |
| J- K | 0 / 28 | -78.0 | -78.0 | 0.14 (1) | 10.00 | B- S | 0 / 2419 | 0.54 (1) |
| T- B | -1891 / 0 | 0.0 | 0.0 | 0.19 (1) | 6.10 | M- J | 0 / 2419 | 0.54 (1) |
| L- J | -1891 / 0 | 0.0 | 0.0 | 0.19 (1) | 6.10 | | | |
| T- S | 0 / 0 | -18.5 | -18.5 | 0.17 (4) | 10.00 | | | |
| S- R | 0 / 2391 | -18.5 | -18.5 | 0.46 (1) | 10.00 | | | |
| R- Q | 0 / 2137 | -18.5 | -18.5 | 0.43 (1) | 10.00 | | | |
| Q- P | 0 / 2137 | -18.5 | -18.5 | 0.43 (1) | 10.00 | | | |
| P- O | 0 / 2137 | -18.5 | -18.5 | 0.43 (1) | 10.00 | | | |
| O- N | 0 / 2137 | -18.5 | -18.5 | 0.43 (1) | 10.00 | | | |
| N- M | 0 / 2391 | -18.5 | -18.5 | 0.46 (1) | 10.00 | | | |
| M- L | 0 / 0 | -18.5 | -18.5 | 0.17 (4) | 10.00 | | | |

**DESIGN CRITERIA**

SPECIFIED LOADS:

| | | | | | |
|---|---|---|---|---|---|
| TOP | CH. | LL | = | 21.0 | PSF |
| | | DL | = | 6.0 | PSF |
| BOT | CH. | LL | = | 0.0 | PSF |
| | | DL | = | 7.4 | PSF |
| TOTAL | LOAD | | = | 34.4 | PSF |

**SPACING = 24.0 IN. C/C**

THIS TRUSS IS DESIGNED FOR RESIDENTIAL OR SMALL BUILDING REQUIREMENTS OF PART 9, NBCC 2015

THIS DESIGN COMPLIES WITH:
- PART 9 OF BCBC 2018 , ABC 2019
- PART 9 OF OBC 2012 (2019 AMENDMENT)
- CSA 086-14
- TPIC 2014

(55 % OF 23.0 P.S.F. G.S.L. PLUS 8.4 P.S.F. RAIN LOAD) EQUALS 21.0 P.S.F. SPECIFIED ROOF LIVE LOAD

ALLOWABLE DEFL.(LL)= L/360 (1.26")
CALCULATED VERT. DEFL.(LL) = L/ 999 (0.13")
ALLOWABLE DEFL.(TL)= L/360 (1.26")
CALCULATED VERT. DEFL.(TL) = L/ 999 (0.28")

CSI: TC=0.55/1.00 (I-J:1) , BC=0.46/1.00 (M-N:1) , WB=0.54/1.00 (J-M:1) , SSI=0.21/1.00 (I-J:1)

DOL LUMBER=1.00 NAIL=1.00 LS BEND=1.10 COMP=1.10 SHEAR=1.10 TENS= 1.10

COMPANION LIVE LOAD FACTOR = 1.00

TRUSS PLATE MANUFACTURER IS NOT RESPONSIBLE FOR QUALITY CONTROL IN THE TRUSS MANUFACTURING PLANT .

NAIL VALUES

| PLATE | GRIP(DRY) (PSI) MAX | MIN | SHEAR (PLI) MAX | MIN | SECTION (PLI) MAX | MIN |
|---|---|---|---|---|---|---|
| MT20 | 650 | 371 | 1747 | 788 | 1987 | 1873 |

PLATE PLACEMENT TOL. = 0.250 inches

PLATE ROTATION TOL. = 5.0 Deg.

JSI GRIP= 0.89 (J) (INPUT = 0.90 )
JSI METAL= 0.68 (Q) (INPUT = 1.00 )

| JOB NAME | TRUSS NAME | QUANTITY | PLY | JOB DESC. | DRWG NO. |
|---|---|---|---|---|---|
| 345177 | H06S | | 1 | TRUSS DESC. JT 45147 | E22073482 |

Alpa Roof Truss, Maple

Version 8.530 S Feb 23 2022 MiTek Industries, Inc. Tue Jul 12 10:23:59 2022 Page 1

ID:RK?4zbbW6zKUfpVYHQwqmTz3QmS-sMwX2Qk74vz8OaCPSp7QAHrk9CqkT5mh?Mepfuyyrs_

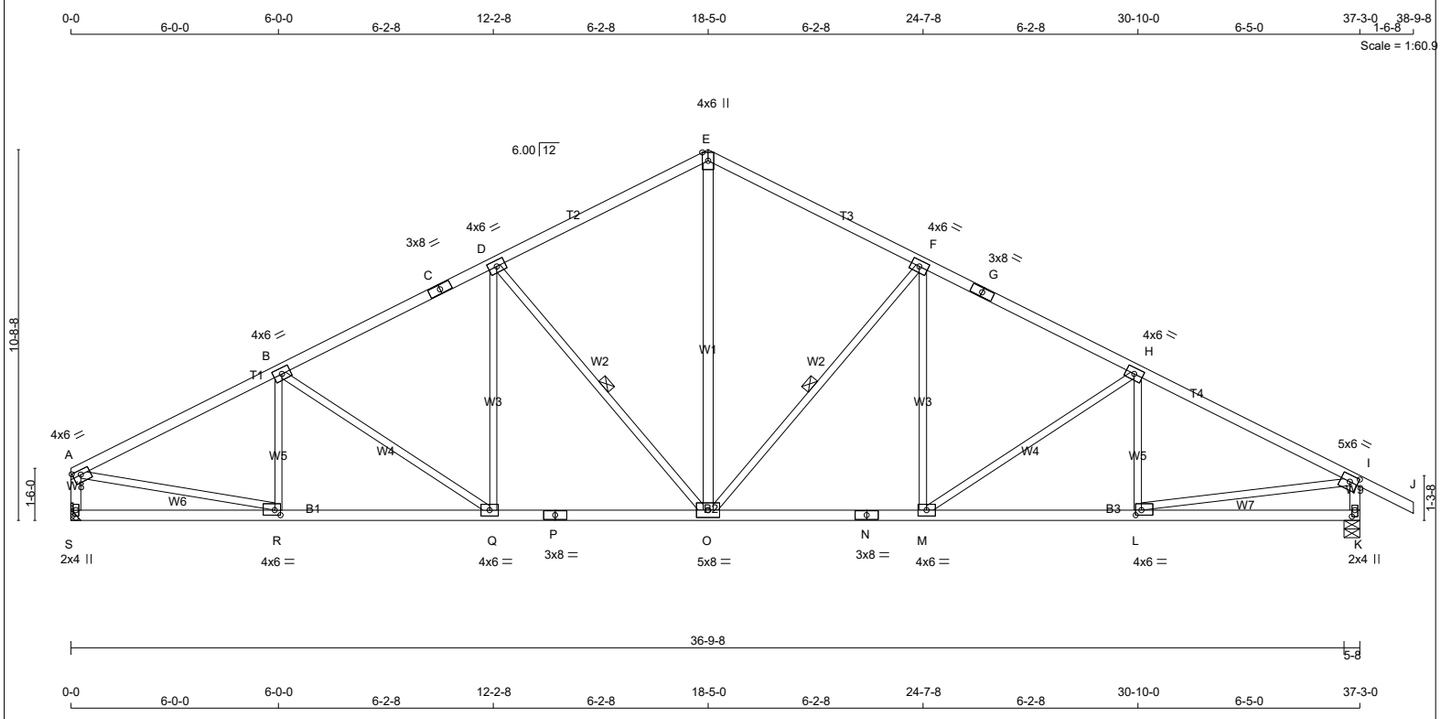


TOTAL WEIGHT = 160 lb

[M][F]

**LUMBER**

N. L. G. A. RULES

| CHORDS | SIZE | | LUMBER | DESCR. |
|---|---|---|---|---|
| A - C | 2x4 | DRY | No.2 | SPF |
| C - E | 2x4 | DRY | No.2 | SPF |
| E - G | 2x4 | DRY | No.2 | SPF |
| G - J | 2x4 | DRY | No.2 | SPF |
| S - A | 2x4 | DRY | No.2 | SPF |
| K - I | 2x4 | DRY | No.2 | SPF |
| S - P | 2x4 | DRY | No.2 | SPF |
| P - N | 2x4 | DRY | No.2 | SPF |
| N - K | 2x4 | DRY | No.2 | SPF |
| ALL WEBS EXCEPT | 2x3 | DRY | No.2 | SPF |
| O - E | 2x4 | DRY | No.2 | SPF |

DRY: SEASONED LUMBER.

**PLATES (table is in inches)**

| JT | TYPE | PLATES | W | LEN | Y | X |
|---|---|---|---|---|---|---|
| A | TMVW-t | MT20 | 4.0 | 6.0 | 1.50 | 2.75 |
| B, D, F, H | | | | | | |
| B | TMWW-t | MT20 | 4.0 | 6.0 | | |
| C | TS-t | MT20 | 3.0 | 8.0 | | |
| E | TTW+p | MT20 | 4.0 | 6.0 | Edge | |
| G | TS-t | MT20 | 3.0 | 8.0 | | |
| I | TMVW-t | MT20 | 5.0 | 6.0 | 2.25 | 2.75 |
| K | BMV1+p | MT20 | 2.0 | 4.0 | 2.25 | 1.00 |
| L | BMWW-t | MT20 | 4.0 | 6.0 | 1.75 | 2.00 |
| M | BMWW-t | MT20 | 4.0 | 6.0 | | |
| N | BS-t | MT20 | 3.0 | 8.0 | | |
| O | BMWWW-t | MT20 | 5.0 | 8.0 | | |
| P | BS-t | MT20 | 3.0 | 8.0 | | |
| Q | BMWW-t | MT20 | 4.0 | 6.0 | | |
| R | BMWW-t | MT20 | 4.0 | 6.0 | 1.75 | 2.00 |
| S | BMV1+p | MT20 | 2.0 | 4.0 | | |

Edge - INDICATES REFERENCE CORNER OF PLATE TOUCHES EDGE OF CHORD.

LATERAL BRACE(S) SHOWN SHALL BE 2X4 SPF#2

LICENSED PROFESSIONAL ENGINEER
Y. WIDYA
100225448
07/12/2022
PROVINCE OF ONTARIO

**DIMENSIONS, SUPPORTS AND LOADINGS SPECIFIED BY FABRICATOR TO BE VERIFIED BY BUILDING DESIGNER**

**BEARINGS**

| JT | FACTORED GROSS REACTION VERT | HORZ | MAXIMUM FACTORED GROSS REACTION DOWN | HORZ | UPLIFT | INPUT BRG | REQRD BRG |
|---|---|---|---|---|---|---|---|
| S | 1797 | 0 | 1797 | 0 | 0 | MECHANICAL | |
| K | 1922 | 0 | 1922 | 0 | 0 | 5-8 | 2-12 |

A SUITABLE HANGER/MECHANICAL CONNECTION IS REQUIRED AT JOINT S. MINIMUM BEARING LENGTH AT JOINT S = 2-5.

**UNFACTORED REACTIONS**

| JT | 1ST LCASE COMBINED | MAX./MIN. COMPONENT REACTIONS SNOW | LIVE | PERM.LIVE | WIND | DEAD | SOIL |
|---|---|---|---|---|---|---|---|
| S | 1281 | 782 / 0 | 0 / 0 | 0 / 0 | 0 / 0 | 499 / 0 | 0 / 0 |
| K | 1368 | 849 / 0 | 0 / 0 | 0 / 0 | 0 / 0 | 518 / 0 | 0 / 0 |

BEARING MATERIAL TO BE SPF NO.2 OR BETTER AT JOINT(S) K

**BRACING**

TOP CHORD TO BE SHEATHED OR MAX. PURLIN SPACING = 3.81 FT.
MAX. UNBRACED BOTTOM CHORD LENGTH = 10.00 FT OR RIGID CEILING DIRECTLY APPLIED.

ALL PITCH BREAKS AND PERIMETER CORNER JOINTS MUST BE LATERALLY RESTRAINED.

1 LATERAL BRACE(S) AT 1/ 2 LENGTH OF D-O, F-O.

END VERTICAL(S) MUST BE SHEATHED OR HAVE BRACES AS INDICATED IN THE MAX. UNBRACED LENGTH COLUMN OF THE TABLE BELOW

**LOADING**

TOTAL LOAD CASES: (4)

CHORDS

| MEMB. FR-TO | MAX. FACTORED FORCE (LBS) | FACTORED VERT. LOAD LC1 (PLF) FROM | TO | MAX CSI (LC) | MAX. UNBRAC LENGTH |
|---|---|---|---|---|---|
| A- B | -2478 / 0 | -78.0 | -78.0 | 0.46 (1) | 3.99 |
| B- C | -2311 / 0 | -78.0 | -78.0 | 0.44 (1) | 4.13 |
| C- D | -2311 / 0 | -78.0 | -78.0 | 0.44 (1) | 4.13 |
| D- E | -1827 / 0 | -78.0 | -78.0 | 0.43 (1) | 4.54 |
| E- F | -1827 / 0 | -78.0 | -78.0 | 0.42 (1) | 4.54 |
| F- G | -2350 / 0 | -78.0 | -78.0 | 0.44 (1) | 4.11 |
| G- H | -2350 / 0 | -78.0 | -78.0 | 0.44 (1) | 4.11 |
| H- I | -2619 / 0 | -78.0 | -78.0 | 0.55 (1) | 3.81 |
| I- J | 0 / 28 | -78.0 | -78.0 | 0.14 (1) | 10.00 |
| S- A | -1750 / 0 | 0.0 | 0.0 | 0.18 (1) | 6.30 |
| K- I | -1871 / 0 | 0.0 | 0.0 | 0.19 (1) | 6.13 |
| S- R | 0 / 0 | -18.5 | -18.5 | 0.15 (4) | 10.00 |
| R- Q | 0 / 2234 | -18.5 | -18.5 | 0.43 (1) | 10.00 |
| Q- P | 0 / 2069 | -18.5 | -18.5 | 0.42 (1) | 10.00 |
| P- O | 0 / 2069 | -18.5 | -18.5 | 0.42 (1) | 10.00 |
| O- N | 0 / 2102 | -18.5 | -18.5 | 0.43 (1) | 10.00 |
| N- M | 0 / 2102 | -18.5 | -18.5 | 0.43 (1) | 10.00 |
| M- L | 0 / 2361 | -18.5 | -18.5 | 0.46 (1) | 10.00 |
| L- K | 0 / 0 | -18.5 | -18.5 | 0.17 (4) | 10.00 |

WEBS

| MEMB. FR-TO | MAX. FACTORED FORCE (LBS) | MAX CSI (LC) |
|---|---|---|
| R- B | -322 / 0 | 0.10 (1) |
| Q- D | 0 / 223 | 0.06 (4) |
| D- O | -700 / 0 | 0.45 (1) |
| O- E | 0 / 1226 | 0.20 (1) |
| O- F | -751 / 0 | 0.49 (1) |
| M- F | 0 / 285 | 0.07 (4) |
| M- H | -312 / 0 | 0.35 (1) |
| L- H | -235 / 6 | 0.07 (1) |
| A- R | 0 / 2277 | 0.51 (1) |
| L- I | 0 / 2388 | 0.54 (1) |

**DESIGN CRITERIA**

SPECIFIED LOADS:

| | | | | |
|---|---|---|---|---|
| TOP CH. | LL | = | 21.0 | PSF |
| | DL | = | 6.0 | PSF |
| BOT CH. | LL | = | 0.0 | PSF |
| | DL | = | 7.4 | PSF |
| TOTAL LOAD | | = | 34.4 | PSF |

**SPACING = 24.0 IN. C/C**

THIS TRUSS IS DESIGNED FOR RESIDENTIAL OR SMALL BUILDING REQUIREMENTS OF PART 9, NBCC 2015

THIS DESIGN COMPLIES WITH:
- PART 9 OF BCBC 2018 , ABC 2019
- PART 9 OF OBC 2012 (2019 AMENDMENT)
- CSA 086-14
- TPIC 2014

(55 % OF 23.0 P.S.F. G.S.L. PLUS 8.4 P.S.F. RAIN LOAD) EQUALS 21.0 P.S.F. SPECIFIED ROOF LIVE LOAD

ALLOWABLE DEFL.(LL)= L/360 (1.24")
CALCULATED VERT. DEFL.(LL) = L/ 999 (0.13")
ALLOWABLE DEFL.(TL)= L/360 (1.24")
CALCULATED VERT. DEFL.(TL) = L/ 999 (0.26")

CSI: TC=0.55/1.00 (H-I:1) , BC=0.46/1.00 (L-M:1) , WB=0.54/1.00 (I-L:1) , SSI=0.21/1.00 (H-I:1)

DOL LUMBER=1.00 NAIL=1.00 LS BEND=1.10 COMP=1.10 SHEAR=1.10 TENS= 1.10

COMPANION LIVE LOAD FACTOR = 1.00

TRUSS PLATE MANUFACTURER IS NOT RESPONSIBLE FOR QUALITY CONTROL IN THE TRUSS MANUFACTURING PLANT .

NAIL VALUES

| PLATE | GRIP(DRY) (PSI) MAX | MIN | SHEAR (PLI) MAX | MIN | SECTION (PLI) MAX | MIN |
|---|---|---|---|---|---|---|
| MT20 | 650 | 371 | 1747 | 788 | 1987 | 1873 |

PLATE PLACEMENT TOL. = 0.250 inches

PLATE ROTATION TOL. = 5.0 Deg.

JSI GRIP= 0.90 (A) (INPUT = 0.90 )
JSI METAL= 0.63 (I) (INPUT = 1.00 )

| JOB NAME | TRUSS NAME | QUANTITY | PLY | JOB DESC. | DRWG NO. |
|---|---|---|---|---|---|
| 345177 | H07T | | 1 | TRUSS DESC. JT 45147 | E22073483 |

Alpa Roof Truss, Maple

Version 8.530 S Feb 23 2022 MiTek Industries, Inc. Tue Jul 12 10:24:01 2022 Page 1

ID:RK?4zbbW6zKUfpVYHQwqmTz3QmS-ol2HS5lNcXEseuLoaE9uFiwAX?SHx37 Tq7wimyyrry

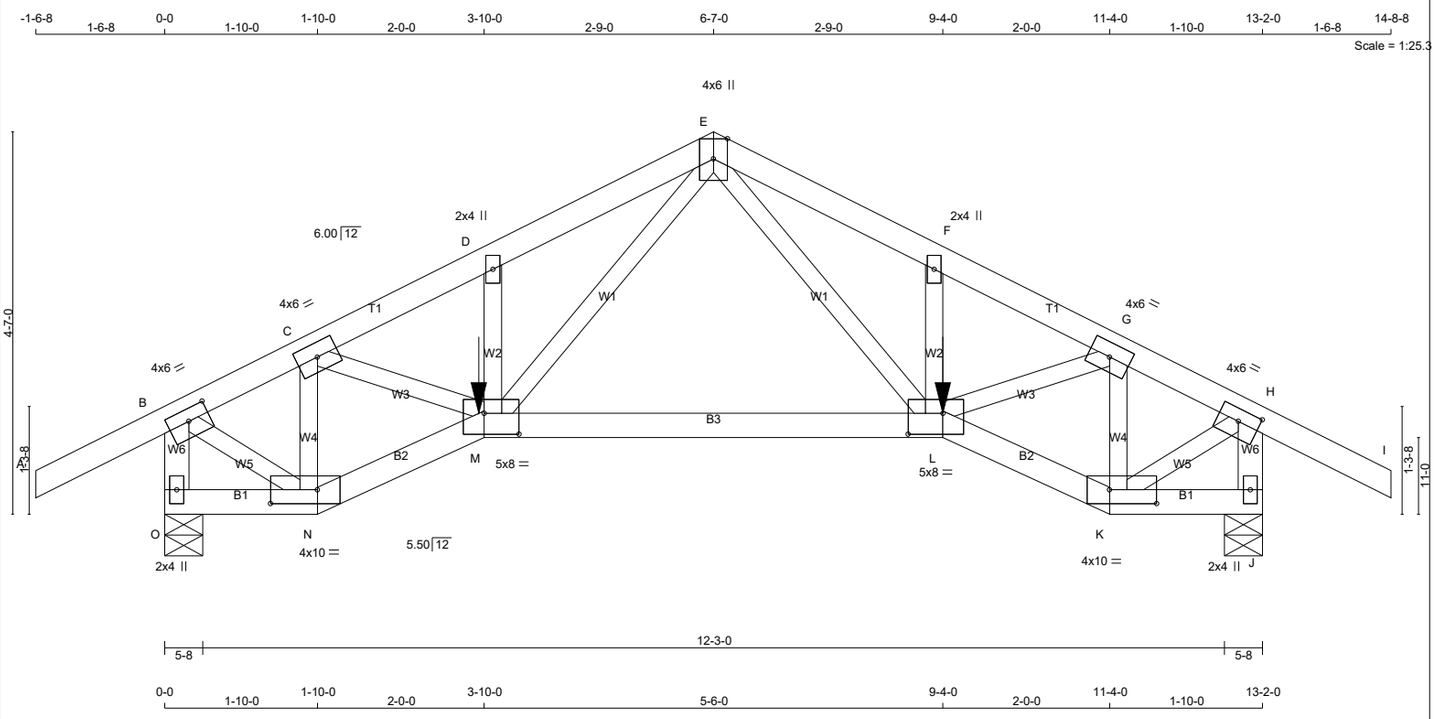


TOTAL WEIGHT = 57 lb [M]

**LUMBER**

N. L. G. A. RULES

| CHORDS | SIZE | | LUMBER | DESCR. |
|---|---|---|---|---|
| A - E | 2x4 | DRY | No.2 | SPF |
| E - I | 2x4 | DRY | No.2 | SPF |
| O - B | 2x4 | DRY | No.2 | SPF |
| J - H | 2x4 | DRY | No.2 | SPF |
| O - N | 2x4 | DRY | No.2 | SPF |
| N - M | 2x4 | DRY | No.2 | SPF |
| M - L | 2x4 | DRY | No.2 | SPF |
| L - K | 2x4 | DRY | No.2 | SPF |
| K - J | 2x4 | DRY | No.2 | SPF |
| ALL WEBS EXCEPT | 2x3 | DRY | No.2 | SPF |

DRY: SEASONED LUMBER.

**PLATES (table is in inches)**

| JT | TYPE | PLATES | W | LEN | Y | X |
|---|---|---|---|---|---|---|
| B | TMVW-t | MT20 | 4.0 | 6.0 | 1.75 | 3.00 |
| C | TMWW-t | MT20 | 4.0 | 6.0 | | |
| D | TMW+w | MT20 | 2.0 | 4.0 | | |
| E | TTWW-m | MT20 | 4.0 | 6.0 | Edge | |
| F | TMW+w | MT20 | 2.0 | 4.0 | | |
| G | TMWW-t | MT20 | 4.0 | 6.0 | | |
| H | TMVW-t | MT20 | 4.0 | 6.0 | 1.75 | 3.00 |
| J | BMV1+p | MT20 | 2.0 | 4.0 | | |
| K | BBWW-l | MT20 | 4.0 | 10.0 | 2.00 | 6.75 |
| L | BBWWW-p | MT20 | 5.0 | 8.0 | 3.00 | 5.00 |
| M | BBWWW-p | MT20 | 5.0 | 8.0 | 3.00 | 5.00 |
| N | BBWW-l | MT20 | 4.0 | 10.0 | 2.00 | 6.75 |
| O | BMV1+p | MT20 | 2.0 | 4.0 | | |

Edge - INDICATES REFERENCE CORNER OF PLATE TOUCHES EDGE OF CHORD.

LATERAL BRACE(S) SHOWN SHALL BE 2X4 SPF#2

LICENSED PROFESSIONAL ENGINEER
Y. WIDYA
100225448
07/12/2022
PROVINCE OF ONTARIO

**DIMENSIONS, SUPPORTS AND LOADINGS SPECIFIED BY FABRICATOR TO BE VERIFIED BY BUILDING DESIGNER**

**BEARINGS**

| JT | FACTORED GROSS REACTION VERT | HORZ | MAXIMUM FACTORED GROSS REACTION DOWN | HORZ | UPLIFT | INPUT BRG IN-SX | REQRD BRG IN-SX |
|---|---|---|---|---|---|---|---|
| O | 1352 | 0 | 1352 | 0 | 0 | 5-8 | 1-8 |
| J | 1352 | 0 | 1352 | 0 | 0 | 5-8 | 1-8 |

**UNFACTORED REACTIONS**

| JT | 1ST LCASE COMBINED | MAX./MIN. COMPONENT REACTIONS SNOW | LIVE | PERM.LIVE | WIND | DEAD | SOIL |
|---|---|---|---|---|---|---|---|
| O | 967 | 576 / 0 | 0 / 0 | 0 / 0 | 0 / 0 | 390 / 0 | 0 / 0 |
| J | 967 | 576 / 0 | 0 / 0 | 0 / 0 | 0 / 0 | 390 / 0 | 0 / 0 |

BEARING MATERIAL TO BE SPF NO.2 OR BETTER AT JOINT(S) O, J

**BRACING**

TOP CHORD TO BE SHEATHED OR MAX. PURLIN SPACING = 4.47 FT.
MAX. UNBRACED BOTTOM CHORD LENGTH = 10.00 FT OR RIGID CEILING DIRECTLY APPLIED.

ALL PITCH BREAKS AND PERIMETER CORNER JOINTS MUST BE LATERALLY RESTRAINED.

**LOADING**

TOTAL LOAD CASES: (4)

CHORDS

| MEMB. FR-TO | MAX. FACTORED FORCE (LBS) | FACTORED VERT. LOAD (PLF) FROM | TO | LC1 MAX CSI (LC) | MAX. UNBRAC LENGTH |
|---|---|---|---|---|---|
| A- B | 0 / 28 | -78.0 | -78.0 | 0.16 (1) | 10.00 |
| B- C | -1182 / 0 | -78.0 | -78.0 | 0.17 (1) | 5.65 |
| C- D | -2140 / 0 | -78.0 | -78.0 | 0.13 (1) | 4.52 |
| D- E | -2148 / 0 | -78.0 | -78.0 | 0.17 (1) | 4.47 |
| E- F | -2148 / 0 | -78.0 | -78.0 | 0.17 (1) | 4.47 |
| F- G | -2140 / 0 | -78.0 | -78.0 | 0.13 (1) | 4.52 |
| G- H | -1182 / 0 | -78.0 | -78.0 | 0.17 (1) | 5.65 |
| H- I | 0 / 28 | -78.0 | -78.0 | 0.16 (1) | 10.00 |
| O- B | -1322 / 0 | 0.0 | 0.0 | 0.15 (1) | 7.00 |
| J- H | -1322 / 0 | 0.0 | 0.0 | 0.15 (1) | 7.00 |
| O- N | 0 / 0 | -33.5 | -33.5 | 0.04 (4) | 10.00 |
| N- M | 0 / 1077 | -33.5 | -33.5 | 0.22 (1) | 10.00 |
| M- L | 0 / 1217 | -86.8 | -86.8 | 0.71 (1) | 10.00 |
| L- K | 0 / 1077 | -33.5 | -33.5 | 0.22 (1) | 10.00 |
| K- J | 0 / 0 | -33.5 | -33.5 | 0.04 (4) | 10.00 |

WEBS

| MEMB. FR-TO | MAX. FACTORED FORCE (LBS) | MAX CSI (LC) |
|---|---|---|
| E- L | 0 / 1108 | 0.27 (1) |
| L- F | -200 / 0 | 0.03 (1) |
| L- G | 0 / 1023 | 0.25 (1) |
| K- G | -935 / 0 | 0.15 (1) |
| M- E | 0 / 1108 | 0.27 (1) |
| M- D | -200 / 0 | 0.03 (1) |
| C- M | 0 / 1023 | 0.25 (1) |
| N- C | -935 / 0 | 0.15 (1) |
| B- N | 0 / 1169 | 0.29 (1) |
| K- H | 0 / 1169 | 0.29 (1) |

FACTORED CONCENTRATED LOADS (LBS)

| JT | LOC. | LC1 | MAX- | MAX+ | FACE | DIR. | TYPE | HEEL | CONN. |
|---|---|---|---|---|---|---|---|---|---|
| L | 9-4-0 | -346 | -346 | --- | FRONT | VERT | TOTAL | --- | C1 |
| M | 3-10-0 | -346 | -346 | --- | FRONT | VERT | TOTAL | --- | C1 |

**CONNECTION REQUIREMENTS**

1) **C1:** A SUITABLE HANGER/MECHANICAL CONNECTION IS REQUIRED.

**DESIGN CRITERIA**

*** SPECIAL LOADS ANALYSIS ***
GEOMETRY AND/OR BASIC LOADS CHANGED BY USER.
LOADS WERE DERIVED FROM USER INPUT
NO FURTHER MODIFICATIONS WERE MADE

SPECIFIED LOADS:

| | | | | |
|---|---|---|---|---|
| TOP CH. | LL | = | 21.0 | PSF |
| | DL | = | 6.0 | PSF |
| BOT CH. | LL | = | 0.0 | PSF |
| | DL | = | 7.4 | PSF |
| TOTAL LOAD | | = | 34.4 | PSF |

**SPACING = 24.0 IN. C/C**

GIRDER TYPE: CStdGirder
START DISTANCE = 3-10-0
START SPAN CARRIED = 4-10-0
END DISTANCE = 9-4-0
END SPAN CARRIED = 4-10-0
END WALL WIDTH = 0-0
APPLIED TO FRONT SIDE OF BOTTOM CHORD.
- ADDT'L LOADS BASED ON 55 % OF GSL.

*** NON STANDARD GIRDER ***
ADDT'L USER-DEFINED LOADS APPLIED TO ALL LOAD CASES.

THIS TRUSS IS DESIGNED FOR RESIDENTIAL OR SMALL BUILDING REQUIREMENTS OF PART 9, NBCC 2015

THIS DESIGN COMPLIES WITH:
- PART 9 OF BCBC 2018 , ABC 2019
- PART 9 OF OBC 2012 (2019 AMENDMENT)
- CSA 086-14
- TPIC 2014

DESIGN ASSUMPTIONS
-OVERHANG NOT TO BE ALTERED OR CUT OFF.

(55 % OF 23.0 P.S.F. G.S.L. PLUS 8.4 P.S.F. RAIN LOAD) EQUALS 21.0 P.S.F. SPECIFIED ROOF LIVE LOAD

ALLOWABLE DEFL.(LL)= L/360 (0.44")
CALCULATED VERT. DEFL.(LL) = L/ 999 (0.12")
ALLOWABLE DEFL.(TL)= L/360 (0.44")
CALCULATED VERT. DEFL.(TL) = L/ 563 (0.28")

CSI: TC=0.17/1.00 (B-C:1) , BC=0.71/1.00 (L-M:1) , WB=0.29/1.00 (B-N:1) , SSI=0.20/1.00 (L-M:1)

DOL LUMBER=1.00 NAIL=1.00 LS BEND=1.00 COMP=1.00 SHEAR=1.00 TENS= 1.00

COMPANION LIVE LOAD FACTOR = 1.00

TRUSS PLATE MANUFACTURER IS NOT RESPONSIBLE FOR QUALITY CONTROL IN THE TRUSS MANUFACTURING PLANT .

NAIL VALUES

| PLATE | GRIP(DRY) (PSI) MAX | MIN | SHEAR (PLI) MAX | MIN | SECTION (PLI) MAX | MIN |
|---|---|---|---|---|---|---|
| MT20 | 650 | 371 | 1747 | 788 | 1987 | 1873 |

PLATE PLACEMENT TOL. = 0.250 inches

PLATE ROTATION TOL. = 5.0 Deg.

JSI GRIP= 0.89 (L) (INPUT = 0.90 )
JSI METAL= 0.43 (L) (INPUT = 1.00 )

| JOB NAME | TRUSS NAME | QUANTITY | PLY | JOB DESC. | DRWG NO. |
|---|---|---|---|---|---|
| 345177 | H07TS | | 1 | TRUSS DESC. JT 45147 | E22073484 |

Alpa Roof Truss, Maple

Version 8.530 S Feb 23 2022 MiTek Industries, Inc. Tue Jul 12 10:24:03 2022 Page 1

ID:RK?4zbbW6zKUfpVYHQwqmTz3QmS-l792tnnd88UatBVAhfBMK70WTpFSP0FHw c1nfyyrrw

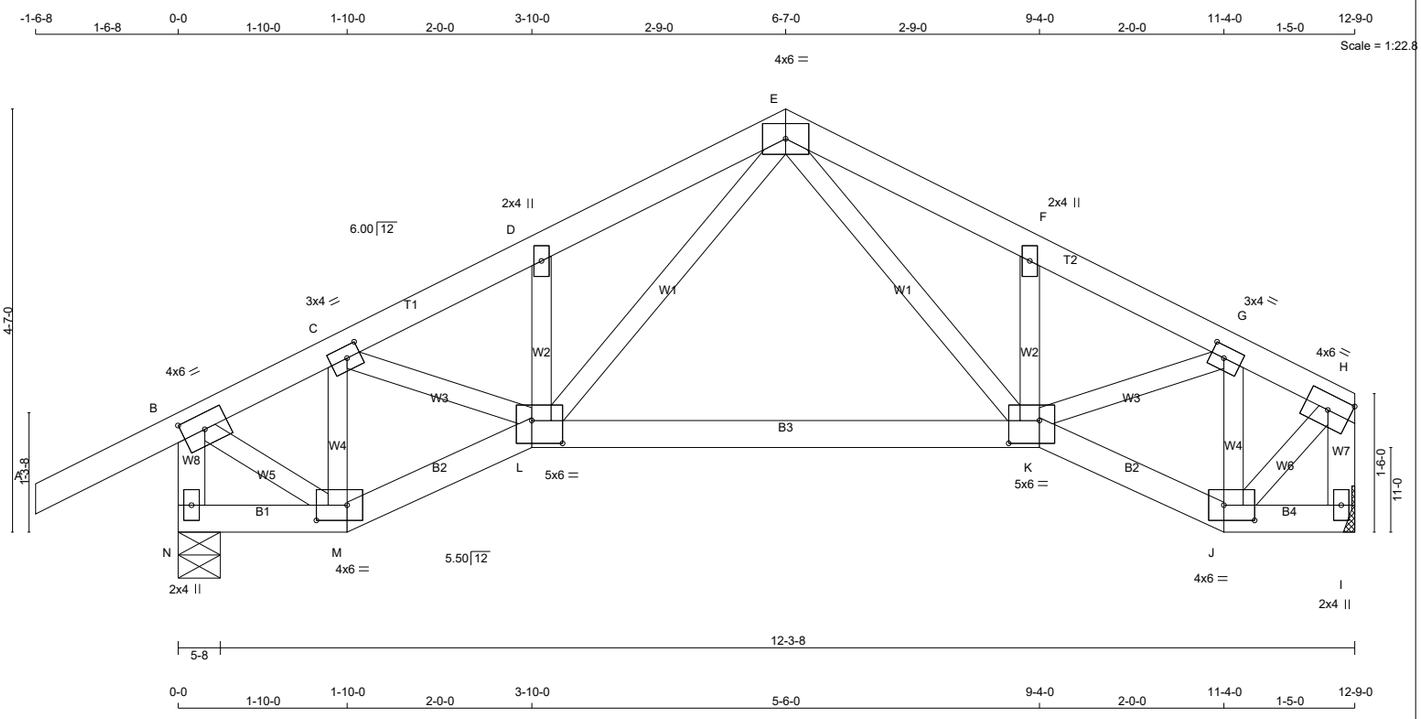


TOTAL WEIGHT = 3 X 54 = 161 lb

[M][F]

**LUMBER**

N. L. G. A. RULES

| CHORDS | SIZE | | LUMBER | DESCR. |
|---|---|---|---|---|
| A - E | 2x4 | DRY | No.2 | SPF |
| E - H | 2x4 | DRY | No.2 | SPF |
| N - B | 2x4 | DRY | No.2 | SPF |
| I - H | 2x4 | DRY | No.2 | SPF |
| N - M | 2x4 | DRY | No.2 | SPF |
| M - L | 2x4 | DRY | No.2 | SPF |
| L - K | 2x4 | DRY | No.2 | SPF |
| K - J | 2x4 | DRY | No.2 | SPF |
| J - I | 2x4 | DRY | No.2 | SPF |
| ALL WEBS EXCEPT | 2x3 | DRY | No.2 | SPF |

DRY: SEASONED LUMBER.

**PLATES (table is in inches)**

| JT | TYPE | PLATES | W | LEN | Y | X |
|---|---|---|---|---|---|---|
| B | TMVW-t | MT20 | 4.0 | 6.0 | 2.00 | 3.00 |
| C | TMWW-t | MT20 | 3.0 | 4.0 | 1.50 | 1.75 |
| D | TMW+w | MT20 | 2.0 | 4.0 | | |
| E | TTWW+m | MT20 | 4.0 | 6.0 | | |
| F | TMW+w | MT20 | 2.0 | 4.0 | | |
| G | TMWW-t | MT20 | 3.0 | 4.0 | 1.50 | 1.75 |
| H | TMVW-t | MT20 | 4.0 | 6.0 | | Edge |
| I | BMV1+p | MT20 | 2.0 | 4.0 | | |
| J | BBWW-l | MT20 | 4.0 | 6.0 | 2.00 | 4.00 |
| K | BBWWW-p | MT20 | 5.0 | 6.0 | 3.00 | 4.00 |
| L | BBWWW-p | MT20 | 5.0 | 6.0 | 3.00 | 4.00 |
| M | BBWW-l | MT20 | 4.0 | 6.0 | 2.00 | 4.00 |
| N | BMV1+p | MT20 | 2.0 | 4.0 | | |

Edge - INDICATES REFERENCE CORNER OF PLATE TOUCHES EDGE OF CHORD.

LATERAL BRACE(S) SHOWN SHALL BE 2X4 SPF#2

**DIMENSIONS, SUPPORTS AND LOADINGS SPECIFIED BY FABRICATOR TO BE VERIFIED BY BUILDING DESIGNER**

**BEARINGS**

| JT | FACTORED GROSS REACTION VERT | HORZ | MAXIMUM FACTORED GROSS REACTION DOWN | HORZ | UPLIFT | INPUT BRG | REQRD BRG |
|---|---|---|---|---|---|---|---|
| N | 748 | 0 | 748 | 0 | 0 | 5-8 | 1-8 |
| I | 607 | 0 | 607 | 0 | 0 | MECHANICAL | |

A SUITABLE HANGER/MECHANICAL CONNECTION IS REQUIRED AT JOINT I. MINIMUM BEARING LENGTH AT JOINT I = 1-8.

**UNFACTORED REACTIONS**

| JT | 1ST LCASE COMBINED | MAX./MIN. COMPONENT REACTIONS SNOW | LIVE | PERM.LIVE | WIND | DEAD | SOIL |
|---|---|---|---|---|---|---|---|
| N | 531 | 339 / 0 | 0 / 0 | 0 / 0 | 0 / 0 | 191 / 0 | 0 / 0 |
| I | 433 | 263 / 0 | 0 / 0 | 0 / 0 | 0 / 0 | 170 / 0 | 0 / 0 |

BEARING MATERIAL TO BE SPF NO.2 OR BETTER AT JOINT(S) N

**BRACING**

TOP CHORD TO BE SHEATHED OR MAX. PURLIN SPACING = 6.25 FT.
MAX. UNBRACED BOTTOM CHORD LENGTH = 10.00 FT OR RIGID CEILING DIRECTLY APPLIED.

ALL PITCH BREAKS AND PERIMETER CORNER JOINTS MUST BE LATERALLY RESTRAINED.

**LOADING**

TOTAL LOAD CASES: (4)

CHORDS

| MEMB. FR-TO | MAX. FACTORED FORCE (LBS) | FACTORED VERT. LOAD (PLF) FROM | TO | LC1 CSI (LC) | MAX UNBRAC LENGTH |
|---|---|---|---|---|---|
| A- B | 0 / 28 | -78.0 | -78.0 | 0.14 (1) | 10.00 |
| B- C | -545 / 0 | -78.0 | -78.0 | 0.11 (1) | 6.25 |
| C- D | -903 / 0 | -78.0 | -78.0 | 0.05 (1) | 6.25 |
| D- E | -923 / 0 | -78.0 | -78.0 | 0.07 (1) | 6.25 |
| E- F | -883 / 0 | -78.0 | -78.0 | 0.08 (1) | 6.25 |
| F- G | -868 / 0 | -78.0 | -78.0 | 0.04 (1) | 6.25 |
| G- H | -458 / 0 | -78.0 | -78.0 | 0.01 (1) | 6.25 |
| N- B | -731 / 0 | 0.0 | 0.0 | 0.07 (1) | 7.81 |
| I- H | -594 / 0 | 0.0 | 0.0 | 0.06 (1) | 7.81 |
| N- M | 0 / 0 | -18.5 | -18.5 | 0.02 (4) | 10.00 |
| M- L | 0 / 483 | -18.5 | -18.5 | 0.09 (1) | 10.00 |
| L- K | 0 / 549 | -18.5 | -18.5 | 0.21 (4) | 10.00 |
| K- J | 0 / 424 | -18.5 | -18.5 | 0.08 (1) | 10.00 |
| J- I | 0 / 0 | -18.5 | -18.5 | 0.01 (4) | 10.00 |

WEBS

| MEMB. FR-TO | MAX. FACTORED FORCE (LBS) | MAX CSI (LC) |
|---|---|---|
| M- C | -413 / 0 | 0.06 (1) |
| C- L | 0 / 411 | 0.09 (1) |
| L- D | -224 / 0 | 0.03 (1) |
| L- E | 0 / 427 | 0.10 (1) |
| E- K | 0 / 372 | 0.08 (1) |
| K- F | -215 / 0 | 0.03 (1) |
| K- G | 0 / 431 | 0.10 (1) |
| J- G | -491 / 0 | 0.07 (1) |
| B- M | 0 / 524 | 0.12 (1) |
| J- H | 0 / 539 | 0.12 (1) |

**DESIGN CRITERIA**

SPECIFIED LOADS:

| | | | | | |
|---|---|---|---|---|---|
| TOP | CH. | LL | = | 21.0 | PSF |
| | | DL | = | 6.0 | PSF |
| BOT | CH. | LL | = | 0.0 | PSF |
| | | DL | = | 7.4 | PSF |
| TOTAL | LOAD | | = | 34.4 | PSF |

**SPACING = 24.0 IN. C/C**

THIS TRUSS IS DESIGNED FOR RESIDENTIAL OR SMALL BUILDING REQUIREMENTS OF PART 9, NBCC 2015

THIS DESIGN COMPLIES WITH:
- PART 9 OF BCBC 2018 , ABC 2019
- PART 9 OF OBC 2012 (2019 AMENDMENT)
- CSA 086-14
- TPIC 2014

DESIGN ASSUMPTIONS
-OVERHANG NOT TO BE ALTERED OR CUT OFF.

(55 % OF 23.0 P.S.F. G.S.L. PLUS 8.4 P.S.F. RAIN LOAD) EQUALS 21.0 P.S.F. SPECIFIED ROOF LIVE LOAD

ALLOWABLE DEFL.(LL)= L/360 (0.43")
CALCULATED VERT. DEFL.(LL) = L/ 999 (0.02")
ALLOWABLE DEFL.(TL)= L/360 (0.43")
CALCULATED VERT. DEFL.(TL) = L/ 999 (0.07")

CSI: TC=0.14/1.00 (A-B:1) , BC=0.21/1.00 (K-L:4) , WB=0.12/1.00 (H-J:1) , SSI=0.09/1.00 (B-C:1)

DOL LUMBER=1.00 NAIL=1.00 LS BEND=1.10 COMP=1.10 SHEAR=1.10 TENS= 1.10

COMPANION LIVE LOAD FACTOR = 1.00

TRUSS PLATE MANUFACTURER IS NOT RESPONSIBLE FOR QUALITY CONTROL IN THE TRUSS MANUFACTURING PLANT .

NAIL VALUES

| PLATE | GRIP(DRY) (PSI) MAX | MIN | SHEAR (PLI) MAX | MIN | SECTION (PLI) MAX | MIN |
|---|---|---|---|---|---|---|
| MT20 | 650 | 371 | 1747 | 788 | 1987 | 1873 |

PLATE PLACEMENT TOL. = 0.250 inches

PLATE ROTATION TOL. = 5.0 Deg.

JSI GRIP= 0.82 (M) (INPUT = 0.90 )
JSI METAL= 0.26 (L) (INPUT = 1.00 )

| JOB NAME | TRUSS NAME | QUANTITY | PLY | JOB DESC. | DRWG NO. |
|---|---|---|---|---|---|
| 345177 | H08 | | 1 | TRUSS DESC. JT 45147 | E22073485 |

Alpha Roof Truss, Maple

Version 8.530 S Feb 23 2022 MiTek Industries, Inc. Tue Jul 12 10:24:05 2022 Page 1

ID:RK?4zbbW6zKUfpVYHQwqmTz3QmS-hWHoITouglkI6VfZp3EqQY5htdmktjNaOI57rXyyrru

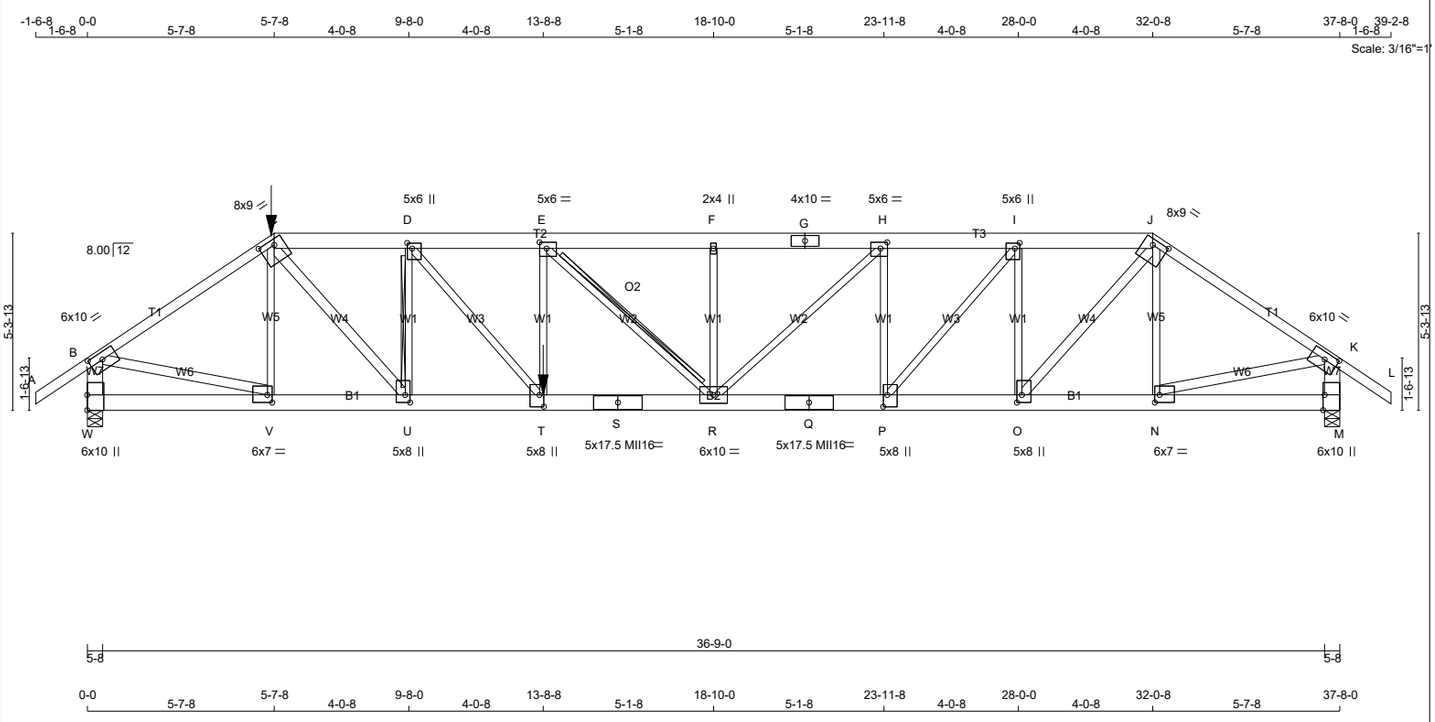


TOTAL WEIGHT = 209 lb

[M]

**LUMBER**

N. L. G. A. RULES

| CHORDS | SIZE | | LUMBER | DESCR. |
|---|---|---|---|---|
| A - C | 2x4 | DRY | 2100F 1.8E | SPF |
| C - G | 2x6 | DRY | No.2 | SPF |
| G - J | 2x6 | DRY | No.2 | SPF |
| J - L | 2x4 | DRY | 2100F 1.8E | SPF |
| W - B | 2x6 | DRY | No.2 | SPF |
| M - K | 2x6 | DRY | No.2 | SPF |
| W - S | 2x6 | DRY | 1650F 1.5E | SPF |
| S - Q | 2x6 | DRY | 1650F 1.5E | SPF |
| Q - M | 2x6 | DRY | 1650F 1.5E | SPF |
| ALL WEBS | 2x3 | DRY | No.2 | SPF |
| EXCEPT | | | | |
| C - U | 2x4 | DRY | No.2 | SPF |
| O - J | 2x4 | DRY | No.2 | SPF |
| B - V | 2x4 | DRY | No.2 | SPF |
| N - K | 2x4 | DRY | No.2 | SPF |

DRY: SEASONED LUMBER.

**PLATES (table is in inches)**

| JT | TYPE | PLATES | W | LEN | Y | X |
|---|---|---|---|---|---|---|
| B | TMVW-t | MT20 | 6.0 | 10.0 | 2.50 | 4.75 |
| C | TTWW-h | MT20 | 8.0 | 9.0 | 2.00 | 5.50 |
| D | TMWW+t | MT20 | 5.0 | 6.0 | 2.00 | 1.75 |
| E | TMWW-t | MT20 | 5.0 | 6.0 | 2.25 | 2.50 |
| F | TMW+w | MT20 | 2.0 | 4.0 | | |
| G | TS-t | MT20 | 4.0 | 10.0 | | |
| H | TMWW-t | MT20 | 5.0 | 6.0 | 2.25 | 2.50 |
| I | TMWW+t | MT20 | 5.0 | 6.0 | 2.00 | 1.75 |
| J | TTWW-h | MT20 | 8.0 | 9.0 | 2.00 | 5.50 |
| K | TMVW-t | MT20 | 6.0 | 10.0 | 2.50 | 4.75 |
| M | BMV1+t | MT20 | 6.0 | 10.0 | Edge | 0.50 |
| N | BMWW-t | MT20 | 6.0 | 7.0 | 2.75 | 1.75 |
| O | BMWW+t | MT20 | 5.0 | 8.0 | 2.75 | 1.75 |
| P | BMWW+t | MT20 | 5.0 | 8.0 | 4.25 | 1.50 |
| Q | BS-t | MII16 | 5.0 | 17.5 | | |
| R | BMWWW-t | MT20 | 6.0 | 10.0 | | |
| S | BS-t | MII16 | 5.0 | 17.5 | | |
| T | BMWW+t | MT20 | 5.0 | 8.0 | 4.25 | 1.50 |
| U | BMWW+t | MT20 | 5.0 | 8.0 | 2.75 | 1.75 |
| V | BMWW-t | MT20 | 6.0 | 7.0 | 2.75 | 1.75 |
| W | BMV1+t | MT20 | 6.0 | 10.0 | 5.50 | |

Edge - INDICATES REFERENCE CORNER OF PLATE TOUCHES EDGE OF CHORD.

LATERAL BRACE(S) SHOWN SHALL BE 2X4 SPF#2

**DIMENSIONS, SUPPORTS AND LOADINGS SPECIFIED BY FABRICATOR TO BE VERIFIED BY BUILDING DESIGNER**

**BEARINGS**

| JT | FACTORED GROSS REACTION VERT | HORZ | MAXIMUM FACTORED GROSS REACTION DOWN | HORZ | UPLIFT | INPUT BRG IN-SX | REQRD BRG IN-SX |
|---|---|---|---|---|---|---|---|
| W | 4856 | 0 | 4856 | 0 | 0 | 5-8 | 5-8 |
| M | 3294 | 0 | 3294 | 0 | 0 | 5-8 | 5-3 |

**UNFACTORED REACTIONS**

| JT | 1ST LCASE COMBINED | MAX./MIN. COMPONENT REACTIONS SNOW | LIVE | PERM.LIVE | WIND | DEAD | SOIL |
|---|---|---|---|---|---|---|---|
| W | 3462 | 2112 / 0 | 0 / 0 | 0 / 0 | 0 / 0 | 1351 / 0 | 0 / 0 |
| M | 2345 | 1448 / 0 | 0 / 0 | 0 / 0 | 0 / 0 | 897 / 0 | 0 / 0 |

BEARING MATERIAL TO BE SPF NO.2 OR BETTER AT JOINT(S) W, M
BEARING SIZE FACTOR = 1.15 AT JNT(S) W ( BASED ON SUPPORT DEPTH = 1-8 )

**BRACING**

TOP CHORD TO BE SHEATHED OR MAX. PURLIN SPACING = 2.11 FT.
MAX. UNBRACED BOTTOM CHORD LENGTH = 10.00 FT OR RIGID CEILING DIRECTLY APPLIED.

ALL PITCH BREAKS AND PERIMETER CORNER JOINTS MUST BE LATERALLY RESTRAINED.

2x4 DRY SPF No.2 T-BRACE AT D-U, E-R

FASTEN T AND I-BRACES TO NARROW EDGE OF WEB WITH ONE ROW PER PLY OF 3" COMMON WIRE NAILS @ 6" O.C. WITH 3" MINIMUM END DISTANCE. BRACE MUST COVER 90% OF WEB LENGTH.

END VERTICAL(S) MUST BE SHEATHED OR HAVE BRACES AS INDICATED IN THE MAX. UNBRACED LENGTH COLUMN OF THE TABLE BELOW

**LOADING**

TOTAL LOAD CASES: (4)

C H O R D S

| MEMB. FR-TO | MAX. FACTORED FORCE (LBS) | VERT. LOAD (PLF) FROM | TO | LC1 MAX CSI (LC) | MAX. UNBRAC LENGTH |
|---|---|---|---|---|---|
| A- B | 0 / 35 | -78.0 | -78.0 | 0.10 (1) | 10.00 |
| B- C | -6063 / 0 | -78.0 | -78.0 | 0.77 (1) | 3.11 |
| C- D | -7900 / 0 | -163.2 | -163.2 | 0.62 (1) | 2.66 |
| D- E | -9871 / 0 | -163.2 | -163.2 | 0.85 (1) | 2.11 |
| E- F | -8778 / 0 | -78.0 | -78.0 | 0.70 (1) | 2.47 |
| F- G | -8778 / 0 | -78.0 | -78.0 | 0.68 (1) | 2.50 |
| G- H | -8778 / 0 | -78.0 | -78.0 | 0.68 (1) | 2.50 |
| H- I | -7070 / 0 | -78.0 | -78.0 | 0.41 (1) | 3.06 |
| I- J | -5398 / 0 | -78.0 | -78.0 | 0.29 (1) | 3.58 |
| J- K | -3987 / 0 | -78.0 | -78.0 | 0.52 (1) | 3.91 |
| K- L | 0 / 35 | -78.0 | -78.0 | 0.10 (1) | 10.00 |
| W- B | -4757 / 0 | 0.0 | 0.0 | 0.35 (1) | 4.89 |
| M- K | -3247 / 0 | 0.0 | 0.0 | 0.24 (1) | 5.84 |
| W- V | 0 / 0 | -38.7 | -38.7 | 0.09 (4) | 10.00 |
| V- U | 0 / 5074 | -38.7 | -38.7 | 0.46 (1) | 10.00 |
| U- T | 0 / 7900 | -38.7 | -38.7 | 0.77 (1) | 10.00 |
| T- S | 0 / 9871 | -18.5 | -18.5 | 0.93 (1) | 10.00 |
| S- R | 0 / 9871 | -18.5 | -18.5 | 0.93 (1) | 10.00 |
| R- Q | 0 / 7070 | -18.5 | -18.5 | 0.62 (1) | 10.00 |
| Q- P | 0 / 7070 | -18.5 | -18.5 | 0.62 (1) | 10.00 |
| P- O | 0 / 5398 | -18.5 | -18.5 | 0.47 (1) | 10.00 |
| O- N | 0 / 3337 | -18.5 | -18.5 | 0.29 (1) | 10.00 |
| N- M | 0 / 0 | -18.5 | -18.5 | 0.05 (4) | 10.00 |

W E B S

| MEMB. FR-TO | MAX. FACTORED FORCE (LBS) | MAX CSI (LC) |
|---|---|---|
| V- C | -878 / 0 | 0.35 (1) |
| C- U | 0 / 4433 | 0.78 (1) |
| U- D | -3168 / 0 | 0.69 (1) |
| D- T | 0 / 3082 | 0.76 (1) |
| T- E | 0 / 568 | 0.14 (1) |
| E- R | -1506 / 0 | 0.56 (1) |
| R- F | -431 / 0 | 0.16 (1) |
| R- H | 0 / 2354 | 0.58 (1) |
| P- H | -1957 / 0 | 0.74 (1) |
| P- I | 0 / 2614 | 0.65 (1) |
| O- I | -2392 / 0 | 0.91 (1) |
| O- J | 0 / 3233 | 0.57 (1) |
| N- J | -610 / 0 | 0.24 (1) |
| B- V | 0 / 5167 | 0.91 (1) |
| N- K | 0 / 3397 | 0.60 (1) |

FACTORED CONCENTRATED LOADS (LBS)

| JT | LOC. | LC1 | MAX- | MAX+ | FACE | DIR. | TYPE | HEEL | CONN. |
|---|---|---|---|---|---|---|---|---|---|
| C | 5-7-8 | -356 | -356 | --- | FRONT | VERT | TOTAL | --- | C1 |
| T | 13-8-8 | -2940 | -2940 | --- | FRONT | VERT | TOTAL | --- | C1 |

**CONNECTION REQUIREMENTS**

1) **C1:** A SUITABLE HANGER/MECHANICAL CONNECTION IS REQUIRED.

**DESIGN CRITERIA**

*** SPECIAL LOADS ANALYSIS ***
GEOMETRY AND/OR BASIC LOADS CHANGED BY USER.
LOADS WERE DERIVED FROM USER INPUT
NO FURTHER MODIFICATIONS WERE MADE

SPECIFIED LOADS:

| | | | | |
|---|---|---|---|---|
| TOP CH. | LL | = | 21.0 | PSF |
| | DL | = | 6.0 | PSF |
| BOT CH. | LL | = | 0.0 | PSF |
| | DL | = | 7.4 | PSF |
| TOTAL LOAD | | = | 34.4 | PSF |

**SPACING = 24.0 IN. C/C**

LOADING IN FLAT SECTION BASED ON A SLOPE OF 2.00/12 MINIMUM

GIRDER TYPE: CPrimeHip
SIDE SETBACK = 5-7-8
END SETBACK = 6-4-8
END WALL WIDTH = 0-0
CORNER FRAMING TYPE: CONVENTIONAL
END JACK TYPE: CONVENTIONAL
APPLIED TO FRONT SIDE
- ADDT'L LOADS BASED ON 55 % OF GSL.
LOADS APPLIED TO FIRST 13-8-8 OF SPAN MEASURED FROM THE LEFT.

*** NON STANDARD GIRDER ***
ADDT'L USER-DEFINED LOADS APPLIED TO ALL LOAD CASES.

THIS TRUSS IS DESIGNED FOR RESIDENTIAL OR SMALL BUILDING REQUIREMENTS OF PART 9, NBCC 2015

THIS DESIGN COMPLIES WITH:
- PART 9 OF BCBC 2018 , ABC 2019
- PART 9 OF OBC 2012 (2019 AMENDMENT)
- CSA 086-14
- TPIC 2014

(55 % OF 23.0 P.S.F. G.S.L. PLUS 8.4 P.S.F. RAIN LOAD) EQUALS 21.0 P.S.F. SPECIFIED ROOF LIVE LOAD

ALLOWABLE DEFL.(LL)= L/360 (1.26")
CALCULATED VERT. DEFL.(LL) = L/ 999 (0.37")
ALLOWABLE DEFL.(TL)= L/360 (1.26")
CALCULATED VERT. DEFL.(TL) = L/ 629 (0.72")

CSI: TC=0.85/1.00 (D-E:1) , BC=0.93/1.00 (R-T:1) , WB=0.91/1.00 (B-V:1) , SSI=0.25/1.00 (C-D:1)

DOL LUMBER=1.00 NAIL=1.00 LS BEND=1.00 COMP=1.00 SHEAR=1.00 TENS= 1.00

COMPANION LIVE LOAD FACTOR = 1.00

AUTOSOLVE HEELS OFF

TRUSS PLATE MANUFACTURER IS NOT RESPONSIBLE FOR QUALITY CONTROL IN THE TRUSS MANUFACTURING PLANT .

NAIL VALUES

| PLATE | GRIP(DRY) (PSI) MAX | MIN | SHEAR (PLI) MAX | MIN | SECTION (PLI) MAX | MIN |
|---|---|---|---|---|---|---|
| MT20 | 650 | 371 | 1747 | 788 | 1987 | 1873 |
| MII16 | 438 | 302 | 2547 | 1256 | 4283 | 1816 |

PLATE PLACEMENT TOL. = 0.250 inches

PLATE ROTATION TOL. = 5.0 Deg.

JSI GRIP= 0.90 (N) (INPUT = 0.90 )
JSI METAL= 0.99 (U) (INPUT = 1.00 )

| JOB NAME | TRUSS NAME | QUANTITY | PLY | JOB DESC. | DRWG NO. |
|---|---|---|---|---|---|
| 345177 | H09 | | 1 | TRUSS DESC. JT 45147 | E22073486 |

Alpha Roof Truss, Maple

Version 8.530 S Feb 23 2022 MiTek Industries, Inc. Tue Jul 12 10:24:07 2022 Page 1

ID:RK?4zbbW6zKUfpVYHQwqmTz3QmS-dvPYj9q8BN ?MppxwUGIVzA?0QYYLk9srcaEwQyyrrs

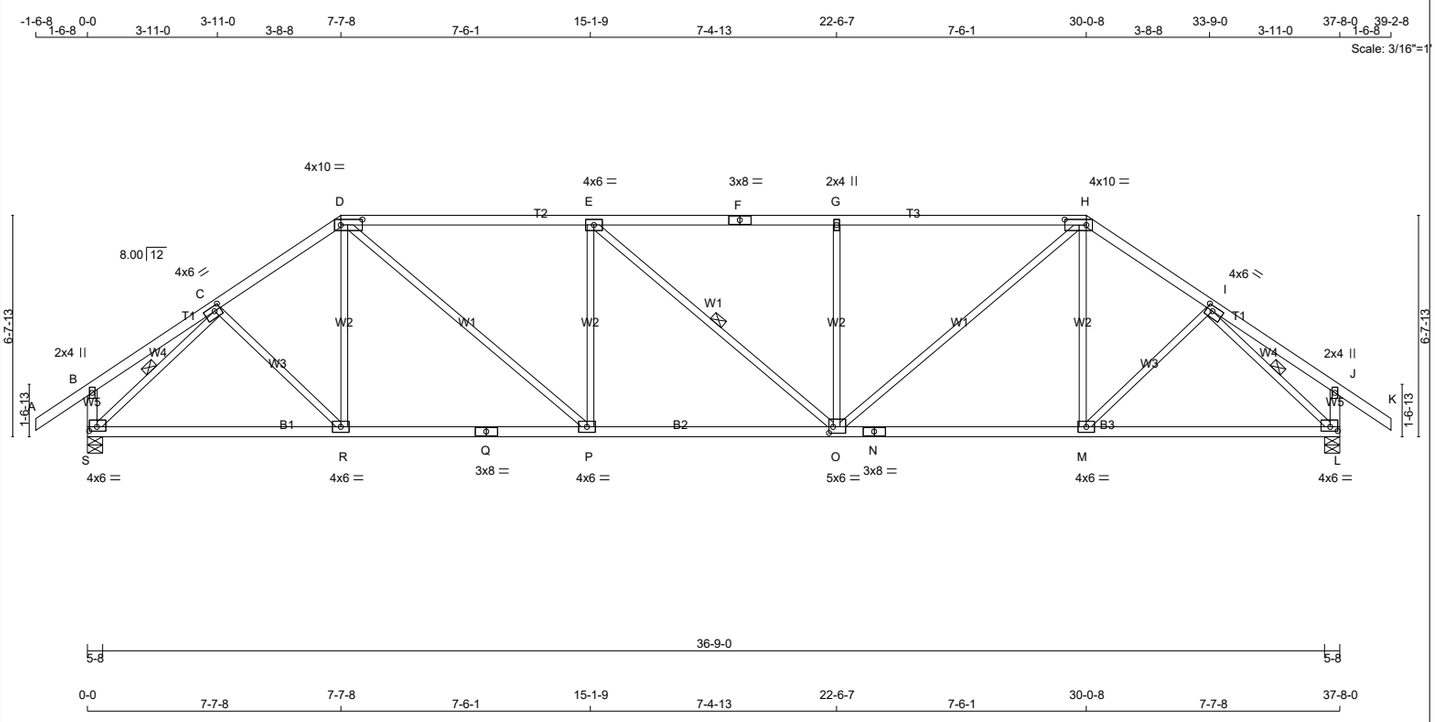





TOTAL WEIGHT = 156 lb

[M]

**LUMBER**

N. L. G. A. RULES

| CHORDS | SIZE | | LUMBER | DESCR. |
|---|---|---|---|---|
| A - D | 2x4 | DRY | No.2 | SPF |
| D - F | 2x4 | DRY | No.2 | SPF |
| F - H | 2x4 | DRY | No.2 | SPF |
| H - K | 2x4 | DRY | No.2 | SPF |
| S - B | 2x4 | DRY | No.2 | SPF |
| L - J | 2x4 | DRY | No.2 | SPF |
| S - Q | 2x4 | DRY | No.2 | SPF |
| Q - N | 2x4 | DRY | No.2 | SPF |
| N - L | 2x4 | DRY | No.2 | SPF |
| ALL WEBS EXCEPT | 2x3 | DRY | No.2 | SPF |

DRY: SEASONED LUMBER.

**PLATES (table is in inches)**

| JT | TYPE | PLATES | W | LEN | Y | X |
|---|---|---|---|---|---|---|
| B | TMV+p | MT20 | 2.0 | 4.0 | | |
| C | TMWW-t | MT20 | 4.0 | 6.0 | 1.75 | 2.25 |
| D | TTWW-l | MT20 | 4.0 | 10.0 | 2.00 | 7.75 |
| E | TMWW-t | MT20 | 4.0 | 6.0 | | |
| F | TS-t | MT20 | 3.0 | 8.0 | | |
| G | TMW+w | MT20 | 2.0 | 4.0 | | |
| H | TTWW-l | MT20 | 4.0 | 10.0 | 2.00 | 7.75 |
| I | TMWW-t | MT20 | 4.0 | 6.0 | 1.75 | 2.25 |
| J | TMV+p | MT20 | 2.0 | 4.0 | | |
| L | BMVW1-t | MT20 | 4.0 | 6.0 | 1.50 | 2.75 |
| M, P, R | | | | | | |
| M | BMWW-t | MT20 | 4.0 | 6.0 | | |
| N | BS-t | MT20 | 3.0 | 8.0 | | |
| O | BMWWW-t | MT20 | 5.0 | 6.0 | 2.25 | 1.50 |
| Q | BS-t | MT20 | 3.0 | 8.0 | | |
| S | BMVW1-t | MT20 | 4.0 | 6.0 | 1.50 | 2.75 |

LATERAL BRACE(S) SHOWN SHALL BE 2X4 SPF#2

**DIMENSIONS, SUPPORTS AND LOADINGS SPECIFIED BY FABRICATOR TO BE VERIFIED BY BUILDING DESIGNER**

**BEARINGS**

| JT | FACTORED GROSS REACTION VERT | HORZ | MAXIMUM FACTORED GROSS REACTION DOWN | HORZ | UPLIFT | INPUT BRG IN-SX | REQRD BRG IN-SX |
|---|---|---|---|---|---|---|---|
| S | 1943 | 0 | 1943 | 0 | 0 | 5-8 | 2-2 |
| L | 1943 | 0 | 1943 | 0 | 0 | 5-8 | 2-2 |

**UNFACTORED REACTIONS**

| JT | 1ST LCASE COMBINED | MAX./MIN. COMPONENT REACTIONS SNOW | LIVE | PERM.LIVE | WIND | DEAD | SOIL |
|---|---|---|---|---|---|---|---|
| S | 1383 | 859 / 0 | 0 / 0 | 0 / 0 | 0 / 0 | 524 / 0 | 0 / 0 |
| L | 1383 | 859 / 0 | 0 / 0 | 0 / 0 | 0 / 0 | 524 / 0 | 0 / 0 |

BEARING MATERIAL TO BE SPF NO.2 OR BETTER AT JOINT(S) S, L

**BRACING**

TOP CHORD TO BE SHEATHED OR MAX. PURLIN SPACING = 3.28 FT.
MAX. UNBRACED BOTTOM CHORD LENGTH = 10.00 FT OR RIGID CEILING DIRECTLY APPLIED.

ALL PITCH BREAKS AND PERIMETER CORNER JOINTS MUST BE LATERALLY RESTRAINED.

1 LATERAL BRACE(S) AT 1/ 2 LENGTH OF E-O, C-S, I-L.

END VERTICAL(S) MUST BE SHEATHED OR HAVE BRACES AS INDICATED IN THE MAX. UNBRACED LENGTH COLUMN OF THE TABLE BELOW

**LOADING**

TOTAL LOAD CASES: (4)

| CHORDS MEMB. FR-TO | MAX. FACTORED FORCE (LBS) | FACTORED VERT. LOAD (PLF) FROM | TO | LC1 CSI (LC) | MAX MAX. UNBRAC LENGTH | WEBS MEMB. FR-TO | MAX. FACTORED FORCE (LBS) | MAX CSI (LC) |
|---|---|---|---|---|---|---|---|---|
| A- B | 0 / 35 | -78.0 | -78.0 | 0.15 (1) | 10.00 | C- R | 0 / 150 | 0.04 (4) |
| B- C | 0 / 17 | -78.0 | -78.0 | 0.16 (1) | 10.00 | R- D | 0 / 104 | 0.04 (4) |
| C- D | -2134 / 0 | -78.0 | -78.0 | 0.23 (1) | 4.45 | D- P | 0 / 1184 | 0.27 (1) |
| D- E | -2664 / 0 | -78.0 | -78.0 | 1.00 (1) | 3.28 | P- E | -632 / 0 | 0.46 (1) |
| E- F | -2663 / 0 | -78.0 | -78.0 | 0.99 (1) | 3.28 | E- O | -1 / 0 | 0.00 (1) |
| F- G | -2663 / 0 | -78.0 | -78.0 | 0.99 (1) | 3.28 | O- G | -632 / 0 | 0.46 (1) |
| G- H | -2663 / 0 | -78.0 | -78.0 | 1.00 (1) | 3.30 | O- H | 0 / 1183 | 0.27 (1) |
| H- I | -2135 / 0 | -78.0 | -78.0 | 0.23 (1) | 4.45 | M- H | 0 / 104 | 0.04 (4) |
| I- J | 0 / 17 | -78.0 | -78.0 | 0.16 (1) | 10.00 | M- I | 0 / 150 | 0.04 (4) |
| J- K | 0 / 35 | -78.0 | -78.0 | 0.15 (1) | 10.00 | S- C | -2328 / 0 | 0.51 (1) |
| S- B | -244 / 0 | 0.0 | 0.0 | 0.03 (1) | 7.81 | I- L | -2328 / 0 | 0.51 (1) |
| L- J | -244 / 0 | 0.0 | 0.0 | 0.03 (1) | 7.81 | | | |
| S- R | 0 / 1651 | -18.5 | -18.5 | 0.41 (4) | 10.00 | | | |
| R- Q | 0 / 1760 | -18.5 | -18.5 | 0.43 (4) | 10.00 | | | |
| Q- P | 0 / 1760 | -18.5 | -18.5 | 0.43 (4) | 10.00 | | | |
| P- O | 0 / 2664 | -18.5 | -18.5 | 0.52 (1) | 10.00 | | | |
| O- N | 0 / 1760 | -18.5 | -18.5 | 0.43 (4) | 10.00 | | | |
| N- M | 0 / 1760 | -18.5 | -18.5 | 0.43 (4) | 10.00 | | | |
| M- L | 0 / 1651 | -18.5 | -18.5 | 0.41 (4) | 10.00 | | | |

**DESIGN CRITERIA**

SPECIFIED LOADS:

| | | | | | |
|---|---|---|---|---|---|
| TOP CH. | LL | = | 21.0 | PSF |
| | DL | = | 6.0 | PSF |
| BOT CH. | LL | = | 0.0 | PSF |
| | DL | = | 7.4 | PSF |
| TOTAL LOAD | | = | 34.4 | PSF |

**SPACING = 24.0 IN. C/C**

LOADING IN FLAT SECTION BASED ON A SLOPE OF 2.00/12 MINIMUM

THIS TRUSS IS DESIGNED FOR RESIDENTIAL OR SMALL BUILDING REQUIREMENTS OF PART 9, NBCC 2015

THIS DESIGN COMPLIES WITH:
- PART 9 OF BCBC 2018 , ABC 2019
- PART 9 OF OBC 2012 (2019 AMENDMENT)
- CSA 086-14
- TPIC 2014

(55 % OF 23.0 P.S.F. G.S.L. PLUS 8.4 P.S.F. RAIN LOAD) EQUALS 21.0 P.S.F. SPECIFIED ROOF LIVE LOAD

ALLOWABLE DEFL.(LL)= L/360 (1.26")
CALCULATED VERT. DEFL.(LL) = L/ 999 (0.14")
ALLOWABLE DEFL.(TL)= L/360 (1.26")
CALCULATED VERT. DEFL.(TL) = L/ 999 (0.31")

CSI: TC=1.00/1.00 (D-E:1) , BC=0.52/1.00 (O-P:1) , WB=0.51/1.00 (I-L:1) , SSI=0.27/1.00 (D-E:1)

DOL LUMBER=1.00 NAIL=1.00 LS BEND=1.10 COMP=1.10 SHEAR=1.10 TENS= 1.10

COMPANION LIVE LOAD FACTOR = 1.00

TRUSS PLATE MANUFACTURER IS NOT RESPONSIBLE FOR QUALITY CONTROL IN THE TRUSS MANUFACTURING PLANT .

NAIL VALUES

| PLATE | GRIP(DRY) (PSI) MAX | MIN | SHEAR (PLI) MAX | MIN | SECTION (PLI) MAX | MIN |
|---|---|---|---|---|---|---|
| MT20 | 650 | 371 | 1747 | 788 | 1987 | 1873 |

PLATE PLACEMENT TOL. = 0.250 inches

PLATE ROTATION TOL. = 5.0 Deg.

JSI GRIP= 0.86 (O) (INPUT = 0.90 )
JSI METAL= 0.59 (Q) (INPUT = 1.00 )

| JOB NAME | TRUSS NAME | QUANTITY | PLY | JOB DESC. | DRWG NO. |
|---|---|---|---|---|---|
| 345177 | H09S | | 1 | TRUSS DESC. JT 45147 | E22073487 |

Alpha Roof Truss, Maple

Version 8.530 S Feb 23 2022 MiTek Industries, Inc. Tue Jul 12 10:24:08 2022 Page 1

ID:RK?4zbbW6zKUfpVYHQwqmTz3QmS-55zxwVrmyg6szzO8UCnX1Bj9zquv4BW04GKoSsyyrrr

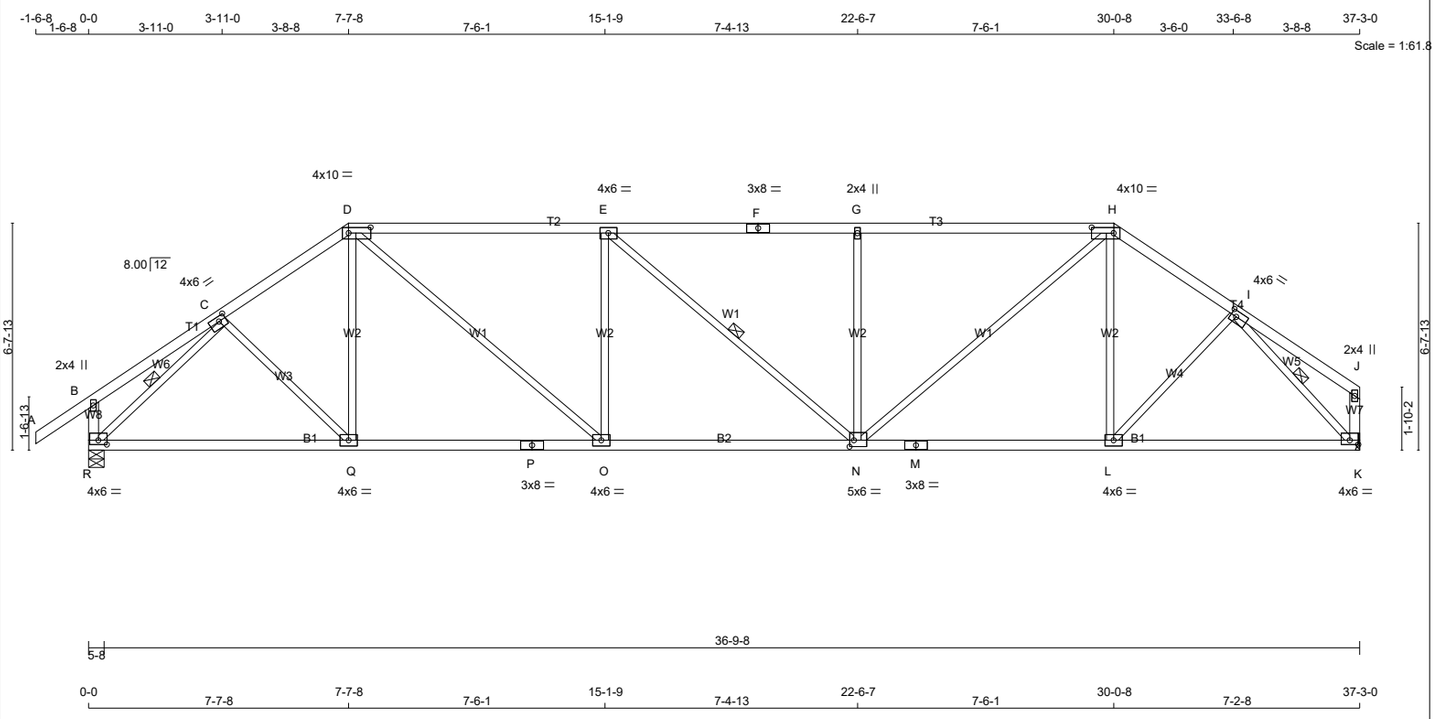





TOTAL WEIGHT = 153 lb

[M]

**LUMBER**

N. L. G. A. RULES

| CHORDS | SIZE | | LUMBER | DESCR. |
|---|---|---|---|---|
| A - D | 2x4 | DRY | No.2 | SPF |
| D - F | 2x4 | DRY | No.2 | SPF |
| F - H | 2x4 | DRY | No.2 | SPF |
| H - J | 2x4 | DRY | No.2 | SPF |
| R - B | 2x4 | DRY | No.2 | SPF |
| K - J | 2x4 | DRY | No.2 | SPF |
| R - P | 2x4 | DRY | No.2 | SPF |
| P - M | 2x4 | DRY | No.2 | SPF |
| M - K | 2x4 | DRY | No.2 | SPF |
| ALL WEBS EXCEPT | 2x3 | DRY | No.2 | SPF |

DRY: SEASONED LUMBER.

**PLATES (table is in inches)**

| JT | TYPE | PLATES | W | LEN | Y | X |
|---|---|---|---|---|---|---|
| B | TMV+p | MT20 | 2.0 | 4.0 | | |
| C | TMWW-t | MT20 | 4.0 | 6.0 | 1.75 | 2.50 |
| D | TTWW-l | MT20 | 4.0 | 10.0 | 2.00 | 7.75 |
| E | TMWW-t | MT20 | 4.0 | 6.0 | | |
| F | TS-t | MT20 | 3.0 | 8.0 | | |
| G | TMW+w | MT20 | 2.0 | 4.0 | | |
| H | TTWW-l | MT20 | 4.0 | 10.0 | 2.00 | 7.75 |
| I | TMWW-t | MT20 | 4.0 | 6.0 | 2.00 | 2.00 |
| J | TMV+p | MT20 | 2.0 | 4.0 | | |
| K | BMVW1-t | MT20 | 4.0 | 6.0 | 1.50 | 3.00 |
| L, O, Q | | | | | | |
| L | BMWW-t | MT20 | 4.0 | 6.0 | | |
| M | BS-t | MT20 | 3.0 | 8.0 | | |
| N | BMWWW-t | MT20 | 5.0 | 6.0 | 2.25 | 1.50 |
| P | BS-t | MT20 | 3.0 | 8.0 | | |
| R | BMVW1-t | MT20 | 4.0 | 6.0 | 1.50 | 3.00 |

LATERAL BRACE(S) SHOWN SHALL BE 2X4 SPF#2

**DIMENSIONS, SUPPORTS AND LOADINGS SPECIFIED BY FABRICATOR TO BE VERIFIED BY BUILDING DESIGNER**

**BEARINGS**

| JT | FACTORED GROSS REACTION VERT | HORZ | MAXIMUM FACTORED GROSS REACTION DOWN | HORZ | UPLIFT | INPUT BRG | REQRD BRG |
|---|---|---|---|---|---|---|---|
| R | 1923 | 0 | 1923 | 0 | 0 | 5-8 | 2-1 |
| K | 1797 | 0 | 1797 | 0 | 0 | MECHANICAL | |

A SUITABLE HANGER/MECHANICAL CONNECTION IS REQUIRED AT JOINT K. MINIMUM BEARING LENGTH AT JOINT K = 1-15.

**UNFACTORED REACTIONS**

| JT | 1ST LCASE COMBINED | MAX./MIN. COMPONENT REACTIONS SNOW | LIVE | PERM.LIVE | WIND | DEAD | SOIL |
|---|---|---|---|---|---|---|---|
| R | 1369 | 850 / 0 | 0 / 0 | 0 / 0 | 0 / 0 | 519 / 0 | 0 / 0 |
| K | 1281 | 782 / 0 | 0 / 0 | 0 / 0 | 0 / 0 | 499 / 0 | 0 / 0 |

BEARING MATERIAL TO BE SPF NO.2 OR BETTER AT JOINT(S) R

**BRACING**

TOP CHORD TO BE SHEATHED OR MAX. PURLIN SPACING = 3.32 FT.
MAX. UNBRACED BOTTOM CHORD LENGTH = 10.00 FT OR RIGID CEILING DIRECTLY APPLIED.

ALL PITCH BREAKS AND PERIMETER CORNER JOINTS MUST BE LATERALLY RESTRAINED.

1 LATERAL BRACE(S) AT 1/ 2 LENGTH OF E-N, C-R, I-K.

END VERTICAL(S) MUST BE SHEATHED OR HAVE BRACES AS INDICATED IN THE MAX. UNBRACED LENGTH COLUMN OF THE TABLE BELOW

**LOADING**

TOTAL LOAD CASES: (4)

CHORDS

| MEMB. FR-TO | MAX. FACTORED FORCE (LBS) | VERT. LOAD LC1 (PLF) FROM | TO | MAX CSI (LC) | MAX. UNBRAC LENGTH |
|---|---|---|---|---|---|
| A- B | 0 / 35 | -78.0 | -78.0 | 0.15 (1) | 10.00 |
| B- C | 0 / 17 | -78.0 | -78.0 | 0.16 (1) | 10.00 |
| C- D | -2105 / 0 | -78.0 | -78.0 | 0.23 (1) | 4.48 |
| D- E | -2616 / 0 | -78.0 | -78.0 | 0.99 (1) | 3.32 |
| E- F | -2592 / 0 | -78.0 | -78.0 | 0.97 (1) | 3.34 |
| F- G | -2592 / 0 | -78.0 | -78.0 | 0.97 (1) | 3.34 |
| G- H | -2592 / 0 | -78.0 | -78.0 | 0.98 (1) | 3.34 |
| H- I | -2019 / 0 | -78.0 | -78.0 | 0.20 (1) | 4.58 |
| I- J | 0 / 16 | -78.0 | -78.0 | 0.14 (1) | 10.00 |
| R- B | -244 / 0 | 0.0 | 0.0 | 0.03 (1) | 7.81 |
| K- J | -112 / 0 | 0.0 | 0.0 | 0.01 (1) | 7.81 |
| R- Q | 0 / 1631 | -18.5 | -18.5 | 0.41 (4) | 10.00 |
| Q- P | 0 / 1736 | -18.5 | -18.5 | 0.43 (4) | 10.00 |
| P- O | 0 / 1736 | -18.5 | -18.5 | 0.43 (4) | 10.00 |
| O- N | 0 / 2616 | -18.5 | -18.5 | 0.52 (1) | 10.00 |
| N- M | 0 / 1663 | -18.5 | -18.5 | 0.41 (4) | 10.00 |
| M- L | 0 / 1663 | -18.5 | -18.5 | 0.41 (4) | 10.00 |
| L- K | 0 / 1497 | -18.5 | -18.5 | 0.38 (4) | 10.00 |

WEBS

| MEMB. FR-TO | MAX. FACTORED FORCE (LBS) | MAX CSI (LC) |
|---|---|---|
| C- Q | 0 / 144 | 0.04 (4) |
| Q- D | 0 / 106 | 0.04 (4) |
| D- O | 0 / 1153 | 0.26 (1) |
| O- E | -612 / 0 | 0.45 (1) |
| E- N | -32 / 0 | 0.02 (1) |
| N- G | -632 / 0 | 0.46 (1) |
| N- H | 0 / 1216 | 0.27 (1) |
| L- H | -22 / 71 | 0.02 (4) |
| L- I | 0 / 243 | 0.05 (1) |
| R- C | -2300 / 0 | 0.50 (1) |
| I- K | -2214 / 0 | 0.48 (1) |

**DESIGN CRITERIA**

SPECIFIED LOADS:

| | | | | |
|---|---|---|---|---|
| TOP CH. | LL | = | 21.0 | PSF |
| | DL | = | 6.0 | PSF |
| BOT CH. | LL | = | 0.0 | PSF |
| | DL | = | 7.4 | PSF |
| TOTAL LOAD | | = | 34.4 | PSF |

**SPACING = 24.0 IN. C/C**

LOADING IN FLAT SECTION BASED ON A SLOPE OF 2.00/12 MINIMUM

THIS TRUSS IS DESIGNED FOR RESIDENTIAL OR SMALL BUILDING REQUIREMENTS OF PART 9, NBCC 2015

THIS DESIGN COMPLIES WITH:
- PART 9 OF BCBC 2018 , ABC 2019
- PART 9 OF OBC 2012 (2019 AMENDMENT)
- CSA 086-14
- TPIC 2014

(55 % OF 23.0 P.S.F. G.S.L. PLUS 8.4 P.S.F. RAIN LOAD) EQUALS 21.0 P.S.F. SPECIFIED ROOF LIVE LOAD

ALLOWABLE DEFL.(LL)= L/360 (1.24")
CALCULATED VERT. DEFL.(LL) = L/ 999 (0.14")
ALLOWABLE DEFL.(TL)= L/360 (1.24")
CALCULATED VERT. DEFL.(TL) = L/ 999 (0.30")

CSI: TC=0.99/1.00 (D-E:1) , BC=0.52/1.00 (N-O:1) , WB=0.50/1.00 (C-R:1) , SSI=0.27/1.00 (D-E:1)

DOL LUMBER=1.00 NAIL=1.00 LS BEND=1.10 COMP=1.10 SHEAR=1.10 TENS= 1.10

COMPANION LIVE LOAD FACTOR = 1.00

TRUSS PLATE MANUFACTURER IS NOT RESPONSIBLE FOR QUALITY CONTROL IN THE TRUSS MANUFACTURING PLANT .

NAIL VALUES

| PLATE | GRIP(DRY) (PSI) MAX | MIN | SHEAR (PLI) MAX | MIN | SECTION (PLI) MAX | MIN |
|---|---|---|---|---|---|---|
| MT20 | 650 | 371 | 1747 | 788 | 1987 | 1873 |

PLATE PLACEMENT TOL. = 0.250 inches

PLATE ROTATION TOL. = 5.0 Deg.

JSI GRIP= 0.90 (C) (INPUT = 0.90 )
JSI METAL= 0.55 (P) (INPUT = 1.00 )

| JOB NAME | TRUSS NAME | QUANTITY | PLY | JOB DESC. | DRWG NO. |
|---|---|---|---|---|---|
| 345177 | H10 | | 1 | TRUSS DESC. JT 45147 | E22073488 |

Alpa Roof Truss, Maple

Version 8.530 S Feb 23 2022 MiTek Industries, Inc. Tue Jul 12 10:24:10 2022 Page 1

ID:RK?4zbbW6zKUfpVYHQwqmTz3QmS-2U4hLAs0UIMaDGXWcdp?7coeEeblY34JXZpuWlyyrrp

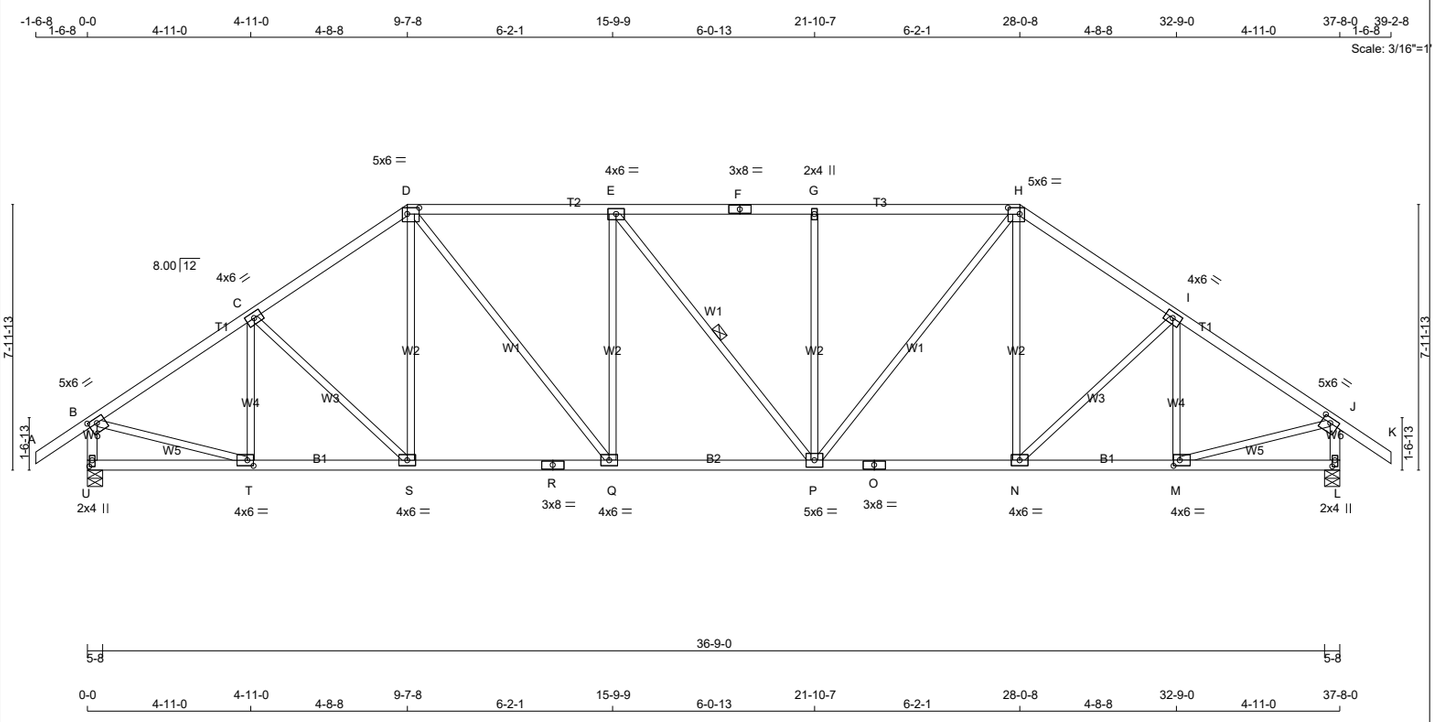





TOTAL WEIGHT = 2 X 170 = 339 lb

**LUMBER**

N. L. G. A. RULES

| CHORDS | SIZE | | LUMBER | DESCR. |
|---|---|---|---|---|
| A - D | 2x4 | DRY | No.2 | SPF |
| D - F | 2x4 | DRY | No.2 | SPF |
| F - H | 2x4 | DRY | No.2 | SPF |
| H - K | 2x4 | DRY | No.2 | SPF |
| U - B | 2x4 | DRY | No.2 | SPF |
| L - J | 2x4 | DRY | No.2 | SPF |
| U - R | 2x4 | DRY | No.2 | SPF |
| R - O | 2x4 | DRY | No.2 | SPF |
| O - L | 2x4 | DRY | No.2 | SPF |
| ALL WEBS EXCEPT | 2x3 | DRY | No.2 | SPF |

DRY: SEASONED LUMBER.

**PLATES (table is in inches)**

| JT | TYPE | PLATES | W | LEN | Y | X |
|---|---|---|---|---|---|---|
| B | TMVW-t | MT20 | 5.0 | 6.0 | 1.75 | 3.00 |
| C, E, I | | | | | | |
| C | TMWW-t | MT20 | 4.0 | 6.0 | | |
| D | TTWW-l | MT20 | 5.0 | 6.0 | 2.25 | 4.25 |
| F | TS-t | MT20 | 3.0 | 8.0 | | |
| G | TMW+w | MT20 | 2.0 | 4.0 | | |
| H | TTWW-l | MT20 | 5.0 | 6.0 | 2.25 | 4.25 |
| J | TMVW-t | MT20 | 5.0 | 6.0 | 1.75 | 3.00 |
| L | BMV1+p | MT20 | 2.0 | 4.0 | 2.25 | 1.00 |
| M | BMWW-t | MT20 | 4.0 | 6.0 | 2.00 | 2.25 |
| N, Q, S | | | | | | |
| N | BMWW-t | MT20 | 4.0 | 6.0 | | |
| O | BS-t | MT20 | 3.0 | 8.0 | | |
| P | BMWWW-t | MT20 | 5.0 | 6.0 | | |
| R | BS-t | MT20 | 3.0 | 8.0 | | |
| T | BMWW-t | MT20 | 4.0 | 6.0 | 2.00 | 2.25 |
| U | BMV1+p | MT20 | 2.0 | 4.0 | 2.25 | 1.00 |

LATERAL BRACE(S) SHOWN SHALL BE 2X4 SPF#2

**DIMENSIONS, SUPPORTS AND LOADINGS SPECIFIED BY FABRICATOR TO BE VERIFIED BY BUILDING DESIGNER**

**BEARINGS**

| JT | FACTORED GROSS REACTION VERT | HORZ | MAXIMUM FACTORED GROSS REACTION DOWN | HORZ | UPLIFT | INPUT BRG IN-SX | REQRD BRG IN-SX |
|---|---|---|---|---|---|---|---|
| U | 1943 | 0 | 1943 | 0 | 0 | 5-8 | 2-13 |
| L | 1943 | 0 | 1943 | 0 | 0 | 5-8 | 2-13 |

**UNFACTORED REACTIONS**

| JT | 1ST LCASE COMBINED | MAX./MIN. COMPONENT REACTIONS SNOW | LIVE | PERM.LIVE | WIND | DEAD | SOIL |
|---|---|---|---|---|---|---|---|
| U | 1383 | 859 / 0 | 0 / 0 | 0 / 0 | 0 / 0 | 524 / 0 | 0 / 0 |
| L | 1383 | 859 / 0 | 0 / 0 | 0 / 0 | 0 / 0 | 524 / 0 | 0 / 0 |

BEARING MATERIAL TO BE SPF NO.2 OR BETTER AT JOINT(S) U, L

**BRACING**

TOP CHORD TO BE SHEATHED OR MAX. PURLIN SPACING = 4.19 FT.
MAX. UNBRACED BOTTOM CHORD LENGTH = 10.00 FT OR RIGID CEILING DIRECTLY APPLIED.

ALL PITCH BREAKS AND PERIMETER CORNER JOINTS MUST BE LATERALLY RESTRAINED.

1 LATERAL BRACE(S) AT 1/ 2 LENGTH OF E-P.

END VERTICAL(S) MUST BE SHEATHED OR HAVE BRACES AS INDICATED IN THE MAX. UNBRACED LENGTH COLUMN OF THE TABLE BELOW

**LOADING**

TOTAL LOAD CASES: (4)

CHORDS

| MEMB. FR-TO | MAX. FACTORED FORCE (LBS) | FACTORED VERT. LOAD (PLF) FROM | TO | LC1 | MAX CSI (LC) | MAX. UNBRAC LENGTH |
|---|---|---|---|---|---|---|
| A- B | 0 / 35 | -78.0 | -78.0 | 0.15 (1) | 10.00 | |
| B- C | -2102 / 0 | -78.0 | -78.0 | 0.30 (1) | 4.43 | |
| C- D | -2071 / 0 | -78.0 | -78.0 | 0.29 (1) | 4.46 | |
| D- E | -2210 / 0 | -78.0 | -78.0 | 0.43 (1) | 4.19 | |
| E- F | -2209 / 0 | -78.0 | -78.0 | 0.39 (1) | 4.24 | |
| F- G | -2209 / 0 | -78.0 | -78.0 | 0.39 (1) | 4.24 | |
| G- H | -2209 / 0 | -78.0 | -78.0 | 0.43 (1) | 4.19 | |
| H- I | -2071 / 0 | -78.0 | -78.0 | 0.29 (1) | 4.46 | |
| I- J | -2102 / 0 | -78.0 | -78.0 | 0.30 (1) | 4.43 | |
| J- K | 0 / 35 | -78.0 | -78.0 | 0.15 (1) | 10.00 | |
| U- B | -1903 / 0 | 0.0 | 0.0 | 0.20 (1) | 6.09 | |
| L- J | -1903 / 0 | 0.0 | 0.0 | 0.20 (1) | 6.09 | |
| U- T | 0 / 0 | -18.5 | -18.5 | 0.09 (4) | 10.00 | |
| T- S | 0 / 1769 | -18.5 | -18.5 | 0.35 (1) | 10.00 | |
| S- R | 0 / 1703 | -18.5 | -18.5 | 0.35 (1) | 10.00 | |
| R- Q | 0 / 1703 | -18.5 | -18.5 | 0.35 (1) | 10.00 | |
| Q- P | 0 / 2210 | -18.5 | -18.5 | 0.43 (1) | 10.00 | |
| P- O | 0 / 1703 | -18.5 | -18.5 | 0.34 (1) | 10.00 | |
| O- N | 0 / 1703 | -18.5 | -18.5 | 0.34 (1) | 10.00 | |
| N- M | 0 / 1769 | -18.5 | -18.5 | 0.35 (1) | 10.00 | |
| M- L | 0 / 0 | -18.5 | -18.5 | 0.09 (4) | 10.00 | |

WEBS

| MEMB. FR-TO | MAX. FACTORED FORCE (LBS) | MAX CSI (LC) |
|---|---|---|
| T- C | -358 / 0 | 0.12 (1) |
| C- S | -94 / 0 | 0.07 (1) |
| S- D | 0 / 169 | 0.05 (4) |
| D- Q | 0 / 810 | 0.18 (1) |
| Q- E | -517 / 0 | 0.63 (1) |
| E- P | -2 / 0 | 0.00 (1) |
| P- G | -517 / 0 | 0.63 (1) |
| P- H | 0 / 808 | 0.18 (1) |
| N- H | 0 / 170 | 0.05 (4) |
| N- I | -93 / 0 | 0.07 (1) |
| M- I | -358 / 0 | 0.12 (1) |
| B- T | 0 / 1825 | 0.41 (1) |
| M- J | 0 / 1824 | 0.41 (1) |

**DESIGN CRITERIA**

SPECIFIED LOADS:

| | | | | |
|---|---|---|---|---|
| TOP CH. | LL | = | 21.0 | PSF |
| | DL | = | 6.0 | PSF |
| BOT CH. | LL | = | 0.0 | PSF |
| | DL | = | 7.4 | PSF |
| TOTAL LOAD | | = | 34.4 | PSF |

**SPACING = 24.0 IN. C/C**

LOADING IN FLAT SECTION BASED ON A SLOPE OF 2.00/12 MINIMUM

THIS TRUSS IS DESIGNED FOR RESIDENTIAL OR SMALL BUILDING REQUIREMENTS OF PART 9, NBCC 2015

THIS DESIGN COMPLIES WITH:
- PART 9 OF BCBC 2018 , ABC 2019
- PART 9 OF OBC 2012 (2019 AMENDMENT)
- CSA 086-14
- TPIC 2014

(55 % OF 23.0 P.S.F. G.S.L. PLUS 8.4 P.S.F. RAIN LOAD) EQUALS 21.0 P.S.F. SPECIFIED ROOF LIVE LOAD

ALLOWABLE DEFL.(LL)= L/360 (1.26")
CALCULATED VERT. DEFL.(LL) = L/ 999 (0.11")
ALLOWABLE DEFL.(TL)= L/360 (1.26")
CALCULATED VERT. DEFL.(TL) = L/ 999 (0.22")

CSI: TC=0.43/1.00 (D-E:1) , BC=0.43/1.00 (P-Q:1) , WB=0.63/1.00 (E-Q:1) , SSI=0.22/1.00 (D-E:1)

DOL LUMBER=1.00 NAIL=1.00 LS BEND=1.10 COMP=1.10 SHEAR=1.10 TENS= 1.10

COMPANION LIVE LOAD FACTOR = 1.00

TRUSS PLATE MANUFACTURER IS NOT RESPONSIBLE FOR QUALITY CONTROL IN THE TRUSS MANUFACTURING PLANT .

NAIL VALUES

| PLATE | GRIP(DRY) (PSI) MAX | MIN | SHEAR (PLI) MAX | MIN | SECTION (PLI) MAX | MIN |
|---|---|---|---|---|---|---|
| MT20 | 650 | 371 | 1747 | 788 | 1987 | 1873 |

PLATE PLACEMENT TOL. = 0.250 inches

PLATE ROTATION TOL. = 5.0 Deg.

JSI GRIP= 0.84 (T) (INPUT = 0.90 )
JSI METAL= 0.54 (B) (INPUT = 1.00 )

| JOB NAME | TRUSS NAME | QUANTITY | PLY | JOB DESC. | DRWG NO. |
|---|---|---|---|---|---|
| 345177 | H11 | | 1 | TRUSS DESC. JT 45147 | E22073489 |

Alpa Roof Truss, Maple

Version 8.530 S Feb 23 2022 MiTek Industries, Inc. Tue Jul 12 10:24:12 2022 Page 1

ID:RK?4zbbW6zKUfpVYHQwqmTz3QmS- sCRmsuH0vclSahvj2sTC1uxqRI000sc?tI?bdyyrrn

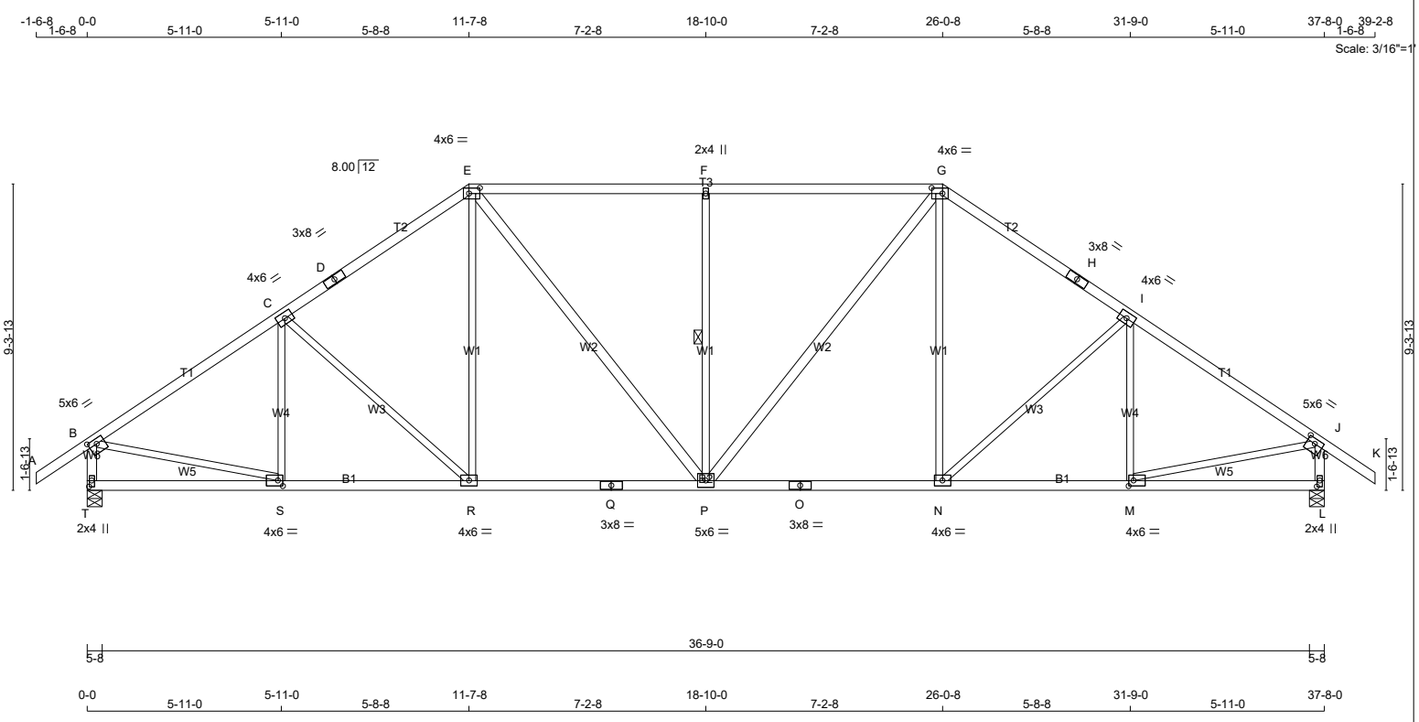


TOTAL WEIGHT = 2 X 175 = 349 lb

[M][F]

**LUMBER**

N. L. G. A. RULES

| CHORDS | SIZE | | LUMBER | DESCR. |
|---|---|---|---|---|
| A - D | 2x4 | DRY | No.2 | SPF |
| D - E | 2x4 | DRY | No.2 | SPF |
| E - G | 2x4 | DRY | No.2 | SPF |
| G - H | 2x4 | DRY | No.2 | SPF |
| H - K | 2x4 | DRY | No.2 | SPF |
| T - B | 2x4 | DRY | No.2 | SPF |
| L - J | 2x4 | DRY | No.2 | SPF |
| T - Q | 2x4 | DRY | No.2 | SPF |
| Q - O | 2x4 | DRY | No.2 | SPF |
| O - L | 2x4 | DRY | No.2 | SPF |
| ALL WEBS | 2x3 | DRY | No.2 | SPF |
| EXCEPT | | | | |
| E - P | 2x4 | DRY | No.2 | SPF |
| P - G | 2x4 | DRY | No.2 | SPF |

DRY: SEASONED LUMBER.

**PLATES (table is in inches)**

| JT | TYPE | PLATES | W | LEN | Y | X |
|---|---|---|---|---|---|---|
| B | TMVW-t | MT20 | 5.0 | 6.0 | 1.75 | 3.00 |
| C | TMWW-t | MT20 | 4.0 | 6.0 | | |
| D | TS-t | MT20 | 3.0 | 8.0 | | |
| E | TTWW-l | MT20 | 4.0 | 6.0 | 2.00 | 4.00 |
| F | TMW+w | MT20 | 2.0 | 4.0 | | |
| G | TTWW-l | MT20 | 4.0 | 6.0 | 2.00 | 4.00 |
| H | TS-t | MT20 | 3.0 | 8.0 | | |
| I | TMWW-t | MT20 | 4.0 | 6.0 | | |
| J | TMVW-t | MT20 | 5.0 | 6.0 | 1.75 | 3.00 |
| L | BMV1+p | MT20 | 2.0 | 4.0 | 2.25 | 1.00 |
| M | BMWW-t | MT20 | 4.0 | 6.0 | 2.00 | 1.75 |
| N | BMWW-t | MT20 | 4.0 | 6.0 | | |
| O | BS-t | MT20 | 3.0 | 8.0 | | |
| P | BMWWW-t | MT20 | 5.0 | 6.0 | | |
| Q | BS-t | MT20 | 3.0 | 8.0 | | |
| R | BMWW-t | MT20 | 4.0 | 6.0 | | |
| S | BMWW-t | MT20 | 4.0 | 6.0 | 2.00 | 1.75 |
| T | BMV1+p | MT20 | 2.0 | 4.0 | 2.25 | 1.00 |

LATERAL BRACE(S) SHOWN SHALL BE 2X4 SPF#2

**DIMENSIONS, SUPPORTS AND LOADINGS SPECIFIED BY FABRICATOR TO BE VERIFIED BY BUILDING DESIGNER**

**BEARINGS**

| JT | FACTORED GROSS REACTION VERT | HORZ | MAXIMUM FACTORED GROSS REACTION DOWN | HORZ | UPLIFT | INPUT BRG IN-SX | REQRD BRG IN-SX |
|---|---|---|---|---|---|---|---|
| T | 1943 | 0 | 1943 | 0 | 0 | 5-8 | 2-13 |
| L | 1943 | 0 | 1943 | 0 | 0 | 5-8 | 2-13 |

**UNFACTORED REACTIONS**

| JT | 1ST LCASE COMBINED | MAX./MIN. COMPONENT REACTIONS SNOW | LIVE | PERM.LIVE | WIND | DEAD | SOIL |
|---|---|---|---|---|---|---|---|
| T | 1383 | 859 / 0 | 0 / 0 | 0 / 0 | 0 / 0 | 524 / 0 | 0 / 0 |
| L | 1383 | 859 / 0 | 0 / 0 | 0 / 0 | 0 / 0 | 524 / 0 | 0 / 0 |

BEARING MATERIAL TO BE SPF NO.2 OR BETTER AT JOINT(S) T, L

**BRACING**

TOP CHORD TO BE SHEATHED OR MAX. PURLIN SPACING = 4.11 FT.
MAX. UNBRACED BOTTOM CHORD LENGTH = 10.00 FT OR RIGID CEILING DIRECTLY APPLIED.

ALL PITCH BREAKS AND PERIMETER CORNER JOINTS MUST BE LATERALLY RESTRAINED.

1 LATERAL BRACE(S) AT 1/ 2 LENGTH OF F-P.

END VERTICAL(S) MUST BE SHEATHED OR HAVE BRACES AS INDICATED IN THE MAX. UNBRACED LENGTH COLUMN OF THE TABLE BELOW

**LOADING**

TOTAL LOAD CASES: (4)

CHORDS

| MEMB. FR-TO | MAX. FACTORED FORCE (LBS) | FACTORED VERT. LOAD (PLF) FROM | TO | LC1 | MAX CSI (LC) | MAX. UNBRAC LENGTH |
|---|---|---|---|---|---|---|
| A- B | 0 / 35 | -78.0 | -78.0 | 0.15 (1) | 10.00 | |
| B- C | -2153 / 0 | -78.0 | -78.0 | 0.45 (1) | 4.23 | |
| C- D | -1986 / 0 | -78.0 | -78.0 | 0.42 (1) | 4.39 | |
| D- E | -1986 / 0 | -78.0 | -78.0 | 0.42 (1) | 4.39 | |
| E- F | -1959 / 0 | -78.0 | -78.0 | 0.61 (1) | 4.11 | |
| F- G | -1959 / 0 | -78.0 | -78.0 | 0.61 (1) | 4.11 | |
| G- H | -1986 / 0 | -78.0 | -78.0 | 0.42 (1) | 4.39 | |
| H- I | -1986 / 0 | -78.0 | -78.0 | 0.42 (1) | 4.39 | |
| I- J | -2153 / 0 | -78.0 | -78.0 | 0.45 (1) | 4.23 | |
| J- K | 0 / 35 | -78.0 | -78.0 | 0.15 (1) | 10.00 | |
| T- B | -1897 / 0 | 0.0 | 0.0 | 0.20 (1) | 6.10 | |
| L- J | -1897 / 0 | 0.0 | 0.0 | 0.20 (1) | 6.10 | |
| T- S | 0 / 0 | -18.5 | -18.5 | 0.14 (4) | 10.00 | |
| S- R | 0 / 1816 | -18.5 | -18.5 | 0.38 (1) | 10.00 | |
| R- Q | 0 / 1628 | -18.5 | -18.5 | 0.37 (1) | 10.00 | |
| Q- P | 0 / 1628 | -18.5 | -18.5 | 0.37 (1) | 10.00 | |
| P- O | 0 / 1628 | -18.5 | -18.5 | 0.37 (1) | 10.00 | |
| O- N | 0 / 1628 | -18.5 | -18.5 | 0.37 (1) | 10.00 | |
| N- M | 0 / 1816 | -18.5 | -18.5 | 0.38 (1) | 10.00 | |
| M- L | 0 / 0 | -18.5 | -18.5 | 0.14 (4) | 10.00 | |

WEBS

| MEMB. FR-TO | MAX. FACTORED FORCE (LBS) | MAX CSI (LC) |
|---|---|---|
| S- C | -269 / 0 | 0.12 (1) |
| C- R | -256 / 0 | 0.32 (1) |
| R- E | 0 / 290 | 0.07 (4) |
| E- P | 0 / 530 | 0.09 (1) |
| P- F | -691 / 0 | 0.39 (1) |
| P- G | 0 / 530 | 0.09 (1) |
| N- G | 0 / 290 | 0.07 (4) |
| N- I | -256 / 0 | 0.32 (1) |
| M- I | -269 / 0 | 0.12 (1) |
| B- S | 0 / 1856 | 0.42 (1) |
| M- J | 0 / 1856 | 0.42 (1) |

**DESIGN CRITERIA**

SPECIFIED LOADS:

| | | | | |
|---|---|---|---|---|
| TOP CH. | LL | = | 21.0 | PSF |
| | DL | = | 6.0 | PSF |
| BOT CH. | LL | = | 0.0 | PSF |
| | DL | = | 7.4 | PSF |
| TOTAL LOAD | | = | 34.4 | PSF |

**SPACING = 24.0 IN. C/C**

LOADING IN FLAT SECTION BASED ON A SLOPE OF 2.00/12 MINIMUM

THIS TRUSS IS DESIGNED FOR RESIDENTIAL OR SMALL BUILDING REQUIREMENTS OF PART 9, NBCC 2015

THIS DESIGN COMPLIES WITH:
- PART 9 OF BCBC 2018 , ABC 2019
- PART 9 OF OBC 2012 (2019 AMENDMENT)
- CSA 086-14
- TPIC 2014

(55 % OF 23.0 P.S.F. G.S.L. PLUS 8.4 P.S.F. RAIN LOAD) EQUALS 21.0 P.S.F. SPECIFIED ROOF LIVE LOAD

ALLOWABLE DEFL.(LL)= L/360 (1.26")
CALCULATED VERT. DEFL.(LL) = L/ 999 (0.09")
ALLOWABLE DEFL.(TL)= L/360 (1.26")
CALCULATED VERT. DEFL.(TL) = L/ 999 (0.20")

CSI: TC=0.61/1.00 (E-F:1) , BC=0.38/1.00 (R-S:1) , WB=0.42/1.00 (J-M:1) , SSI=0.27/1.00 (E-F:1)

DOL LUMBER=1.00 NAIL=1.00 LS BEND=1.10 COMP=1.10 SHEAR=1.10 TENS= 1.10

COMPANION LIVE LOAD FACTOR = 1.00

TRUSS PLATE MANUFACTURER IS NOT RESPONSIBLE FOR QUALITY CONTROL IN THE TRUSS MANUFACTURING PLANT .

NAIL VALUES

| PLATE | GRIP(DRY) (PSI) MAX | MIN | SHEAR (PLI) MAX | MIN | SECTION (PLI) MAX | MIN |
|---|---|---|---|---|---|---|
| MT20 | 650 | 371 | 1747 | 788 | 1987 | 1873 |

PLATE PLACEMENT TOL. = 0.250 inches

PLATE ROTATION TOL. = 5.0 Deg.

JSI GRIP= 0.85 (S) (INPUT = 0.90 )
JSI METAL= 0.56 (Q) (INPUT = 1.00 )

| JOB NAME | TRUSS NAME | QUANTITY | PLY | JOB DESC. | DRWG NO. |
|---|---|---|---|---|---|
| 345177 | H12 | | 1 | TRUSS DESC. JT 45147 | E22073490 |

Alpha Roof Truss, Maple

Version 8.530 S Feb 23 2022 MiTek Industries, Inc. Tue Jul 12 10:24:14 2022 Page 1

ID:RK?4zbbW6zKUfpVYHQwqmTz3QmS-wFKCBYvXYWs0iurIrSuxHSzGnFz1UwIuSBn6fWyyrrl

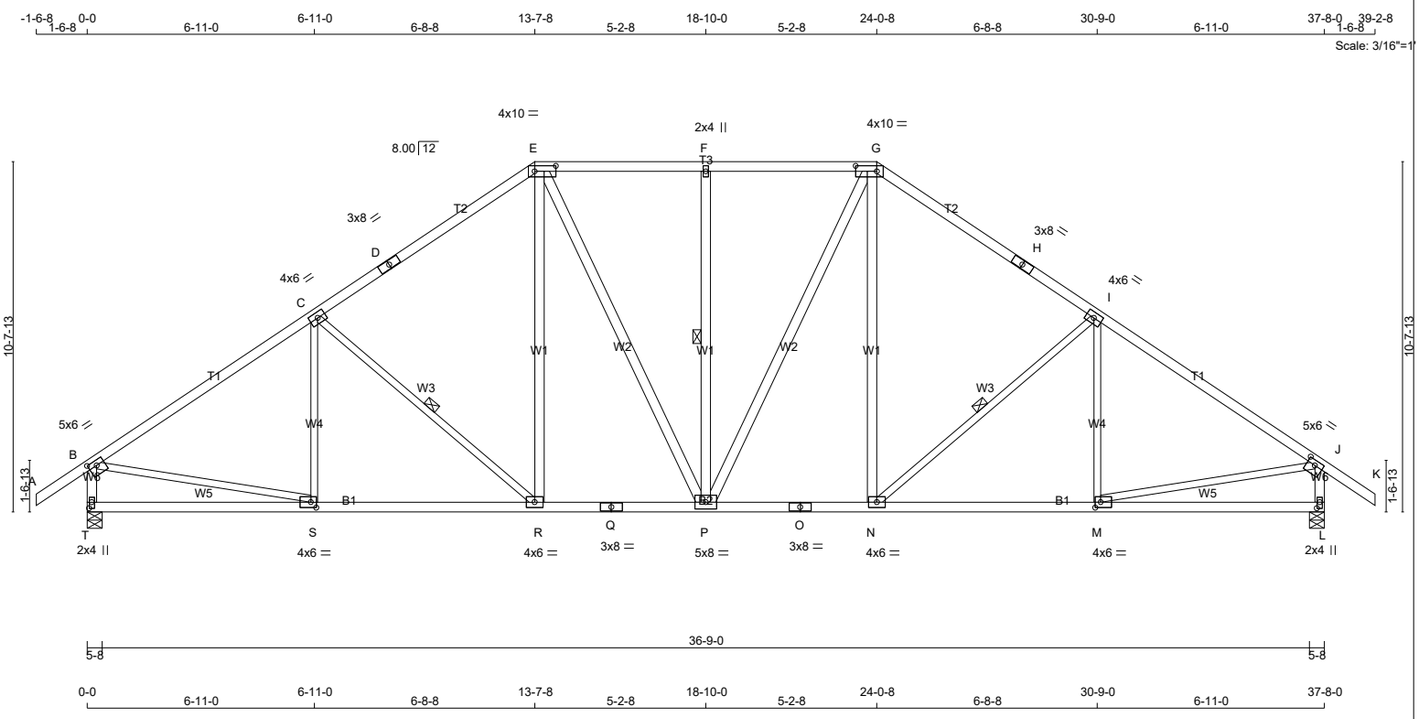


TOTAL WEIGHT = 3 X 193 = 580 lb

[M][F]

**LUMBER**

N. L. G. A. RULES

| CHORDS | SIZE | | LUMBER | DESCR. |
|---|---|---|---|---|
| A - D | 2x4 | DRY | No.2 | SPF |
| D - E | 2x4 | DRY | No.2 | SPF |
| E - G | 2x4 | DRY | No.2 | SPF |
| G - H | 2x4 | DRY | No.2 | SPF |
| H - K | 2x4 | DRY | No.2 | SPF |
| T - B | 2x4 | DRY | No.2 | SPF |
| L - J | 2x4 | DRY | No.2 | SPF |
| T - Q | 2x4 | DRY | No.2 | SPF |
| Q - O | 2x4 | DRY | No.2 | SPF |
| O - L | 2x4 | DRY | No.2 | SPF |
| ALL WEBS EXCEPT | 2x4 | DRY | No.2 | SPF |
| S - C | 2x3 | DRY | No.2 | SPF |
| C - R | 2x3 | DRY | No.2 | SPF |
| N - I | 2x3 | DRY | No.2 | SPF |
| M - I | 2x3 | DRY | No.2 | SPF |
| B - S | 2x3 | DRY | No.2 | SPF |
| M - J | 2x3 | DRY | No.2 | SPF |

DRY: SEASONED LUMBER.

**PLATES (table is in inches)**

| JT | TYPE | PLATES | W | LEN | Y | X |
|---|---|---|---|---|---|---|
| B | TMVW-t | MT20 | 5.0 | 6.0 | 1.75 | 3.00 |
| C | TMWW-t | MT20 | 4.0 | 6.0 | | |
| D | TS-t | MT20 | 3.0 | 8.0 | | |
| E | TTWW-l | MT20 | 4.0 | 10.0 | 2.00 | 7.75 |
| F | TMW+w | MT20 | 2.0 | 4.0 | | |
| G | TTWW-l | MT20 | 4.0 | 10.0 | 2.00 | 7.75 |
| H | TS-t | MT20 | 3.0 | 8.0 | | |
| I | TMWW-t | MT20 | 4.0 | 6.0 | | |
| J | TMVW-t | MT20 | 5.0 | 6.0 | 1.75 | 3.00 |
| L | BMV1+p | MT20 | 2.0 | 4.0 | 2.25 | 1.00 |
| M | BMWW-t | MT20 | 4.0 | 6.0 | 2.00 | 2.00 |
| N | BMWW-t | MT20 | 4.0 | 6.0 | | |
| O | BS-t | MT20 | 3.0 | 8.0 | | |
| P | BMWWW-t | MT20 | 5.0 | 8.0 | | |
| Q | BS-t | MT20 | 3.0 | 8.0 | | |
| R | BMWW-t | MT20 | 4.0 | 6.0 | | |
| S | BMWW-t | MT20 | 4.0 | 6.0 | 2.00 | 2.00 |
| T | BMV1+p | MT20 | 2.0 | 4.0 | 2.25 | 1.00 |

LATERAL BRACE(S) SHOWN SHALL BE 2X4 SPF#2

LICENSED PROFESSIONAL ENGINEER
Y. WIDYA
100225448
07/12/2022
PROVINCE OF ONTARIO

**DIMENSIONS, SUPPORTS AND LOADINGS SPECIFIED BY FABRICATOR TO BE VERIFIED BY BUILDING DESIGNER**

**BEARINGS**

| JT | FACTORED GROSS REACTION VERT | HORZ | MAXIMUM FACTORED GROSS REACTION DOWN | HORZ | UPLIFT | INPUT BRG IN-SX | REQRD BRG IN-SX |
|---|---|---|---|---|---|---|---|
| T | 1943 | 0 | 1943 | 0 | 0 | 5-8 | 2-13 |
| L | 1943 | 0 | 1943 | 0 | 0 | 5-8 | 2-13 |

**UNFACTORED REACTIONS**

| JT | 1ST LCASE COMBINED | MAX./MIN. COMPONENT REACTIONS SNOW | LIVE | PERM.LIVE | WIND | DEAD | SOIL |
|---|---|---|---|---|---|---|---|
| T | 1383 | 859 / 0 | 0 / 0 | 0 / 0 | 0 / 0 | 524 / 0 | 0 / 0 |
| L | 1383 | 859 / 0 | 0 / 0 | 0 / 0 | 0 / 0 | 524 / 0 | 0 / 0 |

BEARING MATERIAL TO BE SPF NO.2 OR BETTER AT JOINT(S) T, L

**BRACING**

TOP CHORD TO BE SHEATHED OR MAX. PURLIN SPACING = 3.99 FT.
MAX. UNBRACED BOTTOM CHORD LENGTH = 10.00 FT OR RIGID CEILING DIRECTLY APPLIED.

ALL PITCH BREAKS AND PERIMETER CORNER JOINTS MUST BE LATERALLY RESTRAINED.

1 LATERAL BRACE(S) AT 1/ 2 LENGTH OF C-R, F-P, I-N.

END VERTICAL(S) MUST BE SHEATHED OR HAVE BRACES AS INDICATED IN THE MAX. UNBRACED LENGTH COLUMN OF THE TABLE BELOW

**LOADING**

TOTAL LOAD CASES: (4)

CHORDS

| MEMB. FR-TO | MAX. FORCE (LBS) | FACTORED VERT. LOAD (PLF) FROM | TO | LC1 | MAX CSI (LC) | MAX. UNBRAC LENGTH |
|---|---|---|---|---|---|---|
| A- B | 0 / 35 | -78.0 | -78.0 | 0.15 (1) | 10.00 | |
| B- C | -2177 / 0 | -78.0 | -78.0 | 0.65 (1) | 3.99 | |
| C- D | -1875 / 0 | -78.0 | -78.0 | 0.59 (1) | 4.28 | |
| D- E | -1875 / 0 | -78.0 | -78.0 | 0.59 (1) | 4.28 | |
| E- F | -1679 / 0 | -78.0 | -78.0 | 0.31 (1) | 4.82 | |
| F- G | -1679 / 0 | -78.0 | -78.0 | 0.31 (1) | 4.82 | |
| G- H | -1875 / 0 | -78.0 | -78.0 | 0.59 (1) | 4.28 | |
| H- I | -1875 / 0 | -78.0 | -78.0 | 0.59 (1) | 4.28 | |
| I- J | -2177 / 0 | -78.0 | -78.0 | 0.65 (1) | 3.99 | |
| J- K | 0 / 35 | -78.0 | -78.0 | 0.15 (1) | 10.00 | |
| T- B | -1891 / 0 | 0.0 | 0.0 | 0.20 (1) | 6.10 | |
| L- J | -1891 / 0 | 0.0 | 0.0 | 0.20 (1) | 6.10 | |
| T- S | 0 / 0 | -18.5 | -18.5 | 0.21 (4) | 10.00 | |
| S- R | 0 / 1841 | -18.5 | -18.5 | 0.41 (1) | 10.00 | |
| R- Q | 0 / 1533 | -18.5 | -18.5 | 0.32 (1) | 10.00 | |
| Q- P | 0 / 1533 | -18.5 | -18.5 | 0.32 (1) | 10.00 | |
| P- O | 0 / 1533 | -18.5 | -18.5 | 0.32 (1) | 10.00 | |
| O- N | 0 / 1533 | -18.5 | -18.5 | 0.32 (1) | 10.00 | |
| N- M | 0 / 1841 | -18.5 | -18.5 | 0.41 (1) | 10.00 | |
| M- L | 0 / 0 | -18.5 | -18.5 | 0.21 (4) | 10.00 | |

WEBS

| MEMB. FR-TO | MAX. FORCE (LBS) | MAX CSI (LC) |
|---|---|---|
| S- C | -189 / 35 | 0.11 (1) |
| C- R | -411 / 0 | 0.23 (1) |
| R- E | 0 / 379 | 0.06 (1) |
| E- P | 0 / 323 | 0.05 (1) |
| P- F | -494 / 0 | 0.28 (1) |
| P- G | 0 / 323 | 0.05 (1) |
| N- G | 0 / 379 | 0.06 (1) |
| N- I | -411 / 0 | 0.23 (1) |
| M- I | -189 / 35 | 0.11 (1) |
| B- S | 0 / 1870 | 0.42 (1) |
| M- J | 0 / 1870 | 0.42 (1) |

**DESIGN CRITERIA**

SPECIFIED LOADS:

| | | | | |
|---|---|---|---|---|
| TOP CH. | LL | = | 21.0 | PSF |
| | DL | = | 6.0 | PSF |
| BOT CH. | LL | = | 0.0 | PSF |
| | DL | = | 7.4 | PSF |
| TOTAL LOAD | | = | 34.4 | PSF |

**SPACING = 24.0 IN. C/C**

LOADING IN FLAT SECTION BASED ON A SLOPE OF 2.00/12 MINIMUM

THIS TRUSS IS DESIGNED FOR RESIDENTIAL OR SMALL BUILDING REQUIREMENTS OF PART 9, NBCC 2015

THIS DESIGN COMPLIES WITH:
- PART 9 OF BCBC 2018 , ABC 2019
- PART 9 OF OBC 2012 (2019 AMENDMENT)
- CSA 086-14
- TPIC 2014

(55 % OF 23.0 P.S.F. G.S.L. PLUS 8.4 P.S.F. RAIN LOAD) EQUALS 21.0 P.S.F. SPECIFIED ROOF LIVE LOAD

ALLOWABLE DEFL.(LL)= L/360 (1.26")
CALCULATED VERT. DEFL.(LL) = L/ 999 (0.09")
ALLOWABLE DEFL.(TL)= L/360 (1.26")
CALCULATED VERT. DEFL.(TL) = L/ 999 (0.18")

CSI: TC=0.65/1.00 (B-C:1) , BC=0.41/1.00 (M-N:1) , WB=0.42/1.00 (J-M:1) , SSI=0.22/1.00 (B-C:1)

DOL LUMBER=1.00 NAIL=1.00 LS BEND=1.10 COMP=1.10 SHEAR=1.10 TENS= 1.10

COMPANION LIVE LOAD FACTOR = 1.00

TRUSS PLATE MANUFACTURER IS NOT RESPONSIBLE FOR QUALITY CONTROL IN THE TRUSS MANUFACTURING PLANT .

NAIL VALUES

| PLATE | GRIP(DRY) (PSI) MAX | MIN | SHEAR (PLI) MAX | MIN | SECTION (PLI) MAX | MIN |
|---|---|---|---|---|---|---|
| MT20 | 650 | 371 | 1747 | 788 | 1987 | 1873 |

PLATE PLACEMENT TOL. = 0.250 inches

PLATE ROTATION TOL. = 5.0 Deg.

JSI GRIP= 0.86 (M) (INPUT = 0.90 )
JSI METAL= 0.57 (J) (INPUT = 1.00 )

| JOB NAME | TRUSS NAME | QUANTITY | PLY | JOB DESC. | DRWG NO. |
|---|---|---|---|---|---|
| 345177 | H13 | | 1 | TRUSS DESC. JT 45147 | E22073491 |

Alpa Roof Truss, Maple

Version 8.530 S Feb 23 2022 MiTek Industries, Inc. Tue Jul 12 10:24:15 2022 Page 1

ID:RK?4zbbW6zKUfpVYHQwqmTz3QmS-ORuaOuw9Jq tJ1QUOAPAqfWN8fFvDKH2hrWfCyyyrrk

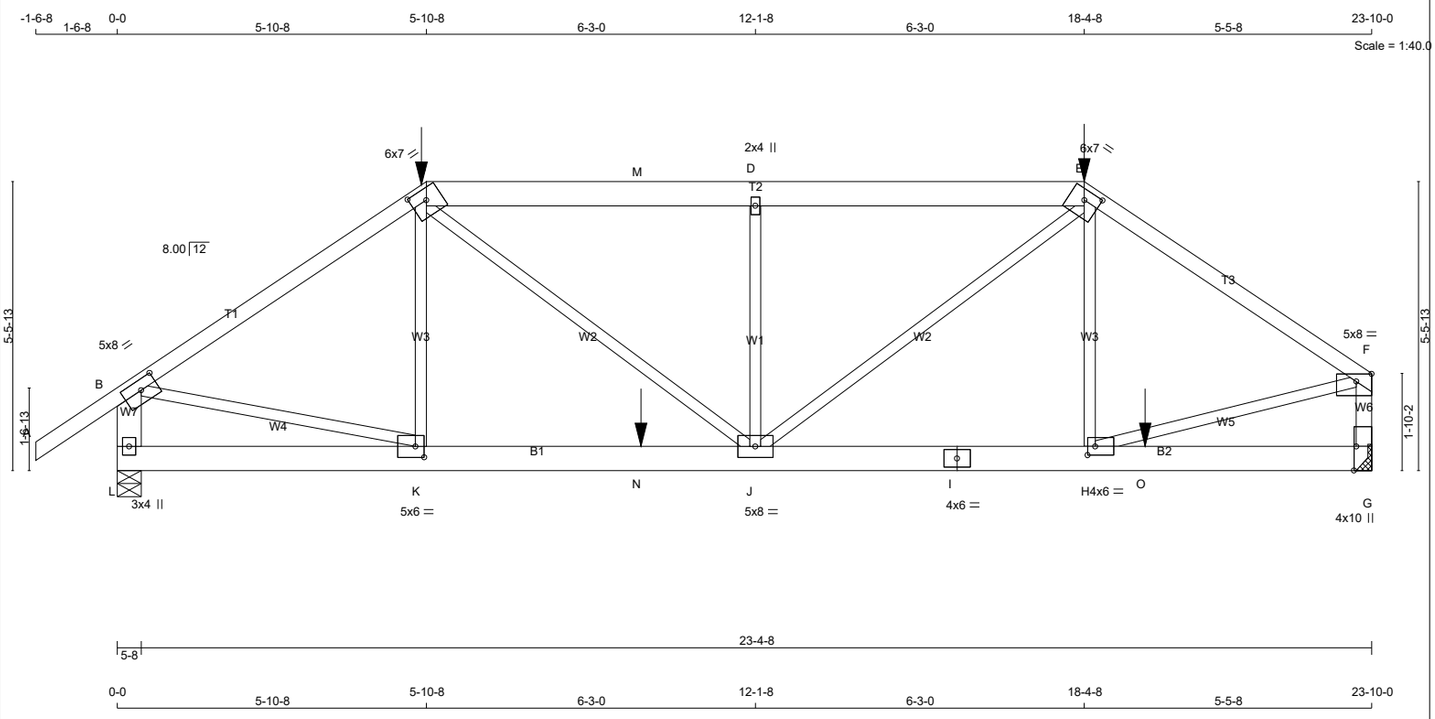





TOTAL WEIGHT = 119 lb

[M]

**LUMBER**

N. L. G. A. RULES

| CHORDS | SIZE | | LUMBER | DESCR. |
|---|---|---|---|---|
| A - C | 2x4 | DRY | No.2 | SPF |
| C - E | 2x6 | DRY | No.2 | SPF |
| E - F | 2x4 | DRY | No.2 | SPF |
| L - B | 2x6 | DRY | No.2 | SPF |
| G - F | 2x4 | DRY | No.2 | SPF |
| L - I | 2x6 | DRY | 1650F 1.5E | SPF |
| I - G | 2x6 | DRY | 1650F 1.5E | SPF |
| ALL WEBS EXCEPT | 2x3 | DRY | No.2 | SPF |

DRY: SEASONED LUMBER.

**PLATES (table is in inches)**

| JT | TYPE | PLATES | W | LEN | Y | X |
|---|---|---|---|---|---|---|
| B | TMVW-t | MT20 | 5.0 | 8.0 | 2.25 | 3.75 |
| C | TTWW-h | MT20 | 6.0 | 7.0 | 2.50 | 3.50 |
| D | TMW+w | MT20 | 2.0 | 4.0 | | |
| E | TTWW-h | MT20 | 6.0 | 7.0 | 2.25 | 3.50 |
| F | TMVW-p | MT20 | 5.0 | 8.0 | 1.75 | Edge |
| G | BMV1+t | MT20 | 4.0 | 10.0 | Edge | 0.50 |
| H | BMWW-t | MT20 | 4.0 | 6.0 | 2.00 | 1.75 |
| I | BS-t | MT20 | 4.0 | 6.0 | | |
| J | BMWWW-t | MT20 | 5.0 | 8.0 | | |
| K | BMWW-t | MT20 | 5.0 | 6.0 | 2.50 | 2.00 |
| L | BMV1+p | MT20 | 3.0 | 4.0 | | |

Edge - INDICATES REFERENCE CORNER OF PLATE TOUCHES EDGE OF CHORD.

LATERAL BRACE(S) SHOWN SHALL BE 2X4 SPF#2

LICENSED PROFESSIONAL ENGINEER
Y. WIDYA
100225448
07/12/2022
PROVINCE OF ONTARIO

**DIMENSIONS, SUPPORTS AND LOADINGS SPECIFIED BY FABRICATOR TO BE VERIFIED BY BUILDING DESIGNER**

**BEARINGS**

| JT | FACTORED GROSS REACTION VERT | HORZ | MAXIMUM FACTORED GROSS REACTION DOWN | HORZ | UPLIFT | INPUT BRG IN-SX | REQRD BRG IN-SX |
|---|---|---|---|---|---|---|---|
| L | 2540 | 0 | 2540 | 0 | 0 | 5-8 | 2-12 |
| G | 2467 | 0 | 2467 | 0 | 0 | MECHANICAL | |

A SUITABLE HANGER/MECHANICAL CONNECTION IS REQUIRED AT JOINT G. MINIMUM BEARING LENGTH AT JOINT G = 3-8.

**UNFACTORED REACTIONS**

| JT | 1ST LCASE COMBINED | MAX./MIN. COMPONENT REACTIONS SNOW | LIVE | HORZ | PERM.LIVE | WIND | DEAD | SOIL |
|---|---|---|---|---|---|---|---|---|
| L | 1811 | 1106 / 0 | 0 / 0 | | 0 / 0 | 0 / 0 | 705 / 0 | 0 / 0 |
| G | 1760 | 1070 / 0 | 0 / 0 | | 0 / 0 | 0 / 0 | 690 / 0 | 0 / 0 |

BEARING MATERIAL TO BE SPF NO.2 OR BETTER AT JOINT(S) L

**BRACING**

TOP CHORD TO BE SHEATHED OR MAX. PURLIN SPACING = 3.16 FT.
MAX. UNBRACED BOTTOM CHORD LENGTH = 10.00 FT OR RIGID CEILING DIRECTLY APPLIED.

ALL PITCH BREAKS AND PERIMETER CORNER JOINTS MUST BE LATERALLY RESTRAINED.

**LOADING**

TOTAL LOAD CASES: (4)

CHORDS

| MEMB. FR-TO | MAX. FACTORED FORCE (LBS) | FACTORED VERT. LOAD (PLF) FROM | TO | LC1 CSI (LC) | MAX UNBRAC LENGTH |
|---|---|---|---|---|---|
| A- B | 0 / 35 | -78.0 | -78.0 | 0.16 (1) | 10.00 |
| B- C | -2988 / 0 | -78.0 | -78.0 | 0.93 (1) | 3.16 |
| C- M | -3279 / 0 | -153.5 | -153.5 | 0.45 (1) | 4.19 |
| M- D | -3279 / 0 | -78.0 | -78.0 | 0.45 (1) | 4.19 |
| D- E | -3280 / 0 | -78.0 | -78.0 | 0.39 (1) | 4.27 |
| E- F | -2679 / 0 | -78.0 | -78.0 | 0.72 (1) | 3.52 |
| L- B | -2507 / 0 | 0.0 | 0.0 | 0.18 (1) | 6.50 |
| G- F | -2292 / 0 | 0.0 | 0.0 | 0.27 (1) | 5.58 |
| L- K | 0 / 0 | -36.4 | -36.4 | 0.21 (1) | 10.00 |
| K- N | 0 / 2490 | -36.4 | -36.4 | 0.68 (1) | 10.00 |
| N- J | 0 / 2490 | -18.5 | -18.5 | 0.68 (1) | 10.00 |
| J- I | 0 / 2233 | -18.5 | -18.5 | 0.39 (1) | 10.00 |
| I- H | 0 / 2233 | -18.5 | -18.5 | 0.39 (1) | 10.00 |
| H- O | 0 / 0 | -29.8 | -29.8 | 0.24 (1) | 10.00 |
| O- G | 0 / 0 | -29.8 | -29.8 | 0.24 (1) | 10.00 |

WEBS

| MEMB. FR-TO | MAX. FACTORED FORCE (LBS) | MAX CSI (LC) |
|---|---|---|
| K- C | 0 / 210 | 0.08 (4) |
| J- D | -748 / 0 | 0.30 (1) |
| J- E | 0 / 1346 | 0.33 (1) |
| H- E | 0 / 131 | 0.05 (4) |
| B- K | 0 / 2541 | 0.63 (1) |
| H- F | 0 / 2313 | 0.57 (1) |

FACTORED CONCENTRATED LOADS (LBS)

| JT | LOC. | LC1 | MAX- | MAX+ | FACE | DIR. | TYPE | HEEL | CONN. |
|---|---|---|---|---|---|---|---|---|---|
| C | 5-10-8 | -334 | -334 | --- | FRONT | VERT | TOTAL | --- | C1 |
| E | 18-4-8 | -209 | -209 | --- | FRONT | VERT | TOTAL | --- | C1 |
| N | 9-11-7 | -850 | -850 | --- | FRONT | VERT | TOTAL | --- | C1 |
| O | 19-6-6 | -641 | -641 | --- | FRONT | VERT | TOTAL | --- | C1 |

**CONNECTION REQUIREMENTS**

1) **C1:** A SUITABLE HANGER/MECHANICAL CONNECTION IS REQUIRED.

**DESIGN CRITERIA**

*** SPECIAL LOADS ANALYSIS ***
GEOMETRY AND/OR BASIC LOADS CHANGED BY USER.
LOADS WERE DERIVED FROM USER INPUT
NO FURTHER MODIFICATIONS WERE MADE

SPECIFIED LOADS:

| | | | | |
|---|---|---|---|---|
| TOP CH. | LL | = | 21.0 | PSF |
| | DL | = | 6.0 | PSF |
| BOT CH. | LL | = | 0.0 | PSF |
| | DL | = | 7.4 | PSF |
| TOTAL LOAD | | = | 34.4 | PSF |

**SPACING = 24.0 IN. C/C**

LOADING IN FLAT SECTION BASED ON A SLOPE OF 2.00/12 MINIMUM

GIRDER TYPE: CPrimeHip
LEFT SETBACK = 5-10-8
RIGHT SETBACK = 5-5-8
END SETBACK = 4-5-7
END WALL WIDTH = 0-0
CORNER FRAMING TYPE: CONVENTIONAL
END JACK TYPE: CONVENTIONAL
APPLIED TO FRONT SIDE
- ADDT'L LOADS BASED ON 55 % OF GSL.
LOADS APPLIED TO FIRST 5-5-8 OF SPAN MEASURED FROM THE RIGHT.

GIRDER TYPE: CPrimeHip
LEFT SETBACK = 5-10-8
RIGHT SETBACK = 5-5-8
END SETBACK = 5-10-8
END WALL WIDTH = 0-0
CORNER FRAMING TYPE: CONVENTIONAL
END JACK TYPE: CONVENTIONAL
APPLIED TO FRONT SIDE
- ADDT'L LOADS BASED ON 55 % OF GSL.
LOADS APPLIED TO FIRST 9-11-7 OF SPAN MEASURED FROM THE LEFT.

*** NON STANDARD GIRDER ***
ADDT'L USER-DEFINED LOADS APPLIED TO ALL LOAD CASES.

THIS TRUSS IS DESIGNED FOR RESIDENTIAL OR SMALL BUILDING REQUIREMENTS OF PART 9, NBCC 2015

THIS DESIGN COMPLIES WITH:
- PART 9 OF BCBC 2018 , ABC 2019
- PART 9 OF OBC 2012 (2019 AMENDMENT)
- CSA 086-14
- TPIC 2014

(55 % OF 23.0 P.S.F. G.S.L. PLUS 8.4 P.S.F. RAIN LOAD) EQUALS 21.0 P.S.F. SPECIFIED ROOF LIVE LOAD

ALLOWABLE DEFL.(LL)= L/360 (0.79")
CALCULATED VERT. DEFL.(LL) = L/ 999 (0.13")
ALLOWABLE DEFL.(TL)= L/360 (0.79")
CALCULATED VERT. DEFL.(TL) = L/ 999 (0.26")

CSI: TC=0.93/1.00 (B-C:1) , BC=0.68/1.00 (J-K:1) , WB=0.63/1.00 (B-K:1) , SSI=0.42/1.00 (J-K:1)

DOL LUMBER=1.00 NAIL=1.00 LS BEND=1.00 COMP=1.00 SHEAR=1.00 TENS= 1.00

COMPANION LIVE LOAD FACTOR = 1.00

AUTOSOLVE RIGHT HEEL ONLY

TRUSS PLATE MANUFACTURER IS NOT RESPONSIBLE FOR QUALITY CONTROL IN THE TRUSS MANUFACTURING PLANT .

NAIL VALUES

| PLATE | GRIP(DRY) (PSI) MAX | MIN | SHEAR (PLI) MAX | MIN | SECTION (PLI) MAX | MIN |
|---|---|---|---|---|---|---|
| MT20 | 650 | 371 | 1747 | 788 | 1987 | 1873 |

PLATE PLACEMENT TOL. = 0.250 inches

PLATE ROTATION TOL. = 5.0 Deg.

JSI GRIP= 0.90 (H) (INPUT = 0.90 )
JSI METAL= 0.72 (I) (INPUT = 1.00 )

| JOB NAME | TRUSS NAME | QUANTITY | PLY | JOB DESC. | DRWG NO. |
|---|---|---|---|---|---|
| 345177 | H14 | | 1 | TRUSS DESC. JT 45147 | E22073492 |

Alpha Roof Truss, Maple

Version 8.530 S Feb 23 2022 MiTek Industries, Inc. Tue Jul 12 10:24:17 2022 Page 1

ID:RK?4zbbW6zKUfpVYHQwqmTz3QmS-Kq0KpayPrRFbZLasWbRev4bvFS 1hDvL89?mGryyrri

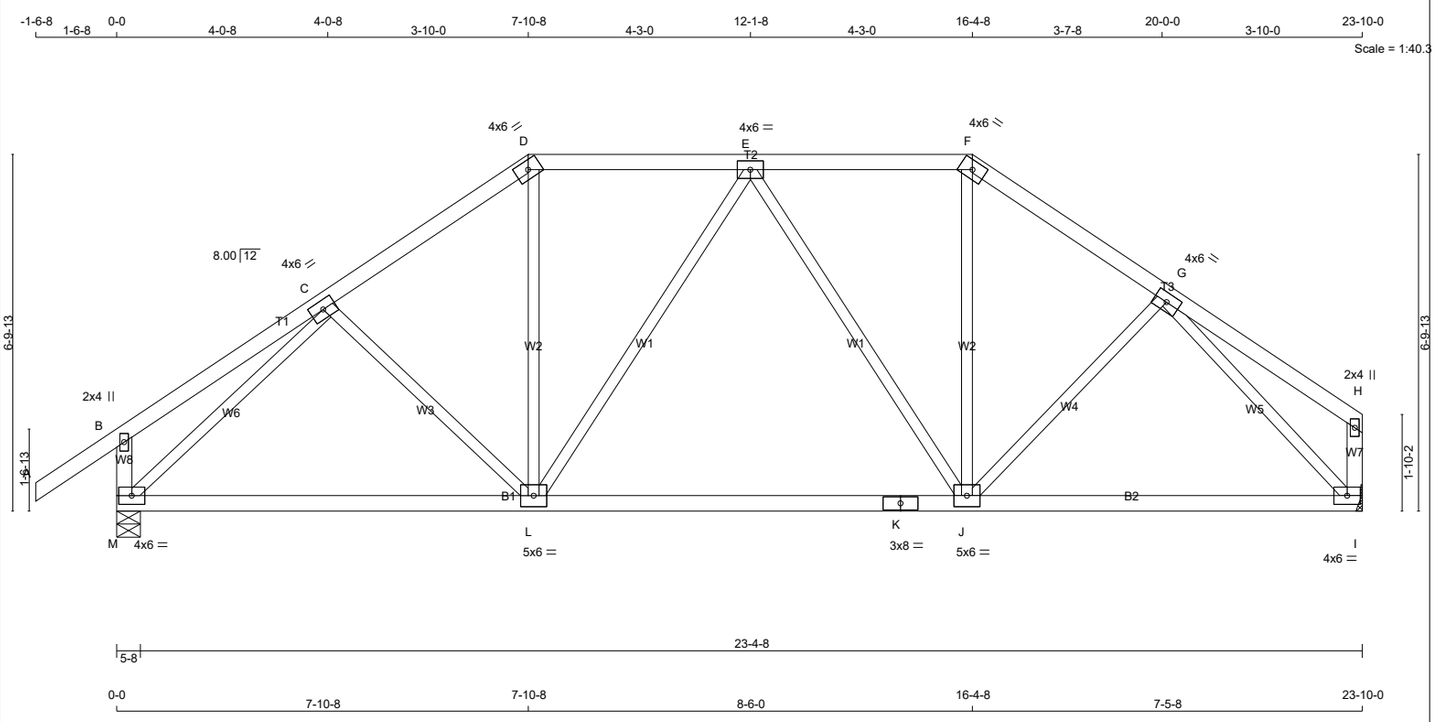


TOTAL WEIGHT = 102 lb

[M][F]

**LUMBER**

N. L. G. A. RULES

| CHORDS | SIZE | | LUMBER | DESCR. |
|---|---|---|---|---|
| A - D | 2x4 | DRY | No.2 | SPF |
| D - F | 2x4 | DRY | No.2 | SPF |
| F - H | 2x4 | DRY | No.2 | SPF |
| M - B | 2x4 | DRY | No.2 | SPF |
| I - H | 2x4 | DRY | No.2 | SPF |
| M - K | 2x4 | DRY | No.2 | SPF |
| K - I | 2x4 | DRY | No.2 | SPF |
| ALL WEBS EXCEPT | 2x3 | DRY | No.2 | SPF |

DRY: SEASONED LUMBER.

**PLATES (table is in inches)**

| JT | TYPE | PLATES | W | LEN | Y | X |
|---|---|---|---|---|---|---|
| B | TMV+p | MT20 | 2.0 | 4.0 | | |
| C, E, G | | | | | | |
| C | TMWW-t | MT20 | 4.0 | 6.0 | | |
| D | TTW-h | MT20 | 4.0 | 6.0 | | |
| F | TTW-h | MT20 | 4.0 | 6.0 | | |
| H | TMV+p | MT20 | 2.0 | 4.0 | | |
| I | BMVW1-t | MT20 | 4.0 | 6.0 | | |
| J | BMWWW-t | MT20 | 5.0 | 6.0 | | |
| K | BS-t | MT20 | 3.0 | 8.0 | | |
| L | BMWWW-t | MT20 | 5.0 | 6.0 | | |
| M | BMVW1-t | MT20 | 4.0 | 6.0 | | |

LATERAL BRACE(S) SHOWN SHALL BE 2X4 SPF#2

LICENSED PROFESSIONAL ENGINEER
Y. WIDYA
100225448
07/12/2022
PROVINCE OF ONTARIO

**DIMENSIONS, SUPPORTS AND LOADINGS SPECIFIED BY FABRICATOR TO BE VERIFIED BY BUILDING DESIGNER**

**BEARINGS**

| JT | FACTORED GROSS REACTION VERT | HORZ | MAXIMUM FACTORED GROSS REACTION DOWN | HORZ | UPLIFT | INPUT BRG | REQRD BRG |
|---|---|---|---|---|---|---|---|
| M | 1276 | 0 | 1276 | 0 | 0 | 5-8 | 1-8 |
| I | 1150 | 0 | 1150 | 0 | 0 | MECHANICAL | |

A SUITABLE HANGER/MECHANICAL CONNECTION IS REQUIRED AT JOINT I. MINIMUM BEARING LENGTH AT JOINT I = 1-8.

**UNFACTORED REACTIONS**

| JT | 1ST LCASE COMBINED | MAX./MIN. COMPONENT REACTIONS SNOW | LIVE | PERM.LIVE | WIND | DEAD | SOIL |
|---|---|---|---|---|---|---|---|
| M | 907 | 568 / 0 | 0 / 0 | 0 / 0 | 0 / 0 | 339 / 0 | 0 / 0 |
| I | 820 | 500 / 0 | 0 / 0 | 0 / 0 | 0 / 0 | 319 / 0 | 0 / 0 |

BEARING MATERIAL TO BE SPF NO.2 OR BETTER AT JOINT(S) M

**BRACING**

TOP CHORD TO BE SHEATHED OR MAX. PURLIN SPACING = 5.75 FT.
MAX. UNBRACED BOTTOM CHORD LENGTH = 10.00 FT OR RIGID CEILING DIRECTLY APPLIED.

ALL PITCH BREAKS AND PERIMETER CORNER JOINTS MUST BE LATERALLY RESTRAINED.

**LOADING**

TOTAL LOAD CASES: (4)

CHORDS

| MEMB. FR-TO | MAX. FACTORED FORCE (LBS) | FACTORED VERT. LOAD LC1 (PLF) FROM | TO | MAX CSI (LC) | MAX. UNBRAC LENGTH |
|---|---|---|---|---|---|
| A- B | 0 / 35 | -78.0 | -78.0 | 0.15 (1) | 10.00 |
| B- C | 0 / 19 | -78.0 | -78.0 | 0.19 (1) | 10.00 |
| C- D | -1159 / 0 | -78.0 | -78.0 | 0.16 (1) | 5.75 |
| D- E | -953 / 0 | -78.0 | -78.0 | 0.18 (1) | 6.15 |
| E- F | -926 / 0 | -78.0 | -78.0 | 0.18 (1) | 6.21 |
| F- G | -1126 / 0 | -78.0 | -78.0 | 0.14 (1) | 5.83 |
| G- H | 0 / 18 | -78.0 | -78.0 | 0.16 (1) | 10.00 |
| M- B | -246 / 0 | 0.0 | 0.0 | 0.03 (1) | 7.81 |
| I- H | -114 / 0 | 0.0 | 0.0 | 0.01 (1) | 7.81 |
| M- L | 0 / 987 | -18.5 | -18.5 | 0.38 (4) | 10.00 |
| L- K | 0 / 1068 | -18.5 | -18.5 | 0.39 (4) | 10.00 |
| K- J | 0 / 1068 | -18.5 | -18.5 | 0.39 (4) | 10.00 |
| J- I | 0 / 912 | -18.5 | -18.5 | 0.35 (4) | 10.00 |

WEBS

| MEMB. FR-TO | MAX. FACTORED FORCE (LBS) | MAX CSI (LC) |
|---|---|---|
| C- L | -56 / 29 | 0.03 (1) |
| L- D | 0 / 385 | 0.09 (1) |
| L- E | -213 / 0 | 0.26 (1) |
| E- J | -264 / 0 | 0.32 (1) |
| J- F | 0 / 374 | 0.08 (1) |
| J- G | 0 / 51 | 0.02 (4) |
| M- C | -1385 / 0 | 0.69 (1) |
| G- I | -1339 / 0 | 0.65 (1) |

**DESIGN CRITERIA**

SPECIFIED LOADS:

| | | | | |
|---|---|---|---|---|
| TOP CH. | LL | = | 21.0 | PSF |
| | DL | = | 6.0 | PSF |
| BOT CH. | LL | = | 0.0 | PSF |
| | DL | = | 7.4 | PSF |
| TOTAL LOAD | | = | 34.4 | PSF |

**SPACING = 24.0 IN. C/C**

LOADING IN FLAT SECTION BASED ON A SLOPE OF 2.00/12 MINIMUM

THIS TRUSS IS DESIGNED FOR RESIDENTIAL OR SMALL BUILDING REQUIREMENTS OF PART 9, NBCC 2015

THIS DESIGN COMPLIES WITH:
- PART 9 OF BCBC 2018 , ABC 2019
- PART 9 OF OBC 2012 (2019 AMENDMENT)
- CSA 086-14
- TPIC 2014

(55 % OF 23.0 P.S.F. G.S.L. PLUS 8.4 P.S.F. RAIN LOAD) EQUALS 21.0 P.S.F. SPECIFIED ROOF LIVE LOAD

ALLOWABLE DEFL.(LL)= L/360 (0.79")
CALCULATED VERT. DEFL.(LL) = L/ 999 (0.04")
ALLOWABLE DEFL.(TL)= L/360 (0.79")
CALCULATED VERT. DEFL.(TL) = L/ 999 (0.13")

CSI: TC=0.19/1.00 (B-C:1) , BC=0.39/1.00 (J-L:4) , WB=0.69/1.00 (C-M:1) , SSI=0.16/1.00 (E-F:1)

DOL LUMBER=1.00 NAIL=1.00 LS BEND=1.10 COMP=1.10 SHEAR=1.10 TENS= 1.10

COMPANION LIVE LOAD FACTOR = 1.00

TRUSS PLATE MANUFACTURER IS NOT RESPONSIBLE FOR QUALITY CONTROL IN THE TRUSS MANUFACTURING PLANT .

NAIL VALUES

| PLATE | GRIP(DRY) (PSI) MAX | MIN | SHEAR (PLI) MAX | MIN | SECTION (PLI) MAX | MIN |
|---|---|---|---|---|---|---|
| MT20 | 650 | 371 | 1747 | 788 | 1987 | 1873 |

PLATE PLACEMENT TOL. = 0.250 inches

PLATE ROTATION TOL. = 5.0 Deg.

JSI GRIP= 0.81 (G) (INPUT = 0.90 )
JSI METAL= 0.37 (K) (INPUT = 1.00 )

| JOB NAME | TRUSS NAME | QUANTITY | PLY | JOB DESC. | DRWG NO. |
|---|---|---|---|---|---|
| 345177 | H15 | | 1 | TRUSS DESC. JT 45147 | E22073493 |

Alpa Roof Truss, Maple

Version 8.530 S Feb 23 2022 MiTek Industries, Inc. Tue Jul 12 10:24:18 2022 Page 1

ID:RK?4zbbW6zKUfpVYHQwqmTz3QmS-p0Zj1vy2clNSAV934IztRI72zsPWQmrUNplKoHyyrrh

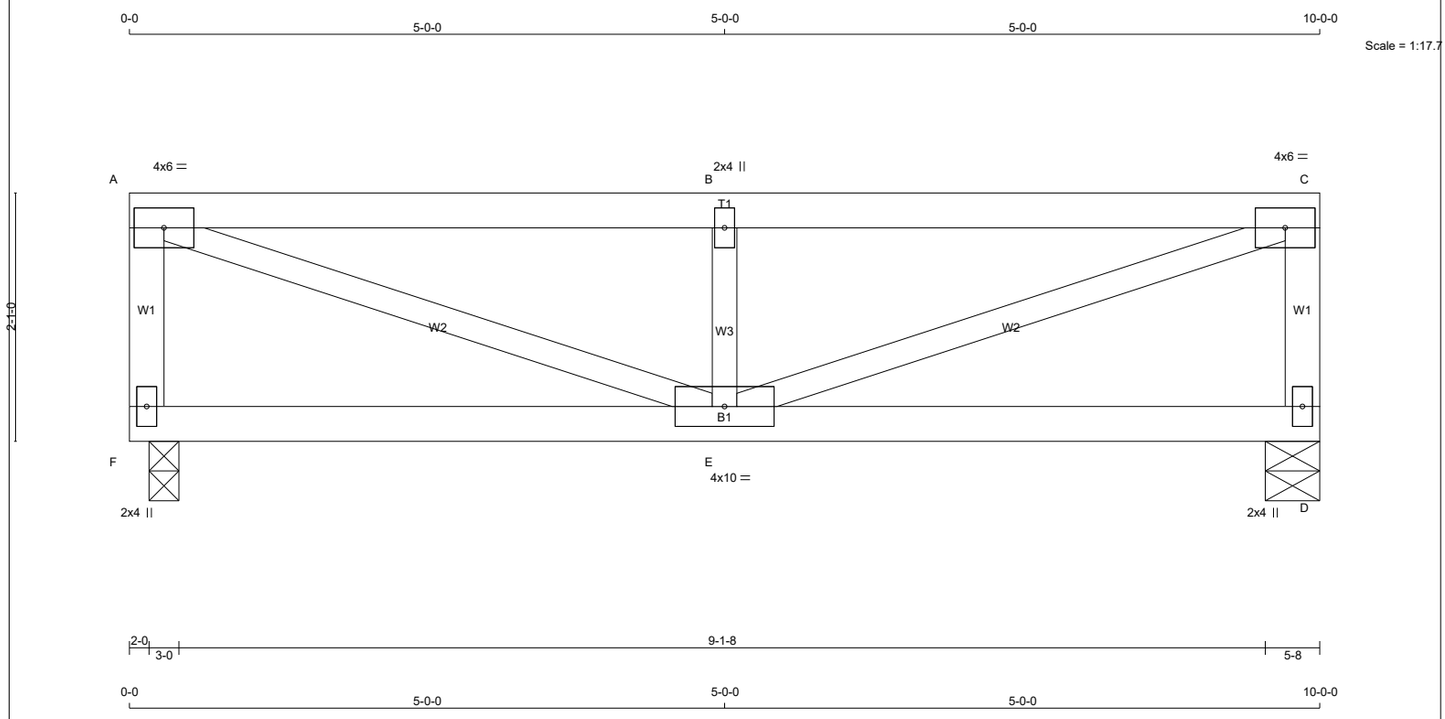


TOTAL WEIGHT = 2 X 35 = 71 lb [M]

**LUMBER**

N. L. G. A. RULES

| CHORDS | SIZE | | LUMBER | DESCR. |
|---|---|---|---|---|
| F - A | 2x4 | DRY | No.2 | SPF |
| A - C | 2x4 | DRY | No.2 | SPF |
| D - C | 2x4 | DRY | No.2 | SPF |
| F - D | 2x4 | DRY | No.2 | SPF |
| ALL WEBS | 2x3 | DRY | No.2 | SPF |

DRY: SEASONED LUMBER.

**PLATES (table is in inches)**

| JT | TYPE | PLATES | W | LEN | Y | X |
|---|---|---|---|---|---|---|
| A | TMVW-t | MT20 | 4.0 | 6.0 | | |
| B | TMW+w | MT20 | 2.0 | 4.0 | | |
| C | TMVW-t | MT20 | 4.0 | 6.0 | | |
| D | BMV1+p | MT20 | 2.0 | 4.0 | | |
| E | BMWWW-t | MT20 | 4.0 | 10.0 | | |
| F | BMV1+p | MT20 | 2.0 | 4.0 | | |

**DIMENSIONS, SUPPORTS AND LOADINGS SPECIFIED BY FABRICATOR TO BE VERIFIED BY BUILDING DESIGNER**

**BEARINGS**

| JT | FACTORED GROSS REACTION VERT | HORZ | MAXIMUM FACTORED GROSS REACTION DOWN | HORZ | UPLIFT | INPUT BRG IN-SX | REQRD BRG IN-SX |
|---|---|---|---|---|---|---|---|
| F | 482 | 0 | 482 | 0 | 0 | 3-0 | 1-8 |
| D | 482 | 0 | 482 | 0 | 0 | 5-8 | 1-8 |

**UNFACTORED REACTIONS**

| JT | 1ST LCASE COMBINED | MAX./MIN. COMPONENT REACTIONS SNOW | LIVE | PERM.LIVE | WIND | DEAD | SOIL |
|---|---|---|---|---|---|---|---|
| F | 344 | 210 / 0 | 0 / 0 | 0 / 0 | 0 / 0 | 134 / 0 | 0 / 0 |
| D | 344 | 210 / 0 | 0 / 0 | 0 / 0 | 0 / 0 | 134 / 0 | 0 / 0 |

BEARING MATERIAL TO BE SPF NO.2 OR BETTER AT JOINT(S) F, D

**BRACING**

TOP CHORD TO BE SHEATHED OR MAX. PURLIN SPACING = 6.25 FT.
MAX. UNBRACED BOTTOM CHORD LENGTH = 10.00 FT OR RIGID CEILING DIRECTLY APPLIED.

ALL PITCH BREAKS AND PERIMETER CORNER JOINTS MUST BE LATERALLY RESTRAINED.

**LOADING**

TOTAL LOAD CASES: (4)

CHORDS

| MEMB. FR-TO | MAX. FACTORED FORCE (LBS) | FACTORED VERT. LOAD LC1 (PLF) FROM | TO | MAX CSI (LC) | MAX. UNBRAC LENGTH |
|---|---|---|---|---|---|
| F- A | -442 / 0 | 0.0 | 0.0 | 0.05 (1) | 7.81 |
| A- B | -812 / 0 | -78.0 | -78.0 | 0.32 (1) | 6.25 |
| B- C | -812 / 0 | -78.0 | -78.0 | 0.32 (1) | 6.25 |
| D- C | -442 / 0 | 0.0 | 0.0 | 0.05 (1) | 7.81 |
| F- E | 0 / 0 | -18.5 | -18.5 | 0.11 (4) | 10.00 |
| E- D | 0 / 0 | -18.5 | -18.5 | 0.11 (4) | 10.00 |

WEBS

| MEMB. FR-TO | MAX. FACTORED FORCE (LBS) | MAX CSI (LC) |
|---|---|---|
| A- E | 0 / 862 | 0.19 (1) |
| E- B | -477 / 0 | 0.07 (1) |
| E- C | 0 / 862 | 0.19 (1) |

**DESIGN CRITERIA**

SPECIFIED LOADS:

| | | | | |
|---|---|---|---|---|
| TOP CH. | LL | = | 21.0 | PSF |
| | DL | = | 6.0 | PSF |
| BOT CH. | LL | = | 0.0 | PSF |
| | DL | = | 7.4 | PSF |
| TOTAL LOAD | | = | 34.4 | PSF |

**SPACING = 24.0 IN. C/C**

LOADING IN FLAT SECTION BASED ON A SLOPE OF 2.00/12 MINIMUM

THIS TRUSS IS DESIGNED FOR RESIDENTIAL OR SMALL BUILDING REQUIREMENTS OF PART 9, NBCC 2015

THIS DESIGN COMPLIES WITH:
- PART 9 OF BCBC 2018 , ABC 2019
- PART 9 OF OBC 2012 (2019 AMENDMENT)
- CSA 086-14
- TPIC 2014

(55 % OF 23.0 P.S.F. G.S.L. PLUS 8.4 P.S.F. RAIN LOAD) EQUALS 21.0 P.S.F. SPECIFIED ROOF LIVE LOAD

ALLOWABLE DEFL.(LL)= L/360 (0.33")
CALCULATED VERT. DEFL.(LL) = L/ 999 (0.02")
ALLOWABLE DEFL.(TL)= L/360 (0.33")
CALCULATED VERT. DEFL.(TL) = L/ 999 (0.05")

CSI: TC=0.32/1.00 (B-C:1) , BC=0.11/1.00 (D-E:4) , WB=0.19/1.00 (A-E:1) , SSI=0.19/1.00 (A-B:1)

DOL LUMBER=1.00 NAIL=1.00 LS BEND=1.10 COMP=1.10 SHEAR=1.10 TENS= 1.10

COMPANION LIVE LOAD FACTOR = 1.00

TRUSS PLATE MANUFACTURER IS NOT RESPONSIBLE FOR QUALITY CONTROL IN THE TRUSS MANUFACTURING PLANT .

NAIL VALUES

| PLATE | GRIP(DRY) (PSI) MAX | MIN | SHEAR (PLI) MAX | MIN | SECTION (PLI) MAX | MIN |
|---|---|---|---|---|---|---|
| MT20 | 650 | 371 | 1747 | 788 | 1987 | 1873 |

PLATE PLACEMENT TOL. = 0.250 inches

PLATE ROTATION TOL. = 5.0 Deg.

JSI GRIP= 0.52 (C) (INPUT = 0.90 )
JSI METAL= 0.19 (C) (INPUT = 1.00 )

LATERAL BRACE(S) SHOWN SHALL BE 2X4 SPF#2

LICENSED PROFESSIONAL ENGINEER
Y. WIDYA
100225448
07/12/2022
PROVINCE OF ONTARIO

| JOB NAME | TRUSS NAME | QUANTITY | PLY | JOB DESC. | DRWG NO. |
|---|---|---|---|---|---|
| 345177 | H15G | | 1 | TRUSS DESC. JT 45147 | E22073494 |

Alpa Roof Truss, Maple

Version 8.530 S Feb 23 2022 MiTek Industries, Inc. Tue Jul 12 10:24:20 2022 Page 1

ID:RK?4zbbW6zKUfpVYHQwqmTz3QmS-lPhTSb I8Md9QpIRBj?LXjDSng6Vujznr7EQtAyyrrf

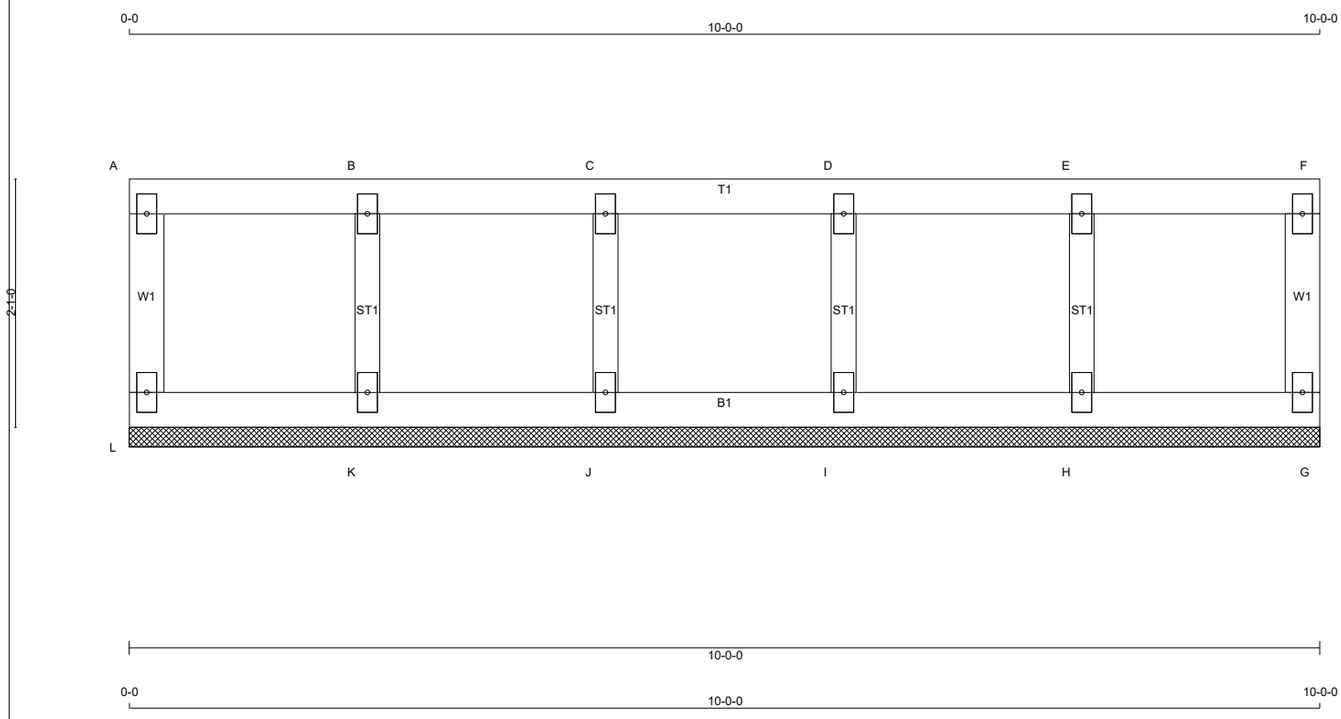


TOTAL WEIGHT = 31 lb [M]

**LUMBER**

N. L. G. A. RULES

| CHORDS | SIZE | | LUMBER | DESCR. |
|---|---|---|---|---|
| L - A | 2x4 | DRY | No.2 | SPF |
| A - F | 2x4 | DRY | No.2 | SPF |
| G - F | 2x4 | DRY | No.2 | SPF |
| L - G | 2x4 | DRY | No.2 | SPF |
| ALL WEBS | 2x3 | DRY | No.2 | SPF |
| ALL GABLE WEBS | 2x3 | DRY | No.2 | SPF |

DRY: SEASONED LUMBER.

GABLE STUDS SPACED AT 2-0-0 OC.

**PLATES (table is in inches)**

| JT | TYPE | PLATES | W | LEN | Y | X |
|---|---|---|---|---|---|---|
| A | TMV+p | MT20 | 2.0 | 4.0 | | |
| B, C, D, E | | | | | | |
| B | TMW+w | MT20 | 2.0 | 4.0 | | |
| F | TMV+p | MT20 | 2.0 | 4.0 | | |
| G | BMV1+p | MT20 | 2.0 | 4.0 | | |
| H, I, J, K | | | | | | |
| H | BMW1+w | MT20 | 2.0 | 4.0 | | |
| L | BMV1+p | MT20 | 2.0 | 4.0 | | |

LATERAL BRACE(S) SHOWN SHALL BE 2X4 SPF#2

LICENSED PROFESSIONAL ENGINEER
Y. WIDYA
100225448
07/12/2022
PROVINCE OF ONTARIO

**DIMENSIONS, SUPPORTS AND LOADINGS SPECIFIED BY FABRICATOR TO BE VERIFIED BY BUILDING DESIGNER**

**BEARINGS**

THIS TRUSS DESIGNED FOR CONTINUOUS BEARINGS.

THIS TRUSS REQUIRES RIGID SHEATHING ON EXPOSED FACE.

BEARING MATERIAL TO BE SPF NO.2 OR BETTER AT JOINT(S)

**BRACING**

TOP CHORD TO BE SHEATHED OR MAX. PURLIN SPACING = 6.25 FT.
MAX. UNBRACED BOTTOM CHORD LENGTH = 10.00 FT OR RIGID CEILING DIRECTLY APPLIED.

ALL PITCH BREAKS AND PERIMETER CORNER JOINTS MUST BE LATERALLY RESTRAINED.

**LOADING**

TOTAL LOAD CASES: (4)

CHORDS

| MEMB. FR-TO | MAX. FORCE (LBS) | FACTORED VERT. LOAD (PLF) FROM | TO | LC1 | MAX CSI (LC) | MAX. UNBRAC LENGTH |
|---|---|---|---|---|---|---|
| L- A | -72 / 0 | 0.0 | 0.0 | 0.02 (1) | 7.81 | |
| A- B | -12 / 0 | -78.0 | -78.0 | 0.04 (1) | 6.25 | |
| B- C | -12 / 0 | -78.0 | -78.0 | 0.04 (1) | 6.25 | |
| C- D | -12 / 0 | -78.0 | -78.0 | 0.03 (1) | 6.25 | |
| D- E | -12 / 0 | -78.0 | -78.0 | 0.04 (1) | 6.25 | |
| E- F | -12 / 0 | -78.0 | -78.0 | 0.04 (1) | 6.25 | |
| G- F | -72 / 0 | 0.0 | 0.0 | 0.02 (1) | 7.81 | |
| L- K | 0 / 12 | -18.5 | -18.5 | 0.02 (4) | 10.00 | |
| K- J | 0 / 12 | -18.5 | -18.5 | 0.02 (4) | 10.00 | |
| J- I | 0 / 12 | -18.5 | -18.5 | 0.02 (4) | 10.00 | |
| I- H | 0 / 12 | -18.5 | -18.5 | 0.02 (4) | 10.00 | |
| H- G | 0 / 12 | -18.5 | -18.5 | 0.02 (4) | 10.00 | |

WEBS

| MEMB. FR-TO | MAX. FORCE (LBS) | MAX CSI (LC) |
|---|---|---|
| K- B | -164 / 0 | 0.02 (1) |
| J- C | -155 / 0 | 0.02 (1) |
| I- D | -155 / 0 | 0.02 (1) |
| H- E | -164 / 0 | 0.02 (1) |

**DESIGN CRITERIA**

SPECIFIED LOADS:

| | | | | | |
|---|---|---|---|---|---|
| TOP CH. | LL | = | 21.0 | PSF |
| | DL | = | 6.0 | PSF |
| BOT CH. | LL | = | 0.0 | PSF |
| | DL | = | 7.4 | PSF |
| TOTAL LOAD | | = | 34.4 | PSF |

**SPACING = 24.0 IN. C/C**

LOADING IN FLAT SECTION BASED ON A SLOPE OF 2.00/12 MINIMUM

THIS TRUSS IS DESIGNED FOR RESIDENTIAL OR SMALL BUILDING REQUIREMENTS OF PART 9, NBCC 2015

THIS DESIGN COMPLIES WITH:
- PART 9 OF BCBC 2018 , ABC 2019
- PART 9 OF OBC 2012 (2019 AMENDMENT)
- CSA 086-14
- TPIC 2014

(55 % OF 23.0 P.S.F. G.S.L. PLUS 8.4 P.S.F. RAIN LOAD) EQUALS 21.0 P.S.F. SPECIFIED ROOF LIVE LOAD

CSI: TC=0.04/1.00 (B-C:1) , BC=0.02/1.00 (J-K:4) , WB=0.02/1.00 (B-K:1) , SSI=0.07/1.00 (A-B:1)

DOL LUMBER=1.00 NAIL=1.00 LS BEND=1.10 COMP=1.10 SHEAR=1.10 TENS= 1.10

COMPANION LIVE LOAD FACTOR = 1.00

TRUSS PLATE MANUFACTURER IS NOT RESPONSIBLE FOR QUALITY CONTROL IN THE TRUSS MANUFACTURING PLANT .

NAIL VALUES

| PLATE | GRIP(DRY) (PSI) MAX | MIN | SHEAR (PLI) MAX | MIN | SECTION (PLI) MAX | MIN |
|---|---|---|---|---|---|---|
| MT20 | 650 | 371 | 1747 | 788 | 1987 | 1873 |

PLATE PLACEMENT TOL. = 0.250 inches

PLATE ROTATION TOL. = 5.0 Deg.

JSI GRIP= 0.08 (K) (INPUT = 0.90 )
JSI METAL= 0.03 (K) (INPUT = 1.00 )

| JOB NAME | TRUSS NAME | QUANTITY | PLY | JOB DESC. | DRWG NO. |
|---|---|---|---|---|---|
| 345177 | H16 | | 1 | TRUSS DESC. JT 45147 | E22073495 |

Alpa Roof Truss, Maple

Version 8.530 S Feb 23 2022 MiTek Industries, Inc. Tue Jul 12 10:24:21 2022 Page 1
ID:RK?4zbbW6zKUfpVYHQwqmTz3QmS-DbFrfx?wuql01ytelRWa3wlZn3RKd9jw3nz Pcyyrre

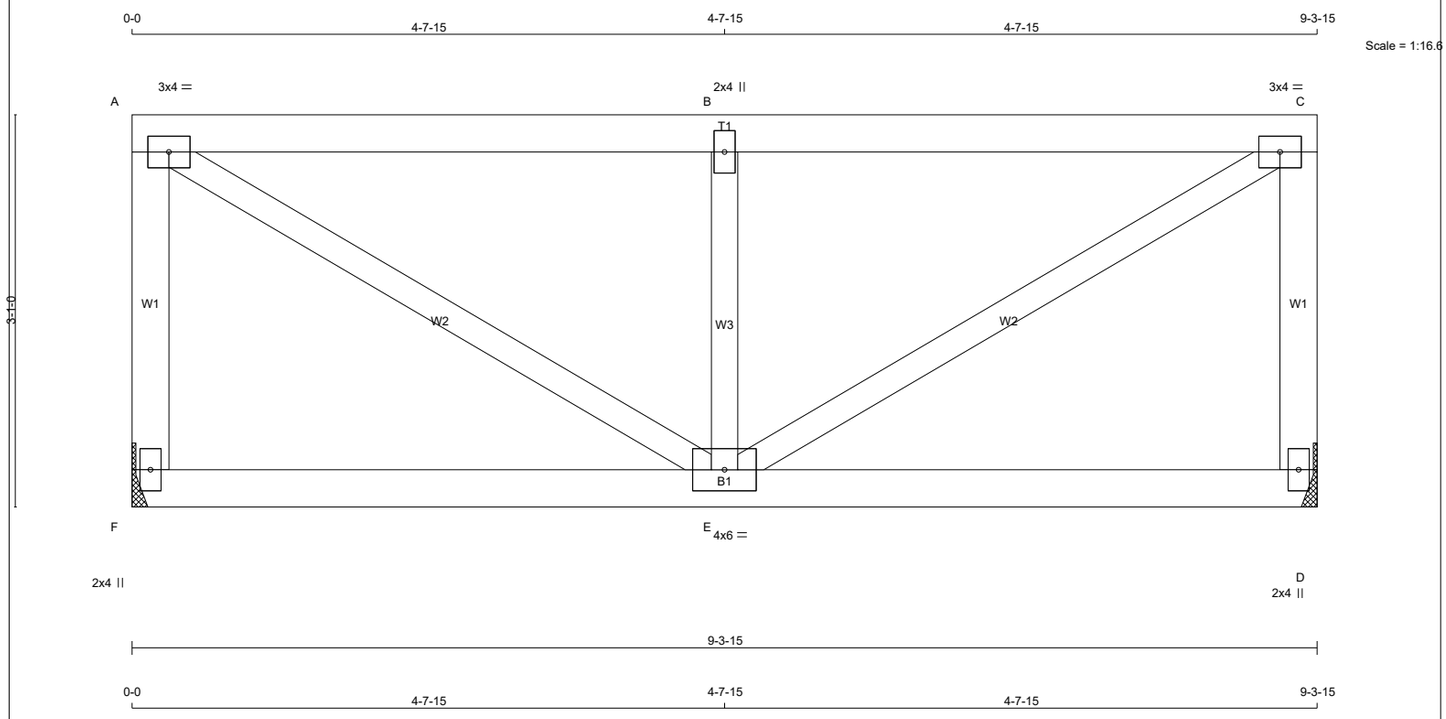


TOTAL WEIGHT = 37 lb
[M]

**LUMBER**
N. L. G. A. RULES

| CHORDS | SIZE | | LUMBER | DESCR. |
|---|---|---|---|---|
| F - A | 2x4 | DRY | No.2 | SPF |
| A - C | 2x4 | DRY | No.2 | SPF |
| D - C | 2x4 | DRY | No.2 | SPF |
| F - D | 2x4 | DRY | No.2 | SPF |
| ALL WEBS | 2x3 | DRY | No.2 | SPF |

DRY: SEASONED LUMBER.

**PLATES (table is in inches)**

| JT | TYPE | PLATES | W | LEN | Y | X |
|---|---|---|---|---|---|---|
| A | TMVW-t | MT20 | 3.0 | 4.0 | | |
| B | TMW+w | MT20 | 2.0 | 4.0 | | |
| C | TMVW-t | MT20 | 3.0 | 4.0 | | |
| D | BMV1+p | MT20 | 2.0 | 4.0 | | |
| E | BMWWW-t | MT20 | 4.0 | 6.0 | | |
| F | BMV1+p | MT20 | 2.0 | 4.0 | | |

**DIMENSIONS, SUPPORTS AND LOADINGS SPECIFIED BY FABRICATOR TO BE VERIFIED BY BUILDING DESIGNER**

**BEARINGS**

| JT | FACTORED GROSS REACTION VERT | HORZ | MAXIMUM FACTORED GROSS REACTION DOWN | HORZ | UPLIFT | INPUT BRG | REQRD BRG |
|---|---|---|---|---|---|---|---|
| F | 450 | 0 | 450 | 0 | 0 | MECHANICAL | |
| D | 450 | 0 | 450 | 0 | 0 | MECHANICAL | |

A SUITABLE HANGER/MECHANICAL CONNECTION IS REQUIRED AT JOINT F, D. MINIMUM BEARING LENGTH AT JOINT F = 1-8, JOINT D = 1-8.

**UNFACTORED REACTIONS**

| JT | 1ST LCASE COMBINED | MAX./MIN. COMPONENT REACTIONS SNOW | LIVE | PERM.LIVE | WIND | DEAD | SOIL |
|---|---|---|---|---|---|---|---|
| F | 321 | 196 / 0 | 0 / 0 | 0 / 0 | 0 / 0 | 125 / 0 | 0 / 0 |
| D | 321 | 196 / 0 | 0 / 0 | 0 / 0 | 0 / 0 | 125 / 0 | 0 / 0 |

**BRACING**
TOP CHORD TO BE SHEATHED OR MAX. PURLIN SPACING = 6.25 FT.
MAX. UNBRACED BOTTOM CHORD LENGTH = 10.00 FT OR RIGID CEILING DIRECTLY APPLIED.

ALL PITCH BREAKS AND PERIMETER CORNER JOINTS MUST BE LATERALLY RESTRAINED.

**LOADING**
TOTAL LOAD CASES: (4)

CHORDS

| MEMB. FR-TO | MAX. FACTORED FORCE (LBS) | FACTORED VERT. LOAD (PLF) FROM | TO | LC1 MAX CSI (LC) | MAX. UNBRAC LENGTH |
|---|---|---|---|---|---|
| F- A | -415 / 0 | 0.0 | 0.0 | 0.07 (1) | 7.81 |
| A- B | -461 / 0 | -78.0 | -78.0 | 0.28 (1) | 6.25 |
| B- C | -461 / 0 | -78.0 | -78.0 | 0.28 (1) | 6.25 |
| D- C | -415 / 0 | 0.0 | 0.0 | 0.07 (1) | 7.81 |
| F- E | 0 / 0 | -18.5 | -18.5 | 0.11 (4) | 10.00 |
| E- D | 0 / 0 | -18.5 | -18.5 | 0.11 (4) | 10.00 |

WEBS

| MEMB. FR-TO | MAX. FACTORED FORCE (LBS) | MAX CSI (LC) |
|---|---|---|
| A- E | 0 / 537 | 0.12 (1) |
| E- B | -449 / 0 | 0.08 (1) |
| E- C | 0 / 537 | 0.12 (1) |

**DESIGN CRITERIA**

SPECIFIED LOADS:

| | | | | |
|---|---|---|---|---|
| TOP CH. | LL | = | 21.0 | PSF |
| | DL | = | 6.0 | PSF |
| BOT CH. | LL | = | 0.0 | PSF |
| | DL | = | 7.4 | PSF |
| TOTAL LOAD | | = | 34.4 | PSF |

**SPACING = 24.0 IN. C/C**

LOADING IN FLAT SECTION BASED ON A SLOPE OF 2.00/12 MINIMUM

THIS TRUSS IS DESIGNED FOR RESIDENTIAL OR SMALL BUILDING REQUIREMENTS OF PART 9, NBCC 2015

THIS DESIGN COMPLIES WITH:
- PART 9 OF BCBC 2018 , ABC 2019
- PART 9 OF OBC 2012 (2019 AMENDMENT)
- CSA 086-14
- TPIC 2014

(55 % OF 23.0 P.S.F. G.S.L. PLUS 8.4 P.S.F. RAIN LOAD) EQUALS 21.0 P.S.F. SPECIFIED ROOF LIVE LOAD

ALLOWABLE DEFL.(LL)= L/360 (0.31")
CALCULATED VERT. DEFL.(LL) = L/ 999 (0.01")
ALLOWABLE DEFL.(TL)= L/360 (0.31")
CALCULATED VERT. DEFL.(TL) = L/ 999 (0.02")

CSI: TC=0.28/1.00 (A-B:1) , BC=0.11/1.00 (D-E:4) , WB=0.12/1.00 (A-E:1) , SSI=0.18/1.00 (A-B:1)

DOL LUMBER=1.00 NAIL=1.00 LS BEND=1.10 COMP=1.10 SHEAR=1.10 TENS= 1.10

COMPANION LIVE LOAD FACTOR = 1.00

TRUSS PLATE MANUFACTURER IS NOT RESPONSIBLE FOR QUALITY CONTROL IN THE TRUSS MANUFACTURING PLANT .

NAIL VALUES

| PLATE | GRIP(DRY) (PSI) MAX | MIN | SHEAR (PLI) MAX | MIN | SECTION (PLI) MAX | MIN |
|---|---|---|---|---|---|---|
| MT20 | 650 | 371 | 1747 | 788 | 1987 | 1873 |

PLATE PLACEMENT TOL. = 0.250 inches

PLATE ROTATION TOL. = 5.0 Deg.

JSI GRIP= 0.75 (C) (INPUT = 0.90 )
JSI METAL= 0.17 (A) (INPUT = 1.00 )

LATERAL BRACE(S) SHOWN SHALL BE 2X4 SPF#2

| JOB NAME | TRUSS NAME | QUANTITY | PLY | JOB DESC. | | DRWG NO. |
|---|---|---|---|---|---|---|
| 345177 | J01 | | 1 | TRUSS DESC. | JT 45147 | E22073496 |

Alpa Roof Truss, Maple

Version 8.530 S Feb 23 2022 MiTek Industries, Inc. Tue Jul 12 10:24:22 2022 Page 1
ID:RK?4zbbW6zKUfpVYHQwqmTz3QmS-hnpDsH?Yf ttf6SqJ81pc8IhjTl7Mdr4IRjXy2yyrrd

Scale = 1:25.2

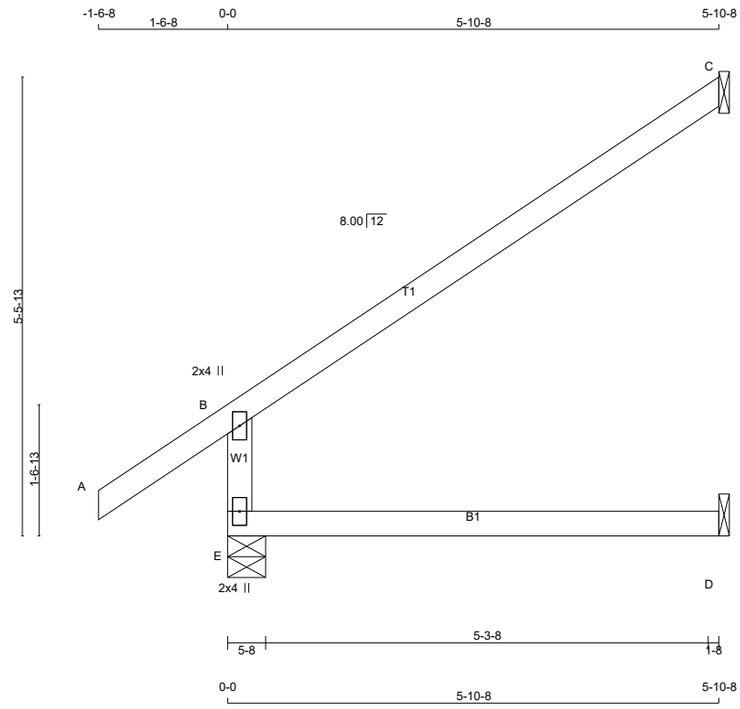


TOTAL WEIGHT = 11 X 18 = 202 lb

[M]

**LUMBER**

N. L. G. A. RULES

| CHORDS | SIZE | | LUMBER | DESCR. |
|---|---|---|---|---|
| E - B | 2x4 | DRY | No.2 | SPF |
| A - C | 2x4 | DRY | No.2 | SPF |
| E - D | 2x4 | DRY | No.2 | SPF |

DRY: SEASONED LUMBER.

**PLATES (table is in inches)**

| JT | TYPE | PLATES | W | LEN | Y | X |
|---|---|---|---|---|---|---|
| B | TMV+p | MT20 | 2.0 | 4.0 | | |
| E | BMV1+p | MT20 | 2.0 | 4.0 | | |

LATERAL BRACE(S) SHOWN SHALL BE 2X4 SPF#2

**DIMENSIONS, SUPPORTS AND LOADINGS SPECIFIED BY FABRICATOR TO BE VERIFIED BY BUILDING DESIGNER**

**BEARINGS**

| JT | FACTORED GROSS REACTION VERT | HORZ | MAXIMUM FACTORED GROSS REACTION DOWN | HORZ | UPLIFT | INPUT BRG IN-SX | REQRD BRG IN-SX |
|---|---|---|---|---|---|---|---|
| E | 475 | 0 | 475 | 0 | 0 | 5-8 | 1-8 |
| C | 172 | 0 | 172 | 0 | 0 | 1-8 | 1-8 |
| D | 46 | 0 | 52 | 0 | 0 | 1-8 | 1-8 |

SEE MITEK STANDARD DETAIL MSD2015-H FOR CONNECTION TO JOINT(S) C , D

**UNFACTORED REACTIONS**

| JT | 1ST LCASE COMBINED | MAX./MIN. COMPONENT REACTIONS SNOW | LIVE | PERM.LIVE | WIND | DEAD | SOIL |
|---|---|---|---|---|---|---|---|
| E | 336 | 222 / 0 | 0 / 0 | 0 / 0 | 0 / 0 | 114 / 0 | 0 / 0 |
| C | 119 | 93 / 0 | 0 / 0 | 0 / 0 | 0 / 0 | 26 / 0 | 0 / 0 |
| D | 37 | 0 / 0 | 0 / 0 | 0 / 0 | 0 / 0 | 37 / 0 | 0 / 0 |

BEARING MATERIAL TO BE SPF NO.2 OR BETTER AT JOINT(S) E, C

**BRACING**

TOP CHORD TO BE SHEATHED OR MAX. PURLIN SPACING = 6.25 FT.
MAX. UNBRACED BOTTOM CHORD LENGTH = 10.00 FT OR RIGID CEILING DIRECTLY APPLIED.

ALL PITCH BREAKS AND PERIMETER CORNER JOINTS MUST BE LATERALLY RESTRAINED.

**LOADING**

TOTAL LOAD CASES: (4)

| CHORDS MEMB. FR-TO | MAX. FACTORED FORCE (LBS) | VERT. LOAD LC1 (PLF) FROM | TO | MAX CSI (LC) | WEBS MEMB. FR-TO | MAX. FACTORED FORCE (LBS) | MAX CSI (LC) | MAX. UNBRAC LENGTH |
|---|---|---|---|---|---|---|---|---|
| E- B | -413 / 0 | 0.0 | 0.0 | 0.11 (4) | | | | 7.81 |
| A- B | 0 / 35 | -78.0 | -78.0 | 0.15 (1) | | | | 10.00 |
| B- C | -32 / 0 | -78.0 | -78.0 | 0.46 (1) | | | | 6.25 |
| E- D | 0 / 0 | -18.5 | -18.5 | 0.13 (4) | | | | 10.00 |

**DESIGN CRITERIA**

SPECIFIED LOADS:

| | | | | | |
|---|---|---|---|---|---|
| TOP | CH. | LL | = | 21.0 | PSF |
| | | DL | = | 6.0 | PSF |
| BOT | CH. | LL | = | 0.0 | PSF |
| | | DL | = | 7.4 | PSF |
| TOTAL | LOAD | | = | 34.4 | PSF |

**SPACING = 24.0 IN. C/C**

THIS TRUSS IS DESIGNED FOR RESIDENTIAL OR SMALL BUILDING REQUIREMENTS OF PART 9, NBCC 2015

THIS DESIGN COMPLIES WITH:
- PART 9 OF BCBC 2018 , ABC 2019
- PART 9 OF OBC 2012 (2019 AMENDMENT)
- CSA 086-14
- TPIC 2014

DESIGN ASSUMPTIONS
-OVERHANG NOT TO BE ALTERED OR CUT OFF.

(55 % OF 23.0 P.S.F. G.S.L. PLUS 8.4 P.S.F. RAIN LOAD) EQUALS 21.0 P.S.F. SPECIFIED ROOF LIVE LOAD

ALLOWABLE DEFL.(LL)= L/360 (0.20")
CALCULATED VERT. DEFL.(LL) = L/ 999 (0.00")
ALLOWABLE DEFL.(TL)= L/360 (0.20")
CALCULATED VERT. DEFL.(TL) = L/ 999 (0.03")

CSI: TC=0.46/1.00 (B-C:1) , BC=0.13/1.00 (D-E:4) , WB=0.00/1.00 (n/a:0) , SSI=0.19/1.00 (B-C:1)

DOL LUMBER=1.00 NAIL=1.00 LS BEND=1.10 COMP=1.10 SHEAR=1.10 TENS= 1.10

COMPANION LIVE LOAD FACTOR = 1.00

TRUSS PLATE MANUFACTURER IS NOT RESPONSIBLE FOR QUALITY CONTROL IN THE TRUSS MANUFACTURING PLANT .

NAIL VALUES

| PLATE | GRIP(DRY) (PSI) MAX | MIN | SHEAR (PLI) MAX | MIN | SECTION (PLI) MAX | MIN |
|---|---|---|---|---|---|---|
| MT20 | 650 | 371 | 1747 | 788 | 1987 | 1873 |

PLATE PLACEMENT TOL. = 0.250 inches

PLATE ROTATION TOL. = 5.0 Deg.

JSI GRIP= 0.25 (B) (INPUT = 0.90 )
JSI METAL= 0.21 (B) (INPUT = 1.00 )

| JOB NAME | TRUSS NAME | QUANTITY | PLY | JOB DESC. | DRWG NO. |
|---|---|---|---|---|---|
| 345177 | J01T | | 1 | TRUSS DESC. JT 45147 | E22073497 |

Alpa Roof Truss, Maple

Version 8.530 S Feb 23 2022 MiTek Industries, Inc. Tue Jul 12 10:24:24 2022 Page 1
ID:RK?4zbbW6zKUfpVYHQwqmTz3QmS-dAx Hz1oBb7buQcDQZ4HhZN56HSeqXUNllCe0xyyrrb

Scale = 1:25.2

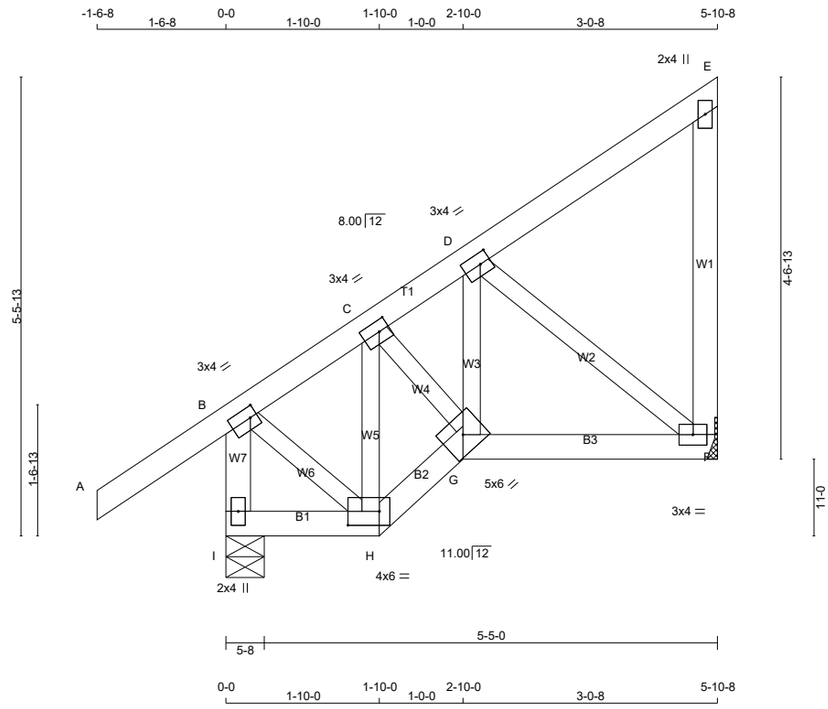


TOTAL WEIGHT = 4 X 32 = 129 lb
[M]

**LUMBER**
N. L. G. A. RULES

| CHORDS | SIZE | | LUMBER | DESCR. |
|---|---|---|---|---|
| I - B | 2x4 | DRY | No.2 | SPF |
| A - E | 2x4 | DRY | No.2 | SPF |
| F - E | 2x4 | DRY | No.2 | SPF |
| I - H | 2x4 | DRY | No.2 | SPF |
| H - G | 2x4 | DRY | No.2 | SPF |
| G - F | 2x4 | DRY | No.2 | SPF |
| ALL WEBS | 2x3 | DRY | No.2 | SPF |

DRY: SEASONED LUMBER.

**PLATES (table is in inches)**

| JT | TYPE | PLATES | W | LEN | Y | X |
|---|---|---|---|---|---|---|
| B | TMVW-t | MT20 | 3.0 | 4.0 | 1.50 | 1.00 |
| C | TMWW-t | MT20 | 3.0 | 4.0 | 1.50 | 1.50 |
| D | TMWW-t | MT20 | 3.0 | 4.0 | 1.50 | 1.50 |
| E | TMV+p | MT20 | 2.0 | 4.0 | | |
| F | BMVW1-t | MT20 | 3.0 | 4.0 | | |
| G | BBWW-h | MT20 | 5.0 | 6.0 | | |
| H | BBWW-l | MT20 | 4.0 | 6.0 | 2.00 | 4.50 |
| I | BMV1+p | MT20 | 2.0 | 4.0 | | |

LATERAL BRACE(S) SHOWN SHALL BE 2X4 SPF#2

**DIMENSIONS, SUPPORTS AND LOADINGS SPECIFIED BY FABRICATOR TO BE VERIFIED BY BUILDING DESIGNER**

**BEARINGS**

| JT | FACTORED GROSS REACTION VERT | HORZ | MAXIMUM FACTORED GROSS REACTION DOWN | HORZ | UPLIFT | INPUT BRG | REQRD BRG |
|---|---|---|---|---|---|---|---|
| I | 427 | 0 | 427 | 0 | 0 | 5-8 | 1-8 |
| F | 266 | 0 | 266 | 0 | 0 | MECHANICAL | |

A SUITABLE HANGER/MECHANICAL CONNECTION IS REQUIRED AT JOINT F. MINIMUM BEARING LENGTH AT JOINT F = 1-8.

**UNFACTORED REACTIONS**

| JT | 1ST LCASE COMBINED | MAX./MIN. COMPONENT REACTIONS SNOW | LIVE | PERM.LIVE | WIND | DEAD | SOIL |
|---|---|---|---|---|---|---|---|
| I | 302 | 201 / 0 | 0 / 0 | 0 / 0 | 0 / 0 | 101 / 0 | 0 / 0 |
| F | 190 | 114 / 0 | 0 / 0 | 0 / 0 | 0 / 0 | 76 / 0 | 0 / 0 |

BEARING MATERIAL TO BE SPF NO.2 OR BETTER AT JOINT(S) I

**BRACING**
TOP CHORD TO BE SHEATHED OR MAX. PURLIN SPACING = 6.25 FT.
MAX. UNBRACED BOTTOM CHORD LENGTH = 10.00 FT OR RIGID CEILING DIRECTLY APPLIED.

ALL PITCH BREAKS AND PERIMETER CORNER JOINTS MUST BE LATERALLY RESTRAINED.

**LOADING**
TOTAL LOAD CASES: (4)

C H O R D S

| MEMB. FR-TO | MAX. FACTORED FORCE (LBS) | FACTORED VERT. LOAD (PLF) FROM | TO | LC1 CSI (LC) | MAX UNBRAC LENGTH |
|---|---|---|---|---|---|
| I- B | -410 / 0 | 0.0 | 0.0 | 0.04 (1) | 7.81 |
| A- B | 0 / 35 | -78.0 | -78.0 | 0.15 (1) | 10.00 |
| B- C | -170 / 0 | -78.0 | -78.0 | 0.14 (1) | 6.25 |
| C- D | -187 / 0 | -78.0 | -78.0 | 0.09 (1) | 6.25 |
| D- E | -12 / 0 | -78.0 | -78.0 | 0.09 (1) | 6.25 |
| F- E | -93 / 0 | 0.0 | 0.0 | 0.03 (1) | 7.81 |
| I- H | 0 / 0 | -18.5 | -18.5 | 0.02 (4) | 10.00 |
| H- G | 0 / 138 | -18.5 | -18.5 | 0.03 (1) | 10.00 |
| G- F | 0 / 188 | -18.5 | -18.5 | 0.07 (4) | 10.00 |

W E B S

| MEMB. FR-TO | MAX. FACTORED FORCE (LBS) | MAX CSI (LC) |
|---|---|---|
| B- H | 0 / 129 | 0.03 (1) |
| C- G | -138 / 0 | 0.02 (1) |
| G- D | 0 / 144 | 0.03 (1) |
| D- F | 0 / 49 | 0.02 (4) |
| | -238 / 0 | 0.06 (1) |

**DESIGN CRITERIA**

SPECIFIED LOADS:

| | | | | | |
|---|---|---|---|---|---|
| TOP | CH. | LL | = | 21.0 | PSF |
| | | DL | = | 6.0 | PSF |
| BOT | CH. | LL | = | 0.0 | PSF |
| | | DL | = | 7.4 | PSF |
| TOTAL | LOAD | | = | 34.4 | PSF |

**SPACING = 24.0 IN. C/C**

THIS TRUSS IS DESIGNED FOR RESIDENTIAL OR SMALL BUILDING REQUIREMENTS OF PART 9, NBCC 2015

THIS DESIGN COMPLIES WITH:
- PART 9 OF BCBC 2018 , ABC 2019
- PART 9 OF OBC 2012 (2019 AMENDMENT)
- CSA 086-14
- TPIC 2014

DESIGN ASSUMPTIONS
-OVERHANG NOT TO BE ALTERED OR CUT OFF.

(55 % OF 23.0 P.S.F. G.S.L. PLUS 8.4 P.S.F. RAIN LOAD) EQUALS 21.0 P.S.F. SPECIFIED ROOF LIVE LOAD

ALLOWABLE DEFL.(LL)= L/360 (0.20")
CALCULATED VERT. DEFL.(LL) = L/ 999 (0.00")
ALLOWABLE DEFL.(TL)= L/360 (0.20")
CALCULATED VERT. DEFL.(TL) = L/ 999 (0.01")

CSI: TC=0.15/1.00 (A-B:1) , BC=0.07/1.00 (F-G:4) , WB=0.06/1.00 (D-F:1) , SSI=0.09/1.00 (B-C:1)

DOL LUMBER=1.00 NAIL=1.00 LS BEND=1.10 COMP=1.10 SHEAR=1.10 TENS= 1.10

COMPANION LIVE LOAD FACTOR = 1.00

TRUSS PLATE MANUFACTURER IS NOT RESPONSIBLE FOR QUALITY CONTROL IN THE TRUSS MANUFACTURING PLANT .

NAIL VALUES

| PLATE | GRIP(DRY) (PSI) MAX | MIN | SHEAR (PLI) MAX | MIN | SECTION (PLI) MAX | MIN |
|---|---|---|---|---|---|---|
| MT20 | 650 | 371 | 1747 | 788 | 1987 | 1873 |

PLATE PLACEMENT TOL. = 0.250 inches

PLATE ROTATION TOL. = 5.0 Deg.

JSI GRIP= 0.39 (B) (INPUT = 0.90 )
JSI METAL= 0.09 (B) (INPUT = 1.00 )

| JOB NAME | TRUSS NAME | QUANTITY | PLY | JOB DESC. | DRWG NO. |
|---|---|---|---|---|---|
| 345177 | J02 | | 1 | TRUSS DESC. JT 45147 | E22073498 |

Alpa Roof Truss, Maple

Version 8.530 S Feb 23 2022 MiTek Industries, Inc. Tue Jul 12 10:24:25 2022 Page 1

ID:RK?4zbbW6zKUfpVYHQwqmTz3QmS-5MUMVJ2RyvFSWaBP GbWDmwEIhoTZ bW PxBYNyyrra

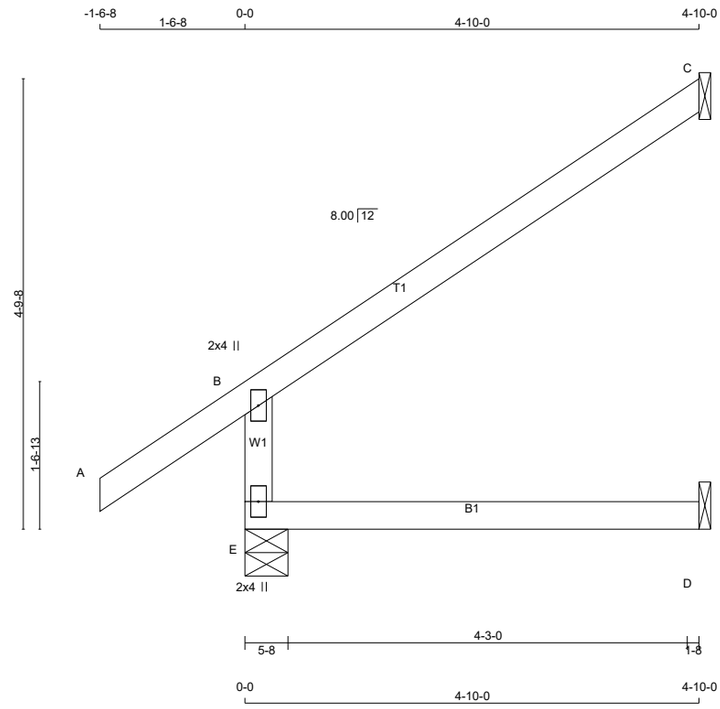


TOTAL WEIGHT = 2 X 16 = 31 lb [M]

**LUMBER**

N. L. G. A. RULES

| CHORDS | SIZE | | LUMBER | DESCR. |
|---|---|---|---|---|
| E - B | 2x4 | DRY | No.2 | SPF |
| A - C | 2x4 | DRY | No.2 | SPF |
| E - D | 2x4 | DRY | No.2 | SPF |

DRY: SEASONED LUMBER.

**PLATES (table is in inches)**

| JT | TYPE | PLATES | W | LEN | Y | X |
|---|---|---|---|---|---|---|
| B | TMV+p | MT20 | 2.0 | 4.0 | | |
| E | BMV1+p | MT20 | 2.0 | 4.0 | | |

LATERAL BRACE(S) SHOWN SHALL BE 2X4 SPF#2

**DIMENSIONS, SUPPORTS AND LOADINGS SPECIFIED BY FABRICATOR TO BE VERIFIED BY BUILDING DESIGNER**

**BEARINGS**

| JT | FACTORED GROSS REACTION VERT | HORZ | MAXIMUM FACTORED GROSS REACTION DOWN | HORZ | UPLIFT | INPUT BRG IN-SX | REQRD BRG IN-SX |
|---|---|---|---|---|---|---|---|
| E | 413 | 0 | 413 | 0 | 0 | 5-8 | 1-8 |
| C | 141 | 0 | 141 | 0 | 0 | 1-8 | 1-8 |
| D | 38 | 0 | 43 | 0 | 0 | 1-8 | 1-8 |

SEE MITEK STANDARD DETAIL MSD2015-H FOR CONNECTION TO JOINT(S) C , D

**UNFACTORED REACTIONS**

| JT | 1ST LCASE COMBINED | MAX./MIN. COMPONENT REACTIONS SNOW | LIVE | PERM.LIVE | WIND | DEAD | SOIL |
|---|---|---|---|---|---|---|---|
| E | 291 | 195 / 0 | 0 / 0 | 0 / 0 | 0 / 0 | 97 / 0 | 0 / 0 |
| C | 98 | 76 / 0 | 0 / 0 | 0 / 0 | 0 / 0 | 22 / 0 | 0 / 0 |
| D | 31 | 0 / 0 | 0 / 0 | 0 / 0 | 0 / 0 | 31 / 0 | 0 / 0 |

BEARING MATERIAL TO BE SPF NO.2 OR BETTER AT JOINT(S) E, C

**BRACING**

TOP CHORD TO BE SHEATHED OR MAX. PURLIN SPACING = 6.25 FT.
MAX. UNBRACED BOTTOM CHORD LENGTH = 10.00 FT OR RIGID CEILING DIRECTLY APPLIED.

ALL PITCH BREAKS AND PERIMETER CORNER JOINTS MUST BE LATERALLY RESTRAINED.

**LOADING**

TOTAL LOAD CASES: (4)

CHORDS

| MEMB. FR-TO | MAX. FACTORED FORCE (LBS) | VERT. LOAD (PLF) FROM | TO | LC1 MAX CSI (LC) | MAX. UNBRAC LENGTH |
|---|---|---|---|---|---|
| E- B | -362 / 0 | 0.0 | 0.0 | 0.07 (4) | 7.81 |
| A- B | 0 / 35 | -78.0 | -78.0 | 0.15 (1) | 10.00 |
| B- C | -26 / 0 | -78.0 | -78.0 | 0.31 (1) | 6.25 |
| E- D | 0 / 0 | -18.5 | -18.5 | 0.09 (4) | 10.00 |

WEBS

| MEMB. FR-TO | MAX. FACTORED FORCE (LBS) | MAX CSI (LC) |
|---|---|---|

**DESIGN CRITERIA**

SPECIFIED LOADS:

| | | | | |
|---|---|---|---|---|
| TOP CH. | LL | = | 21.0 | PSF |
| | DL | = | 6.0 | PSF |
| BOT CH. | LL | = | 0.0 | PSF |
| | DL | = | 7.4 | PSF |
| TOTAL LOAD | | = | 34.4 | PSF |

**SPACING = 24.0 IN. C/C**

THIS TRUSS IS DESIGNED FOR RESIDENTIAL OR SMALL BUILDING REQUIREMENTS OF PART 9, NBCC 2015

THIS DESIGN COMPLIES WITH:
- PART 9 OF BCBC 2018 , ABC 2019
- PART 9 OF OBC 2012 (2019 AMENDMENT)
- CSA 086-14
- TPIC 2014

DESIGN ASSUMPTIONS
-OVERHANG NOT TO BE ALTERED OR CUT OFF.

(55 % OF 23.0 P.S.F. G.S.L. PLUS 8.4 P.S.F. RAIN LOAD) EQUALS 21.0 P.S.F. SPECIFIED ROOF LIVE LOAD

ALLOWABLE DEFL.(LL)= L/360 (0.19")
CALCULATED VERT. DEFL.(LL) = L/ 999 (0.00")
ALLOWABLE DEFL.(TL)= L/360 (0.19")
CALCULATED VERT. DEFL.(TL) = L/ 999 (0.02")

CSI: TC=0.31/1.00 (B-C:1) , BC=0.09/1.00 (D-E:4) , WB=0.00/1.00 (n/a:0) , SSI=0.15/1.00 (B-C:1)

DOL LUMBER=1.00 NAIL=1.00 LS BEND=1.10 COMP=1.10 SHEAR=1.10 TENS= 1.10

COMPANION LIVE LOAD FACTOR = 1.00

TRUSS PLATE MANUFACTURER IS NOT RESPONSIBLE FOR QUALITY CONTROL IN THE TRUSS MANUFACTURING PLANT .

NAIL VALUES

| PLATE | GRIP(DRY) (PSI) MAX | MIN | SHEAR (PLI) MAX | MIN | SECTION (PLI) MAX | MIN |
|---|---|---|---|---|---|---|
| MT20 | 650 | 371 | 1747 | 788 | 1987 | 1873 |

PLATE PLACEMENT TOL. = 0.250 inches

PLATE ROTATION TOL. = 5.0 Deg.

JSI GRIP= 0.22 (B) (INPUT = 0.90 )
JSI METAL= 0.18 (B) (INPUT = 1.00 )

| JOB NAME | TRUSS NAME | QUANTITY | PLY | JOB DESC. | DRWG NO. |
|---|---|---|---|---|---|
| 345177 | J02TA | | 1 | TRUSS DESC. JT 45147 | E22073499 |

Alpa Roof Truss, Maple

Version 8.530 S Feb 23 2022 MiTek Industries, Inc. Tue Jul 12 10:24:27 2022 Page 1

ID:RK?4zbbW6zKUfpVYHQwqmTz3QmS-2lc6w 3hUWVAltLn5hd JB?c7UVb1uEpSjQIdGyyrrY

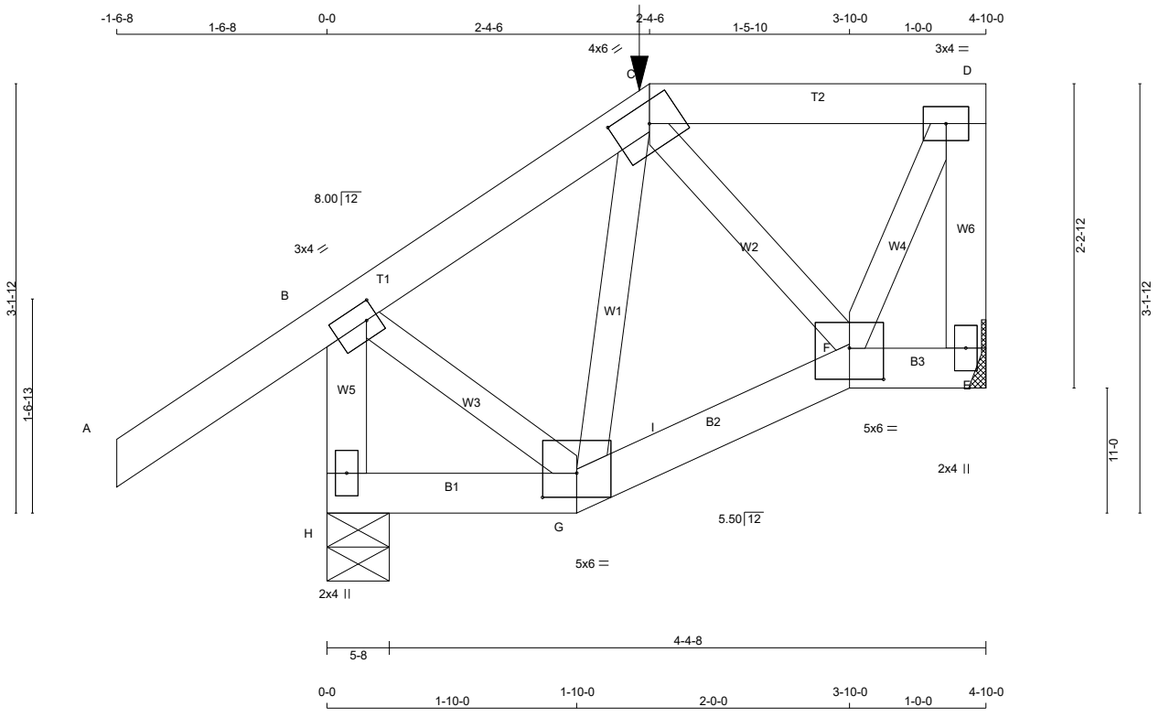


TOTAL WEIGHT = 2 X 24 = 49 lb [M]

**LUMBER**

N. L. G. A. RULES

| CHORDS | SIZE | | LUMBER | DESCR. |
|---|---|---|---|---|
| A - C | 2x4 | DRY | No.2 | SPF |
| C - D | 2x4 | DRY | No.2 | SPF |
| E - D | 2x4 | DRY | No.2 | SPF |
| H - B | 2x4 | DRY | No.2 | SPF |
| H - G | 2x4 | DRY | No.2 | SPF |
| G - F | 2x4 | DRY | No.2 | SPF |
| F - E | 2x4 | DRY | No.2 | SPF |
| ALL WEBS EXCEPT | 2x3 | DRY | No.2 | SPF |

DRY: SEASONED LUMBER.

**PLATES (table is in inches)**

| JT | TYPE | PLATES | W | LEN | Y | X |
|---|---|---|---|---|---|---|
| B | TMVW-t | MT20 | 3.0 | 4.0 | 1.50 | 1.00 |
| C | TTWW-h | MT20 | 4.0 | 6.0 | 1.75 | 3.25 |
| D | TMVW-t | MT20 | 3.0 | 4.0 | | |
| E | BMV1+p | MT20 | 2.0 | 4.0 | | |
| F | BBWW-l | MT20 | 5.0 | 6.0 | 2.75 | 3.00 |
| G | BBWW-l | MT20 | 5.0 | 6.0 | 2.25 | 3.00 |
| H | BMV1+p | MT20 | 2.0 | 4.0 | | |

LATERAL BRACE(S) SHOWN SHALL BE 2X4 SPF#2

**DIMENSIONS, SUPPORTS AND LOADINGS SPECIFIED BY FABRICATOR TO BE VERIFIED BY BUILDING DESIGNER**

**BEARINGS**

| JT | FACTORED GROSS REACTION VERT | HORZ | MAXIMUM FACTORED GROSS REACTION DOWN | HORZ | UPLIFT | INPUT BRG | REQRD BRG |
|---|---|---|---|---|---|---|---|
| E | 347 | 0 | 347 | 0 | 0 | MECHANICAL | |
| H | 434 | 0 | 434 | 0 | 0 | 5-8 | 1-8 |

A SUITABLE HANGER/MECHANICAL CONNECTION IS REQUIRED AT JOINT E. MINIMUM BEARING LENGTH AT JOINT E = 1-8.

**UNFACTORED REACTIONS**

| JT | 1ST LCASE COMBINED | MAX./MIN. COMPONENT REACTIONS SNOW | LIVE | PERM.LIVE | WIND | DEAD | SOIL |
|---|---|---|---|---|---|---|---|
| E | 247 | 152 / 0 | 0 / 0 | 0 / 0 | 0 / 0 | 95 / 0 | 0 / 0 |
| H | 308 | 199 / 0 | 0 / 0 | 0 / 0 | 0 / 0 | 108 / 0 | 0 / 0 |

BEARING MATERIAL TO BE SPF NO.2 OR BETTER AT JOINT(S) H

**BRACING**

TOP CHORD TO BE SHEATHED OR MAX. PURLIN SPACING = 6.25 FT.
MAX. UNBRACED BOTTOM CHORD LENGTH = 10.00 FT OR RIGID CEILING DIRECTLY APPLIED.

ALL PITCH BREAKS AND PERIMETER CORNER JOINTS MUST BE LATERALLY RESTRAINED.

**LOADING**

TOTAL LOAD CASES: (4)

C H O R D S

| MEMB. FR-TO | MAX. FACTORED FORCE (LBS) | FACTORED VERT. LOAD (PLF) FROM | TO | LC1 CSI (LC) | MAX UNBRAC LENGTH |
|---|---|---|---|---|---|
| A- B | 0 / 35 | -78.0 | -78.0 | 0.16 (1) | 10.00 |
| B- C | -171 / 0 | -78.0 | -78.0 | 0.08 (1) | 6.25 |
| C- D | -102 / 0 | -111.3 | -111.3 | 0.13 (1) | 6.25 |
| E- D | -333 / 0 | 0.0 | 0.0 | 0.04 (1) | 7.81 |
| H- B | -410 / 0 | 0.0 | 0.0 | 0.05 (1) | 7.81 |
| H- G | 0 / 0 | -26.4 | -26.4 | 0.03 (4) | 10.00 |
| G- I | 0 / 181 | -26.4 | -26.4 | 0.05 (1) | 10.00 |
| I- F | 0 / 181 | -26.4 | -26.4 | 0.05 (1) | 10.00 |
| F- E | 0 / 0 | -26.4 | -26.4 | 0.01 (4) | 10.00 |

W E B S

| MEMB. FR-TO | MAX. FACTORED FORCE (LBS) | MAX CSI (LC) |
|---|---|---|
| G- C | -123 / 0 | 0.02 (1) |
| C- F | -103 / 0 | 0.02 (1) |
| F- D | 0 / 222 | 0.05 (1) |
| B- G | 0 / 171 | 0.04 (1) |

FACTORED CONCENTRATED LOADS (LBS)

| JT | LOC. | LC1 | MAX- | MAX+ | FACE | DIR. | TYPE | HEEL | CONN. |
|---|---|---|---|---|---|---|---|---|---|
| C | 2-4-6 | -68 | -68 | --- | FRONT | VERT | TOTAL | --- | C1 |

**CONNECTION REQUIREMENTS**

1) **C1:** A SUITABLE HANGER/MECHANICAL CONNECTION IS REQUIRED.

**DESIGN CRITERIA**

SPECIFIED LOADS:

| | | | | | |
|---|---|---|---|---|---|
| TOP | CH. | LL | = | 21.0 | PSF |
| | | DL | = | 6.0 | PSF |
| BOT | CH. | LL | = | 0.0 | PSF |
| | | DL | = | 7.4 | PSF |
| TOTAL | LOAD | | = | 34.4 | PSF |

**SPACING = 24.0 IN. C/C**

LOADING IN FLAT SECTION BASED ON A SLOPE OF 2.00/12 MINIMUM

GIRDER TYPE: CPrimeHip
LEFT SETBACK = 2-4-6
RIGHT SETBACK = 0-0
END SETBACK = 3-8-8
END WALL WIDTH = 0-0
CORNER FRAMING TYPE: CONVENTIONAL
END JACK TYPE: CONVENTIONAL
APPLIED TO FRONT SIDE
- ADDT'L LOADS BASED ON 55 % OF GSL.

THIS TRUSS IS DESIGNED FOR RESIDENTIAL OR SMALL BUILDING REQUIREMENTS OF PART 9, NBCC 2015

THIS DESIGN COMPLIES WITH:
- PART 9 OF BCBC 2018 , ABC 2019
- PART 9 OF OBC 2012 (2019 AMENDMENT)
- CSA 086-14
- TPIC 2014

(55 % OF 23.0 P.S.F. G.S.L. PLUS 8.4 P.S.F. RAIN LOAD) EQUALS 21.0 P.S.F. SPECIFIED ROOF LIVE LOAD

ALLOWABLE DEFL.(LL)= L/360 (0.19")
CALCULATED VERT. DEFL.(LL) = L/ 999 (0.00")
ALLOWABLE DEFL.(TL)= L/360 (0.19")
CALCULATED VERT. DEFL.(TL) = L/ 999 (0.00")

CSI: TC=0.16/1.00 (A-B:1) , BC=0.05/1.00 (F-G:1) , WB=0.05/1.00 (D-F:1) , SSI=0.12/1.00 (C-D:1)

DOL LUMBER=1.00 NAIL=1.00 LS BEND=1.00 COMP=1.00 SHEAR=1.00 TENS= 1.00

COMPANION LIVE LOAD FACTOR = 1.00

AUTOSOLVE RIGHT HEEL ONLY

TRUSS PLATE MANUFACTURER IS NOT RESPONSIBLE FOR QUALITY CONTROL IN THE TRUSS MANUFACTURING PLANT .

NAIL VALUES

| PLATE | GRIP(DRY) (PSI) MAX | MIN | SHEAR (PLI) MAX | MIN | SECTION (PLI) MAX | MIN |
|---|---|---|---|---|---|---|
| MT20 | 650 | 371 | 1747 | 788 | 1987 | 1873 |

PLATE PLACEMENT TOL. = 0.250 inches

PLATE ROTATION TOL. = 5.0 Deg.

JSI GRIP= 0.53 (B) (INPUT = 0.90 )
JSI METAL= 0.10 (B) (INPUT = 1.00 )

| JOB NAME | TRUSS NAME | QUANTITY | PLY | JOB DESC. | DRWG NO. |
|---|---|---|---|---|---|
| 345177 | J02TB | | 1 | TRUSS DESC. JT 45147 | E22073500 |

Alpa Roof Truss, Maple

Version 8.530 S Feb 23 2022 MiTek Industries, Inc. Tue Jul 12 10:24:28 2022 Page 1

ID:RK?4zbbW6zKUfpVYHQwqmTz3QmS-WxAV7K4JFqd1N1w fP8DrPYn5ur8mLjygNAr9iyyrrX

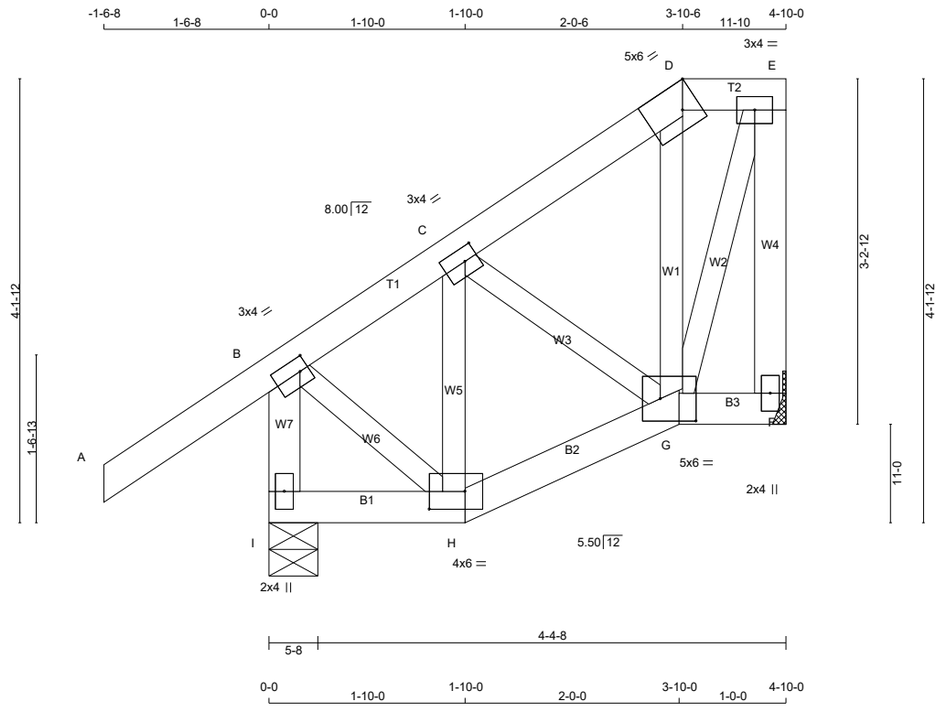


TOTAL WEIGHT = 2 X 28 = 57 lb [M]

**LUMBER**

N. L. G. A. RULES

| CHORDS | SIZE | | LUMBER | DESCR. |
|---|---|---|---|---|
| A - D | 2x4 | DRY | No.2 | SPF |
| D - E | 2x4 | DRY | No.2 | SPF |
| F - E | 2x4 | DRY | No.2 | SPF |
| I - B | 2x4 | DRY | No.2 | SPF |
| I - H | 2x4 | DRY | No.2 | SPF |
| H - G | 2x4 | DRY | No.2 | SPF |
| G - F | 2x4 | DRY | No.2 | SPF |
| ALL WEBS EXCEPT | 2x3 | DRY | No.2 | SPF |

DRY: SEASONED LUMBER.

**PLATES (table is in inches)**

| JT | TYPE | PLATES | W | LEN | Y | X |
|---|---|---|---|---|---|---|
| B | TMVW-t | MT20 | 3.0 | 4.0 | 1.50 | 1.00 |
| C | TMWW-t | MT20 | 3.0 | 4.0 | 1.50 | 1.50 |
| D | TTW-h | MT20 | 5.0 | 6.0 | Edge | 2.00 |
| E | TMVW-t | MT20 | 3.0 | 4.0 | | |
| F | BMV1+p | MT20 | 2.0 | 4.0 | | |
| G | BBWWW-p | MT20 | 5.0 | 6.0 | 2.50 | 4.00 |
| H | BBWW-l | MT20 | 4.0 | 6.0 | 2.00 | 4.00 |
| I | BMV1+p | MT20 | 2.0 | 4.0 | | |

Edge - INDICATES REFERENCE CORNER OF PLATE TOUCHES EDGE OF CHORD.

LATERAL BRACE(S) SHOWN SHALL BE 2X4 SPF#2

**DIMENSIONS, SUPPORTS AND LOADINGS SPECIFIED BY FABRICATOR TO BE VERIFIED BY BUILDING DESIGNER**

**BEARINGS**

| JT | FACTORED GROSS REACTION VERT | HORZ | MAXIMUM FACTORED GROSS REACTION DOWN | HORZ | UPLIFT | INPUT BRG IN-SX | REQRD BRG IN-SX |
|---|---|---|---|---|---|---|---|
| F | 212 | 0 | 212 | 0 | 0 | MECHANICAL | |
| I | 381 | 0 | 381 | 0 | 0 | 5-8 | 1-8 |

A SUITABLE HANGER/MECHANICAL CONNECTION IS REQUIRED AT JOINT F. MINIMUM BEARING LENGTH AT JOINT F = 1-8.

**UNFACTORED REACTIONS**

| JT | 1ST LCASE COMBINED | MAX./MIN. COMPONENT REACTIONS SNOW | LIVE | PERM.LIVE | WIND | DEAD | SOIL |
|---|---|---|---|---|---|---|---|
| F | 152 | 90 / 0 | 0 / 0 | 0 / 0 | 0 / 0 | 61 / 0 | 0 / 0 |
| I | 269 | 181 / 0 | 0 / 0 | 0 / 0 | 0 / 0 | 88 / 0 | 0 / 0 |

BEARING MATERIAL TO BE SPF NO.2 OR BETTER AT JOINT(S) I

**BRACING**

TOP CHORD TO BE SHEATHED OR MAX. PURLIN SPACING = 6.25 FT.
MAX. UNBRACED BOTTOM CHORD LENGTH = 10.00 FT OR RIGID CEILING DIRECTLY APPLIED.

ALL PITCH BREAKS AND PERIMETER CORNER JOINTS MUST BE LATERALLY RESTRAINED.

**LOADING**

TOTAL LOAD CASES: (4)

CHORDS

| MEMB. FR-TO | MAX. FACTORED FORCE (LBS) | VERT. LOAD (PLF) FROM | TO | LC1 CSI (LC) | MAX UNBRAC LENGTH |
|---|---|---|---|---|---|
| A- B | 0 / 35 | -78.0 | -78.0 | 0.15 (1) | 10.00 |
| B- C | -135 / 0 | -78.0 | -78.0 | 0.14 (1) | 6.25 |
| C- D | -71 / 0 | -78.0 | -78.0 | 0.05 (1) | 6.25 |
| D- E | -57 / 0 | -78.0 | -78.0 | 0.01 (1) | 6.25 |
| F- E | -203 / 0 | 0.0 | 0.0 | 0.03 (1) | 7.81 |
| I- B | -364 / 0 | 0.0 | 0.0 | 0.04 (1) | 7.81 |
| I- H | 0 / 0 | -18.5 | -18.5 | 0.02 (4) | 10.00 |
| H- G | 0 / 94 | -18.5 | -18.5 | 0.03 (4) | 10.00 |
| G- F | 0 / 0 | -18.5 | -18.5 | 0.01 (4) | 10.00 |

WEBS

| MEMB. FR-TO | MAX. FACTORED FORCE (LBS) | MAX CSI (LC) |
|---|---|---|
| H- C | -63 / 0 | 0.01 (1) |
| C- G | -36 / 0 | 0.01 (1) |
| G- D | -78 / 0 | 0.01 (1) |
| G- E | 0 / 175 | 0.04 (1) |
| B- H | 0 / 106 | 0.02 (1) |

**DESIGN CRITERIA**

SPECIFIED LOADS:

| | | | | |
|---|---|---|---|---|
| TOP CH. | LL | = | 21.0 | PSF |
| | DL | = | 6.0 | PSF |
| BOT CH. | LL | = | 0.0 | PSF |
| | DL | = | 7.4 | PSF |
| TOTAL LOAD | | = | 34.4 | PSF |

**SPACING = 24.0 IN. C/C**

LOADING IN FLAT SECTION BASED ON A SLOPE OF 2.00/12 MINIMUM

THIS TRUSS IS DESIGNED FOR RESIDENTIAL OR SMALL BUILDING REQUIREMENTS OF PART 9, NBCC 2015

THIS DESIGN COMPLIES WITH:
- PART 9 OF BCBC 2018 , ABC 2019
- PART 9 OF OBC 2012 (2019 AMENDMENT)
- CSA 086-14
- TPIC 2014

DESIGN ASSUMPTIONS
-OVERHANG NOT TO BE ALTERED OR CUT OFF.

(55 % OF 23.0 P.S.F. G.S.L. PLUS 8.4 P.S.F. RAIN LOAD) EQUALS 21.0 P.S.F. SPECIFIED ROOF LIVE LOAD

ALLOWABLE DEFL.(LL)= L/360 (0.19")
CALCULATED VERT. DEFL.(LL) = L/ 999 (0.00")
ALLOWABLE DEFL.(TL)= L/360 (0.19")
CALCULATED VERT. DEFL.(TL) = L/ 999 (0.00")

CSI: TC=0.15/1.00 (A-B:1) , BC=0.03/1.00 (G-H:4) , WB=0.04/1.00 (E-G:1) , SSI=0.08/1.00 (A-B:1)

DOL LUMBER=1.00 NAIL=1.00 LS BEND=1.10 COMP=1.10 SHEAR=1.10 TENS= 1.10

COMPANION LIVE LOAD FACTOR = 1.00

TRUSS PLATE MANUFACTURER IS NOT RESPONSIBLE FOR QUALITY CONTROL IN THE TRUSS MANUFACTURING PLANT .

NAIL VALUES

| PLATE | GRIP(DRY) (PSI) MAX | MIN | SHEAR (PLI) MAX | MIN | SECTION (PLI) MAX | MIN |
|---|---|---|---|---|---|---|
| MT20 | 650 | 371 | 1747 | 788 | 1987 | 1873 |

PLATE PLACEMENT TOL. = 0.250 inches

PLATE ROTATION TOL. = 5.0 Deg.

JSI GRIP= 0.47 (E) (INPUT = 0.90 )
JSI METAL= 0.08 (B) (INPUT = 1.00 )

| JOB NAME | TRUSS NAME | QUANTITY | PLY | JOB DESC. | DRWG NO. |
|---|---|---|---|---|---|
| 345177 | J03 | | 1 | TRUSS DESC. JT 45147 | E22073501 |

Alpa Roof Truss, Maple

Version 8.530 S Feb 23 2022 MiTek Industries, Inc. Tue Jul 12 10:24:30 2022 Page 1

ID:RK?4zbbW6zKUfpVYHQwqmTz3QmS-SKIFY06ZnRtlcL3MnqAhwqd2kiTCEFqF8hfyEbyyrrV

Scale = 1:24.4

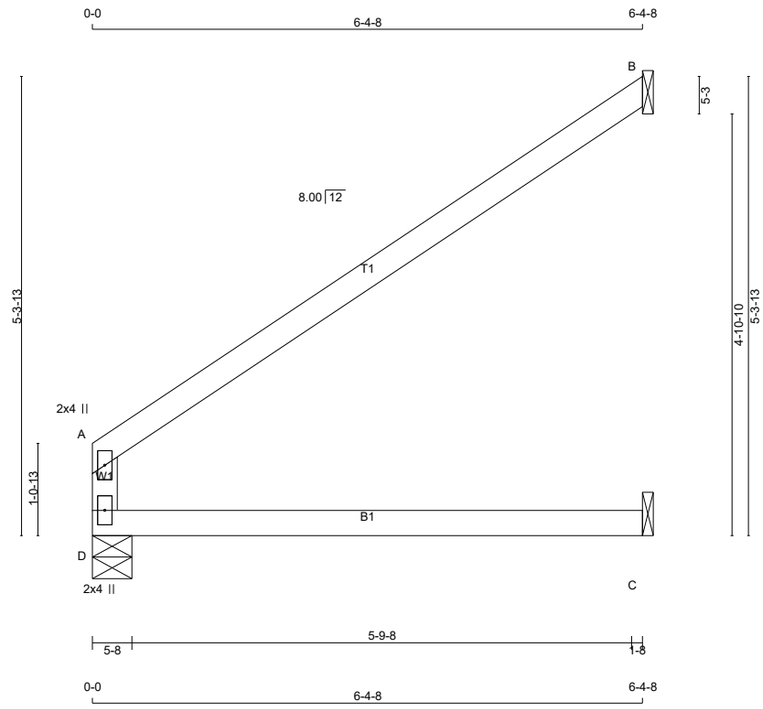


TOTAL WEIGHT = 5 X 17 = 85 lb

[M][F]

**LUMBER**

N. L. G. A. RULES

| CHORDS | SIZE | | LUMBER | DESCR. |
|---|---|---|---|---|
| D - A | 2x4 | DRY | No.2 | SPF |
| A - B | 2x4 | DRY | No.2 | SPF |
| D - C | 2x4 | DRY | No.2 | SPF |

DRY: SEASONED LUMBER.

**PLATES (table is in inches)**

| JT | TYPE | PLATES | W | LEN | Y | X |
|---|---|---|---|---|---|---|
| A | TMV+p | MT20 | 2.0 | 4.0 | | |
| D | BMV1+p | MT20 | 2.0 | 4.0 | | |

**DIMENSIONS, SUPPORTS AND LOADINGS SPECIFIED BY FABRICATOR TO BE VERIFIED BY BUILDING DESIGNER**

**BEARINGS**

| JT | FACTORED GROSS REACTION VERT | HORZ | MAXIMUM FACTORED GROSS REACTION DOWN | HORZ | UPLIFT | INPUT BRG IN-SX | REQRD BRG IN-SX |
|---|---|---|---|---|---|---|---|
| D | 307 | 0 | 307 | 0 | 0 | 5-8 | 1-8 |
| B | 225 | 0 | 225 | 0 | 0 | 1-8 | 1-8 |
| C | 82 | 0 | 82 | 0 | 0 | 1-8 | 1-8 |

SEE MITEK STANDARD DETAIL MSD2015-H FOR CONNECTION TO JOINT(S) B , C

**UNFACTORED REACTIONS**

| JT | 1ST LCASE COMBINED | MAX./MIN. COMPONENT REACTIONS SNOW | LIVE | PERM.LIVE | WIND | DEAD | SOIL |
|---|---|---|---|---|---|---|---|
| D | 219 | 134 / 0 | 0 / 0 | 0 / 0 | 0 / 0 | 85 / 0 | 0 / 0 |
| B | 156 | 118 / 0 | 0 / 0 | 0 / 0 | 0 / 0 | 38 / 0 | 0 / 0 |
| C | 63 | 16 / 0 | 0 / 0 | 0 / 0 | 0 / 0 | 47 / 0 | 0 / 0 |

BEARING MATERIAL TO BE SPF NO.2 OR BETTER AT JOINT(S) D

**BRACING**

TOP CHORD TO BE SHEATHED OR MAX. PURLIN SPACING = 6.25 FT.
MAX. UNBRACED BOTTOM CHORD LENGTH = 10.00 FT OR RIGID CEILING DIRECTLY APPLIED.

ALL PITCH BREAKS AND PERIMETER CORNER JOINTS MUST BE LATERALLY RESTRAINED.

**LOADING**

TOTAL LOAD CASES: (4)

C H O R D S

| MEMB. FR-TO | MAX. FORCE (LBS) | FACTORED VERT. LOAD (PLF) | LC1 FROM | MAX TO | CSI (LC) | MAX. UNBRAC LENGTH |
|---|---|---|---|---|---|---|
| D- A | -272 / 0 | 0.0 | | 0.0 | 0.17 (1) | 7.81 |
| A- B | -13 / 0 | -78.0 | | -78.0 | 0.46 (1) | 6.25 |
| D- C | 0 / 0 | -18.5 | | -18.5 | 0.25 (1) | 10.00 |

W E B S

| MEMB. FR-TO | MAX. FORCE (LBS) | MAX CSI (LC) |
|---|---|---|

**DESIGN CRITERIA**

SPECIFIED LOADS:

| | | | | |
|---|---|---|---|---|
| TOP CH. | LL | = | 21.0 | PSF |
| | DL | = | 6.0 | PSF |
| BOT CH. | LL | = | 0.0 | PSF |
| | DL | = | 7.4 | PSF |
| TOTAL LOAD | | = | 34.4 | PSF |

**SPACING = 24.0 IN. C/C**

THIS TRUSS IS DESIGNED FOR RESIDENTIAL OR SMALL BUILDING REQUIREMENTS OF PART 9, NBCC 2015

THIS DESIGN COMPLIES WITH:
- PART 9 OF BCBC 2018 , ABC 2019
- PART 9 OF OBC 2012 (2019 AMENDMENT)
- CSA 086-14
- TPIC 2014

(55 % OF 23.0 P.S.F. G.S.L. PLUS 8.4 P.S.F. RAIN LOAD) EQUALS 21.0 P.S.F. SPECIFIED ROOF LIVE LOAD

ALLOWABLE DEFL.(LL)= L/360 (0.21")
CALCULATED VERT. DEFL.(LL) = L/ 999 (0.06")
ALLOWABLE DEFL.(TL)= L/360 (0.21")
CALCULATED VERT. DEFL.(TL) = L/ 495 (0.15")

CSI: TC=0.46/1.00 (A-B:1) , BC=0.25/1.00 (C-D:1) , WB=0.00/1.00 (n/a:0) , SSI=0.18/1.00 (A-B:1)

DOL LUMBER=1.00 NAIL=1.00 LS BEND=1.10 COMP=1.10 SHEAR=1.10 TENS= 1.10

COMPANION LIVE LOAD FACTOR = 1.00

TRUSS PLATE MANUFACTURER IS NOT RESPONSIBLE FOR QUALITY CONTROL IN THE TRUSS MANUFACTURING PLANT .

NAIL VALUES

| PLATE | GRIP(DRY) (PSI) MAX | MIN | SHEAR (PLI) MAX | MIN | SECTION (PLI) MAX | MIN |
|---|---|---|---|---|---|---|
| MT20 | 650 | 371 | 1747 | 788 | 1987 | 1873 |

PLATE PLACEMENT TOL. = 0.250 inches

PLATE ROTATION TOL. = 5.0 Deg.

JSI GRIP= 0.17 (A) (INPUT = 0.90 )
JSI METAL= 0.14 (A) (INPUT = 1.00 )

LATERAL BRACE(S) SHOWN SHALL BE 2X4 SPF#2

| JOB NAME | TRUSS NAME | QUANTITY | PLY | JOB DESC. | DRWG NO. |
|---|---|---|---|---|---|
| 345177 | J04 | | 1 | TRUSS DESC. JT 45147 | E22073502 |

Alpa Roof Truss, Maple

Version 8.530 S Feb 23 2022 MiTek Industries, Inc. Tue Jul 12 10:24:31 2022 Page 1

ID:RK?4zbbW6zKUfpVYHQwqmTz3QmS-wWsdlM6BYl?bEVeZKXiwT1AC05r0zi4PMLOWm1yyrrU

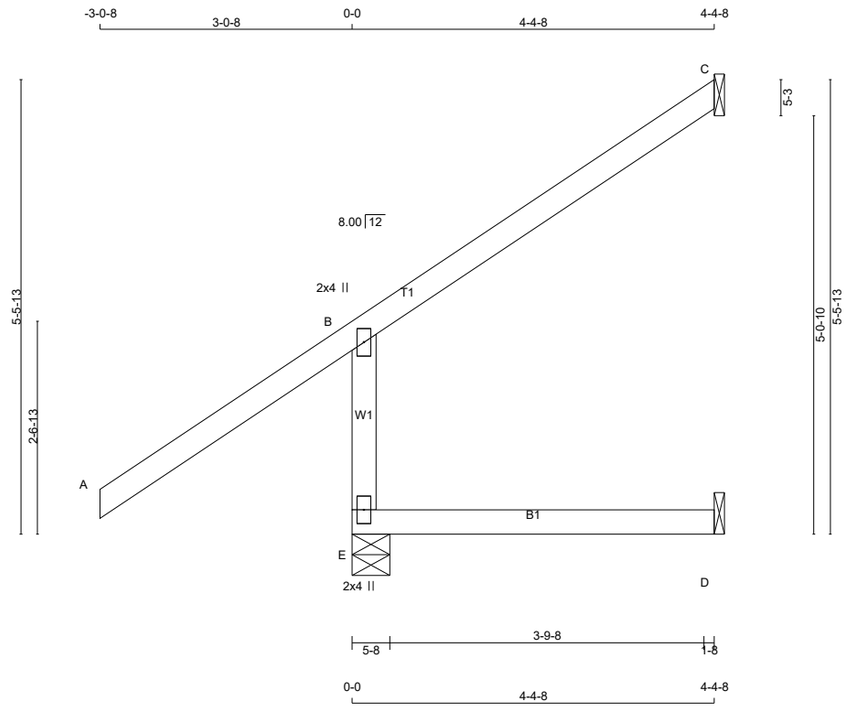


TOTAL WEIGHT = 2 X 18 = 36 lb [M]

**LUMBER**

N. L. G. A. RULES

| CHORDS | SIZE | | LUMBER | DESCR. |
|---|---|---|---|---|
| E - B | 2x4 | DRY | No.2 | SPF |
| A - C | 2x4 | DRY | No.2 | SPF |
| E - D | 2x4 | DRY | No.2 | SPF |

DRY: SEASONED LUMBER.

**PLATES (table is in inches)**

| JT | TYPE | PLATES | W | LEN | Y | X |
|---|---|---|---|---|---|---|
| B | TMV+p | MT20 | 2.0 | 4.0 | | |
| E | BMV1+p | MT20 | 2.0 | 4.0 | | |

LATERAL BRACE(S) SHOWN SHALL BE 2X4 SPF#2

**DIMENSIONS, SUPPORTS AND LOADINGS SPECIFIED BY FABRICATOR TO BE VERIFIED BY BUILDING DESIGNER**

**BEARINGS**

| JT | FACTORED GROSS REACTION VERT | HORZ | MAXIMUM FACTORED GROSS REACTION DOWN | HORZ | UPLIFT | INPUT BRG IN-SX | REQRD BRG IN-SX |
|---|---|---|---|---|---|---|---|
| E | 501 | 0 | 501 | 0 | 0 | 5-8 | 1-8 |
| C | 128 | 0 | 128 | 0 | 0 | 1-8 | 1-8 |
| D | 36 | 0 | 41 | 0 | 0 | 1-8 | 1-8 |

SEE MITEK STANDARD DETAIL MSD2015-H FOR CONNECTION TO JOINT(S) C , D

**UNFACTORED REACTIONS**

| JT | 1ST LCASE COMBINED | MAX./MIN. COMPONENT REACTIONS SNOW | LIVE | PERM.LIVE | WIND | DEAD | SOIL |
|---|---|---|---|---|---|---|---|
| E | 352 | 246 / 0 | 0 / 0 | 0 / 0 | 0 / 0 | 106 / 0 | 0 / 0 |
| C | 89 | 69 / 0 | 0 / 0 | 0 / 0 | 0 / 0 | 20 / 0 | 0 / 0 |
| D | 29 | 0 / 0 | 0 / 0 | 0 / 0 | 0 / 0 | 29 / 0 | 0 / 0 |

BEARING MATERIAL TO BE SPF NO.2 OR BETTER AT JOINT(S) E

**BRACING**

TOP CHORD TO BE SHEATHED OR MAX. PURLIN SPACING = 6.25 FT.
MAX. UNBRACED BOTTOM CHORD LENGTH = 10.00 FT OR RIGID CEILING DIRECTLY APPLIED.

ALL PITCH BREAKS AND PERIMETER CORNER JOINTS MUST BE LATERALLY RESTRAINED.

**LOADING**

TOTAL LOAD CASES: (7)

| CHORDS MEMB. FR-TO | MAX. FACTORED FORCE (LBS) | FACTORED VERT. LOAD (PLF) FROM | TO | LC1 MAX CSI (LC) | MAX. UNBRAC LENGTH | WEBS MEMB. FR-TO | MAX. FACTORED FORCE (LBS) | MAX CSI (LC) |
|---|---|---|---|---|---|---|---|---|
| E- B | -456 / 0 | 0.0 | 0.0 | 0.04 (4) | 7.81 | | | |
| A- B | 0 / 68 | -78.0 | -78.0 | 0.55 (5) | 10.00 | | | |
| B- C | -24 / 0 | -78.0 | -78.0 | 0.25 (6) | 6.25 | | | |
| E- D | 0 / 0 | -18.5 | -18.5 | 0.08 (4) | 10.00 | | | |

CANTILEVER ANALYSIS HAS BEEN CONSIDERED IN THIS DESIGN

PATTERN-LOADING CHECK APPLIED TO THIS TRUSS.

**DESIGN CRITERIA**

SPECIFIED LOADS:

| | | | | |
|---|---|---|---|---|
| TOP CH. | LL | = | 21.0 | PSF |
| | DL | = | 6.0 | PSF |
| BOT CH. | LL | = | 0.0 | PSF |
| | DL | = | 7.4 | PSF |
| TOTAL LOAD | | = | 34.4 | PSF |

**SPACING = 24.0 IN. C/C**

THIS TRUSS IS DESIGNED FOR RESIDENTIAL OR SMALL BUILDING REQUIREMENTS OF PART 9, NBCC 2015

THIS DESIGN COMPLIES WITH:
- PART 9 OF BCBC 2018 , ABC 2019
- PART 9 OF OBC 2012 (2019 AMENDMENT)
- CSA 086-14
- TPIC 2014

DESIGN ASSUMPTIONS
-OVERHANG NOT TO BE ALTERED OR CUT OFF.

(55 % OF 23.0 P.S.F. G.S.L. PLUS 8.4 P.S.F. RAIN LOAD) EQUALS 21.0 P.S.F. SPECIFIED ROOF LIVE LOAD

ALLOWABLE DEFL.(LL)= L/360 (0.19")
CALCULATED VERT. DEFL.(LL) = L/ 999 (0.00")
ALLOWABLE DEFL.(TL)= L/360 (0.19")
CALCULATED VERT. DEFL.(TL) = L/ 999 (0.01")

CSI: TC=0.55/1.00 (A-B:5) , BC=0.08/1.00 (D-E:4) , WB=0.00/1.00 (n/a:0) , SSI=0.16/1.00 (A-B:5)

DOL LUMBER=1.00 NAIL=1.00 LS BEND=1.10 COMP=1.10 SHEAR=1.10 TENS= 1.10

COMPANION LIVE LOAD FACTOR = 1.00

TRUSS PLATE MANUFACTURER IS NOT RESPONSIBLE FOR QUALITY CONTROL IN THE TRUSS MANUFACTURING PLANT .

NAIL VALUES

| PLATE | GRIP(DRY) (PSI) MAX | MIN | SHEAR (PLI) MAX | MIN | SECTION (PLI) MAX | MIN |
|---|---|---|---|---|---|---|
| MT20 | 650 | 371 | 1747 | 788 | 1987 | 1873 |

PLATE PLACEMENT TOL. = 0.250 inches

PLATE ROTATION TOL. = 5.0 Deg.

JSI GRIP= 0.28 (B) (INPUT = 0.90 )
JSI METAL= 0.23 (B) (INPUT = 1.00 )

# LUS – Double Shear Joist Hangers

SIMPSON Strong-Tie®

All LUS hangers have double shear nailing. This patented innovation distributes the load through two points on each joist nail for greater strength. It also allows the use of fewer nails, faster installation and the use of common nails for all connections.

**Material:** 18 gauge

**Finish:** G90 galvanized

**Design:**

- Factored resistances are in accordance with CSA O86-14.
- Uplift resistances have been increased 15%. No further increase is permitted.
- Wood shear is not considered in the factored resistances given. The specifier must ensure that the joist and header capacities are capable of withstanding these loads.

**Installation:**

- Use all specified fasteners.
- Nails: 16d = 0.162" dia. x 3½" long common wire, 10d = 0.148" x 3" long common wire.
- Double shear nails must be driven at an angle through the joist or truss into the header to achieve the table loads.
- Not designed for welded or nailer applications.

**Options:**

- These hangers cannot be modified

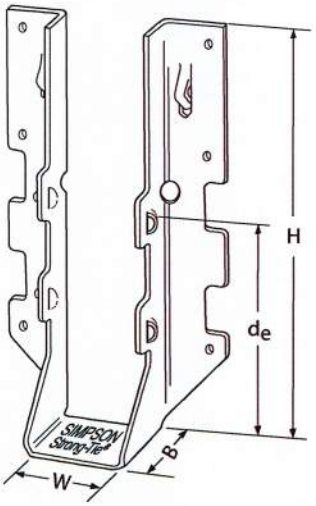


LUS28

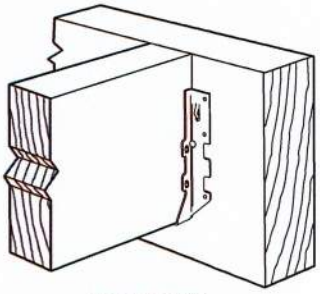

Typical LUS Installation

| Model No. | Ga. | Dimensions (in.) | | | | Fasteners | | Factored Resistance (lb.) | | | |
|---|---|---|---|---|---|---|---|---|---|---|---|
| | | | | | | | | D.Fir-L | | S-P-F | |
| | | W | H | B | $d_e$[1] | Face | Joist | Uplift ($K_D$=1.15) | Normal ($K_D$=1.00) | Uplift ($K_D$=1.15) | Normal ($K_D$=1.00) |
| LUS24 | 18 | 1 9/16 | 3 1/8 | 1 3/4 | 1 15/16 | (4) 10d | (2) 10d | 710 | 1630 | 645 | 1155 |
| LUS24-2 | 18 | 3 1/8 | 3 1/8 | 2 | 1 13/16 | (4) 16d | (2) 16d | 835 | 2020 | 590 | 1435 |
| LUS26 | 18 | 1 9/16 | 4 3/4 | 1 3/4 | 3 5/8 | (4) 10d | (4) 10d | 1420 | 2170 | 1290 | 1630 |
| LUS26-2 | 18 | 3 1/8 | 4 7/8 | 2 | 4 | (4) 16d | (4) 16d | 1720 | 2595 | 1545 | 1920 |
| LUS26-3 | 18 | 4 5/8 | 4 3/16 | 2 | 3 1/4 | (4) 16d | (4) 16d | 1720 | 2595 | 1545 | 2340 |
| LUS28 | 18 | 1 9/16 | 6 5/8 | 1 3/4 | 3 3/4 | (6) 10d | (6) 10d | 1420 | 2520 | 1290 | 1790 |
| LUS28-2 | 18 | 3 1/8 | 7 | 2 | 4 | (6) 16d | (4) 16d | 1720 | 3325 | 1545 | 2575 |
| LUS28-3 | 18 | 4 5/8 | 6 1/4 | 2 | 3 1/4 | (6) 16d | (4) 16d | 1720 | 3325 | 1545 | 2375 |
| LUS210 | 18 | 1 9/16 | 7 13/16 | 1 3/4 | 3 7/8 | (8) 10d | (4) 10d | 1420 | 2785 | 1290 | 2210 |
| LUS210-2 | 18 | 3 1/8 | 9 | 2 | 6 | (8) 16d | (6) 16d | 2580 | 4500 | 2320 | 3195 |
| LUS210-3 | 18 | 4 5/8 | 8 3/16 | 2 | 5 1/4 | (8) 16d | (6) 16d | 2580 | 3345 | 2320 | 2375 |

1. $d_e$ is the distance from the seat of the hanger to the highest joist nail.

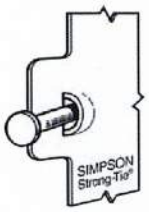


Dome Double Shear Nailing prevents tabs breaking off (available on some models).

U.S. Patent 5,603,580

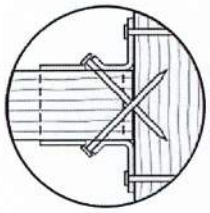

Double Shear Nailing Top View.

LICENSED PROFESSIONAL ENGINEER
04/01/2020
B. D. BUNTING
PROVINCE OF ONTARIO

LIMIT STATES DESIGN

This technical bulletin is effective until June 30, 2022, and reflects information available as of April 1, 2020. This information is updated periodically and should not be relied upon after June 30, 2022. Contact Simpson Strong-Tie for current information and limited warranty or see strongtie.com.

© 2020 Simpson Strong-Tie Company Inc.



(800) 999-5099
strongtie.com

TECHNICAL BULLETIN

# HUS/LJS – Double Shear Joist Hangers

SIMPSON Strong-Tie®

All hangers have double shear nailing. This patented innovation distributes the load through two points on each joist nail for greater strength. It also allows the use of fewer nails, faster installation and the use of common nails for all connections. Do not bend or remove tabs.

**Material:** See table

**Finish:** G90 galvanized

**Design:**

- Factored resistances are in accordance with CSA O86 -14.
- Uplift resistances have been increased 15%. No further increase is permitted.
- Wood shear is not considered in the factored resistances given. The specifier must ensure that the joist and header capacities are capable of withstanding these loads.

**Installation:**

- Use all specified fasteners
- Nails: 16d = 0.162" dia. x 3½" long common wire
- Double shear nails must be driven at an angle through the joist or truss into the header to achieve the table loads
- Not designed for welded or nailer applications

**Options:**

- See current catalogue for options

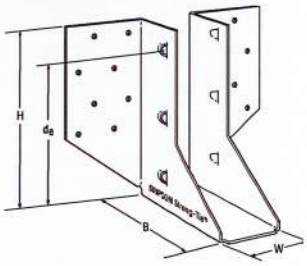


LJS26DS

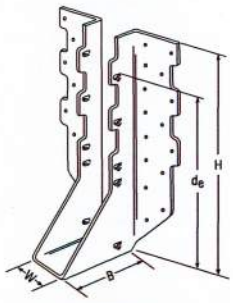


HUS210
(HUS26, HUS28, similar)

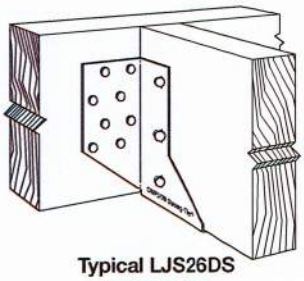

Typical LJS26DS Installation

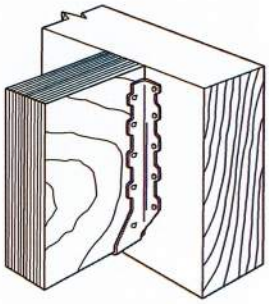

Typical HUS Installation

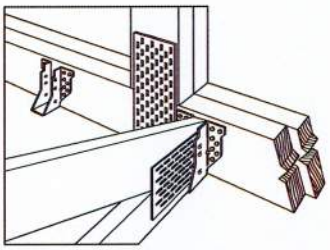

Typical HUS Installation
(Truss Designer to provide fastener quantity for connecting multiple members together)

| Model No. | Ga. | Dimensions (in.) | | | | Fasteners | | Factored Resistance (lb.) | | | |
|---|---|---|---|---|---|---|---|---|---|---|---|
| | | | | | | | | D.Fir-L | | S-P-F | |
| | | W | H | B | $d_e$[1] | Face | Joist | Uplift ($K_D$=1.15) lb. | Normal ($K_D$=1.00) lb. | Uplift ($K_D$=1.15) lb. | Normal ($K_D$=1.00) lb. |
| LJS26DS | 18 | 1 9/16 | 5 | 3½ | 4⅝ | (16) 16d | (6) 16d | 2055 | 4265 | 1460 | 4115 |
| HUS26 | 16 | 1⅝ | 5⅜ | 3 | 3 15/16 | (14) 16d | (6) 16d | 2705 | 4940 | 2065 | 3875 |
| HUS28 | 16 | 1⅝ | 7 3/32 | 3 | 6 3/32 | (22) 16d | (8) 16d | 3605 | 5365 | 2675 | 4345 |
| HUS210 | 16 | 1⅝ | 9 3/32 | 3 | 7 31/32 | (30) 16d | (10) 16d | 4505 | 5795 | 4010 | 4740 |
| HUS1.81/10 | 16 | 1 13/16 | 9 | 3 | 8 | (30) 16d | (10) 16d | 4505 | 6450 | 4010 | 5200 |

1. $d_e$ is the distance from the seat of the hanger to the highest joist nail.

Dome Double Shear Nailing prevents tabs breaking off (available on some models).

U.S. Patent 5,603,580

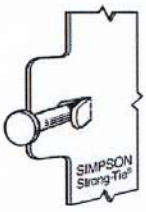


Double Shear Nailing Side View. Do not bend tab back.

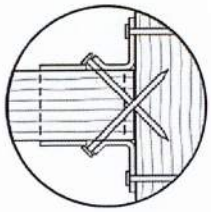

Double Shear Nailing Top View.

LIMIT STATES DESIGN

This technical bulletin is effective until June 30, 2022, and reflects information available as of April 1, 2020. This information is updated periodically and should not be relied upon after June 30, 2022. Contact Simpson Strong-Tie for current information and limited warranty or see strongtie.com.

© 2020 Simpson Strong-Tie Company Inc.



(800) 999-5099
strongtie.com

TECHNICAL BULLETIN

# HHUS – Double Shear Joist Hangers

SIMPSON Strong-Tie®

All HHUS hangers have double shear nailing. This patented innovation distributes the load through two points on each joist nail for greater strength. It also allows the use of fewer nails, faster installation and the use of common nails for all connections. Do not bend or remove tabs.

**Material:** 14 gauge

**Finish:** G90 galvanized

**Design:**

- Factored resistances are in accordance with CSA O86-14.
- Uplift resistances have been increased 15%. No further increase is permitted.
- Wood shear is not considered in the factored resistances given. The specifier must ensure that the joist and header capacities are capable of withstanding these loads.

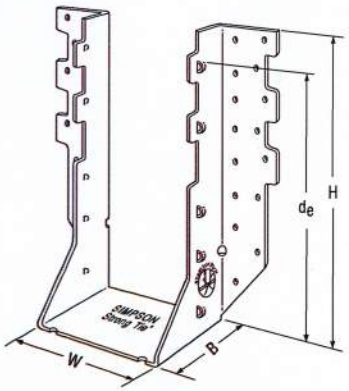


HHUS410

**Installation:**

- Use all specified fasteners
- Nails: 16d = 0.162" dia. x 3½" long common wire
- Double shear nails must be driven at an angle through the joist or truss into the header to achieve the table loads
- Not designed for welded or nailer applications

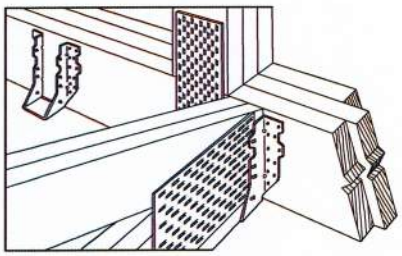

Typical HHUS Installation (Truss Designer to provide fastener quantity for connecting multiple members together)

**Options:**

- See current catalogue for options

| Model No. | Ga. | Dimensions (in.) | | | | Fasteners | | Factored Resistance (lb.) | | | |
|---|---|---|---|---|---|---|---|---|---|---|---|
| | | | | | | | | D.Fir-L | | S-P-F | |
| | | W | H | B | $d_e$[1] | Face | Joist | Uplift ($K_D$=1.15) | Normal ($K_D$=1.00) | Uplift ($K_D$=1.15) | Normal ($K_D$=1.00) |
| HHUS26-2 | 14 | 3 5/16 | 5 13/16 | 3 | 3 15/16 | (14) 16d | (6) 16d | 2850 | 7335 | 2065 | 5205 |
| HHUS28-2 | 14 | 3 5/16 | 7 7/32 | 3 | 6 5/32 | (22) 16d | (8) 16d | 3765 | 8940 | 2675 | 6345 |
| HHUS210-2 | 14 | 3 5/16 | 9 3/32 | 3 | 8 | (30) 16d | (10) 16d | 4670 | 9660 | 4235 | 7000 |
| HHUS210-3 | 14 | 4 11/16 | 9 | 3 | 7 15/16 | (30) 16d | (10) 16d | 4670 | 9670 | 4235 | 6865 |
| HHUS210-4 | 14 | 6 1/8 | 8 29/32 | 3 | 7 27/32 | (30) 16d | (10) 16d | 4670 | 10155 | 4235 | 7210 |
| HHUS46 | 14 | 3 5/8 | 5 13/32 | 3 | 3 15/16 | (14) 16d | (6) 16d | 2540 | 7335 | 2065 | 5205 |
| HHUS48 | 14 | 3 5/8 | 7 1/8 | 3 | 6 1/8 | (22) 16d | (8) 16d | 3765 | 8940 | 2675 | 6345 |
| HHUS410 | 14 | 3 5/8 | 9 | 3 | 8 | (30) 16d | (10) 16d | 4670 | 9855 | 4235 | 7000 |
| HHUS5.50/10 | 14 | 5 1/2 | 9 | 3 | 8 | (30) 16d | (10) 16d | 4670 | 10155 | 4235 | 7210 |
| HHUS7.25/10 | 14 | 7 1/4 | 9 | 3 5/16 | 7 29/32 | (30) 16d | (10) 16d | 4670 | 10155 | 3370 | 7210 |

1. $d_e$ is the distance from the seat of the hanger to the highest joist nail.

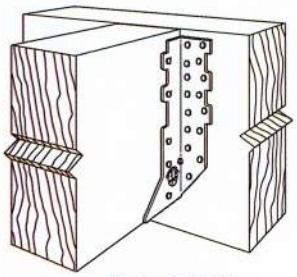

Typical HHUS Installation

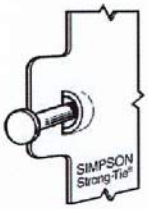


Dome Double Shear Nailing prevents tabs breaking off (available on some models).

U.S. Patent 5,603,580

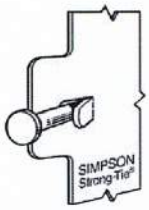


Double Shear Nailing Side View. Do not bend tab back.

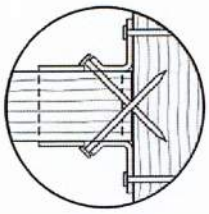

Double Shear Nailing Top View.

LIMIT STATES DESIGN

This technical bulletin is effective until June 30, 2022, and reflects information available as of April 1, 2020. This information is updated periodically and should not be relied upon after June 30, 2022. Contact Simpson Strong-Tie for current information and limited warranty or see strongtie.com.

© 2020 Simpson Strong-Tie Company Inc.

T-SPECHHUS20 3/20 exp. 6/22

(800) 999-5099
strongtie.com

# TC – Truss Connectors

SIMPSON Strong-Tie®

The TC truss connector is an ideal connector for scissor trusses and can allow horizontal movement up to 1¼". The TC also attaches plated trusses to top plates or sill plates to resist uplift forces. Typically used on one or both ends of truss as determined by the building designer.

**Material:** 16 gauge

**Finish:** G90 galvanized

**Design:** Factored resistances are in accordance with CSA 086-14

### Installation:

- Use all specified fasteners.
- Nails: 10d = 0.148" dia. x 3" long common wire, 10d x 1½ = 0.148" dia. x 1½" long.
- Drive 10d nails into the truss at the inside end of the slotted holes (inside end is towards the centre of the truss) and clinch on the back side. Do not seat these nails into the truss–allow room under the nail head for movement of the truss with respect to the wall.

### Optional TC Installation:

- Bend one flange up 90°. Drive specified nails into the top and face of the top plates or install Titen® screws into the top and face of masonry wall. See optional load tables and installation details.

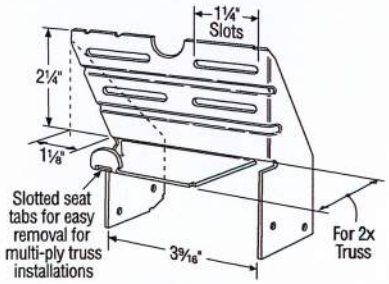


**TC24**
U.S. Patent 4,932,173

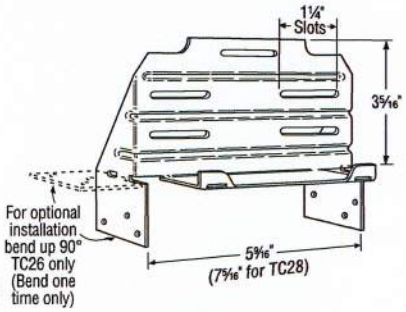


**TC26**
(TC28 Similiar)

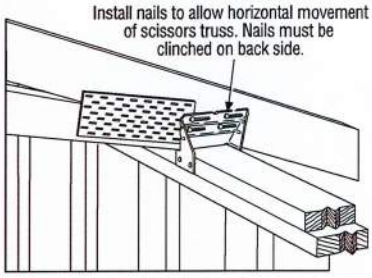


**Typical TC24 Installation**

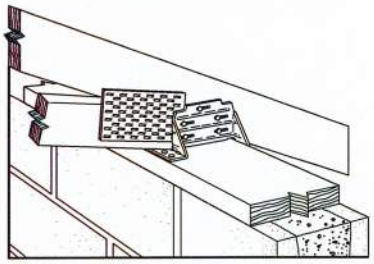

**Optional TC26 Installation for Grouted Concrete Block using a Wood Nailer**
(8", 10", 12" Wall Installation Similar)

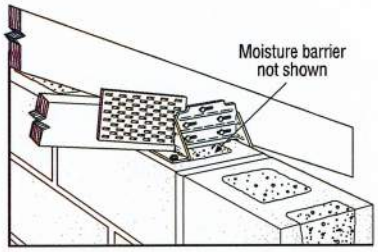


**Optional TC26 Installation for Grouted Concrete Block using Titen Screws**

| Model No. | Fasteners | | Factored Resistance | |
|---|---|---|---|---|
| | Truss | Wall Plates | D.Fir-L | S-P-F |
| | | | Uplift ($K_D$=1.15) | Uplift ($K_D$=1.15) |
| | | | lb. | lb. |
| TC24 | (4) 10d | (4) 10d | 605 | 430 |
| TC26 | (5) 10d | (6) 10d | 1015 | 720 |
| TC28 | (5) 10d | (6) 10d | 1015 | 720 |

### Optional TC Installation Table

| Model No. | Fasteners | | Factored Resistance | |
|---|---|---|---|---|
| | Truss | Wall Plates | D.Fir-L | S-P-F |
| | | | Uplift ($K_D$=1.15) | Uplift ($K_D$=1.15) |
| | | | lb. | lb. |
| TC26 | (5) 10d | (6) 10d x 1½" | 810 | 660 |
| | (5) 10d | (6) 10d | 930 | 660 |

1. Factored resistances have been increased 15% for earthquake or wind loading; no further increase allowed; reduce where other loads govern.
2. Grout strength is 15 MPa minimum.
3. Optional TC26 installation with 10d nails requires minimum 3" top plate thickness.
4. TC26 fastened to grouted concrete block with (6) – ⁹⁄₁₆" x 2¼" Titen screws has a factored uplift resistance of 275 lb.

LIMIT STATES DESIGN

This technical bulletin is effective until June 30, 2022, and reflects information available as of April 1, 2020. This information is updated periodically and should not be relied upon after June 30, 2022. Contact Simpson Strong-Tie for current information and limited warranty or see strongtie.com.

© 2020 Simpson Strong-Tie Company Inc.



(800) 999-5099
strongtie.com

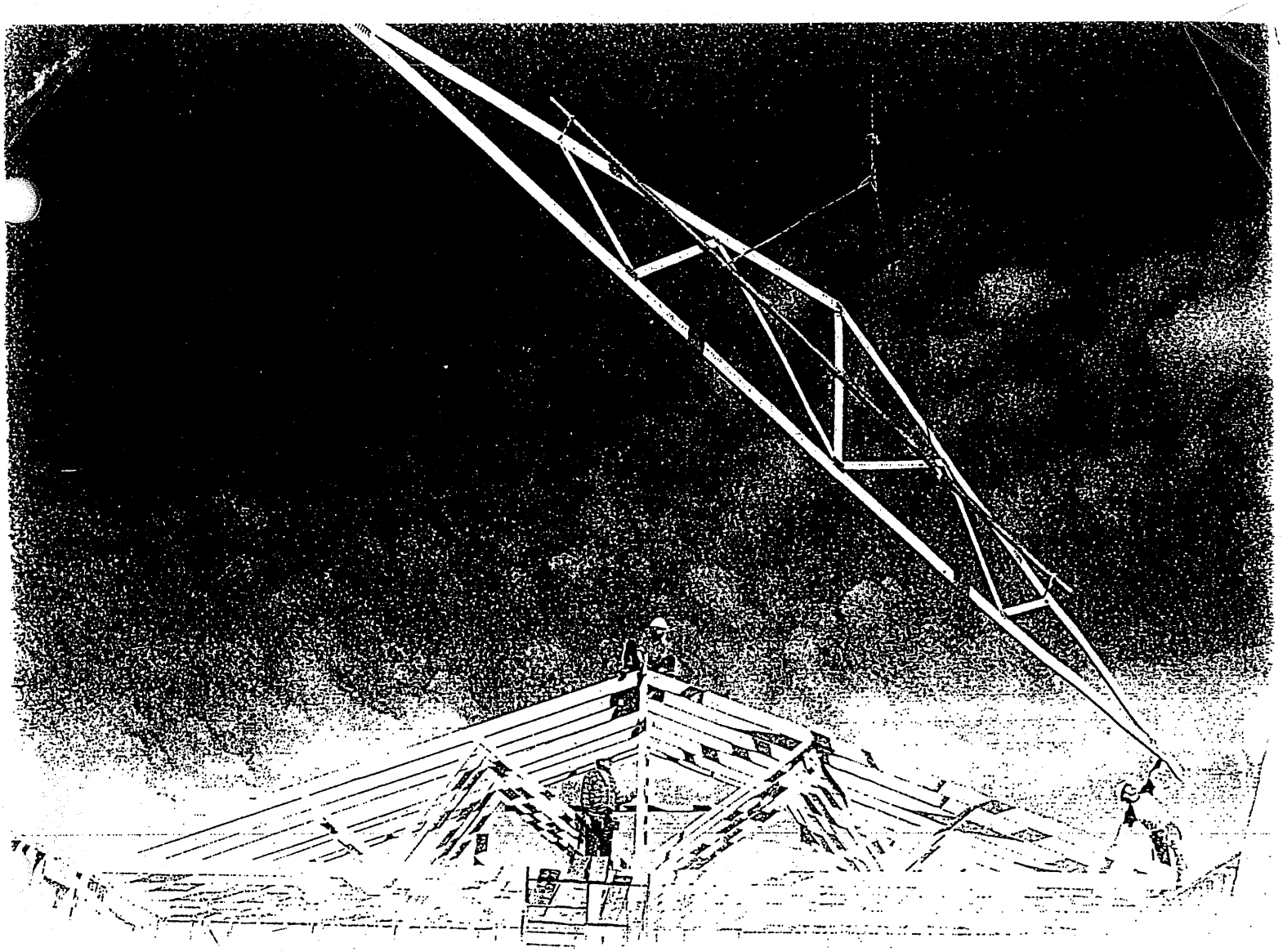

# Wood Truss Installation

**A Guide to proper handling, erecting and bracing metal plate connected wood trusses**

# Table of Content


Warning.....4

1 Unloading & Lifting.....5

2 Job Site Handling.....5

3 Hoisting.....6

4 Beginning the Erection Process.....7

5 Erection Tolerance.....8

6 Bracing.....8

7 Bracing Requirements for 3 Planes of Roof.....9

8 Stacking Materials.....10

Caution Notes.....11

# Warning

## General

Familiarity with the **Construction Design Documents**, the **Truss Design Drawings**, and **Truss Placement Plans** (if required by the **Construction Design Documents**) is required to properly erect, brace, and connect the trusses to the building system.

All of the care and quality involved in the design and manufacture of wood trusses can be jeopardized if the trusses are not properly handled, erected, and braced.

**The consequences of improper handling, erecting, and bracing may be a collapse of the structure, which at best is a substantial loss of time and materials, and at worst is a loss of life. The majority of truss accidents occur during truss installation and not as a result of improper design or manufacture.**

Prior to truss erection, the builder/erector shall meet with the erection crew for a safety and planning meeting, making sure each crew member understands his or her roles and responsibilities during the erection process.

## Temporary Erection Bracing

**Trusses are not marked in any way to identify the frequency, or location of temporary erection bracing.**

All temporary bracing shall comply with the latest edition of *Commentary and Recommendations for Handling, Installing & Bracing Metal Plate Connected Wood Trusses* (HIB), published by the Truss Plate Institute, and/or as specified in the **Construction Design Documents** prepared by the building designer.

## Permanent Truss Bracing

Permanent bracing for the roof or floor trusses is the responsibility of the building designer and should be shown on the **Construction Design Documents**. Permanent bracing locations for individual compression members of a wood truss are shown on the **Truss Design Drawings**, and shall be installed by the building or erection contractor. This bracing is needed for the proper performance of individual trusses within the roof or floor system. The design and connection of the bracing to the truss and then to the overall building system is the responsibility of the building designer, and is in addition to the permanent bracing plan, which is also specified by the building designer.

## Special Design Requirements

Special design requirements, such as wind bracing, portal bracing, seismic bracing, diaphragms, shear walls, or other load transfer elements and their connections to wood trusses must be considered separately by the building designer, who shall determine size, location, and method of connections for all bracing as needed to resist these forces.

# 1 Unloading & Lifting

## Never handle trusses flat

Beginning with the unloading process, and throughout all phases of construction, care must be taken to avoid **lateral bending** of trusses, which can cause damage to the lumber and metal connector plates at the joints.

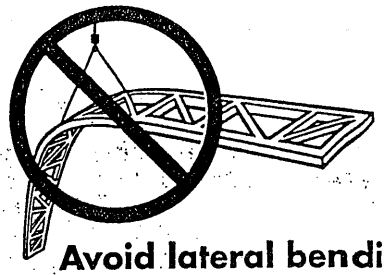

**Avoid lateral bending**

- **Use special care in windy weather.**
- **If using a crane within 10 feet of an electric line, contact the local power company.**
- **If using a crane within 5 miles of an airport, contact the airport 30 days prior to erection to learn about any safety regulations that must be followed.**

# 2 Job Site Handling

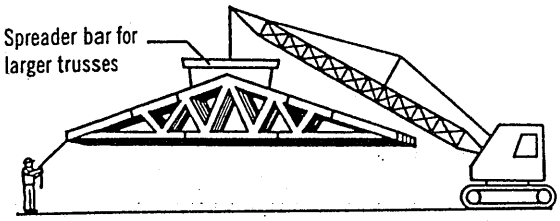


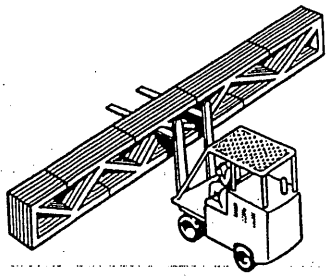

## All trusses should be picked up at the top chords in a vertical position only

Proper banding and smooth ground allow for unloading of trusses without damage. This should be done as close to the building site as possible to minimize handling. **Do not** break banding until installation begins. Hand erection of trusses is allowed, provided excessive lateral bending is prevented.

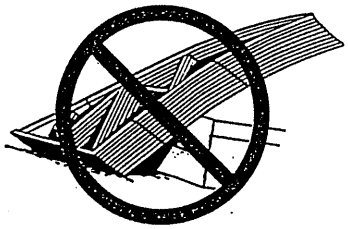

### Do not store unbraced bundles upright

If trusses are stored vertically they shall be braced in a manner that will prevent tipping or topping. Generally cuting of the banding is done just prior to installation.

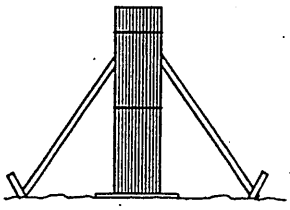

### Do not store on uneven ground

If trusses are stored horizontally, blocking should be used on eight to ten foot centers, or as required, to minimize lateral bending and moisture gain.

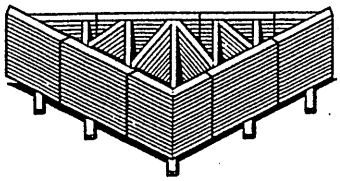

**Care should be exercised when removing banding to avoid damaging trusses.**

During long term storage, trusses shall be protected from the environment in a manner that provides for adequate ventilation of the trusses. If tarpaulins or other material is used, the ends shall be left open for ventilation. Plastic is not recommended, since it can trap moisture.

# 3 Hoisting

**All trusses that are erected one at a time shall be held safely in position by the erection equipment until such time as all necessary bracing has been installed and the ends of the trusses are securely fastened to the building.**

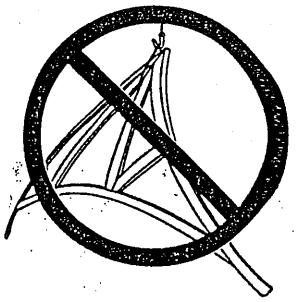

**Avoid lateral bending**

**L ≤ 30'**

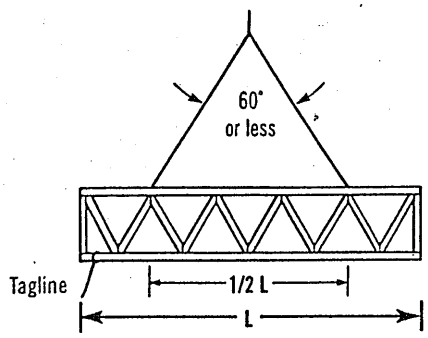


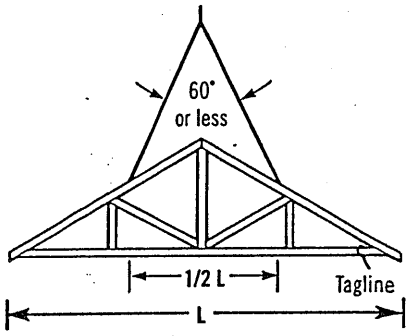


Truss sling is acceptable where these criteria are met.

**30' < L ≤ 60'**

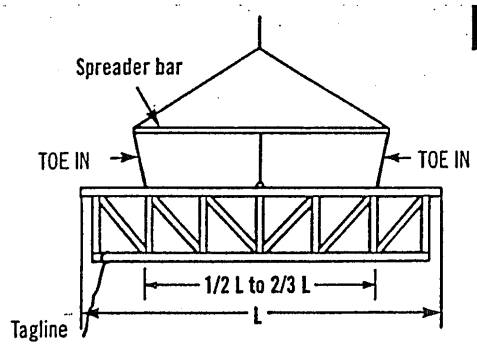


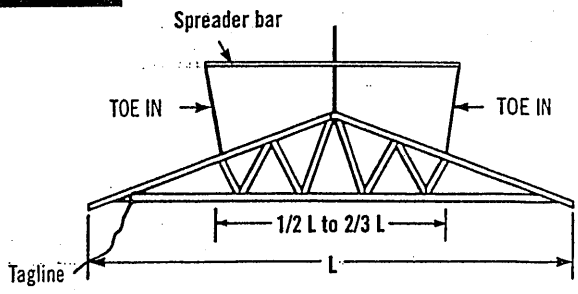


Use spreader bar in all other cases. It should be noted that the lines from the ends of the spreader bar "**TOE IN**"; if these lines should "**TOE OUT**" the truss may fold in half.

**L > 60'**

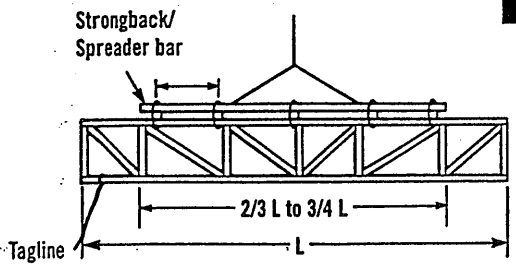


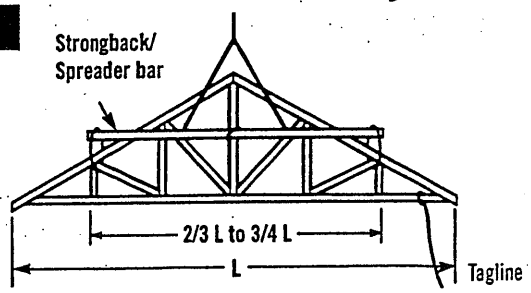


For lifting trusses with spans in excess of 60 feet, it is recommended that a strongback/spreader bar be used as illustrated. The strongback/spreader bar should be attached to the top chord and web members at intervals of approximately 10 feet. Further, the strongback/spreader bar should be at or above the mid-height of the truss to prevent overturning. The strongback/spreader bar can be of any material with sufficient strength to safely carry the weight of the truss and sufficient rigidity to adequately resist bending of the truss.

# 4 Beginning the Erection Process

It is important for the builder or erection contractor to provide substantial bracing for the first truss erected. The two or more trusses making up the rest of the first set are tied to and rely upon the first truss for stability. Likewise, after this first set of trusses is adequately cross-braced, the remaining trusses installed rely upon this first set for stability. Thus, the performance of the truss bracing system depends to a great extent on how well the first group of trusses is braced.

## Ground Brace – Exterior

One satisfactory method ties the first unit of trusses off to a series of braces that are attached to a stake driven into the ground and securely anchored. The ground brace itself should be supported as shown below or it is apt to buckle. Additional ground braces in the opposite direction, inside the building, are also recommended.

## Ground Brace – Interior

Another satisfactory method where height of building or ground conditions prohibit bracing from the exterior is to tie the first truss rigidly in place from the interior at the floor level, provided the floor is substantially completed and capable of supporting the ground bracing forces. Securely fasten the first truss to the middle of the building. Brace the bracing similar to exterior ground bracing shown at left. Set trusses from the middle toward the end of the building. Properly cross-brace the first set of trusses before removing floor braces and setting remaining trusses.

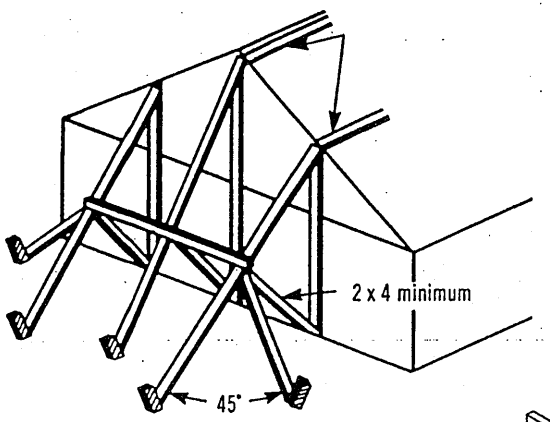


Note: Locate ground braces for first truss directly in line with all rows of top chord continuous lateral bracing (either temporary or permanent).

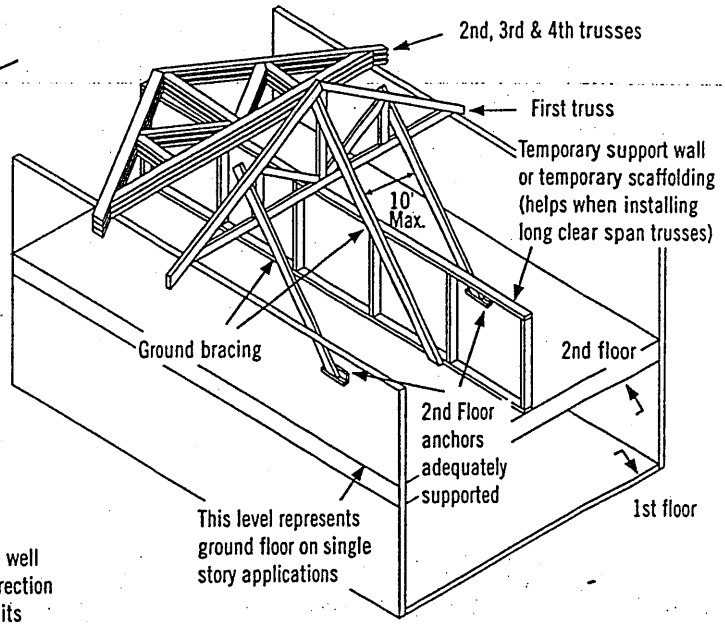


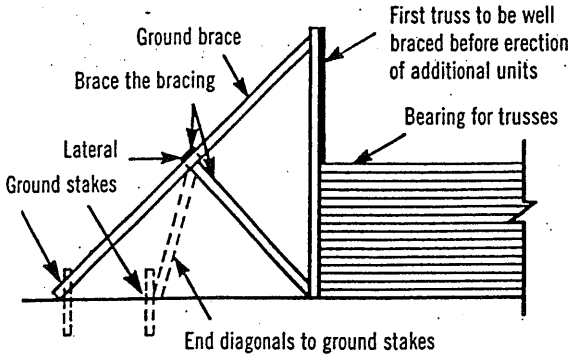


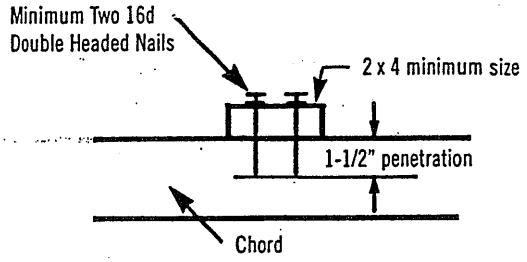


**Inadequate size of bracing material or inadequate fastening is a major cause of erection dominoing.**

# 5 Erection Tolerance

Complying with erection tolerances is critical to achieving an acceptable roof or floor line, and to accomplishing effective bracing. Setting trusses within tolerance the first time will prevent the need for the hazardous practice of respacing or adjusting trusses when roof sheathing or roof purlins are installed. Trusses leaning or bowing can cause nails to miss the top chords when sheathing is applied, and create cumulative stresses on the bracing, which is a frequent cause of dominoing.

**When sheathing, make sure nails are driven into the top chord of the trusses.**

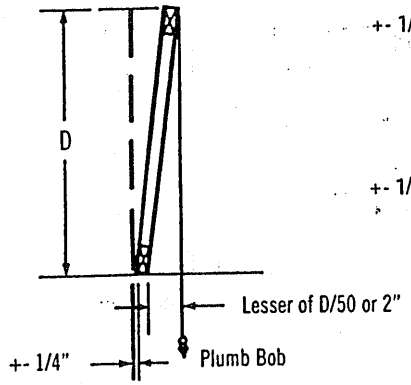


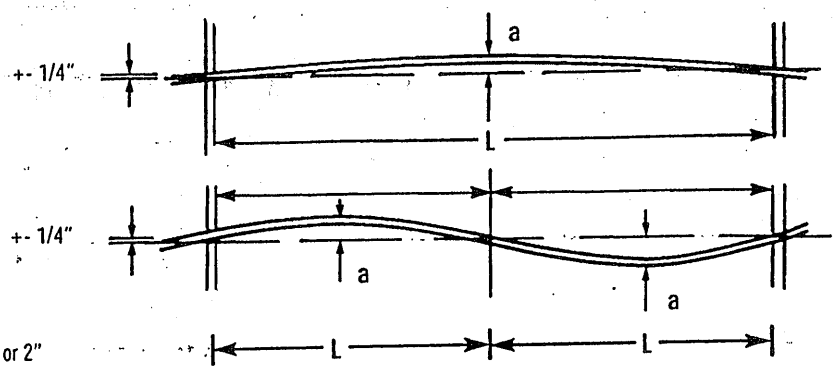


**L = 16' to 32', a = 1"**
**L = 32' & over, a = 2"**

# 6 Bracing

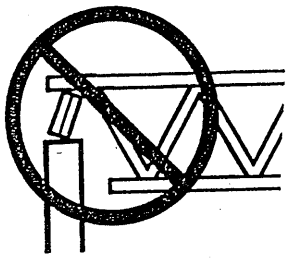

**Do not install trusses on temporarily connected supports**

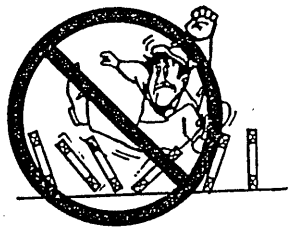

**Do not walk on unbraced trusses**

**Do not walk on trusses or gable ends lying flat**

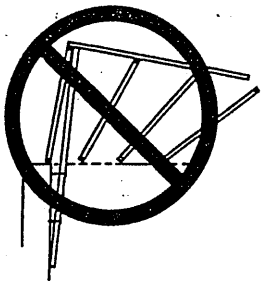

**Nails in withdrawal (parallel to force)**

All anchors, hangers, tie-downs, seats, bearing ledgers, etc., that are part of the supporting structure shall be accurately and properly placed and permanently attached before truss installation begins. No trusses shall ever be installed on anchors or ties that have temporary connections to the supporting structure.

**Nailing scabs to the end of the building to brace the first truss is not recommended.**
All nailing of bracing should be done so that nails are driven perpendicular to the direction of force, as shown at right.

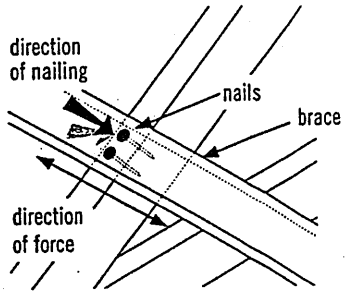


**Well nailed (perpendicular to force)**

# 7 Bracing Requirements for 3 Planes of Roof

Temporary erection bracing must be applied to three planes of the roof system to ensure stability: Plane 1) **Top Chord** (sheathing), Plane 2) **Bottom Chord** (ceiling plane), and Plane 3) **Web Member** plane or vertical plane perpendicular to trusses.

### 1) Top Chord Plane

Most important to the builder or erection contractor is bracing in the plane of the top chord. Truss top chords are susceptible to lateral buckling before they are braced or sheathed.

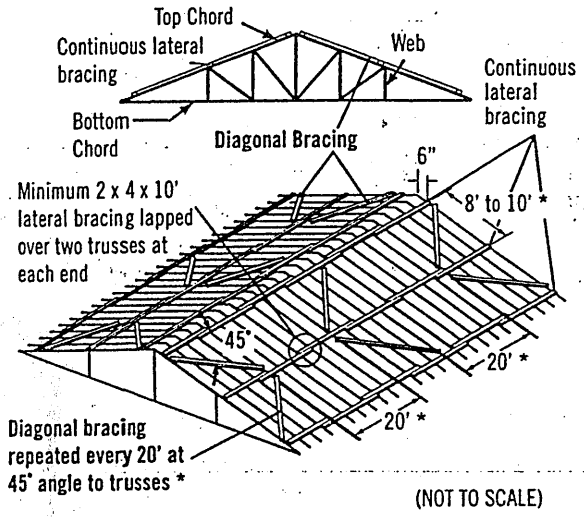


(NOT TO SCALE)

Exact spacing between trusses should be maintained as bracing is installed to avoid the hazardous practice of removing bracing to adjust spacing. This act of "adjusting spacing" can cause trusses to topple if connections are removed at the wrong time.

### 2) Bottom Chord Plane

In order to hold proper spacing on the bottom chord, temporary bracing is recommended on the top of the bottom chord.

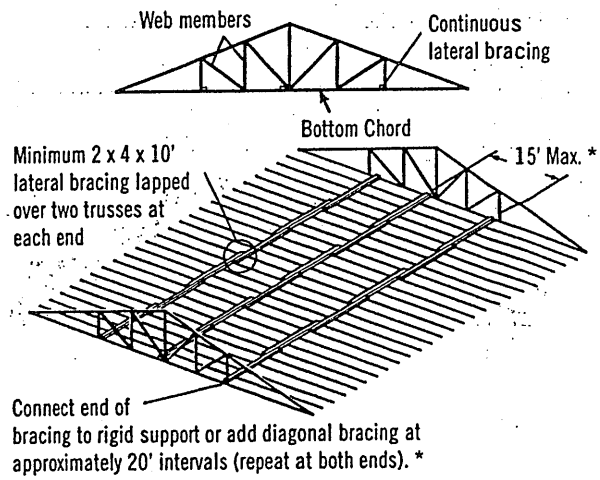


* Long spans, heavy loads or other spacing configurations may require closer spacing between lateral bracing and closer intervals between diagonals. Consult the building designer or HIB and DSB (*Recommended Design Specification for Temporary Bracing of Metal-Plate Connected Wood Trusses*) for details.

**Diagonal or cross-bracing is very important!**

### 3) Web Member Plane

**"X" bracing, as shown, is critical in preventing trusses from leaning or dominoing. Repeat as shown to create a succession of rigid units.**

X-bracing should be installed on vertical web members wherever possible, at or near lateral bracing. Plywood or OSB may be substituted for X-bracing.

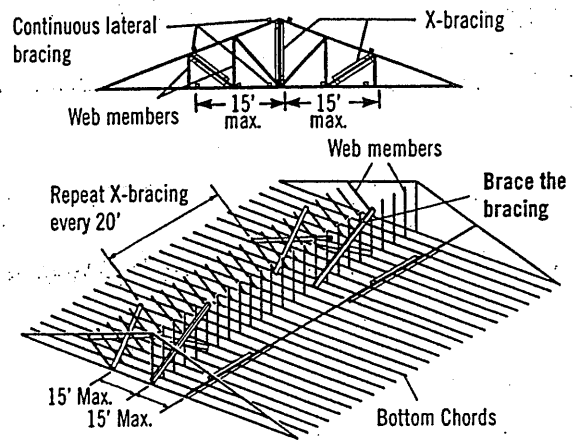


Note: Top chords and some web members are not shown, in order to make drawings more readable.

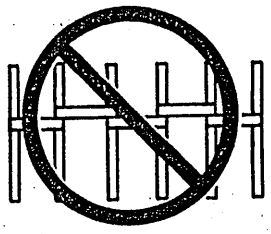

**Do not use short blocks to brace individual trusses without a specific bracing plan detailing their use**

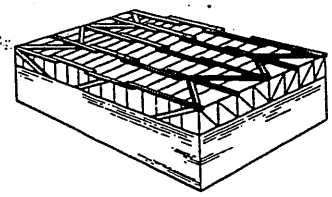

**Bracing requirements using the same principles apply to parallel chord trusses**

# 8 Stacking Materials

**Do not proceed with building completion until all bracing is securely and properly in place**

**Never stack materials on unbraced or inadequately braced trusses**

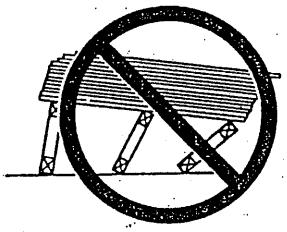

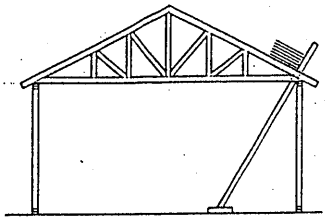


Proper distribution of construction materials is a must during construction.

**Never stack materials near a peak**

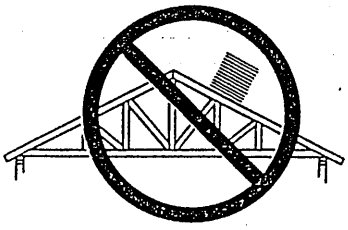

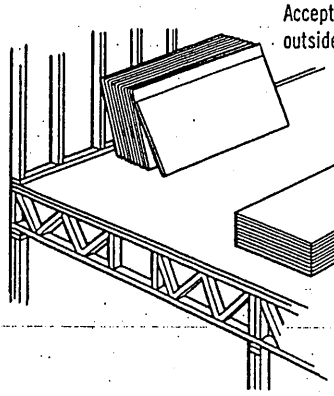


**Never stack materials on the cantilever of a truss**

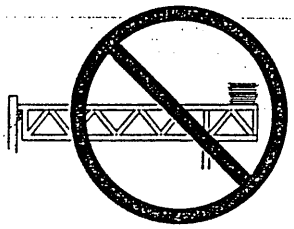

Always stack materials over two or more trusses.

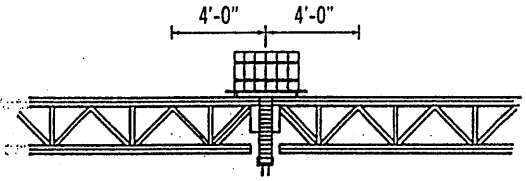


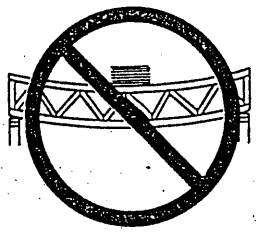

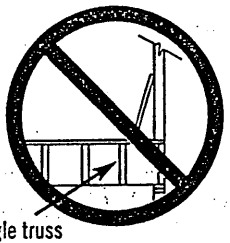


Roofing and mechanical contractors are cautioned to stack materials only along outside supporting members or directly over inside supporting members. Trusses are not designed for dynamic loads (i.e., moving vehicles). Extreme care should be taken when loading and stacking construction materials (rolled roofing, mechanical equipment, etc.) on the roof or floor system.

**Never overload small groups or single trusses. Position load over as many trusses as possible.**

**Never cut any structural member of a truss.**

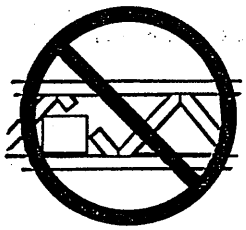

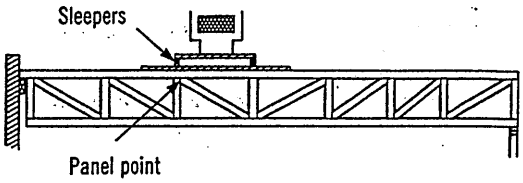


Sleepers for mechanical equipment should be located at panel points (joints) or over main supporting members, and only on trusses that have been designed for such loads.

# Caution Notes

Errors in building lines and/or dimensions, or errors by others shall be corrected by the contractor or responsible construction trade subcontractor or supplier **before** erection of trusses begins.

Cutting of nonstructural overhangs is considered a part of normal erection and shall be done by the builder or erection contractor.

Any field modification that involves the cutting, drilling, or relocation of any structural truss member or connector plate shall not be done without the approval of the truss manufacturer or a licensed design professional.

The methods and procedures outlined are intended to ensure that the overall construction techniques employed will put floor and roof trusses **safely** in place in a completed structure. These recommendations for bracing wood trusses originate from the collective experience of leading technical personnel in the wood truss industry, but must, due to the nature of responsibilities involved, be presented only as a **guide** for use by a qualified building designer, builder, or erection contractor. Thus, the Wood Truss Council of America expressly disclaims any responsibility for damages arising from the use, application, or reliance on the recommendations and information contained herein.

[Selected text and figures referenced or reproduced from HIB and DSB by permission of the Truss Plate Institute, Madison, WI.]

THE CANADIAN WOOD TRUSS ASSOCIATION

L'ASSOCIATION CANADIENNE DES FABRICANTS DE FERMES DE BOIS

1400 Blair Place, Suite 210, Ottawa, ON K1J 9B8
Tel.: 613-747-5544 Fax: 613-747-6264

**Wood Truss Council of America**

One WTCA Center
6300 Enterprise Lane, Madison, WI 53719-1140
Tel.: 608-274-4849 Fax: 608-274-3329
wtca@woodtruss.com www.woodtruss.com