THESE DRAWINGS CONSTITUTE THE PROPERTY OF ALPA ROOF TRUSSES INC., SHALL NOT BE REPRODUCED, PUBLISHED, OR REDISTRIBUTED IN ANY MANNER OR UTILIZED FOR ANY PURPOSE OTHER THAN THE MANUFACTURE OF TRUSSES BY ALPA ROOF TRUSSES INC AND WILL BE RETRACTED IF UTLILZED FOR ANY OTHER PURPOSE.

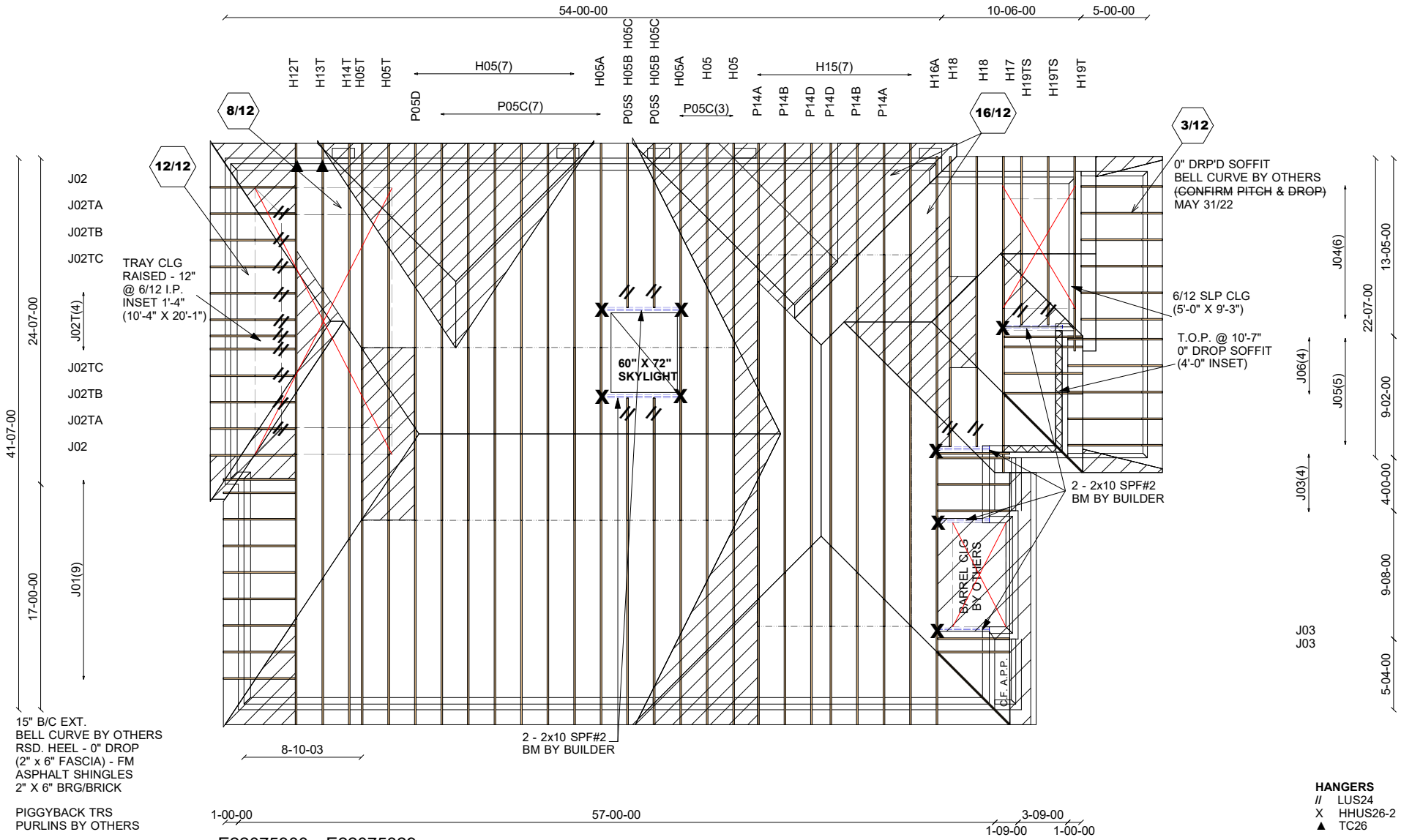

E22075300 - E22075329

(CITY COMM.)

PL# 120155

Mitek V. 8.5.3.233

ALL CONVENTIONAL FRAMING TO CONFORM WITH PART 9 O.B.C. LATEST EDITION. ROOF RAFTERS THAT CROSS OVER TRUSSES TO BE 2X4 SPF #2 @ 24" O.C WITH A VERT. POST TO THE TRUSS UNDERNEATH AT EACH CROSS POINT. VERT. POSTS LONGER THAN 6' TO HAVE LATERAL BRACING SO THAT THE DISTANCE BETWEEN END POINTS & BETWEEN ROWS OF BRACING DOES NOT EXCEED 6'

CONVENTIONAL FRAMING BY OTHERS

Job Track: 45147	Builder / Location: GOLD PARK HOMES / VAUGHAN	Model / Elevation: 5011	/ B LOT 67 OPT SKY
Layout ID: 346378	Project: PINE VALLEY PH 2		
Plan Log: 118156	Date: 2022-12-14 Designer: jburrows/aw		

EWP DESIGN INC.

(905) 832-2250 FAX (905) 832-0286

RESPONSIBILITIES AND SPECIFICATIONS

RESPONSIBILITIES

1. EWP DESIGN INC. is responsible for the design of trusses as individual components.
2. It is the responsibility of others to ascertain that the design loads utilized on each drawing meet or exceed the actual dead load imposed by the structure, the live load imposed by the intended use and the snow load imposed by local building code or authorities with jurisdictions.
3. All dimensions are to be verified by the owner, contractor, architect or other authorities with jurisdictions before truss fabrication.
4. EWP DESIGN INC. bears no responsibility for the erection of trusses. Persons erecting trusses are cautioned to seek professional advice regarding the temporary and permanent bracing for the system. Bracing shown on EWP DESIGN INC. drawing is specified for the truss as a component only and forms an integral part of the truss design.
5. It is the truss manufacturer's responsibility to ensure that trusses are manufactured in conformance with specifications of EWP DESIGN INC. as outlined below.

SPECIFICATIONS

1. Trusses designed by EWP DESIGN INC. conform to the relevant section of the Ontario Building Code of Canada (Part 9 or Part 4) or to the Canadian code for farm buildings, whichever applies to the building type, as indicated on the EWP DESIGN INC. drawings, and conform to the design procedures established by the Truss Plate Institute of Canada. Unit stresses used for truss designs are as per the edition of CSA-O86 shown on EWP DESIGN INC. drawings.
2. Lumber is to be the size, species and grade as specified on EWP DESIGN INC. drawings.
3. Moisture content of lumber shall not exceed 19% in service unless specified otherwise.
4. Metal connector plates shall be applied to both faces of truss at each joint and shall be positioned as specified.
5. Top chords of trusses are assumed to be continuously braced laterally by roof sheathing or by purlins at intervals not exceeding 12.5 times the thickness of top chord member.
6. Bottom chords shall be laterally braced at intervals not exceeding 3M (10') o.c., where rigid ceiling is not applied directly to the underside of chords.

THESE DRAWINGS CONSTITUTE THE PROPERTY OF EWP DESIGN INC., SHALL NOT BE REPRODUCED, PUBLISHED, OR REDISTRIBUTED IN ANY MANNER OR UTILIZED FOR ANY PURPOSE OTHER THAN THE MANUFACTURE OF TRUSSES BY THE ALPA LUMBER GROUP, AND WILL BE RETRACTED BY EWP DESIGN INC. IF UTILIZED FOR ANY OTHER PURPOSE.

JOB NAME	TRUSS NAME	QUANTITY	PLY	JOB DESC.		DRWG NO.
346378	H05		1	TRUSS DESC.	JT 45147	E22075300

Alpa Roof Truss, Maple

Version 8.530 S Feb 23 2022 MiTek Industries, Inc. Mon Jul 25 12:11:23 2022 Page 1

ID:9a plwcon izmXpuR1McGqzT9hG-HJQZYuh8K4Dpwe?yNEh7uNHwFZkiyj2PFqJcB?yuY3I

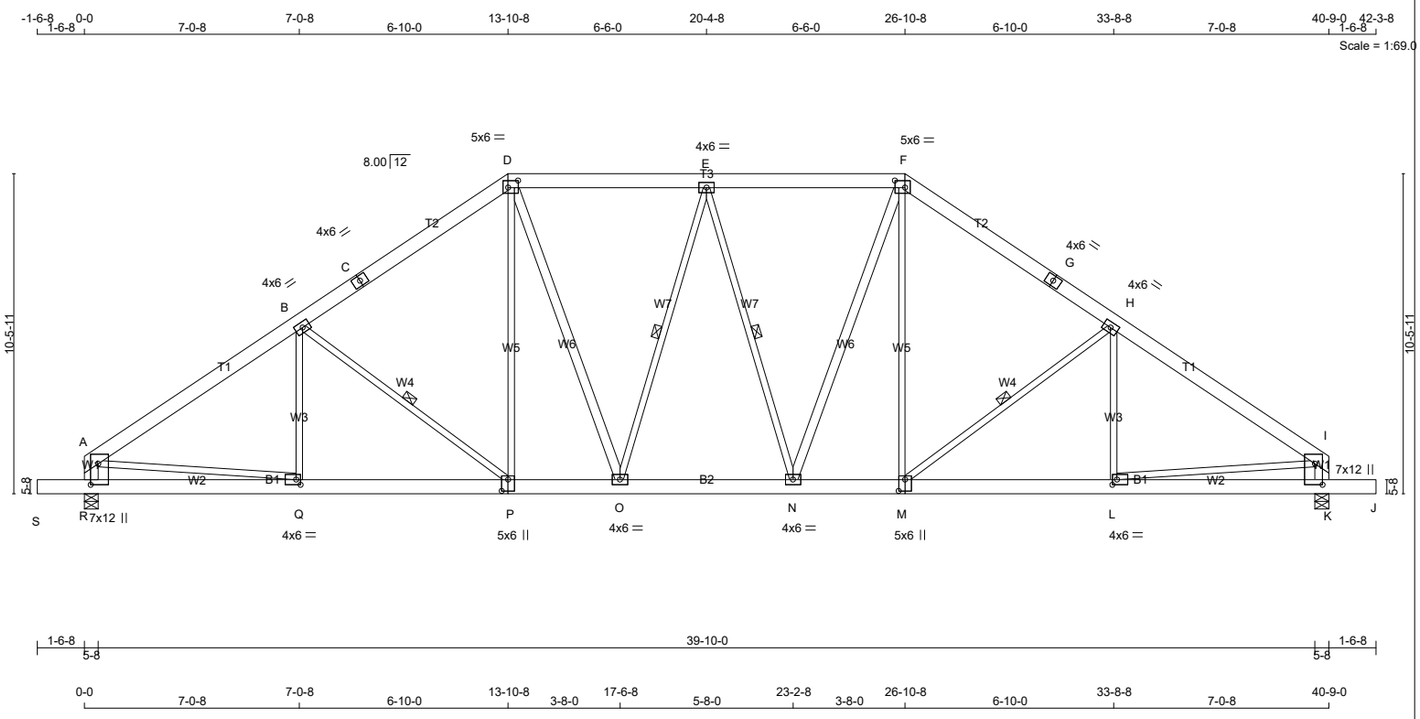

TOTAL WEIGHT = 9 X 252 = 2267 lb

[M][F]

LUMBER

N. L. G. A. RULES

CHORDS	SIZE		LUMBER	DESCR.
A - C	2x6	DRY	No.2	SPF
C - D	2x6	DRY	No.2	SPF
D - F	2x6	DRY	No.2	SPF
F - G	2x6	DRY	No.2	SPF
G - I	2x6	DRY	No.2	SPF
R - A	2x6	DRY	No.2	SPF
K - I	2x6	DRY	No.2	SPF
S - P	2x6	DRY	No.2	SPF
P - M	2x6	DRY	No.2	SPF
M - J	2x6	DRY	No.2	SPF
ALL WEBS	2x3	DRY	No.2	SPF
EXCEPT				
D - O	2x4	DRY	No.2	SPF
N - F	2x4	DRY	No.2	SPF

DRY: SEASONED LUMBER.

PLATES (table is in inches)

JT	TYPE	PLATES	W	LEN	Y	X
A, I, K, R						
A						
B, E, H						
B	TMWW-t	MT20	4.0	6.0		
C	TS-t	MT20	4.0	6.0		
D	TTWW-I	MT20	5.0	6.0	2.75	4.00
F	TTWW-I	MT20	5.0	6.0	2.75	4.00
G	TS-t	MT20	4.0	6.0		
K	TMBMVW1*+p	MT20	7.0	12.0	8.25	3.00
L	BMWW-t	MT20	4.0	6.0	2.00	1.75
M	BSWW+I	MT20	5.0	6.0	4.50	2.50
N	BMWW-t	MT20	4.0	6.0		
O	BMWW-t	MT20	4.0	6.0		
P	BSWW+I	MT20	5.0	6.0	4.50	2.50
Q	BMWW-t	MT20	4.0	6.0	2.00	1.75
R	TMBMVW1*+p	MT20	7.0	12.0	8.25	3.00

LATERAL BRACE(S) SHOWN SHALL BE 2X4 SPF#2

DIMENSIONS, SUPPORTS AND LOADINGS SPECIFIED BY FABRICATOR TO BE VERIFIED BY BUILDING DESIGNER

BEARINGS

JT	FACTORED GROSS REACTION VERT	HORZ	MAXIMUM FACTORED GROSS REACTION DOWN	HORZ	UPLIFT	INPUT BRG IN-SX	REQRD BRG IN-SX
R	2212	0	2212	0	0	5-8	2-5
K	2212	0	2212	0	0	5-8	2-5

UNFACTORED REACTIONS

JT	1ST LCASE COMBINED	MAX./MIN. COMPONENT REACTIONS SNOW	LIVE	PERM.LIVE	WIND	DEAD	SOIL
R	1585	920 / 0	0 / 0	0 / 0	0 / 0	665 / 0	0 / 0
K	1585	920 / 0	0 / 0	0 / 0	0 / 0	665 / 0	0 / 0

BEARING MATERIAL TO BE SPF NO.2 OR BETTER AT JOINT(S) R, K

BRACING

FOR SECTION D-F, MAX. PURLIN SPACING = 2.00 FT.
FOR OTHER SECTIONS, TOP CHORD TO BE SHEATHED OR MAX. PURLIN SPACING = 4.79 FT.
MAX. UNBRACED BOTTOM CHORD LENGTH = 10.00 FT OR RIGID CEILING DIRECTLY APPLIED.

ALL PITCH BREAKS AND PERIMETER CORNER JOINTS MUST BE LATERALLY RESTRAINED.

1 LATERAL BRACE(S) AT 1/ 2 LENGTH OF B-P, E-O, E-N, H-M.

END VERTICAL(S) MUST BE SHEATHED OR HAVE BRACES AS INDICATED IN THE MAX. UNBRACED LENGTH COLUMN OF THE TABLE BELOW

LOADING

TOTAL LOAD CASES: (4)

CHORDS

MEMB. FR-TO	MAX. FACTORED FORCE (LBS)	VERT. LOAD LC1 (PLF) FROM	TO	MAX CSI (LC)	MAX. UNBRAC LENGTH
A- B	-2765 / 0	-78.0	-78.0	0.27 (1)	4.79
B- C	-2359 / 0	-78.0	-78.0	0.25 (1)	5.11
C- D	-2359 / 0	-78.0	-78.0	0.25 (1)	5.11
D- E	-2104 / 0	-93.0	-93.0	0.26 (1)	2.00
E- F	-2104 / 0	-93.0	-93.0	0.26 (1)	2.00
F- G	-2359 / 0	-78.0	-78.0	0.25 (1)	5.11
G- H	-2359 / 0	-78.0	-78.0	0.25 (1)	5.11
H- I	-2765 / 0	-78.0	-78.0	0.27 (1)	4.79
R- A	-2005 / 0	0.0	0.0	0.13 (1)	7.13
K- I	-2005 / 0	0.0	0.0	0.13 (1)	7.13
S- R	0 / 0	-96.5	-96.5	0.08 (1)	10.00
R- Q	0 / 0	-18.5	-18.5	0.10 (4)	10.00
Q- P	0 / 2328	-18.5	-18.5	0.33 (1)	10.00
P- O	0 / 1936	-18.5	-18.5	0.25 (1)	10.00
O- N	0 / 2208	-18.5	-18.5	0.29 (1)	10.00
N- M	0 / 1936	-18.5	-18.5	0.25 (1)	10.00
M- L	0 / 2328	-18.5	-18.5	0.33 (1)	10.00
L- K	0 / 0	-18.5	-18.5	0.10 (4)	10.00
K- J	0 / 0	-96.5	-96.5	0.08 (1)	10.00

WEBS

MEMB. FR-TO	MAX. FACTORED FORCE (LBS)	MAX CSI (LC)
Q- B	-95 / 71	0.04 (1)
B- P	-503 / 0	0.26 (1)
P- D	0 / 390	0.09 (1)
D- O	0 / 490	0.08 (1)
O- E	-379 / 0	0.30 (1)
E- N	-379 / 0	0.30 (1)
N- F	0 / 490	0.08 (1)
M- F	0 / 390	0.09 (1)
M- H	-503 / 0	0.26 (1)
L- H	-95 / 71	0.04 (1)
A- Q	0 / 2340	0.53 (1)
L- I	0 / 2340	0.53 (1)

DESIGN CRITERIA

SPECIFIED LOADS:

TOP CH.	LL	=	21.0	PSF
	DL	=	6.0	PSF
BOT CH.	LL	=	0.0	PSF
	DL	=	7.4	PSF
TOTAL LOAD		=	34.4	PSF

SPACING = 24.0 IN. C/C

LOADING IN FLAT SECTION BASED ON PIGGYBACK TRUSS WITH SLOPES OF 6.00/12 AND -6.00/12 AND RESPECTIVE HEEL HEIGHTS OF 0-0 AND 0-0 AND AN ADDITIONAL DEAD LOAD OF 6.0 P.S.F.

THIS TRUSS IS DESIGNED FOR RESIDENTIAL OR SMALL BUILDING REQUIREMENTS OF PART 9, NBCC 2015

THIS DESIGN COMPLIES WITH:
- PART 9 OF BCBC 2018 , ABC 2019
- PART 9 OF OBC 2012 (2019 AMENDMENT)
- CSA 086-14
- TPIC 2014

(55 % OF 23.0 P.S.F. G.S.L. PLUS 8.4 P.S.F. RAIN LOAD) EQUALS 21.0 P.S.F. SPECIFIED ROOF LIVE LOAD

ALLOWABLE DEFL.(LL)= L/360 (1.36")
CALCULATED VERT. DEFL.(LL) = L/ 999 (0.08")
ALLOWABLE DEFL.(TL)= L/360 (1.36")
CALCULATED VERT. DEFL.(TL) = L/ 999 (0.18")

CANTILEVER DEFLECTION:
ALLOWABLE DEFL.(LL)= L/120 (0.19")
CALCULATED VERT. DEFL.(LL) = L/ 999 (0.00")
ALLOWABLE DEFL.(TL)= L/120 (0.19")
CALCULATED VERT. DEFL.(TL) = L/ 999 (0.00")

CSI: TC=0.27/1.00 (A-B:1) , BC=0.33/1.00 (L-M:1) , WB=0.53/1.00 (I-L:1) , SSI=0.22/1.00 (D-E:1)

DOL LUMBER=1.00 NAIL=1.00 LS BEND=1.10 COMP=1.10 SHEAR=1.10 TENS= 1.10

COMPANION LIVE LOAD FACTOR = 1.00

AUTOSOLVE HEELS OFF

TRUSS PLATE MANUFACTURER IS NOT RESPONSIBLE FOR QUALITY CONTROL IN THE TRUSS MANUFACTURING PLANT .

NAIL VALUES

PLATE	GRIP(DRY) (PSI) MAX	MIN	SHEAR (PLI) MAX	MIN	SECTION (PLI) MAX	MIN
MT20	650	371	1747	788	1987	1873

PLATE PLACEMENT TOL. = 0.250 inches

PLATE ROTATION TOL. = 5.0 Deg.

JSI GRIP= 0.85 (Q) (INPUT = 0.90)
JSI METAL= 0.77 (R) (INPUT = 1.00)

JOB NAME	TRUSS NAME	QUANTITY	PLY	JOB DESC.	DRWG NO.
346378	H05T		1	TRUSS DESC. JT 45147	E22075301

Alpha Roof Truss, Maple

Version 8.530 S Feb 23 2022 MiTek Industries, Inc. Mon Jul 25 12:11:30 2022 Page 1

ID:9a plwcon izmXpuR1McGqzT9hG-afLD0InXhD5qFj1IHCJmhr43MN5f5ohRsGWUx5yuY3B

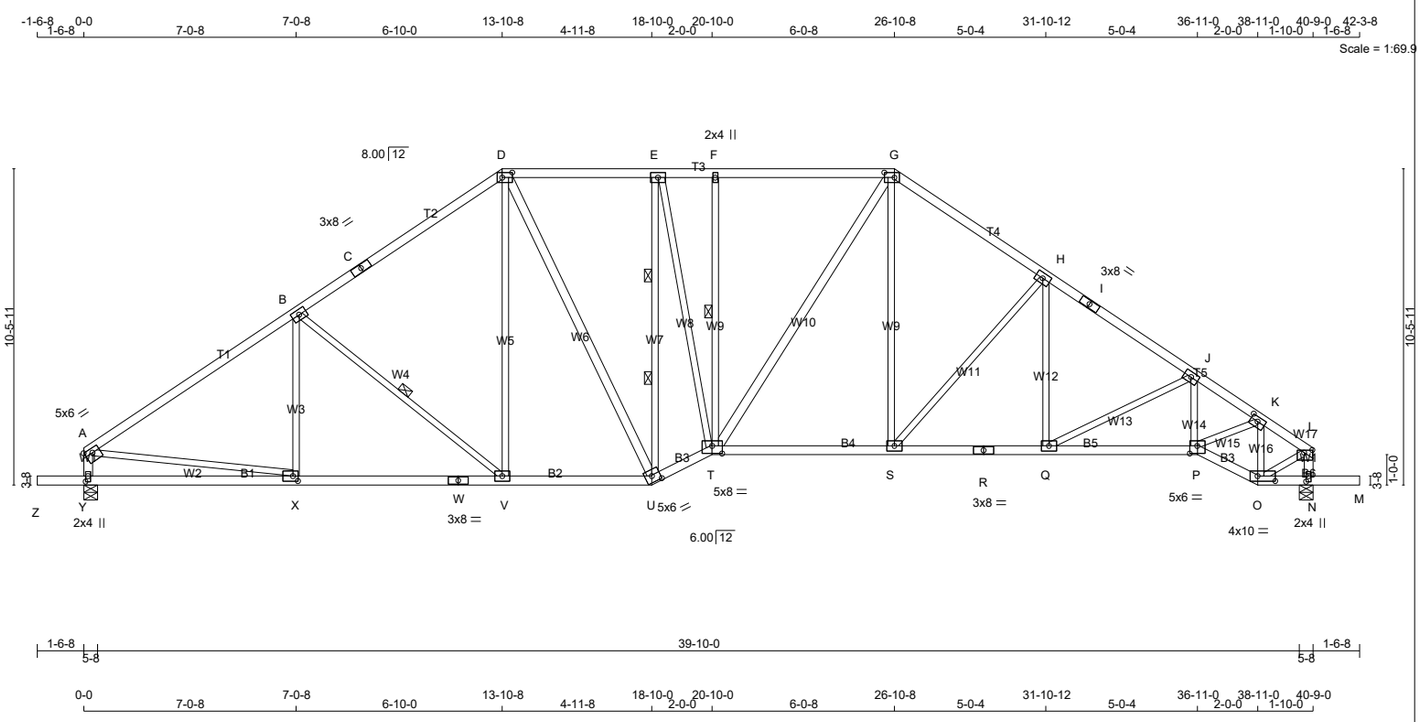

TOTAL WEIGHT = 2 X 206 = 413 lb

[M][F]

LUMBER

N. L. G. A. RULES

CHORDS	SIZE		LUMBER	DESCR.
A - C	2x4	DRY	1650F 1.5E	SPF
C - D	2x4	DRY	1650F 1.5E	SPF
D - G	2x4	DRY	No.2	SPF
G - I	2x4	DRY	No.2	SPF
I - L	2x4	DRY	No.2	SPF
Y - A	2x4	DRY	No.2	SPF
N - L	2x4	DRY	No.2	SPF
Z - W	2x4	DRY	No.2	SPF
W - U	2x4	DRY	No.2	SPF
U - T	2x4	DRY	No.2	SPF
T - R	2x4	DRY	No.2	SPF
R - P	2x4	DRY	No.2	SPF
P - O	2x4	DRY	No.2	SPF
O - M	2x4	DRY	No.2	SPF
ALL WEBS	2x3	DRY	No.2	SPF
EXCEPT				
D - U	2x4	DRY	No.2	SPF
T - G	2x4	DRY	No.2	SPF

DRY: SEASONED LUMBER.

PLATES (table is in inches)

JT	TYPE	PLATES	W	LEN	Y	X
A	TMVW-t	MT20	5.0	6.0	1.75	Edge
B, E, H, J						
B	TMWW-t	MT20	4.0	6.0		
C	TS-t	MT20	3.0	8.0		
D	TTWW-l	MT20	4.0	6.0	2.00	4.00
F	TMW+w	MT20	2.0	4.0		
G	TTWW-l	MT20	4.0	6.0	2.00	4.00
I	TS-t	MT20	3.0	8.0		
K	TMWW-t	MT20	4.0	6.0	1.75	3.00
L	TMVW-p	MT20	4.0	6.0	1.00	3.25
N	BMV1+p	MT20	2.0	4.0	2.25	1.00
O	BBWW-l	MT20	4.0	10.0	2.00	7.00
P	BBWW-l	MT20	5.0	6.0	3.00	3.00
Q, S, V						
Q	BMWW-t	MT20	4.0	6.0		
R	BS-t	MT20	3.0	8.0		
T	BBWWW-p	MT20	5.0	8.0	3.00	4.00
U	BBWW-h	MT20	5.0	6.0	2.50	3.25
W	BS-t	MT20	3.0	8.0		
X	BMWW-t	MT20	4.0	6.0	2.00	2.00
Y	BMV1+p	MT20	2.0	4.0	2.25	1.00

Edge - INDICATES REFERENCE CORNER OF PLATE TOUCHES EDGE OF CHORD.

LATERAL BRACE(S) SHOWN SHALL BE 2X4 SPF#2

DIMENSIONS, SUPPORTS AND LOADINGS SPECIFIED BY FABRICATOR TO BE VERIFIED BY BUILDING DESIGNER

BEARINGS

JT	FACTORED GROSS REACTION VERT	HORZ	MAXIMUM FACTORED GROSS REACTION DOWN	HORZ	UPLIFT	INPUT BRG IN-SX	REQRD BRG IN-SX
Y	2111	0	2111	0	0	5-8	3-3
N	2117	0	2117	0	0	5-8	3-3

UNFACTORED REACTIONS

JT	1ST LCASE COMBINED	MAX./MIN. COMPONENT REACTIONS SNOW	LIVE	PERM.LIVE	WIND	DEAD	SOIL
Y	1505	919 / 0	0 / 0	0 / 0	0 / 0	587 / 0	0 / 0
N	1509	921 / 0	0 / 0	0 / 0	0 / 0	588 / 0	0 / 0

BEARING MATERIAL TO BE SPF NO.2 OR BETTER AT JOINT(S) Y, N

BRACING

TOP CHORD TO BE SHEATHED OR MAX. PURLIN SPACING = 3.73 FT.
MAX. UNBRACED BOTTOM CHORD LENGTH = 10.00 FT OR RIGID CEILING DIRECTLY APPLIED.

ALL PITCH BREAKS AND PERIMETER CORNER JOINTS MUST BE LATERALLY RESTRAINED.

1 LATERAL BRACE(S) AT 1/ 2 LENGTH OF B-V, F-T.
2 LATERAL BRACE(S) AT 1/ 3 LENGTH OF E-U.

END VERTICAL(S) MUST BE SHEATHED OR HAVE BRACES AS INDICATED IN THE MAX. UNBRACED LENGTH COLUMN OF THE TABLE BELOW

LOADING

TOTAL LOAD CASES: (4)

CHORDS

MEMB. FR-TO	MAX. FACTORED FORCE (LBS)	FACTORED VERT. LOAD (PLF) FROM	TO	LC1 CSI (LC)	MAX UNBRAC LENGTH
A- B	-2533 / 0	-78.0	-78.0	0.53 (1)	4.38
B- C	-2163 / 0	-78.0	-78.0	0.49 (1)	4.69
C- D	-2163 / 0	-78.0	-78.0	0.49 (1)	4.69
D- E	-1966 / 0	-78.0	-78.0	0.28 (1)	4.55
E- F	-2197 / 0	-78.0	-78.0	0.29 (1)	4.33
F- G	-2201 / 0	-78.0	-78.0	0.41 (1)	4.20
G- H	-2375 / 0	-78.0	-78.0	0.33 (1)	4.19
H- I	-2835 / 0	-78.0	-78.0	0.36 (1)	3.86
I- J	-2835 / 0	-78.0	-78.0	0.36 (1)	3.86
J- K	-3305 / 0	-78.0	-78.0	0.20 (1)	3.73
K- L	-1891 / 0	-78.0	-78.0	0.09 (1)	4.83
Y- A	-1909 / 0	0.0	0.0	0.19 (1)	6.08
N- L	-1889 / 0	0.0	0.0	0.19 (1)	6.10
Z- Y	0 / 0	-96.5	-96.5	0.16 (1)	10.00
Y- X	0 / 0	-18.5	-18.5	0.22 (4)	10.00
X- W	0 / 2138	-18.5	-18.5	0.45 (1)	10.00
W- V	0 / 2138	-18.5	-18.5	0.45 (1)	10.00
V- U	0 / 1772	-18.5	-18.5	0.37 (1)	10.00
U- T	0 / 2213	-18.5	-18.5	0.37 (1)	10.00
T- S	0 / 1961	-18.5	-18.5	0.40 (1)	10.00
S- R	0 / 2372	-18.5	-18.5	0.46 (1)	10.00
R- Q	0 / 2372	-18.5	-18.5	0.46 (1)	10.00
Q- P	0 / 2762	-18.5	-18.5	0.51 (1)	10.00
P- O	0 / 1666	-18.5	-18.5	0.28 (1)	10.00
O- N	0 / 0	-18.5	-18.5	0.12 (1)	10.00
N- M	0 / 0	-96.5	-96.5	0.16 (1)	10.00

WEBS

MEMB. FR-TO	MAX. FACTORED FORCE (LBS)	MAX CSI (LC)
X- B	-131 / 58	0.07 (1)
B- V	-476 / 0	0.26 (1)
V- D	0 / 414	0.09 (1)
D- U	0 / 443	0.07 (1)
U- E	-1333 / 0	0.92 (1)
E- T	0 / 1076	0.24 (1)
T- F	-362 / 0	0.22 (1)
T- G	0 / 436	0.07 (1)
S- G	0 / 589	0.13 (1)
S- H	-631 / 0	0.77 (1)
Q- H	0 / 289	0.07 (1)
Q- J	-439 / 0	0.23 (1)
P- J	0 / 173	0.04 (1)
P- K	0 / 1429	0.32 (1)
O- K	-1539 / 0	0.24 (1)
A- X	0 / 2155	0.48 (1)
O- L	0 / 1745	0.39 (1)

DESIGN CRITERIA

SPECIFIED LOADS:

TOP CH.	LL	=	21.0	PSF
	DL	=	6.0	PSF
BOT CH.	LL	=	0.0	PSF
	DL	=	7.4	PSF
TOTAL LOAD		=	34.4	PSF

SPACING = 24.0 IN. C/C

LOADING IN FLAT SECTION BASED ON A SLOPE OF 2.00/12 MINIMUM

THIS TRUSS IS DESIGNED FOR RESIDENTIAL OR SMALL BUILDING REQUIREMENTS OF PART 9, NBCC 2015

THIS DESIGN COMPLIES WITH:
- PART 9 OF BCBC 2018 , ABC 2019
- PART 9 OF OBC 2012 (2019 AMENDMENT)
- CSA 086-14
- TPIC 2014

DESIGN ASSUMPTIONS
-OVERHANG NOT TO BE ALTERED OR CUT OFF.

(55 % OF 23.0 P.S.F. G.S.L. PLUS 8.4 P.S.F. RAIN LOAD) EQUALS 21.0 P.S.F. SPECIFIED ROOF LIVE LOAD

ALLOWABLE DEFL.(LL)= L/360 (1.36")
CALCULATED VERT. DEFL.(LL) = L/ 999 (0.15")
ALLOWABLE DEFL.(TL)= L/360 (1.36")
CALCULATED VERT. DEFL.(TL) = L/ 999 (0.32")

CANTILEVER DEFLECTION:
ALLOWABLE DEFL.(LL)= L/120 (0.19")
CALCULATED VERT. DEFL.(LL) = L/ 999 (0.02")
ALLOWABLE DEFL.(TL)= L/120 (0.19")
CALCULATED VERT. DEFL.(TL) = L/ 566 (0.03")

CSI: TC=0.53/1.00 (A-B:1) , BC=0.51/1.00 (P-Q:1) , WB=0.92/1.00 (E-U:1) , SSI=0.22/1.00 (A-B:1)

DOL LUMBER=1.00 NAIL=1.00 LS BEND=1.10 COMP=1.10 SHEAR=1.10 TENS= 1.10

COMPANION LIVE LOAD FACTOR = 1.00

TRUSS PLATE MANUFACTURER IS NOT RESPONSIBLE FOR QUALITY CONTROL IN THE TRUSS MANUFACTURING PLANT .

NAIL VALUES

PLATE	GRIP(DRY) (PSI) MAX	MIN	SHEAR (PLI) MAX	MIN	SECTION (PLI) MAX	MIN
MT20	650	371	1747	788	1987	1873

PLATE PLACEMENT TOL. = 0.250 inches

PLATE ROTATION TOL. = 5.0 Deg.

JSI GRIP= 0.89 (X) (INPUT = 0.90)
JSI METAL= 0.71 (R) (INPUT = 1.00)

JOB NAME	TRUSS NAME	QUANTITY	PLY	JOB DESC.	DRWG NO.
346378	H12T		1	TRUSS DESC. JT 45147	E22075302

Alpha Roof Truss, Maple

Version 8.530 S Feb 23 2022 MiTek Industries, Inc. Mon Jul 25 12:11:33 2022 Page 1

ID:9a plwcon izmXpuR1McGqzT9hG- E0LfJpQz8TP6BmtzKsTIUiT2b0OI86tYEk8YQyuY38

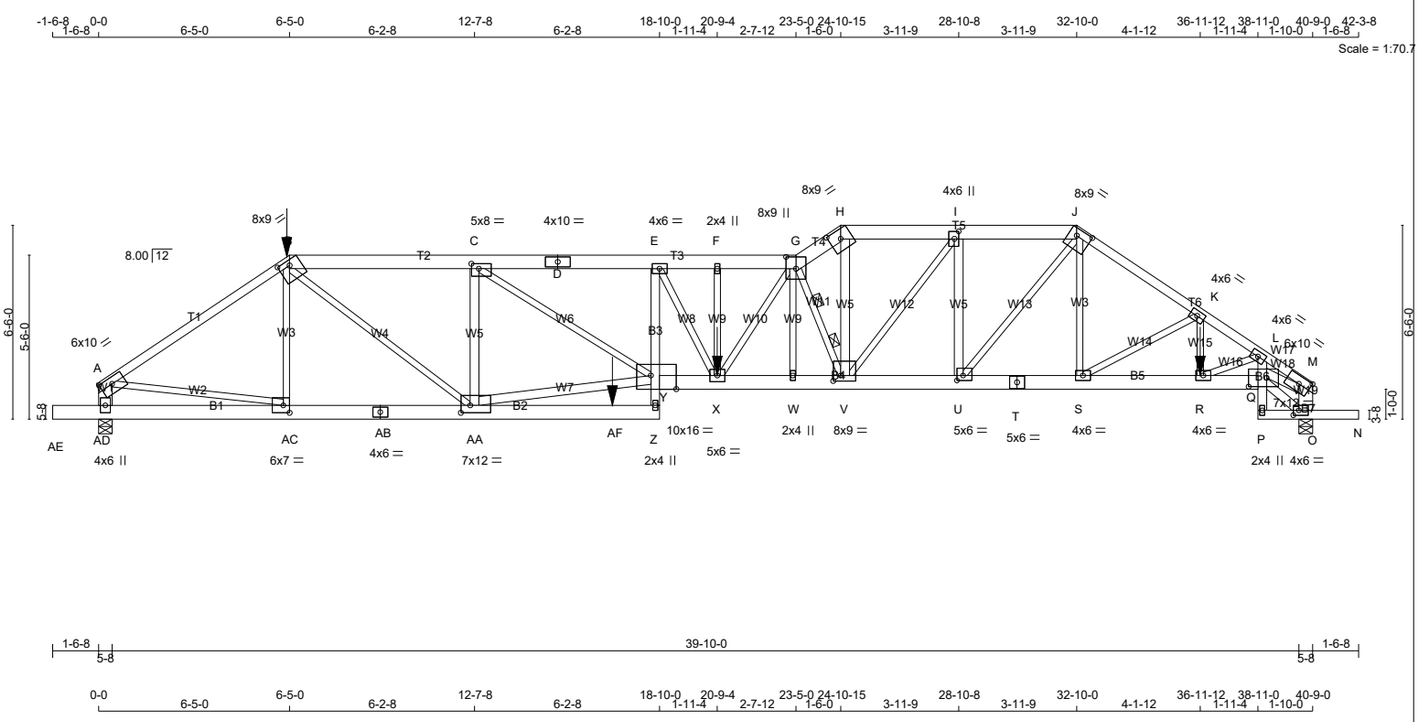

LUMBER

N. L. G. A. RULES

CHORDS	SIZE		LUMBER	DESCR.
A - B	2x4	DRY	2100F 1.8E	SPF
B - D	2x6	DRY	No.2	SPF
D - G	2x6	DRY	No.2	SPF
G - H	2x6	DRY	No.2	SPF
H - J	2x6	DRY	No.2	SPF
J - M	2x4	DRY	No.2	SPF
AD- A	2x6	DRY	No.2	SPF
O - M	2x6	DRY	No.2	SPF
AE- AB	2x6	DRY	No.2	SPF
AB- Z	2x6	DRY	No.2	SPF
Z - E	2x4	DRY	No.2	SPF
Y - T	2x6	DRY	1650F 1.5E	SPF
T - Q	2x6	DRY	1650F 1.5E	SPF
P - L	2x4	DRY	No.2	SPF
P - N	2x4	DRY	No.2	SPF
ALL WEBS	2x3	DRY	No.2	SPF
EXCEPT				
AA- C	2x4	DRY	No.2	SPF
AA- Y	2x4	DRY	1650F 1.5E	SPF
V - H	2x4	DRY	No.2	SPF
U - I	2x4	DRY	No.2	SPF
Q - O	2x4	DRY	No.2	SPF
Q - M	2x4	DRY	1650F 1.5E	SPF

DRY: SEASONED LUMBER.

PLATES (table is in inches)

JT	TYPE	PLATES	W	LEN	Y	X
A	TMVW-t	MT20	6.0	10.0	2.50	4.75
B	TTWW-h	MT20	8.0	9.0	2.00	4.50
C	TMWW-t	MT20	5.0	8.0	2.00	3.00
D	TS-t	MT20	4.0	10.0		
E	TMVW-t	MT20	4.0	6.0		
F	TMW+w	MT20	2.0	4.0		
G	TTWWW+p	MT20	8.0	9.0	4.75	4.00
H	TTW-h	MT20	8.0	9.0	3.50	4.50
I	TMWW+t	MT20	4.0	6.0	3.00	1.75
J	TTWW-h	MT20	8.0	9.0	2.75	5.75
K	TMWW-t	MT20	4.0	6.0		
L	TMVW-t	MT20	4.0	6.0		
M	TMVW-t	MT20	6.0	10.0		Edge
O	BMVW1-t	MT20	4.0	6.0	2.00	2.25
P	BMV+p	MT20	2.0	4.0		
Q	BVMWW-l	MT20	7.0	12.0	3.50	7.25
R	BMWW-t	MT20	4.0	6.0		
S	BMWW-t	MT20	4.0	6.0		
T	BS-t	MT20	5.0	6.0		
U	BMWW-t	MT20	5.0	6.0	2.00	2.50
V	BMWWW-t	MT20	8.0	9.0	2.25	3.00
W	BMW+w	MT20	2.0	4.0		
X	BMWWW-t	MT20	5.0	6.0		
Y	BVMWW-l	MT20	10.0	16.0	Edge	10.25
Z	BMV+p	MT20	2.0	4.0		
AA	BMWWW-t	MT20	7.0	12.0	3.00	3.75
AB	BS-t	MT20	4.0	6.0		
AC	BMWW-t	MT20	6.0	7.0	3.00	2.50
AD	BMV1+p	MT20	4.0	6.0		

Edge - INDICATES REFERENCE CORNER OF PLATE TOUCHES EDGE OF CHORD.

LATERAL BRACE(S) SHOWN SHALL BE 2X4 SPF#2

DIMENSIONS, SUPPORTS AND LOADINGS SPECIFIED BY FABRICATOR TO BE VERIFIED BY BUILDING DESIGNER

BEARINGS

JT	FACTORED GROSS REACTION VERT	HORZ	MAXIMUM FACTORED GROSS REACTION DOWN	HORZ	UPLIFT	INPUT BRG IN-SX	REQRD BRG IN-SX
AD	3382	0	3382	0	0	5-8	5-4
O	3760	0	3760	0	0	5-8	4-0

ALLOW FOR 0.4" OF HORIZONTAL MOVEMENT DUE TO TOTAL LOAD

UNFACTORED REACTIONS

1ST LCASE MAX./MIN. COMPONENT REACTIONS

JT	COMBINED	SNOW	LIVE	PERM.LIVE	WIND	DEAD	SOIL
AD	2408	1492 / 0	0 / 0	0 / 0	0 / 0	915 / 0	0 / 0
O	2675	1663 / 0	0 / 0	0 / 0	0 / 0	1012 / 0	0 / 0

BEARING MATERIAL TO BE SPF NO.2 OR BETTER AT JOINT(S) AD, O

BRACING

TOP CHORD TO BE SHEATHED OR MAX. PURLIN SPACING = 1.59 FT.
MAX. UNBRACED BOTTOM CHORD LENGTH = 7.81 FT OR RIGID CEILING DIRECTLY APPLIED.

ALL PITCH BREAKS AND PERIMETER CORNER JOINTS MUST BE LATERALLY RESTRAINED.

2 LATERAL BRACE(S) AT 1/ 3 LENGTH OF G-V.

END VERTICAL(S) MUST BE SHEATHED OR HAVE BRACES AS INDICATED IN THE MAX. UNBRACED LENGTH COLUMN OF THE TABLE BELOW

LOADING

TOTAL LOAD CASES: (4)

CHORDS

MEMB. FR-TO	MAX. FACTORED FORCE (LBS)	FACTORED VERT. LOAD (PLF) FROM	TO	LC1	MAX CSI (LC)	MAX. UNBRAC LENGTH
A- B	-4403 / 0	-78.0	-78.0	0.80 (1)	3.57	
B- C	-6125 / 0	-114.5	-114.5	0.61 (1)	3.01	
C- D	-9243 / 0	-114.5	-114.5	0.95 (1)	2.01	
D- E	-9243 / 0	-114.5	-114.5	0.95 (1)	2.01	
E- F	-9205 / 0	-114.5	-114.5	0.57 (1)	2.45	
F- G	-9206 / 0	-78.0	-78.0	0.58 (1)	2.44	
G- H	-8267 / 0	-78.0	-78.0	0.35 (1)	2.78	
H- I	-7005 / 0	-78.0	-78.0	0.37 (1)	3.02	
I- J	-6044 / 0	-78.0	-78.0	0.31 (1)	3.31	
J- K	-5546 / 0	-78.0	-78.0	0.74 (1)	2.42	
K- L	-6434 / 0	-78.0	-78.0	0.80 (1)	1.84	
L- M	-6875 / 0	-78.0	-78.0	0.85 (1)	1.59	
AD- A	-3159 / 0	0.0	0.0	0.22 (1)	5.91	
O- M	-3343 / 0	0.0	0.0	0.24 (1)	5.76	
AE-AD	0 / 0	-96.5	-96.5	0.08 (1)	10.00	
AD-AC	0 / 0	-27.2	-27.2	0.12 (4)	10.00	
AC-AB	0 / 3677	-27.2	-27.2	0.55 (1)	10.00	
AB-AA	0 / 3677	-27.2	-27.2	0.55 (1)	10.00	
AA-AF	0 / 207	-27.2	-27.2	0.21 (1)	10.00	
AF- Z	0 / 207	-27.2	-27.2	0.21 (1)	10.00	
Z- Y	0 / 196	0.0	0.0	0.38 (1)	10.00	
Y- E	-256 / 0	0.0	0.0	0.35 (1)	7.81	
Y- X	0 / 9311	-27.2	-27.2	0.77 (1)	10.00	
X- W	0 / 8909	-87.8	-87.8	0.95 (1)	10.00	
W- V	0 / 8918	-87.8	-87.8	0.95 (1)	10.00	
V- U	0 / 6044	-87.8	-87.8	0.57 (1)	10.00	
U- T	0 / 4597	-87.8	-87.8	0.47 (1)	10.00	
T- S	0 / 4597	-87.8	-87.8	0.47 (1)	10.00	
S- R	0 / 5415	-87.8	-87.8	0.55 (1)	10.00	
R- Q	0 / 5980	-33.5	-33.5	0.58 (1)	10.00	
P- Q	-40 / 5	0.0	0.0	0.43 (1)	7.81	
Q- L	0 / 517	0.0	0.0	0.52 (1)	10.00	
P- O	0 / 267	-33.5	-33.5	0.22 (1)	10.00	
O- N	0 / 0	-96.5	-96.5	0.17 (1)	10.00	

WEBS

MEMB. FR-TO	MAX. FACTORED FORCE (LBS)	MAX CSI (LC)
AC- B	-301 / 28	0.13 (1)
B-AA	0 / 3178	0.79 (1)
AA- C	-2865 / 0	0.84 (1)
AA- Y	0 / 6061	0.78 (1)
C- Y	0 / 3660	0.91 (1)
E- X	-208 / 0	0.07 (1)
X- F	-68 / 0	0.02 (1)
X- G	0 / 539	0.13 (1)
W- G	-331 / 0	0.09 (1)
G- V	-5379 / 0	1.00 (1)
V- H	0 / 4331	0.77 (1)
V- I	0 / 1593	0.39 (1)
U- I	-1574 / 0	0.46 (1)
U- J	0 / 2349	0.58 (1)
S- J	0 / 945	0.23 (1)
S- K	-923 / 0	0.34 (1)
R- K	0 / 622	0.15 (1)
R- L	-620 / 0	0.11 (1)
A-AC	0 / 3702	0.92 (1)
Q- O	-318 / 0	0.04 (1)
Q- M	0 / 5706	0.73 (1)

FACTORED CONCENTRATED LOADS (LBS)

JT	LOC.	LC1	MAX-	MAX+	FACE	DIR.	TYPE	HEEL	CONN.
B	6-5-0	-198	-198	---	FRONT	VERT	TOTAL	---	C1
R	36-11-12	-331	-331	---	FRONT	VERT	TOTAL	---	C1
X	20-9-4	-331	-331	---	FRONT	VERT	TOTAL	---	C1
AF	17-3-0	-168	-168	---	FRONT	VERT	TOTAL	---	C1

CONNECTION REQUIREMENTS

1) **C1:** A SUITABLE HANGER/MECHANICAL CONNECTION IS REQUIRED.

DESIGN CRITERIA

*** SPECIAL LOADS ANALYSIS ***
GEOMETRY AND/OR BASIC LOADS CHANGED BY USER.
LOADS WERE DERIVED FROM USER INPUT
NO FURTHER MODIFICATIONS WERE MADE

SPECIFIED LOADS:

TOP CH.	LL	=	21.0	PSF
	DL	=	6.0	PSF
BOT CH.	LL	=	0.0	PSF
	DL	=	7.4	PSF
TOTAL LOAD		=	34.4	PSF

SPACING = 24.0 IN. C/C

LOADING IN ALL FLAT SECTIONS BASED ON A SLOPE OF 2.00/12 MINIMUM

GIRDER TYPE: CPrimeHip
LEFT SETBACK = 6-5-0
RIGHT SETBACK = 7-11-0
END SETBACK = 3-10-8
END WALL WIDTH = 0-0
CORNER FRAMING TYPE: CONVENTIONAL
END JACK TYPE: CONVENTIONAL
APPLIED TO FRONT SIDE
- ADDT'L LOADS BASED ON 55 % OF GSL.
LOADS APPLIED TO FIRST 20-9-4 OF SPAN MEASURED FROM THE LEFT.

GIRDER TYPE: CStdGirder
START DISTANCE = 20-9-4
START SPAN CARRIED = 4-10-8
END DISTANCE = 36-11-12
END SPAN CARRIED = 4-10-8
END WALL WIDTH = 0-0
APPLIED TO FRONT SIDE OF BOTTOM CHORD.
- ADDT'L LOADS BASED ON 55 % OF GSL.

*** NON STANDARD GIRDER ***
ADDT'L USER-DEFINED LOADS APPLIED TO ALL LOAD CASES.

THIS TRUSS IS DESIGNED FOR RESIDENTIAL OR SMALL BUILDING REQUIREMENTS OF PART 9, NBCC 2015

THIS DESIGN COMPLIES WITH:
- PART 9 OF BCBC 2018 , ABC 2019
- PART 9 OF OBC 2012 (2019 AMENDMENT)
- CSA 086-14
- TPIC 2014

DESIGN ASSUMPTIONS
-OVERHANG NOT TO BE ALTERED OR CUT OFF.

(55 % OF 23.0 P.S.F. G.S.L. PLUS 8.4 P.S.F. RAIN LOAD) EQUALS 21.0 P.S.F. SPECIFIED ROOF LIVE LOAD

ALLOWABLE DEFL.(LL)= L/360 (1.36")
CALCULATED VERT. DEFL.(LL) = L/ 915 (0.53")
ALLOWABLE DEFL.(TL)= L/360 (1.36")
CALCULATED VERT. DEFL.(TL) = L/ 477 (1.03")

CANTILEVER DEFLECTION:
ALLOWABLE DEFL.(LL)= L/120 (0.19")
CALCULATED VERT. DEFL.(LL) = L/ 212 (0.09")
ALLOWABLE DEFL.(TL)= L/120 (0.19")
CALCULATED VERT. DEFL.(TL) = L/ 120 (0.17")

CSI: TC=0.95/1.00 (C-E:1) , BC=0.95/1.00 (V-W:1) , WB=1.00/1.00 (G-V:1) , SSI=0.28/1.00 (B-C:1)

DOL LUMBER=1.00 NAIL=1.00 LS BEND=1.00 COMP=1.00 SHEAR=1.00 TENS= 1.00

COMPANION LIVE LOAD FACTOR = 1.00

AUTOSOLVE HEELS OFF

TRUSS PLATE MANUFACTURER IS NOT RESPONSIBLE FOR QUALITY CONTROL IN THE TRUSS MANUFACTURING PLANT .

NAIL VALUES

PLATE	GRIP(DRY) (PSI) MAX	MIN	SHEAR (PLI) MAX	MIN	SECTION (PLI) MAX	MIN
MT20	650	371	1747	788	1987	1873

PLATE PLACEMENT TOL. = 0.250 inches

PLATE ROTATION TOL. = 5.0 Deg.

CONTINUED ON PAGE 2

JOB NAME	TRUSS NAME	QUANTITY	PLY	JOB DESC.		DRWG NO.
346378	H13T		1	TRUSS DESC.	JT 45147	E22075303

Alpa Roof Truss, Maple

Version 8.530 S Feb 23 2022 MiTek Industries, Inc. Mon Jul 25 12:11:35 2022 Page 1

ID:9a plwcon izmXpuR1McGqzT9hG-wd863?rgVmk6MVwF4lvxNvnvxOnCm5eA?YDFcJyuY36

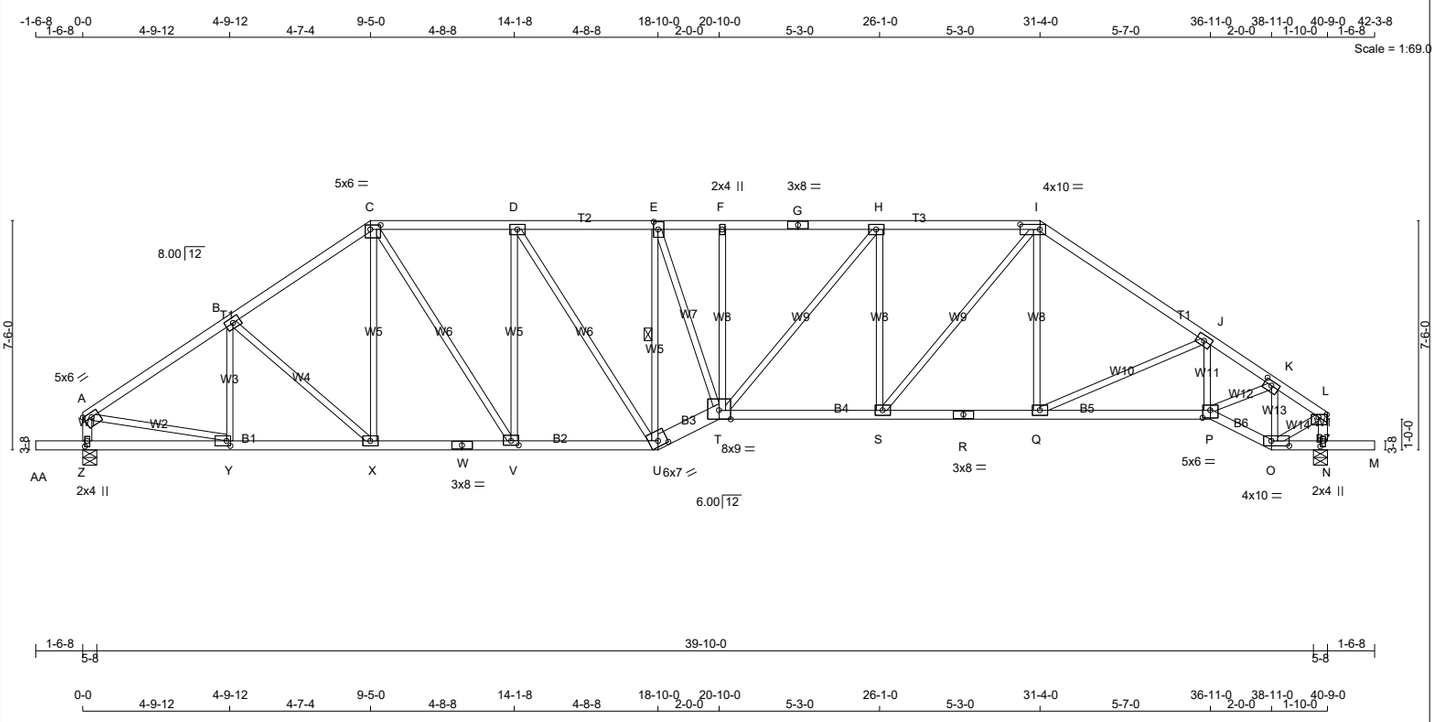

TOTAL WEIGHT = 190 lb

LUMBER

N. L. G. A. RULES

CHORDS	SIZE		LUMBER	DESCR.
A - C	2x4	DRY	No.2	SPF
C - G	2x4	DRY	No.2	SPF
G - I	2x4	DRY	No.2	SPF
I - L	2x4	DRY	No.2	SPF
Z - A	2x4	DRY	No.2	SPF
N - L	2x4	DRY	No.2	SPF
AA- W	2x4	DRY	No.2	SPF
W - U	2x4	DRY	No.2	SPF
U - T	2x6	DRY	No.2	SPF
T - R	2x4	DRY	No.2	SPF
R - P	2x4	DRY	No.2	SPF
P - O	2x4	DRY	No.2	SPF
O - M	2x4	DRY	No.2	SPF
ALL WEBS EXCEPT	2x3	DRY	No.2	SPF

DRY: SEASONED LUMBER.

PLATES (table is in inches)

JT	TYPE	PLATES	W	LEN	Y	X
A	TMVW-t	MT20	5.0	6.0	1.75	Edge
B, D, H, J						
B	TMWW-t	MT20	4.0	6.0		
C	TTWW-l	MT20	5.0	6.0	1.75	4.00
E	TMWW+t	MT20	4.0	6.0	3.00	1.75
F	TMW+w	MT20	2.0	4.0		
G	TS-t	MT20	3.0	8.0		
I	TTWW-l	MT20	4.0	10.0	2.00	7.75
K	TMWW-t	MT20	4.0	6.0	1.75	3.00
L	TMVW-p	MT20	4.0	6.0	1.00	3.25
N	BMV1+p	MT20	2.0	4.0	2.25	1.00
O	BBWW-l	MT20	4.0	10.0	2.00	7.00
P	BBWW-l	MT20	5.0	6.0	3.00	3.00
Q, S, X						
Q	BMWW-t	MT20	4.0	6.0		
R	BS-t	MT20	3.0	8.0		
T	BBWWW-p	MT20	8.0	9.0	Edge	
U	BBWW-h	MT20	6.0	7.0	2.25	3.50
V	BMWW-t	MT20	4.0	6.0	1.75	3.00
W	BS-t	MT20	3.0	8.0		
Y	BMWW-t	MT20	4.0	6.0	2.00	1.50
Z	BMV1+p	MT20	2.0	4.0	2.25	1.00

Edge - INDICATES REFERENCE CORNER OF PLATE TOUCHES EDGE OF CHORD.

LATERAL BRACE(S) SHOWN SHALL BE 2X4 SPF#2

DIMENSIONS, SUPPORTS AND LOADINGS SPECIFIED BY FABRICATOR TO BE VERIFIED BY BUILDING DESIGNER

BEARINGS

JT	FACTORED GROSS REACTION VERT	HORZ	MAXIMUM FACTORED GROSS REACTION DOWN	HORZ	UPLIFT	INPUT BRG IN-SX	REQRD BRG IN-SX
Z	2111	0	2111	0	0	5-8	3-3
N	2117	0	2117	0	0	5-8	3-3

UNFACTORED REACTIONS

JT	1ST LCASE COMBINED	MAX./MIN. COMPONENT REACTIONS SNOW	LIVE	PERM.LIVE	WIND	DEAD	SOIL
Z	1505	919 / 0	0 / 0	0 / 0	0 / 0	587 / 0	0 / 0
N	1509	921 / 0	0 / 0	0 / 0	0 / 0	588 / 0	0 / 0

BEARING MATERIAL TO BE SPF NO.2 OR BETTER AT JOINT(S) Z, N

BRACING

TOP CHORD TO BE SHEATHED OR MAX. PURLIN SPACING = 3.42 FT.
MAX. UNBRACED BOTTOM CHORD LENGTH = 10.00 FT OR RIGID CEILING DIRECTLY APPLIED.

ALL PITCH BREAKS AND PERIMETER CORNER JOINTS MUST BE LATERALLY RESTRAINED.

1 LATERAL BRACE(S) AT 1/ 2 LENGTH OF E-U.

END VERTICAL(S) MUST BE SHEATHED OR HAVE BRACES AS INDICATED IN THE MAX. UNBRACED LENGTH COLUMN OF THE TABLE BELOW

LOADING

TOTAL LOAD CASES: (4)

CHORDS

MEMB. FR-TO	FORCE (LBS)	FACTORED VERT. LOAD (PLF) FROM	TO	LC1	MAX CSI (LC)	MAX. UNBRAC LENGTH
A- B	-2476 / 0	-78.0	-78.0	0.42 (1)	4.02	
B- C	-2403 / 0	-78.0	-78.0	0.40 (1)	4.07	
C- D	-2541 / 0	-78.0	-78.0	0.38 (1)	3.99	
D- E	-2789 / 0	-78.0	-78.0	0.40 (1)	3.81	
E- F	-3252 / 0	-78.0	-78.0	0.23 (1)	3.72	
F- G	-3257 / 0	-78.0	-78.0	0.54 (1)	3.42	
G- H	-3257 / 0	-78.0	-78.0	0.54 (1)	3.42	
H- I	-3004 / 0	-78.0	-78.0	0.52 (1)	3.58	
I- J	-2772 / 0	-78.0	-78.0	0.51 (1)	3.79	
J- K	-3322 / 0	-78.0	-78.0	0.39 (1)	3.46	
K- L	-1882 / 0	-78.0	-78.0	0.12 (1)	4.80	
Z- A	-1923 / 0	0.0	0.0	0.20 (1)	6.07	
N- L	-1889 / 0	0.0	0.0	0.19 (1)	6.10	
AA- Z	0 / 0	-96.5	-96.5	0.16 (1)	10.00	
Z- Y	0 / 0	-18.5	-18.5	0.09 (4)	10.00	
Y- X	0 / 2079	-18.5	-18.5	0.38 (1)	10.00	
X- W	0 / 1980	-18.5	-18.5	0.37 (1)	10.00	
W- V	0 / 1980	-18.5	-18.5	0.37 (1)	10.00	
V- U	0 / 2542	-18.5	-18.5	0.46 (1)	10.00	
U- T	0 / 3091	-18.5	-18.5	0.37 (1)	10.00	
T- S	0 / 3004	-18.5	-18.5	0.55 (1)	10.00	
S- R	0 / 2293	-18.5	-18.5	0.44 (1)	10.00	
R- Q	0 / 2293	-18.5	-18.5	0.44 (1)	10.00	
Q- P	0 / 2810	-18.5	-18.5	0.53 (1)	10.00	
P- O	0 / 1649	-18.5	-18.5	0.28 (1)	10.00	
O- N	0 / 0	-18.5	-18.5	0.16 (1)	10.00	
N- M	0 / 0	-96.5	-96.5	0.16 (1)	10.00	

WEBS

MEMB. FR-TO	FORCE (LBS)	MAX CSI (LC)
Y- B	-300 / 0	0.09 (1)
B- X	-135 / 0	0.09 (1)
X- C	0 / 177	0.04 (4)
C- V	0 / 1026	0.23 (1)
V- D	-794 / 0	0.81 (1)
D- U	0 / 449	0.10 (1)
U- E	-1673 / 0	0.59 (1)
E- T	0 / 1508	0.34 (1)
T- F	-250 / 0	0.17 (1)
T- H	0 / 390	0.09 (1)
S- H	-770 / 0	0.53 (1)
S- I	0 / 1099	0.25 (1)
Q- I	0 / 346	0.08 (1)
Q- J	-574 / 0	0.38 (1)
P- J	0 / 136	0.04 (4)
P- K	0 / 1498	0.34 (1)
O- K	-1523 / 0	0.24 (1)
A- Y	0 / 2115	0.48 (1)
O- L	0 / 1727	0.39 (1)

DESIGN CRITERIA

SPECIFIED LOADS:

TOP CH.	LL	=	21.0	PSF
	DL	=	6.0	PSF
BOT CH.	LL	=	0.0	PSF
	DL	=	7.4	PSF
TOTAL LOAD		=	34.4	PSF

SPACING = 24.0 IN. C/C

LOADING IN FLAT SECTION BASED ON A SLOPE OF 2.00/12 MINIMUM

THIS TRUSS IS DESIGNED FOR RESIDENTIAL OR SMALL BUILDING REQUIREMENTS OF PART 9, NBCC 2015

THIS DESIGN COMPLIES WITH:
- PART 9 OF BCBC 2018 , ABC 2019
- PART 9 OF OBC 2012 (2019 AMENDMENT)
- CSA 086-14
- TPIC 2014

DESIGN ASSUMPTIONS
-OVERHANG NOT TO BE ALTERED OR CUT OFF.

(55 % OF 23.0 P.S.F. G.S.L. PLUS 8.4 P.S.F. RAIN LOAD) EQUALS 21.0 P.S.F. SPECIFIED ROOF LIVE LOAD

ALLOWABLE DEFL.(LL)= L/360 (1.36")
CALCULATED VERT. DEFL.(LL) = L/ 999 (0.21")
ALLOWABLE DEFL.(TL)= L/360 (1.36")
CALCULATED VERT. DEFL.(TL) = L/ 999 (0.42")

CANTILEVER DEFLECTION:
ALLOWABLE DEFL.(LL)= L/120 (0.19")
CALCULATED VERT. DEFL.(LL) = L/ 965 (0.02")
ALLOWABLE DEFL.(TL)= L/120 (0.19")
CALCULATED VERT. DEFL.(TL) = L/ 472 (0.04")

CSI: TC=0.54/1.00 (F-H:1) , BC=0.55/1.00 (S-T:1) , WB=0.81/1.00 (D-V:1) , SSI=0.19/1.00 (H-I:1)

DOL LUMBER=1.00 NAIL=1.00 LS BEND=1.10 COMP=1.10 SHEAR=1.10 TENS= 1.10

COMPANION LIVE LOAD FACTOR = 1.00

TRUSS PLATE MANUFACTURER IS NOT RESPONSIBLE FOR QUALITY CONTROL IN THE TRUSS MANUFACTURING PLANT .

NAIL VALUES

PLATE	GRIP(DRY) (PSI) MAX	MIN	SHEAR (PLI) MAX	MIN	SECTION (PLI) MAX	MIN
MT20	650	371	1747	788	1987	1873

PLATE PLACEMENT TOL. = 0.250 inches

PLATE ROTATION TOL. = 5.0 Deg.

JSI GRIP= 0.88 (E) (INPUT = 0.90)
JSI METAL= 0.68 (R) (INPUT = 1.00)

JOB NAME	TRUSS NAME	QUANTITY	PLY	JOB DESC.	DRWG NO.
346378	H14T		1	TRUSS DESC. JT 45147	E22075304

Alpha Roof Truss, Maple

Version 8.530 S Feb 23 2022 MiTek Industries, Inc. Mon Jul 25 12:11:37 2022 Page 1

ID:9a plwcon izmXpuR1McGqzT9hG-t0GsUhsw1N qbo3eCAxPTKsDNCUCEyhTTriLhByuY34

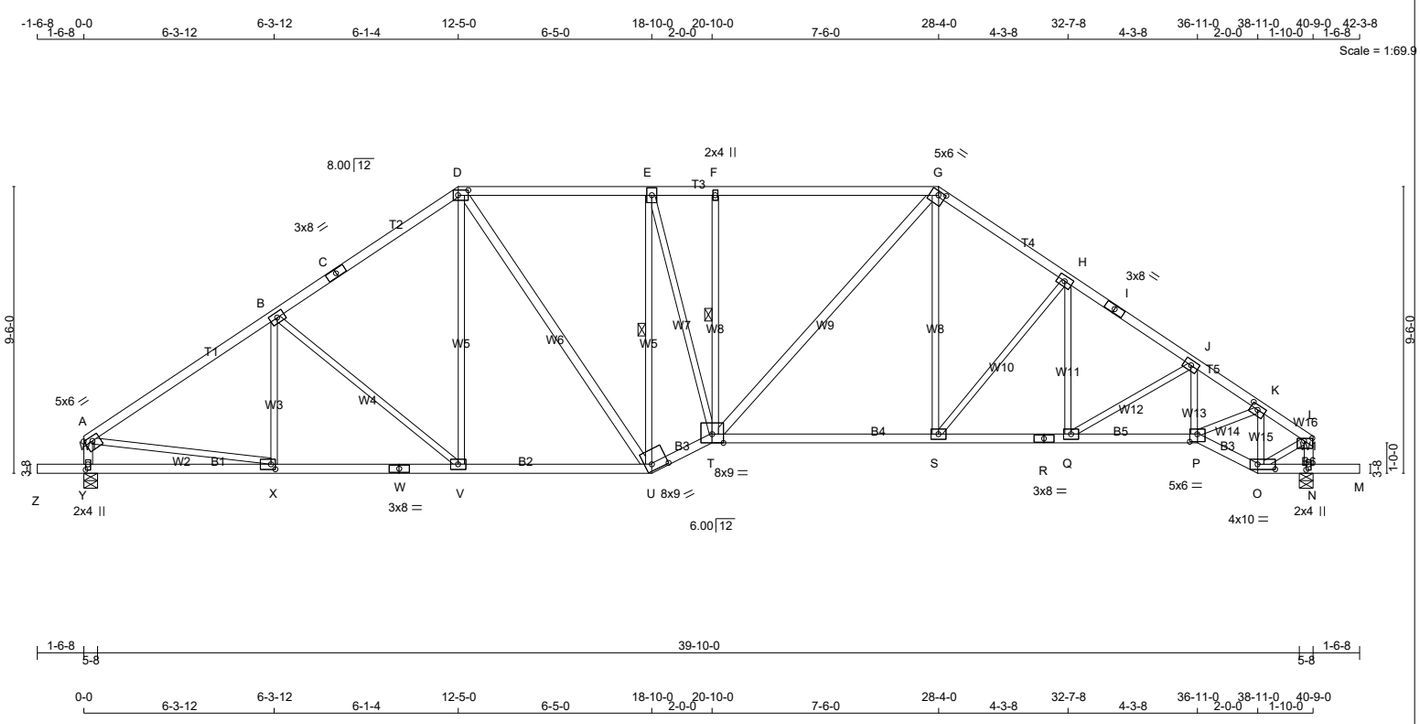

TOTAL WEIGHT = 198 lb

[M][F]

LUMBER

N. L. G. A. RULES

CHORDS	SIZE		LUMBER	DESCR.
A - C	2x4	DRY	No.2	SPF
C - D	2x4	DRY	No.2	SPF
D - G	2x4	DRY	No.2	SPF
G - I	2x4	DRY	No.2	SPF
I - L	2x4	DRY	No.2	SPF
Y - A	2x4	DRY	No.2	SPF
N - L	2x4	DRY	No.2	SPF
Z - W	2x4	DRY	No.2	SPF
W - U	2x4	DRY	No.2	SPF
U - T	2x4	DRY	No.2	SPF
T - R	2x4	DRY	No.2	SPF
R - P	2x4	DRY	No.2	SPF
P - O	2x4	DRY	No.2	SPF
O - M	2x4	DRY	No.2	SPF
ALL WEBS	2x3	DRY	No.2	SPF
EXCEPT				
D - U	2x4	DRY	No.2	SPF
T - G	2x4	DRY	No.2	SPF

DRY: SEASONED LUMBER.

PLATES (table is in inches)

JT	TYPE	PLATES	W	LEN	Y	X
A	TMVW-t	MT20	5.0	6.0	1.75	Edge
B, H, J						
B	TMWW-t	MT20	4.0	6.0		
C	TS-t	MT20	3.0	8.0		
D	TTWW-l	MT20	4.0	6.0	2.00	4.00
E	TMWW+t	MT20	4.0	6.0		
F	TMW+w	MT20	2.0	4.0		
G	TTWW-h	MT20	5.0	6.0	1.50	2.75
I	TS-t	MT20	3.0	8.0		
K	TMWW-t	MT20	4.0	6.0	1.75	3.00
L	TMVW-p	MT20	4.0	6.0	1.00	3.25
N	BMV1+p	MT20	2.0	4.0	2.25	1.00
O	BBWW-l	MT20	4.0	10.0	2.00	7.00
P	BBWW-l	MT20	5.0	6.0	3.00	3.00
Q, S, V						
Q	BMWW-t	MT20	4.0	6.0		
R	BS-t	MT20	3.0	8.0		
T	BBWWW-p	MT20	8.0	9.0	Edge	
U	BBWW-h	MT20	8.0	9.0	2.50	6.25
W	BS-t	MT20	3.0	8.0		
X	BMWW-t	MT20	4.0	6.0	2.00	1.75
Y	BMV1+p	MT20	2.0	4.0	2.25	1.00

Edge - INDICATES REFERENCE CORNER OF PLATE TOUCHES EDGE OF CHORD.

LATERAL BRACE(S) SHOWN SHALL BE 2X4 SPF#2

DIMENSIONS, SUPPORTS AND LOADINGS SPECIFIED BY FABRICATOR TO BE VERIFIED BY BUILDING DESIGNER

BEARINGS

JT	FACTORED GROSS REACTION VERT	HORZ	MAXIMUM FACTORED GROSS REACTION DOWN	HORZ	UPLIFT	INPUT BRG IN-SX	REQRD BRG IN-SX
Y	2111	0	2111	0	0	5-8	3-3
N	2117	0	2117	0	0	5-8	3-3

UNFACTORED REACTIONS

JT	1ST LCASE COMBINED	MAX./MIN. COMPONENT REACTIONS SNOW	LIVE	PERM.LIVE	WIND	DEAD	SOIL
Y	1505	919 / 0	0 / 0	0 / 0	0 / 0	587 / 0	0 / 0
N	1509	921 / 0	0 / 0	0 / 0	0 / 0	588 / 0	0 / 0

BEARING MATERIAL TO BE SPF NO.2 OR BETTER AT JOINT(S) Y, N

BRACING

TOP CHORD TO BE SHEATHED OR MAX. PURLIN SPACING = 3.67 FT.
MAX. UNBRACED BOTTOM CHORD LENGTH = 10.00 FT OR RIGID CEILING DIRECTLY APPLIED.

ALL PITCH BREAKS AND PERIMETER CORNER JOINTS MUST BE LATERALLY RESTRAINED.

1 LATERAL BRACE(S) AT 1/ 2 LENGTH OF E-U, F-T.

END VERTICAL(S) MUST BE SHEATHED OR HAVE BRACES AS INDICATED IN THE MAX. UNBRACED LENGTH COLUMN OF THE TABLE BELOW

LOADING

TOTAL LOAD CASES: (4)

CHORDS

MEMB. FR-TO	MAX. FACTORED FORCE (LBS)	FACTORED VERT. LOAD (PLF) FROM	TO	LC1	MAX CSI (LC)	MAX. UNBRAC LENGTH
A- B	-2527 / 0	-78.0	-78.0	0.57 (1)	3.85	
B- C	-2254 / 0	-78.0	-78.0	0.51 (1)	4.08	
C- D	-2254 / 0	-78.0	-78.0	0.51 (1)	4.08	
D- E	-2189 / 0	-78.0	-78.0	0.46 (1)	4.16	
E- F	-2476 / 0	-78.0	-78.0	0.48 (1)	3.86	
F- G	-2482 / 0	-78.0	-78.0	0.68 (1)	3.67	
G- H	-2506 / 0	-78.0	-78.0	0.25 (1)	4.17	
H- I	-2889 / 0	-78.0	-78.0	0.27 (1)	3.90	
I- J	-2889 / 0	-78.0	-78.0	0.27 (1)	3.90	
J- K	-3301 / 0	-78.0	-78.0	0.17 (1)	3.76	
K- L	-1893 / 0	-78.0	-78.0	0.08 (1)	4.84	
Y- A	-1913 / 0	0.0	0.0	0.19 (1)	6.07	
N- L	-1889 / 0	0.0	0.0	0.19 (1)	6.10	
Z- Y	0 / 0	-96.5	-96.5	0.16 (1)	10.00	
Y- X	0 / 0	-18.5	-18.5	0.15 (4)	10.00	
X- W	0 / 2129	-18.5	-18.5	0.44 (1)	10.00	
W- V	0 / 2129	-18.5	-18.5	0.44 (1)	10.00	
V- U	0 / 1850	-18.5	-18.5	0.40 (1)	10.00	
U- T	0 / 2429	-18.5	-18.5	0.40 (1)	10.00	
T- S	0 / 2073	-18.5	-18.5	0.46 (1)	10.00	
S- R	0 / 2415	-18.5	-18.5	0.51 (1)	10.00	
R- Q	0 / 2415	-18.5	-18.5	0.51 (1)	10.00	
Q- P	0 / 2751	-18.5	-18.5	0.50 (1)	10.00	
P- O	0 / 1670	-18.5	-18.5	0.28 (1)	10.00	
O- N	0 / 0	-18.5	-18.5	0.12 (1)	10.00	
N- M	0 / 0	-96.5	-96.5	0.16 (1)	10.00	

WEBS

MEMB. FR-TO	MAX. FACTORED FORCE (LBS)	MAX CSI (LC)
X- B	-184 / 22	0.08 (1)
B- V	-366 / 0	0.50 (1)
V- D	0 / 361	0.08 (1)
D- U	0 / 592	0.10 (1)
U- E	-1503 / 0	0.90 (1)
E- T	0 / 1222	0.27 (1)
T- F	-466 / 0	0.21 (1)
T- G	0 / 605	0.10 (1)
S- G	0 / 561	0.13 (1)
S- H	-548 / 0	0.49 (1)
Q- H	0 / 259	0.06 (1)
Q- J	-393 / 0	0.16 (1)
P- J	0 / 180	0.04 (1)
P- K	0 / 1413	0.32 (1)
O- K	-1543 / 0	0.24 (1)
A- X	0 / 2151	0.48 (1)
O- L	0 / 1749	0.39 (1)

DESIGN CRITERIA

SPECIFIED LOADS:

TOP CH.	LL	=	21.0	PSF
	DL	=	6.0	PSF
BOT CH.	LL	=	0.0	PSF
	DL	=	7.4	PSF
TOTAL LOAD		=	34.4	PSF

SPACING = 24.0 IN. C/C

LOADING IN FLAT SECTION BASED ON A SLOPE OF 2.00/12 MINIMUM

THIS TRUSS IS DESIGNED FOR RESIDENTIAL OR SMALL BUILDING REQUIREMENTS OF PART 9, NBCC 2015

THIS DESIGN COMPLIES WITH:
- PART 9 OF BCBC 2018 , ABC 2019
- PART 9 OF OBC 2012 (2019 AMENDMENT)
- CSA 086-14
- TPIC 2014

DESIGN ASSUMPTIONS
-OVERHANG NOT TO BE ALTERED OR CUT OFF.

(55 % OF 23.0 P.S.F. G.S.L. PLUS 8.4 P.S.F. RAIN LOAD) EQUALS 21.0 P.S.F. SPECIFIED ROOF LIVE LOAD

ALLOWABLE DEFL.(LL)= L/360 (1.36")
CALCULATED VERT. DEFL.(LL) = L/ 999 (0.16")
ALLOWABLE DEFL.(TL)= L/360 (1.36")
CALCULATED VERT. DEFL.(TL) = L/ 999 (0.38")

CANTILEVER DEFLECTION:
ALLOWABLE DEFL.(LL)= L/120 (0.19")
CALCULATED VERT. DEFL.(LL) = L/ 999 (0.02")
ALLOWABLE DEFL.(TL)= L/120 (0.19")
CALCULATED VERT. DEFL.(TL) = L/ 559 (0.03")

CSI: TC=0.68/1.00 (F-G:1) , BC=0.51/1.00 (Q-S:1) , WB=0.90/1.00 (E-U:1) , SSI=0.26/1.00 (F-G:1)

DOL LUMBER=1.00 NAIL=1.00 LS BEND=1.10 COMP=1.10 SHEAR=1.10 TENS= 1.10

COMPANION LIVE LOAD FACTOR = 1.00

TRUSS PLATE MANUFACTURER IS NOT RESPONSIBLE FOR QUALITY CONTROL IN THE TRUSS MANUFACTURING PLANT .

NAIL VALUES

PLATE	GRIP(DRY) (PSI) MAX	MIN	SHEAR (PLI) MAX	MIN	SECTION (PLI) MAX	MIN
MT20	650	371	1747	788	1987	1873

PLATE PLACEMENT TOL. = 0.250 inches

PLATE ROTATION TOL. = 5.0 Deg.

JSI GRIP= 0.89 (D) (INPUT = 0.90)
JSI METAL= 0.69 (R) (INPUT = 1.00)

JOB NAME	TRUSS NAME	QUANTITY	PLY	JOB DESC.	DRWG NO.
346378	H15		1	TRUSS DESC. JT 45147	E22075305

Alpha Roof Truss, Maple

Version 8.530 S Feb 23 2022 MiTek Industries, Inc. Mon Jul 25 12:11:39 2022 Page 1

ID:9a plwcon izmXpuR1McGqzT9hG-pONcvNuBZ EYq6D0JbztYlxUw0AXivclw9BSl4yuY32

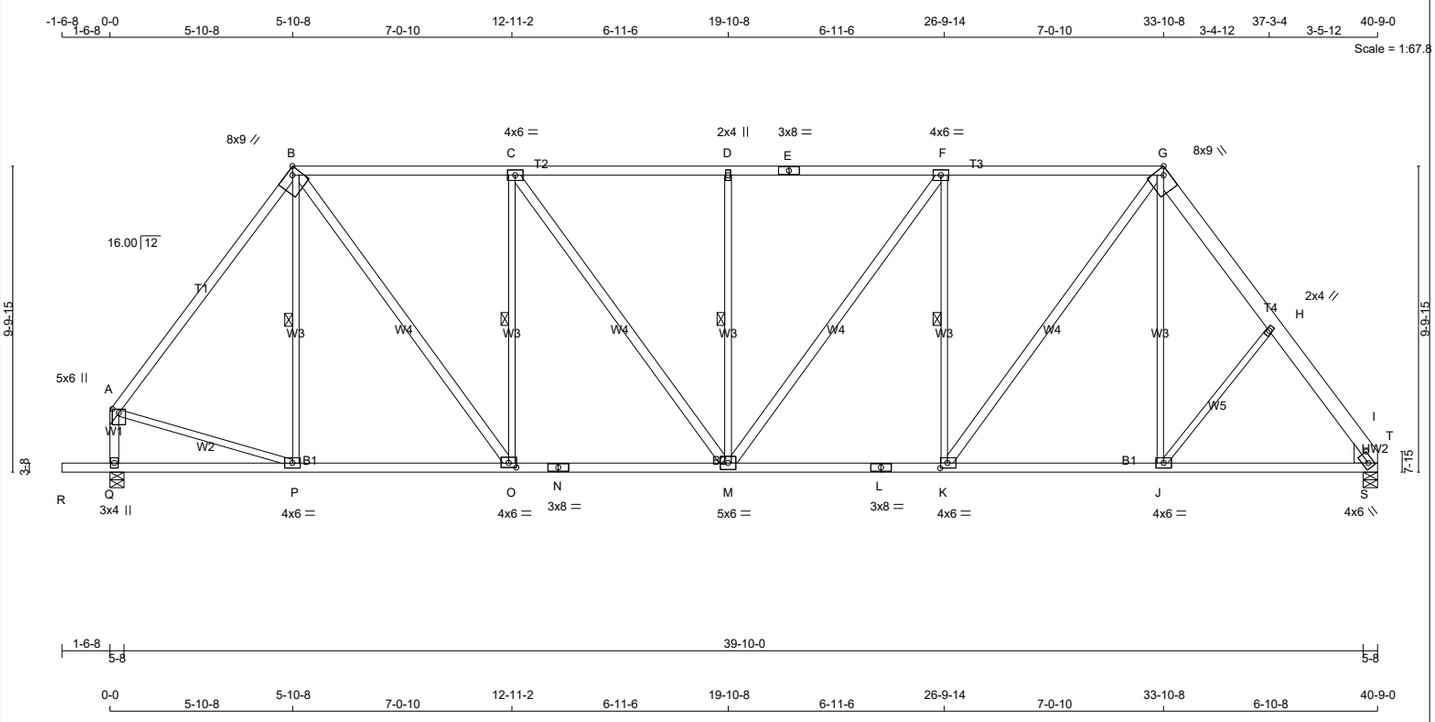

TOTAL WEIGHT = 7 X 215 = 1503 lb [M]

LUMBER

N. L. G. A. RULES

CHORDS	SIZE		LUMBER	DESCR.
A - B	2x4	DRY	1650F 1.5E	SPF
B - E	2x4	DRY	No.2	SPF
E - G	2x4	DRY	No.2	SPF
G - I	2x6	DRY	No.2	SPF
Q - A	2x4	DRY	No.2	SPF
R - N	2x4	DRY	No.2	SPF
N - L	2x4	DRY	No.2	SPF
L - I	2x4	DRY	No.2	SPF
ALL WEBS	2x3	DRY	No.2	SPF
EXCEPT				
B - O	2x4	DRY	No.2	SPF
C - M	2x4	DRY	No.2	SPF
M - F	2x4	DRY	No.2	SPF
K - G	2x4	DRY	No.2	SPF

DRY: SEASONED LUMBER.

PLATES (table is in inches)

JT	TYPE	PLATES	W	LEN	Y	X
A	TMVW+p	MT20	5.0	6.0	1.50	2.50
B	TTWW-h	MT20	8.0	9.0	Edge	2.75
C	TMWW-t	MT20	4.0	6.0		
D	TMW+w	MT20	2.0	4.0		
E	TS-t	MT20	3.0	8.0		
F	TMWW-t	MT20	4.0	6.0		
G	TTWW-h	MT20	8.0	9.0	Edge	2.75
H	TMW+w	MT20	2.0	4.0		
I	TBMH1-h	MT20	4.0	6.0	2.00	4.00
J	BMWW-t	MT20	4.0	6.0		
K	BMWW-t	MT20	4.0	6.0	2.00	2.75
L	BS-t	MT20	3.0	8.0		
M	BMWWW-t	MT20	5.0	6.0		
N	BS-t	MT20	3.0	8.0		
O	BMWW-t	MT20	4.0	6.0	1.75	3.00
P	BMWW-t	MT20	4.0	6.0		
Q	BMV1+p	MT20	3.0	4.0		

Edge - INDICATES REFERENCE CORNER OF PLATE TOUCHES EDGE OF CHORD.

LATERAL BRACE(S) SHOWN SHALL BE 2X4 SPF#2

DIMENSIONS, SUPPORTS AND LOADINGS SPECIFIED BY FABRICATOR TO BE VERIFIED BY BUILDING DESIGNER

BEARINGS

JT	FACTORED GROSS REACTION VERT	HORZ	MAXIMUM FACTORED GROSS REACTION DOWN	HORZ	UPLIFT	INPUT BRG IN-SX	REQRD BRG IN-SX	HEEL WEDGE
I	2170	0	2170	0	0	5-8	3-8	2x8 R
Q	2329	0	2329	0	0	5-8	3-14	

UNFACTORED REACTIONS

JT	1ST LCASE COMBINED	MAX./MIN. COMPONENT REACTIONS SNOW	LIVE	PERM.LIVE	WIND	DEAD	SOIL
I	1565	855 / 0	0 / 0	0 / 0	0 / 0	710 / 0	0 / 0
Q	1680	920 / 0	0 / 0	0 / 0	0 / 0	759 / 0	0 / 0

BEARING MATERIAL TO BE SPF NO.2 OR BETTER AT JOINT(S) I, Q

BRACING

FOR SECTION B-G, MAX. PURLIN SPACING = 2.00 FT.
FOR OTHER SECTIONS, TOP CHORD TO BE SHEATHED OR MAX. PURLIN SPACING = 4.83 FT.
MAX. UNBRACED BOTTOM CHORD LENGTH = 10.00 FT OR RIGID CEILING DIRECTLY APPLIED.

ALL PITCH BREAKS AND PERIMETER CORNER JOINTS MUST BE LATERALLY RESTRAINED.

1 LATERAL BRACE(S) AT 1/ 2 LENGTH OF B-P, C-O, D-M, F-K.

END VERTICAL(S) MUST BE SHEATHED OR HAVE BRACES AS INDICATED IN THE MAX. UNBRACED LENGTH COLUMN OF THE TABLE BELOW

LOADING

TOTAL LOAD CASES: (4)

CHORDS

MEMB. FR-TO	MAX. FACTORED FORCE (LBS)	VERT. LOAD LC1 FROM (PLF)	TO	MAX CSI (LC)	MAX. UNBRAC LENGTH
A- B	-1984 / 0	-78.0	-78.0	0.65 (1)	4.83
B- C	-2130 / 0	-93.0	-93.0	0.94 (1)	2.00
C- D	-2431 / 0	-93.0	-93.0	0.99 (1)	2.00
D- E	-2431 / 0	-93.0	-93.0	0.99 (1)	2.00
E- F	-2431 / 0	-93.0	-93.0	0.99 (1)	2.00
F- G	-2207 / 0	-93.0	-93.0	0.95 (1)	2.00
G- H	-2290 / 0	-78.0	-78.0	0.10 (1)	5.34
H- T	-2447 / 0	-78.0	-78.0	0.07 (1)	5.23
T- I	-2710 / 0	-78.0	-78.0	0.08 (1)	5.02
Q- A	-2138 / 0	0.0	0.0	0.25 (1)	5.80
R- Q	0 / 0	-96.5	-96.5	0.16 (1)	10.00
Q- P	0 / 0	-18.5	-18.5	0.18 (4)	10.00
P- O	0 / 1184	-18.5	-18.5	0.32 (4)	10.00
O- N	0 / 2130	-18.5	-18.5	0.44 (1)	10.00
N- M	0 / 2130	-18.5	-18.5	0.44 (1)	10.00
M- L	0 / 2208	-18.5	-18.5	0.46 (1)	10.00
L- K	0 / 2208	-18.5	-18.5	0.46 (1)	10.00
K- J	0 / 1350	-18.5	-18.5	0.33 (4)	10.00
J- S	0 / 1464	-18.5	-18.5	0.34 (4)	10.00
S- I	0 / 1464	-18.5	-18.5	0.30 (1)	10.00

WEBS

MEMB. FR-TO	MAX. FACTORED FORCE (LBS)	MAX CSI (LC)
P- B	-186 / 0	0.12 (1)
B- O	0 / 1586	0.26 (1)
O- C	-1144 / 0	0.74 (1)
C- M	0 / 512	0.08 (1)
M- D	-595 / 0	0.39 (1)
M- F	0 / 379	0.06 (1)
K- F	-1014 / 0	0.66 (1)
K- G	0 / 1431	0.23 (1)
J- G	0 / 271	0.06 (4)
J- H	-184 / 0	0.11 (1)
A- P	0 / 1228	0.28 (1)
S- T	0 / 217	0.00 (1)

DESIGN CRITERIA

SPECIFIED LOADS:

TOP CH.	LL	=	21.0	PSF
	DL	=	6.0	PSF
BOT CH.	LL	=	0.0	PSF
	DL	=	7.4	PSF
TOTAL LOAD		=	34.4	PSF

SPACING = 24.0 IN. C/C

LOADING IN FLAT SECTION BASED ON PIGGYBACK TRUSS WITH SLOPES OF 6.00/12 AND -6.00/12 AND RESPECTIVE HEEL HEIGHTS OF 0-0 AND 0-0 AND AN ADDITIONAL DEAD LOAD OF 6.0 P.S.F.

THIS TRUSS IS DESIGNED FOR RESIDENTIAL OR SMALL BUILDING REQUIREMENTS OF PART 9, NBCC 2015

THIS DESIGN COMPLIES WITH:
- PART 9 OF BCBC 2018 , ABC 2019
- PART 9 OF OBC 2012 (2019 AMENDMENT)
- CSA 086-14
- TPIC 2014

(55 % OF 23.0 P.S.F. G.S.L. PLUS 8.4 P.S.F. RAIN LOAD) EQUALS 21.0 P.S.F. SPECIFIED ROOF LIVE LOAD

ALLOWABLE DEFL.(LL)= L/360 (1.36")
CALCULATED VERT. DEFL.(LL) = L/ 999 (0.10")
ALLOWABLE DEFL.(TL)= L/360 (1.36")
CALCULATED VERT. DEFL.(TL) = L/ 999 (0.23")

CANTILEVER DEFLECTION:
ALLOWABLE DEFL.(LL)= L/120 (0.19")
CALCULATED VERT. DEFL.(LL) = L/ 999 (0.01")
ALLOWABLE DEFL.(TL)= L/120 (0.19")
CALCULATED VERT. DEFL.(TL) = L/ 999 (0.01")

CSI: TC=0.99/1.00 (D-F:1) , BC=0.46/1.00 (K-M:1) , WB=0.74/1.00 (C-O:1) , SSI=0.31/1.00 (F-G:1)

DOL LUMBER=1.00 NAIL=1.00 LS BEND=1.10 COMP=1.10 SHEAR=1.10 TENS= 1.10

COMPANION LIVE LOAD FACTOR = 1.00

AUTOSOLVE LEFT HEEL ONLY

TRUSS PLATE MANUFACTURER IS NOT RESPONSIBLE FOR QUALITY CONTROL IN THE TRUSS MANUFACTURING PLANT .

NAIL VALUES

PLATE	GRIP(DRY) (PSI) MAX	MIN	SHEAR (PLI) MAX	MIN	SECTION (PLI) MAX	MIN
MT20	650	371	1747	788	1987	1873

PLATE PLACEMENT TOL. = 0.250 inches

PLATE ROTATION TOL. = 5.0 Deg.

JSI GRIP= 0.88 (K) (INPUT = 0.90)
JSI METAL= 0.68 (L) (INPUT = 1.00)

JOB NAME	TRUSS NAME	QUANTITY	PLY	JOB DESC.	DRWG NO.
346378	H16A		1	TRUSS DESC. JT 45147	E22075306

Alpha Roof Truss, Maple

Version 8.530 S Feb 23 2022 MiTek Industries, Inc. Mon Jul 25 12:11:41 2022 Page 1

ID:9a plwcon izmXpuR1McGqzT9hG-lnVNK2vR5cUG4QNPR0?LdA1wdpkZAok2OTqZqyyuY30

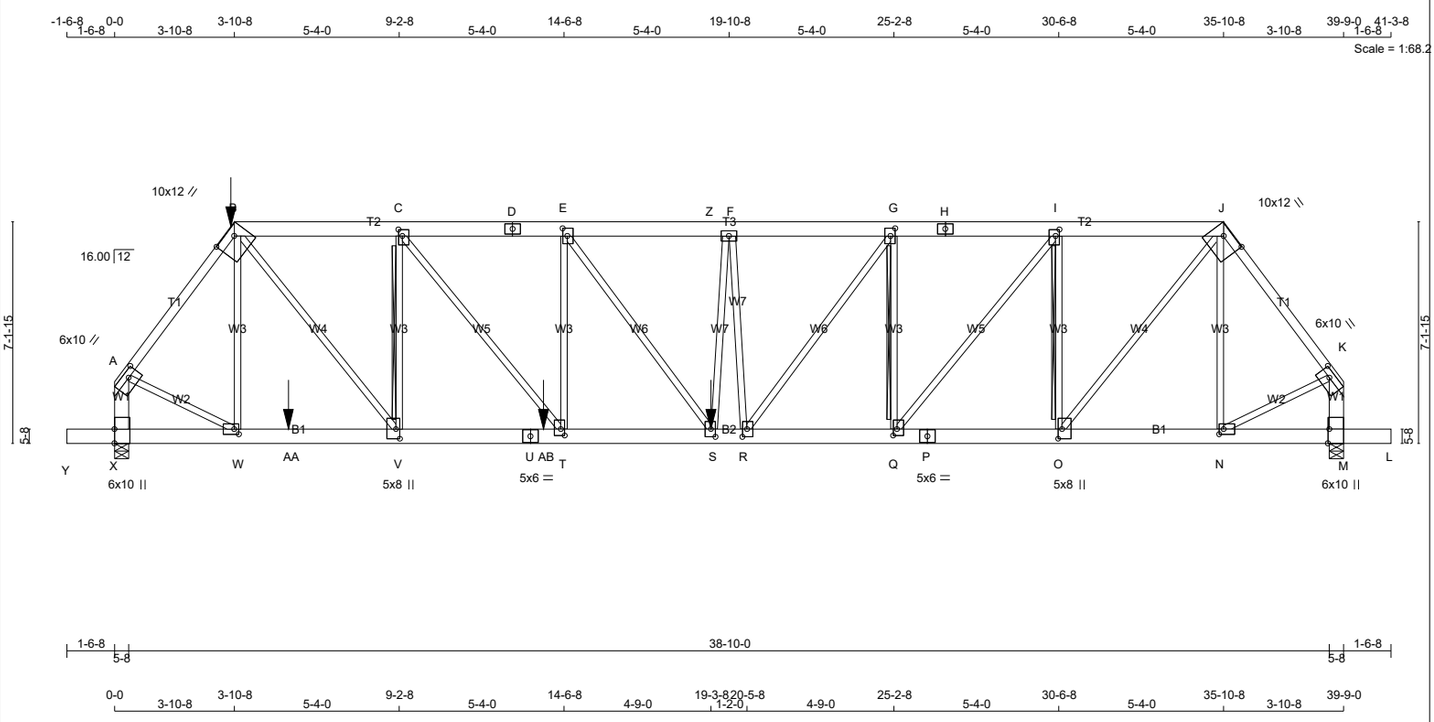

TOTAL WEIGHT = 241 lb

[M]

LUMBER

N. L. G. A. RULES

CHORDS	SIZE		LUMBER	DESCR.
A - B	2x4	DRY	No.2	SPF
B - D	2x6	DRY	No.2	SPF
D - H	2x6	DRY	No.2	SPF
H - J	2x6	DRY	No.2	SPF
J - K	2x4	DRY	No.2	SPF
X - A	2x6	DRY	No.2	SPF
M - K	2x6	DRY	No.2	SPF
Y - U	2x6	DRY	No.2	SPF
U - P	2x6	DRY	No.2	SPF
P - L	2x6	DRY	No.2	SPF
ALL WEBS EXCEPT	2x3	DRY	No.2	SPF

DRY: SEASONED LUMBER.

PLATES (table is in inches)

JT	TYPE	PLATES	W	LEN	Y	X
A	TMVW-t	MT20	6.0	10.0	2.25	4.00
B	TTWW-h	MT20	10.0	12.0	3.00	7.50
C	TMWW+t	MT20	4.0	6.0	2.50	1.50
D	TS-t	MT20	4.0	6.0		
E	TMWW+t	MT20	4.0	6.0	3.00	1.75
F	TMWW-t	MT20	4.0	6.0		
G	TMWW+t	MT20	4.0	6.0	3.00	1.75
H	TS-t	MT20	4.0	6.0		
I	TMWW+t	MT20	4.0	6.0	2.50	1.50
J	TTWW-h	MT20	10.0	12.0	3.00	7.50
K	TMVW-t	MT20	6.0	10.0	2.25	4.00
M	BMV1+t	MT20	6.0	10.0	Edge	0.50
N	BMWW-t	MT20	4.0	6.0	2.00	1.75
O	BMWW+t	MT20	5.0	8.0	3.75	1.50
P	BS-t	MT20	5.0	6.0		
Q	BMWW+t	MT20	4.0	6.0	2.50	1.50
R	BMWW+t	MT20	4.0	6.0	3.00	1.75
S	BMWW+t	MT20	4.0	6.0	3.00	1.75
T	BMWW+t	MT20	4.0	6.0	2.50	1.50
U	BS-t	MT20	5.0	6.0		
V	BMWW+t	MT20	5.0	8.0	3.75	1.50
W	BMWW-t	MT20	4.0	6.0	2.00	1.75
X	BMV1+t	MT20	6.0	10.0	Edge	

Edge - INDICATES REFERENCE CORNER OF PLATE TOUCHES EDGE OF CHORD.

LATERAL BRACE(S) SHOWN SHALL BE 2X4 SPF#2

LICENSED PROFESSIONAL ENGINEER
Y. WIDYA
100225448
07/25/2022
PROVINCE OF ONTARIO

DIMENSIONS, SUPPORTS AND LOADINGS SPECIFIED BY FABRICATOR TO BE VERIFIED BY BUILDING DESIGNER

BEARINGS

JT	FACTORED GROSS REACTION VERT	HORZ	MAXIMUM FACTORED GROSS REACTION DOWN	HORZ	UPLIFT	INPUT BRG IN-SX	REQRD BRG IN-SX
X	3986	0	3986	0	0	5-8	5-8
M	3045	0	3045	0	0	5-8	4-3

UNFACTORED REACTIONS

JT	1ST LCASE COMBINED	MAX./MIN. COMPONENT REACTIONS SNOW	LIVE	PERM.LIVE	WIND	DEAD	SOIL
X	2819	1849 / 0	0 / 0	0 / 0	0 / 0	970 / 0	0 / 0
M	2157	1395 / 0	0 / 0	0 / 0	0 / 0	762 / 0	0 / 0

BEARING MATERIAL TO BE SPF NO.2 OR BETTER AT JOINT(S) X, M
BEARING SIZE FACTOR = 1.15 AT JNT(S) X (BASED ON SUPPORT DEPTH = 1-8)

BRACING

TOP CHORD TO BE SHEATHED OR MAX. PURLIN SPACING = 3.30 FT.
MAX. UNBRACED BOTTOM CHORD LENGTH = 10.00 FT OR RIGID CEILING DIRECTLY APPLIED.

ALL PITCH BREAKS AND PERIMETER CORNER JOINTS MUST BE LATERALLY RESTRAINED.

2x4 DRY SPF No.2 T-BRACE AT C-V, G-Q, I-O

FASTEN T AND I-BRACES TO NARROW EDGE OF WEB WITH ONE ROW PER PLY OF 3" COMMON WIRE NAILS @ 6" O.C. WITH 3" MINIMUM END DISTANCE. BRACE MUST COVER 90% OF WEB LENGTH.

END VERTICAL(S) MUST BE SHEATHED OR HAVE BRACES AS INDICATED IN THE MAX. UNBRACED LENGTH COLUMN OF THE TABLE BELOW

LOADING

TOTAL LOAD CASES: (4)

CHORDS

MEMB. FR-TO	MAX. FACTORED FORCE (LBS)	VERT. LOAD (PLF) FROM	TO	LC1 MAX CSI (LC)	MAX. UNBRAC LENGTH
A- B	-3598 / 0	-78.0	-78.0	0.59 (1)	3.30
B- C	-4246 / 0	-114.5	-114.5	0.35 (1)	3.90
C- D	-5520 / 0	-114.5	-114.5	0.45 (1)	3.39
D- E	-5520 / 0	-114.5	-114.5	0.45 (1)	3.39
E- Z	-5781 / 0	-114.5	-114.5	0.44 (1)	3.34
Z- F	-5781 / 0	-78.0	-78.0	0.44 (1)	3.34
F- G	-5698 / 0	-78.0	-78.0	0.37 (1)	3.42
G- H	-4776 / 0	-78.0	-78.0	0.33 (1)	3.75
H- I	-4776 / 0	-78.0	-78.0	0.33 (1)	3.75
I- J	-3403 / 0	-78.0	-78.0	0.24 (1)	4.41
J- K	-2648 / 0	-78.0	-78.0	0.43 (1)	3.90
X- A	-3856 / 0	0.0	0.0	0.31 (1)	5.40
M- K	-2877 / 0	0.0	0.0	0.23 (1)	6.14
Y- X	0 / 0	-96.5	-96.5	0.08 (1)	10.00
X- W	0 / 0	-27.2	-27.2	0.21 (1)	10.00
W-AA	0 / 2153	-27.2	-27.2	0.55 (1)	10.00
AA- V	0 / 2153	-27.2	-27.2	0.55 (1)	10.00
V- U	0 / 4246	-27.2	-27.2	0.71 (1)	10.00
U-AB	0 / 4246	-27.2	-27.2	0.71 (1)	10.00
AB- T	0 / 4246	-27.2	-27.2	0.71 (1)	10.00
T- S	0 / 5520	-27.2	-27.2	0.90 (1)	10.00
S- R	0 / 5749	-18.5	-18.5	0.93 (1)	10.00
R- Q	0 / 4776	-18.5	-18.5	0.68 (1)	10.00
Q- P	0 / 3403	-18.5	-18.5	0.49 (1)	10.00
P- O	0 / 3403	-18.5	-18.5	0.49 (1)	10.00
O- N	0 / 1579	-18.5	-18.5	0.26 (1)	10.00
N- M	0 / 0	-18.5	-18.5	0.06 (4)	10.00
M- L	0 / 0	-96.5	-96.5	0.08 (1)	10.00

WEBS

MEMB. FR-TO	MAX. FACTORED FORCE (LBS)	MAX CSI (LC)
W- B	-279 / 0	0.22 (1)
B- V	0 / 3361	0.83 (1)
V- C	-2271 / 0	0.77 (1)
C- T	0 / 2045	0.51 (1)
T- E	-969 / 0	0.77 (1)
E- S	0 / 446	0.11 (1)
S- F	0 / 363	0.09 (1)
F- R	-857 / 0	0.69 (1)
R- G	0 / 1575	0.39 (1)
Q- G	-1664 / 0	0.56 (1)
Q- I	0 / 2204	0.55 (1)
O- I	-2189 / 0	0.74 (1)
O- J	0 / 2927	0.72 (1)
N- J	-497 / 0	0.40 (1)
A- W	0 / 2309	0.57 (1)
N- K	0 / 1699	0.42 (1)

FACTORED CONCENTRATED LOADS (LBS)

JT	LOC.	LC1	MAX-	MAX+	FACE	DIR.	TYPE	HEEL	CONN.
B	3-10-8	-120	-120	---	FRONT	VERT	TOTAL	---	C1
S	19-3-8	-1072	-1072	---	FRONT	VERT	TOTAL	---	C1
AA	5-7-8	-488	-488	---	FRONT	VERT	TOTAL	---	C1
AB	13-10-8	-488	-488	---	FRONT	VERT	TOTAL	---	C1

CONNECTION REQUIREMENTS

1) **C1:** A SUITABLE HANGER/MECHANICAL CONNECTION IS REQUIRED.

DESIGN CRITERIA

*** SPECIAL LOADS ANALYSIS ***
GEOMETRY AND/OR BASIC LOADS CHANGED BY USER.
LOADS WERE DERIVED FROM USER INPUT
NO FURTHER MODIFICATIONS WERE MADE

SPECIFIED LOADS:

TOP CH.	LL	=	21.0	PSF
	DL	=	6.0	PSF
BOT CH.	LL	=	0.0	PSF
	DL	=	7.4	PSF
TOTAL LOAD		=	34.4	PSF

SPACING = 24.0 IN. C/C

LOADING IN FLAT SECTION BASED ON A SLOPE OF 2.00/12 MINIMUM

GIRDER TYPE: CPrimeHip
SIDE SETBACK = 3-10-8
END SETBACK = 3-10-8
END WALL WIDTH = 0-0
CORNER FRAMING TYPE: CONVENTIONAL
END JACK TYPE: CONVENTIONAL
APPLIED TO FRONT SIDE
- ADDT'L LOADS BASED ON 55 % OF GSL.
LOADS APPLIED TO FIRST 19-3-8 OF SPAN MEASURED FROM THE LEFT.

*** NON STANDARD GIRDER ***
ADDT'L USER-DEFINED LOADS APPLIED TO ALL LOAD CASES.

THIS TRUSS IS DESIGNED FOR RESIDENTIAL OR SMALL BUILDING REQUIREMENTS OF PART 9, NBCC 2015

THIS DESIGN COMPLIES WITH:
- PART 9 OF BCBC 2018 , ABC 2019
- PART 9 OF OBC 2012 (2019 AMENDMENT)
- CSA 086-14
- TPIC 2014

(55 % OF 23.0 P.S.F. G.S.L. PLUS 8.4 P.S.F. RAIN LOAD) EQUALS 21.0 P.S.F. SPECIFIED ROOF LIVE LOAD

ALLOWABLE DEFL.(LL)= L/360 (1.33")
CALCULATED VERT. DEFL.(LL) = L/ 999 (0.27")
ALLOWABLE DEFL.(TL)= L/360 (1.33")
CALCULATED VERT. DEFL.(TL) = L/ 972 (0.49")

CANTILEVER DEFLECTION:
ALLOWABLE DEFL.(LL)= L/120 (0.19")
CALCULATED VERT. DEFL.(LL) = L/ 999 (0.00")
ALLOWABLE DEFL.(TL)= L/120 (0.19")
CALCULATED VERT. DEFL.(TL) = L/ 999 (0.00")

CSI: TC=0.59/1.00 (A-B:1) , BC=0.93/1.00 (R-S:1) , WB=0.83/1.00 (B-V:1) , SSI=0.32/1.00 (T-V:1)

DOL LUMBER=1.00 NAIL=1.00 LS BEND=1.00 COMP=1.00 SHEAR=1.00 TENS= 1.00

COMPANION LIVE LOAD FACTOR = 1.00

AUTOSOLVE HEELS OFF

TRUSS PLATE MANUFACTURER IS NOT RESPONSIBLE FOR QUALITY CONTROL IN THE TRUSS MANUFACTURING PLANT .

NAIL VALUES

PLATE	GRIP(DRY) (PSI) MAX	MIN	SHEAR (PLI) MAX	MIN	SECTION (PLI) MAX	MIN
MT20	650	371	1747	788	1987	1873

PLATE PLACEMENT TOL. = 0.250 inches

PLATE ROTATION TOL. = 5.0 Deg.

JSI GRIP= 0.90 (C) (INPUT = 0.90)
JSI METAL= 0.88 (U) (INPUT = 1.00)

JOB NAME	TRUSS NAME	QUANTITY	PLY	JOB DESC.	DRWG NO.
346378	H17		1	TRUSS DESC. JT 45147	E22075307

Alpa Roof Truss, Maple

Version 8.530 S Feb 23 2022 MiTek Industries, Inc. Mon Jul 25 12:11:43 2022 Page 1

ID:9a plwcon izmXpuR1McGqzT9hG-h9d7lkxhdDk JjXoYR2pib6I daLeiMLrn9qvryuY3_

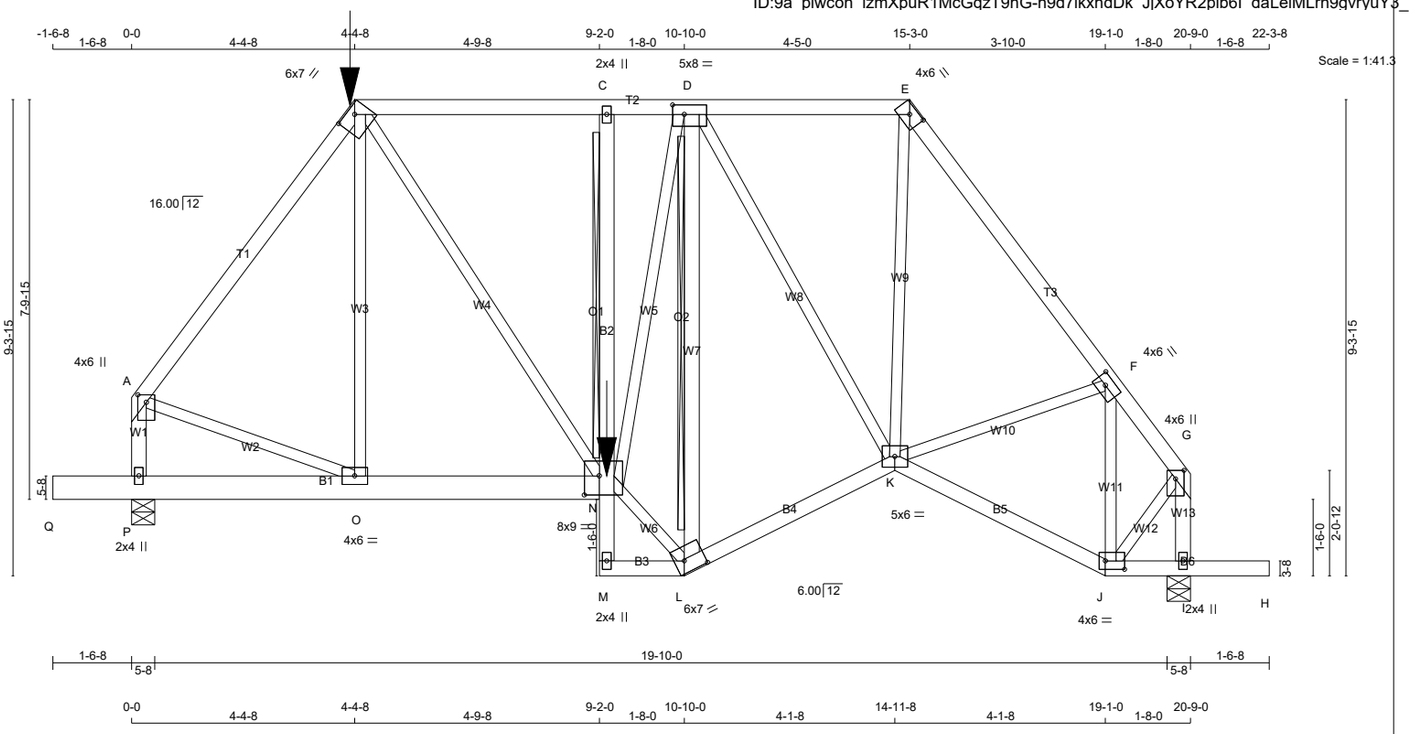

LUMBER

N. L. G. A. RULES

CHORDS	SIZE		LUMBER	DESCR.
A - B	2x4	DRY	No.2	SPF
B - E	2x4	DRY	No.2	SPF
E - G	2x4	DRY	No.2	SPF
P - A	2x4	DRY	No.2	SPF
I - G	2x4	DRY	No.2	SPF
Q - N	2x6	DRY	No.2	SPF
M - C	2x4	DRY	No.2	SPF
M - L	2x4	DRY	No.2	SPF
L - K	2x4	DRY	No.2	SPF
K - J	2x4	DRY	No.2	SPF
J - H	2x4	DRY	No.2	SPF
ALL WEBS EXCEPT	2x3	DRY	No.2	SPF
L - D	2x4	DRY	No.2	SPF

DRY: SEASONED LUMBER.

PLATES (table is in inches)

JT	TYPE	PLATES	W	LEN	Y	X
A	TMVW+p	MT20	4.0	6.0	1.75	2.00
B	TTWW-h	MT20	6.0	7.0	1.75	4.00
C	TMV+p	MT20	2.0	4.0		
D	TMWWW-t	MT20	5.0	8.0	2.25	2.75
E	TTW-h	MT20	4.0	6.0	1.75	3.00
F	TMWW-t	MT20	4.0	6.0	2.00	2.50
G	TMVW+p	MT20	4.0	6.0	2.00	2.00
I	BMV1+p	MT20	2.0	4.0		
J	BBWW-l	MT20	4.0	6.0	2.00	4.50
K	BBWWW-p	MT20	5.0	6.0		
L	BBWW-h	MT20	6.0	7.0	2.75	4.75
M	BMV+p	MT20	2.0	4.0		
N	BVMWWW-l	MT20	8.0	9.0	4.50	3.50
O	BMWW-t	MT20	4.0	6.0		
P	BMV1+p	MT20	2.0	4.0		

LATERAL BRACE(S) SHOWN SHALL BE 2X4 SPF#2

DIMENSIONS, SUPPORTS AND LOADINGS SPECIFIED BY FABRICATOR TO BE VERIFIED BY BUILDING DESIGNER

BEARINGS

JT	FACTORED GROSS REACTION VERT	HORZ	MAXIMUM FACTORED GROSS REACTION DOWN	HORZ	UPLIFT	INPUT BRG IN-SX	REQRD BRG IN-SX
P	1903	0	1903	0	0	5-8	2-9
I	1612	0	1612	0	0	5-8	1-11

UNFACTORED REACTIONS

JT	1ST LCASE COMBINED	MAX./MIN. COMPONENT REACTIONS SNOW	LIVE	PERM.LIVE	WIND	DEAD	SOIL
P	1351	859 / 0	0 / 0	0 / 0	0 / 0	492 / 0	0 / 0
I	1143	732 / 0	0 / 0	0 / 0	0 / 0	411 / 0	0 / 0

BEARING MATERIAL TO BE SPF NO.2 OR BETTER AT JOINT(S) P, I

BRACING

TOP CHORD TO BE SHEATHED OR MAX. PURLIN SPACING = 4.82 FT.
MAX. UNBRACED BOTTOM CHORD LENGTH = 7.81 FT OR RIGID CEILING DIRECTLY APPLIED.

ALL PITCH BREAKS AND PERIMETER CORNER JOINTS MUST BE LATERALLY RESTRAINED.

2x3 DRY SPF No.2 T-BRACE AT C-N
2x4 DRY SPF No.2 T-BRACE AT D-L

FASTEN T AND I-BRACES TO NARROW EDGE OF WEB WITH ONE ROW PER PLY OF 3" COMMON WIRE NAILS @ 6" O.C. WITH 3" MINIMUM END DISTANCE. BRACE MUST COVER 90% OF WEB LENGTH.

END VERTICAL(S) MUST BE SHEATHED OR HAVE BRACES AS INDICATED IN THE MAX. UNBRACED LENGTH COLUMN OF THE TABLE BELOW

LOADING

TOTAL LOAD CASES: (4)

CHORDS

MEMB. FR-TO	MAX. FACTORED FORCE (LBS)	VERT. LOAD (PLF) FROM	TO	LC1 MAX CSI (LC)	MAX. UNBRAC LENGTH
A- B	-1526 / 0	-78.0	-78.0	0.40 (1)	4.91
B- C	-1412 / 0	-124.3	-124.3	0.48 (1)	4.82
C- D	-1405 / 0	-78.0	-78.0	0.35 (1)	4.99
D- E	-970 / 0	-78.0	-78.0	0.20 (1)	6.04
E- F	-1577 / 0	-78.0	-78.0	0.24 (1)	5.02
F- G	-954 / 0	-78.0	-78.0	0.16 (1)	6.13
P- A	-1704 / 0	0.0	0.0	0.21 (1)	6.32
I- G	-1379 / 0	0.0	0.0	0.17 (1)	6.88
Q- P	0 / 0	-96.5	-96.5	0.08 (1)	10.00
P- O	0 / 0	-29.5	-29.5	0.09 (4)	10.00
O- N	0 / 909	-29.5	-29.5	0.17 (1)	10.00
M- N	0 / 16	0.0	0.0	0.09 (1)	10.00
N- C	-462 / 0	0.0	0.0	0.22 (1)	7.81
M- L	0 / 37	-18.5	-18.5	0.02 (4)	10.00
L- K	0 / 1211	-18.5	-18.5	0.27 (1)	10.00
K- J	0 / 646	-18.5	-18.5	0.17 (1)	10.00
J- I	0 / 0	-18.5	-18.5	0.17 (1)	10.00
I- H	0 / 0	-96.5	-96.5	0.17 (1)	10.00

WEBS

MEMB. FR-TO	MAX. FACTORED FORCE (LBS)	MAX CSI (LC)
O- B	-141 / 80	0.15 (1)
B- N	0 / 908	0.22 (1)
N- L	0 / 1469	0.36 (1)
N- D	0 / 1593	0.39 (1)
L- D	-1547 / 0	0.82 (1)
D- K	-226 / 0	0.30 (1)
K- E	0 / 973	0.24 (1)
K- F	0 / 376	0.09 (1)
J- F	-883 / 0	0.23 (1)
A- O	0 / 962	0.24 (1)
J- G	0 / 835	0.21 (1)

FACTORED CONCENTRATED LOADS (LBS)

JT	LOC.	LC1	MAX-	MAX+	FACE	DIR.	TYPE	HEEL	CONN.
B	4-4-8	-163	-163	---	FRONT	VERT	TOTAL	---	C1
N	9-3-12	-721	-721	---	FRONT	VERT	TOTAL	---	C1

CONNECTION REQUIREMENTS

1) **C1:** A SUITABLE HANGER/MECHANICAL CONNECTION IS REQUIRED.

DESIGN CRITERIA

*** SPECIAL LOADS ANALYSIS ***
GEOMETRY AND/OR BASIC LOADS CHANGED BY USER.
LOADS WERE DERIVED FROM USER INPUT
NO FURTHER MODIFICATIONS WERE MADE

SPECIFIED LOADS:

TOP	CH.	LL	=	21.0	PSF
		DL	=	6.0	PSF
BOT	CH.	LL	=	0.0	PSF
		DL	=	7.4	PSF
TOTAL	LOAD		=	34.4	PSF

SPACING = 24.0 IN. C/C

LOADING IN FLAT SECTION BASED ON A SLOPE OF 2.00/12 MINIMUM

GIRDER TYPE: CPrimeHip
LEFT SETBACK = 4-4-8
RIGHT SETBACK = 5-6-0
END SETBACK = 4-4-8
END WALL WIDTH = 0-0
CORNER FRAMING TYPE: CONVENTIONAL
END JACK TYPE: CONVENTIONAL
APPLIED TO FRONT SIDE
- ADDT'L LOADS BASED ON 55 % OF GSL.
LOADS APPLIED TO FIRST 9-5-8 OF SPAN MEASURED FROM THE LEFT.

*** NON STANDARD GIRDER ***
ADDT'L USER-DEFINED LOADS APPLIED TO ALL LOAD CASES.

THIS TRUSS IS DESIGNED FOR RESIDENTIAL OR SMALL BUILDING REQUIREMENTS OF PART 9, NBCC 2015

THIS DESIGN COMPLIES WITH:
- PART 9 OF BCBC 2018 , ABC 2019
- PART 9 OF OBC 2012 (2019 AMENDMENT)
- CSA 086-14
- TPIC 2014

DESIGN ASSUMPTIONS
-OVERHANG NOT TO BE ALTERED OR CUT OFF.

(55 % OF 23.0 P.S.F. G.S.L. PLUS 8.4 P.S.F. RAIN LOAD) EQUALS 21.0 P.S.F. SPECIFIED ROOF LIVE LOAD

ALLOWABLE DEFL.(LL)= L/360 (0.69")
CALCULATED VERT. DEFL.(LL) = L/ 999 (0.06")
ALLOWABLE DEFL.(TL)= L/360 (0.69")
CALCULATED VERT. DEFL.(TL) = L/ 999 (0.11")

CANTILEVER DEFLECTION:
ALLOWABLE DEFL.(LL)= L/120 (0.19")
CALCULATED VERT. DEFL.(LL) = L/ 999 (0.01")
ALLOWABLE DEFL.(TL)= L/120 (0.19")
CALCULATED VERT. DEFL.(TL) = L/ 999 (0.01")

CSI: TC=0.48/1.00 (B-C:1) , BC=0.27/1.00 (K-L:1) , WB=0.82/1.00 (D-L:1) , SSI=0.30/1.00 (B-C:1)

DOL LUMBER=1.00 NAIL=1.00 LS BEND=1.00 COMP=1.00 SHEAR=1.00 TENS= 1.00

COMPANION LIVE LOAD FACTOR = 1.00

AUTOSOLVE HEELS OFF

TRUSS PLATE MANUFACTURER IS NOT RESPONSIBLE FOR QUALITY CONTROL IN THE TRUSS MANUFACTURING PLANT .

NAIL VALUES

PLATE	GRIP(DRY) (PSI) MAX	MIN	SHEAR (PLI) MAX	MIN	SECTION (PLI) MAX	MIN
MT20	650	371	1747	788	1987	1873

PLATE PLACEMENT TOL. = 0.250 inches

PLATE ROTATION TOL. = 5.0 Deg.

JSI GRIP= 0.85 (P) (INPUT = 0.90)
JSI METAL= 0.55 (A) (INPUT = 1.00)

JOB NAME	TRUSS NAME	QUANTITY	PLY	JOB DESC.	DRWG NO.
346378	H18		1	TRUSS DESC. JT 45147	E22075308

Alpa Roof Truss, Maple

Version 8.530 S Feb 23 2022 MiTek Industries, Inc. Mon Jul 25 12:11:44 2022 Page 1

ID:9a plwcon izmXpuR1McGqzT9hG-9MBVy4yJOXsrxt6 68Z2FofUz1wSNGyV4RvDQHyuY2z

Scale = 1:52.1

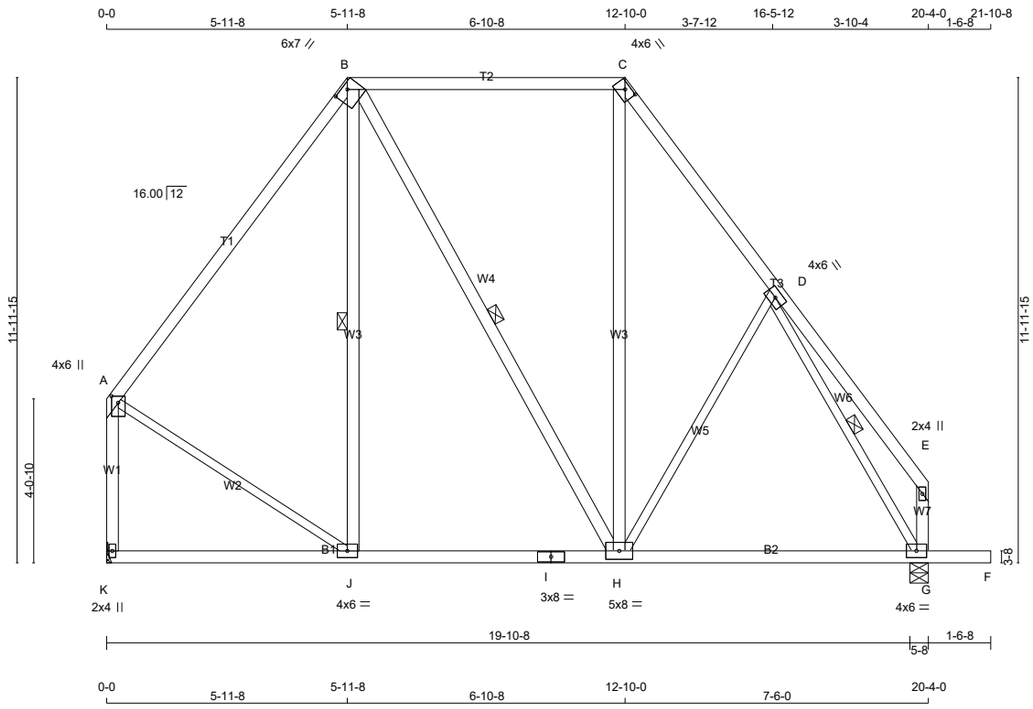

TOTAL WEIGHT = 2 X 123 = 247 lb

[M][F]

LUMBER

N. L. G. A. RULES

CHORDS	SIZE		LUMBER	DESCR.
A - B	2x4	DRY	2100F 1.8E	SPF
B - C	2x4	DRY	1650F 1.5E	SPF
C - E	2x4	DRY	No.2	SPF
K - A	2x4	DRY	No.2	SPF
G - E	2x4	DRY	No.2	SPF
K - I	2x4	DRY	No.2	SPF
I - F	2x4	DRY	No.2	SPF
ALL WEBS	2x4	DRY	No.2	SPF
EXCEPT				
H - D	2x3	DRY	No.2	SPF
A - J	2x3	DRY	No.2	SPF
D - G	2x3	DRY	No.2	SPF

DRY: SEASONED LUMBER.

PLATES (table is in inches)

JT	TYPE	PLATES	W	LEN	Y	X
A	TMVW+p	MT20	4.0	6.0	2.00	2.00
B	TTWW-h	MT20	6.0	7.0	1.50	3.75
C	TTW-h	MT20	4.0	6.0	1.50	3.00
D	TMWW-t	MT20	4.0	6.0		
E	TMV+p	MT20	2.0	4.0		
G	BMVW1-t	MT20	4.0	6.0		
H	BMWWW-t	MT20	5.0	8.0		
I	BS-t	MT20	3.0	8.0		
J	BMWW-t	MT20	4.0	6.0		
K	BMV1+p	MT20	2.0	4.0		

LATERAL BRACE(S) SHOWN SHALL BE 2X4 SPF#2

DIMENSIONS, SUPPORTS AND LOADINGS SPECIFIED BY FABRICATOR TO BE VERIFIED BY BUILDING DESIGNER

BEARINGS

JT	FACTORED GROSS REACTION VERT	HORZ	MAXIMUM FACTORED GROSS REACTION DOWN	HORZ	UPLIFT	INPUT BRG	REQRD BRG
K	981	0	981	0	0	MECHANICAL	
G	1129	0	1129	0	0	5-8	1-8

A SUITABLE HANGER/MECHANICAL CONNECTION IS REQUIRED AT JOINT K. MINIMUM BEARING LENGTH AT JOINT K = 1-8.

UNFACTORED REACTIONS

JT	1ST LCASE COMBINED	MAX./MIN. COMPONENT REACTIONS SNOW	LIVE	PERM.LIVE	WIND	DEAD	SOIL
K	699	427 / 0	0 / 0	0 / 0	0 / 0	272 / 0	0 / 0
G	805	492 / 0	0 / 0	0 / 0	0 / 0	314 / 0	0 / 0

BEARING MATERIAL TO BE SPF NO.2 OR BETTER AT JOINT(S) G

BRACING

TOP CHORD TO BE SHEATHED OR MAX. PURLIN SPACING = 6.25 FT.
MAX. UNBRACED BOTTOM CHORD LENGTH = 10.00 FT OR RIGID CEILING DIRECTLY APPLIED.

ALL PITCH BREAKS AND PERIMETER CORNER JOINTS MUST BE LATERALLY RESTRAINED.

1 LATERAL BRACE(S) AT 1/ 2 LENGTH OF B-J, B-H, D-G.

END VERTICAL(S) MUST BE SHEATHED OR HAVE BRACES AS INDICATED IN THE MAX. UNBRACED LENGTH COLUMN OF THE TABLE BELOW

LOADING

TOTAL LOAD CASES: (4)

CHORDS

MEMB. FR-TO	MAX. FACTORED FORCE (LBS)	FACTORED VERT. LOAD (PLF) FROM	TO	LC1 CSI (LC)	MAX MAX. UNBRAC LENGTH
A- B	-606 / 0	-78.0	-78.0	0.24 (1)	6.25
B- C	-407 / 0	-78.0	-78.0	0.40 (1)	6.25
C- D	-706 / 0	-78.0	-78.0	0.15 (1)	6.25
D- E	0 / 28	-78.0	-78.0	0.18 (1)	10.00
K- A	-935 / 0	0.0	0.0	0.26 (1)	7.81
G- E	-109 / 0	0.0	0.0	0.01 (1)	7.81
K- J	0 / 0	-18.5	-18.5	0.15 (4)	10.00
J- I	0 / 361	-18.5	-18.5	0.28 (4)	10.00
I- H	0 / 361	-18.5	-18.5	0.28 (4)	10.00
H- G	0 / 460	-18.5	-18.5	0.28 (4)	10.00
G- F	0 / 0	-96.5	-96.5	0.16 (1)	10.00

WEBS

MEMB. FR-TO	MAX. FACTORED FORCE (LBS)	MAX CSI (LC)
J- B	-94 / 51	0.07 (1)
B- H	0 / 92	0.01 (1)
H- C	0 / 162	0.03 (4)
H- D	-107 / 0	0.13 (1)
A- J	0 / 422	0.09 (1)
D- G	-935 / 0	0.35 (1)

DESIGN CRITERIA

SPECIFIED LOADS:

TOP CH.	LL	=	21.0	PSF
	DL	=	6.0	PSF
BOT CH.	LL	=	0.0	PSF
	DL	=	7.4	PSF
TOTAL LOAD		=	34.4	PSF

SPACING = 24.0 IN. C/C

LOADING IN FLAT SECTION BASED ON A SLOPE OF 2.00/12 MINIMUM

THIS TRUSS IS DESIGNED FOR RESIDENTIAL OR SMALL BUILDING REQUIREMENTS OF PART 9, NBCC 2015

THIS DESIGN COMPLIES WITH:
- PART 9 OF BCBC 2018 , ABC 2019
- PART 9 OF OBC 2012 (2019 AMENDMENT)
- CSA 086-14
- TPIC 2014

(55 % OF 23.0 P.S.F. G.S.L. PLUS 8.4 P.S.F. RAIN LOAD) EQUALS 21.0 P.S.F. SPECIFIED ROOF LIVE LOAD

ALLOWABLE DEFL.(LL)= L/360 (0.68")
CALCULATED VERT. DEFL.(LL) = L/ 999 (0.01")
ALLOWABLE DEFL.(TL)= L/360 (0.68")
CALCULATED VERT. DEFL.(TL) = L/ 999 (0.10")

CANTILEVER DEFLECTION:
ALLOWABLE DEFL.(LL)= L/120 (0.19")
CALCULATED VERT. DEFL.(LL) = L/ 999 (0.01")
ALLOWABLE DEFL.(TL)= L/120 (0.19")
CALCULATED VERT. DEFL.(TL) = L/ 999 (0.01")

CSI: TC=0.40/1.00 (B-C:1) , BC=0.28/1.00 (G-H:4) , WB=0.35/1.00 (D-G:1) , SSI=0.21/1.00 (B-C:1)

DOL LUMBER=1.00 NAIL=1.00 LS BEND=1.10 COMP=1.10 SHEAR=1.10 TENS= 1.10

COMPANION LIVE LOAD FACTOR = 1.00

TRUSS PLATE MANUFACTURER IS NOT RESPONSIBLE FOR QUALITY CONTROL IN THE TRUSS MANUFACTURING PLANT .

NAIL VALUES

PLATE	GRIP(DRY) (PSI) MAX	MIN	SHEAR (PLI) MAX	MIN	SECTION (PLI) MAX	MIN
MT20	650	371	1747	788	1987	1873

PLATE PLACEMENT TOL. = 0.250 inches

PLATE ROTATION TOL. = 5.0 Deg.

JSI GRIP= 0.70 (D) (INPUT = 0.90)
JSI METAL= 0.25 (A) (INPUT = 1.00)

JOB NAME	TRUSS NAME	QUANTITY	PLY	JOB DESC.	DRWG NO.
346378	H19T		1	TRUSS DESC. JT 45147	E22075309

Alpa Roof Truss, Maple

Version 8.530 S Feb 23 2022 MiTek Industries, Inc. Mon Jul 25 12:11:46 2022 Page 1

ID:9a plwcon izmXpuR1McGqzT9hG-6kIGNmzav86ZABFMDZbWKDku5qetrEjnXIOKUAyuY2x

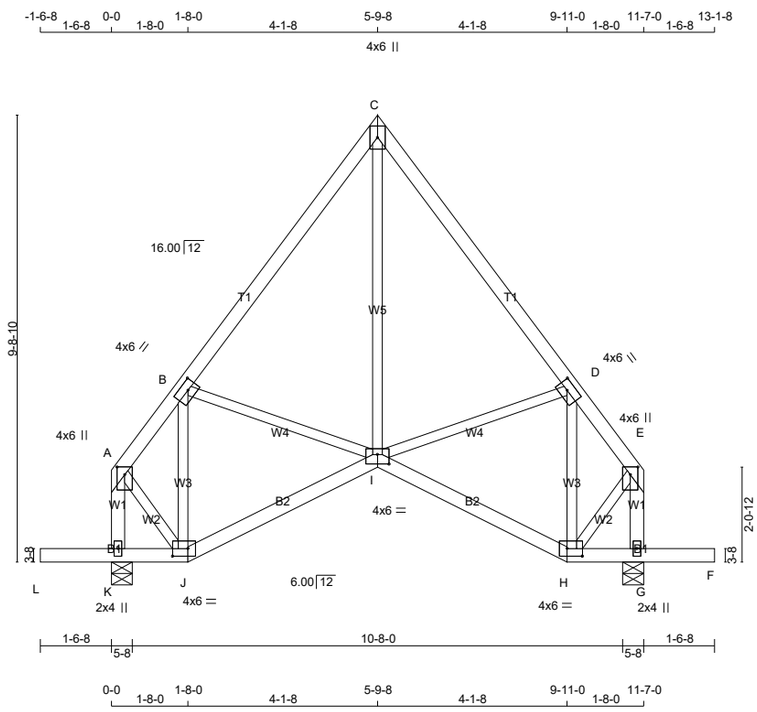

TOTAL WEIGHT = 66 lb

[M][F]

LUMBER

N. L. G. A. RULES

CHORDS	SIZE		LUMBER	DESCR.
A - C	2x4	DRY	No.2	SPF
C - E	2x4	DRY	No.2	SPF
K - A	2x4	DRY	No.2	SPF
G - E	2x4	DRY	No.2	SPF
L - J	2x4	DRY	No.2	SPF
J - I	2x4	DRY	No.2	SPF
I - H	2x4	DRY	No.2	SPF
H - F	2x4	DRY	No.2	SPF
ALL WEBS EXCEPT	2x3	DRY	No.2	SPF

DRY: SEASONED LUMBER.

PLATES (table is in inches)

JT	TYPE	PLATES	W	LEN	Y	X
A	TMVW+p	MT20	4.0	6.0	2.00	2.00
B	TMWW-t	MT20	4.0	6.0	2.00	2.50
C	TTW+p	MT20	4.0	6.0		
D	TMWW-t	MT20	4.0	6.0	2.00	2.50
E	TMVW+p	MT20	4.0	6.0	2.00	2.00
G	BMV1+p	MT20	2.0	4.0		
H	BBWW-l	MT20	4.0	6.0	2.00	4.00
I	BBWWW-p	MT20	4.0	6.0	2.50	3.00
J	BBWW-l	MT20	4.0	6.0	2.00	4.00
K	BMV1+p	MT20	2.0	4.0		

LATERAL BRACE(S) SHOWN SHALL BE 2X4 SPF#2

LICENSED PROFESSIONAL ENGINEER
Y. WIDYA
100225448
07/25/2022
PROVINCE OF ONTARIO

DIMENSIONS, SUPPORTS AND LOADINGS SPECIFIED BY FABRICATOR TO BE VERIFIED BY BUILDING DESIGNER

BEARINGS

JT	FACTORED GROSS REACTION VERT	HORZ	MAXIMUM FACTORED GROSS REACTION DOWN	HORZ	UPLIFT	INPUT BRG IN-SX	REQRD BRG IN-SX
K	707	0	707	0	0	5-8	1-8
G	707	0	707	0	0	5-8	1-8

UNFACTORED REACTIONS

JT	1ST LCASE COMBINED	MAX./MIN. COMPONENT REACTIONS SNOW	LIVE	PERM.LIVE	WIND	DEAD	SOIL
K	504	308 / 0	0 / 0	0 / 0	0 / 0	197 / 0	0 / 0
G	504	308 / 0	0 / 0	0 / 0	0 / 0	197 / 0	0 / 0

BEARING MATERIAL TO BE SPF NO.2 OR BETTER AT JOINT(S) K, G

BRACING

TOP CHORD TO BE SHEATHED OR MAX. PURLIN SPACING = 6.25 FT.
MAX. UNBRACED BOTTOM CHORD LENGTH = 10.00 FT OR RIGID CEILING DIRECTLY APPLIED.

ALL PITCH BREAKS AND PERIMETER CORNER JOINTS MUST BE LATERALLY RESTRAINED.

LOADING

TOTAL LOAD CASES: (4)

CHORDS

MEMB. FR-TO	MAX. FACTORED FORCE (LBS)	FACTORED VERT. LOAD LC1 (PLF) FROM	TO	MAX CSI (LC)	MAX. UNBRAC LENGTH
A- B	-295 / 0	-78.0	-78.0	0.14 (1)	6.25
B- C	-370 / 0	-78.0	-78.0	0.16 (1)	6.25
C- D	-370 / 0	-78.0	-78.0	0.16 (1)	6.25
D- E	-295 / 0	-78.0	-78.0	0.14 (1)	6.25
K- A	-475 / 0	0.0	0.0	0.05 (1)	7.81
G- E	-475 / 0	0.0	0.0	0.05 (1)	7.81
L- K	0 / 0	-96.5	-96.5	0.16 (1)	10.00
K- J	0 / 0	-18.5	-18.5	0.12 (1)	10.00
J- I	0 / 232	-18.5	-18.5	0.11 (4)	10.00
I- H	0 / 232	-18.5	-18.5	0.11 (4)	10.00
H- G	0 / 0	-18.5	-18.5	0.12 (1)	10.00
G- F	0 / 0	-96.5	-96.5	0.16 (1)	10.00

WEBS

MEMB. FR-TO	MAX. FACTORED FORCE (LBS)	MAX CSI (LC)
I- C	0 / 284	0.06 (1)
I- D	0 / 6	0.00 (4)
H- D	-327 / 0	0.08 (1)
B- I	0 / 6	0.00 (4)
J- B	-327 / 0	0.08 (1)
A- J	0 / 300	0.07 (1)
H- E	0 / 300	0.07 (1)

DESIGN CRITERIA

SPECIFIED LOADS:

TOP CH.	LL	=	21.0	PSF
	DL	=	6.0	PSF
BOT CH.	LL	=	0.0	PSF
	DL	=	7.4	PSF
TOTAL LOAD		=	34.4	PSF

SPACING = 24.0 IN. C/C

THIS TRUSS IS DESIGNED FOR RESIDENTIAL OR SMALL BUILDING REQUIREMENTS OF PART 9, NBCC 2015

THIS DESIGN COMPLIES WITH:
- PART 9 OF BCBC 2018 , ABC 2019
- PART 9 OF OBC 2012 (2019 AMENDMENT)
- CSA 086-14
- TPIC 2014

DESIGN ASSUMPTIONS
-OVERHANG NOT TO BE ALTERED OR CUT OFF.

(55 % OF 23.0 P.S.F. G.S.L. PLUS 8.4 P.S.F. RAIN LOAD) EQUALS 21.0 P.S.F. SPECIFIED ROOF LIVE LOAD

ALLOWABLE DEFL.(LL)= L/360 (0.39")
CALCULATED VERT. DEFL.(LL) = L/ 999 (0.01")
ALLOWABLE DEFL.(TL)= L/360 (0.39")
CALCULATED VERT. DEFL.(TL) = L/ 999 (0.02")

CANTILEVER DEFLECTION:
ALLOWABLE DEFL.(LL)= L/120 (0.19")
CALCULATED VERT. DEFL.(LL) = L/ 999 (0.01")
ALLOWABLE DEFL.(TL)= L/120 (0.19")
CALCULATED VERT. DEFL.(TL) = L/ 673 (0.03")

CSI: TC=0.16/1.00 (B-C:1) , BC=0.16/1.00 (F-G:1) , WB=0.08/1.00 (D-H:1) , SSI=0.12/1.00 (K-L:1)

DOL LUMBER=1.00 NAIL=1.00 LS BEND=1.10 COMP=1.10 SHEAR=1.10 TENS= 1.10

COMPANION LIVE LOAD FACTOR = 1.00

TRUSS PLATE MANUFACTURER IS NOT RESPONSIBLE FOR QUALITY CONTROL IN THE TRUSS MANUFACTURING PLANT .

NAIL VALUES

PLATE	GRIP(DRY) (PSI) MAX	MIN	SHEAR (PLI) MAX	MIN	SECTION (PLI) MAX	MIN
MT20	650	371	1747	788	1987	1873

PLATE PLACEMENT TOL. = 0.250 inches

PLATE ROTATION TOL. = 5.0 Deg.

JSI GRIP= 0.45 (J) (INPUT = 0.90)
JSI METAL= 0.16 (J) (INPUT = 1.00)

JOB NAME	TRUSS NAME	QUANTITY	PLY	JOB DESC.		DRWG NO.
346378	H19TS		1	TRUSS DESC.	JT 45147	E22075310

Alpa Roof Truss, Maple

Version 8.530 S Feb 23 2022 MiTek Industries, Inc. Mon Jul 25 12:11:47 2022 Page 1

ID:9a plwcon izmXpuR1McGqzT9hG-axseb6 CgSEPoLqZnH6ltRH3rEz6ahnxmP7t1cyuY2w

Scale = 1:45.9

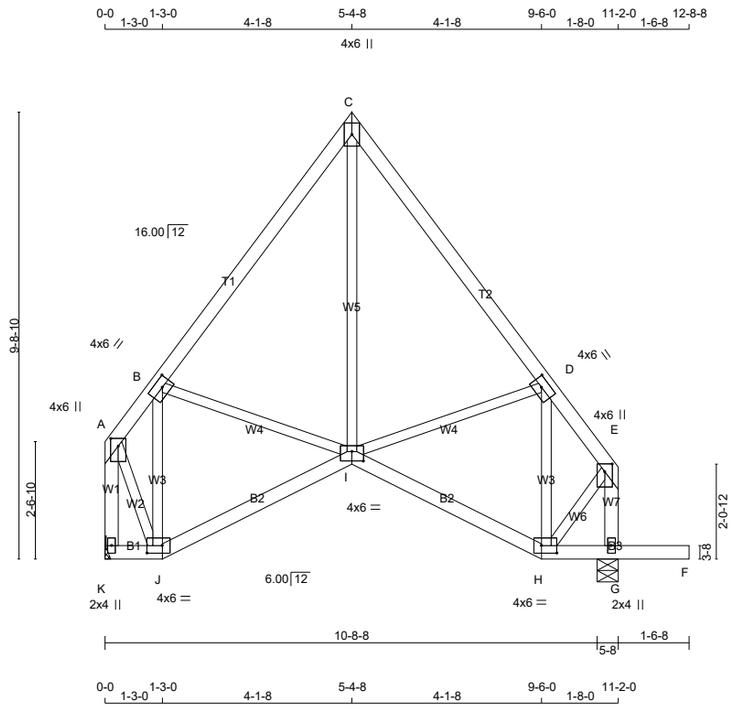

TOTAL WEIGHT = 2 X 64 = 128 lb

[M][F]

LUMBER

N. L. G. A. RULES

CHORDS	SIZE		LUMBER	DESCR.
A - C	2x4	DRY	No.2	SPF
C - E	2x4	DRY	No.2	SPF
K - A	2x4	DRY	No.2	SPF
G - E	2x4	DRY	No.2	SPF
K - J	2x4	DRY	No.2	SPF
J - I	2x4	DRY	No.2	SPF
I - H	2x4	DRY	No.2	SPF
H - F	2x4	DRY	No.2	SPF
ALL WEBS EXCEPT	2x3	DRY	No.2	SPF

DRY: SEASONED LUMBER.

PLATES (table is in inches)

JT	TYPE	PLATES	W	LEN	Y	X
A	TMVW+p	MT20	4.0	6.0	2.00	2.00
B	TMWW-t	MT20	4.0	6.0	2.00	2.50
C	TTW+p	MT20	4.0	6.0		
D	TMWW-t	MT20	4.0	6.0	2.00	2.50
E	TMVW+p	MT20	4.0	6.0	2.00	2.00
G	BMV1+p	MT20	2.0	4.0		
H	BBWW-l	MT20	4.0	6.0	2.00	4.00
I	BBWWW-p	MT20	4.0	6.0	2.50	3.00
J	BBWW-l	MT20	4.0	6.0	2.00	4.00
K	BMV1+p	MT20	2.0	4.0		

LATERAL BRACE(S) SHOWN SHALL BE 2X4 SPF#2

DIMENSIONS, SUPPORTS AND LOADINGS SPECIFIED BY FABRICATOR TO BE VERIFIED BY BUILDING DESIGNER

BEARINGS

JT	FACTORED GROSS REACTION VERT	HORZ	MAXIMUM FACTORED GROSS REACTION DOWN	HORZ	UPLIFT	INPUT BRG IN-SX	REQRD BRG IN-SX
K	528	0	528	0	0	MECHANICAL	
G	698	0	698	0	0	5-8	1-8

A SUITABLE HANGER/MECHANICAL CONNECTION IS REQUIRED AT JOINT K. MINIMUM BEARING LENGTH AT JOINT K = 1-8.

UNFACTORED REACTIONS

JT	1ST LCASE COMBINED	MAX./MIN. COMPONENT REACTIONS SNOW	LIVE	PERM.LIVE	WIND	DEAD	SOIL
K	377	230 / 0	0 / 0	0 / 0	0 / 0	147 / 0	0 / 0
G	497	304 / 0	0 / 0	0 / 0	0 / 0	194 / 0	0 / 0

BEARING MATERIAL TO BE SPF NO.2 OR BETTER AT JOINT(S) G

BRACING

TOP CHORD TO BE SHEATHED OR MAX. PURLIN SPACING = 6.25 FT.
MAX. UNBRACED BOTTOM CHORD LENGTH = 10.00 FT OR RIGID CEILING DIRECTLY APPLIED.

ALL PITCH BREAKS AND PERIMETER CORNER JOINTS MUST BE LATERALLY RESTRAINED.

LOADING

TOTAL LOAD CASES: (4)

CHORDS

MEMB. FR-TO	MAX. FACTORED FORCE (LBS)	FACTORED VERT. LOAD LC1 (PLF) FROM	TO	MAX CSI (LC)	MAX. UNBRAC LENGTH
A- B	-228 / 0	-78.0	-78.0	0.14 (1)	6.25
B- C	-358 / 0	-78.0	-78.0	0.16 (1)	6.25
C- D	-357 / 0	-78.0	-78.0	0.16 (1)	6.25
D- E	-288 / 0	-78.0	-78.0	0.14 (1)	6.25
K- A	-517 / 0	0.0	0.0	0.07 (1)	7.81
G- E	-465 / 0	0.0	0.0	0.05 (1)	7.81
K- J	0 / 0	-18.5	-18.5	0.01 (4)	10.00
J- I	0 / 203	-18.5	-18.5	0.11 (4)	10.00
I- H	0 / 227	-18.5	-18.5	0.11 (4)	10.00
H- G	0 / 0	-18.5	-18.5	0.12 (1)	10.00
G- F	0 / 0	-96.5	-96.5	0.16 (1)	10.00

WEBS

MEMB. FR-TO	MAX. FACTORED FORCE (LBS)	MAX CSI (LC)
J- B	-373 / 0	0.09 (1)
B- I	0 / 19	0.00 (4)
I- C	0 / 264	0.06 (1)
I- D	-4 / 4	0.00 (4)
H- D	-320 / 0	0.08 (1)
A- J	0 / 383	0.09 (1)
H- E	0 / 294	0.07 (1)

DESIGN CRITERIA

SPECIFIED LOADS:

TOP CH.	LL	=	21.0	PSF
	DL	=	6.0	PSF
BOT CH.	LL	=	0.0	PSF
	DL	=	7.4	PSF
TOTAL LOAD		=	34.4	PSF

SPACING = 24.0 IN. C/C

THIS TRUSS IS DESIGNED FOR RESIDENTIAL OR SMALL BUILDING REQUIREMENTS OF PART 9, NBCC 2015

THIS DESIGN COMPLIES WITH:
- PART 9 OF BCBC 2018 , ABC 2019
- PART 9 OF OBC 2012 (2019 AMENDMENT)
- CSA 086-14
- TPIC 2014

DESIGN ASSUMPTIONS
-OVERHANG NOT TO BE ALTERED OR CUT OFF.

(55 % OF 23.0 P.S.F. G.S.L. PLUS 8.4 P.S.F. RAIN LOAD) EQUALS 21.0 P.S.F. SPECIFIED ROOF LIVE LOAD

ALLOWABLE DEFL.(LL)= L/360 (0.37")
CALCULATED VERT. DEFL.(LL) = L/ 999 (0.01")
ALLOWABLE DEFL.(TL)= L/360 (0.37")
CALCULATED VERT. DEFL.(TL) = L/ 999 (0.02")

CANTILEVER DEFLECTION:
ALLOWABLE DEFL.(LL)= L/120 (0.19")
CALCULATED VERT. DEFL.(LL) = L/ 999 (0.01")
ALLOWABLE DEFL.(TL)= L/120 (0.19")
CALCULATED VERT. DEFL.(TL) = L/ 670 (0.03")

CSI: TC=0.16/1.00 (C-D:1) , BC=0.16/1.00 (F-G:1) , WB=0.09/1.00 (B-J:1) , SSI=0.12/1.00 (F-G:1)

DOL LUMBER=1.00 NAIL=1.00 LS BEND=1.10 COMP=1.10 SHEAR=1.10 TENS= 1.10

COMPANION LIVE LOAD FACTOR = 1.00

TRUSS PLATE MANUFACTURER IS NOT RESPONSIBLE FOR QUALITY CONTROL IN THE TRUSS MANUFACTURING PLANT .

NAIL VALUES

PLATE	GRIP(DRY) (PSI) MAX	MIN	SHEAR (PLI) MAX	MIN	SECTION (PLI) MAX	MIN
MT20	650	371	1747	788	1987	1873

PLATE PLACEMENT TOL. = 0.250 inches

PLATE ROTATION TOL. = 5.0 Deg.

JSI GRIP= 0.61 (J) (INPUT = 0.90)
JSI METAL= 0.17 (J) (INPUT = 1.00)

JOB NAME	TRUSS NAME	QUANTITY	PLY	JOB DESC.	DRWG NO.
346378	J01		1	TRUSS DESC. JT 45147	E22075311

Alpa Roof Truss, Maple

Version 8.530 S Feb 23 2022 MiTek Industries, Inc. Mon Jul 25 12:11:49 2022 Page 1

ID:9a plwcon izmXpuR1McGqzT9hG-WJ O?n?SC3U71e xvh9DysMOe2f82ciEDjc 5VyuY2u

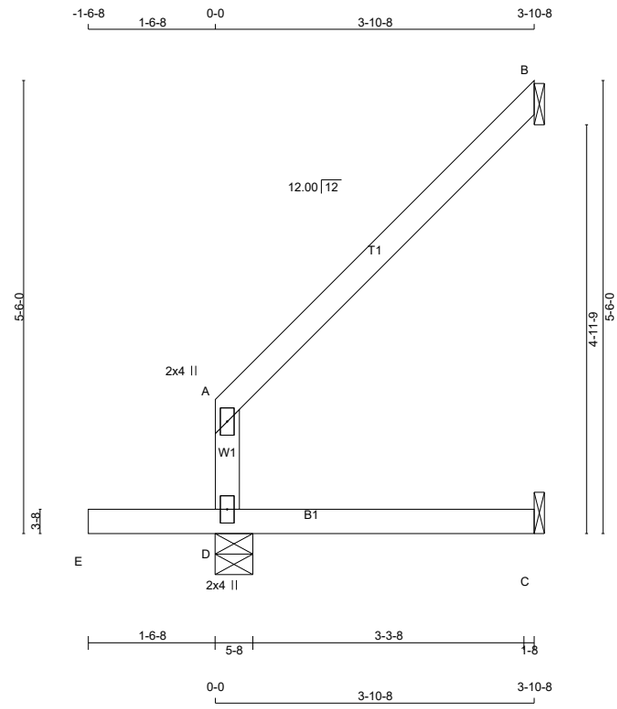

TOTAL WEIGHT = 9 X 14 = 127 lb

[M]

LUMBER

N. L. G. A. RULES

CHORDS	SIZE		LUMBER	DESCR.
D - A	2x4	DRY	No.2	SPF
A - B	2x4	DRY	No.2	SPF
E - C	2x4	DRY	No.2	SPF

DRY: SEASONED LUMBER.

PLATES (table is in inches)

JT	TYPE	PLATES	W	LEN	Y	X
A	TMV+p	MT20	2.0	4.0		
D	BMV1+p	MT20	2.0	4.0		

LATERAL BRACE(S) SHOWN SHALL BE 2X4 SPF#2

DIMENSIONS, SUPPORTS AND LOADINGS SPECIFIED BY FABRICATOR TO BE VERIFIED BY BUILDING DESIGNER

BEARINGS

JT	FACTORED GROSS REACTION VERT	HORZ	MAXIMUM FACTORED GROSS REACTION DOWN	HORZ	UPLIFT	INPUT BRG IN-SX	REQRD BRG IN-SX
D	367	0	367	0	0	5-8	1-8
B	129	0	129	0	0	1-8	1-8
C	27	0	30	0	0	1-8	1-8

SEE MITEK STANDARD DETAIL MSD2015-H FOR CONNECTION TO JOINT(S) B , C

UNFACTORED REACTIONS

JT	1ST LCASE COMBINED	MAX./MIN. COMPONENT REACTIONS SNOW	LIVE	PERM.LIVE	WIND	DEAD	SOIL
D	262	158 / 0	0 / 0	0 / 0	0 / 0	104 / 0	0 / 0
B	89	69 / 0	0 / 0	0 / 0	0 / 0	20 / 0	0 / 0
C	22	0 / 0	0 / 0	0 / 0	0 / 0	22 / 0	0 / 0

BEARING MATERIAL TO BE SPF NO.2 OR BETTER AT JOINT(S) D

BRACING

TOP CHORD TO BE SHEATHED OR MAX. PURLIN SPACING = 6.25 FT.
MAX. UNBRACED BOTTOM CHORD LENGTH = 10.00 FT OR RIGID CEILING DIRECTLY APPLIED.

ALL PITCH BREAKS AND PERIMETER CORNER JOINTS MUST BE LATERALLY RESTRAINED.

LOADING

TOTAL LOAD CASES: (7)

CHORDS MEMB. FR-TO	MAX. FORCE (LBS)	FACTORED VERT. LOAD (PLF) FROM	TO	LC1 MAX CSI (LC)	WEBS MAX. UNBRAC LENGTH	MEMB. FR-TO	MAX. FORCE (LBS)	MAX CSI (LC)
D- A	-173 / 0	0.0	0.0	0.12 (1)	7.81			
A- B	-16 / 0	-78.0	-78.0	0.14 (1)	6.25			
E- D	0 / 0	-96.5	-96.5	0.18 (7)	10.00			
D- C	0 / 0	-18.5	-18.5	0.08 (4)	10.00			

CANTILEVER ANALYSIS HAS BEEN CONSIDERED IN THIS DESIGN

PATTERN-LOADING CHECK APPLIED TO THIS TRUSS.

DESIGN CRITERIA

SPECIFIED LOADS:

TOP CH.	LL	=	21.0	PSF
	DL	=	6.0	PSF
BOT CH.	LL	=	0.0	PSF
	DL	=	7.4	PSF
TOTAL LOAD		=	34.4	PSF

SPACING = 24.0 IN. C/C

THIS TRUSS IS DESIGNED FOR RESIDENTIAL OR SMALL BUILDING REQUIREMENTS OF PART 9, NBCC 2015

THIS DESIGN COMPLIES WITH:
- PART 9 OF BCBC 2018 , ABC 2019
- PART 9 OF OBC 2012 (2019 AMENDMENT)
- CSA 086-14
- TPIC 2014

DESIGN ASSUMPTIONS
-OVERHANG NOT TO BE ALTERED OR CUT OFF.

(55 % OF 23.0 P.S.F. G.S.L. PLUS 8.4 P.S.F. RAIN LOAD) EQUALS 21.0 P.S.F. SPECIFIED ROOF LIVE LOAD

ALLOWABLE DEFL.(TL)= L/360 (0.19")
CALCULATED VERT. DEFL.(TL) = L/ 999 (0.00")

CANTILEVER DEFLECTION:
ALLOWABLE DEFL.(LL)= L/120 (0.19")
CALCULATED VERT. DEFL.(LL) = L/ 999 (0.01")
ALLOWABLE DEFL.(TL)= L/120 (0.19")
CALCULATED VERT. DEFL.(TL) = L/ 999 (0.01")

CSI: TC=0.14/1.00 (A-B:1) , BC=0.18/1.00 (D-E:7) , WB=0.00/1.00 (n/a:0) , SSI=0.14/1.00 (D-E:7)

DOL LUMBER=1.00 NAIL=1.00 LS BEND=1.10 COMP=1.10 SHEAR=1.10 TENS= 1.10

COMPANION LIVE LOAD FACTOR = 1.00

TRUSS PLATE MANUFACTURER IS NOT RESPONSIBLE FOR QUALITY CONTROL IN THE TRUSS MANUFACTURING PLANT .

NAIL VALUES

PLATE	GRIP(DRY) (PSI) MAX	MIN	SHEAR (PLI) MAX	MIN	SECTION (PLI) MAX	MIN
MT20	650	371	1747	788	1987	1873

PLATE PLACEMENT TOL. = 0.250 inches

PLATE ROTATION TOL. = 5.0 Deg.

JSI GRIP= 0.13 (A) (INPUT = 0.90)
JSI METAL= 0.09 (A) (INPUT = 1.00)

JOB NAME	TRUSS NAME	QUANTITY	PLY	JOB DESC.	DRWG NO.
346378	J02		1	TRUSS DESC. JT 45147	E22075312

Alpa Roof Truss, Maple

Version 8.530 S Feb 23 2022 MiTek Industries, Inc. Mon Jul 25 12:11:50 2022 Page 1

ID:9a plwcon izmXpuR1McGqzT9hG- WYmD704zNc foZ8SPgSU3vYAR?pn3yNSNMXdxyuY2t

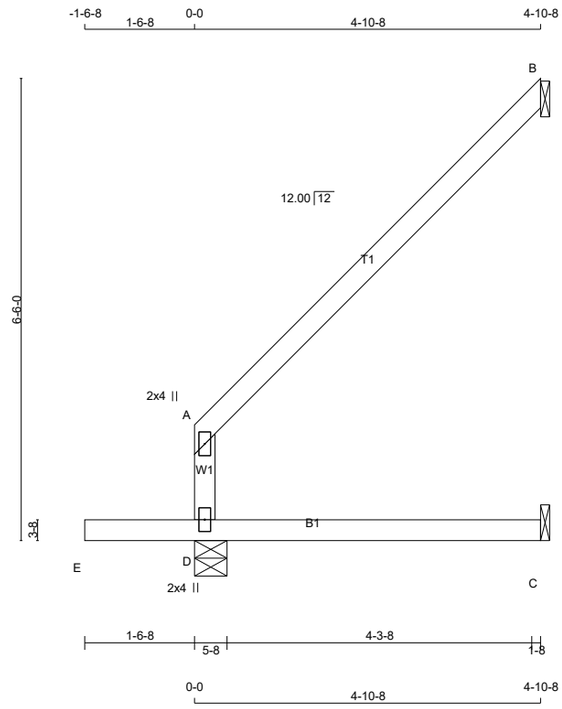

TOTAL WEIGHT = 2 X 17 = 34 lb [M]

LUMBER

N. L. G. A. RULES

CHORDS	SIZE		LUMBER	DESCR.
D - A	2x4	DRY	No.2	SPF
A - B	2x4	DRY	No.2	SPF
E - C	2x4	DRY	No.2	SPF

DRY: SEASONED LUMBER.

PLATES (table is in inches)

JT	TYPE	PLATES	W	LEN	Y	X
A	TMV+p	MT20	2.0	4.0		
D	BMV1+p	MT20	2.0	4.0		

LATERAL BRACE(S) SHOWN SHALL BE 2X4 SPF#2

DIMENSIONS, SUPPORTS AND LOADINGS SPECIFIED BY FABRICATOR TO BE VERIFIED BY BUILDING DESIGNER

BEARINGS

JT	FACTORED GROSS REACTION VERT	HORZ	MAXIMUM FACTORED GROSS REACTION DOWN	HORZ	UPLIFT	INPUT BRG IN-SX	REQRD BRG IN-SX
D	426	0	426	0	0	5-8	1-8
B	160	0	160	0	0	1-8	1-8
C	34	0	38	0	0	1-8	1-8

SEE MITEK STANDARD DETAIL MSD2015-H FOR CONNECTION TO JOINT(S) B , C

UNFACTORED REACTIONS

JT	1ST LCASE COMBINED	MAX./MIN. COMPONENT REACTIONS SNOW	LIVE	PERM.LIVE	WIND	DEAD	SOIL
D	304	183 / 0	0 / 0	0 / 0	0 / 0	120 / 0	0 / 0
B	110	86 / 0	0 / 0	0 / 0	0 / 0	25 / 0	0 / 0
C	27	0 / 0	0 / 0	0 / 0	0 / 0	27 / 0	0 / 0

BEARING MATERIAL TO BE SPF NO.2 OR BETTER AT JOINT(S) D, B

BRACING

TOP CHORD TO BE SHEATHED OR MAX. PURLIN SPACING = 6.25 FT.
MAX. UNBRACED BOTTOM CHORD LENGTH = 10.00 FT OR RIGID CEILING DIRECTLY APPLIED.

ALL PITCH BREAKS AND PERIMETER CORNER JOINTS MUST BE LATERALLY RESTRAINED.

LOADING

TOTAL LOAD CASES: (4)

CHORDS MEMB. FR-TO	MAX. FACTORED FORCE (LBS)	FACTORED VERT. LOAD (PLF) FROM	TO	LC1 MAX CSI (LC)	MAX. UNBRAC LENGTH	WEBS MEMB. FR-TO	MAX. FACTORED FORCE (LBS)	MAX CSI (LC)
D- A	-221 / 0	0.0	0.0	0.20 (1)	7.81			
A- B	-22 / 0	-78.0	-78.0	0.22 (1)	6.25			
E- D	0 / 0	-96.5	-96.5	0.16 (1)	10.00			
D- C	0 / 0	-18.5	-18.5	0.13 (4)	10.00			

DESIGN CRITERIA

SPECIFIED LOADS:

TOP CH.	LL	=	21.0	PSF
	DL	=	6.0	PSF
BOT CH.	LL	=	0.0	PSF
	DL	=	7.4	PSF
TOTAL LOAD		=	34.4	PSF

SPACING = 24.0 IN. C/C

THIS TRUSS IS DESIGNED FOR RESIDENTIAL OR SMALL BUILDING REQUIREMENTS OF PART 9, NBCC 2015

THIS DESIGN COMPLIES WITH:
- PART 9 OF BCBC 2018 , ABC 2019
- PART 9 OF OBC 2012 (2019 AMENDMENT)
- CSA 086-14
- TPIC 2014

DESIGN ASSUMPTIONS
-OVERHANG NOT TO BE ALTERED OR CUT OFF.

(55 % OF 23.0 P.S.F. G.S.L. PLUS 8.4 P.S.F. RAIN LOAD) EQUALS 21.0 P.S.F. SPECIFIED ROOF LIVE LOAD

ALLOWABLE DEFL.(TL)= L/360 (0.19")
CALCULATED VERT. DEFL.(TL) = L/ 999 (0.01")

CANTILEVER DEFLECTION:
ALLOWABLE DEFL.(LL)= L/120 (0.19")
CALCULATED VERT. DEFL.(LL) = L/ 999 (0.01")
ALLOWABLE DEFL.(TL)= L/120 (0.19")
CALCULATED VERT. DEFL.(TL) = L/ 999 (0.01")

CSI: TC=0.22/1.00 (A-B:1) , BC=0.16/1.00 (D-E:1) , WB=0.00/1.00 (n/a:0) , SSI=0.12/1.00 (A-B:1)

DOL LUMBER=1.00 NAIL=1.00 LS BEND=1.10 COMP=1.10 SHEAR=1.10 TENS= 1.10

COMPANION LIVE LOAD FACTOR = 1.00

TRUSS PLATE MANUFACTURER IS NOT RESPONSIBLE FOR QUALITY CONTROL IN THE TRUSS MANUFACTURING PLANT .

NAIL VALUES

PLATE	GRIP(DRY) (PSI) MAX	MIN	SHEAR (PLI) MAX	MIN	SECTION (PLI) MAX	MIN
MT20	650	371	1747	788	1987	1873

PLATE PLACEMENT TOL. = 0.250 inches

PLATE ROTATION TOL. = 5.0 Deg.

JSI GRIP= 0.17 (A) (INPUT = 0.90)
JSI METAL= 0.12 (A) (INPUT = 1.00)

JOB NAME	TRUSS NAME	QUANTITY	PLY	JOB DESC.	DRWG NO.
346378	J02T		1	TRUSS DESC. JT 45147	E22075313

Alpa Roof Truss, Maple

Version 8.530 S Feb 23 2022 MiTek Industries, Inc. Mon Jul 25 12:11:51 2022 Page 1

ID:9a plwcon izmXpuR1McGqzT9hG-Si69QT1ikqlrHy8K06Bh1HRlorL2WWlWh155ANyuY2s

Scale = 1:29.7

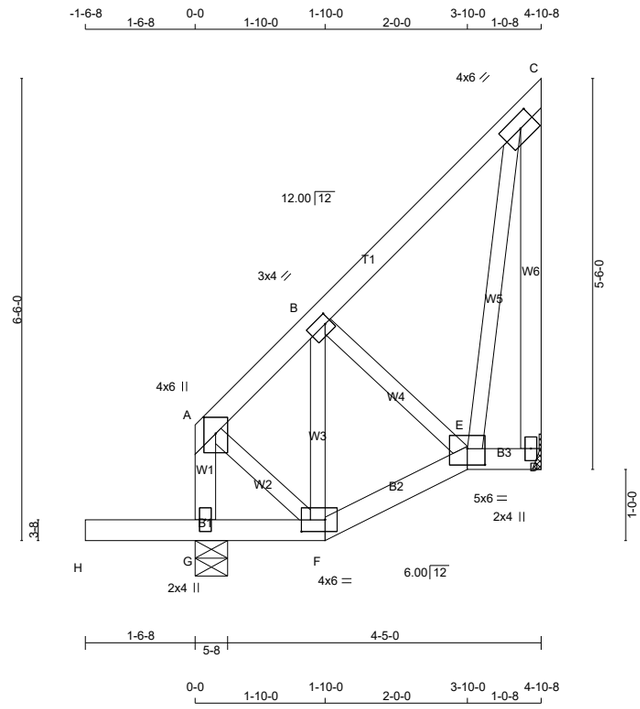

TOTAL WEIGHT = 4 X 32 = 129 lb [M]

LUMBER

N. L. G. A. RULES

CHORDS	SIZE		LUMBER	DESCR.
G - A	2x4	DRY	No.2	SPF
A - C	2x4	DRY	No.2	SPF
D - C	2x4	DRY	No.2	SPF
H - F	2x4	DRY	No.2	SPF
F - E	2x4	DRY	No.2	SPF
E - D	2x4	DRY	No.2	SPF
ALL WEBS	2x3	DRY	No.2	SPF

DRY: SEASONED LUMBER.

PLATES (table is in inches)

JT	TYPE	PLATES	W	LEN	Y	X
A	TMVW+p	MT20	4.0	6.0	2.75	2.00
B	TMWW-t	MT20	3.0	4.0	1.50	1.00
C	TMVW-t	MT20	4.0	6.0	2.00	2.75
D	BMV1+p	MT20	2.0	4.0		
E	BBWW-l	MT20	5.0	6.0	2.75	3.00
F	BBWW-l	MT20	4.0	6.0	2.00	4.00
G	BMV1+p	MT20	2.0	4.0		

LATERAL BRACE(S) SHOWN SHALL BE 2X4 SPF#2

LICENSED PROFESSIONAL ENGINEER
Y. WIDYA
100225448
07/25/2022
PROVINCE OF ONTARIO

DIMENSIONS, SUPPORTS AND LOADINGS SPECIFIED BY FABRICATOR TO BE VERIFIED BY BUILDING DESIGNER

BEARINGS

JT	FACTORED GROSS REACTION VERT	HORZ	MAXIMUM FACTORED GROSS REACTION DOWN	HORZ	UPLIFT	INPUT BRG	REQRD BRG
G	407	0	407	0	0	5-8	1-8
D	212	0	212	0	0	MECHANICAL	

A SUITABLE HANGER/MECHANICAL CONNECTION IS REQUIRED AT JOINT D. MINIMUM BEARING LENGTH AT JOINT D = 1-8.

UNFACTORED REACTIONS

JT	1ST LCASE COMBINED	MAX./MIN. COMPONENT REACTIONS SNOW	LIVE	PERM.LIVE	WIND	DEAD	SOIL
G	290	177 / 0	0 / 0	0 / 0	0 / 0	113 / 0	0 / 0
D	151	92 / 0	0 / 0	0 / 0	0 / 0	59 / 0	0 / 0

BEARING MATERIAL TO BE SPF NO.2 OR BETTER AT JOINT(S) G

BRACING

TOP CHORD TO BE SHEATHED OR MAX. PURLIN SPACING = 6.25 FT.
MAX. UNBRACED BOTTOM CHORD LENGTH = 10.00 FT OR RIGID CEILING DIRECTLY APPLIED.

ALL PITCH BREAKS AND PERIMETER CORNER JOINTS MUST BE LATERALLY RESTRAINED.

LOADING

TOTAL LOAD CASES: (4)

CHORDS

MEMB. FR-TO	MAX. FACTORED FORCE (LBS)	FACTORED VERT. LOAD (PLF) FROM	TO	LC1 MAX CSI (LC)	MAX. UNBRAC LENGTH
G- A	-179 / 0	0.0	0.0	0.02 (1)	7.81
A- B	-99 / 0	-78.0	-78.0	0.09 (1)	6.25
B- C	-52 / 0	-78.0	-78.0	0.09 (1)	6.25
D- C	-202 / 0	0.0	0.0	0.10 (1)	7.81
H- G	0 / 0	-96.5	-96.5	0.16 (1)	10.00
G- F	0 / 0	-18.5	-18.5	0.16 (1)	10.00
F- E	0 / 95	-18.5	-18.5	0.03 (4)	10.00
E- D	0 / 0	-18.5	-18.5	0.01 (4)	10.00

WEBS

MEMB. FR-TO	MAX. FACTORED FORCE (LBS)	MAX CSI (LC)
A- F	0 / 109	0.02 (1)
F- B	-132 / 0	0.03 (1)
B- E	-82 / 0	0.02 (1)
E- C	0 / 130	0.03 (1)

DESIGN CRITERIA

SPECIFIED LOADS:

TOP CH.	LL	=	21.0	PSF
	DL	=	6.0	PSF
BOT CH.	LL	=	0.0	PSF
	DL	=	7.4	PSF
TOTAL LOAD		=	34.4	PSF

SPACING = 24.0 IN. C/C

THIS TRUSS IS DESIGNED FOR RESIDENTIAL OR SMALL BUILDING REQUIREMENTS OF PART 9, NBCC 2015

THIS DESIGN COMPLIES WITH:
- PART 9 OF BCBC 2018 , ABC 2019
- PART 9 OF OBC 2012 (2019 AMENDMENT)
- CSA 086-14
- TPIC 2014

DESIGN ASSUMPTIONS
-OVERHANG NOT TO BE ALTERED OR CUT OFF.

(55 % OF 23.0 P.S.F. G.S.L. PLUS 8.4 P.S.F. RAIN LOAD) EQUALS 21.0 P.S.F. SPECIFIED ROOF LIVE LOAD

ALLOWABLE DEFL.(LL)= L/360 (0.19")
CALCULATED VERT. DEFL.(LL) = L/ 999 (0.00")
ALLOWABLE DEFL.(TL)= L/360 (0.19")
CALCULATED VERT. DEFL.(TL) = L/ 999 (0.00")

CANTILEVER DEFLECTION:
ALLOWABLE DEFL.(LL)= L/120 (0.19")
CALCULATED VERT. DEFL.(LL) = L/ 999 (0.02")
ALLOWABLE DEFL.(TL)= L/120 (0.19")
CALCULATED VERT. DEFL.(TL) = L/ 569 (0.03")

CSI: TC=0.10/1.00 (C-D:1) , BC=0.16/1.00 (F-G:1) , WB=0.03/1.00 (C-E:1) , SSI=0.12/1.00 (G-H:1)

DOL LUMBER=1.00 NAIL=1.00 LS BEND=1.10 COMP=1.10 SHEAR=1.10 TENS= 1.10

COMPANION LIVE LOAD FACTOR = 1.00

TRUSS PLATE MANUFACTURER IS NOT RESPONSIBLE FOR QUALITY CONTROL IN THE TRUSS MANUFACTURING PLANT .

NAIL VALUES

PLATE	GRIP(DRY) (PSI) MAX	MIN	SHEAR (PLI) MAX	MIN	SECTION (PLI) MAX	MIN
MT20	650	371	1747	788	1987	1873

PLATE PLACEMENT TOL. = 0.250 inches

PLATE ROTATION TOL. = 5.0 Deg.

JSI GRIP= 0.17 (F) (INPUT = 0.90)
JSI METAL= 0.07 (F) (INPUT = 1.00)

JOB NAME	TRUSS NAME	QUANTITY	PLY	JOB DESC.	DRWG NO.
346378	J02TA		1	TRUSS DESC. JT 45147	E22075314

Alpa Roof Truss, Maple

Version 8.530 S Feb 23 2022 MiTek Industries, Inc. Mon Jul 25 12:11:53 2022 Page 1

ID:9a plwcon izmXpuR1McGqzT9hG-P5Evr92zGI?ZWGIj8XD96iX6vf0G PYp8LaCEGyuY2q

Scale = 1:17.8

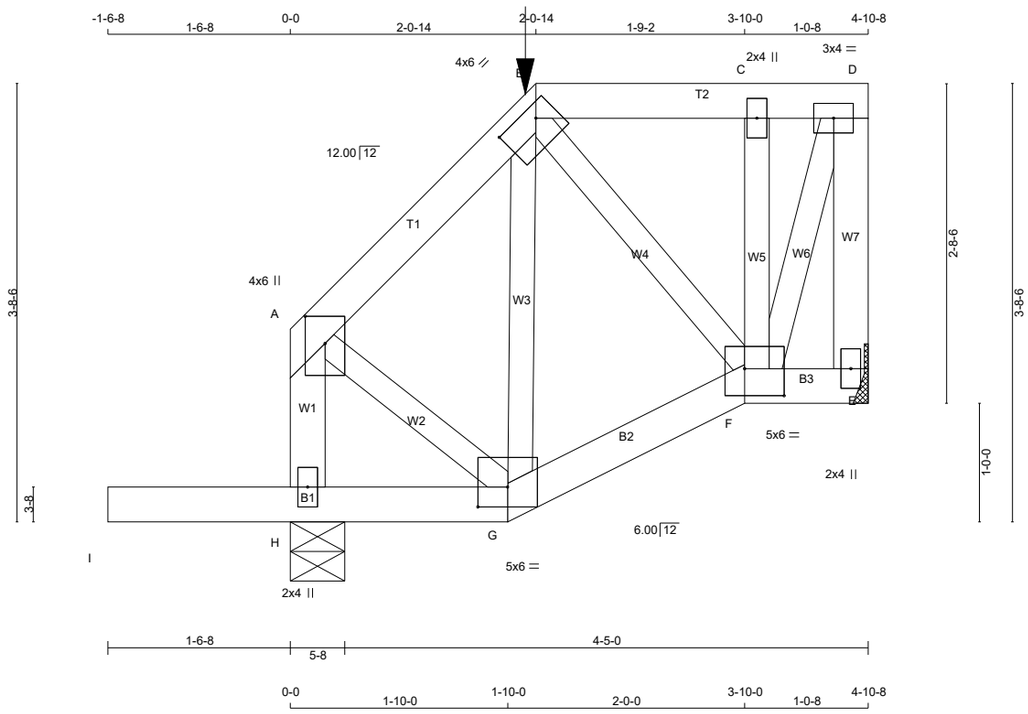

TOTAL WEIGHT = 2 X 28 = 56 lb [M]

LUMBER

N. L. G. A. RULES

CHORDS	SIZE		LUMBER	DESCR.
A - B	2x4	DRY	No.2	SPF
B - D	2x4	DRY	No.2	SPF
E - D	2x4	DRY	No.2	SPF
H - A	2x4	DRY	No.2	SPF
I - G	2x4	DRY	No.2	SPF
G - F	2x4	DRY	No.2	SPF
F - E	2x4	DRY	No.2	SPF
ALL WEBS EXCEPT	2x3	DRY	No.2	SPF

DRY: SEASONED LUMBER.

PLATES (table is in inches)

JT	TYPE	PLATES	W	LEN	Y	X
A	TMVW+p	MT20	4.0	6.0	2.75	2.00
B	TTWW-h	MT20	4.0	6.0	1.25	4.00
C	TMW+w	MT20	2.0	4.0		
D	TMVW-t	MT20	3.0	4.0		
E	BMV1+p	MT20	2.0	4.0		
F	BBWWW-p	MT20	5.0	6.0	2.75	4.00
G	BBWW-l	MT20	5.0	6.0	2.00	3.00
H	BMV1+p	MT20	2.0	4.0		

LATERAL BRACE(S) SHOWN SHALL BE 2X4 SPF#2

LICENSED PROFESSIONAL ENGINEER
Y. WIDYA
100225448
07/25/2022
PROVINCE OF ONTARIO

DIMENSIONS, SUPPORTS AND LOADINGS SPECIFIED BY FABRICATOR TO BE VERIFIED BY BUILDING DESIGNER

BEARINGS

JT	FACTORED GROSS REACTION VERT	HORZ	MAXIMUM FACTORED GROSS REACTION DOWN	HORZ	UPLIFT	INPUT BRG	REQRD BRG
E	323	0	323	0	0	MECHANICAL	
H	488	0	488	0	0	5-8	1-8

A SUITABLE HANGER/MECHANICAL CONNECTION IS REQUIRED AT JOINT E. MINIMUM BEARING LENGTH AT JOINT E = 1-8.

UNFACTORED REACTIONS

JT	1ST LCASE COMBINED	MAX./MIN. COMPONENT REACTIONS SNOW	LIVE	PERM.LIVE	WIND	DEAD	SOIL
E	230	142 / 0	0 / 0	0 / 0	0 / 0	88 / 0	0 / 0
H	348	210 / 0	0 / 0	0 / 0	0 / 0	138 / 0	0 / 0

BEARING MATERIAL TO BE SPF NO.2 OR BETTER AT JOINT(S) H

BRACING

TOP CHORD TO BE SHEATHED OR MAX. PURLIN SPACING = 6.25 FT.
MAX. UNBRACED BOTTOM CHORD LENGTH = 10.00 FT OR RIGID CEILING DIRECTLY APPLIED.

ALL PITCH BREAKS AND PERIMETER CORNER JOINTS MUST BE LATERALLY RESTRAINED.

LOADING

TOTAL LOAD CASES: (4)

CHORDS

MEMB. FR-TO	MAX. FACTORED FORCE (LBS)	FACTORED VERT. LOAD (PLF) FROM	TO	LC1 CSI (LC)	MAX UNBRAC LENGTH
A- B	-143 / 0	-78.0	-78.0	0.06 (1)	6.25
B- C	-112 / 0	-111.3	-111.3	0.06 (1)	6.25
C- D	-120 / 0	-111.3	-111.3	0.03 (1)	6.25
E- D	-309 / 0	0.0	0.0	0.04 (1)	7.81
H- A	-252 / 0	0.0	0.0	0.03 (1)	7.81
I- H	0 / 0	-96.5	-96.5	0.17 (1)	10.00
H- G	0 / 0	-26.4	-26.4	0.17 (1)	10.00
G- F	0 / 123	-26.4	-26.4	0.05 (4)	10.00
F- E	0 / 0	-26.4	-26.4	0.01 (4)	10.00

WEBS

MEMB. FR-TO	MAX. FACTORED FORCE (LBS)	MAX CSI (LC)
G- B	-137 / 0	0.03 (1)
B- F	0 / 3	0.00 (4)
F- C	-183 / 0	0.03 (1)
F- D	0 / 301	0.07 (1)
A- G	0 / 122	0.03 (1)

FACTORED CONCENTRATED LOADS (LBS)

JT	LOC.	LC1	MAX-	MAX+	FACE	DIR.	TYPE	HEEL	CONN.
B	2-0-14	-59	-59	---	FRONT	VERT	TOTAL	---	C1

CONNECTION REQUIREMENTS

1) **C1:** A SUITABLE HANGER/MECHANICAL CONNECTION IS REQUIRED.

DESIGN CRITERIA

SPECIFIED LOADS:

TOP CH.	LL	=	21.0	PSF
	DL	=	6.0	PSF
BOT CH.	LL	=	0.0	PSF
	DL	=	7.4	PSF
TOTAL LOAD		=	34.4	PSF

SPACING = 24.0 IN. C/C

LOADING IN FLAT SECTION BASED ON A SLOPE OF 2.00/12 MINIMUM

GIRDER TYPE: CPrimeHip
LEFT SETBACK = 2-0-14
RIGHT SETBACK = 0-0
END SETBACK = 3-8-8
END WALL WIDTH = 0-0
CORNER FRAMING TYPE: CONVENTIONAL
END JACK TYPE: CONVENTIONAL
APPLIED TO FRONT SIDE
- ADDT'L LOADS BASED ON 55 % OF GSL.

THIS TRUSS IS DESIGNED FOR RESIDENTIAL OR SMALL BUILDING REQUIREMENTS OF PART 9, NBCC 2015

THIS DESIGN COMPLIES WITH:
- PART 9 OF BCBC 2018 , ABC 2019
- PART 9 OF OBC 2012 (2019 AMENDMENT)
- CSA 086-14
- TPIC 2014

DESIGN ASSUMPTIONS
-OVERHANG NOT TO BE ALTERED OR CUT OFF.

(55 % OF 23.0 P.S.F. G.S.L. PLUS 8.4 P.S.F. RAIN LOAD) EQUALS 21.0 P.S.F. SPECIFIED ROOF LIVE LOAD

ALLOWABLE DEFL.(LL)= L/360 (0.19")
CALCULATED VERT. DEFL.(LL) = L/ 999 (0.00")
ALLOWABLE DEFL.(TL)= L/360 (0.19")
CALCULATED VERT. DEFL.(TL) = L/ 999 (0.00")

CANTILEVER DEFLECTION:
ALLOWABLE DEFL.(LL)= L/120 (0.19")
CALCULATED VERT. DEFL.(LL) = L/ 999 (0.02")
ALLOWABLE DEFL.(TL)= L/120 (0.19")
CALCULATED VERT. DEFL.(TL) = L/ 576 (0.03")

CSI: TC=0.06/1.00 (A-B:1) , BC=0.17/1.00 (G-H:1) , WB=0.07/1.00 (D-F:1) , SSI=0.13/1.00 (H-I:1)

DOL LUMBER=1.00 NAIL=1.00 LS BEND=1.00 COMP=1.00 SHEAR=1.00 TENS= 1.00

COMPANION LIVE LOAD FACTOR = 1.00

AUTOSOLVE RIGHT HEEL ONLY

TRUSS PLATE MANUFACTURER IS NOT RESPONSIBLE FOR QUALITY CONTROL IN THE TRUSS MANUFACTURING PLANT .

NAIL VALUES

PLATE	GRIP(DRY) (PSI) MAX	MIN	SHEAR (PLI) MAX	MIN	SECTION (PLI) MAX	MIN
MT20	650	371	1747	788	1987	1873

PLATE PLACEMENT TOL. = 0.250 inches

PLATE ROTATION TOL. = 5.0 Deg.

JSI GRIP= 0.80 (D) (INPUT = 0.90)
JSI METAL= 0.11 (F) (INPUT = 1.00)

JOB NAME	TRUSS NAME	QUANTITY	PLY	JOB DESC.	DRWG NO.
346378	J02TB		1	TRUSS DESC. JT 45147	E22075315

Alpa Roof Truss, Maple

Version 8.530 S Feb 23 2022 MiTek Industries, Inc. Mon Jul 25 12:11:54 2022 Page 1

ID:9a plwcon izmXpuR1McGqzT9hG-tHnH3V3b1b7Q8PtvhFkOfv3Hr3MljtQzN?KlmiyuY2p

Scale = 1:23.4

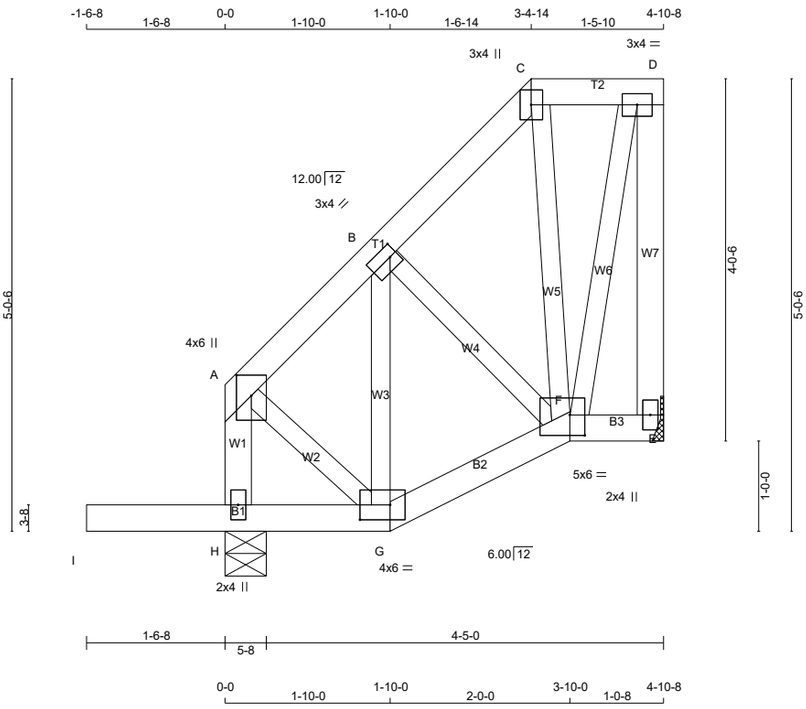

TOTAL WEIGHT = 2 X 32 = 64 lb [M]

LUMBER

N. L. G. A. RULES

CHORDS	SIZE		LUMBER	DESCR.
A - C	2x4	DRY	No.2	SPF
C - D	2x4	DRY	No.2	SPF
E - D	2x4	DRY	No.2	SPF
H - A	2x4	DRY	No.2	SPF
I - G	2x4	DRY	No.2	SPF
G - F	2x4	DRY	No.2	SPF
F - E	2x4	DRY	No.2	SPF
ALL WEBS EXCEPT	2x3	DRY	No.2	SPF

DRY: SEASONED LUMBER.

PLATES (table is in inches)

JT	TYPE	PLATES	W	LEN	Y	X
A	TMVW+p	MT20	4.0	6.0	2.75	2.00
B	TMWW-t	MT20	3.0	4.0	1.50	1.00
C	TTW+p	MT20	3.0	4.0		
D	TMVW-t	MT20	3.0	4.0		
E	BMV1+p	MT20	2.0	4.0		
F	BBWWW-p	MT20	5.0	6.0	2.75	2.00
G	BBWW-l	MT20	4.0	6.0	2.00	4.00
H	BMV1+p	MT20	2.0	4.0		

LATERAL BRACE(S) SHOWN SHALL BE 2X4 SPF#2

LICENSED PROFESSIONAL ENGINEER
Y. WIDYA
100225448
07/25/2022
PROVINCE OF ONTARIO

DIMENSIONS, SUPPORTS AND LOADINGS SPECIFIED BY FABRICATOR TO BE VERIFIED BY BUILDING DESIGNER

BEARINGS

JT	FACTORED GROSS REACTION VERT	HORZ	MAXIMUM FACTORED GROSS REACTION DOWN	HORZ	UPLIFT	INPUT BRG IN-SX	REQRD BRG IN-SX
E	212	0	212	0	0	MECHANICAL	
H	407	0	407	0	0	5-8	1-8

A SUITABLE HANGER/MECHANICAL CONNECTION IS REQUIRED AT JOINT E. MINIMUM BEARING LENGTH AT JOINT E = 1-8.

UNFACTORED REACTIONS

JT	1ST LCASE COMBINED	MAX./MIN. COMPONENT REACTIONS SNOW	LIVE	PERM.LIVE	WIND	DEAD	SOIL
E	151	92 / 0	0 / 0	0 / 0	0 / 0	59 / 0	0 / 0
H	290	177 / 0	0 / 0	0 / 0	0 / 0	113 / 0	0 / 0

BEARING MATERIAL TO BE SPF NO.2 OR BETTER AT JOINT(S) H

BRACING

TOP CHORD TO BE SHEATHED OR MAX. PURLIN SPACING = 6.25 FT.
MAX. UNBRACED BOTTOM CHORD LENGTH = 10.00 FT OR RIGID CEILING DIRECTLY APPLIED.

ALL PITCH BREAKS AND PERIMETER CORNER JOINTS MUST BE LATERALLY RESTRAINED.

LOADING

TOTAL LOAD CASES: (4)

CHORDS

MEMB. FR-TO	MAX. FACTORED FORCE (LBS)	FACTORED VERT. LOAD (PLF) FROM	TO	LC1 MAX CSI (LC)	MAX. UNBRAC LENGTH
A- B	-96 / 0	-78.0	-78.0	0.04 (1)	6.25
B- C	-79 / 0	-78.0	-78.0	0.04 (1)	6.25
C- D	-41 / 0	-78.0	-78.0	0.03 (1)	6.25
E- D	-202 / 0	0.0	0.0	0.05 (1)	7.81
H- A	-179 / 0	0.0	0.0	0.02 (1)	7.81
I- H	0 / 0	-96.5	-96.5	0.16 (1)	10.00
H- G	0 / 0	-18.5	-18.5	0.16 (1)	10.00
G- F	0 / 80	-18.5	-18.5	0.03 (4)	10.00
F- E	0 / 0	-18.5	-18.5	0.01 (4)	10.00

WEBS

MEMB. FR-TO	MAX. FACTORED FORCE (LBS)	MAX CSI (LC)
G- B	-115 / 0	0.02 (1)
B- F	-33 / 0	0.01 (1)
C- F	-60 / 0	0.02 (1)
F- D	0 / 151	0.03 (1)
A- G	0 / 91	0.02 (1)

DESIGN CRITERIA

SPECIFIED LOADS:

TOP CH.	LL	=	21.0	PSF
	DL	=	6.0	PSF
BOT CH.	LL	=	0.0	PSF
	DL	=	7.4	PSF
TOTAL LOAD		=	34.4	PSF

SPACING = 24.0 IN. C/C

LOADING IN FLAT SECTION BASED ON A SLOPE OF 2.00/12 MINIMUM

THIS TRUSS IS DESIGNED FOR RESIDENTIAL OR SMALL BUILDING REQUIREMENTS OF PART 9, NBCC 2015

THIS DESIGN COMPLIES WITH:
- PART 9 OF BCBC 2018 , ABC 2019
- PART 9 OF OBC 2012 (2019 AMENDMENT)
- CSA 086-14
- TPIC 2014

DESIGN ASSUMPTIONS
-OVERHANG NOT TO BE ALTERED OR CUT OFF.

(55 % OF 23.0 P.S.F. G.S.L. PLUS 8.4 P.S.F. RAIN LOAD) EQUALS 21.0 P.S.F. SPECIFIED ROOF LIVE LOAD

ALLOWABLE DEFL.(LL)= L/360 (0.19")
CALCULATED VERT. DEFL.(LL) = L/ 999 (0.00")
ALLOWABLE DEFL.(TL)= L/360 (0.19")
CALCULATED VERT. DEFL.(TL) = L/ 999 (0.00")

CANTILEVER DEFLECTION:
ALLOWABLE DEFL.(LL)= L/120 (0.19")
CALCULATED VERT. DEFL.(LL) = L/ 999 (0.02")
ALLOWABLE DEFL.(TL)= L/120 (0.19")
CALCULATED VERT. DEFL.(TL) = L/ 561 (0.03")

CSI: TC=0.05/1.00 (D-E:1) , BC=0.16/1.00 (G-H:1) , WB=0.03/1.00 (D-F:1) , SSI=0.12/1.00 (H-I:1)

DOL LUMBER=1.00 NAIL=1.00 LS BEND=1.10 COMP=1.10 SHEAR=1.10 TENS= 1.10

COMPANION LIVE LOAD FACTOR = 1.00

TRUSS PLATE MANUFACTURER IS NOT RESPONSIBLE FOR QUALITY CONTROL IN THE TRUSS MANUFACTURING PLANT .

NAIL VALUES

PLATE	GRIP(DRY) (PSI) MAX	MIN	SHEAR (PLI) MAX	MIN	SECTION (PLI) MAX	MIN
MT20	650	371	1747	788	1987	1873

PLATE PLACEMENT TOL. = 0.250 inches

PLATE ROTATION TOL. = 5.0 Deg.

JSI GRIP= 0.31 (D) (INPUT = 0.90)
JSI METAL= 0.06 (F) (INPUT = 1.00)

JOB NAME	TRUSS NAME	QUANTITY	PLY	JOB DESC.		DRWG NO.
346378	J02TC		1	TRUSS DESC.	JT 45147	E22075316

Alpa Roof Truss, Maple

Version 8.530 S Feb 23 2022 MiTek Industries, Inc. Mon Jul 25 12:11:56 2022 Page 1

ID:9a plwcon izmXpuR1McGqzT9hG-pfv2TB5rZCN8Nj0HpgnskK8cXs2DBm GqJpsrbyuY2n

Scale = 1:29.1

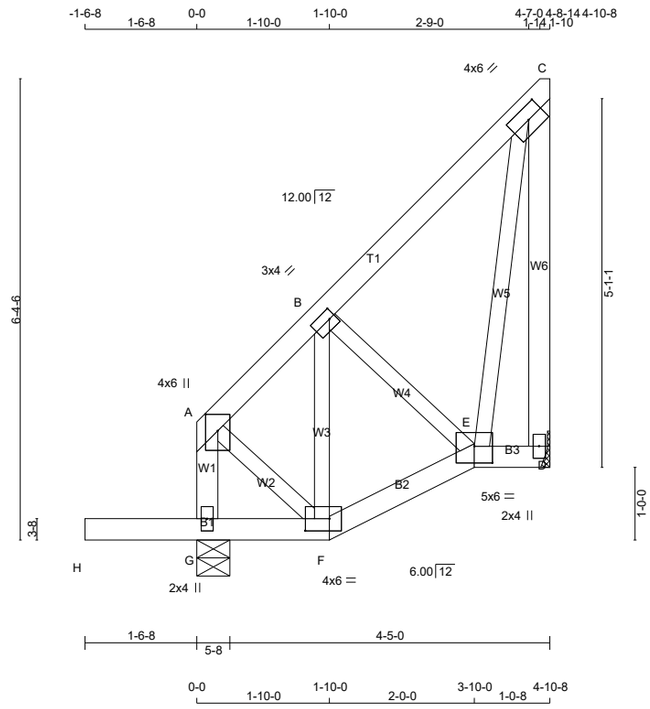

TOTAL WEIGHT = 2 X 32 = 65 lb [M]

LUMBER

N. L. G. A. RULES

CHORDS	SIZE		LUMBER	DESCR.
A - C	2x4	DRY	No.2	SPF
D - C	2x4	DRY	No.2	SPF
G - A	2x4	DRY	No.2	SPF
H - F	2x4	DRY	No.2	SPF
F - E	2x4	DRY	No.2	SPF
E - D	2x4	DRY	No.2	SPF
ALL WEBS EXCEPT	2x3	DRY	No.2	SPF

DRY: SEASONED LUMBER.

PLATES (table is in inches)

JT	TYPE	PLATES	W	LEN	Y	X
A	TMVW+p	MT20	4.0	6.0	2.75	2.00
B	TMWW-t	MT20	3.0	4.0	1.50	1.00
C	TMVW-t	MT20	4.0	6.0	2.00	2.75
D	BMV1+p	MT20	2.0	4.0		
E	BBWW-l	MT20	5.0	6.0	2.75	3.00
F	BBWW-l	MT20	4.0	6.0	2.00	4.00
G	BMV1+p	MT20	2.0	4.0		

LATERAL BRACE(S) SHOWN SHALL BE 2X4 SPF#2

DIMENSIONS, SUPPORTS AND LOADINGS SPECIFIED BY FABRICATOR TO BE VERIFIED BY BUILDING DESIGNER

BEARINGS

JT	FACTORED GROSS REACTION VERT	HORZ	MAXIMUM FACTORED GROSS REACTION DOWN	HORZ	UPLIFT	INPUT BRG	REQRD BRG
D	212	0	212	0	0	MECHANICAL	
G	407	0	407	0	0	5-8	1-8

A SUITABLE HANGER/MECHANICAL CONNECTION IS REQUIRED AT JOINT D. MINIMUM BEARING LENGTH AT JOINT D = 1-8.

UNFACTORED REACTIONS

JT	1ST LCASE COMBINED	MAX./MIN. COMPONENT REACTIONS SNOW	LIVE	PERM.LIVE	WIND	DEAD	SOIL
D	151	92 / 0	0 / 0	0 / 0	0 / 0	59 / 0	0 / 0
G	290	177 / 0	0 / 0	0 / 0	0 / 0	113 / 0	0 / 0

BEARING MATERIAL TO BE SPF NO.2 OR BETTER AT JOINT(S) G

BRACING

TOP CHORD TO BE SHEATHED OR MAX. PURLIN SPACING = 6.25 FT.
MAX. UNBRACED BOTTOM CHORD LENGTH = 10.00 FT OR RIGID CEILING DIRECTLY APPLIED.

ALL PITCH BREAKS AND PERIMETER CORNER JOINTS MUST BE LATERALLY RESTRAINED.

LOADING

TOTAL LOAD CASES: (4)

CHORDS

MEMB. FR-TO	MAX. FACTORED FORCE (LBS)	VERT. LOAD (PLF) FROM	TO	LC1 CSI (LC)	MAX UNBRAC LENGTH
A- B	-99 / 0	-78.0	-78.0	0.09 (1)	6.25
B- C	-52 / 0	-78.0	-78.0	0.09 (1)	6.25
D- C	-202 / 0	0.0	0.0	0.10 (1)	7.81
G- A	-179 / 0	0.0	0.0	0.02 (1)	7.81
H- G	0 / 0	-96.5	-96.5	0.16 (1)	10.00
G- F	0 / 0	-18.5	-18.5	0.16 (1)	10.00
F- E	0 / 95	-18.5	-18.5	0.03 (4)	10.00
E- D	0 / 0	-18.5	-18.5	0.01 (4)	10.00

WEBS

MEMB. FR-TO	MAX. FACTORED FORCE (LBS)	MAX CSI (LC)
F- B	-132 / 0	0.03 (1)
B- E	-82 / 0	0.02 (1)
E- C	0 / 130	0.03 (1)
A- F	0 / 109	0.02 (1)

DESIGN CRITERIA

SPECIFIED LOADS:

TOP CH.	LL	=	21.0	PSF
	DL	=	6.0	PSF
BOT CH.	LL	=	0.0	PSF
	DL	=	7.4	PSF
TOTAL LOAD		=	34.4	PSF

SPACING = 24.0 IN. C/C

THIS TRUSS IS DESIGNED FOR RESIDENTIAL OR SMALL BUILDING REQUIREMENTS OF PART 9, NBCC 2015

THIS DESIGN COMPLIES WITH:
- PART 9 OF BCBC 2018 , ABC 2019
- PART 9 OF OBC 2012 (2019 AMENDMENT)
- CSA 086-14
- TPIC 2014

DESIGN ASSUMPTIONS
-OVERHANG NOT TO BE ALTERED OR CUT OFF.

(55 % OF 23.0 P.S.F. G.S.L. PLUS 8.4 P.S.F. RAIN LOAD) EQUALS 21.0 P.S.F. SPECIFIED ROOF LIVE LOAD

ALLOWABLE DEFL.(LL)= L/360 (0.19")
CALCULATED VERT. DEFL.(LL) = L/ 999 (0.00")
ALLOWABLE DEFL.(TL)= L/360 (0.19")
CALCULATED VERT. DEFL.(TL) = L/ 999 (0.00")

CANTILEVER DEFLECTION:
ALLOWABLE DEFL.(LL)= L/120 (0.19")
CALCULATED VERT. DEFL.(LL) = L/ 999 (0.02")
ALLOWABLE DEFL.(TL)= L/120 (0.19")
CALCULATED VERT. DEFL.(TL) = L/ 569 (0.03")

CSI: TC=0.10/1.00 (C-D:1) , BC=0.16/1.00 (F-G:1) , WB=0.03/1.00 (C-E:1) , SSI=0.12/1.00 (G-H:1)

DOL LUMBER=1.00 NAIL=1.00 LS BEND=1.10 COMP=1.10 SHEAR=1.10 TENS= 1.10

COMPANION LIVE LOAD FACTOR = 1.00

TRUSS PLATE MANUFACTURER IS NOT RESPONSIBLE FOR QUALITY CONTROL IN THE TRUSS MANUFACTURING PLANT .

NAIL VALUES

PLATE	GRIP(DRY) (PSI) MAX	MIN	SHEAR (PLI) MAX	MIN	SECTION (PLI) MAX	MIN
MT20	650	371	1747	788	1987	1873

PLATE PLACEMENT TOL. = 0.250 inches

PLATE ROTATION TOL. = 5.0 Deg.

JSI GRIP= 0.17 (F) (INPUT = 0.90)
JSI METAL= 0.07 (F) (INPUT = 1.00)

JOB NAME	TRUSS NAME	QUANTITY	PLY	JOB DESC.	DRWG NO.
346378	J03		1	TRUSS DESC. JT 45147	E22075317

Alpa Roof Truss, Maple

Version 8.530 S Feb 23 2022 MiTek Industries, Inc. Mon Jul 25 12:11:57 2022 Page 1

ID:9a plwcon izmXpuR1McGqzT9hG-HsTQhW6TKWV??tbUNNI5HYhmbGO0wDhP3zYPN1yuY2m

Scale = 1:32.7

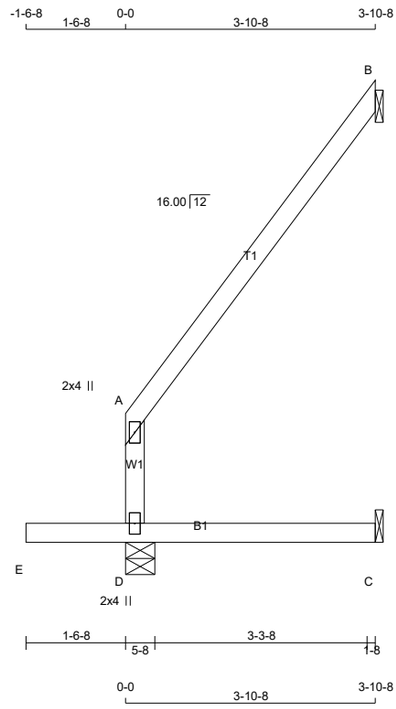

TOTAL WEIGHT = 6 X 16 = 95 lb

[M]

LUMBER

N. L. G. A. RULES

CHORDS	SIZE		LUMBER	DESCR.
D - A	2x4	DRY	No.2	SPF
A - B	2x4	DRY	No.2	SPF
E - C	2x4	DRY	No.2	SPF

DRY: SEASONED LUMBER.

PLATES (table is in inches)

JT	TYPE	PLATES	W	LEN	Y	X
A	TMV+p	MT20	2.0	4.0		
D	BMV1+p	MT20	2.0	4.0		

LATERAL BRACE(S) SHOWN SHALL BE 2X4 SPF#2

DIMENSIONS, SUPPORTS AND LOADINGS SPECIFIED BY FABRICATOR TO BE VERIFIED BY BUILDING DESIGNER

BEARINGS

JT	FACTORED GROSS REACTION VERT	HORZ	MAXIMUM FACTORED GROSS REACTION DOWN	HORZ	UPLIFT	INPUT BRG IN-SX	REQRD BRG IN-SX
D	366	0	366	0	0	5-8	1-8
B	129	0	129	0	0	1-8	1-8
C	27	0	30	0	0	1-8	1-8

SEE MITEK STANDARD DETAIL MSD2015-H FOR CONNECTION TO JOINT(S) B , C

UNFACTORED REACTIONS

JT	1ST LCASE COMBINED	MAX./MIN. COMPONENT REACTIONS SNOW	LIVE	PERM.LIVE	WIND	DEAD	SOIL
D	261	158 / 0	0 / 0	0 / 0	0 / 0	104 / 0	0 / 0
B	90	70 / 0	0 / 0	0 / 0	0 / 0	20 / 0	0 / 0
C	22	0 / 0	0 / 0	0 / 0	0 / 0	22 / 0	0 / 0

BEARING MATERIAL TO BE SPF NO.2 OR BETTER AT JOINT(S) D, B

BRACING

TOP CHORD TO BE SHEATHED OR MAX. PURLIN SPACING = 6.25 FT.
MAX. UNBRACED BOTTOM CHORD LENGTH = 10.00 FT OR RIGID CEILING DIRECTLY APPLIED.

ALL PITCH BREAKS AND PERIMETER CORNER JOINTS MUST BE LATERALLY RESTRAINED.

LOADING

TOTAL LOAD CASES: (7)

CHORDS MEMB. FR-TO	MAX. FACTORED FORCE (LBS)	FACTORED VERT. LOAD (PLF) FROM	TO	LC1 MAX CSI (LC)	WEBS MEMB. FR-TO	MAX. FACTORED FORCE (LBS)	MAX CSI (LC)	MAX. UNBRAC LENGTH
D- A	-173 / 0	0.0	0.0	0.11 (1)				7.81
A- B	-17 / 0	-78.0	-78.0	0.15 (1)				6.25
E- D	0 / 0	-96.5	-96.5	0.18 (7)				10.00
D- C	0 / 0	-18.5	-18.5	0.08 (4)				10.00

CANTILEVER ANALYSIS HAS BEEN CONSIDERED IN THIS DESIGN

PATTERN-LOADING CHECK APPLIED TO THIS TRUSS.

DESIGN CRITERIA

SPECIFIED LOADS:

TOP CH.	LL	=	21.0	PSF
	DL	=	6.0	PSF
BOT CH.	LL	=	0.0	PSF
	DL	=	7.4	PSF
TOTAL LOAD		=	34.4	PSF

SPACING = 24.0 IN. C/C

THIS TRUSS IS DESIGNED FOR RESIDENTIAL OR SMALL BUILDING REQUIREMENTS OF PART 9, NBCC 2015

THIS DESIGN COMPLIES WITH:
- PART 9 OF BCBC 2018 , ABC 2019
- PART 9 OF OBC 2012 (2019 AMENDMENT)
- CSA 086-14
- TPIC 2014

DESIGN ASSUMPTIONS
-OVERHANG NOT TO BE ALTERED OR CUT OFF.

(55 % OF 23.0 P.S.F. G.S.L. PLUS 8.4 P.S.F. RAIN LOAD) EQUALS 21.0 P.S.F. SPECIFIED ROOF LIVE LOAD

ALLOWABLE DEFL.(TL)= L/360 (0.19")
CALCULATED VERT. DEFL.(TL) = L/ 999 (0.00")

CANTILEVER DEFLECTION:
ALLOWABLE DEFL.(LL)= L/120 (0.19")
CALCULATED VERT. DEFL.(LL) = L/ 999 (0.01")
ALLOWABLE DEFL.(TL)= L/120 (0.19")
CALCULATED VERT. DEFL.(TL) = L/ 999 (0.01")

CSI: TC=0.15/1.00 (A-B:1) , BC=0.18/1.00 (D-E:7) , WB=0.00/1.00 (n/a:0) , SSI=0.14/1.00 (D-E:7)

DOL LUMBER=1.00 NAIL=1.00 LS BEND=1.10 COMP=1.10 SHEAR=1.10 TENS= 1.10

COMPANION LIVE LOAD FACTOR = 1.00

TRUSS PLATE MANUFACTURER IS NOT RESPONSIBLE FOR QUALITY CONTROL IN THE TRUSS MANUFACTURING PLANT .

NAIL VALUES

PLATE	GRIP(DRY) (PSI) MAX	MIN	SHEAR (PLI) MAX	MIN	SECTION (PLI) MAX	MIN
MT20	650	371	1747	788	1987	1873

PLATE PLACEMENT TOL. = 0.250 inches

PLATE ROTATION TOL. = 5.0 Deg.

JSI GRIP= 0.15 (A) (INPUT = 0.90)
JSI METAL= 0.08 (A) (INPUT = 1.00)

JOB NAME	TRUSS NAME	QUANTITY	PLY	JOB DESC.	DRWG NO.
346378	J04		1	TRUSS DESC. JT 45147	E22075318

Alpa Roof Truss, Maple

Version 8.530 S Feb 23 2022 MiTek Industries, Inc. Mon Jul 25 12:11:58 2022 Page 1

ID:9a plwcon izmXpuR1McGqzT9hG-l21ous655qdsc1Agw4pKplEuigkhfgxYIdIzvTyuY2l

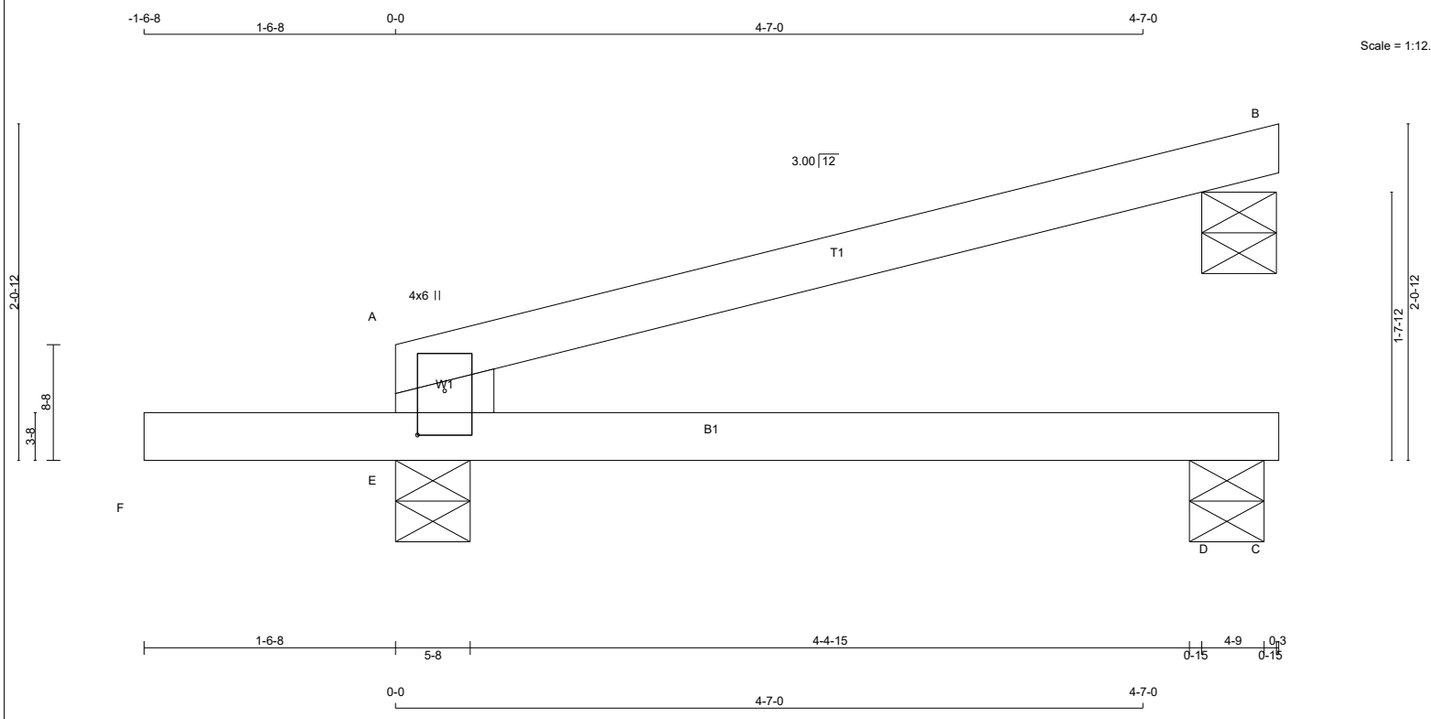

TOTAL WEIGHT = 6 X 15 = 90 lb [M]

LUMBER

N. L. G. A. RULES

CHORDS	SIZE		LUMBER	DESCR.
A - B	2x4	DRY	No.2	SPF
E - A	2x8	DRY	No.2	SPF
F - C	2x4	DRY	No.2	SPF

DRY: SEASONED LUMBER.

PLATES (table is in inches)

JT	TYPE	PLATES	W	LEN	Y	X
A						
A	TMBMV1+p	MT20	4.0	6.0	3.25	2.00
E						

LATERAL BRACE(S) SHOWN SHALL BE 2X4 SPF#2

DIMENSIONS, SUPPORTS AND LOADINGS SPECIFIED BY FABRICATOR TO BE VERIFIED BY BUILDING DESIGNER

BEARINGS

JT	FACTORED GROSS REACTION VERT	HORZ	MAXIMUM FACTORED GROSS REACTION DOWN	HORZ	UPLIFT	INPUT BRG IN-SX	REQRD BRG IN-SX
B	160	0	160	0	0	5-8	5-8
E	470	0	470	0	0	5-8	1-8
D	41	0	46	0	0	5-8	1-8

BEVELED PLATE OR SHIM REQUIRED TO PROVIDE FULL BEARING SURFACE WITH TRUSS CHORD AT JT(S): B

UNFACTORED REACTIONS

JT	1ST LCASE COMBINED	MAX./MIN. COMPONENT REACTIONS SNOW	LIVE	PERM.LIVE	WIND	DEAD	SOIL
B	111	86 / 0	0 / 0	0 / 0	0 / 0	25 / 0	0 / 0
E	335	206 / 0	0 / 0	0 / 0	0 / 0	129 / 0	0 / 0
D	33	0 / 0	0 / 0	0 / 0	0 / 0	33 / 0	0 / 0

BEARING MATERIAL TO BE SPF NO.2 OR BETTER AT JOINT(S) B, E, D

BRACING

TOP CHORD TO BE SHEATHED OR MAX. PURLIN SPACING = 6.25 FT.
MAX. UNBRACED BOTTOM CHORD LENGTH = 10.00 FT OR RIGID CEILING DIRECTLY APPLIED.

ALL PITCH BREAKS AND PERIMETER CORNER JOINTS MUST BE LATERALLY RESTRAINED.

LOADING

TOTAL LOAD CASES: (4)

CHORDS MEMB. FR-TO	MAX. FACTORED FORCE (LBS)	FACTORED VERT. LOAD (PLF) FROM	TO	LC1 CSI (LC)	MAX UNBRAC LENGTH	WEBS MEMB. FR-TO	MAX. FACTORED FORCE (LBS)	MAX CSI (LC)
A- B	-12 / 0	-78.0	-78.0	0.38 (1)	6.25			
E- A	-263 / 0	0.0	0.0	0.13 (1)	7.81			
F- E	0 / 0	-96.5	-96.5	0.16 (1)	10.00			
E- D	0 / 0	-18.5	-18.5	0.14 (4)	10.00			
D- C	0 / 0	-18.5	-18.5	0.00 (4)	10.00			

DESIGN CRITERIA

SPECIFIED LOADS:

TOP CH.	LL	=	21.0	PSF
	DL	=	6.0	PSF
BOT CH.	LL	=	0.0	PSF
	DL	=	7.4	PSF
TOTAL LOAD		=	34.4	PSF

SPACING = 24.0 IN. C/C

THIS TRUSS IS DESIGNED FOR RESIDENTIAL OR SMALL BUILDING REQUIREMENTS OF PART 9, NBCC 2015

THIS DESIGN COMPLIES WITH:
- PART 9 OF BCBC 2018 , ABC 2019
- PART 9 OF OBC 2012 (2019 AMENDMENT)
- CSA 086-14
- TPIC 2014

DESIGN ASSUMPTIONS
-OVERHANG NOT TO BE ALTERED OR CUT OFF.

(55 % OF 23.0 P.S.F. G.S.L. PLUS 8.4 P.S.F. RAIN LOAD) EQUALS 21.0 P.S.F. SPECIFIED ROOF LIVE LOAD

ALLOWABLE DEFL.(TL)= L/360 (0.19")
CALCULATED VERT. DEFL.(TL) = L/ 999 (0.01")

CANTILEVER DEFLECTION:
ALLOWABLE DEFL.(LL)= L/120 (0.19")
CALCULATED VERT. DEFL.(LL) = L/ 999 (0.01")
ALLOWABLE DEFL.(TL)= L/120 (0.19")
CALCULATED VERT. DEFL.(TL) = L/ 999 (0.01")

CSI: TC=0.38/1.00 (A-B:1) , BC=0.16/1.00 (E-F:1) , WB=0.00/1.00 (n/a:0) , SSI=0.20/1.00 (A-B:1)

DOL LUMBER=1.00 NAIL=1.00 LS BEND=1.10 COMP=1.10 SHEAR=1.10 TENS= 1.10

COMPANION LIVE LOAD FACTOR = 1.00

AUTOSOLVE RIGHT HEEL ONLY

TRUSS PLATE MANUFACTURER IS NOT RESPONSIBLE FOR QUALITY CONTROL IN THE TRUSS MANUFACTURING PLANT .

NAIL VALUES

PLATE	GRIP(DRY) (PSI) MAX	MIN	SHEAR (PLI) MAX	MIN	SECTION (PLI) MAX	MIN
MT20	650	371	1747	788	1987	1873

PLATE PLACEMENT TOL. = 0.250 inches

PLATE ROTATION TOL. = 5.0 Deg.

JSI GRIP= 0.09 (A) (INPUT = 0.90)
JSI METAL= 0.03 (A) (INPUT = 1.00)

JOB NAME	TRUSS NAME	QUANTITY	PLY	JOB DESC.	DRWG NO.
346378	J05		1	TRUSS DESC. JT 45147	E22075319

Alpa Roof Truss, Maple

Version 8.530 S Feb 23 2022 MiTek Industries, Inc. Mon Jul 25 12:12:00 2022 Page 1

ID:9a plwcon izmXpuR1McGqzT9hG-hR9YJY8McRtZsKK32VrouAJCjTNZ7aQrlwn3 MyuY2j

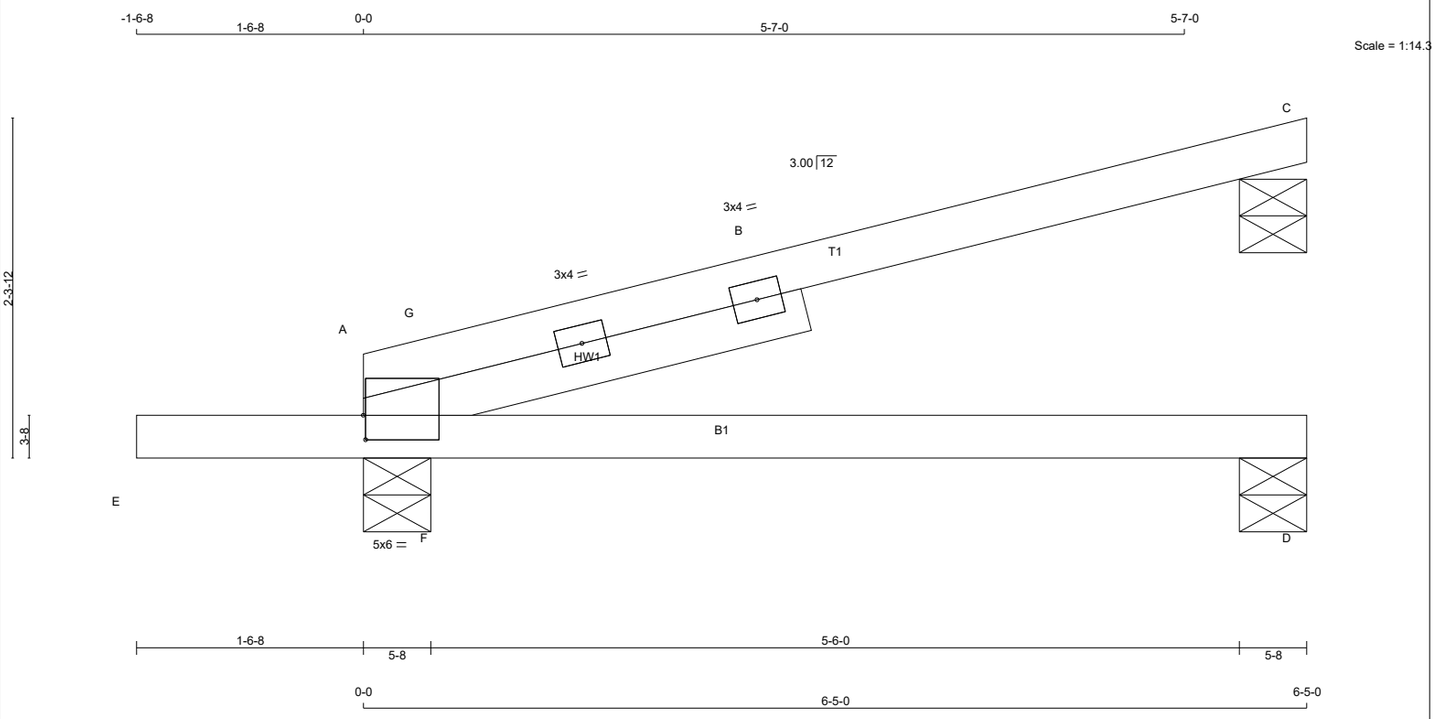

TOTAL WEIGHT = 5 X 20 = 101 lb

[M][F]

LUMBER

N. L. G. A. RULES

CHORDS	SIZE		LUMBER	DESCR.
A - C	2x4	DRY	No.2	SPF
E - D	2x4	DRY	No.2	SPF
REINFORCING MEMBERS				
HW1	2x4	DRY	No.2	SPF

DRY: SEASONED LUMBER.

PLATES (table is in inches)

JT	TYPE	PLATES	W	LEN	Y	X
A	TMBMR1-I	MT20	5.0	6.0	2.00	0.25
A	RT-t	MT20	3.0	4.0		
A	RT-t	MT20	3.0	4.0		

LATERAL BRACE(S) SHOWN SHALL BE 2X4 SPF#2

DIMENSIONS, SUPPORTS AND LOADINGS SPECIFIED BY FABRICATOR TO BE VERIFIED BY BUILDING DESIGNER

BEARINGS

JT	FACTORED GROSS REACTION VERT	HORZ	MAXIMUM FACTORED GROSS REACTION DOWN	HORZ	UPLIFT	INPUT BRG IN-SX	REQRD BRG IN-SX
A	458	0	458	0	0	5-8	1-8
C	228	0	228	0	0	5-8	5-8
D	82	0	82	0	0	5-8	1-8

BEVELED PLATE OR SHIM REQUIRED TO PROVIDE FULL BEARING SURFACE WITH TRUSS CHORD AT JT(S): C

UNFACTORED REACTIONS

JT	1ST LCASE COMBINED	MAX./MIN. COMPONENT REACTIONS SNOW	LIVE	PERM.LIVE	WIND	DEAD	SOIL
A	327	199 / 0	0 / 0	0 / 0	0 / 0	127 / 0	0 / 0
C	159	116 / 0	0 / 0	0 / 0	0 / 0	43 / 0	0 / 0
D	62	19 / 0	0 / 0	0 / 0	0 / 0	43 / 0	0 / 0

BEARING MATERIAL TO BE SPF NO.2 OR BETTER AT JOINT(S) A, C, D

BRACING

TOP CHORD TO BE SHEATHED OR MAX. PURLIN SPACING = 6.25 FT.
MAX. UNBRACED BOTTOM CHORD LENGTH = 10.00 FT OR RIGID CEILING DIRECTLY APPLIED.

ALL PITCH BREAKS AND PERIMETER CORNER JOINTS MUST BE LATERALLY RESTRAINED.

LOADING

TOTAL LOAD CASES: (4)

CHORDS MEMB. FR-TO	MAX. FACTORED FORCE (LBS)	FACTORED VERT. LOAD (PLF) FROM	TO	LC1 CSI (LC)	MAX. UNBRAC LENGTH	WEBS MEMB. FR-TO	MAX. FACTORED FORCE (LBS)	MAX CSI (LC)
A- G	-204 / 0	-78.0	-78.0	0.14 (1)	6.25	F- G	-375 / 0	0.00 (1)
G- B	-127 / 0	-78.0	-78.0	0.47 (1)	6.25	F- B	0 / 260	0.05 (4)
B- C	-127 / 0	-78.0	-78.0	0.47 (1)	6.25			
E- A	0 / 0	-96.5	-96.5	0.16 (1)	10.00			
A- F	0 / 233	-18.5	-18.5	0.26 (1)	10.00			
F- D	0 / 0	-18.5	-18.5	0.25 (1)	10.00			

DESIGN CRITERIA

SPECIFIED LOADS:

TOP CH.	LL	=	21.0	PSF
	DL	=	6.0	PSF
BOT CH.	LL	=	0.0	PSF
	DL	=	7.4	PSF
TOTAL LOAD		=	34.4	PSF

SPACING = 24.0 IN. C/C

THIS TRUSS IS DESIGNED FOR RESIDENTIAL OR SMALL BUILDING REQUIREMENTS OF PART 9, NBCC 2015

THIS DESIGN COMPLIES WITH:
- PART 9 OF BCBC 2018 , ABC 2019
- PART 9 OF OBC 2012 (2019 AMENDMENT)
- CSA 086-14
- TPIC 2014

(55 % OF 23.0 P.S.F. G.S.L. PLUS 8.4 P.S.F. RAIN LOAD) EQUALS 21.0 P.S.F. SPECIFIED ROOF LIVE LOAD

ALLOWABLE DEFL.(LL)= L/360 (0.21")
CALCULATED VERT. DEFL.(LL) = L/ 999 (0.07")
ALLOWABLE DEFL.(TL)= L/360 (0.21")
CALCULATED VERT. DEFL.(TL) = L/ 496 (0.16")

CANTILEVER DEFLECTION:
ALLOWABLE DEFL.(LL)= L/120 (0.19")
CALCULATED VERT. DEFL.(LL) = L/ 999 (0.01")
ALLOWABLE DEFL.(TL)= L/120 (0.19")
CALCULATED VERT. DEFL.(TL) = L/ 999 (0.01")

CSI: TC=0.47/1.00 (C-G:1) , BC=0.26/1.00 (A-F:1) , WB=0.05/1.00 (B-F:4) , SSI=0.23/1.00 (A-F:1)

DOL LUMBER=1.00 NAIL=1.00 LS BEND=1.10 COMP=1.10 SHEAR=1.10 TENS= 1.10

COMPANION LIVE LOAD FACTOR = 1.00

TRUSS PLATE MANUFACTURER IS NOT RESPONSIBLE FOR QUALITY CONTROL IN THE TRUSS MANUFACTURING PLANT .

NAIL VALUES

PLATE	GRIP(DRY) (PSI) MAX	MIN	SHEAR (PLI) MAX	MIN	SECTION (PLI) MAX	MIN
MT20	650	371	1747	788	1987	1873

PLATE PLACEMENT TOL. = 0.250 inches

PLATE ROTATION TOL. = 5.0 Deg.

JSI GRIP= 0.10 (A) (INPUT = 0.90)
JSI METAL= 0.03 (A) (INPUT = 1.00)

JOB NAME	TRUSS NAME	QUANTITY	PLY	JOB DESC.	DRWG NO.
346378	J06		1	TRUSS DESC. JT 45147	E22075320

Alpa Roof Truss, Maple

Version 8.530 S Feb 23 2022 MiTek Industries, Inc. Mon Jul 25 12:12:01 2022 Page 1

ID:9a plwcon izmXpuR1McGqzT9hG-AdixXu9 Nl?QTUvFcDM1ROsS?tlts1q? aWdWoyuY2i

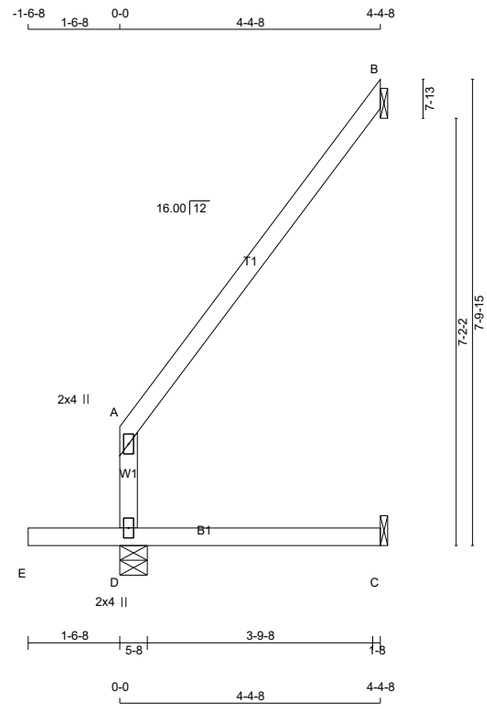

TOTAL WEIGHT = 4 X 17 = 69 lb

[M]

LUMBER

N. L. G. A. RULES

CHORDS	SIZE		LUMBER	DESCR.
D - A	2x4	DRY	No.2	SPF
A - B	2x4	DRY	No.2	SPF
E - C	2x4	DRY	No.2	SPF

DRY: SEASONED LUMBER.

PLATES (table is in inches)

JT	TYPE	PLATES	W	LEN	Y	X
A	TMV+p	MT20	2.0	4.0		
D	BMV1+p	MT20	2.0	4.0		

LATERAL BRACE(S) SHOWN SHALL BE 2X4 SPF#2

DIMENSIONS, SUPPORTS AND LOADINGS SPECIFIED BY FABRICATOR TO BE VERIFIED BY BUILDING DESIGNER

BEARINGS

JT	FACTORED GROSS REACTION VERT	HORZ	MAXIMUM FACTORED GROSS REACTION DOWN	HORZ	UPLIFT	INPUT BRG IN-SX	REQRD BRG IN-SX
D	396	0	396	0	0	5-8	1-8
B	145	0	145	0	0	1-8	1-8
C	30	0	34	0	0	1-8	1-8

SEE MITEK STANDARD DETAIL MSD2015-H FOR CONNECTION TO JOINT(S) B , C

UNFACTORED REACTIONS

JT	1ST LCASE COMBINED	MAX./MIN. COMPONENT REACTIONS SNOW	LIVE	PERM.LIVE	WIND	DEAD	SOIL
D	282	170 / 0	0 / 0	0 / 0	0 / 0	112 / 0	0 / 0
B	100	78 / 0	0 / 0	0 / 0	0 / 0	22 / 0	0 / 0
C	24	0 / 0	0 / 0	0 / 0	0 / 0	24 / 0	0 / 0

BEARING MATERIAL TO BE SPF NO.2 OR BETTER AT JOINT(S) D

BRACING

TOP CHORD TO BE SHEATHED OR MAX. PURLIN SPACING = 6.25 FT.
MAX. UNBRACED BOTTOM CHORD LENGTH = 10.00 FT OR RIGID CEILING DIRECTLY APPLIED.

ALL PITCH BREAKS AND PERIMETER CORNER JOINTS MUST BE LATERALLY RESTRAINED.

LOADING

TOTAL LOAD CASES: (7)

CHORDS MEMB. FR-TO	MAX. FACTORED FORCE (LBS)	FACTORED VERT. LOAD (PLF) FROM	TO	LC1 MAX CSI (LC)	WEBS MEMB. FR-TO	MAX. FACTORED FORCE (LBS)	MAX CSI (LC)	MAX. UNBRAC LENGTH
D- A	-196 / 0	0.0	0.0	0.15 (1)				7.81
A- B	-21 / 0	-78.0	-78.0	0.18 (1)				6.25
E- D	0 / 0	-96.5	-96.5	0.19 (7)				10.00
D- C	0 / 0	-18.5	-18.5	0.10 (4)				10.00

CANTILEVER ANALYSIS HAS BEEN CONSIDERED IN THIS DESIGN

PATTERN-LOADING CHECK APPLIED TO THIS TRUSS.

DESIGN CRITERIA

SPECIFIED LOADS:

TOP CH.	LL	=	21.0	PSF
	DL	=	6.0	PSF
BOT CH.	LL	=	0.0	PSF
	DL	=	7.4	PSF
TOTAL LOAD		=	34.4	PSF

SPACING = 24.0 IN. C/C

THIS TRUSS IS DESIGNED FOR RESIDENTIAL OR SMALL BUILDING REQUIREMENTS OF PART 9, NBCC 2015

THIS DESIGN COMPLIES WITH:
- PART 9 OF BCBC 2018 , ABC 2019
- PART 9 OF OBC 2012 (2019 AMENDMENT)
- CSA 086-14
- TPIC 2014

DESIGN ASSUMPTIONS
-OVERHANG NOT TO BE ALTERED OR CUT OFF.

(55 % OF 23.0 P.S.F. G.S.L. PLUS 8.4 P.S.F. RAIN LOAD) EQUALS 21.0 P.S.F. SPECIFIED ROOF LIVE LOAD

ALLOWABLE DEFL.(TL)= L/360 (0.19")
CALCULATED VERT. DEFL.(TL) = L/ 999 (0.01")

CANTILEVER DEFLECTION:
ALLOWABLE DEFL.(LL)= L/120 (0.19")
CALCULATED VERT. DEFL.(LL) = L/ 999 (0.01")
ALLOWABLE DEFL.(TL)= L/120 (0.19")
CALCULATED VERT. DEFL.(TL) = L/ 999 (0.01")

CSI: TC=0.18/1.00 (A-B:1) , BC=0.19/1.00 (D-E:7) , WB=0.00/1.00 (n/a:0) , SSI=0.14/1.00 (D-E:7)

DOL LUMBER=1.00 NAIL=1.00 LS BEND=1.10 COMP=1.10 SHEAR=1.10 TENS= 1.10

COMPANION LIVE LOAD FACTOR = 1.00

TRUSS PLATE MANUFACTURER IS NOT RESPONSIBLE FOR QUALITY CONTROL IN THE TRUSS MANUFACTURING PLANT .

NAIL VALUES

PLATE	GRIP(DRY) (PSI) MAX	MIN	SHEAR (PLI) MAX	MIN	SECTION (PLI) MAX	MIN
MT20	650	371	1747	788	1987	1873

PLATE PLACEMENT TOL. = 0.250 inches

PLATE ROTATION TOL. = 5.0 Deg.

JSI GRIP= 0.17 (A) (INPUT = 0.90)
JSI METAL= 0.09 (A) (INPUT = 1.00)

JOB NAME	TRUSS NAME	QUANTITY	PLY	JOB DESC.	DRWG NO.
346378	P05C		1	TRUSS DESC. JT 45147	E22075321

Alpa Roof Truss, Maple

Version 8.530 S Feb 23 2022 MiTek Industries, Inc. Mon Jul 25 12:12:02 2022 Page 1

ID:9a plwcon izmXpuR1McGqzT9hG-epGJkE9c827H5eUR9wuG bObeH3YbUM8DEGA3FyuY2h

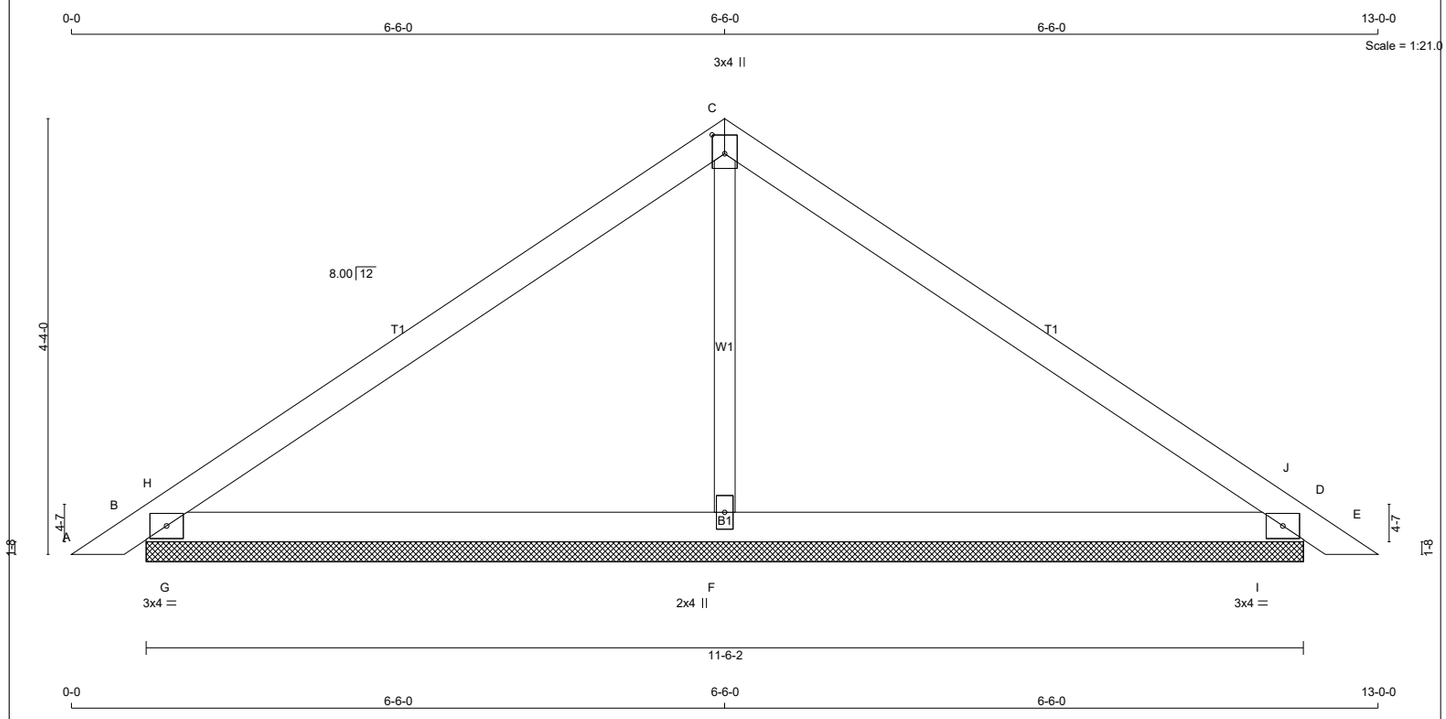

TOTAL WEIGHT = 10 X 34 = 338 lb

[M]

LUMBER

N. L. G. A. RULES

CHORDS	SIZE		LUMBER	DESCR.
A - C	2x4	DRY	No.2	SPF
C - E	2x4	DRY	No.2	SPF
B - D	2x4	DRY	No.2	SPF
ALL WEBS	2x3	DRY	No.2	SPF

DRY: SEASONED LUMBER.

PLATES (table is in inches)

JT	TYPE	PLATES	W	LEN	Y	X
B	TMB1-I	MT20	3.0	4.0		
C	TTW+p	MT20	3.0	4.0	2.25	1.50
D	TMB1-I	MT20	3.0	4.0		
F	BMW1+w	MT20	2.0	4.0		

DIMENSIONS, SUPPORTS AND LOADINGS SPECIFIED BY FABRICATOR TO BE VERIFIED BY BUILDING DESIGNER

BEARINGS

JT	FACTORED GROSS REACTION VERT	HORZ	MAXIMUM FACTORED GROSS REACTION DOWN	HORZ	UPLIFT	INPUT BRG IN-SX	REQRD BRG IN-SX
B	419	0	419	0	0	11-6-2	1-8
D	419	0	419	0	0	11-6-2	1-8
F	377	0	377	0	0	11-6-2	1-8

UNFACTORED REACTIONS

JT	1ST LCASE COMBINED	MAX./MIN. COMPONENT REACTIONS SNOW	LIVE	PERM.LIVE	WIND	DEAD	SOIL
B	296	197 / 0	0 / 0	0 / 0	0 / 0	99 / 0	0 / 0
D	296	197 / 0	0 / 0	0 / 0	0 / 0	99 / 0	0 / 0
F	272	145 / 0	0 / 0	0 / 0	0 / 0	127 / 0	0 / 0

BEARING MATERIAL TO BE SPF NO.2 OR BETTER AT JOINT(S) B, D, F

BRACING

TOP CHORD TO BE SHEATHED OR MAX. PURLIN SPACING = 6.25 FT.
MAX. UNBRACED BOTTOM CHORD LENGTH = 10.00 FT OR RIGID CEILING DIRECTLY APPLIED.

ALL PITCH BREAKS AND PERIMETER CORNER JOINTS MUST BE LATERALLY RESTRAINED.

LOADING

TOTAL LOAD CASES: (4)

CHORDS

MEMB. FR-TO	MAX. FACTORED FORCE (LBS)	FACTORED VERT. LOAD (PLF) FROM	TO	LC1 MAX CSI (LC)	MAX. UNBRAC LENGTH
A- B	0 / 13	-78.0	-78.0	0.03 (1)	10.00
B- H	-50 / 38	-78.0	-78.0	0.18 (1)	6.25
H- C	-226 / 0	-78.0	-78.0	0.32 (1)	6.25
C- J	-226 / 0	-78.0	-78.0	0.32 (1)	6.25
J- D	-50 / 38	-78.0	-78.0	0.18 (1)	6.25
D- E	0 / 13	-78.0	-78.0	0.03 (1)	10.00
B- G	0 / 177	-18.5	-18.5	0.29 (1)	10.00
G- F	0 / 177	-18.5	-18.5	0.29 (1)	10.00
F- I	0 / 177	-18.5	-18.5	0.29 (1)	10.00
I- D	0 / 177	-18.5	-18.5	0.29 (1)	10.00

WEBS

MEMB. FR-TO	MAX. FACTORED FORCE (LBS)	MAX CSI (LC)
F- C	-142 / 0	0.04 (1)
G- H	-638 / 0	0.00 (1)
I- J	-638 / 0	0.00 (1)

DESIGN CRITERIA

SPECIFIED LOADS:

TOP CH.	LL	=	21.0	PSF
	DL	=	6.0	PSF
BOT CH.	LL	=	0.0	PSF
	DL	=	7.4	PSF
TOTAL LOAD		=	34.4	PSF

SPACING = 24.0 IN. C/C

THIS TRUSS IS DESIGNED FOR RESIDENTIAL OR SMALL BUILDING REQUIREMENTS OF PART 9, NBCC 2015

THIS DESIGN COMPLIES WITH:
- PART 9 OF BCBC 2018 , ABC 2019
- PART 9 OF OBC 2012 (2019 AMENDMENT)
- CSA 086-14
- TPIC 2014

(55 % OF 23.0 P.S.F. G.S.L. PLUS 8.4 P.S.F. RAIN LOAD) EQUALS 21.0 P.S.F. SPECIFIED ROOF LIVE LOAD

CSI: TC=0.32/1.00 (C-H:1) , BC=0.29/1.00 (B-G:1) , WB=0.04/1.00 (C-F:1) , SSI=0.49/1.00 (B-G:1)

DOL LUMBER=1.00 NAIL=1.00 LS BEND=1.10 COMP=1.10 SHEAR=1.10 TENS= 1.10

COMPANION LIVE LOAD FACTOR = 1.00

TRUSS PLATE MANUFACTURER IS NOT RESPONSIBLE FOR QUALITY CONTROL IN THE TRUSS MANUFACTURING PLANT .

NAIL VALUES

PLATE	GRIP(DRY) (PSI) MAX	MIN	SHEAR (PLI) MAX	MIN	SECTION (PLI) MAX	MIN
MT20	650	371	1747	788	1987	1873

PLATE PLACEMENT TOL. = 0.250 inches

PLATE ROTATION TOL. = 5.0 Deg.

JSI GRIP= 0.35 (B) (INPUT = 0.90)
JSI METAL= 0.09 (D) (INPUT = 1.00)

LATERAL BRACE(S) SHOWN SHALL BE 2X4 SPF#2

JOB NAME	TRUSS NAME	QUANTITY	PLY	JOB DESC.	DRWG NO.
346378	P05D		1	TRUSS DESC. JT 45147	E22075322

Alpa Roof Truss, Maple

Version 8.530 S Feb 23 2022 MiTek Industries, Inc. Mon Jul 25 12:12:04 2022 Page 1

ID:9a plwcon izmXpuR1McGqzT9hG-aCO39wBsqgN?KyeqHLwk30Uxx5ms3O RgYlH77yuY2f

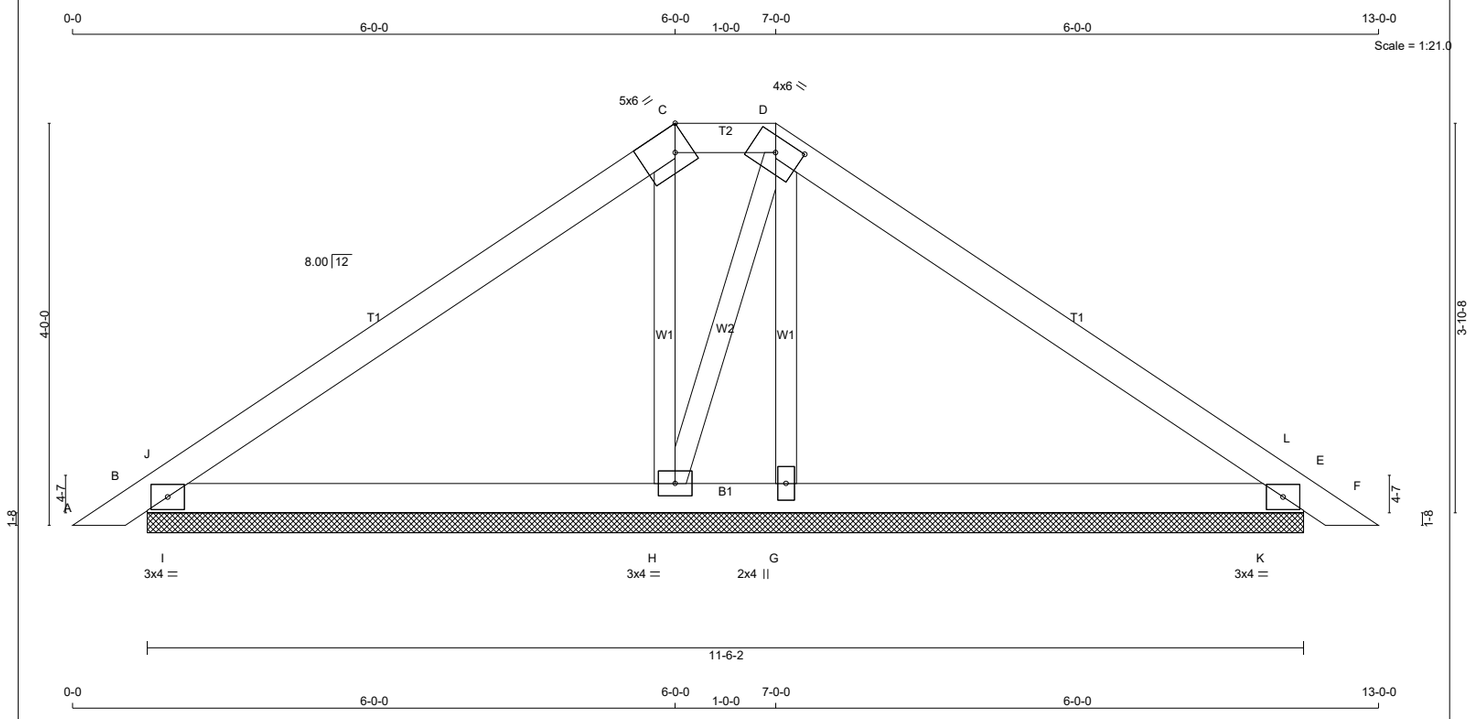

TOTAL WEIGHT = 39 lb

[M]

LUMBER

N. L. G. A. RULES

CHORDS	SIZE		LUMBER	DESCR.
A - C	2x4	DRY	No.2	SPF
C - D	2x4	DRY	No.2	SPF
D - F	2x4	DRY	No.2	SPF
B - E	2x4	DRY	No.2	SPF
ALL WEBS	2x3	DRY	No.2	SPF

DRY: SEASONED LUMBER.

PLATES (table is in inches)

JT	TYPE	PLATES	W	LEN	Y	X
B	TMB1-l	MT20	3.0	4.0		
C	TTW-h	MT20	5.0	6.0	Edge	2.00
D	TTWW-h	MT20	4.0	6.0	1.75	3.00
E	TMB1-l	MT20	3.0	4.0		
G	BMW1+w	MT20	2.0	4.0		
H	BMWW1-t	MT20	3.0	4.0		

Edge - INDICATES REFERENCE CORNER OF PLATE TOUCHES EDGE OF CHORD.

LATERAL BRACE(S) SHOWN SHALL BE 2X4 SPF#2

DIMENSIONS, SUPPORTS AND LOADINGS SPECIFIED BY FABRICATOR TO BE VERIFIED BY BUILDING DESIGNER

BEARINGS

JT	FACTORED GROSS REACTION VERT	HORZ	MAXIMUM FACTORED GROSS REACTION DOWN	HORZ	UPLIFT	INPUT BRG IN-SX	REQRD BRG IN-SX
B	372	0	372	0	0	11-6-2	1-8
E	382	0	382	0	0	11-6-2	1-8
H	282	0	282	0	0	11-6-2	1-8
G	178	0	178	0	0	11-6-2	1-8

UNFACTORED REACTIONS

JT	1ST LCASE COMBINED	MAX./MIN. COMPONENT REACTIONS SNOW	LIVE	PERM.LIVE	WIND	DEAD	SOIL
B	263	172 / 0	0 / 0	0 / 0	0 / 0	90 / 0	0 / 0
E	270	179 / 0	0 / 0	0 / 0	0 / 0	92 / 0	0 / 0
H	201	124 / 0	0 / 0	0 / 0	0 / 0	77 / 0	0 / 0
G	129	64 / 0	0 / 0	0 / 0	0 / 0	65 / 0	0 / 0

BEARING MATERIAL TO BE SPF NO.2 OR BETTER AT JOINT(S) B, E, H, G

BRACING

TOP CHORD TO BE SHEATHED OR MAX. PURLIN SPACING = 6.25 FT.
MAX. UNBRACED BOTTOM CHORD LENGTH = 10.00 FT OR RIGID CEILING DIRECTLY APPLIED.

ALL PITCH BREAKS AND PERIMETER CORNER JOINTS MUST BE LATERALLY RESTRAINED.

LOADING

TOTAL LOAD CASES: (4)

C H O R D S

MEMB. FR-TO	MAX. FORCE (LBS)	FACTORED VERT. LOAD (PLF) FROM	TO	LC1 CSI (LC)	MAX UNBRAC LENGTH
A- B	0 / 13	-78.0	-78.0	0.03 (1)	10.00
B- J	-50 / 31	-78.0	-78.0	0.13 (1)	6.25
J- C	-167 / 0	-78.0	-78.0	0.27 (1)	6.25
C- D	-133 / 0	-78.0	-78.0	0.01 (1)	6.25
D- L	-186 / 0	-78.0	-78.0	0.27 (1)	6.25
L- E	-53 / 10	-78.0	-78.0	0.13 (1)	6.25
E- F	0 / 13	-78.0	-78.0	0.03 (1)	10.00
B- I	0 / 130	-18.5	-18.5	0.23 (1)	10.00
I- H	0 / 130	-18.5	-18.5	0.23 (1)	10.00
H- G	0 / 148	-18.5	-18.5	0.17 (1)	10.00
G- K	0 / 146	-18.5	-18.5	0.23 (1)	10.00
K- E	0 / 146	-18.5	-18.5	0.23 (1)	10.00

W E B S

MEMB. FR-TO	MAX. FORCE (LBS)	MAX CSI (LC)
H- C	-126 / 0	0.03 (1)
H- D	-49 / 0	0.01 (1)
G- D	-69 / 0	0.02 (1)
I- J	-515 / 0	0.00 (1)
K- L	-513 / 0	0.00 (1)

DESIGN CRITERIA

SPECIFIED LOADS:

TOP CH.	LL	=	21.0	PSF
	DL	=	6.0	PSF
BOT CH.	LL	=	0.0	PSF
	DL	=	7.4	PSF
TOTAL LOAD		=	34.4	PSF

SPACING = 24.0 IN. C/C

LOADING IN FLAT SECTION BASED ON A SLOPE OF 2.00/12 MINIMUM

THIS TRUSS IS DESIGNED FOR RESIDENTIAL OR SMALL BUILDING REQUIREMENTS OF PART 9, NBCC 2015

THIS DESIGN COMPLIES WITH:
- PART 9 OF BCBC 2018 , ABC 2019
- PART 9 OF OBC 2012 (2019 AMENDMENT)
- CSA 086-14
- TPIC 2014

(55 % OF 23.0 P.S.F. G.S.L. PLUS 8.4 P.S.F. RAIN LOAD) EQUALS 21.0 P.S.F. SPECIFIED ROOF LIVE LOAD

CSI: TC=0.27/1.00 (D-L:1) , BC=0.23/1.00 (G-K:1) , WB=0.03/1.00 (C-H:1) , SSI=0.40/1.00 (B-I:1)

DOL LUMBER=1.00 NAIL=1.00 LS BEND=1.10 COMP=1.10 SHEAR=1.10 TENS= 1.10

COMPANION LIVE LOAD FACTOR = 1.00

TRUSS PLATE MANUFACTURER IS NOT RESPONSIBLE FOR QUALITY CONTROL IN THE TRUSS MANUFACTURING PLANT .

NAIL VALUES

PLATE	GRIP(DRY) (PSI) MAX	MIN	SHEAR (PLI) MAX	MIN	SECTION (PLI) MAX	MIN
MT20	650	371	1747	788	1987	1873

PLATE PLACEMENT TOL. = 0.250 inches

PLATE ROTATION TOL. = 5.0 Deg.

JSI GRIP= 0.31 (E) (INPUT = 0.90)
JSI METAL= 0.08 (E) (INPUT = 1.00)

JOB NAME	TRUSS NAME	QUANTITY	PLY	JOB DESC.		DRWG NO.
346378	P14A		1	TRUSS DESC.	JT 45147	E22075323

Alpa Roof Truss, Maple

Version 8.530 S Feb 23 2022 MiTek Industries, Inc. Mon Jul 25 12:12:06 2022 Page 1

ID:9a_plwcon_izmXpuR1McGqzT9hG-WbWqabD7CHdjaFnCOmyC8RZA?uRGXHDk8sEOC0yuY2d

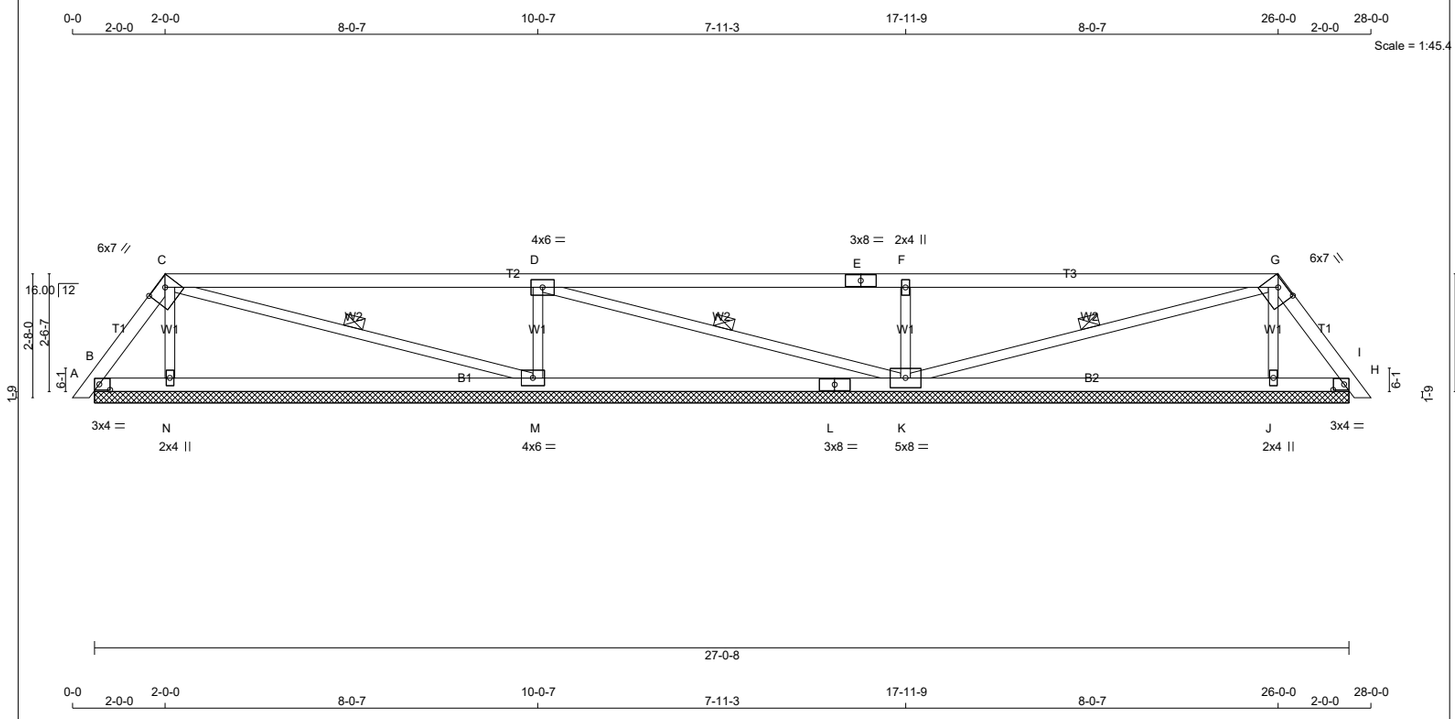

TOTAL WEIGHT = 2 X 92 = 183 lb

[M]

LUMBER

N. L. G. A. RULES

CHORDS	SIZE		LUMBER	DESCR.
A - C	2x4	DRY	No.2	SPF
C - E	2x4	DRY	No.2	SPF
E - G	2x4	DRY	No.2	SPF
G - I	2x4	DRY	No.2	SPF
B - L	2x4	DRY	No.2	SPF
L - H	2x4	DRY	No.2	SPF
ALL WEBS	2x3	DRY	No.2	SPF

DRY: SEASONED LUMBER.

PLATES (table is in inches)

JT	TYPE	PLATES	W	LEN	Y	X
B	TMB1-l	MT20	3.0	4.0	1.50	2.75
C	TTWW-h	MT20	6.0	7.0	2.00	4.25
D	TMWW-t	MT20	4.0	6.0		
E	TS-t	MT20	3.0	8.0		
F	TMW+w	MT20	2.0	4.0		
G	TTWW-h	MT20	6.0	7.0	1.75	4.00
H	TMB1-l	MT20	3.0	4.0	1.50	2.75
J	BMW1+w	MT20	2.0	4.0		
K	BMWWW1-t	MT20	5.0	8.0		
L	BS-t	MT20	3.0	8.0		
M	BMWW1-t	MT20	4.0	6.0		
N	BMW1+w	MT20	2.0	4.0		

LATERAL BRACE(S) SHOWN SHALL BE 2X4 SPF#2

DIMENSIONS, SUPPORTS AND LOADINGS SPECIFIED BY FABRICATOR TO BE VERIFIED BY BUILDING DESIGNER

BEARINGS

JT	FACTORED GROSS REACTION VERT	HORZ	MAXIMUM FACTORED GROSS REACTION DOWN	HORZ	UPLIFT	INPUT BRG IN-SX	REQRD BRG IN-SX
B	133	0	133	0	-2	27-0-8 (11-1-0)	1-9-8
N	361	0	361	0	0	27-0-8 (11-1-0)	1-9-8
M	832	0	832	0	0	27-0-8 (11-1-0)	1-9-8
K	851	0	851	0	0	27-0-8 (11-1-0)	1-9-8
J	369	0	369	0	0	27-0-8 (11-1-0)	1-9-8
H	120	0	120	0	-5	27-0-8 (11-1-0)	1-9-8

VALUE IN PARENTHESIS INDICATES EFFECTIVE BEARING LENGTH

PROVIDE ANCHORAGE AT BEARING JOINT B FOR 150 LBS FACTORED UPLIFT
PROVIDE ANCHORAGE AT BEARING JOINT H FOR 150 LBS FACTORED UPLIFT

UNFACTORED REACTIONS

JT	1ST LCASE COMBINED	MAX./MIN. COMPONENT REACTIONS SNOW	LIVE	PERM.LIVE	WIND	DEAD	SOIL
B	88	90 / 0	0 / 0	0 / 0	0 / 0	0 / -2	0 / 0
N	264	121 / 0	0 / 0	0 / 0	0 / 0	143 / 0	0 / 0
M	592	368 / 0	0 / 0	0 / 0	0 / 0	225 / 0	0 / 0
K	605	378 / 0	0 / 0	0 / 0	0 / 0	227 / 0	0 / 0
J	270	126 / 0	0 / 0	0 / 0	0 / 0	144 / 0	0 / 0
H	80	83 / 0	0 / 0	0 / 0	0 / 0	0 / -4	0 / 0

BEARING MATERIAL TO BE SPF NO.2 OR BETTER AT JOINT(S) B, N, M, K, J, H

BRACING

TOP CHORD TO BE SHEATHED OR MAX. PURLIN SPACING = 6.25 FT.
MAX. UNBRACED BOTTOM CHORD LENGTH = 10.00 FT OR RIGID CEILING DIRECTLY APPLIED.

ALL PITCH BREAKS AND PERIMETER CORNER JOINTS MUST BE LATERALLY RESTRAINED.

1 LATERAL BRACE(S) AT 1/ 2 LENGTH OF C-M, D-K, G-K.

LOADING

TOTAL LOAD CASES: (4)

C H O R D S

MEMB. FR-TO	MAX. FACTORED FORCE (LBS)	FACTORED VERT. LOAD LC1 (PLF) FROM	TO	MAX CSI (LC)	MAX. UNBRAC LENGTH
A- B	0 / 10	-78.0	-78.0	0.01 (1)	10.00
B- C	-97 / 0	-78.0	-78.0	0.03 (1)	6.25
C- D	-23 / 0	-78.0	-78.0	0.68 (1)	6.25
D- E	0 / 0	-78.0	-78.0	0.68 (1)	10.00
E- F	0 / 0	-78.0	-78.0	0.68 (1)	10.00
F- G	0 / 1	-78.0	-78.0	0.68 (1)	10.00
G- H	-81 / 0	-78.0	-78.0	0.03 (1)	6.25
H- I	0 / 10	-78.0	-78.0	0.01 (1)	10.00
B- N	0 / 55	-18.5	-18.5	0.19 (4)	10.00
N- M	0 / 45	-18.5	-18.5	0.24 (4)	10.00
M- L	0 / 24	-18.5	-18.5	0.24 (4)	10.00
L- K	0 / 24	-18.5	-18.5	0.24 (4)	10.00
K- J	0 / 35	-18.5	-18.5	0.24 (4)	10.00
J- H	0 / 46	-18.5	-18.5	0.19 (4)	10.00

W E B S

MEMB. FR-TO	MAX. FACTORED FORCE (LBS)	MAX CSI (LC)
N- C	-226 / 0	0.04 (1)
C- M	-22 / 0	0.01 (1)
M- D	-677 / 0	0.11 (1)
D- K	-26 / 0	0.01 (1)
K- F	-684 / 0	0.11 (1)
K- G	-38 / 0	0.02 (1)
J- G	-234 / 0	0.04 (1)

DESIGN CRITERIA

SPECIFIED LOADS:

TOP CH.	LL	=	21.0	PSF
	DL	=	6.0	PSF
BOT CH.	LL	=	0.0	PSF
	DL	=	7.4	PSF
TOTAL LOAD		=	34.4	PSF

SPACING = 24.0 IN. C/C

LOADING IN FLAT SECTION BASED ON A SLOPE OF 2.00/12 MINIMUM

THIS TRUSS IS DESIGNED FOR RESIDENTIAL OR SMALL BUILDING REQUIREMENTS OF PART 9, NBCC 2015

THIS DESIGN COMPLIES WITH:
- PART 9 OF BCBC 2018 , ABC 2019
- PART 9 OF OBC 2012 (2019 AMENDMENT)
- CSA 086-14
- TPIC 2014

(55 % OF 23.0 P.S.F. G.S.L. PLUS 8.4 P.S.F. RAIN LOAD) EQUALS 21.0 P.S.F. SPECIFIED ROOF LIVE LOAD

CSI: TC=0.68/1.00 (C-D:1) , BC=0.24/1.00 (M-N:4) , WB=0.11/1.00 (F-K:1) , SSI=0.29/1.00 (C-D:1)

DOL LUMBER=1.00 NAIL=1.00 LS BEND=1.10 COMP=1.10 SHEAR=1.10 TENS= 1.10

COMPANION LIVE LOAD FACTOR = 1.00

TRUSS PLATE MANUFACTURER IS NOT RESPONSIBLE FOR QUALITY CONTROL IN THE TRUSS MANUFACTURING PLANT .

NAIL VALUES

PLATE	GRIP(DRY) (PSI) MAX	MIN	SHEAR (PLI) MAX	MIN	SECTION (PLI) MAX	MIN
MT20	650	371	1747	788	1987	1873

PLATE PLACEMENT TOL. = 0.250 inches

PLATE ROTATION TOL. = 5.0 Deg.

JSI GRIP= 0.88 (C) (INPUT = 0.90)
JSI METAL= 0.63 (E) (INPUT = 1.00)

JOB NAME	TRUSS NAME	QUANTITY	PLY	JOB DESC.	DRWG NO.
346378	P14B		1	TRUSS DESC. JT 45147	E22075324

Alpha Roof Truss, Maple

Version 8.530 S Feb 23 2022 MiTek Industries, Inc. Mon Jul 25 12:12:08 2022 Page 1

ID:9a plwcon izmXpuR1McGqzT9hG-Szea?HENkuuRpZxbWB qDseZqi8p?9r1bAjUGuyuY2b

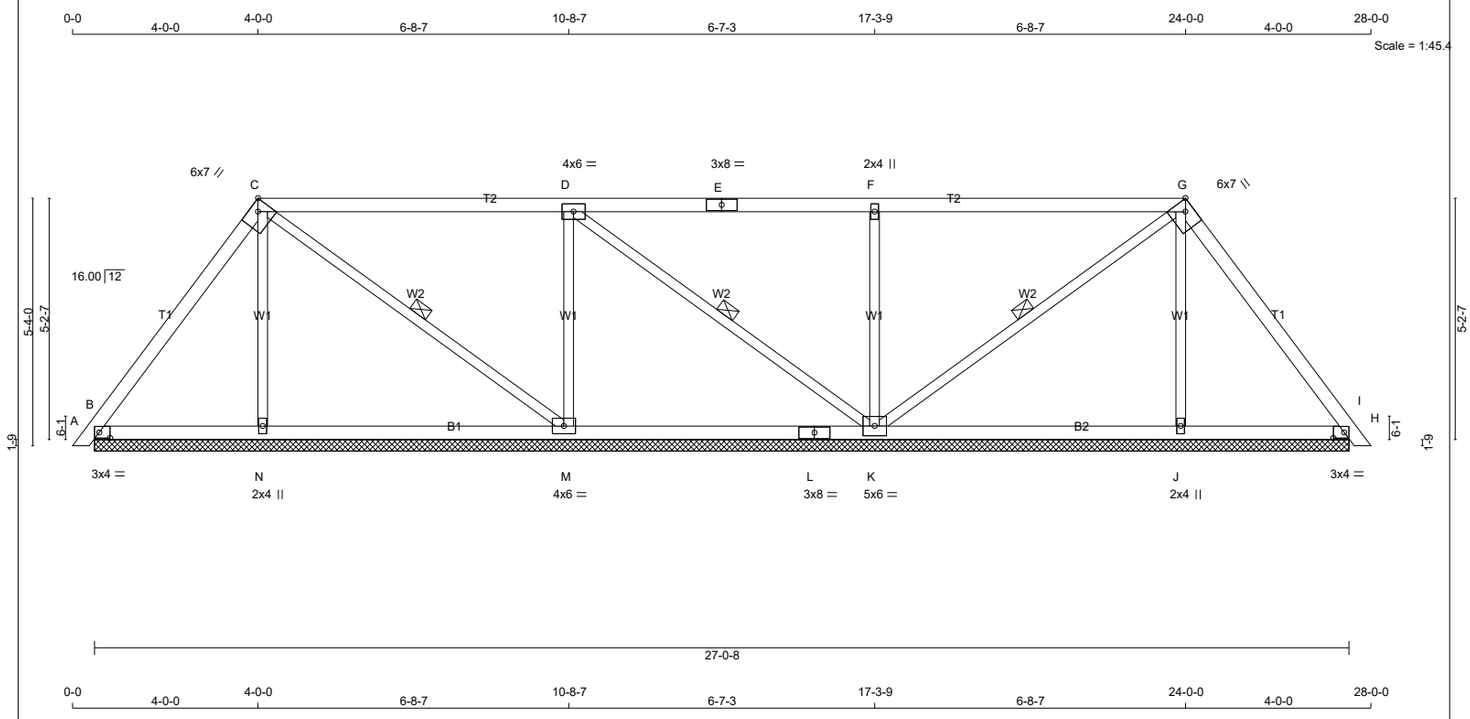

TOTAL WEIGHT = 2 X 103 = 206 lb [M]

LUMBER

N. L. G. A. RULES

CHORDS	SIZE		LUMBER	DESCR.
A - C	2x4	DRY	No.2	SPF
C - E	2x4	DRY	No.2	SPF
E - G	2x4	DRY	No.2	SPF
G - I	2x4	DRY	No.2	SPF
B - L	2x4	DRY	No.2	SPF
L - H	2x4	DRY	No.2	SPF
ALL WEBS	2x3	DRY	No.2	SPF

DRY: SEASONED LUMBER.

PLATES (table is in inches)

JT	TYPE	PLATES	W	LEN	Y	X
B	TMB1-l	MT20	3.0	4.0	1.50	2.75
C	TTWW-h	MT20	6.0	7.0	Edge	2.75
D	TMWW-t	MT20	4.0	6.0		
E	TS-t	MT20	3.0	8.0		
F	TMW+w	MT20	2.0	4.0		
G	TTWW-h	MT20	6.0	7.0	Edge	2.75
H	TMB1-l	MT20	3.0	4.0	1.50	2.75
J	BMW1+w	MT20	2.0	4.0		
K	BMWWW1-t	MT20	5.0	6.0		
L	BS-t	MT20	3.0	8.0		
M	BMWW1-t	MT20	4.0	6.0		
N	BMW1+w	MT20	2.0	4.0		

Edge - INDICATES REFERENCE CORNER OF PLATE TOUCHES EDGE OF CHORD.

LATERAL BRACE(S) SHOWN SHALL BE 2X4 SPF#2

LICENSED PROFESSIONAL ENGINEER
Y. WIDYA
100225448
07/25/2022
PROVINCE OF ONTARIO

DIMENSIONS, SUPPORTS AND LOADINGS SPECIFIED BY FABRICATOR TO BE VERIFIED BY BUILDING DESIGNER

BEARINGS

JT	FACTORED GROSS REACTION VERT	HORZ	MAXIMUM FACTORED GROSS REACTION DOWN	HORZ	UPLIFT	INPUT BRG IN-SX	REQRD BRG IN-SX
B	303	0	303	0	0	27-0-8 (11-6-4)	8
N	312	0	312	0	0	27-0-8 (11-6-4)	8
M	654	0	654	0	0	27-0-8 (11-6-4)	8
K	822	0	822	0	0	27-0-8 (11-6-4)	8
J	317	0	317	0	0	27-0-8 (11-6-4)	8
H	258	0	258	0	0	27-0-8 (11-6-4)	8

VALUE IN PARENTHESIS INDICATES EFFECTIVE BEARING LENGTH

UNFACTORED REACTIONS

JT	1ST LCASE COMBINED	MAX./MIN. COMPONENT REACTIONS SNOW	LIVE	PERM.LIVE	WIND	DEAD	SOIL
B	212	153 / 0	0 / 0	0 / 0	0 / 0	59 / 0	0 / 0
N	227	110 / 0	0 / 0	0 / 0	0 / 0	117 / 0	0 / 0
M	466	285 / 0	0 / 0	0 / 0	0 / 0	181 / 0	0 / 0
K	583	376 / 0	0 / 0	0 / 0	0 / 0	207 / 0	0 / 0
J	231	113 / 0	0 / 0	0 / 0	0 / 0	118 / 0	0 / 0
H	180	129 / 0	0 / 0	0 / 0	0 / 0	52 / 0	0 / 0

BEARING MATERIAL TO BE SPF NO.2 OR BETTER AT JOINT(S) B, N, M, K, J, H

BRACING

TOP CHORD TO BE SHEATHED OR MAX. PURLIN SPACING = 6.25 FT.
MAX. UNBRACED BOTTOM CHORD LENGTH = 10.00 FT OR RIGID CEILING DIRECTLY APPLIED.

ALL PITCH BREAKS AND PERIMETER CORNER JOINTS MUST BE LATERALLY RESTRAINED.

1 LATERAL BRACE(S) AT 1/ 2 LENGTH OF C-M, D-K, G-K.

LOADING

TOTAL LOAD CASES: (4)

CHORDS

MEMB. FR-TO	MAX. FACTORED FORCE (LBS)	FACTORED VERT. LOAD LC1 (PLF) FROM	TO	MAX CSI (LC)	MAX. UNBRAC LENGTH
A- B	0 / 10	-78.0	-78.0	0.01 (1)	10.00
B- C	-146 / 0	-78.0	-78.0	0.17 (1)	6.25
C- D	-48 / 0	-78.0	-78.0	0.47 (1)	6.25
D- E	0 / 38	-78.0	-78.0	0.48 (1)	10.00
E- F	0 / 38	-78.0	-78.0	0.48 (1)	10.00
F- G	0 / 39	-78.0	-78.0	0.48 (1)	10.00
G- H	-91 / 0	-78.0	-78.0	0.17 (1)	6.25
H- I	0 / 10	-78.0	-78.0	0.01 (1)	10.00
B- N	0 / 86	-18.5	-18.5	0.13 (4)	10.00
N- M	0 / 81	-18.5	-18.5	0.17 (4)	10.00
M- L	0 / 48	-18.5	-18.5	0.17 (4)	10.00
L- K	0 / 48	-18.5	-18.5	0.17 (4)	10.00
K- J	0 / 49	-18.5	-18.5	0.17 (4)	10.00
J- H	0 / 53	-18.5	-18.5	0.13 (4)	10.00

WEBS

MEMB. FR-TO	MAX. FACTORED FORCE (LBS)	MAX CSI (LC)
N- C	-205 / 0	0.08 (1)
C- M	-41 / 0	0.02 (1)
M- D	-505 / 0	0.20 (1)
D- K	-108 / 0	0.05 (1)
K- F	-570 / 0	0.23 (1)
K- G	-107 / 0	0.05 (1)
J- G	-210 / 0	0.08 (1)

DESIGN CRITERIA

SPECIFIED LOADS:

TOP CH.	LL	=	21.0	PSF
	DL	=	6.0	PSF
BOT CH.	LL	=	0.0	PSF
	DL	=	7.4	PSF
TOTAL LOAD		=	34.4	PSF

SPACING = 24.0 IN. C/C

LOADING IN FLAT SECTION BASED ON A SLOPE OF 2.00/12 MINIMUM

THIS TRUSS IS DESIGNED FOR RESIDENTIAL OR SMALL BUILDING REQUIREMENTS OF PART 9, NBCC 2015

THIS DESIGN COMPLIES WITH:
- PART 9 OF BCBC 2018 , ABC 2019
- PART 9 OF OBC 2012 (2019 AMENDMENT)
- CSA 086-14
- TPIC 2014

(55 % OF 23.0 P.S.F. G.S.L. PLUS 8.4 P.S.F. RAIN LOAD) EQUALS 21.0 P.S.F. SPECIFIED ROOF LIVE LOAD

CSI: TC=0.48/1.00 (D-F:1) , BC=0.17/1.00 (M-N:4) , WB=0.23/1.00 (F-K:1) , SSI=0.24/1.00 (C-D:1)

DOL LUMBER=1.00 NAIL=1.00 LS BEND=1.10 COMP=1.10 SHEAR=1.10 TENS= 1.10

COMPANION LIVE LOAD FACTOR = 1.00

TRUSS PLATE MANUFACTURER IS NOT RESPONSIBLE FOR QUALITY CONTROL IN THE TRUSS MANUFACTURING PLANT .

NAIL VALUES

PLATE	GRIP(DRY) (PSI) MAX	MIN	SHEAR (PLI) MAX	MIN	SECTION (PLI) MAX	MIN
MT20	650	371	1747	788	1987	1873

PLATE PLACEMENT TOL. = 0.250 inches

PLATE ROTATION TOL. = 5.0 Deg.

JSI GRIP= 0.76 (G) (INPUT = 0.90)
JSI METAL= 0.22 (E) (INPUT = 1.00)

JOB NAME	TRUSS NAME	QUANTITY	PLY	JOB DESC.	DRWG NO.
346378	P14D		1	TRUSS DESC. JT 45147	E22075325

Alpa Roof Truss, Maple

Version 8.530 S Feb 23 2022 MiTek Industries, Inc. Mon Jul 25 12:12:09 2022 Page 1

ID:9a plwcon izmXpuR1McGqzT9hG-xAByCdF?VC0IRjWn4uWvm4BlL6UQkXNAqgS2oLyuY2a

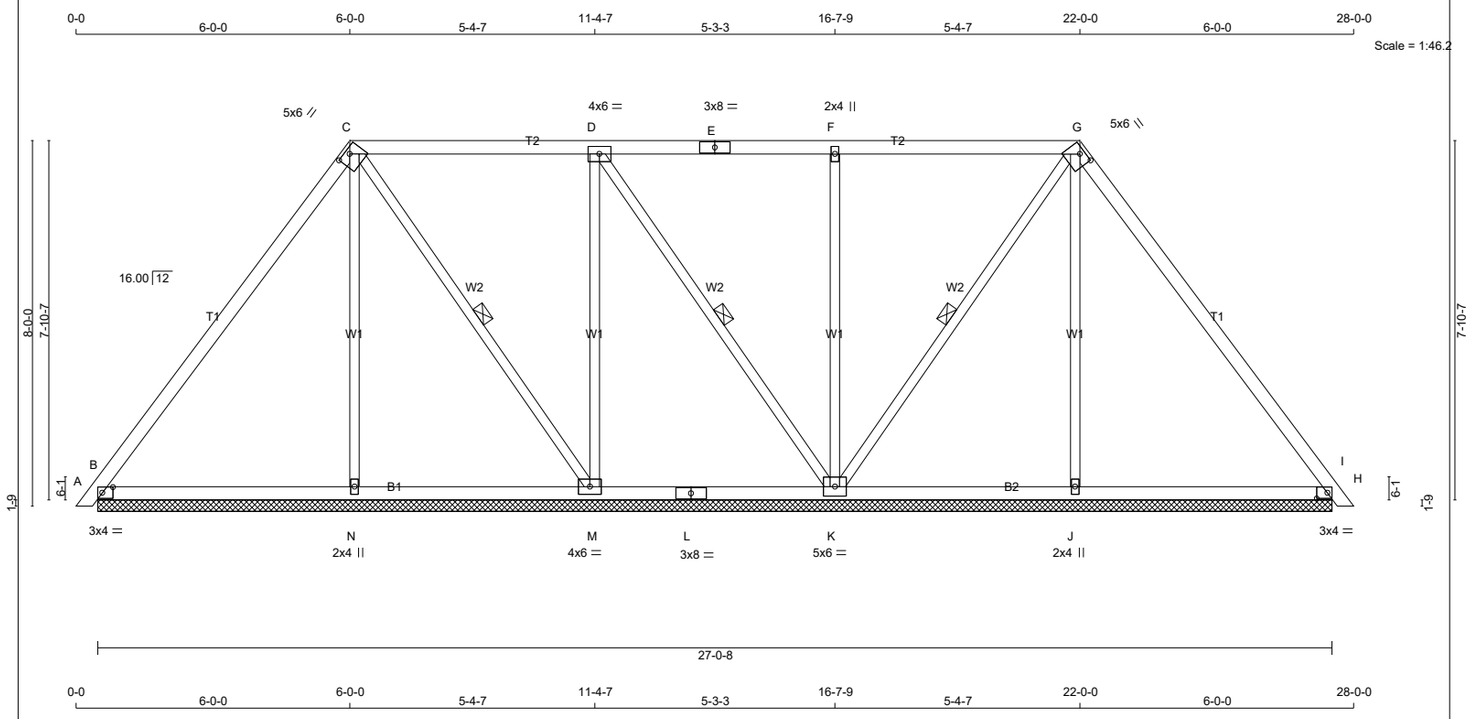

TOTAL WEIGHT = 2 X 117 = 235 lb

[M]

LUMBER

N. L. G. A. RULES

CHORDS	SIZE		LUMBER	DESCR.
A - C	2x4	DRY	No.2	SPF
C - E	2x4	DRY	No.2	SPF
E - G	2x4	DRY	No.2	SPF
G - I	2x4	DRY	No.2	SPF
B - L	2x4	DRY	No.2	SPF
L - H	2x4	DRY	No.2	SPF
ALL WEBS	2x3	DRY	No.2	SPF

DRY: SEASONED LUMBER.

PLATES (table is in inches)

JT	TYPE	PLATES	W	LEN	Y	X
B	TMB1-l	MT20	3.0	4.0	1.50	2.75
C	TTWW-h	MT20	5.0	6.0	1.25	3.00
D	TMWW-t	MT20	4.0	6.0		
E	TS-t	MT20	3.0	8.0		
F	TMW+w	MT20	2.0	4.0		
G	TTWW-h	MT20	5.0	6.0	1.25	3.00
H	TMB1-l	MT20	3.0	4.0	1.50	2.75
J	BMW1+w	MT20	2.0	4.0		
K	BMWWW1-t	MT20	5.0	6.0		
L	BS-t	MT20	3.0	8.0		
M	BMWW1-t	MT20	4.0	6.0		
N	BMW1+w	MT20	2.0	4.0		

LATERAL BRACE(S) SHOWN SHALL BE 2X4 SPF#2

DIMENSIONS, SUPPORTS AND LOADINGS SPECIFIED BY FABRICATOR TO BE VERIFIED BY BUILDING DESIGNER

BEARINGS

JT	FACTORED GROSS REACTION VERT	HORZ	MAXIMUM FACTORED GROSS REACTION DOWN	HORZ	UPLIFT	INPUT BRG IN-SX	REQRD BRG IN-SX
B	415	0	415	0	0	27-0-8 (14-0-8)	8
N	301	0	301	0	0	27-0-8 (14-0-8)	8
M	486	0	486	0	0	27-0-8 (14-0-8)	8
K	810	0	810	0	0	27-0-8 (14-0-8)	8
J	301	0	301	0	0	27-0-8 (14-0-8)	8
H	352	0	352	0	0	27-0-8 (14-0-8)	8

VALUE IN PARENTHESIS INDICATES EFFECTIVE BEARING LENGTH

UNFACTORED REACTIONS

JT	1ST LCASE COMBINED	MAX./MIN. COMPONENT REACTIONS SNOW	LIVE	PERM.LIVE	WIND	DEAD	SOIL
B	292	201 / 0	0 / 0	0 / 0	0 / 0	91 / 0	0 / 0
N	221	100 / 0	0 / 0	0 / 0	0 / 0	121 / 0	0 / 0
M	347	211 / 0	0 / 0	0 / 0	0 / 0	135 / 0	0 / 0
K	571	386 / 0	0 / 0	0 / 0	0 / 0	185 / 0	0 / 0
J	221	100 / 0	0 / 0	0 / 0	0 / 0	121 / 0	0 / 0
H	248	167 / 0	0 / 0	0 / 0	0 / 0	81 / 0	0 / 0

BEARING MATERIAL TO BE SPF NO.2 OR BETTER AT JOINT(S) B, N, M, K, J, H

BRACING

TOP CHORD TO BE SHEATHED OR MAX. PURLIN SPACING = 6.25 FT.
MAX. UNBRACED BOTTOM CHORD LENGTH = 10.00 FT OR RIGID CEILING DIRECTLY APPLIED.

ALL PITCH BREAKS AND PERIMETER CORNER JOINTS MUST BE LATERALLY RESTRAINED.

1 LATERAL BRACE(S) AT 1/ 2 LENGTH OF C-M, D-K, G-K.

LOADING

TOTAL LOAD CASES: (4)

CHORDS

MEMB. FR-TO	MAX. FACTORED FORCE (LBS)	FACTORED VERT. LOAD LC1 FROM (PLF)	TO	MAX CSI (LC)	MAX. UNBRAC LENGTH
A- B	0 / 10	-78.0	-78.0	0.01 (1)	10.00
B- C	-161 / 0	-78.0	-78.0	0.42 (1)	6.25
C- D	-44 / 0	-78.0	-78.0	0.30 (1)	6.25
D- E	0 / 46	-78.0	-78.0	0.31 (1)	10.00
E- F	0 / 46	-78.0	-78.0	0.31 (1)	10.00
F- G	0 / 47	-78.0	-78.0	0.31 (1)	10.00
G- H	-83 / 0	-78.0	-78.0	0.41 (1)	6.25
H- I	0 / 10	-78.0	-78.0	0.01 (1)	10.00
B- N	0 / 95	-18.5	-18.5	0.14 (4)	10.00
N- M	0 / 93	-18.5	-18.5	0.14 (4)	10.00
M- L	0 / 44	-18.5	-18.5	0.09 (4)	10.00
L- K	0 / 44	-18.5	-18.5	0.09 (4)	10.00
K- J	0 / 46	-18.5	-18.5	0.14 (4)	10.00
J- H	0 / 49	-18.5	-18.5	0.14 (4)	10.00

WEBS

MEMB. FR-TO	MAX. FACTORED FORCE (LBS)	MAX CSI (LC)
N- C	-186 / 0	0.22 (1)
C- M	-83 / 0	0.05 (1)
M- D	-325 / 0	0.38 (1)
D- K	-159 / 0	0.09 (1)
K- F	-455 / 0	0.53 (1)
K- G	-160 / 0	0.09 (1)
J- G	-186 / 0	0.22 (1)

DESIGN CRITERIA

SPECIFIED LOADS:

TOP CH.	LL	=	21.0	PSF
	DL	=	6.0	PSF
BOT CH.	LL	=	0.0	PSF
	DL	=	7.4	PSF
TOTAL LOAD		=	34.4	PSF

SPACING = 24.0 IN. C/C

LOADING IN FLAT SECTION BASED ON A SLOPE OF 2.00/12 MINIMUM

THIS TRUSS IS DESIGNED FOR RESIDENTIAL OR SMALL BUILDING REQUIREMENTS OF PART 9, NBCC 2015

THIS DESIGN COMPLIES WITH:
- PART 9 OF BCBC 2018 , ABC 2019
- PART 9 OF OBC 2012 (2019 AMENDMENT)
- CSA 086-14
- TPIC 2014

(55 % OF 23.0 P.S.F. G.S.L. PLUS 8.4 P.S.F. RAIN LOAD) EQUALS 21.0 P.S.F. SPECIFIED ROOF LIVE LOAD

CSI: TC=0.42/1.00 (B-C:1) , BC=0.14/1.00 (B-N:4) , WB=0.53/1.00 (F-K:1) , SSI=0.20/1.00 (C-D:1)

DOL LUMBER=1.00 NAIL=1.00 LS BEND=1.10 COMP=1.10 SHEAR=1.10 TENS= 1.10

COMPANION LIVE LOAD FACTOR = 1.00

TRUSS PLATE MANUFACTURER IS NOT RESPONSIBLE FOR QUALITY CONTROL IN THE TRUSS MANUFACTURING PLANT .

NAIL VALUES

PLATE	GRIP(DRY) (PSI) MAX	MIN	SHEAR (PLI) MAX	MIN	SECTION (PLI) MAX	MIN
MT20	650	371	1747	788	1987	1873

PLATE PLACEMENT TOL. = 0.250 inches

PLATE ROTATION TOL. = 5.0 Deg.

JSI GRIP= 0.76 (C) (INPUT = 0.90)
JSI METAL= 0.19 (B) (INPUT = 1.00)

JOB NAME	TRUSS NAME	QUANTITY	PLY	JOB DESC.	DRWG NO.
346378	H05A		1	TRUSS DESC. JT 45147	E22075326

Alpha Roof Truss, Maple

Version 8.530 S Feb 23 2022 MiTek Industries, Inc. Mon Jul 25 12:11:25 2022 Page 1

ID:9a plwcon izmXpuR1McGqzT9hG-DiXKzajPshTX9y9KVfjb oM63MIIQWaii ojGuyuY3G

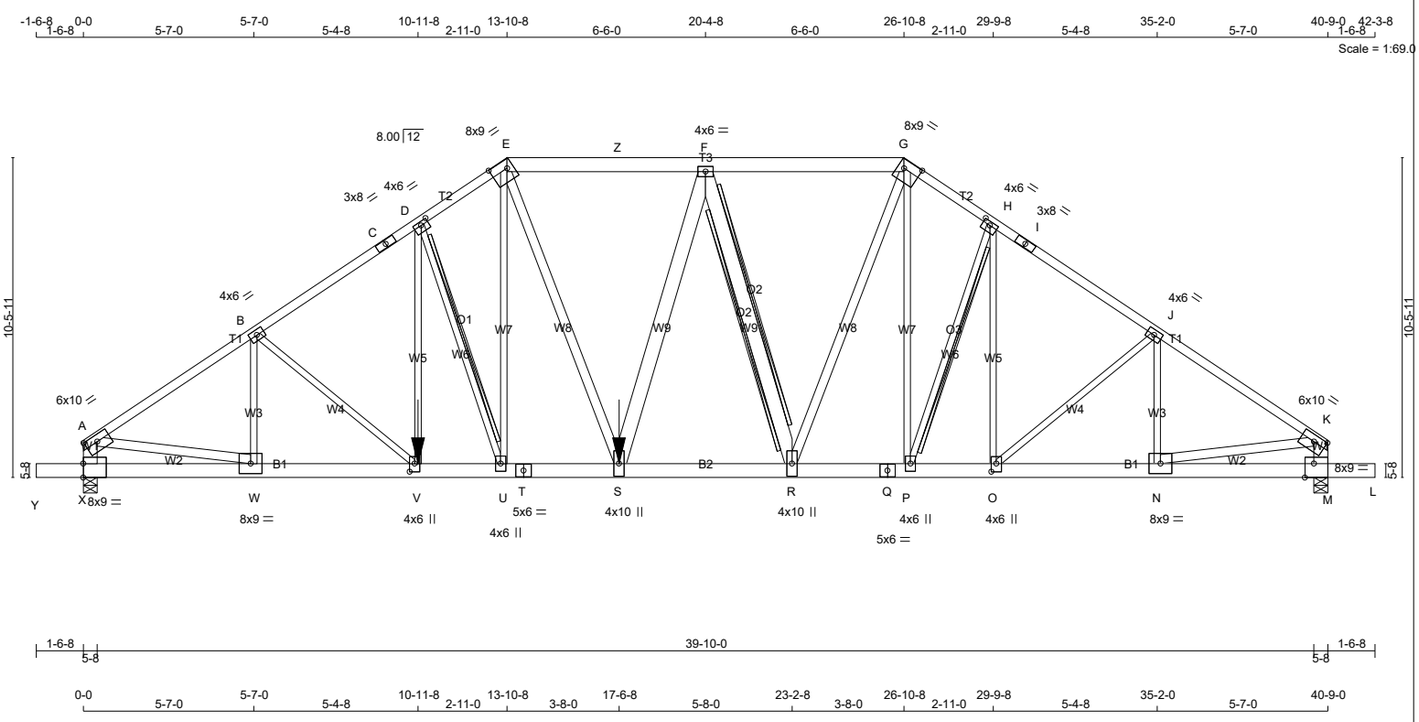

TOTAL WEIGHT = 2 X 273 = 546 lb [M]

LUMBER

N. L. G. A. RULES

CHORDS	SIZE		LUMBER	DESCR.
A - C	2x4	DRY	1650F 1.5E	SPF
C - E	2x4	DRY	1650F 1.5E	SPF
E - G	2x6	DRY	No.2	SPF
G - I	2x4	DRY	1650F 1.5E	SPF
I - K	2x4	DRY	1650F 1.5E	SPF
X - A	2x6	DRY	No.2	SPF
M - K	2x6	DRY	No.2	SPF
Y - T	2x6	DRY	No.2	SPF
T - Q	2x6	DRY	No.2	SPF
Q - L	2x6	DRY	No.2	SPF
ALL WEBS	2x3	DRY	No.2	SPF
EXCEPT				
E - S	2x4	DRY	No.2	SPF
S - F	2x6	DRY	No.2	SPF
F - R	2x6	DRY	No.2	SPF
R - G	2x4	DRY	No.2	SPF
A - W	2x4	DRY	No.2	SPF
N - K	2x4	DRY	No.2	SPF

DRY: SEASONED LUMBER.

PLATES (table is in inches)

JT	TYPE	PLATES	W	LEN	Y	X
A	TMVW-t	MT20	6.0	10.0	2.50	4.75
B, F, J						
B	TMWW-t	MT20	4.0	6.0		
C	TS-t	MT20	3.0	8.0		
D	TMWW-t	MT20	4.0	6.0	1.50	3.00
E	TTWW-h	MT20	8.0	9.0	3.25	6.50
G	TTWW-h	MT20	8.0	9.0	3.25	6.50
H	TMWW-t	MT20	4.0	6.0	1.50	3.00
I	TS-t	MT20	3.0	8.0		
K	TMVW-t	MT20	6.0	10.0	2.50	4.75
M	BMV1-t	MT20	8.0	9.0	Edge	3.50
N	BMWW-t	MT20	8.0	9.0		
O	BMWW+t	MT20	4.0	6.0	3.25	2.00
P	BMWW+t	MT20	4.0	6.0		
Q	BS-t	MT20	5.0	6.0		
R	BMWW+t	MT20	4.0	10.0		
S	BMWW+t	MT20	4.0	10.0		
T	BS-t	MT20	5.0	6.0		
U	BMWW+t	MT20	4.0	6.0		
V	BMWW+t	MT20	4.0	6.0	3.25	2.00
W	BMWW-t	MT20	8.0	9.0		
X	BMV1-t	MT20	8.0	9.0	Edge	

Edge - INDICATES REFERENCE CORNER OF PLATE TOUCHES EDGE OF CHORD.

LATERAL BRACE(S) SHOWN SHALL BE 2X4 SPF#2

DIMENSIONS, SUPPORTS AND LOADINGS SPECIFIED BY FABRICATOR TO BE VERIFIED BY BUILDING DESIGNER

BEARINGS

JT	FACTORED GROSS REACTION VERT	HORZ	MAXIMUM FACTORED GROSS REACTION DOWN	HORZ	UPLIFT	INPUT BRG IN-SX	REQRD BRG IN-SX
X	4814	0	4814	0	0	5-8	5-8
M	3720	0	3720	0	0	5-8	5-8

UNFACTORED REACTIONS

JT	1ST LCASE COMBINED	SNOW	MAX./MIN. COMPONENT REACTIONS LIVE	PERM.LIVE	WIND	DEAD	SOIL
X	3401	2252 / 0	0 / 0	0 / 0	0 / 0	1149 / 0	0 / 0
M	2637	1694 / 0	0 / 0	0 / 0	0 / 0	944 / 0	0 / 0

BEARING MATERIAL TO BE SPF NO.2 OR BETTER AT JOINT(S) X, M
BEARING SIZE FACTOR = 1.15 AT JNT(S) X, M (BASED ON SUPPORT DEPTH = 1-8)

BRACING

FOR SECTION E-G, MAX. PURLIN SPACING = 2.00 FT.
FOR OTHER SECTIONS, TOP CHORD TO BE SHEATHED OR MAX. PURLIN SPACING = 2.68 FT.
MAX. UNBRACED BOTTOM CHORD LENGTH = 10.00 FT OR RIGID CEILING DIRECTLY APPLIED.

ALL PITCH BREAKS AND PERIMETER CORNER JOINTS MUST BE LATERALLY RESTRAINED.

2x4 DRY SPF No.2 T-BRACE AT D-U
2x4 DRY SPF No.2 I-BRACE AT F-R
2x3 DRY SPF No.2 T-BRACE AT H-P

FASTEN T AND I-BRACES TO NARROW EDGE OF WEB WITH ONE ROW PER PLY OF 3" COMMON WIRE NAILS @ 6" O.C. WITH 3" MINIMUM END DISTANCE. BRACE MUST COVER 90% OF WEB LENGTH.

END VERTICAL(S) MUST BE SHEATHED OR HAVE BRACES AS INDICATED IN THE MAX. UNBRACED LENGTH COLUMN OF THE TABLE BELOW

LOADING

TOTAL LOAD CASES: (4)

CHORDS

MEMB. FR-TO	MAX. FACTORED FORCE (LBS)	FACTORED VERT. LOAD (PLF) FROM	TO	LC1 CSI (LC)	MAX UNBRAC LENGTH
A- B	-6520 / 0	-78.0	-78.0	0.95 (1)	2.73
B- C	-6711 / 0	-78.0	-78.0	0.93 (1)	2.68
C- D	-6711 / 0	-78.0	-78.0	0.93 (1)	2.68
D- E	-6163 / 0	-156.0	-156.0	0.40 (1)	3.02
E- Z	-5568 / 0	-171.0	-171.0	0.64 (1)	2.00
Z- F	-5568 / 0	-93.0	-93.0	0.64 (1)	2.00
F- G	-4740 / 0	-93.0	-93.0	0.58 (1)	2.00
G- H	-4832 / 0	-78.0	-78.0	0.30 (1)	3.48
H- I	-4958 / 0	-78.0	-78.0	0.68 (1)	3.23
I- J	-4958 / 0	-78.0	-78.0	0.68 (1)	3.23
J- K	-4906 / 0	-78.0	-78.0	0.70 (1)	3.25
X- A	-4606 / 0	0.0	0.0	0.33 (1)	4.97
M- K	-3512 / 0	0.0	0.0	0.25 (1)	5.64
Y- X	0 / 0	-96.5	-96.5	0.08 (1)	10.00
X- W	0 / 0	-18.5	-18.5	0.08 (4)	10.00
W- V	0 / 5443	-18.5	-18.5	0.84 (1)	10.00
V- U	0 / 5576	-37.3	-37.3	0.84 (1)	10.00
U- T	0 / 5114	-37.3	-37.3	0.76 (1)	10.00
T- S	0 / 5114	-37.3	-37.3	0.76 (1)	10.00
S- R	0 / 5279	-18.5	-18.5	0.74 (1)	10.00
R- Q	0 / 4015	-18.5	-18.5	0.57 (1)	10.00
Q- P	0 / 4015	-18.5	-18.5	0.57 (1)	10.00
P- O	0 / 4115	-18.5	-18.5	0.58 (1)	10.00
O- N	0 / 4102	-18.5	-18.5	0.61 (1)	10.00
N- M	0 / 0	-18.5	-18.5	0.07 (4)	10.00
M- L	0 / 0	-96.5	-96.5	0.08 (1)	10.00

WEBS

MEMB. FR-TO	MAX. FACTORED FORCE (LBS)	MAX CSI (LC)
W- B	-685 / 0	0.24 (1)
V- B	0 / 174	0.04 (1)
V- D	0 / 1170	0.29 (1)
D- U	-1363 / 0	0.79 (1)
U- E	0 / 1543	0.38 (1)
E- S	0 / 1322	0.23 (1)
S- F	0 / 1059	0.14 (1)
F- R	-1984 / 0	0.85 (1)
R- G	0 / 2111	0.37 (1)
P- G	0 / 384	0.10 (1)
P- H	-292 / 0	0.37 (1)
O- H	0 / 84	0.03 (4)
O- J	-14 / 17	0.01 (4)
N- J	-512 / 0	0.18 (1)
A- W	0 / 5501	0.97 (1)
N- K	0 / 4146	0.73 (1)

FACTORED CONCENTRATED LOADS (LBS)

JT	LOC.	LC1	MAX-	MAX+	FACE	DIR.	TYPE	HEEL	CONN.
S	17-6-8	-2174	-2174	---	FRONT	VERT	TOTAL	---	C1
V	10-11-8	-1300	-1300	---	FRONT	VERT	TOTAL	---	C1

CONNECTION REQUIREMENTS

1) **C1:** A SUITABLE HANGER/MECHANICAL CONNECTION IS REQUIRED.

DESIGN CRITERIA

*** SPECIAL LOADS ANALYSIS ***
GEOMETRY AND/OR BASIC LOADS CHANGED BY USER.
LOADS WERE DERIVED FROM USER INPUT
NO FURTHER MODIFICATIONS WERE MADE

SPECIFIED LOADS:

TOP	CH.	LL	=	21.0	PSF
		DL	=	6.0	PSF
BOT	CH.	LL	=	0.0	PSF
		DL	=	7.4	PSF
TOTAL	LOAD		=	34.4	PSF

SPACING = 24.0 IN. C/C

LOADING IN FLAT SECTION BASED ON PIGGYBACK TRUSS WITH SLOPES OF 6.00/12 AND -6.00/12 AND RESPECTIVE HEEL HEIGHTS OF 0-0 AND 0-0 AND AN ADDITIONAL DEAD LOAD OF 6.0 P.S.F.

*** NON STANDARD GIRDER ***
ADDT'L USER-DEFINED LOADS APPLIED TO ALL LOAD CASES.

THIS TRUSS IS DESIGNED FOR RESIDENTIAL OR SMALL BUILDING REQUIREMENTS OF PART 9, NBCC 2015

THIS DESIGN COMPLIES WITH:
- PART 9 OF BCBC 2018 , ABC 2019
- PART 9 OF OBC 2012 (2019 AMENDMENT)
- CSA 086-14
- TPIC 2014

(55 % OF 23.0 P.S.F. G.S.L. PLUS 8.4 P.S.F. RAIN LOAD) EQUALS 21.0 P.S.F. SPECIFIED ROOF LIVE LOAD

ALLOWABLE DEFL.(LL)= L/360 (1.36")
CALCULATED VERT. DEFL.(LL) = L/ 999 (0.24")
ALLOWABLE DEFL.(TL)= L/360 (1.36")
CALCULATED VERT. DEFL.(TL) = L/ 999 (0.44")

CANTILEVER DEFLECTION:
ALLOWABLE DEFL.(LL)= L/120 (0.19")
CALCULATED VERT. DEFL.(LL) = L/ 999 (0.00")
ALLOWABLE DEFL.(TL)= L/120 (0.19")
CALCULATED VERT. DEFL.(TL) = L/ 999 (0.00")

CSI: TC=0.95/1.00 (A-B:1) , BC=0.84/1.00 (U-V:1) , WB=0.97/1.00 (A-W:1) , SSI=0.31/1.00 (E-F:1)

DOL LUMBER=1.00 NAIL=1.00 LS BEND=1.00 COMP=1.00 SHEAR=1.00 TENS= 1.00

COMPANION LIVE LOAD FACTOR = 1.00

AUTOSOLVE HEELS OFF

TRUSS PLATE MANUFACTURER IS NOT RESPONSIBLE FOR QUALITY CONTROL IN THE TRUSS MANUFACTURING PLANT .

NAIL VALUES

PLATE	GRIP(DRY) (PSI) MAX	MIN	SHEAR (PLI) MAX	MIN	SECTION (PLI) MAX	MIN
MT20	650	371	1747	788	1987	1873

PLATE PLACEMENT TOL. = 0.250 inches

PLATE ROTATION TOL. = 5.0 Deg.

JSI GRIP= 0.89 (A) (INPUT = 0.90)
JSI METAL= 0.95 (A) (INPUT = 1.00)

JOB NAME	TRUSS NAME	QUANTITY	PLY	JOB DESC.		DRWG NO.
346378	H05B		1	TRUSS DESC.	JT 45147	E22075327

Alpa Roof Truss, Maple

Version 8.530 S Feb 23 2022 MiTek Industries, Inc. Mon Jul 25 12:11:27 2022 Page 1

ID:9a plwcon izmXpuR1McGqzT9hG-94f4OGkfOIjFOGIjc4I33DSWIA6ZuU4 AIHqKmyuY3E

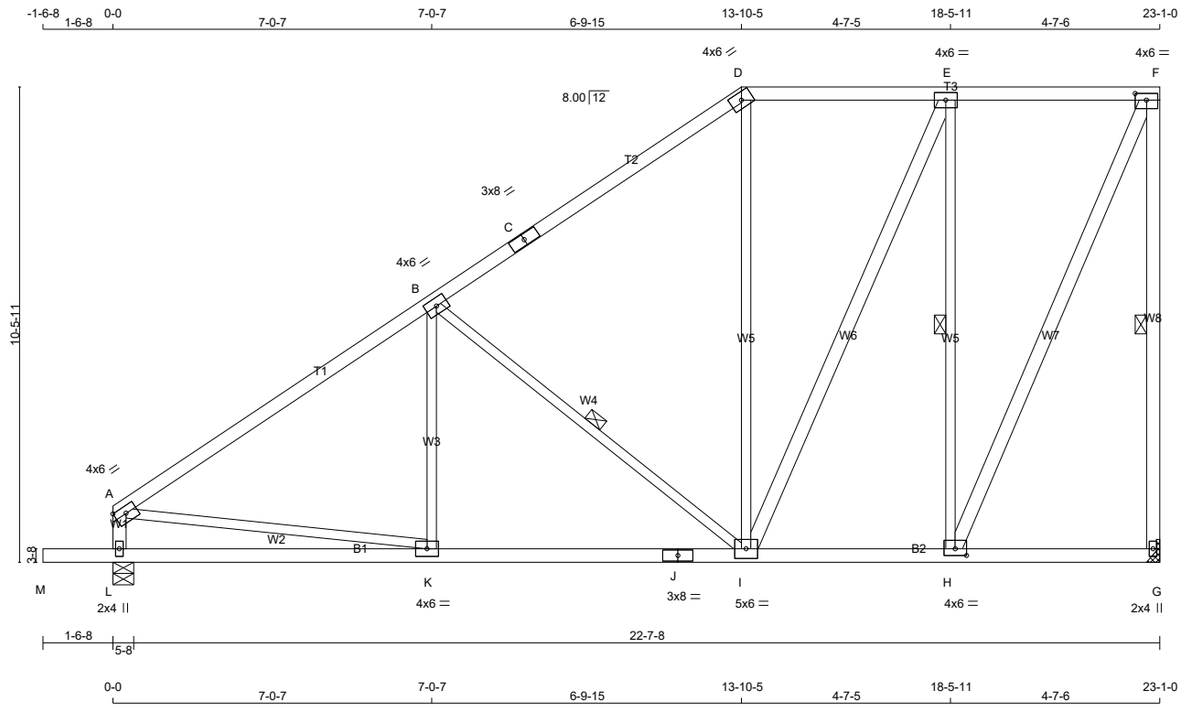

TOTAL WEIGHT = 2 X 127 = 255 lb

[M][F]

LUMBER

N. L. G. A. RULES

CHORDS	SIZE		LUMBER	DESCR.
A - C	2x4	DRY	No.2	SPF
C - D	2x4	DRY	No.2	SPF
D - F	2x4	DRY	No.2	SPF
G - F	2x4	DRY	No.2	SPF
L - A	2x4	DRY	No.2	SPF
M - J	2x4	DRY	No.2	SPF
J - G	2x4	DRY	No.2	SPF
ALL WEBS	2x3	DRY	No.2	SPF
EXCEPT				
I - E	2x4	DRY	No.2	SPF
H - F	2x4	DRY	No.2	SPF

DRY: SEASONED LUMBER.

PLATES (table is in inches)

JT	TYPE	PLATES	W	LEN	Y	X
A	TMVW-t	MT20	4.0	6.0	1.75	Edge
B	TMWW-t	MT20	4.0	6.0		
C	TS-t	MT20	3.0	8.0		
D	TTW-h	MT20	4.0	6.0		
E	TMWW-t	MT20	4.0	6.0		
F	TMVW-t	MT20	4.0	6.0	1.75	3.00
G	BMV1+p	MT20	2.0	4.0		
H	BMWW-t	MT20	4.0	6.0	1.75	3.00
I	BMWWW-t	MT20	5.0	6.0		
J	BS-t	MT20	3.0	8.0		
K	BMWW-t	MT20	4.0	6.0		
L	BMV1+p	MT20	2.0	4.0		

Edge - INDICATES REFERENCE CORNER OF PLATE TOUCHES EDGE OF CHORD.

LATERAL BRACE(S) SHOWN SHALL BE 2X4 SPF#2

LICENSED PROFESSIONAL ENGINEER
Y. WIDYA
100225448
07/25/2022
PROVINCE OF ONTARIO

DIMENSIONS, SUPPORTS AND LOADINGS SPECIFIED BY FABRICATOR TO BE VERIFIED BY BUILDING DESIGNER

BEARINGS

JT	FACTORED GROSS REACTION VERT	HORZ	MAXIMUM FACTORED GROSS REACTION DOWN	HORZ	UPLIFT	INPUT BRG	REQRD BRG
G	1224	0	1224	0	0	MECHANICAL	
L	1290	0	1290	0	0	5-8	1-8

A SUITABLE HANGER/MECHANICAL CONNECTION IS REQUIRED AT JOINT G. MINIMUM BEARING LENGTH AT JOINT G = 1-8.

UNFACTORED REACTIONS

JT	1ST LCASE COMBINED	MAX./MIN. COMPONENT REACTIONS SNOW	LIVE	PERM.LIVE	WIND	DEAD	SOIL
G	882	485 / 0	0 / 0	0 / 0	0 / 0	398 / 0	0 / 0
L	922	549 / 0	0 / 0	0 / 0	0 / 0	373 / 0	0 / 0

BEARING MATERIAL TO BE SPF NO.2 OR BETTER AT JOINT(S) L

BRACING

FOR SECTION D-F, MAX. PURLIN SPACING = 2.00 FT.
FOR OTHER SECTIONS, TOP CHORD TO BE SHEATHED OR MAX. PURLIN SPACING = 4.96 FT.
MAX. UNBRACED BOTTOM CHORD LENGTH = 10.00 FT OR RIGID CEILING DIRECTLY APPLIED.

ALL PITCH BREAKS AND PERIMETER CORNER JOINTS MUST BE LATERALLY RESTRAINED.

1 LATERAL BRACE(S) AT 1/ 2 LENGTH OF F-G, B-I, E-H.

END VERTICAL(S) MUST BE SHEATHED OR HAVE BRACES AS INDICATED IN THE MAX. UNBRACED LENGTH COLUMN OF THE TABLE BELOW

LOADING

TOTAL LOAD CASES: (4)

CHORDS

MEMB. FR-TO	MAX. FACTORED FORCE (LBS)	VERT. LOAD LC1 (PLF) FROM	TO	MAX CSI (LC)	MAX. UNBRAC LENGTH
A- B	-1292 / 0	-78.0	-78.0	0.56 (1)	4.96
B- C	-812 / 0	-78.0	-78.0	0.51 (1)	5.97
C- D	-812 / 0	-78.0	-78.0	0.51 (1)	5.97
D- E	-645 / 0	-93.0	-93.0	0.25 (1)	2.00
E- F	-464 / 0	-93.0	-93.0	0.25 (1)	2.00
G- F	-1189 / 0	0.0	0.0	0.65 (1)	5.86
L- A	-1089 / 0	0.0	0.0	0.11 (1)	7.57
M- L	0 / 0	-96.5	-96.5	0.16 (1)	10.00
L- K	0 / 0	-18.5	-18.5	0.23 (4)	10.00
K- J	0 / 1105	-18.5	-18.5	0.34 (4)	10.00
J- I	0 / 1105	-18.5	-18.5	0.34 (4)	10.00
I- H	0 / 464	-18.5	-18.5	0.16 (4)	10.00
H- G	0 / 0	-18.5	-18.5	0.08 (4)	10.00

WEBS

MEMB. FR-TO	MAX. FACTORED FORCE (LBS)	MAX CSI (LC)
K- B	0 / 109	0.04 (4)
B- I	-593 / 0	0.33 (1)
I- D	0 / 85	0.03 (4)
I- E	0 / 446	0.07 (1)
H- E	-936 / 0	0.72 (1)
H- F	0 / 1125	0.18 (1)
A- K	0 / 1114	0.25 (1)

DESIGN CRITERIA

SPECIFIED LOADS:

TOP CH.	LL	=	21.0	PSF
	DL	=	6.0	PSF
BOT CH.	LL	=	0.0	PSF
	DL	=	7.4	PSF
TOTAL LOAD		=	34.4	PSF

SPACING = 24.0 IN. C/C

LOADING IN FLAT SECTION BASED ON PIGGYBACK TRUSS WITH SLOPES OF 6.00/12 AND -6.00/12 AND RESPECTIVE HEEL HEIGHTS OF 0-0 AND 0-0 AND AN ADDITIONAL DEAD LOAD OF 6.0 P.S.F.

THIS TRUSS IS DESIGNED FOR RESIDENTIAL OR SMALL BUILDING REQUIREMENTS OF PART 9, NBCC 2015

THIS DESIGN COMPLIES WITH:
- PART 9 OF BCBC 2018 , ABC 2019
- PART 9 OF OBC 2012 (2019 AMENDMENT)
- CSA 086-14
- TPIC 2014

(55 % OF 23.0 P.S.F. G.S.L. PLUS 8.4 P.S.F. RAIN LOAD) EQUALS 21.0 P.S.F. SPECIFIED ROOF LIVE LOAD

ALLOWABLE DEFL.(LL)= L/360 (0.77")
CALCULATED VERT. DEFL.(LL) = L/ 999 (0.04")
ALLOWABLE DEFL.(TL)= L/360 (0.77")
CALCULATED VERT. DEFL.(TL) = L/ 999 (0.10")

CANTILEVER DEFLECTION:
ALLOWABLE DEFL.(LL)= L/120 (0.19")
CALCULATED VERT. DEFL.(LL) = L/ 999 (0.01")
ALLOWABLE DEFL.(TL)= L/120 (0.19")
CALCULATED VERT. DEFL.(TL) = L/ 999 (0.01")

CSI: TC=0.65/1.00 (F-G:1) , BC=0.34/1.00 (I-K:4) , WB=0.72/1.00 (E-H:1) , SSI=0.22/1.00 (A-B:1)

DOL LUMBER=1.00 NAIL=1.00 LS BEND=1.10 COMP=1.10 SHEAR=1.10 TENS= 1.10

COMPANION LIVE LOAD FACTOR = 1.00

TRUSS PLATE MANUFACTURER IS NOT RESPONSIBLE FOR QUALITY CONTROL IN THE TRUSS MANUFACTURING PLANT .

NAIL VALUES

PLATE	GRIP(DRY) (PSI) MAX	MIN	SHEAR (PLI) MAX	MIN	SECTION (PLI) MAX	MIN
MT20	650	371	1747	788	1987	1873

PLATE PLACEMENT TOL. = 0.250 inches

PLATE ROTATION TOL. = 5.0 Deg.

JSI GRIP= 0.77 (F) (INPUT = 0.90)
JSI METAL= 0.37 (J) (INPUT = 1.00)

JOB NAME	TRUSS NAME	QUANTITY	PLY	JOB DESC.	DRWG NO.
346378	H05C		1	TRUSS DESC. JT 45147	E22075328

Alpa Roof Truss, Maple

Version 8.530 S Feb 23 2022 MiTek Industries, Inc. Mon Jul 25 12:11:28 2022 Page 1

ID:9a plwcon izmXpuR1McGqzT9hG-dHDSbclH9cr60QtvAnHIbQ nXaU7d?P8Oy1NtDyuY3D

Scale = 1:37.0

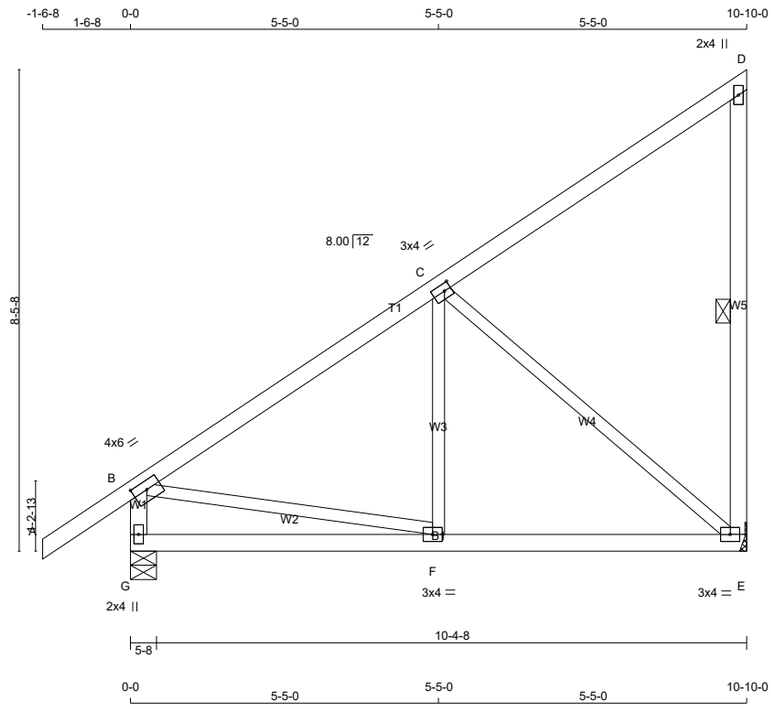

TOTAL WEIGHT = 2 X 52 = 105 lb

[M][F]

LUMBER

N. L. G. A. RULES

CHORDS	SIZE		LUMBER	DESCR.
A - D	2x4	DRY	No.2	SPF
E - D	2x4	DRY	No.2	SPF
G - B	2x4	DRY	No.2	SPF
G - E	2x4	DRY	No.2	SPF
ALL WEBS EXCEPT	2x3	DRY	No.2	SPF

DRY: SEASONED LUMBER.

PLATES (table is in inches)

JT	TYPE	PLATES	W	LEN	Y	X
B	TMVW-t	MT20	4.0	6.0	1.75	3.00
C	TMWW-t	MT20	3.0	4.0	1.50	1.50
D	TMV+p	MT20	2.0	4.0		
E	BMVW1-t	MT20	3.0	4.0		
F	BMWW-t	MT20	3.0	4.0		
G	BMV1+p	MT20	2.0	4.0		

DIMENSIONS, SUPPORTS AND LOADINGS SPECIFIED BY FABRICATOR TO BE VERIFIED BY BUILDING DESIGNER

BEARINGS

JT	FACTORED GROSS REACTION VERT	HORZ	MAXIMUM FACTORED GROSS REACTION DOWN	HORZ	UPLIFT	INPUT BRG	REQRD BRG
E	523	0	523	0	0	MECHANICAL	
G	649	0	649	0	0	5-8	1-8

A SUITABLE HANGER/MECHANICAL CONNECTION IS REQUIRED AT JOINT E. MINIMUM BEARING LENGTH AT JOINT E = 1-8.

UNFACTORED REACTIONS

JT	1ST LCASE COMBINED	MAX./MIN. COMPONENT REACTIONS SNOW	LIVE	PERM.LIVE	WIND	DEAD	SOIL
E	373	227 / 0	0 / 0	0 / 0	0 / 0	145 / 0	0 / 0
G	460	296 / 0	0 / 0	0 / 0	0 / 0	165 / 0	0 / 0

BEARING MATERIAL TO BE SPF NO.2 OR BETTER AT JOINT(S) G

BRACING

TOP CHORD TO BE SHEATHED OR MAX. PURLIN SPACING = 6.25 FT.
MAX. UNBRACED BOTTOM CHORD LENGTH = 10.00 FT OR RIGID CEILING DIRECTLY APPLIED.

ALL PITCH BREAKS AND PERIMETER CORNER JOINTS MUST BE LATERALLY RESTRAINED.

1 LATERAL BRACE(S) AT 1/ 2 LENGTH OF D-E.

END VERTICAL(S) MUST BE SHEATHED OR HAVE BRACES AS INDICATED IN THE MAX. UNBRACED LENGTH COLUMN OF THE TABLE BELOW

LOADING

TOTAL LOAD CASES: (4)

CHORDS

MEMB. FR-TO	MAX. FACTORED FORCE (LBS)	FACTORED VERT. LOAD LC1 (PLF) FROM	TO	MAX CSI (LC)	MAX. UNBRAC LENGTH
A- B	0 / 35	-78.0	-78.0	0.15 (1)	10.00
B- C	-438 / 0	-78.0	-78.0	0.30 (1)	6.25
C- D	-29 / 0	-78.0	-78.0	0.29 (1)	6.25
E- D	-159 / 0	0.0	0.0	0.05 (1)	6.25
G- B	-610 / 0	0.0	0.0	0.06 (1)	7.81
G- F	0 / 0	-18.5	-18.5	0.15 (4)	10.00
F- E	0 / 388	-18.5	-18.5	0.19 (4)	10.00

WEBS

MEMB. FR-TO	MAX. FACTORED FORCE (LBS)	MAX CSI (LC)
F- C	0 / 114	0.04 (4)
C- E	-506 / 0	0.45 (1)
B- F	0 / 394	0.09 (1)

DESIGN CRITERIA

SPECIFIED LOADS:

TOP CH.	LL	=	21.0	PSF
	DL	=	6.0	PSF
BOT CH.	LL	=	0.0	PSF
	DL	=	7.4	PSF
TOTAL LOAD		=	34.4	PSF

SPACING = 24.0 IN. C/C

THIS TRUSS IS DESIGNED FOR RESIDENTIAL OR SMALL BUILDING REQUIREMENTS OF PART 9, NBCC 2015

THIS DESIGN COMPLIES WITH:
- PART 9 OF BCBC 2018 , ABC 2019
- PART 9 OF OBC 2012 (2019 AMENDMENT)
- CSA 086-14
- TPIC 2014

(55 % OF 23.0 P.S.F. G.S.L. PLUS 8.4 P.S.F. RAIN LOAD) EQUALS 21.0 P.S.F. SPECIFIED ROOF LIVE LOAD

ALLOWABLE DEFL.(LL)= L/360 (0.36")
CALCULATED VERT. DEFL.(LL) = L/ 999 (0.01")
ALLOWABLE DEFL.(TL)= L/360 (0.36")
CALCULATED VERT. DEFL.(TL) = L/ 999 (0.02")

CSI: TC=0.30/1.00 (B-C:1) , BC=0.19/1.00 (E-F:4) , WB=0.45/1.00 (C-E:1) , SSI=0.17/1.00 (B-C:1)

DOL LUMBER=1.00 NAIL=1.00 LS BEND=1.10 COMP=1.10 SHEAR=1.10 TENS= 1.10

COMPANION LIVE LOAD FACTOR = 1.00

TRUSS PLATE MANUFACTURER IS NOT RESPONSIBLE FOR QUALITY CONTROL IN THE TRUSS MANUFACTURING PLANT .

NAIL VALUES

PLATE	GRIP(DRY) (PSI) MAX	MIN	SHEAR (PLI) MAX	MIN	SECTION (PLI) MAX	MIN
MT20	650	371	1747	788	1987	1873

PLATE PLACEMENT TOL. = 0.250 inches

PLATE ROTATION TOL. = 5.0 Deg.

JSI GRIP= 0.65 (F) (INPUT = 0.90)
JSI METAL= 0.15 (B) (INPUT = 1.00)

LATERAL BRACE(S) SHOWN SHALL BE 2X4 SPF#2

JOB NAME	TRUSS NAME	QUANTITY	PLY	JOB DESC.	DRWG NO.
346378	P05S		1	TRUSS DESC. JT 45147	E22075329

Alpa Roof Truss, Maple

Version 8.530 S Feb 23 2022 MiTek Industries, Inc. Mon Jul 25 12:12:05 2022 Page 1

ID:9a plwcon izmXpuR1McGqzT9hG-2OyRMFCURzVsy6C0r2RzbE04nU5bor1avCUqfZyuY2e

Scale = 1:20.9

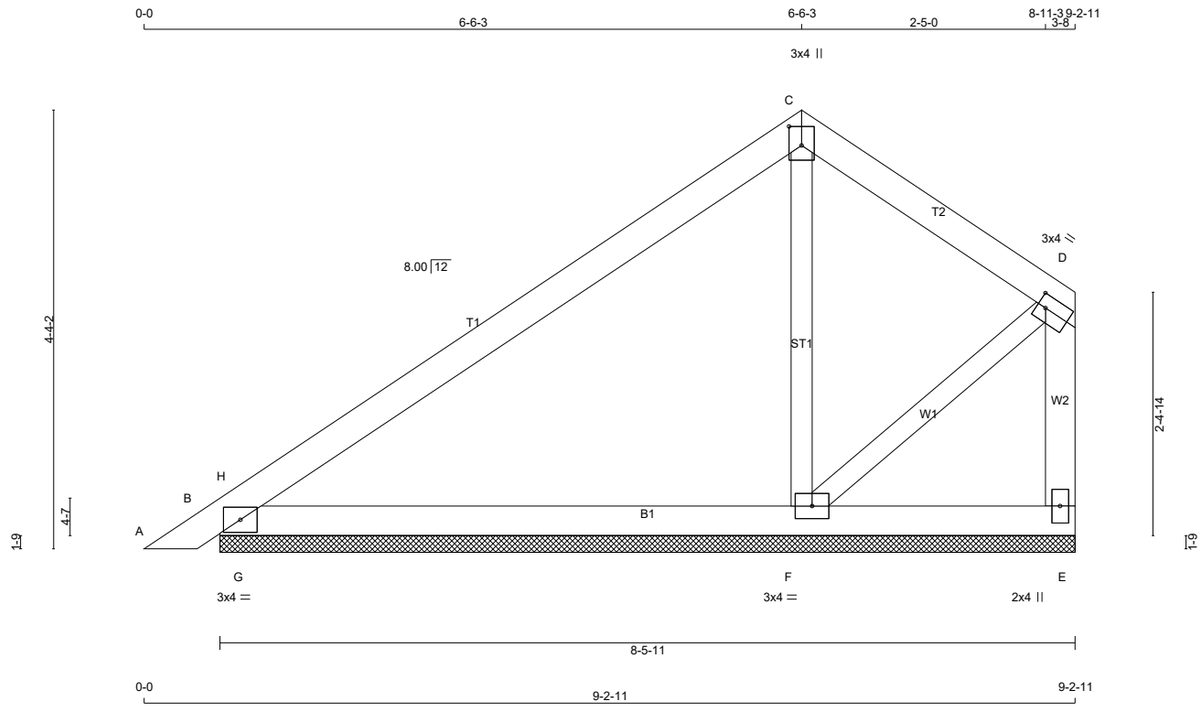

TOTAL WEIGHT = 2 X 30 = 60 lb

[M]

LUMBER

N. L. G. A. RULES

CHORDS	SIZE		LUMBER	DESCR.
A - C	2x4	DRY	No.2	SPF
C - D	2x4	DRY	No.2	SPF
E - D	2x4	DRY	No.2	SPF
B - E	2x4	DRY	No.2	SPF
ALL WEBS	2x3	DRY	No.2	SPF

DRY: SEASONED LUMBER.

PLATES (table is in inches)

JT	TYPE	PLATES	W	LEN	Y	X
B	TMB1-I	MT20	3.0	4.0		
C	TTW+p	MT20	3.0	4.0	2.25	1.50
D	TMVW-t	MT20	3.0	4.0	1.50	1.00
E	BMV1+p	MT20	2.0	4.0		
F	BMWW1-t	MT20	3.0	4.0		

DIMENSIONS, SUPPORTS AND LOADINGS SPECIFIED BY FABRICATOR TO BE VERIFIED BY BUILDING DESIGNER

BEARINGS

JT	FACTORED GROSS REACTION VERT	HORZ	MAXIMUM FACTORED GROSS REACTION DOWN	HORZ	UPLIFT	INPUT BRG IN-SX	REQRD BRG IN-SX
E	235	0	235	0	0	8-5-11	1-8
B	379	0	379	0	0	8-5-11	1-8
F	255	0	255	0	0	8-5-11	1-8

UNFACTORED REACTIONS

JT	1ST LCASE COMBINED	MAX./MIN. COMPONENT REACTIONS SNOW	LIVE	PERM.LIVE	WIND	DEAD	SOIL
E	165	115 / 0	0 / 0	0 / 0	0 / 0	50 / 0	0 / 0
B	268	177 / 0	0 / 0	0 / 0	0 / 0	92 / 0	0 / 0
F	186	92 / 0	0 / 0	0 / 0	0 / 0	94 / 0	0 / 0

BEARING MATERIAL TO BE SPF NO.2 OR BETTER AT JOINT(S) E, B, F

BRACING

TOP CHORD TO BE SHEATHED OR MAX. PURLIN SPACING = 6.25 FT.
MAX. UNBRACED BOTTOM CHORD LENGTH = 10.00 FT OR RIGID CEILING DIRECTLY APPLIED.

ALL PITCH BREAKS AND PERIMETER CORNER JOINTS MUST BE LATERALLY RESTRAINED.

LOADING

TOTAL LOAD CASES: (4)

CHORDS

MEMB. FR-TO	MAX. FACTORED FORCE (LBS)	FACTORED VERT. LOAD (PLF) FROM	TO	LC1 MAX CSI (LC)	MAX. UNBRAC LENGTH
A- B	0 / 13	-78.0	-78.0	0.03 (1)	10.00
B- H	-35 / 104	-78.0	-78.0	0.17 (1)	6.25
H- C	-136 / 0	-78.0	-78.0	0.33 (1)	6.25
C- D	-124 / 0	-78.0	-78.0	0.10 (1)	6.25
E- D	-254 / 0	0.0	0.0	0.03 (1)	7.81
B- G	0 / 103	-18.5	-18.5	0.27 (1)	10.00
G- F	0 / 103	-18.5	-18.5	0.27 (1)	10.00
F- E	0 / 0	-18.5	-18.5	0.16 (1)	10.00

WEBS

MEMB. FR-TO	MAX. FACTORED FORCE (LBS)	MAX CSI (LC)
F- C	-160 / 0	0.04 (1)
F- D	0 / 131	0.03 (1)
G- H	-602 / 0	0.00 (1)

DESIGN CRITERIA

SPECIFIED LOADS:

TOP CH.	LL	=	21.0	PSF
	DL	=	6.0	PSF
BOT CH.	LL	=	0.0	PSF
	DL	=	7.4	PSF
TOTAL LOAD		=	34.4	PSF

SPACING = 24.0 IN. C/C

THIS TRUSS IS DESIGNED FOR RESIDENTIAL OR SMALL BUILDING REQUIREMENTS OF PART 9, NBCC 2015

THIS DESIGN COMPLIES WITH:
- PART 9 OF BCBC 2018 , ABC 2019
- PART 9 OF OBC 2012 (2019 AMENDMENT)
- CSA 086-14
- TPIC 2014

(55 % OF 23.0 P.S.F. G.S.L. PLUS 8.4 P.S.F. RAIN LOAD) EQUALS 21.0 P.S.F. SPECIFIED ROOF LIVE LOAD

CSI: TC=0.33/1.00 (C-H:1) , BC=0.27/1.00 (B-G:1) , WB=0.04/1.00 (C-F:1) , SSI=0.47/1.00 (B-G:1)

DOL LUMBER=1.00 NAIL=1.00 LS BEND=1.10 COMP=1.10 SHEAR=1.10 TENS= 1.10

COMPANION LIVE LOAD FACTOR = 1.00

TRUSS PLATE MANUFACTURER IS NOT RESPONSIBLE FOR QUALITY CONTROL IN THE TRUSS MANUFACTURING PLANT .

NAIL VALUES

PLATE	GRIP(DRY) (PSI) MAX	MIN	SHEAR (PLI) MAX	MIN	SECTION (PLI) MAX	MIN
MT20	650	371	1747	788	1987	1873

PLATE PLACEMENT TOL. = 0.250 inches

PLATE ROTATION TOL. = 5.0 Deg.

JSI GRIP= 0.40 (D) (INPUT = 0.90)
JSI METAL= 0.07 (B) (INPUT = 1.00)

LATERAL BRACE(S) SHOWN SHALL BE 2X4 SPF#2

TECHNICAL BULLETIN

LUS — Double-Shear Joist Hangers

SIMPSON Strong-Tie

All LUS hangers have double-shear nailing. This patented innovation distributes the load through two points on each joist nail for greater strength. It also allows the use of fewer nails, faster installation and the use of common nails for all connections.

Material: 18 gauge

Finish: G90 galvanized

Design:

- Factored resistances are in accordance with CSA O86-14 and CSA O86:19.
- Uplift resistances have been increased 15%. No further increase is permitted.
- Wood shear is not considered in the factored resistances given. The specifier must ensure that the joist and header capacities are capable of withstanding these loads.

Installation:

- Use all specified fasteners
- Nails: 16d = 0.162" dia. x 3½" long common wire, 10d = 0.148" x 3" long common wire
- Double-shear nails must be driven at an angle through the joist or truss into the header to achieve the table loads
- Not designed for welded or nailer applications

Options:

- These hangers cannot be modified

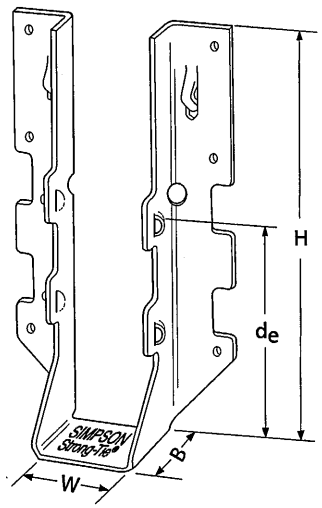

LUS28

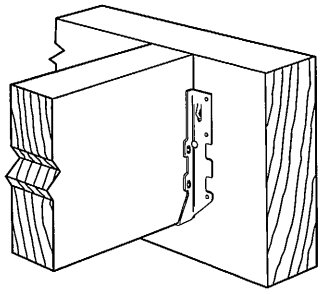

Typical LUS Installation

Model No.	Ga.	Dimensions (in.)				Fasteners		Factored Resistance (lb.)			
								D.Fir–L		S-P-F	
		W	H	B	d_e[1]	Face	Joist	Uplift (K_D=1.15)	Normal (K_D=1.00)	Uplift (K_D=1.15)	Normal (K_D=1.00)
LUS24	18	1 9/16	3 1/8	1 3/4	1 15/16	(4) 10d	(2) 10d	710	1630	645	1155
LUS24-2	18	3 1/8	3 1/8	2	1 13/16	(4) 16d	(2) 16d	835	2020	590	1435
LUS26	18	1 9/16	4 3/4	1 3/4	3 5/8	(4) 10d	(4) 10d	1420	2170	1290	1630
LUS26-2	18	3 1/8	4 7/8	2	4	(4) 16d	(4) 16d	1720	2595	1545	1920
LUS26-3	18	4 5/8	4 3/16	2	3 1/4	(4) 16d	(4) 16d	1720	2595	1545	2340
LUS28	18	1 9/16	6 5/8	1 3/4	3 3/4	(6) 10d	(6) 10d	1420	2520	1290	1790
LUS28-2	18	3 1/8	7	2	4	(6) 16d	(4) 16d	1720	3325	1545	2575
LUS28-3	18	4 5/8	6 1/4	2	3 1/4	(6) 16d	(4) 16d	1720	3325	1545	2375
LUS210	18	1 9/16	7 13/16	1 3/4	3 7/8	(8) 10d	(4) 10d	1420	2785	1290	2210
LUS210-2	18	3 1/8	9	2	6	(8) 16d	(6) 16d	2580	4500	2320	3195
LUS210-3	18	4 5/8	8 3/16	2	5 1/4	(8) 16d	(6) 16d	2580	3345	2320	2375

1. d_e is the distance from the seat of the hanger to the highest joist nail.

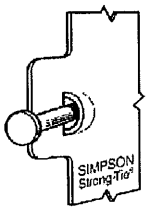

Dome double-shear nailing prevents tabs breaking off (available on some models).

US Patent 5,603,580

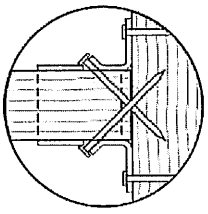

Double-shear nailing top view.

LICENSED PROFESSIONAL ENGINEER
07/19/2022
B. D. BUNTING
PROVINCE OF ONTARIO

This technical bulletin is effective until December 31, 2024, and reflects information available as of July 1, 2022.
This information is updated periodically and should not be relied upon after December 31, 2024.
Contact Simpson Strong-Tie for current information and limited warranty or see strongtie.com.

© 2022 Simpson Strong-Tie Company Inc. • P.O. Box 10789, Pleasanton, CA 94588

(800) 999-5099
strongtie.com

TECHNICAL BULLETIN

HHUS — Double-Shear Joist Hangers

SIMPSON Strong-Tie

All HHUS hangers have double-shear nailing. This patented innovation distributes the load through two points on each joist nail for greater strength. It also allows the use of fewer nails, faster installation and the use of common nails for all connections. Do not bend or remove tabs.

Material: 14 gauge

Finish: G90 galvanized

Design:

- Factored resistances are in accordance with CSA O86-14 and CSA O86:19.
- Uplift resistances have been increased 15%. No further increase is permitted.
- Wood shear is not considered in the factored resistances given. The specifier must ensure that the joist and header capacities are capable of withstanding these loads.

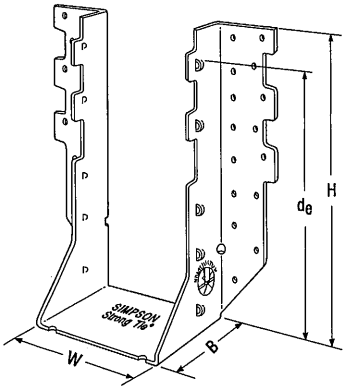

HHUS410

Installation:

- Use all specified fasteners
- Nails: 16d = 0.162" dia. x 3½" long common wire
- Double-shear nails must be driven at an angle through the joist or truss into the header to achieve the table loads
- Not designed for welded or nailer applications

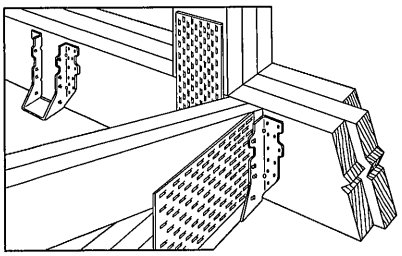

Typical HHUS Installation (Truss designer to provide fastener quantity for connecting multiple members together)

Options:

- See current catalogue for options

Model No.	Ga.	Dimensions (in.)				Fasteners		Factored Resistance (lb.)			
								D.Fir–L		S-P-F	
		W	H	B	d_e[1]	Face	Joist	Uplift (K_D=1.15)	Normal (K_D=1.00)	Uplift (K_D=1.15)	Normal (K_D=1.00)
HHUS26-2	14	3 5/16	5 13/16	3	3 15/16	(14) 16d	(6) 16d	2850	7335	2065	5205
HHUS28-2	14	3 5/16	7 7/32	3	6 5/32	(22) 16d	(8) 16d	3765	8940	2675	6345
HHUS210-2	14	3 5/16	9 3/32	3	8	(30) 16d	(10) 16d	4670	9660	4235	7000
HHUS210-3	14	4 11/16	9	3	7 15/16	(30) 16d	(10) 16d	4670	9670	4235	6865
HHUS210-4	14	6 1/8	8 29/32	3	7 27/32	(30) 16d	(10) 16d	4670	10155	4235	7210
HHUS46	14	3 5/8	5 13/32	3	3 15/16	(14) 16d	(6) 16d	2540	7335	2065	5205
HHUS48	14	3 5/8	7 1/8	3	6 1/8	(22) 16d	(8) 16d	3765	8945	2267	6345
HHUS410	14	3 5/8	9	3	8	(30) 16d	(10) 16d	4670	9855	4235	7000
HHUS5.50/10	14	5 1/2	9	3	8	(30) 16d	(10) 16d	4670	10155	4235	7210
HHUS7.25/10	14	7 1/4	9	3 5/16	7 29/32	(30) 16d	(10) 16d	4670	10155	3370	7210

1. d_e is the distance from the seat of the hanger to the highest joist nail.

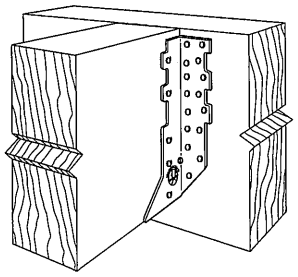

Typical HHUS Installation

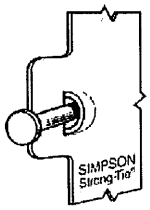

Dome double-shear nailing prevents tabs breaking off (available on some models).

US Patent 5,603,580

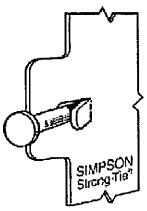

Double-shear nailing side view. Do not bend tab back.

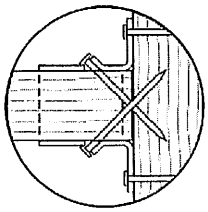

Double-shear nailing top view.

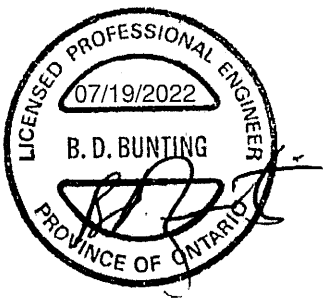

This technical bulletin is effective until December 31, 2024, and reflects information available as of July 1, 2022.
This information is updated periodically and should not be relied upon after December 31, 2024.
Contact Simpson Strong-Tie for current information and limited warranty or see strongtie.com.

© 2022 Simpson Strong-Tie Company Inc. • P.O. Box 10789, Pleasanton, CA 94588

T-SPECHHUS22 7/22 exp. 12/24

(800) 999-5099
strongtie.com

TECHNICAL BULLETIN

TC — Truss Connectors

SIMPSON Strong-Tie

The TC truss connector is an ideal connector for scissor trusses and can allow horizontal movement up to 1¼". The TC also attaches plated trusses to top plates or sill plates to resist uplift forces, and is typically used on one or both ends of truss as determined by the building designer.

Material: 16 gauge

Finish: G90 galvanized

Design: Factored resistances are in accordance with CSA O86-14 and CSA O86:19

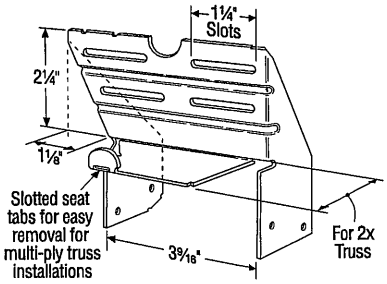

TC24
US Patent 4,932,173

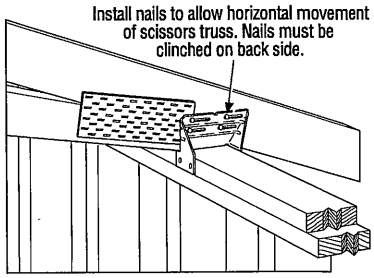

Typical TC24 Installation

Installation:

- Use all specified fasteners.
- Nails: 10d = 0.148" dia. x 3" long common wire, 10d x 1½ = 0.148" dia. x 1½" long.
- Drive 10d nails into the truss at the inside end of the slotted holes (inside end is towards the centre of the truss) and clinch on the back side. Do not seat these nails into the truss — allow room under the nail head for movement of the truss with respect to the wall.

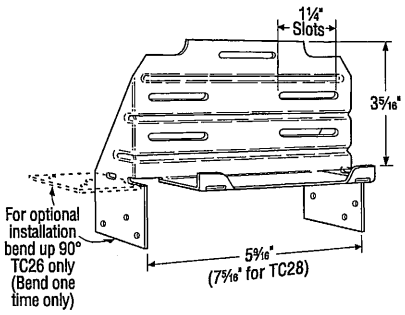

TC26
(TC28 Similar)

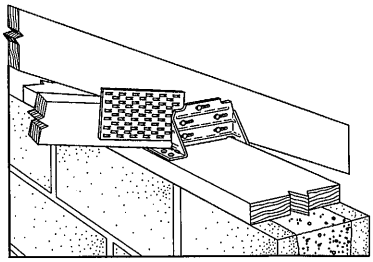

Optional TC26 Installation for Grouted Concrete Block using a Wood Nailer
(8", 10", 12" Wall Installation Similar)

Optional TC Installation:

- Bend one flange up 90°. Drive specified nails into the top and face of the top plates or install Titen® screws into the top and face of masonry wall. See optional load tables and installation details.

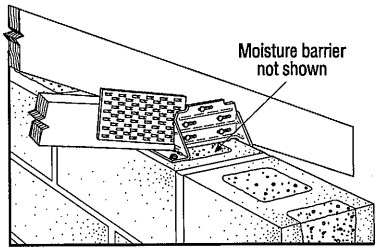

Optional TC26 Installation for Grouted Concrete Block using Titen Screws

Model No.	Fasteners		Factored Resistance	
	Truss	Wall Plates	D.Fir–L	S-P-F
			Uplift (K_D=1.15)	Uplift (K_D=1.15)
			lb.	lb.
TC24	(4) 10d	(4) 10d	605	430
TC26	(5) 10d	(6) 10d	1015	720
TC28	(5) 10d	(6) 10d	1015	720

1. Factored resistances have been increased 15% for earthquake or wind loading; no further increase allowed; reduce where other loads govern.
2. Grout strength is 15 MPa minimum.
3. Optional TC26 installation with 10d nails requires minimum 3" top plate thickness.
4. TC26 fastened to grouted concrete block with (6) – ⁹⁄₁₆" x 2¼" Titen screws has a factored uplift resistance of 275 lb.

Optional TC Installation Table

Model No.	Fasteners		Factored Resistance	
	Truss	Wall Plates	D.Fir–L	S-P-F
			Uplift (K_D=1.15)	Uplift (K_D=1.15)
			lb.	lb.
TC26	(5) 10d	(6) 10d x 1½"	810	660
	(5) 10d	(6) 10d	930	660

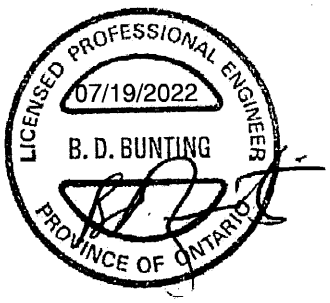

This technical bulletin is effective until December 31, 2024, and reflects information available as of July 1, 2022.
This information is updated periodically and should not be relied upon after December 31, 2024.
Contact Simpson Strong-Tie for current information and limited warranty or see strongtie.com.

© 2022 Simpson Strong-Tie Company Inc. • P.O. Box 10789, Pleasanton, CA 94588

(800) 999-5099
strongtie.com

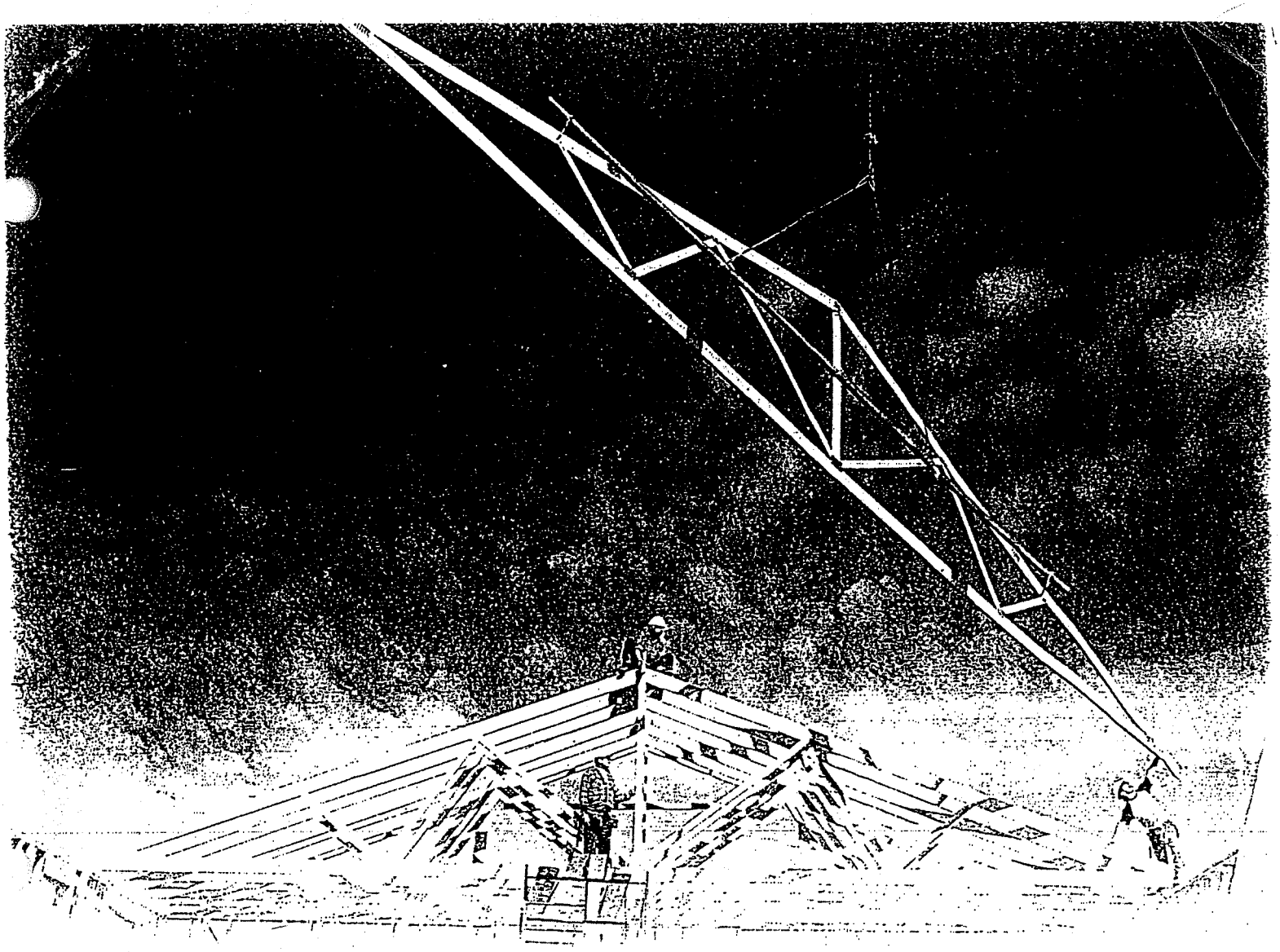

Wood Truss Installation

A Guide to proper handling, erecting and bracing metal plate connected wood trusses

Table of Content

Warning.....4

1 Unloading & Lifting.....5

2 Job Site Handling.....5

3 Hoisting.....6

4 Beginning the Erection Process.....7

5 Erection Tolerance.....8

6 Bracing.....8

7 Bracing Requirements for 3 Planes of Roof.....9

8 Stacking Materials.....10

Caution Notes.....11

Warning

General

Familiarity with the Construction Design Documents, the Truss Design Drawings, and Truss Placement Plans (if required by the Construction Design Documents) is required to properly erect, brace, and connect the trusses to the building system.

All of the care and quality involved in the design and manufacture of wood trusses can be jeopardized if the trusses are not properly handled, erected, and braced.

The consequences of improper handling, erecting, and bracing may be a collapse of the structure, which at best is a substantial loss of time and materials, and at worst is a loss of life. The majority of truss accidents occur during truss installation and not as a result of improper design or manufacture.

Prior to truss erection, the builder/erector shall meet with the erection crew for a safety and planning meeting, making sure each crew member understands his or her roles and responsibilities during the erection process.

Temporary Erection Bracing

Trusses are not marked in any way to identify the frequency, or location of temporary erection bracing.

All temporary bracing shall comply with the latest edition of *Commentary and Recommendations for Handling, Installing & Bracing Metal Plate Connected Wood Trusses* (HIB), published by the Truss Plate Institute, and/or as specified in the Construction Design Documents prepared by the building designer.

Permanent Truss Bracing

Permanent bracing for the roof or floor trusses is the responsibility of the building designer and should be shown on the Construction Design Documents. Permanent bracing locations for individual compression members of a wood truss are shown on the Truss Design Drawings, and shall be installed by the building or erection contractor. This bracing is needed for the proper performance of individual trusses within the roof or floor system. The design and connection of the bracing to the truss and then to the overall building system is the responsibility of the building designer, and is in addition to the permanent bracing plan, which is also specified by the building designer.

Special Design Requirements

Special design requirements, such as wind bracing, portal bracing, seismic bracing, diaphragms, shear walls, or other load transfer elements and their connections to wood trusses must be considered separately by the building designer, who shall determine size, location, and method of connections for all bracing as needed to resist these forces.

1 Unloading & Lifting

Never handle trusses flat

Beginning with the unloading process, and throughout all phases of construction, care must be taken to avoid lateral bending of trusses, which can cause damage to the lumber and metal connector plates at the joints.

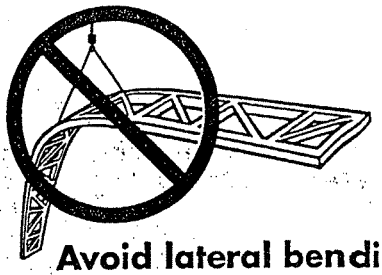

Avoid lateral bending

- **Use special care in windy weather.**
- **If using a crane within 10 feet of an electric line, contact the local power company.**
- **If using a crane within 5 miles of an airport, contact the airport 30 days prior to erection to learn about any safety regulations that must be followed.**

2 Job Site Handling

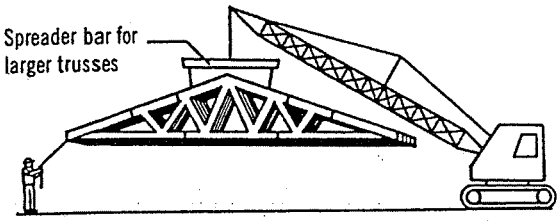

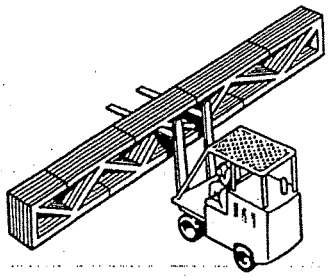

All trusses should be picked up at the top chords in a vertical position only

Proper banding and smooth ground allow for unloading of trusses without damage. This should be done as close to the building site as possible to minimize handling. Do not break banding until installation begins. Hand erection of trusses is allowed, provided excessive lateral bending is prevented.

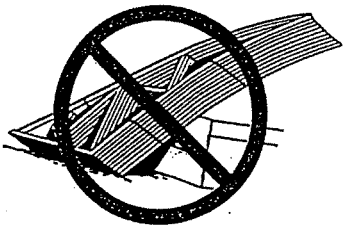

Do not store unbraced bundles upright

If trusses are stored vertically they shall be braced in a manner that will prevent tipping or topping. Generally cuting of the banding is done just prior to installation.

Do not store on uneven ground

If trusses are stored horizontally, blocking should be used on eight to ten foot centers, or as required, to minimize lateral bending and moisture gain.

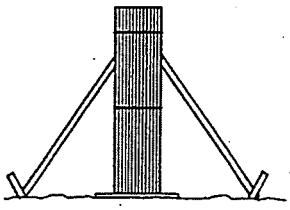

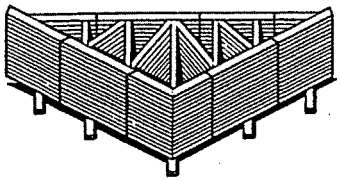

Care should be exercised when removing banding to avoid damaging trusses.

During long term storage, trusses shall be protected from the environment in a manner that provides for adequate ventilation of the trusses. If tarpaulins or other material is used, the ends shall be left open for ventilation. Plastic is not recommended, since it can trap moisture.

3 Hoisting

All trusses that are erected one at a time shall be held safely in position by the erection equipment until such time as all necessary bracing has been installed and the ends of the trusses are securely fastened to the building.

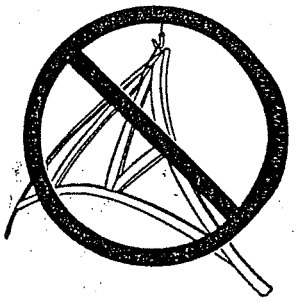

Avoid lateral bending

L ≤ 30'

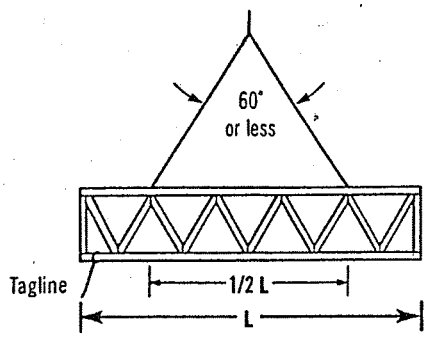

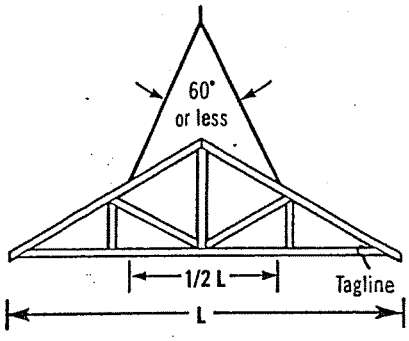

Truss sling is acceptable where these criteria are met.

30' < L ≤ 60'

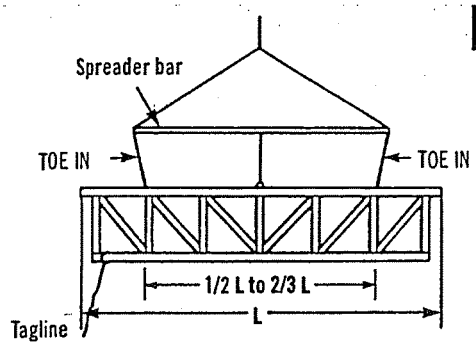

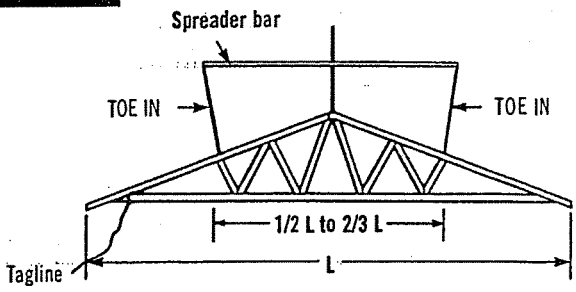

Use spreader bar in all other cases. It should be noted that the lines from the ends of the spreader bar "**TOE IN**"; if these lines should "**TOE OUT**" the truss may fold in half.

L > 60'

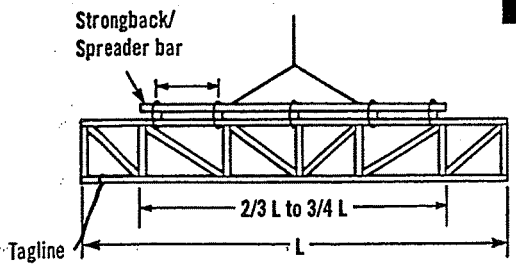

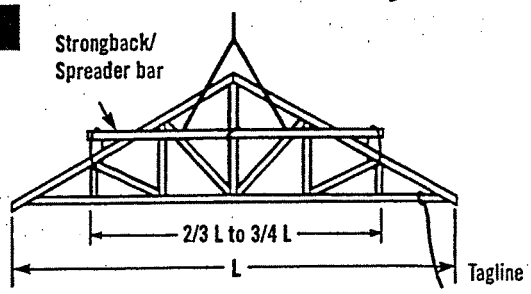

For lifting trusses with spans in excess of 60 feet, it is recommended that a strongback/spreader bar be used as illustrated. The strongback/spreader bar should be attached to the top chord and web members at intervals of approximately 10 feet. Further, the strongback/spreader bar should be at or above the mid-height of the truss to prevent overturning. The strongback/spreader bar can be of any material with sufficient strength to safely carry the weight of the truss and sufficient rigidity to adequately resist bending of the truss.

4 Beginning the Erection Process

It is important for the builder or erection contractor to provide substantial bracing for the first truss erected. The two or more trusses making up the rest of the first set are tied to and rely upon the first truss for stability. Likewise, after this first set of trusses is adequately cross-braced, the remaining trusses installed rely upon this first set for stability. Thus, the performance of the truss bracing system depends to a great extent on how well the first group of trusses is braced.

Ground Brace – Exterior

One satisfactory method ties the first unit of trusses off to a series of braces that are attached to a stake driven into the ground and securely anchored. The ground brace itself should be supported as shown below or it is apt to buckle. Additional ground braces in the opposite direction, inside the building, are also recommended.

Ground Brace – Interior

Another satisfactory method where height of building or ground conditions prohibit bracing from the exterior is to tie the first truss rigidly in place from the interior at the floor level, provided the floor is substantially completed and capable of supporting the ground bracing forces. Securely fasten the first truss to the middle of the building. Brace the bracing similar to exterior ground bracing shown at left. Set trusses from the middle toward the end of the building. Properly cross-brace the first set of trusses before removing floor braces and setting remaining trusses.

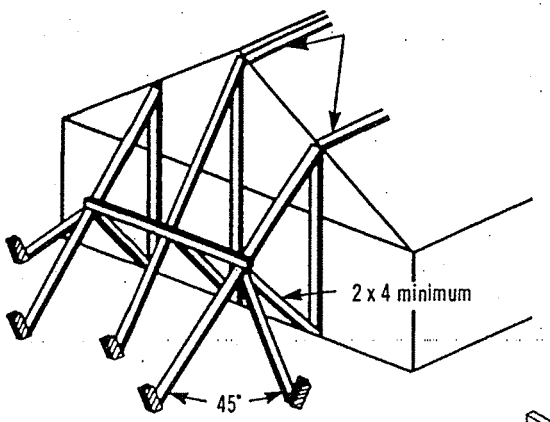

Note: Locate ground braces for first truss directly in line with all rows of top chord continuous lateral bracing (either temporary or permanent).

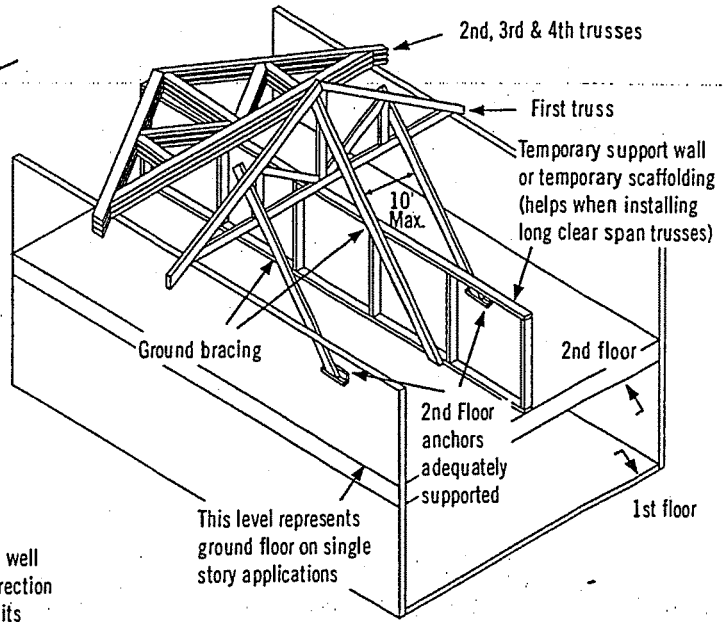

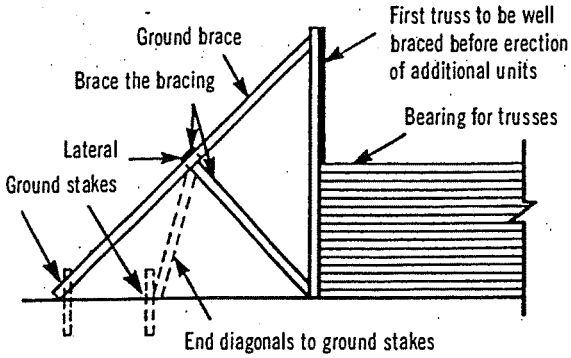

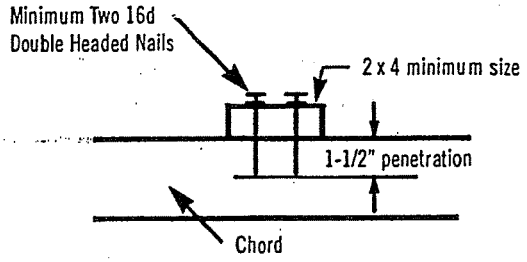

Inadequate size of bracing material or inadequate fastening is a major cause of erection dominoing.

5 Erection Tolerance

Complying with erection tolerances is critical to achieving an acceptable roof or floor line, and to accomplishing effective bracing. Setting trusses within tolerance the first time will prevent the need for the hazardous practice of respacing or adjusting trusses when roof sheathing or roof purlins are installed. Trusses leaning or bowing can cause nails to miss the top chords when sheathing is applied, and create cumulative stresses on the bracing, which is a frequent cause of dominoing.

When sheathing, make sure nails are driven into the top chord of the trusses.

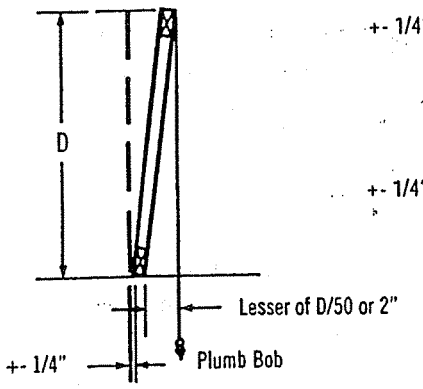

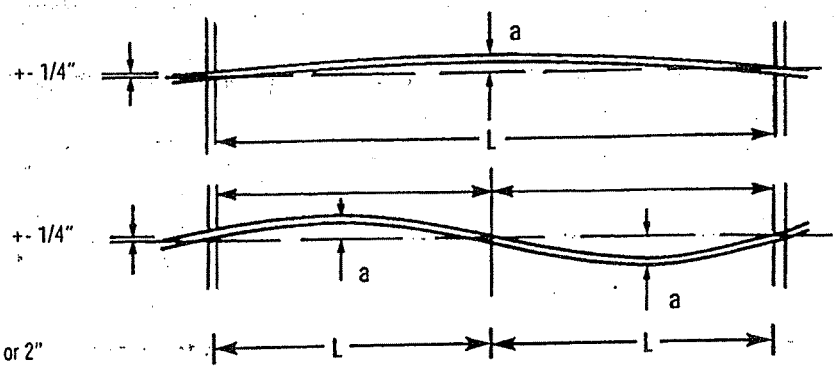

L = 16' to 32', a = 1"
L = 32' & over, a = 2"

6 Bracing

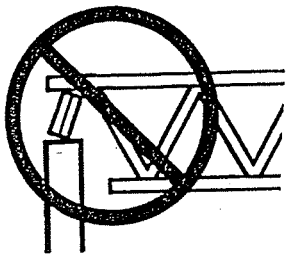

Do not install trusses on temporarily connected supports

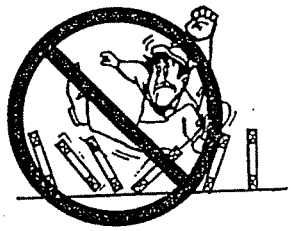

Do not walk on unbraced trusses

Do not walk on trusses or gable ends lying flat

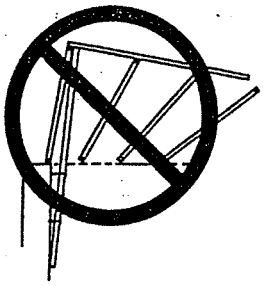

Nails in withdrawal (parallel to force)

All anchors, hangers, tie-downs, seats, bearing ledgers, etc., that are part of the supporting structure shall be accurately and properly placed and permanently attached before truss installation begins. No trusses shall ever be installed on anchors or ties that have temporary connections to the supporting structure.

Nailing scabs to the end of the building to brace the first truss is not recommended.
All nailing of bracing should be done so that nails are driven perpendicular to the direction of force, as shown at right.

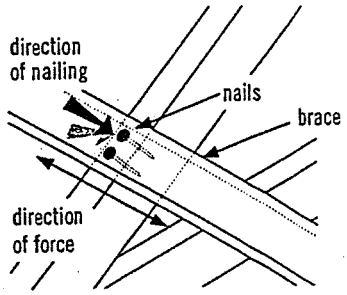

Well nailed (perpendicular to force)

7 Bracing Requirements for 3 Planes of Roof

Temporary erection bracing must be applied to three planes of the roof system to ensure stability: Plane 1) Top Chord (sheathing), Plane 2) Bottom Chord (ceiling plane), and Plane 3) Web Member plane or vertical plane perpendicular to trusses.

1) Top Chord Plane

Most important to the builder or erection contractor is bracing in the plane of the top chord. Truss top chords are susceptible to lateral buckling before they are braced or sheathed.

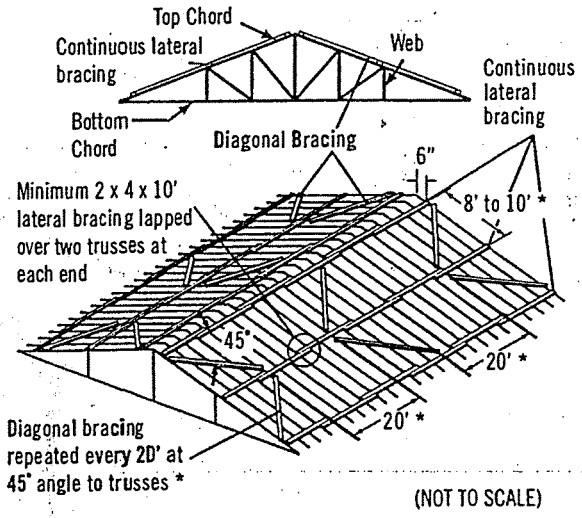

(NOT TO SCALE)

Exact spacing between trusses should be maintained as bracing is installed to avoid the hazardous practice of removing bracing to adjust spacing. This act of "adjusting spacing" can cause trusses to topple if connections are removed at the wrong time.

2) Bottom Chord Plane

In order to hold proper spacing on the bottom chord, temporary bracing is recommended on the top of the bottom chord.

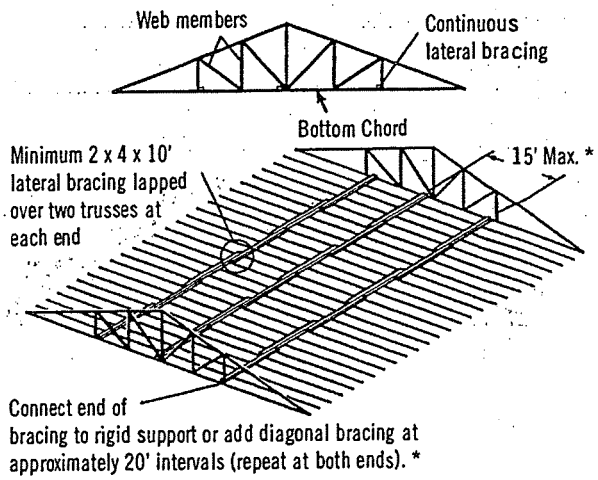

* Long spans, heavy loads or other spacing configurations may require closer spacing between lateral bracing and closer intervals between diagonals. Consult the building designer or HIB and DSB (*Recommended Design Specification for Temporary Bracing of Metal-Plate Connected Wood Trusses*) for details.

Diagonal or cross-bracing is very important!

3) Web Member Plane

"X" bracing, as shown, is critical in preventing trusses from leaning or dominoing. Repeat as shown to create a succession of rigid units.

X-bracing should be installed on vertical web members wherever possible, at or near lateral bracing. Plywood or OSB may be substituted for X-bracing.

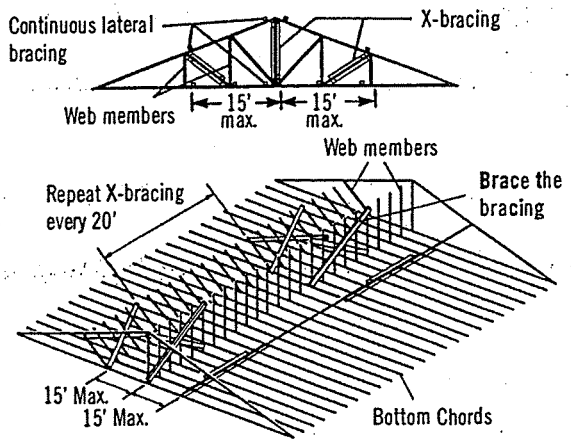

Note: Top chords and some web members are not shown, in order to make drawings more readable.

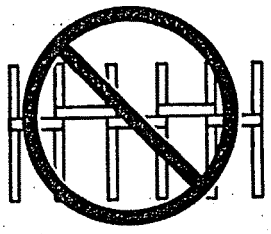

Do not use short blocks to brace individual trusses without a specific bracing plan detailing their use

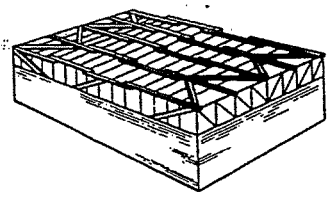

Bracing requirements using the same principles apply to parallel chord trusses

8 Stacking Materials

Do not proceed with building completion until all bracing is securely and properly in place

Never stack materials on unbraced or inadequately braced trusses

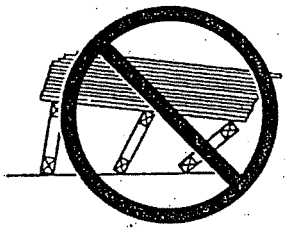

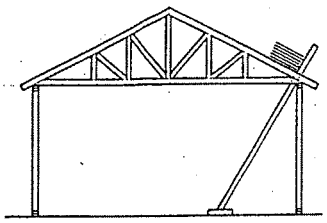

Proper distribution of construction materials is a must during construction.

Never stack materials near a peak

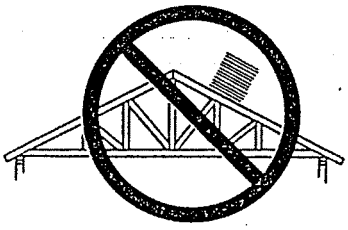

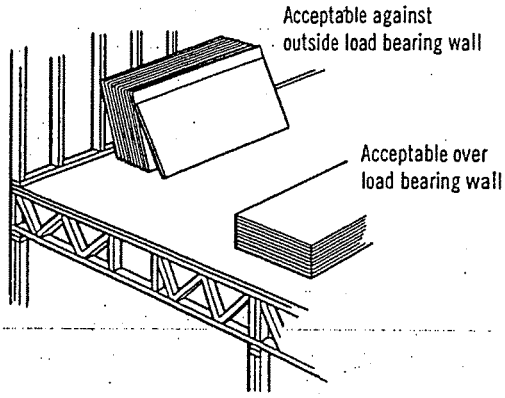

Never stack materials on the cantilever of a truss

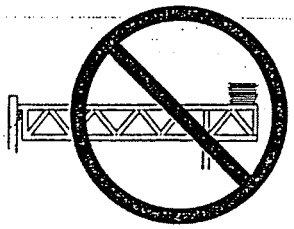

Always stack materials over two or more trusses.

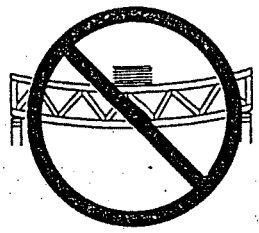

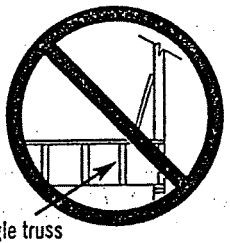

Never overload small groups or single trusses. Position load over as many trusses as possible.

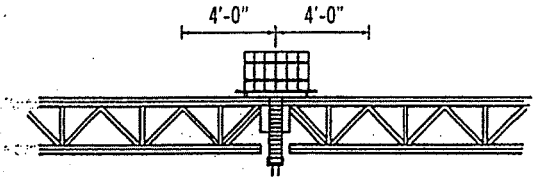

Roofing and mechanical contractors are cautioned to stack materials only along outside supporting members or directly over inside supporting members. Trusses are not designed for dynamic loads (i.e., moving vehicles). Extreme care should be taken when loading and stacking construction materials (rolled roofing, mechanical equipment, etc.) on the roof or floor system.

Never cut any structural member of a truss.

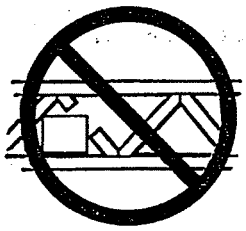

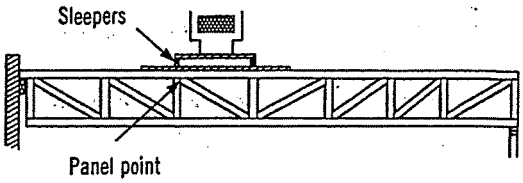

Sleepers for mechanical equipment should be located at panel points (joints) or over main supporting members, and only on trusses that have been designed for such loads.

Caution Notes

Errors in building lines and/or dimensions, or errors by others shall be corrected by the contractor or responsible construction trade subcontractor or supplier **before** erection of trusses begins.

Cutting of nonstructural overhangs is considered a part of normal erection and shall be done by the builder or erection contractor.

Any field modification that involves the cutting, drilling, or relocation of any structural truss member or connector plate shall not be done without the approval of the truss manufacturer or a licensed design professional.

The methods and procedures outlined are intended to ensure that the overall construction techniques employed will put floor and roof trusses safely in place in a completed structure. These recommendations for bracing wood trusses originate from the collective experience of leading technical personnel in the wood truss industry, but must, due to the nature of responsibilities involved, be presented only as a guide for use by a qualified building designer, builder, or erection contractor. Thus, the Wood Truss Council of America expressly disclaims any responsibility for damages arising from the use, application, or reliance on the recommendations and information contained herein.

[Selected text and figures referenced or reproduced from HIB and DSB by permission of the Truss Plate Institute, Madison, WI.]

THE CANADIAN WOOD TRUSS ASSOCIATION

L'ASSOCIATION CANADIENNE DES FABRICANTS DE FERMES DE BOIS

1400 Blair Place, Suite 210, Ottawa, ON K1J 9B8
Tel.: 613-747-5544 Fax: 613-747-6264

Wood Truss Council of America

One WTCA Center
6300 Enterprise Lane, Madison, WI 53719-1140
Tel.: 608-274-4849 Fax: 608-274-3329
wtca@woodtruss.com www.woodtruss.com