CONSTRUCTION NOTES (Unless otherwise noted)

ALL CONSTRUCTION TO ADHERE TO THESE PLANS AND SPEC'S AND TO CONFORM TO THE ONTARIO BUILDING CODE AND ALL OTHER APPLICABLE CODES AND AUTHORITIES HAVING JURISDICTION. THESE REQUIREMENTS ARE TO BE TAKEN AS MINIMUM SPECIFICATIONS. ONT. REG. 332/12-2012 OBC.

(1) ROOF CONSTRUCTION
NO.210 (10.25kg/m2) ASPHALT SHINGLES, 10mm (3/8") PLYWOOD SHEATHING WITH "H" CLIPS. APPROVED WOOD TRUSSES @ 610mm (24") O.C. MAX. APPROVED EAVES PROTECTION TO EXTEND 900mm (3'-0") FROM EDGE OF ROOF AND MIN. 300mm (12") BEYOND INNER FACE OF EXTERIOR WALL. (EAVES PROTECTION NOT REQ'D FOR ROOF SLOPES 8:12 OR GREATER) 38x89 (2"x4") TRUSS BRACING @ 1830mm (6'-0") O.C. AT BOTTOM CHORD. PREFIN. ALUM. EAVESTROUGH, FASCIA, RWL & VENTED SOFFIT. PROVIDE ICE & WATER SHIELD TO ALL ROOF/WALL SURFACES SUSCEPTIBLE TO ICE DAMMING. ROOF SHEATHING TO BE FASTENED 150 (6") c/c ALONG EDGES & INTERMEDIATE SUPPORTS WHEN TRUSSES SPACED GREATER THAN 406 (16"). ATTIC VENTILATION 1:300 OF INSULATED CEILING AREA WITH MIN. 25% AT EAVES & MIN. 25% AT RIDGE (OBC 9.19.1.2.).

(2) FRAME WALL CONSTRUCTION (2"x6") (SB-12-TABLE 3.1.1.2.A)
SIDING AS PER ELEV., 19x38 (1"x2") VERTICAL WOOD FURRING, CONTIN. SHEATHING MEMBRANE, 11mm (7/16") EXT. TYPE SHEATHING, 38x140 (2"x6") STUDS @ 400mm (16") O.C., RSI 3.87 (R22) INSULATION AND APPR. VAPOUR BARRIER AND APPR. CONTIN. AIR BARRIER, 13mm (1/2") INT. DRYWALL FINISH. SIDING TO BE MIN. 200mm (8") ABOVE FINISH GRADE. REFER TO OBC SB-12, CHAPTER 3 FOR REQUIRED MINIMUM THERMAL INSULATION REQUIREMENTS.

(2B) FRAME WALL CONSTRUCTION (2"x4") - GARAGE WALLS
SIDING AS PER ELEV., 19x38 (1"x2") VERTICAL WOOD FURRING, CONTIN. SHEATHING MEMBRANE, 11mm (7/16") EXT. TYPE SHEATHING, 38x89 (2"x4") STUDS @ 406mm (16") O.C. (MAX. HEIGHT 3000mm (9'-10")), WITH APPR. DIAGONAL WALL BRACING. REFER TO NOTE 19 WHERE FLOOR EXISTS ABOVE GARAGE.
SIDING TO BE MIN. 200mm (8") ABOVE FINISH GRADE.

(2C) STUCCO WALL CONSTRUCTION (2"x6") (SB-12-TABLE 3.1.1.2.A)
STUCCO CLADDING SYSTEM CONFORMING TO O.B.C. 9.27.1.1.(2) & 9.28 THAT EMPLOY A MINIMUM 10mm AIR SPACE BEHIND THE CLADDING WITH POSITIVE DRAINAGE TO THE EXT. AND APPLIED PER MANUFACTURERS SPECIFICATIONS ON 25mm (1") MIN. EXTRUDED OR EXPANDED RIGID POLYSTYRENE ON APPR. AIR/MOISTURE BARRIER ON 38x140 (2"x6") STUDS @ 406 (16") O.C., RSI 3.87 (R22) BATT INSUL., APPR. 6 MIL POLYETHYLENE VAPOUR BARRIER, 13mm (1/2") GYPSUM BOARD INTERIOR FINISH. STUCCO TO BE MIN. 200 (8") ABOVE FINISH GRADE. REFER TO OBC SB-12, CHAPTER 3 FOR REQUIRED MINIMUM THERMAL INSULATION REQUIREMENTS.

(2D) STUCCO WALL CONSTRUCTION (2"x4") - GARAGE WALLS
STUCCO CLADDING SYSTEM CONFORMING TO O.B.C. 9.27.1.1.(2) & 9.28 THAT EMPLOY A MINIMUM 10mm AIR SPACE BEHIND THE CLADDING WITH POSITIVE DRAINAGE TO THE EXTERIOR AND APPLIED PER MANUFACTURERS SPECIFICATIONS OVER 25mm (1") MIN. EXPANDED OR EXTRUDED RIGID POLYSTYRENE ON APPROVED AIR/MOISTURE BARRIER ON 38x89 (2"x4") STUDS @ 406 (16") O.C. (MAX. HEIGHT 3000mm (9'-10")), WITH APPR. DIAGONAL WALL BRACING. REFER TO NOTE 19 WHERE FLOOR EXISTS ABOVE GARAGE.
STUCCO TO BE MIN. 200 (8") ABOVE FINISH GRADE.

(2E) WALLS ADJACENT TO ATTIC - NO CLADDING
11mm (7/16") EXT. TYPE SHEATHING, 38x140 (2"x6") STUDS @ 400mm (16") O.C., RSI 3.87 (R22) INSULATION AND APPR. VAPOUR BARRIER AND APPR. CONTIN. AIR BARRIER, 13mm (1/2") INTERIOR DRYWALL FINISH. MID-HEIGHT BLOCKING REQ'D. IF NO SHEATHING APPLIED, REFER TO OBC SB-12, CHAPTER 3 FOR ADDITIONAL THERMAL INSULATION REQUIREMENTS.

(3) BRICK VENEER CONSTRUCTION (2"x6") (SB-12-TABLE 3.1.1.2.A)
90mm (4") FACE BRICK, 25mm (1") AIR SPACE, 22x180x0.76mm (7/8"x7"x0.03") GALV. METAL TIES @ 406mm (16") O.C. HORIZONTAL 610mm (24") O.C. VERTICAL. APPROVED SHEATHING PAPER, 11mm (7/16") EXTERIOR TYPE SHEATHING, 38x140 (2"x6") STUDS @ 406mm (16") O.C., RSI 3.87 (R22) INSULATION AND APPROVED VAPOUR BARRIER WITH APPROVED CONTIN. AIR BARRIER, 13mm (1/2") INT. DRYWALL FINISH. PROVIDE WEEP HOLES @ 800mm (32") O.C. BOTTOM COURSE AND OVER OPENINGS. PROVIDE BASE FLASHING UP MIN. 150mm (6") BEHIND BUILDING PAPER. BRICK TO BE MIN. 150mm (6") ABOVE FINISH GRADE. REFER TO OBC SB-12, CHAPTER 3 FOR REQUIRED MINIMUM THERMAL INSULATION REQUIREMENTS.

(3B) BRICK VENEER CONSTRUCTION (2"x4") - GARAGE WALLS
90mm (4") FACE BRICK, 25mm (1") AIR SPACE, 22x180x0.76mm (7/8"x7"x0.03") GALV. METAL TIES @ 406mm (16") O.C. HORIZONTAL 610mm (24") O.C. VERTICAL. APPROVED SHEATHING PAPER, 11mm (7/16") EXTERIOR TYPE SHEATHING, 38x89 (2"x4") STUDS @ 406mm (16") O.C. (MAX. HEIGHT 3000mm (9'-10")) WITH APPROVED DIAGONAL WALL BRACING. REFER TO NOTE 19 WHERE FLOOR EXISTS ABOVE GARAGE. PROVIDE WEEP HOLES @ 800mm (32") O.C. BOTTOM COURSE AND OVER OPENINGS. PROVIDE BASE FLASHING UP MIN. 150mm (6") BEHIND BUILDING PAPER.
BRICK TO BE MIN. 150mm (6") ABOVE FINISH GRADE.

(3C) STUCCO WALL CONSTRUCTION (2"x6") (SB-12-TABLE 3.1.1.2.A)
STUCCO CLADDING SYSTEM CONFORMING TO O.B.C. 9.27.1.1.(2) & 9.28 THAT EMPLOYS A MINIMUM 10mm AIR SPACE BEHIND THE CLADDING WITH POSITIVE DRAINAGE TO THE EXTERIOR AND APPLIED PER MANUFACTURERS SPECIFICATIONS OVER 25mm (1") MIN. EXTRUDED OR EXPANDED RIGID POLYSTYRENE ON APPR. CONTIN. AIR/MOISTURE BARRIER ON 38x140 (2"x6") STUDS @ 406mm (16") O.C., RSI 3.87 (R22) BATT INSUL., APPR. 6 MIL POLYETHYLENE VAPOUR BARRIER, 13mm (1/2") GYPSUM WALLBOARD INTERIOR FINISH. STUCCO TO BE MIN. 200 (8") ABOVE FINISH GRADE. REFER TO OBC SB-12, CHAPTER 3 FOR REQUIRED MINIMUM THERMAL INSULATION REQUIREMENTS.

REGISTERED PROFESSIONAL ENGINEER
B. MARINKOVIC
PROVINCE OF ONTARIO

STRUDET INC.
FOR STRUCTURE ONLY

(4) INTERIOR STUD PARTITIONS
FOR BEARING PARTITIONS 38x89 (2"x4") @ 406mm (16") O.C. FOR 2 STOREYS AND 305mm (12") O.C. FOR 3 STOREYS. NON-BEARING PARTITIONS 38x89 (2"x4") @ 610mm (24") O.C. PROVIDE 38x89 (2"x4") BOTTOM PLATE AND 2/38x89 (2/2"x4") TOP PLATE. 13mm (1/2") INT. DRYWALL BOTH SIDES OF STUDS. PROVIDE 38x140 (2"x6") STUDS/PLATES WHERE NOTED.

(5) FOUNDATION WALL/FOOTINGS: (9.15.3, 9.15.4, 9.13.2, 9.14.2.1.(2))
200mm (8") POURED CONC. FDTN. WALL, 15MPa (2200psi) WITH BITUMINOUS DAMPPROOFING AND DRAINAGE LAYER. DRAINAGE LAYER REQ'D. WHEN BASEMENT INSUL. EXTENDS 900 (2'-11") BELOW FIN. GRADE. DRAINAGE LAYER IS NOT REQ'D. IF FOUNDATION WALL IS WATERPROOFED. MAXIMUM POUR HEIGHT 2350 (7'-10") ON 500x155 (20"x6") CONTINUOUS KEYED CONC. FTG. BRACE FDTN. WALL PRIOR TO BACKFILLING. ALL FOOTINGS SHALL REST ON NATURAL UNDISTURBED SOIL OR COMPACTED ENGINEERED FILL.

STRIP FOOTINGS - FOR TOWNHOUSES
FOR STRIP FOOTING SIZES REFER TO BLOCK FOUNDATION PLAN. ASSUMED 120 KPa (18 p.s.i.) SOIL BEARING CAPACITY FOR TOWNHOUSES, TO BE VERIFIED IN SITE.

-MAXIMUM FLOOR LIVE LOAD OF 2.4kPa. (50psf.) PER FLOOR.
-REFER TO SOILS REPORT FOR SOIL CONDITIONS AND BEARING CAPACITY.

(6) FOUNDATION DRAINAGE OBC. 9.14.2. & 9.14.3.
100mm (4") DIA. FOUNDATION DRAINAGE TILE 150mm (6") CRUSHED STONE OVER AND AROUND DRAINAGE TILES.

(7) BASEMENT SLAB OBC. 9.3.1.6.(1)(b), 9.16.4.5.(1), 9.25.3.3.(15)
80mm (3")MIN. 25MPa (3600psi) CONC. SLAB ON 100mm (4") COARSE GRANULAR FILL, OR 20MPa. (3000psi) CONC. WITH DAMPPROOFING BELOW SLAB. UNDER SLAB INSULATION PER SB-12; 3.1.1.7.(5)(6) where required.
ALL SLAB JOINTS & PENETRATIONS TO BE SEALED TO MAINTAIN AIR BARRIER.

(8) WOOD SUBFLOORS (SEE OBC. 9.23.14. & 9.30.2.1)
-19mm (3/4") MIN. T & G SUBFLOOR UNDER GROUND FLOOR FINISH FLOOR.
16mm (5/8") T&G SUBFLOOR UNDER SECOND FLOOR FINISH FLOOR.
16mm (5/8") PANEL-TYPE UNDERLAY FOR CERAMIC TILE APPLICATION.
6mm (1/4") PANEL-TYPE UNDERLAYMENT UNDER RESILIENT & PARQUET FLOORING.

(9) ATTIC INSULATION (SB-12-TABLE 3.1.1.2.A) (SB-12-3.1.1.8)
RSI 10.56 (R60) BLOWN IN ROOF INSULATION AND APPROVED VAPOUR BARRIER, 16mm (5/8") INT. DRYWALL FINISH OR APPROVED EQUAL. RSI 3.52 (R20) MIN. ABOVE INNER SURFACE OF EXTERIOR WALL.

(10) ALL STAIRS/EXTERIOR STAIRS -OBC. 9.8.-

UNIFORM RISE	-5mm (1/4") MAX BETWEEN ADJACENT TREADS OR LANDINGS -10mm (1/2") MAX BETWEEN TALLEST & SHORTEST RISE IN FLIGHT
MAX. RISE	= 200 (7-7/8")
MIN. RUN	= 210 (8-1/4")
MIN. TREAD	= 235 (9-1/4")
MAX. NOSING	= 25 (1")
MIN. HEADROOM	= 1950 (6'-5")
RAIL @ LANDING	= 900 (2'-11")
RAIL @ STAIR	= 865 (2'-10") to 965 (3'-2")
MIN. STAIR WIDTH	= 860 (2'-10")
FOR CURVED STAIRS	
MIN. RUN	= 150 (6")
MIN. AVG. RUN	= 200 (8")

(11) HANDRAILS -OBC. 9.8.7.-
FINISHED RAILING ON PICKETS SPACED MAXIMUM 100mm (4") BETWEEN PICKETS. CLEARANCE BETWEEN HANDRAIL AND SURFACE BEHIND IT TO BE 50 (2") MIN. HANDRAILS TO BE CONTINUOUS EXCEPT FOR NEWEL POST AT CHANGES OF DIRECTION.

INTERIOR GUARDS -OBC. 9.8.8.-
INTERIOR GUARDS: 900mm (2'-11") MIN. HIGH

EXTERIOR GUARDS - OBC. 9.8.8.
900mm (36") HIGH GUARD WHERE DISTANCE FROM PORCH TO FIN. GRADE IS LESS THAN 1800mm (71"). 1070mm (42") HIGH GUARD IS REQUIRED WHERE DISTANCE EXCEEDS 1800mm (71").

(12) SILL PLATE ANCHORAGE
38x89 (2"x4") SILL PLATE WITH 13mm (1/2") DIA. ANCHOR BOLTS 200mm (8") LONG, EMBEDDED MIN. 100mm (4") INTO CONC. @ 2400mm (7'-10") O.C., CAULKING OR 25 (1") MIN. MINERAL WOOL BETWEEN PLATE AND TOP OF FDTN. WALL.
USE NON-SHRINK GROUT TO LEVEL SILL PLATE WHEN REQUIRED.

(13) BASEMENT INSULATION (SB-12-3.1.1.7), 9.25.2.3, 9.13.2.6)
FOUNDATION WALLS ENCLOSING HEATED SPACE SHALL BE INSULATED FROM THE UNDERSIDE OF THE SUBFLOOR TO NOT MORE THAN 200mm (8") ABOVE THE FINISHED FLOOR & NO CLOSER THAN 50mm (2") OF THE BASEMENT SLAB. RSI 3.52ci (R20ci) BLANKET INSULATION TO HAVE APPROVED VAPOUR BARRIER. RECOMMEND DAMPPROOF WITH BUILDING PAPER BETWEEN THE FOUNDATION WALL AND INSULATION UP TO GRADE LEVEL. NOTE: FULL HEIGHT INSULATION AT COLD CELLAR WALLS. AIR BARRIER TO BE SEALED TO FOUNDATION WALL WITH CAULKING.
CONTINUOUS INSULATION (ci) IS NOT TO BE INTERRUPTED BY FRAMING.

(14) BASEMENT BEARING STUD PARTITION
38x89 (2"x4") STUDS @ 406mm (16") O.C. 38x89 (2"x4") SILL PLATE ON DAMPPROOFING MATERIAL, 13mm (1/2") DIA. ANCHOR BOLTS 200mm (8") LONG, EMBEDDED MIN. 100mm (4") INTO CONC. @ 2400mm (7'-10") O.C. 100mm (4") HIGH CONC. CURB ON 305x155 (12"x6") CONC. FOOTING. ADD HORIZ. BLOCKING AT MID-HEIGHT IF WALL IS UNFINISHED.

(15) STEEL BASEMENT COLUMN (SEE O.B.C. 9.15.3.3)
89mm(3-1/2") DIA x 4.78mm(0.188") STL. COL. WITH A MIN. CAPACITY OF 108.6kN (24,000lbs.) WITH 150x150x9.5 (6"x6"x3/8") STL. TOP & BOTTOM PLATE.

(15A) STEEL COLUMN
90mm(3-1/2") DIA x 4.78mm(0.188") STL. COL. WITH 100x100x6.0 (4"x4"x1/4") TOP & BOTTOM PLATES, FIELD WELD BOTTOM PLATE TO 100x250x12.5 (4"x10"x1/2") BASE PLATE C/W 2-12mm DIA. x 300mm LONG x50mm HOOK ANCHORS (2-1/2"x12"x2"). TIE COLUMN TO STUD WALL WITH 2-32x3.175 (1 1/4"x 1/8") STEEL STRAP WELDED TO COLUMN AND FASTENED TO STUD WITH 2-S35 6.35x38 (1/4"x1 1/2") SCREWS MANUF. BY SIMPSON STRONG TIE.

(16) CONCRETE PILASTER
BEAM POCKET OR 200x200 (8"x8") POURED CONC. NIB WALLS. MIN. BEARING 90mm (3-1/2")

(17) 19x38 (1"x2") CONTINUOUS WOOD STRAPPING BOTH SIDES OF STEEL BEAM. (OBC. 9.23.4.3.(3c))

(18) GARAGE SLAB
100mm (4") 32MPa (4640psi) CONC. SLAB WITH 5-8% AIR ENTRAINMENT ON OPTIONAL 100 (4") COARSE GRANULAR FILL WITH COMPACTED SUB-BASE OR COMPACTED NATIVE FILL.
SLOPE TO FRONT (EXTERIOR) AT 1% MIN.

(19) INTERIOR GARAGE WALLS & CEILINGS (SB-12-TABLE 3.1.1.2.A)
13mm (1/2") GYPSUM BOARD ON WALL AND CEILING BETWEEN HOUSE AND GARAGE, RSI 3.87 (R22) IN WALLS, RSI 5.46 (R31) IN CEILING. TAPE AND SEAL ALL JOINTS AIRTIGHT PER O.B.C. 9.10.9.16. REFER TO SB-12, TABLE 3.1.1.2.A. FOR REQUIRED THERMAL INSULATION.

(20) DOOR AND FRAME GASPROOFED. DOOR EQUIPPED WITH SELF CLOSING DEVICE AND WEATHERSTRIPPING PER OBC 9.10.13.15.

(21) EXTERIOR STEP
PRECAST CONCRETE STEP OR WOOD STEP WHERE NOT EXPOSED TO WEATHER. MAX. RISE 200mm (7-7/8") MIN. TREAD 250mm (9-27/32"). SEE OBC. 9.8.9.2., 9.8.9.3. & 9.8.10.

(22) DRYER VENT (OBC-6.2.3.8.(7). & 9.2.4.1.1)
CAPPED DRYER EXHAUST VENTED TO EXTERIOR.
(USE 100mm (4") DIA. SMOOTH WALL VENT PIPE).

(23) INSULATED ATTIC ACCESS (OBC-9.19.2.1. & SB12-3.1.1.8)
ATTIC ACCESS HATCH WITH MIN. DIMENSION OF 545x700mm (21-1/2"x27-1/2") & A MIN. AREA OF 0.32 SQ.M. (3.44 SQ.FT.) WITH WEATHERSTRIPPING. RSI 3.52 (R20) RIGID INSULATION BACKING. SEE OBC SB-12, 3.1.1.8.

(24) FIREPLACE CHIMNEYS -OBC. 9.21.-
TOP OF FIREPLACE CHIMNEY SHALL BE 915mm (3'-0") ABOVE THE HIGHEST POINT AT WHICH IT COMES IN CONTACT WITH THE ROOF AND 610mm (2'-0") ABOVE THE ROOF SURFACE WITHIN A HORIZ. DISTANCE OF 3050mm (10'-0") FROM THE CHIMNEY.

(25) LINEN CLOSETS
4 SHELVES MIN. 350mm (14") DEEP.

(26) MECHANICAL EXHAUST
MECHANICAL EXHAUST FAN, VENTED TO EXTERIOR AS REQUIRED BY OBC. 9.32.3.5. & 9.32.3.10.

(27) STEEL BEARING PLATE FOR MASONRY WALLS
280x280x16 (11"x11"x5/8") STL. PLATE FOR STL. BEAMS AND 280x280x12 (11"x11"x1/2") STL. PLATE FOR WOOD BEAMS BEARING ON CONC. BLOCK PARTYWALL, ANCHORED WITH 2-19mm (3/4") x 200mm (8") LONG GALV. ANCHORS WITHIN SOLID BLOCK COURSE. LEVEL WITH NON-SHRINK GROUT.

(27A) SOLID WOOD BEARING FOR WOOD STUD WALLS
SOLID BEARING TO BE AT LEAST AS WIDE AS THE SUPPORTED MEMBER. SOLID WOOD BEARING COMPRISED OF BUILT-UP WOOD STUDS TO BE CONSTRUCTED IN ACCORDANCE WITH OBC 9.17.4.2(2).

(28) CLASS "B" VENT
U.L.C. RATED CLASS "B" VENT 610mm (2'-0") ABOVE THE POINT IN CONTACT WITH THE ROOF FOR SLOPES UP TO 9/12, REFER TO THE ONTARIO GAS UTILIZATION CODE.

(29) BASEMENT WOOD POST (OBC 9.17.4.)
3-38x140 (3-2"x6") BUILT-UP-POST ON METAL BASE SHOE ANCHORED TO CONC. WITH 12.7 DIA. BOLT, 406x406x203 (16"x16"x8") CONC. FTG. OR AS OTHERWISE SPECIFIED ON DRAWING.

(30) STEPPED FOOTINGS (OBC. 9.15.3.9.)
MIN. HORZ. STEP = 600mm (24").
MAX. VERT. STEP = 600mm (24").

(31) SLAB ON GRADE
MIN. 100mm (4") CONCRETE SLAB ON GRADE ON 100mm (4") COARSE GRANULAR FILL, REINFORCED WITH 6x6-W2.9xW2.9 MESH PLACED NEAR MID-DEPTH OF SLAB. CONC. STRENGTH 32 MPa (4640 psi) WITH 5-8% AIR ENTRAINMENT ON COMPACTED SUB-GRADE. UNDER SLAB INSULATION AS PER OBC. SB-12 3.1.1.7.(5)(6) AND SB-12, TABLE 3.1.1.2.A. where required.
ALL JOINTS & PENETRATIONS OF INTERIOR SLABS TO BE SEALED TO MAINTAIN AIR BARRIER.

LOOSE STEEL LINTELS

L1	=3-1/2" x 3-1/2" x 1/4"L (90x90x6.0L)
L2	=4" x 3-1/2" x 5/16"L (100x90x8.0L)
L3	=5" x 3-1/2" x 5/16"L (125x90x8.0L)
L4	=6" x 3-1/2" x 3/8"L (150x90x10.0L)
L5	=6" x 4" x 3/8"L (150x100x10.0L)
L6	=7" x 4" x 3/8"L (180x100x10.0L)

LAMINATED VENEER LUMBER (LVL) BEAMS

LVL1A	=1-1 3/4"x7 1/4"	(1-45x184)
LVL1	=2-1 3/4"x7 1/4"	(2-45x184)
LVL2	=3-1 3/4"x7 1/4"	(3-45x184)
LVL3	=4-1 3/4"x7 1/4"	(4-45x184)
LVL4A	=1-1 3/4"x9 1/4"	(1-45x235)
LVL4	=2-1 3/4"x9 1/4"	(2-45x235)
LVL5	=3-1 3/4"x9 1/4"	(3-45x235)
LVL5A	=4-1 3/4"x9 1/4"	(4-45x235)
LVL6A	=1-1 3/4"x11 7/8"	(1-45x300)
LVL6	=2-1 3/4"x11 7/8"	(2-45x300)
LVL7	=3-1 3/4"x11 7/8"	(3-45x300)
LVL7A	=4-1 3/4"x11 7/8"	(4-45x300)
LVL8	=2-1 3/4"x14"	(2-45x356)
LVL9	=3-1 3/4"x14"	(3-45x356)

PAD FOOTINGS

120 KPa. NATIVE SOIL	90 KPa. ENGINEERED FILL SOIL
F1 = 42"x42"x18" CONCRETE PAD	F1 = 48"x48"x20" CONCRETE PAD
F2 = 36"x36"x16" CONCRETE PAD	F2 = 40"x40"x16" CONCRETE PAD
F3 = 30"x30"x12" CONCRETE PAD	F3 = 34"x34"x14" CONCRETE PAD
F4 = 24"x24"x12" CONCRETE PAD	F4 = 28"x28"x12" CONCRETE PAD
F5 = 18"x18"x8" CONCRETE PAD	F5 = 18"x18"x8" CONCRETE PAD

(REFER TO FLOOR PLAN FOR UNUSUAL SIZE PADS NOT ON CHART.)

DOOR SCHEDULE

NOS.	WIDTH	HEIGHT 8'to 9' CEILING	HEIGHT 10' OR MORE CEILING	TYPE
1	2'-10"	6'-8"	8'-0"	INSULATED ENTRANCE DOOR
1a	2'-8"	6'-8"	8'-0"	INSULATED FRONT DOORS
2	2'-8"	6'-8"	8'-0"	WOOD & GLASS DOOR
3	2'-8"	6'-8"	8'-0"	EXTERIOR SLAB DOOR
4	2'-8"	6'-8"	8'-0"	INTERIOR SLAB DOOR
5	2'-6"	6'-8"	8'-0"	INTERIOR SLAB DOOR
6	2'-2"	6'-8"	8'-0"	INTERIOR SLAB DOOR
7	1'-6"	6'-8"	8'-0"	INTERIOR SLAB DOOR

BRICK VENEER LINTELS

WL1	=3-1/2" x 3-1/2" x 1/4"L (89x63x6.4L)	+ 2-2"x8" SPR. No.2
WL2	=4" x 3-1/2" x 5/16"L (102x89x7.9L)	+ 2-2"x8" SPR. No.2
WL3	=5" x 3-1/2" x 5/16"L (127x89x7.9L)	+ 2-2"x10" SPR. No.2
WL4	=6" x 3-1/2" x 7/16"L (152x89x11.0L)	+ 2-2"x12" SPR. No.2
WL5	=6" x 4" x 7/16"L (152x102x11.0L)	+ 2-2"x12" SPR. No.2
WL6	=5" x 3-1/2" x 5/16"L (127x89x7.9L)	+ 2-2"x12" SPR. No.2
WL7	=5" x 3-1/2" x 5/16"L (127x89x7.9L)	+ 3-2"x12" SPR. No.2
WL8	=5" x 3-1/2" x 5/16"L (127x89x7.9L)	+ 3-2"x10" SPR. No.2
WL9	=6" x 4" x 7/16"L (152x102x11.0L)	+ 3-2"x10" SPR. No.2

WOOD LINTELS AND BEAMS

WB1	=2-2"x8" (2-38x184)	SPR. No.2
WB2	=3-2"x8" (3-38x184)	SPR. No.2
WB3	=2-2"x10" (2-38x235)	SPR. No.2
WB4	=3-2"x10" (3-38x235)	SPR. No.2
WB5	=2-2"x12" (2-38x286)	SPR. No.2
WB6	=3-2"x12" (3-38x286)	SPR. No.2
WB7	=5-2"x12" (5-38x286)	SPR. No.2
WB11	=4-2"x10" (4-38x235)	SPR. No.2
WB12	=4-2"x12" (4-38x286)	SPR. No.2

(32) DIRECT VENTING GAS FURNACE VENT
DIRECT VENT FURNACE TERMINAL MIN. 900mm (36") FROM A GAS REGULATOR. MIN. 300mm (12") ABOVE FIN. GRADE, FROM ALL OPENINGS, EXHAUST AND INTAKE VENTS. HRV INTAKE TO BE A MIN. OF 1830mm (6'-0") FROM ALL EXHAUST TERMINALS. REFER TO GAS UTILIZATION CODE.

(33) DIRECT VENTING GAS FIREPLACE VENT
DIRECT VENT GAS FIREPLACE. VENT TO BE A MINIMUM 300mm (12") FROM ANY OPENING AND ABOVE FIN. GRADE. REFER TO GAS UTILIZATION CODE.

(34) JOIST STRAPPING AND BRIDGING (SEE OBC. 9.23.9.4)
16mm (5/8") T & G SUBFLOOR ON WOOD FLOOR JOISTS. FOR CERAMIC TILE APPLICATION (* SEE OBC 9.30.6. *) 6mm (1/4") PANEL TYPE UNDERLAY UNDER RESILIENT & PARQUET FLOORING. (* SEE OBC 9.30.2.*)
FLOOR JOISTS WITH SPANS OVER 2100mm (6'-11") TO BE BRIDGED WITH 38x38 (2"x2") CROSS BRACING OR SOLID BLOCKING @ 2100mm (6'-11") O.C. MAX. AND WHERE SPECIFIED BY JOIST TABLES A-1 OR A-2 STRAPPING SHALL BE 19x64 (1"x3") @ 2100mm (6'-11") O.C. UNLESS A PANEL TYPE CEILING FINISH IS APPLIED. (* SEE OBC 9.23.9.4. *)

(35) EXPOSED BUILDING FACE -OBC. 9.10.15.
EXTERIOR WALLS TO HAVE A FIRE RESISTANCE RATING OF NOT LESS THAN 45 min. WHERE LIMITING DISTANCE (LD) IS LESS THAN 1.2M (3'-11"). WHERE THE LD IS LESS THAN 600mm (1'-11") THE EXPOSING FACE SHALL BE CLAD IN NON-COMBUSTIBLE MATERIAL. SEE ELEVATIONS FOR ADDITIONAL NOTES.

(36) COLD CELLAR PORCH SLAB (OBC 9.39.)
FOR MAX. 2500 mm (8'-2") PORCH DEPTH (SHORTEST DIM.), 125mm (4 7/8") 32MPa (4640psi) CONC. SLAB WITH 5-8% AIR ENTRAINMENT. REINF. WITH 10M BARS @ 200mm (7 7/8") O.C. EACH WAY IN BOTTOM THIRD OF SLAB, 600x600 (23 5/8"x 23 5/8") 10M DOWELS @ 600mm (23 5/8") O.C., ANCHORED IN PERIMETER FDTN. WALLS. SLOPE SLAB MIN. 1.0% FROM DOOR. SLAB TO HAVE MIN. 75mm (3") BEARING ON FDTN. WALLS. PROVIDE (L1) LINTELS OVER CELLAR DOOR AND WITH 100mm (4") END BEARING.

(37) BRICK CHECK
THE FDTN. WALL SHALL NOT BE REDUCED TO LESS THAN 90mm (3-1/2") THICK TO A MAX. DEPTH OF 660mm (26") AND SHALL BE TIED TO THE FACING MATERIAL WITH METAL TIES SPACED 200mm (8") O.C. VERTICALLY AND 900mm (36") O.C. HORIZONTALLY. FILL SPACE BETWEEN WALL AND FACING SOLID WITH MORTAR.

(38) CONVENTIONAL ROOF FRAMING (2.0Kpa. SNOW LOAD)
38x140 (2"x6") RAFTERS @ 406mm (16"O.C.) FOR MAX 11'-7" SPAN, 38x184 (2"x8") RIDGE BOARD. 38x89 (2"x4") COLLAR TIES AT MIDSPANS. CEILING JOISTS TO BE 38x89 (2"x4") @ 406mm (16") O.C. FOR MAX. 2830mm (9'-3") SPAN & 38x140 (2"x6") @ 406 (16") O.C. FOR MAX. 4450mm (14'-7") SPAN.
RAFTERS FOR BUILT-UP ROOF TO BE 38x89 (2"x4") @ 610mm (24") O.C. WITH A 38x89 (2"x4") CENTRE POST TO THE TRUSS BELOW. LATERALLY BRACED @ 1800mm (6'-0") O.C. VERTICALLY.

(39) TWO STOREY VOLUME SPACES
-FOR A MAXIMUM 5490 mm (18'-0") HEIGHT AND MAXIMUM SUPPORTED ROOF TRUSS LENGTH OF 6.0m, PROVIDE 2-38x140 (2-2"x6") SPR #2 CONTIN. STUDS @ 305mm (12") O.C. (TRIPLE UP AT EVERY THIRD DOUBLE STUD FOR BRICK WALLS) C/W 9.6 (3/8") THICK EXT. PLYWOOD SHEATHING. PROVIDE SOLID WOOD BLOCKING BETWEEN WOOD STUDS @ 1220 mm (4'-0") O.C. VERTICALLY. -FOR WALLS WITH HORIZ. DISTANCES NOT EXCEEDING 2900 mm (9'-6"), PROVIDE 38x140 (2"x6") STUDS @ 406 (16") O.C. WITH CONTINUOUS 2-38x140 (2-2"x6")TOP PLATES + 1-38x140 (1-2"x6") BOTTOM PLATE & MINIMUM OF 3-38x184 (3-2"x8") CONT. HEADER AT GRND. CEILING LEVEL TOE-NAILED & GLUED AT TOP, BOTTOM PLATES AND HEADERS.

(40) EXPOSED FLOOR TO EXTERIOR (SB-12-TABLE 3.1.1.2.A)
PROVIDE RSI 5.46 (R31) INSULATION, APPROVED VAPOUR BARRIER AND CONTINUOUS AIR BARRIER, FINISHED SOFFIT.

(41) PARTYWALLS
TYPICAL 1 HOUR RATED PARTYWALL.
REFER TO DETAILS FOR TYPE AND SPECIFICATIONS.

(42) EXTERIOR WALLS FOR WALK-OUT CONDITIONS
THE EXTERIOR BASEMENT STUD WALL TO BE 38x140 (2"x6") STUDS @ 406mm (16") o.c. OR 38x89 (2"x4") STUDS @ 305mm (12") o.c.

WINDOWS:
1) MINIMUM BEDROOM WINDOW -OBC. 9.9.10.1-
AT LEAST ONE BEDROOM WINDOW ON A GIVEN FLOOR IS TO HAVE MIN. 0.35m2 UNOBSTRUCTED GLAZED OR OPENABLE AREA WITH MIN. CLEAR WIDTH OF 380 mm (1'-3").
2) WINDOW GUARDS -OBC. 9.8.8.1.(6)
A GUARD IS REQUIRED WHERE THE TOP OF THE WINDOW SILL IS LOCATED LESS THAN 480mm (1'-7") ABOVE FIN. FLOOR AND THE DISTANCE FROM THE FIN. FLOOR TO THE ADJACENT GRADE IS GREATER THAN 1800mm (5'-11").
3) WINDOW WELLS -OBC. 9.14.6.3.
ALL WINDOW WELLS TO DRAIN TO FOOTING LEVEL PER OBC 9.14.6.3. CHECK WITH THE LOCAL AUTHORITY.
4) EXTERIOR WINDOWS
ALL EXTERIOR WINDOWS TO COMPLY WITH REQUIREMENTS STATED IN O.B.C.-DIV. B-3.7.1.7. & SB12-3.1.1.9.

DOORS:
1) EXTERIOR DOORS - THERMAL RESISTANCE
ALL EXTERIOR DOORS TO COMPLY WITH THERMAL RESISTANCE AS STATED IN O.B.C. SB-12-3.1.1.9.
2) EXTERIOR SLIDING GLASS DOORS - THERMAL RESISTANCE
ALL EXTERIOR SLIDING GLASS DOORS TO COMPLY WITH THERMAL PERFORMANCE AS STATED IN O.B.C. SB-12-3.1.1.9.

GENERAL:
1) MECHANICAL VENTILATION IS REQUIRED TO PROVIDE 0.3 AIR CHANGES PER HOUR AVERAGED OVER 24 HOURS. SEE MECHANICAL DRAWINGS.
2) ALL DOWNSPOUTS TO DRAIN AWAY FROM THE BUILDING AS PER OBC 9.26.18.2. AND MUNICIPAL STANDARDS.
3) STUD WALL REINFORCEMENT FOR FUTURE GRAB BARS IN MAIN BATHROOM
REINFORCEMENT OF STUD WALLS SHALL BE INSTALLED ADJACENT TO WATER CLOSETS AND SHOWER OR BATHTUB IN MAIN BATHROOM. REFER TO OBC. 9.5.2.3, 3.8.3.8.(1)(d) & 3.8.3.13.(1)(f).
4) AIR BARRIERS
ALL AIR BARRIER SYSTEMS TO COMPLY WITH O.B.C.-DIV. B, 9.25.3.

LUMBER:
1) ALL LUMBER SHALL BE SPRUCE NO.2 GRADE, UNLESS NOTED OTHERWISE.
2) LUMBER EXPOSED TO THE EXTERIOR TO BE SPRUCE No.2 GRADE PRESSURE TREATED OR CEDAR, UNLESS NOTED OTHERWISE.
3) ALL LAMINATED VENEER LUMBER (L.V.L.) BEAMS, GIRDER TRUSSES, AND METAL HANGER CONNECTIONS SUPPORTING ROOF FRAMING TO BE DESIGNED & CERTIFIED BY ROOF TRUSS MANUF.
4) LVL BEAMS SHALL BE 2.0E-2950Fb MIN. NAIL EACH PLY OF LVL WITH 89mm (3 1/2") LONG COMMON WIRE NAILS @ 300mm (12") O.C. STAGGERED IN 2 ROWS FOR 184,240 & 300mm (7 1/4",9 1/2", 11 7/8") DEPTHS AND STAGGERED IN 3 ROWS FOR GREATER DEPTHS AND FOR 4 PLY MEMBERS ADD 13mm (1/2") DIA. GALV. BOLTS BOLTED AT MID-DEPTH OF BEAM @ 915mm (3'-0") O.C.
5) PROVIDE TOP MOUNT BEAM HANGERS TYPE "SCL" MANUFACTURED BY SIMPSON STRONG-TIE OR EQUAL FOR ALL LVL BEAM TO BEAM CONNECTIONS UNLESS NOTED OTHERWISE.
6) JOIST HANGERS: PROVIDE METAL HANGERS FOR ALL JOISTS AND BUILT-UP WOOD MEMBERS INTERSECTING FLUSH BUILT-UP WOOD MEMBERS.
7) WOOD FRAMING NOT TREATED WITH A WOOD PRESERVATIVE, IN CONTACT WITH CONCRETE, SHALL BE SEPARATED FROM THE CONCRETE BY AT LEAST 2 mil POLYETHYLENE FILM, No. 50 (45lbs.) ROLL ROOFING OR OTHER DAMPPROOFING MATERIAL, EXCEPT WHERE THE WOOD MEMBER IS AT LEAST 150mm (6") ABOVE THE GROUND.

STEEL:
1) STRUCTURAL STEEL SHALL CONFORM TO CAN/CSA-G40.21 GRADE 350W. "STRUCTURAL QUALITY". PER OBC. B-9.23.4.3.
2) REINFORCING STEEL SHALL CONFORM TO CSA-G30-18M GRADE 400R.

STUCCO:
1) ALL STUCCO WALLS TO HAVE A MINIMUM 10mm AIR SPACE BEHIND THE CLADDING WITH POSITIVE DRAINAGE TO THE EXTERIOR. THE EXTERIOR SHEATHING MUST NOT BE GYPSUM BASED. ALL STUCCO TO BE INSTALLED AS PER MANUFACTURERS SPECIFICATIONS.

THE MINIMAL THERMAL PERFORMANCE OF BUILDING ENVELOPE AND EQUIPMENT SHALL CONFORM TO THE FOLLOWING SB-12 COMPLIANCE PACKAGE AS PER OBC SUPPLEMENTARY STANDARD SB-12, SECTION 3.1.1.1.

USE SB-12 COMPLIANCE PACKAGE (A1):

COMPONENT	A1	Notes:
Ceiling with Attic Space Minimum RSI (R) value	10.56 (R60)	R20 at inner face of exterior walls
Ceiling without Attic Space Minimum RSI (R) value	5.46 (R31)	BATT or SPRAY
Exposed Floor Minimum RSI (R) value	5.46 (R31)	BATT or SPRAY
Walls Above Grade Minimum RSI (R) value	3.87 (R22)	6" R22 BATT
Basement Walls Minimum RSI (R) value	3.52ci (R20ci)	OPTION TO USE R12+R10ci
Edge of Below Grade Slab ≤600mm below grade Minimum RSI (R) value	1.76 (R10)	RIGID INSUL
Windows & Sliding glass Doors Maximum U-value	1.6U (0.28)	
Skylights Maximum U-value	2.8U (0.49)	
Space Heating Equipment Minimum AFUE	96% Min.	NATURAL GAS
Hot Water Heater Minimum EF	0.66 (0.8)	NATURAL GAS
HRV Minimum Efficiency	75%	-
Drain Water Heat Recovery Unit (DWHR)	Minimum 1 OR Maximum 2 Required. Dependent on number of showers installed. Refer to SB12-3.1.1.12 for information	

ci- Denotes Continuous Insulation without framing interruption.

LEGEND

CLASS "B" VENT		EXHAUST FAN TO EXTERIOR	
DUPLEX OUTLET (12" ABOVE SURFACE)		DUPLEX OUTLET (HEIGHT A.F.F)	
WEATHERPROOF DUPLEX OUTLET		GFI DUPLEX OUTLET (HEIGHT A.F.F)	
POT LIGHT		HEAVY DUTY OUTLET (220 volt)	
LIGHT FIXTURE (PULL CHAIN)		LIGHT FIXTURE (CEILING MOUNTED)	
SWITCH		LIGHT FIXTURE (WALL MOUNTED)	
FLOOR DRAIN		HOSE BIB (NON-FREEZE)	

S.A./CO. COMBINED SMOKE ALARM AND CARBON MONOXIDE DETECTOR/ALARM
DJ — DOUBLE JOIST
TJ — TRIPLE JOIST
SJ — SINGLE JOIST
LVL — LAMINATED VENEER LUMBER
POINT LOAD FROM ABOVE
P.T. PRESSURE TREATED LUMBER
G.T. GIRDER TRUSS BY ROOF TRUSS MANUF.
FA FLAT ARCH
CA CURVED ARCH
M.C. MEDICINE CABINET
CONC. BLOCK WALL
SPECIAL WALL CONSTRUCTION SEE NOTE ON PLANS
SB SOLID WOOD BEARING (SPRUCE No. 2)
SOLID BEARING TO BE AS WIDE AS SUPPORTED MEMBER OR AS DIRECTED BY STRUCTURAL ENGINEER.
SOLID BEARING TO BE MINIMUM 2 PIECES.
SBFA SOLID WOOD BEARING TO MATCH FROM ABOVE

NOTE: SOLID BEARING TO BE AT LEAST AS WIDE AS THE SUPPORTED LINTEL/BEAM

SMOKE ALARM (REFER TO OBC 9.10.19)
PROVIDE 1 PER FLOOR, NEAR THE STAIRS CONNECTING THE FLOOR LEVEL, AND ALSO 1 IN EACH BEDROOM NEAR HALL DOOR. ALARMS TO BE CONNECTED TO AN ELECTRICAL CIRCUIT AND INTERCONNECTED TO ACTIVATE ALL ALARMS IF 1 SOUNDS. BATTERY BACK-UP REQUIRED. SMOKE ALARMS TO INCORPORATE VISUAL SIGNALLING COMPONENT (9.10.19.3.(3)).

CARBON MONOXIDE ALARM (OBC. 9.33.4.)
WHERE A FUEL-BURNING APPLIANCE IS INSTALLED IN A DWELLING UNIT, A CARBON MONOXIDE DETECTOR CONFORMING TO CAN/CSA-6.19,CSA 6.18 OR UL2034 SHALL BE INSTALLED ADJACENT TO EACH SLEEPING AREA. CARBON MONOXIDE DETECTOR(S) SHALL BE PERMANENTLY WIRED SO THAT ITS ACTIVATION WILL ACTIVATE ALL CARBON MONOXIDE DETECTORS AND BE EQUIPPED WITH AN ALARM THAT IS AUDIBLE WITHIN BEDROOMS WHEN THE INTERVENING DOORS ARE CLOSED.

SOIL GAS CONTROL (OBC. 9.13.4.1. & 9.13.4.2)
PROVIDE CONSTRUCTION TO PREVENT LEAKAGE OF SOIL GAS INTO THE BUILDING IF REQUIRED.

DRAIN WATER HEAT RECOVERY UNIT (DWHR)
PER SB12-3.1.1.12., A DRAIN WATER HEAT RECOVERY (DWHR) UNIT SHALL BE INSTALLED IN EACH DWELLING UNIT TO RECEIVE DRAIN WATER FROM ALL SHOWERS OR FROM AT LEAST TWO SHOWERS WHERE THERE ARE TWO OR MORE SHOWERS IN THE DWELLING UNIT. DOES NOT APPLY IF THERE ARE NO SHOWERS OR NO STOREY BENEATH ANY OF THE SHOWERS.

CITY OF BRAMPTON
BUILDING DIVISION
REVIEWED
JAN 04 2019
BY
MARK DERKSEN

CONTRACTOR MUST VERIFY ALL DIMENSIONS ON THE JOB AND REPORT ANY DISCREPANCY TO VA3 DESIGN INC. BEFORE PROCEEDING WITH THE WORK.
ALL DRAWINGS AND SPECIFICATIONS ARE INSTRUMENTS OF SERVICE AND THE PROPERTY OF THE DESIGNER WHICH MUST BE RETURNED AT THE COMPLETION OF THE WORK. ALL DRAWINGS TO BE USED FOR CONSTRUCTION ONLY AFTER BUILDING PERMIT HAS BEEN ISSUED.

SB-12 COMPLIANCE PACKAGE "A1" TO BE USED FOR THIS MODEL.
The minimum thermal performance of building envelope and equipment shall conform to the selected package unless otherwise noted.

REVISION: ONT. REG. 332/12-2012 OBC Amendment O. Reg. 368/13 MR-16-S-26 NOV. 28, 2016

PACKAGE 'A1'

no.	description	date	by
9			
8			
7			
6			
5			
4			
3			
2			
1	ISSUED FOR PERMIT.	JULY 23/18	GW

The undersigned has reviewed and takes responsibility for this design, and has the qualifications and meets the requirements set out in the Ontario Building Code to be a Designer.
qualification information
Richard Vink (signature) BCIN 24488
registration information
VA3 Design Inc. 42658

Contractor must verify all dimensions on the job and report any discrepancy to the Designer before proceeding with the work. All drawings and specifications are instruments of service and the property of the Designer which must be returned at the completion of the work. Drawings are not to be scaled.

VA3 DESIGN
255 Consumers Rd Suite 120
Toronto ON M2J 1R4
t 416.630.2255 f 416.630.4782
va3design.com

Greenpark.

project name: MINNISALE HOMES CORP.	municipality: BRAMPTON	project no.: 18012
TYPICAL CONSTRUCTION NOTES		drawing no.: 1
date: JUNE 2018	drawn by: GW	checked by: GW
scale: 3/16" = 1'-0"	file name: GP-14X18-NOTES-2018-VA3-PKG-A1-18012	

greg - F:\LIBRARY\LIBRARY.ML\2018 OBC CONSTRUCTION NOTES\GREENPARK\GP-14x18-NOTES-2018-VA3-PKG-A1-18012.dwg - Mon, Jul 23 2018 - 11:37 AM

All drawings specifications, related documents and design are the copyright property of VA3 DESIGN. Reproduction of this property in whole or in part is strictly prohibited without VA3 DESIGN's written permission.

All work shall conform to the Ontario Building Code O. Reg. 332/12 as amended

REFER TO STANDARD WALL SECTION SHEET FOR FURTHER INFORMATION ON WALL CONSTRUCTION.

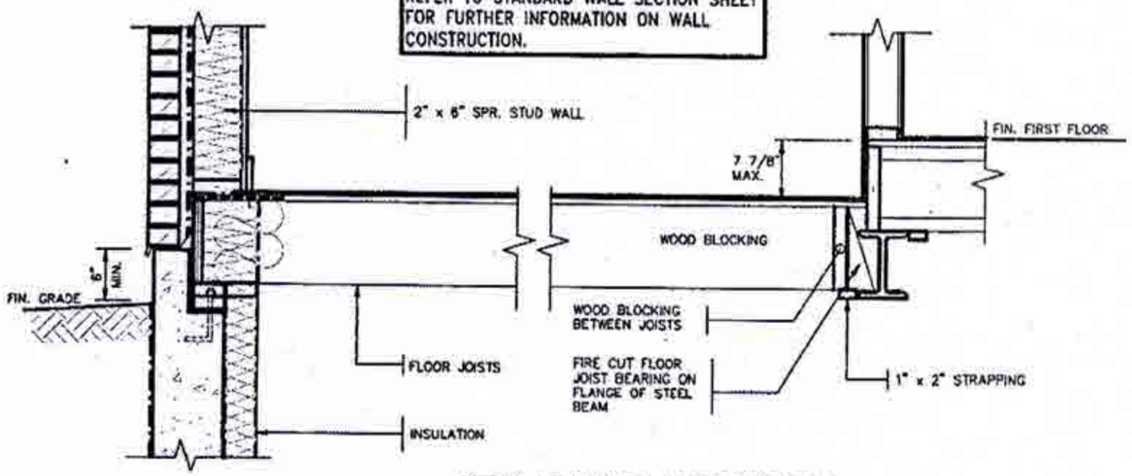

DETAIL OF SUNKEN LAUNDRY/ENTRY
(ONE RISER)

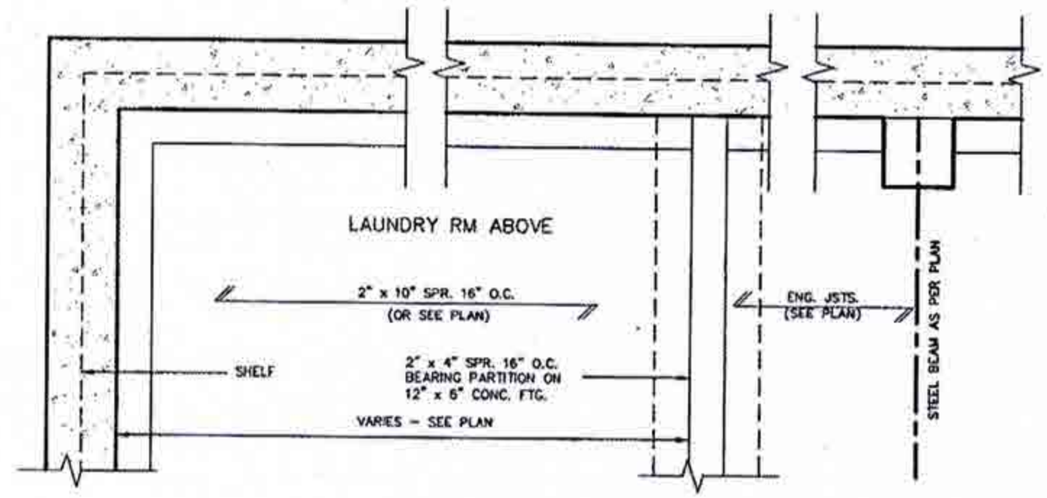

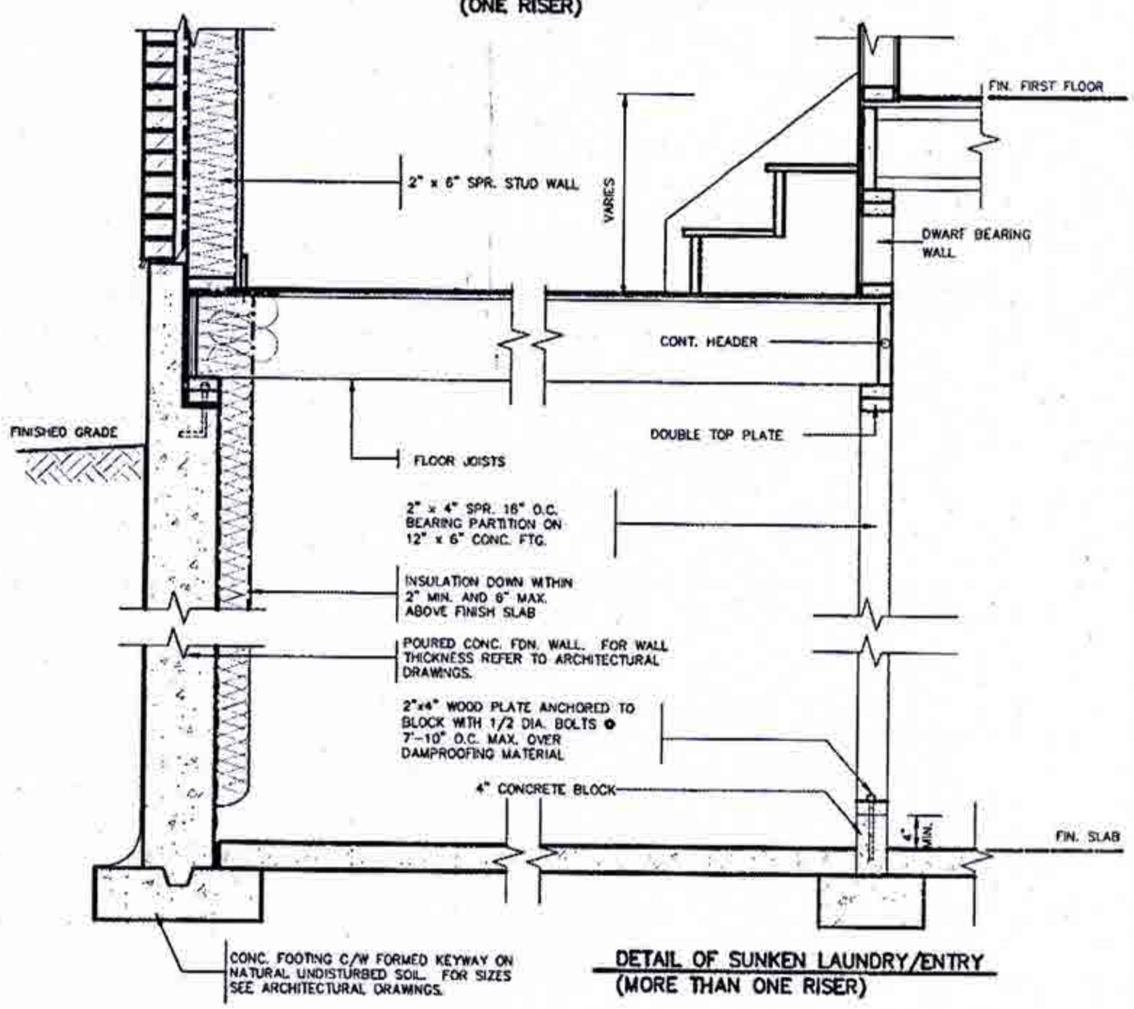

DETAIL OF SUNKEN LAUNDRY/ENTRY
(MORE THAN ONE RISER)

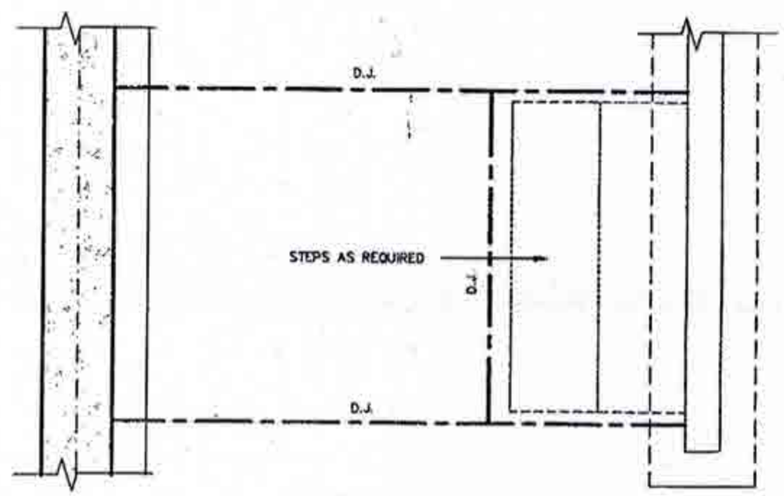

PARTIAL FOUNDATION PLAN

CITY OF BRAMPTON
BUILDING DIVISION
REVIEWED
JAN 04 2019
BY
MARK DERKSEN

REGISTERED PROFESSIONAL ENGINEER
B. MARINKOVIC
PROVINCE OF ONTARIO
STRUDET INC.
FOR STRUCTURE ONLY

2012 CODE COMPLIANCE PACKAGE A1

no.	description	date	by
9			
8			
7			
6			
5			
4			
3			
2			
1	ISSUED FOR PERMIT	JULY 23/18	GW

The undersigned has reviewed and takes responsibility for this design and has the qualifications and meets the requirements set out in the Ontario Building Code to be a Designer.
qualification information: Richard Vink 24488
name / signature / BCIN
registration information: VAS Design Inc. 42658

Contractor shall verify all dimensions on the job and report any discrepancy to the Designer before proceeding with the work. All drawings and specifications are instruments of service and the property of the Designer which must be returned at the completion of the work. Drawings are not to be scaled.

VAS DESIGN
255 Consumers Rd Suite 120
Toronto ON M2J 1R4
t 416.630.2255 f 416.630.4782
vas3design.com

Greenpark.

project name: MINNISALE HOMES CORP.	municipality: BRAMPTON
project no.	18012
date: JULY 2018	SUNKEN FLOOR DETAILS
drawn by: GW	checked by: –
scale: Not to Scale	file name: 18012-GP-STD_DETAILS_A1
drawing no.	2

All drawings specifications, related documents and design are the copyright property of VAS DESIGN. Reproduction of this property in whole or in part is strictly prohibited without VAS DESIGN's written permission.

EAVE PROTECTION SHALL BE PROVIDED FROM THE EDGE OF ROOF A MIN. 3'-0" (900mm) UP FROM THE ROOF SLOPE TO A LINE NOT LESS THAN 1'-0" (300mm) INSIDE THE INNER FACE OF THE EXTERIOR WALL. EAVE PROTECTION SHALL BE LAID BENEATH THE STARTER STRIP AND SHALL CONSIST OF TYPE 'M' OR TYPE 'S' ASPHALT COATED ROOFING SHEETS.

BAFFLES AS REQUIRED FOR ROOF VENTILATION

PROVIDE ROOF VENTILATION @ A RATE OF 1:300 OF INSULATED CEILING AREA UNIFORMLY DISTRIBUTED

CONVENTIONAL ROOF RAFTERS AND CEILING JOISTS OR ROOF TRUSSES @ 24"o.c. MAX.

210 ASPHALT SHINGLES ON 3/8" PLYWOOD SHEATHING USE 'H' CLIPS FOR TRUSSES

SEE PLAN FOR ROOF SLOPE

STARTER STRIP OF ROOF SHINGLES REQUIRED

CEILING JOISTS (SEE PLAN)

TOP OF WOOD PLATE

2"x5" FASCIA BOARD PREFINISHED METAL GUTTER, FASCIA AND VENTED SOFFIT

1/2" (13mm) DRYWALL FINISH OVER CONT. 6 MIL. POLY VAPOUR/AIR BARRIER & MIN. R-50 INSULATION R60

DOUBLE TOP PLATE

1/2" GYPSUM BOARD

2"x6" BOTTOM PLATE

LAP VAPOUR AND AIR BARRIER 4" AND SECURE TO PLATE

FIN. FLOORING ON SUBFLOOR

FINISHED SECOND FLOOR

4" FACE BRICK TIED TO STUDS WITH GALVANIZED 7/8" WIDE METAL TIES @ 16" o.c. HORIZONTAL AND 24" o.c. VERTICAL

PARALLEL JOISTS: WOOD BLOCKING per FLOOR MANUFACTURER

1" AIR SPACE

FLOOR JOISTS SEE PLAN

#15 BUILDING PAPER OVER 7/16" OSB SHEATHING, 2"x6" SPR. STUDS @ 16"o.c. FILLED WITH MIN. R-22 BATT INSULATION AND 6 MIL. POLY VAPOUR BARRIER. R22

1/2" GYPSUM BOARD CEILING FINISH

SINGLE CONTIN. RIMBOARD

AIR BARRIER RUN BETWEEN DOUBLE TOP PLATE AND UP UNDER FLOOR PLATE

DOUBLE TOP PLATE

CONTINUOUS RIM JOIST w/ R-24 INSULATION, 6 MIL. VAPOUR BARRIER AND SEAL TO JOIST AND SUBFLOOR

1/2" GYPSUM BOARD

SINGLE CONTIN. RIMBOARD

FIN. FLOORING ON SUBFLOOR

FINISHED FIRST FLOOR

TYVEK HEADER WRAP AT FIRST FLOOR. SEAL AT SUBFLOOR & BASE PLATE

SCREENED WEEPING HOLES 3/8" DIA. AT 24" o.c. AT BOTTOM OF CAVITY 6 MIL. POLYETHYLENE BASE FLASHING BENEATH WEEPING AND 6" UP BEHIND BUILDING PAPER

SLOPE 6" MIN.

FIN. GRADE

CAULK OR SEAL WITH GASKET

AIR BARRIER SECURED TO PLATE

2-2"x4" WOOD PLATE ANCHORED TO FOUNDATION WALLS WITH 1/2" DIA. BOLTS AT 7'-10"o.c. MIN. 4" INTO FOUNDATION WALL

HEAVY COAT OF BITUMEN OVER CONC. WALL

R-20 INSULATION DOWN WITHIN 2" MIN. AND 6" MAX. ABOVE FINISH SLAB WITH MOISTURE & VAPOUR BARRIER SEALED AT TOP & BOTTOM

MIN. 4'-0" FROST COVERAGE

FOUNDATION WALLS TO BE WATER PROOFED OR PROVIDE A DRAINAGE LAYER ADJACENT TO EXT. SURFACE OF FOUNDATION WALL AND EXTEND TO FOOTING LAYER OR PROVIDE "SYSTEM PLANTON AIR GAP MEMBRANE"

POURED CONC. FDN. WALL. FOR WALL THICKNESS SEE ARCHITECTURAL DRAWINGS.

CONTINUOUS WATERSTOP (BITUMEN CAULKING)

CEMENT COVE

3" CONCRETE SLAB 25 MPa ON 4" MIN. COMPACT GRAVEL

4" DIA. WEEPING TILES W/6" CRUSHED STONE COVER

FIN. SLAB

FINISHED SLAB

CONC. FOOTING C/W FORMED KEYWAY ON NATURAL UNDISTURBED SOIL. FOR FOOTING SIZES SEE ARCHITECTURAL DRAWINGS.

WALL SECTION

CITY OF BRAMPTON
BUILDING DIVISION
REVIEWED BY: S. HANNA
JAN 22 2019
ATTACHED NOTES ARE PART OF REVIEWED DRAWINGS
ALL WORK MUST COMPLY WITH OBC

REGISTERED PROFESSIONAL ENGINEER
B. MARINKOVIC
PROVINCE OF ONTARIO

STRUDET INC.
FOR STRUCTURE ONLY

1/2" (13mm) DRYWALL FINISH OVER CONTINUOUS 6 MIL. POLY VAPOUR/AIR BARRIER & MIN. R-31 INSULATION. (DRYWALL ON THE CEILING ONLY WHEN THERE IS NO SECOND FLOOR ABOVE GARAGE)

FIN. FLOORING ON SUBFLOOR

FINISHED SECOND FLOOR

GARAGE

1/2" GYPSUM BOARD CEILING FINISH

#15 BUILDING PAPER OVER 1" R-5 RIGID INSULATION, 2"x6" SPR. STUDS @ 16"o.c. FILLED WITH MIN. R-20 BATT INSULATION (TOTAL MIN. R-25) AND 6 MIL. POLY VAPOUR BARRIER

AIR BARRIER RUN BETWEEN DOUBLE TOP PLATE AND UP UNDER FLOOR PLATE

DOUBLE TOP PLATE

TYVEK HEADER WRAP AT FIRST FLOOR. SEAL AT SUBFLOOR & BASE PLATE

WALL FLASHING

WEEP HOLES

PROTECTION REQ'D FOR FRAMING MEMBERS

2-2"x4" WOOD PLATE ANCHORED TO FOUNDATION WALLS WITH 1/2" DIA. BOLTS AT 7'-10"o.c. MIN. 4" INTO FOUNDATION WALL

DOVE TAIL TIES @ 8" o.c. VERT. & 36" o.c. HORIZ.

SOLID MORTAR FILL

26" MAX. FOR 8" CONCRETE WALL

SLOPE

FIN. GRADE

8" FOUNDATION WALL WHEN VENEER CUT IS EQUAL OR LESS THAN 26". 10" FOUNDATION WALL WHEN VENEER CUT IS MORE THAN 26".

DETAIL FOR CONCRETE VENEER DROPPED GRADE

EVERY OTHER BRICK IS OMMITED TO TIE IN CONC SLAB MIN. 4" INTO FOUND. WALL

TYVEK HEADER WRAP AT FIRST FLOOR. SEAL AT SUBFLOOR & BASE PLATE

WALL FLASHING

WEEP HOLES

7-1/2" MAX.

CAULKING

SLOPE

5" MIN. REINF. CONC. PORCH SLAB. SEE ARCHITECTURAL DRAWINGS.

PROTECTION REQ'D FOR FRAMING MEMBERS

3" MIN. BEARING

R-20 INSULATION

COLD CELLAR

FOUNDATION WALL

DETAIL FOR COLD CELLAR PORCH SLAB

CITY OF BRAMPTON
BUILDING DIVISION
REVIEWED
JAN 04 2019
BY
MARK DERKSEN

2012 CODE COMPLIANCE PACKAGE A1

no.	description	date	by
9			
8			
7			
6			
5			
4			
3			
2			
1	ISSUED FOR PERMIT	JULY 23/18	CW

The undersigned has reviewed and takes responsibility for this design and has the qualifications and meets the requirements set out in the Ontario Building Code to be a Designer.

qualification information
name: Richard Vink — signature: R Vink — BCIN: 24488
registration information
VA3 Design Inc. — 42658

Contractor must verify all dimensions on the job and report any discrepancy to the Designer before proceeding with the work. All drawings and specifications are instruments of service and the property of the Designer which must be returned at the completion of the work. Drawings are not to be scaled.

VA3 DESIGN
255 Consumers Rd Suite 120
Toronto ON M2J 1R4
t 416.630.2255 f 416.630.4782
va3design.com

Greenpark

project name: MINNISALE HOMES CORP. — municipality: BRAMPTON — project no. 18012

date: JULY 2018 — 2"x6" BRICK VENEER SECTIONS — drawing no. 3

drawn by: CW — checked by: - - — scale: Not to Scale — file name: 18012-GP-STD_DETAILS_A1

All drawings specifications, related documents and design are the copyright property of VA3 DESIGN. Reproduction of this property in whole or in part is strictly prohibited without VA3 DESIGN's written permission.

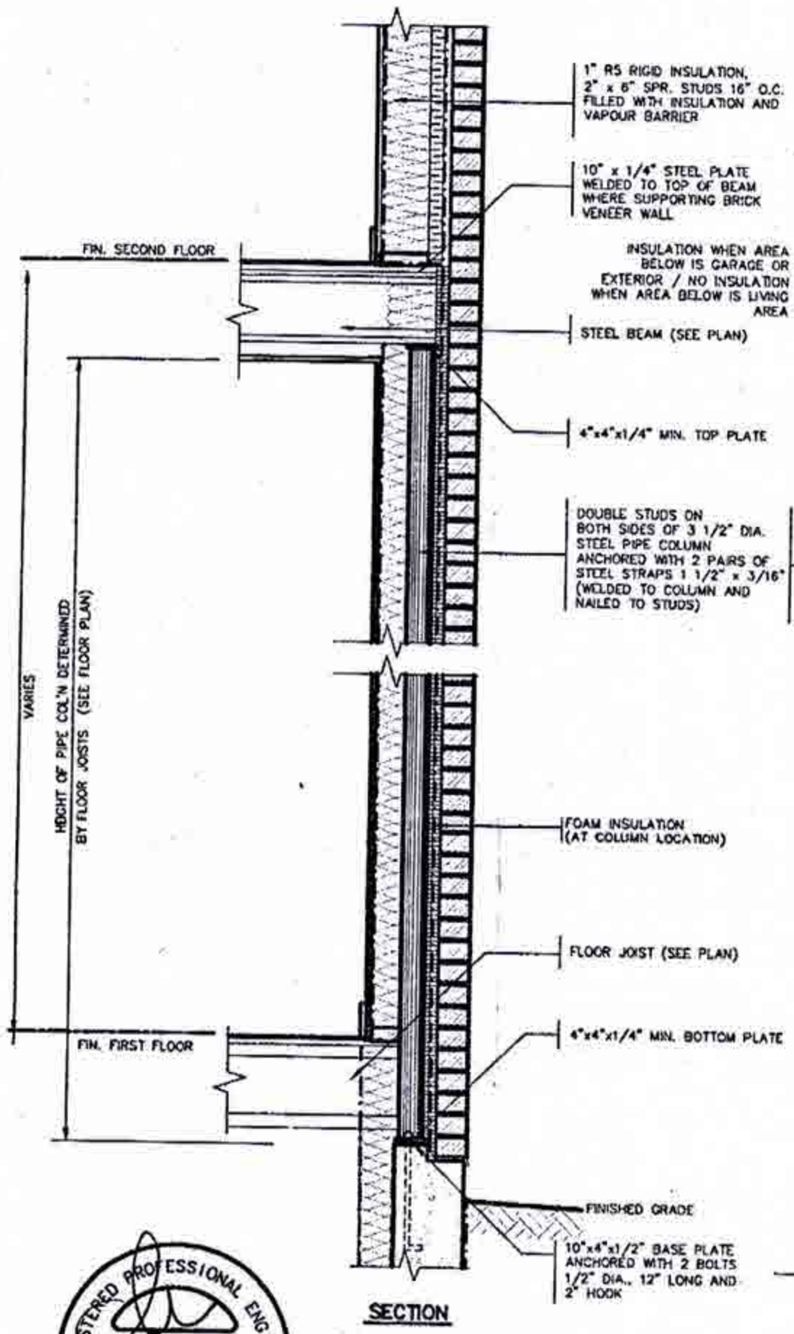

SECTION

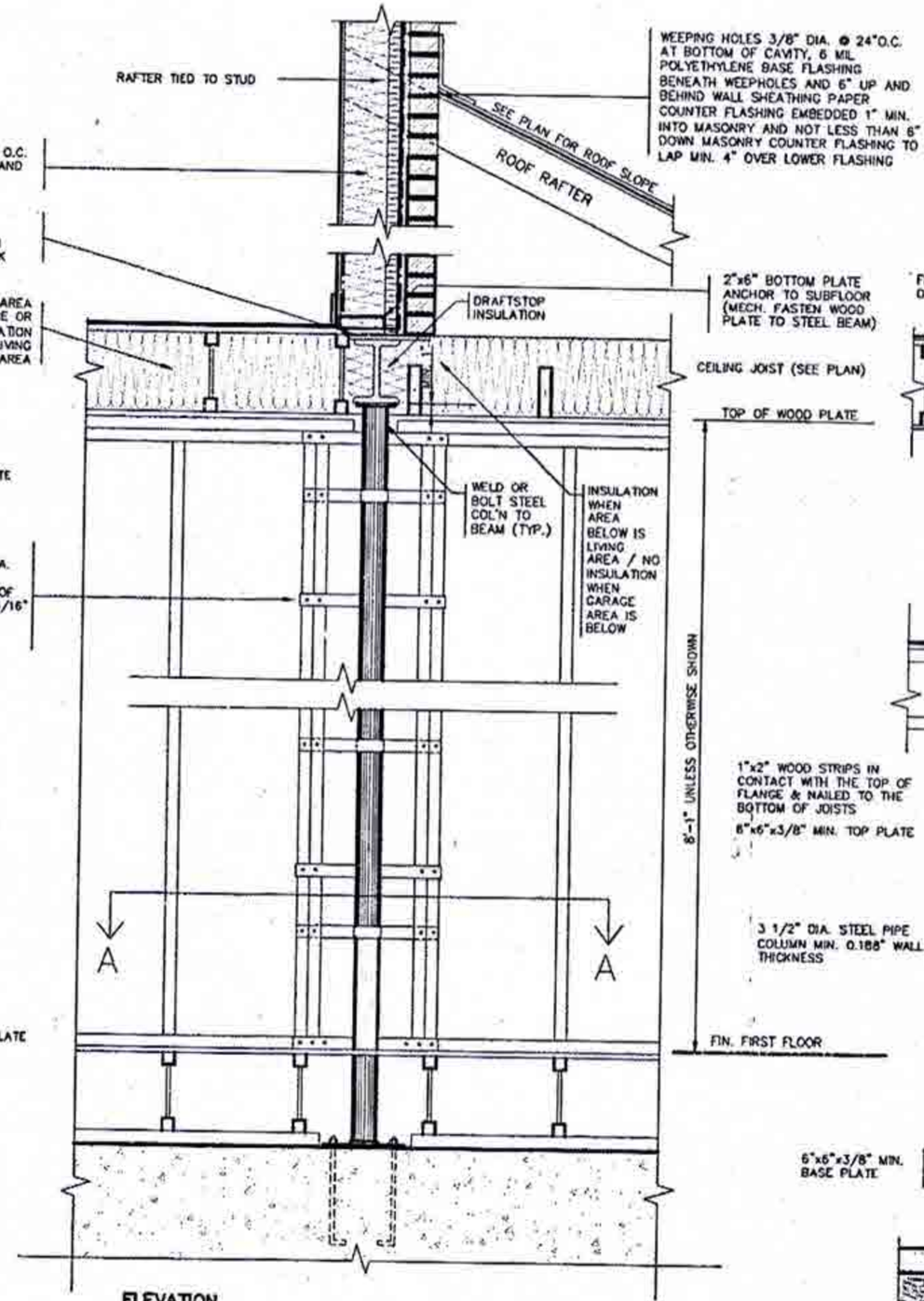

ELEVATION

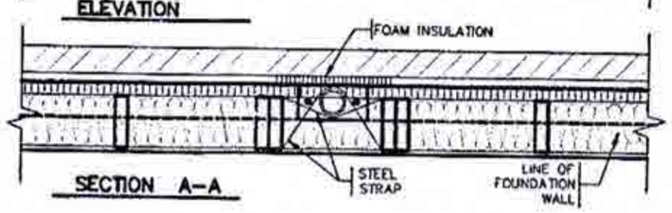

SECTION A–A

SECTION THROUGH STEEL BEAM SUPPORTING MASONRY & BEARING STUD PARTITION

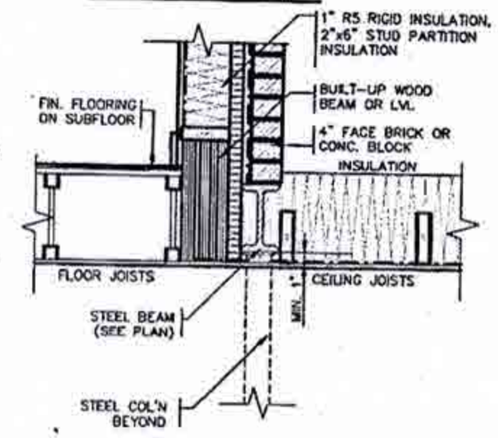

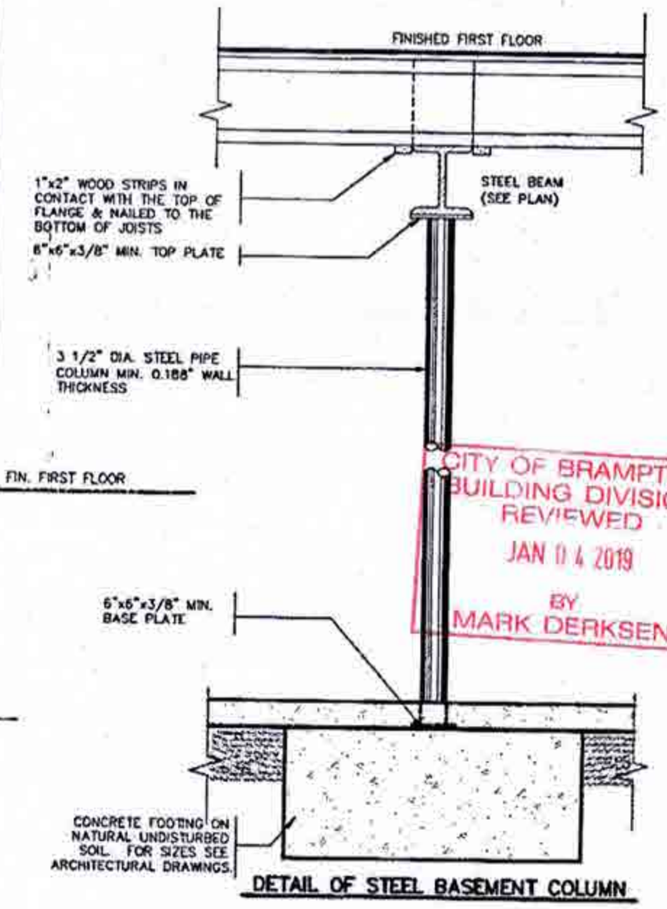

DETAIL OF STEEL BASEMENT COLUMN

CITY OF BRAMPTON
BUILDING DIVISION
REVIEWED
JAN 04 2019
BY
MARK DERKSEN

REGISTERED PROFESSIONAL ENGINEER
B. MARINKOVIC
PROVINCE OF ONTARIO

STRUDET INC.
FOR STRUCTURE ONLY

2012 CODE COMPLIANCE PACKAGE A1

no.	description	date	by
9			
8			
7			
6			
5			
4			
3			
2			
1	ISSUED FOR PERMIT	JULY 23/18	CW

The undersigned has reviewed and takes responsibility for this design and has the qualifications and meets the requirements set out in the Ontario Building Code to be a Designer.
qualification information
name: Richard Vink — signature — 24488
registration information
VA3 Design Inc. — BCIN 42658

Contractor must verify all dimensions on the job and report any discrepancy to the Designer before proceeding with the work. All drawings and specifications are instruments of service and the property of the Designer which must be returned at the completion of the work. Drawings are not to be scaled.

VA3 DESIGN
255 Consumers Rd Suite 120
Toronto ON M2J 1R4
t 416.630.2255 f 416.630.4782
va3design.com

Greenpark.

project name: MINNISALE HOMES CORP. — municipality: BRAMPTON — project no. 18012
date: JULY 2018 — STEEL COLUMN DETAILS — drawing no. 4
drawn by: CW — checked by: – — scale: As Shown — file name: 18012-GP-STD_DETAILS_A1

All drawings specifications, related documents and design are the copyright property of VA3 DESIGN. Reproduction of this property in whole or in part is strictly prohibited without VA3 DESIGN's written permission.

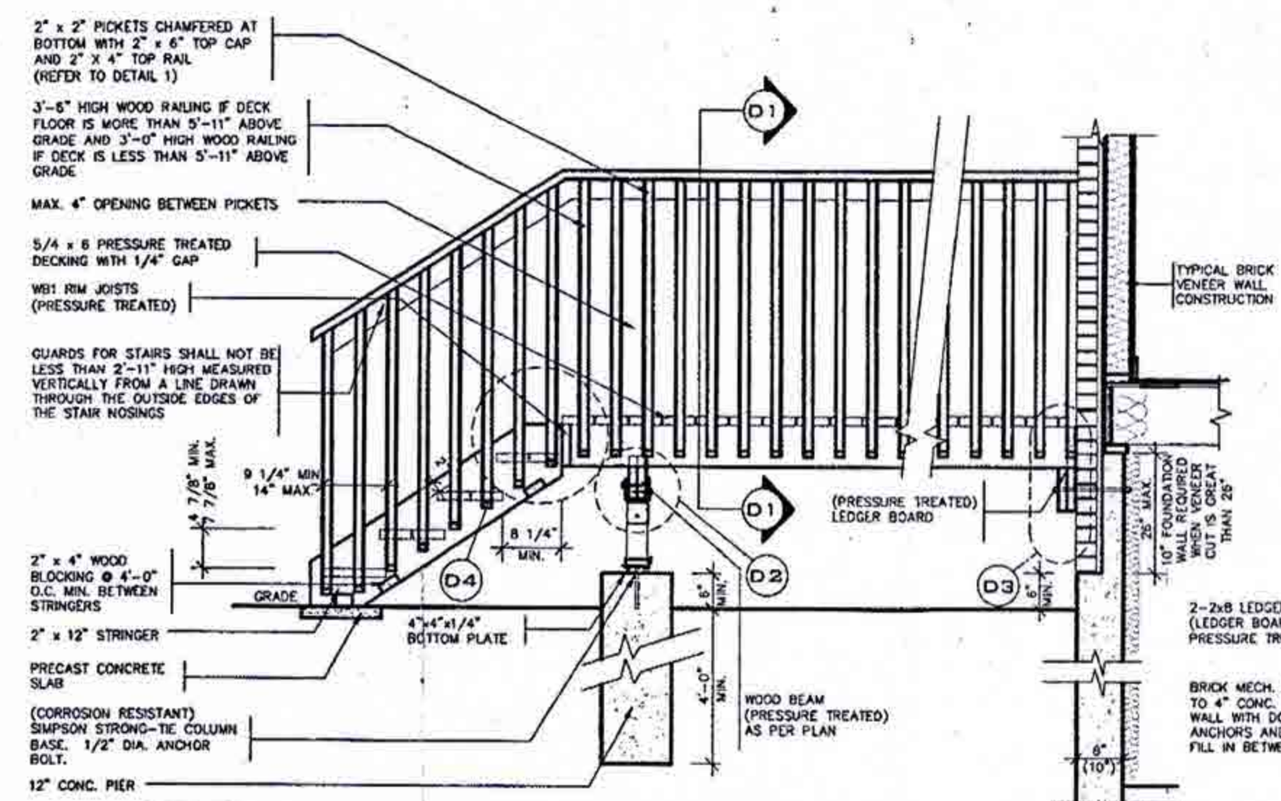

WOOD DECK SECTION WITH BRICK VENEER

SCALE: 1/2"=1'-0"

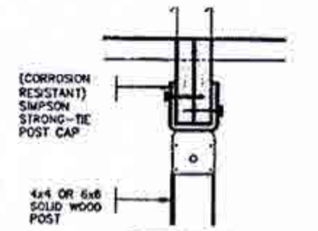

DETAIL 2 - BEAM-TO-POST

SCALE: 1" = 1'-0"

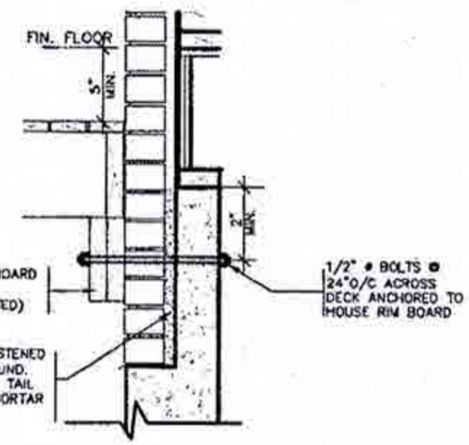

DETAIL 3
STEEL ANGLE

SCALE: 1" = 1'-0"

DETAIL 1
CANTILEVERED PICKET SCREWED TO RIM JOIST AND DECK

GUARD PARALLEL TO FLOOR JOISTS

SCALE: 1" = 1'-0"

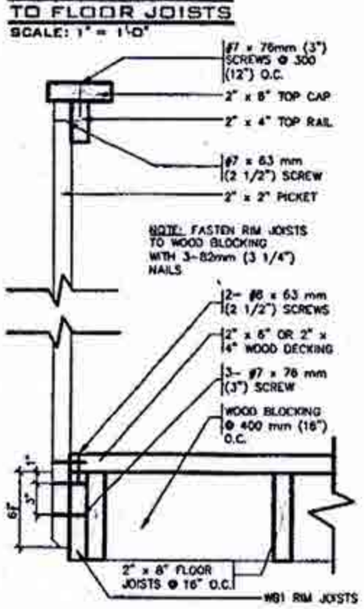

GUARD PERPENDICULAR TO FLOOR JOISTS

SCALE: 1" = 1'-0"

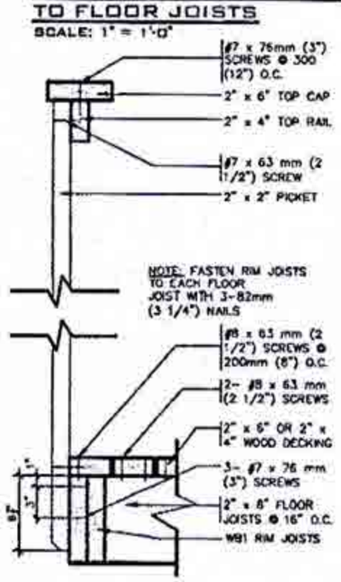

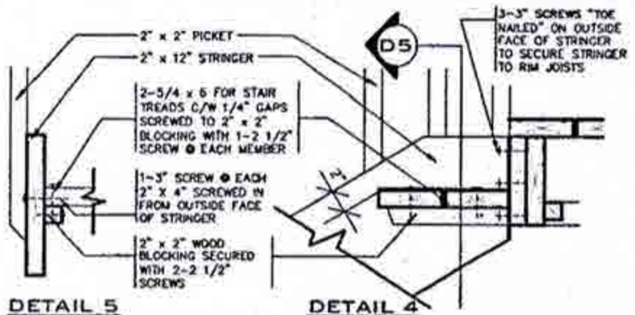

DETAIL 5
SECTION THROUGH STAIR STRINGER

SCALE: 1" = 1'-0"

DETAIL 4
SECTION @ TREAD AND STRINGER SECUREMENT

SCALE: 1" = 1'-0"

REGISTERED PROFESSIONAL ENGINEER
B. MARINKOVIC
PROVINCE OF ONTARIO

STRUDET INC.
FOR STRUCTURE ONLY

GENERAL NOTES

1. BRICK TO BE COMPRESSIVE STRENGTH OF 15 mPA (2200 p.s.i.) MIN. UNITS TO BE LAID WITH FULL HEAD AND BED JOINTS.
2. MORTAR TO BE TYPE S WITH JOINT THICKNESS OF 10mm (3/8")MIN. AND 20mm (3/4") MAX.
3. ALL NAILS AND SCREWS TO BE GALVANIZED.
4. WB1 = 2- 2 x 8 (PRESSURE TREATED)
   WB3 = 2- 2 x 10 (PRESSURE TREATED)
5. WOOD FOR CANTILEVERED PICKETS SHALL BE DOUGLAS FIR-LARCH, SPRUCE-PINE-FIR, OR HEM-FIR SPECIES.

CITY OF BRAMPTON
BUILDING DIVISION
REVIEWED
JAN 0 4 2019
BY
MARK DERKSEN

2012 CODE COMPLIANCE PACKAGE A1

no.	description	date	by
9			
8			
7			
6			
5			
4			
3			
2			
1	ISSUED FOR PERMIT	JULY 23/18	CW

The undersigned has reviewed and takes responsibility for this design and has the qualifications and meets the requirements set out in the Ontario Building Code to be a Designer.
qualification information
Richard Vink 24488
name signature BCIN
registration information
VA3 Design Inc. 42658

Contractor must verify all dimensions on the job and report any discrepancy to the Designer before proceeding with the work. All drawings and specifications are instruments of service and the property of the Designer which must be returned at the completion of the work. Drawings are not to be scaled.

VA3 DESIGN
255 Consumers Rd Suite 120
Toronto ON M2J 1R4
t 416.630.2255 f 416.630.4782
va3design.com

Greenpark.

project name: MINNISALE HOMES CORP.	municipality: BRAMPTON	project no. 18012
date: JULY 2018	WOOD DECK DETAILS	drawing no. 5
drawn by: CW	checked by: -	scale: As Shown
file name: 18012-GP-STD_DETAILS_A1		

All drawings specifications, related documents and design are the copyright property of VA3 DESIGN. Reproduction of this property in whole or in part is strictly prohibited without VA3 DESIGN's written permission.

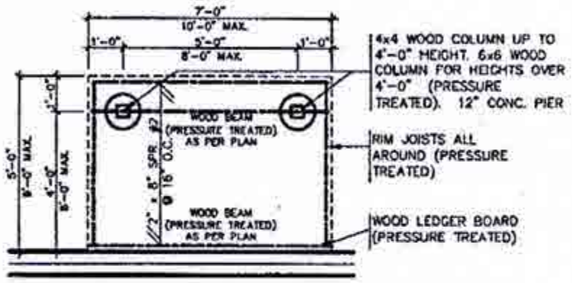

TYPICAL DECK LAYOUT

SCALE: 1/4"=1'-0"

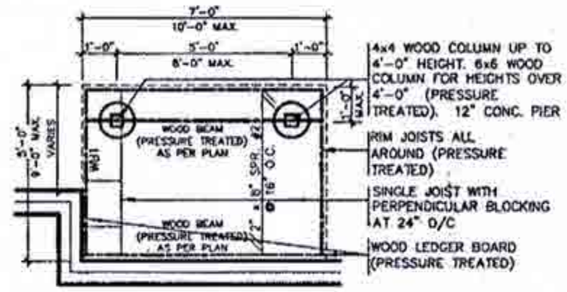

TYPICAL DECK LAYOUT

SCALE: 1/4"=1'-0"

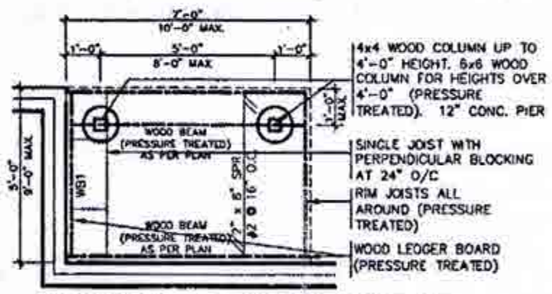

TYPICAL DECK LAYOUT

SCALE: 1/4"=1'-0"

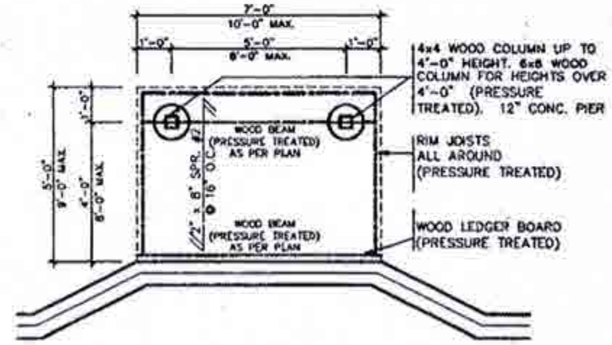

TYPICAL DECK LAYOUT

SCALE: 1/4"=1'-0"

REGISTERED PROFESSIONAL ENGINEER
B. MARINKOVIC
PROVINCE OF ONTARIO

STRUDET INC.
FOR STRUCTURE ONLY

CITY OF BRAMPTON
BUILDING DIVISION
REVIEWED
JAN 04 2019
BY
MARK DERKSEN

2012 CODE COMPLIANCE PACKAGE A1

no.	description	date	by
9			
8			
7			
6			
5			
4			
3			
2			
1	ISSUED FOR PERMIT	JULY 23/18	CW

The undersigned has reviewed and takes responsibility for this design and has the qualifications and meets the requirements set out in the Ontario Building Code to be a Designer.
qualification information: Richard Vink, 24488
name, signature, BCIN
registration information: VA3 Design Inc., 42658

Contractor must verify all dimensions on the job and report any discrepancy to the Designer before proceeding with the work. All drawings and specifications are instruments of service and the property of the Designer which must be returned at the completion of the work. Drawings are not to be scaled.

VA3 DESIGN
255 Consumers Rd Suite 120
Toronto ON M2J 1R4
t 416.630.2255 f 416.630.4782
va3design.com

Greenpark.

project name: MINNISALE HOMES CORP.	municipality: BRAMPTON
project no.	18012
date: JULY 2018	WOOD DECK DETAILS
drawn by: CW	checked by: -
scale: As Shown	file name: 18012-GP-STD_DETAILS_A1
drawing no.	5-2

All drawings specifications, related documents and design are the copyright property of VA3 DESIGN. Reproduction of this property in whole or in part is strictly prohibited without VA3 DESIGN's written permission.

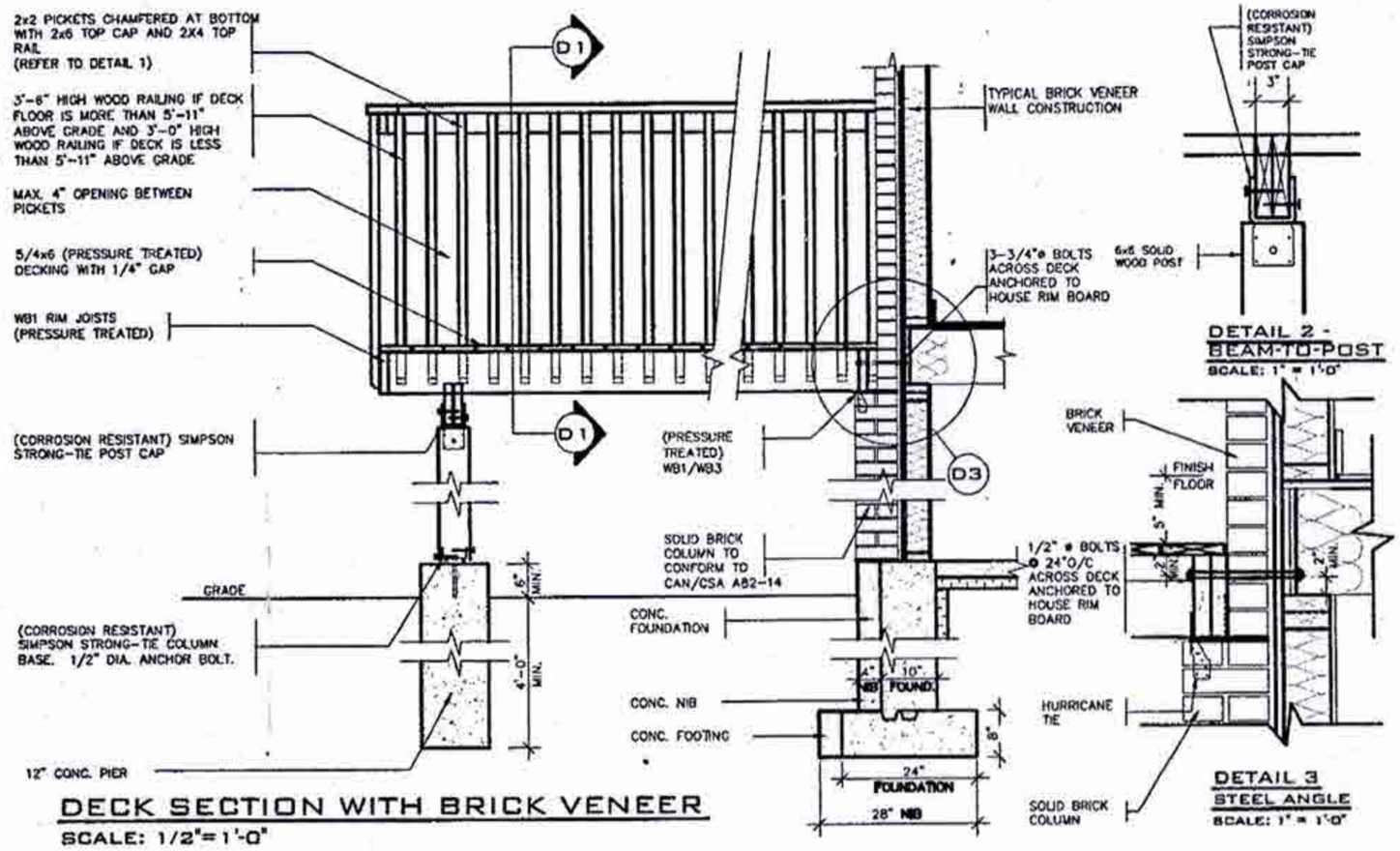

DECK SECTION WITH BRICK VENEER

SCALE: 1/2"=1'-0"

DETAIL 1
CANTILEVERED PICKET SCREWED TO RIM JOIST AND DECK

GUARD PARALLEL TO FLOOR JOISTS

SCALE: 1" = 1'-0"

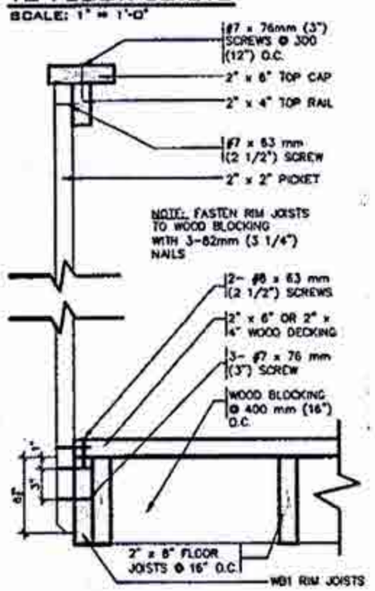

GUARD PERPENDICULAR TO FLOOR JOISTS

SCALE: 1" = 1'-0"

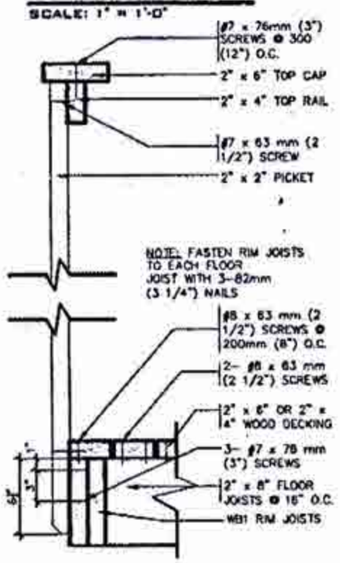

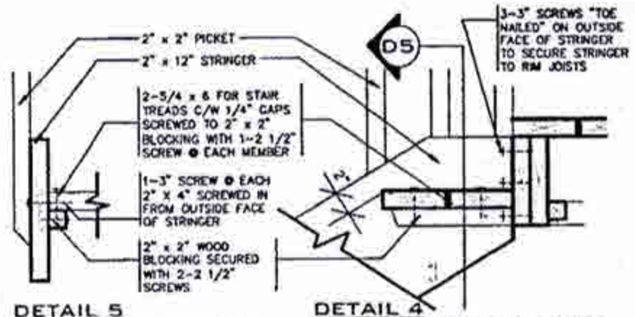

DETAIL 5
SECTION THROUGH STAIR STRINGER

SCALE: 1" = 1'-0"

DETAIL 4
SECTION @ TREAD AND STRINGER SECUREMENT

SCALE: 1" = 1'-0"

GENERAL NOTES

1. BRICK TO BE COMPRESSIVE STRENGTH OF 15 mPA (2200 p.s.i.) MIN. UNITS TO BE LAID WITH FULL HEAD AND BED JOINTS.
2. MORTAR TO BE TYPE S WITH JOINT THICKNESS OF 10mm (3/8")MIN. AND 20mm (3/4") MAX.
3. ALL NAILS AND SCREWS TO BE GALVANIZED.
4. WB1 = 2- 2 x 8 (PRESSURE TREATED)
   WB3 = 2- 2 x 10 (PRESSURE TREATED)
5. WOOD FOR CANTILEVERED PICKETS SHALL BE DOUGLAS FIR-LARCH, SPRUCE-PINE-FIR, OR HEM-FIR SPECIES.

REGISTERED PROFESSIONAL ENGINEER
R. MARINKOVIC
PROVINCE OF ONTARIO

STRUDET INC.
FOR STRUCTURE ONLY

CITY OF BRAMPTON
BUILDING DIVISION
REVIEWED
JAN 04 2019
BY
MARK DERKSEN

2012 CODE COMPLIANCE PACKAGE A1

no.	description	date	by
9			
8			
7			
6			
5			
4			
3			
2			
1	ISSUED FOR PERMIT.	JULY 23/18	CW

The undersigned has reviewed and takes responsibility for this design and has the qualifications and meets the requirements set out in the Ontario Building Code to be a Designer.
qualification information: Richard Vink — 24488
name / signature — BCIN
registration information: VA3 Design Inc. — 42658

Contractor must verify all dimensions on the job and report any discrepancy to the Designer before proceeding with the work. All drawings and specifications are instruments of service and the property of the Designer which must be returned at the completion of the work. Drawings are not to be scaled.

VA3 DESIGN
255 Consumers Rd Suite 120
Toronto ON M2J 1R4
t 416.630.2255 f 416.630.4782
va3design.com

Greenpark.

project name: MINNISALE HOMES CORP. — municipality: BRAMPTON — project no. 18012
date: JULY 2018 — WOOD DECK -WALK-OUT CONDITION — drawing no. 5-3
drawn by: CW — checked by: - — scale: As Shown — file name: 18012-GP-STD_DETAILS_A1

All drawings specifications, related documents and design are the copyright property of VA3 DESIGN. Reproduction of this property in whole or in part is strictly prohibited without VA3 DESIGN's written permission.

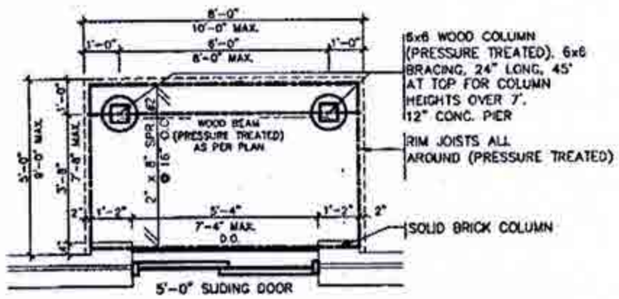

TYPICAL DECK LAYOUT

SCALE: 1/4"=1'-0"

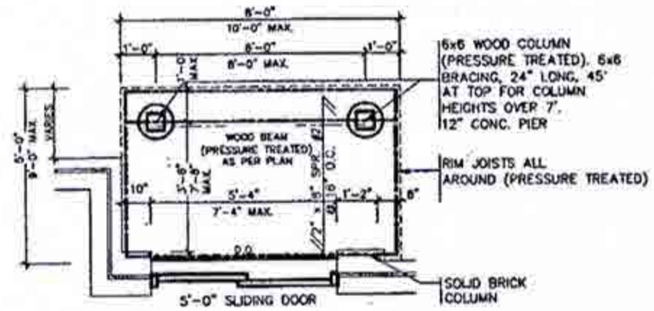

TYPICAL DECK LAYOUT

SCALE: 1/4"=1'-0"

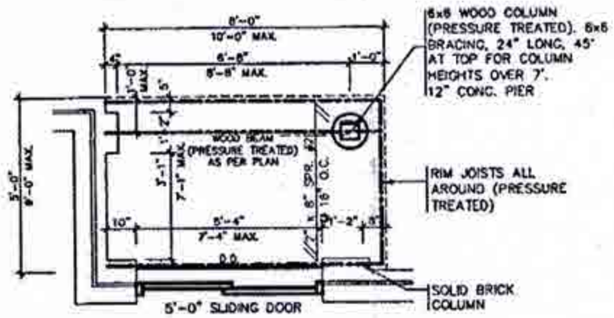

TYPICAL DECK LAYOUT

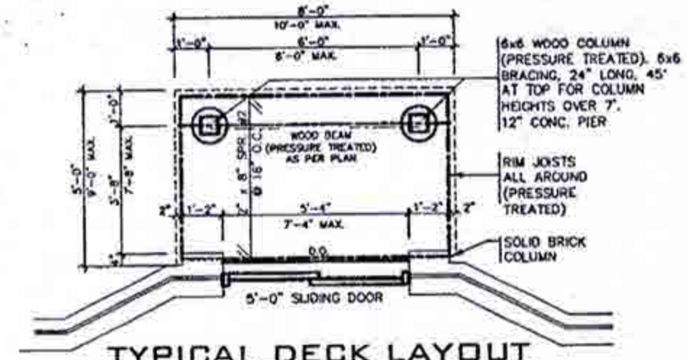

TYPICAL DECK LAYOUT

SCALE: 1/4"=1'-0"

REGISTERED PROFESSIONAL ENGINEER
B. MARINKOVIC
PROVINCE OF ONTARIO

STRUDET INC.
FOR STRUCTURE ONLY

CITY OF BRAMPTON
BUILDING DIVISION
REVIEWED
JAN 04 2019
BY
MARK DERKSEN

2012 CODE COMPLIANCE PACKAGE A1

no.	description	date	by
9			
8			
7			
6			
5			
4			
3			
2			
1	ISSUED FOR PERMIT	JULY 23/18	GW

The undersigned has reviewed and takes responsibility for this design, and has the qualifications and meets the requirements set out in the Ontario Building Code to be a Designer.
qualification information
Richard Vink — signature — 24488
name — signature — BCIN
registration information
VA3 Design Inc. — 42658

Contractor must verify all dimensions on the job and report any discrepancy to the Designer before proceeding with the work. All drawings and specifications are instruments of service and the property of the Designer which must be returned at the completion of the work. Drawings are not to be scaled.

VA3 DESIGN
255 Consumers Rd Suite 120
Toronto ON M2J 1R4
t 416.630.2255 f 416.630.4782
va3design.com

Greenpark.

project name: MINNISALE HOMES CORP.	municipality: BRAMPTON
project no.	18012
date: JULY 2018	WOOD DECK DETAILS-WALK-OUT CONDITION
drawn by: GW	checked by: –
scale: As Shown	drawing no. 5-4
file name: 18012-GP-STD_DETAILS_A1	

All drawings, specifications, related documents and designs are the copyright property of VA3 DESIGN. Reproduction of this property in whole or in part is strictly prohibited without VA3 DESIGN's written permission.

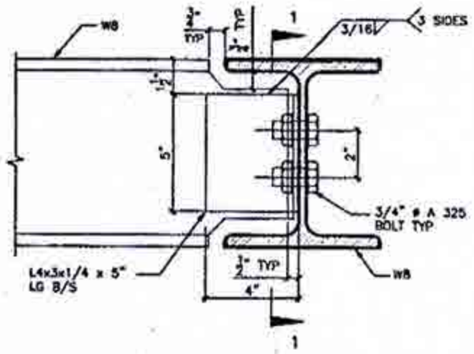

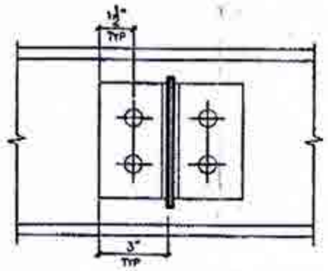

DETAIL 1.

W8
TO
W8
CONNECTION

SECTION 1–1

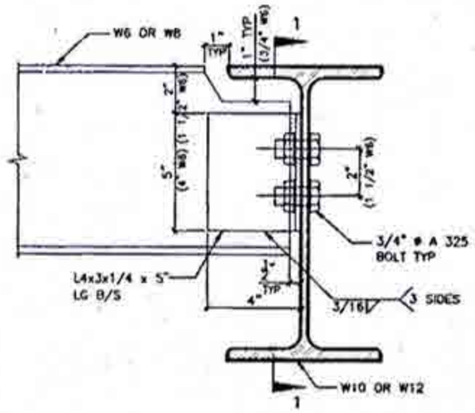

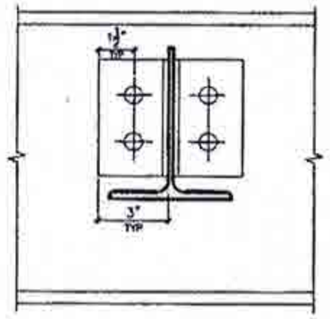

DETAIL 2.

W6(W8)
TO
W10(W12)
CONNECTION

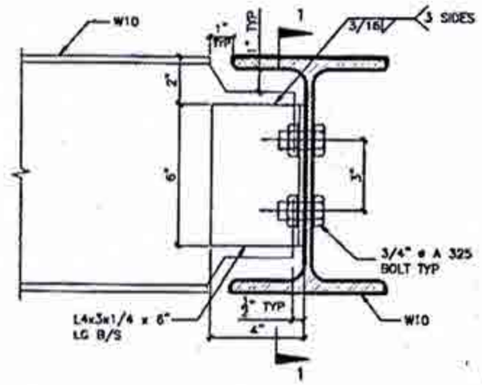

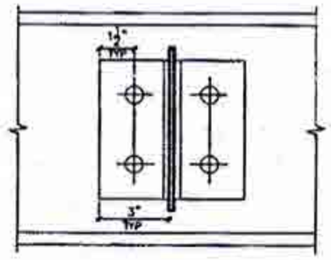

DETAIL 3.

W10
TO
W10
CONNECTION

SECTION 1–1

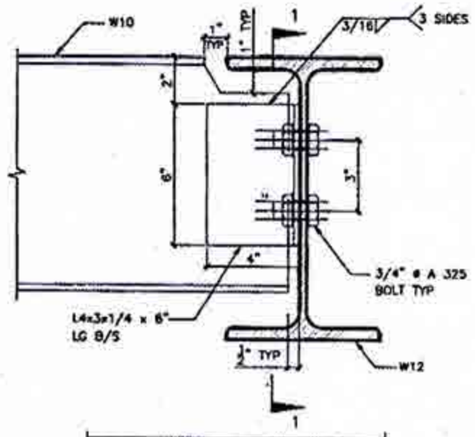

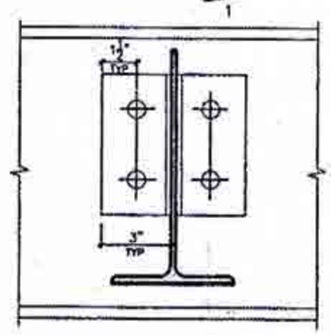

DETAIL 4.

W10
TO
W12
CONNECTION

SECTION 1–1

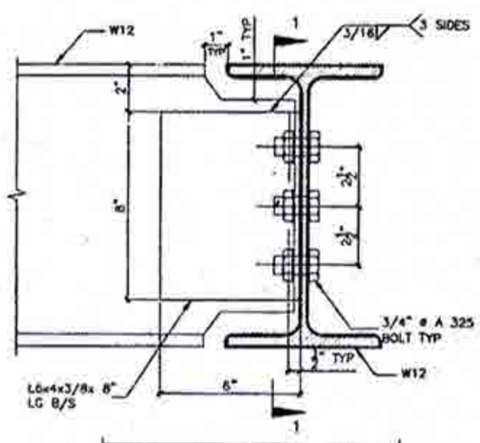

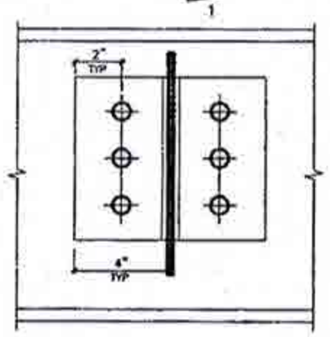

DETAIL 5.

W12
TO
W12
CONNECTION

SECTION 1–1

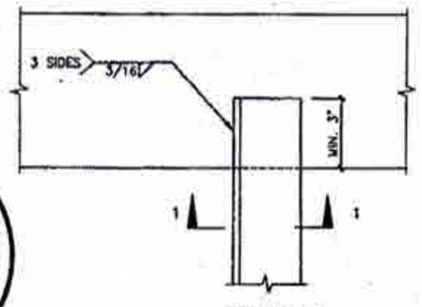

PLAN VIEW

REGISTERED PROFESSIONAL ENGINEER
R. B. MARINKOVIC
PROVINCE OF ONTARIO

STRUDET INC.
FOR STRUCTURE ONLY

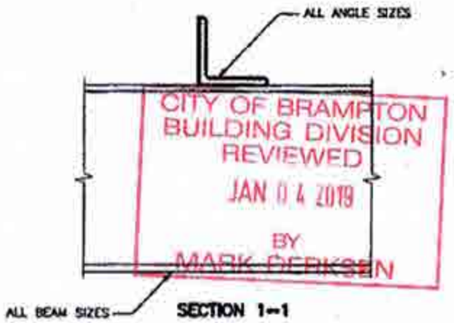

SECTION 1–1

CITY OF BRAMPTON
BUILDING DIVISION
REVIEWED
JAN 04 2019
BY
MARK PERKSEIN

DETAIL 6.

ANGLE
TO
BEAM
CONNECTION

2012 CODE COMPLIANCE PACKAGE A1

no	description	date	by
9			
8			
7			
6			
5			
4			
3			
2			
1	ISSUED FOR PERMIT	JULY 23/18	GW

This undersigned has reviewed and takes responsibility for this design and has the qualifications and meets the requirements set out in the Ontario Building Code to be a Designer.
qualification information
Richard Vink — signature — 24488
name — registration information — BCIN
VA3 Design Inc. — 42658

Contractor must verify all dimensions on the job and report any discrepancy to the Designer before proceeding with the work. All drawings and specifications are instruments of service and the property of the Designer which must be returned at the completion of the work. Drawings are not to be scaled.

VA3 DESIGN
255 Consumers Rd Suite 120
Toronto ON M2J 1R4
t 416.630.2255 f 416.630.4782
va3design.com

Greenpark.

project name	municipality	project no
MINNISALE HOMES CORP.	BRAMPTON	18012

date			drawing title	drawing no.
JULY 2018			STEEL BEAM CONNECTIONS	6
drawn by	checked by	scale	file name	
GW	–	Not to Scale	18012-GP-STD_DETAILS_A1	

All drawings specifications, related documents and design are the copyright property of VA3 DESIGN. Reproduction of this property in whole or in part is strictly prohibited without VA3 DESIGN's written permission.

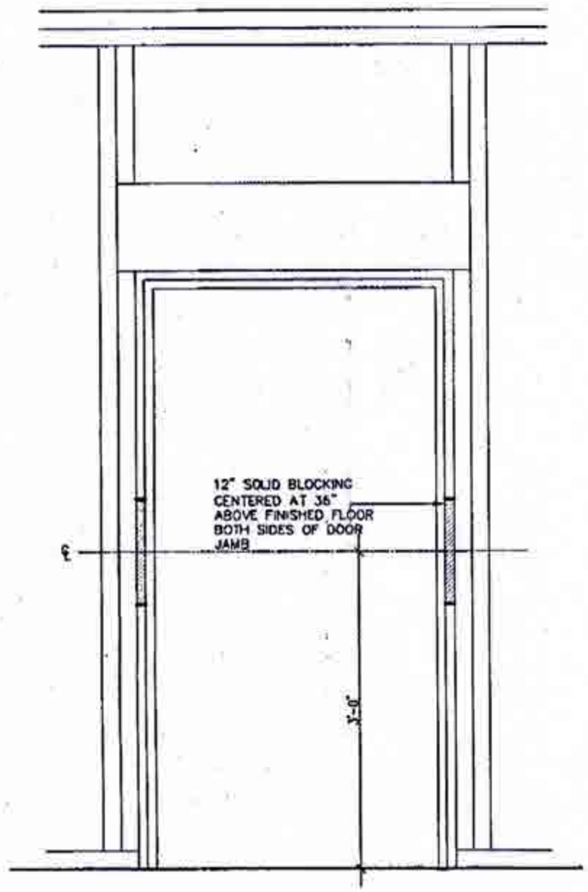

RESISTANCE TO FORCED ENTRY (OBC 9.6.8.)

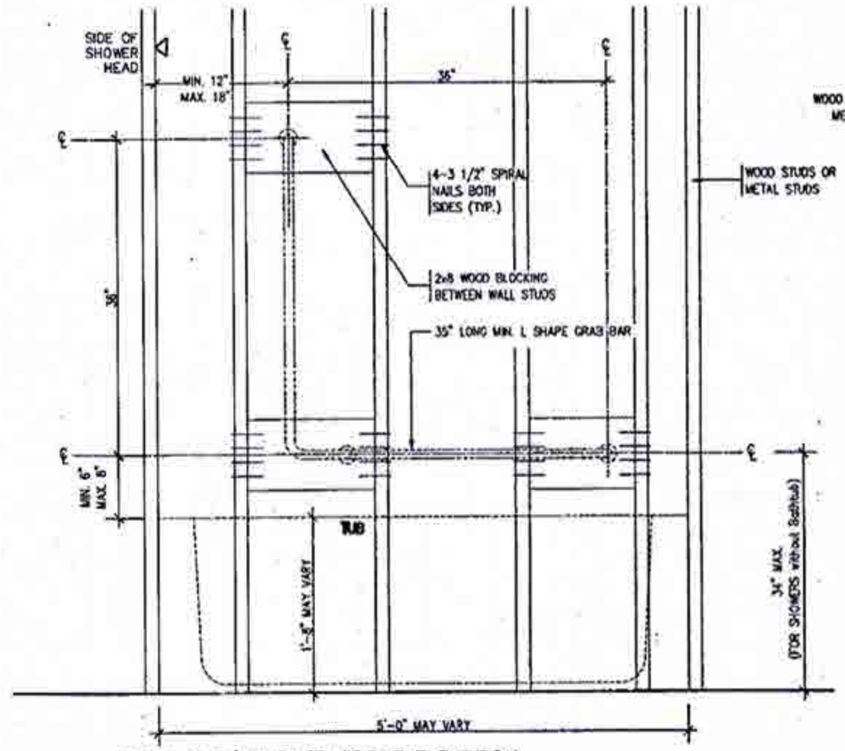

BATH TUB/ SHOWER FRONT ELEVATION

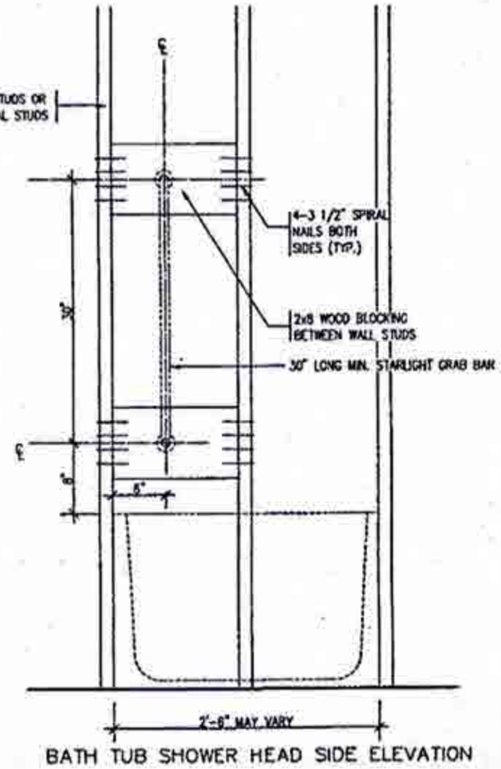

BATH TUB SHOWER HEAD SIDE ELEVATION

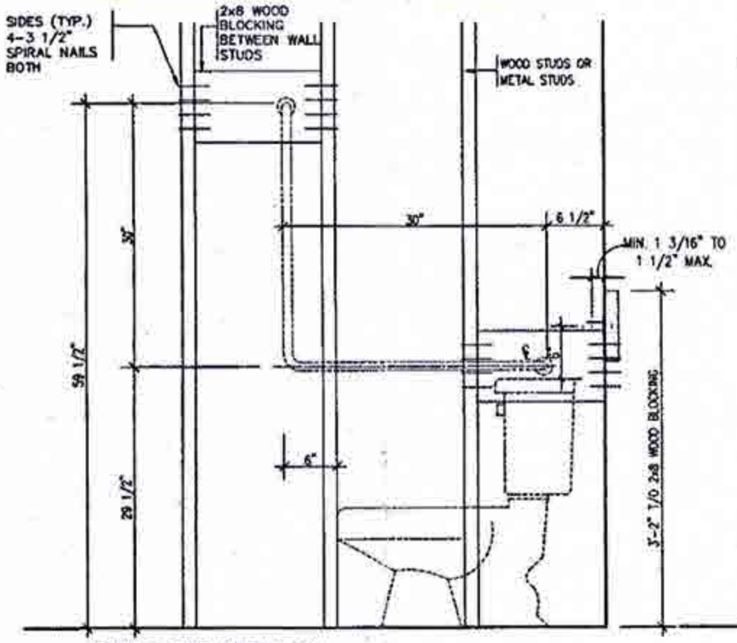

TOILET SIDE ELEVATION

STRUCTURAL REINFORCEMENT FOR GRAB BAR (OBC 9.5.2.3.)
FOR MAIN BATH ONLY

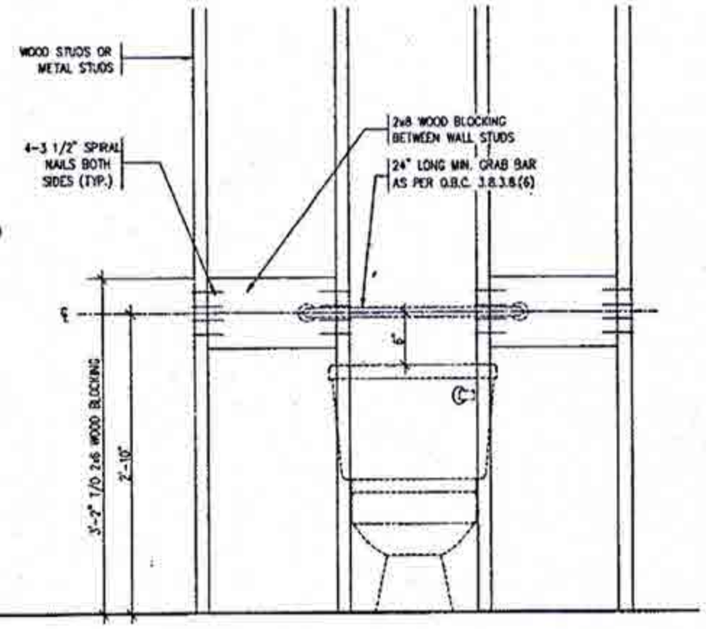

REGISTERED PROFESSIONAL ENGINEER
B. MARINKOVIC
PROVINCE OF ONTARIO

STRUDET INC.
FOR STRUCTURE ONLY

CITY OF BRAMPTON
BUILDING DIVISION
REVIEWED
JAN 04 2019
BY
MARK DERKSEN

2012 CODE COMPLIANCE PACKAGE A1

no	description	date	by
9			
8			
7			
6			
5			
4			
3			
2			
1	ISSUED FOR PERMIT	JULY 23/18	DW

The undersigned has reviewed and takes responsibility for this design, and has the qualifications and meets the requirements set out in the Ontario Building Code to be a Designer.
qualification information: Richard Vink, 24488
name / signature: RCV
registration information: VA3 Design Inc., 42658

Contractor must verify all dimensions on the job and report any discrepancy to the Designer before proceeding with the work. All drawings and specifications are instruments of service and the property of the Designer which must be returned at the completion of the work. Drawings are not to be scaled.

VA3 DESIGN
255 Consumers Rd Suite 120
Toronto ON M2J 1R4
t 416.630.2255 f 416.630.4782
va3design.com

Greenpark.

project name: MINNISALE HOMES CORP.
municipality: BRAMPTON
project no: 18012
date: JULY 2018
drawn by: DW
checked by: -
scale: Not to Scale
STUD WALL REINFORCEMENT
file name: 18012-GP-STD_DETAILS_A1
drawing no: 7

All drawings specifications, related documents and design are the copyright property of VA3 DESIGN. Reproduction of this property in whole or in part is strictly prohibited without VA3 DESIGN's written permission.

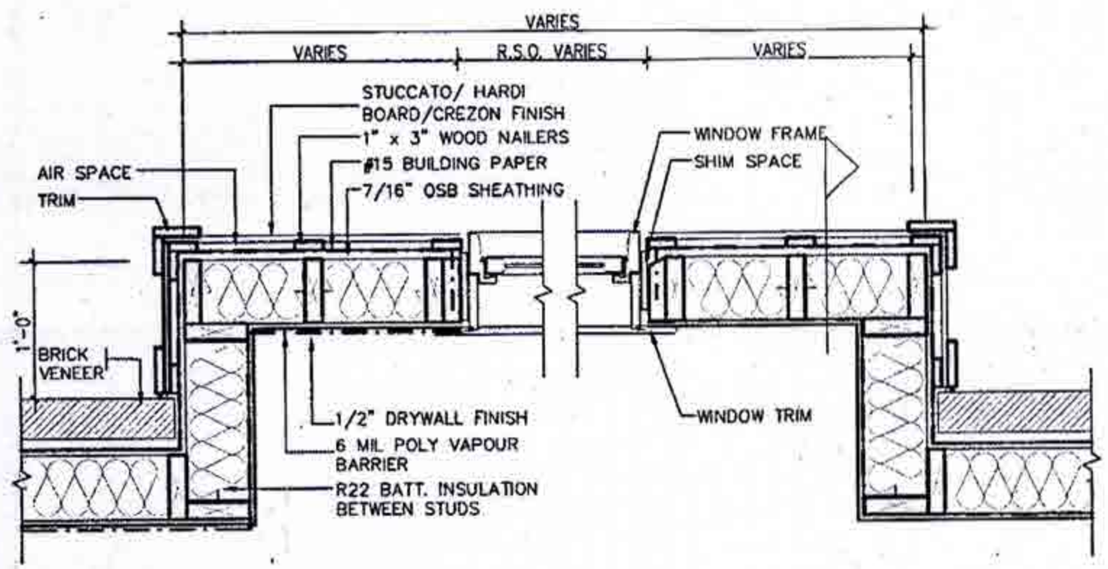

PLAN VIEW

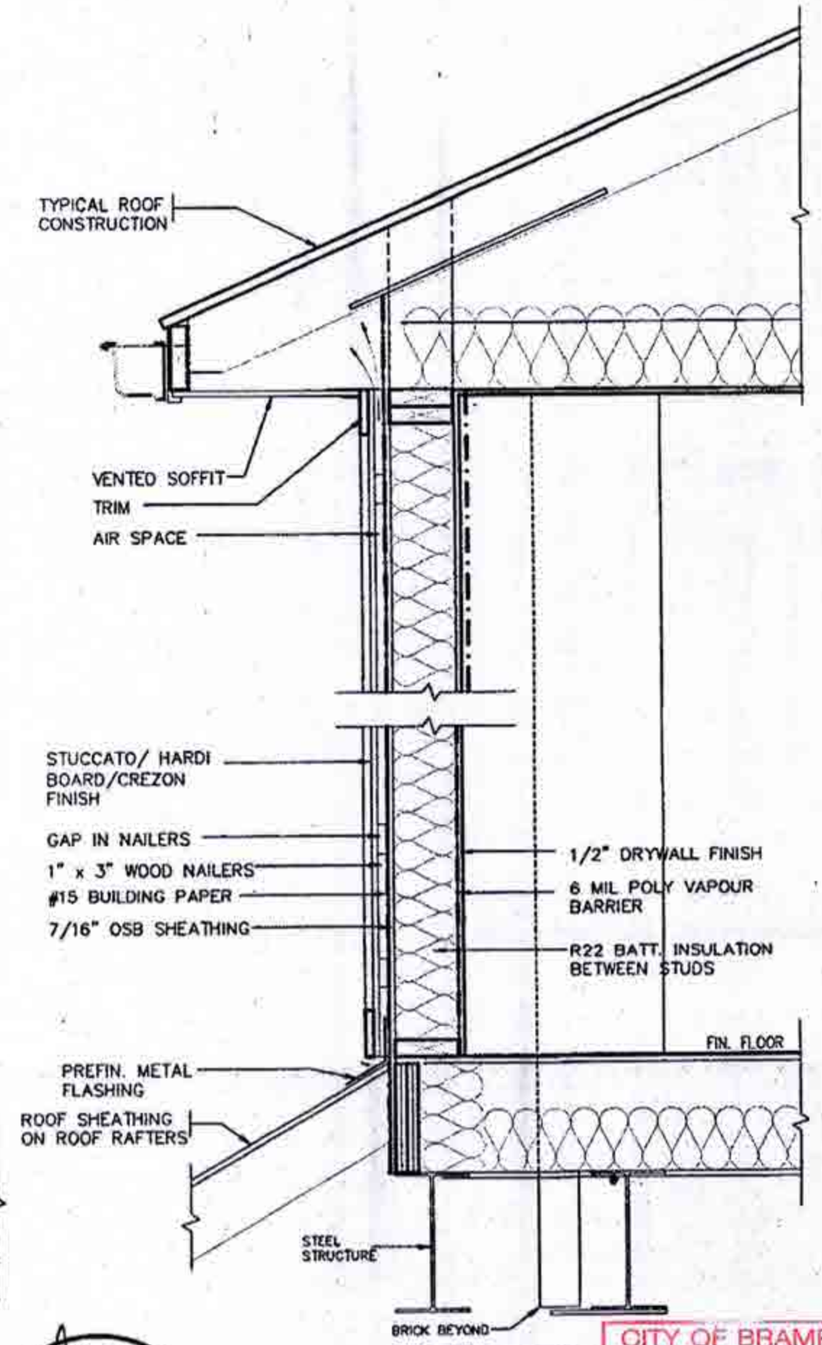

CROSS SECTION

STUCCATO BOARD FINISH CLADDING OR EQUAL (OBC 9.27.)

REGISTERED PROFESSIONAL ENGINEER
B. MARINKOVIC
PROVINCE OF ONTARIO

STRUDET INC.
FOR STRUCTURE ONLY

CITY OF BRAMPTON
BUILDING DIVISION
REVIEWED
JAN 04 2019
BY
MARK DERKSEN

2012 CODE COMPLIANCE PACKAGE A1

no	description	date	by
9			
8			
7			
6			
5			
4			
3			
2			
1	ISSUED FOR PERMIT	JULY 23/18	GW

The undersigned has reviewed and takes responsibility for this design, and has the qualifications and meets the requirements set out in the Ontario Building Code to be a Designer.
qualification information
Richard Vink — signature — 24488
name — registration information
VA3 Design Inc. — 42658

Contractor must verify all dimensions on the job and report any discrepancy to the Designer before proceeding with the work. All drawings and specifications are instruments of service and the property of the Designer which must be returned at the completion of the work. Drawings are not to be scaled.

VA3 DESIGN
255 Consumers Rd Suite 120
Toronto ON M2J 1R4
t 416.630.2255 f 416.630.4782
va3design.com

Greenpark

project name: MINNISALE HOMES CORP.
municipality: BRAMPTON
project no. 18012
date: JULY 2018
STUCCATO/ HARDI BOARD FINISH
drawn by: GW
checked by: -
scale: Not to Scale
file name: 18012-GP-STD_DETAILS_A1
drawing no. 8

All drawings, specifications, related documents and design are the copyright property of VA3 DESIGN. Reproduction of this property in whole or in part is strictly prohibited without VA3 DESIGN's written permission.