For conventional framing roof/ceilings framing shall conform to OBC.9.23
All work shall conform to the Ontario Building Code O. Reg. 332/12 as amended

CITY OF BRAMPTON
BUILDING DIVISION
REVIEWED
DEC 19 2018
BY
MARK DERKSEN

KOTT

Layout based on plans provided by
JARDIN DESIGN GROUP INC
Dated April 26/18

This certification is for the engineering review of structural components shown on this drawing and is limited to the components supplied by KOTT for the loads and conditions shown on the calculation page of each component. The placement of these components on this layout is shown for reference only. Roof trusses must be installed according to manufacturer's guidelines at 24" C/C unless noted otherwise. Conventional framing shown on the layout must be designed and approved by the project engineer. Temporary and permanent bracing is to conform to BCSI guidelines.

LICENSED PROFESSIONAL ENGINEER
T.L. WISE
100083566
PROVINCE OF ONTARIO

September 14, 2018

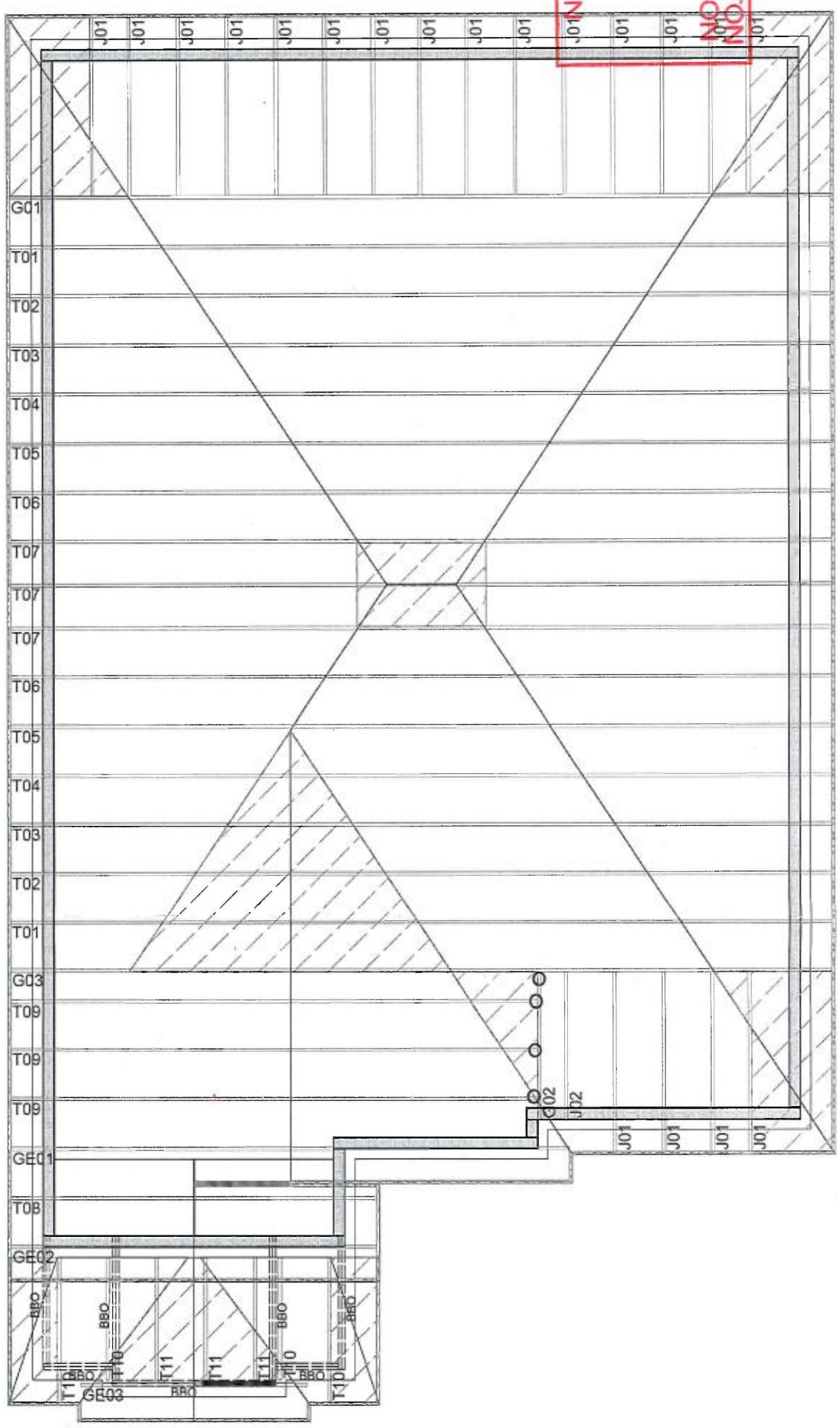

UNDERSIDE OF DROPPED PORCH BEAMS TO BE 7' 6" ABOVE FINISHED 1ST FLOOR

ROOF TRUSS LAYOUT

LOT 16

CONVENTIONAL FRAMING BY OTHERS

HANGER LEGEND

X - LUS24	O - LJS26DS
# - HGUS26	% - HGUS26-2

SIZE AND LOCATION OF CONVENTIONAL FRAMING IS APPROXIMATE. ALL AREAS MAY NOT BE SHOWN. REFER TO ARCHITECTURAL PLANS FOR DETAILS.

ALL CONVENTIONAL FRAMING TO CONFORM WITH PART 9 OF THE O.B.C RAFTER THAT CROSS MEET OVER TRUSSES TO BE 2X4 SPF @ 24" O/C WITH 2X4 VERT POST TO THE TRUSS BELOW EA CROSS PT. VERT POS . THAN 6' TO HAVE A LATERAL BRACING SO THAT THE DISTANCE BETEN PT & VERT ROWS OF BRACING DOES NOT EXCEED 6'

DESIGN CRITERIA
SPECIFIED LOADS:
TOP CH. LL = 31.3 psf
DL = 3.0 psf
BOT CH. LL = 0.0 psf
DL = 7.0 psf
TOTAL LOAD = 41.3 psf

SPACING @ 24" CENTERS,
THIS TRUSS SYSTEM IS DESIGN FOR RESIDENTIAL OR SMALL BUILDING REQUIREMENTS OF PART 9, NBCC 2010

THIS DESIGN COMPLIES WITH PART 9 OF OBC 2012, BCBC 2012, ABC 2012; CSA 086-09; TPIC 2011

ALLOWABLE DEFLECTION OF EACH COMPONENT = L/360

Model:	**MILLWOOD 2 EL 2**
Customer:	**GREENPARK**
Project:	**MINNISALE HOMES**
Location:	**BRAMPTON**
Drawn By:	**DM**
Date:	**6/22/2018**

Lot 16

ENGINEERING NOTE PAGE (ENP-1)

PLEASE READ PRIOR TO INSTALLATION

RESPONSIBILITIES

THIS DESIGN IS FOR AN INDIVIDUAL BUILDING COMPONENT AND HAS BEEN BASED ON INFORMATION PROVIDED BY THE DESIGN OFFICE OF KOTT LUMBER. THE UNDERSIGNED ENGINEER DISCLAIMS ANY RESPONSIBILITY FOR DAMAGES AS A RESULT OF FAULTY OR INCORRECT INFORMATION, SPECIFICATION AND/OR DESIGNS FURNISHED TO THE ENGINEER. THE UNDERSIGNED ENGINEER IS ONLY RESPONSIBLE FOR THE STRUCTURAL INTEGRITY OF THIS BUILDING COMPONENT FOR THE CONDITIONS AND LOADS SHOWN ON THIS DRAWING. THE STRUCTURAL INTEGRITY OF THE BUILDING AND THE VERIFICATION OF THE DIMENSIONS AND THE DESIGN LOADS USED ARE THE RESPONSIBILITY OF THE BUILDING DESIGNER.

TRUSSES ARE DESIGNED IN CONFORMANCE WITH THE RELEVANT SECTIONS OF THE NATIONAL BUILDING CODE OF CANADA OR THE CANADIAN CODE FOR FARM BUILDINGS, WHICHEVER APPLIES TO THE BUILDING TYPE INDICATED ON THE DRAWING

IT IS THE RESPONSIBILITY OF KOTT LUMBER TO ENSURE THAT TRUSSES ARE MANUFACTURED IN CONFORMANCE WITH THESE DESIGNS AND WITH THE SPECIFICATIONS OUTLINED BELOW. THE UNDERSIGNED ENGINEER IS NOT RESPONSIBLE FOR QUALITY CONTROL IN THE TRUSS MANUFACTURING PLANT.

USE AND OCCUPANCY

- The building is of the type indicated on the drawing

LOADING

- The truss loading intensity and distribution as well as load transfer mechanism is that indicated on the drawing
- No buildings, trees, parapets or other projections higher than the roof for which the trusses are used are located within a distance less than ten (10) times the difference in height, or five metres (16 ft) whichever is greater, unless the drawing indicates that the snow drifting has been taken into account

HANDLING, INSTALLATION AND BRACING

- The trusses must be handled and installed by a qualified professional as per the supplied document titled *Information for Truss Installers* and the BCSI-B1 and BCSI-B3 Summary Sheets
- The compression chords are laterally braced by continuous rigid diaphragm sheathing or as specified on the drawing
- Temporary and permanent bracing must be installed as indicated on the truss drawing and according to the BCSI-B1 and BCSI-B3 Summary Sheets. Bracing for the lateral stability of the truss is to be provided by the building designer
- **It is recommended that a Professional Engineer's advice be obtained for the bracing of trusses spanning more than 12.37m (40'-7")**

SUPPORTS

- The trusses are to be supported at the bearing points indicated and anchored to the supports where considered necessary by the designer of the overall structure
- Bearing sizes shown are the minimum required to prevent crushing of the truss members and do not necessarily take into account stability of the overall building structure
- Elevation of bearings must be carefully checked and shimmed to alignment for solid bearings
- Adequate wood truss bearing is the responsibility of the building designer.

DIMENSIONS

- Geometry of the truss and dimensions indicated on the drawing are identical to those of the installed truss.

KOTT

Layout based on plans provided by
JARDIN DESIGN GROUP INC
Dated April 26/18

This certification is for the engineering review of structural components shown on this drawing and is limited to the components supplied by KOTT for the loads and conditions shown on the calculation page of each component. The placement of these components on this layout is shown for reference only. Roof trusses must be installed according to manufacturer's guidelines at 24" C/C unless noted otherwise. Conventional framing shown on the layout must be designed and approved by the project engineer. Temporary and permanent bracing is to conform to BCSI guidelines.

LICENSED PROFESSIONAL ENGINEER
T.L. WISE
100083566
PROVINCE OF ONTARIO
September 14, 2018

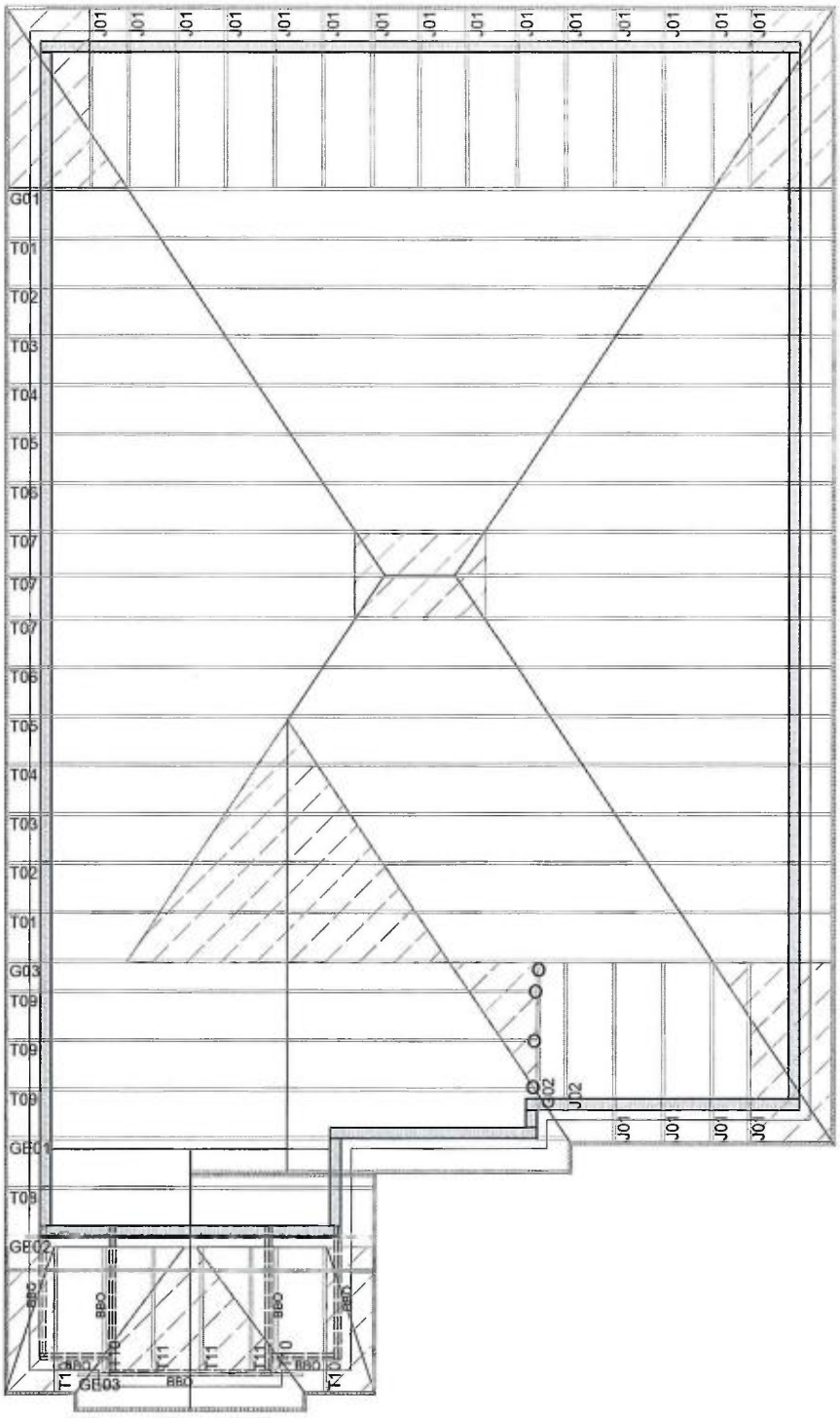

ROOF TRUSS LAYOUT

CONVENTIONAL FRAMING BY OTHERS

HANGER LEGEND

X - LUS24	O - LJS26DS
# - HGUS26	% - HGUS26-2

SIZE AND LOCATION OF CONVENTIONAL FRAMING IS APPROXIMATE. ALL AREAS MAY NOT BE SHOWN. REFER TO ARCHITECTURAL PLANS FOR DETAILS.

ALL CONVENTIONAL FRAMING TO CONFORM WITH PART 9 OF THE O.B.C RAFTER THAT CROSS MEET OVER TRUSSES TO BE 2X4 SPF @ 24" O/C WITH 2X4 VERT POST TO THE TRUSS BELOW EA CROSS PT. VERT POS . THAN 6' TO HAVE A LATERAL BRACING SO THAT THE DISTANCE BETEN PT & VERT ROWS OF BRACING DOES NOT EXCEED 6'

DESIGN CRITERIA
SPECIFIED LOADS:
TOP CH. LL = 31.3 psf
DL = 3.0 psf
BOT CH. LL = 0.0 psf
DL = 7.0 psf
TOTAL LOAD = 41.3 psf

SPACING @ 24" CENTERS,
THIS TRUSS SYSTEM IS DESIGN FOR RESIDENTIAL OR SMALL BUILDING REQUIREMENTS OF PART 9, NBCC 2010

THIS DESIGN COMPLIES WITH PART 9 OF OBC 2012, BCBC 2012, ABC 2012, CSA 086-09; TPIC 2011

ALLOWABLE DEFLECTION OF EACH COMPONENT = L/360

Model:	MILLWOOD 2 EL 2
Customer:	GREENPARK
Project:	MINNISALE HOMES
Location:	BRAMPTON
Drawn By:	DM
Date:	6/22/2018

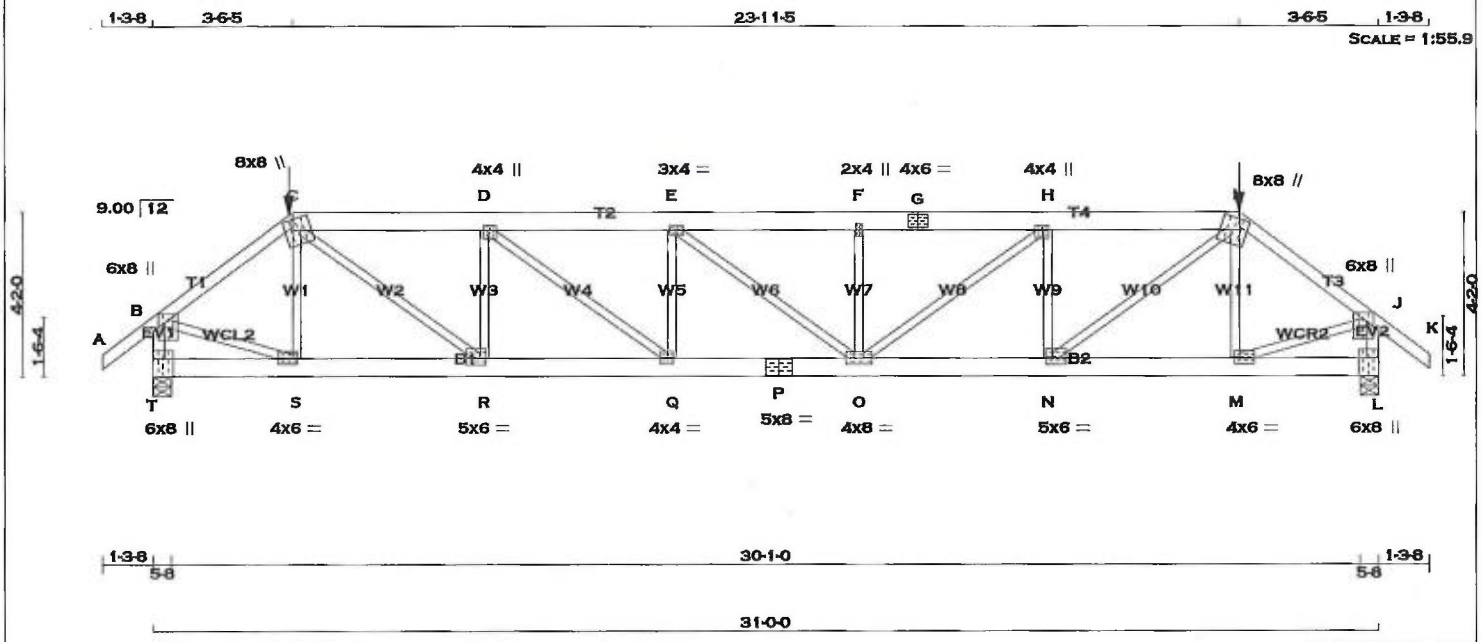

TOTAL WEIGHT = 159 lb

LUMBER
N. L. G. A. RULES

CHORDS	SIZE		LUMBER	DESCR.
A - C	2x4	DRY	No.2	SPF
C - G	2x6	DRY	No.2	SPF
G - I	2x6	DRY	No.2	SPF
I - K	2x4	DRY	No.2	SPF
T - B	2x4	DRY	No.2	SPF
L - J	2x4	DRY	No.2	SPF
T - P	2x6	DRY	No.2	SPF
P - L	2x6	DRY	No.2	SPF
ALL WEBS EXCEPT	2x3	DRY	No.2	SPF

DRY: SEASONED LUMBER.

PLATES (table is in inches)

JT	TYPE	PLATES	W	LEN	Y	X
B	TMVW+p	MT20	6.0	8.0	2.75	2.00
C	TTWW+m	MT20	8.0	8.0	4.00	3.25
D	TMWW+t	MT20	4.0	4.0	1.50	1.50
E	TMWW-t	MT20	3.0	4.0		
F	TMW+w	MT20	2.0	4.0		
G	TS-t	MT20	4.0	6.0		
H	TMWW+t	MT20	4.0	4.0	1.50	1.50
I	TTWW+m	MT20	8.0	8.0	4.00	3.25
J	TMW+p	MT20	6.0	8.0	2.75	2.00
L	BMV1+t	MT20	6.0	8.0	Edge	2.50
M	BMWW-t	MT20	4.0	6.0	1.75	1.50
N	BMWW-t	MT20	5.0	6.0	2.00	1.75
O	BMWWW-t	MT20	4.0	8.0		
P	BS-t	MT20	5.0	8.0		
Q	BMWW-t	MT20	4.0	4.0	1.75	1.50
R	BMWW-t	MT20	5.0	6.0	2.00	1.75
S	BMWW-t	MT20	4.0	6.0	1.75	1.50
T	BMV1+t	MT20	6.0	8.0	5.50	

Edge - INDICATES REFERENCE CORNER OF PLATE TOUCHES EDGE OF CHORD.

A SIZE FOR SIZE SUBSTITUTION OF MITEK MII20 WITH TEE-LOK TL20 PLATES IS ALLOWED.

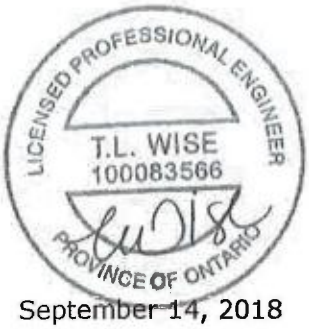

September 14, 2018

DIMENSIONS, SUPPORTS AND LOADINGS SPECIFIED BY FABRICATOR TO BE VERIFIED BY BUILDING DESIGNER

BEARINGS

JT	FACTORED GROSS REACTION VERT	HORZ	MAXIMUM FACTORED GROSS REACTION DOWN	HORZ	UPLIFT	INPUT BRG IN-SX	REQRD BRG IN-SX
T	2842	0	2842	0	0	5-8	5-8
L	2842	0	2842	0	0	5-8	5-8

UNFACTORED REACTIONS

JT	1ST LCASE COMBINED	MAX./MIN. COMPONENT REACTIONS SNOW	LIVE	PERM.LIVE	WIND	DEAD	SOIL
T	1993	1403 / 0	0 / 0	0 / 0	0 / 0	590 / 0	0 / 0
L	1993	1403 / 0	0 / 0	0 / 0	0 / 0	590 / 0	0 / 0

BEARING MATERIAL TO BE SPF NO.2 OR BETTER AT JOINT(S) T, L

BRACING
TOP CHORD TO BE SHEATHED OR MAX. PURLIN SPACING = 3.31 FT.
MAX. UNBRACED BOTTOM CHORD LENGTH = 10.00 FT OR RIGID CEILING DIRECTLY APPLIED.

ALL PITCH BREAKS AND PERIMETER CORNER JOINTS MUST BE LATERALLY RESTRAINED.

LOADING
TOTAL LOAD CASES: (4)

CHORDS

MEMB. FR-TO	MAX. FACTORED FORCE (LBS)	FACTORED VERT. LOAD (PLF) FROM	TO	LC1 CSI (LC)	MAX UNBRAC LENGTH
A- B	0 / 32	-77.4	-77.4	0.12 (1)	10.00
B- C	-3039 / 0	-77.4	-77.4	0.34 (1)	3.69
C- D	-4716 / 0	-145.9	-145.9	0.39 (1)	3.67
D- E	-5783 / 0	-145.9	-145.9	0.43 (1)	3.31
E- F	-5774 / 0	-145.9	-145.9	0.41 (1)	3.34
F- G	-5774 / 0	-145.9	-145.9	0.43 (1)	3.31
G- H	-5774 / 0	-145.9	-145.9	0.43 (1)	3.31
H- I	-4718 / 0	-145.9	-145.9	0.39 (1)	3.67
I- J	-3039 / 0	-77.4	-77.4	0.34 (1)	3.69
J- K	0 / 32	-77.4	-77.4	0.12 (1)	10.00
T- B	-2801 / 0	0.0	0.0	0.32 (1)	5.08
L- J	-2801 / 0	0.0	0.0	0.32 (1)	5.08
T- S	0 / 0	-33.0	-33.0	0.07 (4)	10.00
S- R	0 / 2423	-33.0	-33.0	0.37 (1)	10.00
R- Q	0 / 4716	-33.0	-33.0	0.69 (1)	10.00
Q- P	0 / 5783	-33.0	-33.0	0.84 (1)	10.00
P- O	0 / 5783	-33.0	-33.0	0.84 (1)	10.00
O- N	0 / 4718	-33.0	-33.0	0.70 (1)	10.00
N- M	0 / 2423	-33.0	-33.0	0.37 (1)	10.00
M- L	0 / 0	-33.0	-33.0	0.07 (4)	10.00

WEBS

MEMB. FR-TO	MAX. FACTORED FORCE (LBS)	MAX CSI (LC)
S- C	-569 / 0	0.14 (1)
C- R	0 / 2892	0.72 (1)
R- D	-1625 / 0	0.40 (1)
D- Q	0 / 1354	0.34 (1)
Q- E	-674 / 0	0.16 (1)
E- O	-12 / 0	0.01 (1)
O- F	-669 / 0	0.16 (1)
O- H	0 / 1340	0.33 (1)
N- H	-1621 / 0	0.40 (1)
N- I	0 / 2895	0.72 (1)
M- I	-571 / 0	0.14 (1)
B- S	0 / 2550	0.63 (1)
M- J	0 / 2550	0.63 (1)

FACTORED CONCENTRATED LOADS (LBS)

JT	LOC.	LC1	MAX-	MAX+	FACE	DIR.	TYPE
C	3-6-5	-205	-205	---	FRONT	VERT	TOTAL
I	27-5-11	-205	-205	---	FRONT	VERT	TOTAL

[M]

DESIGN CRITERIA

SPECIFIED LOADS:

TOP CH.	LL	=	23.3	PSF
	DL	=	3.0	PSF
BOT CH.	LL	=	0.0	PSF
	DL	=	7.0	PSF
TOTAL LOAD		=	33.3	PSF

SPACING = 24.0 IN. C/C

LOADING IN FLAT SECTION BASED ON A SLOPE OF 2.00/12 MINIMUM

GIRDER TYPE: CPrimeHip
SIDE SETBACK = 3-6-5
END SETBACK = 6-0-0
END WALL WIDTH = 5-8
CORNER FRAMING TYPE: CONVENTIONAL
END JACK TYPE: CONVENTIONAL
APPLIED TO FRONT SIDE
- ADDT'L LOADS BASED ON 55 % OF GSL.

THIS TRUSS IS DESIGNED FOR RESIDENTIAL OR SMALL BUILDING REQUIREMENTS OF PART 9, NBCC 2010

THIS DESIGN COMPLIES WITH:
- PART 9 OF OBC 2012 , BCBC 2012 , ABC 2014
- CSA 086-09
- TPIC 2011

(55 % OF 27.2 P.S.F. G.S.L. PLUS 8.4 P.S.F. RAIN LOAD) EQUALS 23.3 P.S.F. SPECIFIED ROOF LIVE LOAD

ALLOWABLE DEFL.(LL)= L/360 (1.03")
CALCULATED VERT. DEFL.(LL) = L/ 999 (0.25")
ALLOWABLE DEFL.(TL)= L/360 (1.03")
CALCULATED VERT. DEFL.(TL) = L/ 842 (0.44")

CSI: TC=0.43/1.00 (F-H:1) , BC=0.84/1.00 (O-Q:1) , WB=0.72/1.00 (I-N:1) , SSI=0.27/1.00 (H-I:1)

DOL LUMBER=1.00 NAIL=1.00 LS BEND=1.00 COMP=1.00 SHEAR=1.00 TENS= 1.00

COMPANION LIVE LOAD FACTOR = 0.50

TRUSS PLATE MANUFACTURER IS NOT RESPONSIBLE FOR QUALITY CONTROL IN THE TRUSS MANUFACTURING PLANT .

NAIL VALUES

PLATE	GRIP(DRY) (PSI) MAX	MIN	SHEAR (PLI) MAX	MIN	SECTION (PLI) MAX	MIN
MT20	618	354	1667	822	2284	1656

PLATE PLACEMENT TOL. = 0.250 inches

PLATE ROTATION TOL. = 5.0 Deg.

JSI GRIP= 0.89 (Q) (INPUT = 0.90)
JSI METAL= 0.95 (P) (INPUT = 1.00)

CONTINUED ON PAGE 2

HANGERS NOTES

1) SPECIAL HANGER(S) OR CONNECTION(S) REQUIRED TO SUPPORT CONCENTRATED LOAD(S) 204.6 lbs FACTORED DOWN AT 27-5-11, AND 204.6 lbs FACTORED DOWN AT 3-6-5 ON TOP CHORD. DESIGN FOR UNSPECIFIED CONNECTION(S) IS DELEGATED TO THE BUILDING DESIGNER.

KOTT

READ ALL NOTES ON THIS PAGE AND ON THE ENGINEERING NOTE PAGE ENP-1. THE NOTE PAGE IS AN INTEGRAL PART OF THIS DRAWING AS IT CONTAINS SPECIFICATIONS AND CRITERIA USED IN THE DESIGN OF THIS COMPONENT.

SCALE = 1:25.5

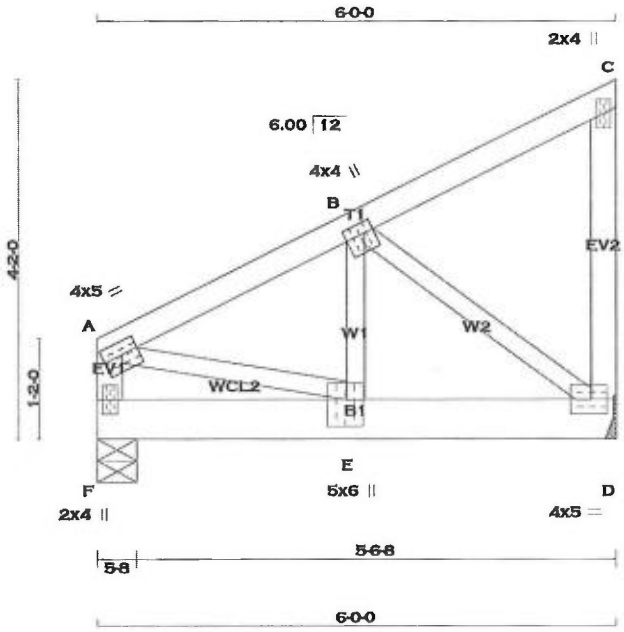

TOTAL WEIGHT = 29 lb

LUMBER

N. L. G. A. RULES

CHORDS	SIZE		LUMBER	DESCR.
A - C	2x4	DRY	No.2	SPF
D - C	2x4	DRY	No.2	SPF
F - A	2x4	DRY	No.2	SPF
F - D	2x6	DRY	No.2	SPF
ALL WEBS EXCEPT	2x3	DRY	No.2	SPF

DRY: SEASONED LUMBER.

PLATES (table is in Inches)

JT	TYPE	PLATES	W	LEN	Y	X
A	TMVW-t	MT20	4.0	5.0	1.75	2.25
B	TMWW+t	MT20	4.0	4.0	1.50	1.25
C	TMV+p	MT20	2.0	4.0		
D	BMVW1-t	MT20	4.0	5.0	2.00	2.25
E	BMWW+t	MT20	5.0	6.0	3.75	2.25
F	BMV1+p	MT20	2.0	4.0		

A SIZE FOR SIZE SUBSTITUTION OF MITEK MII20 WITH TEE-LOK TL20 PLATES IS ALLOWED.

DIMENSIONS, SUPPORTS AND LOADINGS SPECIFIED BY FABRICATOR TO BE VERIFIED BY BUILDING DESIGNER

BEARINGS

JT	FACTORED GROSS REACTION VERT	HORZ	MAXIMUM FACTORED GROSS REACTION DOWN	HORZ	UPLIFT	INPUT BRG IN-SX	REQRD BRG IN-SX
D	1550	0	1550	0	0	MECHANICAL	
F	1550	0	1550	0	0	5-8	2-10

A SUITABLE MECHANICAL CONNECTION IS REQUIRED AT JOINT D TO RESIST THE MAX FACTORED REACTIONS.

UNFACTORED REACTIONS

JT	1ST LCASE COMBINED	SNOW	MAX./MIN. COMPONENT REACTIONS LIVE	PERM.LIVE	WIND	DEAD	SOIL
D	1088	761 / 0	0 / 0	0 / 0	0 / 0	327 / 0	0 / 0
F	1088	761 / 0	0 / 0	0 / 0	0 / 0	327 / 0	0 / 0

BEARING MATERIAL TO BE SPF NO.2 OR BETTER AT JOINT(S) F

BRACING

TOP CHORD TO BE SHEATHED OR MAX. PURLIN SPACING = 5.49 FT.
MAX. UNBRACED BOTTOM CHORD LENGTH = 10.00 FT OR RIGID CEILING DIRECTLY APPLIED.

ALL PITCH BREAKS AND PERIMETER CORNER JOINTS MUST BE LATERALLY RESTRAINED.

LOADING

TOTAL LOAD CASES: (4)

CHORDS

MEMB. FR-TO	MAX. FACTORED FORCE (LBS)	FACTORED VERT. LOAD (PLF) FROM	TO	LC1 CSI	MAX (LC)	MAX. UNBRAC LENGTH
A- B	-1323 / 0	-77.4	-77.4	0.12	(1)	5.49
B- C	-9 / 0	-77.4	-77.4	0.09	(1)	10.00
D- C	-96 / 0	0.0	0.0	0.02	(1)	7.81
F- A	-999 / 0	0.0	0.0	0.11	(1)	7.79
F- E	0 / 0	-439.4	-439.4	0.25	(1)	10.00
E- D	0 / 1191	-439.4	-439.4	0.41	(1)	10.00

WEBS

MEMB. FR-TO	MAX. FACTORED FORCE (LBS)	MAX CSI	(LC)
E- B	0 / 1227	0.30	(1)
B- D	-1495 / 0	0.36	(1)
A- E	0 / 1230	0.30	(1)

DESIGN CRITERIA

SPECIFIED LOADS:

TOP CH.	LL	=	23.3	PSF
	DL	=	3.0	PSF
BOT CH.	LL	=	0.0	PSF
	DL	=	7.0	PSF
TOTAL LOAD		=	33.3	PSF

SPACING = 24.0 IN. C/C

GIRDER TYPE: CStdGirder
START DISTANCE = 0-0
START SPAN CARRIED = 20-3-0
END DISTANCE = 6-0-0
END SPAN CARRIED = 20-3-0
END WALL WIDTH = 5-8
APPLIED TO FRONT SIDE OF BOTTOM CHORD.
- ADDT'L LOADS BASED ON 55 % OF GSL.

THIS TRUSS IS DESIGNED FOR RESIDENTIAL OR SMALL BUILDING REQUIREMENTS OF PART 9, NBCC 2010

THIS DESIGN COMPLIES WITH:
- PART 9 OF OBC 2012 , BCBC 2012 , ABC 2014
- CSA 086-09
- TPIC 2011

(55 % OF 27.2 P.S.F. G.S.L. PLUS 8.4 P.S.F. RAIN LOAD) EQUALS 23.3 P.S.F. SPECIFIED ROOF LIVE LOAD

ALLOWABLE DEFL.(LL)= L/360 (0.20")
CALCULATED VERT. DEFL.(LL) = L/ 999 (0.02")
ALLOWABLE DEFL.(TL)= L/360 (0.20")
CALCULATED VERT. DEFL.(TL) = L/ 999 (0.03")

CSI: TC=0.12/1.00 (A-B:1) , BC=0.41/1.00 (D-E:1) , WB=0.36/1.00 (B-D:1) , SSI=0.51/1.00 (E-F:1)

DOL LUMBER=1.00 NAIL=1.00 LS BEND=1.00 COMP=1.00 SHEAR=1.00 TENS= 1.00

COMPANION LIVE LOAD FACTOR = 0.50

TRUSS PLATE MANUFACTURER IS NOT RESPONSIBLE FOR QUALITY CONTROL IN THE TRUSS MANUFACTURING PLANT .

NAIL VALUES

PLATE	GRIP(DRY) (PSI) MAX	MIN	SHEAR (PLI) MAX	MIN	SECTION (PLI) MAX	MIN
MT20	618	354	1667	822	2284	1656

PLATE PLACEMENT TOL. = 0.250 inches

PLATE ROTATION TOL. = 5.0 Deg.

JSI GRIP= 0.89 (B) (INPUT = 0.90)
JSI METAL= 0.41 (B) (INPUT = 1.00)

LICENSED PROFESSIONAL ENGINEER
T.L. WISE
100083566
PROVINCE OF ONTARIO

September 14, 2018

KOTT

READ ALL NOTES ON THIS PAGE AND ON THE ENGINEERING NOTE PAGE ENP-1. THE NOTE PAGE IS AN INTEGRAL PART OF THIS DRAWING AS IT CONTAINS SPECIFICATIONS AND CRITERIA USED IN THE DESIGN OF THIS COMPONENT.

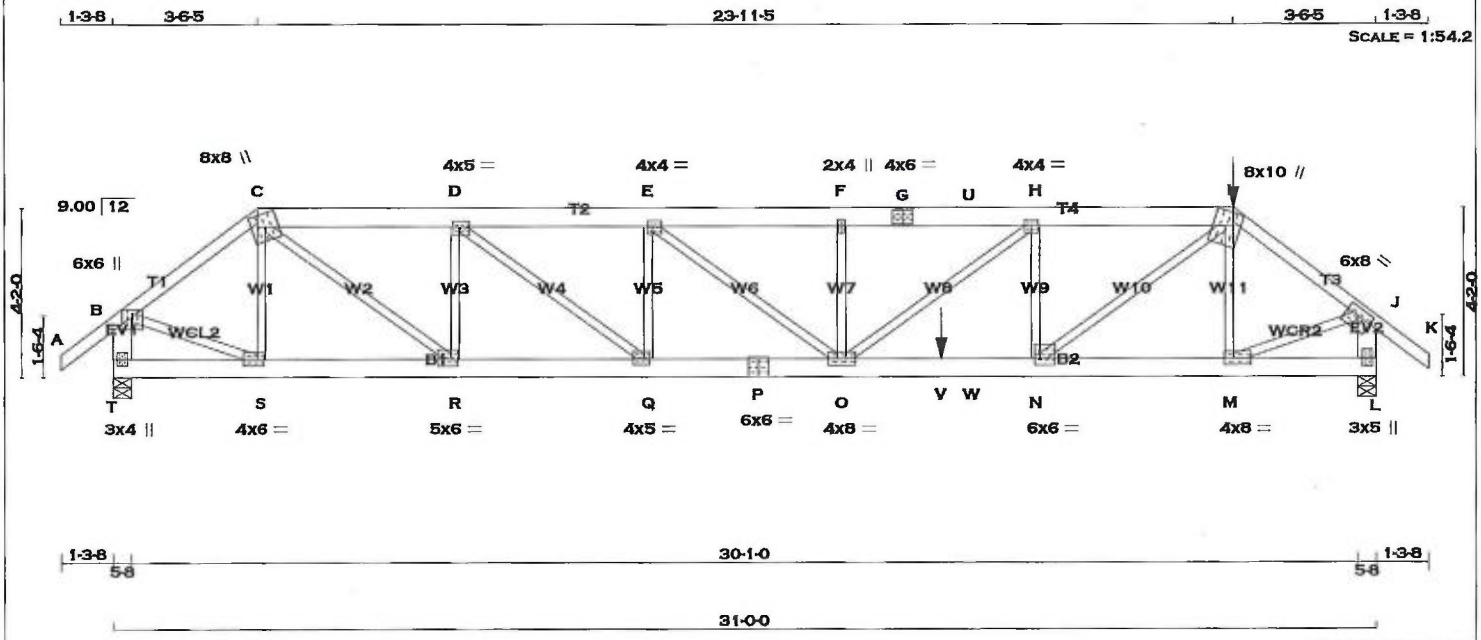

TOTAL WEIGHT = 160 lb [M]

LUMBER
N. L. G. A. RULES

CHORDS	SIZE		LUMBER	DESCR.
A - C	2x4	DRY	No.2	SPF
C - G	2x6	DRY	No.2	SPF
G - I	2x6	DRY	No.2	SPF
I - K	2x4	DRY	No.2	SPF
T - B	2x6	DRY	No.2	SPF
L - J	2x6	DRY	No.2	SPF
T - P	2x6	DRY	No.2	SPF
P - L	2x6	DRY	2100F 1.8E	SPF
ALL WEBS EXCEPT	2x3	DRY	No.2	SPF

DRY: SEASONED LUMBER.

PLATES (table is in inches)

JT	TYPE	PLATES	W	LEN	Y	X
B	TMVW+p	MT20	6.0	6.0	2.25	2.75
C	TTWW+m	MT20	8.0	8.0	4.00	3.75
D	TMWW-t	MT20	4.0	5.0	1.50	2.00
E	TMWW-t	MT20	4.0	4.0	1.75	1.50
F	TMW+w	MT20	2.0	4.0		
G	TS-t	MT20	4.0	6.0		
H	TMWW-t	MT20	4.0	4.0		
I	TTWW+m	MT20	8.0	10.0	4.50	3.50
J	TMVW-t	MT20	6.0	8.0	2.25	3.50
L	BMV1+p	MT20	3.0	5.0		
M	BMWW-t	MT20	4.0	8.0	2.00	2.75
N	BMWW-t	MT20	6.0	6.0	2.00	1.50
O	BMWWW-t	MT20	4.0	8.0		
P	BS-t	MT20	6.0	6.0		
Q	BMWW-t	MT20	4.0	5.0	1.75	1.75
R	BMWW-t	MT20	5.0	6.0	2.25	2.00
S	BMWW-t	MT20	4.0	6.0	2.00	2.00
T	BMV1+p	MT20	3.0	4.0		

A SIZE FOR SIZE SUBSTITUTION OF MITEK MII20 WITH TEE-LOK TL20 PLATES IS ALLOWED.

HANGERS NOTES
1)

LICENSED PROFESSIONAL ENGINEER
T.L. WISE
100083566
PROVINCE OF ONTARIO
September 14, 2018

DIMENSIONS, SUPPORTS AND LOADINGS SPECIFIED BY FABRICATOR TO BE VERIFIED BY BUILDING DESIGNER

BEARINGS

JT	FACTORED GROSS REACTION VERT	HORZ	MAXIMUM FACTORED GROSS REACTION DOWN	HORZ	UPLIFT	INPUT BRG IN-SX	REQRD BRG IN-SX
T	2256	0	2256	0	0	5-8	2-7
L	3251	0	3251	0	0	5-8	3-8

UNFACTORED REACTIONS

JT	1ST LCASE COMBINED	MAX./MIN. COMPONENT REACTIONS SNOW	LIVE	PERM.LIVE	WIND	DEAD	SOIL
T	1581	1121 / 0	0 / 0	0 / 0	0 / 0	460 / 0	0 / 0
L	2280	1603 / 0	0 / 0	0 / 0	0 / 0	677 / 0	0 / 0

BEARING MATERIAL TO BE SPF NO.2 OR BETTER AT JOINT(S) T, L

BRACING
TOP CHORD TO BE SHEATHED OR MAX. PURLIN SPACING = 3.17 FT.
MAX. UNBRACED BOTTOM CHORD LENGTH = 10.00 FT OR RIGID CEILING DIRECTLY APPLIED.

ALL PITCH BREAKS AND PERIMETER CORNER JOINTS MUST BE LATERALLY RESTRAINED.

LOADING
TOTAL LOAD CASES: (4)

CHORDS

MEMB. FR-TO	MAX. FACTORED FORCE (LBS)	FACTORED VERT. LOAD (PLF) FROM	TO	LC1 MAX CSI (LC)	MAX. UNBRAC LENGTH
A- B	0 / 32	-77.4	-77.4	0.12 (1)	10.00
B- C	-2369 / 0	-77.4	-77.4	0.28 (1)	4.17
C- D	-3992 / 0	-77.4	-77.4	0.24 (1)	4.12
D- E	-5393 / 0	-77.4	-77.4	0.29 (1)	3.58
E- F	-6397 / 0	-77.4	-77.4	0.41 (1)	3.19
F- G	-6397 / 0	-77.4	-77.4	0.43 (1)	3.17
G- U	-6397 / 0	-77.4	-77.4	0.43 (1)	3.17
U- H	-6397 / 0	-145.9	-145.9	0.43 (1)	3.17
H- I	-5759 / 0	-145.9	-145.9	0.49 (1)	3.24
I- J	-3487 / 0	-77.4	-77.4	0.39 (1)	3.41
J- K	0 / 32	-77.4	-77.4	0.12 (1)	10.00
T- B	-2237 / 0	0.0	0.0	0.16 (1)	6.80
L- J	-3178 / 0	0.0	0.0	0.23 (1)	5.89
T- S	0 / 0	-17.5	-17.5	0.04 (4)	10.00
S- R	0 / 1888	-17.5	-17.5	0.28 (1)	10.00
R- Q	0 / 3992	-17.5	-17.5	0.62 (1)	10.00
Q- P	0 / 5393	-17.5	-17.5	0.80 (1)	10.00
P- O	0 / 5393	-17.5	-17.5	0.80 (1)	10.00
O- V	0 / 5758	-17.5	-17.5	0.88 (1)	10.00
V- W	0 / 5758	-17.5	-17.5	0.88 (1)	10.00
W- N	0 / 5758	-33.0	-33.0	0.88 (1)	10.00
N- M	0 / 2775	-33.0	-33.0	0.34 (1)	10.00
M- L	0 / 0	-33.0	-33.0	0.03 (1)	10.00

WEBS

MEMB. FR-TO	MAX. FACTORED FORCE (LBS)	MAX CSI (LC)
S- C	-486 / 0	0.12 (1)
C- R	0 / 2655	0.66 (1)
R- D	-1515 / 0	0.37 (1)
D- Q	0 / 1777	0.44 (1)
Q- E	-1161 / 0	0.28 (1)
E- O	0 / 1275	0.32 (1)
O- F	-333 / 0	0.08 (1)
O- H	0 / 810	0.20 (1)
N- H	-1234 / 0	0.30 (1)
N- I	0 / 3764	0.93 (1)
M- I	-841 / 0	0.21 (1)
B- S	0 / 1988	0.49 (1)
M- J	0 / 2926	0.72 (1)

FACTORED CONCENTRATED LOADS (LBS)

JT	LOC.	LC1	MAX-	MAX+	FACE	DIR.	TYPE
I	27-5-11	-205	-205	---	FRONT	VERT	TOTAL
V	20-3-12	-1550	-1550	---	FRONT	VERT	TOTAL

DESIGN CRITERIA

*** SPECIAL LOADS ANALYSIS ***
GEOMETRY AND/OR BASIC LOADS CHANGED BY USER.
LOADS WERE DERIVED FROM USER INPUT
NO FURTHER MODIFICATIONS WERE MADE

SPECIFIED LOADS:

TOP	CH.	LL	=	23.3	PSF
		DL	=	3.0	PSF
BOT	CH.	LL	=	0.0	PSF
		DL	=	7.0	PSF
TOTAL	LOAD		=	33.3	PSF

SPACING = 24.0 IN. C/C

LOADING IN FLAT SECTION BASED ON A SLOPE OF 2.00/12 MINIMUM

GIRDER TYPE: CPrimeHip
SIDE SETBACK = 3-6-5
END SETBACK = 6-0-0
END WALL WIDTH = 5-8
CORNER FRAMING TYPE: CONVENTIONAL
END JACK TYPE: CONVENTIONAL
APPLIED TO FRONT SIDE
- ADDT'L LOADS BASED ON 55 % OF GSL.
LOADS APPLIED TO FIRST 10-0-0 OF SPAN MEASURED FROM THE RIGHT.

*** NON STANDARD GIRDER ***
ADDT'L USER-DEFINED LOADS APPLIED TO ALL LOAD CASES.

THIS TRUSS IS DESIGNED FOR RESIDENTIAL OR SMALL BUILDING REQUIREMENTS OF PART 9, NBCC 2010

THIS DESIGN COMPLIES WITH:
- PART 9 OF OBC 2012 , BCBC 2012 , ABC 2014
- CSA 086-09
- TPIC 2011

(55 % OF 27.2 P.S.F. G.S.L. PLUS 8.4 P.S.F. RAIN LOAD) EQUALS 23.3 P.S.F. SPECIFIED ROOF LIVE LOAD

ALLOWABLE DEFL.(LL)= L/360 (1.03")
CALCULATED VERT. DEFL.(LL) = L/ 999 (0.28")
ALLOWABLE DEFL.(TL)= L/360 (1.03")
CALCULATED VERT. DEFL.(TL) = L/ 756 (0.49")

CSI: TC=0.49/1.00 (H-I:1) , BC=0.88/1.00 (N-O:1) , WB=0.93/1.00 (I-N:1) , SSI=0.58/1.00 (N-O:1)

DOL LUMDER=1.00 NAIL=1.00 LS BEND=1.00 COMP=1.00 SHEAR=1.00 TENS= 1.00

COMPANION LIVE LOAD FACTOR = 0.50

AUTOSOLVE HEELS OFF

TRUSS PLATE MANUFACTURER IS NOT RESPONSIBLE FOR QUALITY CONTROL IN THE TRUSS MANUFACTURING PLANT .

CONTINUED ON PAGE 2

HANGERS NOTES

1) SPECIAL HANGER(S) OR CONNECTION(S) REQUIRED TO SUPPORT CONCENTRATED LOAD(S) 204.6 lbs FACTORED DOWN AT 27-5-11 ON TOP CHORD, AND 1550.3 lbs FACTORED DOWN AT 20-3-12 ON BOTTOM CHORD. DESIGN FOR UNSPECIFIED CONNECTION(S) IS DELEGATED TO THE BUILDING DESIGNER.

NAIL VALUES

PLATE	GRIP(DRY) (PSI)		SHEAR (PLI)		SECTION (PLI)	
	MAX	MIN	MAX	MIN	MAX	MIN
MT20	618	354	1667	822	2284	1656

PLATE PLACEMENT TOL. = 0.250 inches

PLATE ROTATION TOL. = 5.0 Deg.

JSI GRIP= 0.90 (R) (INPUT = 0.90)
JSI METAL= 0.75 (N) (INPUT = 1.00)

KOTT

READ ALL NOTES ON THIS PAGE AND ON THE ENGINEERING NOTE PAGE ENP-1. THE NOTE PAGE IS AN INTEGRAL PART OF THIS DRAWING AS IT CONTAINS SPECIFICATIONS AND CRITERIA USED IN THE DESIGN OF THIS COMPONENT.

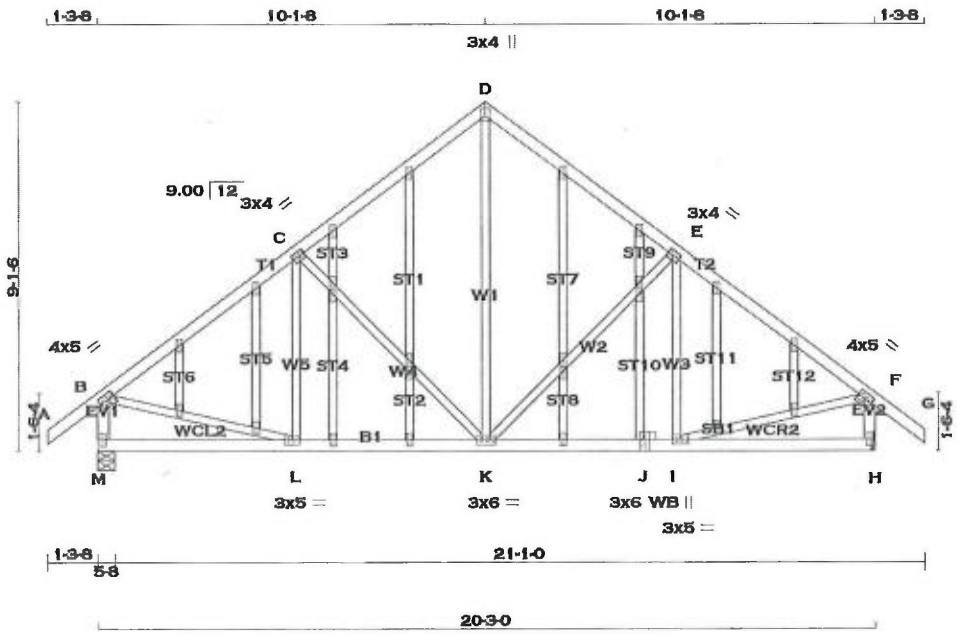

TOTAL WEIGHT = 122 lb

[M][F]

LUMBER

N. L. G. A. RULES

CHORDS	SIZE		LUMBER	DESCR.
A - D	2x4	DRY	No.2	SPF
D - G	2x4	DRY	No.2	SPF
M - B	2x4	DRY	No.2	SPF
H - F	2x4	DRY	No.2	SPF
M - J	2x4	DRY	No.2	SPF
J - H	2x4	DRY	No.2	SPF
ALL WEBS	2x3	DRY	No.2	SPF

EXCEPT

ALL GABLE WEBS

	2x3	DRY	No.2	SPF

DRY: SEASONED LUMBER.

GABLE STUDS SPACED AT 2-0-0 OC.

PLATES (table is in inches)

JT	TYPE	PLATES	W	LEN	Y	X
B	TMVW-t	MT20	4.0	5.0	1.75	2.00
C	TMWW-t	MT20	3.0	4.0	1.50	1.50
D	TTW+p	MT20	3.0	4.0	2.25	1.50
E	TMWW-t	MT20	3.0	4.0	1.50	1.50
F	TMVW-t	MT20	4.0	5.0	1.75	2.00
H	BMV1+p	MT20	2.0	4.0		
I	BMWW-t	MT20	3.0	5.0		
J						
J						
J	BSW+I	MT20	3.0	6.0		
K	BMWWW-t	MT20	3.0	6.0		
L	BMWW-t	MT20	3.0	5.0		
M	BMV1+p	MT20	2.0	4.0		
N, Q, Z, AB						
N	NP+w	MT20	2.0	4.0	1.50	1.00
N, O, P, Q, R, S, T, U, V, W, X, Y, Z, AA, AB, AC, AD, AE, AF						
N	NP+w	MT20	2.0	4.0		

A SIZE FOR SIZE SUBSTITUTION OF MITEK MII20 WITH TEE-LOK TL20 PLATES IS ALLOWED.

WB - INDICATES BLOCKING REQUIRED

DIMENSIONS, SUPPORTS AND LOADINGS SPECIFIED BY FABRICATOR TO BE VERIFIED BY BUILDING DESIGNER

BEARINGS

JT	FACTORED GROSS REACTION VERT	HORZ	MAXIMUM FACTORED GROSS REACTION DOWN	HORZ	UPLIFT	INPUT BRG IN-SX	REQRD BRG IN-SX
M	1067	0	1067	0	0	5-8	1-13
H	1067	0	1067	0	0	MECHANICAL	

A SUITABLE MECHANICAL CONNECTION IS REQUIRED AT JOINT H TO RESIST THE MAX FACTORED REACTIONS.

UNFACTORED REACTIONS

JT	1ST LCASE COMBINED	MAX.MIN. COMPONENT REACTIONS SNOW	LIVE	PERM.LIVE	WIND	DEAD	SOIL
M	747	536 / 0	0 / 0	0 / 0	0 / 0	211 / 0	0 / 0
H	747	536 / 0	0 / 0	0 / 0	0 / 0	211 / 0	0 / 0

BEARING MATERIAL TO BE SPF NO.2 OR BETTER AT JOINT(S) M

BRACING

TOP CHORD TO BE SHEATHED OR MAX. PURLIN SPACING = 6.04 FT.
MAX. UNBRACED BOTTOM CHORD LENGTH = 10.00 FT OR RIGID CEILING DIRECTLY APPLIED.

ALL PITCH BREAKS AND PERIMETER CORNER JOINTS MUST BE LATERALLY RESTRAINED.

LOADING

TOTAL LOAD CASES: (4)

CHORDS

MEMB. FR-TO	MAX. FACTORED FORCE (LBS)	FACTORED VERT. LOAD (PLF) FROM	TO	LC1 CSI (LC)	MAX UNBRAC LENGTH
A- B	0 / 32	-77.4	-77.4	0.11 (1)	10.00
B- C	-953 / 0	-77.4	-77.4	0.27 (1)	6.04
C- D	-725 / 0	-77.4	-77.4	0.26 (1)	6.25
D- E	-725 / 0	-77.4	-77.4	0.26 (1)	6.25
E- F	-953 / 0	-77.4	-77.4	0.27 (1)	6.04
F- G	0 / 32	-77.4	-77.4	0.11 (1)	10.00
M- B	-1030 / 0	0.0	0.0	0.11 (1)	7.74
H- F	-1030 / 0	0.0	0.0	0.11 (1)	7.74
M- L	0 / 0	-17.5	-17.5	0.11 (4)	10.00
L- K	0 / 784	-17.5	-17.5	0.18 (1)	10.00
K- J	0 / 784	-17.5	-17.5	0.18 (1)	10.00
J- I	0 / 784	-17.5	-17.5	0.18 (1)	10.00
I- H	0 / 0	-17.5	-17.5	0.11 (4)	10.00

WEBS

MEMB. FR-TO	MAX. FACTORED FORCE (LBS)	MAX CSI (LC)
K- D	0 / 548	0.12 (1)
K- E	-325 / 0	0.31 (1)
I- E	-83 / 60	0.04 (1)
C- K	-325 / 0	0.31 (1)
L- C	-83 / 60	0.04 (1)
B- L	0 / 805	0.18 (1)
I- F	0 / 805	0.18 (1)

DESIGN CRITERIA

SPECIFIED LOADS:

TOP CH.	LL	=	23.3	PSF
	DL	=	3.0	PSF
BOT CH.	LL	=	0.0	PSF
	DL	=	7.0	PSF
TOTAL LOAD		=	33.3	PSF

SPACING = 24.0 IN. C/C

THIS TRUSS IS DESIGNED FOR RESIDENTIAL OR SMALL BUILDING REQUIREMENTS OF PART 9, NBCC 2010

THIS DESIGN COMPLIES WITH:
- PART 9 OF OBC 2012 , BCBC 2012 , ABC 2014
- CSA 086-09
- TPIC 2011

(55 % OF 27.2 P.S.F. G.S.L. PLUS 8.4 P.S.F. RAIN LOAD) EQUALS 23.3 P.S.F. SPECIFIED ROOF LIVE LOAD

ALLOWABLE DEFL.(LL)= L/360 (0.68")
CALCULATED VERT. DEFL.(LL) = L/ 999 (0.02")
ALLOWABLE DEFL.(TL)= L/360 (0.68")
CALCULATED VERT. DEFL.(TL) = L/ 999 (0.05")

CSI: TC=0.27/1.00 (B-C:1) , BC=0.18/1.00 (K-L:1) , WB=0.31/1.00 (C-K:1) , SSI=0.15/1.00 (B-C:1)

DOL LUMBER=1.00 NAIL=1.00 LS BEND=1.10 COMP=1.10 SHEAR=1.10 TENS= 1.10

COMPANION LIVE LOAD FACTOR = 0.50

TRUSS PLATE MANUFACTURER IS NOT RESPONSIBLE FOR QUALITY CONTROL IN THE TRUSS MANUFACTURING PLANT .

NAIL VALUES

PLATE	GRIP(DRY) (PSI) MAX	MIN	SHEAR (PLI) MAX	MIN	SECTION (PLI) MAX	MIN
MT20	618	354	1667	822	2284	1656

PLATE PLACEMENT TOL. = 0.250 inches

PLATE ROTATION TOL. = 5.0 Deg.

JSI GRIP= 0.88 (K) (INPUT = 0.90)
JSI METAL= 0.34 (F) (INPUT = 1.00)

LICENSED PROFESSIONAL ENGINEER
T.L. WISE
100083566
PROVINCE OF ONTARIO

September 14, 2018

KOTT

READ ALL NOTES ON THIS PAGE AND ON THE ENGINEERING NOTE PAGE ENP-1. THE NOTE PAGE IS AN INTEGRAL PART OF THIS DRAWING AS IT CONTAINS SPECIFICATIONS AND CRITERIA USED IN THE DESIGN OF THIS COMPONENT.

CONTINUED ON PAGE 2

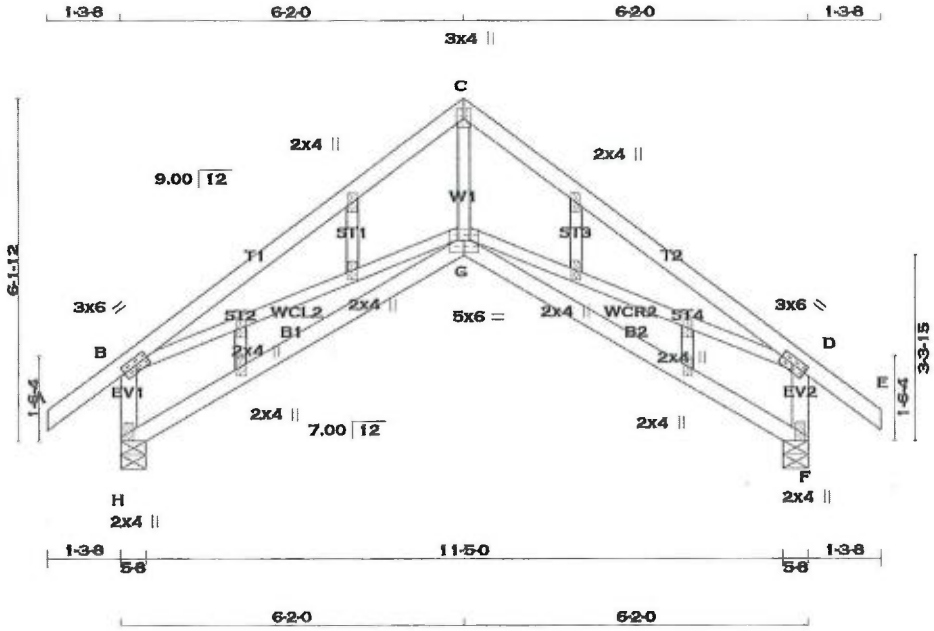

TOTAL WEIGHT = 57 lb

LUMBER
N. L. G. A. RULES

CHORDS	SIZE		LUMBER	DESCR.
A - C	2x4	DRY	No.2	SPF
C - E	2x4	DRY	No.2	SPF
H - B	2x4	DRY	No.2	SPF
F - D	2x4	DRY	No.2	SPF
H - G	2x4	DRY	No.2	SPF
G - F	2x4	DRY	No.2	SPF
ALL WEBS	2x3	DRY	No.2	SPF
EXCEPT				
ALL GABLE WEBS	2x3	DRY	No.2	SPF

DRY: SEASONED LUMBER.

GABLE STUDS SPACED AT 2-0-0 OC.

PLATES (table is in inches)

JT	TYPE	PLATES	W	LEN	Y	X
B	TMVW-I	MT20	3.0	6.0	1.50	2.75
C	TTW+p	MT20	3.0	4.0	2.25	1.50
D	TMVW-I	MT20	3.0	6.0	1.50	2.75
F	BMV1+p	MT20	2.0	4.0	Edge	
G	BBWWW-p	MT20	5.0	6.0	2.75	3.00
H	BMV1+p	MT20	2.0	4.0	Edge	
I, J, K, L, M, N, O, P						
I	NP+w	MT20	2.0	4.0		

Edge - INDICATES REFERENCE CORNER OF PLATE TOUCHES EDGE OF CHORD.

A SIZE FOR SIZE SUBSTITUTION OF MITEK MII20 WITH TEE-LOK TL20 PLATES IS ALLOWED.

DIMENSIONS, SUPPORTS AND LOADINGS SPECIFIED BY FABRICATOR TO BE VERIFIED BY BUILDING DESIGNER

BEARINGS

JT	FACTORED GROSS REACTION VERT	HORZ	MAXIMUM FACTORED GROSS REACTION DOWN	HORZ	UPLIFT	INPUT BRG IN-SX	REQRD BRG IN-SX
H	692	0	692	0	0	5-8	1-8
F	692	0	692	0	0	5-8	1-8

UNFACTORED REACTIONS

JT	1ST LCASE COMBINED	MAX./MIN. COMPONENT REACTIONS SNOW	LIVE	PERM.LIVE	WIND	DEAD	SOIL
H	483	351 / 0	0 / 0	0 / 0	0 / 0	132 / 0	0 / 0
F	483	351 / 0	0 / 0	0 / 0	0 / 0	132 / 0	0 / 0

BEARING MATERIAL TO BE SPF NO.2 OR BETTER AT JOINT(S) H, F

BRACING
TOP CHORD TO BE SHEATHED OR MAX. PURLIN SPACING = 5.93 FT.
MAX. UNBRACED BOTTOM CHORD LENGTH = 10.00 FT OR RIGID CEILING DIRECTLY APPLIED.

ALL PITCH BREAKS AND PERIMETER CORNER JOINTS MUST BE LATERALLY RESTRAINED.

LOADING
TOTAL LOAD CASES: (4)

CHORDS

MEMB. FR-TO	MAX. FACTORED FORCE (LBS)	FACTORED VERT. LOAD (PLF) FROM	TO	LC1 CSI (LC)	MAX UNBRAC LENGTH
A- B	0 / 32	-77.4	-77.4	0.11 (1)	10.00
B- C	-915 / 0	-77.4	-77.4	0.40 (1)	5.93
C- D	-915 / 0	-77.4	-77.4	0.40 (1)	5.93
D- E	0 / 32	-77.4	-77.4	0.11 (1)	10.00
H- B	-638 / 0	0.0	0.0	0.07 (1)	7.81
F- D	-638 / 0	0.0	0.0	0.07 (1)	7.81
H- G	0 / 0	-17.5	-17.5	0.20 (4)	10.00
G- F	0 / 0	-17.5	-17.5	0.20 (4)	10.00

WEBS

MEMB. FR-TO	MAX. FACTORED FORCE (LBS)	MAX CSI (LC)
G- C	0 / 621	0.14 (1)
B- G	0 / 775	0.17 (1)
G- D	0 / 775	0.17 (1)

DESIGN CRITERIA [M][F]

SPECIFIED LOADS:

TOP CH.	LL	=	23.3	PSF
	DL	=	3.0	PSF
BOT CH.	LL	=	0.0	PSF
	DL	=	7.0	PSF
TOTAL LOAD		=	33.3	PSF

SPACING = 24.0 IN. C/C

THIS TRUSS IS DESIGNED FOR RESIDENTIAL OR SMALL BUILDING REQUIREMENTS OF PART 9, NBCC 2010

THIS DESIGN COMPLIES WITH:
- PART 9 OF OBC 2012 , BCBC 2012 , ABC 2014
- CSA 086-09
- TPIC 2011

(55 % OF 27.2 P.S.F. G.S.L. PLUS 6.4 P.S.F. RAIN LOAD) EQUALS 23.3 P.S.F. SPECIFIED ROOF LIVE LOAD

ALLOWABLE DEFL.(LL)= L/360 (0.41")
CALCULATED VERT. DEFL.(LL) = L/ 999 (0.04")
ALLOWABLE DEFL.(TL)= L/360 (0.41")
CALCULATED VERT. DEFL.(TL) = L/ 999 (0.11")

CSI: TC=0.40/1.00 (C-D:1) , BC=0.20/1.00 (F-G:4) , WB=0.17/1.00 (B-G:1) , SSI=0.15/1.00 (C-D:1)

DOL LUMBER=1.00 NAIL=1.00 LS BEND=1.10 COMP=1.10 SHEAR=1.10 TENS= 1.10

COMPANION LIVE LOAD FACTOR = 0.50

TRUSS PLATE MANUFACTURER IS NOT RESPONSIBLE FOR QUALITY CONTROL IN THE TRUSS MANUFACTURING PLANT .

NAIL VALUES

PLATE	GRIP(DRY) (PSI) MAX	MIN	SHEAR (PLI) MAX	MIN	SECTION (PLI) MAX	MIN
MT20	618	354	1667	822	2284	1656

PLATE PLACEMENT TOL. = 0.250 inches

PLATE ROTATION TOL. = 5.0 Deg.

JSI GRIP= 0.89 (C) (INPUT = 0.90)
JSI METAL= 0.28 (D) (INPUT = 1.00)

LICENSED PROFESSIONAL ENGINEER
T.L. WISE
100083566
PROVINCE OF ONTARIO

September 14, 2018

KOTT

READ ALL NOTES ON THIS PAGE AND ON THE ENGINEERING NOTE PAGE ENP-1. THE NOTE PAGE IS AN INTEGRAL PART OF THIS DRAWING AS IT CONTAINS SPECIFICATIONS AND CRITERIA USED IN THE DESIGN OF THIS COMPONENT.

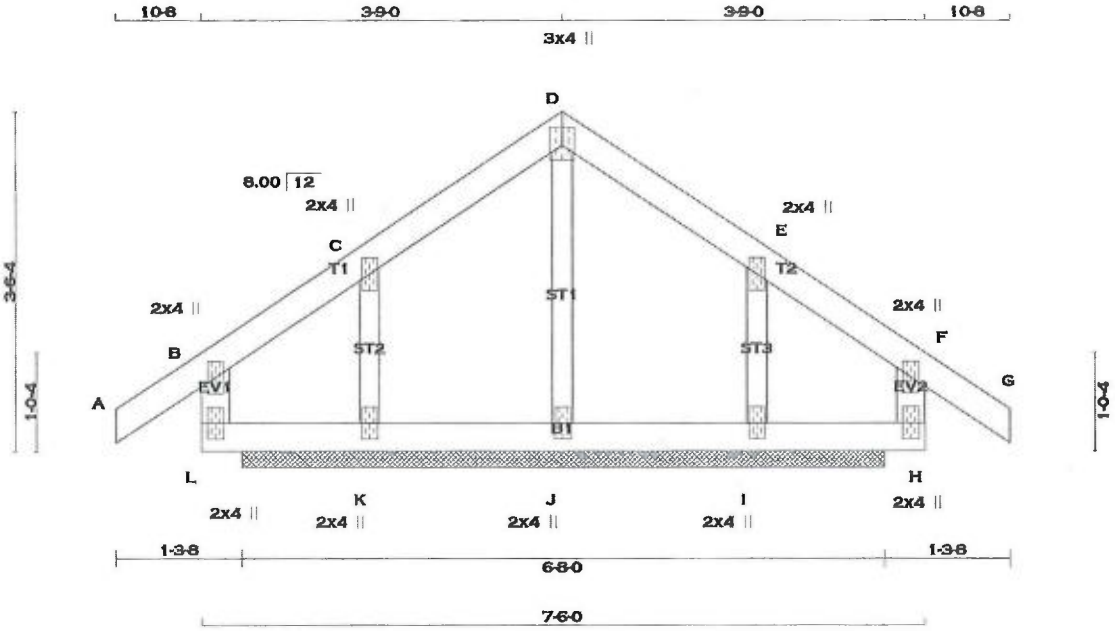

TOTAL WEIGHT = 28 lb

LUMBER
N. L. G. A. RULES

CHORDS	SIZE		LUMBER	DESCR.
L - B	2x4	DRY	No.2	SPF
A - D	2x4	DRY	No.2	SPF
D - G	2x4	DRY	No.2	SPF
H - F	2x4	DRY	No.2	SPF
L - H	2x4	DRY	No.2	SPF
ALL WEBS	2x3	DRY	No.2	SPF
ALL GABLE WEBS	2x3	DRY	No.2	SPF

DRY: SEASONED LUMBER.

GABLE STUDS SPACED AT 2-0-0 OC.

PLATES (table is in inches)

JT	TYPE	PLATES	W	LEN	Y	X
B	TMV+p	MT20	2.0	4.0		
C	TMW+w	MT20	2.0	4.0		
D	TTW+p	MT20	3.0	4.0	2.25	1.50
E	TMW+w	MT20	2.0	4.0		
F	TMV+p	MT20	2.0	4.0		
H	BMV+p	MT20	2.0	4.0		
I, J, K						
I	BMW1+w	MT20	2.0	4.0		
L	BMV+p	MT20	2.0	4.0		

A SIZE FOR SIZE SUBSTITUTION OF MITEK MII20 WITH TEE-LOK TL20 PLATES IS ALLOWED.

DIMENSIONS, SUPPORTS AND LOADINGS SPECIFIED BY FABRICATOR TO BE VERIFIED BY BUILDING DESIGNER

BEARINGS

THIS TRUSS DESIGNED FOR CONTINUOUS BEARINGS.

THIS TRUSS REQUIRES RIGID SHEATHING ON EXPOSED FACE.

BEARING MATERIAL TO BE SPF NO.2 OR BETTER AT JOINT(S)

BRACING
TOP CHORD TO BE SHEATHED OR MAX. PURLIN SPACING = 10.00 FT.
MAX. UNBRACED BOTTOM CHORD LENGTH = 6.25 FT OR RIGID CEILING DIRECTLY APPLIED.

ALL PITCH BREAKS AND PERIMETER CORNER JOINTS MUST BE LATERALLY RESTRAINED.

LOADING
TOTAL LOAD CASES: (4)

CHORDS

MEMB. FR-TO	MAX. FACTORED FORCE (LBS)	FACTORED VERT. LOAD (PLF) FROM	TO	LC1	MAX CSI (LC)	MAX. UNBRAC LENGTH
L- B	-25 / 7	0.0	0.0	0.06	(1)	7.81
A- B	0 / 21	-77.4	-77.4	0.05	(1)	10.00
B- C	0 / 158	-77.4	-77.4	0.09	(1)	10.00
C- D	0 / 139	-77.4	-77.4	0.09	(1)	10.00
D- E	0 / 139	-77.4	-77.4	0.09	(1)	10.00
E- F	0 / 158	-77.4	-77.4	0.09	(1)	10.00
F- G	0 / 21	-77.4	-77.4	0.05	(1)	10.00
H- F	-25 / 7	0.0	0.0	0.06	(1)	7.81
L- K	-114 / 0	-17.5	-17.5	0.05	(1)	6.25
K- J	-123 / 0	-17.5	-17.5	0.04	(1)	6.25
J- I	-123 / 0	-17.5	-17.5	0.04	(1)	6.25
I- H	-114 / 0	-17.5	-17.5	0.05	(1)	6.25

WEBS

MEMB. FR-TO	MAX. FACTORED FORCE (LBS)	MAX CSI (LC)
J- D	-295 / 0	0.06 (1)
K- C	-192 / 0	0.03 (1)
I- E	-192 / 0	0.03 (1)

DESIGN CRITERIA

SPECIFIED LOADS:

TOP CH.	LL	=	23.3	PSF
	DL	=	3.0	PSF
BOT CH.	LL	=	0.0	PSF
	DL	=	7.0	PSF
TOTAL LOAD		=	33.3	PSF

SPACING = 24.0 IN. C/C

THIS TRUSS IS DESIGNED FOR RESIDENTIAL OR SMALL BUILDING REQUIREMENTS OF PART 9, NBCC 2010

THIS DESIGN COMPLIES WITH:
- PART 9 OF OBC 2012 , BCBC 2012 , ABC 2014
- CSA 086-09
- TPIC 2011

DESIGN ASSUMPTIONS
-OVERHANG NOT TO BE ALTERED OR CUT OFF.

(55 % OF 27.2 P.S.F. G.S.L. PLUS 8.4 P.S.F. RAIN LOAD) EQUALS 23.3 P.S.F. SPECIFIED ROOF LIVE LOAD

CSI: TC=0.09/1.00 (B-C:1) , BC=0.05/1.00 (H-I:1) , WB=0.06/1.00 (D-J:1) , SSI=0.09/1.00 (B-L:1)

DOL LUMBER=1.00 NAIL=1.00 LS BEND=1.10 COMP=1.10 SHEAR=1.10 TENS= 1.10

COMPANION LIVE LOAD FACTOR = 0.50

TRUSS PLATE MANUFACTURER IS NOT RESPONSIBLE FOR QUALITY CONTROL IN THE TRUSS MANUFACTURING PLANT .

NAIL VALUES

PLATE	GRIP(DRY) (PSI) MAX	MIN	SHEAR (PLI) MAX	MIN	SECTION (PLI) MAX	MIN
MT20	618	354	1667	822	2284	1656

PLATE PLACEMENT TOL. = 0.250 inches

PLATE ROTATION TOL. = 5.0 Deg.

JSI GRIP= 0.20 (D) (INPUT = 0.90)
JSI METAL= 0.07 (L) (INPUT = 1.00)

LICENSED PROFESSIONAL ENGINEER
T.L. WISE
100083566
PROVINCE OF ONTARIO
September 14, 2018

KOTT

READ ALL NOTES ON THIS PAGE AND ON THE ENGINEERING NOTE PAGE ENP-1. THE NOTE PAGE IS AN INTEGRAL PART OF THIS DRAWING AS IT CONTAINS SPECIFICATIONS AND CRITERIA USED IN THE DESIGN OF THIS COMPONENT.

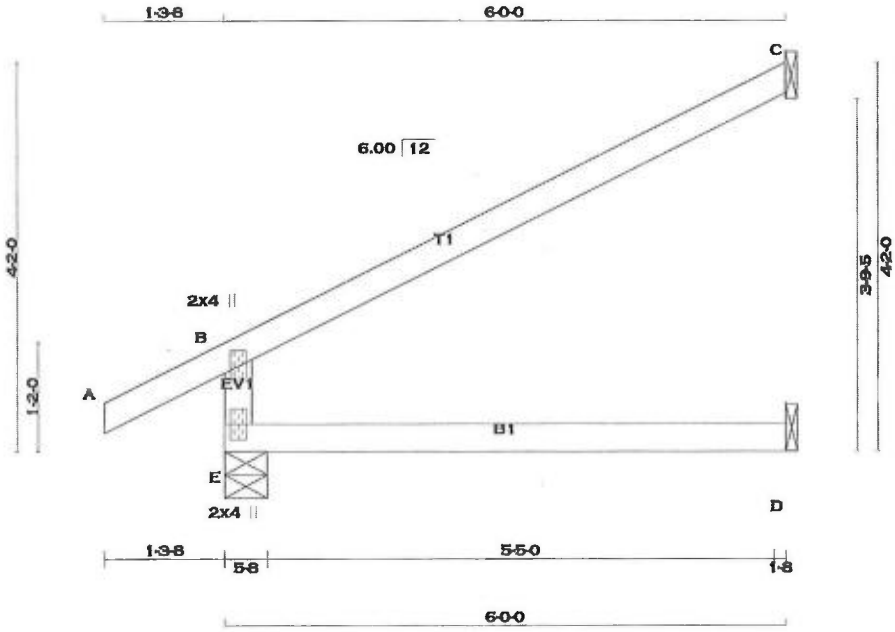

TOTAL WEIGHT = 20 X 17 = 342 lb

LUMBER
N. L. G. A. RULES

CHORDS	SIZE		LUMBER	DESCR.
E - B	2x4	DRY	No.2	SPF
A - C	2x4	DRY	No.2	SPF
E - D	2x4	DRY	No.2	SPF

DRY: SEASONED LUMBER.

PLATES (table is in inches)

JT	TYPE	PLATES	W	LEN Y	X
B	TMV+p	MT20	2.0	4.0	
E	BMV1+p	MT20	2.0	4.0	

A SIZE FOR SIZE SUBSTITUTION OF MITEK MII20 WITH TEE-LOK TL20 PLATES IS ALLOWED.

DIMENSIONS, SUPPORTS AND LOADINGS SPECIFIED BY FABRICATOR TO BE VERIFIED BY BUILDING DESIGNER

BEARINGS

JT	FACTORED GROSS REACTION VERT	HORZ	MAXIMUM FACTORED GROSS REACTION DOWN	HORZ	UPLIFT	INPUT BRG IN-SX	REQRD BRG IN-SX
E	457	0	457	0	0	5-8	1-8
C	174	0	174	0	0	1-8	1-8
D	43	0	49	0	0	1-8	1-8

SEE MITEK STANDARD DETAIL B37579H FOR CONNECTION TO JOINT(S) C , D

UNFACTORED REACTIONS

JT	1ST LCASE COMBINED	MAX./MIN. COMPONENT REACTIONS SNOW	LIVE	PERM.LIVE	WIND	DEAD	SOIL
E	318	238 / 0	0 / 0	0 / 0	0 / 0	80 / 0	0 / 0
C	118	105 / 0	0 / 0	0 / 0	0 / 0	14 / 0	0 / 0
D	35	0 / 0	0 / 0	0 / 0	0 / 0	35 / 0	0 / 0

BEARING MATERIAL TO BE SPF NO.2 OR BETTER AT JOINT(S) E

BRACING
TOP CHORD TO BE SHEATHED OR MAX. PURLIN SPACING = 6.25 FT.
MAX. UNBRACED BOTTOM CHORD LENGTH = 10.00 FT OR RIGID CEILING DIRECTLY APPLIED.

ALL PITCH BREAKS AND PERIMETER CORNER JOINTS MUST BE LATERALLY RESTRAINED.

LOADING
TOTAL LOAD CASES: (4)

CHORDS

MEMB. FR-TO	MAX. FACTORED FORCE (LBS)	FACTORED VERT. LOAD (PLF) FROM	TO	LC1 MAX CSI (LC)	MAX. UNBRAC LENGTH
E- B	-395 / 0	0.0	0.0	0.13 (4)	7.81
A- B	0 / 23	-77.4	-77.4	0.10 (1)	10.00
B- C	-26 / 0	-77.4	-77.4	0.47 (1)	6.25
E- D	0 / 0	-17.5	-17.5	0.13 (4)	10.00

WEBS

MEMB. FR-TO	MAX. FACTORED FORCE (LBS)	MAX CSI (LC)

DESIGN CRITERIA

SPECIFIED LOADS:

TOP CH.	LL	=	23.3	PSF
	DL	=	3.0	PSF
BOT CH.	LL	=	0.0	PSF
	DL	=	7.0	PSF
TOTAL LOAD		=	33.3	PSF

SPACING = 24.0 IN. C/C

THIS TRUSS IS DESIGNED FOR RESIDENTIAL OR SMALL BUILDING REQUIREMENTS OF PART 9, NBCC 2010

THIS DESIGN COMPLIES WITH:
- PART 9 OF OBC 2012 , BCBC 2012 , ABC 2014
- CSA 086-09
- TPIC 2011

DESIGN ASSUMPTIONS
-OVERHANG NOT TO BE ALTERED OR CUT OFF.

(55 % OF 27.2 P.S.F. G.S.L. PLUS 8.4 P.S.F. RAIN LOAD) EQUALS 23.3 P.S.F. SPECIFIED ROOF LIVE LOAD

ALLOWABLE DEFL.(LL)= L/360 (0.20")
CALCULATED VERT. DEFL.(LL) = L/ 999 (0.00")
ALLOWABLE DEFL.(TL)= L/360 (0.20")
CALCULATED VERT. DEFL.(TL) = L/ 999 (0.03")

CSI: TC=0.47/1.00 (B-C:1) , BC=0.13/1.00 (D-E:4) , WB=0.00/1.00 (n/a:0) , SSI=0.20/1.00 (B-C:1)

DOL LUMBER=1.00 NAIL=1.00 LS BEND=1.10 COMP=1.10 SHEAR=1.10 TENS= 1.10

COMPANION LIVE LOAD FACTOR = 0.50

AUTOSOLVE RIGHT HEEL ONLY

TRUSS PLATE MANUFACTURER IS NOT RESPONSIBLE FOR QUALITY CONTROL IN THE TRUSS MANUFACTURING PLANT .

NAIL VALUES

PLATE	GRIP(DRY) (PSI) MAX	MIN	SHEAR (PLI) MAX	MIN	SECTION (PLI) MAX	MIN
MT20	618	354	1667	822	2284	1656

PLATE PLACEMENT TOL. = 0.250 inches

PLATE ROTATION TOL. = 5.0 Deg.

JSI GRIP= 0.23 (B) (INPUT = 0.90)
JSI METAL= 0.09 (B) (INPUT = 1.00)

LICENSED PROFESSIONAL ENGINEER
T.L. WISE
100083566
PROVINCE OF ONTARIO

September 14, 2018

KOTT

READ ALL NOTES ON THIS PAGE AND ON THE ENGINEERING NOTE PAGE ENP-1. THE NOTE PAGE IS AN INTEGRAL PART OF THIS DRAWING AS IT CONTAINS SPECIFICATIONS AND CRITERIA USED IN THE DESIGN OF THIS COMPONENT.

JOB NAME	TRUSS NAME	QUANTITY	PLY	JOB DESC. / TRUSS DESC.	DRWG NO.	
TW0918-068	T01	2	1	TR - GREENPARK - MINNISALE HOMES - MILLWOOD 2 ELE 2	TW0918-068	Page 12 of 24

Kott, Ottawa,Ontario, TW

Version 8.210 S Mar 12 2018 MiTek Industries, Inc. Fri Sep 14 09:30:09 2018 Page 1
ID:GvG8oeB5QNkqs?aXtV?B3Fz4ISM-GKWdjA8ICUESOmJK5HGt0VM?oW_sHKy?raoZd5ydmeS

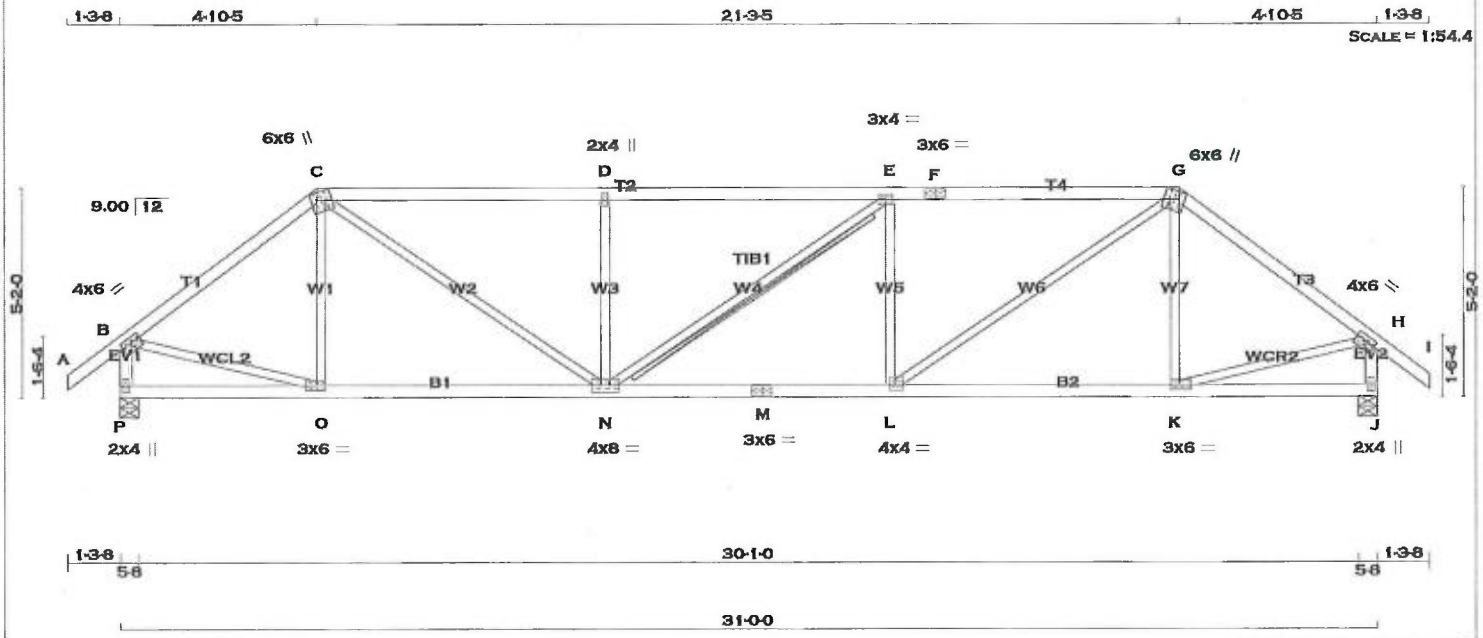

TOTAL WEIGHT = 2 X 123 = 246 lb [M]

LUMBER
N. L. G. A. RULES

CHORDS	SIZE		LUMBER	DESCR.
A - C	2x4	DRY	No.2	SPF
C - F	2x4	DRY	No.2	SPF
F - G	2x4	DRY	No.2	SPF
G - I	2x4	DRY	No.2	SPF
P - B	2x4	DRY	No.2	SPF
J - H	2x4	DRY	No.2	SPF
P - M	2x4	DRY	No.2	SPF
M - J	2x4	DRY	No.2	SPF
ALL WEBS EXCEPT	2x3	DRY	No.2	SPF

DRY: SEASONED LUMBER.

PLATES (table is in inches)

JT	TYPE	PLATES	W	LEN	Y	X
B	TMVW-t	MT20	4.0	6.0	1.50	2.75
C	TTWW+m	MT20	6.0	6.0	Edge	4.25
D	TMW+w	MT20	2.0	4.0		
E	TMWW-t	MT20	3.0	4.0		
F	TS-t	MT20	3.0	6.0		
G	TTWW+m	MT20	6.0	6.0	Edge	4.25
H	TMVW-t	MT20	4.0	6.0	1.50	2.75
J	BMV1+p	MT20	2.0	4.0		
K	BMWW-t	MT20	3.0	6.0	1.50	2.50
L	BMWW-t	MT20	4.0	4.0	1.75	1.50
M	BS-t	MT20	3.0	6.0		
N	BMWWW-t	MT20	4.0	8.0		
O	BMWW-t	MT20	3.0	6.0	1.50	2.50
P	BMV1+p	MT20	2.0	4.0		

Edge - INDICATES REFERENCE CORNER OF PLATE TOUCHES EDGE OF CHORD.

A SIZE FOR SIZE SUBSTITUTION OF MITEK MII20 WITH TEE-LOK TL20 PLATES IS ALLOWED.

DIMENSIONS, SUPPORTS AND LOADINGS SPECIFIED BY FABRICATOR TO BE VERIFIED BY BUILDING DESIGNER

BEARINGS

JT	FACTORED GROSS REACTION VERT	HORZ	MAXIMUM FACTORED GROSS REACTION DOWN	HORZ	UPLIFT	INPUT BRG IN-SX	REQRD BRG IN-SX
P	1577	0	1577	0	0	5-8	2-11
J	1577	0	1577	0	0	5-8	2-11

UNFACTORED REACTIONS

JT	1ST LCASE COMBINED	MAX./MIN. COMPONENT REACTIONS SNOW	LIVE	PERM.LIVE	WIND	DEAD	SOIL
P	1104	786 / 0	0 / 0	0 / 0	0 / 0	318 / 0	0 / 0
J	1104	786 / 0	0 / 0	0 / 0	0 / 0	318 / 0	0 / 0

BEARING MATERIAL TO BE SPF NO.2 OR BETTER AT JOINT(S) P, J

BRACING
TOP CHORD TO BE SHEATHED OR MAX. PURLIN SPACING = 3.72 FT.
MAX. UNBRACED BOTTOM CHORD LENGTH = 10.00 FT OR RIGID CEILING DIRECTLY APPLIED.

ALL PITCH BREAKS AND PERIMETER CORNER JOINTS MUST BE LATERALLY RESTRAINED.

2x4 DRY SPF No.2 T-BRACE AT E-N

FASTEN T AND I-BRACES TO NARROW EDGE OF WEB WITH ONE ROW PER PLY OF 3" COMMON WIRE NAILS @ 6" O.C. WITH 3" MINIMUM END DISTANCE. BRACE MUST COVER 90% OF WEB LENGTH.

END VERTICAL(S) MUST BE SHEATHED OR HAVE BRACES AS INDICATED IN THE MAX. UNBRACED LENGTH COLUMN OF THE TABLE BELOW

LOADING
TOTAL LOAD CASES: (4)

CHORDS

MEMB. FR-TO	MAX. FACTORED FORCE (LBS)	FACTORED VERT. LOAD LC1 (PLF) FROM	TO	MAX CSI (LC)	MAX. UNBRAC LENGTH
A- B	0 / 32	-77.4	-77.4	0.11 (1)	10.00
B- C	-1577 / 0	-77.4	-77.4	0.39 (1)	4.82
C- D	-2306 / 0	-77.4	-77.4	0.79 (1)	3.72
D- E	-2306 / 0	-77.4	-77.4	0.78 (1)	3.72
E- F	-2307 / 0	-77.4	-77.4	0.78 (1)	3.72
F- G	-2307 / 0	-77.4	-77.4	0.78 (1)	3.72
G- H	-1577 / 0	-77.4	-77.4	0.39 (1)	4.83
H- I	0 / 32	-77.4	-77.4	0.11 (1)	10.00
P- B	-1546 / 0	0.0	0.0	0.16 (1)	6.62
J- H	-1546 / 0	0.0	0.0	0.16 (1)	6.62
P- O	0 / 0	-17.5	-17.5	0.15 (4)	10.00
O- N	0 / 1255	-17.5	-17.5	0.29 (1)	10.00
N- M	0 / 2307	-17.5	-17.5	0.46 (1)	10.00
M- L	0 / 2307	-17.5	-17.5	0.46 (1)	10.00
L- K	0 / 1255	-17.5	-17.5	0.29 (1)	10.00
K- J	0 / 0	-17.5	-17.5	0.15 (4)	10.00

WEBS

MEMB. FR-TO	MAX. FACTORED FORCE (LBS)	MAX CSI (LC)
O- C	-184 / 39	0.07 (1)
C- N	0 / 1272	0.29 (1)
N- D	-594 / 0	0.23 (1)
N- E	0 / 0	0.00 (1)
L- E	-593 / 0	0.23 (1)
L- G	0 / 1272	0.29 (1)
K- G	-185 / 39	0.07 (1)
B- O	0 / 1295	0.29 (1)
K- H	0 / 1295	0.29 (1)

DESIGN CRITERIA

SPECIFIED LOADS:

TOP CH.	LL	=	23.3	PSF
	DL	=	3.0	PSF
BOT CH.	LL	=	0.0	PSF
	DL	=	7.0	PSF
TOTAL LOAD		=	33.3	PSF

SPACING = 24.0 IN. C/C

LOADING IN FLAT SECTION BASED ON A SLOPE OF 2.00/12 MINIMUM

THIS TRUSS IS DESIGNED FOR RESIDENTIAL OR SMALL BUILDING REQUIREMENTS OF PART 9, NBCC 2010

THIS DESIGN COMPLIES WITH:
- PART 9 OF OBC 2012 , BCBC 2012 , ABC 2014
- CSA 086-09
- TPIC 2011

(55 % OF 27.2 P.S.F. G.S.L. PLUS 8.4 P.S.F. RAIN LOAD) EQUALS 23.3 P.S.F. SPECIFIED ROOF LIVE LOAD

ALLOWABLE DEFL.(LL)= L/360 (1.03")
CALCULATED VERT. DEFL.(LL) = L/ 999 (0.12")
ALLOWABLE DEFL.(TL)= L/360 (1.03")
CALCULATED VERT. DEFL.(TL) = L/ 999 (0.24")

CSI: TC=0.79/1.00 (C-D:1) , BC=0.46/1.00 (L-N:1) , WB=0.29/1.00 (B-O:1) , SSI=0.26/1.00 (C-D:1)

DOL LUMBER=1.00 NAIL=1.00 LS BEND=1.10 COMP=1.10 SHEAR=1.10 TENS= 1.10

COMPANION LIVE LOAD FACTOR = 0.50

TRUSS PLATE MANUFACTURER IS NOT RESPONSIBLE FOR QUALITY CONTROL IN THE TRUSS MANUFACTURING PLANT .

NAIL VALUES

PLATE	GRIP(DRY) (PSI) MAX	MIN	SHEAR (PLI) MAX	MIN	SECTION (PLI) MAX	MIN
MT20	618	354	1667	822	2284	1656

PLATE PLACEMENT TOL. = 0.250 inches

PLATE ROTATION TOL. = 5.0 Deg.

JSI GRIP= 0.88 (O) (INPUT = 0.90)
JSI METAL= 0.68 (M) (INPUT = 1.00)

LICENSED PROFESSIONAL ENGINEER
T.L. WISE
100083566
PROVINCE OF ONTARIO

September 14, 2018

KOTT

READ ALL NOTES ON THIS PAGE AND ON THE ENGINEERING NOTE PAGE ENP-1. THE NOTE PAGE IS AN INTEGRAL PART OF THIS DRAWING AS IT CONTAINS SPECIFICATIONS AND CRITERIA USED IN THE DESIGN OF THIS COMPONENT.

JOB NAME	TRUSS NAME	QUANTITY	PLY	JOB DESC.	DRWG NO.
TW0918-068	T02	2	1	TR - GREENPARK - MINNISALE HOMES - MILLWOOD 2 ELE 2 TRUSS DESC.	Page 13 of 24 TW0918-068

Kott, Ottawa,Ontario, TW

Version 8.210 S Mar 12 2018 MiTek Industries, Inc. Fri Sep 14 09:30:10 2018 Page 1
ID:GvG8oeB5QNkqs?aXtV?B3Fz4ISM-kX4?wV9wzoMJ0wuWf?n6YjvC7wMR0nu83EY79XydmeR

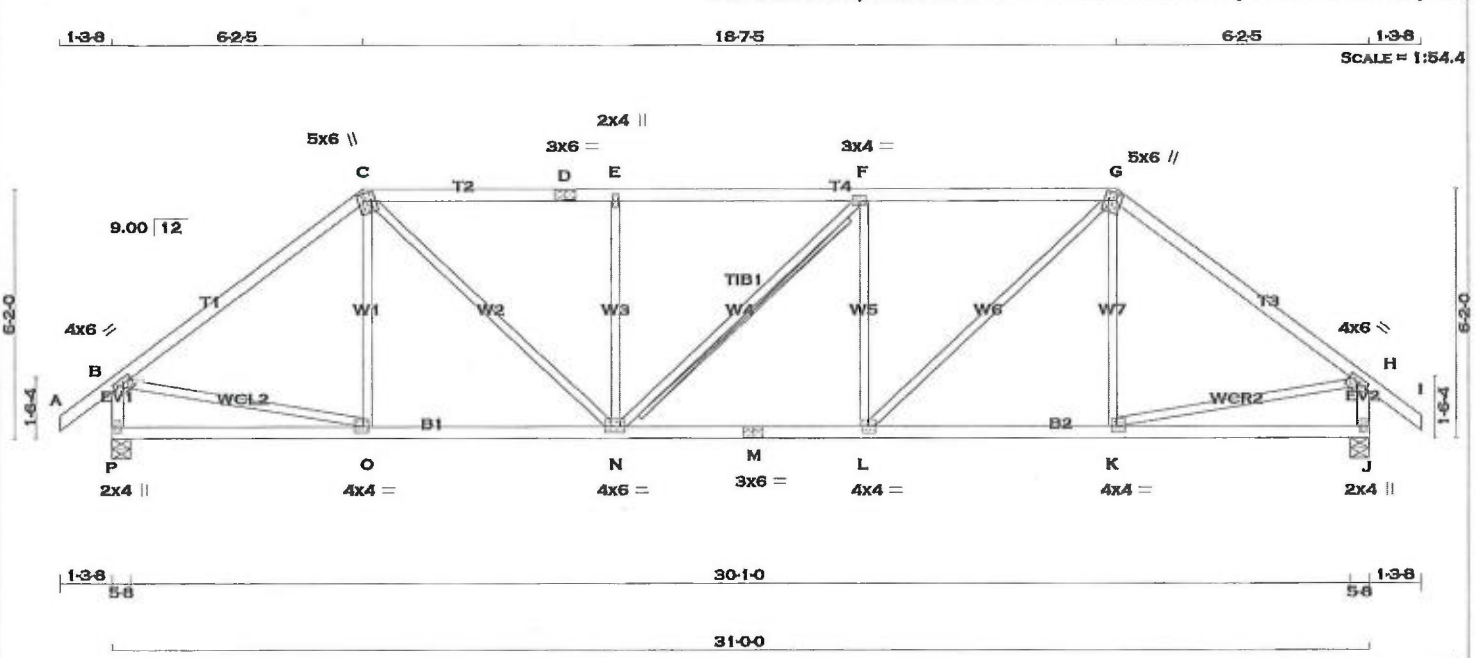

TOTAL WEIGHT = 2 X 129 = 257 lb

LUMBER
N. L. G. A. RULES

CHORDS	SIZE		LUMBER	DESCR.
A - C	2x4	DRY	No.2	SPF
C - D	2x4	DRY	No.2	SPF
D - G	2x4	DRY	No.2	SPF
G - I	2x4	DRY	No.2	SPF
P - B	2x4	DRY	No.2	SPF
J - H	2x4	DRY	No.2	SPF
P - M	2x4	DRY	No.2	SPF
M - J	2x4	DRY	No.2	SPF
ALL WEBS EXCEPT	2x3	DRY	No.2	SPF

DRY: SEASONED LUMBER.

PLATES (table is in Inches)

JT	TYPE	PLATES	W	LEN	Y	X
B	TMVW-t	MT20	4.0	6.0	1.50	2.75
C	TTWW+m	MT20	5.0	6.0	2.00	1.50
D	TS-t	MT20	3.0	6.0		
E	TMW+w	MT20	2.0	4.0		
F	TMWW-t	MT20	3.0	4.0		
G	TTWW+m	MT20	5.0	6.0	2.00	1.50
H	TMVW-t	MT20	4.0	6.0	1.50	2.75
J	BMV1+p	MT20	2.0	4.0		
K	BMWW-t	MT20	4.0	4.0	1.75	1.50
L	BMWW-t	MT20	4.0	4.0	2.00	1.75
M	BS-t	MT20	3.0	6.0		
N	BMWWW-t	MT20	4.0	6.0	1.75	2.00
O	BMWW-t	MT20	4.0	4.0	1.75	1.50
P	BMV1+p	MT20	2.0	4.0		

A SIZE FOR SIZE SUBSTITUTION OF MITEK MII20 WITH TEE-LOK TL20 PLATES IS ALLOWED.

LICENSED PROFESSIONAL ENGINEER
T.L. WISE
100083566
PROVINCE OF ONTARIO
September 14, 2018

DIMENSIONS, SUPPORTS AND LOADINGS SPECIFIED BY FABRICATOR TO BE VERIFIED BY BUILDING DESIGNER

BEARINGS

JT	FACTORED GROSS REACTION VERT	HORZ	MAXIMUM FACTORED GROSS REACTION DOWN	HORZ	UPLIFT	INPUT BRG IN-SX	REQRD BRG IN-SX
P	1577	0	1577	0	0	5-8	2-11
J	1577	0	1577	0	0	5-8	2-11

UNFACTORED REACTIONS

JT	1ST LCASE COMBINED	MAX./MIN. COMPONENT REACTIONS SNOW	LIVE	PERM.LIVE	WIND	DEAD	SOIL
P	1104	786 / 0	0 / 0	0 / 0	0 / 0	318 / 0	0 / 0
J	1104	786 / 0	0 / 0	0 / 0	0 / 0	318 / 0	0 / 0

BEARING MATERIAL TO BE SPF NO.2 OR BETTER AT JOINT(S) P, J

BRACING
TOP CHORD TO BE SHEATHED OR MAX. PURLIN SPACING = 4.30 FT.
MAX. UNBRACED BOTTOM CHORD LENGTH = 10.00 FT OR RIGID CEILING DIRECTLY APPLIED.

ALL PITCH BREAKS AND PERIMETER CORNER JOINTS MUST BE LATERALLY RESTRAINED.

2x4 DRY SPF No.2 T-BRACE AT F-N

FASTEN T AND I-BRACES TO NARROW EDGE OF WEB WITH ONE ROW PER PLY OF 3" COMMON WIRE NAILS @ 6" O.C. WITH 3" MINIMUM END DISTANCE. BRACE MUST COVER 90% OF WEB LENGTH.

END VERTICAL(S) MUST BE SHEATHED OR HAVE BRACES AS INDICATED IN THE MAX. UNBRACED LENGTH COLUMN OF THE TABLE BELOW

LOADING
TOTAL LOAD CASES: (4)

CHORDS

MEMB. FR-TO	MAX. FACTORED FORCE (LBS)	FACTORED VERT. LOAD LC1 (PLF) FROM	TO	MAX CSI (LC)	MAX. UNBRAC LENGTH
A- B	0 / 32	-77.4	-77.4	0.11 (1)	10.00
B- C	-1576 / 0	-77.4	-77.4	0.68 (1)	4.46
C- D	-1919 / 0	-77.4	-77.4	0.52 (1)	4.32
D- E	-1919 / 0	-77.4	-77.4	0.52 (1)	4.32
E- F	-1919 / 0	-77.4	-77.4	0.52 (1)	4.30
F- G	-1920 / 0	-77.4	-77.4	0.53 (1)	4.30
G- H	-1576 / 0	-77.4	-77.4	0.68 (1)	4.46
H- I	0 / 32	-77.4	-77.4	0.11 (1)	10.00
P- B	-1533 / 0	0.0	0.0	0.16 (1)	6.64
J- H	-1533 / 0	0.0	0.0	0.16 (1)	6.65
P- O	0 / 0	-17.5	-17.5	0.17 (4)	10.00
O- N	0 / 1257	-17.5	-17.5	0.30 (1)	10.00
N- M	0 / 1920	-17.5	-17.5	0.37 (1)	10.00
M- L	0 / 1920	-17.5	-17.5	0.37 (1)	10.00
L- K	0 / 1257	-17.5	-17.5	0.29 (1)	10.00
K- J	0 / 0	-17.5	-17.5	0.16 (4)	10.00

WEBS

MEMB. FR-TO	MAX. FACTORED FORCE (LBS)	MAX CSI (LC)
O- C	-114 / 66	0.07 (1)
C- N	0 / 907	0.20 (1)
N- E	-517 / 0	0.31 (1)
N- F	-2 / 0	0.00 (1)
L- F	-519 / 0	0.31 (1)
L- G	0 / 910	0.20 (1)
K- G	-115 / 66	0.07 (1)
B- O	0 / 1282	0.29 (1)
K- H	0 / 1281	0.29 (1)

KOTT

READ ALL NOTES ON THIS PAGE AND ON THE ENGINEERING NOTE PAGE ENP-1. THE NOTE PAGE IS AN INTEGRAL PART OF THIS DRAWING AS IT CONTAINS SPECIFICATIONS AND CRITERIA USED IN THE DESIGN OF THIS COMPONENT.

[M]

DESIGN CRITERIA

SPECIFIED LOADS:

TOP CH.	LL	=	23.3	PSF
	DL	=	3.0	PSF
BOT CH.	LL	=	0.0	PSF
	DL	=	7.0	PSF
TOTAL LOAD		=	33.3	PSF

SPACING = 24.0 IN. C/C

LOADING IN FLAT SECTION BASED ON A SLOPE OF 2.00/12 MINIMUM

THIS TRUSS IS DESIGNED FOR RESIDENTIAL OR SMALL BUILDING REQUIREMENTS OF PART 9, NBCC 2010

THIS DESIGN COMPLIES WITH:
- PART 9 OF OBC 2012 , BCBC 2012 , ABC 2014
- CSA 086-09
- TPIC 2011

(55 % OF 27.2 P.S.F. G.S.L. PLUS 8.4 P.S.F. RAIN LOAD) EQUALS 23.3 P.S.F. SPECIFIED ROOF LIVE LOAD

ALLOWABLE DEFL.(LL)= L/360 (1.03")
CALCULATED VERT. DEFL.(LL) = L/ 999 (0.09")
ALLOWABLE DEFL.(TL)= L/360 (1.03")
CALCULATED VERT. DEFL.(TL) = L/ 999 (0.17")

CSI: TC=0.68/1.00 (B-C:1) , BC=0.37/1.00 (L-N:1) , WB=0.31/1.00 (F-L:1) , SSI=0.22/1.00 (F-G:1)

DOL LUMBER=1.00 NAIL=1.00 LS BEND=1.10 COMP=1.10 SHEAR=1.10 TENS= 1.10

COMPANION LIVE LOAD FACTOR = 0.50

TRUSS PLATE MANUFACTURER IS NOT RESPONSIBLE FOR QUALITY CONTROL IN THE TRUSS MANUFACTURING PLANT .

NAIL VALUES

PLATE	GRIP(DRY) (PSI) MAX	MIN	SHEAR (PLI) MAX	MIN	SECTION (PLI) MAX	MIN
MT20	618	354	1667	822	2284	1656

PLATE PLACEMENT TOL. = 0.250 inches

PLATE ROTATION TOL. = 5.0 Deg.

JSI GRIP= 0.89 (G) (INPUT = 0.90)
JSI METAL= 0.56 (M) (INPUT = 1.00)

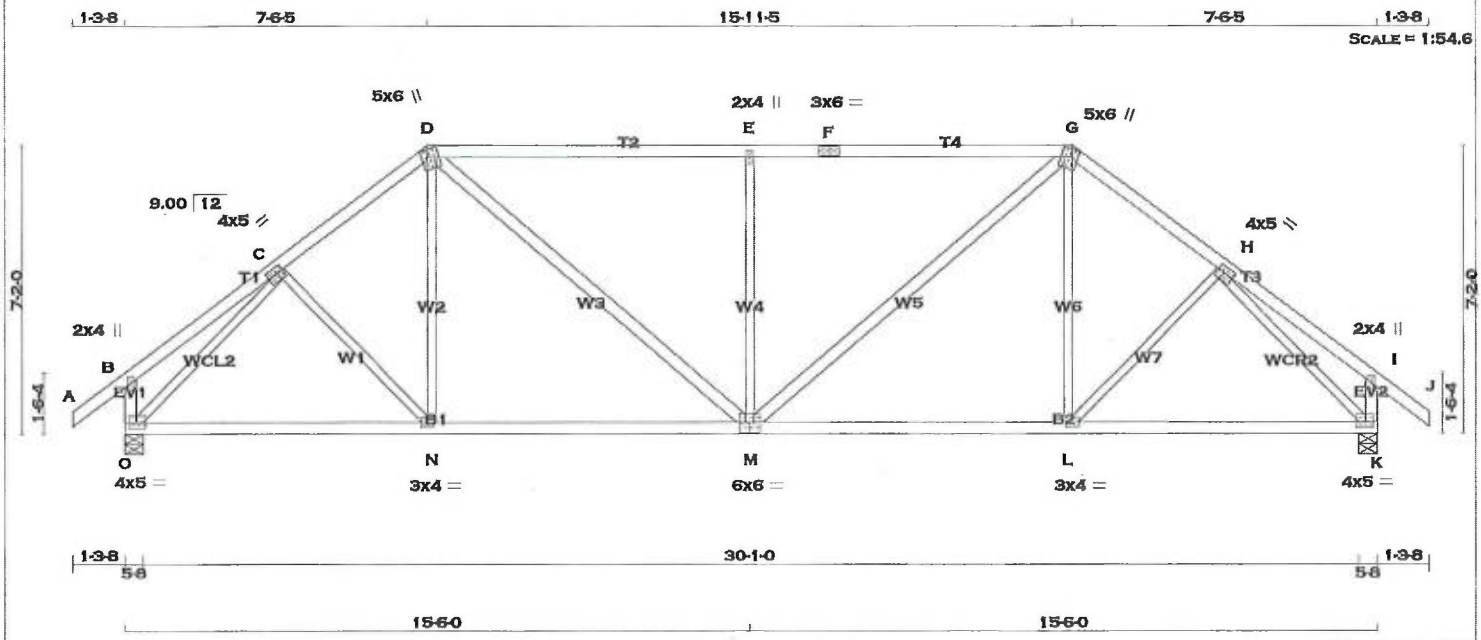

TOTAL WEIGHT = 2 X 138 = 275 lb

LUMBER
N. L. G. A. RULES

CHORDS	SIZE		LUMBER	DESCR.
A - D	2x4	DRY	No.2	SPF
D - F	2x4	DRY	2100F 1.8E	SPF
F - G	2x4	DRY	No.2	SPF
G - J	2x4	DRY	No.2	SPF
O - B	2x4	DRY	No.2	SPF
K - I	2x4	DRY	No.2	SPF
O - M	2x4	DRY	No.2	SPF
M - K	2x4	DRY	No.2	SPF
ALL WEBS	2x3	DRY	No.2	SPF
EXCEPT				
D - M	2x4	DRY	No.2	SPF
M - G	2x4	DRY	No.2	SPF

DRY: SEASONED LUMBER.

PLATES (table is in inches)

JT	TYPE	PLATES	W	LEN	Y	X
B	TMV+p	MT20	2.0	4.0		
C	TMWW-t	MT20	4.0	5.0	1.75	2.00
D	TTWW+m	MT20	5.0	6.0	2.25	1.75
E	TMW+w	MT20	2.0	4.0		
F	TS-t	MT20	3.0	6.0		
G	TTWW+m	MT20	5.0	6.0	2.25	1.75
H	TMWW-t	MT20	4.0	5.0	1.75	2.00
I	TMV+p	MT20	2.0	4.0		
K	BMVW1-t	MT20	4.0	5.0	1.75	2.25
L	BMWW-t	MT20	3.0	4.0		
M	BSWWW-l	MT20	6.0	6.0	3.25	3.00
N	BMWW-t	MT20	3.0	4.0		
O	BMVW1-t	MT20	4.0	5.0	1.75	2.25

A SIZE FOR SIZE SUBSTITUTION OF MITEK MII20 WITH TEE-LOK TL20 PLATES IS ALLOWED.

DIMENSIONS, SUPPORTS AND LOADINGS SPECIFIED BY FABRICATOR TO BE VERIFIED BY BUILDING DESIGNER

BEARINGS

JT	FACTORED GROSS REACTION VERT	HORZ	MAXIMUM FACTORED GROSS REACTION DOWN	HORZ	UPLIFT	INPUT BRG IN-SX	REQRD BRG IN-SX
O	1577	0	1577	0	0	5-8	1-13
K	1577	0	1577	0	0	5-8	1-13

UNFACTORED REACTIONS

JT	1ST LCASE COMBINED	MAX./MIN. COMPONENT REACTIONS SNOW	LIVE	PERM.LIVE	WIND	DEAD	SOIL
O	1104	786 / 0	0 / 0	0 / 0	0 / 0	318 / 0	0 / 0
K	1104	786 / 0	0 / 0	0 / 0	0 / 0	318 / 0	0 / 0

BEARING MATERIAL TO BE SPF NO.2 OR BETTER AT JOINT(S) O, K

BRACING
TOP CHORD TO BE SHEATHED OR MAX. PURLIN SPACING = 4.34 FT.
MAX. UNBRACED BOTTOM CHORD LENGTH = 10.00 FT OR RIGID CEILING DIRECTLY APPLIED.

ALL PITCH BREAKS AND PERIMETER CORNER JOINTS MUST BE LATERALLY RESTRAINED.

LOADING
TOTAL LOAD CASES: (4)

CHORDS

MEMB. FR-TO	MAX. FACTORED FORCE (LBS)	FACTORED VERT. LOAD (PLF) FROM	TO	LC1 MAX CSI (LC)	MAX. UNBRAC LENGTH
A- B	0 / 32	-77.4	-77.4	0.11 (1)	10.00
B- C	0 / 19	-77.4	-77.4	0.16 (1)	10.00
C- D	-1568 / 0	-77.4	-77.4	0.20 (1)	5.07
D- E	-1759 / 0	-77.4	-77.4	0.68 (1)	5.03
E- F	-1760 / 0	-77.4	-77.4	0.68 (1)	4.34
F- G	-1760 / 0	-77.4	-77.4	0.68 (1)	4.34
G- H	-1568 / 0	-77.4	-77.4	0.20 (1)	5.07
H- I	0 / 19	-77.4	-77.4	0.16 (1)	10.00
I- J	0 / 32	-77.4	-77.4	0.11 (1)	10.00
O- B	-220 / 0	0.0	0.0	0.02 (1)	7.81
K- I	-220 / 0	0.0	0.0	0.02 (1)	7.81
O- N	0 / 1220	-17.5	-17.5	0.34 (4)	10.00
N- M	0 / 1239	-17.5	-17.5	0.35 (4)	10.00
M- L	0 / 1239	-17.5	-17.5	0.35 (4)	10.00
L- K	0 / 1220	-17.5	-17.5	0.34 (4)	10.00

WEBS

MEMB. FR-TO	MAX. FACTORED FORCE (LBS)	MAX CSI (LC)
C- N	0 / 56	0.02 (4)
N- D	0 / 136	0.05 (4)
D- M	0 / 687	0.11 (1)
M- E	-766 / 0	0.69 (1)
M- G	0 / 687	0.11 (1)
L- G	0 / 136	0.05 (4)
L- H	0 / 56	0.02 (4)
O- C	-1786 / 0	0.87 (1)
H- K	-1786 / 0	0.87 (1)

DESIGN CRITERIA

SPECIFIED LOADS:

TOP CH.	LL	=	23.3	PSF	
	DL	=	3.0	PSF	
BOT CH.	LL	=	0.0	PSF	
	DL	=	7.0	PSF	
TOTAL LOAD		=	33.3	PSF	

SPACING = 24.0 IN. C/C

LOADING IN FLAT SECTION BASED ON A SLOPE OF 2.00/12 MINIMUM

THIS TRUSS IS DESIGNED FOR RESIDENTIAL OR SMALL BUILDING REQUIREMENTS OF PART 9, NBCC 2010

THIS DESIGN COMPLIES WITH:
- PART 9 OF OBC 2012 , BCBC 2012 , ABC 2014
- CSA 086-09
- TPIC 2011

(55 % OF 27.2 P.S.F. G.S.L. PLUS 8.4 P.S.F. RAIN LOAD) EQUALS 23.3 P.S.F. SPECIFIED ROOF LIVE LOAD

ALLOWABLE DEFL.(LL)= L/360 (1.03")
CALCULATED VERT. DEFL.(LL) = L/ 999 (0.07")
ALLOWABLE DEFL.(TL)= L/360 (1.03")
CALCULATED VERT. DEFL.(TL) = L/ 999 (0.14")

CSI: TC=0.68/1.00 (E-G:1) , BC=0.35/1.00 (L-M:4) , WB=0.87/1.00 (H-K:1) , SSI=0.30/1.00 (D-E:1)

DOL LUMBER=1.00 NAIL=1.00 LS BEND=1.10 COMP=1.10 SHEAR=1.10 TENS= 1.10

COMPANION LIVE LOAD FACTOR = 0.50

TRUSS PLATE MANUFACTURER IS NOT RESPONSIBLE FOR QUALITY CONTROL IN THE TRUSS MANUFACTURING PLANT .

NAIL VALUES

PLATE	GRIP(DRY) (PSI) MAX	MIN	SHEAR (PLI) MAX	MIN	SECTION (PLI) MAX	MIN
MT20	618	354	1667	822	2284	1656

PLATE PLACEMENT TOL. = 0.250 inches

PLATE ROTATION TOL. = 5.0 Deg.

JSI GRIP= 0.89 (H) (INPUT = 0.90)
JSI METAL= 0.53 (H) (INPUT = 1.00)

LICENSED PROFESSIONAL ENGINEER
T.L. WISE
100083566
PROVINCE OF ONTARIO

September 14, 2018

KOTT

READ ALL NOTES ON THIS PAGE AND ON THE ENGINEERING NOTE PAGE ENP-1. THE NOTE PAGE IS AN INTEGRAL PART OF THIS DRAWING AS IT CONTAINS SPECIFICATIONS AND CRITERIA USED IN THE DESIGN OF THIS COMPONENT.

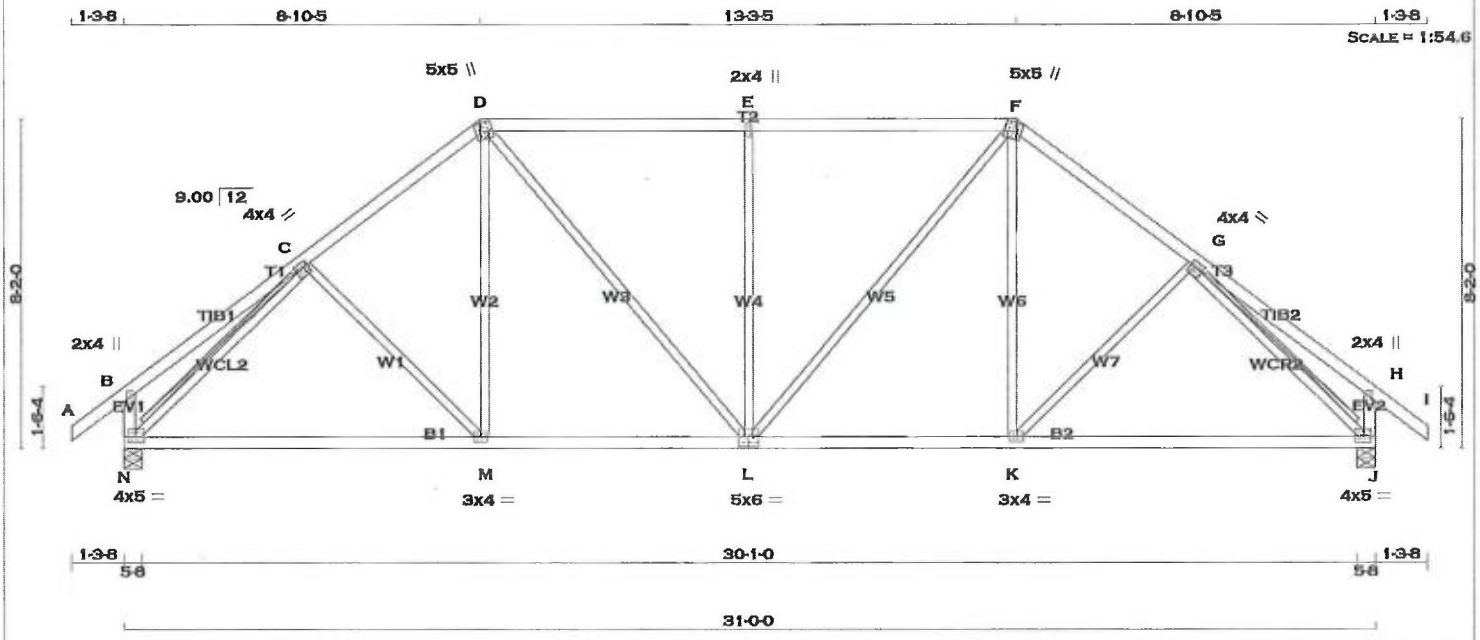

TOTAL WEIGHT = 2 X 137 = 273 lb

[M][F]

LUMBER

N. L. G. A. RULES

CHORDS	SIZE		LUMBER	DESCR.
A - D	2x4	DRY	No.2	SPF
D - F	2x4	DRY	No.2	SPF
F - I	2x4	DRY	No.2	SPF
N - B	2x4	DRY	No.2	SPF
J - H	2x4	DRY	No.2	SPF
N - L	2x4	DRY	No.2	SPF
L - J	2x4	DRY	No.2	SPF
ALL WEBS EXCEPT	2x3	DRY	No.2	SPF

DRY: SEASONED LUMBER.

PLATES (table is in inches)

JT	TYPE	PLATES	W	LEN	Y	X
B	TMV+p	MT20	2.0	4.0		
C	TMWW-t	MT20	4.0	4.0	1.50	1.50
D	TTWW+m	MT20	5.0	5.0	2.25	1.50
E	TMW+w	MT20	2.0	4.0		
F	TTWW+m	MT20	5.0	5.0	2.25	1.50
G	TMWW-t	MT20	4.0	4.0	1.50	1.50
H	TMV+p	MT20	2.0	4.0		
J	BMVW1-t	MT20	4.0	5.0	1.75	2.25
K	BMWW-t	MT20	3.0	4.0		
L	BSWWW-l	MT20	5.0	6.0	3.00	3.00
M	BMWW-t	MT20	3.0	4.0		
N	BMVW1-t	MT20	4.0	5.0	1.75	2.25

A SIZE FOR SIZE SUBSTITUTION OF MITEK MII20 WITH TEE-LOK TL20 PLATES IS ALLOWED.

DIMENSIONS, SUPPORTS AND LOADINGS SPECIFIED BY FABRICATOR TO BE VERIFIED BY BUILDING DESIGNER

BEARINGS

JT	FACTORED GROSS REACTION VERT	HORZ	MAXIMUM GROSS REACTION DOWN	HORZ	FACTORED UPLIFT	INPUT BRG IN-SX	REQRD BRG IN-SX
N	1577	0	1577	0	0	5-8	1-12
J	1577	0	1577	0	0	5-8	1-12

UNFACTORED REACTIONS

JT	1ST LCASE COMBINED	MAX./MIN. COMPONENT REACTIONS SNOW	LIVE	PERM.LIVE	WIND	DEAD	SOIL
N	1104	786 / 0	0 / 0	0 / 0	0 / 0	318 / 0	0 / 0
J	1104	786 / 0	0 / 0	0 / 0	0 / 0	318 / 0	0 / 0

BEARING MATERIAL TO BE SPF NO.2 OR BETTER AT JOINT(S) N, J

BRACING

TOP CHORD TO BE SHEATHED OR MAX. PURLIN SPACING = 4.79 FT.
MAX. UNBRACED BOTTOM CHORD LENGTH = 10.00 FT OR RIGID CEILING DIRECTLY APPLIED.

ALL PITCH BREAKS AND PERIMETER CORNER JOINTS MUST BE LATERALLY RESTRAINED.

2x4 DRY SPF No.2 T-BRACE AT C-N, G-J

FASTEN T AND I-BRACES TO NARROW EDGE OF WEB WITH ONE ROW PER PLY OF 3" COMMON WIRE NAILS @ 6" O.C. WITH 3" MINIMUM END DISTANCE. BRACE MUST COVER 90% OF WEB LENGTH.

END VERTICAL(S) MUST BE SHEATHED OR HAVE BRACES AS INDICATED IN THE MAX. UNBRACED LENGTH COLUMN OF THE TABLE BELOW

LOADING

TOTAL LOAD CASES: (4)

CHORDS

MEMB. FR-TO	MAX. FACTORED FORCE (LBS)	FACTORED VERT. LOAD (PLF) FROM	TO	LC1 CSI (LC)	MAX. UNBRAC LENGTH
A- B	0 / 32	-77.4	-77.4	0.11 (1)	10.00
B- C	0 / 23	-77.4	-77.4	0.24 (1)	10.00
C- D	-1525 / 0	-77.4	-77.4	0.22 (1)	5.12
D- E	-1502 / 0	-77.4	-77.4	0.48 (1)	4.79
E- F	-1502 / 0	-77.4	-77.4	0.48 (1)	4.79
F- G	-1525 / 0	-77.4	-77.4	0.22 (1)	5.12
G- H	0 / 23	-77.4	-77.4	0.24 (1)	10.00
H- I	0 / 32	-77.4	-77.4	0.11 (1)	10.00
N- B	-238 / 0	0.0	0.0	0.02 (1)	7.81
J- H	-238 / 0	0.0	0.0	0.02 (1)	7.81
N- M	0 / 1249	-17.5	-17.5	0.40 (4)	10.00
M- L	0 / 1202	-17.5	-17.5	0.40 (4)	10.00
L- K	0 / 1202	-17.5	-17.5	0.40 (4)	10.00
K- J	0 / 1249	-17.5	-17.5	0.40 (4)	10.00

WEBS

MEMB. FR-TO	MAX. FACTORED FORCE (LBS)	MAX CSI (LC)
C- M	-71 / 38	0.05 (1)
M- D	0 / 216	0.06 (4)
D- L	0 / 466	0.10 (1)
L- E	-630 / 0	0.82 (1)
L- F	0 / 466	0.10 (1)
K- F	0 / 216	0.06 (4)
K- G	-71 / 38	0.05 (1)
N- C	-1785 / 0	0.53 (1)
G- J	-1785 / 0	0.53 (1)

DESIGN CRITERIA

SPECIFIED LOADS:

TOP CH.	LL	=	23.3	PSF
	DL	=	3.0	PSF
BOT CH.	LL	=	0.0	PSF
	DL	=	7.0	PSF
TOTAL LOAD		=	33.3	PSF

SPACING = 24.0 IN. C/C

LOADING IN FLAT SECTION BASED ON A SLOPE OF 2.00/12 MINIMUM

THIS TRUSS IS DESIGNED FOR RESIDENTIAL OR SMALL BUILDING REQUIREMENTS OF PART 9, NBCC 2010

THIS DESIGN COMPLIES WITH:
- PART 9 OF OBC 2012 , BCBC 2012 , ABC 2014
- CSA 086-09
- TPIC 2011

(55 % OF 27.2 P.S.F. G.S.L. PLUS 8.4 P.S.F. RAIN LOAD) EQUALS 23.3 P.S.F. SPECIFIED ROOF LIVE LOAD

ALLOWABLE DEFL.(LL)= L/360 (1.03")
CALCULATED VERT. DEFL.(LL) = L/ 999 (0.07")
ALLOWABLE DEFL.(TL)= L/360 (1.03")
CALCULATED VERT. DEFL.(TL) = L/ 999 (0.20")

CSI: TC=0.48/1.00 (D-E:1) , BC=0.40/1.00 (K-L:4) , WB=0.82/1.00 (E-L:1) , SSI=0.25/1.00 (D-E:1)

DOL LUMBER=1.00 NAIL=1.00 LS BEND=1.10 COMP=1.10 SHEAR=1.10 TENS= 1.10

COMPANION LIVE LOAD FACTOR = 0.50

TRUSS PLATE MANUFACTURER IS NOT RESPONSIBLE FOR QUALITY CONTROL IN THE TRUSS MANUFACTURING PLANT .

NAIL VALUES

PLATE	GRIP(DRY) (PSI) MAX	MIN	SHEAR (PLI) MAX	MIN	SECTION (PLI) MAX	MIN
MT20	618	354	1667	822	2284	1656

PLATE PLACEMENT TOL. = 0.250 inches

PLATE ROTATION TOL. = 5.0 Deg.

JSI GRIP= 0.89 (C) (INPUT = 0.90)
JSI METAL= 0.66 (C) (INPUT = 1.00)

LICENSED PROFESSIONAL ENGINEER
T.L. WISE
100083566
PROVINCE OF ONTARIO

September 14, 2018

KOTT

READ ALL NOTES ON THIS PAGE AND ON THE ENGINEERING NOTE PAGE ENP-1. THE NOTE PAGE IS AN INTEGRAL PART OF THIS DRAWING AS IT CONTAINS SPECIFICATIONS AND CRITERIA USED IN THE DESIGN OF THIS COMPONENT.

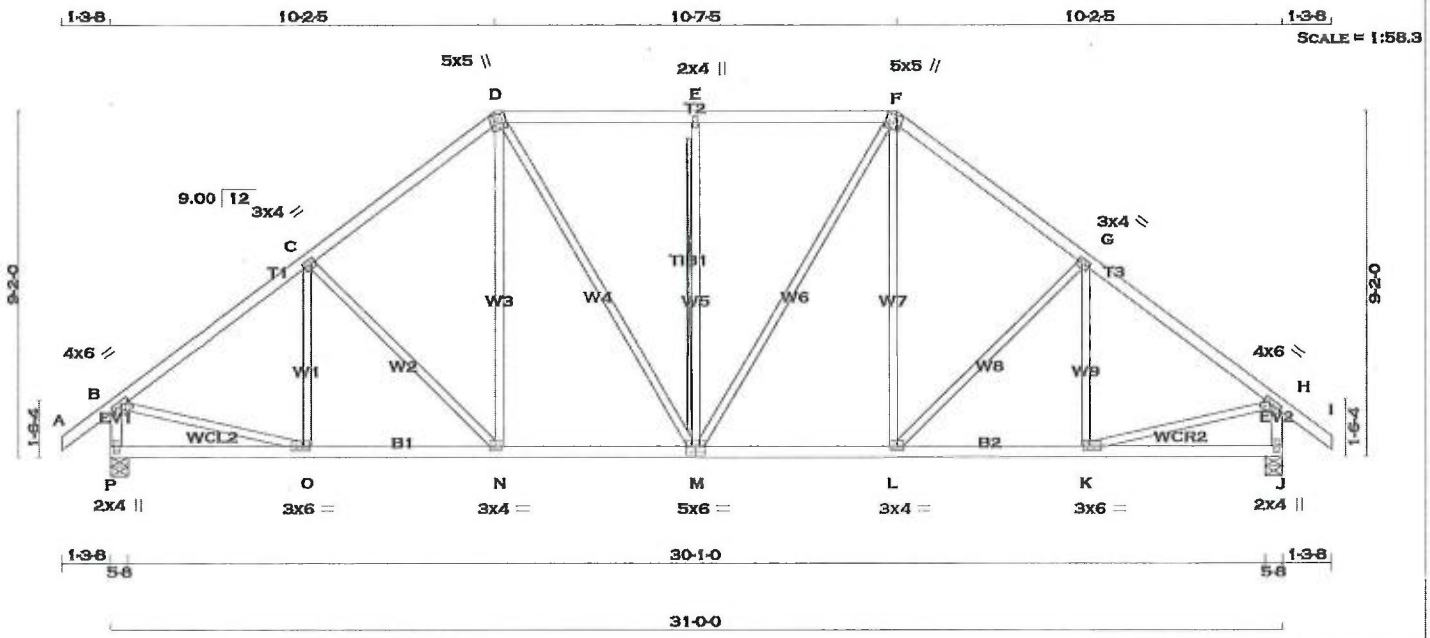

TOTAL WEIGHT = 2 X 147 = 295 lb

LUMBER

N. L. G. A. RULES

CHORDS	SIZE		LUMBER	DESCR.
A - D	2x4	DRY	No.2	SPF
D - F	2x4	DRY	No.2	SPF
F - I	2x4	DRY	No.2	SPF
P - B	2x4	DRY	No.2	SPF
J - H	2x4	DRY	No.2	SPF
P - M	2x4	DRY	No.2	SPF
M - J	2x4	DRY	No.2	SPF
ALL WEBS EXCEPT	2x3	DRY	No.2	SPF

DRY: SEASONED LUMBER.

PLATES (table is in Inches)

JT	TYPE	PLATES	W	LEN	Y	X
B	TMVW-t	MT20	4.0	6.0	1.50	2.75
C	TMWW-t	MT20	3.0	4.0	1.50	1.50
D	TTWW+m	MT20	5.0	5.0	2.25	1.50
E	TMW+w	MT20	2.0	4.0		
F	TTWW+m	MT20	5.0	5.0	2.25	1.50
G	TMWW-t	MT20	3.0	4.0	1.50	1.50
H	TMVW-t	MT20	4.0	6.0	1.50	2.75
J	BMV1+p	MT20	2.0	4.0		
K	BMWW-t	MT20	3.0	6.0	1.50	2.25
L	BMWW-t	MT20	3.0	4.0		
M	BSWWW-I	MT20	5.0	6.0	3.00	3.00
N	BMWW-t	MT20	3.0	4.0		
O	BMWW-t	MT20	3.0	6.0	1.50	2.25
P	BMV1+p	MT20	2.0	4.0		

A SIZE FOR SIZE SUBSTITUTION OF MITEK MII20 WITH TEE-LOK TL20 PLATES IS ALLOWED.

DIMENSIONS, SUPPORTS AND LOADINGS SPECIFIED BY FABRICATOR TO BE VERIFIED BY BUILDING DESIGNER

BEARINGS

JT	FACTORED GROSS REACTION VERT	HORZ	MAXIMUM FACTORED GROSS REACTION DOWN	HORZ	UPLIFT	INPUT BRG IN-SX	REQRD BRG IN-SX
P	1577	0	1577	0	0	5-8	2-11
J	1577	0	1577	0	0	5-8	2-11

UNFACTORED REACTIONS

JT	1ST LCASE COMBINED	MAX./MIN. COMPONENT REACTIONS SNOW	LIVE	PERM.LIVE	WIND	DEAD	SOIL
P	1104	786 / 0	0 / 0	0 / 0	0 / 0	318 / 0	0 / 0
J	1104	786 / 0	0 / 0	0 / 0	0 / 0	318 / 0	0 / 0

BEARING MATERIAL TO BE SPF NO.2 OR BETTER AT JOINT(S) P, J

BRACING

TOP CHORD TO BE SHEATHED OR MAX. PURLIN SPACING = 4.93 FT.
MAX. UNBRACED BOTTOM CHORD LENGTH = 10.00 FT OR RIGID CEILING DIRECTLY APPLIED.

ALL PITCH BREAKS AND PERIMETER CORNER JOINTS MUST BE LATERALLY RESTRAINED.

2x4 DRY SPF No.2 T-BRACE AT E-M

FASTEN T AND I-BRACES TO NARROW EDGE OF WEB WITH ONE ROW PER PLY OF 3" COMMON WIRE NAILS @ 6" O.C. WITH 3" MINIMUM END DISTANCE. BRACE MUST COVER 90% OF WEB LENGTH.

END VERTICAL(S) MUST BE SHEATHED OR HAVE BRACES AS INDICATED IN THE MAX. UNBRACED LENGTH COLUMN OF THE TABLE BELOW

LOADING

TOTAL LOAD CASES: (4)

CHORDS

MEMB. FR-TO	MAX. FACTORED FORCE (LBS)	FACTORED VERT. LOAD LC1 (PLF) FROM	TO	MAX CSI (LC)	MAX. UNBRAC LENGTH
A- B	0 / 32	-77.4	-77.4	0.11 (1)	10.00
B- C	-1602 / 0	-77.4	-77.4	0.30 (1)	4.93
C- D	-1453 / 0	-77.4	-77.4	0.29 (1)	5.13
D- E	-1317 / 0	-77.4	-77.4	0.30 (1)	5.30
E- F	-1317 / 0	-77.4	-77.4	0.30 (1)	5.30
F- G	-1453 / 0	-77.4	-77.4	0.29 (1)	5.13
G- H	-1602 / 0	-77.4	-77.4	0.30 (1)	4.93
H- I	0 / 32	-77.4	-77.4	0.11 (1)	10.00
P- B	-1538 / 0	0.0	0.0	0.16 (1)	6.64
J- H	-1538 / 0	0.0	0.0	0.16 (1)	6.64
P- O	0 / 0	-17.5	-17.5	0.11 (4)	10.00
O- N	0 / 1304	-17.5	-17.5	0.26 (1)	10.00
N- M	0 / 1141	-17.5	-17.5	0.23 (1)	10.00
M- L	0 / 1141	-17.5	-17.5	0.23 (1)	10.00
L- K	0 / 1304	-17.5	-17.5	0.26 (1)	10.00
K- J	0 / 0	-17.5	-17.5	0.11 (4)	10.00

WEBS

MEMB. FR-TO	MAX. FACTORED FORCE (LBS)	MAX CSI (LC)
O- C	-202 / 25	0.09 (1)
C- N	-235 / 0	0.24 (1)
N- D	0 / 256	0.06 (1)
D- M	0 / 344	0.08 (1)
M- E	-499 / 0	0.31 (1)
M- F	0 / 344	0.08 (1)
L- F	0 / 256	0.06 (1)
L- G	-235 / 0	0.24 (1)
K- G	-202 / 25	0.09 (1)
B- O	0 / 1337	0.30 (1)
K- H	0 / 1337	0.30 (1)

DESIGN CRITERIA

SPECIFIED LOADS:

TOP	CH.	LL	=	23.3	PSF
		DL	=	3.0	PSF
BOT	CH.	LL	=	0.0	PSF
		DL	=	7.0	PSF
TOTAL	LOAD		=	33.3	PSF

SPACING = 24.0 IN. C/C

LOADING IN FLAT SECTION BASED ON A SLOPE OF 2.00/12 MINIMUM

THIS TRUSS IS DESIGNED FOR RESIDENTIAL OR SMALL BUILDING REQUIREMENTS OF PART 9, NBCC 2010

THIS DESIGN COMPLIES WITH:
- PART 9 OF OBC 2012 , BCBC 2012 , ABC 2014
- CSA 086-09
- TPIC 2011

(55 % OF 27.2 P.S.F. G.S.L. PLUS 8.4 P.S.F. RAIN LOAD) EQUALS 23.3 P.S.F. SPECIFIED ROOF LIVE LOAD

ALLOWABLE DEFL.(LL)= L/360 (1.03")
CALCULATED VERT. DEFL.(LL) = L/ 999 (0.06")
ALLOWABLE DEFL.(TL)= L/360 (1.03")
CALCULATED VERT. DEFL.(TL) = L/ 999 (0.10")

CSI: TC=0.30/1.00 (G-H:1) , BC=0.26/1.00 (K-L:1) , WB=0.31/1.00 (E-M:1) , SSI=0.20/1.00 (D-E:1)

DOL LUMBER=1.00 NAIL=1.00 LS BEND=1.10 COMP=1.10 SHEAR=1.10 TENS= 1.10

COMPANION LIVE LOAD FACTOR = 0.50

TRUSS PLATE MANUFACTURER IS NOT RESPONSIBLE FOR QUALITY CONTROL IN THE TRUSS MANUFACTURING PLANT.

NAIL VALUES

PLATE	GRIP(DRY) (PSI) MAX	MIN	SHEAR (PLI) MAX	MIN	SECTION (PLI) MAX	MIN
MT20	618	354	1667	822	2284	1656

PLATE PLACEMENT TOL. = 0.250 inches

PLATE ROTATION TOL. = 5.0 Deg.

JSI GRIP= 0.83 (K) (INPUT = 0.90)
JSI METAL= 0.45 (B) (INPUT = 1.00)

LICENSED PROFESSIONAL ENGINEER
T.L. WISE
100083566
PROVINCE OF ONTARIO

September 14, 2018

KOTT

READ ALL NOTES ON THIS PAGE AND ON THE ENGINEERING NOTE PAGE ENP-1. THE NOTE PAGE IS AN INTEGRAL PART OF THIS DRAWING AS IT CONTAINS SPECIFICATIONS AND CRITERIA USED IN THE DESIGN OF THIS COMPONENT.

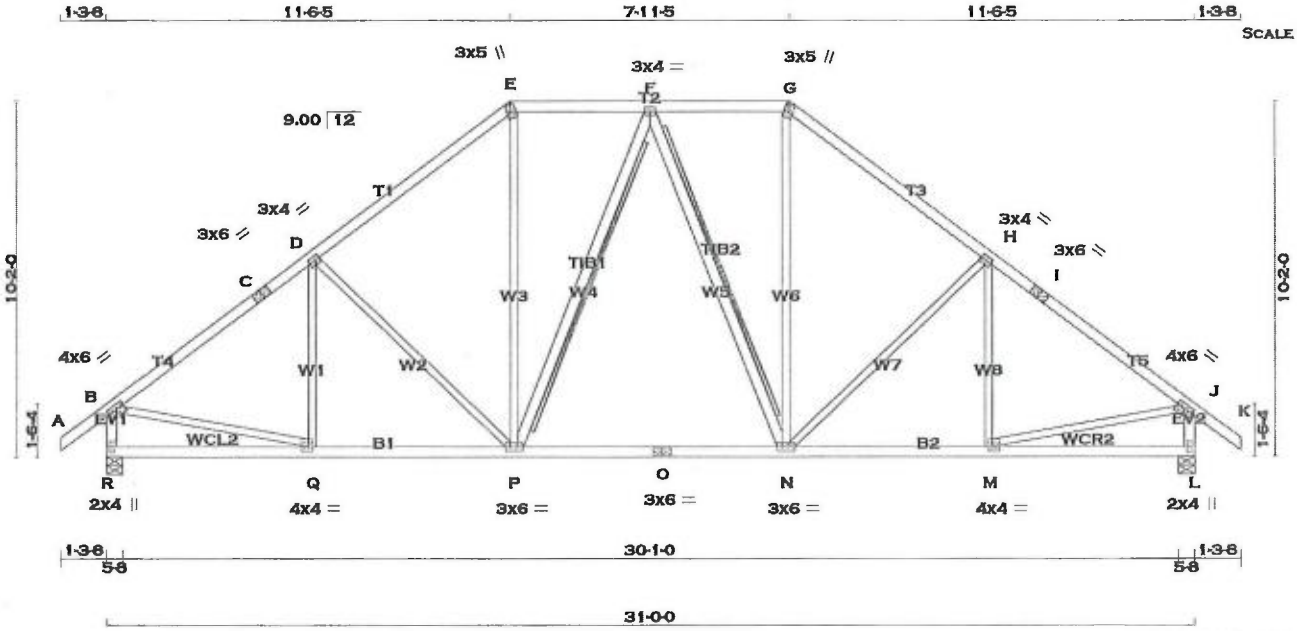

TOTAL WEIGHT = 2 X 153 = 307 lb

[M][F]

LUMBER

N. L. G. A. RULES

CHORDS	SIZE		LUMBER	DESCR.
A - C	2x4	DRY	No.2	SPF
C - E	2x4	DRY	No.2	SPF
E - G	2x4	DRY	No.2	SPF
G - I	2x4	DRY	No.2	SPF
I - K	2x4	DRY	No.2	SPF
R - B	2x4	DRY	No.2	SPF
L - J	2x4	DRY	No.2	SPF
R - O	2x4	DRY	No.2	SPF
O - L	2x4	DRY	No.2	SPF
ALL WEBS EXCEPT	2x3	DRY	No.2	SPF
P - F	2x4	DRY	No.2	SPF
F - N	2x4	DRY	No.2	SPF

DRY: SEASONED LUMBER.

PLATES (table is in inches)

JT	TYPE	PLATES	W	LEN	Y	X
B	TMVW-t	MT20	4.0	6.0	1.50	2.75
C	TS-t	MT20	3.0	6.0		
D	TMWW-t	MT20	3.0	4.0	1.50	1.50
E	TTW+m	MT20	3.0	5.0	Edge	1.25
F	TMWW-t	MT20	3.0	4.0		
G	TTW+m	MT20	3.0	5.0	Edge	1.25
H	TMWW-t	MT20	3.0	4.0	1.50	1.50
I	TS-t	MT20	3.0	6.0		
J	TMVW-t	MT20	4.0	6.0	1.50	2.75
L	BMV1+p	MT20	2.0	4.0		
M	BMWW-t	MT20	4.0	4.0	1.50	1.50
N	BMWWW-t	MT20	3.0	6.0		
O	BS-t	MT20	3.0	6.0		
P	BMWWW-t	MT20	3.0	6.0		
Q	BMWW-t	MT20	4.0	4.0	1.50	1.50
R	BMV1+p	MT20	2.0	4.0		

Edge - INDICATES REFERENCE CORNER OF PLATE TOUCHES EDGE OF CHORD.

A SIZE FOR SIZE SUBSTITUTION OF MITEK MII20 WITH TEE-LOK TL20 PLATES IS ALLOWED.

LICENSED PROFESSIONAL ENGINEER
T.L. WISE
100083566
PROVINCE OF ONTARIO

September 14, 2018

DIMENSIONS, SUPPORTS AND LOADINGS SPECIFIED BY FABRICATOR TO BE VERIFIED BY BUILDING DESIGNER

BEARINGS

JT	FACTORED GROSS REACTION VERT	HORZ	MAXIMUM FACTORED GROSS REACTION DOWN	HORZ	UPLIFT	INPUT BRG IN-SX	REQRD BRG IN-SX
R	1577	0	1577	0	0	5-8	2-11
L	1577	0	1577	0	0	5-8	2-11

UNFACTORED REACTIONS

JT	1ST LCASE COMBINED	MAX./MIN. COMPONENT REACTIONS SNOW	LIVE	PERM.LIVE	WIND	DEAD	SOIL
R	1104	786 / 0	0 / 0	0 / 0	0 / 0	318 / 0	0 / 0
L	1104	786 / 0	0 / 0	0 / 0	0 / 0	318 / 0	0 / 0

BEARING MATERIAL TO BE SPF NO.2 OR BETTER AT JOINT(S) R, L

BRACING

TOP CHORD TO BE SHEATHED OR MAX. PURLIN SPACING = 4.81 FT.
MAX. UNBRACED BOTTOM CHORD LENGTH = 10.00 FT OR RIGID CEILING DIRECTLY APPLIED.

ALL PITCH BREAKS AND PERIMETER CORNER JOINTS MUST BE LATERALLY RESTRAINED.

2x4 DRY SPF No.2 T-BRACE AT F-P, F-N

FASTEN T AND I-BRACES TO NARROW EDGE OF WEB WITH ONE ROW PER PLY OF 3" COMMON WIRE NAILS @ 6" O.C. WITH 3" MINIMUM END DISTANCE. BRACE MUST COVER 90% OF WEB LENGTH.

END VERTICAL(S) MUST BE SHEATHED OR HAVE BRACES AS INDICATED IN THE MAX. UNBRACED LENGTH COLUMN OF THE TABLE BELOW

LOADING

TOTAL LOAD CASES: (4)

CHORDS

MEMB. FR-TO	MAX. FACTORED FORCE (LBS)	FACTORED VERT. LOAD (PLF) FROM	TO	LC1	MAX CSI (LC)	MAX. UNBRAC LENGTH
A- B	0 / 32	-77.4	-77.4	0.11 (1)	10.00	
B- C	-1610 / 0	-77.4	-77.4	0.40 (1)	4.81	
C- D	-1610 / 0	-77.4	-77.4	0.40 (1)	4.81	
D- E	-1391 / 0	-77.4	-77.4	0.37 (1)	5.11	
E- F	-1090 / 0	-77.4	-77.4	0.16 (1)	5.88	
F- G	-1090 / 0	-77.4	-77.4	0.16 (1)	5.88	
G- H	-1391 / 0	-77.4	-77.4	0.37 (1)	5.11	
H- I	-1610 / 0	-77.4	-77.4	0.40 (1)	4.81	
I- J	-1610 / 0	-77.4	-77.4	0.40 (1)	4.81	
J- K	0 / 32	-77.4	-77.4	0.11 (1)	10.00	
R- B	-1533 / 0	0.0	0.0	0.16 (1)	6.64	
L- J	-1533 / 0	0.0	0.0	0.16 (1)	6.64	
R- Q	0 / 0	-17.5	-17.5	0.12 (4)	10.00	
Q- P	0 / 1314	-17.5	-17.5	0.31 (1)	10.00	
P- O	0 / 1162	-17.5	-17.5	0.29 (1)	10.00	
O- N	0 / 1162	-17.5	-17.5	0.29 (1)	10.00	
N- M	0 / 1314	-17.5	-17.5	0.31 (1)	10.00	
M- L	0 / 0	-17.5	-17.5	0.12 (4)	10.00	

WEBS

MEMB. FR-TO	MAX. FACTORED FORCE (LBS)	MAX CSI (LC)
Q- D	-163 / 42	0.09 (1)
D- P	-319 / 0	0.43 (1)
P- E	0 / 529	0.12 (1)
P- F	-197 / 0	0.16 (1)
F- N	-197 / 0	0.16 (1)
N- G	0 / 529	0.12 (1)
N- H	-319 / 0	0.43 (1)
M- H	-163 / 42	0.09 (1)
B- Q	0 / 1340	0.30 (1)
M- J	0 / 1340	0.30 (1)

KOTT

READ ALL NOTES ON THIS PAGE AND ON THE ENGINEERING NOTE PAGE ENP-1. THE NOTE PAGE IS AN INTEGRAL PART OF THIS DRAWING AS IT CONTAINS SPECIFICATIONS AND CRITERIA USED IN THE DESIGN OF THIS COMPONENT.

DESIGN CRITERIA

SPECIFIED LOADS:

TOP CH.	LL	=	23.3	PSF
	DL	=	3.0	PSF
BOT CH.	LL	=	0.0	PSF
	DL	=	7.0	PSF
TOTAL LOAD		=	33.3	PSF

SPACING = 24.0 IN. C/C

LOADING IN FLAT SECTION BASED ON A SLOPE OF 2.00/12 MINIMUM

THIS TRUSS IS DESIGNED FOR RESIDENTIAL OR SMALL BUILDING REQUIREMENTS OF PART 9, NBCC 2010

THIS DESIGN COMPLIES WITH:
- PART 9 OF OBC 2012 , BCBC 2012 , ABC 2014
- CSA 086-09
- TPIC 2011

(55 % OF 27.2 P.S.F. G.S.L. PLUS 8.4 P.S.F. RAIN LOAD) EQUALS 23.3 P.S.F. SPECIFIED ROOF LIVE LOAD

ALLOWABLE DEFL.(LL)= L/360 (1.03")
CALCULATED VERT. DEFL.(LL) = L/ 999 (0.06")
ALLOWABLE DEFL.(TL)= L/360 (1.03")
CALCULATED VERT. DEFL.(TL) = L/ 999 (0.15")

CSI: TC=0.40/1.00 (H-J:1) , BC=0.31/1.00 (M-N:1) , WB=0.43/1.00 (H-N:1) , SSI=0.17/1.00 (H-J:1)

DOL LUMBER=1.00 NAIL=1.00 LS BEND=1.10 COMP=1.10 SHEAR=1.10 TENS= 1.10

COMPANION LIVE LOAD FACTOR = 0.50

TRUSS PLATE MANUFACTURER IS NOT RESPONSIBLE FOR QUALITY CONTROL IN THE TRUSS MANUFACTURING PLANT .

NAIL VALUES

PLATE	GRIP(DRY) (PSI) MAX	MIN	SHEAR (PLI) MAX	MIN	SECTION (PLI) MAX	MIN
MT20	618	354	1667	822	2284	1656

PLATE PLACEMENT TOL. = 0.250 inches

PLATE ROTATION TOL. = 5.0 Deg.

JSI GRIP= 0.88 (P) (INPUT = 0.90)
JSI METAL= 0.49 (Q) (INPUT = 1.00)

CONTINUED ON PAGE 2

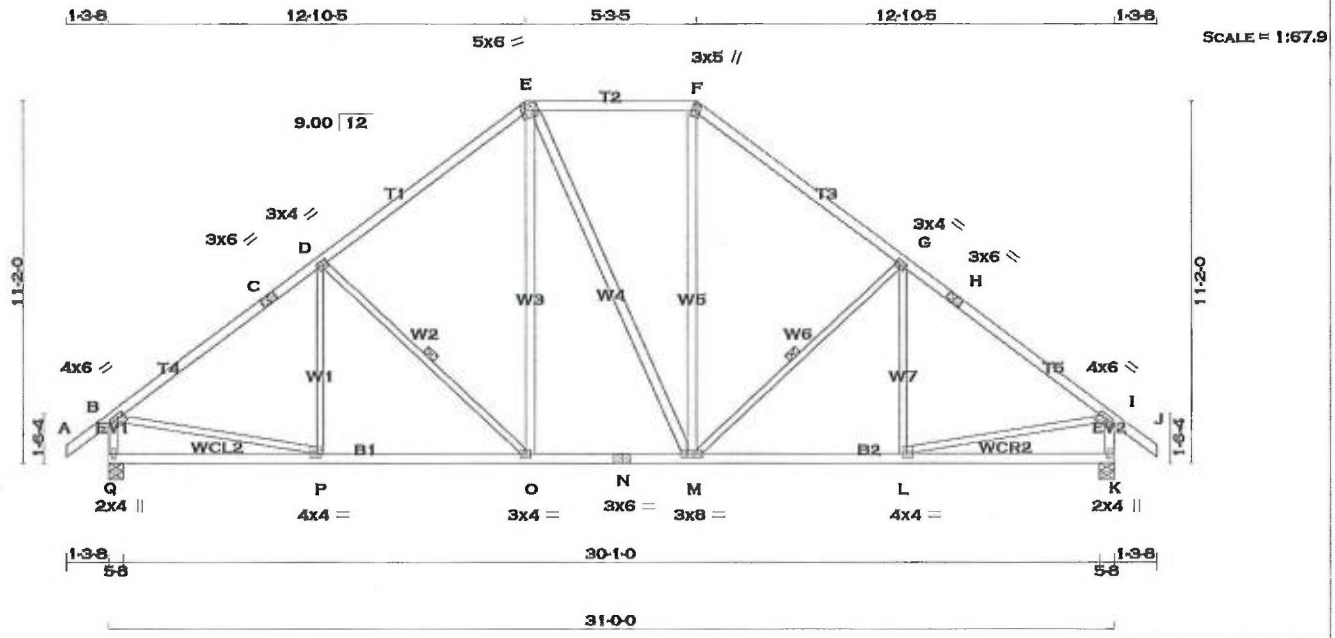

TOTAL WEIGHT = 3 X 156 = 467 lb

[M][F]

LUMBER

N. L. G. A. RULES

CHORDS	SIZE		LUMBER	DESCR.
A - C	2x4	DRY	No.2	SPF
C - E	2x4	DRY	No.2	SPF
E - F	2x4	DRY	No.2	SPF
F - H	2x4	DRY	No.2	SPF
H - J	2x4	DRY	No.2	SPF
Q - B	2x4	DRY	No.2	SPF
K - I	2x4	DRY	No.2	SPF
Q - N	2x4	DRY	No.2	SPF
N - K	2x4	DRY	No.2	SPF
ALL WEBS	2x3	DRY	No.2	SPF
EXCEPT				
O - E	2x4	DRY	No.2	SPF
E - M	2x4	DRY	No.2	SPF
M - F	2x4	DRY	No.2	SPF

DRY: SEASONED LUMBER.

PLATES (table is in inches)

JT	TYPE	PLATES	W	LEN	Y	X
B	TMVW-t	MT20	4.0	6.0	1.50	2.75
C	TS-t	MT20	3.0	6.0		
D	TMWW-t	MT20	3.0	4.0	1.50	1.50
E	TTWW-m	MT20	5.0	6.0	2.00	1.50
F	TTW+m	MT20	3.0	5.0	Edge	1.25
G	TMWW-t	MT20	3.0	4.0	1.50	1.50
H	TS-t	MT20	3.0	6.0		
I	TMVW-t	MT20	4.0	6.0	1.50	2.75
K	BMV1+p	MT20	2.0	4.0		
L	BMWW-t	MT20	4.0	4.0	1.50	1.50
M	BMWWW-t	MT20	3.0	8.0		
N	BS-t	MT20	3.0	6.0		
O	BMWW-t	MT20	3.0	4.0		
P	BMWW-t	MT20	4.0	4.0	1.50	1.50
Q	BMV1+p	MT20	2.0	4.0		

Edge - INDICATES REFERENCE CORNER OF PLATE TOUCHES EDGE OF CHORD.

A SIZE FOR SIZE SUBSTITUTION OF MITEK MII20 WITH TEE-LOK TL20 PLATES IS ALLOWED.

LICENSED PROFESSIONAL ENGINEER
T.L. WISE
100083566
PROVINCE OF ONTARIO

September 14, 2018

DIMENSIONS, SUPPORTS AND LOADINGS SPECIFIED BY FABRICATOR TO BE VERIFIED BY BUILDING DESIGNER

BEARINGS

JT	FACTORED GROSS REACTION VERT	HORZ	MAXIMUM FACTORED GROSS REACTION DOWN	HORZ	UPLIFT	INPUT BRG IN-SX	REQRD BRG IN-SX
Q	1577	0	1577	0	0	5-8	2-11
K	1577	0	1577	0	0	5-8	2-11

UNFACTORED REACTIONS

JT	1ST LCASE COMBINED	MAX./MIN. COMPONENT REACTIONS SNOW	LIVE	PERM.LIVE	WIND	DEAD	SOIL
Q	1104	786 / 0	0 / 0	0 / 0	0 / 0	318 / 0	0 / 0
K	1104	786 / 0	0 / 0	0 / 0	0 / 0	318 / 0	0 / 0

BEARING MATERIAL TO BE SPF NO.2 OR BETTER AT JOINT(S) Q, K

BRACING

TOP CHORD TO BE SHEATHED OR MAX. PURLIN SPACING = 4.66 FT.
MAX. UNBRACED BOTTOM CHORD LENGTH = 10.00 FT OR RIGID CEILING DIRECTLY APPLIED.

ALL PITCH BREAKS AND PERIMETER CORNER JOINTS MUST BE LATERALLY RESTRAINED.

1 - 1x4 LATERAL BRACE(S) AT 1/2 LENGTH OF D-O, G-M. DBS = 20-0-0 . CBF = 52 LBS.

DBS = DIAGONAL BRACE SPACING (MAX). CBF = CUMULATIVE BRACING FORCE (PER BRACE). FASTEN LATERAL BRACE(S) USING (0.122"X3") SPIRAL NAILS : 1 NAIL FOR 2x3 BRACE(S), 2 FOR 1x4, 2x4, 2x5, 3 FOR 2x6, 4 FOR 2x8, 5 FOR 2x10, AND 6 FOR 2x12.

END VERTICAL(S) MUST BE SHEATHED OR HAVE BRACES AS INDICATED IN THE MAX. UNBRACED LENGTH COLUMN OF THE TABLE BELOW

LOADING

TOTAL LOAD CASES: (4)

CHORDS

MEMB. FR-TO	MAX. FACTORED FORCE (LBS)	FACTORED VERT. LOAD (PLF) FROM	TO	LC1 MAX CSI (LC)	MAX. UNBRAC LENGTH
A- B	0 / 32	-77.4	-77.4	0.11 (1)	10.00
B- C	-1614 / 0	-77.4	-77.4	0.51 (1)	4.66
C- D	-1614 / 0	-77.4	-77.4	0.51 (1)	4.66
D- E	-1312 / 0	-77.4	-77.4	0.47 (1)	5.09
E- F	-1024 / 0	-77.4	-77.4	0.29 (1)	5.84
F- G	-1312 / 0	-77.4	-77.4	0.47 (1)	5.09
G- H	-1614 / 0	-77.4	-77.4	0.51 (1)	4.66
H- I	-1614 / 0	-77.4	-77.4	0.51 (1)	4.66
I- J	0 / 32	-77.4	-77.4	0.11 (1)	10.00
Q- B	-1531 / 0	0.0	0.0	0.16 (1)	6.65
K- I	-1530 / 0	0.0	0.0	0.16 (1)	6.65
Q- P	0 / 0	-17.5	-17.5	0.18 (4)	10.00
P- O	0 / 1320	-17.5	-17.5	0.31 (1)	10.00
O- N	0 / 1024	-17.5	-17.5	0.23 (1)	10.00
N- M	0 / 1024	-17.5	-17.5	0.23 (1)	10.00
M- L	0 / 1320	-17.5	-17.5	0.31 (1)	10.00
L- K	0 / 0	-17.5	-17.5	0.18 (4)	10.00

WEBS

MEMB. FR-TO	MAX. FACTORED FORCE (LBS)	MAX CSI (LC)
P- D	-112 / 76	0.07 (1)
D- O	-414 / 0	0.22 (1)
O- E	0 / 379	0.06 (1)
E- M	0 / 0	0.00 (1)
M- F	0 / 380	0.06 (1)
M- G	-413 / 0	0.22 (1)
L- G	-113 / 76	0.08 (1)
B- P	0 / 1342	0.30 (1)
L- I	0 / 1342	0.30 (1)

KOTT

READ ALL NOTES ON THIS PAGE AND ON THE ENGINEERING NOTE PAGE ENP-1. THE NOTE PAGE IS AN INTEGRAL PART OF THIS DRAWING AS IT CONTAINS SPECIFICATIONS AND CRITERIA USED IN THE DESIGN OF THIS COMPONENT.

DESIGN CRITERIA

SPECIFIED LOADS:

TOP CH.	LL	=	23.3	PSF
	DL	=	3.0	PSF
BOT CH.	LL	=	0.0	PSF
	DL	=	7.0	PSF
TOTAL LOAD		=	33.3	PSF

SPACING = 24.0 IN. C/C

LOADING IN FLAT SECTION BASED ON A SLOPE OF 2.00/12 MINIMUM

THIS TRUSS IS DESIGNED FOR RESIDENTIAL OR SMALL BUILDING REQUIREMENTS OF PART 9, NBCC 2010

THIS DESIGN COMPLIES WITH:
- PART 9 OF OBC 2012 , BCBC 2012 , ABC 2014
- CSA 086-09
- TPIC 2011

(55 % OF 27.2 P.S.F. G.S.L. PLUS 8.4 P.S.F. RAIN LOAD) EQUALS 23.3 P.S.F. SPECIFIED ROOF LIVE LOAD

ALLOWABLE DEFL.(LL)= L/360 (1.03")
CALCULATED VERT. DEFL.(LL) = L/ 999 (0.06")
ALLOWABLE DEFL.(TL)= L/360 (1.03")
CALCULATED VERT. DEFL.(TL) = L/ 999 (0.11")

CSI: TC=0.51/1.00 (B-D:1) , BC=0.31/1.00 (O-P:1) , WB=0.30/1.00 (B-P:1) , SSI=0.20/1.00 (B-D:1)

DOL LUMBER=1.00 NAIL=1.00 LS BEND=1.10 COMP=1.10 SHEAR=1.10 TENS= 1.10

COMPANION LIVE LOAD FACTOR = 0.50

TRUSS PLATE MANUFACTURER IS NOT RESPONSIBLE FOR QUALITY CONTROL IN THE TRUSS MANUFACTURING PLANT .

NAIL VALUES

PLATE	GRIP(DRY) (PSI) MAX	MIN	SHEAR (PLI) MAX	MIN	SECTION (PLI) MAX	MIN
MT20	618	354	1667	822	2284	1656

PLATE PLACEMENT TOL. = 0.250 inches

PLATE ROTATION TOL. = 5.0 Deg.

JSI GRIP= 0.88 (F) (INPUT = 0.90)
JSI METAL= 0.49 (P) (INPUT = 1.00)

CONTINUED ON PAGE 2

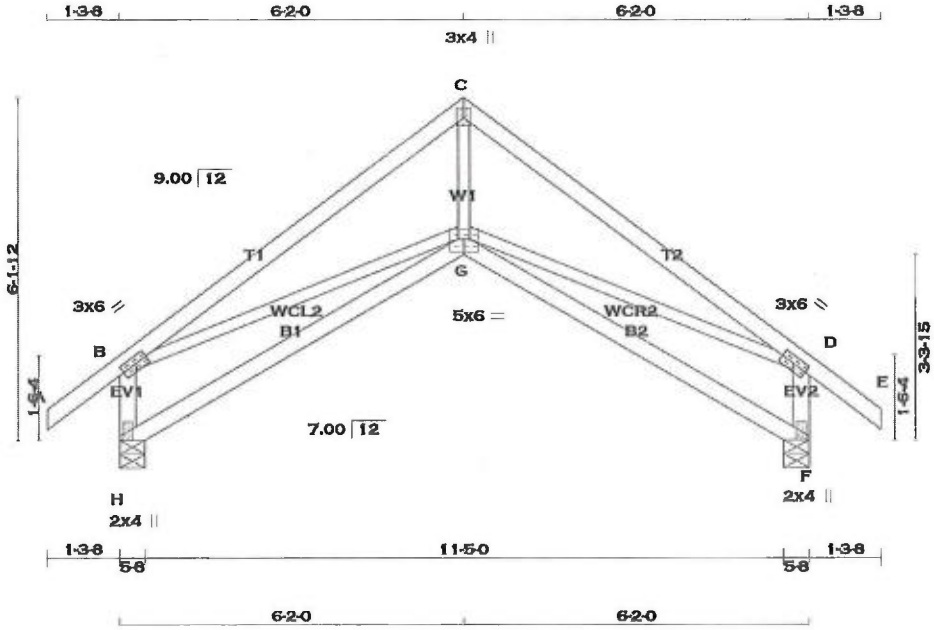

TOTAL WEIGHT = 53 lb

[M][F]

LUMBER
N. L. G. A. RULES

CHORDS	SIZE		LUMBER	DESCR.
A - C	2x4	DRY	No.2	SPF
C - E	2x4	DRY	No.2	SPF
H - B	2x4	DRY	No.2	SPF
F - D	2x4	DRY	No.2	SPF
H - G	2x4	DRY	No.2	SPF
G - F	2x4	DRY	No.2	SPF
ALL WEBS EXCEPT	2x3	DRY	No.2	SPF

DRY: SEASONED LUMBER.

PLATES (table is in inches)

JT	TYPE	PLATES	W	LEN	Y	X
B	TMVW-t	MT20	3.0	6.0	1.50	2.75
C	TTW+p	MT20	3.0	4.0	2.25	1.50
D	TMVW-t	MT20	3.0	6.0	1.50	2.75
F	BMV1+p	MT20	2.0	4.0	Edge	
G	BBWWW-p	MT20	5.0	6.0	2.75	3.00
H	BMV1+p	MT20	2.0	4.0	Edge	

Edge - INDICATES REFERENCE CORNER OF PLATE TOUCHES EDGE OF CHORD.

A SIZE FOR SIZE SUBSTITUTION OF MITEK MII20 WITH TEE-LOK TL20 PLATES IS ALLOWED.

DIMENSIONS, SUPPORTS AND LOADINGS SPECIFIED BY FABRICATOR TO BE VERIFIED BY BUILDING DESIGNER

BEARINGS

JT	FACTORED GROSS REACTION VERT	HORZ	MAXIMUM FACTORED GROSS REACTION DOWN	HORZ	UPLIFT	INPUT BRG IN-SX	REQRD BRG IN-SX
H	692	0	692	0	0	5-8	1-8
F	692	0	692	0	0	5-8	1-8

UNFACTORED REACTIONS

JT	1ST LCASE COMBINED	MAX./MIN. COMPONENT REACTIONS SNOW	LIVE	PERM.LIVE	WIND	DEAD	SOIL
H	483	351 / 0	0 / 0	0 / 0	0 / 0	132 / 0	0 / 0
F	483	351 / 0	0 / 0	0 / 0	0 / 0	132 / 0	0 / 0

BEARING MATERIAL TO BE SPF NO.2 OR BETTER AT JOINT(S) H, F

BRACING
TOP CHORD TO BE SHEATHED OR MAX. PURLIN SPACING = 5.93 FT.
MAX. UNBRACED BOTTOM CHORD LENGTH = 10.00 FT OR RIGID CEILING DIRECTLY APPLIED.

ALL PITCH BREAKS AND PERIMETER CORNER JOINTS MUST BE LATERALLY RESTRAINED.

LOADING
TOTAL LOAD CASES: (4)

CHORDS MEMB. FR-TO	MAX. FACTORED FORCE (LBS)	FACTORED VERT. LOAD (PLF) FROM	TO	LC1 MAX CSI (LC)	MAX. UNBRAC LENGTH	WEBS MEMB. FR-TO	MAX. FACTORED FORCE (LBS)	MAX CSI (LC)
A- B	0 / 32	-77.4	-77.4	0.11 (1)	10.00	G- C	0 / 621	0.14 (1)
B- C	-915 / 0	-77.4	-77.4	0.40 (1)	5.93	B- G	0 / 775	0.17 (1)
C- D	-915 / 0	-77.4	-77.4	0.40 (1)	5.93	G- D	0 / 775	0.17 (1)
D- E	0 / 32	-77.4	-77.4	0.11 (1)	10.00			
H- B	-638 / 0	0.0	0.0	0.07 (1)	7.81			
F- D	-638 / 0	0.0	0.0	0.07 (1)	7.81			
H- G	0 / 0	-17.5	-17.5	0.20 (4)	10.00			
G- F	0 / 0	-17.5	-17.5	0.20 (4)	10.00			

DESIGN CRITERIA

SPECIFIED LOADS:

TOP CH.	LL	=	23.3	PSF
	DL	=	3.0	PSF
BOT CH.	LL	=	0.0	PSF
	DL	=	7.0	PSF
TOTAL LOAD		=	33.3	PSF

SPACING = 24.0 IN. C/C

THIS TRUSS IS DESIGNED FOR RESIDENTIAL OR SMALL BUILDING REQUIREMENTS OF PART 9, NBCC 2010

THIS DESIGN COMPLIES WITH:
- PART 9 OF OBC 2012 , BCBC 2012 , ABC 2014
- CSA 086-09
- TPIC 2011

(55 % OF 27.2 P.S.F. G.S.L. PLUS 8.4 P.S.F. RAIN LOAD) EQUALS 23.3 P.S.F. SPECIFIED ROOF LIVE LOAD

ALLOWABLE DEFL.(LL)= L/360 (0.41")
CALCULATED VERT. DEFL.(LL) = L/ 999 (0.04")
ALLOWABLE DEFL.(TL)= L/360 (0.41")
CALCULATED VERT. DEFL.(TL) = L/ 999 (0.11")

CSI: TC=0.40/1.00 (C-D:1) , BC=0.20/1.00 (F-G:4) , WB=0.17/1.00 (B-G:1) , SSI=0.15/1.00 (C-D:1)

DOL LUMBER=1.00 NAIL=1.00 LS BEND=1.10 COMP=1.10 SHEAR=1.10 TENS= 1.10

COMPANION LIVE LOAD FACTOR = 0.50

TRUSS PLATE MANUFACTURER IS NOT RESPONSIBLE FOR QUALITY CONTROL IN THE TRUSS MANUFACTURING PLANT .

NAIL VALUES

PLATE	GRIP(DRY) (PSI) MAX	MIN	SHEAR (PLI) MAX	MIN	SECTION (PLI) MAX	MIN
MT20	618	354	1667	822	2284	1656

PLATE PLACEMENT TOL. = 0.250 inches

PLATE ROTATION TOL. = 5.0 Deg.

JSI GRIP= 0.89 (C) (INPUT = 0.90)
JSI METAL= 0.28 (D) (INPUT = 1.00)

LICENSED PROFESSIONAL ENGINEER
T.L. WISE
100083566
PROVINCE OF ONTARIO

September 14, 2018

KOTT

READ ALL NOTES ON THIS PAGE AND ON THE ENGINEERING NOTE PAGE ENP-1. THE NOTE PAGE IS AN INTEGRAL PART OF THIS DRAWING AS IT CONTAINS SPECIFICATIONS AND CRITERIA USED IN THE DESIGN OF THIS COMPONENT.

SCALE = 1:57.4

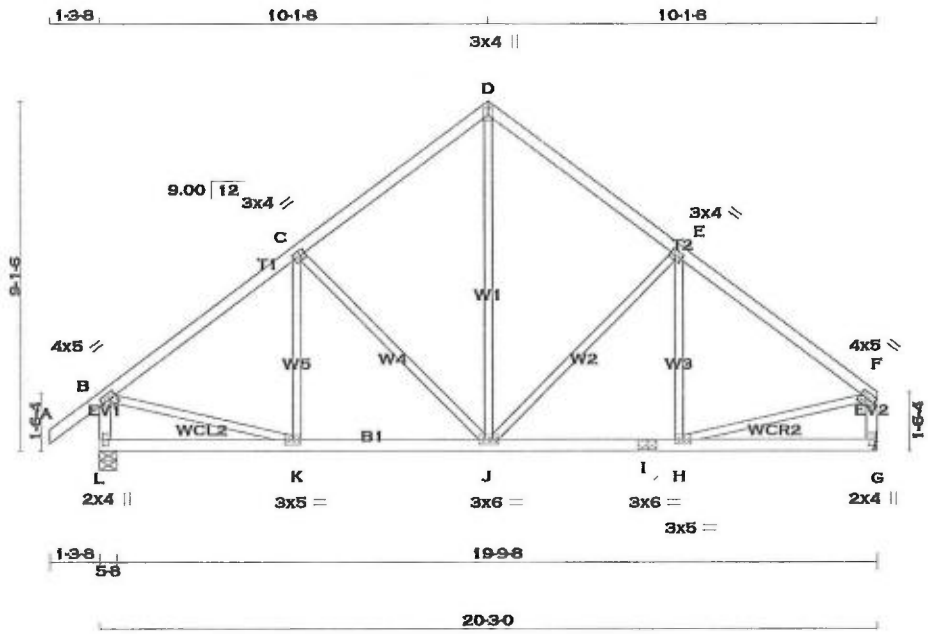

TOTAL WEIGHT = 3 X 90 = 271 lb

[M][F]

LUMBER

N. L. G. A. RULES

CHORDS	SIZE		LUMBER	DESCR.
A - D	2x4	DRY	No.2	SPF
D - F	2x4	DRY	No.2	SPF
L - B	2x4	DRY	No.2	SPF
G - F	2x4	DRY	No.2	SPF
L - I	2x4	DRY	No.2	SPF
I - G	2x4	DRY	No.2	SPF
ALL WEBS EXCEPT	2x3	DRY	No.2	SPF

DRY: SEASONED LUMBER.

PLATES (table is in inches)

JT	TYPE	PLATES	W	LEN	Y	X
B	TMWW-t	MT20	4.0	5.0	1.75	2.00
C	TMWW-t	MT20	3.0	4.0	1.50	1.50
D	TTW+p	MT20	3.0	4.0	2.25	1.50
E	TMWW-t	MT20	3.0	4.0	1.50	1.50
F	TMVW-t	MT20	4.0	5.0	1.75	Edge
G	BMV1+p	MT20	2.0	4.0		
H	BMWW-t	MT20	3.0	5.0		
I	BS-t	MT20	3.0	6.0		
J	BMWWW-t	MT20	3.0	6.0		
K	BMWW-t	MT20	3.0	5.0		
L	BMV1+p	MT20	2.0	4.0		

Edge - INDICATES REFERENCE CORNER OF PLATE TOUCHES EDGE OF CHORD.

A SIZE FOR SIZE SUBSTITUTION OF MITEK MII20 WITH TEE-LOK TL20 PLATES IS ALLOWED.

DIMENSIONS, SUPPORTS AND LOADINGS SPECIFIED BY FABRICATOR TO BE VERIFIED BY BUILDING DESIGNER

BEARINGS

JT	FACTORED GROSS REACTION VERT	HORZ	MAXIMUM FACTORED GROSS REACTION DOWN	HORZ	UPLIFT	INPUT BRG IN-SX	REQRD BRG IN-SX
L	1067	0	1067	0	0	5-8	1-13
G	960	0	960	0	0	MECHANICAL	

A SUITABLE MECHANICAL CONNECTION IS REQUIRED AT JOINT G TO RESIST THE MAX FACTORED REACTIONS.

UNFACTORED REACTIONS

JT	1ST LCASE COMBINED	MAX./MIN. COMPONENT REACTIONS SNOW	LIVE	PERM.LIVE	WIND	DEAD	SOIL
L	747	536 / 0	0 / 0	0 / 0	0 / 0	211 / 0	0 / 0
G	674	472 / 0	0 / 0	0 / 0	0 / 0	202 / 0	0 / 0

BEARING MATERIAL TO BE SPF NO.2 OR BETTER AT JOINT(S) L

BRACING

TOP CHORD TO BE SHEATHED OR MAX. PURLIN SPACING = 6.04 FT.
MAX. UNBRACED BOTTOM CHORD LENGTH = 10.00 FT OR RIGID CEILING DIRECTLY APPLIED.

ALL PITCH BREAKS AND PERIMETER CORNER JOINTS MUST BE LATERALLY RESTRAINED.

LOADING

TOTAL LOAD CASES: (4)

CHORDS

MEMB. FR-TO	MAX. FACTORED FORCE (LBS)	FACTORED VERT. LOAD (PLF) FROM	TO	LC1 MAX CSI (LC)	MAX. UNBRAC LENGTH
A- B	0 / 32	-77.4	-77.4	0.11 (1)	10.00
B- C	-953 / 0	-77.4	-77.4	0.27 (1)	6.04
C- D	-725 / 0	-77.4	-77.4	0.26 (1)	6.25
D- E	-725 / 0	-77.4	-77.4	0.26 (1)	6.25
E- F	-953 / 0	-77.4	-77.4	0.27 (1)	6.04
L- B	-1030 / 0	0.0	0.0	0.11 (1)	7.74
G- F	-923 / 0	0.0	0.0	0.10 (1)	7.81
L- K	0 / 0	-17.5	-17.5	0.11 (4)	10.00
K- J	0 / 784	-17.5	-17.5	0.18 (1)	10.00
J- I	0 / 784	-17.5	-17.5	0.18 (1)	10.00
I- H	0 / 784	-17.5	-17.5	0.18 (1)	10.00
H- G	0 / 0	-17.5	-17.5	0.11 (4)	10.00

WEBS

MEMB. FR-TO	MAX. FACTORED FORCE (LBS)	MAX CSI (LC)
J- D	0 / 548	0.12 (1)
J- E	-325 / 0	0.31 (1)
H- E	-83 / 60	0.04 (1)
C- J	-325 / 0	0.31 (1)
K- C	-83 / 60	0.04 (1)
B- K	0 / 805	0.18 (1)
H- F	0 / 805	0.18 (1)

DESIGN CRITERIA

SPECIFIED LOADS:

TOP	CH.	LL	=	23.3	PSF
		DL	=	3.0	PSF
BOT	CH.	LL	=	0.0	PSF
		DL	=	7.0	PSF
TOTAL LOAD			=	33.3	PSF

SPACING = 24.0 IN. C/C

THIS TRUSS IS DESIGNED FOR RESIDENTIAL OR SMALL BUILDING REQUIREMENTS OF PART 9, NBCC 2010

THIS DESIGN COMPLIES WITH:
- PART 9 OF OBC 2012 , BCBC 2012 , ABC 2014
- CSA 086-09
- TPIC 2011

(55 % OF 27.2 P.S.F. G.S.L. PLUS 8.4 P.S.F. RAIN LOAD) EQUALS 23.3 P.S.F. SPECIFIED ROOF LIVE LOAD

ALLOWABLE DEFL.(LL)= L/360 (0.67")
CALCULATED VERT. DEFL.(LL) = L/ 999 (0.02")
ALLOWABLE DEFL.(TL)= L/360 (0.67")
CALCULATED VERT. DEFL.(TL) = L/ 999 (0.05")

CSI: TC=0.27/1.00 (B-C:1) , BC=0.18/1.00 (H-J:1) , WB=0.31/1.00 (E-J:1) , SSI=0.15/1.00 (B-C:1)

DOL LUMBER=1.00 NAIL=1.00 LS BEND=1.10 COMP=1.10 SHEAR=1.10 TENS= 1.10

COMPANION LIVE LOAD FACTOR = 0.50

TRUSS PLATE MANUFACTURER IS NOT RESPONSIBLE FOR QUALITY CONTROL IN THE TRUSS MANUFACTURING PLANT .

NAIL VALUES

PLATE	GRIP(DRY) (PSI) MAX	MIN	SHEAR (PLI) MAX	MIN	SECTION (PLI) MAX	MIN
MT20	618	354	1667	822	2284	1656

PLATE PLACEMENT TOL. = 0.250 inches

PLATE ROTATION TOL. = 5.0 Deg.

JSI GRIP= 0.88 (J) (INPUT = 0.90)
JSI METAL= 0.34 (B) (INPUT = 1.00)

LICENSED PROFESSIONAL ENGINEER
T.L. WISE
100083566
PROVINCE OF ONTARIO

September 14, 2018

KOTT

READ ALL NOTES ON THIS PAGE AND ON THE ENGINEERING NOTE PAGE ENP-1. THE NOTE PAGE IS AN INTEGRAL PART OF THIS DRAWING AS IT CONTAINS SPECIFICATIONS AND CRITERIA USED IN THE DESIGN OF THIS COMPONENT.

SCALE = 1:19.6

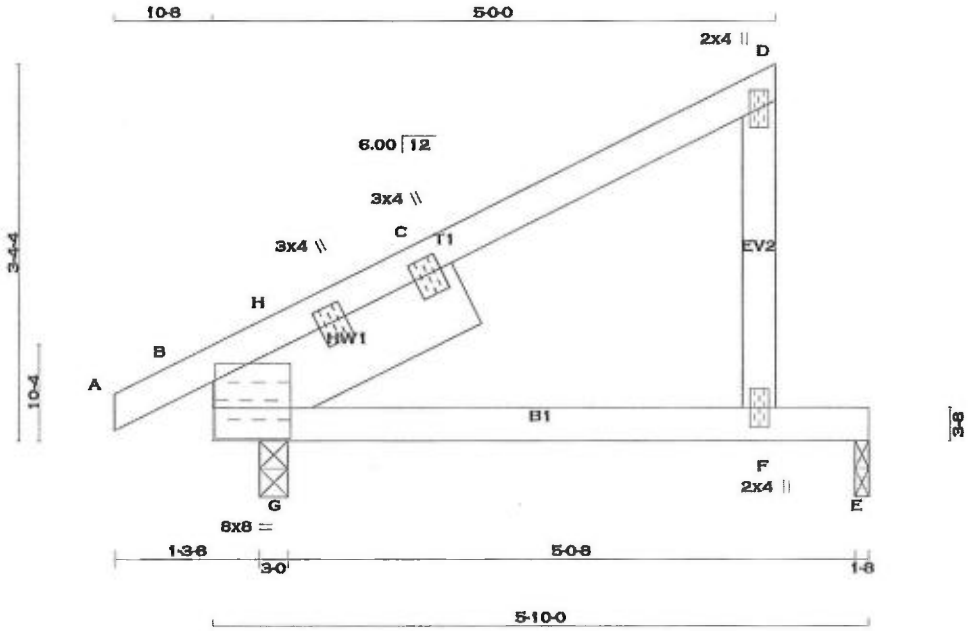

TOTAL WEIGHT = 4 X 23 = 93 lb

LUMBER

N. L. G. A. RULES

CHORDS	SIZE		LUMBER	DESCR.
A - D	2x4	DRY	No.2	SPF
F - D	2x4	DRY	No.2	SPF
B - E	2x4	DRY	No.2	SPF

REINFORCING MEMBERS

HW1	2x8	DRY	No.2	SPF

DRY: SEASONED LUMBER.

PLATES (table is in inches)

JT	TYPE	PLATES	W	LEN	Y	X
B	TMBMR1-I	MT20	8.0	8.0	6.00	0.25
B	RT+t	MT20	3.0	4.0	1.75	12.75
B	RT+t	MT20	3.0	4.0	1.75	24.00
D	TMV+p	MT20	2.0	4.0		
F	BMV+p	MT20	2.0	4.0		

A SIZE FOR SIZE SUBSTITUTION OF MITEK MII20 WITH TEE-LOK TL20 PLATES IS ALLOWED.

DIMENSIONS, SUPPORTS AND LOADINGS SPECIFIED BY FABRICATOR TO BE VERIFIED BY BUILDING DESIGNER

BEARINGS

JT	FACTORED GROSS REACTION VERT	HORZ	MAXIMUM FACTORED GROSS REACTION DOWN	HORZ	UPLIFT	INPUT BRG IN-SX	REQRD BRG IN-SX
B	345	0	345	0	0	3-0	1-8
E	217	0	217	0	0	1-8	1-8

UNFACTORED REACTIONS

JT	1ST LCASE COMBINED	MAX./MIN. COMPONENT REACTIONS SNOW	LIVE	PERM.LIVE	WIND	DEAD	SOIL
B	240	177 / 0	0 / 0	0 / 0	0 / 0	64 / 0	0 / 0
E	153	100 / 0	0 / 0	0 / 0	0 / 0	54 / 0	0 / 0

BEARING MATERIAL TO BE SPF NO.2 OR BETTER AT JOINT(S) B, E

BRACING

TOP CHORD TO BE SHEATHED OR MAX. PURLIN SPACING = 6.25 FT.
MAX. UNBRACED BOTTOM CHORD LENGTH = 10.00 FT OR RIGID CEILING DIRECTLY APPLIED.

ALL PITCH BREAKS AND PERIMETER CORNER JOINTS MUST BE LATERALLY RESTRAINED.

LOADING

TOTAL LOAD CASES: (4)

CHORDS

MEMB. FR-TO	MAX. FACTORED FORCE (LBS)	FACTORED VERT. LOAD (PLF) FROM	TO	LC1 MAX CSI (LC)	MAX. UNBRAC LENGTH
A- B	-3 / 0	-77.4	-77.4	0.04 (1)	10.00
B- H	-189 / 0	-77.4	-77.4	0.06 (1)	6.25
H- C	-102 / 0	-77.4	-77.4	0.32 (1)	6.25
C- D	-102 / 0	-77.4	-77.4	0.32 (1)	6.25
F- D	-186 / 0	0.0	0.0	0.03 (1)	7.81
B- G	0 / 154	-17.5	-17.5	0.13 (1)	10.00
G- F	0 / 0	-17.5	-17.5	0.25 (1)	10.00
F- E	0 / 0	-17.5	-17.5	0.24 (1)	10.00

WEBS

MEMB. FR-TO	MAX. FACTORED FORCE (LBS)	MAX CSI (LC)
G- H	-239 / 0	0.00 (1)
G- C	0 / 240	0.02 (1)

DESIGN CRITERIA

SPECIFIED LOADS:

TOP CH.	LL	=	23.3	PSF
	DL	=	3.0	PSF
BOT CH.	LL	=	0.0	PSF
	DL	=	7.0	PSF
TOTAL LOAD		=	33.3	PSF

SPACING = 24.0 IN. C/C

THIS TRUSS IS DESIGNED FOR RESIDENTIAL OR SMALL BUILDING REQUIREMENTS OF PART 9, NBCC 2010

THIS DESIGN COMPLIES WITH:
- PART 9 OF OBC 2012 , BCBC 2012 , ABC 2014
- CSA 086-09
- TPIC 2011

(55 % OF 27.2 P.S.F. G.S.L. PLUS 8.4 P.S.F. RAIN LOAD) EQUALS 23.3 P.S.F. SPECIFIED ROOF LIVE LOAD

ALLOWABLE DEFL.(LL)= L/360 (0.19")
CALCULATED VERT. DEFL.(LL) = L/ 986 (0.07")
ALLOWABLE DEFL.(TL)= L/360 (0.19")
CALCULATED VERT. DEFL.(TL) = L/ 525 (0.13")

CSI: TC=0.32/1.00 (D-H:1) , BC=0.25/1.00 (F-G:1) , WB=0.02/1.00 (C-G:1) , SSI=0.18/1.00 (D-H:1)

DOL LUMBER=1.00 NAIL=1.00 LS BEND=1.10 COMP=1.10 SHEAR=1.10 TENS= 1.10

COMPANION LIVE LOAD FACTOR = 0.50

AUTOSOLVE LEFT HEEL ONLY

TRUSS PLATE MANUFACTURER IS NOT RESPONSIBLE FOR QUALITY CONTROL IN THE TRUSS MANUFACTURING PLANT .

NAIL VALUES

PLATE	GRIP(DRY) (PSI) MAX	MIN	SHEAR (PLI) MAX	MIN	SECTION (PLI) MAX	MIN
MT20	618	354	1667	822	2284	1656

PLATE PLACEMENT TOL. = 0.250 inches

PLATE ROTATION TOL. = 5.0 Deg.

JSI GRIP= 0.12 (B) (INPUT = 0.90)
JSI METAL= 0.04 (D) (INPUT = 1.00)

LICENSED PROFESSIONAL ENGINEER
T.L. WISE
100083566
PROVINCE OF ONTARIO

September 14, 2018

KOTT

READ ALL NOTES ON THIS PAGE AND ON THE ENGINEERING NOTE PAGE ENP-1. THE NOTE PAGE IS AN INTEGRAL PART OF THIS DRAWING AS IT CONTAINS SPECIFICATIONS AND CRITERIA USED IN THE DESIGN OF THIS COMPONENT.

SCALE = 1:20.2

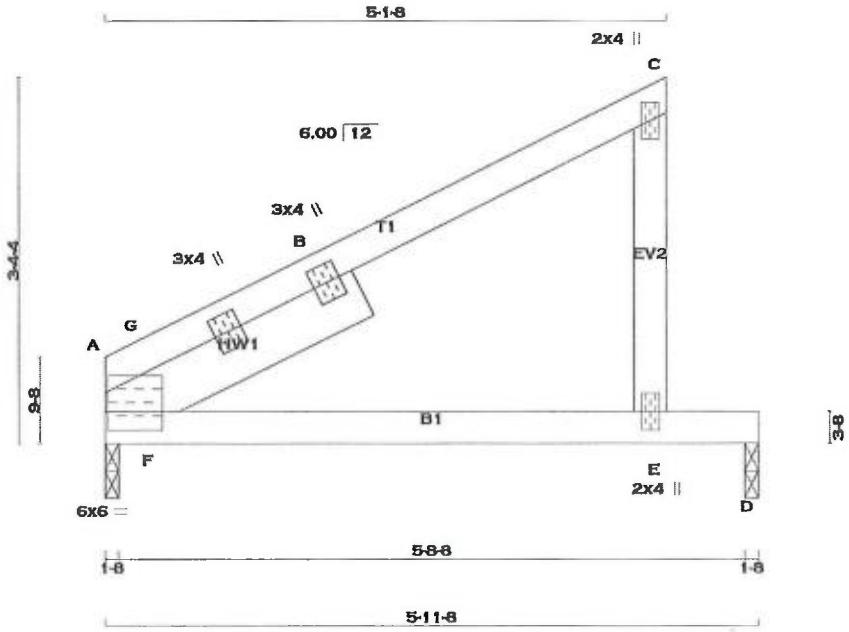

TOTAL WEIGHT = 3 X 21 = 64 lb

LUMBER
N. L. G. A. RULES

CHORDS	SIZE		LUMBER	DESCR.
A - C	2x4	DRY	No.2	SPF
E - C	2x4	DRY	No.2	SPF
A - D	2x4	DRY	No.2	SPF

REINFORCING MEMBERS

HW1	2x6	DRY	No.2	SPF

DRY: SEASONED LUMBER.

PLATES (table is in inches)

JT	TYPE	PLATES	W	LEN	Y	X
A	TMBMR1-I	MT20	6.0	6.0	2.00	0.25
A	RT+t	MT20	3.0	4.0		
A	RT+t	MT20	3.0	4.0		
C	TMV+p	MT20	2.0	4.0		
E	BMV+p	MT20	2.0	4.0		

A SIZE FOR SIZE SUBSTITUTION OF MITEK MII20 WITH TEE-LOK TL20 PLATES IS ALLOWED.

DIMENSIONS, SUPPORTS AND LOADINGS SPECIFIED BY FABRICATOR TO BE VERIFIED BY BUILDING DESIGNER

BEARINGS

JT	FACTORED GROSS REACTION VERT	HORZ	MAXIMUM FACTORED GROSS REACTION DOWN	HORZ	UPLIFT	INPUT BRG IN-SX	REQRD BRG IN-SX
A	278	0	278	0	0	1-8	1-8
D	223	0	223	0	0	1-8	1-8

UNFACTORED REACTIONS

JT	1ST LCASE COMBINED	MAX./MIN. COMPONENT REACTIONS SNOW	LIVE	PERM.LIVE	WIND	DEAD	SOIL
A	195	136 / 0	0 / 0	0 / 0	0 / 0	59 / 0	0 / 0
D	158	103 / 0	0 / 0	0 / 0	0 / 0	55 / 0	0 / 0

BEARING MATERIAL TO BE SPF NO.2 OR BETTER AT JOINT(S) A, D

BRACING
TOP CHORD TO BE SHEATHED OR MAX. PURLIN SPACING = 6.25 FT.
MAX. UNBRACED BOTTOM CHORD LENGTH = 10.00 FT OR RIGID CEILING DIRECTLY APPLIED.

ALL PITCH BREAKS AND PERIMETER CORNER JOINTS MUST BE LATERALLY RESTRAINED.

LOADING
TOTAL LOAD CASES: (4)

CHORDS

MEMB. FR-TO	MAX. FACTORED FORCE (LBS)	FACTORED VERT. LOAD (PLF) FROM	TO	LC1	MAX CSI (LC)	MAX. UNBRAC LENGTH
A- G	-192 / 0	-77.4	-77.4	0.08 (1)	6.25	
G- B	-111 / 0	-77.4	-77.4	0.34 (1)	6.25	
B- C	-111 / 0	-77.4	-77.4	0.34 (1)	6.25	
E- C	-191 / 0	0.0	0.0	0.03 (1)	7.81	
A- F	0 / 176	-17.5	-17.5	0.13 (1)	10.00	
F- E	0 / 0	-17.5	-17.5	0.26 (1)	10.00	
E- D	0 / 0	-17.5	-17.5	0.24 (1)	10.00	

WEBS

MEMB. FR-TO	MAX. FACTORED FORCE (LBS)	MAX CSI (LC)
F- G	-245 / 13	0.00 (1)
F- B	0 / 246	0.03 (1)

DESIGN CRITERIA

SPECIFIED LOADS:

TOP CH.	LL	=	23.3	PSF
	DL	=	3.0	PSF
BOT CH.	LL	=	0.0	PSF
	DL	=	7.0	PSF
TOTAL LOAD		=	33.3	PSF

SPACING = 24.0 IN. C/C

THIS TRUSS IS DESIGNED FOR RESIDENTIAL OR SMALL BUILDING REQUIREMENTS OF PART 9, NBCC 2010

THIS DESIGN COMPLIES WITH:
- PART 9 OF OBC 2012 , BCBC 2012 , ABC 2014
- CSA 086-09
- TPIC 2011

(55 % OF 27.2 P.S.F. G.S.L. PLUS 8.4 P.S.F. RAIN LOAD) EQUALS 23.3 P.S.F. SPECIFIED ROOF LIVE LOAD

ALLOWABLE DEFL.(LL)= L/360 (0.20")
CALCULATED VERT. DEFL.(LL) = L/ 941 (0.08")
ALLOWABLE DEFL.(TL)= L/360 (0.20")
CALCULATED VERT. DEFL.(TL) = L/ 497 (0.14")

CSI: TC=0.34/1.00 (C-G:1) , BC=0.26/1.00 (E-F:1) , WB=0.03/1.00 (B-F:1) , SSI=0.17/1.00 (C-G:1)

DOL LUMBER=1.00 NAIL=1.00 LS BEND=1.10 COMP=1.10 SHEAR=1.10 TENS= 1.10

COMPANION LIVE LOAD FACTOR = 0.50

AUTOSOLVE LEFT HEEL ONLY

TRUSS PLATE MANUFACTURER IS NOT RESPONSIBLE FOR QUALITY CONTROL IN THE TRUSS MANUFACTURING PLANT .

NAIL VALUES

PLATE	GRIP(DRY) (PSI) MAX	MIN	SHEAR (PLI) MAX	MIN	SECTION (PLI) MAX	MIN
MT20	618	354	1667	822	2284	1656

PLATE PLACEMENT TOL. = 0.250 inches

PLATE ROTATION TOL. = 5.0 Deg.

JSI GRIP= 0.11 (C) (INPUT = 0.90)
JSI METAL= 0.04 (C) (INPUT = 1.00)

LICENSED PROFESSIONAL ENGINEER
T.L. WISE
100083566
PROVINCE OF ONTARIO

September 14, 2018

KOTT

READ ALL NOTES ON THIS PAGE AND ON THE ENGINEERING NOTE PAGE ENP-1. THE NOTE PAGE IS AN INTEGRAL PART OF THIS DRAWING AS IT CONTAINS SPECIFICATIONS AND CRITERIA USED IN THE DESIGN OF THIS COMPONENT.

BEARING ANCHORAGE BY TOE-NAILS FOR LATERAL CAPACITY

B37579H1

NAIL TYPE	LENGTH (IN)	DIAMETER (IN)	NAIL LATERAL CAPACITY (LB)	
			S-P-F	D. FIR
COMMON WIRE	3.00	0.144	132	147
	3.25	0.144	132	147
	3.50	0.160	159	177

NOTES:

1. Rafter and ceiling members may be anchored to top and bottom chords of girder truss by toe-nailing rafter and ceiling members to girder chords provided the reaction does not exceed the lateral capacities in the table. Hangers (specified by others) are required for reactions higher than the maximum toe-nail capacity. Reactions are based on factored loads.
2. Toe nail capacities shown in the table are for **one** toe-nail. For additional toe-nails multiply values in table by the number of toe-nails used. Toe-nail capacities take into account toe-nailing factor J_A in CSA O86-09, section 10.9.4.1.
3. For 9- 3/4 gauge 3.25" common wire gun nails (diameter = 0.120") use 3" common spiral nail values.
4. Maximum number of toe-nails allowed depends on the lumber size & species to be toe-nailed to supporting member and nail diameter, as shown in tables below.
5. Nail values in table are based on the following relative lumber densities: G = 0.42 (SPF), G = 0.49 (D. Fir).
6. Toe-nails shall be driven at approximately 1/3 the nail length from the edge of the joist/truss chord and driven at an angle of 30° to the grain of the member (See next page for nailing on bearing plate).
7. For loads due to **wind** the nail lateral capacity in this table may be multiplied by 1.15 (K_D factor).
8. Lumber must be dry (< 19% moisture content) at the time of nail installation.
9. Nail values in this table comply with CSA O86-09, section 10.9.4
10. This design is not valid after April 30, 2019.

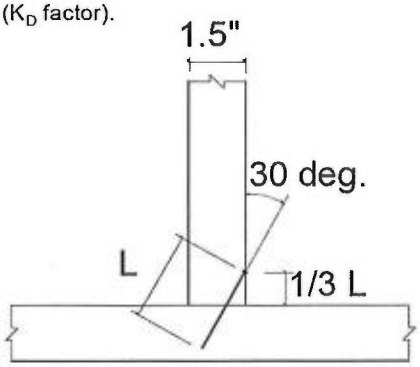

TOE-NAIL INSTALLATION

Nail type	Common wire	Common spiral	Common wire
Nail dia. (in)	0.160	0.152	0.144
	(3.5" nail)		(3" and 3.25" nail)
LUMBER SIZE	MAXIMUM NUMBER OF TOE-NAILS		
2X4 SPF	2	2	3
2X4 D. Fir	2	2	2
2X6 SPF	4	4	4
2X6 D. Fir	3	3	3

MiTek Canada Inc
100 Industrial Rd.
Bradford, Ontario L3Z 3G7

PEO
Certificate No. 10889485

LICENSED PROFESSIONAL ENGINEER
C. Cordogiannis
90553736
PROVINCE OF ONTARIO

April 26, 2017

BEARING ANCHORAGE BY TOE-NAILS FOR WIND LOADING B37579H2

NAIL TYPE	LENGTH (IN)	DIAMETER (IN)	NAIL WITHDRAWAL CAPACITY (LB)	
			S-P-F	D. FIR
COMMON WIRE	3.00	0.144	30	42
	3.25	0.144	32	45
	3.50	0.160	38	52

Note: If using truss with D. Fir lumber and S-P-F bearing plate, use values in table for S-P-F.

NOTES:

1. Truss chord, rafter, or ceiling members may be anchored to bearing plate by toe-nails, provided that the actual factored uplift force due to **wind or earthquake** load does not exceed the withdrawal capacities in the table. Hangers (specified by others) are required for uplift forces that are higher than the maximum toe-nail withdrawal capacity.
2. Toe nail capacities shown in the table are for **one** toe-nail. For additional toe-nails multiply values in table by the number of toe-nails used. Toe-nail capacities take into account toe-nailing factor J_A in CSA O86-09, section 10.9.5.2.
3. For 9- 3/4 gauge 3.25" common wire gun nails (diameter = 0.120") use 3" common spiral nail values.
4. Maximum number of toe-nails allowed depends on the lumber size & species to be toe-nailed to supporting member and nail diameter, as shown in table above.
5. Nail values in table are based on the following relative lumber densities: G = 0.42(SPF), G = 0.49(D. Fir).
6. Toe-nails shall be driven at approximately 1/3 the nail length from the edge of the joist/truss chord and driven at an angle of 30° to the grain of the member (See drawing on detail B37579H1).
7. Lumber must be dry (< 19% moisture content) at the time of nail installation.
8. Nail values in this table comply with CSA O86-09, section 10.9.5
9. This design is not valid after April 30, 2019

Toe-nailing on 2x6 Bearing Plate

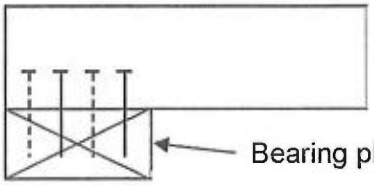

Elevation view

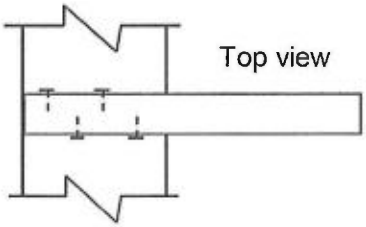

Top view

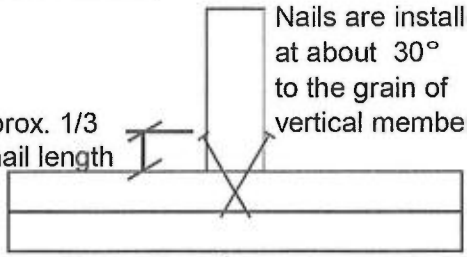

Toe-nailing viewed from end of joist or truss

Toe-nailing on 2x4 Bearing Plate

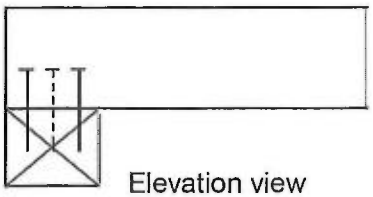

Elevation view

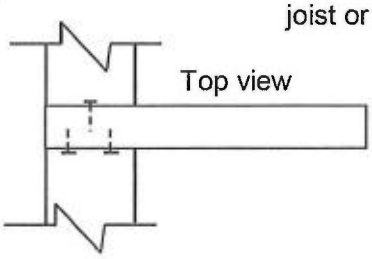

Top view

MiTek Canada Inc
100 Industrial Rd.
Bradford, Ontario L3Z 3G7

PEO
Certificate No. 10889485

LICENSED PROFESSIONAL ENGINEER
C. Cordogiannis
90553736
PROVINCE OF ONTARIO

April 26, 2017