THIS TRUSS DESIGNED FOR FLAT SOLAR PANEL ARRAY TO BE INSTALLED ALONG TOP CHORDS HAVING A COMBINED DEAD LOAD (SOLAR PANEL ARRAY) NOT EXCEEDING 5.0 PSF AND IN ACCORDANCE WITH CURRENT EDITION OF TPIC. THIS IS A LOAD READY DECLARATION ONLY AND NOT AN INSTALLATION READY DECLARATION.A SEPARATE INSTALLATION DETAIL IS REQUIRED BY LICENSED PROFESSIONAL ENGINEER ONCE A SOLAR ARRAY LAYOUT IS ESTABLISHED , AND AVAILABLE ON A ROOF BY ROOF BASIS.

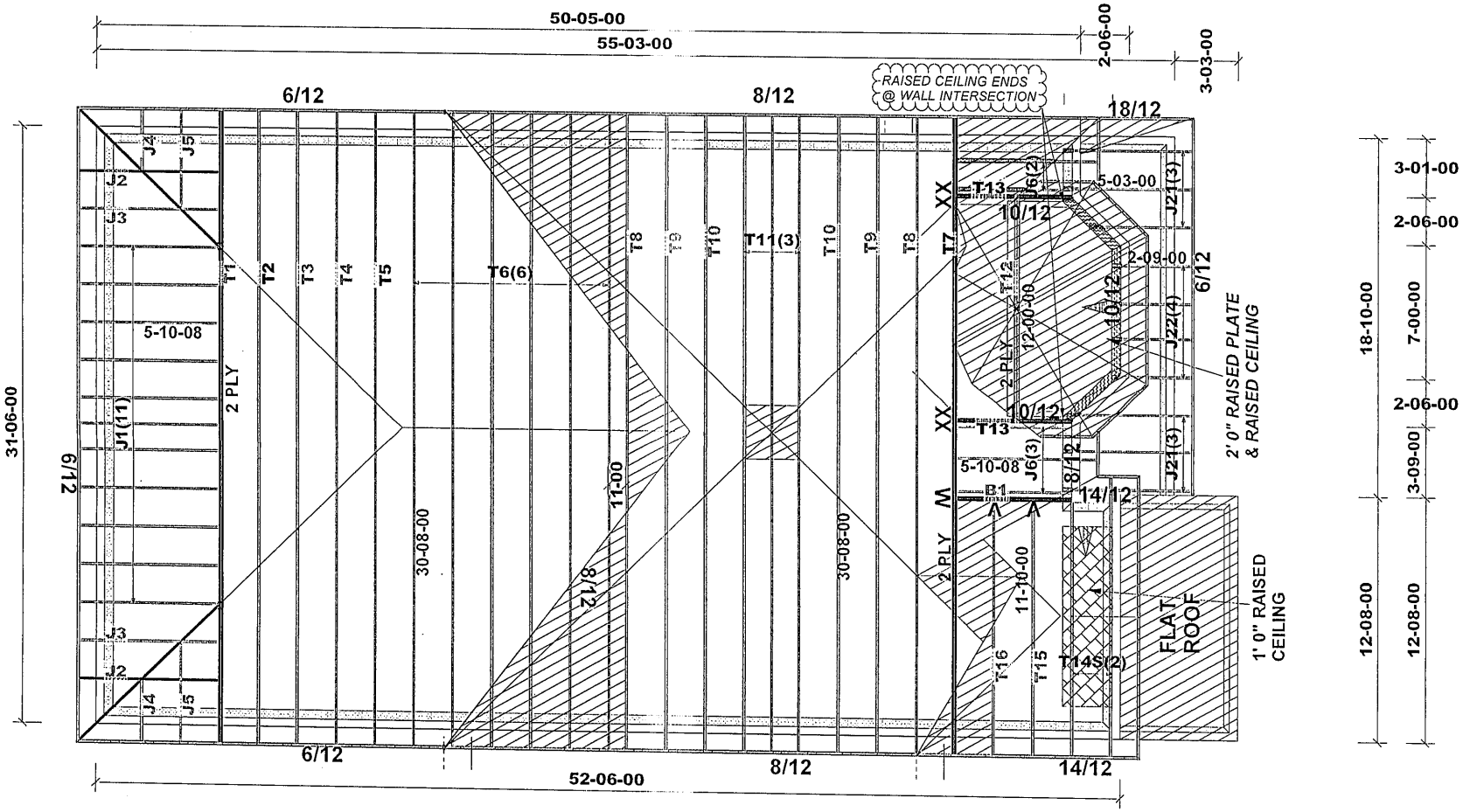

ASPHALT SHINGLES
12" FINISHED O.H.
5" CLADDING ALLOWANCE
2x6 EXTERIOR WALLS
2x6 FASCIA BOARD
HEEL: R.T.M.C

T - 180020

ALL CONV. FRAMING TO CONFORM WITH PART 9 OF O.B.C. 2012 ROOF RAFTERS THAT CROSS OVER OR MEET TRUSSES TO BE 2X4 SPF #2 24" O.C. WITH A VERT.POST TO THE TRUSS UNDERNEATH AT EACH CROSS PT. VERT. POST LONGER THAN 6' TO HAVE LATERAL BRACING SO THAT THE DIST. BETWEEN END PT. & BETWEEN ROWS OF BRACING DOES NOT EXCEED 6'

DESIGN CONFORMS WITH OBC 2012
OCCUPANCY: RESIDENTIAL | PART: 9
GROUND SNOW LOAD Ss=48.1psf Sr=8.4psf
DESIGN LOADS
TCDL (8psf)
BCLL (10.5psf)
BCDL (7psf)

DENOTES:
CONVENTIONAL FRAMING

HARDWARE:
LUS24 - (O)
LJS26DS - (V)
LUS26-2 - (W)
HGUS26-2 - (XX)

BEAMS:
B1: 2 - 2x10 SPF #2

TAMARACK LUMBER INC. ALPA LUMBER GROUP	Job Track: 45274	Builder / Location: GREENPARK HOMES / EAST GWILLIMBURY	Model / Elevation: PINEBROOK 1A / 1
	Layout ID: 290315	Project: SECONDO VALES ESTATES	
	Plan Log: 95166	Date: 1/18/2018 Designer: colinh/JG	

THESE DRAWINGS CONSTITUTE THE PROPERTY OF TAMARACK ROOF TRUSSES INC., SHALL NOT BE REPRODUCED, PUBLISHED, OR REDISTRIBUTED IN ANY MANNER OR UTILIZED FOR ANY PURPOSE OTHER THAN THE MANUFACTURE OF TRUSSES BY TAMARACK ROOF TRUSSES INC AND WILL BE RETRACTED BY TAMARACK ROOF TRUSSES INC IF UTLILZED FOR ANY OTHER PURPOSE.

Mitek ver 7.5.0

THIS TRUSS DESIGNED FOR FLAT SOLAR PANEL ARRAY TO BE INSTALLED ALONG TOP CHORDS HAVING A COMBINED DEAD LOAD (SOLAR PANEL ARRAY) NOT EXCEEDING 5.0 PSF AND IN ACCORDANCE WITH CURRENT EDITION OF TPIC. THIS IS A LOAD READY DECLARATION ONLY AND NOT AN INSTALLATION READY DECLARATION.A SEPARATE INSTALLATION DETAIL IS REQUIRED BY LICENSED PROFESSIONAL ENGINEER ONCE A SOLAR ARRAY LAYOUT IS ESTABLISHED , AND AVAILABLE ON A ROOF BY ROOF BASIS.

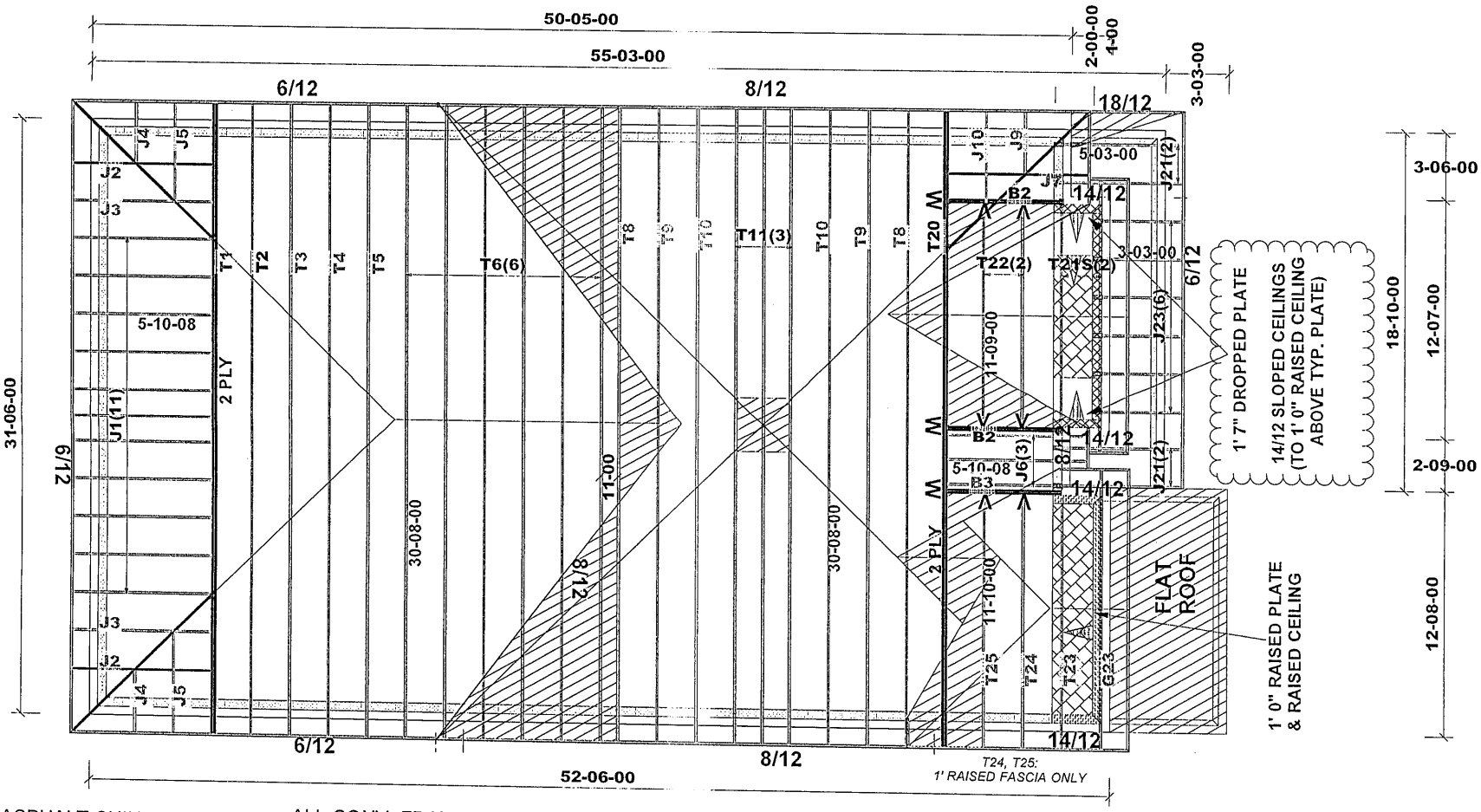

ASPHALT SHINGLES
12" FINISHED O.H.
5" CLADDING ALLOWANCE
2x6 EXTERIOR WALLS
2x6 FASCIA BOARD
HEEL: R.T.M.C

T - 180020

ALL CONV. FRAMING TO CONFORM WITH PART 9 OF O.B.C. 2012 ROOF RAFTERS THAT CROSS OVER OR MEET TRUSSES TO BE 2X4 SPF #2 24" O.C. WITH A VERT.POST TO THE TRUSS UNDERNEATH AT EACH CROSS PT. VERT. POST LONGER THAN 6' TO HAVE LATERAL BRACING SO THAT THE DIST. BETWEEN END PT. & BETWEEN ROWS OF BRACING DOES NOT EXCEED 6'

DESIGN CONFORMS WITH OBC 2012
OCCUPANCY: RESIDENTIAL | PART: 9
GROUND SNOW LOAD Ss=48.1psf Sr=8.4psf
DESIGN LOADS
TCDL (8psf)
BCLL (10.5psf)
BCDL (7psf)

HARDWARE:
LUS24 - (O)
LJS26DS - (V)
LUS26-2 - (W)
HGUS26-2 - (XX)

DENOTES:
CONVENTIONAL FRAMING

BEAMS:
B2, B3: 2 - 2x10 SPF #2

TAMARACK LUMBER INC. / ALPA LUMBER GROUP	Job Track: **45274**	Builder / Location: **GREENPARK HOMES / EAST GWILLIMBURY**	Model / Elevation: **PINEBROOK 1A / 2**
	Layout ID: **290316**	Project: **SECONDO VALES ESTATES**	
	Plan Log: **95166**	Date: 1/18/2018 Designer: colinh/JG	

THESE DRAWINGS CONSTITUTE THE PROPERTY OF TAMARACK ROOF TRUSSES INC., SHALL NOT BE REPRODUCED, PUBLISHED, OR REDISTRIBUTED IN ANY MANNER OR UTILIZED FOR ANY PURPOSE OTHER THAN THE MANUFACTURE OF TRUSSES BY TAMARACK ROOF TRUSSES INC AND WILL BE RETRACTED BY TAMARACK ROOF TRUSSES INC IF UTLILZED FOR ANY OTHER PURPOSE.

Mitek ver 7.5.0

THIS TRUSS DESIGNED FOR FLAT SOLAR PANEL ARRAY TO BE INSTALLED ALONG TOP CHORDS HAVING A COMBINED DEAD LOAD (SOLAR PANEL ARRAY) NOT EXCEEDING 5.0 PSF AND IN ACCORDANCE WITH CURRENT EDITION OF TPIC. THIS IS A LOAD READY DECLARATION ONLY AND NOT AN INSTALLATION READY DECLARATION.A SEPARATE INSTALLATION DETAIL IS REQUIRED BY LICENSED PROFESSIONAL ENGINEER ONCE A SOLAR ARRAY LAYOUT IS ESTABLISHED , AND AVAILABLE ON A ROOF BY ROOF BASIS.

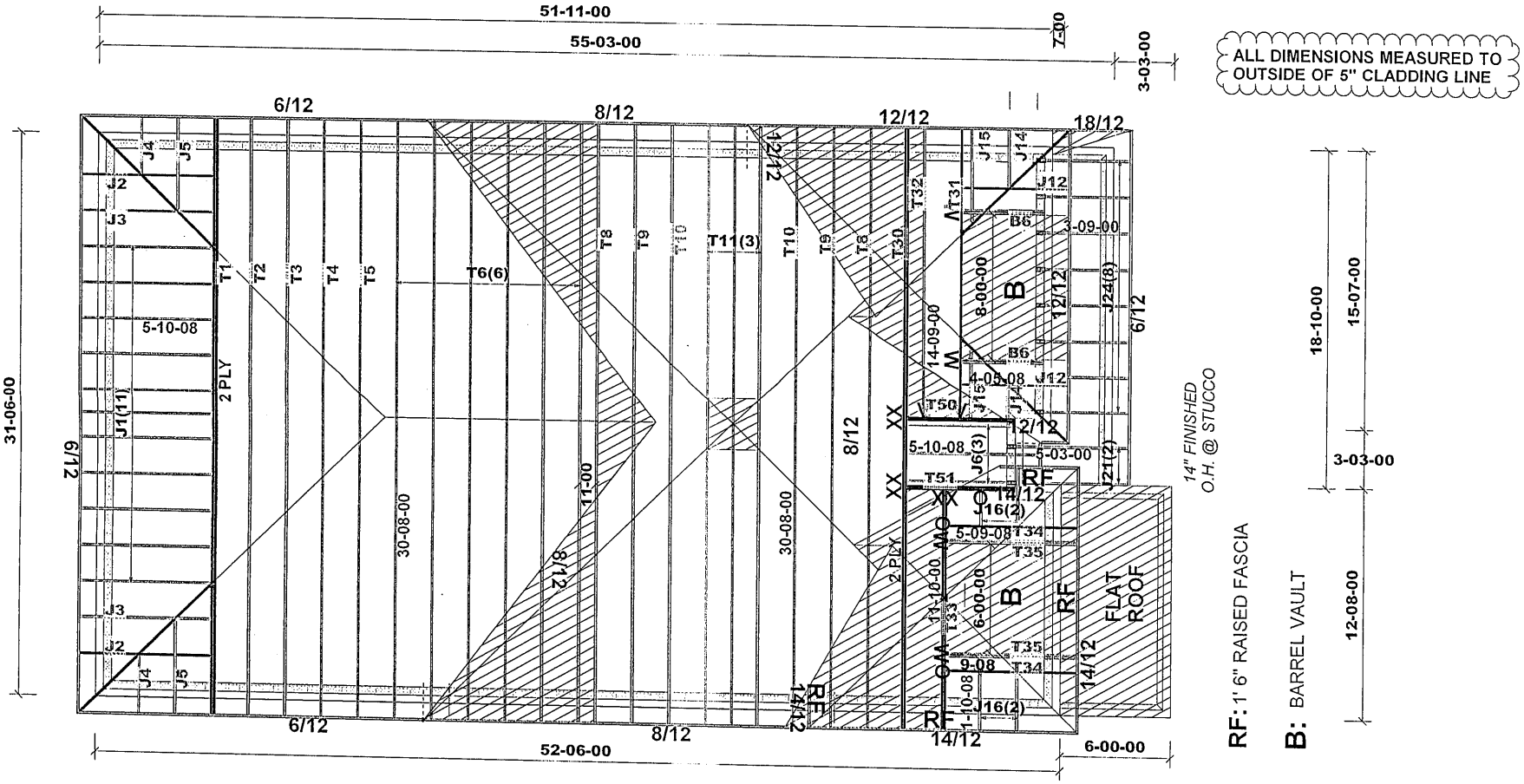

RF: 1' 6" RAISED FASCIA

B: BARREL VAULT

ASPHALT SHINGLES
12" FINISHED O.H.
5" CLADDING ALLOWANCE
2x6 EXTERIOR WALLS
2x6 FASCIA BOARD
HEEL: R.T.M.C

T - 180020

ALL CONV. FRAMING TO CONFORM WITH PART 9 OF O.B.C. 2012 ROOF RAFTERS THAT CROSS OVER OR MEET TRUSSES TO BE 2X4 SPF #2 24" O.C. WITH A VERT.POST TO THE TRUSS UNDERNEATH AT EACH CROSS PT. VERT. POST LONGER THAN 6' TO HAVE LATERAL BRACING SO THAT THE DIST. BETWEEN END PT. & BETWEEN ROWS OF BRACING DOES NOT EXCEED 6'

DESIGN CONFORMS WITH OBC 2012
OCCUPANCY: RESIDENTIAL | PART: 9
GROUND SNOW LOAD Ss=48.1psf Sr=8.4psf
DESIGN LOADS
TCDL (8psf)
BCLL (10.5psf)
BCDL (7psf)

DENOTES:
CONVENTIONAL FRAMING

HARDWARE:
LUS24 - (O)
LJS26DS - (V)
LUS26-2 - (W)
HGUS26-2 - (XX)

BEAMS:
B4, B5, B6: 2 - 2x10 SPF #2

TAMARACK LUMBER INC. ALPA LUMBER GROUP	Job Track: 45274	Builder / Location: GREENPARK HOMES / EAST GWILLIMBURY	Model / Elevation: PINEBROOK 1A / 3
	Layout ID: 290317	Project: SECONDO VALES ESTATES	
	Plan Log: 95166	Date: 1/18/2018 Designer: colinh/JG	

THESE DRAWINGS CONSTITUTE THE PROPERTY OF TAMARACK ROOF TRUSSES INC., SHALL NOT BE REPRODUCED, PUBLISHED, OR REDISTRIBUTED IN ANY MANNER OR UTILIZED FOR ANY PURPOSE OTHER THAN THE MANUFACTURE OF TRUSSES BY TAMARACK ROOF TRUSSES INC AND WILL BE RETRACTED BY TAMARACK ROOF TRUSSES INC IF UTLILZED FOR ANY OTHER PURPOSE.

Mitek ver 7.5.0

DATE	01/12/18
SALES REP	Mario

TAMARACK LUMBER INC.
[redacted]
ALPA LUMBER GROUP

Delivery Shiplist

JOB TRACK: 45274 LAYOUT ID: 290315 LOCATION: EAST GWILLIMBURY
BUILDER: GREENPARK / Secondo Vales SUB-BUILDER:
MODEL: PINEBROOK 1A ELEVATION: 1

ROOF TRUSSES

ROOF TRUSS SPACING: 24.0 IN. O.C. (TYP.)

PROFILE	QTY / PLY	MARK / TYPE	PITCH TC / BC	SPAN	TRUSS HEIGHT	LUMBER TOP	LUMBER BOT	OVERHANG LEFT / RIGHT	HEEL HEIGHT LEFT / RIGHT	LBS. / BFT.	BUNDLE # / STACK #	LOAD BY: / REMARKS
	1 / 2 Ply	T1 HIP GIRDER	6.00 / 0.00	30-08-00	04-01-04	2 X 4	2 X 4	01-03-08 / 01-03-08	01-02-00 / 01-02-00	239.40 / 150.66		
	1	T2 HIP	6.00 / 0.00	30-08-00	05-01-04	2 X 4	2 X 4	01-03-08 / 01-03-08	01-02-00 / 01-02-00	122.88 / 77.17		
	1	T3 HIP	6.00 / 0.00	30-08-00	06-01-04	2 X 4	2 X 4	01-03-08 / 01-03-08	01-02-00 / 01-02-00	125.55 / 78.67		
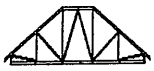	1	T4 HIP	6.00 / 0.00	30-08-00	07-01-04	2 X 4	2 X 4	01-03-08 / 01-03-08	01-02-00 / 01-02-00	127.03 / 78.67		
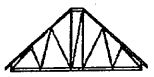	1	T5 HIP	6.00 / 0.00	30-08-00	08-01-04	2 X 4	2 X 4	01-03-08 / 01-03-08	01-02-00 / 01-02-00	132.63 / 83.00		
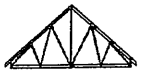	6	T6 COMMON	6.00 / 0.00	30-08-00	08-10-00	2 X 4	2 X 4	01-03-08 / 01-03-08	01-02-00 / 01-02-00	746.04 / 467.04		
	1 / 2 Ply	T7 HIP GIRDER	8.00 / 0.00	30-08-00	05-03-13	2 X 4	2 X 6	01-03-08 / 01-03-08	01-04-13 / 01-04-13	303.18 / 185.34		
	2	T8 HIP	8.00 / 0.00	30-08-00	06-07-13	2 X 4	2 X 4	01-03-08 / 01-03-08	01-04-13 / 01-04-13	269.72 / 172.00		
	2	T9 HIP	8.00 / 0.00	30-08-00	07-11-13	2 X 4	2 X 4	01-03-08 / 01-03-08	01-04-13 / 01-04-13	276.50 / 174.00		
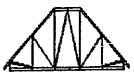	2	T10 HIP	8.00 / 0.00	30-08-00	09-03-13	2 X 4	2 X 4	01-03-08 / 01-03-08	01-04-13 / 01-04-13	280.88 / 174.66		
	3	T11 HIP	8.00 / 0.00	30-08-00	10-07-13	2 X 4	2 X 4	01-03-08 / 01-03-08	01-04-13 / 01-04-13	478.56 / 297.99		
	1 / 2 Ply	T12 COMMON	10.00 / 0.00	12-00-00	06-01-00	2 X 4	2 X 4	00-00-00 / 00-00-00	01-01-00 / 01-01-00	108.10 / 70.00		
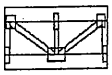	2 / 2 Ply	T13 FLAT GIRDER	0.00 / 0.00	05-10-08	02-00-00	2 X 6	2 X 6	00-00-00 / 00-00-00	02-00-00 / 02-00-00	115.60 / 74.68		
	2	T14S ROOF	14.00 / 0.00	11-10-00	09-00-02	2 X 4	2 X 4	01-03-08 / 01-03-08	02-01-05 / 02-01-05	136.64 / 89.34		
	1	T15 HIP	14.00 / 0.00	11-10-00	07-03-12	2 X 4	2 X 4	01-03-08 / 01-03-08	02-01-05 / 02-01-05	65.79 / 42.00		
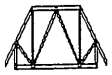	1	T16 HIP	14.00 / 0.00	11-10-00	04-11-12	2 X 4	2 X 4	01-03-08 / 01-03-08	02-01-05 / 02-01-05	59.76 / 38.67		
	11	J1 JACK-OPEN	6.00 / 0.00	05-10-08	04-01-04	2 X 4	2 X 4	01-03-08 / 00-00-00	01-02-00 / 04-01-04	184.69 / 117.37		
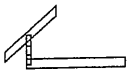	2	J2 JACK-OPEN	6.00 / 0.00	05-10-08	02-00-12	2 X 4	2 X 4	01-03-08 / -04-01-01	01-02-00 / 00-03-08	23.16 / 14.66		

DATE	01/12/18
SALES REP	Mario

TAMARACK LUMBER INC.
[redacted]
ALPA LUMBER GROUP

Delivery Shiplist

JOB TRACK: 45274 LAYOUT ID: 290315 LOCATION: EAST GWILLIMBURY
BUILDER: GREENPARK / Seconds Vales SUB-BUILDER:
MODEL: PINEBROOK 1A ELEVATION: 1

ROOF TRUSSES

ROOF TRUSS SPACING: 24.0 IN. O.C. (TYP.)

PROFILE	QTY / PLY	MARK TYPE	PITCH TC / BC	SPAN	TRUSS HEIGHT	LUMBER TOP	LUMBER BOT	OVERHANG LEFT / RIGHT	HEEL HEIGHT LEFT / RIGHT	LBS. / BFT.	BUNDLE # / STACK #	LOAD BY: / REMARKS
	2	J3 JACK-OPEN	6.00 / 0.00	05-10-08	03-00-12	2 X 4	2 X 4	01-03-08 / -02-01-01	01-02-00 / 00-03-08	28.26 / 17.34		
	2	J4 JACK-OPEN	6.00 / 0.00	01-10-08	02-00-12	2 X 4	2 X 4	01-03-08 / -00-01-01	01-02-00 / 00-03-08	14.04 / 9.34		
	2	J5 JACK-OPEN	6.00 / 0.00	01-10-08	03-03-14	2 X 4	2 X 4	01-03-08 / 01-10-15	01-02-00 / 00-04-11	19.14 / 12.00		
	5	J6 JACK-OPEN	8.00 / 0.00	05-10-08	05-03-13	2 X 4	2 X 4	01-03-08 / 00-00-00	01-04-13 / 05-03-13	89.15 / 53.35		
	6	J21 JACK-OPEN	6.00 / 0.00	05-03-00	02-11-11	2 X 4	2 X 4	01-03-08 / 00-00-00	00-04-03 / 02-11-11	86.94 / 55.98		
	4	J22 JACK-OPEN	6.00 / 0.00	02-09-00	01-08-11	2 X 4	2 X 4	01-03-08 / 00-00-00	00-04-03 / 01-08-11	33.84 / 21.32		

TOTAL # TRUSS= **67.00** TOTAL BFT OF ALL TRUSSES= **2555.25** BFT. TOTAL WEIGHT OF ALL TRUSSES= **4067.48** LBS.

HARDWARE

QTY	ITEM TYPE	MODEL	LENGTH FT-IN-16
2	Hangers	HGUS26-2	
2	Hangers	LJS26DS	

TOTAL # ITEMS= **4.00**

DATE	01/12/18
SALES REP	Mario

TAMARACK LUMBER INC.
[redacted]
ALPA LUMBER GROUP

Delivery Shiplist

JOB TRACK: 45274 LAYOUT ID: 290316 LOCATION: EAST GWILLIMBURY
BUILDER: GREENPARK / Secondo Vales SUB-BUILDER:
MODEL: PINEBROOK 1A ELEVATION: 2

ROOF TRUSSES

ROOF TRUSS SPACING: 24.0 IN. O.C. (TYP.)

PROFILE	QTY / PLY	MARK / TYPE	PITCH TC / BC	SPAN	TRUSS HEIGHT	LUMBER TOP	LUMBER BOT	OVERHANG LEFT / RIGHT	HEEL HEIGHT LEFT / RIGHT	LBS. / BFT.	BUNDLE # / STACK #	LOAD BY: / REMARKS
	1 / 2 Ply	T1 HIP GIRDER	6.00 / 0.00	30-08-00	04-01-04	2 X 4	2 X 4	01-03-08 / 01-03-08	01-02-00 / 01-02-00	239.40 / 150.66		
	1	T2 HIP	6.00 / 0.00	30-08-00	05-01-04	2 X 4	2 X 4	01-03-08 / 01-03-08	01-02-00 / 01-02-00	122.88 / 77.17		
	1	T3 HIP	6.00 / 0.00	30-08-00	06-01-04	2 X 4	2 X 4	01-03-08 / 01-03-08	01-02-00 / 01-02-00	125.55 / 78.67		
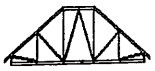	1	T4 HIP	6.00 / 0.00	30-08-00	07-01-04	2 X 4	2 X 4	01-03-08 / 01-03-08	01-02-00 / 01-02-00	127.03 / 78.67		
	1	T5 HIP	6.00 / 0.00	30-08-00	08-01-04	2 X 4	2 X 4	01-03-08 / 01-03-08	01-02-00 / 01-02-00	132.63 / 83.00		
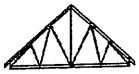	6	T6 COMMON	6.00 / 0.00	30-08-00	08-10-00	2 X 4	2 X 4	01-03-08 / 01-03-08	01-02-00 / 01-02-00	746.04 / 467.04		
	2	T8 HIP	8.00 / 0.00	30-08-00	06-07-13	2 X 4	2 X 4	01-03-08 / 01-03-08	01-04-13 / 01-04-13	269.72 / 172.00		
	2	T9 HIP	8.00 / 0.00	30-08-00	07-11-13	2 X 4	2 X 4	01-03-08 / 01-03-08	01-04-13 / 01-04-13	276.50 / 174.00		
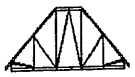	2	T10 HIP	8.00 / 0.00	30-08-00	09-03-13	2 X 4	2 X 4	01-03-08 / 01-03-08	01-04-13 / 01-04-13	280.88 / 174.66		
	3	T11 HIP	8.00 / 0.00	30-08-00	10-07-13	2 X 4	2 X 4	01-03-08 / 01-03-08	01-04-13 / 01-04-13	478.56 / 297.99		
	1 / 2 Ply	T20 HIP GIRDER	8.00 / 0.00	30-08-00	05-03-13	2 X 4	2 X 6	01-03-08 / 01-03-08	01-04-13 / 01-04-13	296.36 / 182.34		
	2	T21S ROOF	14.00 / 14.00	11-09-00	08-11-09	2 X 4	2 X 4	01-03-08 / 01-03-08	02-01-05 / 02-01-05	135.10 / 90.00		
	2	T22 COMMON	14.00 / 0.00	11-09-00	07-04-09	2 X 4	2 X 4	00-00-00 / 00-00-00	00-06-05 / 00-06-05	95.58 / 62.34		
	1	T23 COMMON	14.00 / 0.00	11-10-00	09-00-02	2 X 4	2 X 4	01-03-08 / 01-03-08	02-01-05 / 02-01-05	68.49 / 43.17		
	1	G23 COMMON	14.00 / 0.00	11-10-00	09-00-02	2 X 4	2 X 4	01-03-08 / 01-03-08	02-01-05 / 02-01-05	69.86 / 45.17		
	1	T24 HIP	14.00 / 0.00	11-10-00	08-03-12	2 X 4	2 X 4	01-03-08 / 01-03-08	03-01-05 / 03-01-05	71.22 / 44.83		
	1	T25 HIP	14.00 / 0.00	11-10-00	05-11-12	2 X 4	2 X 4	01-03-08 / 01-03-08	03-01-05 / 03-01-05	66.21 / 43.00		
	11	J1 JACK-OPEN	6.00 / 0.00	05-10-08	04-01-04	2 X 4	2 X 4	01-03-08 / 00-00-00	01-02-00 / 04-01-04	184.69 / 117.37		

DATE	01/12/18
SALES REP	Mario

TAMARACK LUMBER INC.
[redacted]
ALPA LUMBER GROUP

Delivery Shiplist

JOB TRACK: 45274 LAYOUT ID: 290316 LOCATION: EAST GWILLIMBURY
BUILDER: GREENPARK / Secondo Vales SUB-BUILDER:
MODEL: PINEBROOK 1A ELEVATION: 2

ROOF TRUSSES

ROOF TRUSS SPACING: 24.0 IN. O.C. (TYP.)

PROFILE	QTY / PLY	MARK / TYPE	PITCH TC / BC	SPAN	TRUSS HEIGHT	LUMBER TOP	LUMBER BOT	OVERHANG LEFT / RIGHT	HEEL HEIGHT LEFT / RIGHT	LBS. / BFT.	BUNDLE # / STACK #	LOAD BY: / REMARKS
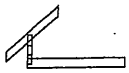	2	J2 JACK-OPEN	6.00 0.00	05-10-08	02-00-12	2 X 4	2 X 4	01-03-08 -04-01-01	01-02-00 00-03-08	23.16 14.66		
	2	J3 JACK-OPEN	6.00 0.00	05-10-08	03-00-12	2 X 4	2 X 4	01-03-08 -02-01-01	01-02-00 00-03-08	28.26 17.34		
	2	J4 JACK-OPEN	6.00 0.00	01-10-08	02-00-12	2 X 4	2 X 4	01-03-08 -00-01-01	01-02-00 00-03-08	14.04 9.34		
	2	J5 JACK-OPEN	6.00 0.00	01-10-08	03-00-12	2 X 4	2 X 4	01-03-08 01-10-15	01-02-00 00-04-11	19.14 12.00		
	3	J6 JACK-OPEN	8.00 0.00	05-10-08	05-03-13	2 X 4	2 X 4	01-03-08 00-00-00	01-04-13 05-03-13	53.49 32.01		
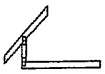	1	J7 JACK-OPEN	8.00 0.00	05-10-08	02-07-02	2 X 4	2 X 4	01-03-08 -04-01-01	01-04-13 00-03-08	12.23 7.33		
	1	J9 JACK-OPEN	8.00 0.00	01-10-08	02-07-02	2 X 4	2 X 4	01-03-08 -00-01-01	01-04-13 00-03-08	7.67 4.67		
	1	J10 JACK-OPEN	8.00 0.00	01-10-08	03-11-02	2 X 4	2 X 4	01-03-08 01-10-15	01-04-13 00-05-03	10.41 6.67		
	4	J21 JACK-OPEN	6.00 0.00	05-03-00	02-11-11	2 X 4	2 X 4	01-03-08 00-00-00	00-04-03 02-11-11	57.96 37.32		
	6	J23 JACK-OPEN	6.00 0.00	03-03-00	01-11-11	2 X 4	2 X 4	01-03-08 00-00-00	00-04-03 01-11-11	57.96 40.02		

TOTAL # TRUSS= **66.00** TOTAL BFT OF ALL TRUSSES= **2563.44** BFT. TOTAL WEIGHT OF ALL TRUSSES= **4071.02** LBS.

HARDWARE

QTY	ITEM TYPE	MODEL	LENGTH FT-IN-16
6	Hangers	LJS26DS	
3	Hangers	LUS26-2	

TOTAL # ITEMS= **9.00**

DATE	01/12/18
SALES REP	Mario

TAMARACK LUMBER INC.
[redacted]
ALPA LUMBER GROUP

Delivery Shiplist

JOB TRACK: 45274 LAYOUT ID: 290317 LOCATION: EAST GWILLIMBURY
BUILDER: GREENPARK / Secondo Vales SUB-BUILDER:
MODEL: PINEBROOK 1A ELEVATION: 3

ROOF TRUSSES

ROOF TRUSS SPACING: 24.0 IN. O.C. (TYP.)

PROFILE	QTY / PLY	MARK / TYPE	PITCH TC / BC	SPAN	TRUSS HEIGHT	LUMBER TOP	LUMBER BOT	OVERHANG LEFT / RIGHT	HEEL HEIGHT LEFT / RIGHT	LBS. / BFT.	BUNDLE # / STACK #	LOAD BY: / REMARKS
	1 / 2 Ply	T1 / HIP GIRDER	6.00 / 0.00	30-08-00	04-01-04	2 X 4	2 X 4	01-03-08 / 01-03-08	01-02-00 / 01-02-00	239.40 / 150.66		
	1	T2 / HIP	6.00 / 0.00	30-08-00	05-01-04	2 X 4	2 X 4	01-03-08 / 01-03-08	01-02-00 / 01-02-00	122.88 / 77.17		
	1	T3 / HIP	6.00 / 0.00	30-08-00	06-01-04	2 X 4	2 X 4	01-03-08 / 01-03-08	01-02-00 / 01-02-00	125.55 / 78.67		
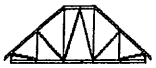	1	T4 / HIP	6.00 / 0.00	30-08-00	07-01-04	2 X 4	2 X 4	01-03-08 / 01-03-08	01-02-00 / 01-02-00	127.03 / 78.67		
	1	T5 / HIP	6.00 / 0.00	30-08-00	08-01-04	2 X 4	2 X 4	01-03-08 / 01-03-08	01-02-00 / 01-02-00	132.63 / 83.00		
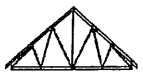	6	T6 / COMMON	6.00 / 0.00	30-08-00	08-10-00	2 X 4	2 X 4	01-03-08 / 01-03-08	01-02-00 / 01-02-00	746.04 / 467.04		
	2	T8 / HIP	8.00 / 0.00	30-08-00	06-07-13	2 X 4	2 X 4	01-03-08 / 01-03-08	01-04-13 / 01-04-13	269.72 / 172.00		
	2	T9 / HIP	8.00 / 0.00	30-08-00	07-11-13	2 X 4	2 X 4	01-03-08 / 01-03-08	01-04-13 / 01-04-13	276.50 / 174.00		
	2	T10 / HIP	8.00 / 0.00	30-08-00	09-03-13	2 X 4	2 X 4	01-03-08 / 01-03-08	01-04-13 / 01-04-13	280.88 / 174.66		
	3	T11 / HIP	8.00 / 0.00	30-08-00	10-07-13	2 X 4	2 X 4	01-03-08 / 01-03-08	01-04-13 / 01-04-13	478.56 / 297.99		
	1 / 2 Ply	T30 / HIP GIRDER	8.00 / 0.00	30-08-00	05-03-13	2 X 6	2 X 6	01-03-08 / 01-03-08	01-04-13 / 01-04-13	347.98 / 210.00		
	1	T31 / HIP GIRDER	12.00 / 0.00	14-09-00	06-04-00	2 X 4	2 X 6	01-03-08 / 01-03-08	01-10-08 / 01-10-08	88.15 / 57.00		
	1	T32 / HIP	12.00 / 0.00	14-09-00	08-04-00	2 X 4	2 X 4	01-03-08 / 01-03-08	01-10-08 / 01-10-08	84.58 / 54.00		
	1 / 2 Ply	T33 / COMMON	14.00 / 0.00	11-10-00	10-06-02	2 X 4	2 X 6	01-03-08 / 01-03-08	03-07-05 / 03-07-05	159.86 / 99.34		
	2	T34 / HALF HIP	14.00 / 0.00	05-09-08	05-09-09	2 X 4	2 X 4	01-03-08 / 00-00-00	03-07-05 / 05-09-09	77.78 / 51.66		
	2 / 2 Ply	T35 / HALF HIP	14.00 / 0.00	05-09-08	06-08-10	2 X 4	2 X 4	01-03-08 / 00-00-00	03-07-05 / 06-08-10	167.40 / 112.68		
	1 / 2 Ply	T50 / JACK-CLOSED	8.00 / 0.00	05-10-08	05-03-13	2 X 4	2 X 6	00-00-00 / 00-00-00	01-04-13 / 05-03-13	64.24 / 40.66		
	1 / 2 Ply	T51 / FLAT GIRDER	0.00 / 0.00	05-10-08	03-03-13	2 X 6	2 X 6	00-00-00 / 00-00-00	03-03-13 / 03-03-13	74.22 / 47.00		

DATE	01/12/18
SALES REP	Mario

TAMARACK LUMBER INC.
[redacted]
ALPA LUMBER GROUP

Delivery Shiplist

JOB TRACK: 45274 LAYOUT ID: 290317 LOCATION: EAST GWILLIMBURY
BUILDER: GREENPARK / Secondo Vales SUB-BUILDER:
MODEL: PINEBROOK 1A ELEVATION: 3

ROOF TRUSS SPACING: 24.0 IN. O.C. (TYP.)

ROOF TRUSSES

PROFILE	QTY / PLY	MARK / TYPE	PITCH TC / BC	SPAN	TRUSS HEIGHT	LUMBER TOP	LUMBER BOT	OVERHANG LEFT / RIGHT	HEEL HEIGHT LEFT / RIGHT	LBS. / BFT.	BUNDLE # / STACK #	LOAD BY: / REMARKS
	11	J1 JACK-OPEN	6.00 / 0.00	05-10-08	04-01-04	2 X 4	2 X 4	01-03-08 / 00-00-00	01-02-00 / 04-01-04	184.69 / 117.37		
	2	J2 JACK-OPEN	6.00 / 0.00	05-10-08	02-00-12	2 X 4	2 X 4	01-03-08 / -04-01-01	01-02-00 / 00-03-08	23.16 / 14.66		
	2	J3 JACK-OPEN	6.00 / 0.00	05-10-08	03-00-12	2 X 4	2 X 4	01-03-08 / -02-01-01	01-02-00 / 00-03-08	28.26 / 17.34		
	2	J4 JACK-OPEN	6.00 / 0.00	01-10-08	02-00-12	2 X 4	2 X 4	01-03-08 / -00-01-01	01-02-00 / 00-03-08	14.04 / 9.34		
	2	J5 JACK-OPEN	6.00 / 0.00	01-10-08	03-00-12	2 X 4	2 X 4	01-03-08 / 01-10-15	01-02-00 / 00-04-11	19.14 / 12.00		
	3	J6 JACK-OPEN	8.00 / 0.00	05-10-08	05-03-13	2 X 4	2 X 4	01-03-08 / 00-00-00	01-04-13 / 05-03-13	53.49 / 32.01		
	2	J12 JACK-OPEN	12.00 / 0.00	04-05-08	03-07-15	2 X 4	2 X 4	01-03-08 / -02-08-01	01-10-08 / 00-03-08	24.10 / 16.00		
	2	J14 JACK-OPEN	12.00 / 0.00	01-10-08	03-07-15	2 X 4	2 X 4	01-03-08 / -00-01-01	01-10-08 / 00-03-08	18.20 / 12.00		
	2	J15 JACK-OPEN	12.00 / 0.00	01-10-08	05-07-15	2 X 4	2 X 4	01-03-08 / 01-10-15	01-10-08 / 00-06-07	24.66 / 16.00		
	4	J16 JACK-OPEN	14.00 / 0.00	01-10-08	05-09-09	2 X 4	2 X 4	01-03-08 / 00-00-00	03-07-05 / 05-09-09	58.44 / 40.00		
	2	J21 JACK-OPEN	6.00 / 0.00	05-03-00	02-11-11	2 X 4	2 X 4	01-03-08 / 00-00-00	00-04-03 / 02-11-11	28.98 / 18.66		
	8	J24 JACK-OPEN	6.00 / 0.00	03-09-00	02-02-11	2 X 4	2 X 4	01-03-08 / 00-00-00	00-04-03 / 02-02-11	86.96 / 53.36		

TOTAL # TRUSS= **79.00** TOTAL BFT OF ALL TRUSSES= **2784.94** BFT. TOTAL WEIGHT OF ALL TRUSSES= **4427.52** LBS.

HARDWARE

QTY	ITEM TYPE	MODEL	LENGTH FT-IN-16
3	Hangers	HGUS26-2	
2	Hangers	LJS26DS	
4	Hangers	LUS24	

TOTAL # ITEMS= **9.00**

JOB NAME	TRUSS NAME	QUANTITY	PLY	JOB DESC. 45274	DRWG NO.
290315	T1	1	2	TRUSS DESC.	

Version 8.200 S Dec 12 2017 MiTek Industries, Inc. Mon Jan 15 08:13:13 2018 Page 1

Tamarack Roof Truss, Burlington

ID:kjhWC3V7rOjjJm4XuW?IGPyNETN-70pCXrc3tT3MABIYWRQVMBxRFqIxov_QnAgoN7zvB2K

Scale = 1:52.8

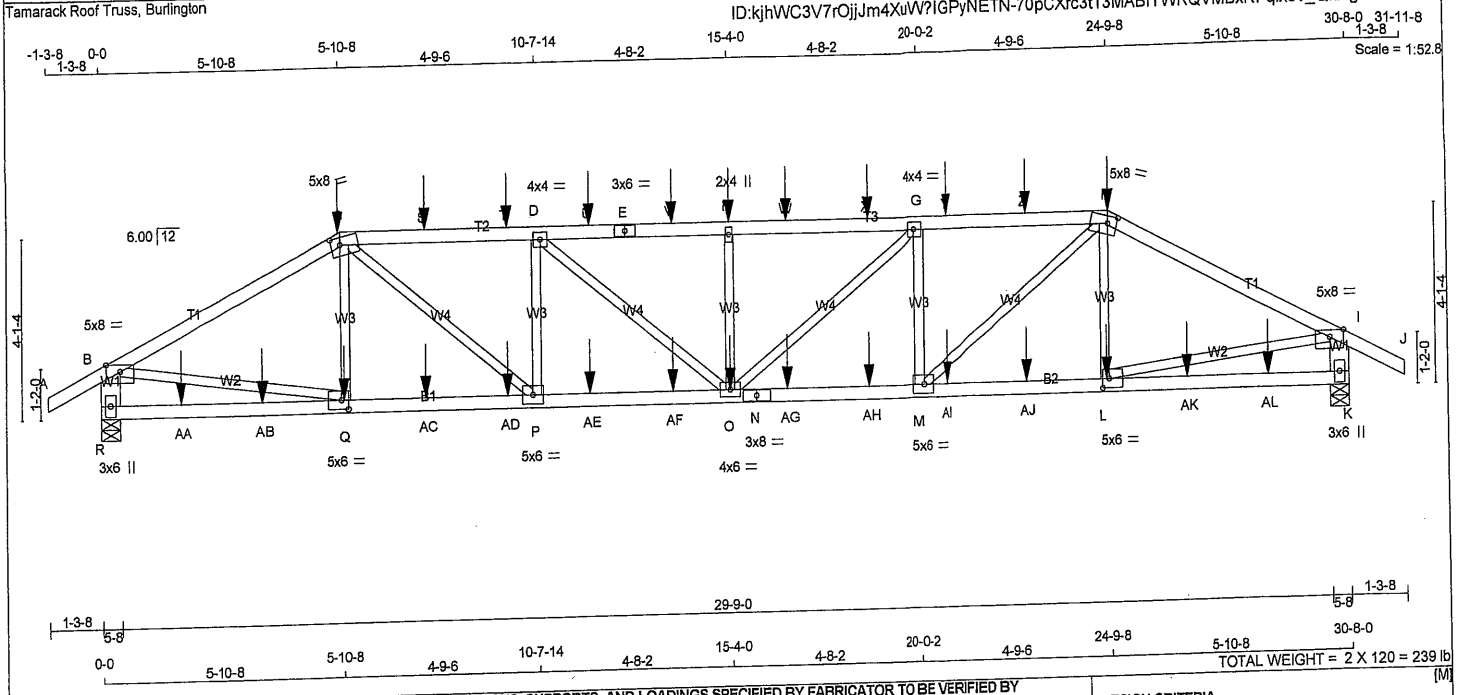

TOTAL WEIGHT = 2 X 120 = 239 lb [M]

LUMBER

N. L. G. A. RULES

CHORDS	SIZE		LUMBER	DESCR.
A - C	2x4	DRY	No.2	SPF
C - E	2x4	DRY	No.2	SPF
E - H	2x4	DRY	No.2	SPF
H - J	2x4	DRY	No.2	SPF
R - B	2x6	DRY	No.2	SPF
K - I	2x6	DRY	No.2	SPF
R - N	2x4	DRY	No.2	SPF
N - K	2x4	DRY	No.2	SPF
ALL WEBS EXCEPT	2x3	DRY	No.2	SPF

DRY: SEASONED LUMBER.

DESIGN CONSISTS OF 2 TRUSSES BUILT SEPARATELY THEN FASTENED TOGETHER AS FOLLOWS:

CHORDS	#ROWS	SURFACE SPACING (IN)	LOAD(PLF)
TOP CHORDS : (0.122"X3") SPIRAL NAILS			
A- C	1	12	SIDE(61.0)
C- E	1	12	SIDE(61.0)
E- H	1	12	SIDE(61.0)
H- J	1	12	SIDE(61.0)
R- B	2	12	TOP
K- I	2	12	TOP
BOTTOM CHORDS : (0.122"X3") SPIRAL NAILS			
R- N	1	12	SIDE(61.0)
N- K	1	12	SIDE(61.0)
WEBS : (0.122"X3") SPIRAL NAILS			
Q- C	1	6	SIDE(6.1)
L- H	1	6	SIDE(6.1)
2x3	1	6	

NAILS TO BE DRIVEN FROM ONE SIDE ONLY.

GIRDER NAILING ASSUMES NAILED HANGERS ARE FASTENED WITH MIN. 3-0 INCH NAILS.

TOP - COMPONENTS ARE LOADED FROM THE TOP AND MUST BE PLACED ON TOP EDGE OF ALL PLIES FOR THE LOAD TO BE TRANSFERRED TO EACH PLY.

SIDE - PLF SHOWN IS THE EQUIVALENT UDL APPLIED TO ONE SIDE THAT THE CORRESPONDING NAILING PATTERN SHALL BE CAPABLE OF TRANSFERING. REMAINING PLF MUST BE APPLIED ON THE OPPOSITE SIDE OR ON THE TOP.

PLATES (table is in inches)

JT	TYPE	PLATES	W	LEN	Y	X
B	TMVW-p	MT20	5.0	8.0	Edge	
C	TTWW-m	MT20	5.0	8.0	2.00	2.75
D	TMWW-t	MT20	4.0	4.0		
E	TS-t	MT20	3.0	6.0		
F	TMW+w	MT20	2.0	4.0		
G	TMWW-t	MT20	4.0	4.0		
H	TTWW-m	MT20	5.0	8.0	2.00	2.75
I	TMVW-p	MT20	5.0	8.0	Edge	
K	BMV1+p	MT20	3.0	6.0		
L	BMWW-t	MT20	5.0	6.0	2.50	2.00
M	BMWW-t	MT20	5.0	6.0		
N	BS-t	MT20	3.0	8.0		
O	BMWWW-t	MT20	4.0	6.0		
P	BMWW-t	MT20	5.0	6.0		
Q	BMWW-t	MT20	5.0	6.0	2.50	2.00
R	BMV1+p	MT20	3.0	6.0		

DIMENSIONS, SUPPORTS AND LOADINGS SPECIFIED BY FABRICATOR TO BE VERIFIED BY BUILDING DESIGNER

BEARINGS

JT	FACTORED GROSS REACTION VERT	HORZ	MAXIMUM FACTORED GROSS REACTION DOWN	HORZ	UPLIFT	INPUT BRG IN-SX	REQRD BRG IN-SX
R	3968	0	3968	0	0	5-8	5-8
K	3968	0	3968	0	0	5-8	5-8

UNFACTORED REACTIONS

JT	1ST LCASE COMBINED	MAX./MIN. COMPONENT REACTIONS SNOW	LIVE	PERM.LIVE	WIND	DEAD	SOIL
R	3149	1802 / 0	558 / 0	0 / 0	0 / 0	789 / 0	0 / 0
K	3148	1802 / 0	558 / 0	0 / 0	0 / 0	789 / 0	0 / 0

BEARING MATERIAL TO BE SPF NO.2 OR BETTER AT JOINT(S) R, K

BRACING

TOP CHORD TO BE SHEATHED OR MAX. PURLIN SPACING = 2.85 FT.
MAX. UNBRACED BOTTOM CHORD LENGTH = 10.00 FT OR RIGID CEILING DIRECTLY APPLIED.

ALL PITCH BREAKS AND PERIMETER CORNER JOINTS MUST BE LATERALLY RESTRAINED.

LOADING

TOTAL LOAD CASES: (4)

CHORDS

MEMB. FR-TO	MAX. FACTORED FORCE (LBS)	FACTORED VERT. LOAD (PLF) FROM	TO	LC1	MAX CSI (LC)	MAX. UNBRAC LENGTH
A- B	0 / 38	-124.4	-124.4	0.09 (1)	10.00	
B- C	-5777 / 0	-124.4	-124.4	0.71 (1)	3.44	
C- S	-7480 / 0	-124.4	-124.4	0.63 (1)	3.05	
S- T	-7480 / 0	-124.4	-124.4	0.63 (1)	3.05	
T- D	-7480 / 0	-124.4	-124.4	0.63 (1)	3.05	
D- U	-8220 / 0	-124.4	-124.4	0.68 (1)	2.85	
U- E	-8220 / 0	-124.4	-124.4	0.68 (1)	2.85	
E- V	-8220 / 0	-124.4	-124.4	0.68 (1)	2.85	
V- F	-8220 / 0	-124.4	-124.4	0.68 (1)	2.85	
F- W	-8220 / 0	-124.4	-124.4	0.68 (1)	2.85	
W- X	-8220 / 0	-124.4	-124.4	0.68 (1)	2.85	
X- G	-8220 / 0	-124.4	-124.4	0.68 (1)	2.85	
G- Y	-7480 / 0	-124.4	-124.4	0.63 (1)	3.05	
Y- Z	-7480 / 0	-124.4	-124.4	0.63 (1)	3.05	
Z- H	-7480 / 0	-124.4	-124.4	0.63 (1)	3.05	
H- I	-5777 / 0	-124.4	-124.4	0.71 (1)	3.44	
I- J	0 / 38	-124.4	-124.4	0.09 (1)	10.00	
R- B	-3865 / 0	0.0	0.0	0.14 (1)	7.20	
K- I	-3865 / 0	0.0	0.0	0.14 (1)	7.20	
R-AA	0 / 0	-28.0	-28.0	0.21 (3)	10.00	
AA-AB	0 / 0	-28.0	-28.0	0.21 (3)	10.00	
AB- Q	0 / 0	-28.0	-28.0	0.21 (3)	10.00	
Q-AC	0 / 5152	-28.0	-28.0	0.55 (1)	10.00	
AC-AD	0 / 5152	-28.0	-28.0	0.55 (1)	10.00	
AD- P	0 / 5152	-28.0	-28.0	0.55 (1)	10.00	
P-AE	0 / 7480	-28.0	-28.0	0.73 (1)	10.00	
AE-AF	0 / 7480	-28.0	-28.0	0.73 (1)	10.00	
AF- O	0 / 7480	-28.0	-28.0	0.73 (1)	10.00	
O- N	0 / 7480	-28.0	-28.0	0.73 (1)	10.00	
N-AG	0 / 7480	-28.0	-28.0	0.73 (1)	10.00	
AG-AH	0 / 7480	-28.0	-28.0	0.73 (1)	10.00	
AH- M	0 / 7480	-28.0	-28.0	0.73 (1)	10.00	
M-AI	0 / 5152	-28.0	-28.0	0.55 (1)	10.00	
AI-AJ	0 / 5152	-28.0	-28.0	0.55 (1)	10.00	
AJ- L	0 / 5152	-28.0	-28.0	0.55 (1)	10.00	
L-AK	0 / 0	-28.0	-28.0	0.21 (3)	10.00	
AK-AL	0 / 0	-28.0	-28.0	0.21 (3)	10.00	
AL- K	0 / 0	-28.0	-28.0	0.21 (3)	10.00	

WEBS

MEMB. FR-TO	MAX. FACTORED FORCE (LBS)	MAX CSI (LC)
Q- C	-446 / 180	0.06 (1)
C- P	0 / 2975	0.37 (1)
P- D	-1650 / 0	0.22 (1)
D- O	0 / 954	0.12 (1)
O- F	-953 / 0	0.13 (1)
O- G	0 / 954	0.12 (1)
M- G	-1650 / 0	0.22 (1)
M- H	0 / 2975	0.37 (1)
L- H	-446 / 180	0.06 (1)
B- Q	0 / 5217	0.65 (1)
L- I	0 / 5217	0.65 (1)

LICENSED PROFESSIONAL ENGINEER
1576
S. KATSOULAKOS
PROVINCE OF ONTARIO

DESIGN CRITERIA

SPECIFIED LOADS:

TOP CH.	LL	=	34.8	PSF
	DL	=	8.0	PSF
BOT CH.	LL	=	10.5	PSF
	DL	=	7.0	PSF
TOTAL LOAD		=	60.3	PSF

SPACING = 24.0 IN. C/C

LOADING IN FLAT SECTION BASED ON A SLOPE OF 6.00/12

THIS TRUSS IS DESIGNED FOR RESIDENTIAL OR SMALL BUILDING REQUIREMENTS OF PART 9, NBCC 2010

THIS DESIGN COMPLIES WITH:
- PART 9 OF OBC 2012 , BCBC 2012 , ABC 2014
- CSA 086-09
- TPIC 2011

(55 % OF 48.1 P.S.F. G.S.L. PLUS 8.4 P.S.F. RAIN LOAD) EQUALS 34.8 P.S.F. SPECIFIED ROOF LIVE LOAD

ALLOWABLE DEFL.(LL)= L/360 (1.02")
CALCULATED VERT. DEFL.(LL) = L/ 999 (0.26")
ALLOWABLE DEFL.(TL)= L/360 (1.02")
CALCULATED VERT. DEFL.(TL) = L/ 859 (0.43")

CSI: TC=0.71/1.00 (B-C:1) , BC=0.73/1.00 (O-P:1) , WB=0.65/1.00 (B-Q:1) , SSI=0.25/1.00 (G-H:1)

DOL LUMBER=1.00 NAIL=1.00 LS BEND=1.00 COMP=1.00 SHEAR=1.00 TENS= 1.00

COMPANION LIVE LOAD FACTOR = 0.50

AUTOSOLVE HEELS OFF

TRUSS PLATE MANUFACTURER IS NOT RESPONSIBLE FOR QUALITY CONTROL IN THE TRUSS MANUFACTURING PLANT .

NAIL VALUES

PLATE	GRIP(DRY) (PSI) MAX	MIN	SHEAR (PLI) MAX	MIN	SECTION (PLI) MAX	MIN
MT20	618	354	1667	822	2284	1656

PLATE PLACEMENT TOL. = 0.250 inches

PLATE ROTATION TOL. = 5.0 Deg.

JSI GRIP= 0.88 (C) (INPUT = 0.90)
JSI METAL= 0.94 (N) (INPUT = 1.00)

p6/4

DWG NO. TAM 3586-18
STRUCTURAL COMPONENT ONLY

CONTINUED ON PAGE 2

JOB NAME	TRUSS NAME	QUANTITY	PLY	JOB DESC. 45274	DRWG NO.
290315	T1	1	2	TRUSS DESC.	

Tamarack Roof Truss, Burlington

Version 8.200 S Dec 12 2017 MiTek Industries, Inc. Mon Jan 15 08:13:13 2018 Page 2
ID:kjhWC3V7rOjjJm4XuVV?IGPyNETN-70pCXrc3tT3MABIYWRQVMBxRFqlxov_QnAgoN7zvB2K

Edge - INDICATES REFERENCE CORNER OF PLATE TOUCHES EDGE OF CHORD.

HANGERS NOTES

1) SPECIAL HANGER(S) OR CONNECTION(S) REQUIRED TO SUPPORT CONCENTRATED LOAD(S) 490.8 lbs FACTORED DOWN AT 5-10-8, 149.7 lbs FACTORED DOWN AT 7-11-4, 149.7 lbs FACTORED DOWN AT 9-11-4, 149.7 lbs FACTORED DOWN AT 11-11-4, 149.7 lbs FACTORED DOWN AT 13-11-4, 149.7 lbs FACTORED DOWN AT 15-4-0, 149.7 lbs FACTORED DOWN AT 16-8-12, 149.7 lbs FACTORED DOWN AT 18-8-12, 149.7 lbs FACTORED DOWN AT 20-8-12, AND 149.7 lbs FACTORED DOWN AT 22-8-12, AND 490.8 lbs FACTORED DOWN AT 24-9-8 ON TOP CHORD, AND 74.4 lbs FACTORED DOWN AT 1-11-4, 69.9 lbs FACTORED DOWN AT 3-11-4, 69.9 lbs FACTORED DOWN AT 5-11-4, 69.9 lbs FACTORED DOWN AT 7-11-4, 69.9 lbs FACTORED DOWN AT 9-11-4, 69.9 lbs FACTORED DOWN AT 11-11-4, 69.9 lbs FACTORED DOWN AT 13-11-4, 69.9 lbs FACTORED DOWN AT 15-4-0, 69.9 lbs FACTORED DOWN AT 16-8-12, 69.9 lbs FACTORED DOWN AT 18-8-12, 69.9 lbs FACTORED DOWN AT 20-8-12, 69.9 lbs FACTORED DOWN AT 22-8-12, 69.9 lbs FACTORED DOWN AT 24-8-12, AND 69.9 lbs FACTORED DOWN AT 26-8-12, AND 74.4 lbs FACTORED DOWN AT 28-8-12 ON BOTTOM CHORD. DESIGN FOR UNSPECIFIED CONNECTION(S) IS DELEGATED TO THE BUILDING DESIGNER.

FACTORED CONCENTRATED LOADS (LBS)

JT	LOC.	LC1	MAX-	MAX+	FACE	DIR.	TYPE
C	5-10-8	-491	-491	—	FRONT	VERT	TOTAL
F	15-4-0	-150	-150	—	FRONT	VERT	TOTAL
H	24-9-8	-491	-491	—	FRONT	VERT	TOTAL
L	24-8-12	-40	-70	—	FRONT	VERT	TOTAL
O	15-4-0	-40	-70	—	FRONT	VERT	TOTAL
Q	5-11-4	-40	-70	—	FRONT	VERT	TOTAL
S	7-11-4	-150	-150	—	FRONT	VERT	TOTAL
T	9-11-4	-150	-150	—	FRONT	VERT	TOTAL
U	11-11-4	-150	-150	—	FRONT	VERT	TOTAL
V	13-11-4	-150	-150	—	FRONT	VERT	TOTAL
W	16-8-12	-150	-150	—	FRONT	VERT	TOTAL
X	18-8-12	-150	-150	—	FRONT	VERT	TOTAL
Y	20-8-12	-150	-150	—	FRONT	VERT	TOTAL
Z	22-8-12	-150	-150	—	FRONT	VERT	TOTAL
AA	1-11-4	-38	-74	—	FRONT	VERT	TOTAL
AB	3-11-4	-40	-70	—	FRONT	VERT	TOTAL
AC	7-11-4	-40	-70	—	FRONT	VERT	TOTAL
AD	9-11-4	-40	-70	—	FRONT	VERT	TOTAL
AE	11-11-4	-40	-70	—	FRONT	VERT	TOTAL
AF	13-11-4	-40	-70	—	FRONT	VERT	TOTAL
AG	16-8-12	-40	-70	—	FRONT	VERT	TOTAL
AH	18-8-12	-40	-70	—	FRONT	VERT	TOTAL
AI	20-8-12	-40	-70	—	FRONT	VERT	TOTAL
AJ	22-8-12	-40	-70	—	FRONT	VERT	TOTAL
AK	26-8-12	-40	-70	—	FRONT	VERT	TOTAL
AL	28-8-12	-38	-74	—	FRONT	VERT	TOTAL

LICENSED PROFESSIONAL ENGINEER
12878
S. KATSOULAKOS
PROVINCE OF ONTARIO

DWG NO. TAM3586-18
STRUCTURAL
COMPONENT ONLY

JOB NAME	TRUSS NAME	QUANTITY	PLY	JOB DESC. 45274	DRWG NO.
290315	T2	1	1	TRUSS DESC.	

Version 8.200 S Dec 12 2017 MiTek Industries, Inc. Mon Jan 15 08:13:14 2018 Page 1

Tamarack Roof Truss, Burlington

ID:kjhWC3V7rOjjJm4XuW?IGPyNETN-bDNalBchenBDoLtk48xkvPUfqE5hXLpZ0qPLvazvB2J

Scale = 1:52.8

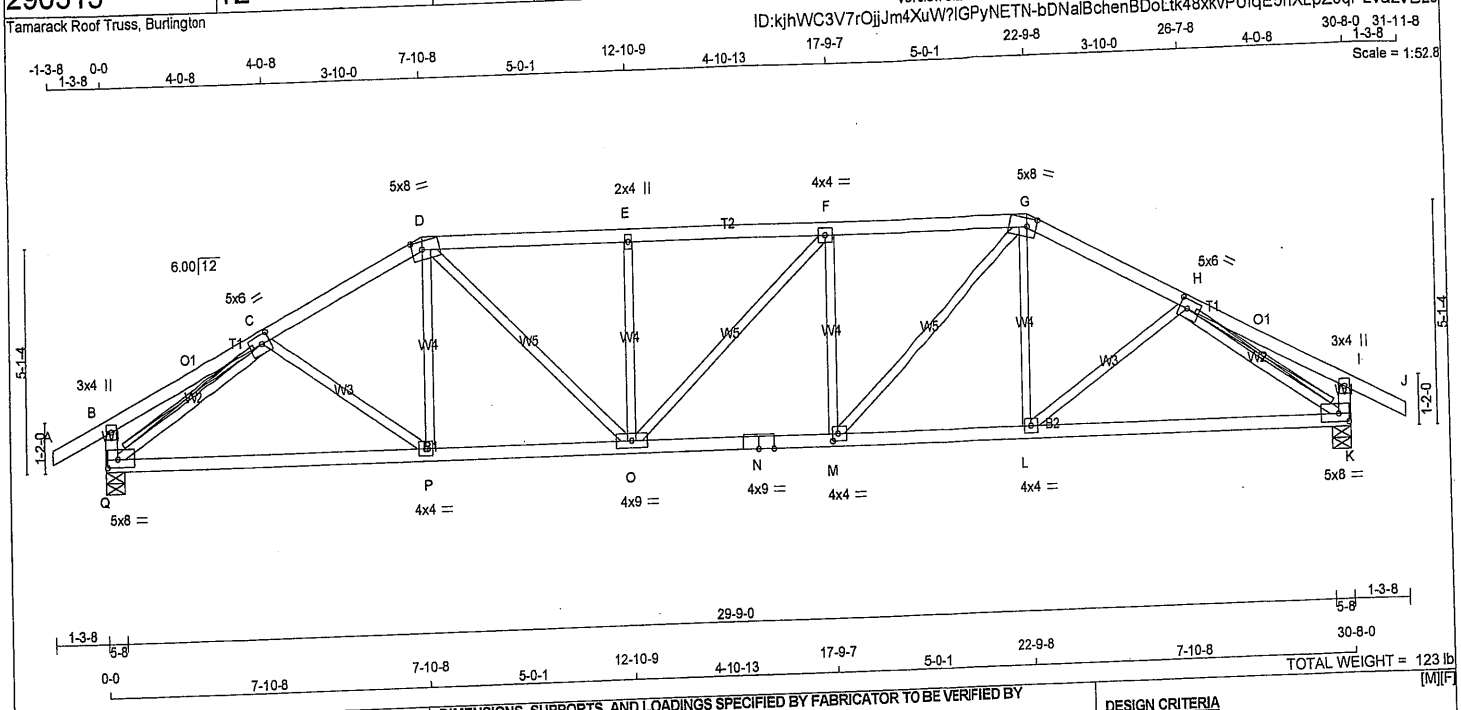

TOTAL WEIGHT = 123 lb [M][F]

LUMBER

N. L. G. A. RULES

CHORDS	SIZE		LUMBER	DESCR.
A - D	2x4	DRY	No.2	SPF
D - G	2x4	DRY	No.2	SPF
G - J	2x4	DRY	No.2	SPF
Q - B	2x4	DRY	No.2	SPF
K - I	2x4	DRY	No.2	SPF
Q - N	2x4	DRY	No.2	SPF
N - K	2x4	DRY	No.2	SPF
ALL WEBS EXCEPT	2x3	DRY	No.2	SPF

DRY: SEASONED LUMBER.

PLATES (table is in inches)

JT	TYPE	PLATES	W	LEN	Y	X
B	TMV+p	MT20	3.0	4.0		
C	TMWW-t	MT20	5.0	6.0	2.50	2.25
D	TTWW-m	MT20	5.0	8.0	2.25	3.00
E	TMW+w	MT20	2.0	4.0		
F	TMWW-t	MT20	4.0	4.0		
G	TTWW-m	MT20	5.0	8.0	2.25	2.75
H	TMWW-t	MT20	5.0	6.0	2.50	2.25
I	TMV+p	MT20	3.0	4.0		
K	BMVW1-t	MT20	5.0	8.0	2.25	3.00
L	BMWW-t	MT20	4.0	4.0		
M	BMWW-t	MT20	4.0	4.0	2.00	1.50
N	BS-t	MT20	4.0	9.0		
O	BMWWW-t	MT20	4.0	9.0		
P	BMWW-t	MT20	4.0	4.0		
Q	BMVW1-t	MT20	5.0	8.0	2.25	3.00

DIMENSIONS, SUPPORTS AND LOADINGS SPECIFIED BY FABRICATOR TO BE VERIFIED BY BUILDING DESIGNER

BEARINGS

JT	FACTORED GROSS REACTION VERT	HORZ	MAXIMUM FACTORED GROSS REACTION DOWN	HORZ	UPLIFT	INPUT BRG IN-SX	REQRD BRG IN-SX
Q	2505	0	2505	0	0	5-8	5-8
K	2505	0	2505	0	0	5-8	5-8

UNFACTORED REACTIONS

JT	1ST LCASE COMBINED	MAX./MIN. COMPONENT REACTIONS SNOW	LIVE	PERM.LIVE	WIND	DEAD	SOIL
Q	1965	1161 / 0	322 / 0	0 / 0	0 / 0	482 / 0	0 / 0
K	1965	1161 / 0	322 / 0	0 / 0	0 / 0	482 / 0	0 / 0

BEARING MATERIAL TO BE SPF NO.2 OR BETTER AT JOINT(S) Q, K

BRACING

TOP CHORD TO BE SHEATHED OR MAX. PURLIN SPACING = 3.20 FT.
MAX. UNBRACED BOTTOM CHORD LENGTH = 10.00 FT OR RIGID CEILING DIRECTLY APPLIED.

ALL PITCH BREAKS AND PERIMETER CORNER JOINTS MUST BE LATERALLY RESTRAINED.

2x4 DRY SPF No.2 T-BRACE AT C-Q, H-K

FASTEN T AND I-BRACES TO NARROW EDGE OF WEB WITH ONE ROW PER PLY OF 3" COMMON WIRE NAILS @ 6" O.C. WITH 3" MINIMUM END DISTANCE. BRACE MUST COVER 90% OF WEB LENGTH.

END VERTICAL(S) MUST BE SHEATHED OR HAVE BRACES AS INDICATED IN THE MAX. UNBRACED LENGTH COLUMN OF THE TABLE BELOW

LOADING

TOTAL LOAD CASES: (4)

CHORDS

MEMB. FR-TO	MAX. FACTORED FORCE (LBS)	FACTORED VERT. LOAD (PLF) FROM	TO	LC1	MAX CSI (LC)	MAX. UNBRAC LENGTH
A- B	0 / 38	-124.4	-124.4	0.16 (1)	10.00	
B- C	0 / 22	-124.4	-124.4	0.27 (1)	10.00	
C- D	-3239 / 0	-124.4	-124.4	0.34 (1)	3.63	
D- E	-3689 / 0	-124.4	-124.4	0.53 (1)	3.20	
E- F	-3690 / 0	-124.4	-124.4	0.49 (1)	3.26	
F- G	-3692 / 0	-124.4	-124.4	0.53 (1)	3.20	
G- H	-3238 / 0	-124.4	-124.4	0.34 (1)	3.63	
H- I	0 / 22	-124.4	-124.4	0.27 (1)	10.00	
I- J	0 / 38	-124.4	-124.4	0.16 (1)	10.00	
Q- B	-366 / 0	0.0	0.0	0.04 (1)	7.81	
K- I	-366 / 0	0.0	0.0	0.04 (1)	7.81	
Q- P	0 / 2853	-28.0	-28.0	0.67 (2)	10.00	
P- O	0 / 2879	-28.0	-28.0	0.69 (2)	10.00	
O- N	0 / 3692	-28.0	-28.0	0.68 (1)	10.00	
N- M	0 / 3692	-28.0	-28.0	0.68 (1)	10.00	
M- L	0 / 2879	-28.0	-28.0	0.69 (2)	10.00	
L- K	0 / 2853	-28.0	-28.0	0.67 (2)	10.00	

WEBS

MEMB. FR-TO	MAX. FACTORED FORCE (LBS)	MAX CSI (LC)
C- P	0 / 173	0.04 (3)
P- D	0 / 309	0.07 (3)
D- O	0 / 1123	0.25 (1)
O- E	-666 / 0	0.26 (1)
O- F	-3 / 0	0.00 (1)
M- F	-666 / 0	0.26 (1)
M- G	0 / 1127	0.25 (1)
L- G	0 / 308	0.07 (3)
L- H	0 / 173	0.04 (3)
Q- C	-3511 / 0	0.74 (1)
H- K	-3511 / 0	0.74 (1)

LICENSED PROFESSIONAL ENGINEER 1318 S. KATSOULAKOS PROVINCE OF ONTARIO

DESIGN CRITERIA

SPECIFIED LOADS:

TOP CH.	LL	=	34.8	PSF
	DL	=	8.0	PSF
BOT CH.	LL	=	10.5	PSF
	DL	=	7.0	PSF
TOTAL LOAD		=	60.3	PSF

SPACING = 24.0 IN. C/C

LOADING IN FLAT SECTION BASED ON A SLOPE OF 6.00/12

THIS TRUSS IS DESIGNED FOR RESIDENTIAL OR SMALL BUILDING REQUIREMENTS OF PART 9, NBCC 2010

THIS DESIGN COMPLIES WITH:
- PART 9 OF OBC 2012 , BCBC 2012 , ABC 2014
- CSA 086-09
- TPIC 2011

(55 % OF 48.1 P.S.F. G.S.L. PLUS 8.4 P.S.F. RAIN LOAD) EQUALS 34.8 P.S.F. SPECIFIED ROOF LIVE LOAD

ALLOWABLE DEFL.(LL)= L/360 (1.02")
CALCULATED VERT. DEFL.(LL) = L/ 999 (0.22")
ALLOWABLE DEFL.(TL)= L/360 (1.02")
CALCULATED VERT. DEFL.(TL) = L/ 988 (0.37")

CSI: TC=0.53/1.00 (D-E:1) , BC=0.69/1.00 (O-P:2) , WB=0.74/1.00 (C-Q:1) , SSI=0.29/1.00 (F-G:1)

DOL LUMBER=1.00 NAIL=1.00 LS BEND=1.10 COMP=1.10 SHEAR=1.10 TENS= 1.10

COMPANION LIVE LOAD FACTOR = 0.50

TRUSS PLATE MANUFACTURER IS NOT RESPONSIBLE FOR QUALITY CONTROL IN THE TRUSS MANUFACTURING PLANT .

NAIL VALUES

PLATE	GRIP(DRY) (PSI) MAX	MIN	SHEAR (PLI) MAX	MIN	SECTION (PLI) MAX	MIN
MT20	618	354	1667	822	2284	1656

PLATE PLACEMENT TOL. = 0.250 inches

PLATE ROTATION TOL. = 5.0 Deg.

JSI GRIP= 0.90 (C) (INPUT = 0.90)
JSI METAL= 0.87 (C) (INPUT = 1.00)

DWG NO. TAM 3587 -18
STRUCTURAL COMPONENT ONLY

JOB NAME	TRUSS NAME	QUANTITY	PLY	JOB DESC. 45274	DRWG NO.
290315	T3	1	1	TRUSS DESC.	

Version 8.200 S Dec 12 2017 MiTek Industries, Inc. Mon Jan 15 08:13:14 2018 Page 1
ID:kjhWC3V7rOjjJm4XuW?IGPyNETN-bDNalBchenBDoLtk48xkvPUeZE7bXMWZ0qPLvazvB2J

Tamarack Roof Truss, Burlington

Scale = 1:52.8

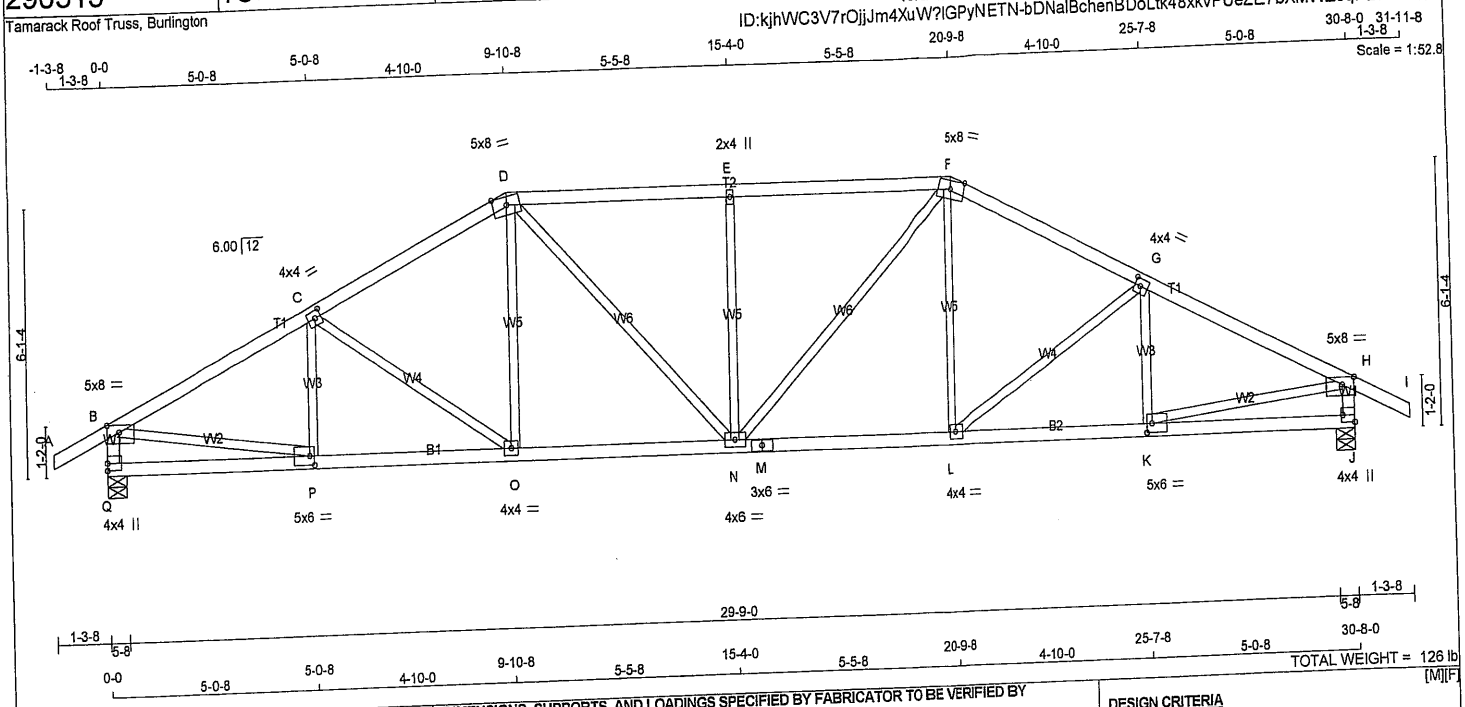

29-9-0 1-3-8 5-8 30-8-0

TOTAL WEIGHT = 126 lb [M][F]

LUMBER

N. L. G. A. RULES

CHORDS	SIZE		LUMBER	DESCR.
A - D	2x4	DRY	No.2	SPF
D - F	2x4	DRY	No.2	SPF
F - I	2x4	DRY	No.2	SPF
Q - B	2x4	DRY	No.2	SPF
J - H	2x4	DRY	No.2	SPF
Q - M	2x4	DRY	No.2	SPF
M - J	2x4	DRY	No.2	SPF
ALL WEBS EXCEPT	2x3	DRY	No.2	SPF

DRY: SEASONED LUMBER.

PLATES (table is in inches)

JT	TYPE	PLATES	W	LEN	Y	X
B	TMVW-p	MT20	5.0	8.0	2.00	3.50
C	TMWW-t	MT20	4.0	4.0	2.00	1.75
D	TTWW-m	MT20	5.0	8.0	Edge	
E	TMW+w	MT20	2.0	4.0		
F	TTWW-m	MT20	5.0	8.0	Edge	
G	TMWW-t	MT20	4.0	4.0	2.00	1.75
H	TMVW-p	MT20	5.0	8.0	2.00	3.50
J	BMV1+p	MT20	4.0	4.0	2.00	Edge
K	BMWW-t	MT20	5.0	6.0	2.50	1.50
L	BMWW-t	MT20	4.0	4.0		
M	BS-t	MT20	3.0	6.0		
N	BMWWW-t	MT20	4.0	6.0		
O	BMWW-t	MT20	4.0	4.0		
P	BMWW-t	MT20	5.0	6.0	2.50	1.50
Q	BMV1+p	MT20	4.0	4.0		

Edge - INDICATES REFERENCE CORNER OF PLATE TOUCHES EDGE OF CHORD.

DIMENSIONS, SUPPORTS AND LOADINGS SPECIFIED BY FABRICATOR TO BE VERIFIED BY BUILDING DESIGNER

BEARINGS

JT	FACTORED GROSS REACTION VERT	HORZ	MAXIMUM FACTORED GROSS REACTION DOWN	HORZ	UPLIFT	INPUT BRG IN-SX	REQRD BRG IN-SX
Q	2505	0	2505	0	0	5-8	5-8
J	2505	0	2505	0	0	5-8	5-8

UNFACTORED REACTIONS

JT	1ST LCASE COMBINED	MAX./MIN. COMPONENT REACTIONS SNOW	LIVE	PERM.LIVE	WIND	DEAD	SOIL
Q	1965	1161 / 0	322 / 0	0 / 0	0 / 0	482 / 0	0 / 0
J	1965	1161 / 0	322 / 0	0 / 0	0 / 0	482 / 0	0 / 0

BEARING MATERIAL TO BE SPF NO.2 OR BETTER AT JOINT(S) Q, J

BRACING

TOP CHORD TO BE SHEATHED OR MAX. PURLIN SPACING = 3.31 FT.
MAX. UNBRACED BOTTOM CHORD LENGTH = 10.00 FT OR RIGID CEILING DIRECTLY APPLIED.

ALL PITCH BREAKS AND PERIMETER CORNER JOINTS MUST BE LATERALLY RESTRAINED.

LOADING

TOTAL LOAD CASES: (4)

CHORDS

MEMB. FR-TO	MAX. FACTORED FORCE (LBS)	FACTORED VERT. LOAD (PLF) FROM	TO	LC1	MAX CSI (LC)	MAX. UNBRAC LENGTH
A- B	0 / 38	-124.4	-124.4	0.16 (1)		10.00
B- C	-3351 / 0	-124.4	-124.4	0.54 (1)		3.36
C- D	-3054 / 0	-124.4	-124.4	0.50 (1)		3.54
D- E	-3166 / 0	-124.4	-124.4	0.61 (1)		3.31
E- F	-3166 / 0	-124.4	-124.4	0.61 (1)		3.31
F- G	-3054 / 0	-124.4	-124.4	0.50 (1)		3.54
G- H	-3351 / 0	-124.4	-124.4	0.54 (1)		3.36
H- I	0 / 38	-124.4	-124.4	0.16 (1)		10.00
Q- B	-2441 / 0	0.0	0.0	0.25 (1)		5.48
J- H	-2441 / 0	0.0	0.0	0.25 (1)		5.48
Q- P	0 / 0	-28.0	-28.0	0.16 (3)		10.00
P- O	0 / 3025	-28.0	-28.0	0.57 (1)		10.00
O- N	0 / 2707	-28.0	-28.0	0.52 (1)		10.00
N- M	0 / 2707	-28.0	-28.0	0.52 (1)		10.00
M- L	0 / 2707	-28.0	-28.0	0.52 (1)		10.00
L- K	0 / 3025	-28.0	-28.0	0.57 (1)		10.00
K- J	0 / 0	-28.0	-28.0	0.16 (3)		10.00

WEBS

MEMB. FR-TO	MAX. FACTORED FORCE (LBS)	MAX CSI (LC)
P- C	-375 / 36	0.08 (1)
C- O	-392 / 0	0.24 (1)
O- D	0 / 392	0.09 (2)
D- N	0 / 670	0.15 (1)
N- E	-830 / 0	0.49 (1)
N- F	0 / 670	0.15 (1)
L- F	0 / 392	0.09 (2)
L- G	-392 / 0	0.24 (1)
K- G	-375 / 36	0.08 (1)
B- P	0 / 3068	0.69 (1)
K- H	0 / 3068	0.69 (1)

DESIGN CRITERIA

SPECIFIED LOADS:

TOP CH.	LL	=	34.8	PSF
	DL	=	8.0	PSF
BOT CH.	LL	=	10.5	PSF
	DL	=	7.0	PSF
TOTAL LOAD		=	60.3	PSF

SPACING = 24.0 IN. C/C

LOADING IN FLAT SECTION BASED ON A SLOPE OF 6.00/12

THIS TRUSS IS DESIGNED FOR RESIDENTIAL OR SMALL BUILDING REQUIREMENTS OF PART 9, NBCC 2010

THIS DESIGN COMPLIES WITH:
- PART 9 OF OBC 2012 , BCBC 2012 , ABC 2014
- CSA 086-09
- TPIC 2011

(55 % OF 48.1 P.S.F. G.S.L. PLUS 8.4 P.S.F. RAIN LOAD) EQUALS 34.8 P.S.F. SPECIFIED ROOF LIVE LOAD

ALLOWABLE DEFL.(LL)= L/360 (1.02")
CALCULATED VERT. DEFL.(LL) = L/ 999 (0.18")
ALLOWABLE DEFL.(TL)= L/360 (1.02")
CALCULATED VERT. DEFL.(TL) = L/ 999 (0.30")

CSI: TC=0.61/1.00 (D-E:1) , BC=0.57/1.00 (O-P:1) , WB=0.69/1.00 (B-P:1) , SSI=0.33/1.00 (D-E:1)

DOL LUMBER=1.00 NAIL=1.00 LS BEND=1.10 COMP=1.10 SHEAR=1.10 TENS= 1.10

COMPANION LIVE LOAD FACTOR = 0.50

TRUSS PLATE MANUFACTURER IS NOT RESPONSIBLE FOR QUALITY CONTROL IN THE TRUSS MANUFACTURING PLANT .

NAIL VALUES

PLATE	GRIP(DRY) (PSI) MAX	MIN	SHEAR (PLI) MAX	MIN	SECTION (PLI) MAX	MIN
MT20	618	354	1667	822	2284	1656

PLATE PLACEMENT TOL. = 0.250 inches

PLATE ROTATION TOL. = 5.0 Deg.

JSI GRIP= 0.88 (K) (INPUT = 0.90)
JSI METAL= 0.76 (P) (INPUT = 1.00)

LICENSED PROFESSIONAL ENGINEER
1/15/18
S. KATSOULAKOS
PROVINCE OF ONTARIO

DWG NO. TAM35 BG -18
STRUCTURAL COMPONENT ONLY

JOB NAME	TRUSS NAME	QUANTITY	PLY	JOB DESC. 45274	DRWG NO.
290315	T4	1	1	TRUSS DESC.	

Tamarack Roof Truss, Burlington

Version 8.200 S Dec 12 2017 MiTek Industries, Inc. Mon Jan 15 08:13:14 2018 Page 1
ID:kjhWC3V7rOjjJm4XuW?IGPyNETN-bDNalBchenBDoLtk48xkvPUbmE6rXMOZ0qPLvazvB2J

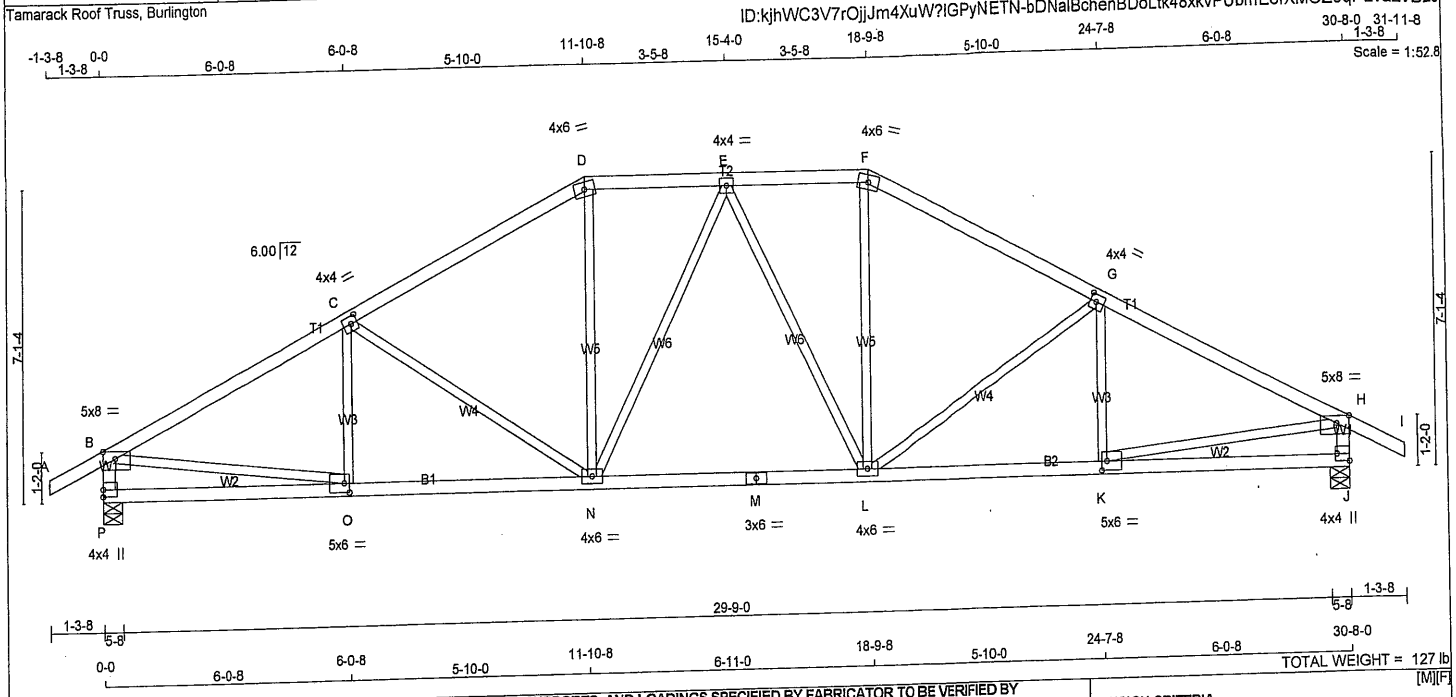

LUMBER

N. L. G. A. RULES

CHORDS	SIZE		LUMBER	DESCR.
A - D	2x4	DRY	No.2	SPF
D - F	2x4	DRY	No.2	SPF
F - I	2x4	DRY	No.2	SPF
P - B	2x4	DRY	No.2	SPF
J - H	2x4	DRY	No.2	SPF
P - M	2x4	DRY	No.2	SPF
M - J	2x4	DRY	No.2	SPF
ALL WEBS EXCEPT	2x3	DRY	No.2	SPF

DRY: SEASONED LUMBER.

PLATES (table is in inches)

JT	TYPE	PLATES	W	LEN	Y	X
B	TMVW-p	MT20	5.0	8.0	2.00	3.50
C	TMWW-t	MT20	4.0	4.0	2.00	1.75
D	TTW-m	MT20	4.0	6.0		
E	TMWW-t	MT20	4.0	4.0		
F	TTW-m	MT20	4.0	6.0		
G	TMWW-t	MT20	4.0	4.0	2.00	1.75
H	TMVW-p	MT20	5.0	8.0	2.00	3.50
J	BMV1+p	MT20	4.0	4.0	2.00	Edge
K	BMWW-t	MT20	5.0	6.0	2.50	1.50
L	BMWWW-t	MT20	4.0	6.0		
M	BS-t	MT20	3.0	6.0		
N	BMWWW-t	MT20	4.0	6.0		
O	BMWW-t	MT20	5.0	6.0	2.50	1.50
P	BMV1+p	MT20	4.0	4.0		

Edge - INDICATES REFERENCE CORNER OF PLATE TOUCHES EDGE OF CHORD.

DIMENSIONS, SUPPORTS AND LOADINGS SPECIFIED BY FABRICATOR TO BE VERIFIED BY BUILDING DESIGNER

BEARINGS

JT	FACTORED GROSS REACTION VERT	HORZ	MAXIMUM FACTORED GROSS REACTION DOWN	HORZ	UPLIFT	INPUT BRG IN-SX	REQRD BRG IN-SX
P	2505	0	2505	0	0	5-8	5-8
J	2505	0	2505	0	0	5-8	5-8

UNFACTORED REACTIONS

JT	1ST LCASE COMBINED	MAX./MIN. COMPONENT REACTIONS SNOW	LIVE	PERM.LIVE	WIND	DEAD	SOIL
P	1965	1161 / 0	322 / 0	0 / 0	0 / 0	482 / 0	0 / 0
J	1965	1161 / 0	322 / 0	0 / 0	0 / 0	482 / 0	0 / 0

BEARING MATERIAL TO BE SPF NO.2 OR BETTER AT JOINT(S) P, J

BRACING

TOP CHORD TO BE SHEATHED OR MAX. PURLIN SPACING = 3.00 FT.
MAX. UNBRACED BOTTOM CHORD LENGTH = 10.00 FT OR RIGID CEILING DIRECTLY APPLIED.

ALL PITCH BREAKS AND PERIMETER CORNER JOINTS MUST BE LATERALLY RESTRAINED.

LOADING

TOTAL LOAD CASES: (4)

CHORDS

MEMB. FR-TO	MAX. FACTORED FORCE (LBS)	FACTORED VERT. LOAD (PLF) FROM	TO	LC1	MAX CSI (LC)	MAX. UNBRAC LENGTH
A- B	0 / 38	-124.4	-124.4	0.16 (1)	10.00	
B- C	-3397 / 0	-124.4	-124.4	0.79 (1)	3.00	
C- D	-2842 / 0	-124.4	-124.4	0.70 (1)	3.37	
D- E	-2518 / 0	-124.4	-124.4	0.24 (1)	4.15	
E- F	-2518 / 0	-124.4	-124.4	0.24 (1)	4.15	
F- G	-2842 / 0	-124.4	-124.4	0.70 (1)	3.37	
G- H	-3397 / 0	-124.4	-124.4	0.79 (1)	3.00	
H- I	0 / 38	-124.4	-124.4	0.16 (1)	10.00	
P- B	-2432 / 0	0.0	0.0	0.25 (1)	5.49	
J- H	-2432 / 0	0.0	0.0	0.25 (1)	5.49	
P- O	0 / 0	-28.0	-28.0	0.24 (3)	10.00	
O- N	0 / 3072	-28.0	-28.0	0.62 (1)	10.00	
N- M	0 / 2643	-28.0	-28.0	0.55 (1)	10.00	
M- L	0 / 2643	-28.0	-28.0	0.55 (1)	10.00	
L- K	0 / 3072	-28.0	-28.0	0.62 (1)	10.00	
K- J	0 / 0	-28.0	-28.0	0.24 (3)	10.00	

WEBS

MEMB. FR-TO	MAX. FACTORED FORCE (LBS)	MAX CSI (LC)
O- C	-262 / 124	0.07 (1)
C- N	-677 / 0	0.65 (1)
N- D	0 / 806	0.18 (1)
N- E	-284 / 0	0.33 (1)
E- L	-284 / 0	0.33 (1)
L- F	0 / 806	0.18 (1)
L- G	-677 / 0	0.65 (1)
K- G	-262 / 124	0.07 (1)
B- O	0 / 3103	0.70 (1)
K- H	0 / 3103	0.70 (1)

DESIGN CRITERIA

SPECIFIED LOADS:

TOP CH.	LL	=	34.8	PSF
	DL	=	8.0	PSF
BOT CH.	LL	=	10.5	PSF
	DL	=	7.0	PSF
TOTAL LOAD		=	60.3	PSF

SPACING = 24.0 IN. C/C

LOADING IN FLAT SECTION BASED ON A SLOPE OF 6.00/12

THIS TRUSS IS DESIGNED FOR RESIDENTIAL OR SMALL BUILDING REQUIREMENTS OF PART 9, NBCC 2010

THIS DESIGN COMPLIES WITH:
- PART 9 OF OBC 2012 , BCBC 2012 , ABC 2014
- CSA 086-09
- TPIC 2011

(55 % OF 48.1 P.S.F. G.S.L. PLUS 8.4 P.S.F. RAIN LOAD) EQUALS 34.8 P.S.F. SPECIFIED ROOF LIVE LOAD

ALLOWABLE DEFL.(LL)= L/360 (1.02")
CALCULATED VERT. DEFL.(LL) = L/ 999 (0.18")
ALLOWABLE DEFL.(TL)= L/360 (1.02")
CALCULATED VERT. DEFL.(TL) = L/ 999 (0.31")

CSI: TC=0.79/1.00 (G-H:1) , BC=0.62/1.00 (K-L:1) , WB=0.70/1.00 (B-O:1) , SSI=0.32/1.00 (G-H:1)

DOL LUMBER=1.00 NAIL=1.00 LS BEND=1.10 COMP=1.10 SHEAR=1.10 TENS= 1.10

COMPANION LIVE LOAD FACTOR = 0.50

TRUSS PLATE MANUFACTURER IS NOT RESPONSIBLE FOR QUALITY CONTROL IN THE TRUSS MANUFACTURING PLANT .

NAIL VALUES

PLATE	GRIP(DRY) (PSI) MAX	MIN	SHEAR (PLI) MAX	MIN	SECTION (PLI) MAX	MIN
MT20	618	354	1667	822	2284	1656

PLATE PLACEMENT TOL. = 0.250 inches

PLATE ROTATION TOL. = 5.0 Deg.

JSI GRIP= 0.87 (D) (INPUT = 0.90)
JSI METAL= 0.79 (M) (INPUT = 1.00)

LICENSED PROFESSIONAL ENGINEER
11578
S. KATSOULAKOS
PROVINCE OF ONTARIO

DWG NO. TAM 3589-18
STRUCTURAL COMPONENT ONLY

JOB NAME	TRUSS NAME	QUANTITY	PLY	JOB DESC. 45274	DRWG NO.
290315	T5	1	1	TRUSS DESC.	

Version 8.200 S Dec 12 2017 MiTek Industries, Inc. Mon Jan 15 08:13:15 2018 Page 1

Tamarack Roof Truss, Burlington

ID:kjhWC3V7rOjjJm4XuW?IGPyNETN-3PxyyXdJP5J4PUSxerSzRc0sJeRVGmcjFU9vR0zvB2I

Scale = 1:53.7

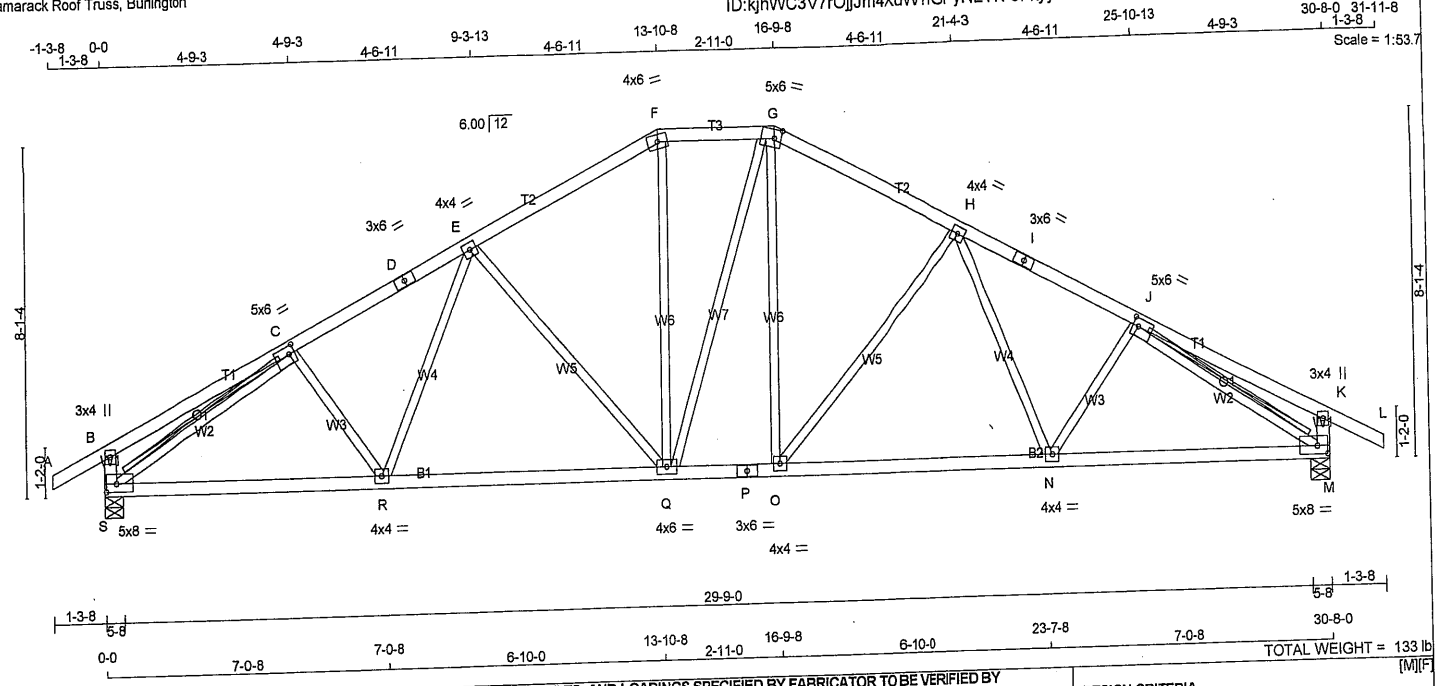

TOTAL WEIGHT = 133 lb [M][F]

LUMBER

N. L. G. A. RULES

CHORDS	SIZE		LUMBER	DESCR.
A - D	2x4	DRY	No.2	SPF
D - F	2x4	DRY	No.2	SPF
F - G	2x4	DRY	No.2	SPF
G - I	2x4	DRY	No.2	SPF
I - L	2x4	DRY	No.2	SPF
S - B	2x4	DRY	No.2	SPF
M - K	2x4	DRY	No.2	SPF
S - P	2x4	DRY	No.2	SPF
P - M	2x4	DRY	No.2	SPF
ALL WEBS EXCEPT	2x3	DRY	No.2	SPF

DRY: SEASONED LUMBER.

PLATES (table is in inches)

JT	TYPE	PLATES	W	LEN	Y	X
B	TMV+p	MT20	3.0	4.0		
C	TMWW-t	MT20	5.0	6.0	2.25	1.75
D	TS-t	MT20	3.0	6.0		
E	TMWW-t	MT20	4.0	4.0		
F	TTW-m	MT20	4.0	6.0		
G	TTWW-m	MT20	5.0	6.0	2.50	2.00
H	TMWW-t	MT20	4.0	4.0		
I	TS-t	MT20	3.0	6.0		
J	TMWW-t	MT20	5.0	6.0	2.25	1.75
K	TMV+p	MT20	3.0	4.0		
M	BMVW1-t	MT20	5.0	8.0	2.25	3.00
N, O, R						
N	BMWW-t	MT20	4.0	4.0		
P	BS-t	MT20	3.0	6.0		
Q	BMWWW-t	MT20	4.0	6.0		
S	BMVW1-t	MT20	5.0	8.0	2.25	3.00

DIMENSIONS, SUPPORTS AND LOADINGS SPECIFIED BY FABRICATOR TO BE VERIFIED BY BUILDING DESIGNER

BEARINGS

JT	FACTORED GROSS REACTION VERT	HORZ	MAXIMUM FACTORED GROSS REACTION DOWN	HORZ	UPLIFT	INPUT BRG IN-SX	REQRD BRG IN-SX
S	2505	0	2505	0	0	5-8	5-8
M	2505	0	2505	0	0	5-8	5-8

UNFACTORED REACTIONS

JT	1ST LCASE COMBINED	MAX./MIN. COMPONENT REACTIONS SNOW	LIVE	PERM.LIVE	WIND	DEAD	SOIL
S	1965	1161 / 0	322 / 0	0 / 0	0 / 0	482 / 0	0 / 0
M	1965	1161 / 0	322 / 0	0 / 0	0 / 0	482 / 0	0 / 0

BEARING MATERIAL TO BE SPF NO.2 OR BETTER AT JOINT(S) S, M

BRACING

TOP CHORD TO BE SHEATHED OR MAX. PURLIN SPACING = 3.55 FT.
MAX. UNBRACED BOTTOM CHORD LENGTH = 10.00 FT OR RIGID CEILING DIRECTLY APPLIED.

ALL PITCH BREAKS AND PERIMETER CORNER JOINTS MUST BE LATERALLY RESTRAINED.

2x4 DRY SPF No.2 T-BRACE AT C-S, J-M

FASTEN T AND I-BRACES TO NARROW EDGE OF WEB WITH ONE ROW PER PLY OF 3" COMMON WIRE NAILS @ 6" O.C. WITH 3" MINIMUM END DISTANCE. BRACE MUST COVER 90% OF WEB LENGTH.

END VERTICAL(S) MUST BE SHEATHED OR HAVE BRACES AS INDICATED IN THE MAX. UNBRACED LENGTH COLUMN OF THE TABLE BELOW

LOADING

TOTAL LOAD CASES: (4)

CHORDS

MEMB. FR-TO	MAX. FACTORED FORCE (LBS)	FACTORED VERT. LOAD LC1 (PLF) FROM	TO	MAX CSI (LC)	MAX. UNBRAC LENGTH
A- B	0 / 38	-124.4	-124.4	0.16 (1)	10.00
B- C	0 / 21	-124.4	-124.4	0.32 (1)	10.00
C- D	-3246 / 0	-124.4	-124.4	0.42 (1)	3.55
D- E	-3246 / 0	-124.4	-124.4	0.42 (1)	3.55
E- F	-2571 / 0	-124.4	-124.4	0.39 (1)	3.96
F- G	-2285 / 0	-124.4	-124.4	0.19 (1)	4.37
G- H	-2568 / 0	-124.4	-124.4	0.39 (1)	3.96
H- I	-3247 / 0	-124.4	-124.4	0.42 (1)	3.55
I- J	-3247 / 0	-124.4	-124.4	0.42 (1)	3.55
J- K	0 / 21	-124.4	-124.4	0.32 (1)	10.00
K- L	0 / 38	-124.4	-124.4	0.16 (1)	10.00
S- B	-411 / 0	0.0	0.0	0.04 (1)	7.81
M- K	-411 / 0	0.0	0.0	0.04 (1)	7.81
S- R	0 / 2944	-28.0	-28.0	0.65 (2)	10.00
R- Q	0 / 2794	-28.0	-28.0	0.64 (2)	10.00
Q- P	0 / 2283	-28.0	-28.0	0.47 (1)	10.00
P- O	0 / 2283	-28.0	-28.0	0.47 (1)	10.00
O- N	0 / 2794	-28.0	-28.0	0.64 (2)	10.00
N- M	0 / 2945	-28.0	-28.0	0.66 (2)	10.00

WEBS

MEMB. FR-TO	MAX. FACTORED FORCE (LBS)	MAX CSI (LC)
C- R	-65 / 130	0.03 (3)
R- E	0 / 351	0.08 (2)
E- Q	-791 / 0	0.81 (1)
Q- F	0 / 726	0.16 (1)
Q- G	0 / 6	0.00 (1)
O- G	0 / 719	0.16 (1)
O- H	-793 / 0	0.81 (1)
H- N	0 / 354	0.08 (2)
N- J	-65 / 130	0.03 (3)
S- C	-3567 / 0	0.89 (1)
J- M	-3568 / 0	0.89 (1)

LICENSED PROFESSIONAL ENGINEER
S. KATSOULAKOS
PROVINCE OF ONTARIO

DESIGN CRITERIA

SPECIFIED LOADS:

TOP CH.	LL	=	34.8	PSF
	DL	=	8.0	PSF
BOT CH.	LL	=	10.5	PSF
	DL	=	7.0	PSF
TOTAL LOAD		=	60.3	PSF

SPACING = 24.0 IN. C/C

LOADING IN FLAT SECTION BASED ON A SLOPE OF 6.00/12

THIS TRUSS IS DESIGNED FOR RESIDENTIAL OR SMALL BUILDING REQUIREMENTS OF PART 9, NBCC 2010

THIS DESIGN COMPLIES WITH:
- PART 9 OF OBC 2012 , BCBC 2012 , ABC 2014
- CSA 086-09
- TPIC 2011

(55 % OF 48.1 P.S.F. G.S.L. PLUS 8.4 P.S.F. RAIN LOAD) EQUALS 34.8 P.S.F. SPECIFIED ROOF LIVE LOAD

ALLOWABLE DEFL.(LL)= L/360 (1.02")
CALCULATED VERT. DEFL.(LL) = L/ 999 (0.19")
ALLOWABLE DEFL.(TL)= L/360 (1.02")
CALCULATED VERT. DEFL.(TL) = L/ 999 (0.32")

CSI: TC=0.42/1.00 (H-J:1) , BC=0.66/1.00 (M-N:2) , WB=0.89/1.00 (J-M:1) , SSI=0.24/1.00 (G-H:1)

DOL LUMBER=1.00 NAIL=1.00 LS BEND=1.10 COMP=1.10 SHEAR=1.10 TENS= 1.10

COMPANION LIVE LOAD FACTOR = 0.50

TRUSS PLATE MANUFACTURER IS NOT RESPONSIBLE FOR QUALITY CONTROL IN THE TRUSS MANUFACTURING PLANT .

NAIL VALUES

PLATE	GRIP(DRY) (PSI) MAX	MIN	SHEAR (PLI) MAX	MIN	SECTION (PLI) MAX	MIN
MT20	618	354	1667	822	2284	1656

PLATE PLACEMENT TOL. = 0.250 inches

PLATE ROTATION TOL. = 5.0 Deg.

JSI GRIP= 0.89 (M) (INPUT = 0.90)
JSI METAL= 0.88 (J) (INPUT = 1.00)

DWG NO. TAM 3590-18
STRUCTURAL COMPONENT ONLY

JOB NAME	TRUSS NAME	QUANTITY	PLY	JOB DESC. 45274	DRWG NO.
290315	T6	6	1	TRUSS DESC.	

Tamarack Roof Truss, Burlington

Version 8.200 S Dec 12 2017 MiTek Industries, Inc. Mon Jan 15 08:13:15 2018 Page 1
ID:kjhWC3V7rOjjJm4XuW?IGPyNETN-3PxyyXdJP5J4PUSxerSzRc0r6eQeGlijFU9vR0zvB2I

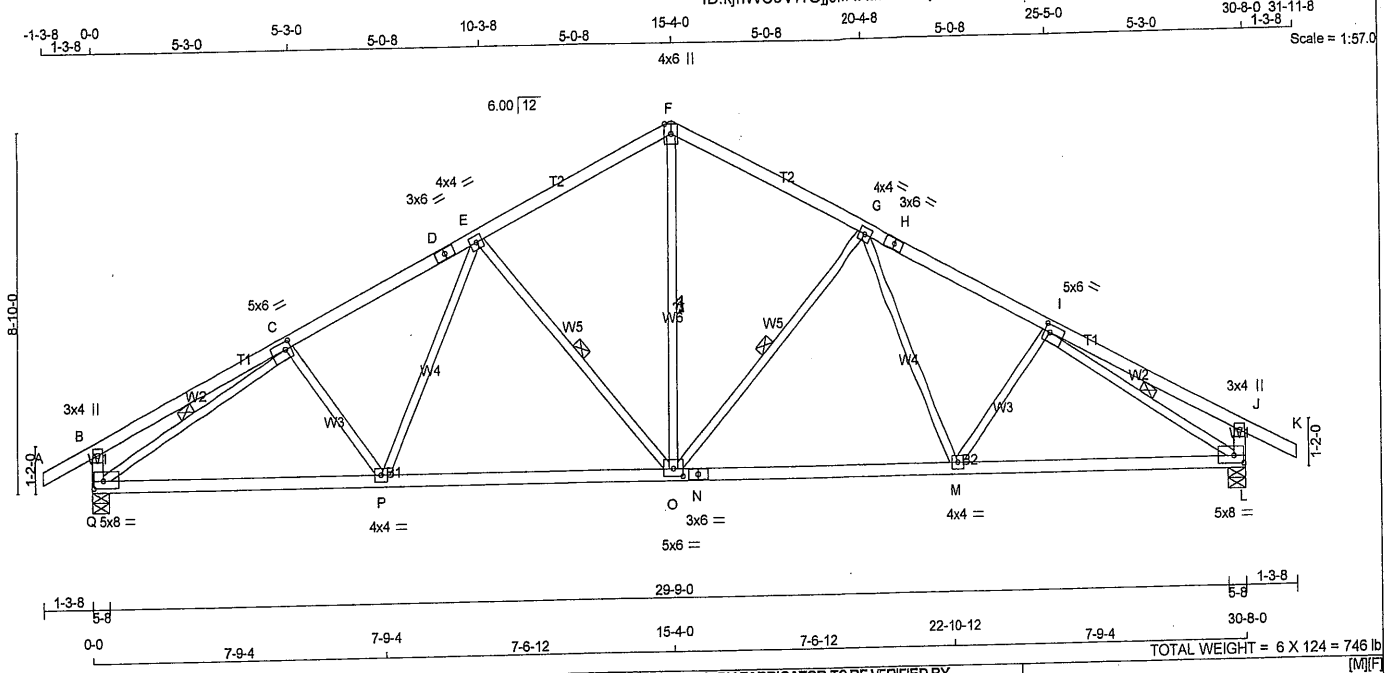

TOTAL WEIGHT = 6 X 124 = 746 lb
[M][F]

LUMBER
N. L. G. A. RULES

CHORDS	SIZE		LUMBER	DESCR.
A - D	2x4	DRY	No.2	SPF
D - F	2x4	DRY	No.2	SPF
F - H	2x4	DRY	No.2	SPF
H - K	2x4	DRY	No.2	SPF
Q - B	2x4	DRY	No.2	SPF
L - J	2x4	DRY	No.2	SPF
Q - N	2x4	DRY	No.2	SPF
N - L	2x4	DRY	No.2	SPF
ALL WEBS EXCEPT	2x3	DRY	No.2	SPF

DRY: SEASONED LUMBER.

PLATES (table is in inches)

JT	TYPE	PLATES	W	LEN	Y	X
B	TMV+p	MT20	3.0	4.0		
C	TMWW-t	MT20	5.0	6.0	2.25	1.75
D	TS-t	MT20	3.0	6.0		
E	TMWW-t	MT20	4.0	4.0		
F	TTW+p	MT20	4.0	6.0	Edge	
G	TMWW-t	MT20	4.0	4.0		
H	TS-t	MT20	3.0	6.0		
I	TMWW-t	MT20	5.0	6.0	2.25	1.75
J	TMV+p	MT20	3.0	4.0		
L	BMVW1-t	MT20	5.0	8.0	2.25	3.00
M	BMWW-t	MT20	4.0	4.0		
N	BS-t	MT20	3.0	6.0		
O	BMWWW-t	MT20	5.0	6.0	2.25	3.00
P	BMWW-t	MT20	4.0	4.0		
Q	BMVW1-t	MT20	5.0	8.0	2.25	3.00

Edge - INDICATES REFERENCE CORNER OF PLATE TOUCHES EDGE OF CHORD.

DIMENSIONS, SUPPORTS AND LOADINGS SPECIFIED BY FABRICATOR TO BE VERIFIED BY BUILDING DESIGNER

BEARINGS

JT	FACTORED GROSS REACTION VERT	HORZ	MAXIMUM FACTORED GROSS REACTION DOWN	HORZ	UPLIFT	INPUT BRG IN-SX	REQRD BRG IN-SX
Q	2505	0	2505	0	0	5-8	5-8
L	2505	0	2505	0	0	5-8	5-8

UNFACTORED REACTIONS

JT	1ST LCASE COMBINED	MAX./MIN. COMPONENT REACTIONS SNOW	LIVE	PERM.LIVE	WIND	DEAD	SOIL
Q	1965	1161 / 0	322 / 0	0 / 0	0 / 0	482 / 0	0 / 0
L	1965	1161 / 0	322 / 0	0 / 0	0 / 0	482 / 0	0 / 0

BEARING MATERIAL TO BE SPF NO.2 OR BETTER AT JOINT(S) Q, L

BRACING
TOP CHORD TO BE SHEATHED OR MAX. PURLIN SPACING = 3.49 FT.
MAX. UNBRACED BOTTOM CHORD LENGTH = 10.00 FT OR RIGID CEILING DIRECTLY APPLIED.

ALL PITCH BREAKS AND PERIMETER CORNER JOINTS MUST BE LATERALLY RESTRAINED.

1 LATERAL BRACE(S) AT 1/ 2 LENGTH OF G-O, E-O, C-Q, I-L. P.O.

END VERTICAL(S) MUST BE SHEATHED OR HAVE BRACES AS INDICATED IN THE MAX. UNBRACED LENGTH COLUMN OF THE TABLE BELOW

LOADING
TOTAL LOAD CASES: (4)

CHORDS

MEMB. FR-TO	MAX. FACTORED FORCE (LBS)	FACTORED VERT. LOAD (PLF) FROM	TO	LC1	MAX CSI (LC)	MAX. UNBRAC LENGTH
A- B	0 / 38	-124.4	-124.4	0.16 (1)	10.00	
B- C	0 / 25	-124.4	-124.4	0.39 (1)	10.00	
C- D	-3209 / 0	-124.4	-124.4	0.50 (1)	3.49	
D- E	-3209 / 0	-124.4	-124.4	0.50 (1)	3.49	
E- F	-2393 / 0	-124.4	-124.4	0.46 (1)	3.99	
F- G	-2393 / 0	-124.4	-124.4	0.46 (1)	3.99	
G- H	-3209 / 0	-124.4	-124.4	0.50 (1)	3.49	
H- I	-3209 / 0	-124.4	-124.4	0.50 (1)	3.49	
I- J	0 / 25	-124.4	-124.4	0.39 (1)	10.00	
J- K	0 / 38	-124.4	-124.4	0.16 (1)	10.00	
Q- B	-434 / 0	0.0	0.0	0.04 (1)	7.81	
L- J	-434 / 0	0.0	0.0	0.04 (1)	7.81	
Q- P	0 / 2974	-28.0	-28.0	0.71 (2)	10.00	
P- O	0 / 2716	-28.0	-28.0	0.69 (2)	10.00	
O- N	0 / 2716	-28.0	-28.0	0.69 (2)	10.00	
N- M	0 / 2716	-28.0	-28.0	0.69 (2)	10.00	
M- L	0 / 2974	-28.0	-28.0	0.71 (2)	10.00	

WEBS

MEMB. FR-TO	MAX. FACTORED FORCE (LBS)	MAX CSI (LC)
O- F	0 / 1598	0.36 (1)
O- G	-918 / 0	0.39 (1)
G- M	0 / 434	0.10 (2)
M- I	-171 / 99	0.05 (1)
E- O	-918 / 0	0.39 (1)
P- E	0 / 434	0.10 (2)
C- P	-171 / 99	0.05 (1)
Q- C	-3574 / 0	0.95 (1)
I- L	-3574 / 0	0.95 (1)

DESIGN CRITERIA

SPECIFIED LOADS:

TOP CH.	LL	=	34.8	PSF
	DL	=	8.0	PSF
BOT CH.	LL	=	10.5	PSF
	DL	=	7.0	PSF
TOTAL LOAD		=	60.3	PSF

SPACING = 24.0 IN. C/C

THIS TRUSS IS DESIGNED FOR RESIDENTIAL OR SMALL BUILDING REQUIREMENTS OF PART 9, NBCC 2010

THIS DESIGN COMPLIES WITH:
- PART 9 OF OBC 2012 , BCBC 2012 , ABC 2014
- CSA 086-09
- TPIC 2011

(55 % OF 48.1 P.S.F. G.S.L. PLUS 8.4 P.S.F. RAIN LOAD) EQUALS 34.8 P.S.F. SPECIFIED ROOF LIVE LOAD

ALLOWABLE DEFL.(LL)= L/360 (1.02")
CALCULATED VERT. DEFL.(LL) = L/ 999 (0.19")
ALLOWABLE DEFL.(TL)= L/360 (1.02")
CALCULATED VERT. DEFL.(TL) = L/ 999 (0.33")

CSI: TC=0.50/1.00 (G-I:1) , BC=0.71/1.00 (L-M:2) , WB=0.95/1.00 (I-L:1) , SSI=0.27/1.00 (F-G:1)

DOL LUMBER=1.00 NAIL=1.00 LS BEND=1.10 COMP=1.10 SHEAR=1.10 TENS= 1.10

COMPANION LIVE LOAD FACTOR = 0.50

AUTOSOLVE HEELS OFF

TRUSS PLATE MANUFACTURER IS NOT RESPONSIBLE FOR QUALITY CONTROL IN THE TRUSS MANUFACTURING PLANT .

NAIL VALUES

PLATE	GRIP(DRY) (PSI) MAX	MIN	SHEAR (PLI) MAX	MIN	SECTION (PLI) MAX	MIN
MT20	618	354	1667	822	2284	1656

PLATE PLACEMENT TOL. = 0.250 inches

PLATE ROTATION TOL. = 5.0 Deg.

JSI GRIP= 0.89 (O) (INPUT = 0.90)
JSI METAL= 0.88 (C) (INPUT = 1.00)

LICENSED PROFESSIONAL ENGINEER
157B
S KATSOULAKOS
PROVINCE OF ONTARIO

DWG NO. TAM 3591 -18
STRUCTURAL
COMPONENT ONLY

JOB NAME	TRUSS NAME	QUANTITY	PLY	JOB DESC. 45274	DRWG NO.
290315	T7	1	2	TRUSS DESC.	

Tamarack Roof Truss, Burlington

Version 8.200 S Dec 12 2017 MiTek Industries, Inc. Mon Jan 15 08:13:16 2018 Page 1
ID:kjhWC3V7rOjjJm4XuW?IGPyNETN-XbULAtex9ORx1e07BZzC_qZwc2ix?CxsU8uS_SzvB2H

Scale = 1:52.8

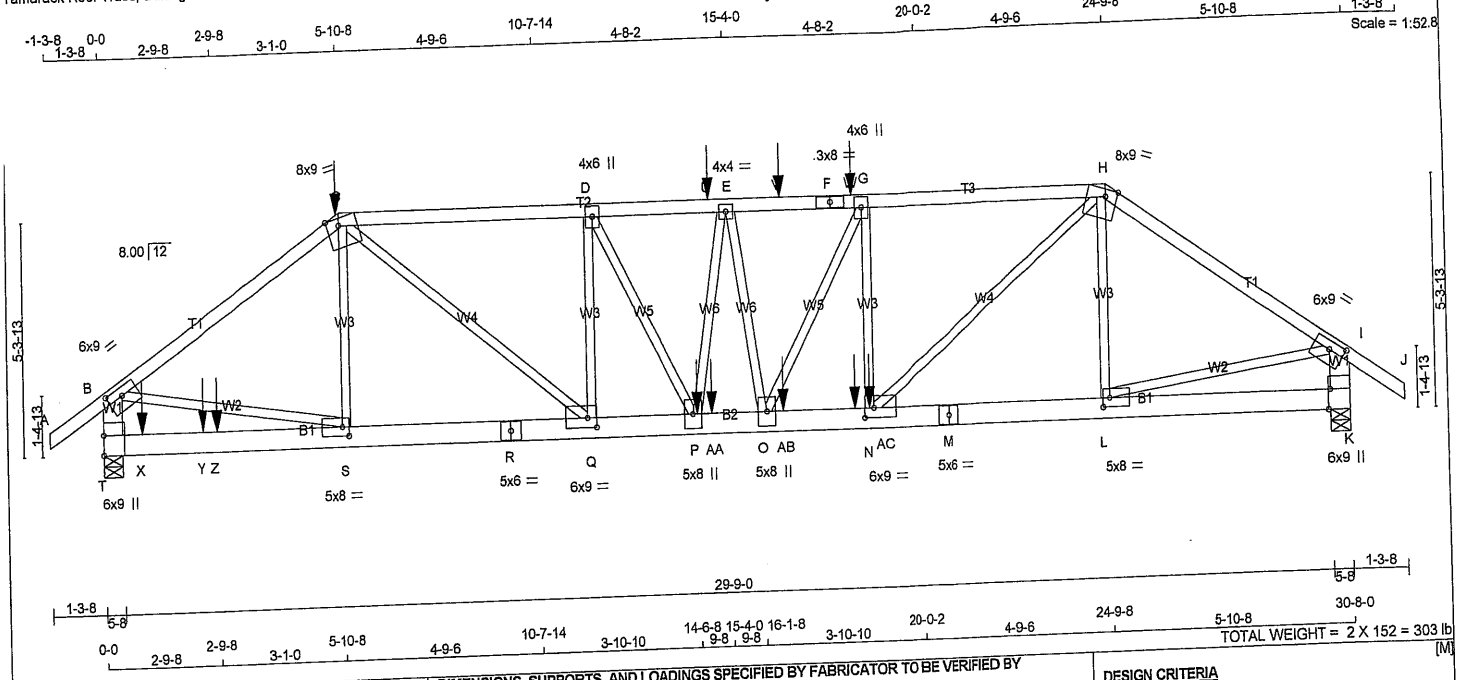

LUMBER

N. L. G. A. RULES

CHORDS	SIZE		LUMBER	DESCR.
A - C	2x4	DRY	1650F 1.5E	SPF
C - F	2x4	DRY	1650F 1.5E	SPF
F - H	2x4	DRY	1650F 1.5E	SPF
H - J	2x4	DRY	1650F 1.5E	SPF
T - B	2x6	DRY	No.2	SPF
K - I	2x6	DRY	No.2	SPF
T - R	2x6	DRY	1650F 1.5E	SPF
R - M	2x6	DRY	1650F 1.5E	SPF
M - K	2x6	DRY	1650F 1.5E	SPF
ALL WEBS EXCEPT	2x3	DRY	No.2	SPF

DRY: SEASONED LUMBER.

DESIGN CONSISTS OF 2 TRUSSES BUILT SEPARATELY THEN FASTENED TOGETHER AS FOLLOWS:

CHORDS	#ROWS	SURFACE SPACING (IN)	LOAD(PLF)
TOP CHORDS : (0.122"X3") SPIRAL NAILS			
A- C	1	12	SIDE(55.2)
C- F	1	12	SIDE(61.0)
F- H	1	12	SIDE(10.3)
H- J	1	12	SIDE(8.6)
T- B	2	12	TOP
K- I	2	12	TOP
BOTTOM CHORDS : (0.122"X3") SPIRAL NAILS			
T- R	2	12	SIDE(0.0)
R- M	2	12	SIDE(183.1)
M- K	2	12	TOP
WEBS : (0.122"X3") SPIRAL NAILS			
S- C	1	6	SIDE(26.6)
G- N	1	6	SIDE(203.6)
P- E	1	4	SIDE(588.0)
2x3	1	6	
E- O	1	4	

NAILS TO BE DRIVEN FROM ONE SIDE ONLY.

GIRDER NAILING ASSUMES NAILED HANGERS ARE FASTENED WITH MIN. 3-0 INCH NAILS.

TOP - COMPONENTS ARE LOADED FROM THE TOP AND MUST BE PLACED ON TOP EDGE OF ALL PLIES FOR THE LOAD TO BE TRANSFERRED TO EACH PLY.

SIDE - PLF SHOWN IS THE EQUIVALENT UDL APPLIED TO ONE SIDE THAT THE CORRESPONDING NAILING PATTERN SHALL BE CAPABLE OF TRANSFERING. REMAINING PLF MUST BE APPLIED ON THE OPPOSITE SIDE OR ON THE TOP.

PLATES (table is in inches)

JT	TYPE	PLATES	W	LEN	Y	X
B	TMVW-t	MT20	6.0	9.0	2.25	4.25
C	TTWW-m	MT20	8.0	9.0	Edge	3.50
D	TMWW+t	MT20	4.0	6.0		
E	TMWW-t	MT20	4.0	4.0		
F	TS-t	MT20	3.0	8.0		
G	TMWW+t	MT20	4.0	6.0		
H	TTWW-m	MT20	8.0	9.0	Edge	3.50
I	TMVW-t	MT20	6.0	9.0	2.25	4.25
K	BMV1+t	MT20	6.0	9.0	Edge	0.50
L	BMWW-t	MT20	5.0	8.0	2.50	2.00
M	BS-t	MT20	5.0	6.0		
N	BMWW-t	MT20	6.0	9.0	2.75	2.75
O	BMWW+t	MT20	5.0	8.0		

DIMENSIONS, SUPPORTS AND LOADINGS SPECIFIED BY FABRICATOR TO BE VERIFIED BY BUILDING DESIGNER

BEARINGS

JT	FACTORED GROSS REACTION VERT	HORZ	MAXIMUM FACTORED GROSS REACTION DOWN	HORZ	UPLIFT	INPUT BRG IN-SX	REQRD BRG IN-SX
T	8361	0	8361	0	0	5-8	5-8
K	5799	0	5799	0	0	5-8	5-8

UNFACTORED REACTIONS

JT	1ST LCASE COMBINED	MAX./MIN. COMPONENT REACTIONS SNOW	LIVE	PERM.LIVE	WIND	DEAD	SOIL
T	6570	3865 / 0	1090 / 0	0 / 0	0 / 0	1615 / 0	0 / 0
K	4531	2706 / 0	722 / 0	0 / 0	0 / 0	1104 / 0	0 / 0

BEARING MATERIAL TO BE SPF NO.2 OR BETTER AT JOINT(S) T, K

BRACING

TOP CHORD TO BE SHEATHED OR MAX. PURLIN SPACING = 2.86 FT.
MAX. UNBRACED BOTTOM CHORD LENGTH = 10.00 FT OR RIGID CEILING DIRECTLY APPLIED.

ALL PITCH BREAKS AND PERIMETER CORNER JOINTS MUST BE LATERALLY RESTRAINED.

LOADING

TOTAL LOAD CASES: (4)

CHORDS

MEMB. FR-TO	MAX. FACTORED FORCE (LBS)	FACTORED VERT. LOAD (PLF) FROM	TO	LC1	MAX CSI (LC)	MAX. UNBRAC LENGTH
A- B	0 / 47	-124.4	-124.4	0.08 (1)	10.00	
B- C	-9121 / 0	-145.0	-145.0	0.84 (1)	3.22	
C- D	-11068 / 0	-145.0	-145.0	0.71 (1)	3.03	
D- U	-12200 / 0	-145.0	-145.0	0.54 (1)	2.86	
U- E	-12200 / 0	-145.0	-145.0	0.54 (1)	2.86	
E- V	-11921 / 0	-145.0	-145.0	0.54 (1)	2.88	
V- F	-11921 / 0	-145.0	-145.0	0.54 (1)	2.88	
F- W	-11921 / 0	-145.0	-145.0	0.54 (1)	2.88	
W- G	-11921 / 0	-145.0	-145.0	0.54 (1)	2.88	
G- H	-11175 / 0	-145.0	-145.0	0.72 (1)	3.00	
H- I	-7396 / 0	-145.0	-145.0	0.70 (1)	3.61	
I- J	0 / 47	-124.4	-124.4	0.08 (1)	10.00	
T- B	-6933 / 0	0.0	0.0	0.25 (1)	5.67	
K- I	-5735 / 0	0.0	0.0	0.21 (1)	6.15	
T- X	0 / 0	-28.0	-28.0	0.96 (1)	10.00	
X- Y	0 / 0	-28.0	-28.0	0.96 (1)	10.00	
Y- Z	0 / 0	-28.0	-28.0	0.96 (1)	10.00	
Z- S	0 / 0	-28.0	-28.0	0.96 (1)	10.00	
S- R	0 / 7601	-28.0	-28.0	0.75 (1)	10.00	
R- Q	0 / 7601	-28.0	-28.0	0.75 (1)	10.00	
Q- P	0 / 11068	-28.0	-28.0	0.59 (1)	10.00	
P-AA	0 / 12083	-28.0	-28.0	0.62 (1)	10.00	
AA- O	0 / 12083	-28.0	-28.0	0.62 (1)	10.00	
O-AB	0 / 11175	-28.0	-28.0	0.50 (1)	10.00	
AB-AC	0 / 11175	-28.0	-28.0	0.50 (1)	10.00	
AC- N	0 / 11175	-28.0	-28.0	0.50 (1)	10.00	
N- M	0 / 6130	-28.0	-28.0	0.30 (1)	10.00	
M- L	0 / 6130	-28.0	-28.0	0.30 (1)	10.00	
L- K	0 / 0	-28.0	-28.0	0.05 (3)	10.00	

WEBS

MEMB. FR-TO	MAX. FACTORED FORCE (LBS)	MAX CSI (LC)
S- C	0 / 981	0.12 (1)
C- Q	0 / 4462	0.55 (1)
Q- D	-3093 / 0	0.63 (1)
N- G	-2514 / 0	0.51 (1)
N- H	0 / 6493	0.80 (1)
L- H	-790 / 0	0.16 (1)
P- E	0 / 647	0.08 (1)
E- O	-1089 / 0	0.23 (1)
D- P	0 / 2469	0.31 (1)
O- G	0 / 1627	0.20 (1)
B- S	0 / 7685	0.95 (1)
L- I	0 / 6232	0.77 (1)

FACTORED CONCENTRATED LOADS (LBS)

JT	LOC.	LC1	MAX-	MAX+	FACE	DIR.	TYPE
C	5-10-8	-464	-464	---	FRONT	VERT	TOTAL
N	18-8-8	-1482	-1482	---	BACK	VERT	TOTAL
P	14-6-8	-2956	-2956	---	BACK	VERT	TOTAL
U	14-10-12	-150	-150	---	BACK	VERT	TOTAL
V	16-7-8	-150	-150	---	BACK	VERT	TOTAL
W	18-4-4	-150	-150	---	BACK	VERT	TOTAL
X	11-4	-42	-73	---	BACK	VERT	TOTAL

DESIGN CRITERIA

*** SPECIAL LOADS ANALYSIS ***
GEOMETRY AND/OR BASIC LOADS CHANGED BY USER.
LOADS WERE DERIVED FROM USER INPUT
NO FURTHER MODIFICATIONS WERE MADE

SPECIFIED LOADS:

TOP CH.	LL	=	34.8	PSF
	DL	=	8.0	PSF
BOT CH.	LL	=	10.5	PSF
	DL	=	7.0	PSF
TOTAL LOAD		=	60.3	PSF

SPACING = 24.0 IN. C/C

LOADING IN FLAT SECTION BASED ON A SLOPE OF 6.00/12

GIRDER TYPE: CStdGirder
START DISTANCE = 0-0
START SPAN CARRIED = 3-0-0
END DISTANCE = 30-8-0
END SPAN CARRIED = 3-0-0
END WALL WIDTH = 5-8
APPLIED TO FRONT SIDE OF TOP CHORD.
- ADDT'L LOADS BASED ON 55 % OF GSL.

*** NON STANDARD GIRDER ***
ADDT'L USER-DEFINED LOADS APPLIED TO ALL LOAD CASES.

THIS TRUSS IS DESIGNED FOR RESIDENTIAL OR SMALL BUILDING REQUIREMENTS OF PART 9, NBCC 2010

THIS DESIGN COMPLIES WITH:
- PART 9 OF OBC 2012 , BCBC 2012 , ABC 2014
- CSA 086-09
- TPIC 2011

(55 % OF 48.1 P.S.F. G.S.L. PLUS 8.4 P.S.F. RAIN LOAD) EQUALS 34.8 P.S.F. SPECIFIED ROOF LIVE LOAD

ALLOWABLE DEFL.(LL)= L/360 (1.02")
CALCULATED VERT. DEFL.(LL) = L/ 999 (0.28")
ALLOWABLE DEFL.(TL)= L/360 (1.02")
CALCULATED VERT. DEFL.(TL) = L/ 794 (0.46")

CSI: TC=0.84/1.00 (B-C:1) , BC=0.96/1.00 (S-T:1) , WB=0.95/1.00 (B-S:1) , SSI=0.59/1.00 (S-T:1)

SOL LUMBER=1.00 NAIL=1.00 LS BEND=1.00 COMP=1.00 SHEAR=1.00 TENS= 1.00

COMPANION LIVE LOAD FACTOR = 0.50

AUTOSOLVE HEELS OFF

TRUSS PLATE MANUFACTURER IS NOT RESPONSIBLE FOR QUALITY CONTROL IN THE TRUSS MANUFACTURING PLANT .

NAIL VALUES

PLATE	GRIP(DRY) (PSI) MAX	MIN	SHEAR (PLI) MAX	MIN	SECTION (PLI) MAX	MIN
MT20	348	354	1667	822	2284	1656

LICENSED PROFESSIONAL ENGINEER 11578 S. KATSOULAKOS PROVINCE OF ONTARIO

DWG NO. TAM 3592
STRUCTURAL COMPONENT ONLY

P6 1/2

CONTINUED ON PAGE 2

JOB NAME	TRUSS NAME	QUANTITY	PLY	JOB DESC. 45274	DRWG NO.
290315	T7	1	2	TRUSS DESC.	

Tamarack Roof Truss, Burlington

Version 8.200 S Dec 12 2017 MiTek Industries, Inc. Mon Jan 15 08:13:16 2018 Page 2
ID:kjhWC3V7rOjjJm4XuW?IGPyNETN-XbULAtex9ORx1e07BZzC_qZwc2ix?CxsU8uS_SzvB2H

PLATES (table is in inches)

JT	TYPE	PLATES	W	LEN	Y	X
P	BMWW+t	MT20	5.0	8.0		
Q	BMWW-t	MT20	6.0	9.0	2.75	2.75
R	BS-t	MT20	5.0	6.0		
S	BMWW-t	MT20	5.0	8.0	2.50	2.00
T	BMV1+t	MT20	6.0	9.0	5.50	

Edge - INDICATES REFERENCE CORNER OF PLATE TOUCHES EDGE OF CHORD.

HANGERS NOTES

1) SPECIAL HANGER(S) OR CONNECTION(S) REQUIRED TO SUPPORT CONCENTRATED LOAD(S) 149.7 lbs FACTORED DOWN AT 14-10-12, 149.7 lbs FACTORED DOWN AT 16-7-8, AND 149.7 lbs FACTORED DOWN AT 18-4-4, AND 463.8 lbs FACTORED DOWN AT 5-10-8 ON TOP CHORD, AND 73.3 lbs FACTORED DOWN AT 11-4, 71.7 lbs FACTORED DOWN AT 2-5-4, 2955.9 lbs FACTORED DOWN AT 2-9-8, 2955.9 lbs FACTORED DOWN AT 14-6-8, 71.7 lbs FACTORED DOWN AT 14-10-12, 71.7 lbs FACTORED DOWN AT 16-7-8, AND 71.7 lbs FACTORED DOWN AT 18-4-4, AND 1482.4 lbs FACTORED DOWN AT 18-8-8 ON BOTTOM CHORD. DESIGN FOR UNSPECIFIED CONNECTION(S) IS DELEGATED TO THE BUILDING DESIGNER.

FACTORED CONCENTRATED LOADS (LBS)

JT	LOC.	LC1	MAX-	MAX+	FACE	DIR.	TYPE
Y	2-5-4	-41	-72	—	BACK	VERT	TOTAL
Z	2-9-8	-2956	-2956	—	BACK	VERT	TOTAL
AA	14-10-12	-41	-72	—	BACK	VERT	TOTAL
AB	16-7-8	-41	-72	—	BACK	VERT	TOTAL
AC	18-4-4	-41	-72	—	BACK	VERT	TOTAL

PLATE PLACEMENT TOL. = 0.250 inches

PLATE ROTATION TOL. = 5.0 Deg.

JSI GRIP= 0.90 (B) (INPUT = 0.90)
JSI METAL= 0.79 (B) (INPUT = 1.00)

LICENSED PROFESSIONAL ENGINEER
1157B
S. KATSOULAKOS
PROVINCE OF ONTARIO

DWG NO. TAM 3592 -13
STRUCTURAL
COMPONENT ONLY

JOB NAME	TRUSS NAME	QUANTITY	PLY	JOB DESC. 45274	DRWG NO.
290315	T8	2	1	TRUSS DESC.	

Tamarack Roof Truss, Burlington

Version 8.200 S Dec 12 2017 MiTek Industries, Inc. Mon Jan 15 08:13:16 2018 Page 1
ID:kjhWC3V7rOjjJm4XuW?IGPyNETN-XbULAtex9ORx1e07BZzC_qZ0e2oI?GSsU8uS_SzvB2H

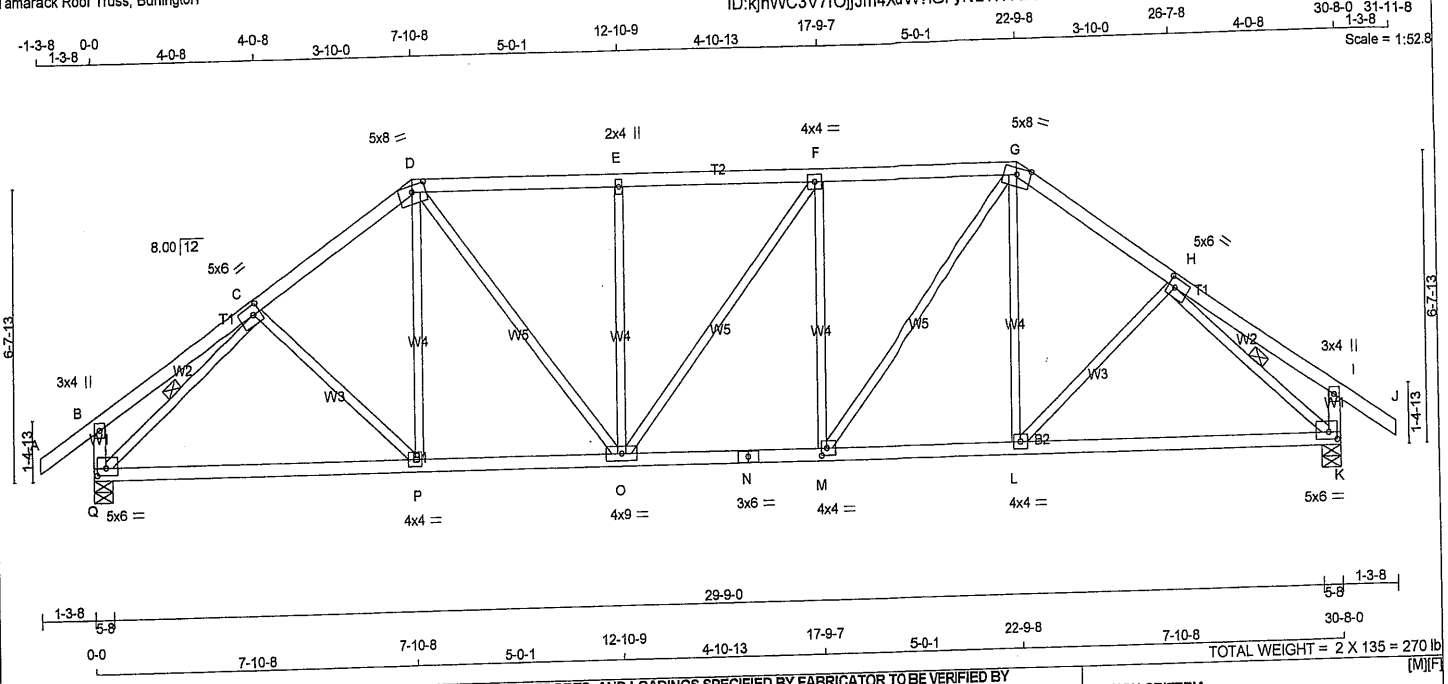

LUMBER

N. L. G. A. RULES

CHORDS	SIZE		LUMBER	DESCR.
A - D	2x4	DRY	No.2	SPF
D - G	2x4	DRY	No.2	SPF
G - J	2x4	DRY	No.2	SPF
Q - B	2x4	DRY	No.2	SPF
K - I	2x4	DRY	No.2	SPF
Q - N	2x4	DRY	No.2	SPF
N - K	2x4	DRY	No.2	SPF
ALL WEBS EXCEPT	2x3	DRY	No.2	SPF

DRY: SEASONED LUMBER.

PLATES (table is in inches)

JT	TYPE	PLATES	W	LEN	Y	X
B	TMV+p	MT20	3.0	4.0		
C	TMWW-t	MT20	5.0	6.0	2.50	2.00
D	TTWW-m	MT20	5.0	8.0	1.75	4.00
E	TMV+w	MT20	2.0	4.0		
F	TMWW-t	MT20	4.0	4.0		
G	TTWW-m	MT20	5.0	8.0	1.75	4.00
H	TMWW-t	MT20	5.0	6.0	2.50	2.00
I	TMV+p	MT20	3.0	4.0		
K	BMVW1-t	MT20	5.0	6.0	2.00	2.50
L	BMWW-t	MT20	4.0	4.0		
M	BMWW-t	MT20	4.0	4.0	2.00	1.50
N	BS-t	MT20	3.0	6.0		
O	BMWWW-t	MT20	4.0	9.0		
P	BMWW-t	MT20	4.0	4.0		
Q	BMVW1-t	MT20	5.0	6.0	2.00	2.50

DIMENSIONS, SUPPORTS AND LOADINGS SPECIFIED BY FABRICATOR TO BE VERIFIED BY BUILDING DESIGNER

BEARINGS

JT	FACTORED GROSS REACTION VERT	HORZ	MAXIMUM FACTORED GROSS REACTION DOWN	HORZ	UPLIFT	INPUT BRG IN-SX	REQRD BRG IN-SX
Q	2507	0	2507	0	0	5-8	5-8
K	2507	0	2507	0	0	5-8	5-8

UNFACTORED REACTIONS

JT	1ST LCASE COMBINED	MAX./MIN. COMPONENT REACTIONS SNOW	LIVE	PERM.LIVE	WIND	DEAD	SOIL
Q	1966	1162 / 0	322 / 0	0 / 0	0 / 0	482 / 0	0 / 0
K	1966	1162 / 0	322 / 0	0 / 0	0 / 0	482 / 0	0 / 0

BEARING MATERIAL TO BE SPF NO.2 OR BETTER AT JOINT(S) Q, K

BRACING

TOP CHORD TO BE SHEATHED OR MAX. PURLIN SPACING = 3.74 FT.
MAX. UNBRACED BOTTOM CHORD LENGTH = 10.00 FT OR RIGID CEILING DIRECTLY APPLIED.

ALL PITCH BREAKS AND PERIMETER CORNER JOINTS MUST BE LATERALLY RESTRAINED.

1 LATERAL BRACE(S) AT 1/ 2 LENGTH OF C-Q, H-K.

END VERTICAL(S) MUST BE SHEATHED OR HAVE BRACES AS INDICATED IN THE MAX. UNBRACED LENGTH COLUMN OF THE TABLE BELOW

LOADING

TOTAL LOAD CASES: (4)

CHORDS

MEMB. FR-TO	MAX. FACTORED FORCE (LBS)	FACTORED VERT. LOAD (PLF) FROM	TO	LC1	MAX CSI (LC)	MAX. UNBRAC LENGTH
A- B	0 / 47	-124.4	-124.4	0.17 (1)	10.00	
B- C	0 / 29	-124.4	-124.4	0.29 (1)	10.00	
C- D	-2650 / 0	-124.4	-124.4	0.31 (1)	4.00	
D- E	-2793 / 0	-124.4	-124.4	0.45 (1)	3.74	
E- F	-2793 / 0	-124.4	-124.4	0.42 (1)	3.78	
F- G	-2796 / 0	-124.4	-124.4	0.45 (1)	3.74	
G- H	-2650 / 0	-124.4	-124.4	0.31 (1)	4.00	
H- I	0 / 29	-124.4	-124.4	0.29 (1)	10.00	
I- J	0 / 47	-124.4	-124.4	0.17 (1)	10.00	
Q- B	-362 / 0	0.0	0.0	0.04 (1)	7.81	
K- I	-362 / 0	0.0	0.0	0.04 (1)	7.81	
Q- P	0 / 2180	-28.0	-28.0	0.61 (2)	10.00	
P- O	0 / 2181	-28.0	-28.0	0.62 (2)	10.00	
O- N	0 / 2796	-28.0	-28.0	0.53 (1)	10.00	
N- M	0 / 2796	-28.0	-28.0	0.53 (1)	10.00	
M- L	0 / 2181	-28.0	-28.0	0.62 (2)	10.00	
L- K	0 / 2179	-28.0	-28.0	0.61 (2)	10.00	

WEBS

MEMB. FR-TO	MAX. FACTORED FORCE (LBS)	MAX CSI (LC)
C- P	-3 / 135	0.03 (3)
P- D	0 / 322	0.08 (3)
D- O	0 / 989	0.22 (1)
O- E	-664 / 0	0.49 (1)
O- F	-4 / 0	0.00 (1)
M- F	-665 / 0	0.49 (1)
M- G	0 / 993	0.22 (1)
L- G	0 / 321	0.08 (3)
L- H	-3 / 135	0.03 (3)
Q- C	-2994 / 0	0.66 (1)
H- K	-2993 / 0	0.66 (1)

DESIGN CRITERIA

SPECIFIED LOADS:

TOP CH.	LL	=	34.8	PSF
	DL	=	8.0	PSF
BOT CH.	LL	=	10.5	PSF
	DL	=	7.0	PSF
TOTAL LOAD		=	60.3	PSF

SPACING = 24.0 IN. C/C

LOADING IN FLAT SECTION BASED ON A SLOPE OF 6.00/12

THIS TRUSS IS DESIGNED FOR RESIDENTIAL OR SMALL BUILDING REQUIREMENTS OF PART 9, NBCC 2010

THIS DESIGN COMPLIES WITH:
- PART 9 OF OBC 2012 , BCBC 2012 , ABC 2014
- CSA 086-09
- TPIC 2011

(55 % OF 48.1 P.S.F. G.S.L. PLUS 8.4 P.S.F. RAIN LOAD) EQUALS 34.8 P.S.F. SPECIFIED ROOF LIVE LOAD

ALLOWABLE DEFL.(LL)= L/360 (1.02")
CALCULATED VERT. DEFL.(LL) = L/ 999 (0.19")
ALLOWABLE DEFL.(TL)= L/360 (1.02")
CALCULATED VERT. DEFL.(TL) = L/ 999 (0.31")

CSI: TC=0.45/1.00 (D-E:1) , BC=0.62/1.00 (O-P:2) , WB=0.66/1.00 (C-Q:1) , SSI=0.29/1.00 (F-G:1)

DOL LUMBER=1.00 NAIL=1.00 LS BEND=1.10 COMP=1.10 SHEAR=1.10 TENS= 1.10

COMPANION LIVE LOAD FACTOR = 0.50

TRUSS PLATE MANUFACTURER IS NOT RESPONSIBLE FOR QUALITY CONTROL IN THE TRUSS MANUFACTURING PLANT .

NAIL VALUES

PLATE	GRIP(DRY) (PSI) MAX	MIN	SHEAR (PLI) MAX	MIN	SECTION (PLI) MAX	MIN
MT20	618	354	1667	822	2284	1656

PLATE PLACEMENT TOL. = 0.250 inches

PLATE ROTATION TOL. = 5.0 Deg.

JSI GRIP= 0.90 (Q) (INPUT = 0.90)
JSI METAL= 0.81 (N) (INPUT = 1.00)

LICENSED PROFESSIONAL ENGINEER
15B
S. KATSOULAKOS
PROVINCE OF ONTARIO

DWG NO. TAM 3593 -18
STRUCTURAL COMPONENT ONLY

JOB NAME	TRUSS NAME	QUANTITY	PLY	JOB DESC. 45274	DRWG NO.
290315	T9	2	1	TRUSS DESC.	

Version 8.200 S Dec 12 2017 MiTek Industries, Inc. Mon Jan 15 08:13:17 2018 Page 1

Tamarack Roof Truss, Burlington

ID:kjhWC3V7rOjjJm4XuW?IGPyNETN-?n2jNDfZwiZofobJIGURW16AnSA8klm?ioe?WuzvB2G

Scale = 1:52.8

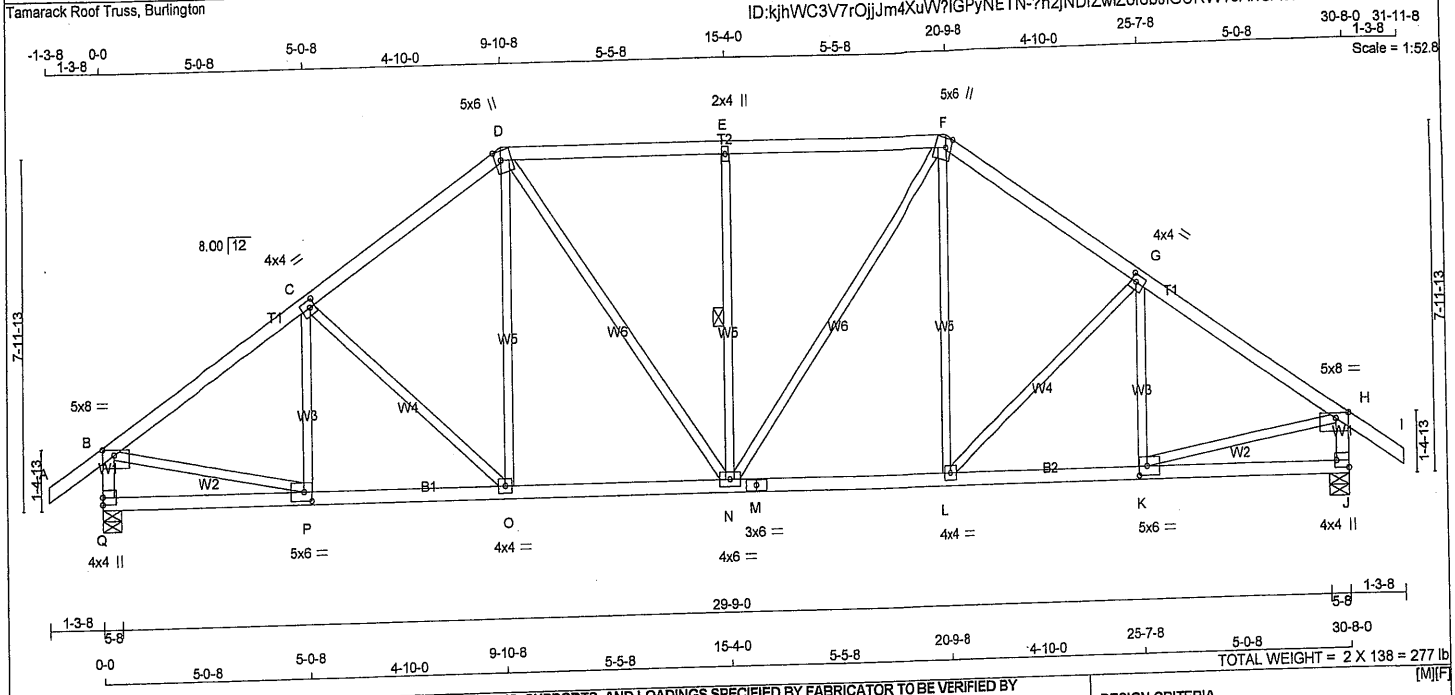

TOTAL WEIGHT = 2 X 138 = 277 lb

[M][F]

LUMBER

N. L. G. A. RULES

CHORDS	SIZE		LUMBER	DESCR.
A - D	2x4	DRY	No.2	SPF
D - F	2x4	DRY	No.2	SPF
F - I	2x4	DRY	No.2	SPF
Q - B	2x4	DRY	No.2	SPF
J - H	2x4	DRY	No.2	SPF
Q - M	2x4	DRY	No.2	SPF
M - J	2x4	DRY	No.2	SPF
ALL WEBS EXCEPT	2x3	DRY	No.2	SPF

DRY: SEASONED LUMBER.

PLATES (table is in inches)

JT	TYPE	PLATES	W	LEN	Y	X
B	TMVW-p	MT20	5.0	8.0	1.50	3.50
C	TMWW-t	MT20	4.0	4.0	2.00	1.50
D	TTWW+m	MT20	5.0	6.0	Edge	1.75
E	TMW+w	MT20	2.0	4.0		
F	TTWW+m	MT20	5.0	6.0	Edge	1.75
G	TMWW-t	MT20	4.0	4.0	2.00	1.50
H	TMVW-p	MT20	5.0	8.0	1.50	3.50
J	BMV1+p	MT20	4.0	4.0	2.00	Edge
K	BMWW-t	MT20	5.0	6.0	2.50	2.25
L	BMWW-t	MT20	4.0	4.0		
M	BS-t	MT20	3.0	6.0		
N	BMWWW-t	MT20	4.0	6.0		
O	BMWW-t	MT20	4.0	4.0		
P	BMWW-t	MT20	5.0	6.0	2.50	2.25
Q	BMV1+p	MT20	4.0	4.0		

Edge - INDICATES REFERENCE CORNER OF PLATE TOUCHES EDGE OF CHORD.

DIMENSIONS, SUPPORTS AND LOADINGS SPECIFIED BY FABRICATOR TO BE VERIFIED BY BUILDING DESIGNER

BEARINGS

JT	FACTORED GROSS REACTION VERT	HORZ	MAXIMUM FACTORED GROSS REACTION DOWN	HORZ	UPLIFT	INPUT BRG IN-SX	REQRD BRG IN-SX
Q	2507	0	2507	0	0	5-8	5-8
J	2507	0	2507	0	0	5-8	5-8

UNFACTORED REACTIONS

JT	1ST LCASE COMBINED	MAX./MIN. COMPONENT REACTIONS SNOW	LIVE	PERM.LIVE	WIND	DEAD	SOIL
Q	1966	1162 / 0	322 / 0	0 / 0	0 / 0	482 / 0	0 / 0
J	1966	1162 / 0	322 / 0	0 / 0	0 / 0	482 / 0	0 / 0

BEARING MATERIAL TO BE SPF NO.2 OR BETTER AT JOINT(S) Q, J

BRACING

TOP CHORD TO BE SHEATHED OR MAX. PURLIN SPACING = 3.72 FT.
MAX. UNBRACED BOTTOM CHORD LENGTH = 10.00 FT OR RIGID CEILING DIRECTLY APPLIED.

ALL PITCH BREAKS AND PERIMETER CORNER JOINTS MUST BE LATERALLY RESTRAINED.

1 LATERAL BRACE(S) AT 1/ 2 LENGTH OF E-N.

END VERTICAL(S) MUST BE SHEATHED OR HAVE BRACES AS INDICATED IN THE MAX. UNBRACED LENGTH COLUMN OF THE TABLE BELOW

LOADING

TOTAL LOAD CASES: (4)

CHORDS

MEMB. FR-TO	MAX. FACTORED FORCE (LBS)	FACTORED VERT. LOAD (PLF) FROM	TO	LC1	MAX CSI (LC)	MAX. UNBRAC LENGTH
A- B	0 / 47	-124.4	-124.4	0.17 (1)	10.00	
B- C	-2734 / 0	-124.4	-124.4	0.51 (1)	3.72	
C- D	-2498 / 0	-124.4	-124.4	0.48 (1)	3.90	
D- E	-2394 / 0	-124.4	-124.4	0.55 (1)	3.83	
E- F	-2394 / 0	-124.4	-124.4	0.55 (1)	3.83	
F- G	-2498 / 0	-124.4	-124.4	0.48 (1)	3.90	
G- H	-2734 / 0	-124.4	-124.4	0.51 (1)	3.72	
H- I	0 / 47	-124.4	-124.4	0.17 (1)	10.00	
Q- B	-2446 / 0	0.0	0.0	0.25 (1)	5.48	
J- H	-2446 / 0	0.0	0.0	0.25 (1)	5.48	
Q- P	0 / 0	-28.0	-28.0	0.17 (3)	10.00	
P- O	0 / 2307	-28.0	-28.0	0.45 (1)	10.00	
O- N	0 / 2046	-28.0	-28.0	0.41 (1)	10.00	
N- M	0 / 2046	-28.0	-28.0	0.41 (1)	10.00	
M- L	0 / 2046	-28.0	-28.0	0.41 (1)	10.00	
L- K	0 / 2307	-28.0	-28.0	0.45 (1)	10.00	
K- J	0 / 0	-28.0	-28.0	0.17 (3)	10.00	

WEBS

MEMB. FR-TO	MAX. FACTORED FORCE (LBS)	MAX CSI (LC)
P- C	-348 / 48	0.12 (1)
C- O	-358 / 0	0.29 (1)
O- D	0 / 401	0.09 (2)
D- N	0 / 600	0.14 (1)
N- E	-828 / 0	0.33 (1)
N- F	0 / 600	0.14 (1)
L- F	0 / 401	0.09 (2)
L- G	-358 / 0	0.29 (1)
K- G	-348 / 48	0.12 (1)
B- P	0 / 2360	0.53 (1)
K- H	0 / 2360	0.53 (1)

LICENSED PROFESSIONAL ENGINEER
1638
S. KATSOULAKOS
PROVINCE OF ONTARIO

DESIGN CRITERIA

SPECIFIED LOADS:

TOP CH.	LL	=	34.8	PSF
	DL	=	8.0	PSF
BOT CH.	LL	=	10.5	PSF
	DL	=	7.0	PSF
TOTAL LOAD		=	60.3	PSF

SPACING = 24.0 IN. C/C

LOADING IN FLAT SECTION BASED ON A SLOPE OF 6.00/12

THIS TRUSS IS DESIGNED FOR RESIDENTIAL OR SMALL BUILDING REQUIREMENTS OF PART 9, NBCC 2010

THIS DESIGN COMPLIES WITH:
- PART 9 OF OBC 2012 , BCBC 2012 , ABC 2014
- CSA 086-09
- TPIC 2011

(55 % OF 48.1 P.S.F. G.S.L. PLUS 8.4 P.S.F. RAIN LOAD) EQUALS 34.8 P.S.F. SPECIFIED ROOF LIVE LOAD

ALLOWABLE DEFL.(LL)= L/360 (1.02")
CALCULATED VERT. DEFL.(LL) = L/ 999 (0.12")
ALLOWABLE DEFL.(TL)= L/360 (1.02")
CALCULATED VERT. DEFL.(TL) = L/ 999 (0.20")

CSI: TC=0.55/1.00 (D-E:1) , BC=0.45/1.00 (K-L:1) , WB=0.53/1.00 (H-K:1) , SSI=0.33/1.00 (E-F:1)

DOL LUMBER=1.00 NAIL=1.00 LS BEND=1.10 COMP=1.10 SHEAR=1.10 TENS= 1.10

COMPANION LIVE LOAD FACTOR = 0.50

TRUSS PLATE MANUFACTURER IS NOT RESPONSIBLE FOR QUALITY CONTROL IN THE TRUSS MANUFACTURING PLANT .

NAIL VALUES

PLATE	GRIP(DRY) (PSI) MAX	MIN	SHEAR (PLI) MAX	MIN	SECTION (PLI) MAX	MIN
MT20	618	354	1667	822	2284	1656

PLATE PLACEMENT TOL. = 0.250 inches

PLATE ROTATION TOL. = 5.0 Deg.

JSI GRIP= 0.88 (P) (INPUT = 0.90)
JSI METAL= 0.58 (K) (INPUT = 1.00)

DWG NO. TAM 3594 -18
STRUCTURAL
COMPONENT ONLY

JOB NAME	TRUSS NAME	QUANTITY	PLY	JOB DESC. 45274	DRWG NO.
290315	T10	2	1	TRUSS DESC.	

Version 8.200 S Dec 12 2017 MiTek Industries, Inc. Mon Jan 15 08:13:17 2018 Page 1

Tamarack Roof Truss, Burlington

ID:kjhWC3V7rOjjJm4XuW?iGPyNETN-?n2jNDfZwiZofobJlGURW167cSAOkiQ?ioe?WuzvB2G

Scale = 1:56.0

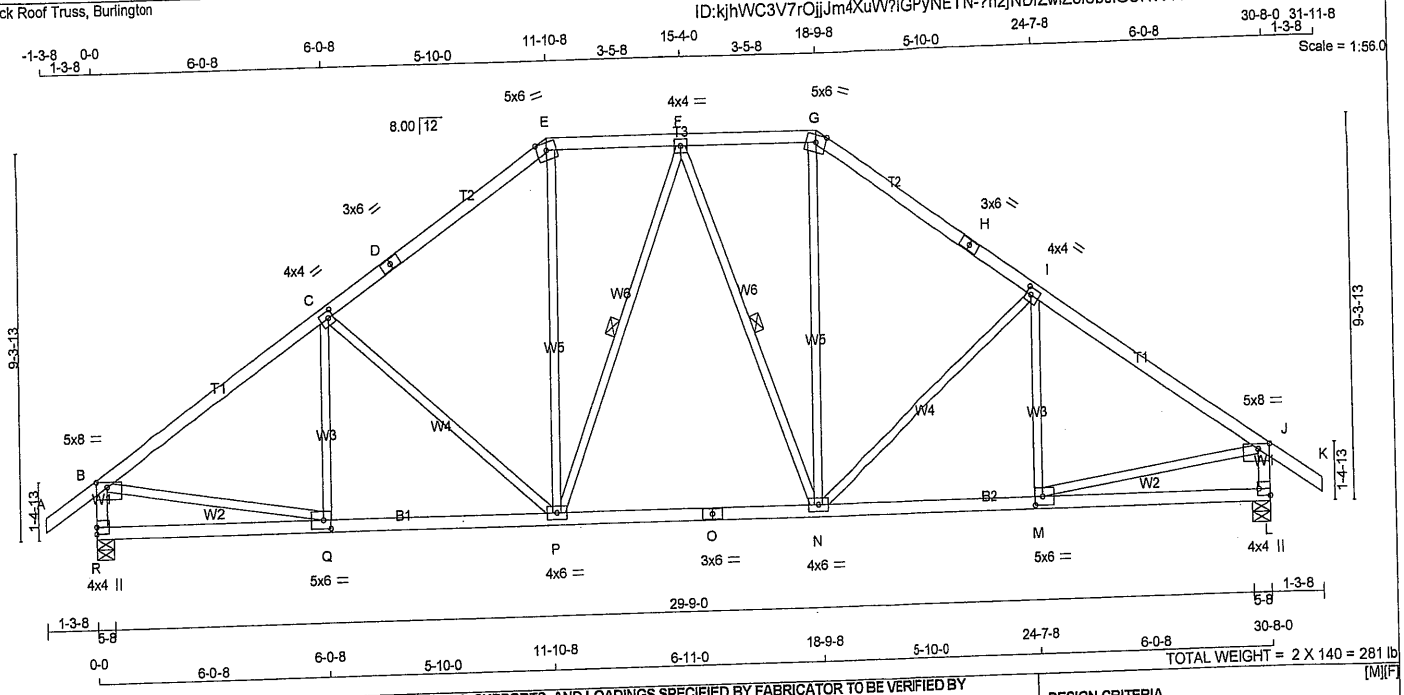

TOTAL WEIGHT = 2 X 140 = 281 lb

[M][F]

LUMBER

N. L. G. A. RULES

CHORDS	SIZE		LUMBER	DESCR.
A - D	2x4	DRY	No.2	SPF
D - E	2x4	DRY	No.2	SPF
E - G	2x4	DRY	No.2	SPF
G - H	2x4	DRY	No.2	SPF
H - K	2x4	DRY	No.2	SPF
R - B	2x4	DRY	No.2	SPF
L - J	2x4	DRY	No.2	SPF
R - O	2x4	DRY	No.2	SPF
O - L	2x4	DRY	No.2	SPF
ALL WEBS EXCEPT	2x3	DRY	No.2	SPF

DRY: SEASONED LUMBER.

PLATES (table is in inches)

JT	TYPE	PLATES	W	LEN	Y	X
B	TMVW-p	MT20	5.0	8.0	1.50	3.50
C	TMWW-t	MT20	4.0	4.0	2.00	1.50
D	TS-t	MT20	3.0	6.0		
E	TTW-m	MT20	5.0	6.0	Edge	
F	TMWW-t	MT20	4.0	4.0		
G	TTW-m	MT20	5.0	6.0	Edge	
H	TS-t	MT20	3.0	6.0		
I	TMWW-t	MT20	4.0	4.0	2.00	1.50
J	TMVW-p	MT20	5.0	8.0	1.50	3.50
L	BMV1+p	MT20	4.0	4.0	2.00	Edge
M	BMWW-t	MT20	5.0	6.0	2.50	2.25
N	BMWWW-t	MT20	4.0	6.0		
O	BS-t	MT20	3.0	6.0		
P	BMWWW-t	MT20	4.0	6.0		
Q	BMWW-t	MT20	5.0	6.0	2.50	2.25
R	BMV1+p	MT20	4.0	4.0		

Edge - INDICATES REFERENCE CORNER OF PLATE TOUCHES EDGE OF CHORD.

DIMENSIONS, SUPPORTS AND LOADINGS SPECIFIED BY FABRICATOR TO BE VERIFIED BY BUILDING DESIGNER

BEARINGS

JT	FACTORED GROSS REACTION VERT	HORZ	MAXIMUM FACTORED GROSS REACTION DOWN	HORZ	UPLIFT	INPUT BRG IN-SX	REQRD BRG IN-SX
R	2507	0	2507	0	0	5-8	5-8
L	2507	0	2507	0	0	5-8	5-8

UNFACTORED REACTIONS

JT	1ST LCASE COMBINED	MAX./MIN. COMPONENT REACTIONS SNOW	LIVE	PERM.LIVE	WIND	DEAD	SOIL
R	1966	1162 / 0	322 / 0	0 / 0	0 / 0	482 / 0	0 / 0
L	1966	1162 / 0	322 / 0	0 / 0	0 / 0	482 / 0	0 / 0

BEARING MATERIAL TO BE SPF NO.2 OR BETTER AT JOINT(S) R, L

BRACING

TOP CHORD TO BE SHEATHED OR MAX. PURLIN SPACING = 3.36 FT.
MAX. UNBRACED BOTTOM CHORD LENGTH = 10.00 FT OR RIGID CEILING DIRECTLY APPLIED.

ALL PITCH BREAKS AND PERIMETER CORNER JOINTS MUST BE LATERALLY RESTRAINED.

1 LATERAL BRACE(S) AT 1/ 2 LENGTH OF F-P, F-N.

END VERTICAL(S) MUST BE SHEATHED OR HAVE BRACES AS INDICATED IN THE MAX. UNBRACED LENGTH COLUMN OF THE TABLE BELOW

LOADING

TOTAL LOAD CASES: (4)

CHORDS

MEMB. FR-TO	MAX. FACTORED FORCE (LBS)	FACTORED VERT. LOAD (PLF) FROM	TO	LC1	MAX CSI (LC)	MAX. UNBRAC LENGTH
A- B	0 / 47	-124.4	-124.4	0.17 (1)	10.00	
B- C	-2762 / 0	-124.4	-124.4	0.76 (1)	3.36	
C- D	-2326 / 0	-124.4	-124.4	0.68 (1)	3.71	
D- E	-2326 / 0	-124.4	-124.4	0.68 (1)	3.71	
E- F	-1901 / 0	-124.4	-124.4	0.20 (1)	4.70	
F- G	-1901 / 0	-124.4	-124.4	0.20 (1)	4.70	
G- H	-2326 / 0	-124.4	-124.4	0.68 (1)	3.71	
H- I	-2326 / 0	-124.4	-124.4	0.68 (1)	3.71	
I- J	-2762 / 0	-124.4	-124.4	0.76 (1)	3.36	
J- K	0 / 47	-124.4	-124.4	0.17 (1)	10.00	
R- B	-2436 / 0	0.0	0.0	0.25 (1)	5.49	
L- J	-2436 / 0	0.0	0.0	0.25 (1)	5.49	
R- Q	0 / 0	-28.0	-28.0	0.25 (3)	10.00	
Q- P	0 / 2339	-28.0	-28.0	0.50 (1)	10.00	
P- O	0 / 1995	-28.0	-28.0	0.45 (1)	10.00	
O- N	0 / 1995	-28.0	-28.0	0.45 (1)	10.00	
N- M	0 / 2339	-28.0	-28.0	0.50 (1)	10.00	
M- L	0 / 0	-28.0	-28.0	0.25 (3)	10.00	

WEBS

MEMB. FR-TO	MAX. FACTORED FORCE (LBS)	MAX CSI (LC)
Q- C	-239 / 134	0.11 (1)
C- P	-590 / 0	0.74 (1)
P- E	0 / 816	0.18 (1)
P- F	-269 / 0	0.18 (1)
F- N	-269 / 0	0.18 (1)
N- G	0 / 816	0.18 (1)
N- I	-590 / 0	0.74 (1)
M- I	-239 / 134	0.11 (1)
B- Q	0 / 2376	0.53 (1)
M- J	0 / 2376	0.53 (1)

LICENSED PROFESSIONAL ENGINEER
1538
S. KATSOULAKOS
PROVINCE OF ONTARIO

DESIGN CRITERIA

SPECIFIED LOADS:

TOP CH.	LL	=	34.8	PSF
	DL	=	8.0	PSF
BOT CH.	LL	=	10.5	PSF
	DL	=	7.0	PSF
TOTAL LOAD		=	60.3	PSF

SPACING = 24.0 IN. C/C

LOADING IN FLAT SECTION BASED ON A SLOPE OF 6.00/12

THIS TRUSS IS DESIGNED FOR RESIDENTIAL OR SMALL BUILDING REQUIREMENTS OF PART 9, NBCC 2010

THIS DESIGN COMPLIES WITH:
- PART 9 OF OBC 2012 , BCBC 2012 , ABC 2014
- CSA 086-09
- TPIC 2011

(55 % OF 48.1 P.S.F. G.S.L. PLUS 8.4 P.S.F. RAIN LOAD) EQUALS 34.8 P.S.F. SPECIFIED ROOF LIVE LOAD

ALLOWABLE DEFL.(LL)= L/360 (1.02")
CALCULATED VERT. DEFL.(LL) = L/ 999 (0.13")
ALLOWABLE DEFL.(TL)= L/360 (1.02")
CALCULATED VERT. DEFL.(TL) = L/ 999 (0.23")

CSI: TC=0.76/1.00 (I-J:1) , BC=0.50/1.00 (M-N:1) , WB=0.74/1.00 (I-N:1) , SSI=0.30/1.00 (I-J:1)

DOL LUMBER=1.00 NAIL=1.00 LS BEND=1.10 COMP=1.10 SHEAR=1.10 TENS= 1.10

COMPANION LIVE LOAD FACTOR = 0.50

TRUSS PLATE MANUFACTURER IS NOT RESPONSIBLE FOR QUALITY CONTROL IN THE TRUSS MANUFACTURING PLANT .

NAIL VALUES

PLATE	GRIP(DRY) (PSI) MAX	MIN	SHEAR (PLI) MAX	MIN	SECTION (PLI) MAX	MIN
MT20	618	354	1667	822	2284	1656

PLATE PLACEMENT TOL. = 0.250 inches

PLATE ROTATION TOL. = 5.0 Deg.

JSI GRIP= 0.85 (Q) (INPUT = 0.90)
JSI METAL= 0.63 (O) (INPUT = 1.00)

DWG NO. TAM 3595 -18
STRUCTURAL
COMPONENT ONLY

JOB NAME	TRUSS NAME	QUANTITY	PLY	JOB DESC. 45274	DRWG NO.
290315	T11	3	1	TRUSS DESC.	

Version 8.200 S Dec 12 2017 MiTek Industries, Inc. Mon Jan 15 08:13:17 2018 Page 1

Tamarack Roof Truss, Burlington

ID:kjhWC3V7rOjjJm4XuW?IGPyNETN-?n2jNDfZwiZofobJIGURW16CNS8?khL?ioe?WuzvB2G

Scale = 1:65.1

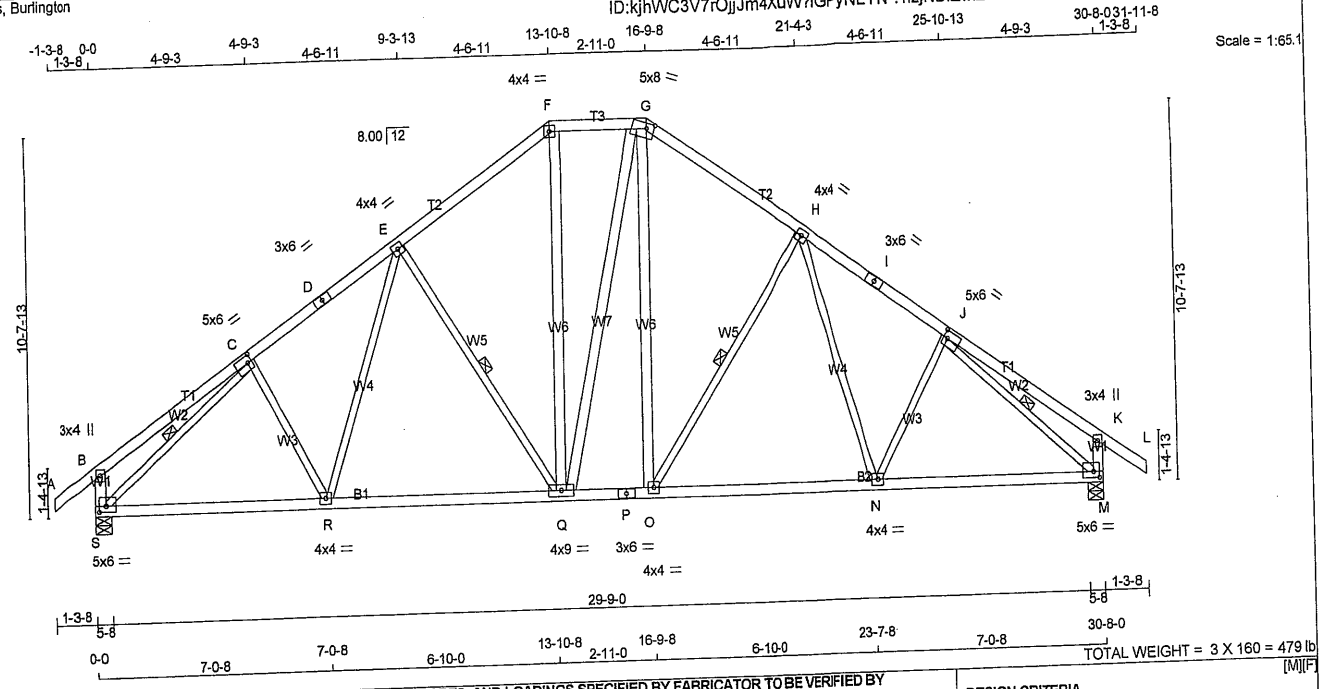

TOTAL WEIGHT = 3 X 160 = 479 lb

[M][F]

LUMBER

N. L. G. A. RULES

CHORDS	SIZE		LUMBER	DESCR.
A - D	2x4	DRY	No.2	SPF
D - F	2x4	DRY	No.2	SPF
F - G	2x4	DRY	No.2	SPF
G - I	2x4	DRY	No.2	SPF
I - L	2x4	DRY	No.2	SPF
S - B	2x4	DRY	No.2	SPF
M - K	2x4	DRY	No.2	SPF
S - P	2x4	DRY	No.2	SPF
P - M	2x4	DRY	No.2	SPF
ALL WEBS EXCEPT	2x3	DRY	No.2	SPF
Q - F	2x4	DRY	No.2	SPF
Q - G	2x4	DRY	No.2	SPF
O - G	2x4	DRY	No.2	SPF

DRY: SEASONED LUMBER.

PLATES (table is in inches)

JT	TYPE	PLATES	W	LEN	Y	X
B	TMV+p	MT20	3.0	4.0		
C	TMWW-t	MT20	5.0	6.0	2.50	1.50
D	TS-t	MT20	3.0	6.0		
E	TMWW-t	MT20	4.0	4.0		
F	TTW-l	MT20	4.0	4.0		
G	TTWW-m	MT20	5.0	8.0	1.75	2.75
H	TMWW-t	MT20	4.0	4.0		
I	TS-t	MT20	3.0	6.0		
J	TMWW-t	MT20	5.0	6.0	2.50	1.50
K	TMV+p	MT20	3.0	4.0		
M	BMVW1-t	MT20	5.0	6.0	2.00	2.25
N, O, R						
N	BMWW-t	MT20	4.0	4.0		
P	BS-t	MT20	3.0	6.0		
Q	BMWWW-t	MT20	4.0	9.0		
S	BMVW1-t	MT20	5.0	6.0	2.00	2.25

DIMENSIONS, SUPPORTS AND LOADINGS SPECIFIED BY FABRICATOR TO BE VERIFIED BY BUILDING DESIGNER

BEARINGS

JT	FACTORED GROSS REACTION VERT	HORZ	MAXIMUM FACTORED GROSS REACTION DOWN	HORZ	UPLIFT	INPUT BRG IN-SX	REQRD BRG IN-SX
S	2507	0	2507	0	0	5-8	5-8
M	2507	0	2507	0	0	5-8	5-8

UNFACTORED REACTIONS

JT	1ST LCASE COMBINED	MAX./MIN. COMPONENT REACTIONS SNOW	LIVE	PERM.LIVE	WIND	DEAD	SOIL
S	1966	1162 / 0	322 / 0	0 / 0	0 / 0	482 / 0	0 / 0
M	1966	1162 / 0	322 / 0	0 / 0	0 / 0	482 / 0	0 / 0

BEARING MATERIAL TO BE SPF NO.2 OR BETTER AT JOINT(S) S, M

BRACING

TOP CHORD TO BE SHEATHED OR MAX. PURLIN SPACING = 3.92 FT.
MAX. UNBRACED BOTTOM CHORD LENGTH = 10.00 FT OR RIGID CEILING DIRECTLY APPLIED.

ALL PITCH BREAKS AND PERIMETER CORNER JOINTS MUST BE LATERALLY RESTRAINED.

1 LATERAL BRACE(S) AT 1/ 2 LENGTH OF E-Q, H-O, C-S, J-M.

END VERTICAL(S) MUST BE SHEATHED OR HAVE BRACES AS INDICATED IN THE MAX. UNBRACED LENGTH COLUMN OF THE TABLE BELOW

LOADING

TOTAL LOAD CASES: (4)

CHORDS

MEMB. FR-TO	MAX. FACTORED FORCE (LBS)	FACTORED VERT. LOAD LC1 (PLF) FROM	TO	MAX CSI (LC)	MAX. UNBRAC LENGTH
A- B	0 / 47	-124.4	-124.4	0.17 (1)	10.00
B- C	0 / 28	-124.4	-124.4	0.32 (1)	10.00
C- D	-2647 / 0	-124.4	-124.4	0.39 (1)	3.92
D- E	-2647 / 0	-124.4	-124.4	0.39 (1)	3.92
E- F	-2094 / 0	-124.4	-124.4	0.37 (1)	4.35
F- G	-1724 / 0	-124.4	-124.4	0.17 (1)	4.93
G- H	-2092 / 0	-124.4	-124.4	0.37 (1)	4.35
H- I	-2648 / 0	-124.4	-124.4	0.39 (1)	3.92
I- J	-2648 / 0	-124.4	-124.4	0.39 (1)	3.92
J- K	0 / 28	-124.4	-124.4	0.32 (1)	10.00
K- L	0 / 47	-124.4	-124.4	0.17 (1)	10.00
S- B	-409 / 0	0.0	0.0	0.04 (1)	7.81
M- K	-409 / 0	0.0	0.0	0.04 (1)	7.81
S- R	0 / 2245	-28.0	-28.0	0.59 (2)	10.00
R- Q	0 / 2114	-28.0	-28.0	0.57 (2)	10.00
Q- P	0 / 1722	-28.0	-28.0	0.38 (1)	10.00
P- O	0 / 1722	-28.0	-28.0	0.38 (1)	10.00
O- N	0 / 2114	-28.0	-28.0	0.58 (2)	10.00
N- M	0 / 2246	-28.0	-28.0	0.59 (2)	10.00

WEBS

MEMB. FR-TO	MAX. FACTORED FORCE (LBS)	MAX CSI (LC)
C- R	-81 / 111	0.03 (1)
R- E	0 / 356	0.08 (2)
E- Q	-727 / 0	0.37 (1)
Q- F	0 / 735	0.12 (1)
Q- G	0 / 6	0.00 (1)
O- G	0 / 727	0.12 (1)
O- H	-729 / 0	0.37 (1)
H- N	0 / 359	0.08 (2)
N- J	-81 / 111	0.03 (1)
S- C	-3019 / 0	0.81 (1)
J- M	-3020 / 0	0.81 (1)

LICENSED PROFESSIONAL ENGINEER
1518
S. KATSOULAKOS
PROVINCE OF ONTARIO

DESIGN CRITERIA

SPECIFIED LOADS:

TOP CH.	LL	=	34.8	PSF
	DL	=	8.0	PSF
BOT CH.	LL	=	10.5	PSF
	DL	=	7.0	PSF
TOTAL LOAD		=	60.3	PSF

SPACING = 24.0 IN. C/C

LOADING IN FLAT SECTION BASED ON A SLOPE OF 6.00/12

THIS TRUSS IS DESIGNED FOR RESIDENTIAL OR SMALL BUILDING REQUIREMENTS OF PART 9, NBCC 2010

THIS DESIGN COMPLIES WITH:
- PART 9 OF OBC 2012 , BCBC 2012 , ABC 2014
- CSA 086-09
- TPIC 2011

(55 % OF 48.1 P.S.F. G.S.L. PLUS 8.4 P.S.F. RAIN LOAD) EQUALS 34.8 P.S.F. SPECIFIED ROOF LIVE LOAD

ALLOWABLE DEFL.(LL)= L/360 (1.02")
CALCULATED VERT. DEFL.(LL) = L/ 999 (0.14")
ALLOWABLE DEFL.(TL)= L/360 (1.02")
CALCULATED VERT. DEFL.(TL) = L/ 999 (0.24")

CSI: TC=0.39/1.00 (H-J:1) , BC=0.59/1.00 (M-N:2) , WB=0.81/1.00 (J-M:1) , SSI=0.22/1.00 (G-H:1)

DOL LUMBER=1.00 NAIL=1.00 LS BEND=1.10 COMP=1.10 SHEAR=1.10 TENS= 1.10

COMPANION LIVE LOAD FACTOR = 0.50

AUTOSOLVE HEELS OFF

TRUSS PLATE MANUFACTURER IS NOT RESPONSIBLE FOR QUALITY CONTROL IN THE TRUSS MANUFACTURING PLANT .

NAIL VALUES

PLATE	GRIP(DRY) (PSI) MAX	MIN	SHEAR (PLI) MAX	MIN	SECTION (PLI) MAX	MIN
MT20	618	354	1667	822	2284	1656

PLATE PLACEMENT TOL. = 0.250 inches

PLATE ROTATION TOL. = 5.0 Deg.

JSI GRIP= 0.89 (F) (INPUT = 0.90)
JSI METAL= 0.75 (J) (INPUT = 1.00)

DWG NO. TAM3596-18
STRUCTURAL
COMPONENT ONLY

JOB NAME	TRUSS NAME	QUANTITY	PLY	JOB DESC. 45274	DRWG NO.
290315	T12	1	2	TRUSS DESC.	

Tamarack Roof Truss, Burlington

Version 8.200 S Dec 12 2017 MiTek Industries, Inc. Mon Jan 15 08:13:18 2018 Page 1
ID:kjhWC3V7rOjjJm4XuW?lGPyNETN-T_c5bZfBh0hfGyAVJ_?g3FeO_rVsTCG9xSNZ2LzvB2F

Scale = 1:35.7

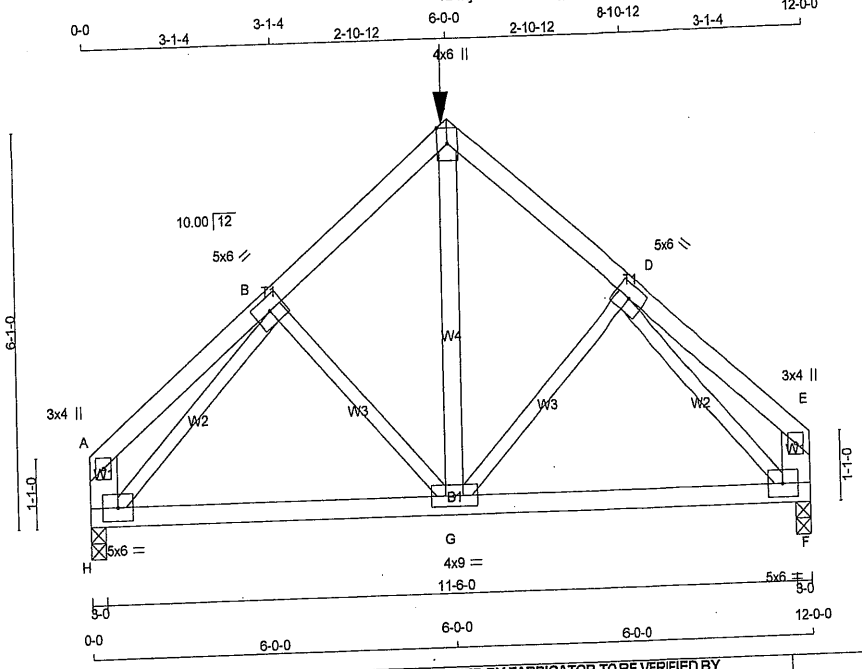

TOTAL WEIGHT = 2 X 54 = 108 lb [M]

LUMBER

N. L. G. A. RULES

CHORDS	SIZE		LUMBER	DESCR.
A - C	2x4	DRY	No.2	SPF
C - E	2x4	DRY	No.2	SPF
H - A	2x6	DRY	No.2	SPF
F - E	2x6	DRY	No.2	SPF
H - F	2x4	DRY	No.2	SPF
ALL WEBS EXCEPT	2x3	DRY	No.2	SPF
G - C	2x4	DRY	No.2	SPF

DRY: SEASONED LUMBER.

DESIGN CONSISTS OF 2 TRUSSES BUILT SEPARATELY THEN FASTENED TOGETHER AS FOLLOWS:

CHORDS	#ROWS	SURFACE SPACING (IN)	LOAD(PLF)
TOP CHORDS : (0.122"X3") SPIRAL NAILS			
A- C	1	12	SIDE(77.6)
C- E	1	12	SIDE(77.6)
H- A	2	12	TOP
F- E	2	12	TOP
BOTTOM CHORDS : (0.122"X3") SPIRAL NAILS			
H- F	1	12	SIDE(39.8)
WEBS : (0.122"X3") SPIRAL NAILS			
2x3	1	6	
G- C	1	6	SIDE(289.7)

NAILS TO BE DRIVEN FROM ONE SIDE ONLY.

GIRDER NAILING ASSUMES NAILED HANGERS ARE FASTENED WITH MIN. 3-0 INCH NAILS.

TOP - COMPONENTS ARE LOADED FROM THE TOP AND MUST BE PLACED ON TOP EDGE OF ALL PLIES FOR THE LOAD TO BE TRANSFERRED TO EACH PLY.

SIDE - PLF SHOWN IS THE EQUIVALENT UDL APPLIED TO ONE SIDE THAT THE CORRESPONDING NAILING PATTERN SHALL BE CAPABLE OF TRANSFERING. REMAINING PLF MUST BE APPLIED ON THE OPPOSITE SIDE OR ON THE TOP.

PLATES (table is in inches)

JT	TYPE	PLATES	W	LEN	Y	X
A	TMV+p	MT20	3.0	4.0		
B	TMWW-t	MT20	5.0	6.0		
C	TTW+p	MT20	4.0	6.0	Edge	
D	TMWW-t	MT20	5.0	6.0		
E	TMV+p	MT20	3.0	4.0		
F	BMVW1-t	MT20	5.0	6.0		
G	BMWWW-t	MT20	4.0	9.0		
H	BMVW1-t	MT20	5.0	6.0		

Edge - INDICATES REFERENCE CORNER OF PLATE TOUCHES EDGE OF CHORD.

HANGERS NOTES

1) SPECIAL HANGER(S) OR CONNECTION(S) REQUIRED TO SUPPORT CONCENTRATED LOAD(S) 1174.0 lbs FACTORED DOWN AT 6-0-0 ON TOP CHORD. DESIGN FOR UNSPECIFIED CONNECTION(S) IS DELEGATED TO THE BUILDING DESIGNER.

DIMENSIONS, SUPPORTS AND LOADINGS SPECIFIED BY FABRICATOR TO BE VERIFIED BY BUILDING DESIGNER

BEARINGS

JT	FACTORED GROSS REACTION VERT	HORZ	MAXIMUM FACTORED GROSS REACTION DOWN	HORZ	UPLIFT	INPUT BRG IN-SX	REQRD BRG IN-SX
H	2987	0	2987	0	0	3-0	3-0
F	2987	0	2987	0	0	3-0	3-0

UNFACTORED REACTIONS

JT	1ST LCASE COMBINED	MAX./MIN. COMPONENT REACTIONS SNOW	LIVE	PERM.LIVE	WIND	DEAD	SOIL
H	2303	1424 / 0	331 / 0	0 / 0	0 / 0	549 / 0	0 / 0
F	2303	1424 / 0	331 / 0	0 / 0	0 / 0	549 / 0	0 / 0

BEARING MATERIAL TO BE SPF NO.2 OR BETTER AT JOINT(S) H, F

BRACING

TOP CHORD TO BE SHEATHED OR MAX. PURLIN SPACING = 5.34 FT.
MAX. UNBRACED BOTTOM CHORD LENGTH = 10.00 FT OR RIGID CEILING DIRECTLY APPLIED.

ALL PITCH BREAKS AND PERIMETER CORNER JOINTS MUST BE LATERALLY RESTRAINED.

LOADING

TOTAL LOAD CASES: (4)

CHORDS

MEMB. FR-TO	MAX. FACTORED FORCE (LBS)	FACTORED VERT. LOAD (PLF) FROM	TO	LC1	MAX CSI (LC)	MAX. UNBRAC LENGTH
A- B	0 / 68	-326.5	-326.5	0.24 (1)	10.00	
B- C	-2561 / 0	-326.5	-326.5	0.27 (1)	5.34	
C- D	-2561 / 0	-326.5	-326.5	0.27 (1)	5.34	
D- E	0 / 68	-326.5	-326.5	0.24 (1)	10.00	
H- A	-379 / 0	0.0	0.0	0.01 (1)	7.81	
F- E	-379 / 0	0.0	0.0	0.01 (1)	7.81	
H- G	0 / 2245	-73.5	-73.5	0.55 (3)	10.00	
G- F	0 / 2245	-73.5	-73.5	0.55 (3)	10.00	

WEBS

MEMB. FR-TO	MAX. FACTORED FORCE (LBS)	MAX CSI (LC)
G- C	0 / 1239	0.11 (1)
G- D	-480 / 6	0.08 (1)
B- G	-480 / 6	0.08 (1)
H- B	-3313 / 0	0.51 (1)
D- F	-3313 / 0	0.51 (1)

FACTORED CONCENTRATED LOADS (LBS)

JT	LOC.	LC1	MAX-	MAX+	FACE	DIR.	TYPE
C	6-0-0	-190	-213	—	FRONT	VERT	DEAD
C	6-0-0	-984	-984	—	FRONT	VERT	SNOW

DESIGN CRITERIA

*** SPECIAL LOADS ANALYSIS ***
GEOMETRY AND/OR BASIC LOADS CHANGED BY USER.
LOADS WERE DERIVED FROM USER INPUT
NO FURTHER MODIFICATIONS WERE MADE

SPECIFIED LOADS:

TOP CH.	LL	=	34.8	PSF
	DL	=	8.0	PSF
BOT CH.	LL	=	10.5	PSF
	DL	=	7.0	PSF
TOTAL LOAD		=	60.3	PSF

SPACING = 24.0 IN. C/C

GIRDER TYPE: CPrimeHip
SIDE SETBACK = 0-0
END SETBACK = 8-6-0
END WALL WIDTH = 0-0
CORNER FRAMING TYPE: CONVENTIONAL
END JACK TYPE: CONVENTIONAL
APPLIED TO FRONT SIDE
- ADDT'L LOADS BASED ON 55 % OF GSL.

*** NON STANDARD GIRDER ***
ADDT'L USER-DEFINED LOADS APPLIED TO ALL LOAD CASES.

THIS TRUSS IS DESIGNED FOR RESIDENTIAL OR SMALL BUILDING REQUIREMENTS OF PART 9, NBCC 2010

THIS DESIGN COMPLIES WITH:
- PART 9 OF OBC 2012 , BCBC 2012 , ABC 2014
- CSA 086-09
- TPIC 2011

(55 % OF 48.1 P.S.F. G.S.L. PLUS 8.4 P.S.F. RAIN LOAD) EQUALS 34.8 P.S.F. SPECIFIED ROOF LIVE LOAD

ALLOWABLE DEFL.(LL)= L/360 (0.40")
CALCULATED VERT. DEFL.(LL) = L/ 999 (0.06")
ALLOWABLE DEFL.(TL)= L/360 (0.40")
CALCULATED VERT. DEFL.(TL) = L/ 999 (0.09")

CSI: TC=0.27/1.00 (C-D:1) , BC=0.55/1.00 (G-H:3) , WB=0.51/1.00 (B-H:1) , SSI=0.23/1.00 (G-H:3)

DOL LUMBER=1.00 NAIL=1.00 LS BEND=1.00 COMP=1.00 SHEAR=1.00 TENS= 1.00

COMPANION LIVE LOAD FACTOR = 0.50

AUTOSOLVE HEELS OFF

TRUSS PLATE MANUFACTURER IS NOT RESPONSIBLE FOR QUALITY CONTROL IN THE TRUSS MANUFACTURING PLANT .

NAIL VALUES

PLATE	GRIP(DRY) (PSI) MAX	MIN	SHEAR (PLI) MAX	MIN	SECTION (PLI) MAX	MIN
MT20	618	354	1667	822	2284	1656

PLATE PLACEMENT TOL. = 0.250 inches

PLATE ROTATION TOL. = 5.0 Deg.

LICENSED PROFESSIONAL ENGINEER
1578
S. KATSOULAKOS
PROVINCE OF ONTARIO

DWG NO. TAM 3597-18
STRUCTURAL COMPONENT ONLY

P6 1/2

CONTINUED ON PAGE 2

JOB NAME	TRUSS NAME	QUANTITY	PLY	JOB DESC. 45274	DRWG NO.
290315	T12	1	2	TRUSS DESC.	

Version 8.200 S Dec 12 2017 MiTek Industries, Inc. Mon Jan 15 08:13:18 2018 Page 2
ID:kjhWC3V7rOjjJm4XuW?IGPyNETN-T_c5bZfBh0hfGyAVJ_?g3FeO_rVsTCG9xSNZ2LzvB2F

Tamarack Roof Truss, Burlington

JSI GRIP= 0.72 (B) (INPUT = 0.90)
JSI METAL= 0.41 (D) (INPUT = 1.00)

LICENSED PROFESSIONAL ENGINEER
1578
S. KATSOULAKOS
PROVINCE OF ONTARIO

DWG NO. TAM 3597 -18
STRUCTURAL
COMPONENT ONLY

JOB NAME	TRUSS NAME	QUANTITY	PLY	JOB DESC. 45274	DRWG NO.
290315	T13	2	2	TRUSS DESC.	

Tamarack Roof Truss, Burlington

Version 8.200 S Dec 12 2017 MiTek Industries, Inc. Mon Jan 15 08:13:18 2018 Page 1
ID:kjhWC3V7rOjjJm4XuW?IGPyNETN-T_c5bZfBh0hfGyAVJ_?g3FePVraITC09xSNZ2LzvB2F

Scale = 1:14.1

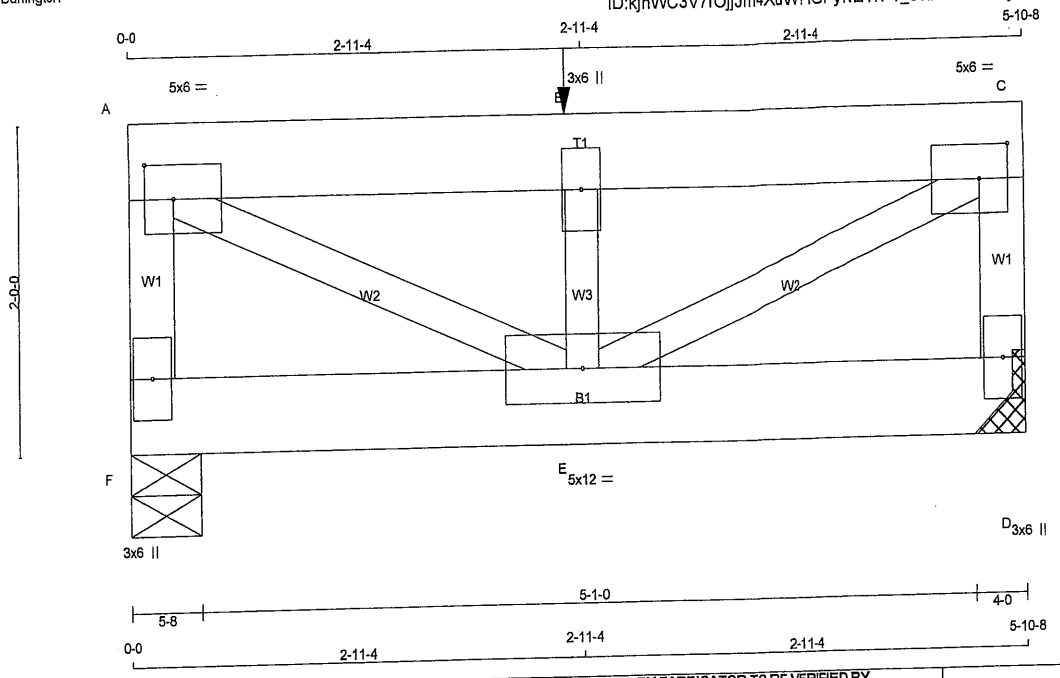

TOTAL WEIGHT = 4 X 29 = 116 lb [M]

LUMBER

N. L. G. A. RULES

CHORDS	SIZE		LUMBER	DESCR.
F - A	2x4	DRY	No.2	SPF
A - C	2x6	DRY	No.2	SPF
D - C	2x4	DRY	No.2	SPF
F - D	2x6	DRY	No.2	SPF
ALL WEBS	2x3	DRY	No.2	SPF

DRY: SEASONED LUMBER.

DESIGN CONSISTS OF 2 TRUSSES BUILT SEPARATELY THEN FASTENED TOGETHER AS FOLLOWS:

CHORDS #ROWS	SURFACE SPACING (IN)	LOAD(PLF)
TOP CHORDS : (0.122"X3") SPIRAL NAILS		
F- A 1	12	TOP
C- D 1	12	TOP
A- C 2	12	SIDE(188.1)
BOTTOM CHORDS : (0.122"X3") SPIRAL NAILS		
F- D 2	12	TOP
WEBS : (0.122"X3") SPIRAL NAILS		
2x3 1	6	

NAILS TO BE DRIVEN FROM ONE SIDE ONLY.

TOP - COMPONENTS ARE LOADED FROM THE TOP AND MUST BE PLACED ON TOP EDGE OF ALL PLIES FOR THE LOAD TO BE TRANSFERRED TO EACH PLY.

SIDE - PLF SHOWN IS THE EQUIVALENT UDL APPLIED TO ONE SIDE THAT THE CORRESPONDING NAILING PATTERN SHALL BE CAPABLE OF TRANSFERING. REMAINING PLF MUST BE APPLIED ON THE OPPOSITE SIDE OR ON THE TOP.

PLATES (table is in inches)

JT	TYPE	PLATES	W	LEN	Y	X
A	TMVW-t	MT20	5.0	6.0	2.50	2.25
B	TMW+w	MT20	3.0	6.0		
C	TMVW-t	MT20	5.0	6.0	2.50	2.25
D	BMV1+p	MT20	3.0	6.0		
E	BMWWW-t	MT20	5.0	12.0		
F	BMV1+p	MT20	3.0	6.0		

HANGERS NOTES

1) SPECIAL HANGER(S) OR CONNECTION(S) REQUIRED TO SUPPORT CONCENTRATED LOAD(S) 2862.6 lbs FACTORED DOWN AT 2-10-0 ON TOP CHORD. DESIGN FOR UNSPECIFIED CONNECTION(S) IS DELEGATED TO THE BUILDING DESIGNER.

DIMENSIONS, SUPPORTS AND LOADINGS SPECIFIED BY FABRICATOR TO BE VERIFIED BY BUILDING DESIGNER

BEARINGS

JT	FACTORED GROSS REACTION VERT	HORZ	MAXIMUM FACTORED GROSS REACTION DOWN	HORZ	UPLIFT	INPUT BRG IN-SX	REQRD BRG IN-SX
F	2984	0	2984	0	0	5-8	5-8
D	2984	0	2984	0	0	HANGER BY OTHERS MIN. SEAT SIZE: 4-0	

UNFACTORED REACTIONS

JT	1ST LCASE COMBINED	MAX./MIN. COMPONENT REACTIONS SNOW	LIVE	PERM.LIVE	WIND	DEAD	SOIL
F	2338	1386 / 0	379 / 0	0 / 0	0 / 0	572 / 0	0 / 0
D	2338	1386 / 0	379 / 0	0 / 0	0 / 0	572 / 0	0 / 0

BEARING MATERIAL TO BE SPF NO.2 OR BETTER AT JOINT(S) F

BRACING

TOP CHORD TO BE SHEATHED OR MAX. PURLIN SPACING = 5.52 FT.
MAX. UNBRACED BOTTOM CHORD LENGTH = 10.00 FT OR RIGID CEILING DIRECTLY APPLIED.

ALL PITCH BREAKS AND PERIMETER CORNER JOINTS MUST BE LATERALLY RESTRAINED.

LOADING

TOTAL LOAD CASES: (4)

CHORDS

MEMB. FR-TO	MAX. FACTORED FORCE (LBS)	FACTORED VERT. LOAD (PLF) FROM	TO	LC1 MAX CSI (LC)	MAX. UNBRAC LENGTH
F- A	-2756 / 0	0.0	0.0	0.16 (1)	6.89
A- B	-3794 / 0	-500.6	-500.6	0.23 (1)	5.52
B- C	-3794 / 0	-500.6	-500.6	0.23 (1)	5.52
D- C	-2756 / 0	0.0	0.0	0.16 (1)	6.89
F- E	0 / 0	-28.0	-28.0	0.20 (1)	10.00
E- D	0 / 0	-28.0	-28.0	0.20 (1)	10.00

WEBS

MEMB. FR-TO	MAX. FACTORED FORCE (LBS)	MAX CSI (LC)
A- E	0 / 4284	0.53 (1)
E- B	-4274 / 0	0.34 (1)
E- C	0 / 4284	0.53 (1)

FACTORED CONCENTRATED LOADS (LBS)

JT	LOC.	LC1	MAX-	MAX+	FACE	DIR.	TYPE
B	2-10-0	-2863	-2863	—	TOP	VERT	TOTAL

DESIGN CRITERIA

SPECIFIED LOADS:

TOP CH.	LL	=	34.8	PSF
	DL	=	8.0	PSF
BOT CH.	LL	=	10.5	PSF
	DL	=	7.0	PSF
TOTAL LOAD		=	60.3	PSF

SPACING = 24.0 IN. C/C

LOADING IN FLAT SECTION BASED ON A SLOPE OF 6.00/12

GIRDER TYPE: CStdGirder
START DISTANCE = 0-0
START SPAN CARRIED = 12-0-0
END DISTANCE = 5-10-8
END SPAN CARRIED = 12-0-0
END WALL WIDTH = 1-8
APPLIED TO FRONT SIDE OF TOP CHORD.
- ADDT'L LOADS BASED ON 55 % OF GSL.

THIS TRUSS IS DESIGNED FOR RESIDENTIAL OR SMALL BUILDING REQUIREMENTS OF PART 9, NBCC 2010

THIS DESIGN COMPLIES WITH:
- PART 9 OF OBC 2012 , BCBC 2012 , ABC 2014
- CSA 086-09
- TPIC 2011

(55 % OF 48.1 P.S.F. G.S.L. PLUS 8.4 P.S.F. RAIN LOAD) EQUALS 34.8 P.S.F. SPECIFIED ROOF LIVE LOAD

ALLOWABLE DEFL.(LL)= L/360 (0.20")
CALCULATED VERT. DEFL.(LL) = L/ 999 (0.03")
ALLOWABLE DEFL.(TL)= L/360 (0.20")
CALCULATED VERT. DEFL.(TL) = L/ 999 (0.04")

CSI: TC=0.23/1.00 (A-B:1) , BC=0.20/1.00 (E-F:1) , WB=0.53/1.00 (A-E:1) , SSI=0.25/1.00 (A-B:1)

DOL LUMBER=1.00 NAIL=1.00 LS BEND=1.00 COMP=1.00 SHEAR=1.00 TENS= 1.00

COMPANION LIVE LOAD FACTOR = 0.50

TRUSS PLATE MANUFACTURER IS NOT RESPONSIBLE FOR QUALITY CONTROL IN THE TRUSS MANUFACTURING PLANT .

NAIL VALUES

PLATE	GRIP(DRY) (PSI) MAX	MIN	SHEAR (PLI) MAX	MIN	SECTION (PLI) MAX	MIN
MT20	618	354	1667	822	2284	1656

PLATE PLACEMENT TOL. = 0.250 inches

PLATE ROTATION TOL. = 5.0 Deg.

JSI GRIP= 0.82 (A) (INPUT = 0.90)
JSI METAL= 0.47 (C) (INPUT = 1.00)

LICENSED PROFESSIONAL ENGINEER
S. KATSOULAKOS
PROVINCE OF ONTARIO

DWG NO. TAM 3598-18
STRUCTURAL COMPONENT ONLY

JOB NAME	TRUSS NAME	QUANTITY	PLY	JOB DESC. 45274	DRWG NO.
290315	T14S	2	1	TRUSS DESC.	

Tamarack Roof Truss, Burlington

Version 8.200 S Dec 12 2017 MiTek Industries, Inc. Mon Jan 15 08:13:18 2018 Page 1
ID:kjhWC3V7rOjjJm4XuW?IGPyNETN-T_c5bZfBh0hfGyAVJ_?g3FeNqraVTI19xSNZ2LzvB2F

Scale = 1:56.1

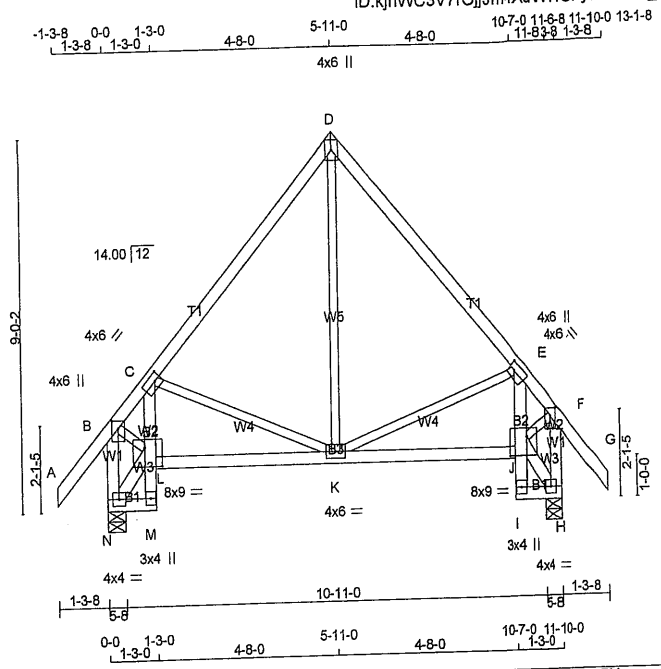

TOTAL WEIGHT = 2 X 68 = 137 lb
[M][F]

LUMBER
N. L. G. A. RULES

CHORDS	SIZE		LUMBER	DESCR.
A - D	2x4	DRY	No.2	SPF
D - G	2x4	DRY	No.2	SPF
N - B	2x4	DRY	No.2	SPF
H - F	2x4	DRY	No.2	SPF
N - M	2x4	DRY	No.2	SPF
M - C	2x4	DRY	No.2	SPF
L - J	2x4	DRY	No.2	SPF
I - E	2x4	DRY	No.2	SPF
I - H	2x4	DRY	No.2	SPF
ALL WEBS EXCEPT	2x3	DRY	No.2	SPF
N - L	2x4	DRY	No.2	SPF
J - H	2x4	DRY	No.2	SPF

DRY: SEASONED LUMBER.

PLATES (table is in inches)

JT	TYPE	PLATES	W	LEN	Y	X
B	TMVW+p	MT20	4.0	6.0	2.25	2.00
C	TMVW-t	MT20	4.0	6.0	2.00	2.00
D	TTW+p	MT20	4.0	6.0		
E	TMVW-t	MT20	4.0	6.0	2.00	2.00
F	TMVW+p	MT20	4.0	6.0	2.25	2.00
H	BMVW1-t	MT20	4.0	4.0		
I	BMV+p	MT20	3.0	4.0		
J	BVMWW-l	MT20	8.0	9.0	5.50	5.50
K	BMWWW-t	MT20	4.0	6.0		
L	BVMWW-l	MT20	8.0	9.0	5.50	5.50
M	BMV+p	MT20	3.0	4.0		
N	BMVW1-t	MT20	4.0	4.0		

DIMENSIONS, SUPPORTS AND LOADINGS SPECIFIED BY FABRICATOR TO BE VERIFIED BY BUILDING DESIGNER

BEARINGS

JT	FACTORED GROSS REACTION VERT	HORZ	MAXIMUM FACTORED GROSS REACTION DOWN	HORZ	UPLIFT	INPUT BRG IN-SX	REQRD BRG IN-SX
N	1076	0	1076	0	0	5-8	5-8
H	1076	0	1076	0	0	5-8	5-8

UNFACTORED REACTIONS

JT	1ST LCASE COMBINED	MAX./MIN. COMPONENT REACTIONS SNOW	LIVE	PERM.LIVE	WIND	DEAD	SOIL
N	833	509 / 0	124 / 0	0 / 0	0 / 0	200 / 0	0 / 0
H	833	509 / 0	124 / 0	0 / 0	0 / 0	200 / 0	0 / 0

BEARING MATERIAL TO BE SPF NO.2 OR BETTER AT JOINT(S) N, H

BRACING
TOP CHORD TO BE SHEATHED OR MAX. PURLIN SPACING = 6.25 FT.
MAX. UNBRACED BOTTOM CHORD LENGTH = 7.81 FT OR RIGID CEILING DIRECTLY APPLIED.

ALL PITCH BREAKS AND PERIMETER CORNER JOINTS MUST BE LATERALLY RESTRAINED.

LOADING
TOTAL LOAD CASES: (4)

CHORDS

MEMB. FR-TO	MAX. FACTORED FORCE (LBS)	FACTORED VERT. LOAD LC1 (PLF) FROM	TO	MAX CSI (LC)	MAX. UNBRAC LENGTH
A- B	0 / 66	-124.4	-124.4	0.18 (1)	10.00
B- C	-824 / 0	-124.4	-124.4	0.30 (1)	6.25
C- D	-570 / 0	-124.4	-124.4	0.34 (1)	6.25
D- E	-570 / 0	-124.4	-124.4	0.34 (1)	6.25
E- F	-824 / 0	-124.4	-124.4	0.30 (1)	6.25
F- G	0 / 66	-124.4	-124.4	0.18 (1)	10.00
N- B	-1039 / 0	0.0	0.0	0.12 (1)	7.71
H- F	-1039 / 0	0.0	0.0	0.12 (1)	7.71
N- M	0 / 18	-28.0	-28.0	0.01 (3)	10.00
M- L	0 / 27	0.0	0.0	0.03 (1)	10.00
L- C	-141 / 31	0.0	0.0	0.02 (1)	7.81
L- K	0 / 617	-28.0	-28.0	0.25 (3)	10.00
K- J	0 / 617	-28.0	-28.0	0.25 (3)	10.00
I- J	0 / 27	0.0	0.0	0.03 (1)	10.00
J- E	-141 / 31	0.0	0.0	0.02 (1)	7.81
I- H	0 / 18	-28.0	-28.0	0.01 (3)	10.00

WEBS

MEMB. FR-TO	MAX. FACTORED FORCE (LBS)	MAX CSI (LC)
K- D	0 / 365	0.08 (2)
K- E	-297 / 0	0.14 (1)
C- K	-297 / 0	0.14 (1)
N- L	-28 / 0	0.00 (1)
B- L	0 / 645	0.15 (1)
J- H	-28 / 0	0.00 (1)
J- F	0 / 645	0.15 (1)

DESIGN CRITERIA

SPECIFIED LOADS:

TOP CH.	LL	=	34.8	PSF
	DL	=	8.0	PSF
BOT CH.	LL	=	10.5	PSF
	DL	=	7.0	PSF
TOTAL LOAD		=	60.3	PSF

SPACING = 24.0 IN. C/C

THIS TRUSS IS DESIGNED FOR RESIDENTIAL OR SMALL BUILDING REQUIREMENTS OF PART 9, NBCC 2010

THIS DESIGN COMPLIES WITH:
- PART 9 OF OBC 2012 , BCBC 2012 , ABC 2014
- CSA 086-09
- TPIC 2011

DESIGN ASSUMPTIONS
-OVERHANG NOT TO BE ALTERED OR CUT OFF.

(55 % OF 48.1 P.S.F. G.S.L. PLUS 8.4 P.S.F. RAIN LOAD) EQUALS 34.8 P.S.F. SPECIFIED ROOF LIVE LOAD

ALLOWABLE DEFL.(LL)= L/360 (0.39")
CALCULATED VERT. DEFL.(LL) = L/ 999 (0.02")
ALLOWABLE DEFL.(TL)= L/360 (0.39")
CALCULATED VERT. DEFL.(TL) = L/ 999 (0.04")

CSI: TC=0.34/1.00 (D-E:1) , BC=0.25/1.00 (K-L:3) , WB=0.15/1.00 (B-L:1) , SSI=0.18/1.00 (D-E:1)

DOL LUMBER=1.00 NAIL=1.00 LS BEND=1.10 COMP=1.10 SHEAR=1.10 TENS= 1.10

COMPANION LIVE LOAD FACTOR = 0.50

TRUSS PLATE MANUFACTURER IS NOT RESPONSIBLE FOR QUALITY CONTROL IN THE TRUSS MANUFACTURING PLANT .

NAIL VALUES

PLATE	GRIP(DRY) (PSI) MAX	MIN	SHEAR (PLI) MAX	MIN	SECTION (PLI) MAX	MIN
MT20	618	354	1667	822	2284	1656

PLATE PLACEMENT TOL. = 0.250 inches

PLATE ROTATION TOL. = 5.0 Deg.

JSI GRIP= 0.62 (N) (INPUT = 0.90)
JSI METAL= 0.20 (B) (INPUT = 1.00)

LICENSED PROFESSIONAL ENGINEER
1/15/18
S. KATSOULAKOS
PROVINCE OF ONTARIO

DWG NO. TAM 3599 -18
STRUCTURAL
COMPONENT ONLY

JOB NAME	TRUSS NAME	QUANTITY	PLY	JOB DESC. 45274	DRWG NO.
290315	T15	1	1	TRUSS DESC.	

Tamarack Roof Truss, Burlington

Version 8.200 S Dec 12 2017 MiTek Industries, Inc. Mon Jan 15 08:13:18 2018 Page 1
ID:kjhWC3V7rOjjJm4XuW?IGPyNETN-T_c5bZfBh0hfGyAVJ_?g3FeN7rb3TJw9xSNZ2LzvB2F

Scale = 1:41.9

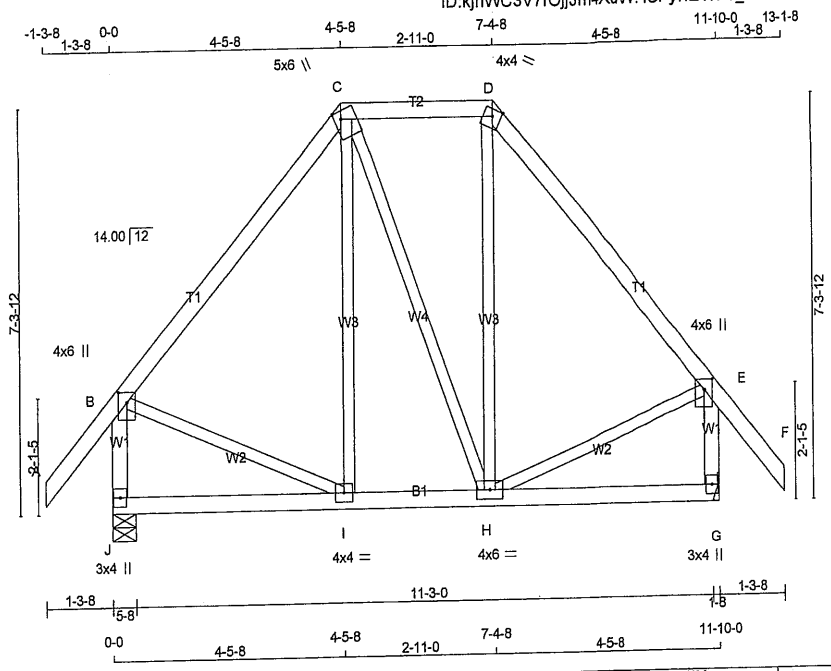

TOTAL WEIGHT = 66 lb
[M][F]

LUMBER
N. L. G. A. RULES

CHORDS	SIZE		LUMBER	DESCR.
A - C	2x4	DRY	No.2	SPF
C - D	2x4	DRY	No.2	SPF
D - F	2x4	DRY	No.2	SPF
J - B	2x4	DRY	No.2	SPF
G - E	2x4	DRY	No.2	SPF
J - G	2x4	DRY	No.2	SPF
ALL WEBS EXCEPT	2x3	DRY	No.2	SPF

DRY: SEASONED LUMBER.

PLATES (table is in inches)

JT	TYPE	PLATES	W	LEN	Y	X
B	TMVW+p	MT20	4.0	6.0	2.25	2.00
C	TTWW+m	MT20	5.0	6.0	1.75	1.50
D	TTW-m	MT20	4.0	4.0	Edge	
E	TMVW+p	MT20	4.0	6.0	2.25	2.00
G	BMV1+p	MT20	3.0	4.0		
H	BMWWW-t	MT20	4.0	6.0		
I	BMWW-t	MT20	4.0	4.0		
J	BMV1+p	MT20	3.0	4.0		

Edge - INDICATES REFERENCE CORNER OF PLATE TOUCHES EDGE OF CHORD.

DIMENSIONS, SUPPORTS AND LOADINGS SPECIFIED BY FABRICATOR TO BE VERIFIED BY BUILDING DESIGNER

BEARINGS

JT	FACTORED GROSS REACTION VERT	HORZ	MAXIMUM FACTORED GROSS REACTION DOWN	HORZ	UPLIFT	INPUT BRG	REQRD BRG
J	1076	0	1076	0	0	IN-SX 5-8	IN-SX 5-8
G	1076	0	1076	0	0	HANGER BY OTHERS MIN. SEAT SIZE: 1-8	

UNFACTORED REACTIONS

JT	1ST LCASE COMBINED	MAX./MIN. COMPONENT REACTIONS SNOW	LIVE	PERM.LIVE	WIND	DEAD	SOIL
J	833	509 / 0	124 / 0	0 / 0	0 / 0	200 / 0	0 / 0
G	833	509 / 0	124 / 0	0 / 0	0 / 0	200 / 0	0 / 0

BEARING MATERIAL TO BE SPF NO.2 OR BETTER AT JOINT(S) J

BRACING
TOP CHORD TO BE SHEATHED OR MAX. PURLIN SPACING = 6.25 FT.
MAX. UNBRACED BOTTOM CHORD LENGTH = 10.00 FT OR RIGID CEILING DIRECTLY APPLIED.

ALL PITCH BREAKS AND PERIMETER CORNER JOINTS MUST BE LATERALLY RESTRAINED.

LOADING
TOTAL LOAD CASES: (4)

CHORDS

MEMB. FR-TO	MAX. FACTORED FORCE (LBS)	FACTORED VERT. LOAD (PLF) FROM	TO	LC1 MAX CSI (LC)	MAX. UNBRAC LENGTH
A- B	0 / 66	-124.4	-124.4	0.18 (1)	10.00
B- C	-565 / 0	-124.4	-124.4	0.32 (1)	6.25
C- D	-365 / 0	-124.4	-124.4	0.14 (1)	6.25
D- E	-565 / 0	-124.4	-124.4	0.32 (1)	6.25
E- F	0 / 66	-124.4	-124.4	0.18 (1)	10.00
J- B	-1021 / 0	0.0	0.0	0.12 (1)	7.75
G- E	-1021 / 0	0.0	0.0	0.12 (1)	7.75
J- I	0 / 0	-28.0	-28.0	0.14 (3)	10.00
I- H	0 / 366	-28.0	-28.0	0.15 (3)	10.00
H- G	0 / 0	-28.0	-28.0	0.14 (3)	10.00

WEBS

MEMB. FR-TO	MAX. FACTORED FORCE (LBS)	MAX CSI (LC)
I- C	-28 / 128	0.03 (3)
C- H	0 / 1	0.00 (3)
H- D	-29 / 130	0.03 (3)
B- I	0 / 392	0.09 (1)
H- E	0 / 392	0.09 (1)

DESIGN CRITERIA

SPECIFIED LOADS:

TOP CH.	LL	=	34.8	PSF
	DL	=	8.0	PSF
BOT CH.	LL	=	10.5	PSF
	DL	=	7.0	PSF
TOTAL LOAD		=	60.3	PSF

SPACING = 24.0 IN. C/C

LOADING IN FLAT SECTION BASED ON A SLOPE OF 6.00/12

THIS TRUSS IS DESIGNED FOR RESIDENTIAL OR SMALL BUILDING REQUIREMENTS OF PART 9, NBCC 2010

THIS DESIGN COMPLIES WITH:
- PART 9 OF OBC 2012 , BCBC 2012 , ABC 2014
- CSA 086-09
- TPIC 2011

(55 % OF 48.1 P.S.F. G.S.L. PLUS 8.4 P.S.F. RAIN LOAD) EQUALS 34.8 P.S.F. SPECIFIED ROOF LIVE LOAD

ALLOWABLE DEFL.(LL)= L/360 (0.39")
CALCULATED VERT. DEFL.(LL) = L/ 999 (0.02")
ALLOWABLE DEFL.(TL)= L/360 (0.39")
CALCULATED VERT. DEFL.(TL) = L/ 999 (0.03")

CSI: TC=0.32/1.00 (B-C:1) , BC=0.15/1.00 (H-I:3) , WB=0.09/1.00 (B-I:1) , SSI=0.14/1.00 (C-D:1)

DOL LUMBER=1.00 NAIL=1.00 LS BEND=1.10 COMP=1.10 SHEAR=1.10 TENS= 1.10

COMPANION LIVE LOAD FACTOR = 0.50

TRUSS PLATE MANUFACTURER IS NOT RESPONSIBLE FOR QUALITY CONTROL IN THE TRUSS MANUFACTURING PLANT .

NAIL VALUES

PLATE	GRIP(DRY) (PSI) MAX	MIN	SHEAR (PLI) MAX	MIN	SECTION (PLI) MAX	MIN
MT20	618	354	1667	822	2284	1656

PLATE PLACEMENT TOL. = 0.250 inches

PLATE ROTATION TOL. = 5.0 Deg.

JSI GRIP= 0.61 (B) (INPUT = 0.90)
JSI METAL= 0.18 (B) (INPUT = 1.00)

LICENSED PROFESSIONAL ENGINEER
1150
S. KATSOULAKOS
PROVINCE OF ONTARIO

DWG NO. TAM 3600 -18
STRUCTURAL COMPONENT ONLY

JOB NAME	TRUSS NAME	QUANTITY	PLY	JOB DESC. 45274	DRWG NO.
290315	T16	1	1	TRUSS DESC.	

Version 8.200 S Dec 12 2017 MiTek Industries, Inc. Mon Jan 15 08:13:19 2018 Page 1

Tamarack Roof Truss, Burlington

ID:kjhWC3V7rOjjJm4XuW?IGPyNETN-xAATovgqSJpWu6lithXvcSBa5FvRCIhIA676bnzvB2E

Scale = 1:29.2

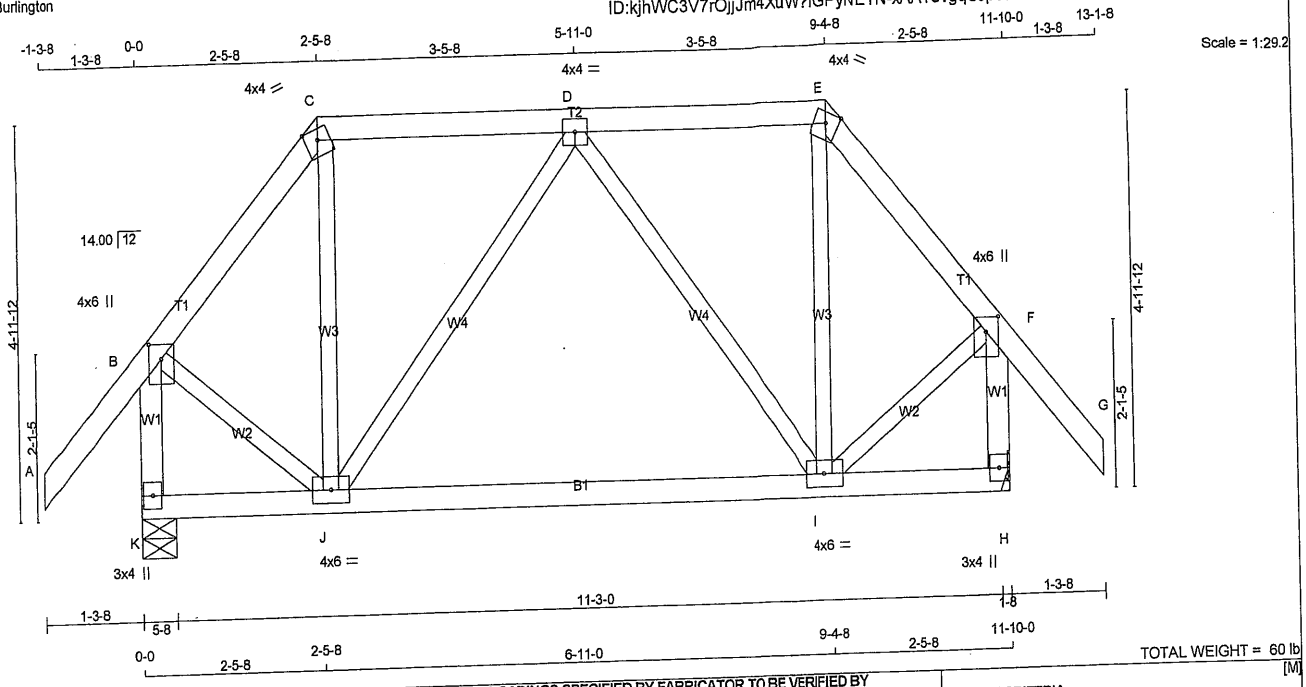

TOTAL WEIGHT = 60 lb [M]

LUMBER

N. L. G. A. RULES

CHORDS	SIZE		LUMBER	DESCR.
A - C	2x4	DRY	No.2	SPF
C - E	2x4	DRY	No.2	SPF
E - G	2x4	DRY	No.2	SPF
K - B	2x4	DRY	No.2	SPF
H - F	2x4	DRY	No.2	SPF
K - H	2x4	DRY	No.2	SPF
ALL WEBS EXCEPT	2x3	DRY	No.2	SPF

DRY: SEASONED LUMBER.

PLATES (table is in inches)

JT	TYPE	PLATES	W	LEN	Y	X
B	TMVW+p	MT20	4.0	6.0	2.25	2.00
C	TTW-m	MT20	4.0	4.0	Edge	
D	TMWW-t	MT20	4.0	4.0		
E	TTW-m	MT20	4.0	4.0	Edge	
F	TMVW+p	MT20	4.0	6.0	2.25	2.00
H	BMV1+p	MT20	3.0	4.0		
I	BMWWW-t	MT20	4.0	6.0		
J	BMWWW-t	MT20	4.0	6.0		
K	BMV1+p	MT20	3.0	4.0		

Edge - INDICATES REFERENCE CORNER OF PLATE TOUCHES EDGE OF CHORD.

DIMENSIONS, SUPPORTS AND LOADINGS SPECIFIED BY FABRICATOR TO BE VERIFIED BY BUILDING DESIGNER

BEARINGS

JT	FACTORED GROSS REACTION VERT	HORZ	MAXIMUM FACTORED GROSS REACTION DOWN	HORZ	UPLIFT	INPUT BRG IN-SX	REQRD BRG IN-SX
K	1076	0	1076	0	0	5-8	5-8
H	1076	0	1076	0	0	HANGER BY OTHERS MIN. SEAT SIZE: 1-8	

UNFACTORED REACTIONS

JT	1ST LCASE COMBINED	MAX./MIN. COMPONENT REACTIONS SNOW	LIVE	PERM.LIVE	WIND	DEAD	SOIL
K	833	509 / 0	124 / 0	0 / 0	0 / 0	200 / 0	0 / 0
H	833	509 / 0	124 / 0	0 / 0	0 / 0	200 / 0	0 / 0

BEARING MATERIAL TO BE SPF NO.2 OR BETTER AT JOINT(S) K

BRACING

TOP CHORD TO BE SHEATHED OR MAX. PURLIN SPACING = 6.25 FT.
MAX. UNBRACED BOTTOM CHORD LENGTH = 10.00 FT OR RIGID CEILING DIRECTLY APPLIED.

ALL PITCH BREAKS AND PERIMETER CORNER JOINTS MUST BE LATERALLY RESTRAINED.

LOADING

TOTAL LOAD CASES: (4)

CHORDS

MEMB. FR-TO	MAX. FACTORED FORCE (LBS)	FACTORED VERT. LOAD LC1 (PLF) FROM	TO	MAX CSI (LC)	MAX. UNBRAC LENGTH
A- B	0 / 66	-124.4	-124.4	0.18 (1)	10.00
B- C	-620 / 0	-124.4	-124.4	0.13 (1)	6.25
C- D	-403 / 0	-124.4	-124.4	0.24 (1)	6.25
D- E	-403 / 0	-124.4	-124.4	0.24 (1)	6.25
E- F	-620 / 0	-124.4	-124.4	0.13 (1)	6.25
F- G	0 / 66	-124.4	-124.4	0.18 (1)	10.00
K- B	-1073 / 0	0.0	0.0	0.13 (1)	7.61
H- F	-1073 / 0	0.0	0.0	0.13 (1)	7.61
K- J	0 / 0	-28.0	-28.0	0.23 (3)	10.00
J- I	0 / 591	-28.0	-28.0	0.27 (3)	10.00
I- H	0 / 0	-28.0	-28.0	0.23 (3)	10.00

WEBS

MEMB. FR-TO	MAX. FACTORED FORCE (LBS)	MAX CSI (LC)
J- C	0 / 201	0.05 (3)
J- D	-321 / 0	0.18 (1)
D- I	-321 / 0	0.18 (1)
I- E	0 / 201	0.05 (3)
B- J	0 / 484	0.11 (1)
I- F	0 / 484	0.11 (1)

DESIGN CRITERIA

SPECIFIED LOADS:

TOP CH.	LL	=	34.8	PSF
	DL	=	8.0	PSF
BOT CH.	LL	=	10.5	PSF
	DL	=	7.0	PSF
TOTAL LOAD		=	60.3	PSF

SPACING = 24.0 IN. C/C

LOADING IN FLAT SECTION BASED ON A SLOPE OF 6.00/12

THIS TRUSS IS DESIGNED FOR RESIDENTIAL OR SMALL BUILDING REQUIREMENTS OF PART 9, NBCC 2010

THIS DESIGN COMPLIES WITH:
- PART 9 OF OBC 2012 , BCBC 2012 , ABC 2014
- CSA 086-09
- TPIC 2011

(55 % OF 48.1 P.S.F. G.S.L. PLUS 8.4 P.S.F. RAIN LOAD) EQUALS 34.8 P.S.F. SPECIFIED ROOF LIVE LOAD

ALLOWABLE DEFL.(LL)= L/360 (0.39")
CALCULATED VERT. DEFL.(LL) = L/ 999 (0.05")
ALLOWABLE DEFL.(TL)= L/360 (0.39")
CALCULATED VERT. DEFL.(TL) = L/ 999 (0.08")

CSI: TC=0.24/1.00 (D-E:1) , BC=0.27/1.00 (I-J:3) , WB=0.18/1.00 (D-I:1) , SSI=0.21/1.00 (C-D:1)

DOL LUMBER=1.00 NAIL=1.00 LS BEND=1.10 COMP=1.10 SHEAR=1.10 TENS= 1.10

COMPANION LIVE LOAD FACTOR = 0.50

TRUSS PLATE MANUFACTURER IS NOT RESPONSIBLE FOR QUALITY CONTROL IN THE TRUSS MANUFACTURING PLANT .

NAIL VALUES

PLATE	GRIP(DRY) (PSI) MAX	MIN	SHEAR (PLI) MAX	MIN	SECTION (PLI) MAX	MIN
MT20	618	354	1667	822	2284	1656

PLATE PLACEMENT TOL. = 0.250 inches

PLATE ROTATION TOL. = 5.0 Deg.

JSI GRIP= 0.64 (F) (INPUT = 0.90)
JSI METAL= 0.17 (B) (INPUT = 1.00)

LICENSED PROFESSIONAL ENGINEER
11518
S. KATSOULAKOS
PROVINCE OF ONTARIO

DWG NO. TAM3601 -13
STRUCTURAL COMPONENT ONLY

JOB NAME	TRUSS NAME	QUANTITY	PLY	JOB DESC.	DRWG NO.
290316	T20	1	2	TRUSS DESC.	

Tamarack Roof Truss, Burlington

Version 8.200 S Dec 12 2017 MiTek Industries, Inc. Mon Jan 15 08:15:16 2018 Page 1
ID:kjhWC3V7rOjjJm4XuW?IGPyNETN-0hkiMv5DvGZvQ5CBDm7Lr7XS1Qhn6YyW4pzoBVzvB0P

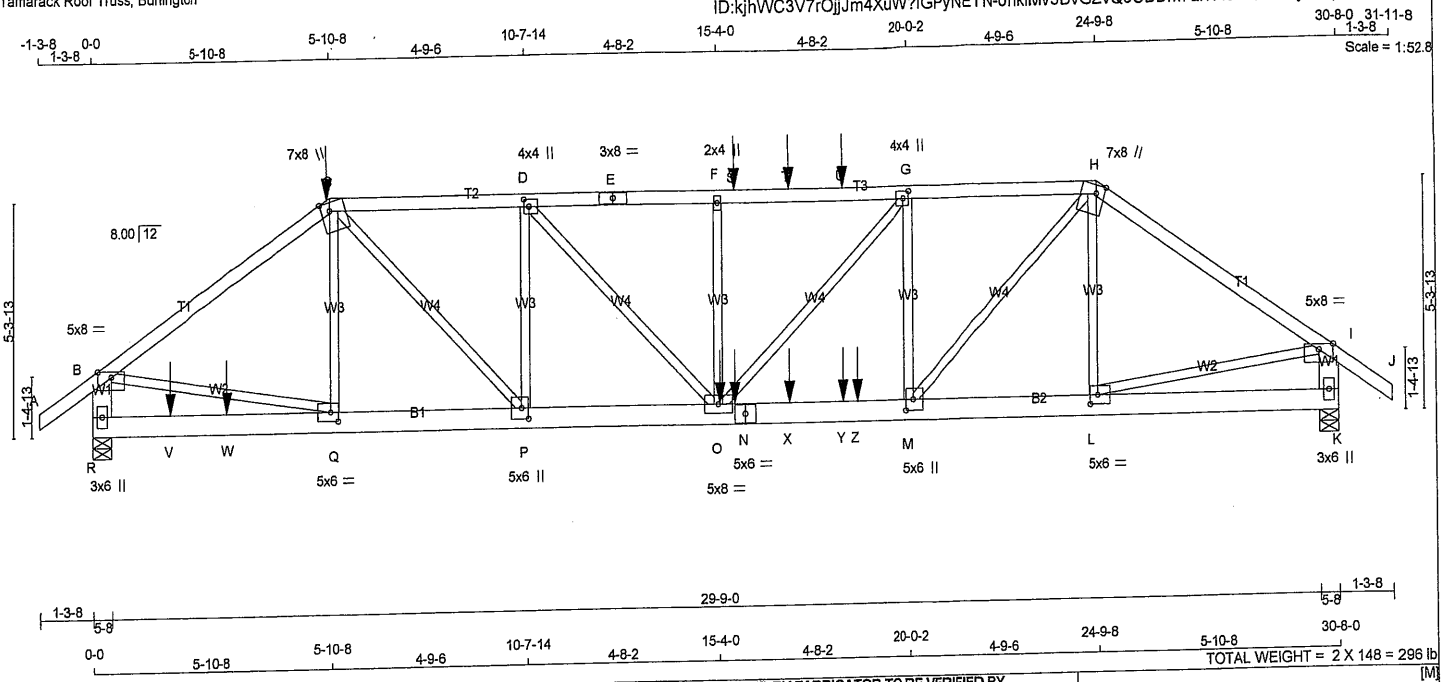

LUMBER

N. L. G. A. RULES

CHORDS	SIZE		LUMBER	DESCR.
A - C	2x4	DRY	No.2	SPF
C - E	2x4	DRY	No.2	SPF
E - H	2x4	DRY	No.2	SPF
H - J	2x4	DRY	No.2	SPF
R - B	2x6	DRY	No.2	SPF
K - I	2x6	DRY	No.2	SPF
R - N	2x6	DRY	No.2	SPF
N - K	2x6	DRY	No.2	SPF
ALL WEBS EXCEPT	2x3	DRY	No.2	SPF

DRY: SEASONED LUMBER.

DESIGN CONSISTS OF 2 TRUSSES BUILT SEPARATELY THEN FASTENED TOGETHER AS FOLLOWS:

CHORDS	#ROWS	SURFACE SPACING (IN)	LOAD(PLF)
TOP CHORDS : (0.122"X3") SPIRAL NAILS			
A- C	1	12	SIDE(61.0)
C- E	1	12	SIDE(61.0)
E- H	1	12	SIDE(0.0)
H- J	1	12	TOP
R- B	2	12	TOP
K- I	2	12	TOP
BOTTOM CHORDS : (0.122"X3") SPIRAL NAILS			
R- N	2	12	SIDE(183.1)
N- K	2	12	SIDE(0.1)
WEBS : (0.122"X3") SPIRAL NAILS			
2x3	1	6	
F- O	1	6	SIDE(135.0)

NAILS TO BE DRIVEN FROM ONE SIDE ONLY.

GIRDER NAILING ASSUMES NAILED HANGERS ARE FASTENED WITH MIN. 3-0 INCH NAILS.

TOP - COMPONENTS ARE LOADED FROM THE TOP AND MUST BE PLACED ON TOP EDGE OF ALL PLIES FOR THE LOAD TO BE TRANSFERRED TO EACH PLY.

SIDE - PLF SHOWN IS THE EQUIVALENT UDL APPLIED TO ONE SIDE THAT THF CORRESPONDING NAILING PATTERN SHALL BE CAPABLE OF TRANSFERING. REMAINING PLF MUST BE APPLIED ON THE OPPOSITE SIDE OR ON THE TOP.

PLATES (table is in inches)

JT	TYPE	PLATES	W	LEN	Y	X
B	TMVW-p	MT20	5.0	8.0	Edge	
C	TTWW+m	MT20	7.0	8.0	Edge	2.50
D	TMWW+t	MT20	4.0	4.0	2.00	1.50
E	TS-t	MT20	3.0	8.0		
F	TMW+w	MT20	2.0	4.0		
G	TMWW+t	MT20	4.0	4.0	2.00	1.50
H	TTWW+m	MT20	7.0	8.0	Edge	2.50
I	TMVW-p	MT20	5.0	8.0	Edge	
K	BMV1+p	MT20	3.0	6.0		
L	BMWW-t	MT20	5.0	6.0	2.50	2.25
M	BMWW+t	MT20	5.0	6.0	3.00	2.00
N	BS-t	MT20	5.0	6.0		
O	BMWWW-t	MT20	5.0	8.0		
P	BMWW+t	MT20	5.0	6.0	3.00	2.00
Q	BMWW-t	MT20	5.0	6.0	2.50	2.25
R	BMV1+p	MT20	3.0	6.0		

DIMENSIONS, SUPPORTS AND LOADINGS SPECIFIED BY FABRICATOR TO BE VERIFIED BY BUILDING DESIGNER

BEARINGS

JT	FACTORED GROSS REACTION VERT	HORZ	MAXIMUM FACTORED GROSS REACTION DOWN	HORZ	UPLIFT	INPUT BRG IN-SX	REQRD BRG IN-SX
R	5056	0	5056	0	0	5-8	5-8
K	4245	0	4245	0	0	5-8	5-8

UNFACTORED REACTIONS

JT	1ST LCASE COMBINED	MAX./MIN. COMPONENT REACTIONS SNOW	LIVE	PERM.LIVE	WIND	DEAD	SOIL
R	3983	2292 / 0	662 / 0	0 / 0	0 / 0	1030 / 0	0 / 0
K	3345	1922 / 0	556 / 0	0 / 0	0 / 0	867 / 0	0 / 0

BEARING MATERIAL TO BE SPF NO.2 OR BETTER AT JOINT(S) R, K

BRACING

TOP CHORD TO BE SHEATHED OR MAX. PURLIN SPACING = 2.96 FT.
MAX. UNBRACED BOTTOM CHORD LENGTH = 10.00 FT OR RIGID CEILING DIRECTLY APPLIED.

ALL PITCH BREAKS AND PERIMETER CORNER JOINTS MUST BE LATERALLY RESTRAINED.

LOADING

TOTAL LOAD CASES: (4)

CHORDS

MEMB. FR-TO	MAX. FACTORED FORCE (LBS)	FACTORED VERT. LOAD LC1 (PLF) FROM	TO	MAX CSI (LC)	MAX. UNBRAC LENGTH
A- B	0 / 43	-112.8	-112.8	0.08 (1)	10.00
B- C	-5860 / 0	-112.8	-112.8	0.73 (1)	3.47
C- D	-6785 / 0	-112.8	-112.8	0.39 (1)	3.49
D- E	-8310 / 0	-112.8	-112.8	0.50 (1)	3.06
E- F	-8310 / 0	-112.8	-112.8	0.50 (1)	3.06
F- S	-8310 / 0	-112.8	-112.8	0.59 (1)	2.96
S- T	-8310 / 0	-112.8	-112.8	0.59 (1)	2.96
T- U	-8310 / 0	-112.8	-112.8	0.59 (1)	2.96
U- G	-8310 / 0	-112.8	-112.8	0.59 (1)	2.96
G- H	-7361 / 0	-112.8	-112.8	0.52 (1)	3.21
H- I	-5279 / 0	-112.8	-112.8	0.67 (1)	3.68
I- J	0 / 43	-112.8	-112.8	0.08 (1)	10.00
R- B	-4557 / 0	0.0	0.0	0.16 (1)	6.75
K- I	-4154 / 0	0.0	0.0	0.15 (1)	7.00
R- V	0 / 0	-28.0	-28.0	0.54 (1)	10.00
V- W	0 / 0	-28.0	-28.0	0.54 (1)	10.00
W- Q	0 / 0	-28.0	-28.0	0.54 (1)	10.00
Q- P	0 / 4879	-28.0	-28.0	0.63 (1)	10.00
P- O	0 / 6785	-28.0	-28.0	0.54 (1)	10.00
O- N	0 / 7361	-28.0	-28.0	0.85 (1)	10.00
N- X	0 / 7361	-28.0	-28.0	0.85 (1)	10.00
X- Y	0 / 7361	-28.0	-28.0	0.85 (1)	10.00
Y- Z	0 / 7361	-28.0	-28.0	0.85 (1)	10.00
Z- M	0 / 7361	-28.0	-28.0	0.85 (1)	10.00
M- L	0 / 4373	-28.0	-28.0	0.46 (1)	10.00
L- K	0 / 0	-28.0	-28.0	0.07 (3)	10.00

WEBS

MEMB. FR-TO	MAX. FACTORED FORCE (LBS)	MAX CSI (LC)
Q- C	0 / 479	0.06 (2)
C- P	0 / 2738	0.34 (1)
P- D	-2169 / 0	0.44 (1)
D- O	0 / 2219	0.27 (1)
O- F	-769 / 0	0.16 (1)
O- G	0 / 1381	0.17 (1)
M- G	-1752 / 0	0.36 (1)
M- H	0 / 4292	0.53 (1)
L- H	-699 / 0	0.14 (1)
B- Q	0 / 4937	0.61 (1)
L- I	0 / 4448	0.55 (1)

FACTORED CONCENTRATED LOADS (LBS)

JT	LOC.	LC1	MAX-	MAX+	FACE	DIR.	TYPE
C	5-10-8	-302	-302	---	BACK	VERT	TOTAL
N	15-8-12	-41	-72	---	BACK	VERT	TOTAL
O	15-4-8	-1219	-1219	---	BACK	VERT	TOTAL
S	15-8-12	-136	-136	---	BACK	VERT	TOTAL
T	17-0-8	-136	-136	---	BACK	VERT	TOTAL
U	18-4-4	-136	-136	---	BACK	VERT	TOTAL
V	1-11-4	-40	-76	---	BACK	VERT	TOTAL
W	3-4-8	-1219	-1219	---	BACK	VERT	TOTAL
X	17-0-8	-41	-72	---	BACK	VERT	TOTAL
Y	18-4-4	-41	-72	---	BACK	VERT	TOTAL

DESIGN CRITERIA

SPECIFIED LOADS:

TOP CH.	LL	=	31.0	PSF
	DL	=	8.0	PSF
BOT CH.	LL	=	10.5	PSF
	DL	=	7.0	PSF
TOTAL LOAD		=	56.4	PSF

SPACING = 24.0 IN. C/C

LOADING IN FLAT SECTION BASED ON A SLOPE OF 6.00/12

THIS TRUSS IS DESIGNED FOR RESIDENTIAL OR SMALL BUILDING REQUIREMENTS OF PART 9, NBCC 2010

THIS DESIGN COMPLIES WITH:
- PART 9 OF OBC 2012 , BCBC 2012 , ABC 2014
- CSA 086-09
- TPIC 2011

(55 % OF 41.1 P.S.F. G.S.L. PLUS 8.4 P.S.F. RAIN LOAD) EQUALS 31.0 P S F. SPECIFIED ROOF LIVE LOAD

ALLOWABLE DEFL.(LL)= L/360 (1.02")
CALCULATED VERT. DEFL.(LL) = L/ 999 (0.20")
ALLOWABLE DEFL.(TL)= L/360 (1.02")
CALCULATED VERT. DEFL.(TL) = L/ 999 (0.34")

CSI: TC=0.73/1.00 (B-C:1) , BC=0.85/1.00 (M-O:1) , WB=0.61/1.00 (B-Q:1) , SSI=0.38/1.00 (M-O:1)

DOL LUMBER=1.00 NAIL=1.00 LS BEND=1.00 COMP=1.00 SHEAR=1.00 TENS= 1.00

COMPANION LIVE LOAD FACTOR = 0.50

AUTOSOLVE HEELS OFF

TRUSS PLATE MANUFACTURER IS NOT RESPONSIBLE FOR QUALITY CONTROL IN THE TRUSS MANUFACTURING PLANT .

NAIL VALUES

PLATE	GRIP(DRY) (PSI) MAX	MIN	SHEAR (PLI) MAX	MIN	SECTION (PLI) MAX	MIN
MT20	618	354	1667	822	2284	1656

PLATE PLACEMENT TOL. = 0.250 inches

PLATE ROTATION TOL. = 5.0 Deg.

JSI GRIP= 0.89 (P) (INPUT = 0.90)
JSI METAL= 0.61 (Q) (INPUT = 1.00)

LICENSED PROFESSIONAL ENGINEER 17518 S. KATSOULAKOS PROVINCE OF ONTARIO

DWG NO. TAM 3602-15 Pelle
STRUCTURAL COMPONENT ONLY

CONTINUED ON PAGE 2

JOB NAME	TRUSS NAME	QUANTITY	PLY	JOB DESC.	DRWG NO.
290316	T20	1	2	TRUSS DESC.	

Tamarack Roof Truss, Burlington

Version 8.200 S Dec 12 2017 MiTek Industries, Inc. Mon Jan 15 08:15:16 2018 Page 2
ID:kjhWC3V7rOjjJm4XuW?IGPyNETN-0hkIMv5DvGZvQ5CBDm7Lr7XS1Qhn6YyW4pzoBVzvB0P

Edge - INDICATES REFERENCE CORNER OF PLATE TOUCHES EDGE OF CHORD.

HANGERS NOTES

1) SPECIAL HANGER(S) OR CONNECTION(S) REQUIRED TO SUPPORT CONCENTRATED LOAD(S) 301.7 lbs FACTORED DOWN AT 5-10-8, 135.8 lbs FACTORED DOWN AT 15-8-12, AND 135.8 lbs FACTORED DOWN AT 17-0-8, AND 135.8 lbs FACTORED DOWN AT 18-4-4 ON TOP CHORD, AND 75.8 lbs FACTORED DOWN AT 1-11-4, 1218.9 lbs FACTORED DOWN AT 3-4-8, 1218.9 lbs FACTORED DOWN AT 15-4-8, 71.7 lbs FACTORED DOWN AT 15-8-12, 71.7 lbs FACTORED DOWN AT 17-0-8, AND 71.7 lbs FACTORED DOWN AT 18-4-4, AND 1362.7 lbs FACTORED DOWN AT 18-8-8 ON BOTTOM CHORD. DESIGN FOR UNSPECIFIED CONNECTION(S) IS DELEGATED TO THE BUILDING DESIGNER.

FACTORED CONCENTRATED LOADS (LBS)

JT	LOC.	LC1	MAX-	MAX+	FACE	DIR.	TYPE
Z	18-8-8	-1363	-1363	---	BACK	VERT	TOTAL

LICENSED PROFESSIONAL ENGINEER
145IB
S. KATSOULAKOS
PROVINCE OF ONTARIO

DWG NO. TAM 3602-18
STRUCTURAL
COMPONENT ONLY

JOB NAME	TRUSS NAME	QUANTITY	PLY	JOB DESC.	DRWG NO.
290316	T21S	2	1	TRUSS DESC.	

Tamarack Roof Truss, Burlington

Version 8.200 S Dec 12 2017 MiTek Industries, Inc. Mon Jan 15 08:15:17 2018 Page 1
ID:rJ8v9xWPhw_dJSMdtatdVEyNCYh-Utl4ZF6rgahm2EnNnTeaOL4mdpCjr6oglTiMjxzvB0O

Scale = 1:55.7

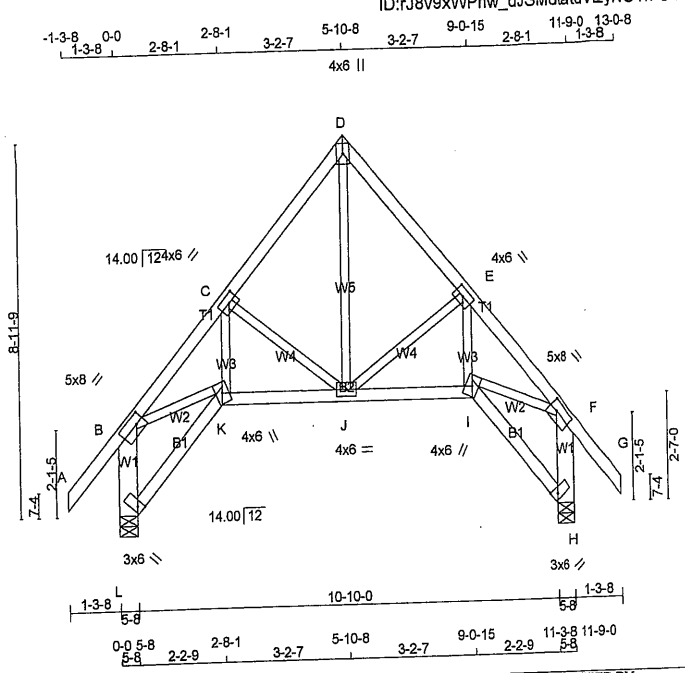

TOTAL WEIGHT = 2 X 68 = 135 lb
[M][F]

LUMBER
N. L. G. A. RULES

CHORDS	SIZE		LUMBER	DESCR.
A - D	2x4	DRY	No.2	SPF
D - G	2x4	DRY	No.2	SPF
L - B	2x6	DRY	No.2	SPF
H - F	2x6	DRY	No.2	SPF
L - K	2x4	DRY	No.2	SPF
K - I	2x4	DRY	No.2	SPF
I - H	2x4	DRY	No.2	SPF
ALL WEBS EXCEPT	2x3	DRY	No.2	SPF

DRY: SEASONED LUMBER.

PLATES (table is in inches)

JT	TYPE	PLATES	W	LEN	Y	X
B	TMVW-t	MT20	5.0	8.0	2.50	2.50
C	TMWW-t	MT20	4.0	6.0	2.00	2.75
D	TTW+p	MT20	4.0	6.0		
E	TMWW-t	MT20	4.0	6.0	2.00	2.75
F	TMVW-t	MT20	5.0	8.0	2.50	2.50
H	BVM1+l	MT20	3.0	6.0	Edge	
I	BBWW+m	MT20	4.0	6.0		
J	BMWWW-t	MT20	4.0	6.0		
K	BBWW+m	MT20	4.0	6.0		
L	BVM1+l	MT20	3.0	6.0	Edge	

Edge - INDICATES REFERENCE CORNER OF PLATE TOUCHES EDGE OF CHORD.

DIMENSIONS, SUPPORTS AND LOADINGS SPECIFIED BY FABRICATOR TO BE VERIFIED BY BUILDING DESIGNER

BEARINGS

JT	FACTORED GROSS REACTION VERT	HORZ	MAXIMUM FACTORED GROSS REACTION DOWN	HORZ	UPLIFT	INPUT BRG IN-SX	REQRD BRG IN-SX
L	986	0	986	0	0	5-8	5-8
H	986	0	986	0	0	5-8	5-8

UNFACTORED REACTIONS

JT	1ST LCASE COMBINED	MAX./MIN. COMPONENT REACTIONS SNOW	LIVE	PERM.LIVE	WIND	DEAD	SOIL
L	772	450 / 0	123 / 0	0 / 0	0 / 0	199 / 0	0 / 0
H	772	450 / 0	123 / 0	0 / 0	0 / 0	199 / 0	0 / 0

BEARING MATERIAL TO BE SPF NO.2 OR BETTER AT JOINT(S) L, H

BRACING
TOP CHORD TO BE SHEATHED OR MAX. PURLIN SPACING = 5.71 FT.
MAX. UNBRACED BOTTOM CHORD LENGTH = 10.00 FT OR RIGID CEILING DIRECTLY APPLIED.

ALL PITCH BREAKS AND PERIMETER CORNER JOINTS MUST BE LATERALLY RESTRAINED.

LOADING
TOTAL LOAD CASES: (4)

CHORDS

MEMB. FR-TO	MAX. FACTORED FORCE (LBS)	FACTORED VERT. LOAD (PLF) FROM	TO	LC1	MAX CSI (LC)	MAX. UNBRAC LENGTH
A- B	0 / 60	-112.8	-112.8	0.16 (1)	10.00	
B- C	-1203 / 0	-112.8	-112.8	0.12 (1)	5.71	
C- D	-654 / 0	-112.8	-112.8	0.12 (1)	6.25	
D- E	-654 / 0	-112.8	-112.8	0.12 (1)	6.25	
E- F	-1203 / 0	-112.8	-112.8	0.12 (1)	5.71	
F- G	0 / 60	-112.8	-112.8	0.16 (1)	10.00	
L- B	-948 / 0	0.0	0.0	0.08 (1)	7.81	
H- F	-948 / 0	0.0	0.0	0.08 (1)	7.81	
L- K	0 / 0	-28.0	-28.0	0.07 (3)	10.00	
K- J	0 / 786	-28.0	-28.0	0.17 (1)	10.00	
J- I	0 / 786	-28.0	-28.0	0.17 (1)	10.00	
I- H	0 / 0	-28.0	-28.0	0.07 (3)	10.00	

WEBS

MEMB. FR-TO	MAX. FACTORED FORCE (LBS)	MAX CSI (LC)
I- E	0 / 348	0.08 (1)
I- F	0 / 844	0.19 (1)
K- C	0 / 348	0.08 (1)
B- K	0 / 844	0.19 (1)
J- D	0 / 671	0.15 (1)
J- E	-476 / 0	0.13 (1)
C- J	-476 / 0	0.13 (1)

DESIGN CRITERIA

SPECIFIED LOADS:

TOP CH.	LL	=	31.0	PSF
	DL	=	8.0	PSF
BOT CH.	LL	=	10.5	PSF
	DL	=	7.0	PSF
TOTAL LOAD		=	56.4	PSF

SPACING = 24.0 IN. C/C

THIS TRUSS IS DESIGNED FOR RESIDENTIAL OR SMALL BUILDING REQUIREMENTS OF PART 9, NBCC 2010

THIS DESIGN COMPLIES WITH:
- PART 9 OF OBC 2012 , BCBC 2012 , ABC 2014
- CSA 086-09
- TPIC 2011

(55 % OF 41.1 P.S.F. G.S.L. PLUS 8.4 P.S.F. RAIN LOAD) EQUALS 31.0 P.S.F. SPECIFIED ROOF LIVE LOAD

ALLOWABLE DEFL.(LL)= L/360 (0.39")
CALCULATED VERT. DEFL.(LL) = L/ 999 (0.03")
ALLOWABLE DEFL.(TL)= L/360 (0.39")
CALCULATED VERT. DEFL.(TL) = L/ 999 (0.05")

CSI: TC=0.16/1.00 (F-G:1) , BC=0.17/1.00 (I-J:1) , WB=0.19/1.00 (F-I:1) , SSI=0.11/1.00 (D-E:1)

DOL LUMBER=1.00 NAIL=1.00 LS BEND=1.10 COMP=1.10 SHEAR=1.10 TENS= 1.10

COMPANION LIVE LOAD FACTOR = 0.50

AUTOSOLVE HEELS OFF

TRUSS PLATE MANUFACTURER IS NOT RESPONSIBLE FOR QUALITY CONTROL IN THE TRUSS MANUFACTURING PLANT .

NAIL VALUES

PLATE	GRIP(DRY) (PSI) MAX	MIN	SHEAR (PLI) MAX	MIN	SECTION (PLI) MAX	MIN
MT20	618	354	1667	822	2284	1656

PLATE PLACEMENT TOL. = 0.250 inches

PLATE ROTATION TOL. = 5.0 Deg.

JSI GRIP= 0.60 (J) (INPUT = 0.90)
JSI METAL= 0.27 (B) (INPUT = 1.00)

LICENSED PROFESSIONAL ENGINEER
S. KATSOULAKOS
PROVINCE OF ONTARIO

DWG NO. TAM 3603 -18
STRUCTURAL COMPONENT ONLY

JOB NAME	TRUSS NAME	QUANTITY	PLY	JOB DESC.	DRWG NO.
290316	T22	2	1	TRUSS DESC.	

Tamarack Roof Truss, Burlington

Version 8.200 S Dec 12 2017 MiTek Industries, Inc. Mon Jan 15 08:15:17 2018 Page 1
ID:rJ8v9xWPhw_dJSMdtatdVEyNCYh-Utl4ZF6rgahm2EnNnTeaOL4nMpA_r6kgITiMjxzvB0O

Scale = 1:45.2

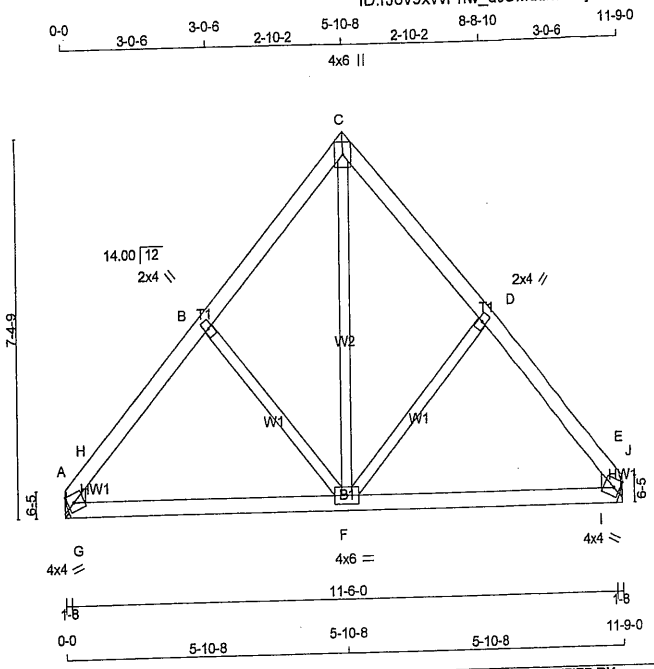

TOTAL WEIGHT = 2 X 48 = 96 lb
[M][F]

LUMBER

N. L. G. A. RULES

CHORDS	SIZE		LUMBER	DESCR.
A - C	2x4	DRY	No.2	SPF
C - E	2x4	DRY	No.2	SPF
A - E	2x4	DRY	No.2	SPF
ALL WEBS	2x3	DRY	No.2	SPF

DRY: SEASONED LUMBER.

PLATES (table is in inches)

JT	TYPE	PLATES	W	LEN	Y	X
A	TMBH1-m	MT20	4.0	4.0		Edge
B	TMW+w	MT20	2.0	4.0		
C	TTW+p	MT20	4.0	6.0		
D	TMW+w	MT20	2.0	4.0		
E	TMBH1-m	MT20	4.0	4.0		Edge
F	BMWWW-t	MT20	4.0	6.0		

Edge - INDICATES REFERENCE CORNER OF PLATE TOUCHES EDGE OF CHORD.

DIMENSIONS, SUPPORTS AND LOADINGS SPECIFIED BY FABRICATOR TO BE VERIFIED BY BUILDING DESIGNER

BEARINGS

JT	FACTORED GROSS REACTION VERT	HORZ	MAXIMUM FACTORED GROSS REACTION DOWN	HORZ	UPLIFT	INPUT BRG IN-SX	REQRD BRG IN-SX	HEEL WEDGE
A	827	0	827	0	0	HANGER BY OTHERS MIN. SEAT SIZE: 1-8		2x4 L
E	827	0	827	0	0	HANGER BY OTHERS MIN. SEAT SIZE: 1-8		2x4 R

UNFACTORED REACTIONS

JT	1ST LCASE COMBINED	MAX./MIN. COMPONENT REACTIONS SNOW	LIVE	PERM.LIVE	WIND	DEAD	SOIL
A	663	364 / 0	123 / 0	0 / 0	0 / 0	176 / 0	0 / 0
E	663	364 / 0	123 / 0	0 / 0	0 / 0	176 / 0	0 / 0

BRACING

TOP CHORD TO BE SHEATHED OR MAX. PURLIN SPACING = 6.22 FT.
MAX. UNBRACED BOTTOM CHORD LENGTH = 10.00 FT OR RIGID CEILING DIRECTLY APPLIED.

ALL PITCH BREAKS AND PERIMETER CORNER JOINTS MUST BE LATERALLY RESTRAINED.

LOADING

TOTAL LOAD CASES: (4)

CHORDS

MEMB. FR-TO	MAX. FACTORED FORCE (LBS)	FACTORED VERT. LOAD LC1 (PLF) FROM	TO	MAX CSI (LC)	MAX. UNBRAC LENGTH
A- H	-1013 / 0	-112.8	-112.8	0.07 (3)	6.22
H- B	-773 / 0	-112.8	-112.8	0.11 (1)	6.25
B- C	-579 / 0	-112.8	-112.8	0.11 (1)	6.25
C- D	-579 / 0	-112.8	-112.8	0.11 (1)	6.25
D- J	-773 / 0	-112.8	-112.8	0.11 (1)	6.25
J- E	-1013 / 0	-112.8	-112.8	0.07 (3)	6.22
A- G	0 / 523	-28.0	-28.0	0.13 (2)	10.00
G- F	0 / 523	-28.0	-28.0	0.28 (3)	10.00
F- I	0 / 523	-28.0	-28.0	0.28 (3)	10.00
I- E	0 / 523	-28.0	-28.0	0.13 (2)	10.00

WEBS

MEMB. FR-TO	MAX. FACTORED FORCE (LBS)	MAX CSI (LC)
F- C	0 / 574	0.13 (1)
F- D	-256 / 0	0.09 (1)
B- F	-256 / 0	0.09 (1)
G- H	0 / 293	0.00 (1)
I- J	0 / 293	0.00 (1)

DESIGN CRITERIA

SPECIFIED LOADS:

TOP CH.	LL	=	31.0	PSF
	DL	=	8.0	PSF
BOT CH.	LL	=	10.5	PSF
	DL	=	7.0	PSF
TOTAL LOAD		=	56.4	PSF

SPACING = 24.0 IN. C/C

THIS TRUSS IS DESIGNED FOR RESIDENTIAL OR SMALL BUILDING REQUIREMENTS OF PART 9, NBCC 2010

THIS DESIGN COMPLIES WITH:
- PART 9 OF OBC 2012 , BCBC 2012 , ABC 2014
- CSA 086-09
- TPIC 2011

(55 % OF 41.1 P.S.F. G.S.L. PLUS 8.4 P.S.F. RAIN LOAD) EQUALS 31.0 P.S.F. SPECIFIED ROOF LIVE LOAD

ALLOWABLE DEFL.(LL)= L/360 (0.39")
CALCULATED VERT. DEFL.(LL) = L/ 999 (0.03")
ALLOWABLE DEFL.(TL)= L/360 (0.39")
CALCULATED VERT. DEFL.(TL) = L/ 999 (0.05")

CSI: TC=0.11/1.00 (D-J:1) , BC=0.28/1.00 (F-G:3) , WB=0.13/1.00 (C-F:1) , SSI=0.15/1.00 (A-G:3)

DOL LUMBER=1.00 NAIL=1.00 LS BEND=1.10 COMP=1.10 SHEAR=1.10 TENS= 1.10

COMPANION LIVE LOAD FACTOR = 0.50

TRUSS PLATE MANUFACTURER IS NOT RESPONSIBLE FOR QUALITY CONTROL IN THE TRUSS MANUFACTURING PLANT .

NAIL VALUES

PLATE	GRIP(DRY) (PSI) MAX	MIN	SHEAR (PLI) MAX	MIN	SECTION (PLI) MAX	MIN
MT20	618	354	1667	822	2284	1656

PLATE PLACEMENT TOL. = 0.250 inches

PLATE ROTATION TOL. = 5.0 Deg.

JSI GRIP= 0.51 (F) (INPUT = 0.90)
JSI METAL= 0.26 (A) (INPUT = 1.00)

LICENSED PROFESSIONAL ENGINEER
1176
S. KATSOULAKOS
PROVINCE OF ONTARIO

DWG NO. TAM 3604 -18
STRUCTURAL
COMPONENT ONLY

JOB NAME	TRUSS NAME	QUANTITY	PLY	JOB DESC.	DRWG NO.
290316	T23	1	1	TRUSS DESC.	

Tamarack Roof Truss, Burlington

Version 8.200 S Dec 12 2017 MiTek Industries, Inc. Mon Jan 15 08:15:17 2018 Page 1

ID:rJ8v9xWPhw_dJSMdtatdVEyNCYh-Utl4ZF6rgahm2EnNnTeaOL4mdp9wr2uglTiMjxzvB0O

Scale = 1:54.2

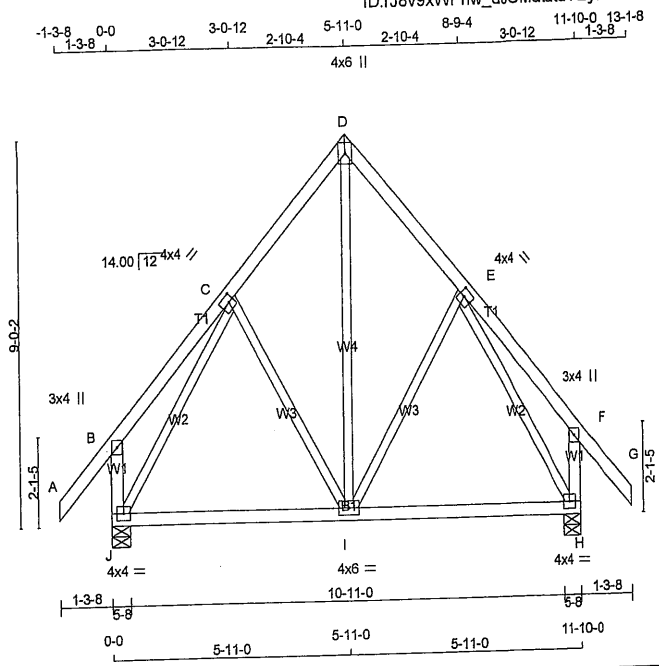

TOTAL WEIGHT = 68 lb

[M][F]

LUMBER

N. L. G. A. RULES

CHORDS	SIZE		LUMBER	DESCR.
A - D	2x4	DRY	No.2	SPF
D - G	2x4	DRY	No.2	SPF
J - B	2x4	DRY	No.2	SPF
H - F	2x4	DRY	No.2	SPF
J - H	2x4	DRY	No.2	SPF
ALL WEBS EXCEPT	2x3	DRY	No.2	SPF

DRY: SEASONED LUMBER.

PLATES (table is in inches)

JT	TYPE	PLATES	W	LEN	Y	X
B	TMV+p	MT20	3.0	4.0		
C	TMWW-t	MT20	4.0	4.0	2.00	1.50
D	TTW+p	MT20	4.0	6.0		
E	TMWW-t	MT20	4.0	4.0	2.00	1.50
F	TMV+p	MT20	3.0	4.0		
H	BMVW1-t	MT20	4.0	4.0		
I	BMVWW-t	MT20	4.0	6.0		
J	BMVW1-t	MT20	4.0	4.0		

DIMENSIONS, SUPPORTS AND LOADINGS SPECIFIED BY FABRICATOR TO BE VERIFIED BY BUILDING DESIGNER

BEARINGS

JT	FACTORED GROSS REACTION VERT	HORZ	MAXIMUM FACTORED GROSS REACTION DOWN	HORZ	UPLIFT	INPUT BRG IN-SX	REQRD BRG IN-SX
J	991	0	991	0	0	5-8	5-8
H	991	0	991	0	0	5-8	5-8

UNFACTORED REACTIONS

JT	1ST LCASE COMBINED	MAX./MIN. COMPONENT REACTIONS SNOW	LIVE	PERM.LIVE	WIND	DEAD	SOIL
J	777	453 / 0	124 / 0	0 / 0	0 / 0	200 / 0	0 / 0
H	777	453 / 0	124 / 0	0 / 0	0 / 0	200 / 0	0 / 0

BEARING MATERIAL TO BE SPF NO.2 OR BETTER AT JOINT(S) J, H

BRACING

TOP CHORD TO BE SHEATHED OR MAX. PURLIN SPACING = 6.25 FT.
MAX. UNBRACED BOTTOM CHORD LENGTH = 10.00 FT OR RIGID CEILING DIRECTLY APPLIED.

ALL PITCH BREAKS AND PERIMETER CORNER JOINTS MUST BE LATERALLY RESTRAINED.

LOADING

TOTAL LOAD CASES: (4)

CHORDS

MEMB. FR-TO	MAX. FACTORED FORCE (LBS)	FACTORED VERT. LOAD LC1 (PLF) FROM	TO	MAX CSI (LC)	MAX. UNBRAC LENGTH
A- B	0 / 60	-112.8	-112.8	0.16 (1)	10.00
B- C	0 / 29	-112.8	-112.8	0.16 (1)	10.00
C- D	-486 / 0	-112.8	-112.8	0.12 (1)	6.25
D- E	-486 / 0	-112.8	-112.8	0.12 (1)	6.25
E- F	0 / 29	-112.8	-112.8	0.16 (1)	10.00
F- G	0 / 60	-112.8	-112.8	0.16 (1)	10.00
J- B	-284 / 0	0.0	0.0	0.03 (1)	7.81
H- F	-284 / 0	0.0	0.0	0.03 (1)	7.81
J- I	0 / 365	-28.0	-28.0	0.34 (3)	10.00
I- H	0 / 365	-28.0	-28.0	0.34 (3)	10.00

WEBS

MEMB. FR-TO	MAX. FACTORED FORCE (LBS)	MAX CSI (LC)
I- D	0 / 429	0.10 (1)
I- E	-131 / 16	0.08 (1)
C- I	-131 / 16	0.08 (1)
J- C	-740 / 0	0.44 (1)
E- H	-740 / 0	0.44 (1)

DESIGN CRITERIA

SPECIFIED LOADS:

TOP CH.	LL	=	31.0	PSF
	DL	=	8.0	PSF
BOT CH.	LL	=	10.5	PSF
	DL	=	7.0	PSF
TOTAL LOAD		=	56.4	PSF

SPACING = 24.0 IN. C/C

THIS TRUSS IS DESIGNED FOR RESIDENTIAL OR SMALL BUILDING REQUIREMENTS OF PART 9, NBCC 2010

THIS DESIGN COMPLIES WITH:
- PART 9 OF OBC 2012 , BCBC 2012 , ABC 2014
- CSA 086-09
- TPIC 2011

(55 % OF 41.1 P.S.F. G.S.L. PLUS 8.4 P.S.F. RAIN LOAD) EQUALS 31.0 P.S.F. SPECIFIED ROOF LIVE LOAD

ALLOWABLE DEFL.(LL)= L/360 (0.39")
CALCULATED VERT. DEFL.(LL) = L/ 999 (0.04")
ALLOWABLE DEFL.(TL)= L/360 (0.39")
CALCULATED VERT. DEFL.(TL) = L/ 999 (0.06")

CSI: TC=0.16/1.00 (F-G:1) , BC=0.34/1.00 (H-I:3) , WB=0.44/1.00 (E-H:1) , SSI=0.16/1.00 (H-I:3)

DOL LUMBER=1.00 NAIL=1.00 LS BEND=1.10 COMP=1.10 SHEAR=1.10 TENS= 1.10

COMPANION LIVE LOAD FACTOR = 0.50

TRUSS PLATE MANUFACTURER IS NOT RESPONSIBLE FOR QUALITY CONTROL IN THE TRUSS MANUFACTURING PLANT .

NAIL VALUES

PLATE	GRIP(DRY) (PSI) MAX	MIN	SHEAR (PLI) MAX	MIN	SECTION (PLI) MAX	MIN
MT20	618	354	1667	822	2284	1656

PLATE PLACEMENT TOL. = 0.250 inches

PLATE ROTATION TOL. = 5.0 Deg.

JSI GRIP= 0.81 (C) (INPUT = 0.90)
JSI METAL= 0.29 (C) (INPUT = 1.00)

LICENSED PROFESSIONAL ENGINEER
1157B
S. KATSOULAKOS
PROVINCE OF ONTARIO

DWG NO. TAM 3605 -18
STRUCTURAL
COMPONENT ONLY

JOB NAME	TRUSS NAME	QUANTITY	PLY	JOB DESC.	DRWG NO.
290316	G23	1	1	TRUSS DESC.	

Tamarack Roof Truss, Burlington

Version 8.200 S Dec 12 2017 MiTek Industries, Inc. Mon Jan 15 08:15:16 2018 Page 1
ID:rJ8v9xWPhw_dJSMdtatdVEyNCYh-0hkiMv5DvGZvQ5CBDm7Lr7XbtQub6eQVV4pzoBVzvB0P

Scale = 1:54.8

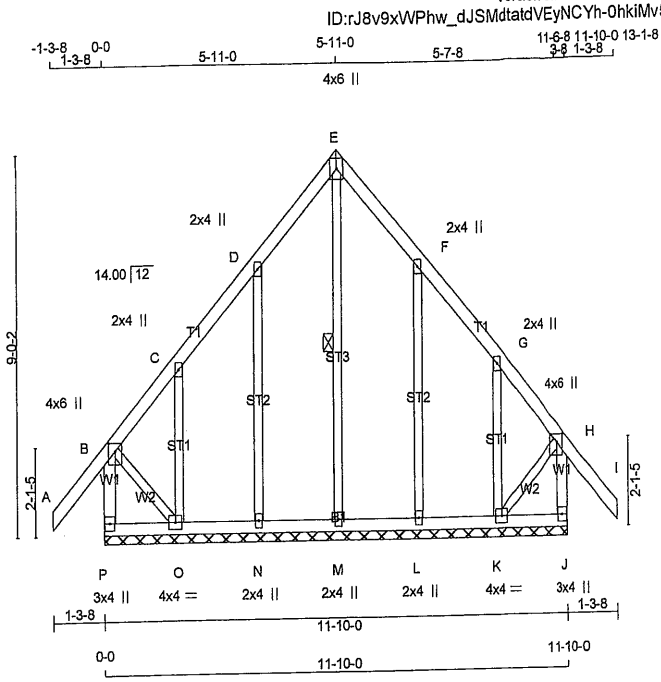

TOTAL WEIGHT = 70 lb
[M]

LUMBER

N. L. G. A. RULES

CHORDS	SIZE		LUMBER	DESCR.
P - B	2x4	DRY	No.2	SPF
A - E	2x4	DRY	No.2	SPF
E - I	2x4	DRY	No.2	SPF
J - H	2x4	DRY	No.2	SPF
P - J	2x4	DRY	No.2	SPF
ALL WEBS	2x3	DRY	No.2	SPF
ALL GABLE WEBS	2x3	DRY	No.2	SPF

DRY: SEASONED LUMBER.

GABLE STUDS SPACED AT 2-0-0 OC.

PLATES (table is in inches)

JT	TYPE	PLATES	W	LEN	Y	X
B	TMVW+p	MT20	4.0	6.0	2.25	2.00
C, D, F, G						
C	TMW+w	MT20	2.0	4.0		
E	TTW+p	MT20	4.0	6.0		
H	TMVW+p	MT20	4.0	6.0	2.25	2.00
J	BMV1+p	MT20	3.0	4.0		
K	BMWW1-t	MT20	4.0	4.0		
L, M, N						
L	BMW1+w	MT20	2.0	4.0		
O	BMWW1-t	MT20	4.0	4.0		
P	BMV1+p	MT20	3.0	4.0		

DIMENSIONS, SUPPORTS AND LOADINGS SPECIFIED BY FABRICATOR TO BE VERIFIED BY BUILDING DESIGNER

BEARINGS

THIS TRUSS DESIGNED FOR CONTINUOUS BEARINGS.

THIS TRUSS REQUIRES RIGID SHEATHING ON EXPOSED FACE.

BEARING MATERIAL TO BE SPF NO.2 OR BETTER AT JOINT(S)

BRACING

TOP CHORD TO BE SHEATHED OR MAX. PURLIN SPACING = 6.25 FT.
MAX. UNBRACED BOTTOM CHORD LENGTH = 10.00 FT OR RIGID CEILING DIRECTLY APPLIED.

ALL PITCH BREAKS AND PERIMETER CORNER JOINTS MUST BE LATERALLY RESTRAINED.

1 LATERAL BRACE(S) AT 1/ 2 LENGTH OF E-M.

END VERTICAL(S) MUST BE SHEATHED OR HAVE BRACES AS INDICATED IN THE MAX. UNBRACED LENGTH COLUMN OF THE TABLE BELOW

LOADING

TOTAL LOAD CASES: (4)

CHORDS

MEMB. FR-TO	MAX. FACTORED FORCE (LBS)	FACTORED VERT. LOAD (PLF) FROM	TO	LC1	MAX CSI (LC)	MAX. UNBRAC LENGTH
P- B	-363 / 0	0.0	0.0	0.04 (1)	7.81	
A- B	0 / 60	-112.8	-112.8	0.16 (1)	10.00	
B- C	-78 / 0	-112.8	-112.8	0.15 (1)	6.25	
C- D	-16 / 0	-112.8	-112.8	0.07 (1)	6.25	
D- E	-42 / 0	-112.8	-112.8	0.07 (1)	6.25	
E- F	-42 / 0	-112.8	-112.8	0.07 (1)	6.25	
F- G	-16 / 0	-112.8	-112.8	0.07 (1)	6.25	
G- H	-78 / 0	-112.8	-112.8	0.15 (1)	6.25	
H- I	0 / 60	-112.8	-112.8	0.16 (1)	10.00	
J- H	-363 / 0	0.0	0.0	0.04 (1)	7.81	
P- O	0 / 0	-28.0	-28.0	0.03 (3)	10.00	
O- N	0 / 20	-28.0	-28.0	0.03 (3)	10.00	
N- M	0 / 15	-28.0	-28.0	0.03 (3)	10.00	
M- L	0 / 15	-28.0	-28.0	0.03 (3)	10.00	
L- K	0 / 20	-28.0	-28.0	0.03 (3)	10.00	
K- J	0 / 0	-28.0	-28.0	0.03 (3)	10.00	

WEBS

MEMB. FR-TO	MAX. FACTORED FORCE (LBS)	MAX CSI (LC)
M- E	-153 / 0	0.08 (1)
N- D	-271 / 0	0.20 (1)
O- C	-137 / 0	0.04 (1)
L- F	-271 / 0	0.20 (1)
K- G	-137 / 0	0.04 (1)
B- O	0 / 32	0.01 (1)
K- H	0 / 32	0.01 (1)

DESIGN CRITERIA

SPECIFIED LOADS:

TOP CH.	LL	=	31.0	PSF
	DL	=	8.0	PSF
BOT CH.	LL	=	10.5	PSF
	DL	=	7.0	PSF
TOTAL LOAD		=	56.4	PSF

SPACING = 24.0 IN. C/C

THIS TRUSS IS DESIGNED FOR RESIDENTIAL OR SMALL BUILDING REQUIREMENTS OF PART 9, NBCC 2010

THIS DESIGN COMPLIES WITH:
- PART 9 OF OBC 2012 , BCBC 2012 , ABC 2014
- CSA 086-09
- TPIC 2011

DESIGN ASSUMPTIONS
-OVERHANG NOT TO BE ALTERED OR CUT OFF.

(55 % OF 41.1 P.S.F. G.S.L. PLUS 8.4 P.S.F. RAIN LOAD) EQUALS 31.0 P.S.F. SPECIFIED ROOF LIVE LOAD

CSI: TC=0.16/1.00 (A-B:1) , BC=0.03/1.00 (K-L:3) , WB=0.20/1.00 (D-N:1) , SSI=0.08/1.00 (A-B:1)

DOL LUMBER=1.00 NAIL=1.00 LS BEND=1.10 COMP=1.10 SHEAR=1.10 TENS= 1.10

COMPANION LIVE LOAD FACTOR = 0.50

TRUSS PLATE MANUFACTURER IS NOT RESPONSIBLE FOR QUALITY CONTROL IN THE TRUSS MANUFACTURING PLANT .

NAIL VALUES

PLATE	GRIP(DRY) (PSI) MAX	MIN	SHEAR (PLI) MAX	MIN	SECTION (PLI) MAX	MIN
MT20	618	354	1667	822	2284	1656

PLATE PLACEMENT TOL. = 0.250 inches

PLATE ROTATION TOL. = 5.0 Deg.

JSI GRIP= 0.23 (D) (INPUT = 0.90)
JSI METAL= 0.08 (D) (INPUT = 1.00)

LICENSED PROFESSIONAL ENGINEER
1157B
S. KATSOULAKOS
PROVINCE OF ONTARIO

DWG NO. TAM3606 -18
STRUCTURAL
COMPONENT ONLY

JOB NAME	TRUSS NAME	QUANTITY	PLY	JOB DESC.	DRWG NO.
290316	T24	1	1	TRUSS DESC.	

Tamarack Roof Truss, Burlington

Version 8.200 S Dec 12 2017 MiTek Industries, Inc. Mon Jan 15 08:15:18 2018 Page 1
ID:rJ8v9xWPhw_dJSMdtatdVEyNCYh-y3sSnb6TRtpdgOLZLB9pwYcvKDYCaaapX7SvGOzvB0N

Scale = 1:46.8

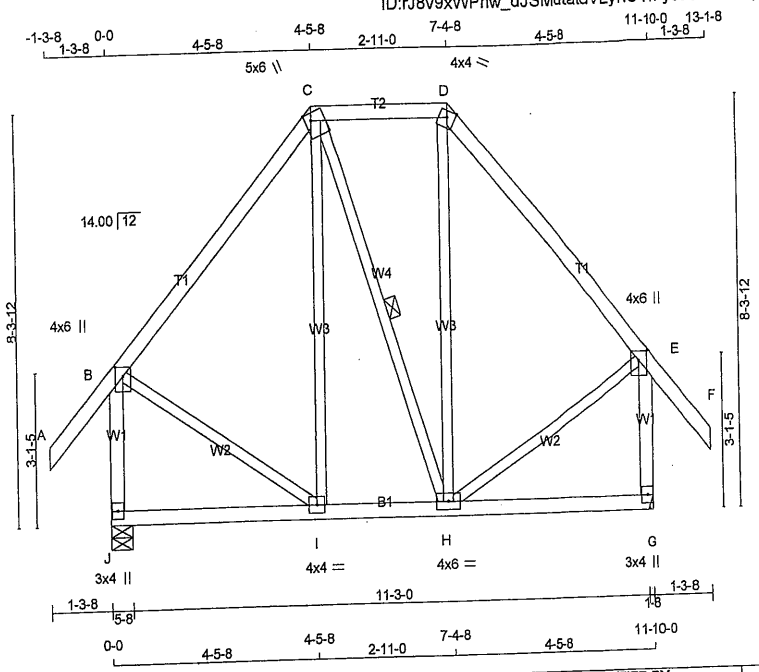

TOTAL WEIGHT = 71 lb
[M][F]

LUMBER

N. L. G. A. RULES

CHORDS	SIZE		LUMBER	DESCR.
A - C	2x4	DRY	No.2	SPF
C - D	2x4	DRY	No.2	SPF
D - F	2x4	DRY	No.2	SPF
J - B	2x4	DRY	No.2	SPF
G - E	2x4	DRY	No.2	SPF
J - G	2x4	DRY	No.2	SPF
ALL WEBS EXCEPT	2x3	DRY	No.2	SPF

DRY: SEASONED LUMBER.

PLATES (table is in inches)

JT	TYPE	PLATES	W	LEN	Y	X
B	TMVW+p	MT20	4.0	6.0	2.25	2.00
C	TTWW+m	MT20	5.0	6.0	1.75	1.50
D	TTW-m	MT20	4.0	4.0	Edge	
E	TMVW+p	MT20	4.0	6.0	2.25	2.00
G	BMV1+p	MT20	3.0	4.0		
H	BMWWW-t	MT20	4.0	6.0		
I	BMWW-t	MT20	4.0	4.0		
J	BMV1+p	MT20	3.0	4.0		

Edge - INDICATES REFERENCE CORNER OF PLATE TOUCHES EDGE OF CHORD.

DIMENSIONS, SUPPORTS AND LOADINGS SPECIFIED BY FABRICATOR TO BE VERIFIED BY BUILDING DESIGNER

BEARINGS

JT	FACTORED GROSS REACTION VERT	HORZ	MAXIMUM FACTORED GROSS REACTION DOWN	HORZ	UPLIFT	INPUT BRG IN-SX	REQRD BRG IN-SX
J	991	0	991	0	0	5-8	5-8
G	991	0	991	0	0	HANGER BY OTHERS MIN. SEAT SIZE: 1-8	

UNFACTORED REACTIONS

JT	1ST LCASE COMBINED	MAX./MIN. COMPONENT REACTIONS SNOW	LIVE	PERM.LIVE	WIND	DEAD	SOIL
J	777	453 / 0	124 / 0	0 / 0	0 / 0	200 / 0	0 / 0
G	777	453 / 0	124 / 0	0 / 0	0 / 0	200 / 0	0 / 0

BEARING MATERIAL TO BE SPF NO.2 OR BETTER AT JOINT(S) J

BRACING

TOP CHORD TO BE SHEATHED OR MAX. PURLIN SPACING = 6.25 FT.
MAX. UNBRACED BOTTOM CHORD LENGTH = 10.00 FT OR RIGID CEILING DIRECTLY APPLIED.

ALL PITCH BREAKS AND PERIMETER CORNER JOINTS MUST BE LATERALLY RESTRAINED.

1 LATERAL BRACE(S) AT 1/ 2 LENGTH OF C-H.

END VERTICAL(S) MUST BE SHEATHED OR HAVE BRACES AS INDICATED IN THE MAX. UNBRACED LENGTH COLUMN OF THE TABLE BELOW

LOADING

TOTAL LOAD CASES: (4)

CHORDS

MEMB. FR-TO	MAX. FACTORED FORCE (LBS)	FACTORED VERT. LOAD (PLF) FROM	TO	LC1	MAX CSI (LC)	MAX. UNBRAC LENGTH
A- B	0 / 60	-112.8	-112.8	0.16 (1)	10.00	
B- C	-458 / 0	-112.8	-112.8	0.29 (1)	6.25	
C- D	-296 / 0	-112.8	-112.8	0.12 (1)	6.25	
D- E	-458 / 0	-112.8	-112.8	0.29 (1)	6.25	
E- F	0 / 60	-112.8	-112.8	0.16 (1)	10.00	
J- B	-937 / 0	0.0	0.0	0.16 (1)	7.81	
G- E	-937 / 0	0.0	0.0	0.16 (1)	7.81	
J- I	0 / 0	-28.0	-28.0	0.14 (3)	10.00	
I- H	0 / 296	-28.0	-28.0	0.15 (3)	10.00	
H- G	0 / 0	-28.0	-28.0	0.14 (3)	10.00	

WEBS

MEMB. FR-TO	MAX. FACTORED FORCE (LBS)	MAX CSI (LC)
I- C	-66 / 103	0.09 (1)
C- H	0 / 1	0.00 (3)
H- D	-67 / 105	0.09 (1)
B- I	0 / 346	0.08 (1)
H- E	0 / 346	0.08 (1)

DESIGN CRITERIA

SPECIFIED LOADS:

TOP CH.	LL	=	31.0	PSF
	DL	=	8.0	PSF
BOT CH.	LL	=	10.5	PSF
	DL	=	7.0	PSF
TOTAL LOAD		=	56.4	PSF

SPACING = 24.0 IN. C/C

LOADING IN FLAT SECTION BASED ON A SLOPE OF 6.00/12

THIS TRUSS IS DESIGNED FOR RESIDENTIAL OR SMALL BUILDING REQUIREMENTS OF PART 9, NBCC 2010

THIS DESIGN COMPLIES WITH:
- PART 9 OF OBC 2012 , BCBC 2012 , ABC 2014
- CSA 086-09
- TPIC 2011

(55 % OF 41.1 P.S.F. G.S.L. PLUS 8.4 P.S.F. RAIN LOAD) EQUALS 31.0 P.S.F. SPECIFIED ROOF LIVE LOAD

ALLOWABLE DEFL.(LL)= L/360 (0.39")
CALCULATED VERT. DEFL.(LL) = L/ 999 (0.02")
ALLOWABLE DEFL.(TL)= L/360 (0.39")
CALCULATED VERT. DEFL.(TL) = L/ 999 (0.03")

CSI: TC=0.29/1.00 (B-C:1) , BC=0.15/1.00 (H-I:3) , WB=0.09/1.00 (D-H:1) , SSI=0.13/1.00 (C-D:1)

DOL LUMBER=1.00 NAIL=1.00 LS BEND=1.10 COMP=1.10 SHEAR=1.10 TENS= 1.10

COMPANION LIVE LOAD FACTOR = 0.50

TRUSS PLATE MANUFACTURER IS NOT RESPONSIBLE FOR QUALITY CONTROL IN THE TRUSS MANUFACTURING PLANT .

NAIL VALUES

PLATE	GRIP(DRY) (PSI) MAX	MIN	SHEAR (PLI) MAX	MIN	SECTION (PLI) MAX	MIN
MT20	618	354	1667	822	2284	1656

PLATE PLACEMENT TOL. = 0.250 inches

PLATE ROTATION TOL. = 5.0 Deg.

JSI GRIP= 0.56 (B) (INPUT = 0.90)
JSI METAL= 0.15 (B) (INPUT = 1.00)

LICENSED PROFESSIONAL ENGINEER
1576
S. KATSOULAKOS
PROVINCE OF ONTARIO

DWG NO. TAM 3607 -18
STRUCTURAL COMPONENT ONLY

JOB NAME	TRUSS NAME	QUANTITY	PLY	JOB DESC.	DRWG NO.
290316	T25	1	1	TRUSS DESC.	

Tamarack Roof Truss, Burlington

Version 8.200 S Dec 12 2017 MiTek Industries, Inc. Mon Jan 15 08:15:18 2018 Page 1

ID:rJ8v9xWPhw_dJSMdtatdVEyNCYh-y3sSnb6TRtpdgOLZLB9pwYcwPDWPaYYpX7SvGOzvB0N

Scale = 1:34.6

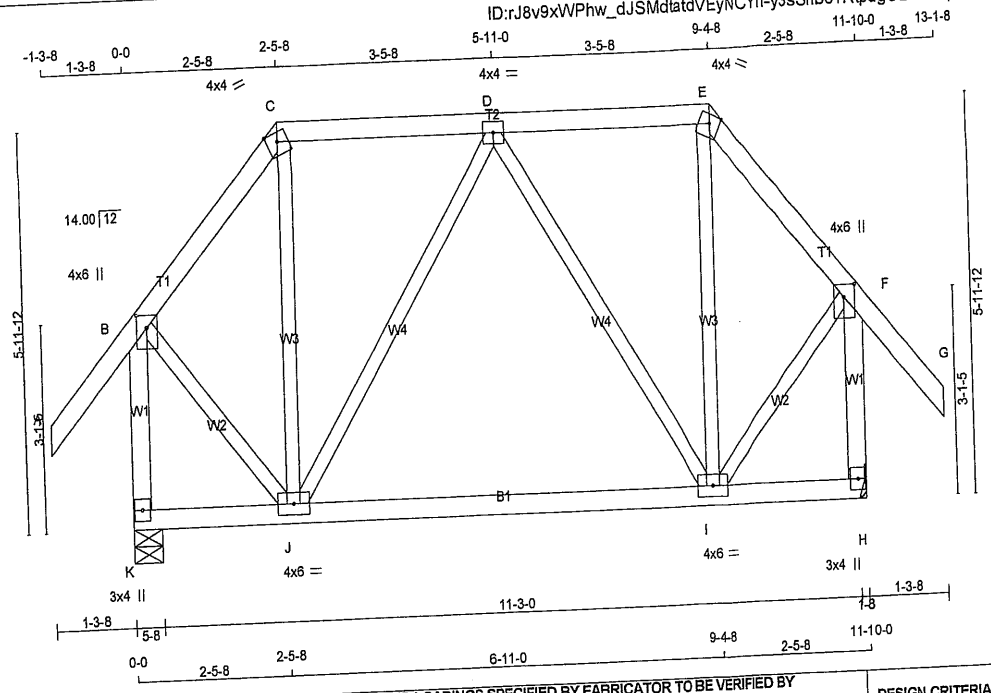

TOTAL WEIGHT = 66 lb [M]

LUMBER

N. L. G. A. RULES

CHORDS	SIZE		LUMBER	DESCR.
A - C	2x4	DRY	No.2	SPF
C - E	2x4	DRY	No.2	SPF
E - G	2x4	DRY	No.2	SPF
K - B	2x4	DRY	No.2	SPF
H - F	2x4	DRY	No.2	SPF
K - H	2x4	DRY	No.2	SPF
ALL WEBS EXCEPT	2x3	DRY	No.2	SPF

DRY: SEASONED LUMBER.

PLATES (table is in inches)

JT	TYPE	PLATES	W	LEN	Y	X
B	TMVW+p	MT20	4.0	6.0	2.25	2.00
C	TTW-m	MT20	4.0	4.0	Edge	
D	TMWW-t	MT20	4.0	4.0		
E	TTW-m	MT20	4.0	4.0	Edge	
F	TMVW+p	MT20	4.0	6.0	2.25	2.00
H	BMV1+p	MT20	3.0	4.0		
I	BMWWW-t	MT20	4.0	6.0		
J	BMWWW-t	MT20	4.0	6.0		
K	BMV1+p	MT20	3.0	4.0		

Edge - INDICATES REFERENCE CORNER OF PLATE TOUCHES EDGE OF CHORD.

DIMENSIONS, SUPPORTS AND LOADINGS SPECIFIED BY FABRICATOR TO BE VERIFIED BY BUILDING DESIGNER

BEARINGS

JT	FACTORED GROSS REACTION VERT	HORZ	MAXIMUM FACTORED GROSS REACTION DOWN	HORZ	UPLIFT	INPUT BRG IN-SX	REQRD BRG IN-SX
K	991	0	991	0	0	5-8	5-8
H	991	0	991	0	0	HANGER BY OTHERS MIN. SEAT SIZE: 1-8	

UNFACTORED REACTIONS

JT	1ST LCASE COMBINED	MAX./MIN. COMPONENT REACTIONS SNOW	LIVE	PERM.LIVE	WIND	DEAD	SOIL
K	777	453 / 0	124 / 0	0 / 0	0 / 0	200 / 0	0 / 0
H	777	453 / 0	124 / 0	0 / 0	0 / 0	200 / 0	0 / 0

BEARING MATERIAL TO BE SPF NO.2 OR BETTER AT JOINT(S) K

BRACING

TOP CHORD TO BE SHEATHED OR MAX. PURLIN SPACING = 6.25 FT.
MAX. UNBRACED BOTTOM CHORD LENGTH = 10.00 FT OR RIGID CEILING DIRECTLY APPLIED.

ALL PITCH BREAKS AND PERIMETER CORNER JOINTS MUST BE LATERALLY RESTRAINED.

LOADING

TOTAL LOAD CASES: (4)

CHORDS

MEMB. FR-TO	MAX. FACTORED FORCE (LBS)	FACTORED VERT. LOAD LC1 (PLF) FROM	TO	MAX CSI (LC)	MAX. UNBRAC LENGTH
A- B	0 / 60	-112.8	-112.8	0.16 (1)	10.00
B- C	-476 / 0	-112.8	-112.8	0.12 (1)	6.25
C- D	-308 / 0	-112.8	-112.8	0.22 (1)	6.25
D- E	-308 / 0	-112.8	-112.8	0.22 (1)	6.25
E- F	-476 / 0	-112.8	-112.8	0.12 (1)	6.25
F- G	0 / 60	-112.8	-112.8	0.16 (1)	10.00
K- B	-988 / 0	0.0	0.0	0.17 (1)	7.81
H- F	-988 / 0	0.0	0.0	0.17 (1)	7.81
K- J	0 / 0	-28.0	-28.0	0.23 (3)	10.00
J- I	0 / 449	-28.0	-28.0	0.26 (3)	10.00
I- H	0 / 0	-28.0	-28.0	0.23 (3)	10.00

WEBS

MEMB. FR-TO	MAX. FACTORED FORCE (LBS)	MAX CSI (LC)
J- C	0 / 146	0.04 (3)
J- D	-276 / 0	0.22 (1)
D- I	-276 / 0	0.22 (1)
I- E	0 / 146	0.04 (3)
B- J	0 / 449	0.10 (1)
I- F	0 / 449	0.10 (1)

DESIGN CRITERIA

SPECIFIED LOADS:

TOP CH.	LL	=	31.0	PSF
	DL	=	8.0	PSF
BOT CH.	LL	=	10.5	PSF
	DL	=	7.0	PSF
TOTAL LOAD		=	56.4	PSF

SPACING = 24.0 IN. C/C

LOADING IN FLAT SECTION BASED ON A SLOPE OF 6.00/12

THIS TRUSS IS DESIGNED FOR RESIDENTIAL OR SMALL BUILDING REQUIREMENTS OF PART 9, NBCC 2010

THIS DESIGN COMPLIES WITH:
- PART 9 OF OBC 2012 , BCBC 2012 , ABC 2014
- CSA 086-09
- TPIC 2011

(55 % OF 41.1 P.S.F. G.S.L. PLUS 8.4 P.S.F. RAIN LOAD) EQUALS 31.0 P.S.F. SPECIFIED ROOF LIVE LOAD

ALLOWABLE DEFL.(LL)= L/360 (0.39")
CALCULATED VERT. DEFL.(LL) = L/ 999 (0.05")
ALLOWABLE DEFL.(TL)= L/360 (0.39")
CALCULATED VERT. DEFL.(TL) = L/ 999 (0.08")

CSI: TC=0.22/1.00 (C-D:1) , BC=0.26/1.00 (I-J:3) , WB=0.22/1.00 (D-J:1) , SSI=0.19/1.00 (D-E:1)

DOL LUMBER=1.00 NAIL=1.00 LS BEND=1.10 COMP=1.10 SHEAR=1.10 TENS= 1.10

COMPANION LIVE LOAD FACTOR = 0.50

TRUSS PLATE MANUFACTURER IS NOT RESPONSIBLE FOR QUALITY CONTROL IN THE TRUSS MANUFACTURING PLANT .

NAIL VALUES

PLATE	GRIP(DRY) (PSI) MAX	MIN	SHEAR (PLI) MAX	MIN	SECTION (PLI) MAX	MIN
MT20	618	354	1667	822	2284	1656

PLATE PLACEMENT TOL. = 0.250 inches

PLATE ROTATION TOL. = 5.0 Deg.

JSI GRIP= 0.59 (F) (INPUT = 0.90)
JSI METAL= 0.14 (F) (INPUT = 1.00)

LICENSED PROFESSIONAL ENGINEER
1676
S. KATSOULAKOS
PROVINCE OF ONTARIO

DWG NO. TAM 3608 -18
STRUCTURAL COMPONENT ONLY

JOB NAME	TRUSS NAME	QUANTITY	PLY	JOB DESC.	DRWG NO.
290317	T30	1	2	TRUSS DESC.	

Tamarack Roof Truss, Burlington

Version 8.200 S Dec 12 2017 MiTek Industries, Inc. Mon Jan 15 08:18:05 2018 Page 1

ID:kjhWC3V7rOjjJm4XuW?IGPyNETN-aBSbqh8D6BrxC3cgdlf_Bm1OlYQACvzOxcPFcCzvAzm

Scale = 1:52.8

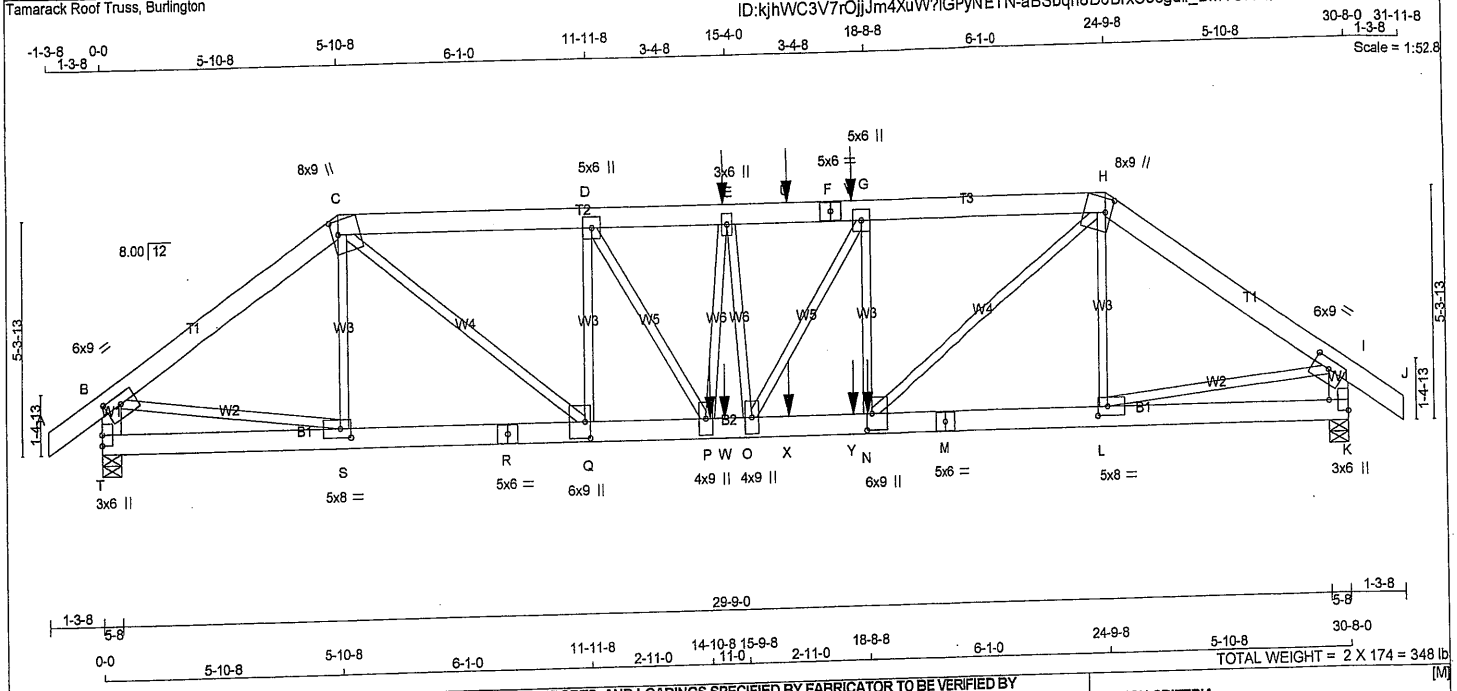

TOTAL WEIGHT = 2 X 174 = 348 lb [M]

LUMBER

N. L. G. A. RULES

CHORDS	SIZE		LUMBER	DESCR.
A - C	2x6	DRY	No.2	SPF
C - F	2x6	DRY	No.2	SPF
F - H	2x6	DRY	No.2	SPF
H - J	2x6	DRY	No.2	SPF
T - B	2x6	DRY	No.2	SPF
K - I	2x6	DRY	No.2	SPF
T - R	2x6	DRY	1650F 1.5E	SPF
R - M	2x6	DRY	1650F 1.5E	SPF
M - K	2x6	DRY	1650F 1.5E	SPF
ALL WEBS EXCEPT	2x3	DRY	No.2	SPF

DRY: SEASONED LUMBER.

DESIGN CONSISTS OF 2 TRUSSES BUILT SEPARATELY THEN FASTENED TOGETHER AS FOLLOWS:

CHORDS	#ROWS	SURFACE SPACING (IN)	LOAD(PLF)
TOP CHORDS : (0.122"X3") SPIRAL NAILS			
A- C	2	12	TOP
C- F	2	12	SIDE(183.1)
F- H	2	12	SIDE(0.0)
H- J	2	12	TOP
T- B	2	12	TOP
K- I	2	12	TOP
BOTTOM CHORDS : (0.122"X3") SPIRAL NAILS			
T- R	2	12	TOP
R- M	2	12	SIDE(183.1)
M- K	2	12	TOP
WEBS : (0.122"X3") SPIRAL NAILS			
P- E	1	4	SIDE(653.4)
2x3	1	4	
G- N	1	4	SIDE(615.1)
S- C	1	6	
Q- C	1	6	
P- D	1	6	
O- G	1	6	
N- H	1	6	
L- H	1	6	
S- B	1	6	
L- I	1	6	

NAILS TO BE DRIVEN FROM ONE SIDE ONLY.

GIRDER NAILING ASSUMES NAILED HANGERS ARE FASTENED WITH MIN. 3-0 INCH NAILS.

TOP - COMPONENTS ARE LOADED FROM THE TOP AND MUST BE PLACED ON TOP EDGE OF ALL PLIES FOR THE LOAD TO BE TRANSFERRED TO EACH PLY.

SIDE - PLF SHOWN IS THE EQUIVALENT UDL APPLIED TO ONE SIDE THAT THE CORRESPONDING NAILING PATTERN SHALL BE CAPABLE OF TRANSFERING. REMAINING PLF MUST BE APPLIED ON THE OPPOSITE SIDE OR ON THE TOP.

PLATES (table is in inches)

JT	TYPE	PLATES	W	LEN	Y	X
B	TMVW-t	MT20	6.0	9.0	2.50	4.50
C	TTWW+m	MT20	8.0	9.0	3.75	1.75
D	TMWW+t	MT20	5.0	6.0		
E	TMWW+t	MT20	3.0	6.0		
F	TS-t	MT20	5.0	6.0		
G	TMWW+t	MT20	5.0	6.0		
H	TTWW+m	MT20	8.0	9.0	3.75	1.75

DIMENSIONS, SUPPORTS AND LOADINGS SPECIFIED BY FABRICATOR TO BE VERIFIED BY BUILDING DESIGNER

BEARINGS

JT	FACTORED GROSS REACTION VERT	HORZ	MAXIMUM FACTORED GROSS REACTION DOWN	HORZ	UPLIFT	INPUT BRG IN-SX	REQRD BRG IN-SX
T	5617	0	5617	0	0	5-8	5-8
K	6247	0	6247	0	0	5-8	5-8

UNFACTORED REACTIONS

JT	1ST LCASE COMBINED	MAX./MIN. COMPONENT REACTIONS SNOW	LIVE	PERM.LIVE	WIND	DEAD	SOIL
T	4349	2661 / 0	647 / 0	0 / 0	0 / 0	1042 / 0	0 / 0
K	4330	2965 / 0	709 / 0	0 / 0	0 / 0	1154 / 0	0 / 0

BEARING MATERIAL TO BE SPF NO.2 OR BETTER AT JOINT(S) T, K

BRACING

TOP CHORD TO BE SHEATHED OR MAX. PURLIN SPACING = 3.14 FT.
MAX. UNBRACED BOTTOM CHORD LENGTH = 10.00 FT OR RIGID CEILING DIRECTLY APPLIED.

ALL PITCH BREAKS AND PERIMETER CORNER JOINTS MUST BE LATERALLY RESTRAINED.

LOADING

TOTAL LOAD CASES: (4)

CHORDS

MEMB. FR-TO	MAX. FACTORED FORCE (LBS)	FACTORED VERT. LOAD (PLF) FROM	TO	LC1	MAX CSI (LC)	MAX. UNBRAC LENGTH
A- B	0 / 49	-124.4	-124.4	0.05 (1)	10.00	
B- C	-7348 / 0	-124.4	-124.4	0.31 (1)	4.19	
C- D	-11200 / 0	-124.4	-124.4	0.40 (1)	3.40	
D- E	-13022 / 0	-124.4	-124.4	0.35 (1)	3.20	
E- U	-13060 / 0	-124.4	-124.4	0.38 (1)	3.16	
U- F	-13060 / 0	-124.4	-124.4	0.38 (1)	3.16	
F- V	-13060 / 0	-124.4	-124.4	0.38 (1)	3.16	
V- G	-13060 / 0	-124.4	-124.4	0.38 (1)	3.16	
G- H	-12686 / 0	-124.4	-124.4	0.48 (1)	3.14	
H- I	-8288 / 0	-124.4	-124.4	0.34 (1)	3.96	
I- J	0 / 49	-124.4	-124.4	0.05 (1)	10.00	
T- B	-5549 / 0	0.0	0.0	0.20 (1)	6.23	
K- I	-6190 / 0	0.0	0.0	0.22 (1)	5.95	
T- S	0 / 0	-28.0	-28.0	0.05 (3)	10.00	
S- R	0 / 6087	-28.0	-28.0	0.27 (1)	10.00	
R- Q	0 / 6087	-28.0	-28.0	0.27 (1)	10.00	
Q- P	0 / 11200	-28.0	-28.0	0.59 (1)	10.00	
P- W	0 / 13066	-28.0	-28.0	0.67 (1)	10.00	
W- O	0 / 13066	-28.0	-28.0	0.67 (1)	10.00	
O- X	0 / 12686	-28.0	-28.0	0.58 (1)	10.00	
X- Y	0 / 12686	-28.0	-28.0	0.58 (1)	10.00	
Y- N	0 / 12686	-28.0	-28.0	0.58 (1)	10.00	
N- M	0 / 6867	-28.0	-28.0	0.34 (1)	10.00	
M- L	0 / 6867	-28.0	-28.0	0.34 (1)	10.00	
L- K	0 / 0	-28.0	-28.0	0.06 (3)	10.00	

WEBS

MEMB. FR-TO	MAX. FACTORED FORCE (LBS)	MAX CSI (LC)
S- C	-720 / 0	0.14 (1)
C- Q	0 / 6532	0.81 (1)
Q- D	-3759 / 0	0.71 (1)
D- P	0 / 3557	0.44 (1)
P- E	-383 / 0	0.07 (1)
E- O	-71 / 37	0.01 (1)
O- G	0 / 730	0.09 (1)
N- G	-1496 / 0	0.28 (1)
N- H	0 / 7435	0.92 (1)
L- H	-771 / 0	0.15 (1)
B- S	0 / 6171	0.76 (1)
L- I	0 / 6960	0.86 (1)

FACTORED CONCENTRATED LOADS (LBS)

JT	LOC.	LC1	MAX-	MAX+	FACE	DIR	TYPE
E	15-2-12	-150	-150	—	BACK	VERT	TOTAL
N	18-8-8	-3060	-3060	—	BACK	VERT	TOTAL
P	14-10-8	-3207	-3207	—	BACK	VERT	TOTAL
U	16-9-8	-150	-150	—	BACK	VERT	TOTAL
V	18-4-4	-150	-150	—	BACK	VERT	TOTAL
W	15-2-12	-41	-72	—	BACK	VERT	TOTAL
X	16-9-8	-41	-72	—	BACK	VERT	TOTAL
Y	18-4-4	-41	-72	—	BACK	VERT	TOTAL

LICENSED PROFESSIONAL ENGINEER 17578 S. KATSOULAKOS PROVINCE OF ONTARIO

DESIGN CRITERIA

SPECIFIED LOADS:

TOP CH.	LL	=	34.8	PSF
	DL	=	8.0	PSF
BOT CH.	LL	=	10.5	PSF
	DL	=	7.0	PSF
TOTAL LOAD		=	60.3	PSF

SPACING = 24.0 IN. C/C

LOADING IN FLAT SECTION BASED ON A SLOPE OF 6.00/12

THIS TRUSS IS DESIGNED FOR RESIDENTIAL OR SMALL BUILDING REQUIREMENTS OF PART 9, NBCC 2010

THIS DESIGN COMPLIES WITH:
- PART 9 OF OBC 2012 , BCBC 2012 , ABC 2014
- CSA 086-09
- TPIC 2011

(55 % OF 48.1 P.S.F. G.S.L. PLUS 8.4 P.S.F. RAIN LOAD) EQUALS 34.8 P.S.F. SPECIFIED ROOF LIVE LOAD

ALLOWABLE DEFL.(LL)= L/360 (1.02")
CALCULATED VERT. DEFL.(LL) = L/ 999 (0.25")
ALLOWABLE DEFL.(TL)= L/360 (1.02")
CALCULATED VERT. DEFL.(TL) = L/ 886 (0.42")

CSI: TC=0.48/1.00 (G-H:1) , BC=0.67/1.00 (O-P:1) , WB=0.92/1.00 (H-N:1) , SSI=0.17/1.00 (E-G:1)

DOL LUMBER=1.00 NAIL=1.00 LS BEND=1.00 COMP=1.00 SHEAR=1.00 TENS= 1.00

COMPANION LIVE LOAD FACTOR = 0.50

AUTOSOLVE HEELS OFF

TRUSS PLATE MANUFACTURER IS NOT RESPONSIBLE FOR QUALITY CONTROL IN THE TRUSS MANUFACTURING PLANT .

NAIL VALUES

PLATE	GRIP(DRY) (PSI) MAX	MIN	SHEAR (PLI) MAX	MIN	SECTION (PLI) MAX	MIN
MT20	618	354	1667	822	2284	1656

PLATE PLACEMENT TOL. = 0.250 inches

PLATE ROTATION TOL. = 5.0 Deg.

JSI GRIP= 0.89 (Q) (INPUT = 0.90)
JSI METAL= 0.72 (B) (INPUT = 1.00)

DWG NO. TAM 3609 -18
STRUCTURAL COMPONENT ONLY

CONTINUED ON PAGE 2

JOB NAME	TRUSS NAME	QUANTITY	PLY	JOB DESC.	DRWG NO.
290317	T30	1	2	TRUSS DESC.	

Tamarack Roof Truss, Burlington

Version 8.200 S Dec 12 2017 MiTek Industries, Inc. Mon Jan 15 08:18:05 2018 Page 2
ID:kjhWC3V7rOjjJm4XuW?IGPyNETN-aBSbqh8D6BrxC3cgdlf_Bm1OlYQACvzOxcPFcCzvAzm

PLATES (table is in Inches)

JT	TYPE	PLATES	W	LEN	Y	X
I	TMVW-t	MT20	6.0	9.0	2.50	4.50
K	BMV1+p	MT20	3.0	6.0	3.00	Edge
L	BMWW-t	MT20	5.0	8.0	2.50	3.00
M	BS-t	MT20	5.0	6.0		
N	BMWW+t	MT20	6.0	9.0	4.50	1.50
O	BMWW+t	MT20	4.0	9.0		
P	BMWW+t	MT20	4.0	9.0		
Q	BMWW+t	MT20	6.0	9.0	4.50	1.50
R	BS-t	MT20	5.0	6.0		
S	BMWW-t	MT20	5.0	8.0	2.50	3.00
T	BMV1+p	MT20	3.0	6.0		

Edge - INDICATES REFERENCE CORNER OF PLATE TOUCHES EDGE OF CHORD.

HANGERS NOTES

1) SPECIAL HANGER(S) OR CONNECTION(S) REQUIRED TO SUPPORT CONCENTRATED LOAD(S) 149.7 lbs FACTORED DOWN AT 15-2-12, AND 149.7 lbs FACTORED DOWN AT 16-9-8, AND 149.7 lbs FACTORED DOWN AT 18-4-4 ON TOP CHORD, AND 3206.5 lbs FACTORED DOWN AT 14-10-8, 71.7 lbs FACTORED DOWN AT 15-2-12, 71.7 lbs FACTORED DOWN AT 16-9-8, AND 71.7 lbs FACTORED DOWN AT 18-4-4, AND 3059.6 lbs FACTORED DOWN AT 18-8-8 ON BOTTOM CHORD. DESIGN FOR UNSPECIFIED CONNECTION(S) IS DELEGATED TO THE BUILDING DESIGNER.

LICENSED PROFESSIONAL ENGINEER
115718
S. KATSOULAKOS
PROVINCE OF ONTARIO

DWG NO. TAM 3609 -18
STRUCTURAL
COMPONENT ONLY

JOB NAME	TRUSS NAME	QUANTITY	PLY	JOB DESC.	DRWG NO.
290317	T31	1	1	TRUSS DESC.	

Tamarack Roof Truss, Burlington

Version 8.200 S Dec 12 2017 MiTek Industries, Inc. Mon Jan 15 08:18:05 2018 Page 1

ID:Q4u7xzBPXyy7N802U7pi6KyN_5O-aBSbqh8D6BrxC3cgdlf_Bm1LwYRgC1QOxcPFcCzvAzm

Scale = 1:36.6

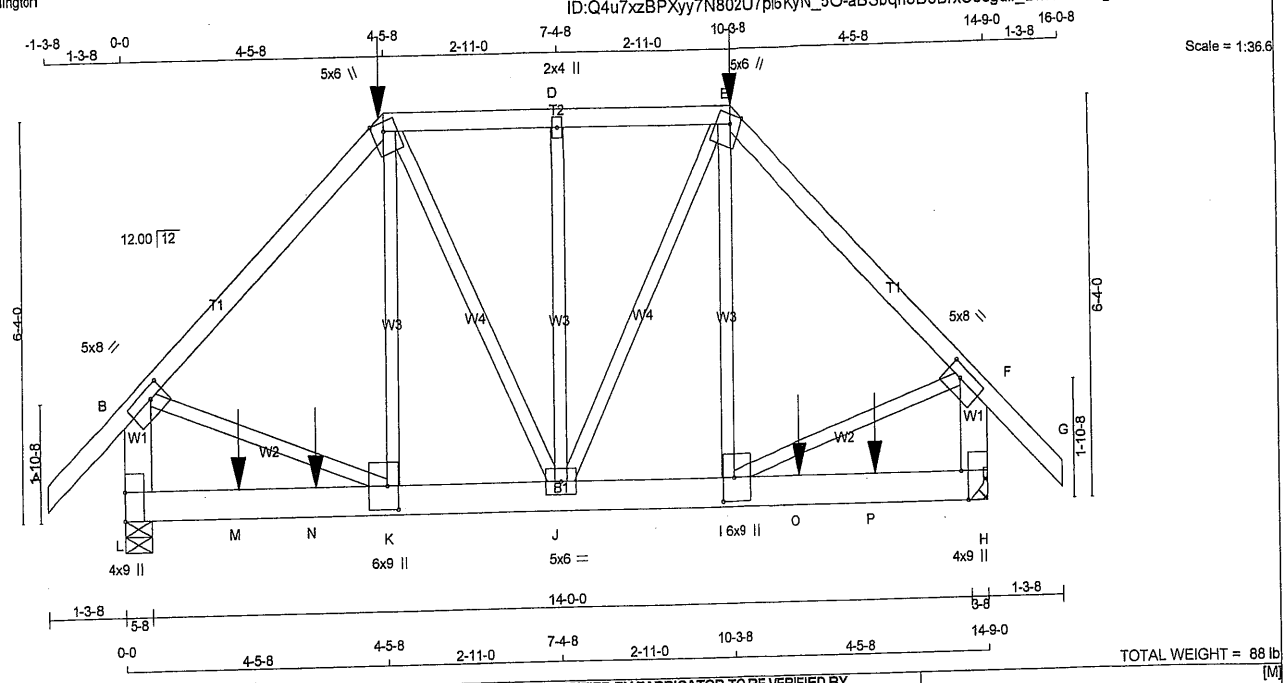

TOTAL WEIGHT = 88 lb [M]

LUMBER

N. L. G. A. RULES

CHORDS	SIZE		LUMBER	DESCR.
A - C	2x4	DRY	No.2	SPF
C - E	2x4	DRY	No.2	SPF
E - G	2x4	DRY	No.2	SPF
L - B	2x6	DRY	No.2	SPF
H - F	2x6	DRY	No.2	SPF
L - H	2x6	DRY	No.2	SPF
ALL WEBS EXCEPT	2x3	DRY	No.2	SPF

DRY: SEASONED LUMBER.

PLATES (table is in inches)

JT	TYPE	PLATES	W	LEN	Y	X
B	TMVW-t	MT20	5.0	8.0	2.00	3.00
C	TTWW+m	MT20	5.0	6.0	Edge	2.25
D	TMW+w	MT20	2.0	4.0		
E	TTWW+m	MT20	5.0	6.0	Edge	2.25
F	TMVW-t	MT20	5.0	8.0	2.00	3.00
H	BMV1+p	MT20	4.0	9.0	Edge	1.50
I	BMWW+t	MT20	6.0	9.0	4.50	2.25
J	BMWWW-t	MT20	5.0	6.0		
K	BMWW+t	MT20	6.0	9.0	4.50	2.25
L	BMV1+p	MT20	4.0	9.0	5.50	

Edge - INDICATES REFERENCE CORNER OF PLATE TOUCHES EDGE OF CHORD.

HANGERS NOTES

1) SPECIAL HANGER(S) OR CONNECTION(S) REQUIRED TO SUPPORT CONCENTRATED LOAD(S) 234.4 lbs FACTORED DOWN AT 4-5-8, AND 234.4 lbs FACTORED DOWN AT 10-3-8 ON TOP CHORD, AND 53.7 lbs FACTORED DOWN AT 1-11-4, 1033.5 lbs FACTORED DOWN AT 3-3-0, AND 1033.5 lbs FACTORED DOWN AT 11-6-0, AND 53.7 lbs FACTORED DOWN AT 12-9-12 ON BOTTOM CHORD. DESIGN FOR UNSPECIFIED CONNECTION(S) IS DELEGATED TO THE BUILDING DESIGNER.

DIMENSIONS, SUPPORTS AND LOADINGS SPECIFIED BY FABRICATOR TO BE VERIFIED BY BUILDING DESIGNER

BEARINGS

JT	FACTORED GROSS REACTION VERT	HORZ	MAXIMUM FACTORED GROSS REACTION DOWN	HORZ	UPLIFT	INPUT BRG	REQRD BRG
L	2982	0	2982	0	0	IN-SX 5-8	IN-SX 5-8
H	2982	0	2982	0	0	HANGER BY OTHERS MIN. SEAT SIZE: 3-8	

UNFACTORED REACTIONS

JT	1ST LCASE COMBINED	MAX./MIN. COMPONENT REACTIONS SNOW	LIVE	PERM.LIVE	WIND	DEAD	SOIL
L	2323	1400 / 0	363 / 0	0 / 0	0 / 0	561 / 0	0 / 0
H	2323	1400 / 0	363 / 0	0 / 0	0 / 0	561 / 0	0 / 0

BEARING MATERIAL TO BE SPF NO.2 OR BETTER AT JOINT(S) L

BRACING

TOP CHORD TO BE SHEATHED OR MAX. PURLIN SPACING = 3.66 FT.
MAX. UNBRACED BOTTOM CHORD LENGTH = 10.00 FT OR RIGID CEILING DIRECTLY APPLIED.

ALL PITCH BREAKS AND PERIMETER CORNER JOINTS MUST BE LATERALLY RESTRAINED.

LOADING

TOTAL LOAD CASES: (4)

CHORDS

MEMB. FR-TO	MAX. FACTORED FORCE (LBS)	FACTORED VERT. LOAD (PLF) FROM	TO	LC1 MAX CSI (LC)	MAX. UNBRAC LENGTH
A- B	0 / 61	-124.4	-124.4	0.19 (1)	10.00
B- C	-2427 / 0	-124.4	-124.4	0.69 (1)	3.66
C- D	-1791 / 0	-124.4	-124.4	0.22 (1)	4.74
D- E	-1791 / 0	-124.4	-124.4	0.22 (1)	4.74
E- F	-2427 / 0	-124.4	-124.4	0.69 (1)	3.66
F- G	0 / 61	-124.4	-124.4	0.19 (1)	10.00
L- B	-2712 / 0	0.0	0.0	0.21 (1)	6.29
H- F	-2712 / 0	0.0	0.0	0.21 (1)	6.29
L- M	0 / 0	-28.0	-28.0	0.51 (1)	10.00
M- N	0 / 0	-28.0	-28.0	0.51 (1)	10.00
N- K	0 / 0	-123.2	-123.2	0.51 (1)	10.00
K- J	0 / 1726	-123.2	-123.2	0.64 (1)	10.00
J- I	0 / 1726	-123.2	-123.2	0.64 (1)	10.00
I- O	0 / 0	-123.2	-123.2	0.51 (1)	10.00
O- P	0 / 0	-28.0	-28.0	0.51 (1)	10.00
P- H	0 / 0	-28.0	-28.0	0.51 (1)	10.00

WEBS

MEMB. FR-TO	MAX. FACTORED FORCE (LBS)	MAX CSI (LC)
K- C	0 / 916	0.23 (1)
C- J	0 / 148	0.04 (1)
J- D	-404 / 0	0.25 (1)
J- E	0 / 148	0.04 (1)
I- E	0 / 916	0.23 (1)
B- K	0 / 1793	0.44 (1)
I- F	0 / 1793	0.44 (1)

FACTORED CONCENTRATED LOADS (LBS)

JT	LOC.	LC1	MAX-	MAX+	FACE	DIR.	TYPE
C	4-5-8	-234	-234	—	BACK	VERT	TOTAL
E	10-3-8	-234	-234	—	BACK	VERT	TOTAL
M	1-11-4	-24	-54	—	BACK	VERT	TOTAL
N	3-3-0	-1033	-1033	—	BACK	VERT	TOTAL
O	11-6-0	-1033	-1033	—	BACK	VERT	TOTAL
P	12-9-12	-24	-54	—	BACK	VERT	TOTAL

DESIGN CRITERIA

SPECIFIED LOADS:

TOP CH.	LL	=	34.8	PSF
	DL	=	8.0	PSF
BOT CH.	LL	=	10.5	PSF
	DL	=	7.0	PSF
TOTAL LOAD		=	60.3	PSF

SPACING = 24.0 IN. C/C

LOADING IN FLAT SECTION BASED ON A SLOPE OF 6.00/12

GIRDER TYPE: CStdGirder
START DISTANCE = 3-3-0
START SPAN CARRIED = 4-6-0
END DISTANCE = 11-6-0
END SPAN CARRIED = 4-6-0
END WALL WIDTH = 0-0
APPLIED TO FRONT SIDE OF BOTTOM CHORD.
- ADDT'L LOADS BASED ON 55 % OF GSL.

THIS TRUSS IS DESIGNED FOR RESIDENTIAL OR SMALL BUILDING REQUIREMENTS OF PART 9, NBCC 2010

THIS DESIGN COMPLIES WITH:
- PART 9 OF OBC 2012 , BCBC 2012 , ABC 2014
- CSA 086-09
- TPIC 2011

(55 % OF 48.1 P.S.F. G.S.L. PLUS 8.4 P.S.F. RAIN LOAD) EQUALS 34.8 P.S.F. SPECIFIED ROOF LIVE LOAD

ALLOWABLE DEFL.(LL)= L/360 (0.49")
CALCULATED VERT. DEFL.(LL) = L/ 999 (0.06")
ALLOWABLE DEFL.(TL)= L/360 (0.49")
CALCULATED VERT. DEFL.(TL) = L/ 999 (0.09")

CSI: TC=0.69/1.00 (E-F:1) , BC=0.64/1.00 (I-J:1) , WB=0.44/1.00 (F-I:1) , SSI=0.69/1.00 (H-I:1)

DOL LUMBER=1.00 NAIL=1.00 LS BEND=1.00 COMP=1.00 SHEAR=1.00 TENS= 1.00

COMPANION LIVE LOAD FACTOR = 0.50

AUTOSOLVE HEELS OFF

TRUSS PLATE MANUFACTURER IS NOT RESPONSIBLE FOR QUALITY CONTROL IN THE TRUSS MANUFACTURING PLANT .

NAIL VALUES

PLATE	GRIP(DRY) (PSI) MAX	MIN	SHEAR (PLI) MAX	MIN	SECTION (PLI) MAX	MIN
MT20	618	354	1667	822	2284	1656

PLATE PLACEMENT TOL. = 0.250 inches

PLATE ROTATION TOL. = 5.0 Deg.

JSI GRIP= 0.82 (K) (INPUT = 0.90)
JSI METAL= 0.51 (B) (INPUT = 1.00)

PROFESSIONAL ENGINEER
LICENSED
1157B
S. KATSOULAKOS
PROVINCE OF ONTARIO

DWG NO. TAM 3610 -18

STRUCTURAL COMPONENT ONLY

JOB NAME	TRUSS NAME	QUANTITY	PLY	JOB DESC.	DRWG NO.
290317	T32	1	1	TRUSS DESC.	

Tamarack Roof Truss, Burlington

Version 8.200 S Dec 12 2017 MiTek Industries, Inc. Mon Jan 15 08:18:05 2018 Page 1

ID:Q4u7xzBPXyy7N802U7pi6KyN_5O-aBSbqh8D6BrxC3cgdlf_Bm1SVYVHC_COxcPFcCzvAzm

Scale = 1:47.1

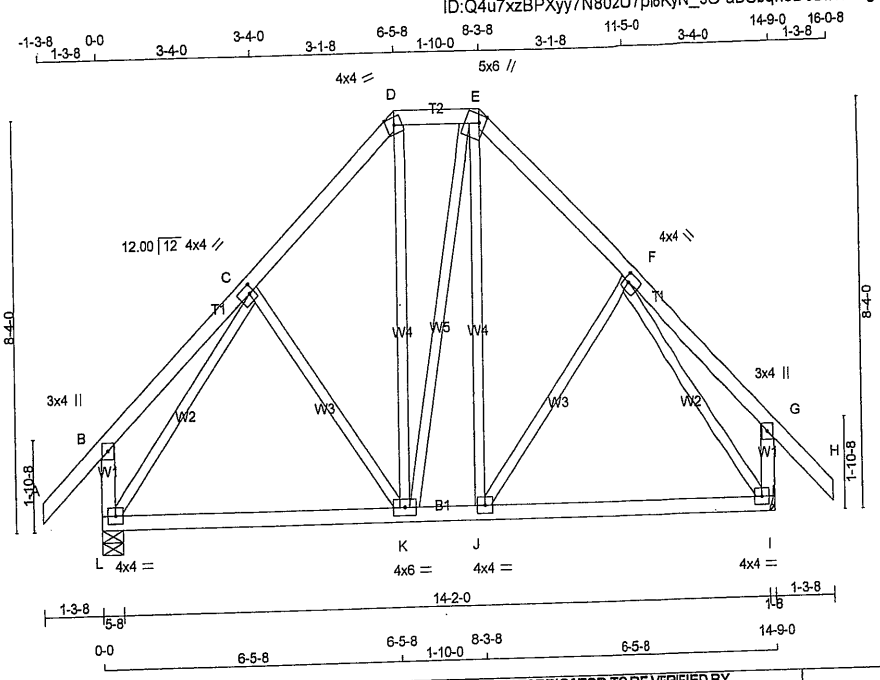

TOTAL WEIGHT = 85 lb

[M][F]

LUMBER

N. L. G. A. RULES

CHORDS	SIZE		LUMBER	DESCR.
A - D	2x4	DRY	No.2	SPF
D - E	2x4	DRY	No.2	SPF
E - H	2x4	DRY	No.2	SPF
L - B	2x4	DRY	No.2	SPF
I - G	2x4	DRY	No.2	SPF
L - I	2x4	DRY	No.2	SPF
ALL WEBS EXCEPT	2x3	DRY	No.2	SPF

DRY: SEASONED LUMBER.

PLATES (table is in inches)

JT	TYPE	PLATES	W	LEN	Y	X
B	TMV+p	MT20	3.0	4.0		
C	TMWW-t	MT20	4.0	4.0	2.00	1.25
D	TTW-m	MT20	4.0	4.0	Edge	
E	TTWW+m	MT20	5.0	6.0	2.00	1.50
F	TMWW-t	MT20	4.0	4.0	2.00	1.25
G	TMV+p	MT20	3.0	4.0		
I	BMVW1-t	MT20	4.0	4.0		
J	BMWW-t	MT20	4.0	4.0		
K	BMWWW-t	MT20	4.0	6.0		
L	BMVW1-t	MT20	4.0	4.0		

Edge - INDICATES REFERENCE CORNER OF PLATE TOUCHES EDGE OF CHORD.

DIMENSIONS, SUPPORTS AND LOADINGS SPECIFIED BY FABRICATOR TO BE VERIFIED BY BUILDING DESIGNER

BEARINGS

JT	FACTORED GROSS REACTION VERT	HORZ	MAXIMUM FACTORED GROSS REACTION DOWN	HORZ	UPLIFT	INPUT BRG IN-SX	REQRD BRG IN-SX
L	1297	0	1297	0	0	5-8	5-8
I	1297	0	1297	0	0	HANGER BY OTHERS MIN. SEAT SIZE: 1-8	

UNFACTORED REACTIONS

JT	1ST LCASE COMBINED	MAX./MIN. COMPONENT REACTIONS SNOW	LIVE	PERM.LIVE	WIND	DEAD	SOIL
L	1009	610 / 0	155 / 0	0 / 0	0 / 0	244 / 0	0 / 0
I	1009	610 / 0	155 / 0	0 / 0	0 / 0	244 / 0	0 / 0

BEARING MATERIAL TO BE SPF NO.2 OR BETTER AT JOINT(S) L

BRACING

TOP CHORD TO BE SHEATHED OR MAX. PURLIN SPACING = 6.25 FT.
MAX. UNBRACED BOTTOM CHORD LENGTH = 10.00 FT OR RIGID CEILING DIRECTLY APPLIED.

ALL PITCH BREAKS AND PERIMETER CORNER JOINTS MUST BE LATERALLY RESTRAINED.

LOADING

TOTAL LOAD CASES: (4)

CHORDS

MEMB. FR-TO	MAX. FACTORED FORCE (LBS)	FACTORED VERT. LOAD (PLF) FROM	TO	LC1	MAX CSI (LC)	MAX. UNBRAC LENGTH
A- B	0 / 61	-124.4	-124.4	0.17 (1)	10.00	
B- C	0 / 33	-124.4	-124.4	0.21 (1)	10.00	
C- D	-771 / 0	-124.4	-124.4	0.16 (1)	6.25	
D- E	-523 / 0	-124.4	-124.4	0.06 (1)	6.25	
E- F	-769 / 0	-124.4	-124.4	0.16 (1)	6.25	
F- G	0 / 33	-124.4	-124.4	0.21 (1)	10.00	
G- H	0 / 61	-124.4	-124.4	0.17 (1)	10.00	
L- B	-325 / 0	0.0	0.0	0.04 (1)	7.81	
I- G	-325 / 0	0.0	0.0	0.04 (1)	7.81	
L- K	0 / 607	-28.0	-28.0	0.34 (3)	10.00	
K- J	0 / 522	-28.0	-28.0	0.34 (3)	10.00	
J- I	0 / 606	-28.0	-28.0	0.33 (3)	10.00	

WEBS

MEMB. FR-TO	MAX. FACTORED FORCE (LBS)	MAX CSI (LC)
C- K	-149 / 25	0.09 (1)
K- D	0 / 252	0.06 (1)
K- E	0 / 6	0.00 (1)
J- E	0 / 245	0.06 (1)
J- F	-149 / 25	0.09 (1)
L- C	-1083 / 0	0.59 (1)
F- I	-1081 / 0	0.58 (1)

DESIGN CRITERIA

SPECIFIED LOADS:

TOP CH.	LL	=	34.8	PSF
	DL	=	8.0	PSF
BOT CH.	LL	=	10.5	PSF
	DL	=	7.0	PSF
TOTAL LOAD		=	60.3	PSF

SPACING = 24.0 IN. C/C

LOADING IN FLAT SECTION BASED ON A SLOPE OF 6.00/12

THIS TRUSS IS DESIGNED FOR RESIDENTIAL OR SMALL BUILDING REQUIREMENTS OF PART 9, NBCC 2010

THIS DESIGN COMPLIES WITH:
- PART 9 OF OBC 2012 , BCBC 2012 , ABC 2014
- CSA 086-09
- TPIC 2011

(55 % OF 48.1 P.S.F. G.S.L. PLUS 8.4 P.S.F. RAIN LOAD) EQUALS 34.8 P.S.F. SPECIFIED ROOF LIVE LOAD

ALLOWABLE DEFL.(LL)= L/360 (0.49")
CALCULATED VERT. DEFL.(LL) = L/ 999 (0.08")
ALLOWABLE DEFL.(TL)= L/360 (0.49")
CALCULATED VERT. DEFL.(TL) = L/ 999 (0.13")

CSI: TC=0.21/1.00 (F-G:1) , BC=0.34/1.00 (J-K:3) , WB=0.59/1.00 (C-L:1) , SSI=0.17/1.00 (K-L:3)

DOL LUMBER=1.00 NAIL=1.00 LS BEND=1.10 COMP=1.10 SHEAR=1.10 TENS= 1.10

COMPANION LIVE LOAD FACTOR = 0.50

TRUSS PLATE MANUFACTURER IS NOT RESPONSIBLE FOR QUALITY CONTROL IN THE TRUSS MANUFACTURING PLANT .

NAIL VALUES

PLATE	GRIP(DRY) (PSI) MAX	MIN	SHEAR (PLI) MAX	MIN	SECTION (PLI) MAX	MIN
MT20	618	354	1667	822	2284	1656

PLATE PLACEMENT TOL. = 0.250 inches

PLATE ROTATION TOL. = 5.0 Deg.

JSI GRIP= 0.89 (C) (INPUT = 0.90)
JSI METAL= 0.41 (C) (INPUT = 1.00)

LICENSED PROFESSIONAL ENGINEER
1157
S. KATSOULAKOS
PROVINCE OF ONTARIO

DWG NO. TAM 3611 -18
STRUCTURAL
COMPONENT ONLY

JOB NAME	TRUSS NAME	QUANTITY	PLY	JOB DESC.	DRWG NO.
290317	T33	1	2	TRUSS DESC.	

Tamarack Roof Truss, Burlington

Version 8.200 S Dec 12 2017 MiTek Industries, Inc. Mon Jan 15 08:18:06 2018 Page 1
ID:Q4u7xzBPXyy7N802U7pi6KyN_5O-2O0z118rtV_oqDBsBTADk_aYdxkIxXGY9G8o9ezvAzl

Scale = 1:62.9

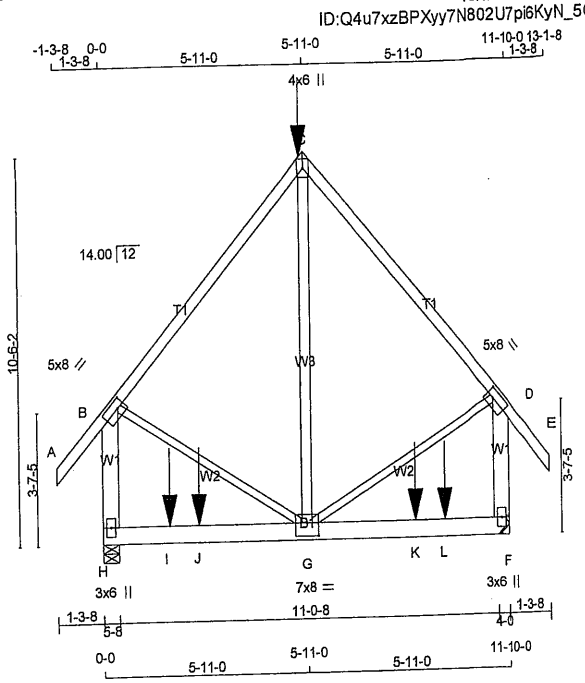

TOTAL WEIGHT = 2 X 80 = 160 lb [M]

LUMBER

N. L. G. A. RULES

CHORDS	SIZE		LUMBER	DESCR.
A - C	2x4	DRY	No.2	SPF
C - E	2x4	DRY	No.2	SPF
H - B	2x6	DRY	No.2	SPF
F - D	2x6	DRY	No.2	SPF
H - F	2x6	DRY	No.2	SPF
ALL WEBS EXCEPT	2x3	DRY	No.2	SPF
G - C	2x4	DRY	No.2	SPF

DRY: SEASONED LUMBER.

DESIGN CONSISTS OF 2 TRUSSES BUILT SEPARATELY THEN FASTENED TOGETHER AS FOLLOWS:

CHORDS	#ROWS	SURFACE SPACING (IN)	LOAD(PLF)
TOP CHORDS : (0.122"X3") SPIRAL NAILS			
A- C	1	12	SIDE(61.0)
C- E	1	12	SIDE(61.0)
H- B	2	12	TOP
F- D	2	12	TOP
BOTTOM CHORDS : (0.122"X3") SPIRAL NAILS			
H- F	2	12	SIDE(114.3)
WEBS : (0.122"X3") SPIRAL NAILS			
2x3	1	6	
G- C	1	6	SIDE(184.3)

NAILS TO BE DRIVEN FROM ONE SIDE ONLY.

GIRDER NAILING ASSUMES NAILED HANGERS ARE FASTENED WITH MIN. 3-0 INCH NAILS.

TOP - COMPONENTS ARE LOADED FROM THE TOP AND MUST BE PLACED ON TOP EDGE OF ALL PLIES FOR THE LOAD TO BE TRANSFERRED TO EACH PLY.

SIDE - PLF SHOWN IS THE EQUIVALENT UDL APPLIED TO ONE SIDE THAT THE CORRESPONDING NAILING PATTERN SHALL BE CAPABLE OF TRANSFERING. REMAINING PLF MUST BE APPLIED ON THE OPPOSITE SIDE OR ON THE TOP.

PLATES (table is in inches)

JT	TYPE	PLATES	W	LEN	Y	X
B	TMVW-t	MT20	5.0	8.0	2.50	2.50
C	TTW+p	MT20	4.0	6.0		
D	TMVW-t	MT20	5.0	8.0	2.50	2.50
F	BMV1+p	MT20	3.0	6.0		
G	BMWWW-t	MT20	7.0	8.0	4.25	4.00
H	BMV1+p	MT20	3.0	6.0		

HANGERS NOTES

1) SPECIAL HANGER(S) OR CONNECTION(S) REQUIRED TO SUPPORT CONCENTRATED LOAD(S) 1174.0 lbs FACTORED DOWN AT 5-11-0 ON TOP CHORD, AND 392.1 lbs FACTORED DOWN AT 1-11-4, 1130.3 lbs FACTORED DOWN AT 2-9-8, AND 1130.3 lbs FACTORED DOWN AT 9-0-8, AND 392.1 lbs FACTORED DOWN AT 9-10-12 ON BOTTOM CHORD. DESIGN FOR UNSPECIFIED CONNECTION(S) IS DELEGATED TO THE BUILDING DESIGNER.

DIMENSIONS, SUPPORTS AND LOADINGS SPECIFIED BY FABRICATOR TO BE VERIFIED BY BUILDING DESIGNER

BEARINGS

JT	FACTORED GROSS REACTION VERT	HORZ	MAXIMUM FACTORED GROSS REACTION DOWN	HORZ	UPLIFT	INPUT BRG IN-SX	REQRD BRG IN-SX
H	3900	0	3900	0	0	5-8	5-8
F	3900	0	3900	0	0	HANGER BY OTHERS MIN. SEAT SIZE: 4-0	

UNFACTORED REACTIONS

JT	1ST LCASE COMBINED	MAX./MIN. COMPONENT REACTIONS SNOW	LIVE	PERM.LIVE	WIND	DEAD	SOIL
H	2984	1882 / 0	401 / 0	0 / 0	0 / 0	701 / 0	0 / 0
F	2984	1882 / 0	401 / 0	0 / 0	0 / 0	701 / 0	0 / 0

BEARING MATERIAL TO BE SPF NO.2 OR BETTER AT JOINT(S) H

BRACING

TOP CHORD TO BE SHEATHED OR MAX. PURLIN SPACING = 5.22 FT.
MAX. UNBRACED BOTTOM CHORD LENGTH = 10.00 FT OR RIGID CEILING DIRECTLY APPLIED.

ALL PITCH BREAKS AND PERIMETER CORNER JOINTS MUST BE LATERALLY RESTRAINED.

LOADING

TOTAL LOAD CASES: (4)

CHORDS

MEMB. FR-TO	MAX. FACTORED FORCE (LBS)	FACTORED VERT. LOAD (PLF) FROM	TO	LC1	MAX CSI (LC)	MAX. UNBRAC LENGTH
A- B	0 / 66	-124.4	-124.4	0.10 (1)	10.00	
B- C	-2344 / 0	-124.4	-124.4	0.57 (1)	5.22	
C- D	-2344 / 0	-124.4	-124.4	0.57 (1)	5.22	
D- E	0 / 66	-124.4	-124.4	0.10 (1)	10.00	
H- B	-3136 / 0	0.0	0.0	0.23 (1)	7.80	
F- D	-3136 / 0	0.0	0.0	0.23 (1)	7.80	
H- I	0 / 0	-28.0	-28.0	0.80 (1)	10.00	
I- J	0 / 0	-28.0	-28.0	0.80 (1)	10.00	
J- G	0 / 0	-256.6	-256.6	0.80 (1)	10.00	
G- K	0 / 0	-256.6	-256.6	0.80 (1)	10.00	
K- L	0 / 0	-28.0	-28.0	0.80 (1)	10.00	
L- F	0 / 0	-28.0	-28.0	0.80 (1)	10.00	

WEBS

MEMB. FR-TO	MAX. FACTORED FORCE (LBS)	MAX CSI (LC)
G- C	0 / 1650	0.15 (1)
B- G	0 / 1729	0.21 (1)
G- D	0 / 1729	0.21 (1)

FACTORED CONCENTRATED LOADS (LBS)

JT	LOC.	LC1	MAX-	MAX+	FACE	DIR.	TYPE
C	5-11-0	-190	-213	—	FRONT	VERT	DEAD
C	5-11-0	-984	-984	—	FRONT	VERT	SNOW
I	1-11-4	-392	-392	—	FRONT	VERT	TOTAL
J	2-9-8	-1130	-1130	—	FRONT	VERT	TOTAL
K	9-0-8	-1130	-1130	—	FRONT	VERT	TOTAL
L	9-10-12	-392	-392	—	FRONT	VERT	TOTAL

LICENSED PROFESSIONAL ENGINEER
S. KATSOULAKOS
7156
PROVINCE OF ONTARIO

DWG NO. TAM 3612 -18
STRUCTURAL COMPONENT ONLY

DESIGN CRITERIA

*** SPECIAL LOADS ANALYSIS ***
GEOMETRY AND/OR BASIC LOADS CHANGED BY USER.
LOADS WERE DERIVED FROM USER INPUT
NO FURTHER MODIFICATIONS WERE MADE

SPECIFIED LOADS:

TOP CH.	LL	=	34.8	PSF
	DL	=	8.0	PSF
BOT CH.	LL	=	10.5	PSF
	DL	=	7.0	PSF
TOTAL LOAD		=	60.3	PSF

SPACING = 24.0 IN. C/C

GIRDER TYPE: CStdGirder
START DISTANCE = 2-9-8
START SPAN CARRIED = 8-0-0
END DISTANCE = 9-0-8
END SPAN CARRIED = 8-0-0
END WALL WIDTH = 0-0
APPLIED TO FRONT SIDE OF BOTTOM CHORD.
- ADDT'L LOADS BASED ON 55 % OF GSL.

*** NON STANDARD GIRDER ***
ADDT'L USER-DEFINED LOADS APPLIED TO ALL LOAD CASES.

THIS TRUSS IS DESIGNED FOR RESIDENTIAL OR SMALL BUILDING REQUIREMENTS OF PART 9, NBCC 2010

THIS DESIGN COMPLIES WITH:
- PART 9 OF OBC 2012 , BCBC 2012 , ABC 2014
- CSA 086-09
- TPIC 2011

(55 % OF 48.1 P.S.F. G.S.L. PLUS 8.4 P.S.F. RAIN LOAD) EQUALS 34.8 P.S.F. SPECIFIED ROOF LIVE LOAD

ALLOWABLE DEFL.(LL)= L/360 (0.39")
CALCULATED VERT. DEFL.(LL) = L/ 999 (0.07")
ALLOWABLE DEFL.(TL)= L/360 (0.39")
CALCULATED VERT. DEFL.(TL) = L/ 999 (0.12")

CSI: TC=0.57/1.00 (B-C:1) , BC=0.80/1.00 (F-G:1) , WB=0.21/1.00 (B-G:1) , SSI=0.54/1.00 (G-H:1)

DOL LUMBER=1.00 NAIL=1.00 LS BEND=1.00 COMP=1.00 SHEAR=1.00 TENS= 1.00

COMPANION LIVE LOAD FACTOR = 0.50

AUTOSOLVE HEELS OFF

TRUSS PLATE MANUFACTURER IS NOT RESPONSIBLE FOR QUALITY CONTROL IN THE TRUSS MANUFACTURING PLANT .

NAIL VALUES

PLATE	GRIP(DRY) (PSI) MAX	MIN	SHEAR (PLI) MAX	MIN	SECTION (PLI) MAX	MIN
MT20	618	354	1667	822	2284	1656

PLATE PLACEMENT TOL. = 0.250 inches

PLATE ROTATION TOL. = 5.0 Deg.

CONTINUED ON PAGE 2

JOB NAME	TRUSS NAME	QUANTITY	PLY	JOB DESC.	DRWG NO.
290317	T33	1	2	TRUSS DESC.	

Version 8.200 S Dec 12 2017 MiTek Industries, Inc. Mon Jan 15 08:18:06 2018 Page 2

Tamarack Roof Truss, Burlington

ID:Q4u7xzBPXyy7N802U7pi6KyN_5O-2O0z118rtV_oqDBsBTADk_aYdxklxXGY9G8o9ezvAzl

JSI GRIP= 0.64 (G) (INPUT = 0.90)
JSI METAL= 0.26 (B) (INPUT = 1.00)

LICENSED PROFESSIONAL ENGINEER
1578
S. KATSOULAKOS
PROVINCE OF ONTARIO

DWG NO. TAM 3612 -18
STRUCTURAL
COMPONENT ONLY

JOB NAME	TRUSS NAME	QUANTITY	PLY	JOB DESC.	DRWG NO.
290317	T34	2	1	TRUSS DESC.	

Tamarack Roof Truss, Burlington

Version 8.200 S Dec 12 2017 MiTek Industries, Inc. Mon Jan 15 08:18:06 2018 Page 1
ID:Q4u7xzBPXyy7N802U7pi6KyN_5O-2O0z118rtV_oqDBsBTADk_abuxv2xZ5Y9G8o9ezvAzl

Scale = 1:34.5

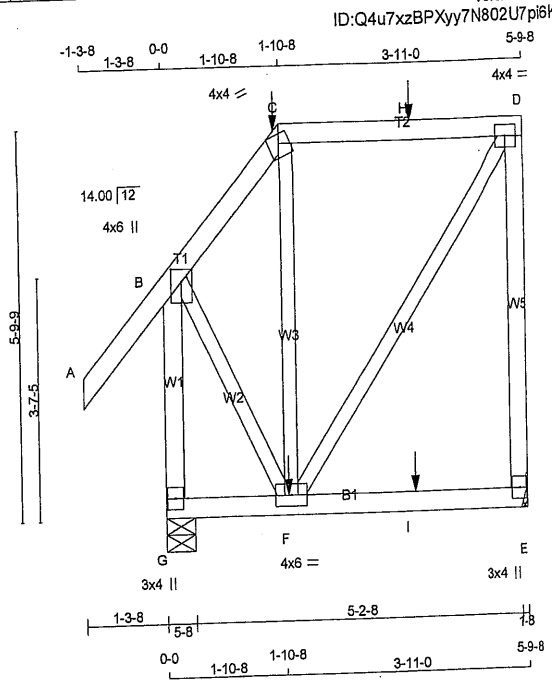

TOTAL WEIGHT = 2 X 39 = 78 lb [M]

LUMBER

N. L. G. A. RULES

CHORDS	SIZE		LUMBER	DESCR.
A - C	2x4	DRY	No.2	SPF
C - D	2x4	DRY	No.2	SPF
E - D	2x4	DRY	No.2	SPF
G - B	2x4	DRY	No.2	SPF
G - E	2x4	DRY	No.2	SPF
ALL WEBS EXCEPT	2x3	DRY	No.2	SPF

DRY: SEASONED LUMBER.

PLATES (table is in inches)

JT	TYPE	PLATES	W	LEN	Y	X
B	TMVW+p	MT20	4.0	6.0	2.25	2.00
C	TTW-m	MT20	4.0	4.0	Edge	
D	TMVW-t	MT20	4.0	4.0		
E	BMV1+p	MT20	3.0	4.0		
F	BMWWW-t	MT20	4.0	6.0		
G	BMV1+p	MT20	3.0	4.0		

Edge - INDICATES REFERENCE CORNER OF PLATE TOUCHES EDGE OF CHORD.

HANGERS NOTES

1) SPECIAL HANGER(S) OR CONNECTION(S) REQUIRED TO SUPPORT CONCENTRATED LOAD(S) 1.0 lbs FACTORED DOWN AND 159.1 lbs FACTORED UP AT 1-10-8, AND 1.0 lbs FACTORED DOWN AND 159.1 lbs FACTORED UP AT 3-11-4 ON TOP CHORD, AND 1.0 lbs FACTORED DOWN AT 1-11-4, AND 1.0 lbs FACTORED DOWN AT 3-11-4 ON BOTTOM CHORD. DESIGN FOR UNSPECIFIED CONNECTION(S) IS DELEGATED TO THE BUILDING DESIGNER.

DIMENSIONS, SUPPORTS AND LOADINGS SPECIFIED BY FABRICATOR TO BE VERIFIED BY BUILDING DESIGNER

BEARINGS

JT	FACTORED GROSS REACTION VERT	HORZ	MAXIMUM FACTORED GROSS REACTION DOWN	HORZ	UPLIFT	INPUT BRG IN-SX	REQRD BRG IN-SX
E	420	0	420	0	0	HANGER BY OTHERS MIN. SEAT SIZE: 1-8	
G	637	0	637	0	0	5-8	5-8

UNFACTORED REACTIONS

JT	1ST LCASE COMBINED	MAX./MIN. COMPONENT REACTIONS SNOW	LIVE	PERM.LIVE	WIND	DEAD	SOIL
E	335	190 / 0	61 / 0	0 / 0	0 / 0	84 / 0	0 / 0
G	484	311 / 0	61 / 0	0 / 0	0 / 0	112 / 0	0 / 0

BEARING MATERIAL TO BE SPF NO.2 OR BETTER AT JOINT(S) G

BRACING

TOP CHORD TO BE SHEATHED OR MAX. PURLIN SPACING = 6.25 FT.
MAX. UNBRACED BOTTOM CHORD LENGTH = 10.00 FT OR RIGID CEILING DIRECTLY APPLIED.

ALL PITCH BREAKS AND PERIMETER CORNER JOINTS MUST BE LATERALLY RESTRAINED.

LOADING

TOTAL LOAD CASES: (7)

CHORDS

MEMB. FR-TO	MAX. FACTORED FORCE (LBS)	FACTORED VERT. LOAD (PLF) FROM	TO	LC1	MAX CSI (LC)	MAX. UNBRAC LENGTH
A- B	0 / 66	-124.4	-124.4	0.19 (1)	10.00	
B- C	-197 / 0	-124.4	-124.4	0.18 (1)	6.25	
C- H	-91 / 0	-124.4	-124.4	0.36 (1)	6.25	
H- D	-91 / 0	-124.4	-124.4	0.36 (1)	6.25	
E- D	-375 / 0	0.0	0.0	0.24 (1)	7.81	
G- B	-624 / 0	0.0	0.0	0.14 (1)	7.81	
G- F	0 / 0	-28.0	-28.0	0.11 (7)	10.00	
F- I	0 / 0	-28.0	-28.0	0.11 (7)	10.00	
I- E	0 / 0	-28.0	-28.0	0.11 (7)	10.00	

WEBS

MEMB. FR-TO	MAX. FACTORED FORCE (LBS)	MAX CSI (LC)
F- C	-183 / 18	0.10 (1)
F- D	0 / 160	0.04 (1)
B- F	0 / 182	0.05 (1)

FACTORED CONCENTRATED LOADS (LBS)

JT	LOC.	LC1	MAX-	MAX+	FACE	DIR.	TYPE
C	1-10-8	1	1	159	BACK	VERT	TOTAL
F	1-11-4	1	1	—	BACK	VERT	TOTAL
H	3-11-4	1	1	159	BACK	VERT	TOTAL
I	3-11-4	1	1	—	BACK	VERT	TOTAL

LICENSED PROFESSIONAL ENGINEER
11578
S. KATSOULAKOS
PROVINCE OF ONTARIO

DESIGN CRITERIA

SPECIFIED LOADS:

TOP CH.	LL	=	34.8	PSF
	DL	=	8.0	PSF
BOT CH.	LL	=	10.5	PSF
	DL	=	7.0	PSF
TOTAL LOAD		=	60.3	PSF

SPACING = 24.0 IN. C/C

LOADING IN FLAT SECTION BASED ON A SLOPE OF 6.00/12

THIS TRUSS IS DESIGNED FOR RESIDENTIAL OR SMALL BUILDING REQUIREMENTS OF PART 9, NBCC 2010

THIS DESIGN COMPLIES WITH:
- PART 9 OF OBC 2012 , BCBC 2012 , ABC 2014
- CSA 086-09
- TPIC 2011

DESIGN ASSUMPTIONS
-OVERHANG NOT TO BE ALTERED OR CUT OFF.

(55 % OF 48.1 P.S.F. G.S.L. PLUS 8.4 P.S.F. RAIN LOAD) EQUALS 34.8 P.S.F. SPECIFIED ROOF LIVE LOAD

ALLOWABLE DEFL.(LL)= L/360 (0.19")
CALCULATED VERT. DEFL.(LL) = L/ 999 (0.01")
ALLOWABLE DEFL.(TL)= L/360 (0.19")
CALCULATED VERT. DEFL.(TL) = L/ 999 (0.02")

CSI: TC=0.36/1.00 (C-D:1) , BC=0.11/1.00 (E-F:7) , WB=0.10/1.00 (C-F:1) , SSI=0.21/1.00 (C-D:1)

DOL LUMBER=1.00 NAIL=1.00 LS BEND=1.00 COMP=1.00 SHEAR=1.00 TENS= 1.00

COMPANION LIVE LOAD FACTOR = 0.50

TRUSS PLATE MANUFACTURER IS NOT RESPONSIBLE FOR QUALITY CONTROL IN THE TRUSS MANUFACTURING PLANT .

NAIL VALUES

PLATE	GRIP(DRY) (PSI) MAX	MIN	SHEAR (PLI) MAX	MIN	SECTION (PLI) MAX	MIN
MT20	618	354	1667	822	2284	1656

PLATE PLACEMENT TOL. = 0.250 inches

PLATE ROTATION TOL. = 5.0 Deg.

JSI GRIP= 0.37 (B) (INPUT = 0.90)
JSI METAL= 0.09 (B) (INPUT = 1.00)

DWG NO. TAM 3613 -18
STRUCTURAL COMPONENT ONLY

JOB NAME	TRUSS NAME	QUANTITY	PLY	JOB DESC.	DRWG NO.
290317	T35	2	2	TRUSS DESC.	

Tamarack Roof Truss, Burlington

Version 8.200 S Dec 12 2017 MiTek Industries, Inc. Mon Jan 15 08:18:06 2018 Page 1
ID:Q4u7xzBPXyy7N802U7pi6KyN_5O-2O0z118rtV_oqDBsBTADk_aYSxvExXsY9G8o9ezvAz

Scale = 1:39.1

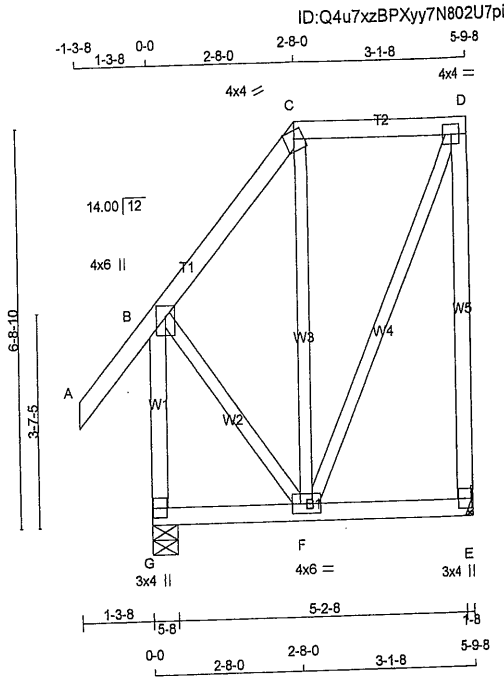

TOTAL WEIGHT = 4 X 42 = 167 lb [M]

LUMBER

N. L. G. A. RULES

CHORDS	SIZE		LUMBER	DESCR.
A - C	2x4	DRY	No.2	SPF
C - D	2x4	DRY	No.2	SPF
E - D	2x4	DRY	No.2	SPF
G - B	2x4	DRY	No.2	SPF
G - E	2x4	DRY	No.2	SPF
ALL WEBS EXCEPT	2x3	DRY	No.2	SPF

DRY: SEASONED LUMBER.

DESIGN CONSISTS OF 2 TRUSSES BUILT SEPARATELY THEN FASTENED TOGETHER AS FOLLOWS:

CHORDS	#ROWS	SURFACE SPACING (IN)	LOAD(PLF)
TOP CHORDS : (0.122"X3") SPIRAL NAILS			
A- C	1	12	SIDE(65.3)
C- D	1	12	SIDE(101.0)
D- E	1	12	TOP
G- B	1	12	TOP
BOTTOM CHORDS : (0.122"X3") SPIRAL NAILS			
G- E	1	12	SIDE(39.8)
WEBS : (0.122"X3") SPIRAL NAILS			
2x3	1	6	

NAILS TO BE DRIVEN FROM ONE SIDE ONLY.

TOP - COMPONENTS ARE LOADED FROM THE TOP AND MUST BE PLACED ON TOP EDGE OF ALL PLIES FOR THE LOAD TO BE TRANSFERRED TO EACH PLY.

SIDE - PLF SHOWN IS THE EQUIVALENT UDL APPLIED TO ONE SIDE THAT THE CORRESPONDING NAILING PATTERN SHALL BE CAPABLE OF TRANSFERING. REMAINING PLF MUST BE APPLIED ON THE OPPOSITE SIDE OR ON THE TOP.

PLATES (table is in Inches)

JT	TYPE	PLATES	W	LEN	Y	X
B	TMVW+p	MT20	4.0	6.0	2.25	2.00
C	TTW-m	MT20	4.0	4.0	Edge	
D	TMVW-t	MT20	4.0	4.0		
E	BMV1+p	MT20	3.0	4.0		
F	BMWWW-t	MT20	4.0	6.0		
G	BMV1+p	MT20	3.0	4.0		

Edge - INDICATES REFERENCE CORNER OF PLATE TOUCHES EDGE OF CHORD.

DIMENSIONS, SUPPORTS AND LOADINGS SPECIFIED BY FABRICATOR TO BE VERIFIED BY BUILDING DESIGNER

BEARINGS

JT	FACTORED GROSS REACTION VERT	HORZ	MAXIMUM FACTORED GROSS REACTION DOWN	HORZ	UPLIFT	INPUT BRG	REQRD BRG
E	1158	0	1158	0	0	IN-SX	IN-SX
						HANGER BY OTHERS	
						MIN. SEAT SIZE: 1-8	
G	1333	0	1333	0	0	5-8	5-8

UNFACTORED REACTIONS

JT	1ST LCASE COMBINED	MAX./MIN. COMPONENT REACTIONS SNOW	LIVE	PERM.LIVE	WIND	DEAD	SOIL
E	917	529 / 0	160 / 0	0 / 0	0 / 0	228 / 0	0 / 0
G	1037	627 / 0	160 / 0	0 / 0	0 / 0	250 / 0	0 / 0

BEARING MATERIAL TO BE SPF NO.2 OR BETTER AT JOINT(S) G

BRACING

TOP CHORD TO BE SHEATHED OR MAX. PURLIN SPACING = 6.25 FT.
MAX. UNBRACED BOTTOM CHORD LENGTH = 10.00 FT OR RIGID CEILING DIRECTLY APPLIED.

ALL PITCH BREAKS AND PERIMETER CORNER JOINTS MUST BE LATERALLY RESTRAINED.

LOADING

TOTAL LOAD CASES: (4)

CHORDS

MEMB. FR-TO	MAX. FACTORED FORCE (LBS)	FACTORED VERT. LOAD LC1 (PLF) FROM	TO	MAX CSI (LC)	MAX. UNBRAC LENGTH
A- B	0 / 66	-124.4	-124.4	0.10 (1)	10.00
B- C	-422 / 0	-326.5	-326.5	0.22 (1)	6.25
C- D	-263 / 0	-326.5	-326.5	0.30 (1)	6.25
E- D	-1066 / 0	0.0	0.0	0.51 (1)	7.81
G- B	-1251 / 0	0.0	0.0	0.15 (1)	7.81
G- F	0 / 0	-73.5	-73.5	0.10 (3)	10.00
F- E	0 / 0	-73.5	-73.5	0.10 (3)	10.00

WEBS

MEMB. FR-TO	MAX. FACTORED FORCE (LBS)	MAX CSI (LC)
F- C	-627 / 8	0.24 (1)
F- D	0 / 617	0.08 (1)
B- F	0 / 420	0.05 (1)

DESIGN CRITERIA

SPECIFIED LOADS:

TOP CH.	LL	=	34.8	PSF
	DL	=	8.0	PSF
BOT CH.	LL	=	10.5	PSF
	DL	=	7.0	PSF
TOTAL LOAD		=	60.3	PSF

SPACING = 24.0 IN. C/C

LOADING IN FLAT SECTION BASED ON A SLOPE OF 6.00/12

GIRDER TYPE: CPrimeHip
SIDE SETBACK = 0-0
END SETBACK = 8-6-0
END WALL WIDTH = 0-0
CORNER FRAMING TYPE: CONVENTIONAL
END JACK TYPE: CONVENTIONAL
APPLIED TO FRONT SIDE
- ADDT'L LOADS BASED ON 55 % OF GSL.

THIS TRUSS IS DESIGNED FOR RESIDENTIAL OR SMALL BUILDING REQUIREMENTS OF PART 9, NBCC 2010

THIS DESIGN COMPLIES WITH:
- PART 9 OF OBC 2012 , BCBC 2012 , ABC 2014
- CSA 086-09
- TPIC 2011

(55 % OF 48.1 P.S.F. G.S.L. PLUS 8.4 P.S.F. RAIN LOAD) EQUALS 34.8 P.S.F. SPECIFIED ROOF LIVE LOAD

ALLOWABLE DEFL.(LL)= L/360 (0.19")
CALCULATED VERT. DEFL.(LL) = L/ 999 (0.01")
ALLOWABLE DEFL.(TL)= L/360 (0.19")
CALCULATED VERT. DEFL.(TL) = L/ 999 (0.01")

CSI: TC=0.51/1.00 (D-E:1) , BC=0.10/1.00 (F-G:3) , WB=0.24/1.00 (C-F:1) , SSI=0.22/1.00 (C-D:1)

DOL LUMBER=1.00 NAIL=1.00 LS BEND=1.00 COMP=1.00 SHEAR=1.00 TENS= 1.00

COMPANION LIVE LOAD FACTOR = 0.50

TRUSS PLATE MANUFACTURER IS NOT RESPONSIBLE FOR QUALITY CONTROL IN THE TRUSS MANUFACTURING PLANT .

NAIL VALUES

PLATE	GRIP(DRY) (PSI) MAX	MIN	SHEAR (PLI) MAX	MIN	SECTION (PLI) MAX	MIN
MT20	618	354	1667	822	2284	1656

PLATE PLACEMENT TOL. = 0.250 inches

PLATE ROTATION TOL. = 5.0 Deg.

JSI GRIP= 0.42 (F) (INPUT = 0.90)
JSI METAL= 0.09 (B) (INPUT = 1.00)

LICENSED PROFESSIONAL ENGINEER
1176
S. KATSOULAKOS
PROVINCE OF ONTARIO

DWG NO. TAM3614 -1R
STRUCTURAL COMPONENT ONLY

JOB NAME	TRUSS NAME	QUANTITY	PLY	JOB DESC.	DRWG NO.
290317	T50	1	2	TRUSS DESC.	

Tamarack Roof Truss, Burlington

Version 8.200 S Dec 12 2017 MiTek Industries, Inc. Mon Jan 15 08:18:06 2018 Page 1
ID:Q4u7xzBPXyy7N802U7pi6KyN_5O-2O0z118rtV_oqDBsBTADk_aeTxqAxUuY9G8o9ezvAz

Scale = 1:31.3

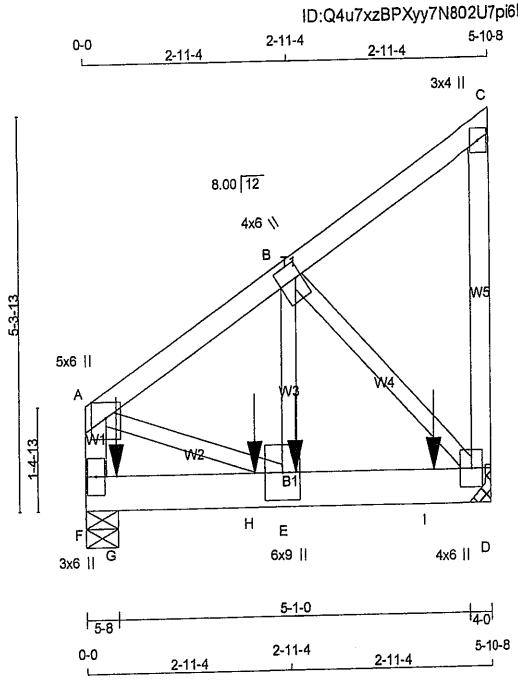

TOTAL WEIGHT = 2 X 32 = 64 lb [M]

LUMBER

N. L. G. A. RULES

CHORDS	SIZE		LUMBER	DESCR.
F - A	2x4	DRY	No.2	SPF
A - C	2x4	DRY	No.2	SPF
D - C	2x4	DRY	No.2	SPF
F - D	2x6	DRY	No.2	SPF
ALL WEBS	2x3	DRY	No.2	SPF

DRY: SEASONED LUMBER.

DESIGN CONSISTS OF 2 TRUSSES BUILT SEPARATELY THEN FASTENED TOGETHER AS FOLLOWS:

CHORDS	#ROWS	SURFACE SPACING (IN)	LOAD(PLF)
TOP CHORDS : (0.122"X3") SPIRAL NAILS			
F- A	1	12	TOP
A- C	1	12	TOP
C- D	1	12	TOP
BOTTOM CHORDS : (0.122"X3") SPIRAL NAILS			
F- D	2	12	SIDE(183.1)
WEBS : (0.122"X3") SPIRAL NAILS			
B- E	1	2	SIDE(587.5)
2x3	1	6	

NAILS TO BE DRIVEN FROM ONE SIDE ONLY.

GIRDER NAILING ASSUMES NAILED HANGERS ARE FASTENED WITH MIN. 3-0 INCH NAILS.

TOP - COMPONENTS ARE LOADED FROM THE TOP AND MUST BE PLACED ON TOP EDGE OF ALL PLIES FOR THE LOAD TO BE TRANSFERRED TO EACH PLY.

SIDE - PLF SHOWN IS THE EQUIVALENT UDL APPLIED TO ONE SIDE THAT THE CORRESPONDING NAILING PATTERN SHALL BE CAPABLE OF TRANSFERING. REMAINING PLF MUST BE APPLIED ON THE OPPOSITE SIDE OR ON THE TOP.

PLATES (table is in inches)

JT	TYPE	PLATES	W	LEN	Y	X
A	TMVW+p	MT20	5.0	6.0	Edge	
B	TMWW+t	MT20	4.0	6.0	2.50	1.00
C	TMV+p	MT20	3.0	4.0		
D	BMVW1+p	MT20	4.0	6.0		
E	BMWW+t	MT20	6.0	9.0		
F	BMV1+p	MT20	3.0	6.0		

Edge - INDICATES REFERENCE CORNER OF PLATE TOUCHES EDGE OF CHORD.

HANGERS NOTES

1) SPECIAL HANGER(S) OR CONNECTION(S) REQUIRED TO SUPPORT CONCENTRATED LOAD(S) 362.0 lbs FACTORED DOWN AT 5-4, 473.6 lbs FACTORED DOWN AT 2-5-4, AND 2954.0 lbs FACTORED DOWN AT 3-0-4, AND 1271.3 lbs FACTORED DOWN AT 5-0-4 ON BOTTOM CHORD. DESIGN FOR UNSPECIFIED CONNECTION(S) IS DELEGATED TO THE BUILDING DESIGNER.

DIMENSIONS, SUPPORTS AND LOADINGS SPECIFIED BY FABRICATOR TO BE VERIFIED BY BUILDING DESIGNER

BEARINGS

JT	FACTORED GROSS REACTION VERT	HORZ	MAXIMUM FACTORED GROSS REACTION DOWN	HORZ	UPLIFT	INPUT BRG IN-SX	REQRD BRG IN-SX
F	2721	0	2721	0	0	5-8	5-8
D	3235	0	3235	0	0	HANGER BY OTHERS MIN. SEAT SIZE: 4-0	

UNFACTORED REACTIONS

JT	1ST LCASE COMBINED	MAX./MIN. COMPONENT REACTIONS SNOW	LIVE	PERM.LIVE	WIND	DEAD	SOIL
F	2069	1328 / 0	262 / 0	0 / 0	0 / 0	479 / 0	0 / 0
D	2488	1549 / 0	351 / 0	0 / 0	0 / 0	589 / 0	0 / 0

BEARING MATERIAL TO BE SPF NO.2 OR BETTER AT JOINT(S) F

BRACING

TOP CHORD TO BE SHEATHED OR MAX. PURLIN SPACING = 5.58 FT.
MAX. UNBRACED BOTTOM CHORD LENGTH = 10.00 FT OR RIGID CEILING DIRECTLY APPLIED.

ALL PITCH BREAKS AND PERIMETER CORNER JOINTS MUST BE LATERALLY RESTRAINED.

LOADING

TOTAL LOAD CASES: (4)

CHORDS

MEMB. FR-TO	MAX. FACTORED FORCE (LBS)	FACTORED VERT. LOAD LC1 (PLF) FROM	TO	MAX CSI (LC)	MAX. UNBRAC LENGTH
F- A	-2310 / 0	0.0	0.0	0.13 (1)	7.37
A- B	-2561 / 0	-124.4	-124.4	0.09 (1)	5.58
B- C	-18 / 0	-124.4	-124.4	0.07 (1)	6.25
D- C	-151 / 0	0.0	0.0	0.03 (1)	7.81
F- G	0 / 0	-28.0	-28.0	0.07 (1)	10.00
G- H	0 / 0	-28.0	-28.0	0.07 (1)	10.00
H- E	0 / 0	-28.0	-28.0	0.07 (1)	10.00
E- I	0 / 2146	-28.0	-28.0	0.43 (1)	10.00
I- D	0 / 2146	-28.0	-28.0	0.43 (1)	10.00

WEBS

MEMB. FR-TO	MAX. FACTORED FORCE (LBS)	MAX CSI (LC)
A- E	0 / 2266	0.28 (1)
E- B	0 / 3161	0.39 (1)
B- D	-3044 / 0	0.43 (1)

FACTORED CONCENTRATED LOADS (LBS)

JT	LOC.	LC1	MAX-	MAX+	FACE	DIR.	TYPE
E	3-0-4	-2954	-2954	—	FRONT	VERT	TOTAL
G	5-4	-362	-362	—	FRONT	VERT	TOTAL
H	2-5-4	-474	-474	—	TOP	VERT	TOTAL
I	5-0-4	-1271	-1271	—	FRONT	VERT	TOTAL

LICENSED PROFESSIONAL ENGINEER
S. KATSOULAKOS
PROVINCE OF ONTARIO

DESIGN CRITERIA

SPECIFIED LOADS:

TOP CH.	LL	=	34.8	PSF
	DL	=	8.0	PSF
BOT CH.	LL	=	10.5	PSF
	DL	=	7.0	PSF
TOTAL LOAD		=	60.3	PSF

SPACING = 24.0 IN. C/C

THIS TRUSS IS DESIGNED FOR RESIDENTIAL OR SMALL BUILDING REQUIREMENTS OF PART 9, NBCC 2010

THIS DESIGN COMPLIES WITH:
- PART 9 OF OBC 2012 , BCBC 2012 , ABC 2014
- CSA 086-09
- TPIC 2011

(55 % OF 48.1 P.S.F. G.S.L. PLUS 8.4 P.S.F. RAIN LOAD) EQUALS 34.8 P.S.F. SPECIFIED ROOF LIVE LOAD

ALLOWABLE DEFL.(LL)= L/360 (0.20")
CALCULATED VERT. DEFL.(LL) = L/ 999 (0.02")
ALLOWABLE DEFL.(TL)= L/360 (0.20")
CALCULATED VERT. DEFL.(TL) = L/ 999 (0.03")

CSI: TC=0.13/1.00 (A-F:1) , BC=0.43/1.00 (D-E:1) , WB=0.43/1.00 (B-D:1) , SSI=0.31/1.00 (D-E:1)

DOL LUMBER=1.00 NAIL=1.00 LS BEND=1.00 COMP=1.00 SHEAR=1.00 TENS= 1.00

COMPANION LIVE LOAD FACTOR = 0.50

TRUSS PLATE MANUFACTURER IS NOT RESPONSIBLE FOR QUALITY CONTROL IN THE TRUSS MANUFACTURING PLANT .

NAIL VALUES

PLATE	GRIP(DRY) (PSI) MAX	MIN	SHEAR (PLI) MAX	MIN	SECTION (PLI) MAX	MIN
MT20	618	354	1667	822	2284	1656

PLATE PLACEMENT TOL. = 0.250 inches

PLATE ROTATION TOL. = 5.0 Deg.

JSI GRIP= 0.89 (D) (INPUT = 0.90)
JSI METAL= 0.42 (E) (INPUT = 1.00)

DWG NO. TAM 3615 -1%
STRUCTURAL COMPONENT ONLY

JOB NAME	TRUSS NAME	QUANTITY	PLY	JOB DESC.	DRWG NO.
290317	T51	1	2	TRUSS DESC.	

Tamarack Roof Truss, Burlington

Version 8.200 S Dec 12 2017 MiTek Industries, Inc. Mon Jan 15 08:18:07 2018 Page 1
ID:Q4u7xzBPXyy7N802U7pi6KyN_5O-WaaLFN9Tdo6fRMm2kAhSHB6qVL5VgyVhOwuMh5zvAzk

Scale = 1:20.3

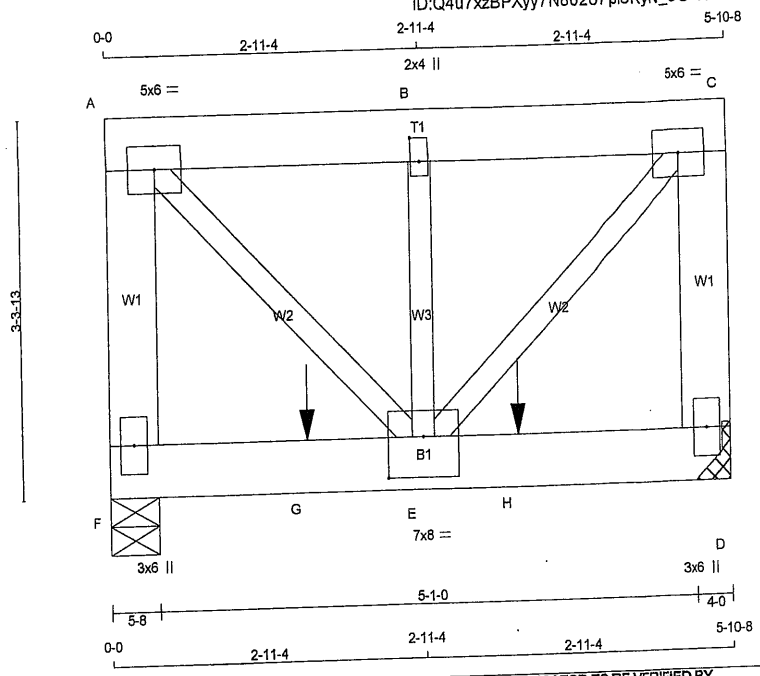

TOTAL WEIGHT = 2 X 37 = 74 lb [M]

LUMBER

N. L. G. A. RULES

CHORDS	SIZE		LUMBER	DESCR.
F - A	2x6	DRY	No.2	SPF
A - C	2x6	DRY	No.2	SPF
D - C	2x6	DRY	No.2	SPF
F - D	2x6	DRY	No.2	SPF
ALL WEBS	2x3	DRY	No.2	SPF

DRY: SEASONED LUMBER.

DESIGN CONSISTS OF 2 TRUSSES BUILT SEPARATELY THEN FASTENED TOGETHER AS FOLLOWS:

CHORDS #ROWS	SURFACE SPACING (IN)		LOAD(PLF)
TOP CHORDS : (0.122"X3") SPIRAL NAILS			
F- A	2	12	TOP
A- C	2	12	TOP
C- D	2	12	TOP
BOTTOM CHORDS : (0.122"X3") SPIRAL NAILS			
F- D	2	12	SIDE(0.0)
WEBS : (0.122"X3") SPIRAL NAILS			
2x3	1	6	

NAILS TO BE DRIVEN FROM ONE SIDE ONLY.

GIRDER NAILING ASSUMES NAILED HANGERS ARE FASTENED WITH MIN. 3-0 INCH NAILS.

TOP - COMPONENTS ARE LOADED FROM THE TOP AND MUST BE PLACED ON TOP EDGE OF ALL PLIES FOR THE LOAD TO BE TRANSFERRED TO EACH PLY.

SIDE - PLF SHOWN IS THE EQUIVALENT UDL APPLIED TO ONE SIDE THAT THE CORRESPONDING NAILING PATTERN SHALL BE CAPABLE OF TRANSFERING. REMAINING PLF MUST BE APPLIED ON THE OPPOSITE SIDE OR ON THE TOP.

PLATES (table is in inches)

JT	TYPE	PLATES	W	LEN	Y	X
A	TMVW-t	MT20	5.0	6.0		
B	TMW+w	MT20	2.0	4.0	2.50	1.00
C	TMVW-t	MT20	5.0	6.0		
D	BMV1+p	MT20	3.0	6.0		
E	BMWWW-t	MT20	7.0	8.0	4.25	4.00
F	BMV1+p	MT20	3.0	6.0		

HANGERS NOTES

1) SPECIAL HANGER(S) OR CONNECTION(S) REQUIRED TO SUPPORT CONCENTRATED LOAD(S) 360.3 lbs FACTORED DOWN AT 1-10-4, AND 3871.7 lbs FACTORED DOWN AT 3-10-0 ON BOTTOM CHORD. DESIGN FOR UNSPECIFIED CONNECTION(S) IS DELEGATED TO THE BUILDING DESIGNER.

DIMENSIONS, SUPPORTS AND LOADINGS SPECIFIED BY FABRICATOR TO BE VERIFIED BY BUILDING DESIGNER

BEARINGS

JT	FACTORED GROSS REACTION VERT	HORZ	MAXIMUM FACTORED GROSS REACTION DOWN	HORZ	UPLIFT	INPUT BRG	REQRD BRG
F	2040	0	2040	0	0	IN-SX 5-8	IN-SX 5-8
D	3087	0	3087	0	0	HANGER BY OTHERS MIN. SEAT SIZE: 4-0	

UNFACTORED REACTIONS

JT	1ST LCASE COMBINED	MAX./MIN. COMPONENT REACTIONS SNOW	LIVE	PERM.LIVE	WIND	DEAD	SOIL
F	1551	995 / 0	196 / 0	0 / 0	0 / 0	360 / 0	0 / 0
D	2357	1495 / 0	311 / 0	0 / 0	0 / 0	551 / 0	0 / 0

BEARING MATERIAL TO BE SPF NO.2 OR BETTER AT JOINT(S) F

BRACING

TOP CHORD TO BE SHEATHED OR MAX. PURLIN SPACING = 6.25 FT.
MAX. UNBRACED BOTTOM CHORD LENGTH = 10.00 FT OR RIGID CEILING DIRECTLY APPLIED.

ALL PITCH BREAKS AND PERIMETER CORNER JOINTS MUST BE LATERALLY RESTRAINED.

LOADING

TOTAL LOAD CASES: (4)

CHORDS

MEMB. FR-TO	MAX. FORCE (LBS)	FACTORED VERT. LOAD (PLF) FROM	TO	LC1	MAX CSI (LC)	MAX. UNBRAC LENGTH
F- A	-2159 / 0	0.0	0.0	0.11 (1)	7.81	
A- B	-1984 / 0	-124.4	-124.4	0.08 (1)	6.25	
B- C	-1984 / 0	-124.4	-124.4	0.08 (1)	6.25	
D- C	-2159 / 0	0.0	0.0	0.11 (1)	7.81	
F- G	0 / 0	-28.0	-28.0	0.32 (1)	10.00	
G- E	0 / 0	-28.0	-28.0	0.32 (1)	10.00	
E- H	0 / 0	-28.0	-28.0	0.68 (1)	10.00	
H- D	0 / 0	-28.0	-28.0	0.68 (1)	10.00	

WEBS

MEMB. FR-TO	MAX. FORCE (LBS)	MAX CSI (LC)
A- E	0 / 2769	0.34 (1)
E- B	-276 / 0	0.03 (1)
E- C	0 / 2769	0.34 (1)

FACTORED CONCENTRATED LOADS (LBS)

JT	LOC.	LC1	MAX-	MAX+	FACE	DIR.	TYPE
G	1-10-4	-360	-360	---	BACK	VERT	TOTAL
H	3-10-0	-3872	-3872	---	BACK	VERT	TOTAL

LICENSED PROFESSIONAL ENGINEER
1578
S. KATSOULAKOS
PROVINCE OF ONTARIO

DESIGN CRITERIA

SPECIFIED LOADS:

TOP CH.	LL	=	34.8	PSF
	DL	=	8.0	PSF
BOT CH.	LL	=	10.5	PSF
	DL	=	7.0	PSF
TOTAL LOAD		=	60.3	PSF

SPACING = 24.0 IN. C/C

LOADING IN FLAT SECTION BASED ON A SLOPE OF 6.00/12

THIS TRUSS IS DESIGNED FOR RESIDENTIAL OR SMALL BUILDING REQUIREMENTS OF PART 9, NBCC 2010

THIS DESIGN COMPLIES WITH:
- PART 9 OF OBC 2012 , BCBC 2012 , ABC 2014
- CSA 086-09
- TPIC 2011

(55 % OF 48.1 P.S.F. G.S.L. PLUS 8.4 P.S.F. RAIN LOAD) EQUALS 34.8 P.S.F. SPECIFIED ROOF LIVE LOAD

ALLOWABLE DEFL.(LL)= L/360 (0.20")
CALCULATED VERT. DEFL.(LL) = L/ 999 (0.03")
ALLOWABLE DEFL.(TL)= L/360 (0.20")
CALCULATED VERT. DEFL.(TL) = L/ 999 (0.04")

CSI: TC=0.11/1.00 (A-F:1) , BC=0.68/1.00 (D-E:1) , WB=0.34/1.00 (A-E:1) , SSI=1.00/1.00 (D-E:1)

DOL LUMBER=1.00 NAIL=1.00 LS BEND=1.00 COMP=1.00 SHEAR=1.00 TENS= 1.00

COMPANION LIVE LOAD FACTOR = 0.50

TRUSS PLATE MANUFACTURER IS NOT RESPONSIBLE FOR QUALITY CONTROL IN THE TRUSS MANUFACTURING PLANT .

NAIL VALUES

PLATE	GRIP(DRY) (PSI) MAX	MIN	SHEAR (PLI) MAX	MIN	SECTION (PLI) MAX	MIN
MT20	618	354	1667	822	2284	1656

PLATE PLACEMENT TOL. = 0.250 inches

PLATE ROTATION TOL. = 5.0 Deg.

JSI GRIP= 0.70 (C) (INPUT = 0.90)
JSI METAL= 0.25 (A) (INPUT = 1.00)

DWG NO. TAM 3616 -18
STRUCTURAL COMPONENT ONLY

TECHNICAL BULLETIN

LUS – Double Shear Joist Hangers

SIMPSON Strong-Tie®

All LUS hangers have double shear nailing. This patented innovation distributes the load through two points on each joist nail for greater strength. It also allows the use of fewer nails, faster installation and the use of common nails for all connections.

Material: 18 gauge

Finish: G90 galvanized

Design:

- Factored resistances are in accordance with CSA O86-14.
- Uplift resistances have been increased 15%. No further increase is permitted.
- Wood shear is not considered in the factored resistances given. The specifier must ensure that the joist and header capacities are capable of withstanding these loads.

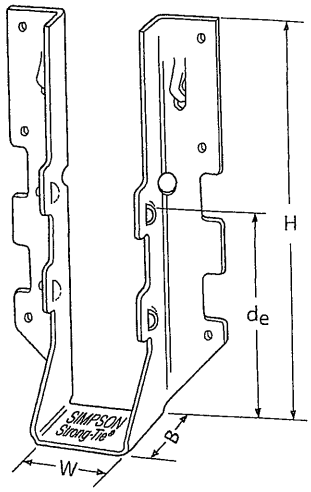

LUS28

Installation:

- Use all specified fasteners.
- Nails: 16d = 0.162" dia. x 3½" long common wire, 10d = 0.148" x 3" long common wire.
- Double shear nails must be driven at an angle through the joist or truss into the header to achieve the table loads.
- Not designed for welded or nailer applications.

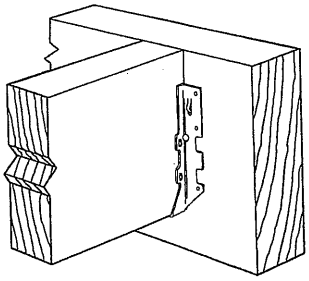

Typical LUS Installation

Options:

- These hangers cannot be modified

Model No.	Ga.	Dimensions (in.)				Fasteners		Factored Resistance (lb.)			
								D.Fir-L		S-P-F	
		W	H	B	d_e[1]	Face	Joist	Uplift (K_D=1.15)	Normal (K_D=1.00)	Uplift (K_D=1.15)	Normal (K_D=1.00)
LUS24	18	1 9/16	3 1/8	1 3/4	1 15/16	(4) 10d	(2) 10d	710	1630	645	1155
LUS24-2	18	3 1/8	3 1/8	2	1 13/16	(4) 16d	(2) 16d	835	2020	590	1435
LUS26	18	1 9/16	4 3/4	1 3/4	3 5/8	(4) 10d	(4) 10d	1420	2170	1290	1630
LUS26-2	18	3 1/8	4 7/8	2	4	(4) 16d	(4) 16d	1720	2595	1545	1920
LUS26-3	18	4 5/8	4 9/16	2	3 1/4	(4) 16d	(4) 16d	1720	2595	1545	2340
LUS28	18	1 9/16	6 5/8	1 3/4	3 3/4	(6) 10d	(6) 10d	1420	2520	1290	1790
LUS28-2	18	3 1/8	7	2	4	(6) 16d	(4) 16d	1720	3325	1545	2575
LUS28-3	18	4 5/8	6 1/4	2	3 1/4	(6) 16d	(4) 16d	1720	3325	1545	2375
LUS210	18	1 9/16	7 13/16	1 3/4	3 7/8	(8) 10d	(4) 10d	1420	2785	1290	2210
LUS210-2	18	3 1/8	9	2	6	(8) 16d	(6) 16d	2580	4500	2320	3195
LUS210-3	18	4 5/8	8 3/16	2	5 1/4	(8) 16d	(6) 16d	2580	3345	2320	2375

1. d_e is the distance from the seat of the hanger to the highest joist nail.

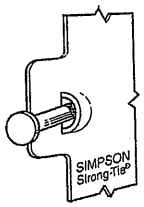

Dome Double Shear Nailing prevents tabs breaking off (available on some models).

U.S. Patent 5,603,580

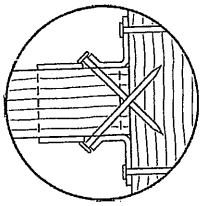

Double Shear Nailing Top View.

LICENSED PROFESSIONAL ENGINEER
4/5/2017
B. D. BUNTING
PROVINCE OF ONTARIO

LIMIT STATES DESIGN

This technical bulletin is effective until June 30, 2019, and reflects information available as of March 1, 2017. This information is updated periodically and should not be relied upon after June 30, 2019. Contact Simpson Strong-Tie for current information and limited warranty or see strongtie.com.

© 2017 Simpson Strong-Tie Company Inc.

T-SPECLUS17 3/17 exp. 6/19

(800) 999-5099
strongtie.com

TECHNICAL BULLETIN

HUS/LJS – Double Shear Joist Hangers

SIMPSON Strong-Tie®

All hangers have double shear nailing. This patented innovation distributes the load through two points on each joist nail for greater strength. It also allows the use of fewer nails, faster installation and the use of common nails for all connections. Do not bend or remove tabs.

Material: See table

Finish: G90 galvanized

Design:

- Factored resistances are in accordance with CSA O86-14.
- Uplift resistances have been increased 15%. No further increase is permitted.
- Wood shear is not considered in the factored resistances given. The specifier must ensure that the joist and header capacities are capable of withstanding these loads.

Installation:

- Use all specified fasteners
- Nails: 16d = 0.162" dia. x 3½" long common wire
- Double shear nails must be driven at an angle through the joist or truss into the header to achieve the table loads
- Not designed for welded or nailer applications

Options:

- See current catalogue for options

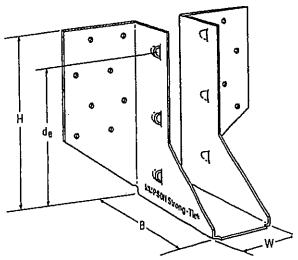

LJS26DS

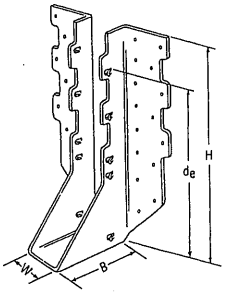

HUS210
(HUS26, HUS28, similar)

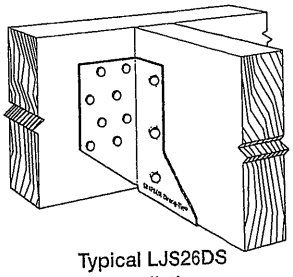

Typical LJS26DS Installation

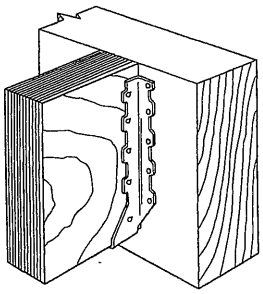

Typical HUS Installation

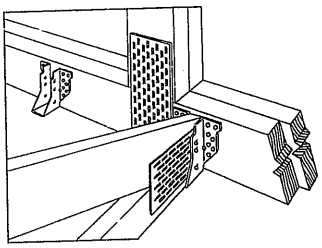

Typical HUS Installation
(Truss Designer to provide fastener quantity for connecting multiple members together)

Model No.	Ga.	Dimensions (in.)				Fasteners		Factored Resistance (lb.)			
								D.Fir-L		S-P-F	
		W	H	B	d_e[1]	Face	Joist	Uplift (K_D=1.15) lb.	Normal (K_D=1.00) lb.	Uplift (K_D=1.15) lb.	Normal (K_D=1.00) lb.
LJS26DS	18	1 9/16	5	3½	4⅝	(16) 16d	(6) 16d	2055	4265	1460	4115
HUS26	16	1⅝	5⅜	3	3 15/16	(14) 16d	(6) 16d	2705	4940	2065	3875
HUS28	16	1⅝	7 3/32	3	6 3/32	(22) 16d	(8) 16d	3605	5365	2675	4345
HUS210	16	1⅝	9 3/32	3	7 31/32	(30) 16d	(10) 16d	4505	5795	4010	4740
HUS1.81/10	16	1 13/16	9	3	8	(30) 16d	(10) 16d	4505	6450	4010	5200

1. d_e is the distance from the seat of the hanger to the highest joist nail.

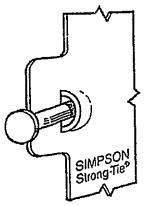

Dome Double Shear Nailing prevents tabs breaking off (available on some models).

U.S. Patent 5,603,580

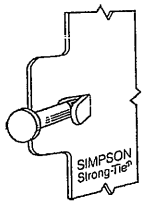

Double Shear Nailing Side View. Do not bend tab back.

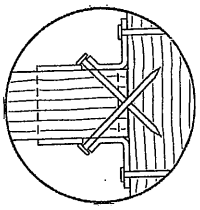

Double Shear Nailing Top View.

LIMIT STATES DESIGN

This technical bulletin is effective until June 30, 2019, and reflects information available as of March 1, 2017. This information is updated periodically and should not be relied upon after June 30, 2019. Contact Simpson Strong-Tie for current information and limited warranty or see strongtie.com.

© 2017 Simpson Strong-Tie Company Inc.

T-SPECHUS17 3/17 exp. 6/19

(800) 999-5099
strongtie.com

TECHNICAL BULLETIN

HGUS – Double Shear Joist Hangers

SIMPSON Strong-Tie®

All HGUS hangers have double shear nailing. This patented innovation distributes the load through two points on each joist nail for greater strength. It also allows the use of fewer nails, faster installation and the use of common nails for all connections. Do not bend or remove tabs.

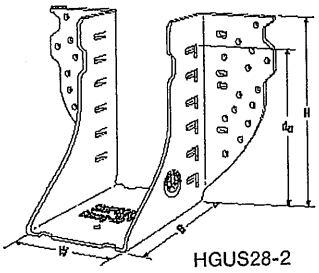

HGUS28-2

Material: 12 gauge

Finish: G90 galvanized

Design:

- Factored resistances are in accordance with CSA O86-14.
- Uplift resistances have been increased 15%. No further increase is permitted.
- Wood shear is not considered in the factored resistances given. The specifier must ensure that the joist and header capacities are capable of withstanding these loads.

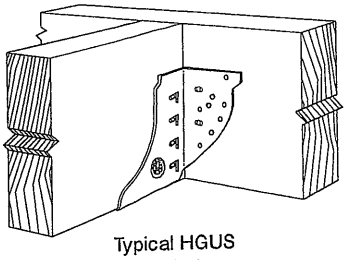
Typical HGUS Installation

Installation:

- Use all specified fasteners
- Nails: 16d = 0.162" dia x 3½" long common wire
- Double shear nails must be driven at an angle through the joist or truss into the header to achieve the table loads
- Not designed for welded or nailer applications

Options:

- See current catalogue for options

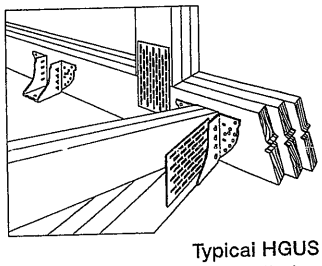
Typical HGUS Installation (Truss Designer to provide fastener quantity for connecting multiple members together)

Model No.	Ga.	Dimensions (in.)				Fasteners		Factored Resistance (lb.)			
								D.Fir-L		S-P-F	
		W	H	B	d_e[1]	Face	Joist	Uplift (K_D=1.15)	Normal (K_D=1.00)	Uplift (K_D=1.15)	Normal (K_D=1.00)
HGUS26	12	1⅝	5⅜	5	4 5/32	(20) 16d	(8) 16d	2685	6625	2685	5700
HGUS26-2	12	3 5/16	5 7/16	4	4⅛	(20) 16d	(8) 16d	4385	8950	3100	6355
HGUS26-3	12	4 15/16	5½	4	4⅛	(20) 16d	(8) 16d	4385	8950	3100	6355
HGUS26-4	12	6 9/16	5 7/16	4	4⅛	(20) 16d	(8) 16d	4385	8950	3100	6355
HGUS28	12	1⅝	7⅛	5	6⅛	(36) 16d	(12) 16d	3310	7675	3100	6900
HGUS28-2	12	3 5/16	7 3/16	4	6⅛	(36) 16d	(12) 16d	6070	12980	4310	9215
HGUS28-3	12	4 15/16	7¼	4	6⅜	(36) 16d	(12) 16d	6070	12980	4310	9215
HGUS28-4	12	6 9/16	7 3/16	4	6⅛	(36) 16d	(12) 16d	6070	12980	4310	9215
HGUS210-2	12	3 5/16	9 3/16	4	8⅛	(46) 16d	(16) 16d	6840	14645	4855	10400
HGUS210-3	12	4 15/16	9¼	4	8⅜	(46) 16d	(16) 16d	6840	14645	4855	10400
HGUS210-4	12	6 9/16	9 3/16	4	8⅛	(46) 16d	(16) 16d	6840	14645	4855	10400
HGUS212-4	12	6 9/16	10⅝	4	10⅛	(56) 16d	(20) 16d	7640	14995	5425	10645
HGUS214-4	12	6 9/16	12⅝	4	11⅛	(66) 16d	(22) 16d	10130	16400	7195	11645

1. d_e is the distance from the seat of the hanger to the highest joist nail.

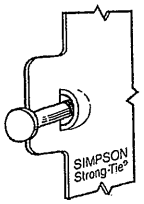

Dome Double Shear Nailing prevents tabs breaking off (available on some models).

U.S. Patent 5,603,580

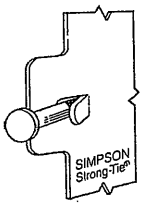

Double Shear Nailing Side View. Do not bend tab back.

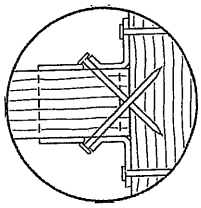
Double Shear Nailing Top View.

LIMIT STATES DESIGN

This technical bulletin is effective until June 30, 2019 and reflects information available as of March 1, 2017. This information is updated periodically and should not be relied upon after June 30, 2019. Contact Simpson Strong-Tie for current information and limited warranty or see strongtie.com.

© 2017 Simpson Strong-Tie Company Inc.

T-SPECHGUS17 3/17 exp. 6/19

(800) 999-5099
strongtie.com

MICRO CITY ENGINEERING SERVICES INC.

TEL: (519) 287 - 2242

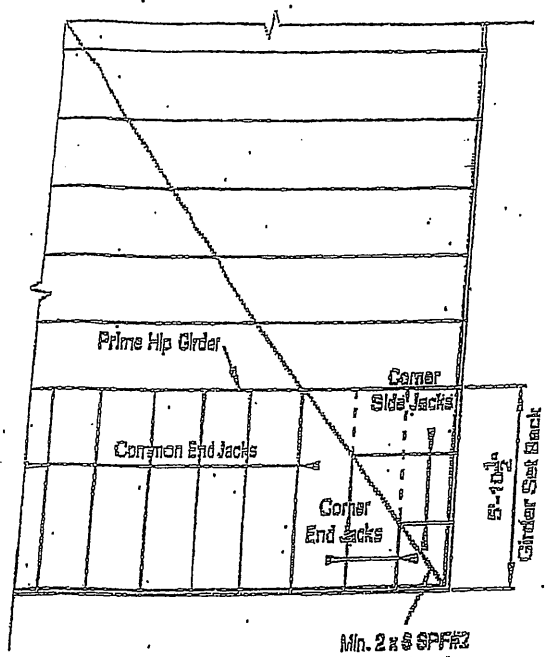

45° Hip End

LUMBER SPECIFICATION

TOP CHORD : 2x4 SPF#2

BOTTOM CHORD : 2x4 SPF#2

WEBS : 2x3 SPF#2

UNLESS OTHERWISE SHOWN

DESIGN LOAD:

TOP CHORD LIVE LOAD	:	39.4 P.S.F.
TOP CHORD DEAD LOAD	:	3.0 P.S.F.
BOTTOM CHORD LIVE LOAD	:	10.5 P.S.F.
BOTTOM CHORD DEAD LOAD	:	7.0 P.S.F
TOTAL LOAD		59.9 P.S.F.

DWG NO T1M 2415.14
STRUCTURAL COMPONENT ONLY

LICENSED PROFESSIONAL ENGINEER
1-20-14
S. KATSOULAKOS
PROVINCE OF ONTARIO

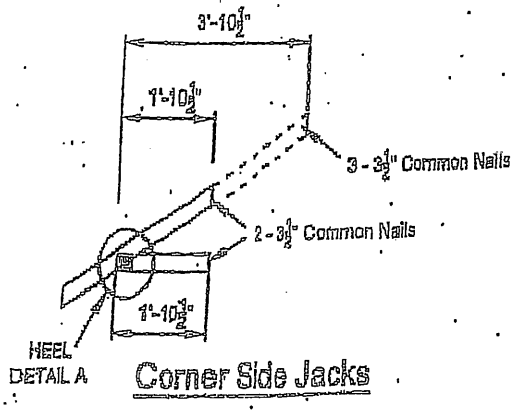

Corner Side Jacks

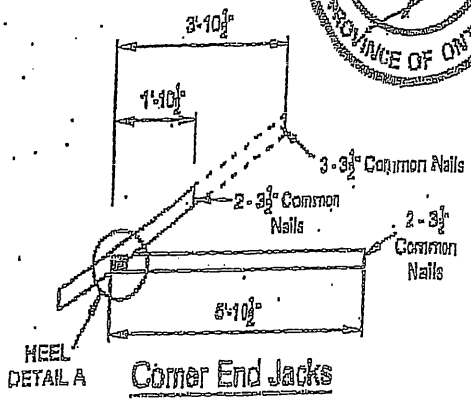

Corner End Jacks

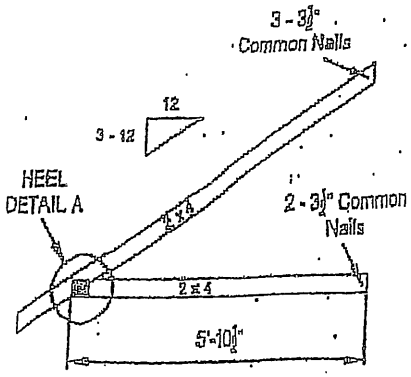

Common End Jacks

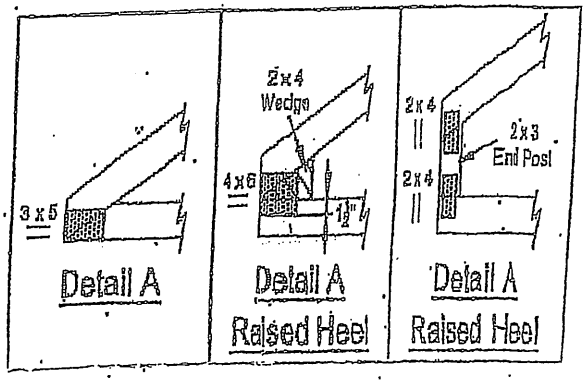

Detail A | Detail A Raised Heel | Detail A Raised Heel

NOTE: DESIGN CONFORMS TO PART 9, O.B.C. 2012 (LIMIT STATES DESIGN)
(TO BE INCLUDED AND USED AS PART OF A FULL TRUSS ENGINEERING PACKAGE)

MICRO CITY
ENGINEERING SERVICES INC.
TEL: (519) 287 - 2242
R.R. #1, P.O. BOX 61, GLENCOE, ONTARIO, NOL 1M0

LUMBER SPECIFICATION

TOP CHORD : 2 x 4 SPF#2
BOTTOM CHORD : 2 x 4 SPF#2
WEBS : 2 x 3 SPF#2
UNLESS OTHERWISE SHOWN

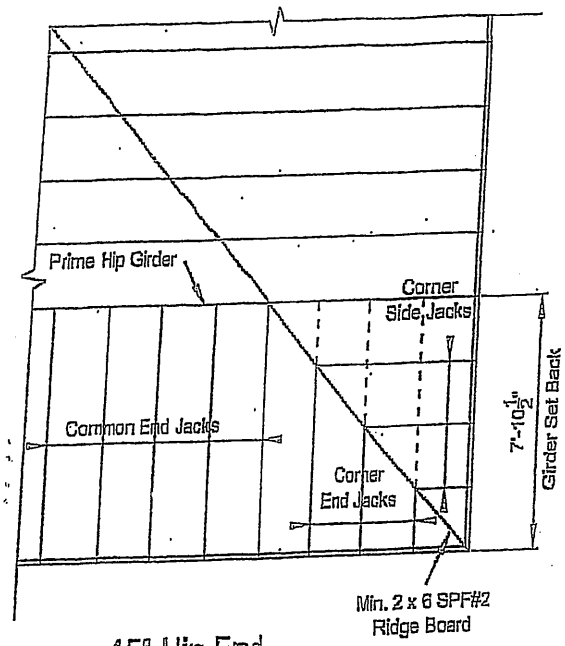

45° Hip End

DESIGN LOAD:

TOP CHORD LIVE LOAD	:	34.8 P.S.F.
TOP CHORD DEAD LOAD	:	3.0 P.S.F.
BOTTOM CHORD LIVE LOAD	:	0.0 P.S.F.
BOTTOM CHORD DEAD LOAD	:	7.0 P.S.F.
TOTAL LOAD	:	44.8 P.S.F.

DWG NO TAM 3503.14
STRUCTURAL
COMPONENT ONLY

LICENSED PROFESSIONAL ENGINEER
1-2014
S. KATSOULAKOS
PROVINCE OF ONTARIO

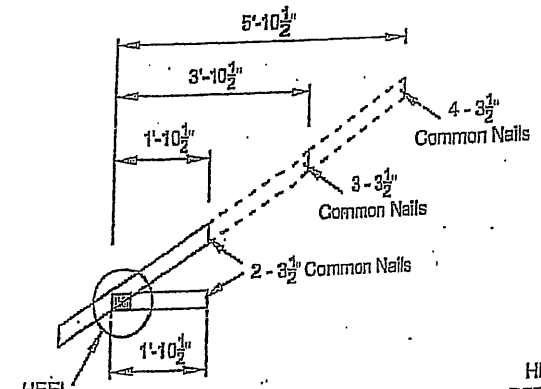

Corner Side Jacks

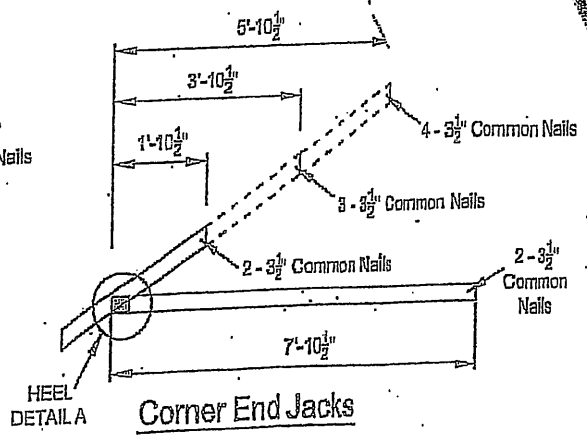

Corner End Jacks

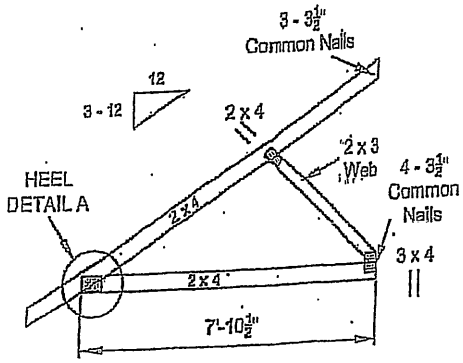

Common End Jacks

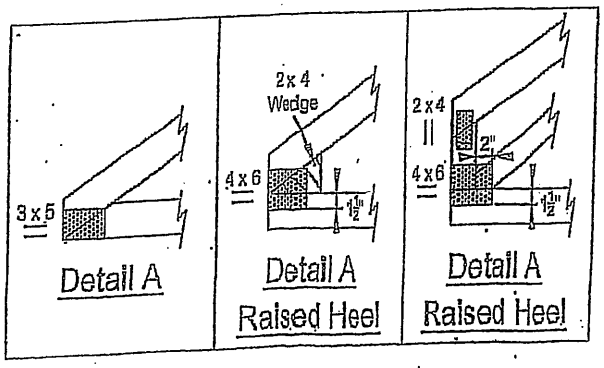

NOTE: DESIGN CONFORMS TO PART 9, O.B.C. 2012 (LIMIT STATES DESIGN)
(TO BE INCLUDED AND USED AS PART OF A FULL TRUSS ENGINEERING PACKAGE)

MICRO CITY
ENGINEERING SERVICES INC.
TEL: (519) 287 - 2242
R.R. #1, P.O. BOX 61, GLENCOE, ONTARIO, NOL 1M0

CONVENTIONAL VALLEY FRAMING DETAIL

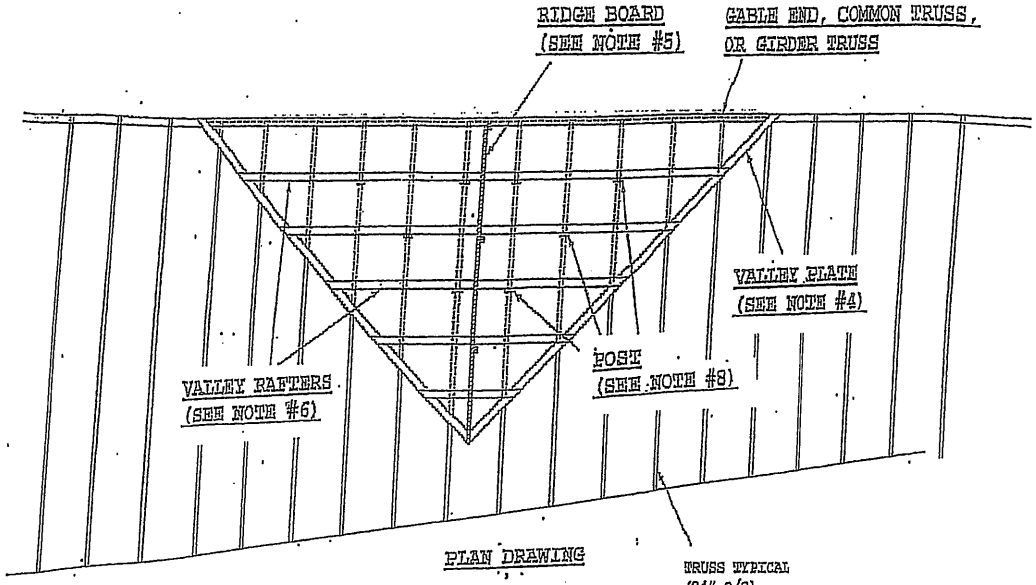

PLAN DRAWING

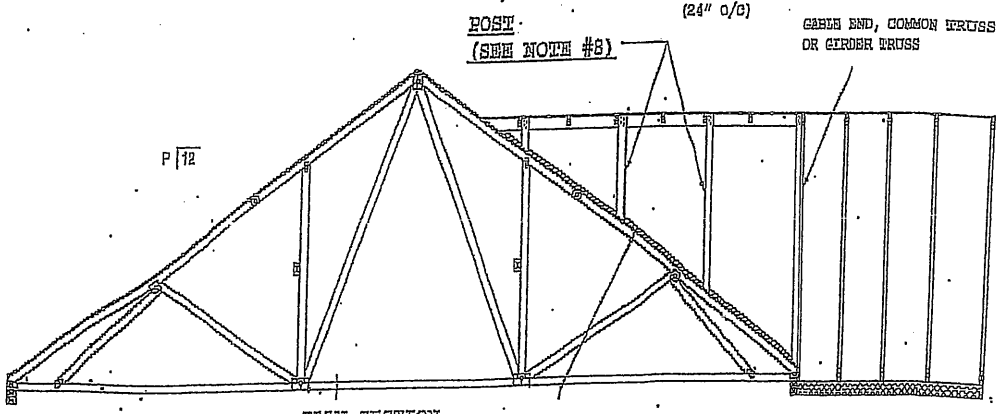

PLAN SECTION

TRUSS MUST
BE SHEATHED

GENERAL SPECIFICATIONS:

(1) WITH THE BASE TRUSSES ERECTED (INSTALLED), APPLY SHEATHING TOP CHORD OF SUPPORTING (BASE) TRUSSES.
(2) BRACE BOTTOM CHORD AND WEB MEMBERS AS PER PRE-ENGINEERED TRUSS DESIGNS.
(3) DEFINE VALLEY RIDGE BY RUNNING A LEVEL STRING FROM THE INTERSECTING RIDGE OF THE (a) GABLE END, (b) GIRDER TRUSS OR (c) COMMON TRUSS TO THE ROOF SHEATHING.
(4) INSTALL 2 X 6 VALLEY PLATES ON FLAT. FASTEN TO EACH SUPPORTING TRUSS WITH (2) 16d (3.5" X 0.131") NAILS.
(5) SET A 2 X 6 #2 RIDGE BOARD (MAX. 10'-0" RIDGE) OR 2 X 8 #2 SPF RIDGE BOARD (MAX. 20'-0" RIDGE). SUPPORT RIDGE BOARD WITH 2 X 4 POSTS SPACED 48" O/C. BEVEL BOTTOM OF POST TO SET EVENLY ON THE SHEATHING. FASTEN POST TO RIDGE WITH (4) 10d (3" X 0.131") NAILS. FASTEN POST TO ROOF SHEATHING WITH (3) 10d (3" X 0.131") TOE-NAILS.
(6) FRAME VALLEY RAFTERS FROM VALLEY PLATE TO RIDGE BOARD. MAXIMUM RAFTER SPACING IS 24" O/C. FASTEN VALLEY RAFTER TO RIDGE BEAM WITH (3) 16d (3.5" X 0.131") TOE-NAILS. FASTEN VALLEY RAFTER TO VALLEY PLATE WITH (3) 16d (3.5" X 0.131") TOE-NAILS.
(7) SUPPORT THE VALLEY RAFTERS WITH 2 X 4 POSTS AT 48" O/C (OR LESS) ALONG EACH RAFTER. INSTALL POSTS IN A STAGGERED PATTERN AS SHOWN ON PLAN DRAWING. ALIGN POSTS WITH TRUSSES BELOW. FASTEN VALLEY RAFTER TO POST WITH (4) 10d (3" X 0.131") NAILS. FASTEN POST THROUGH SHEATHING TO SUPPORTING TRUSSES WITH (2) 16d (3.5" X 0.131") NAILS.
(8) POSTS SHALL BE 2 X 4 #2 SPF OR BETTER. POSTS EXCEEDING 75" IN HEIGHT SHALL BE INCREASED TO 4 X 4 #2 SPF, OR BETTER, OR BE PRE-ASSEMBLED TO (2) PLY 2 X 4 #2 SPF OR BETTER FASTENED TOGETHER WITH 2 ROWS OF 10d (3" X 0.131") NAILS AT 6" O/C.
(9) MAINTAIN A MINIMUM 3/4" LUMBER EDGE DISTANCE WHEN NAILING. NAIL SPACING SHOULD APPROXIMATE A MINIMUM 1-3/4" O/C OR MORE UNLESS NOTED OTHERWISE. ALL CONSTRUCTION TO CONFORM TO ONTARIO BUILDING CODE (CURRENT ADDITION) AT ALL TIMES.

NOTES:

(10) 48" O/C (MAXIMUM POST SPACING.
(11) ROOF LIVE LOAD = 34.8 PSF (MAX.)
(12) ROOF DEAD LOAD = 10.0 PSF (MAX.)
(13) PART 9 APPLICATION ONLY (ONTARIO BUILDING CODE)
(14) PART 4 APPLICATION ONLY (ONTARIO BUILDING CODE) WITH APPROVED REVIEW BY LICENSED PROFESSIONAL ENGINEER.
(15) BASE TRUSS SPACING (24" O/C MAX.)
(16) ALL PRE-ENGINEERED BASE TRUSS COMPONENTS TO BE SEALED BY LICENSED PROFESSIONAL ENGINEER AND THIS DETAIL TO BE VERIFIED AND APPROVED BY SAME WHEN RIDGE BOARD LENGTH EXCEEDS 12'-0".
(17) ALL BASE TRUSSES: P = 4 (4/12) - MINIMUM.
(18) ALL VALLEY RAFTERS: P = 4 (4/12) - MINIMUM.

LICENSED PROFESSIONAL ENGINEER
3-5-74
S. KATSOULAKOS
PROVINCE OF ONTARIO

PWA NO TAM 6305.14
STRUCTURAL
COMPONENT ONLY

Symbols

PLATE LOCATION AND ORIENTATION

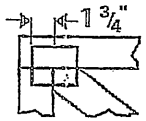

Center plate on joint unless x, y offsets are indicated. Dimensions are in ft-in-sixteenths or mm. Apply plates to both sides of truss and fully embed teeth.

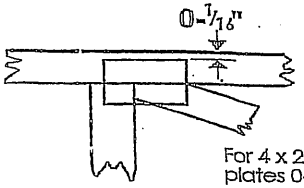

For 4 x 2 orientation, locate plates 0-1/16" from outside edge of truss.

This symbol indicates the required direction of slots in connector plates.

*Plate location details available in MiTek software or upon request.

PLATE SIZE

4 x 4

The first dimension is the plate width measured perpendicular to slots. Second dimension is the length parallel to slots.

LATERAL BRACING LOCATION

Indicated by symbol shown and/or by text in the bracing section of the output. Use T, I or Eliminator bracing if indicated.

BEARING

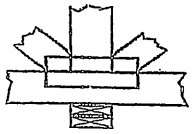

Indicates location where bearings (supports) occur. Icons vary but reaction section indicates joint number where bearings occur.

Industry Standards:

TPIC: Truss Design Procedures and Specifications for Light Metal Plate Connected Wood Trusses

DSB-89: *Design Standard for Bracing.*

BCSI: Building Component Safety Information, Guide to Good Practice for Handling, Installing & Bracing of Metal Plate Connected Wood Trusses.

Numbering System

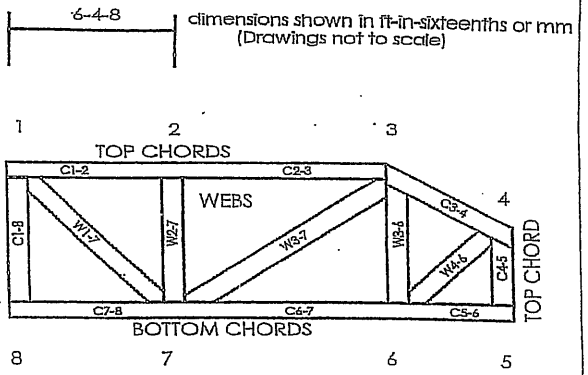

JOINTS ARE GENERALLY NUMBERED/LETTERED CLOCKWISE AROUND THE TRUSS STARTING AT THE JOINT FARTHEST TO THE LEFT.

CHORDS AND WEBS ARE IDENTIFIED BY END JOINT NUMBERS/LETTERS.

PRODUCT CODE APPROVALS

CCMC Reports:

11996-L, 10319-L, 13270-L, 12691-R

© 2007 MiTek® All Rights Reserved

MiTek®

POWER TO PERFORM.™

MiTek Engineering Reference Sheet: MII-7473C rev. 10-'08

General Safety Notes

Failure to Follow Could Cause Property Damage or Personal Injury

1. Additional stability bracing for truss system, e.g. diagonal or X-bracing, is always required. See BCSI.
2. Truss bracing must be designed by an engineer. For wide truss spacing, individual lateral braces themselves may require bracing, or alternative T, I, or Eliminator bracing should be considered.
3. Never exceed the design loading shown and never stack materials on inadequately braced trusses.
4. Provide copies of this truss design to the building designer, erection supervisor, property owner and all other interested parties.
5. Cut members to bear tightly against each other.
6. Place plates on each face of truss at each joint and embed fully. Knots and wane at joint locations are regulated by TPIC.
7. Design assumes trusses will be suitably protected from the environment in accord with TPIC.
8. Unless otherwise noted, moisture content of lumber shall not exceed 19% at time of fabrication.
9. Unless expressly noted, this design is not applicable for use with fire retardant, preservative treated, or green lumber.
10. Camber is a non-structural consideration and is the responsibility of truss fabricator. General practice is to camber for dead load deflection.
11. Plate type, size, orientation and location dimensions indicated are minimum plating requirements.
12. Lumber used shall be of the species and size, and in all respects, equal to or better than that specified.
13. Top chords must be sheathed or purlins provided at spacing indicated on design.
14. Bottom chords require lateral bracing at 10 ft. spacing, or less, if no ceiling is installed, unless otherwise noted.
15. Connections not shown are the responsibility of others.
16. Do not cut or alter truss member or plate without prior approval of an engineer.
17. Install and load vertically unless indicated otherwise.
18. Use of green or treated lumber may pose unacceptable environmental, health or performance risks. Consult with project engineer before use.
19. Review all portions of this design (front, back, words and pictures) before use. Reviewing pictures alone is not sufficient.
20. Design assumes manufacture in accordance with TPIC Quality Criteria.

Micro City Engineering Services Inc.
(BCIN: 26064; FIRM BCIN: 29991)
RR #1, Po Box 61
Glencoe, Ontario
N0L 1M0
(519) 287 - 2242; Fax: (519) 287 - 5750 (Call)

LICENSED PROFESSIONAL ENGINEER
1-2014
S. KATSOULAKOS
PROVINCE OF ONTARIO

DWG NO ~~TM-B~~ 2-194/14
STRUCTURAL
COMPONENT ONLY

Responsibilities:

Micro City Engineering Services is responsible for the design of trusses as individual components.

It is the responsibilities of others to ascertain that the design loads utilized on this (these) drawing(s) meet or exceed the actual dead load imposed by the structure and the live load imposed by the local building code or the authorities having jurisdiction over such decisions.

All dimensions are to be verified by the owner, contractor, architect, or other authority having input over such decisions prior to truss component manufacture. At no time shall Micro City Engineering Services Inc. or its employees be responsible for dimension errors.

Micro City Engineering Services Inc. bears no responsibility for the erection of any truss components. Persons erecting truss components are cautioned to seek professional advice regarding temporary and permanent bracing systems and to be **totally** familiar with all aspects of truss erection prior to proceeding on **any** truss component erection job. Any bracing shown on Micro City Engineering Services Inc. or Tamarack Roof Trusses Inc. sealed or unsealed truss component drawings is specified for the single truss component in question and is identified as an integral part of the design for that particular truss component but is **not** meant to represent the only required bracing for that particular truss component when installed as a component in a series of truss components in a roof truss system.

~~It is the truss manufacturer's responsibility to ensure that trusses are manufactured in accordance with Micro City Engineering~~ Services Inc. specifications outlined below:

SPECIFICATIONS:

Truss components sealed by Micro City Engineering Services Inc. must conform to the relevant sections of the current Building Code of Ontario and Canada (Part 4 or Part 9) or the current Farm Building Code of Canada in accordance with the application specified on the sealed truss component drawing. All truss component design procedures must conform to the current design standard issued by the Truss Plate Institute of Canada (TPIC). All unit lumber and nailing stresses identified on truss component design drawings and/or used in the design of individual truss components shall conform to the current CSA Wood Design standard identified in the current Building Code and TPIC Design Standards.

The lumber used to manufacture any truss component is to conform to the specified size and grade identified on the truss drawing.

The lumber used in the manufacture of any truss component is not to exceed 19% during its service use unless specifically noted on the truss drawing.

The lumber used in the manufacture of any truss component is not to be treated with any chemicals during its service life unless specifically noted on the truss drawing.

Connector plates shall be applied to both faces of the truss component at each joint and shall be positioned exactly as specified.

The top chord of any truss component is assumed to be continuously laterally braced by the roof sheathing or purlins at intervals specified on the sealed truss component drawing but not exceeding 24" o/c (Part 9 design) and not exceeding 48" o/c (Part 4 or Agricultural design).

When a truss component is to be installed with no rigid ceiling attached directly to the bottom chord, then the bottom chord is to be laterally braced at intervals not exceeding 3m (or 10'-0").

All sealed or unsealed truss component drawings provided by Micro City Engineering Services Inc. Or Tamarack Roof Trusses Inc. should be read in conjunction with the following:

Warning-Verify design parameters and READ NOTES ON THIS AND INCLUDED MITEK REFERENCE PAGE MII-7473C rev 10-'08 BEFORE USE. Design valid for use only with Mitek connectors. This design is based only upon parameters shown, and is for individual building component. Applicability of design parameters and proper incorporation of component is the responsibility of the building designer - not the truss designer. Bracing shown is for lateral support of individual web members only. Additional temporary bracing to insure stability during construction is the responsibility of the erector. Additional permanent bracing of the overall structure is the responsibility of the building designer. For general guidance regarding fabrication, quality control, storage, delivery, erection, and bracing, consult TPIC Appendix G - Minimum Quality Manufacturing Criteria available from www.tpic.ca and BCSI Building Component Safety Information available from the Truss Plate Institute, 781 N. Lee Street, Suite 312, Alexandria, VA, 22314.