CONSTRUCTION NOTES (Unless otherwise noted)

ALL CONSTRUCTION TO ADHERE TO THESE PLANS AND SPEC'S AND TO CONFORM TO THE ONTARIO BUILDING CODE AND ALL OTHER APPLICABLE CODES AND AUTHORITIES HAVING JURISDICTION. THESE REQUIREMENTS ARE TO BE TAKEN AS MINIMUM SPECIFICATIONS. ONT. REG. 332/12-2012 OBC.

(1.) ROOF CONSTRUCTION
NO.210 (10.25kg/m2) ASPHALT SHINGLES, 10mm (3/8") PLYWOOD SHEATHING WITH "H" CLIPS. APPROVED WOOD TRUSSES @ 610mm (24") O.C. MAX. APPROVED EAVES PROTECTION TO EXTEND 900mm (3'-0") FROM EDGE OF ROOF AND MIN. 300mm (12") BEYOND INNER FACE OF EXTERIOR WALL, (EAVES PROTECTION NOT REQ'D FOR ROOF SLOPES 8:12 OR GREATER) 38x89 (2"x4") TRUSS BRACING @ 1830mm (6'-0") O.C. AT BOTTOM CHORD. PREFIN. ALUM. EAVESTROUGH, FASCIA, RWL & VENTED SOFFIT. PROVIDE ICE & WATER SHIELD TO ALL ROOF/WALL SURFACES SUSCEPTIBLE TO ICE DAMMING. ROOF SHEATHING TO BE FASTENED 150 (6") c/c ALONG EDGES & INTERMEDIATE SUPPORTS WHEN TRUSSES SPACED GREATER THAN 406 (16"). ATTIC VENTILATION 1:300 OF INSULATED CEILING AREA WITH MIN. 25% AT EAVES & MIN. 25% AT RIDGE (OBC 9.19.1.2.).

(2.) FRAME WALL CONSTRUCTION (2"x6") (REFER TO B.O.P. FORM)
SIDING, HARDIE BOARD, STUCCATO BOARD OR EQUAL AS PER ELEVATION, 19x64 (1"x3") VERTICAL WOOD FURRING, APPROVED SHEATHING PAPER, MIN. RSI. 0.88 (R-5) RIGID INSULATION, 38x140 (2"x6") STUDS @ 400mm (16") O.C. FILLED WITH MIN. RSI. 3.87 (R-22) BATT INSULATION, TOTAL MIN. RSI. 4.75 (R-27). APPROVED DIAGONAL WALL BRACING, VAPOUR BARRIER AND CONT. AIR BARRIER, 13mm (1/2") INT. DRYWALL FINISH.

(2B) FRAME WALL CONSTRUCTION – GARAGE WALLS
SIDING AS PER ELEV., 19x38 (1"x2") VERTICAL WOOD FURRING, CONTIN. SHEATHING MEMBRANE, 9.5mm (3/8") EXT. TYPE SHEATHING, 38x89 (2"x4") STUDS @ 406mm (16") O.C. ((FOR MAX. HEIGHT 3000mm (9'-10")) OR 38x140 (2"x6" STUDS @ 406mm (16") O.C. (FOR MAX. HEIGHT OF 3.6M (11'-10")) WITH APPROVED DIAGONAL WALL BRACING. 13mm (1/2") INTERIOR DRYWALL FINISH.
REFER TO NOTE 19 WHERE FLOOR EXISTS ABOVE GARAGE. SIDING TO BE MIN. 200mm (8") ABOVE FINISH GRADE.

(2C) STUCCO WALL CONSTRUCTION (2"x6") (REFER TO B.O.P. FORM)
STUCCO CLADDING SYSTEM CONFORMING TO O.B.C. 9.27.1.1.(2) & 9.28 THAT EMPLOY A MINIMUM 6mm (1/4") AIR SPACE BEHIND THE CLADDING WITH POSITIVE DRAINAGE TO THE EXTERIOR AND APPLIED PER MANUFACTURERS SPECIFICATIONS ON 25mm (1") MIN. EXTRUDED OR EXPANDED RIGID POLYSTYRENE, APPROVED SHEATHING PAPER, MINIMUM RSI. 0.88 (R-5) RIGID INSULATION, 38x140 (2"x6") STUDS @ 400mm (16") O.C. FILLED WITH MIN. RSI. 3.87 (R22) BATT INSUL. TOTAL MIN. RSI. 4.75 (R-27), APPROVED DIAGONAL WALL BRACING, VAPOUR BARRIER AND CONT'L AIR BARRIER, 13mm (1/2") GYPSUM BOARD INTERIOR FINISH. STUCCO TO BE MIN. 200 (8") ABOVE FINISH GRADE.

(2D) STUCCO WALL CONSTRUCTION – GARAGE WALLS
STUCCO CLADDING SYSTEM CONFORMING TO O.B.C. 9.27.1.1.(2) & 9.28 THAT EMPLOY A MINIMUM 6mm (1/4") AIR SPACE BEHIND THE CLADDING WITH POSITIVE DRAINAGE TO THE EXTERIOR AND APPLIED PER MANUFACTURERS SPECIFICATIONS OVER 25mm (1") MIN. EXPANDED OR EXTRUDED RIGID POLYSTYRENE ON APPROVED AIR/MOISTURE BARRIER ON 13mm (1/2") EXT. TYPE SHEATHING ON 38x89 (2"x4") STUDS @ 406mm (16") O.C. ((FOR MAX. HEIGHT 3000mm (9'-10")) OR 38x140 (2"x6" STUDS @ 406mm (16") O.C. (FOR MAX. HEIGHT OF 3.6M (11'-10")) WITH APPROVED DIAGONAL WALL BRACING. 13mm (1/2") INTERIOR DRYWALL FINISH.
REFER TO NOTE 19 WHERE FLOOR EXISTS ABOVE GARAGE.
STUCCO TO BE MIN. 200mm (8") ABOVE FINISH GRADE.

(3.) MASONRY VENEER CONSTRUCTION (2"x6") (REFER TO B.O.P. FORM)
90mm (4") MASONRY, 25mm (1") AIR SPACE, 22x180x0.76mm (7/8"x7"x0.03") GALV. METAL TIES @ 400mm (16") o.c. HORIZONTAL 600mm (24") o.c. VERTICAL. APPROVED SHEATHING PAPER, MIN. RSI. 0.88 (R-5) RIGID INSULATION, 38x140 (2"x6") STUDS @ 400mm (16") O.C. FILLED WITH MIN. RSI. 3.87 (R-22) BATT INSULATION, TOTAL MIN. RSI. 4.75 (R-27). APPROVED DIAGONAL WALL BRACING, VAPOUR BARRIER AND CONT. AIR BARRIER, 13mm (1/2") INT. DRYWALL FINISH. PROVIDE WEEP HOLES @ 800mm (32") o.c. BOTTOM COURSE AND OVER OPENINGS. PROVIDE BASE FLASHING UP MIN. 150mm (6") BEHIND BUILDING PAPER.

(3B) MASONRY VENEER CONSTRUCTION – GARAGE WALLS
90mm (4") MASONRY, 25mm (1") AIR SPACE, 22x180x0.76mm (7/8"x7"x0.03") GALV. METAL TIES @ 406mm (16") O.C. HORIZONTAL 610mm (24") O.C. VERTICAL. APPROVED SHEATHING PAPER, 9.5mm (3/8") EXTERIOR TYPE SHEATHING, 38x89 (2"x4") STUDS @ 406mm (16") O.C. ((FOR MAX. HEIGHT 3000mm (9'-10")) OR 38x140 (2"x6" STUDS @ 406mm (16") O.C. (FOR MAX. HEIGHT OF 3.6M (11'-10")) WITH APPROVED DIAGONAL WALL BRACING. 13mm (1/2") INTERIOR DRYWALL FINISH.
REFER TO NOTE 19 WHERE FLOOR EXISTS ABOVE GARAGE. PROVIDE WEEP HOLES @ 800mm (32") O.C. BOTTOM COURSE AND OVER OPENINGS. PROVIDE BASE FLASHING UP MIN. 150mm (6") BEHIND BUILDING PAPER. BRICK TO BE MIN. 150mm (6") ABOVE FINISH GRADE.

INTERIOR STUD PARTITIONS
(4.) FOR BEARING PARTITIONS 38x89 (2"x4") @ 406mm (16") O.C. FOR 2 STOREYS AND 305mm (12") O.C. FOR 3 STOREYS, NON-BEARING PARTITIONS 38x89 (2"x4") @ 610mm (24") O.C. PROVIDE 38x89 (2"x4") BOTTOM PLATE AND 2/38x89 (2/2"x4") TOP PLATE. 13mm (1/2") INT. DRYWALL BOTH SIDES OF STUDS, PROVIDE 38x140 (2"x6") STUDS/PLATES WHERE NOTED.

PROVIDE SWITCHES CONTROLLING LIGHTS OVER STAIRS AS PER OBC DIV. B. 9.34.2.3.

PROVIDE LIGHTS IN THE UNFINISHED BASEMENT AS PER OBC. DIV. B. 9.34.2.4.

(5.) FOUNDATION WALL/FOOTINGS: (9.15.3, 9.15.4, 9.13.2, 9.16.2.1.(2))
200mm (8") POURED CONC. FDTN. WALL 15MPa (2200psi) WITH BITUMINOUS DAMPPROOFING AND DRAINAGE LAYER. DRAINAGE LAYER REQ'D. WHEN BASEMENT INSUL. EXTENDS 900 (2'-11") BELOW FIN. GRADE. DRAINAGE LAYER IS NOT REQ'D. IF FOUNDATION WALL IS WATERPROOFED. MAXIMUM POUR HEIGHT 2390 (7'-10") ON 500x155 (20"x6") CONTINUOUS KEYED CONC. FTG. BRACE FDTN. WALL PRIOR TO BACKFILLING. ALL FOOTINGS SHALL REST ON NATURAL UNDISTURBED SOIL OR COMPACTED ENGINEERED FILL.

* REFER TO UNIT PLANS FOR STRIP FOOTING SIZES *

-MAXIMUM FLOOR LIVE LOAD OF 2.4kPa. (50psf.) PER FLOOR.
-REFER TO SOILS REPORT FOR SOIL CONDITIONS AND BEARING CAPACITY.

(6.) FOUNDATION DRAINAGE OBC. 9.14.2. & 9.14.3.
100mm (4") DIA. FOUNDATION DRAINAGE TILE 150mm (6") CRUSHED STONE OVER AND AROUND DRAINAGE TILES.

(7.) BASEMENT SLAB OBC. 9.3.1.6.(1)(b), 9.16.4.5.(1), 9.25.3.3.(15)
80mm (3")MIN. 25MPa (3600psi) CONC. SLAB ON 100mm (4") COARSE GRANULAR FILL, OR 15MPa. (2200psi) CONC. WITH DAMPPROOFING BELOW SLAB. UNDER SLAB INSULATION PER B.O.P. FORM where required.
ALL SLAB JOINTS & PENETRATIONS TO BE SEALED TO MAINTAIN AIR BARRIER.

(8.) WOOD SUBFLOORS (SEE OBC. 9.23.14. & 9.30.2.1)
-19mm (3/4") MIN. T & G SUBFLOOR UNDER GROUND FLOOR FINISH FLOOR.
16mm (5/8") T&G SUBFLOOR UNDER SECOND FLOOR FINISH FLOOR.
16mm (5/8") PANEL-TYPE UNDERLAY FOR CERAMIC TILE APPLICATION.
6mm (1/4") PANEL-TYPE UNDERLAYMENT UNDER RESILIENT & PARQUET FLOORING.

(9.) ATTIC INSULATION (REFER TO B.O.P. FORM)
RSI 10.56 (R60) BLOWN IN ROOF INSULATION AND APPROVED VAPOUR BARRIER, 16mm (5/8") INT. DRYWALL FINISH OR APPROVED EQUAL. RSI 3.52 (R20) MIN. ABOVE INNER SURFACE OF EXTERIOR WALL.

ALL STAIRS/EXTERIOR STAIRS –OBC. 9.8.–
(10.) UNIFORM RISE -5mm (1/4") MAX BETWEEN ADJACENT TREADS OR LANDINGS
-10mm (1/2") MAX BETWEEN TALLEST & SHORTEST RISE IN FLIGHT

MAX. RISE	= 200 (7-7/8")
MIN. RUN	= 210 (8-1/4")
MIN. TREAD	= 235 (9-1/4")
MAX. NOSING	= 25 (1")
MIN. HEADROOM	= 1950 (6'-5")
RAIL @ LANDING	= 900 (2'-11")
RAIL @ STAIR	= 865 (2'-10") to 965 (3'-2")
MIN. STAIR WIDTH	= 860 (2'-10")

FOR CURVED STAIRS

MIN. RUN	= 150 (6")
MIN. AVG. RUN	= 200 (8")

(11.) HANDRAILS –OBC. 9.8.7.–
FINISHED RAILING ON PICKETS SPACED MAXIMUM 100mm (4") BETWEEN PICKETS. CLEARANCE BETWEEN HANDRAIL AND SURFACE BEHIND IT TO BE 50 (2") MIN. HANDRAILS TO BE CONTINUOUS EXCEPT FOR NEWEL POST AT CHANGES OF DIRECTION .

INTERIOR GUARDS –OBC. 9.8.8.–
INTERIOR GUARDS: 900mm (2'-11") MIN. HIGH

EXTERIOR GUARDS – OBC. 9.8.8.
900mm (36") HIGH GUARD WHERE DISTANCE FROM PORCH TO FIN. GRADE IS LESS THAN 1800mm (71"). 1070mm (42") HIGH GUARD IS REQUIRED WHERE DISTANCE EXCEEDS 1800mm (71").

(12.) SILL PLATE ANCHORAGE
38x89 (2"x4") SILL PLATE WITH 13mm (1/2") DIA. ANCHOR BOLTS 200mm (8") LONG. EMBEDDED MIN. 100mm (4") INTO CONC. @ 2400mm (7'-10") O.C., CAULKING OR 25 (1") MIN. MINERAL WOOL BETWEEN PLATE AND TOP OF FDTN. WALL.
USE NON-SHRINK GROUT TO LEVEL SILL PLATE WHEN REQUIRED.

(13.) BASEMENT INSULATION (REFER TO B.O.P. FORM)
FOUNDATION WALLS ENCLOSING HEATED SPACE SHALL BE INSULATED FROM THE UNDERSIDE OF THE SUBFLOOR TO NOT MORE THAN 200mm (8") ABOVE THE FINISHED FLOOR & NO CLOSER THAN 50mm (2") OF THE BASEMENT SLAB. FOUNDATION WALL INSULATION SHALL BE MINIMUM RSI. 3.52 (R20). INSULATION TO HAVE APPROVED VAPOUR BARRIER. DAMPPROOF WITH BUILDING PAPER BETWEEN THE FOUNDATION WALL AND INSULATION UP TO GRADE LEVEL. NOTE: FULL HEIGHT INSULATION AT COLD CELLAR WALLS. AIR BARRIER TO BE SEALED TO FOUNDATION WALL WITH CAULKING.

(14.) BASEMENT BEARING STUD PARTITION
38x89/140 (2"x4"/6") STUDS @ 400mm (16") O.C. 38x89/140 (2"x4"/6") SILL PLATE ON DAMPPROOFING MATERIAL, 13mm (1/2") DIA. ANCHOR BOLTS 200mm (8") LONG, EMBEDDED MIN. 100mm (4") INTO CONCRETE @ 2400mm (7'-10") O.C. 100mm (4") HIGH CONCRETE CURB ON 305x155 (12"x6") FOR 2x4 STUD WALL OR 400x155 (16"x6") FOR 2x6 STUD WALL, CONCRETE FOOTING. ADD HORIZONTAL BLOCKING AT MID-HEIGHT IF WALL IS UNFINISHED.

(15.) STEEL BASEMENT COLUMN (SEE O.B.C. 9.17.3)
89mm(3-1/2") DIA x 4.76mm(0.188") STEEL COLUMN WITH 150x150x9.5 (6"x6"x3/8") STEEL TOP & BOTTOM PLATE.

(15A) STEEL COLUMN (SEE O.B.C. 9.17.3)
90mm(3-1/2") DIA x 4.76mm(0.188") STEEL COLUMN WITH 100x100x6.0 (4"x4"x1/4") TOP & BOTTOM PLATES. FIELD WELD BOTTOM PLATE TO 100x250x12.5 (4"x10"x1/2") BASE PLATE C/W 2-12mm DIA. x 300mm LONG x50mm HOOK ANCHORS (2-1/2"x12"x2"). TIE COLUMN TO STUD WALL WITH 2-32x3.175 (1 1/4"x 1/8") STEEL STRAP WELDED TO COLUMN AND FASTENED TO STUD WITH 2-SDS 6.35x38 (1/4"x1 1/2") SCREWS MANUF. BY SIMPSON STRONG TIE.

PROVIDE WATERPROOF WALL FINISH IN WASHROOMS AS PER OBC DIV. B. 9.29.2.1

(16.) CONCRETE PILASTER
BEAM POCKET OR 200x200 (8"x8") POURED CONC. NIB WALLS. MIN. BEARING 90mm (3-1/2")

(17.) 19x38 (1"x2") CONTINUOUS WOOD STRAPPING BOTH SIDES OF STEEL BEAM. (OBC. 9.23.4.3.(3c))

(18.) GARAGE SLAB
100mm (4") 32MPa (4640psi) CONC. SLAB WITH 5-8% AIR ENTRAINMENT ON OPTIONAL 100 (4") COARSE GRANULAR FILL WITH COMPACTED SUB-BASE OR COMPACTED NATIVE FILL.
SLOPE TO FRONT (EXTERIOR) AT 1% MIN.

(19.) INTERIOR GARAGE WALLS & CEILINGS (REFER TO B.O.P. FORM)
13mm (1/2") GYPSUM BOARD ON WALL AND CEILING BETWEEN HOUSE AND GARAGE. WALL INSULATION = RSI. 3.87 (R22) BATTS + RSI. 0.88 (R5) CONTINUOUS RIGID INSUL. CEILING INSUL.= RSI. 5.46 (R31). TAPE AND SEAL ALL JOINTS AIRTIGHT PER O.B.C. 9.10.9.16.

(20.) DOOR AND FRAME GASPROOFED. DOOR EQUIPPED WITH SELF CLOSING DEVICE AND WEATHERSTRIPPING PER OBC 9.10.13.15.

(21.) EXTERIOR STEP
PRECAST CONCRETE STEP OR WOOD STEP WHERE NOT EXPOSED TO WEATHER. MAX. RISE 200mm (7-7/8") MIN. TREAD 250mm (9-1/2"). SEE OBC. 9.8.9.2., 9.8.9.3. & 9.8.10.

(22.) DRYER VENT(OBC-6.2.3.8.(7), 9.2.4.1.1 & 9.2.4.11)
CAPPED DRYER EXHAUST VENTED TO EXTERIOR.
(USE 100mm (4") DIA. SMOOTH WALL VENT PIPE).

(23.) INSULATED ATTIC ACCESS (OBC–9.19.2.1)
ATTIC ACCESS HATCH WITH MIN. DIMENSION OF 545x700mm (21-1/2"x27-1/2") & A MIN. AREA OF 0.32 SQ.M. (3.44 SQ.FT.) WITH WEATHERSTRIPPING. RSI 3.52 (R20) RIGID INSULATION BACKING.

(24.) FIREPLACE CHIMNEYS –OBC. 9.21.–
TOP OF FIREPLACE CHIMNEY SHALL BE 915mm (3'-0") ABOVE THE HIGHEST POINT AT WHICH IT COMES IN CONTACT WITH THE ROOF AND 610mm (2'-0") ABOVE THE ROOF SURFACE WITHIN A HORIZ. DISTANCE OF 3050mm (10'-0") FROM THE CHIMNEY.

(25.) LINEN CLOSETS
4 SHELVES MIN. 350mm (14") DEEP.

(26.) MECHANICAL EXHAUST
MECHANICAL EXHAUST FAN, VENTED TO EXTERIOR AS REQUIRED BY OBC. 9.32.3.5. & 9.32.3.10.

(27.) STEEL BEARING PLATE FOR MASONRY WALLS
280x280x16 (11"x11"x5/8") STL. PLATE FOR STL. BEAMS AND 280x280x12 (11"x11"x1/2") STL. PLATE FOR WOOD BEAMS BEARING ON CONC. BLOCK PARTYWALL, ANCHORED WITH 2-19mm (3/4") x 200mm (8") LONG GALV. ANCHORS WITHIN SOLID BLOCK COURSE. LEVEL WITH NON-SHRINK GROUT.

(27A) SOLID WOOD BEARING FOR WOOD STUD WALLS
SOLID BEARING TO BE AT LEAST AS WIDE AS THE SUPPORTED MEMBER. SOLID WOOD BEARING COMPOSED OF BUILT-UP WOOD STUDS TO BE CONSTRUCTED IN ACCORDANCE WITH OBC 9.17.4.2(2).

(28.) CLASS 'B' VENT
U.L.C. RATED CLASS "B" VENT 610mm (2'-0") ABOVE THE POINT IN CONTACT WITH THE ROOF FOR SLOPES UP TO 9/12, REFER TO THE ONTARIO GAS UTILIZATION CODE.

(29.) BASEMENT WOOD POST (OBC 9.17.4.)
3-38x140 (3-2"x6") BUILT-UP-POST ON METAL BASE SHOE ANCHORED TO CONC. WITH 12.7 DIA. BOLT, 406x406x203 (16"x16"x8") CONC. FTG. OR AS OTHERWISE SPECIFIED ON DRAWING.

(30.) STEPPED FOOTINGS (OBC 9.15.3.9.)
MIN. HORIZ. STEP = 600mm (24").
MAX. VERT. STEP = 600mm (24").

(31.) SLAB ON GRADE
MIN. 100mm (4") CONCRETE SLAB ON GRADE ON 100mm (4") COARSE GRANULAR FILL. REINFORCED WITH 6x6-W2.9xW2.0 MESH PLACED NEAR MID-DEPTH OF SLAB. CONC. STRENGTH 32 MPa (4640 psi) WITH 5-8% AIR ENTRAINMENT ON COMPACTED SUB-GRADE. UNDER SLAB INSULATION AS PER B.O.P. FORM where required.
ALL JOINTS & PENETRATIONS OF INTERIOR SLABS TO BE SEALED TO MAINTAIN AIR BARRIER.

(32.) DIRECT VENTING GAS FURNACE VENT
DIRECT VENT FURNACE TERMINAL MIN. 900mm (36") FROM A GAS REGULATOR. MIN. 300mm (12") ABOVE FIN. GRADE, FROM ALL OPENINGS, EXHAUST AND INTAKE VENTS. HRV INTAKE TO BE A MIN. OF 1830mm (6'-0") FROM ALL EXHAUST TERMINALS. REFER TO GAS UTILIZATION CODE.

(33.) DIRECT VENTING GAS FIREPLACE VENT
DIRECT VENT GAS FIREPLACE. VENT TO BE A MINIMUM 300mm (12") FROM ANY OPENING AND ABOVE FIN. GRADE. REFER TO GAS UTILIZATION CODE.

(34.) JOIST STRAPPING AND BRIDGING (SEE OBC. 9.23.9.4)
ALL CONVENTIONAL FRAMED FLOOR JOISTS WITH SPANS OVER 2100mm (6'-11") TO BE BRIDGED WITH 38x38 (2"x2") CROSS BRACING OR SOLID BLOCKING @ 2100mm (6'-11") O.C. MAX. AND WHERE SPECIFIED BY JOIST TABLES A-1 OR A-2 STRAPPING SHALL BE 19x64 (1"x3") @ 2100mm (6'-11") O.C. UNLESS A PANEL TYPE CEILING FINISH IS APPLIED. (* SEE OBC 9.23.9.4. *).
REFER TO FLOOR LAYOUTS FOR ENGINEERED FLOOR JOISTS.

(35.) EXPOSED BUILDING FACE –OBC. 9.10.15.
EXTERIOR WALLS TO HAVE A FIRE RESISTANCE RATING OF NOT LESS THAN 45 min. WHERE LIMITING DISTANCE (LD) IS LESS THAN 1.2M (3'-11"). WHERE THE LD IS LESS THAN 600mm (1'-11") THE EXPOSING FACE SHALL BE CLAD IN NON-COMBUSTIBLE MATERIAL. SEE ELEVATIONS FOR ADDITIONAL NOTES.

(36.) COLD CELLAR PORCH SLAB (OBC 9.39.)
FOR MAX. 2500 mm (8'-2") PORCH DEPTH (SHORTEST DIM.), 125mm (4 7/8") 32MPa (4640psi) CONC. SLAB WITH 5-8% AIR ENTRAINMENT. REINF. WITH 10M BARS @ 200mm (7 7/8") O.C. EACH WAY IN BOTTOM THIRD OF SLAB, 600x600 (23 5/8"x 23 5/8") 10M DOWELS @ 600mm (23 5/8") O.C., ANCHORED IN PERIMETER FDTN. WALLS. SLOPE SLAB MIN. 1.0% FROM DOOR. SLAB TO HAVE MIN 75mm (3") BEARING ON FDTN WALLS. PROVIDE (WL1) LINTELS OVER CELLAR DOOR AND WITH 100mm (4") END BEARING.

(37.) FOUNDATION LEDGE FOR BRICK/MASONRY
THE FDTN. WALL SHALL NOT BE REDUCED TO LESS THAN 90mm (3-1/2") THICK TO A MAX. DEPTH OF 660mm (25") AND SHALL BE TIED TO THE FACING MATERIAL WITH METAL TIES SPACED 200mm (8") O.C. VERTICALLY AND 900mm (36") O.C. HORIZONTALLY. FILL SPACE BETWEEN WALL AND FACING SOLID WITH MORTAR.

(38.) CONVENTIONAL ROOF FRAMING (2.0Kpa. SNOW LOAD)
38x140 (2"x6") RAFTERS @ 406mm (16"O.C.) FOR MAX 11'-7" SPAN, 38x184 (2"x8") RIDGE BOARD. 38x89 (2"x4") COLLAR TIES AT MIDSPANS. CEILING JOISTS TO BE 38x89 (2"x4") @ 406mm (16") O.C. FOR MAX. 2830mm (9'-3") SPAN & 38x140 (2"x6") @ 406 (16") O.C. FOR MAX. 4450mm (14'-7") SPAN.
RAFTERS FOR BUILT-UP ROOF TO BE 38x89 (2"x4") @ 610mm (24") O.C. WITH A 38x89 (2"x4") CENTRE POST TO THE TRUSS BELOW, LATERALLY BRACED @ 1800mm (6'-0") O.C. VERTICALLY.

(39.) TWO STOREY VOLUME SPACES
-FOR A MAXIMUM 5490 mm (18'-0") HEIGHT AND MAXIMUM SUPPORTED ROOF TRUSS LENGTH OF 6.0m, PROVIDE 2-38x140 (2-2"x6") SPR.#2 CONTIN. STUDS @ 305mm (12") O.C. (TRIPLE UP AT EVERY THIRD DOUBLE STUD FOR BRICK WALLS) C/W 9.6 (3/8") THICK EXT. PLYWOOD SHEATHING. PROVIDE SOLID WOOD BLOCKING BETWEEN WOOD STUDS @ 1220 mm (4'-0") O.C. VERTICALLY. -FOR WALLS WITH HORIZ. DISTANCES NOT EXCEEDING 2900 mm (9'-6"), PROVIDE 38x140 (2"x6") STUDS @ 406 (16") O.C. WITH CONTINUOUS 2-38x140 (2-2"x6")TOP PLATES + 1-38x140 (1-2"x6") BOTTOM PLATE & MINIMUM OF 3-38x184 (3-2"x8") CONT. HEADER AT GRND. CEILING LEVEL TOE-NAILED & GLUED AT TOP, BOTTOM PLATES AND HEADERS.

(40.) EXPOSED FLOOR TO EXTERIOR (REFER TO B.O.P. FORM)
PROVIDE RSI 5.46 (R31) INSULATION, APPROVED VAPOUR BARRIER AND CONTINUOUS AIR BARRIER, FINISHED SOFFIT.

(41.) PARTYWALLS
TYPICAL 1 HOUR RATED PARTYWALL.
REFER TO DETAILS FOR TYPE AND SPECIFICATIONS.

(42.) EXTERIOR WALLS FOR WALK-OUT CONDITIONS
THE EXTERIOR BASEMENT STUD WALL TO BE 38x140 (2"x6") STUDS @ 406mm (16") o.c. OR 38x89 (2"x4") STUDS @ 305mm (12") o.c. WALL INSULATION TO BE SAME AS STANDARD ABOVE GRADE WOOD STUD WALLS (R20+R5).

WINDOWS: CANADA ZONE C
1) MINIMUM BEDROOM WINDOW –OBC. 9.9.10.1–
AT LEAST ONE BEDROOM WINDOW ON A GIVEN FLOOR IS TO HAVE MIN. 0.35m2 UNOBSTRUCTED GLAZED OR OPENABLE AREA WITH MIN. CLEAR WIDTH OF 380 mm (1'-3").
GLASS AREA NOT MORE THAN 17% OF GROSS PERIPHERAL WALL AREA. MAXIMUM U-VALUE 1.67 & MIN ER-VALUE 29
2) WINDOW GUARDS –OBC. 9.8.8.1.(6)
A GUARD IS REQUIRED WHERE THE TOP OF THE WINDOW SILL IS LOCATED LESS THAN 480mm (1'-7") ABOVE FIN. FLOOR AND THE DISTANCE FROM THE FIN. FLOOR TO THE ADJACENT GRADE IS GREATER THAN 1800mm (5'-11")
3) WINDOW WELLS –OBC. 9.14.6.3.
ALL WINDOW WELLS TO DRAIN TO FOOTING LEVEL PER OBC 9.14.6.3. CHECK WITH THE LOCAL AUTHORITY.

DOORS:
1) EXTERIOR DOORS– THERMAL RESISTANCE
ALL EXTERIOR DOORS TO COMPLY WITH THERMAL RESISTANCE AS STATED IN B.O.P. FORM
2) EXTERIOR SLIDING GLASS DOORS– THERMAL RESISTANCE
ALL EXTERIOR SLIDING GLASS DOORS TO COMPLY WITH THERMAL PERFORMANCE AS STATED IN B.O.P. FORM.

GENERAL:
1) MECHANICAL VENTILATION IS REQUIRED TO PROVIDE 0.3 AIR CHANGES PER HOUR AVERAGED OVER 24 HOURS. SEE MECHANICAL DRAWINGS.
2) ALL DOWNSPOUTS TO DRAIN AWAY FROM THE BUILDING AS PER OBC 9.26.18.2. AND MUNICIPAL STANDARDS.
3) SOLID WALL REINFORCEMENT FOR FUTURE GRAB BARS IN MAIN BATHROOM
REINFORCEMENT OF STUD WALLS SHALL BE INSTALLED ADJACENT TO WATER CLOSETS AND SHOWER OR BATHTUB IN MAIN BATHROOM. REFER TO OBC. 9.5.2.3, 3.8.3.8.(1)(d) & 3.8.3.13.(1)(f).
4) AIR BARRIERS
ALL AIR BARRIER SYSTEMS TO COMPLY WITH O.B.C.–DIV. B. 9.25.3.

LUMBER:
1) ALL LUMBER SHALL BE SPRUCE NO.2 GRADE, UNLESS NOTED OTHERWISE.
2) LUMBER EXPOSED TO THE EXTERIOR TO BE SPRUCE No.2 GRADE PRESSURE TREATED OR CEDAR, UNLESS NOTED OTHERWISE.
3) ALL LAMINATED VENEER LUMBER (L.V.L.) BEAMS, GIRDER TRUSSES, AND METAL HANGER CONNECTIONS SUPPORTING ROOF FRAMING TO BE DESIGNED & CERTIFIED BY ROOF TRUSS MANUFACTURER.
4) LVL BEAMS NOT SPECIFIED ON ENGINEERED FLOOR OR ROOF LAYOUTS SHALL BE VERSALAM 2.0E. OR EQUAL. NAIL EACH PLY OF LVL WITH 89mm (3 1/2") LONG COMMON WIRE NAILS @ 300mm (12") O.C. STAGGERED IN 2 ROWS FOR 184,240 & 300mm (7 1/4",9 1/2", 11 7/8") DEPTHS AND STAGGERED IN 3 ROWS FOR GREATER DEPTHS AND FOR 4 PLY MEMBERS ADD 13mm (1/2") DIA. GALV. BOLTS BOLTED AT MID-DEPTH OF BEAM @ 915mm (3'-0") O.C.
5) PROVIDE FACE MOUNT BEAM HANGERS TYPE "SCL" MANUFACTURED BY SIMPSON STRONG-TIE OR EQUAL FOR ALL LVL BEAM TO BEAM CONNECTIONS UNLESS OTHERWISE NOTED.
REFER TO ENGINEERED FLOOR LAYOUTS.
6) JOIST HANGERS: PROVIDE METAL HANGERS FOR ALL JOISTS AND BUILT-UP WOOD MEMBERS INTERSECTING FLUSH BUILT-UP WOOD MEMBERS.
7) WOOD FRAMING NOT TREATED WITH A WOOD PRESERVATIVE, IN CONTACT WITH CONCRETE, SHALL BE SEPARATED FROM THE CONCRETE BY AT LEAST 2 mil POLYETHYLENE FILM, No. 50 (45lbs.) ROLL ROOFING OR OTHER DAMPPROOFING MATERIAL, EXCEPT WHERE THE WOOD MEMBER IS AT LEAST 150mm (6") ABOVE THE GROUND.

STEEL:
1) STRUCTURAL STEEL SHALL CONFORM TO CAN/CSA-G40.21 GRADE 350W. "STRUCTURAL QUALITY". PER OBC. B-9.23.4.3.
2) REINFORCING STEEL SHALL CONFORM TO CSA-G30-18M GRADE 400R.

STUCCO:
1) ALL STUCCO WALLS TO HAVE A MINIMUM 6mm (1/4") AIR SPACE BEHIND THE CLADDING WITH POSITIVE DRAINAGE TO THE EXTERIOR. THE EXTERIOR SHEATHING MUST NOT BE GYPSUM BASED. ALL STUCCO TO BE INSTALLED AS PER MANUFACTURERS SPECIFICATIONS.

EVCS ELECTRIC VEHICLE CHARGING SYSTEM (EVCS)
ROUGH-IN FOR FUTURE ELECTRIC VEHICLE SUPPLY EQUIPMENT (CHARGING SYSTEM) TO BE INSTALLED. ROUGH-IN SHALL INCLUDE:
- A minimum 200 amp Panelboard.
- Conduit that is not less than 1 1/16" (27mm) trade size.
- A square 4 11/16" (118mm) trade size electrical outlet box.
- Rainproofed Electrical outlet box to be installed in the Garage or carport or adjacent to Driveway.

REFER TO 2012 OBC. 9.34.4.

LEGEND

	CLASS 'B' VENT		EXHAUST FAN TO EXTERIOR
	DUPLEX OUTLET (12" ABOVE SURFACE)		DUPLEX OUTLET (HEIGHT A.F.F)
WP	WEATHERPROOF DUPLEX OUTLET	GFI	GFI DUPLEX OUTLET (HEIGHT A.F.F)
PL	POT LIGHT		HEAVY DUTY OUTLET (220 volt)
PC	LIGHT FIXTURE (PULL CHAIN)		LIGHT FIXTURE (CEILING MOUNTED)
	SWITCH		LIGHT FIXTURE (WALL MOUNTED)
FD	FLOOR DRAIN	HB	HOSE B/B (NON-FREEZE)
S.A. COD.	COMBINED SMOKE ALARM AND CARBON MONOXIDE DETECTOR/ALARM		
	SMOKE ALARM		
DJ	— DOUBLE JOIST	TJ	— TRIPLE JOIST
SJ	— SINGLE JOIST	LVL	— LAMINATED VENEER LUMBER
PL	POINT LOAD FROM ABOVE		
P.T.	—PRESSURE TREATED LUMBER	FL	— FLUSH MEMBER
G.T.	—GIRDER TRUSS BY ROOF TRUSS MANUF.	DROP	—DROPPED MEMBER
F.A.	FLAT ARCH		
C.A.	CURVED ARCH		
M.C.	MEDICINE CABINET		
	CONC. BLOCK WALL		
	SPECIAL WALL CONSTRUCTION SEE NOTE ON PLANS		
SB	SOLID WOOD BEARING (SPRUCE No. 2) SOLID BEARING TO BE AS WIDE AS SUPPORTED MEMBER OR AS DIRECTED BY STRUCTURAL ENGINEER. SOLID BEARING TO BE MINIMUM 2 PIECES.		
SBFA	SOLID WOOD BEARING TO MATCH FROM ABOVE		

NOTE: SOLID BEARING TO BE AT LEAST AS WIDE AS THE SUPPORTED LINTEL/BEAM

SMOKE ALARM (REFER TO OBC 9.10.19)
PROVIDE 1 PER FLOOR, NEAR THE STAIRS CONNECTING THE FLOOR LEVEL AND ALSO 1 IN EACH BEDROOM NEAR WALL DOOR. ALARMS TO BE CONNECTED TO AN ELECTRICAL CIRCUIT AND INTERCONNECTED TO ACTIVATE ALL ALARMS IF 1 SOUNDS. BATTERY BACK-UP REQUIRED. SMOKE ALARMS TO INCORPORATE VISUAL SIGNALLING COMPONENT (9.10.19.3.(3)).

CMA CARBON MONOXIDE ALARM (OBC 9.33.4.)
WHERE A FUEL-BURNING APPLIANCE IS INSTALLED IN A DWELLING UNIT, A CARBON MONOXIDE DETECTOR CONFORMING TO CAN/CGA-6.19,CSA 6.19 OR UL2034 SHALL BE INSTALLED ADJACENT TO EACH SLEEPING AREA. CARBON MONOXIDE DETECTOR(S) SHALL BE PERMANENTLY WIRED SO THAT ITS ACTIVATION WILL ACTIVATE ALL CARBON MONOXIDE DETECTORS AND BE EQUIPPED WITH AN ALARM THAT IS AUDIBLE WITHIN BEDROOMS WHEN THE INTERVENING DOORS ARE CLOSED.

S.A. COD. COMBINED SMOKE ALARM (REFER TO OBC 9.10.19) & CARBON MONOXIDE ALARM (OBC 9.33.4.)
REFER TO NOTES ABOVE FOR SMOKE AND CARBON MONOXIDE ALARM

SOIL GAS CONTROL (OBC 9.13.4.1 & 9.13.4.2)
PROVIDE CONSTRUCTION TO PREVENT LEAKAGE OF SOIL GAS INTO THE BUILDING IF REQUIRED.

2012 OBC. – ON. REG. 332/12
THESE DRAWINGS HAVE BEEN DESIGNED TO COMPLY WITH THE 2012 OBC AND ALL AMENDMENTS AS OF JANUARY 2019.

CONTRACTOR MUST VERIFY ALL DIMENSIONS ON THE JOB AND REPORT ANY DISCREPANCY TO THE VA3 DESIGN BEFORE PROCEEDING WITH THE WORK.
ALL DRAWINGS AND SPECIFICATIONS ARE INSTRUMENTS OF SERVICE AND THE PROPERTY OF THE DESIGNER WHICH MUST BE RETURNED AT THE COMPLETION OF THE WORK. ALL DRAWINGS TO BE USED FOR CONSTRUCTION ONLY AFTER BUILDING PERMIT HAS BEEN ISSUED.

REVISION: ONT. REG. 332/12-2012 OBC
Amendment O. Reg. 563/17
MR-17-S-28 JAN. 31, 2019

ESCC MODEL
ENERGY STAR VERSION 17
REFER TO BOP FORM

LOOSE STEEL LINTELS	
L1	=3-1/2" x 3-1/2" x 1/4"L (90x90x6.0L)
L2	=4" x 3-1/2" x 5/16"L (100x90x8.0L)
L3	=5" x 3-1/2" x 5/16"L (125x90x8.0L)
L4	=6" x 3-1/2" x 3/8"L (150x90x10.0L)
L5	=6" x 4" x 3/8"L (150x100x10.0L)
L6	=7" x 4" x 3/8"L (180x100x10.0L)

LAMINATED VENEER LUMBER (LVL) BEAMS		
LVL1A	=1-1 3/4"x7 1/4"	(1-45x184)
LVL1	=2-1 3/4"x7 1/4"	(2-45x184)
LVL2	=3-1 3/4"x7 1/4"	(3-45x184)
LVL3	=4-1 3/4"x7 1/4"	(4-45x184)
LVL4A	=1-1 3/4"x9 1/4"	(1-45x235)
LVL4	=2-1 3/4"x9 1/4"	(2-45x235)
LVL5	=3-1 3/4"x9 1/4"	(3-45x235)
LVL5A	=4-1 3/4"x9 1/4"	(4-45x235)
LVL6A	=1-1 3/4"x11 7/8"	(1-45x300)
LVL6	=2-1 3/4"x11 7/8"	(2-45x300)
LVL7	=3-1 3/4"x11 7/8"	(3-45x300)
LVL7A	=4-1 3/4"x11 7/8"	(4-45x300)
LVL8	=2-1 3/4"x14"	(2-45x356)
LVL9	=3-1 3/4"x14"	(3-45x356)

PAD FOOTINGS

120 KPa. NATIVE SOIL	100 KPa. NATIVE SOIL	90 KPa. ENGINEERED FILL SOIL
F1 = 42"x42"x18" CONCRETE PAD	F1 = 46"x46"x20" CONCRETE PAD	F1 = 48"x48"x20" CONCRETE PAD
F2 = 36"x36"x16" CONCRETE PAD	F2 = 39"x39"x16" CONCRETE PAD	F2 = 40"x40"x16" CONCRETE PAD
F3 = 30"x30"x12" CONCRETE PAD	F3 = 32"x32"x14" CONCRETE PAD	F3 = 34"x34"x14" CONCRETE PAD
F4 = 24"x24"x12" CONCRETE PAD	F4 = 26"x26"x12" CONCRETE PAD	F4 = 28"x28"x12" CONCRETE PAD
F5 = 16"x16"x8" CONCRETE PAD	F5 = 17"x17"x8" CONCRETE PAD	F5 = 18"x18"x8" CONCRETE PAD

(REFER TO FLOOR PLAN FOR UNUSUAL SIZE PADS NOT ON CHART.)

DOOR SCHEDULE

NOS.	WIDTH	HEIGHT 8'-9" CEILING	HEIGHT 10' OR MORE CEILING	TYPE
1	2'-10"	6'-8"	8'-0"	INSULATED ENTRANCE DOOR
1a	2'-8"	6'-8"	8'-0"	INSULATED FRONT DOORS
2	2'-8"	6'-8"	8'-0"	WOOD & GLASS DOOR
3	2'-8"	6'-8"	8'-0"	EXTERIOR SLAB DOOR
4	2'-8"	6'-8"	8'-0"	INTERIOR SLAB DOOR
5	2'-6"	6'-8"	8'-0"	INTERIOR SLAB DOOR
6	2'-2"	6'-8"	8'-0"	INTERIOR SLAB DOOR
7	1'-6"	6'-8"	8'-0"	INTERIOR SLAB DOOR
8	3'-0"	6'-8"	8'-0"	INTERIOR SLAB DOOR

BRICK VENEER LINTELS		
WL1	=3-1/2" x 3-1/2" x 1/4"L (89x89x6.4L)	+ 2-2"x8" SPR. No.2
WL2	=4" x 3-1/2" x 5/16"L (102x89x7.9L)	+ 2-2"x8" SPR. No.2
WL3	=5" x 3-1/2" x 5/16"L (127x89x7.9L)	+ 2-2"x10" SPR. No.2
WL4	=6" x 3-1/2" x 7/16"L (152x89x11.0L)	+ 2-2"x12" SPR. No.2
WL5	=6" x 4" x 7/16"L (152x102x11.0L)	+ 2-2"x12" SPR. No.2
WL6	=5" x 3-1/2" x 5/16"L (127x89x7.9L)	+ 2-2"x12" SPR. No.2
WL7	=5" x 3-1/2" x 5/16"L (127x89x7.9L)	+ 3-2"x12" SPR. No.2
WL8	=5" x 3-1/2" x 5/16"L (127x89x7.9L)	+ 3-2"x10" SPR. No.2
WL9	=6" x 4" x 7/16"L (152x102x11.0L)	+ 3-2"x10" SPR. No.2

WOOD LINTELS AND BEAMS		
WB1	=2-2"x8" (2-38x184)	SPR. No.2
WB2	=3-2"x8" (3-38x184)	SPR. No.2
WB3	=2-2"x10" (2-38x235)	SPR. No.2
WB4	=3-2"x10" (3-38x235)	SPR. No.2
WB5	=2-2"x12" (2-38x286)	SPR. No.2
WB6	=3-2"x12" (3-38x286)	SPR. No.2
WB7	=5-2"x12" (5-38x286)	SPR. No.2
WB11	=4-2"x10" (4-38x235)	SPR. No.2
WB12	=4-2"x12" (4-38x286)	SPR. No.2

THIS STRUCTURE MUST BE CONSTRUCTED TO MEET OR EXCEED THE PROVISIONS OF THE ONTARIO BUILDING CODE

REGISTERED PROFESSIONAL ENGINEER
B. MARINKOVIC
PROVINCE OF ONTARIO

STRUDET INC.
FOR STRUCTURE ONLY

RECEIVED
JUN 25 2019
TOWN OF CALEDON BUILDING SECTION
FILE NO

FEB 14 2019

no.	description	date	by
9	.	.	.
8	.	.	.
7	.	.	.
6	.	.	.
5	.	.	.
4	.	.	.
3	REVISED. RE-ISSUED FOR PERMIT.	FEB. 08/19	GW
2	INSULATION VALUES PER ESTAR V17.	JAN 31/19	GW
1	ISSUED FOR PERMIT.	JAN 18/19	GW

The undersigned has reviewed and takes responsibility for this design and has the qualifications and meets the requirements set out in the Ontario Building Code to be a Designer.
qualification information
Richard Vink (signature) 24488
name signature BCIN
registration information
VA3 Design Inc. 42858

Contractor must verify all dimensions on the job and report any discrepancy to the Designer before proceeding with the work. All drawings and specifications are instruments of service and the property of the Designer which must be returned at the completion of the work. Drawings are not to be scaled.

VA3 DESIGN
255 Consumers Rd Suite 120
Toronto ON M2J 1R4
t 416.630.2255 f 416.630.4782
va3design.com

Greenpark.

SINGLES

project name: LAMBERTS LANE HOME CORP. PH. 2
municipality: CALEDON
project no. 18023

STANDARD CONSTRUCTION NOTES

date	drawn by	checked by	scale	file name	drawing no.
JAN. 2018	GW	GW	3/16" = 1'-0"	GP-14X18-NOTES-JAN18-VA3-ES17-18023	1

greg - F:\LIBRARY\LIBRARY.VIL\2018 OBC CONSTRUCTION NOTES\GREENPARK\GP-14x18-NOTES-JAN19-VA3-ES17-18023.dwg - Wed, Feb 13 2019 - 2:10 PM

All drawings specifications, related documents and design are the copyright property of VA3 DESIGN. Reproduction of this property in whole or in part is strictly prohibited without VA3 DESIGN's written permission.

REFER TO STANDARD WALL SECTION SHEET FOR FURTHER INFORMATION ON EXTERIOR WALL CONSTRUCTION.

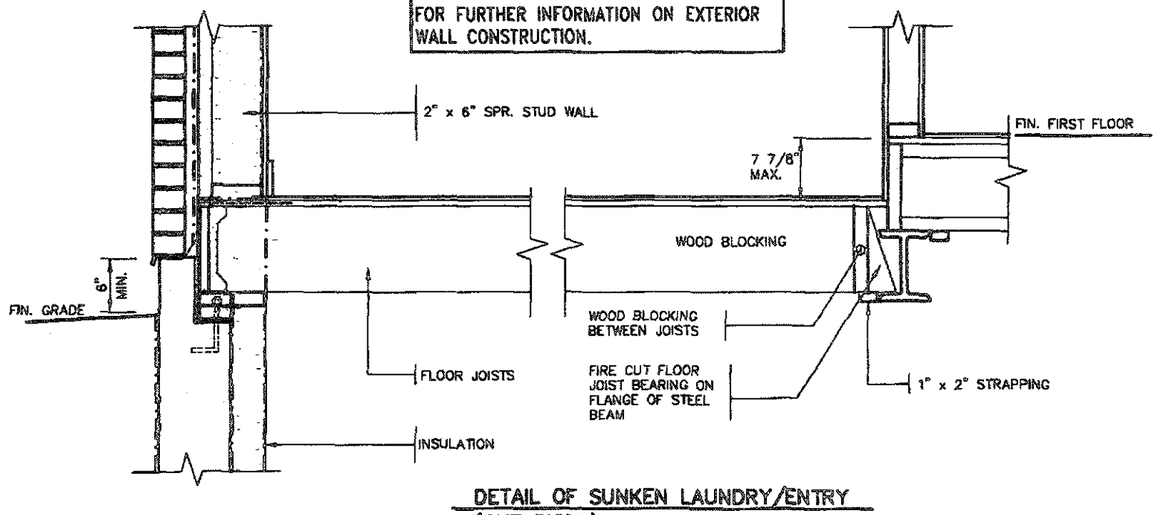

DETAIL OF SUNKEN LAUNDRY/ENTRY
(ONE RISER)

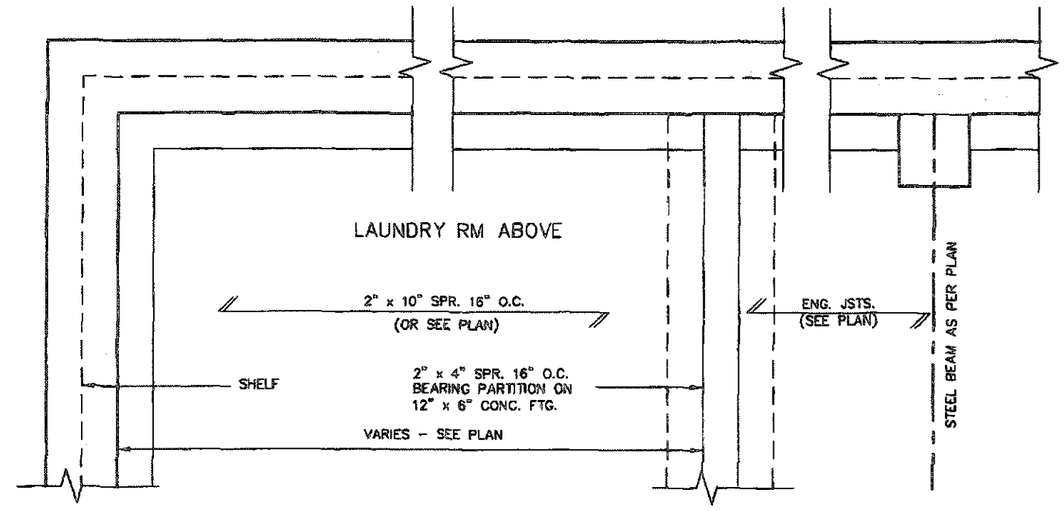

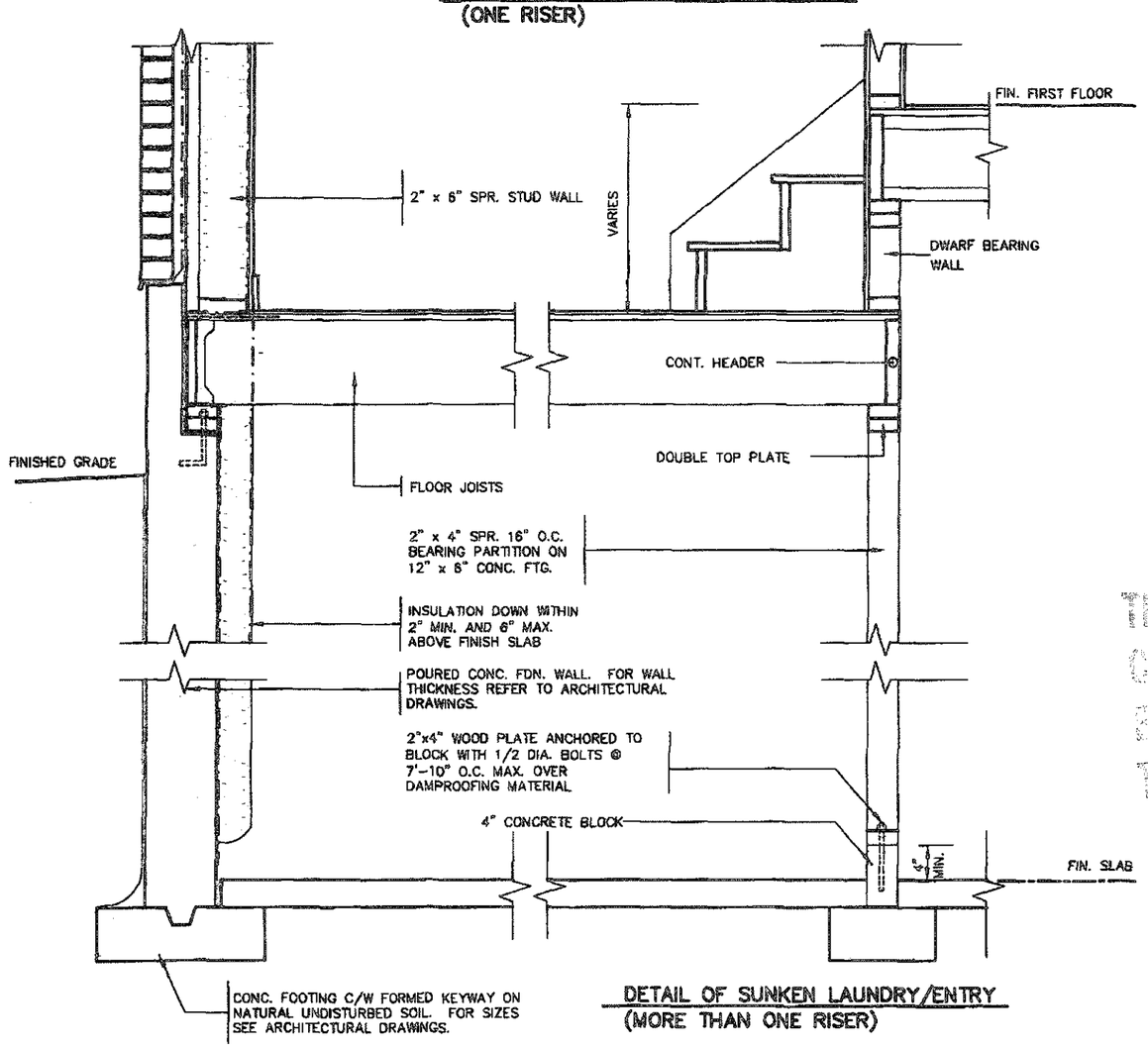

DETAIL OF SUNKEN LAUNDRY/ENTRY
(MORE THAN ONE RISER)

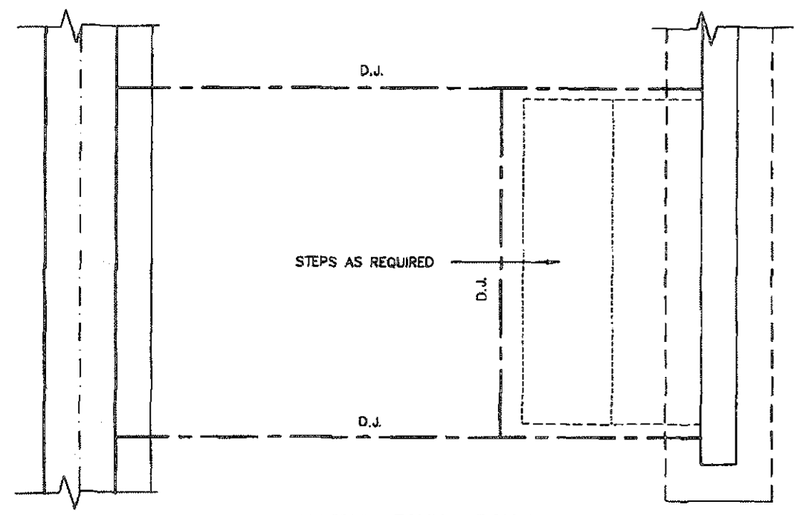

PARTIAL FOUNDATION PLAN

THIS STRUCTURE MUST BE CONSTRUCTED TO MEET OR EXCEED THE PROVISIONS OF THE ONTARIO BUILDING CODE

REGISTERED PROFESSIONAL ENGINEER
R. B. MARINKOVIC
PROVINCE OF ONTARIO

STRUDET INC.
FOR STRUCTURE ONLY

RECEIVED
JUN 25 2019
TOWN OF CALEDON
BUILDING SECTION
FILE NO.

FEB 14 2019

2012 CODE ENERGY STAR

no.	description	date	by
9			
8			
7			
6			
5			
4			
3			
2	INSUL. UPDATED. RE-ISSUED FOR PERMIT.	JAN 30/19	GW
1	ISSUED FOR PERMIT.	DEC 19/18	GW

The undersigned has reviewed and takes responsibility for this design and has the qualifications and meets the requirements set out in the Ontario Building Code to be a Designer.
qualification information
Richard Vink — 24498
name — signature — stamp
registration information
VA3 Design Inc. — 42658

Contractor must verify all dimensions on this job and report any discrepancy to the Designer before proceeding with the work. All drawings and specifications are instruments of service and the property of the Designer which must be returned at the completion of the work. Drawings are not to be scaled.

VA3 DESIGN
255 Consumers Rd Suite 120
Toronto ON M2J 1R4
t 416.630.2255 f 416.630.4782
va3design.com

Greenpark

project name: LAMBERTS LANE HOME CORP. PH.2	municipality: CALEDON
project no.: 18023	
date: SEPT. 2019	SUNKEN FLOOR DETAILS
drawn by: GW	checked by: -
scale: Not to Scale	file name: 18023-GP-STD_DETAILS_ES17
drawing no.: 2	

All drawings specifications, related documents and design are the copyright property of VA3 DESIGN. Reproduction of this property in whole or in part is strictly prohibited without VA3 DESIGN's written permission.

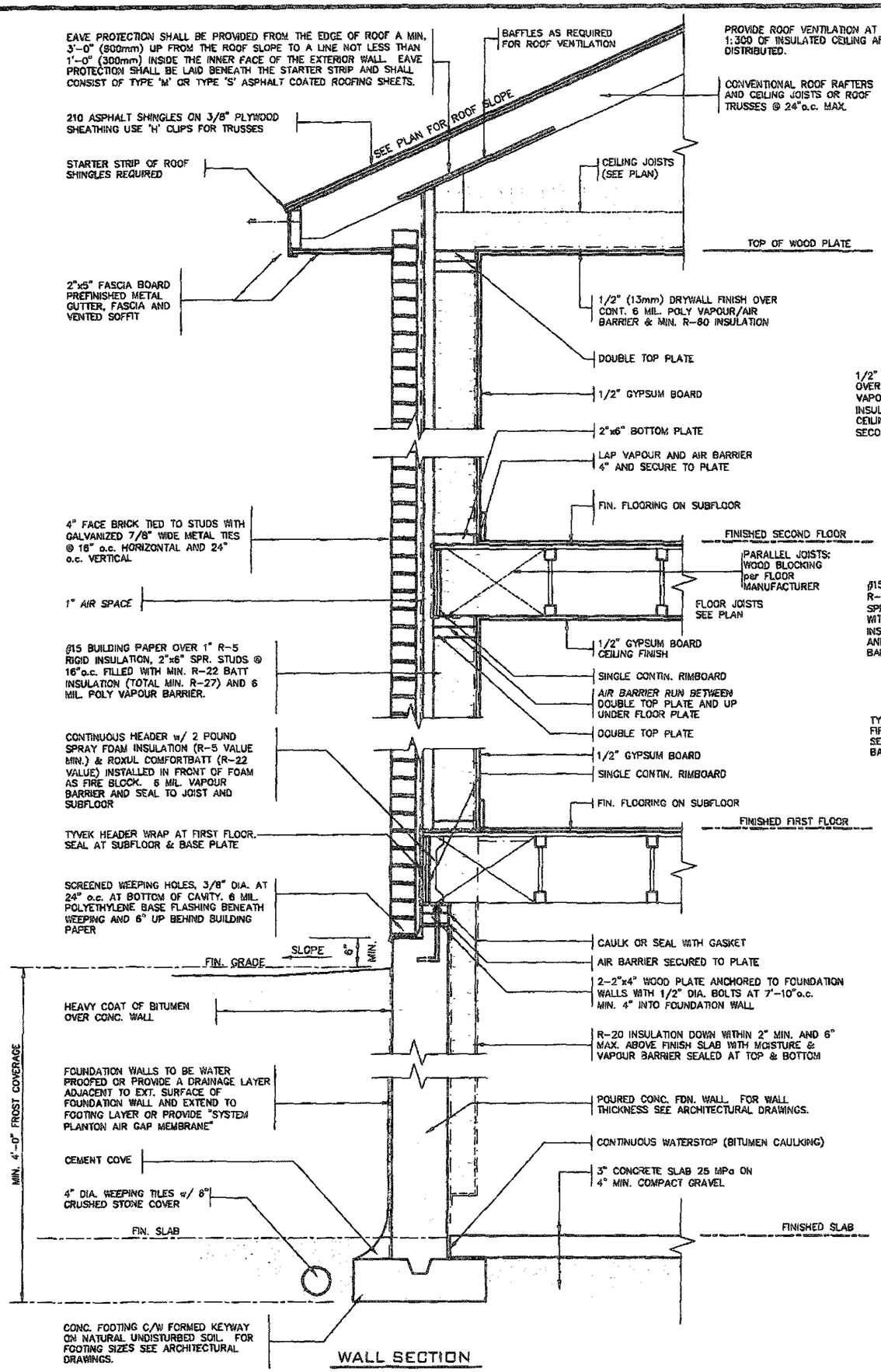

WALL SECTION

THIS STRUCTURE MUST BE CONSTRUCTED TO MEET OR EXCEED THE PROVISIONS OF THE ONTARIO BUILDING CODE

REGISTERED PROFESSIONAL ENGINEER
B. MARINKOVIC
PROVINCE OF ONTARIO

STRUDET INC.
FOR STRUCTURE ONLY

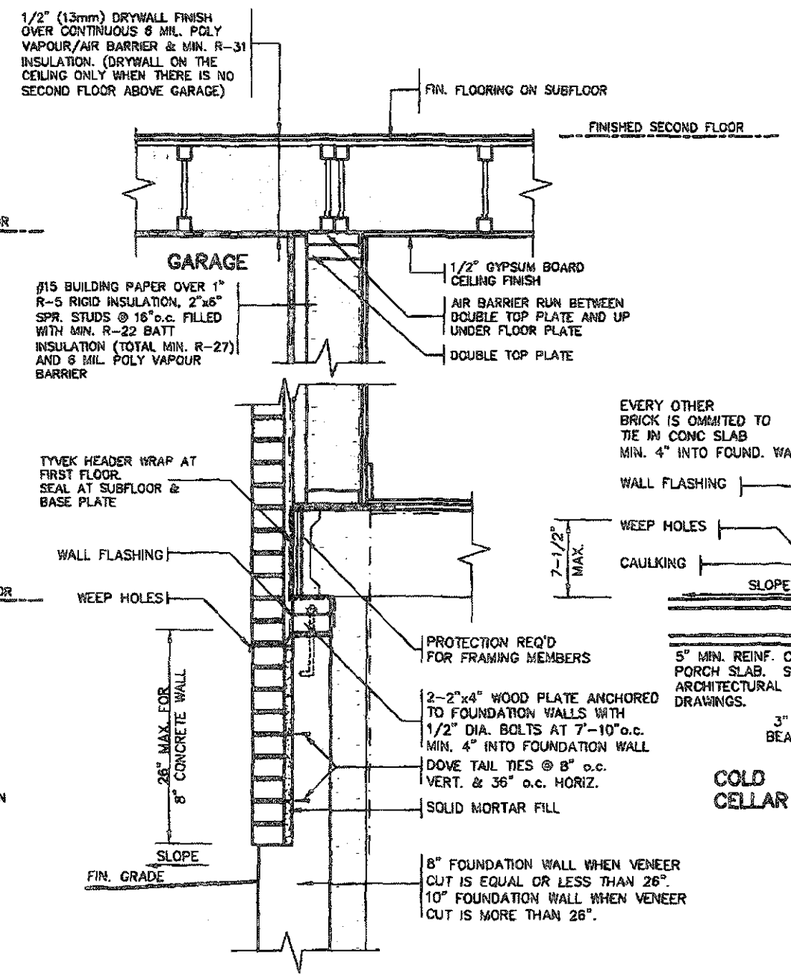

DETAIL FOR CONCRETE VENEER DROPPED GRADE

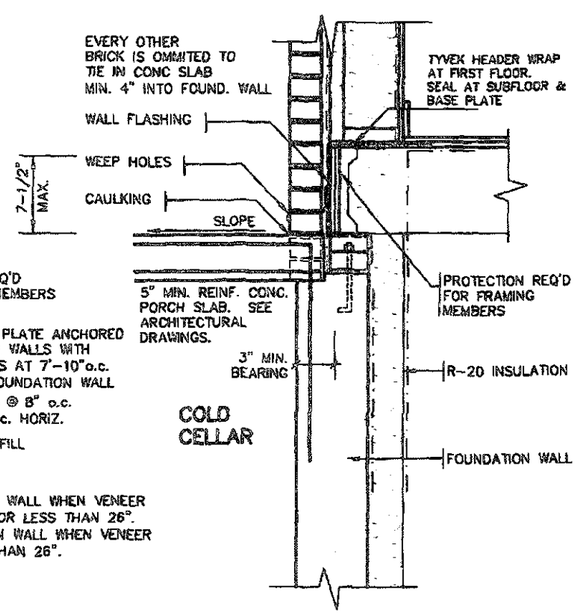

DETAIL FOR COLD CELLAR PORCH SLAB

RECEIVED
JUN 25 2019
TOWN OF CALEDON BUILDING SECTION FILE NO.

FEB 14 2019

2012 CODE ENERGY STAR

no.	description	date	by
9			
8			
7			
6			
5			
4			
3			
2	INSUL. UPDATED. RE-ISSUED FOR PERMIT.	JAN 30/19	GW
1	ISSUED FOR PERMIT.	DEC 19/18	GW

The undersigned has reviewed and takes responsibility for this design and has the qualifications and meets the requirements set out in the Ontario Building Code to be a Designer.
qualification information
Richard Vink — 24488
name — signature — BCIN
registration information
VA3 Design Inc. — 42659

Contractor must verify all dimensions on the job and report any discrepancy to the Designer before proceeding with the work. All drawings and specifications are instruments of service and the property of the Designer which must be returned at the completion of the work. Drawings are not to be scaled.

VA3 DESIGN
255 Consumers Rd Suite 120
Toronto ON M2J 1R4
t 416.630.2255 f 416.630.4762
va3design.com

Greenpark

project name: LAMBERTS LANE HOME CORP. PH.2 — municipality: CALEDON — project no. 18023
date: SEPT. 2018 — 2"x6" BRICK VENEER SECTIONS — drawing no. 3
drawn by: GW — checked by: – — scale: Not to Scale — file name: 18023-CP-STD_DETAILS_FS17

All drawings specifications, related documents and design are the copyright property of VA3 DESIGN. Reproduction of this property in whole or in part is strictly prohibited without VA3 DESIGN's written permission.

EAVE PROTECTION SHALL BE PROVIDED FROM THE EDGE OF ROOF A MIN. 3'-0" (900mm) UP FROM THE ROOF SLOPE TO A LINE NOT LESS THAN 1'-0" (300mm) INSIDE THE INNER FACE OF THE EXTERIOR WALL. EAVE PROTECTION SHALL BE LAID BENEATH THE STARTER STRIP AND SHALL CONSIST OF TYPE 'M' OR TYPE 'S' ASPHALT COATED ROOFING SHEETS.

BAFFLES AS REQUIRED FOR ROOF VENTILATION

PROVIDE ROOF VENTILATION @ A RATE OF 1:300 OF INSULATED CEILING AREA UNIFORMLY DISTRIBUTED

210 ASPHALT SHINGLES ON 3/8" PLYWOOD SHEATHING USE 'H' CLIPS FOR TRUSSES

ROOF TRUSSES @ 24"o.c. MAX. RAISED HEEL TO MATCH PLATE

STARTER STRIP OF ROOF SHINGLES REQUIRED

SEE PLAN FOR ROOF SLOPE

TOP OF WOOD PLATE

2"x5" FASCIA BOARD PREFINISHED METAL GUTTER, FASCIA AND VENTED SOFFIT

1/2" (13mm) DRYWALL FINISH OVER CONT. 6 MIL. POLY VAPOUR/AIR BARRIER & MIN. R-60 INSULATION

1 1/2"x6" RAISED STUCCO FRIEZE BOARD (TYP.)

DOUBLE TOP PLATE

MESH BACKWRAPPED

1/2" GYPSUM BOARD

2"x6" BOTTOM PLATE

- FIN. COAT OF EXTERIOR ACRYLIC STUCCO
- FIBER MESH EMBEDDED IN PREP COAT
- INSULATION BOARD, (MIN. R5) W/ GEOMETRICALLY DEFINED DRAINAGE CAVITY HAVING A MIN. CAVITY DEPTH OF 1/4"
- AIR/MOISTURE BARRIER
- 7/16" EXTERIOR GRADE OSB SHEATHING
- 2" x 6" STUDS
- MIN. R-22 BATT INSULATION
- CONT. VAPOUR / AIR BARRIER
- 1/2" DRYWALL

(EIFS APPROVED SYSTEM, ALL MATERIALS AND SYSTEMS SHALL CONFORM TO CAN/ULC-S716.1)

LAP VAPOUR AND AIR BARRIER 4" AND SECURE TO PLATE

FIN. FLOORING ON SUBFLOOR

FINISHED SECOND FLOOR

PARALLEL JOISTS: WOOD BLOCKING per FLOOR MANUFACTURER

FLOOR JOISTS SEE PLAN

1/2" GYPSUM BOARD CEILING FINISH

DOUBLE CONTIN. RIMBOARD

AIR BARRIER RUN BETWEEN DOUBLE TOP PLATE AND UP UNDER FLOOR PLATE

A 3-2

DOUBLE TOP PLATE

CONCRETE SILL

1/2" GYPSUM BOARD

CONTINUOUS HEADER w/ 2 POUND SPRAY FOAM INSULATION (R-5 VALUE MIN.) & ROXUL COMFORTBATT (R-22 VALUE) INSTALLED IN FRONT OF FOAM AS FIRE STOP. 6 MIL. VAPOUR BARRIER AND SEAL TO JOIST AND SUBFLOOR

DOUBLE CONTIN. RIMBOARD

FIN. FLOORING ON SUBFLOOR

FINISHED FIRST FLOOR

4" FACE BRICK TIED TO STUDS WITH GALVANIZED 7/8" WIDE METAL TIES @ 16" o.c. HORIZONTAL AND 24" o.c. VERTICAL

SCREENED WEEPING HOLES 3/8" DIA. AT 24" o.c. AT BOTTOM OF CAVITY 6 MIL. POLYETHYLENE BASE FLASHING BENEATH WEEPING AND 6" UP BEHIND BUILDING PAPER

SLOPE 6" MIN.

FIN. GRADE

CAULK OR SEAL WITH GASKET

AIR BARRIER SECURED TO PLATE

2"x4" WOOD PLATE ANCHORED TO FOUNDATION WALLS WITH 1/2" DIA. BOLTS AT 7'-10"o.c. MIN. 4" INTO FOUNDATION WALL

HEAVY COAT OF BITUMEN OVER CONC. WALL

R-20 INSULATION DOWN WITHIN 2" MIN. AND 6" MAX. ABOVE FINISH SLAB WITH MOISTURE & VAPOR BARRIER SEALED AT TOP & BOTTOM

MIN. 4'-0" FROST COVERAGE

FOUNDATION WALLS TO BE WATER PROOFED OR PROVIDE A DRAINAGE LAYER ADJACENT TO EXT. SURFACE OF FOUNDATION WALL AND EXTEND TO FOOTING LAYER OR PROVIDE "SYSTEM PLANTON AIR GAP MEMBRANE"

POURED CONC. FDN. WALL. FOR WALL THICKNESS SEE ARCHITECTURAL DRAWINGS.

CONTINUOUS WATERSTOP (BITUMEN CAULKING)

CEMENT COVE

3" CONCRETE SLAB 25 MPa ON 4" MIN. COMPACT GRAVEL

4" DIA. WEEPING TILES W/6" CRUSHED STONE COVER

FIN. SLAB

FINISHED SLAB

CONC. FOOTING C/W FORMED KEYWAY ON NATURAL UNDISTURBED SOIL. FOR FOOTING SIZES SEE ARCHITECTURAL DRAWINGS.

WALL SECTION

REGISTERED PROFESSIONAL ENGINEER
B. MARINKOVIC
PROVINCE OF ONTARIO

STRUDET INC.
FOR STRUCTURE ONLY

THIS STRUCTURE MUST BE CONSTRUCTED TO MEET OR EXCEED THE PROVISIONS OF THE ONTARIO BUILDING CODE

WOOD SHEATHING

AIR/MOISTURE BARRIER

FIBRE MESH EMBEDDED IN PREP COAT

INSULATION BOARD (R-5) MIN W/ GEOMETRICALLY DEFINED DRAINAGE CAVITY HAVING A MIN. CAVITY DEPTH OF 1/4"

STARTER MESH (BACKWRAPPED)

CAULK WITH BEAD VENT

FLASHING

CONCRETE SILL

MASONRY CLADDING AS PER ELEVATION

A. TERMINATION AT MASONRY CLADDING WITH SEALANT 1

1 1/2"=1'0"

WALL FLASHING

WEEP HOLES

7-1/2" MAX.

26" MAX. FOR 8" CONCRETE WALL

PROTECTION REQ'D FOR FRAMING MEMBERS

2"x4" WOOD PLATE ANCHORED TO FOUNDATION WALLS WITH 1/2" DIA. BOLTS AT 7'-10"o.c. MIN. 4" INTO FOUNDATION WALL

DOVE TAIL TIES @ 8" o.c. VERT. & 36" o.c. HORIZ.

SOLID MORTAR FILL

SLOPE

FIN. GRADE

8" FOUNDATION WALL WHEN VENEER CUT IS EQUAL OR LESS THAN 26". 10" FOUNDATION WALL WHEN VENEER CUT IS MORE THAN 26".

DETAIL FOR CONCRETE VENEER DROPPED GRADE

3/4"=1'0"

EVERY OTHER BRICK IS OMMITED TO TIE IN CONC SLAB MIN. 4" INTO FOUND. WALL

WALL FLASHING

WEEP HOLES

CAULKING

SLOPE

5" MIN. REINF. CONC. PORCH SLAB. SEE ARCHITECTURAL DRAWINGS.

PROTECTION REQ'D FOR FRAMING MEMBERS

3" MIN. BEARING

R-20 INSULATION FULL HEIGHT

COLD CELLAR

FOUNDATION WALL

DETAIL FOR COLD CELLAR PORCH SLAB

3/4"=1'0"

RECEIVED
JUN 25 2019
TOWN OF CALEDON
BUILDING SECTION
FILE NO.

FEB 14 2019

2012 CODE ENERGY STAR

no.	description	date	by
9			
8			
7			
6			
5			
4			
3			
2	INSUL. UPDATED. RE-ISSUED FOR PERMIT.	JAN 30/19	GW
1	ISSUED FOR PERMIT.	DEC 19/18	GW

The undersigned has reviewed and takes responsibility for this design and has the qualifications and meets the requirements set out in the Ontario Building Code to be a Designer.
qualification information
Richard Vink — signature — 24488
name — registration information — VA3 Design Inc. — BCIN — 42659

Contractor must verify all dimensions on the job and report any discrepancy to the Designer before proceeding with the work. All drawings and specifications are instruments of service and the property of the Designer which must be returned at the completion of the work. Drawings are not to be scaled.

VA3 DESIGN
255 Consumers Rd Suite 120
Toronto ON M2J 1R4
t 416.630.2255 f 416.630.4782
va3design.com

Greenpark

project name: LAMBERTS LANE HOME CORP. PH.2 — municipality: CALEDON — project no. 18023

date: SEPT. 2018 — 2"x6" BRICK VENEER/STUCCO SECTIONS — drawing no. 3-2

drawn by: GW — checked by: - — scale: Not to Scale — file name: 18023-GP-STD_DETAILS_ES17

All drawings specifications, related documents and design are the copyright property of VA3 DESIGN. Reproduction of this property in whole or in part is strictly prohibited without VA3 DESIGN's written permission.

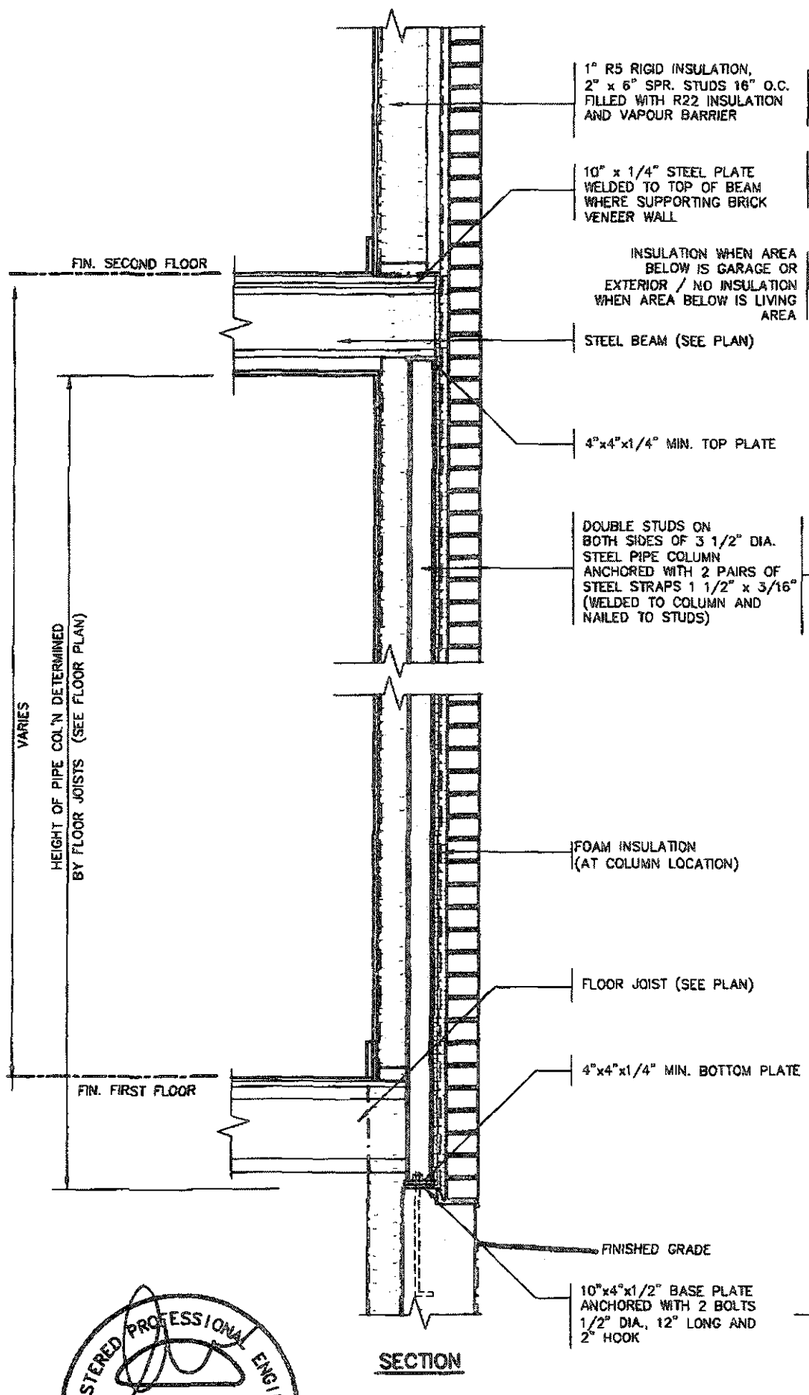

SECTION

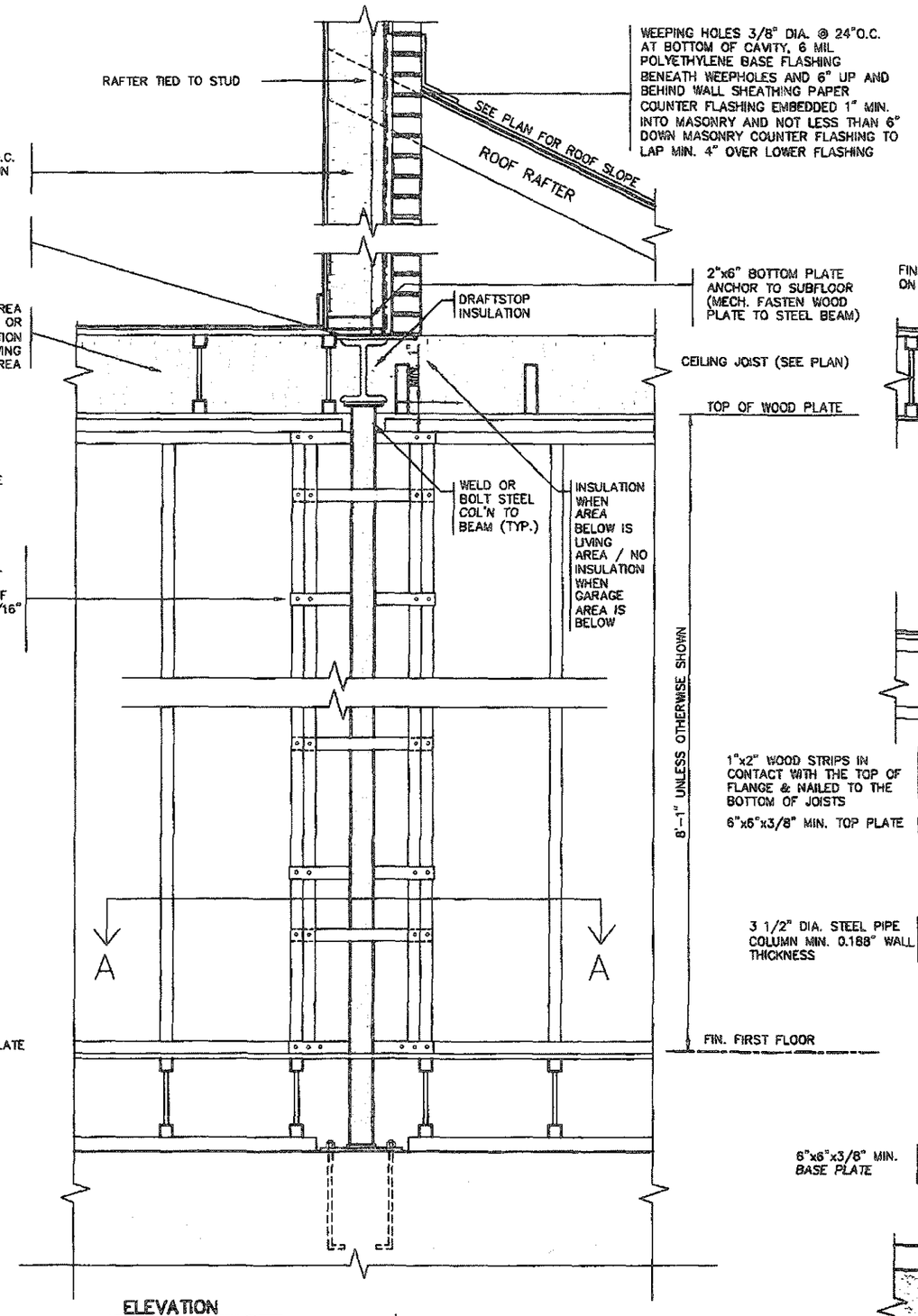

ELEVATION

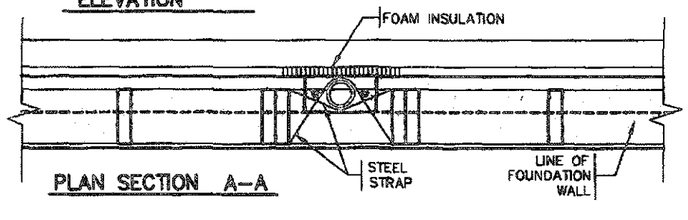

PLAN SECTION A–A

SECTION THROUGH STEEL BEAM SUPPORTING MASONRY & BEARING STUD PARTITION

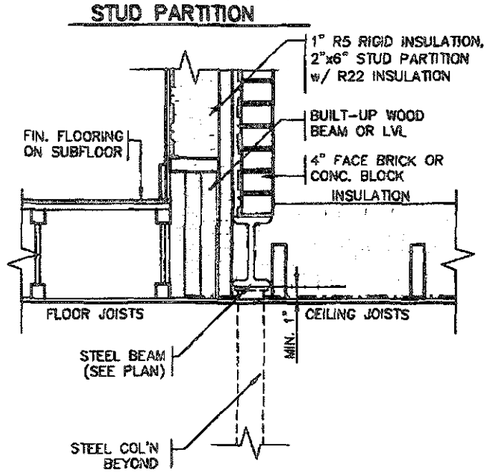

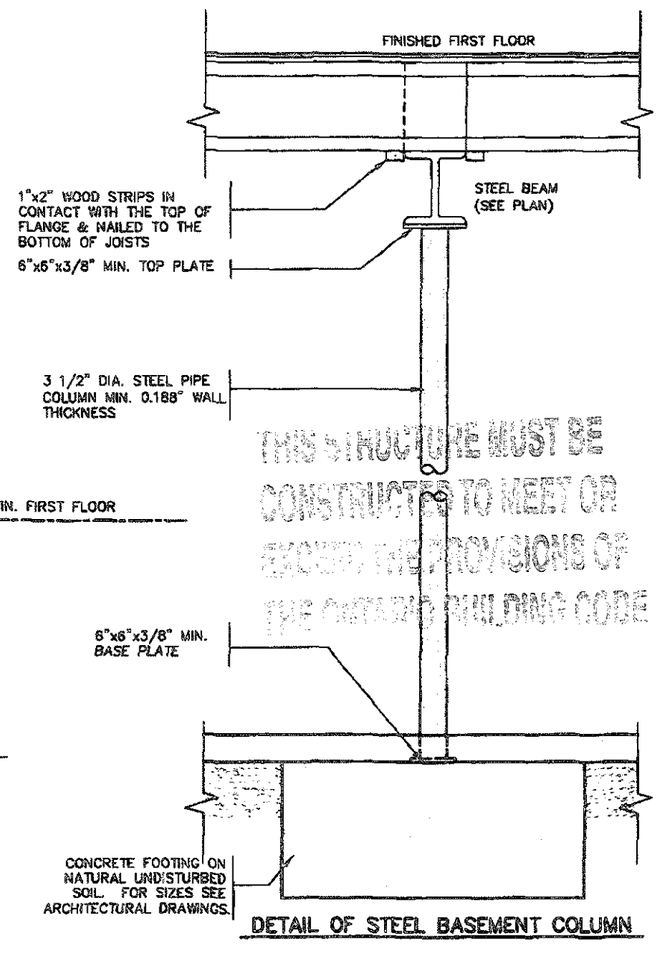

DETAIL OF STEEL BASEMENT COLUMN

THIS STRUCTURE MUST BE CONSTRUCTED TO MEET OR EXCEED THE PROVISIONS OF THE ONTARIO BUILDING CODE

REGISTERED PROFESSIONAL ENGINEER
B. MARINKOVIC
PROVINCE OF ONTARIO

STRUDET INC.
FOR STRUCTURE ONLY

RECEIVED
JUN 25 2019
TOWN OF CALEDON
BUILDING SECTION

FEB 14 2019

2012 CODE ENERGY STAR

no.	description	date	by
9			
8			
7			
6			
5			
4			
3			
2	INSUL. UPDATED. RE-ISSUED FOR PERMIT.	JAN 30/19	GW
1	ISSUED FOR PERMIT.	DEC 19/18	GW

The undersigned has reviewed and takes responsibility for this design and has the qualifications and meets the requirements set out in the Ontario Building Code to be a Designer.
qualification information
Richard Vink — 24489
name — signature — BCIN
registration information
VA3 Design Inc. — 42858

Contractor must verify all dimensions on the job and report any discrepancy to the Designer before proceeding with the work. All drawings and specifications are instruments of service and the property of the Designer which must be returned at the completion of the work. Drawings are not to be scaled.

VA3 DESIGN
255 Consumers Rd Suite 120
Toronto ON M2J 1R4
t 416.630.2255 f 416.630.4762
va3design.com

Greenpark

project name	municipality	project no.
LAMBERTS LANE HOME CORP. PH.2	CALEDON	18023

date		drawing title
SEPT. 2018		STEEL COLUMN DETAILS
drawn by: GW	checked by: –	code: As Shown
file name: 18023-GP-STD_DETAILS_ES17		drawing no. 4

All drawings specifications, related documents and design are the copyright property of VA3 DESIGN. Reproduction of this property in whole or in part is strictly prohibited without VA3 DESIGN's written permission.

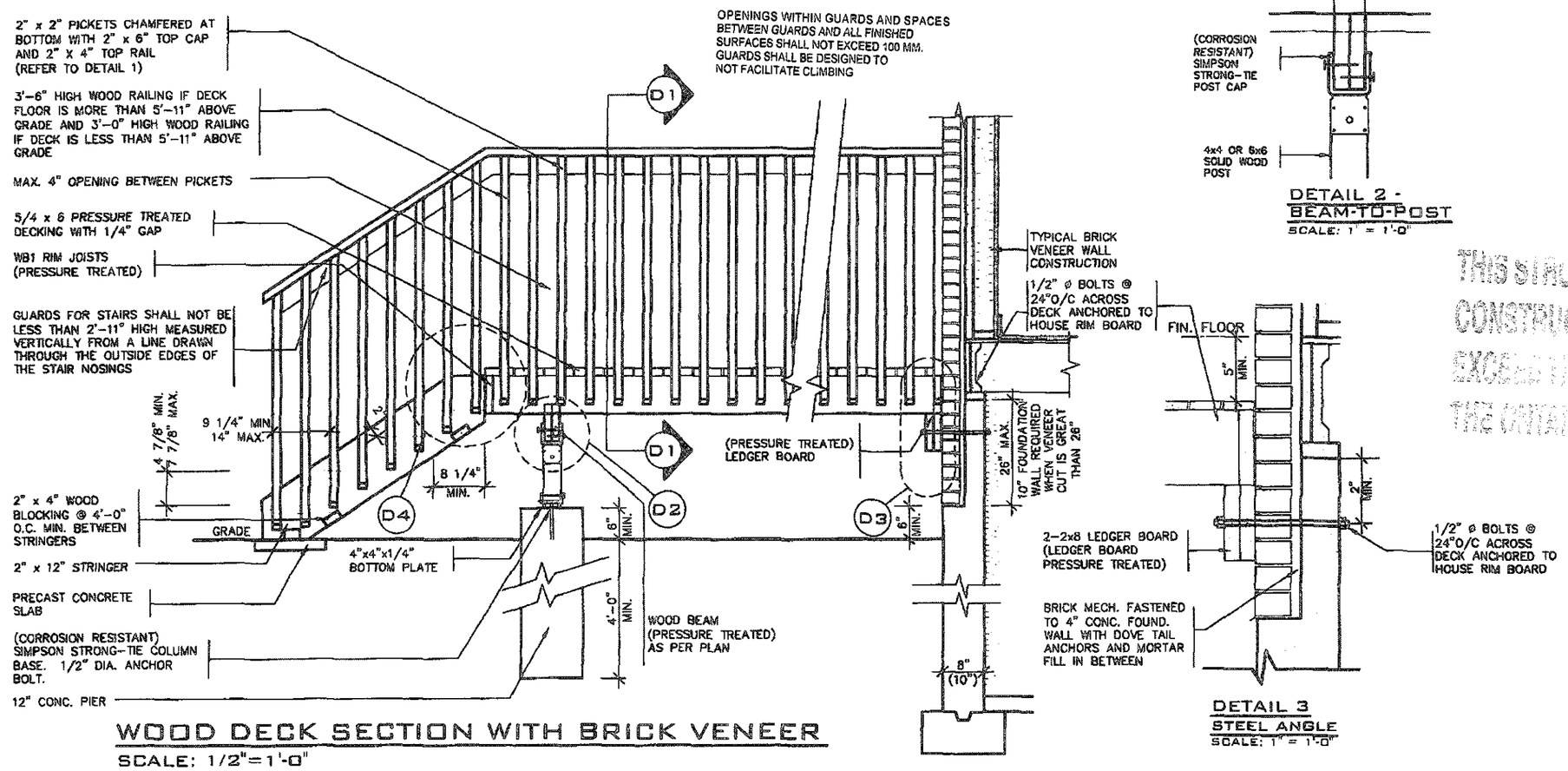

WOOD DECK SECTION WITH BRICK VENEER

SCALE: 1/2"=1'-0"

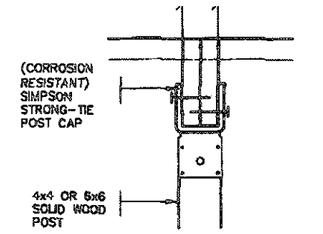

DETAIL 2 - BEAM-TO-POST

SCALE: 1" = 1'-0"

DETAIL 3 STEEL ANGLE

SCALE: 1" = 1'-0"

THIS STRUCTURE MUST BE CONSTRUCTED TO MEET OR EXCEED THE PROVISIONS OF THE ONTARIO BUILDING CODE

DETAIL 1
CANTILEVERED PICKET SCREWED TO RIM JOIST AND DECK

GUARD PARALLEL TO FLOOR JOISTS

SCALE: 1" = 1'-0"

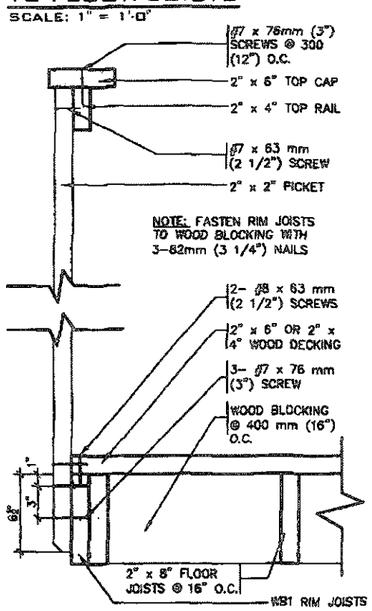

GUARD PERPENDICULAR TO FLOOR JOISTS

SCALE: 1" = 1'-0"

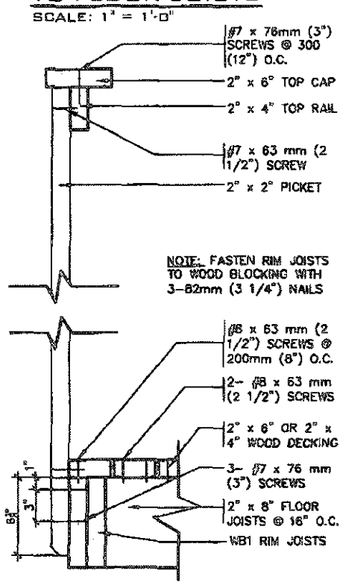

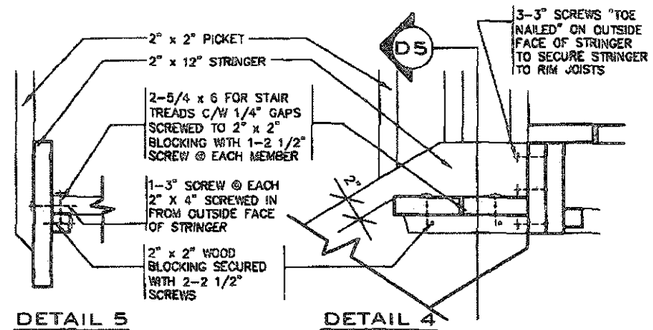

DETAIL 5 SECTION THROUGH STAIR STRINGER

SCALE: 1" = 1'-0"

DETAIL 4 SECTION @ TREAD AND STRINGER SECUREMENT

SCALE: 1" = 1'-0"

GENERAL NOTES

1. BRICK TO BE COMPRESSIVE STRENGTH OF 15 mPA (2200 p.s.i.) MIN. UNITS TO BE LAID WITH FULL HEAD AND BED JOINTS.
2. MORTAR TO BE TYPE S WITH JOINT THICKNESS OF 10mm (3/8")MIN. AND 20mm (3/4") MAX.
3. ALL NAILS AND SCREWS TO BE GALVANIZED.
4. WB1 = 2- 2 x 8 (PRESSURE TREATED)
   WB3 = 2- 2 x 10 (PRESSURE TREATED)
5. WOOD FOR CANTILEVERED PICKETS SHALL BE DOUGLAS FIR-LARCH, SPRUCE-PINE-FIR, OR HEM-FIR SPECIES.

REGISTERED PROFESSIONAL ENGINEER
R. B. MARINKOVIC
PROVINCE OF ONTARIO
Feb 14/19

STRUDET INC.
FOR STRUCTURE ONLY

RECEIVED
JUN 25 2019
TOWN OF CALEDON
BUILDING SECTION
FILE NO.

FEB 14 2019

2012 CODE ENERGY STAR

no.	description	date	by
9			
8			
7			
6			
5			
4			
3			
2	INSUL. UPDATED. RE-ISSUED FOR PERMIT.	JAN 30/19	GW
1	ISSUED FOR PERMIT.	DEC 19/18	GW

The undersigned has reviewed and takes responsibility for this design and has the qualifications and meets the requirements set out in the Ontario Building Code to be a Designer.
qualification information
Richard Vink — 24496
name — signature — BCIN
registration information
VA3 Design Inc. — 42658

Contractor must verify all dimensions on the job and report any discrepancy to the Designer before proceeding with the work. All drawings and specifications are instruments of service and the property of the Designer which must be returned at the completion of the work. Drawings are not to be scaled.

VA3 DESIGN
255 Consumers Rd Suite 120
Toronto ON M2J 1R4
t 416.630.2255 f 416.630.4782
va3design.com

Greenpark

project name: LAMBERTS LANE HOME CORP. PH.2
municipality: CALEDON
project no.: 18023
date: SEPT. 2018
drawing title: WOOD DECK DETAILS
drawn by: GW
checked by: -
scale: As Shown
file name: 18023-CP-STD_DETAILS_ES17
drawing no.: 5

All drawings specifications, related documents and design are the copyright property of VA3 DESIGN. Reproduction of this property in whole or in part is strictly prohibited without VA3 DESIGN's written permission.

THIS STRUCTURE MUST BE CONSTRUCTED TO MEET OR EXCEED THE PROVISIONS OF THE ONTARIO BUILDING CODE

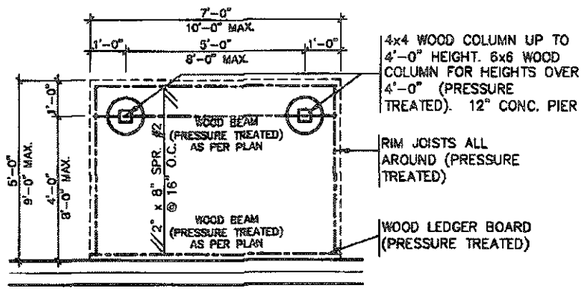

TYPICAL DECK LAYOUT

SCALE: 1/4"=1'-0"

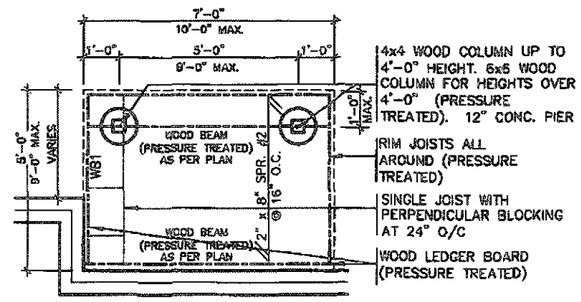

TYPICAL DECK LAYOUT

SCALE: 1/4"=1'-0"

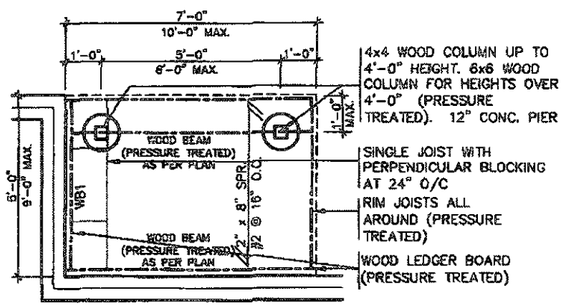

TYPICAL DECK LAYOUT

SCALE: 1/4"=1'-0"

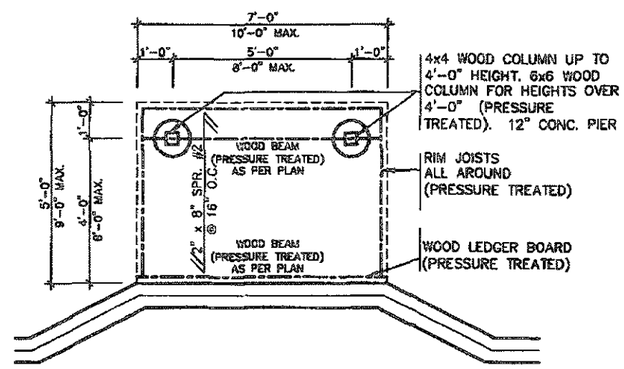

TYPICAL DECK LAYOUT

SCALE: 1/4"=1'-0"

REGISTERED PROFESSIONAL ENGINEER
B. MARINKOVIC
PROVINCE OF ONTARIO

STRUDET INC.
FOR STRUCTURE ONLY

RECEIVED
JUN 25 2019

TOWN OF CALEDON
BUILDING SECTION
FILE NO.

FEB 14 2019

2012 CODE ENERGY STAR

no.	description	date	by
9	.	.	.
8	.	.	.
7	.	.	.
6	.	.	.
5	.	.	.
4	.	.	.
3	.	.	.
2	INSUL. UPDATED. RE-ISSUED FOR PERMIT.	JAN 30/19	GW
1	ISSUED FOR PERMIT.	DEC 19/18	GW

The undersigned has reviewed and takes responsibility for this design and has the qualifications and meets the requirements set out in the Ontario Building Code to be a Designer.

qualification information
Richard Vink — 24068
name — signature — qual.
registration information
VA3 Design Inc. — 42658

Contractor must verify all dimensions on this job and report any discrepancy to the Designer before proceeding with the work. All drawings and specifications are instruments of service and the property of the Designer which must be returned at the completion of the work. Drawings are not to be scaled.

VA3 DESIGN
255 Consumers Rd Suite 120
Toronto ON M2J 1R4
t 416.630.2255 f 416.630.4782
va3design.com

Greenpark.

project name: LAMBERTS LANE HOME CORP. PH.2
municipality: CALEDON
project no.: 18023
date: SEPT. 2018
drawing title: WOOD DECK DETAILS
drawn by: GW
checked by: -
scale: As Shown
file name: 18023-GP-STD_DETAILS_ES17
drawing no.: 5-2

All drawings specifications, related documents and design are the copyright property of VA3 DESIGN. Reproduction of this property in whole or in part is strictly prohibited without VA3 DESIGN's written permission.

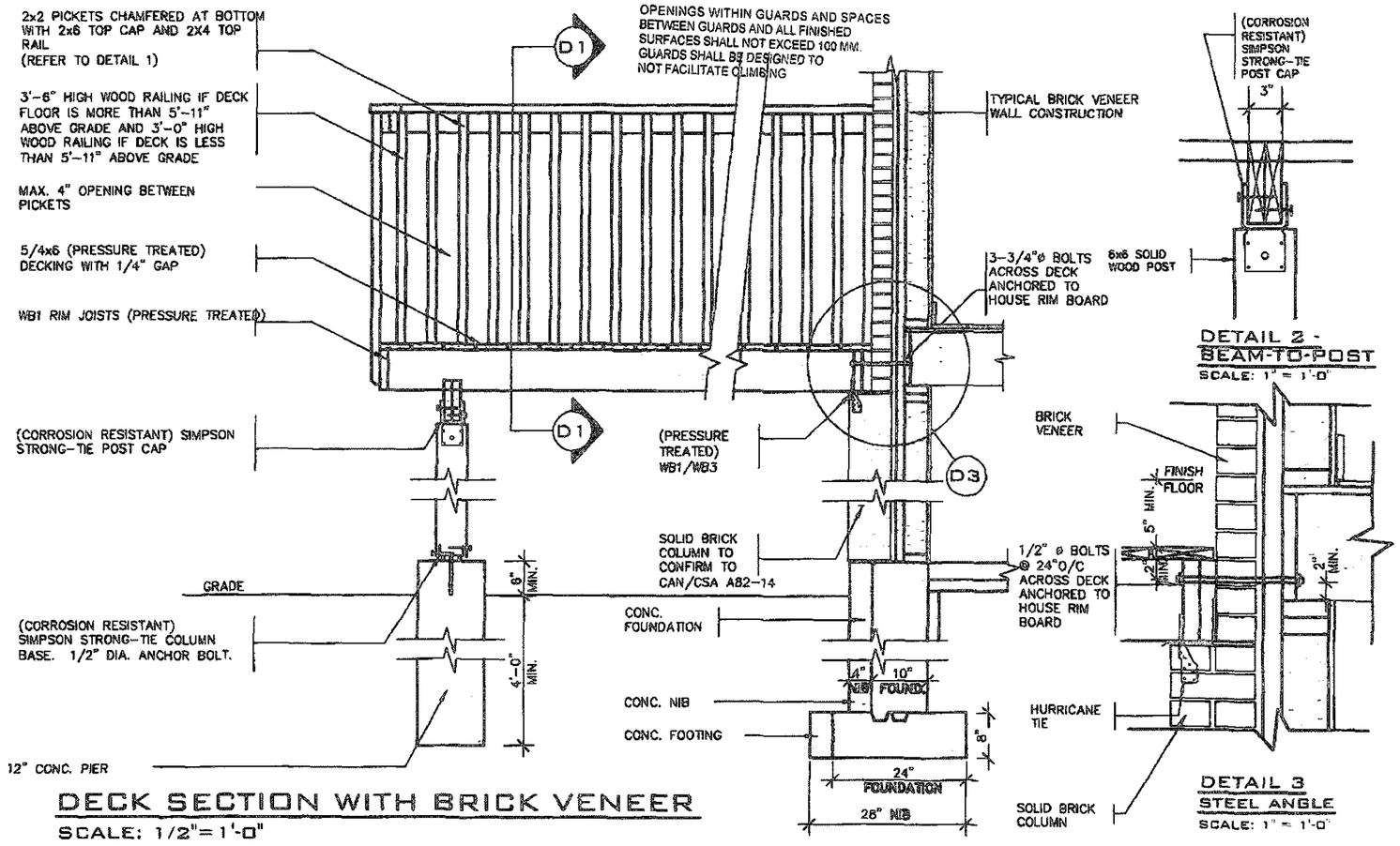

DECK SECTION WITH BRICK VENEER

SCALE: 1/2"= 1'-0"

DETAIL 1

CANTILEVERED PICKET SCREWED TO RIM JOIST AND DECK

GUARD PARALLEL TO FLOOR JOISTS

SCALE: 1" = 1'-0"

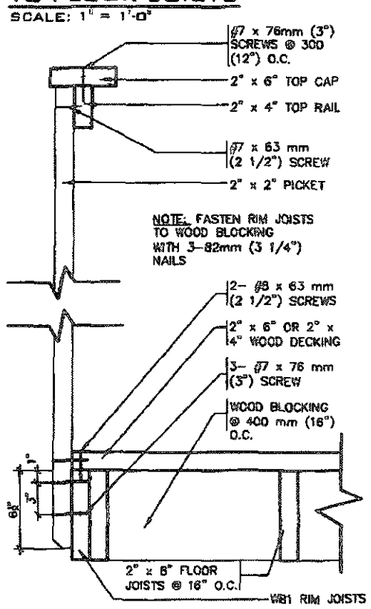

GUARD PERPENDICULAR TO FLOOR JOISTS

SCALE: 1" = 1'-0"

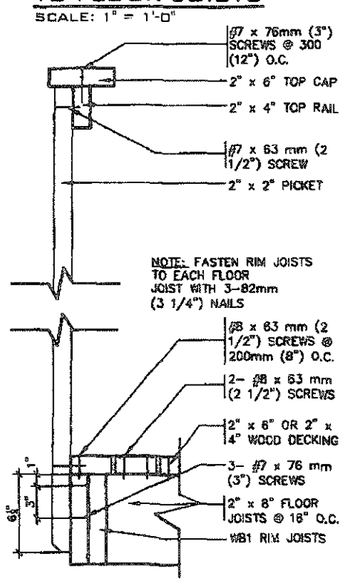

THIS STRUCTURE MUST BE CONSTRUCTED TO MEET OR EXCEED THE PROVISIONS OF THE ONTARIO BUILDING CODE

REGISTERED PROFESSIONAL ENGINEER
B. MARINKOVIC
PROVINCE OF ONTARIO

STRUDET INC.
FOR STRUCTURE ONLY

RECEIVED
JUN 25 2019
TOWN OF CALEDON
BUILDING SECTION
FILE NO.

GENERAL NOTES

1. BRICK TO BE COMPRESSIVE STRENGTH OF 15 mPA (2200 p.s.i.) MIN. UNITS TO BE LAID WITH FULL HEAD AND BED JOINTS.
2. MORTAR TO BE TYPE S WITH JOINT THICKNESS OF 10mm (3/8")MIN. AND 20mm (3/4") MAX.
3. ALL NAILS AND SCREWS TO BE GALVANIZED.
4. WB1 = 2- 2 x 8 (PRESSURE TREATED)
   WB3 = 2- 2 x 10 (PRESSURE TREATED)
5. WOOD FOR CANTILEVERED PICKETS SHALL BE DOUGLAS FIR-LARCH, SPRUCE-PINE-FIR, OR HEM-FIR SPECIES.

FEB 14 2019

2012 CODE ENERGY STAR

no.	description	date	by
9	.	.	.
8	.	.	.
7	.	.	.
6	.	.	.
5	.	.	.
4	.	.	.
3	.	.	.
2	INSUL. UPDATED. RE-ISSUED FOR PERMIT.	JAN 30/19	GW
1	ISSUED FOR PERMIT.	DEC 19/18	GW

The undersigned has reviewed and takes responsibility for this design and has the qualifications and meets the requirements set out in the Ontario Building Code to be a Designer.
qualification information: Howard Vink 24489
name / signature: HOV
registration information: VA3 Design Inc. 42698

Contractor must verify all dimensions on the job and report any discrepancy to the Designer before proceeding with the work. All drawings and specifications are instruments of service and the property of the Designer which must be returned at the completion of the work. Drawings are not to be scaled.

VA3 DESIGN
255 Consumers Rd Suite 120
Toronto ON M2J 1R4
t 416.630.2255 f 416.630.4782
va3design.com

Greenpark.

project name: LAMBERTS LANE HOME CORP. PH.2
municipality: CALEDON
project no.: 18023
date: SEPT. 2018
drawn by: GW
checked by: -
scale: As Shown
drawing title: WOOD DECK -WALK-OUT CONDITION
file name: 18023-GP-STD_DETAILS_E317
drawing no.: 5-3

All drawings specifications, related documents and design are the copyright property of VA3 DESIGN. Reproduction of this property in whole or in part is strictly prohibited without VA3 DESIGN's written permission.

THIS STRUCTURE MUST BE CONSTRUCTED TO MEET OR EXCEED THE PROVISIONS OF THE ONTARIO BUILDING CODE

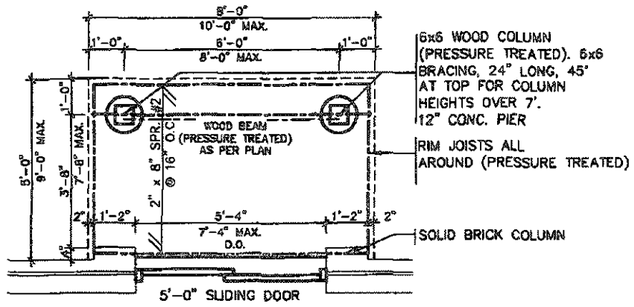

TYPICAL DECK LAYOUT

SCALE: 1/4"=1'-0"

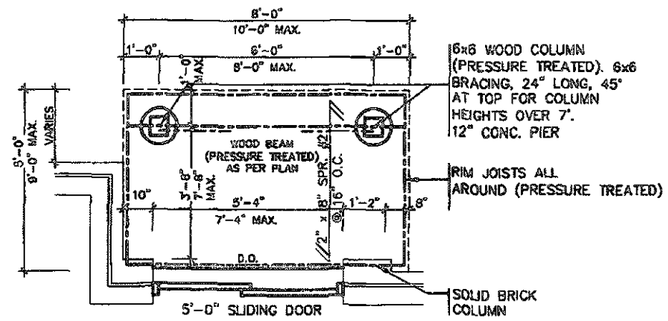

TYPICAL DECK LAYOUT

SCALE: 1/4"=1'-0"

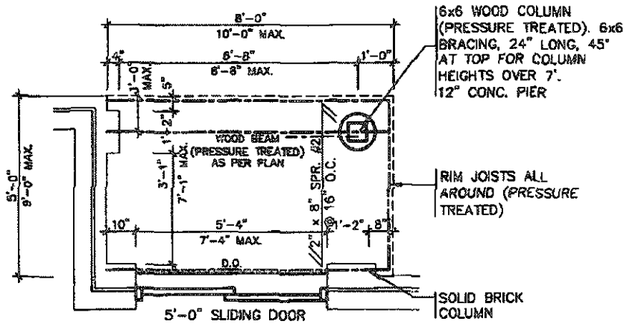

TYPICAL DECK LAYOUT

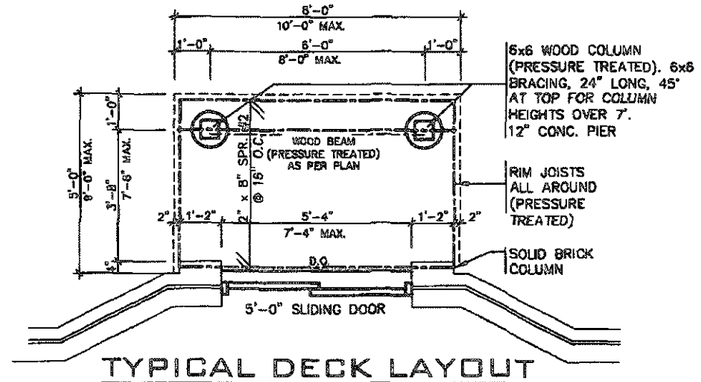

TYPICAL DECK LAYOUT

SCALE: 1/4"=1'-0"

REGISTERED PROFESSIONAL ENGINEER
B. MARINKOVIC
26/4/19
PROVINCE OF ONTARIO

STRUDET INC.
FOR STRUCTURE ONLY

RECEIVED
JUN 25 2019
TOWN OF CALEDON
BUILDING SECTION
FILE NO.

FEB 14 2019

2012 CODE ENERGY STAR

no.	description	date	by
9			
8			
7			
6			
5			
4			
3			
2	INSUL. UPDATED. RE-ISSUED FOR PERMIT.	JAN 30/19	GW
1	ISSUED FOR PERMIT.	DEC 19/18	GW

The undersigned has reviewed and takes responsibility for this design and has the qualifications and meets the requirements set out in the Ontario Building Code to be a Designer.
qualification information
Richard Vink — signature — 24488
name — registration information — BCIN
VA3 Design Inc. — 42658

Contractor must verify all dimensions on the job and report any discrepancy to the Designer before proceeding with the work. All drawings and specifications are instruments of service and the property of the Designer which must be returned at the completion of the work. Drawings are not to be scaled.

VA3 DESIGN
255 Consumers Rd Suite 120
Toronto ON M2J 1R4
t 416.630.2255 f 416.630.4732
va3design.com

Greenpark.

project name: LAMBERTS LANE HOME CORP. PH.2 — municipality: CALEDON — project no. 18023
date: SEPT. 2018 — WOOD DECK DETAILS-WALK-OUT CONDITION — drawing no. 5-4
drawn by: GW — checked by: – — scale: As Shown — file name: 18023-GP-STD_DETAILS_ES17

All drawings specifications, related documents and design are the copyright property of VA3 DESIGN. Reproduction of this property in whole or in part is strictly prohibited without VA3 DESIGN's written permission.

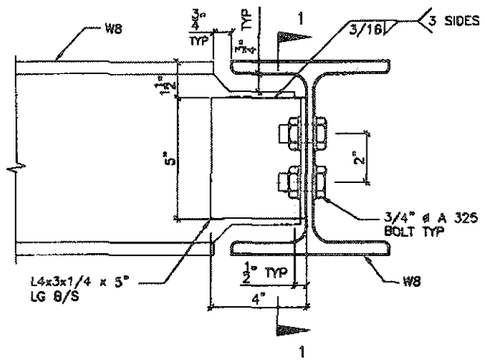

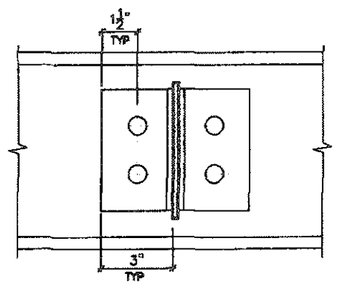

DETAIL 1.

W8
TO
W8
CONNECTION

SECTION 1–1

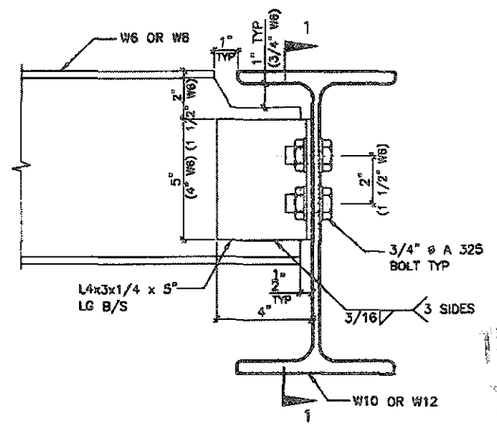

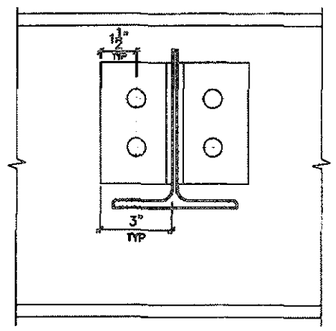

DETAIL 2.

W6(W8)
TO
W10(W12)
CONNECTION

SECTION 1–1

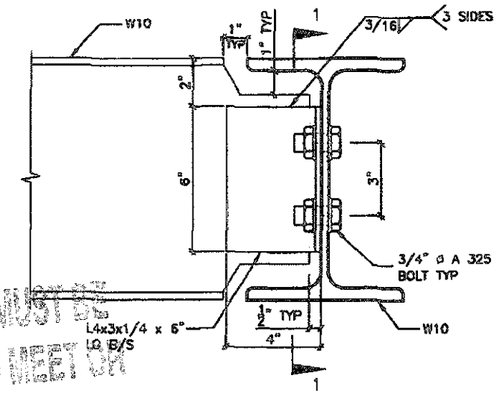

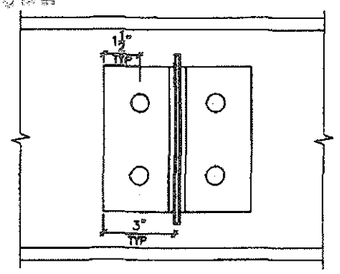

DETAIL 3.

W10
TO
W10
CONNECTION

SECTION 1–1

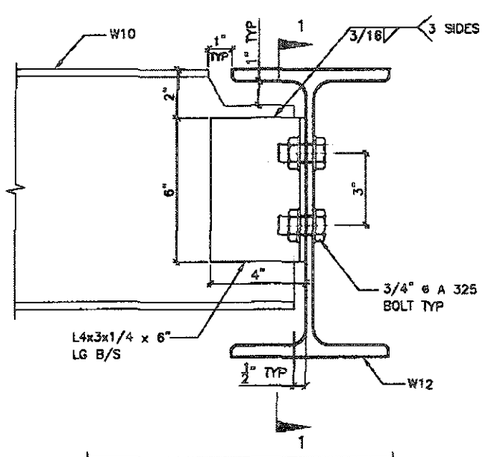

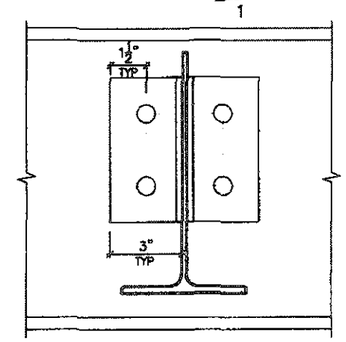

DETAIL 4.

W10
TO
W12
CONNECTION

SECTION 1–1

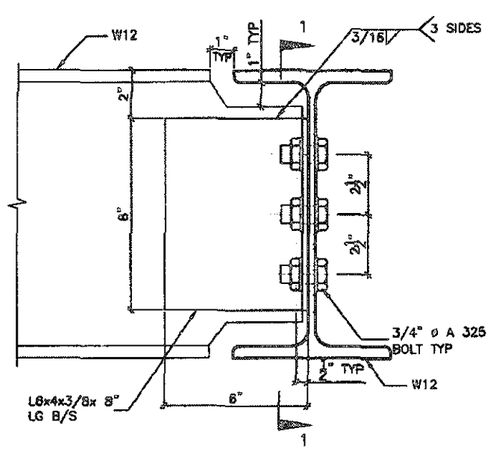

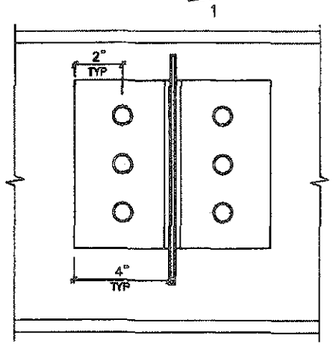

DETAIL 5.

W12
TO
W12
CONNECTION

SECTION 1–1

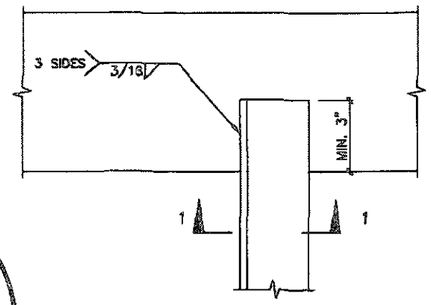

PLAN VIEW

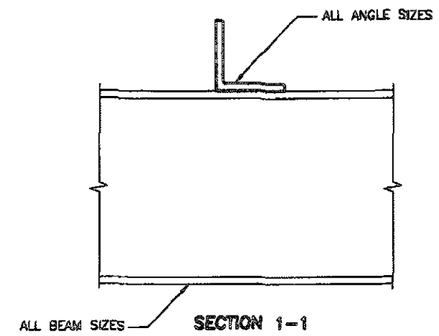

SECTION 1–1

DETAIL 6.

ANGLE
TO
BEAM
CONNECTION

REGISTERED PROFESSIONAL ENGINEER
B. MARINKOVIC
PROVINCE OF ONTARIO

STRUDET INC.
FOR STRUCTURE ONLY

THIS STRUCTURE MUST BE CONSTRUCTED TO MEET OR EXCEED THE PROVISIONS OF THE ONTARIO BUILDING CODE

FEB 14 2019

2012 CODE ENERGY STAR

RECEIVED
JUN 25 2019
TOWN OF CALEDON
BUILDING SECTION
FILE NO.

no.	description	date	by
9			
8			
7			
6			
5			
4			
3			
2	INSUL. UPDATED. RE-ISSUED FOR PERMIT.	JAN 30/19	GW
1	ISSUED FOR PERMIT.	DEC 19/18	GW

The undersigned has reviewed and takes responsibility for this design and has the qualifications and meets the requirements set out in the Ontario Building Code to be a Designer.
qualification information
name: Richard Vink — signature: R Vink — BCIN: 24488
registration information
VA3 Design Inc. — 42659

Contractor must verify all dimensions on the job and report any discrepancy to the Designer before proceeding with the work. All drawings and specifications are instruments of service and the property of the Designer which must be returned at the completion of the work. Drawings are not to be scaled.

VA3 DESIGN
255 Consumers Rd Suite 120
Toronto ON M2J 1R4
t 416.630.2255 f 416.630.4782
va3design.com

Greenpark.

project name: LAMBERTS LANE HOME CORP. PH.2
municipality: CALEDON
project no.: 18023
date: SEPT. 2018
drawn by: GW
checked by: –
scale: Not to Scale
STEEL BEAM CONNECTIONS
file name: 18023-GP-STD_DETAILS_E517
drawing no.: 6

All drawings specifications, related documents and design are the copyright property of VA3 DESIGN. Reproduction of this property in whole or in part is strictly prohibited without VA3 DESIGN's written permission.

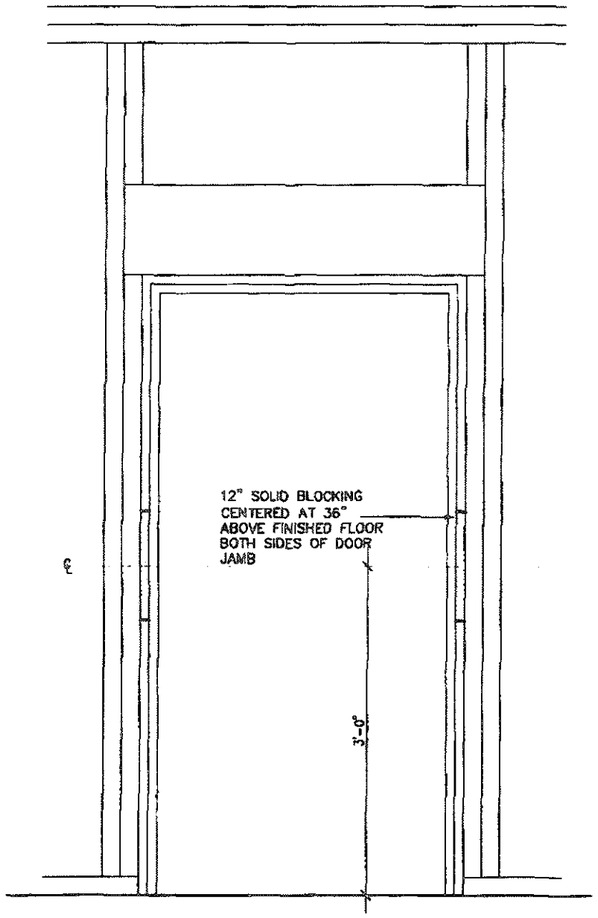

RESISTANCE TO FORCED ENTRY (OBC 9.6.8.)

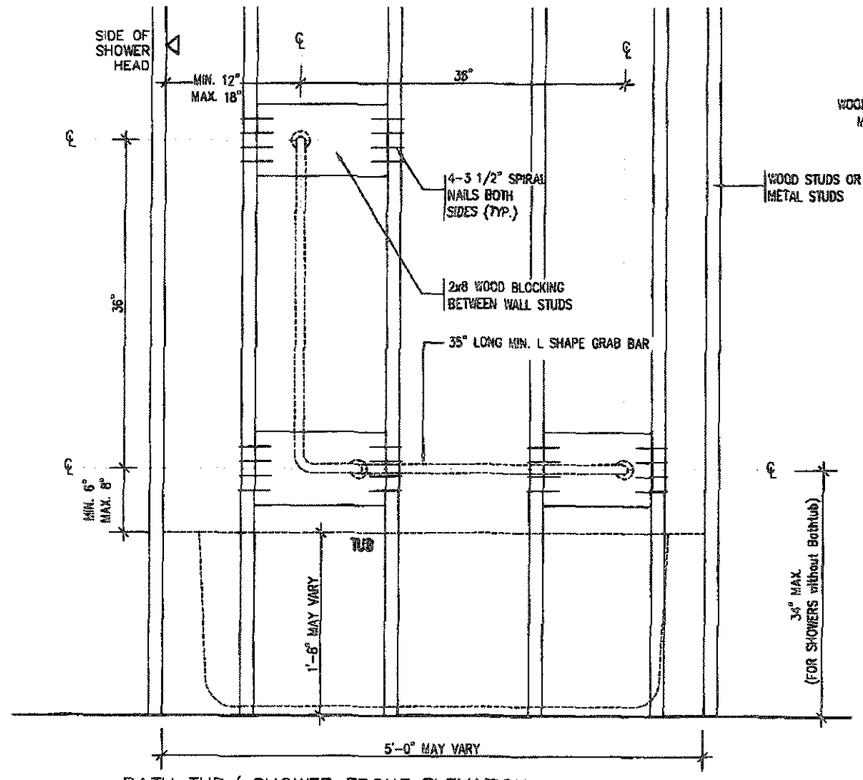

BATH TUB/ SHOWER FRONT ELEVATION

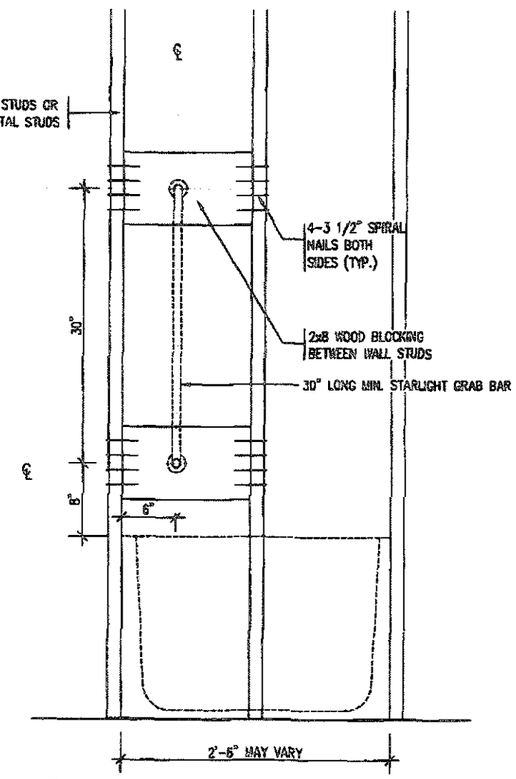

BATH TUB SHOWER HEAD SIDE ELEVATION

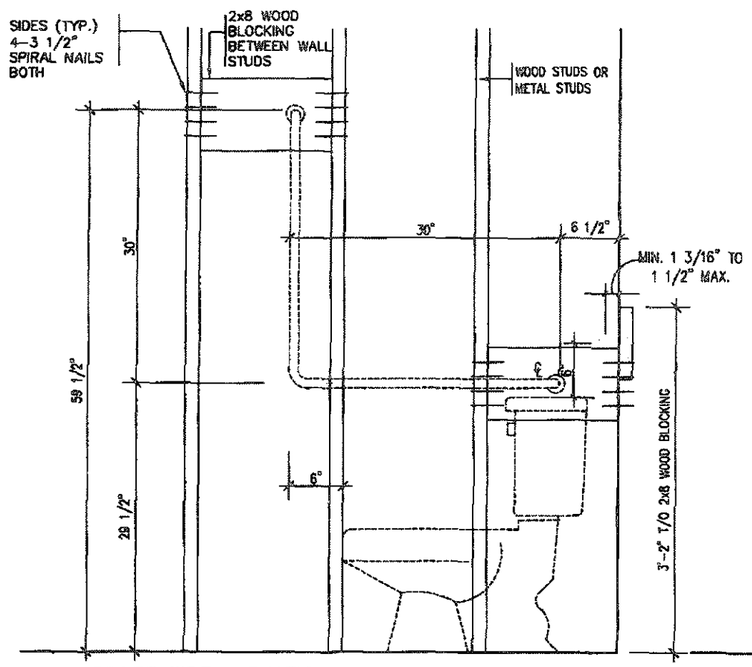

TOILET SIDE ELEVATION

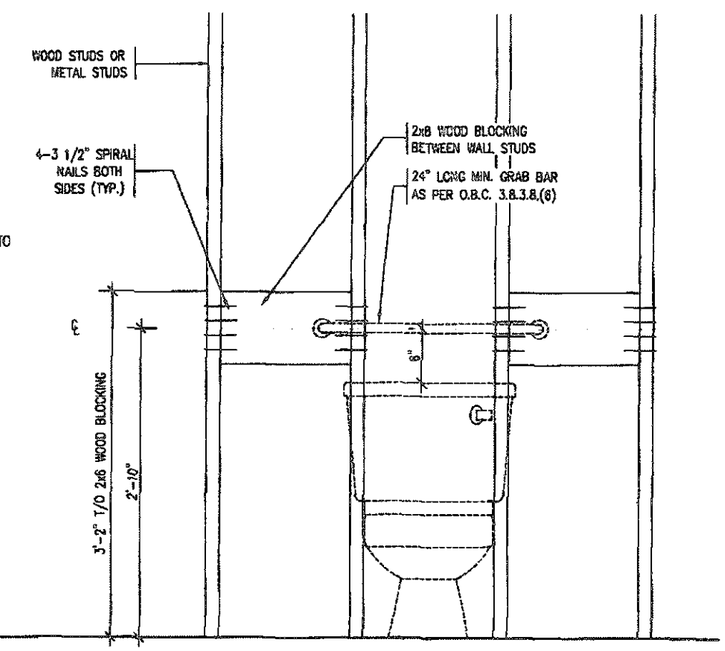

STRUCTURAL REINFORCEMENT FOR GRAB BAR (OBC 9.5.2.3.)
FOR MAIN BATH ONLY

THIS STRUCTURE MUST BE CONSTRUCTED TO MEET OR EXCEED THE PROVISIONS OF THE ONTARIO BUILDING CODE

REGISTERED PROFESSIONAL ENGINEER
B. MARINKOVIC
PROVINCE OF ONTARIO
Feb/14/19

STRUDET INC.
FOR STRUCTURE ONLY

RECEIVED
JUN 25 2019
TOWN OF CALEDON
BUILDING SECTION
FILE NO

FEB 14 2019

2012 CODE
ENERGY STAR

no.	description	date	by
9			
8			
7			
6			
5			
4			
3			
2	INSUL. UPDATED. RE-ISSUED FOR PERMIT.	JAN 30/19	GW
1	ISSUED FOR PERMIT.	DEC 19/18	GW

the undersigned has reviewed and takes responsibility for this design and has the qualifications and meets the requirements set out in the Ontario Building Code to be a Designer.
qualification information
name: Richard Vink — signature: R Vink — BCIN 24486
registration information
VA3 Design Inc. — 42659

Contractor must verify all dimensions on the job and report any discrepancy to the Designer before proceeding with the work. All drawings and specifications are instruments of service and are property of the Designer which must be returned at the completion of the work. Drawings are not to be scaled.

VA3 DESIGN
255 Consumers Rd Suite 120
Toronto ON M2J 1R4
t 416.630.2255 f 416.630.4782
va3design.com

Greenpark

project name: LAMBERTS LANE HOME CORP. PH.2 — municipality: CALEDON — project no. 18023

date: SEPT. 2018 — title: STUD WALL REINFORCEMENT — drawing no. 7

drawn by: GW — checked by: - — scale: Not to Scale — file name: 18023-GP-STD_DETAILS_ES17

All drawings specifications, related documents and design are the copyright property of VA3 DESIGN. Reproduction of this property in whole or in part is strictly prohibited without VA3 DESIGN's written permission.

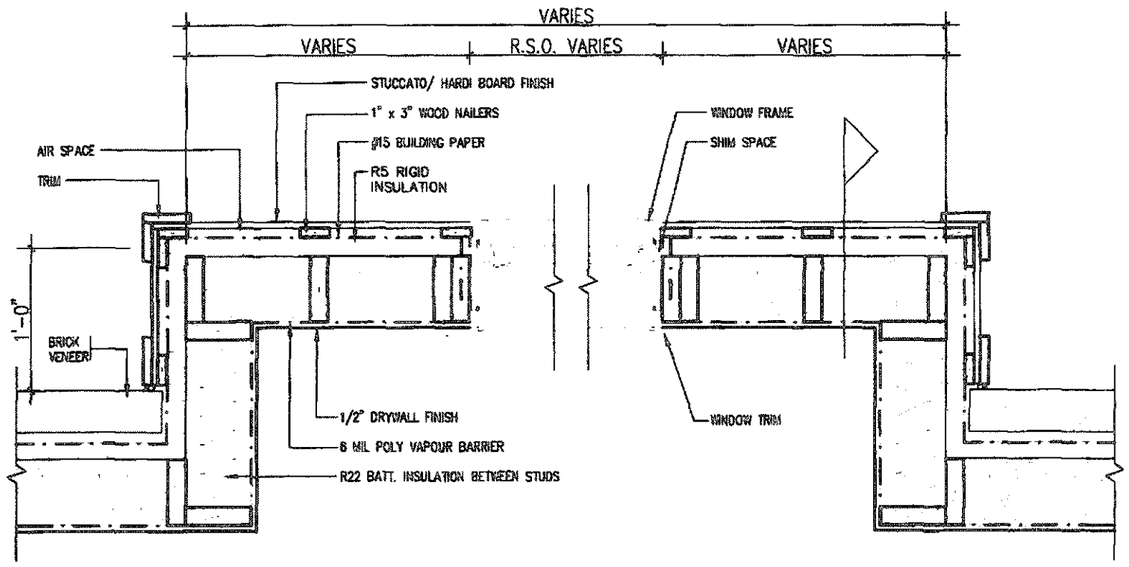

PLAN VIEW

STUCCATO BOARD FINISH CLADDING OR EQUAL (OBC 9.27.)

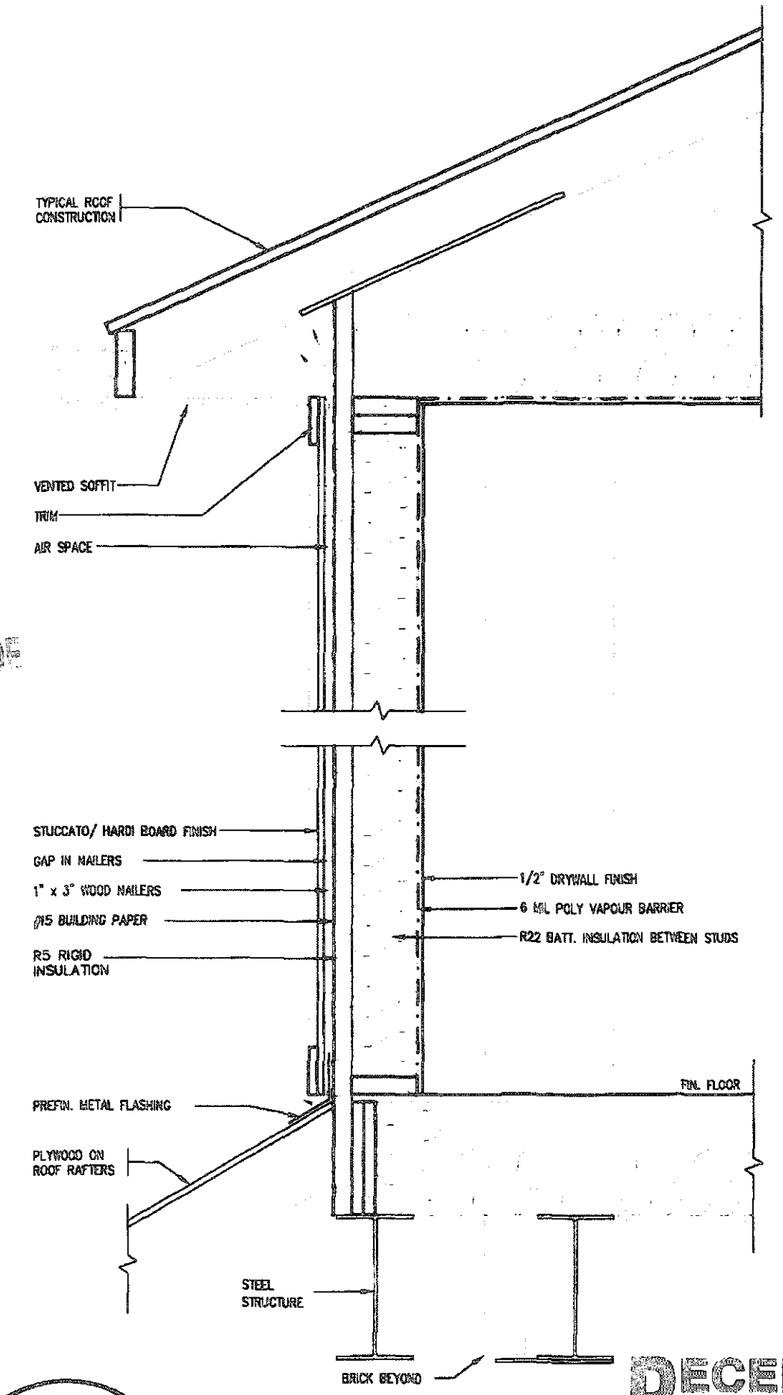

CROSS SECTION

THIS STRUCTURE MUST BE CONSTRUCTED TO MEET OR EXCEED THE PROVISIONS OF THE ONTARIO BUILDING CODE

REGISTERED PROFESSIONAL ENGINEER
B. MARINKOVIC
PROVINCE OF ONTARIO

STRUDET INC.
FOR STRUCTURE ONLY

RECEIVED
JUN 25 2019
TOWN OF CALEDON
BUILDING SECTION
FILE NO

FEB 14 2019

2012 CODE ENERGY STAR

no.	description	date	by
9			
8			
7			
6			
5			
4			
3			
2	INSUL. UPDATED, RE-ISSUED FOR PERMIT.	JAN 30/19	GW
1	ISSUED FOR PERMIT.	DEC 19/18	GW

The undersigned has reviewed and takes responsibility for this design and has the qualifications and meets the requirements set out in the Ontario Building Code to be a Designer.
qualification information
name: Richard Vink — signature — BCIN 24088
registration information
VA3 Design Inc. — 42658

Contractor must verify all dimensions on the job and report any discrepancy to the Designer before proceeding with the work. All drawings and specifications are instruments of service and the property of the Designer which must be returned at the completion of the work. Drawings are not to be scaled.

VA3 DESIGN
255 Consumers Rd Suite 120
Toronto ON M2J 1R4
t 416.630.2255 f 416.630.4762
va3design.com

Greenpark.

project name: LAMBERTS LANE HOME CORP. PH.2 — municipality: CALEDON — project no. 18023
date: SEPT. 2019 — STUCCATO/ HARDI BOARD FINISH — drawing no. 8
drawn by: GW — checked by: – — scale: Not to Scale — file name: 18023-CP-STD_DETAILS_ES17

All drawings specifications, related documents and design are the copyright property of VA3 DESIGN. Reproduction of this property in whole or in part is strictly prohibited without VA3 DESIGN's written permission.

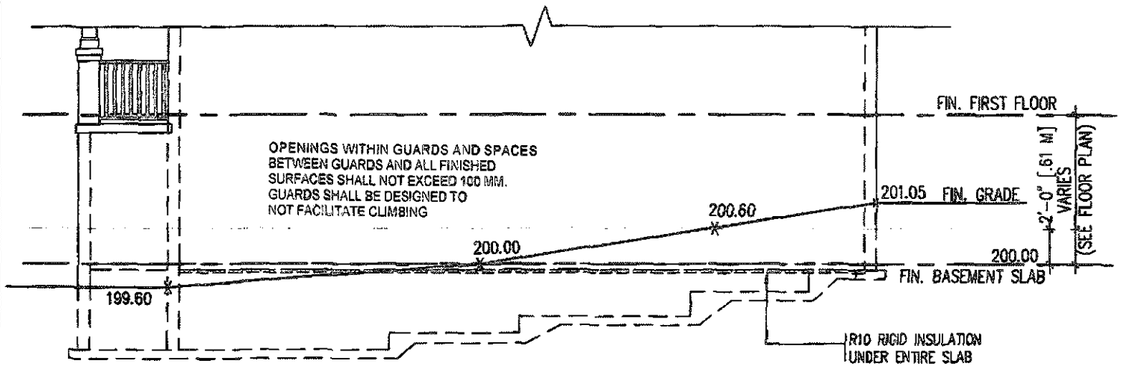

TYPICAL RIGHT SIDE ELEVATION

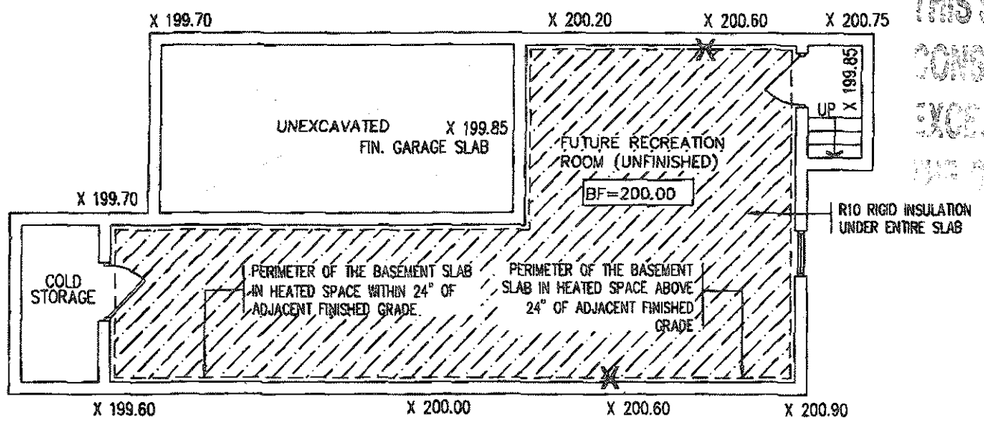

TYPICAL BASEMENT PLAN

SLAB ON GRADE CONDITION

NOTES:
1. LEVELS SHOWN ON THE PLANS ARE FOR ILLUSTRATION PURPOSE ONLY, SEE FINAL GRADING PLAN FOR ACTUAL LEVELS
2. ALL LEVELS ARE SHOWN IN METRIC

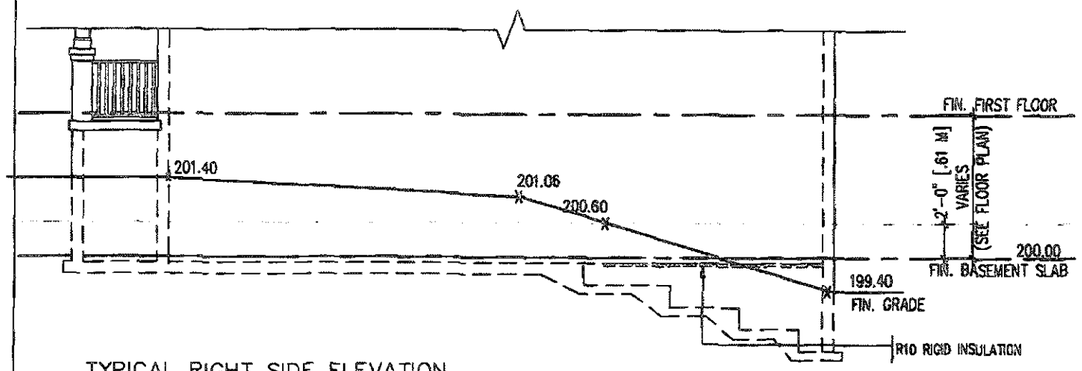

TYPICAL RIGHT SIDE ELEVATION

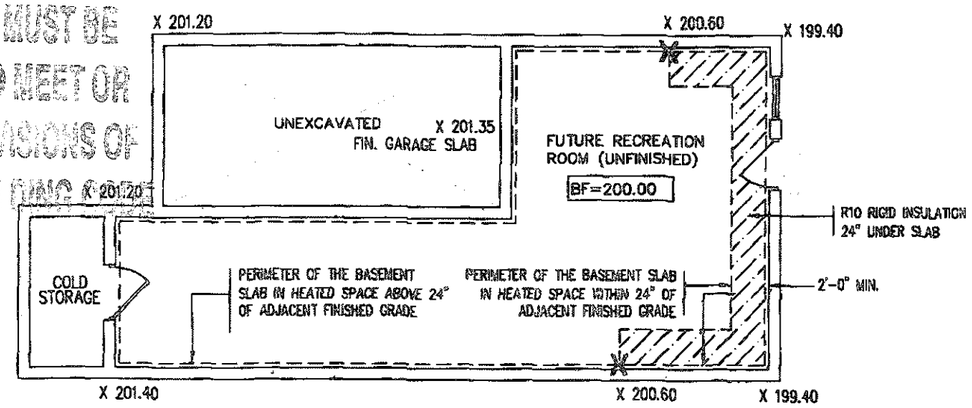

TYPICAL BASEMENT PLAN

WALK OUT BASEMENT CONDITION

NOTES:
1. LEVELS SHOWN ON THE PLANS ARE FOR ILLUSTRATION PURPOSE ONLY, SEE FINAL GRADING PLAN FOR ACTUAL LEVELS
2. ALL LEVELS ARE SHOWN IN METRIC

THIS STRUCTURE MUST BE CONSTRUCTED TO MEET OR EXCEED THE PROVISIONS OF THE ONTARIO BUILDING CODE

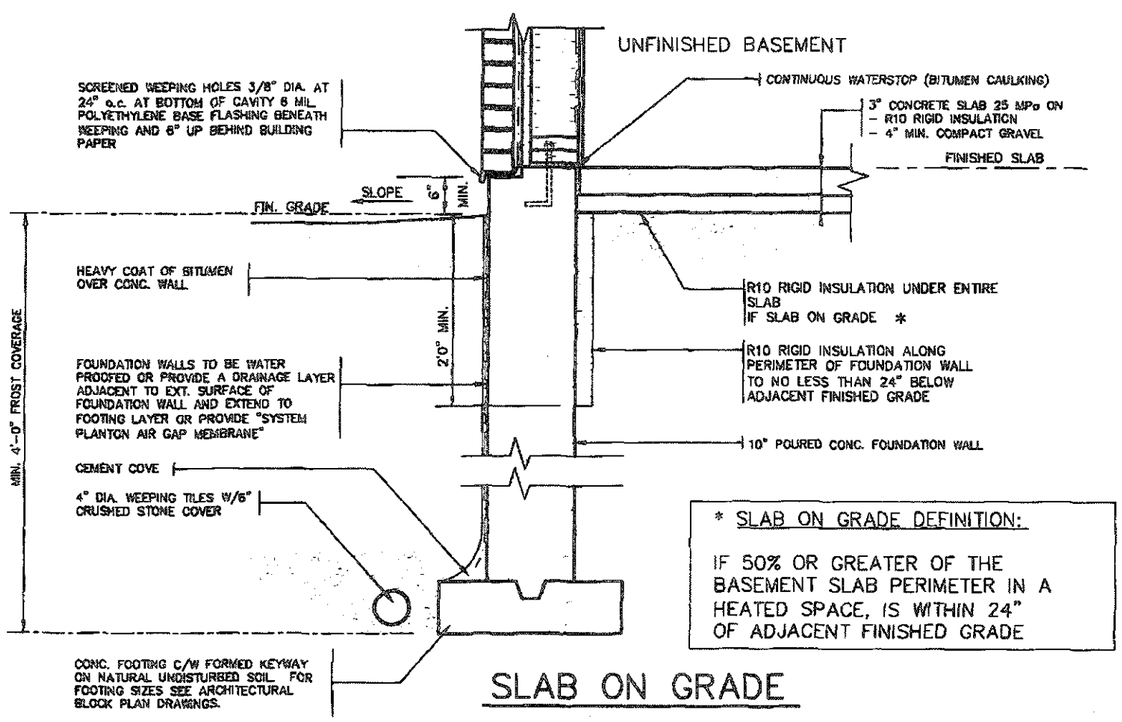

* SLAB ON GRADE DEFINITION:

IF 50% OR GREATER OF THE BASEMENT SLAB PERIMETER IN A HEATED SPACE, IS WITHIN 24" OF ADJACENT FINISHED GRADE

SLAB ON GRADE

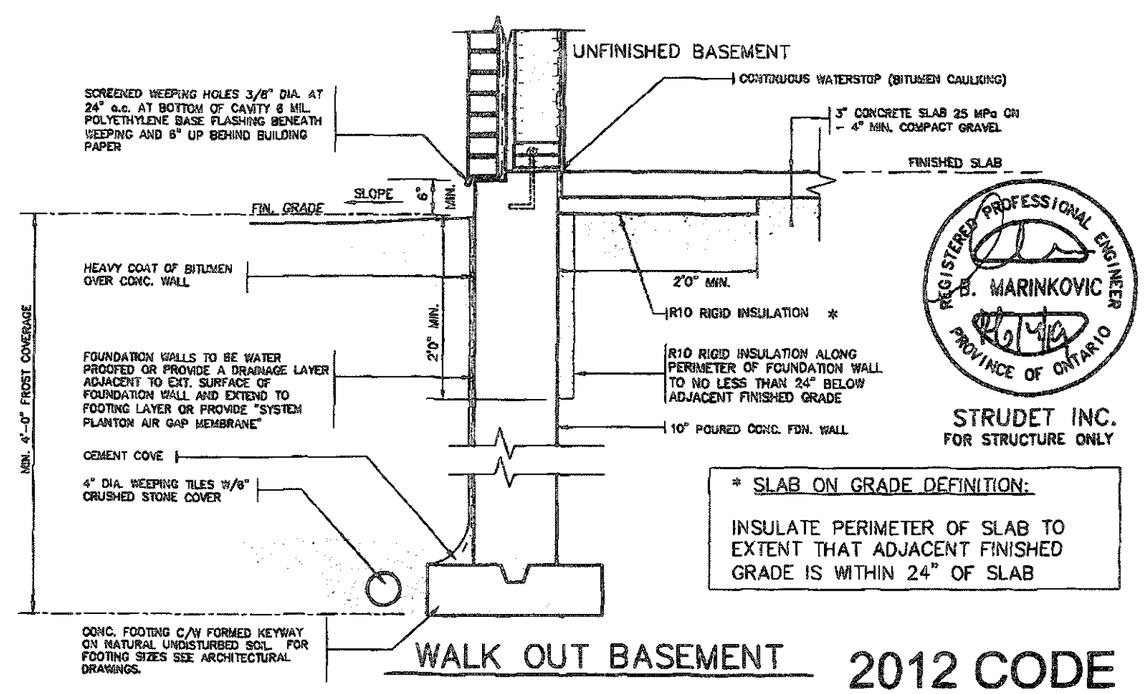

* SLAB ON GRADE DEFINITION:

INSULATE PERIMETER OF SLAB TO EXTENT THAT ADJACENT FINISHED GRADE IS WITHIN 24" OF SLAB

REGISTERED PROFESSIONAL ENGINEER B. MARINKOVIC PROVINCE OF ONTARIO

STRUDET INC.
FOR STRUCTURE ONLY

WALK OUT BASEMENT

FEB 14 2019

2012 CODE ENERGY STAR

RECEIVED JUN 25 2019 TOWN OF CALEDON BUILDING DIVISION FILE NO

no.	description	date	by
9			
8			
7			
6			
5			
4			
3			
2	INSUL. UPDATED. RE-ISSUED FOR PERMIT.	JAN 30/19	GW
1	ISSUED FOR PERMIT.	DEC 19/18	GW

The undersigned has reviewed and takes responsibility for this design and has the qualifications and meets the requirements set out in the Ontario Building Code to be a Designer.
qualification information
Richard Vink 24486
name signature BCIN
registration information
VA3 Design Inc. 42959

Contractor must verify all dimensions on the job and report any discrepancy to the Designer before proceeding with the work. All drawings and specifications are instruments of service and the property of the Designer which must be returned at the completion of the work. Drawings are not to be scaled.

VA3 DESIGN
255 Consumers Rd Suite 120
Toronto ON M2J 1R4
t 416.630.2255 f 416.630.4782
va3design.com

Greenpark

project name: LAMBERTS LANE HOME CORP. PH.2
municipality: CALEDON
project no.: 18023
date: SEPT. 2018
drawn by: GW
checked by: -
scale: Not to Scale
file name: 18023-GP-STD_DETAILS_ES17
SLAB ON GRADE INSULATION
drawing no.: 9

All drawings specifications, related documents and designs are the copyright property of VA3 DESIGN. Reproduction of this property in whole or in part is strictly prohibited without VA3 DESIGN's written permission.