# CONSTRUCTION NOTES (Unless otherwise noted)

ALL CONSTRUCTION TO ADHERE TO THESE PLANS AND SPEC'S AND TO CONFORM TO THE ONTARIO BUILDING CODE AND ALL OTHER APPLICABLE CODES AND AUTHORITIES HAVING JURISDICTION. THESE REQUIREMENTS ARE TO BE TAKEN AS MINIMUM SPECIFICATIONS. ONT. REG. 332/12-2012 OBC.

(1.) ROOF CONSTRUCTION
80.210 (10.25kg/m2) ASPHALT SHINGLES, 10mm (3/8") PLYWOOD SHEATHING WITH "H" CLIPS. APPROVED WOOD TRUSSES @ 610mm (24") O.C. MAX. APPROVED EAVES PROTECTION TO EXTEND 900mm (3'-0") FROM EDGE OF ROOF AND MIN. 300mm (12") BEYOND INNER FACE OF EXTERIOR WALL. (EAVES PROTECTION NOT REQ'D FOR ROOF SLOPES 8:12 OR GREATER) 38x89 (2"x4") TRUSS BRACING @ 1830mm (6'-0") O.C. AT BOTTOM CHORD. PREFIN. ALUM. EAVESTROUGH, FASCIA, RAIL & VENTED SOFFIT. PROVIDE ICE & WATER SHIELD TO ALL ROOF/WALL SURFACES SUSCEPTIBLE TO ICE DAMMING. ROOF SHEATHING TO BE FASTENED 150 (6") c/c ALONG EDGES & INTERMEDIATE SUPPORTS WHEN TRUSSES SPACED GREATER THAN 405 (16"). ATTIC VENTILATION 1:300 OF INSULATED CEILING AREA WITH MIN. 25% AT EAVES & MIN. 25% AT RIDGE (OBC 9.19.1.2.).

(2.) FRAME WALL CONSTRUCTION (2"x6") (REFER TO B.O.P. FORM)
SIDING, HARDIE BOARD, STUCCAFO BOARD OR EQUAL AS PER ELEVATION, 19x94 (1"x3") VERTICAL WOOD FURRING, APPROVED SHEATHING PAPER, MIN. RSI. 0.88 (R-5) RIGID INSULATION, 38x140 (2"x6") STUDS @ 400mm (16") O.C. FILLED WITH MIN. RSI. 3.87 (R-22) BATT INSULATION, TOTAL MIN. RSI. 4.75 (R-27). APPROVED DIAGONAL WALL BRACING, VAPOUR BARRIER AND CONT. AIR BARRIER. 13mm (1/2") INT. DRYWALL FINISH.

(2B.) FRAME WALL CONSTRUCTION – GARAGE WALLS
SIDING AS PER ELEV., 19x38 (1"x2") VERTICAL WOOD FURRING, CONTIN. SHEATHING MEMBRANE, 9.5mm (3/8") EXT. TYPE SHEATHING, 38x89 (2"x4") STUDS @ 400mm (16") O.C. ((FOR MAX. HEIGHT 3000mm (9'-10")) OR 38x140 (2"x6" STUDS @ 400mm (16") O.C. (FOR MAX. HEIGHT OF 3.6M (11'-10")) WITH APPROVED DIAGONAL WALL BRACING. 13mm (1/2") INTERIOR DRYWALL FINISH.
REFER TO NOTE 19 WHERE FLOOR EXISTS ABOVE GARAGE. SIDING TO BE MIN. 200mm (8") ABOVE FINISH GRADE.

(2C.) STUCCO WALL CONSTRUCTION (2"x6") (REFER TO B.O.P. FORM)
STUCCO CLADDING SYSTEM CONFORMING TO O.B.C. 9.27.1.1.(2) & 9.28 THAT EMPLOY A MINIMUM 6mm (1/4") AIR SPACE BEHIND THE CLADDING WITH POSITIVE DRAINAGE TO THE EXTERIOR AND APPLIED PER MANUFACTURERS SPECIFICATIONS ON 25mm (1") MIN. EXTRUDED OR EXPANDED RIGID POLYSTYRENE, APPROVED SHEATHING PAPER, MINIMUM RSI. 0.88 (R-5) RIGID INSULATION, 38x140 (2"x6") STUDS @ 400mm (16") O.C. FILLED WITH MIN. RSI. 3.87 (R22) BATT INSUL. TOTAL MIN. RSI. 4.75 (R-27), APPROVED DIAGONAL WALL BRACING, VAPOUR BARRIER AND CONTIN. AIR BARRIER, 13mm (1/2") GYPSUM BOARD INTERIOR FINISH. STUCCO TO BE MIN. 200 (8") ABOVE FINISH GRADE.

STUCCO WALL CONSTRUCTION –GARAGE WALLS
(2D.) STUCCO CLADDING SYSTEM CONFORMING TO O.B.C. 9.27.1.1.(2) & 9.28 THAT EMPLOY A MINIMUM 6mm (1/4") AIR SPACE BEHIND THE CLADDING WITH POSITIVE DRAINAGE TO THE EXTERIOR AND APPLIED PER MANUFACTURERS SPECIFICATIONS OVER 25mm (1") MIN. EXPANDED OR EXTRUDED RIGID POLYSTYRENE ON APPROVED AIR/MOISTURE BARRIER ON 13mm (1/2") EXT. TYPE SHEATHING ON 38x89 (2"x4") STUDS @ 400mm (16") O.C. ((FOR MAX. HEIGHT 3000mm (9'-10")) OR 38x140 (2"x6" STUDS @ 400mm (16") O.C. (FOR MAX. HEIGHT OF 3.6M (11'-10")) WITH APPROVED DIAGONAL WALL BRACING. 13mm (1/2") INTERIOR DRYWALL FINISH.
REFER TO NOTE 19 WHERE FLOOR EXISTS ABOVE GARAGE.
STUCCO TO BE MIN. 200mm (8") ABOVE FINISH GRADE.

(3.) MASONRY VENEER CONSTRUCTION (2"x6") (REFER TO B.O.P. FORM)
90mm (4") MASONRY, 25mm (1") AIR SPACE, 22x180x0.76mm (7/8"x7"x0.03") GALV. METAL TIES @ 400mm (16") o.c. HORIZONTAL 600mm (24") o.c. VERTICAL APPROVED SHEATHING PAPER, MIN. RSI. 0.88 (R-5) RIGID INSULATION, 38x140 (2"x6") STUDS @ 400mm (16") O.C. FILLED WITH MIN. RSI. 3.87 (R-22) BATT INSULATION, TOTAL MIN. RSI. 4.75 (R-27), APPROVED DIAGONAL WALL BRACING, VAPOUR BARRIER AND CONT. AIR BARRIER, 13mm (1/2") INT. DRYWALL FINISH. PROVIDE WEEP HOLES @ 800mm (32") o.c. BOTTOM COURSE AND OVER OPENINGS. PROVIDE BASE FLASHING UP MIN. 150mm (6") BEHIND BUILDING PAPER.

(3B.) MASONRY VENEER CONSTRUCTION – GARAGE WALLS
90mm (4") MASONRY, 25mm (1") AIR SPACE, 22x180x0.76mm (7/8"x7"x0.03") GALV. METAL TIES @ 400mm (16") O.C. HORIZONTAL 610mm (24") O.C. VERTICAL, APPROVED SHEATHING PAPER, 9.5mm (3/8") EXTERIOR TYPE SHEATHING, 38x89 (2"x4") STUDS @ 400mm (16") O.C. ((FOR MAX. HEIGHT 3000mm (9'-10")) OR 38x140 (2"x6" STUDS @ 400mm (16") O.C. (FOR MAX. HEIGHT OF 3.6M (11'-10")) WITH APPROVED DIAGONAL WALL BRACING. 13mm (1/2") INTERIOR DRYWALL FINISH.
REFER TO NOTE 19 WHERE FLOOR EXISTS ABOVE GARAGE. PROVIDE WEEP HOLES @ 800mm (32") O.C. BOTTOM COURSE AND OVER OPENINGS. PROVIDE BASE FLASHING UP MIN. 150mm (6") BEHIND BUILDING PAPER. BRICK TO BE MIN. 150mm (6") ABOVE FINISH GRADE.

INTERIOR STUD PARTITIONS
(4.) FOR BEARING PARTITIONS 38x89 (2"x4") @ 405mm (16") O.C. FOR 2 STOREYS AND 305mm (12") O.C. FOR 3 STOREYS, NON-BEARING PARTITIONS 38x89 (2"x4") @ 610mm (24") O.C. PROVIDE 38x89 (2"x4") BOTTOM PLATE AND 2/38x89 (2/2"x4") TOP PLATE, 13mm (1/2") INT. DRYWALL BOTH SIDES OF STUDS, PROVIDE 38x140 (2"x6") STUDS/PLATES WHERE NOTED.

(5.) FOUNDATION WALL/FOOTINGS: (9.15.3. 9.15.4. 9.15.2. 9.15.2.1.(2))
200mm (8") POURED CONC. FDTN. WALL 15MPa (2200psi) WITH BITUMENOUS DAMPPROOFING AND DRAINAGE LAYER. DRAINAGE LAYER REQ'D. WHEN BASEMENT INSUL. EXTENDS 900 (2'-11") BELOW FIN. GRADE. DRAINAGE LAYER IS NOT REQ'D. IF FOUNDATION WALL IS WATERPROOFED. MAXIMUM POUR HEIGHT 2380 (7'-10") ON 600x155 (20"x6") CONTINUOUS KEYED CONC. FTG. SPACE FDTN. WALL PRIOR TO BACKFILLING. ALL FOOTINGS SHALL REST ON NATURAL UNDISTURBED SOIL OR COMPACTED ENGINEERED FILL.

* REFER TO UNIT PLANS FOR STRIP FOOTING SIZES *

-MAXIMUM FLOOR LIVE LOAD OF 2.4kPa. (50psf.) PER FLOOR.
-REFER TO SOILS REPORT FOR SOIL CONDITIONS AND BEARING CAPACITY.

FOUNDATION DRAINAGE OBC. 9.14.2. & 9.14.3.
(6.) 100mm (4") DIA. FOUNDATION DRAINAGE TILE 150mm (6") CRUSHED STONE OVER AND AROUND DRAINAGE TILES.

BASEMENT SLAB OBC. 9.3.1.6.(1)(b), 9.16.4.5.(1), 9.25.3.3.(1g)
(7.) 80mm (3")MIN. 25MPa (3600psi) CONC. SLAB ON 100mm (4") COARSE GRANULAR FILL, OR 15MPa. (2200psi) CONC. WITH DAMPPROOFING BELOW SLAB. UNDER SLAB INSULATION PER B.O.P. FORM where required.
ALL SLAB JOINTS & PENETRATIONS TO BE SEALED TO MAINTAIN AIR BARRIER.

WOOD SUBFLOORS (SEE OBC. 9.23.14. & 9.30.2.1)
(8.) -19mm (3/4") MIN. T & G SUBFLOOR UNDER GROUND FLOOR FINISH FLOOR.
16mm (5/8") T&G SUBFLOOR UNDER SECOND FLOOR FINISH FLOOR.
16mm (5/8") PANEL-TYPE UNDERLAY FOR CERAMIC TILE APPLICATION.
6mm (1/4") PANEL-TYPE UNDERLAYMENT UNDER RESILIENT & PARQUET FLOORING.

(9.) ATTIC INSULATION (REFER TO B.O.P. FORM)
RSI 10.56 (R60) BLOWN IN ROOF INSULATION AND APPROVED VAPOUR BARRIER, 16mm (5/8") INT. DRYWALL FINISH OR APPROVED EQUAL. RSI 3.52 (R20) MIN. ABOVE OUTER SURFACE OF EXTERIOR WALL.

ALL STAIRS/EXTERIOR STAIRS –OBC. 9.8.–
(10.) UNIFORM RISE -5mm (1/4") MAX BETWEEN ADJACENT TREADS OR LANDINGS
-10mm (1/2") MAX BETWEEN TALLEST & SHORTEST RISE IN FLIGHT

| | | |
|---|---|---|
| MAX. RISE | = | 200 (7-7/8") |
| MIN. RUN | = | 210 (8-1/4") |
| MIN. TREAD | = | 235 (9-1/4") |
| MAX. NOSING | = | 25 (1") |
| MIN. HEADROOM | = | 1950 (6'-5") |
| RAIL @ LANDING | = | 900 (2'-11") |
| RAIL @ STAIR | = | 865 (2'-10") to 965 (3'-2") |
| MIN. STAIR WIDTH | = | 860 (2'-10") |

FOR CURVED STAIRS
MIN. RUN = 150 (6")
MIN. AVG. RUN = 200 (8")

HANDRAILS –OBC. 9.8.7.–
(11.) FINISHED RAILING ON POCKETS SPACED MAXIMUM 100mm (4") BETWEEN PICKETS. CLEARANCE BETWEEN HANDRAIL AND SURFACE BEHIND IT TO BE 50 (2") MIN. HANDRAILS TO BE CONTINUOUS EXCEPT FOR NEWEL POST AT CHANGES OF DIRECTION .

INTERIOR GUARDS –OBC. 9.8.8.–
INTERIOR GUARDS: 900mm (2'-11") MIN. HIGH

EXTERIOR GUARDS – OBC. 9.8.8.
900mm (36") HIGH GUARD WHERE DISTANCE FROM PORCH TO FIN. GRADE IS LESS THAN 1800mm (71"). 1070mm (42") HIGH GUARD IS REQUIRED WHERE DISTANCE EXCEEDS 1800mm (71").

SILL PLATE ANCHORAGE
(12.) 38x89 (2"x4") SILL PLATE WITH 13mm (1/2") DIA. ANCHOR BOLTS 200mm (8") LONG. EMBEDDED MIN. 100mm (4") INTO CONC. @ 2400mm (7'-10") O.C., CAULKING OR 25 (1") MIN. MINERAL WOOL BETWEEN PLATE AND TOP OF FDTN. WALL.
USE NON-SHRINK GROUT TO LEVEL SILL PLATE WHEN REQUIRED.

BASEMENT INSULATION (REFER TO B.O.P. FORM)
(13.) FOUNDATION WALLS ENCLOSING HEATED SPACE SHALL BE INSULATED FROM THE UNDERSIDE OF THE SUBFLOOR TO NOT MORE THAN 200mm (8") ABOVE THE FINISHED FLOOR & NO CLOSER THAN 50mm (2") OF THE BASEMENT SLAB. FOUNDATION WALL INSULATION SHALL BE MINIMUM RSI. 3.52 (R20). INSULATION TO HAVE APPROVED VAPOUR BARRIER. DAMPPROOF WITH BUILDING PAPER BETWEEN THE FOUNDATION WALL AND INSULATION UP TO GRADE LEVEL. NOTE: FULL HEIGHT INSULATION AT COLD CELLAR WALLS. AIR BARRIER TO BE SEALED TO FOUNDATION WALL WITH CAULKING.

BASEMENT BEARING STUD PARTITION
(14.) 38x89/140 (2"x4"/6") STUDS @ 405mm (16") O.C. 38x89/140 (2"x4"/6") SILL PLATE ON DAMPPROOFING MATERIAL, 13mm (1/2") DIA. ANCHOR BOLTS 200mm (8") LONG, EMBEDDED MIN. 100mm (4") INTO CONCRETE @ 2400mm (7'-10") O.C. 100mm (4") HIGH CONCRETE CURB ON 305x155 (12"x6") FOR 2x4 STUD WALL OR 400x155 (16"x6") FOR 2x6 STUD WALL. CONCRETE FOOTING. ADD HORIZONTAL BLOCKING AT MID-HEIGHT IF WALL IS UNFINISHED.

(15.) STEEL BASEMENT COLUMN (SEE O.B.C. 9.17.3)
89mm(3-1/2") DIA x 4.76mm(0.188") STEEL COLUMN WITH 150x150x6.5 (6"x6"x1/8") STEEL TOP & BOTTOM PLATE.

(15A) STEEL COLUMN (SEE O.B.C. 9.17.3)
90mm(3-1/2") DIA x 4.76mm(0.188") STEEL COLUMN WITH 100x100x6.0 (4"x4"x1/4") TOP & BOTTOM PLATES. FIELD WELD BOTTOM PLATE TO 100x250x12.5 (4"x10"x1/2") BASE PLATE C/W 2-12mm DIA. x 300mm LONG x59mm HOOK ANCHORS (2-1/2"x12"x2"). TIE COLUMN TO STUD WALL WITH 2-32x3.175 (1 1/4"x 1/8") STEEL STRAP WELDED TO COLUMN AND FASTENED TO STUD WITH 2-SDS 6.35x38 (1/4"x1 1/2") SCREWS MANUF. BY SIMPSON STRONG TIE.

CONCRETE PILASTER
(16.) BEAM POCKET OR 200x200 (8"x8") POURED CONC. NOB WALLS. MIN. BEARING 90mm (3-1/2")

(17.) 19x38 (1"x2") CONTINUOUS WOOD STRAPPING BOTH SIDES OF STEEL BEAM. (OBC. 9.23.4.3.(3c))

GARAGE SLAB
(18.) 100mm (4") 32MPa (4640psi) CONC. SLAB WITH 5-8% AIR ENTRAINMENT ON OPTIONAL 100 (4") COARSE GRANULAR FILL WITH COMPACTED SUB-BASE OR COMPACTED NATIVE FILL.
SLOPE TO FRONT (EXTERIOR) AT 12 MIN.

INTERIOR GARAGE WALLS & CEILINGS (REFER TO B.O.P. FORM)
(19.) 13mm (1/2") GYPSUM BOARD ON WALL AND CEILING BETWEEN HOUSE AND GARAGE. WALL INSULATION = RSI. 3.87 (R22) BATTS + RSI. 0.88 (R5) CONTINUOUS RIGID INSUL. CEILING INSUL.= RSI. 5.46 (R31). TAPE AND SEAL ALL JOINTS AIRTIGHT PER O.B.C. 9.10.9.16.

(20.) DOOR AND FRAME GASPROOFED. DOOR EQUIPPED WITH SELF CLOSING DEVICE AND WEATHERSTRIPPING PER OBC 9.10.13.15.

EXTERIOR SIPP
(21.) PRECAST CONCRETE STEP OR WOOD STEP WHERE NOT EXPOSED TO WEATHER. MAX. RISE 200mm (7-7/8") MIN. TREAD 250mm (9-1/2"). SEE OBC. 9.8.9.2., 9.8.9.3. & 9.8.10.

DRYER VENT (OBC-9.2.3.9.(7), 9.2.4.1.1 & 9.2.4.11)
(22.) CAPPED DRYER EXHAUST VENTED TO EXTERIOR.
(USE 100mm (4") DIA. SMOOTH WALL VENT PIPE).

(23.) INSULATED ATTIC ACCESS (OBC-9.19.2.1)
ATTIC ACCESS HATCH WITH MIN. DIMENSION OF 545x700mm (21-1/2"x27-1/2") & A MIN. AREA OF 0.32 SQ.M. (3.44 SQ.FT.) WITH WEATHERSTRIPPING. RSI 3.52 (R20) RIGID INSULATION BACKING.

FIREPLACE CHIMNEYS –OBC. 9.21.–
(24.) TOP OF FIREPLACE CHIMNEY SHALL BE 915mm (3'-0") ABOVE THE HIGHEST POINT AT WHICH IT COMES IN CONTACT WITH THE ROOF AND 610mm (2'-0") ABOVE THE ROOF SURFACE WITHIN A HORIZ. DISTANCE OF 3050mm (10'-0") FROM THE CHIMNEY.

(25.) LINEN CLOSETS
4 SHELVES MIN. 350mm (14") DEEP.

MECHANICAL EXHAUST
(26.) MECHANICAL EXHAUST FAN, VENTED TO EXTERIOR AS REQUIRED BY OBC. 9.32.3.5. & 9.32.3.10.

STEEL BEARING PLATE FOR MASONRY WALLS
(27.) 250x250x16 (11"x11"x5/8") STL. PLATE FOR STL BEAMS AND 200x200x12 (11"x11"x1/2") STL. PLATE FOR WOOD BEAMS BEARING ON CONC. BLOCK PARTYWALL, ANCHORED WITH 2-19mm (3/4") x 200mm (8") LONG BALL ANCHORS WITHIN SOLID BLOCK COURSE. LEVEL WITH NON-SHRINK GROUT.

(27A) SOLID WOOD BEARING FOR WOOD STUD WALLS
SOLID BEARING TO BE AT LEAST AS WIDE AS THE SUPPORTED MEMBER. SOLID WOOD BEARING COMPRISED OF BUILT-UP WOOD STUDS TO BE CONSTRUCTED IN ACCORDANCE WITH OBC 9.17.4.2(2).

(28.) CLASS 'B' VENT
U.L.C. RATED CLASS "B" VENT 610mm (2'-0") ABOVE THE POINT IN CONTACT WITH THE ROOF FOR SLOPES UP TO 9/12, REFER TO THE ONTARIO GAS UTILIZATION CODE.

BASEMENT WOOD POST (OBC 9.17.4.)
(29.) 3-38x140 (3-2"x6") BUILT-UP-POST ON METAL BASE SHOE ANCHORED TO CONC. WITH 12.7 DIA. BOLT, 406x406x203 (16"x16"x8") CONC. FTG. OR AS OTHERWISE SPECIFIED ON DRAWING.

STEPPED FOOTINGS (OBC 9.15.3.9.)
(30.) MIN. HORIZ. STEP = 600mm (24").
MAX. VERT. STEP = 600mm (24").

SLAB ON GRADE
(31.) MIN. 100mm (4") CONCRETE SLAB ON GRADE ON 100mm (4") COARSE GRANULAR FILL. REINFORCED WITH 6x6-W2.9xW2.9 MESH PLACED NEAR MID-DEPTH OF SLAB. CONC. STRENGTH 32 MPa (4640 psi) WITH 5-8% AIR ENTRAINMENT ON COMPACTED SUB-GRADE. UNDER SLAB INSULATION AS PER B.O.P. FORM where required.
ALL JOINTS & PENETRATIONS OF INTERIOR SLABS TO BE SEALED TO MAINTAIN AIR BARRIER.

DIRECT VENTING GAS FURNACE VENT
(32.) DIRECT VENT FURNACE TERMINAL MIN. 900mm (36") FROM A GAS REGULATOR. MIN. 300mm (12") ABOVE FIN. GRADE. FROM ALL OPENINGS, EXHAUST AND INTAKE VENTS. MIN. INTAKE TO BE A MIN. OF 1830mm (6'-0") FROM ALL EXHAUST TERMINALS. REFER TO GAS UTILIZATION CODE.

DIRECT VENTING GAS FIREPLACE VENT
(33.) DIRECT VENT GAS FIREPLACE. VENT TO BE A MINIMUM 300mm (12") FROM ANY OPENING AND ABOVE FIN. GRADE. REFER TO GAS UTILIZATION CODE.

-JOIST STRAPPING AND BRIDGING (SEE OBC. 9.23.9.4)
(34.) ALL CONVENTIONAL FRAMED FLOOR JOISTS WITH SPANS OVER 2100mm (6'-11") TO BE BRIDGED WITH 38x38 (2"x2") CROSS BRACING OR SOLID BLOCKING @ 2100mm (6'-11") O.C. MAX. AND WHERE SPECIFIED BY JOIST TABLES A-1 OR A-2 STRAPPING SHALL BE 19x94 (1"x3") @ 2100mm (6'-11") O.C. UNLESS A PANEL TYPE CEILING FINISH IS APPLIED. (* SEE OBC 9.23.9.4. *).
REFER TO FLOOR LAYOUTS FOR ENGINEERED FLOOR JOISTS.

EXPOSED BUILDING FACE –OBC. 9.10.15.
(35.) EXTERIOR WALLS TO HAVE A FIRE RESISTANCE RATING OF NOT LESS THAN 45 min. WHERE LIMITING DISTANCE (LD) IS LESS THAN 1.2M (3'-11"). WHERE THE LD IS LESS THAN 600mm (1'-11") THE EXPOSING FACE SHALL BE CLAD IN NON-COMBUSTIBLE MATERIAL. SEE ELEVATIONS FOR ADDITIONAL NOTES.

COLD CELLAR PORCH SLAB (OBC 9.38.)
(36.) FOR MAX. 2500 mm (8'-2") PORCH DEPTH (SHORTEST DIM.), 125mm (4 7/8") 32MPa (4640psi) CONC. SLAB WITH 5-8% AIR ENTRAINMENT. REINF. WITH 10M BARS @ 220mm (7 7/8") O.C. EACH WAY IN BOTTOM THIRD OF SLAB, 600x600 (23 5/8"x 23 5/8") 10M DOWELS @ 600mm (23 5/8") O.C., ANCHORED IN PERIMETER FDTN. WALLS. SLOPE SLAB MIN. 1.0% FROM DOOR. SLAB TO HAVE MIN 75mm (3") BEARING ON FDTN. WALLS. PROVIDE (W.I.) LINTELS OVER CELLAR DOOR AND WITH 100mm (4") END BEARING.

FOUNDATION LEDGE FOR BRICK/MASONRY
(37.) THE FDTN. WALL SHALL NOT BE REDUCED TO LESS THAN 90mm (3-1/2") THICK TO A MAX. DEPTH OF 650mm (26") AND SHALL BE TIED TO THE FACING VENEER WITH METAL TIES SPACED 200mm (8") O.C. VERTICALLY AND 900mm (36") O.C. HORIZONTALLY. FILL SPACE BETWEEN WALL AND FACING SOLID WITH MORTAR.

(38.) CONVENTIONAL ROOF FRAMING (2.0kpa. SNOW LOAD)
38x140 (2"x6") RAFTERS @ 400mm (16"O.C.) FOR MAX 11'-7" SPAN, 38x184 (2"x8") RIDGE BOARD. 38x89 (2"x4") COLLAR TIES AT MIDSPANS. CEILING JOISTS TO BE 38x89 (2"x4") @ 400mm (16") O.C. FOR MAX. 2830mm (9'-3") SPAN & 38x140 (2"x6") @ 405 (16") O.C. FOR MAX. 4450mm (14'-7") SPAN.
RAFTERS FOR BUILT-UP ROOF TO BE 38x89 (2"x4") @ 610mm (24") O.C. WITH A 38x89 (2"x4") CENTRE POST TO THE TRUSS BELOW, LATERALLY BRACED @ 1800mm (6'-0") O.C. VERTICALLY.

(39.) TWO STOREY VOLUME SPACES
-FOR A MAXIMUM 5460 mm (18'-0") HEIGHT AND MAXIMUM SUPPORTED ROOF TRUSS LENGTH OF 8.0m, PROVIDE 2-38x140 (2-2"x6") SPR.#2 CONTIN. STUDS @ 305mm (12") O.C. (TRIPLE UP AT EVERY THIRD DOUBLE STUD FOR BRICK WALLS) C/W 9.6 (3/8") THICK EXT. PLYWOOD SHEATHING. PROVIDE SOLID WOOD BLOCKING BETWEEN WOOD STUDS @ 1220 mm (4'-0") O.C. VERTICALLY. -FOR WALLS WITH HORIZ. DISTANCES NOT EXCEEDING 2800 mm (9'-6"), PROVIDE 38x140 (2"x6") STUDS @ 406 (16") O.C. WITH CONTINUOUS 2-38x140 (2-2"x6")TOP PLATES + 1-38x140 (1-2"x6") BOTTOM PLATE & MINIMUM OF 3-38x184 (3-2"x8") CONT. HEADER AT GRND. CEILING LEVEL TOE-NAILED & GLUED AT TOP, BOTTOM PLATES AND HEADERS.

EXPOSED FLOOR TO EXTERIOR (REFER TO B.O.P. FORM)
(40.) PROVIDE RSI 5.46 (R31) INSULATION, APPROVED VAPOUR BARRIER AND CONTINUOUS AIR BARRIER, FINISHED SOFFIT.

PARTYWALLS
(41.) TYPICAL 1 HOUR RATED PARTYWALL.
REFER TO DETAILS FOR TYPE AND SPECIFICATIONS.

EXTERIOR WALLS FOR WALK-OUT CONDITIONS
(42.) THE EXTERIOR BASEMENT STUD WALL TO BE 38x140 (2"x6") STUDS @ 405mm (16") o.c. OR 38x89 (2"x4") STUDS @ 305mm (12") o.c. WALL INSULATION TO BE SAME AS STANDARD ABOVE GRADE WOOD STUD WALLS (R20+RS).

WINDOWS: CANADA ZONE C
1) MINIMUM BEDROOM WINDOW –OBC. 9.9.10.1.–
AT LEAST ONE BEDROOM WINDOW ON A GIVEN FLOOR IS TO HAVE MIN. 0.35m2 UNOBSTRUCTED GLAZED OR OPENABLE AREA WITH MIN. CLEAR WIDTH OF 380 mm (1'-3").
GLASS AREA NOT MORE THAN 17% OF GROSS PERIPHERAL WALL AREA. MAXIMUM U-VALUE 1.67 & MIN ER-VALUE 29
2) WINDOW GUARDS –OBC. 9.8.8.1.(8)
A GUARD IS REQUIRED WHERE THE TOP OF THE WINDOW SILL IS LOCATED LESS THAN 460mm (1'-7") ABOVE FIN. FLOOR AND THE DISTANCE FROM THE FIN. FLOOR TO THE ADJACENT GRADE IS GREATER THAN 1800mm (5'-11")
3) WINDOW WELLS –OBC. 9.14.6.3.
ALL WINDOW WELLS TO EXIT TO FOOTING LEVEL PER OBC 9.14.6.3. CHECK WITH THE LOCAL AUTHORITY.

DOORS:
1) EXTERIOR DOORS– THERMAL RESISTANCE
ALL EXTERIOR DOORS TO COMPLY WITH THERMAL RESISTANCE AS STATED IN B.O.P. FORM
2) EXTERIOR SLIDING GLASS DOORS– THERMAL RESISTANCE
ALL EXTERIOR SLIDING GLASS DOORS TO COMPLY WITH THERMAL RESISTANCE AS STATED IN B.O.P. FORM

GENERAL:
1) MECHANICAL VENTILATION IS REQUIRED TO PROVIDE 0.3 AIR CHANGES PER HOUR AVERAGED OVER 24 HOURS. SEE MECHANICAL DRAWINGS.
2) ALL DOWNSPOUTS TO DRAIN AWAY FROM THE BUILDING AS PER OBC 9.26.18.2. AND MUNICIPAL STANDARDS.
3) SOLID WALL REINFORCEMENT FOR GRAB BARS OR WALL REINFORCEMENT OF SOLID WALLS SHALL BE INSTALLED ADJACENT TO OWNER CLOSETS AND SHOWER OR BATHTUB IN MAIN BATHROOM. REFER TO OBC. 9.5.2.3. 3.8.3.8.(1)(a) & 3.8.3.13.(1)(b).
4) AIR BARRIER
ALL AIR BARRIER SYSTEMS TO COMPLY WITH O.B.C.-DIV. B, 9.25.3.

LUMBER:
1) ALL LUMBER SHALL BE SPRUCE NO.2 GRADE, UNLESS NOTED OTHERWISE.
2) LUMBER EXPOSED TO THE EXTERIOR TO BE SPRUCE No.2 GRADE PRESSURE TREATED OR CEDAR, UNLESS NOTED OTHERWISE.
3) ALL LAMINATED VENEER LUMBER (LVL) BEAMS, GIRDER TRUSSES, AND METAL HANGER CONNECTIONS SUPPORTING ROOF FRAMING TO BE DESIGNED & CERTIFIED BY ROOF TRUSS MANUFACTURER.
4) LVL BEAMS NOT SPECIFIED ON ENGINEERED FLOOR OR ROOF LAYOUTS SHALL BE VERSALAM 2.0E OR EQUAL. NAIL EACH PLY OF LVL WITH 69mm (3 1/2") LONG COMMON WIRE NAILS @ 300mm (12") O.C. STAGGERED IN 2 ROWS FOR 184,240 & 300mm (7 1/4",9 1/2", 11 7/8") DEPTHS AND STAGGERED IN 3 ROWS FOR GREATER DEPTHS AND FOR 4 PLY MEMBERS ADD 13mm (1/2") DIA. GALV. BOLTS BOLTED AT MID-DEPTH OF BEAM @ 915mm (3'-0") O.C.
5) PROVIDE FACE MOUNT BEAM HANGERS TYPE "BCL" MANUFACTURED BY SIMPSON STRONG-TIE OR EQUAL FOR ALL LVL BEAM TO BEAM CONNECTIONS UNLESS OTHERWISE NOTED.
REFER TO ENGINEERED FLOOR LAYOUTS.
6) JOIST HANGERS: PROVIDE METAL HANGERS FOR ALL JOISTS AND BUILT-UP WOOD MEMBERS INTERSECTING FLUSH BUILT-UP WOOD MEMBERS.
7) WOOD FRAMING NOT TREATED WITH A WOOD PRESERVATIVE, IN CONTACT WITH CONCRETE, SHALL BE SEPARATED FROM THE CONCRETE BY AT LEAST 2 mil POLYETHYLENE FILM, lbs 50 (45kg.) ROLL ROOFING OR OTHER DAMPPROOFING MATERIAL, EXCEPT WHERE THE WOOD MEMBER IS AT LEAST 150mm (6") ABOVE THE GROUND.

STEEL:
1) STRUCTURAL STEEL SHALL CONFORM TO CAN/CSA-G40.21 GRADE 350W. "STRUCTURAL QUALITY". PER OBC. 9-9.23.4.3.
2) REINFORCING STEEL SHALL CONFORM TO CSA-G30-18M GRADE 400R.

STUCCO:
1) ALL STUCCO WALLS TO HAVE A MINIMUM 6mm (1/4") AIR SPACE BEHIND THE CLADDING WITH POSITIVE DRAINAGE TO THE EXTERIOR. THE EXTERIOR SHEATHING MUST NOT BE GYPSUM BASED. ALL STUCCO TO BE INSTALLED AS PER MANUFACTURERS SPECIFICATIONS.

ELECTRIC VEHICLE CHARGING SYSTEM (EVCS)
ROUGH-IN FOR FUTURE ELECTRIC VEHICLE SUPPLY EQUIPMENT (CHARGING SYSTEM) TO BE INSTALLED.
ROUGH-IN SHALL INCLUDE:
- A minimum 208 amp Panelboard,
- Conduit that is not less than 1 1/16" (27mm) trade size,
- A square 4 11/16" (119mm) trade size electrical outlet box.
- Receptacle/ Blanked outlet box to be located in the Garage or carport or adjacent to driveway.

REFER TO 2012 OBC. 9.34.4.

## LEGEND

- CLASS 'B' VENT
- EXHAUST FAN TO EXTERIOR
- DUPLEX OUTLET (12" ABOVE SURFACE)
- DUPLEX OUTLET (HEIGHT A.F.F)
- WEATHERPROOF DUPLEX OUTLET
- GFI DUPLEX OUTLET (HEIGHT A.F.F)
- POT LIGHT
- HEAVY DUTY OUTLET (220 volt)
- LIGHT FIXTURE (PULL CHAIN)
- LIGHT FIXTURE (CEILING MOUNTED)
- SWITCH
- LIGHT FIXTURE (WALL MOUNTED)
- FLOOR DRAIN
- HOSE BIB (NON-FREEZE)
- S.A. COD. COMBINED SMOKE ALARM AND CARBON MONOXIDE DETECTOR/ALARM
- SMOKE ALARM
- DJ — DOUBLE JOIST
- TJ — TRIPLE JOIST
- SJ — SINGLE JOIST
- LVL — LAMINATED VENEER LUMBER
- PL — POINT LOAD FROM ABOVE
- P.T. — PRESSURE TREATED LUMBER
- FL — FLUSH MEMBER
- G.T. — GIRDER TRUSS BY ROOF TRUSS MANUF.
- DROP — DROPPED MEMBER
- F.A. FLAT ARCH
- C.A. CURVED ARCH
- M.C. MEDICINE CABINET
- CONC. BLOCK WALL
- SPECIAL WALL CONSTRUCTION SEE NOTE ON PLANS
- SOLID WOOD BEARING (SPRUCE No. 2) SOLID BEARING TO BE AS WIDE AS SUPPORTED MEMBER OR AS DIRECTED BY STRUCTURAL ENGINEER. SOLID BEARING TO BE UNBROKEN 2 PIECES.
- SOLID WOOD BEARING TO MATCH FROM ABOVE

NOTE: SOLID BEARING TO BE AT LEAST AS WIDE AS THE SUPPORTED LINTEL/BEAM

SMOKE ALARM (REFER TO OBC 9.10.19)
PROVIDE 1 PER FLOOR, NEAR THE STAIRS CONNECTING THE FLOOR LEVEL AND ALSO 1 IN EACH BEDROOM NEAR HALL DOOR. ALARMS TO BE CONNECTED TO AN ELECTRICAL CIRCUIT AND INTERCONNECTED TO ACTIVATE ALL ALARMS IF 1 SOUNDS. BATTERY BACK-UP REQUIRED. SMOKE ALARMS TO INCORPORATE VISUAL SIGNALLING COMPONENT (9.10.19.3.(3)).

CARBON MONOXIDE ALARM (OBC 9.33.4.)
WHERE A FUEL-BURNING APPLIANCE IS INSTALLED IN A DWELLING UNIT, A CARBON MONOXIDE DETECTOR CONFORMING TO CAN/CSA-6.19/CSA 6.19 OR UL2034 SHALL BE INSTALLED ADJACENT TO EACH SLEEPING AREA. CARBON MONOXIDE DETECTOR(S) SHALL BE PERMANENTLY WIRED SO THAT ITS ACTIVATION WILL ACTIVATE ALL CARBON MONOXIDE DETECTORS AND BE EQUIPPED WITH AN ALARM THAT IS AUDIBLE WITHIN BEDROOMS WHEN THE INTERVENING DOORS ARE CLOSED.

S.A. COD. COMBINED SMOKE ALARM (REFER TO OBC 9.10.19) & CARBON MONOXIDE ALARM (OBC 9.33.4.)
REFER TO NOTES ABOVE FOR SMOKE AND CARBON MONOXIDE ALARM.

SOIL GAS CONTROL (OBC 9.13.4.1 & 9.13.4.2)
PROVIDE CONSTRUCTION TO PREVENT LEAKAGE OF SOIL GAS INTO THE BUILDING IF REQUIRED.

**2012 OBC. – ON. REG. 332/12**
THESE DRAWINGS HAVE BEEN DESIGNED TO COMPLY WITH THE 2012 OBC AND ALL AMENDMENTS AS OF JANUARY 2019.

CONTRACTOR MUST VERIFY ALL DIMENSIONS ON THE JOB AND REPORT ANY DISCREPANCY TO THE VA3 DESIGN BEFORE PROCEEDING WITH THE WORK.
ALL DRAWINGS AND

REFER TO STANDARD WALL SECTION SHEET FOR FURTHER INFORMATION ON EXTERIOR WALL CONSTRUCTION.

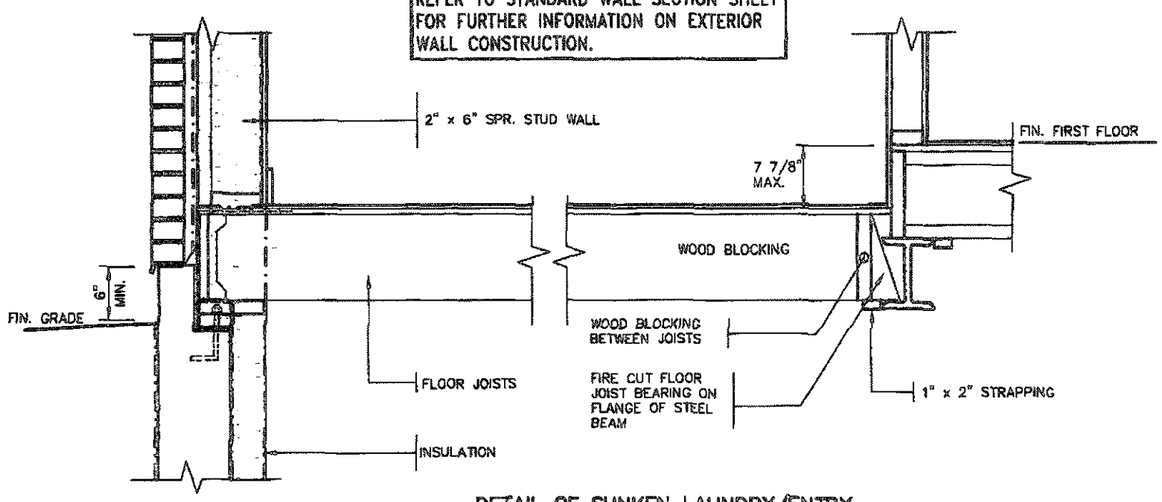


DETAIL OF SUNKEN LAUNDRY/ENTRY
(ONE RISER)

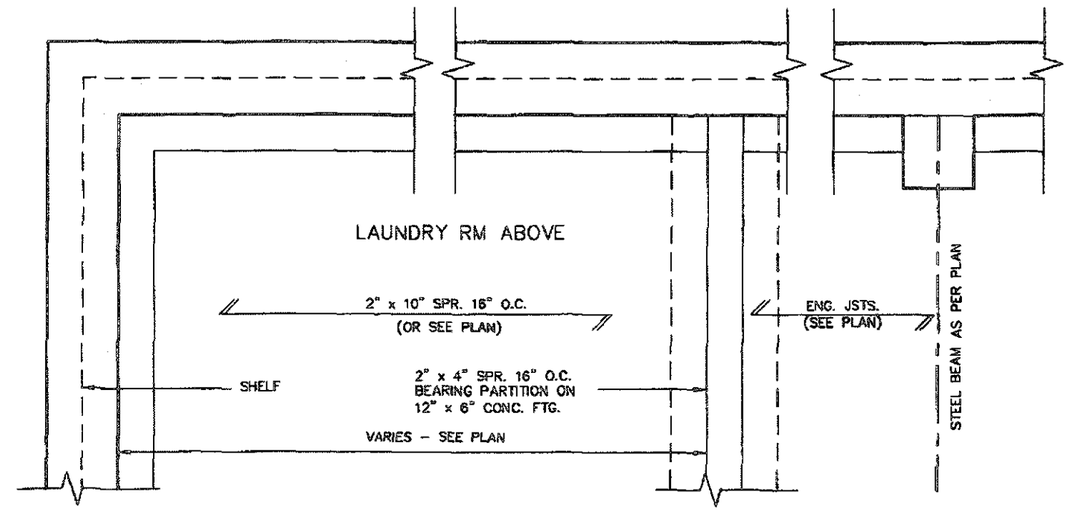


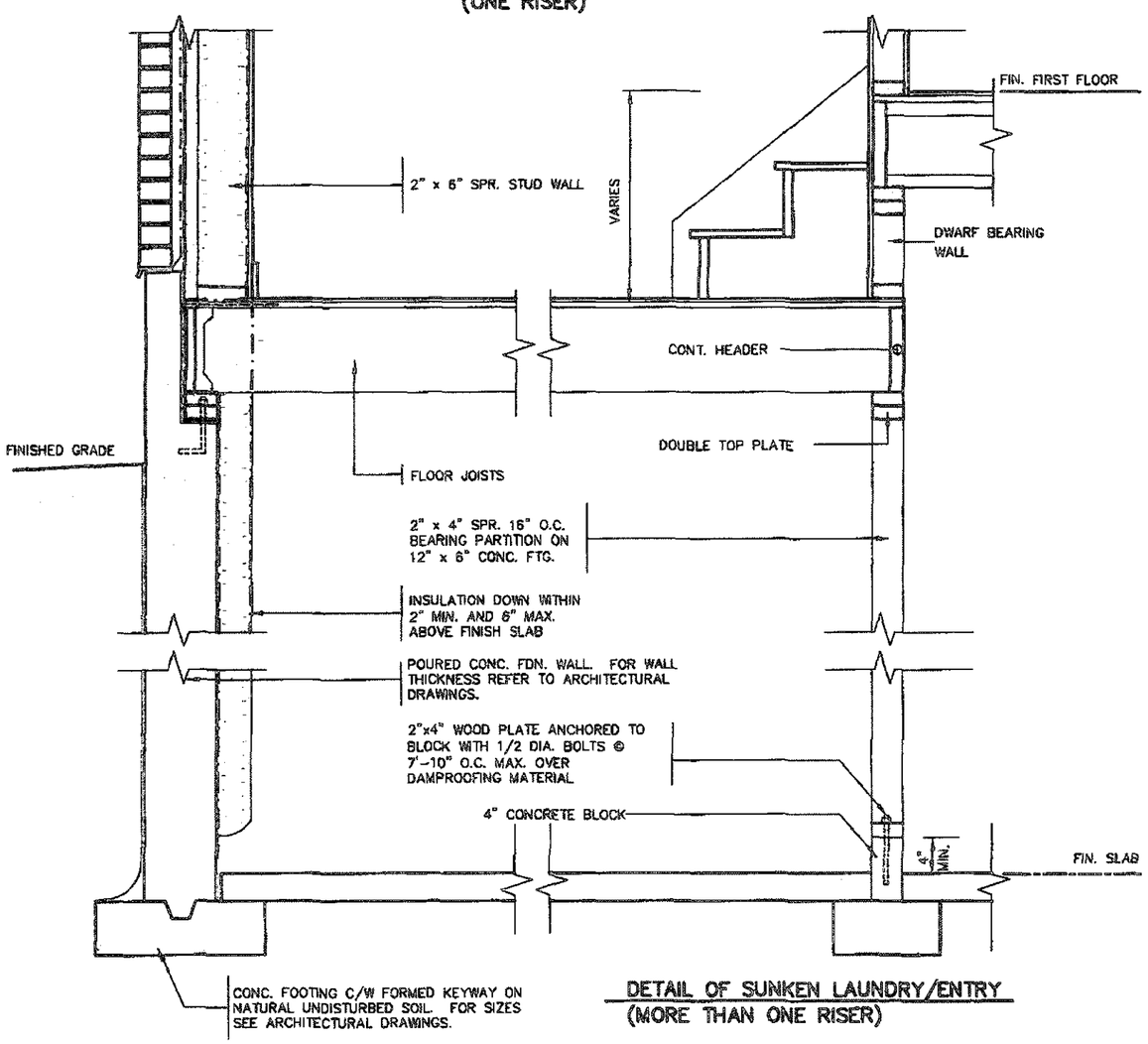


DETAIL OF SUNKEN LAUNDRY/ENTRY
(MORE THAN ONE RISER)

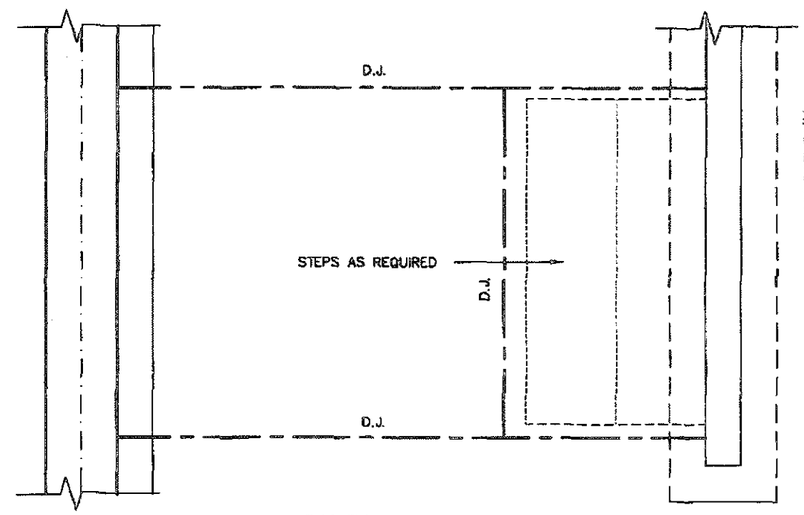


PARTIAL FOUNDATION PLAN

RECEIVED
JUN 10 2019
TOWN OF CALEDON
BUILDING SECTION
FILE NO

REGISTERED PROFESSIONAL ENGINEER
R. MARINKOVIC
PROVINCE OF ONTARIO

STRUDET INC.
FOR STRUCTURE ONLY

FEB 14 2019

2012 CODE
ENERGY STAR

| no. | description | date | by |
|---|---|---|---|
| 9 | | | |
| 8 | | | |
| 7 | | | |
| 6 | | | |
| 5 | | | |
| 4 | | | |
| 3 | | | |
| 2 | INSUL. UPDATED, RE-ISSUED FOR PERMIT. | JAN 30/19 | GW |
| 1 | ISSUED FOR PERMIT. | DEC 19/18 | GW |

The undersigned has reviewed and takes responsibility for this design and has the qualifications and meets the requirements set out in the Ontario Building Code to be a Designer.
qualification information
Richard Vink 24489
name signature BCIN
registration information
VA3 Design Inc. 42658

Contractor must verify all dimensions on the job and report any discrepancy to the Designer before proceeding with the work. All drawings and specifications are instruments of service and the property of the Designer which must be returned at the completion of the work. Drawings are not to be scaled.

VA3 DESIGN
255 Consumers Rd Suite 120
Toronto ON M2J 1R4
t 416.630.2255 f 416.630.4782
va3design.com

Greenpark

| | |
|---|---|
| project name: LAMBERTS LANE HOME CORP. PH.2 | municipality: CALEDON |
| project no.: 18023 | |
| date: SEPT. 2018 | title: SUNKEN FLOOR DETAILS |
| drawn by: GW | checked by: – |
| scale: Not to Scale | file name: 18023-GP-STD_DETAILS_ES17 |
| drawing no.: 2 | |

All drawings specifications, related documents and design are the copyright property of VA3 DESIGN. Reproduction of this property in whole or in part is strictly prohibited without VA3 DESIGN's written permission.

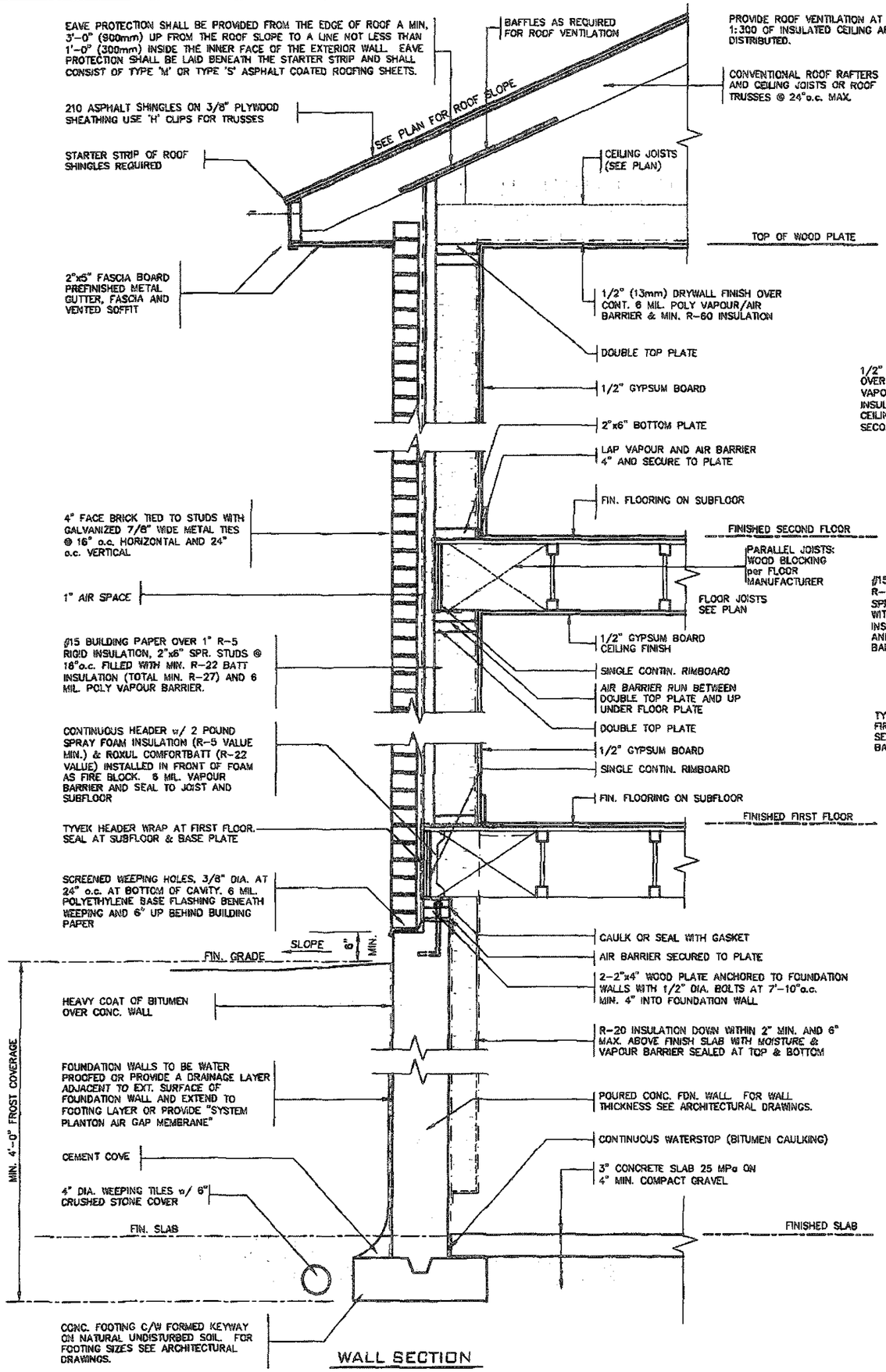


WALL SECTION

THIS STRUCTURE MUST BE CONSTRUCTED TO MEET OR EXCEED THE PROVISIONS OF THE ONTARIO BUILDING CODE

REGISTERED PROFESSIONAL ENGINEER
B. MARINKOVIC
PROVINCE OF ONTARIO

STRUDET INC.
FOR STRUCTURE ONLY

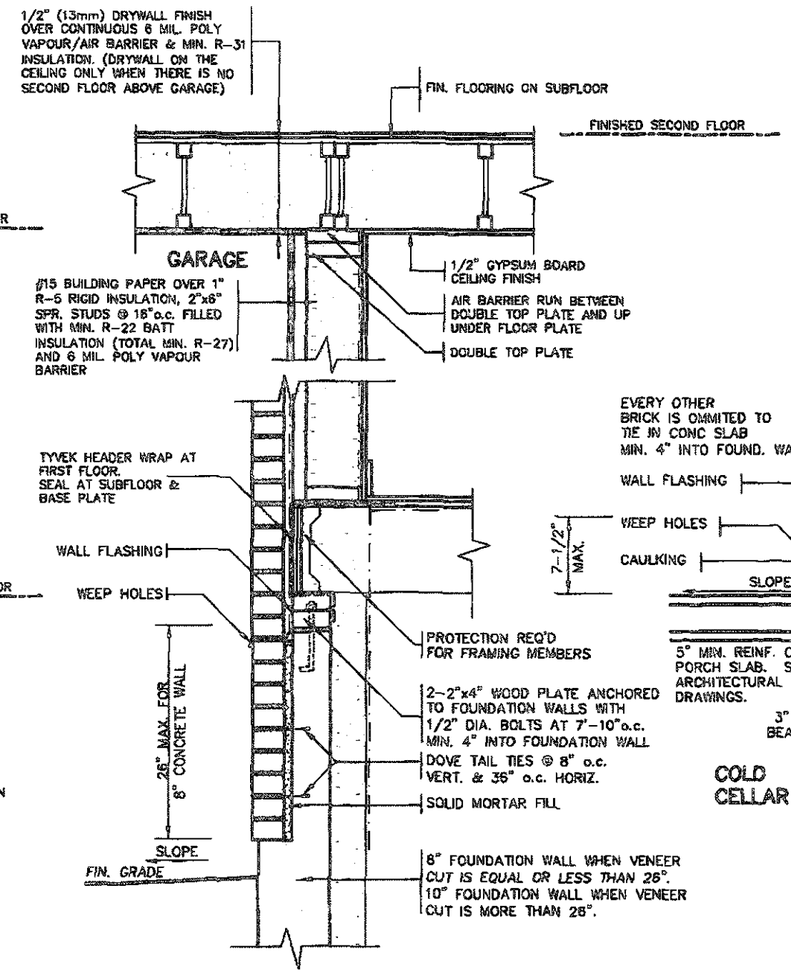


DETAIL FOR CONCRETE VENEER DROPPED GRADE

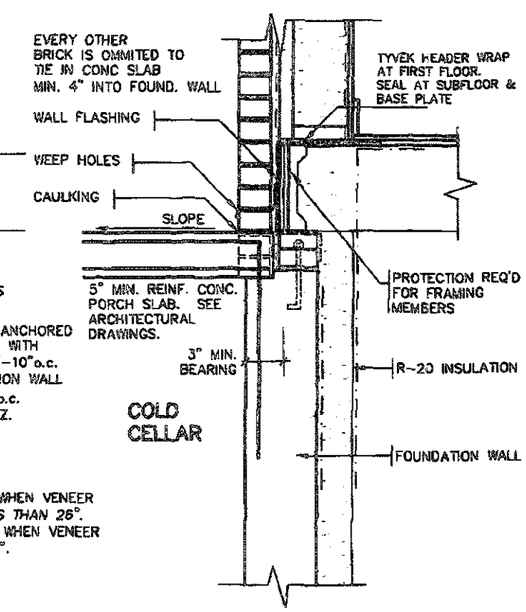


DETAIL FOR COLD CELLAR PORCH SLAB

FEB 14 2019

2012 CODE
ENERGY STAR

| no. | description | date | by |
|---|---|---|---|
| 9 | | | |
| 8 | | | |
| 7 | | | |
| 6 | | | |
| 5 | | | |
| 4 | | | |
| 3 | | | |
| 2 | INSUL. UPDATED. RE-ISSUED FOR PERMIT. | JAN 30/19 | GW |
| 1 | ISSUED FOR PERMIT. | DEC 19/18 | GW |

The undersigned has reviewed and takes responsibility for this design and has the qualifications and meets the requirements set out in the Ontario Building Code to be a Designer.
qualification information: Richard Vink
signature: R Vink
registration information: 24488
VA3 Design Inc. 42659

Contractor must verify all dimensions on the job and report any discrepancy to the Designer before proceeding with the work. All drawings and specifications are instruments of service and the property of the Designer which must be returned at the completion of the work. Drawings are not to be scaled.

VA3 DESIGN
255 Consumers Rd Suite 120
Toronto ON M2J 1R4
t 416.630.2255 f 416.630.4782
va3design.com

Greenpark

project name: LAMBERTS LANE HOME CORP. PH.2
municipality: CALEDON
project no.: 18023
date: SEPT. 2018
2"x6" BRICK VENEER SECTIONS
drawn by: GW
checked by: -
scale: Not to Scale
file name: 18023-GP-STD_DETAILS_ES17
drawing no.: 3

All drawings specifications, related documents and designs are the copyright property of VA3 DESIGN. Reproduction of this property in whole or in part is strictly prohibited without VA3 DESIGN's written permission.

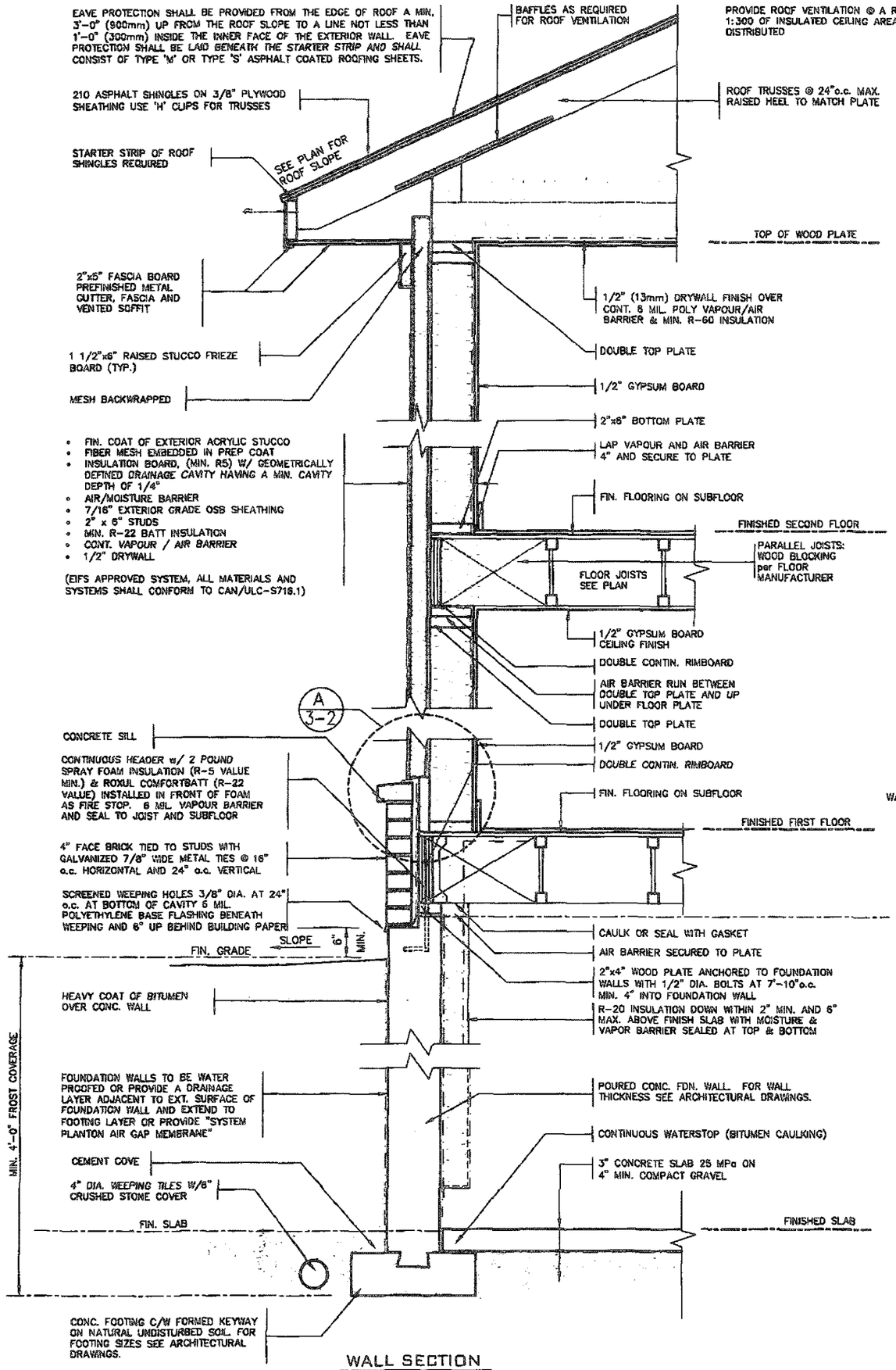


WALL SECTION

REGISTERED PROFESSIONAL ENGINEER
B. MARINKOVIC
26/4/19
PROVINCE OF ONTARIO

STRUDET INC.
FOR STRUCTURE ONLY

THIS STRUCTURE MUST BE CONSTRUCTED TO MEET OR EXCEED THE PROVISIONS OF THE ONTARIO BUILDING CODE

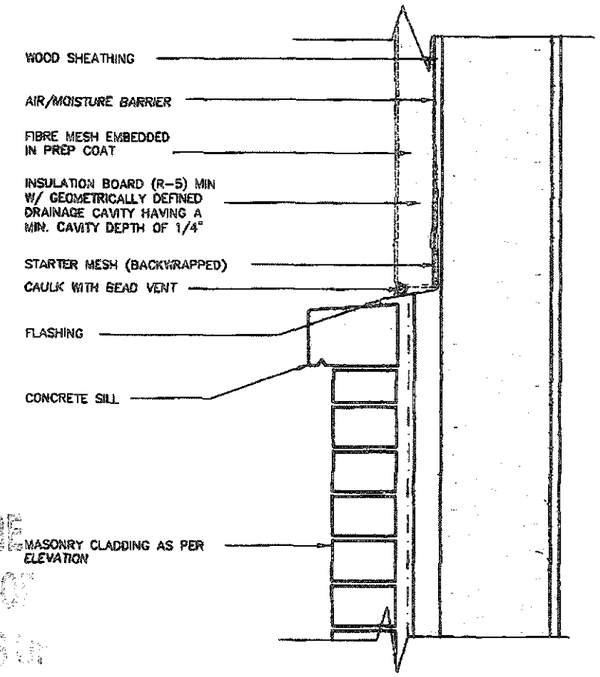


A. TERMINATION AT MASONRY CLADDING WITH SEALANT 1

1 1/2"=1'0"

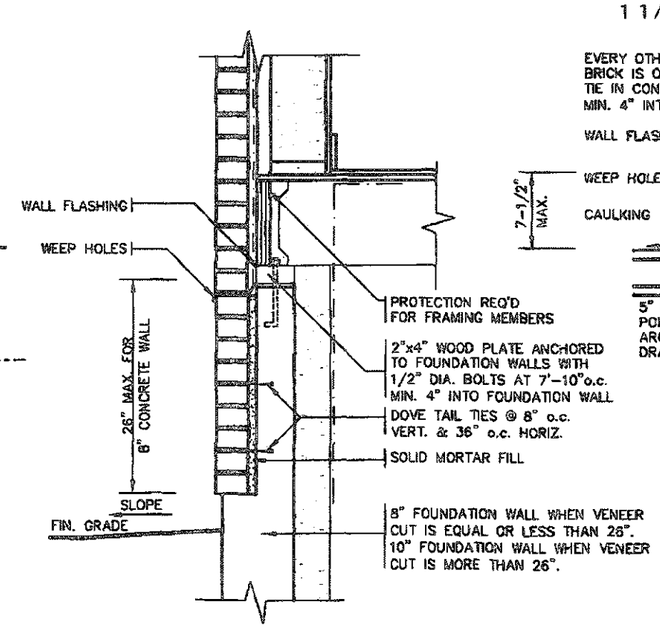


DETAIL FOR CONCRETE VENEER DROPPED GRADE

3/4"=1'0"

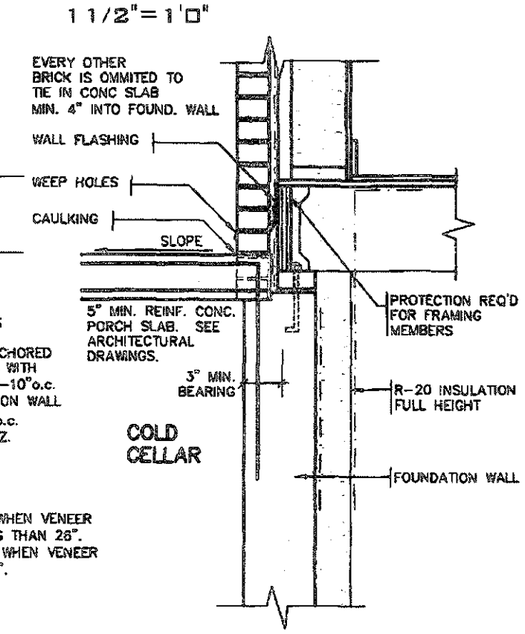


DETAIL FOR COLD CELLAR PORCH SLAB

3/4"=1'0"

RECEIVED
JUN 10 2019
TOWN OF CALEDON BUILDING SECTION
FILE NO.

FEB 14 2019

# 2012 CODE ENERGY STAR

| no. | description | date | by |
|---|---|---|---|
| 9 | | | |
| 8 | | | |
| 7 | | | |
| 6 | | | |
| 5 | | | |
| 4 | | | |
| 3 | | | |
| 2 | INSUL. UPDATED. RE-ISSUED FOR PERMIT. | JAN 30/19 | GW |
| 1 | ISSUED FOR PERMIT. | DEC 19/18 | GW |

The undersigned has reviewed and takes responsibility for this design and has the qualifications and meets the requirements set out in the Ontario Building Code to be a Designer.
qualification information
Richard Vink — signature — 24488
name — registration number
registration information
VA3 Design Inc. — 42658

Contractor must verify all dimensions on the job and report any discrepancy to the Designer before proceeding with the work. All drawings and specifications are instruments of service and the property of the Designer which must be returned at the completion of the work. Drawings are not to be scaled.

VA3 DESIGN
255 Consumers Rd Suite 120
Toronto ON M2J 1R4
t 416.630.2255 f 416.630.4782
va3design.com

Greenpark.

project name: LAMBERTS LANE HOME CORP. PH.2 — municipality: CALEDON — project no. 18023

date: SEPT. 2018 — 2"x6" BRICK VENEER/STUCCO SECTIONS — drawing no. 3-2

drawn by: GW — checked by: - — scale: Ref to Scale — file name: 18023-GP-STD_DETAILS_ES17

All drawings specifications, related documents and design are the copyright property of VA3 DESIGN. Reproduction of this property in whole or in part is strictly prohibited without VA3 DESIGN's written permission.

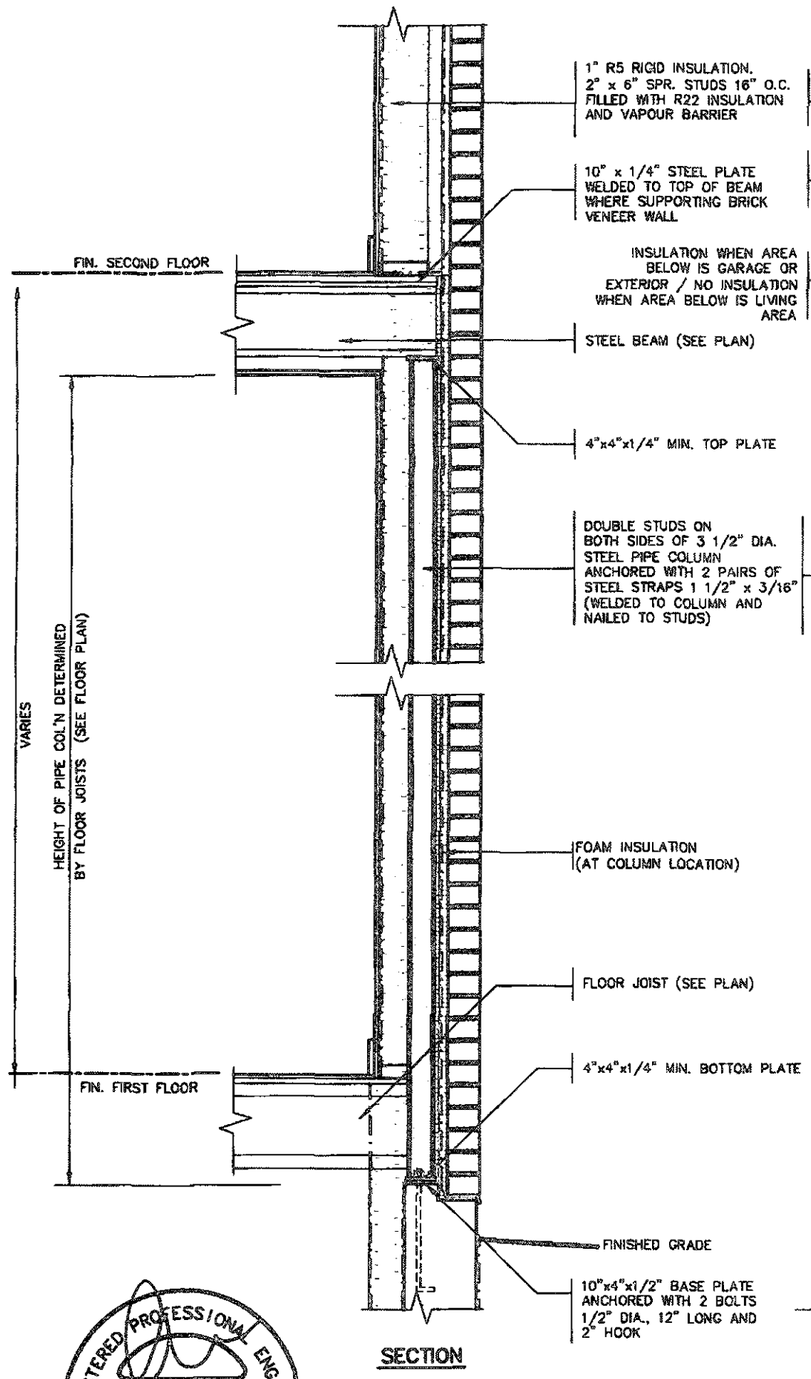


SECTION

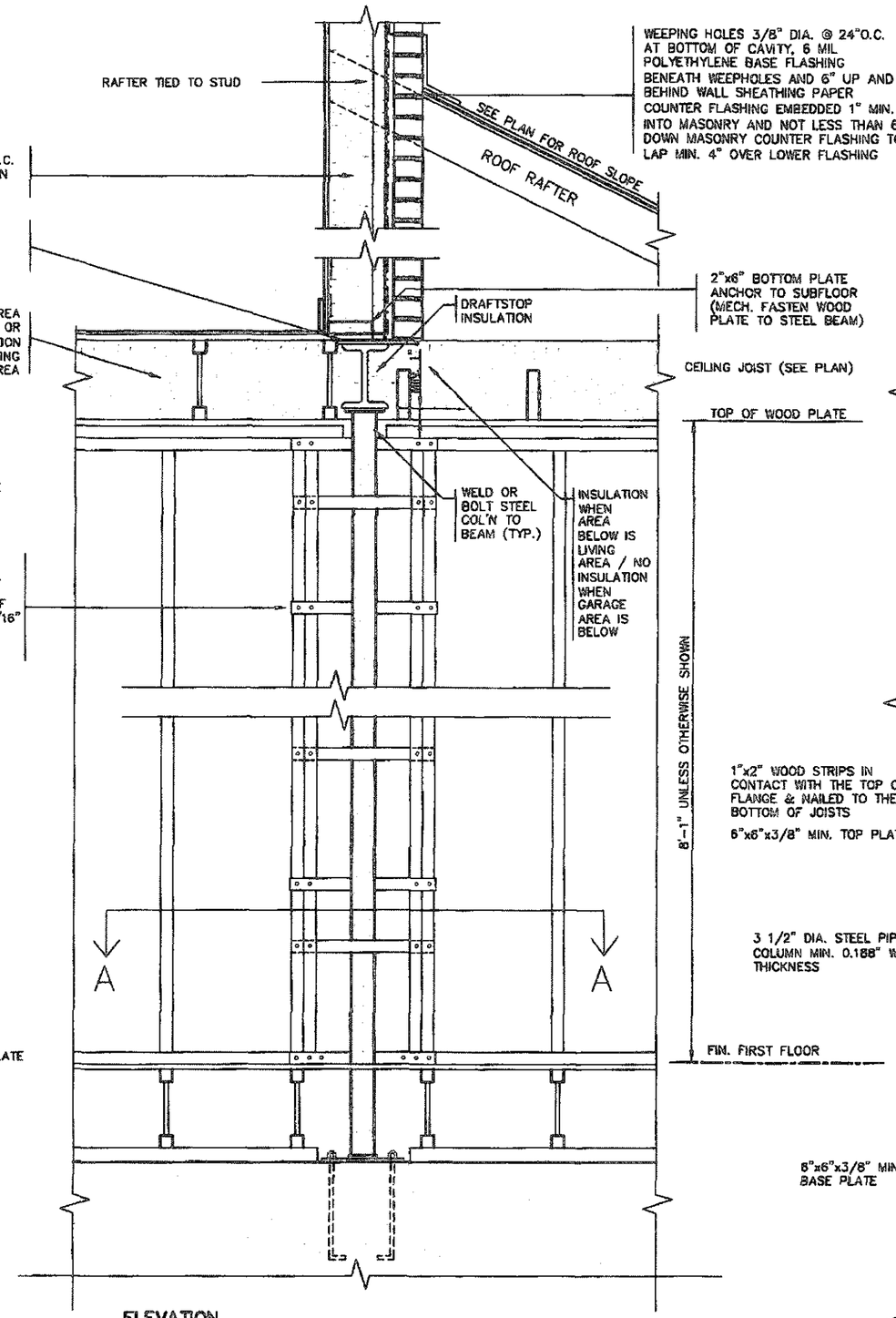


ELEVATION

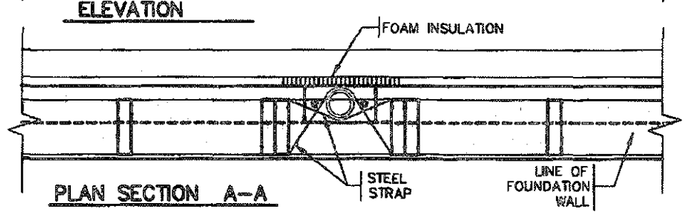


PLAN SECTION A–A

## SECTION THROUGH STEEL BEAM SUPPORTING MASONRY & BEARING STUD PARTITION

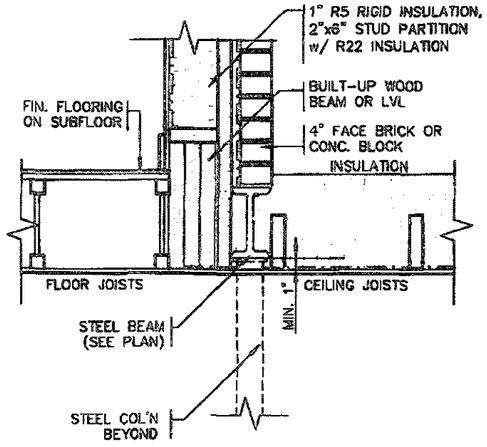


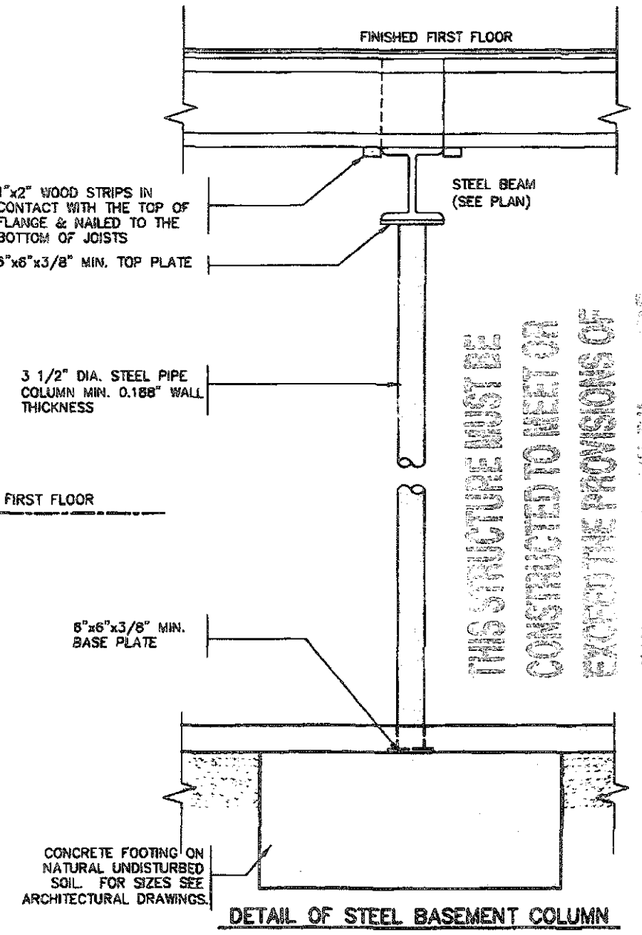


DETAIL OF STEEL BASEMENT COLUMN

THIS STRUCTURE MUST BE CONSTRUCTED TO MEET OR EXCEED THE PROVISIONS OF THE ONTARIO BUILDING CODE

REGISTERED PROFESSIONAL ENGINEER
B. MARINKOVIC
PROVINCE OF ONTARIO

STRUDET INC.
FOR STRUCTURE ONLY

FEB 14 2019

# 2012 CODE ENERGY STAR

| no. | description | date | by |
|---|---|---|---|
| 9 | | | |
| 8 | | | |
| 7 | | | |
| 6 | | | |
| 5 | | | |
| 4 | | | |
| 3 | | | |
| 2 | INSUL. UPDATED. RE-ISSUED FOR PERMIT. | JAN 30/19 | GW |
| 1 | ISSUED FOR PERMIT. | DEC 19/18 | GW |

The undersigned has reviewed and takes responsibility for this design and has the qualifications and meets the requirements set out in the Ontario Building Code to be a Designer.

qualification information
Richard Vink 24488
name signature BCIN
registration information
VAB Design Inc. 42658

Contractor must verify all dimensions on the job and report any discrepancy to the Designer before proceeding with the work. All drawings and specifications are instruments of service and the property of the Designer which must be returned at the completion of the work. Drawings are not to be scaled.

VAB DESIGN
255 Consumers Rd Suite 120
Toronto ON M2J 1R4
t 416.630.2255 f 416.630.4782
vab design.com

Greenpark

project name: LAMBERTS LANE HOME CORP. PH.2
municipality: CALEDON
project no.: 18023
date: SEPT. 2018
title: STEEL COLUMN DETAILS
drawn by: GW
checked by: –
scale: As Shown
file name: 18023-GP-STD_DETAILS_ES17
drawing no.: 4

All drawings specifications, related documents and designs are the copyright property of VAB DESIGN. Reproduction of this property in whole or in part is strictly prohibited without VAB DESIGN's written permission.

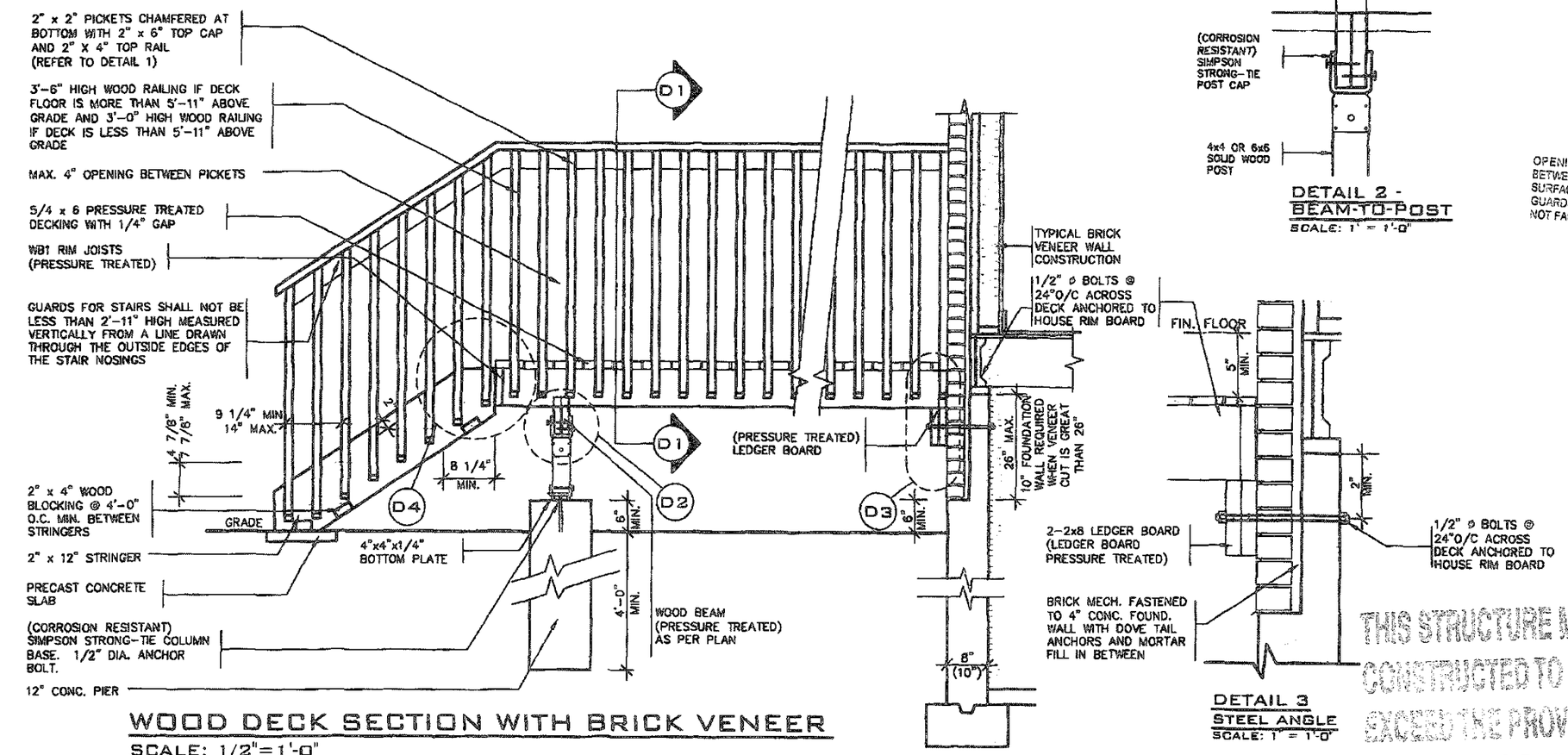


OPENINGS WITHIN GUARDS AND SPACES BETWEEN GUARDS AND ALL FINISHED SURFACES SHALL NOT EXCEED 100 MM. GUARDS SHALL BE DESIGNED TO NOT FACILITATE CLIMBING

## WOOD DECK SECTION WITH BRICK VENEER

SCALE: 1/2"=1'-0"

THIS STRUCTURE MUST BE CONSTRUCTED TO MEET OR EXCEED THE PROVISIONS OF THE ONTARIO BUILDING CODE

## DETAIL 1

## CANTILEVERED PICKET SCREWED TO RIM JOIST AND DECK

### GUARD PARALLEL TO FLOOR JOISTS

SCALE: 1" = 1'-0"

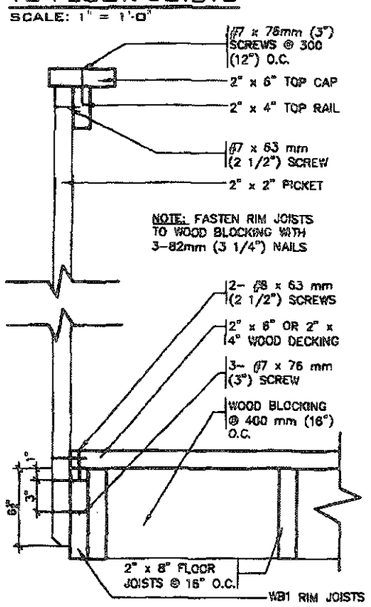


### GUARD PERPENDICULAR TO FLOOR JOISTS

SCALE: 1" = 1'-0"

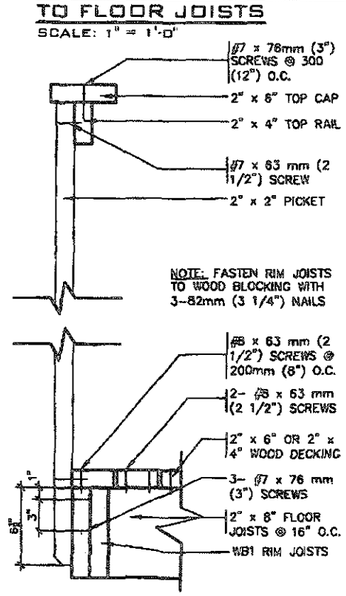


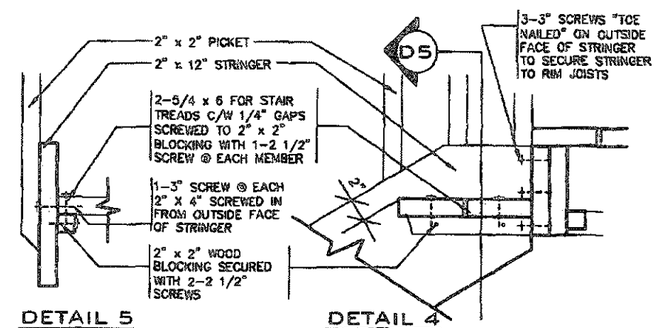


DETAIL 5
SECTION THROUGH STAIR STRINGER
SCALE: 1" = 1'-0"

DETAIL 4
SECTION @ TREAD AND STRINGER SECUREMENT
SCALE: 1" = 1'-0"

REGISTERED PROFESSIONAL ENGINEER
R.B. MARINKOVIC
PROVINCE OF ONTARIO

STRUDET INC.
FOR STRUCTURE ONLY

## GENERAL NOTES

1. BRICK TO BE COMPRESSIVE STRENGTH OF 15 mPA (2200 p.s.i.) MIN. UNITS TO BE LAID WITH FULL HEAD AND BED JOINTS.
2. MORTAR TO BE TYPE S WITH JOINT THICKNESS OF 10mm (3/8")MIN. AND 20mm (3/4") MAX.
3. ALL NAILS AND SCREWS TO BE GALVANIZED.
4. WB1 = 2- 2 x 8 (PRESSURE TREATED)
   WB3 = 2- 2 x 10 (PRESSURE TREATED)
5. WOOD FOR CANTILEVERED PICKETS SHALL BE DOUGLAS FIR-LARCH, SPRUCE-PINE-FIR, OR HEM-FIR SPECIES.

RECEIVED
JUN 10 2019
TOWN OF CALEDON
BUILDING SECTION
FILE NO.

FEB 14 2019

# 2012 CODE ENERGY STAR

| no. | description | date | by |
|---|---|---|---|
| 9 | | | |
| 8 | | | |
| 7 | | | |
| 6 | | | |
| 5 | | | |
| 4 | | | |
| 3 | | | |
| 2 | INSUL. UPDATED. RE-ISSUED FOR PERMIT. | JAN 30/19 | GW |
| 1 | ISSUED FOR PERMIT. | DEC 19/18 | GW |

The undersigned has reviewed and takes responsibility for this design and has the qualifications and meets the requirements set out in the Ontario Building Code to be a Designer.
qualification information: Richard Vink — signature — 24486
name — signature — stamp
registration information: VA3 Design Inc. — 42658

Contractor must verify all dimensions on the job and report any discrepancy to the Designer before proceeding with the work. All drawings and specifications are instruments of service and the property of the Designer which must be returned at the completion of the work. Drawings are not to be scaled.

VA3 DESIGN
255 Consumers Rd Suite 120
Toronto ON M2J 1R4
t 416.830.2255 f 416.630.4782
va3design.com

Greenpark

| | |
|---|---|
| project name: LAMBERTS LANE HOME CORP. PH.2 | municipality: CALEDON |
| project no. | 18023 |
| date: SEPT. 2018 | WOOD DECK DETAILS |
| drawn by: GW | checked by: - |
| scale: As Shown | file name: 18023-CP-STD_DETAILS_ES17 |
| drawing no. | 5 |

All drawings specifications, related documents and design are the copyright property of VA3 DESIGN. Reproduction of this property in whole or in part is strictly prohibited without VA3 DESIGN's written permission.

THIS STRUCTURE MUST BE CONSTRUCTED TO MEET OR EXCEED THE PROVISIONS OF THE ONTARIO BUILDING CODE

OPENINGS WITHIN GUARDS AND SPACES BETWEEN GUARDS AND ALL FINISHED SURFACES SHALL NOT EXCEED 100 MM. GUARDS SHALL BE DESIGNED TO NOT FACILITATE CLIMBING

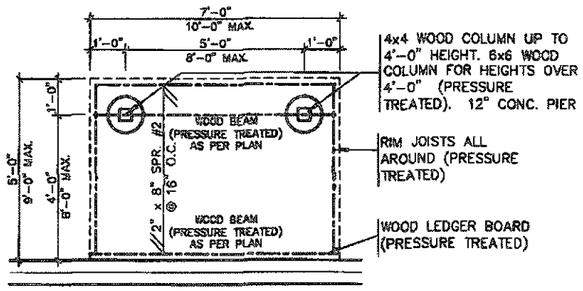


## TYPICAL DECK LAYOUT

SCALE: 1/4"=1'-0"

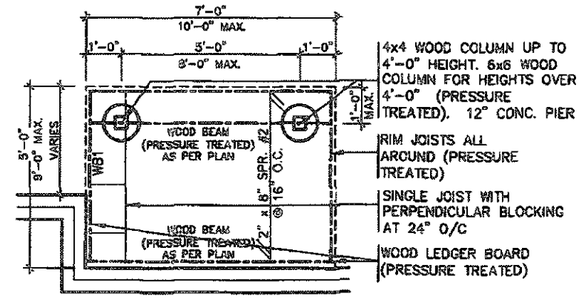


## TYPICAL DECK LAYOUT

SCALE: 1/4"=1'-0"

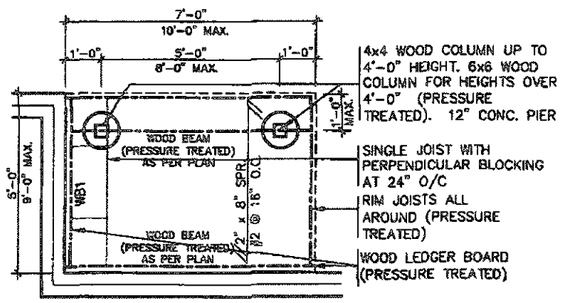


## TYPICAL DECK LAYOUT

SCALE: 1/4"=1'-0"

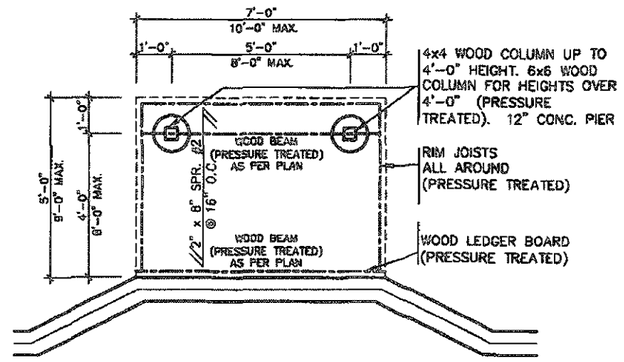


## TYPICAL DECK LAYOUT

SCALE: 1/4"=1'-0"

REGISTERED PROFESSIONAL ENGINEER
B. MARINKOVIC
PROVINCE OF ONTARIO

STRUDET INC.
FOR STRUCTURE ONLY

FEB 14 2019

# 2012 CODE ENERGY STAR

| no. | description | date | by |
|---|---|---|---|
| 9 | . | . | . |
| 8 | . | . | . |
| 7 | . | . | . |
| 6 | . | . | . |
| 5 | . | . | . |
| 4 | . | . | . |
| 3 | . | . | . |
| 2 | INSUL. UPDATED. RE-ISSUED FOR PERMIT. | JAN 30/19 | GW |
| 1 | ISSUED FOR PERMIT. | DEC 19/18 | GW |

The undersigned has reviewed and takes responsibility for this design and has the qualifications and meets the requirements set out in the Ontario Building Code to be a Designer.

qualification information: Richard Vink, 24489

name: signature: seal

registration information: VA3 Design Inc., 42658

Contractor must verify all dimensions on the job and report any discrepancy to the Designer before proceeding with the work. All drawings and specifications are instruments of service and the property of the Designer which must be returned at the completion of the work. Drawings are not to be scaled.

VA3 DESIGN
255 Consumers Rd Suite 120
Toronto ON M2J 1R4
t 416.630.2235 f 416.630.4782
va3design.com

Greenpark.

project name: LAMBERTS LANE HOME CORP. PH.2
municipality: CALEDON
project no.: 18023
date: SEPT. 2018
title: WOOD DECK DETAILS
drawn by: GW
checked by: -
scale: As Shown
file name: 18023-CP-STD_DETAILS_ES17
drawing no.: 5-2

All drawings specifications, related documents and designs are the copyright property of VA3 DESIGN. Reproduction of this property in whole or in part is strictly prohibited without VA3 DESIGN's written permission.

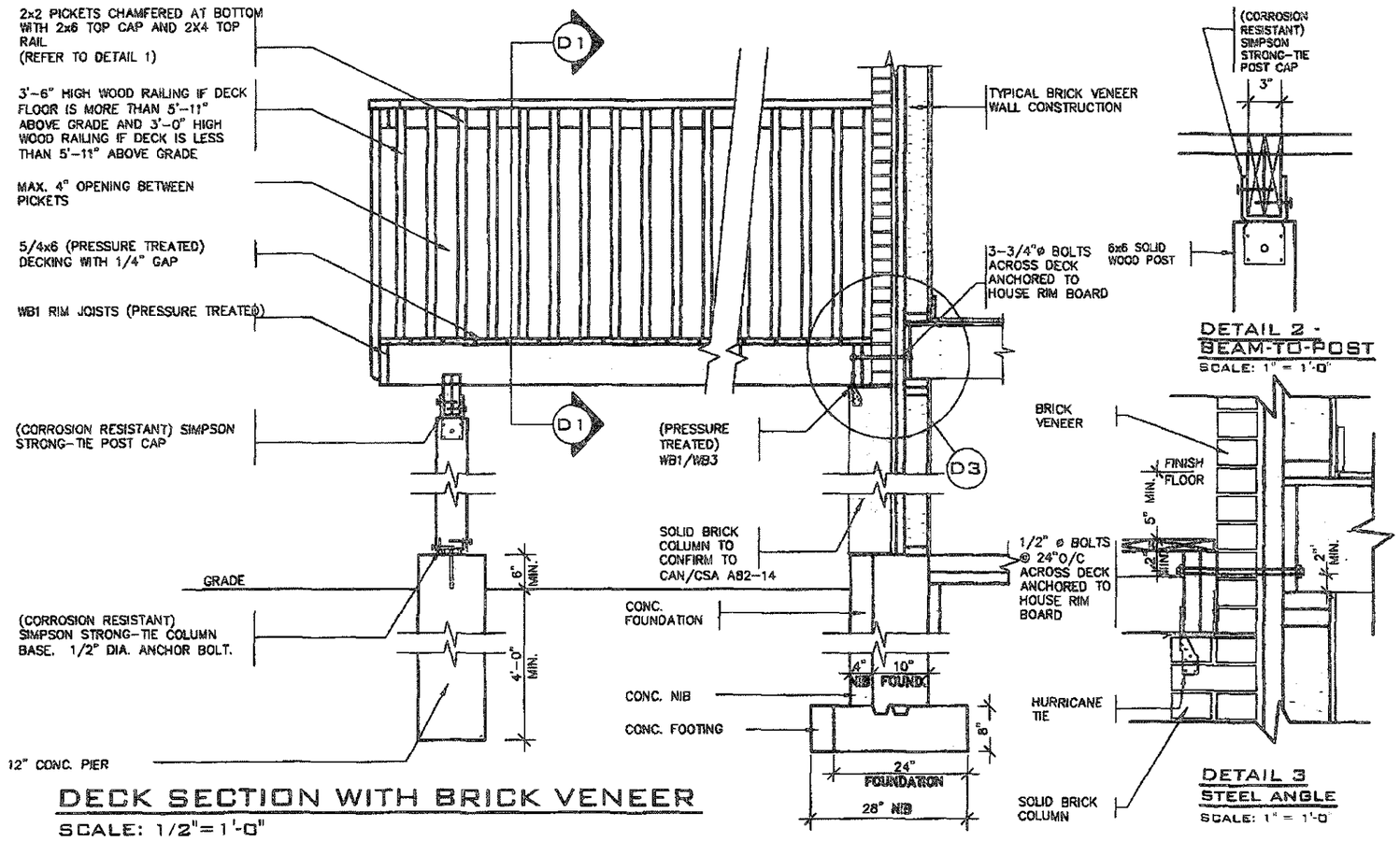


## DECK SECTION WITH BRICK VENEER

SCALE: 1/2"=1'-0"




## DETAIL 2 - BEAM-TO-POST

SCALE: 1" = 1'-0"

OPENINGS WITHIN GUARDS AND SPACES BETWEEN GUARDS AND ALL FINISHED SURFACES SHALL NOT EXCEED 100 MM. GUARDS SHALL BE DESIGNED TO NOT FACILITATE CLIMBING

## DETAIL 3 STEEL ANGLE

SCALE: 1" = 1'-0"

## DETAIL 1

## CANTILEVERED PICKET SCREWED TO RIM JOIST AND DECK

### GUARD PARALLEL TO FLOOR JOISTS

SCALE: 1" = 1'-0"

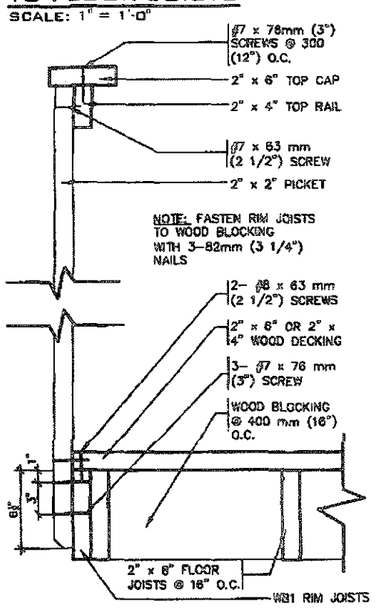


### GUARD PERPENDICULAR TO FLOOR JOISTS

SCALE: 1" = 1'-0"

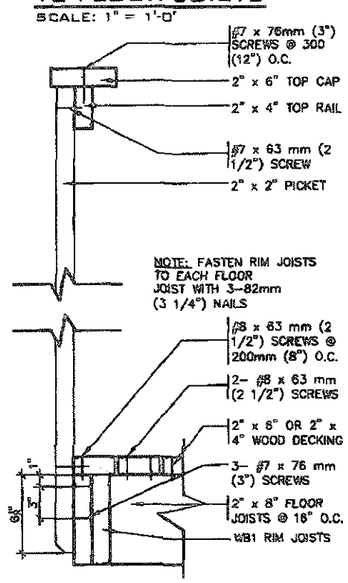


THIS STRUCTURE MUST BE CONSTRUCTED TO MEET OR EXCEED THE PROVISIONS OF THE ONTARIO BUILDING CODE

REGISTERED PROFESSIONAL ENGINEER
B. MARINKOVIC
PROVINCE OF ONTARIO

STRUDET INC.
FOR STRUCTURE ONLY

RECEIVED
JUN 10 2019
TOWN OF CALEDON
BUILDING SECTION
FILE NO.

## GENERAL NOTES

1. BRICK TO BE COMPRESSIVE STRENGTH OF 15 mPA (2200 p.s.i.) MIN. UNITS TO BE LAID WITH FULL HEAD AND BED JOINTS.
2. MORTAR TO BE TYPE S WITH JOINT THICKNESS OF 10mm (3/8")MIN. AND 20mm (3/4") MAX.
3. ALL NAILS AND SCREWS TO BE GALVANIZED.
4. WB1 = 2- 2 x 8 (PRESSURE TREATED)
   WB3 = 2- 2 x 10 (PRESSURE TREATED)
5. WOOD FOR CANTILEVERED PICKETS SHALL BE DOUGLAS FIR-LARCH, SPRUCE-PINE-FIR, OR HEM-FIR SPECIES.

FEB 14 2019

# 2012 CODE ENERGY STAR

| no. | description | date | by |
|---|---|---|---|
| 9 | . | . | . |
| 8 | . | . | . |
| 7 | . | . | . |
| 6 | . | . | . |
| 5 | . | . | . |
| 4 | . | . | . |
| 3 | . | . | . |
| 2 | INSUL. UPDATED, RE-ISSUED FOR PERMIT. | JAN 30/19 | GW |
| 1 | ISSUED FOR PERMIT. | DEC 19/18 | GW |

The undersigned has reviewed and takes responsibility for this design and has the qualifications and meets the requirements set out in the Ontario Building Code to be a designer.
qualification information: Richard Vink, signature, 24486
name, qualification information: VA3 Design Inc., 42688

Contractor must verify all dimensions on the job and report any discrepancy to the Designer before proceeding with the work. All drawings and specifications are instruments of service and the property of the designer which must be returned at the completion of the work. Drawings are not to be scaled.

VA3 DESIGN
255 Consumers Rd Suite 120
Toronto ON M2J 1R4
t 416.630.2255 f 416.630.4782
va3design.com

Greenpark

| | |
|---|---|
| project name: LAMBERTS LANE HOME CORP. PH.2 | municipality: CALEDON |
| project no.: 18023 | |
| date: SEPT. 2016 | WOOD DECK -WALK-OUT CONDITION |
| drawn by: GW | checked by: - |
| scale: As Shown | file name: 18023-GP-STD_DETAILS_ES17 |
| drawing no.: 5-3 | |

All drawings specifications, related documents and design are the copyright property of VA3 DESIGN. Reproduction of this property in whole or in part is strictly prohibited without VA3 DESIGN's written permission.

OPENINGS WITHIN GUARDS AND SPACES BETWEEN GUARDS AND ALL FINISHED SURFACES SHALL NOT EXCEED 100 MM. GUARDS SHALL BE DESIGNED TO NOT FACILITATE CLIMBING

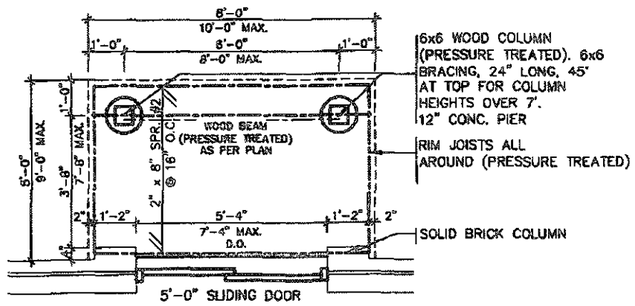


## TYPICAL DECK LAYOUT

SCALE: 1/4"=1'-0"

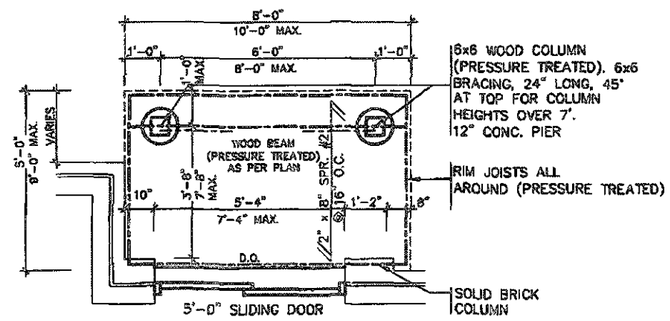


## TYPICAL DECK LAYOUT

SCALE: 1/4"=1'-0"

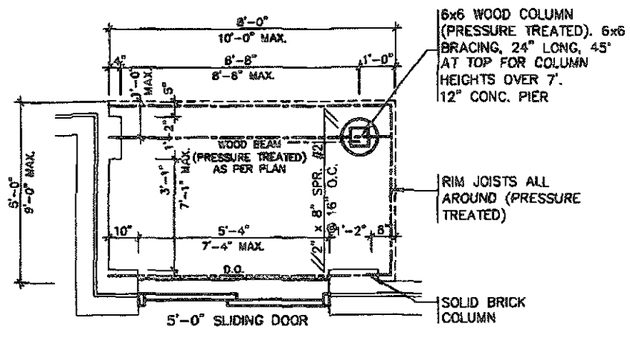


## TYPICAL DECK LAYOUT

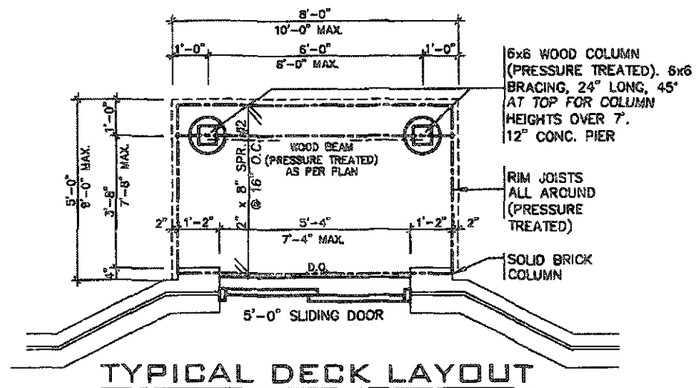


## TYPICAL DECK LAYOUT

SCALE: 1/4"=1'-0"

REGISTERED PROFESSIONAL ENGINEER
B. MARINKOVIC
PROVINCE OF ONTARIO

STRUDET INC.
FOR STRUCTURE ONLY

CONSTRUCTED TO MEET OR EXCEED THE PROVISIONS OF THE ONTARIO BUILDING CODE

FEB 14 2019

# 2012 CODE ENERGY STAR

| no. | description | date | by |
|---|---|---|---|
| 9 | . | . | . |
| 8 | . | . | . |
| 7 | . | . | . |
| 6 | . | . | . |
| 5 | . | . | . |
| 4 | . | . | . |
| 3 | . | . | . |
| 2 | INSUL. UPDATED. RE-ISSUED FOR PERMIT. | JAN 30/19 | GW |
| 1 | ISSUED FOR PERMIT. | DEC 19/18 | GW |

The undersigned has reviewed and takes responsibility for this design and has the qualifications and meets the requirements set out in the Ontario Building Code to be a Designer.

qualification information
Richard Vink — 24468
name — signature — BCIN
registration information
VA3 Design Inc. — 42658

Contractor must verify all dimensions on the job and report any discrepancy to the Designer before proceeding with the work. All drawings and specifications are instruments of service and the property of the Designer which must be returned at the completion of the work. Drawings are not to be scaled.


VA3 DESIGN
255 Consumers Rd Suite 120
Toronto ON M2J 1R4
t 416.630.2255 f 416.630.4782
va3design.com


Greenpark.

project name: LAMBERTS LANE HOME CORP. PH.2
municipality: CALEDON
project no.: 18023
date: SEPT. 2018
title: WOOD DECK DETAILS-WALK-OUT CONDITION
drawn by: GW
checked by: -
scale: As Shown
file name: 18023-GP-STD_DETAILS_ES17
drawing no.: 5-4

All drawings specifications, related documents and design are the copyright property of VA3 DESIGN. Reproduction of this property in whole or in part is strictly prohibited without VA3 DESIGN's written permission.

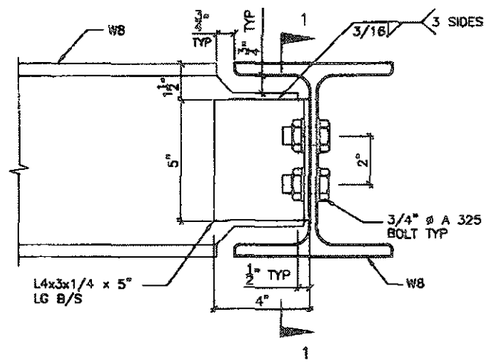


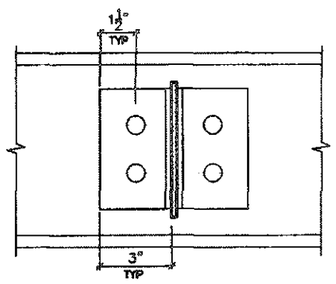


## DETAIL 1.

W8
TO
W8
CONNECTION

SECTION 1–1

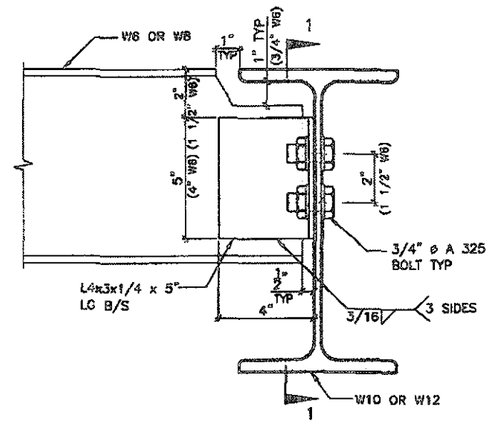


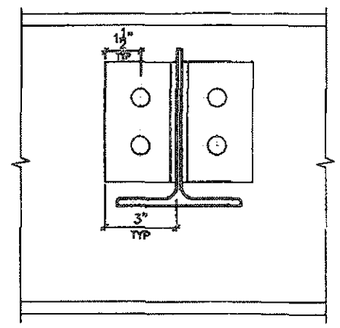


## DETAIL 2.

W6(W8)
TO
W10(W12)
CONNECTION

SECTION 1–1

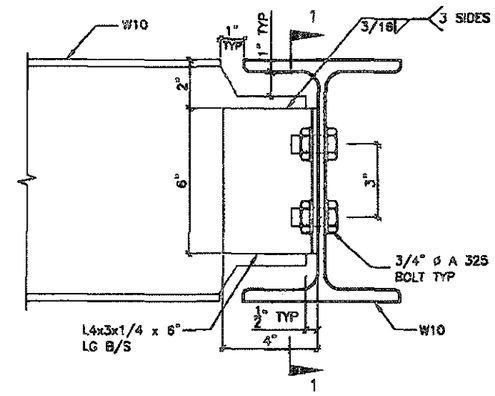


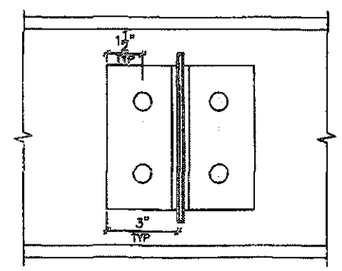


## DETAIL 3.

W10
TO
W10
CONNECTION

SECTION 1–1

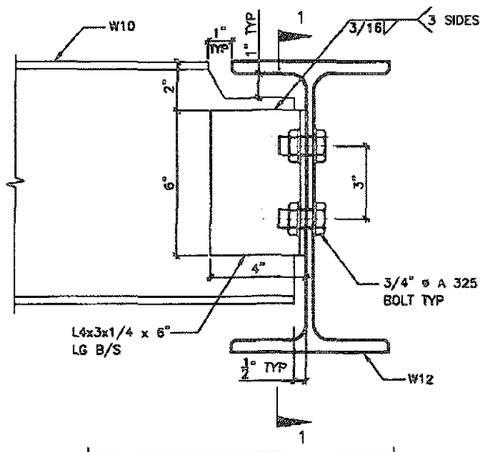


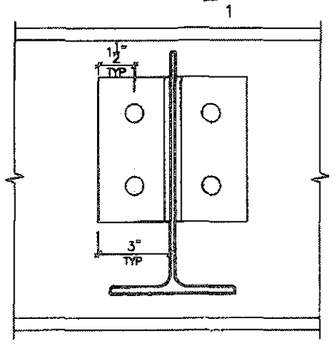


## DETAIL 4.

W10
TO
W12
CONNECTION

SECTION 1–1

THIS STRUCTURE MUST BE CONSTRUCTED TO MEET OR EXCEED THE PROVISIONS OF THE ONTARIO BUILDING CODE

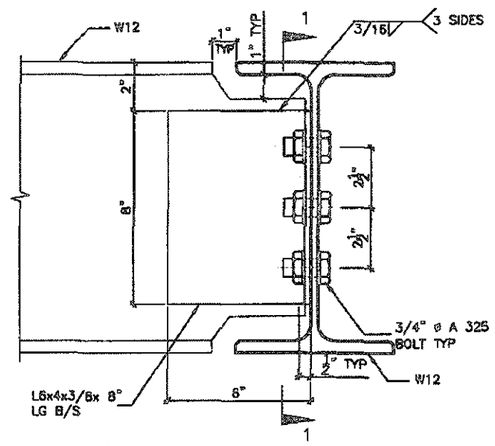


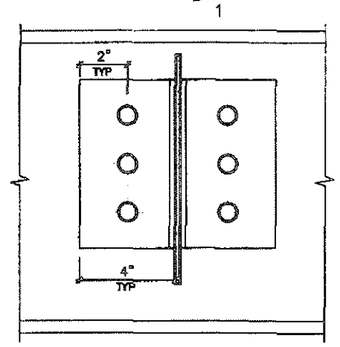


## DETAIL 5.

W12
TO
W12
CONNECTION

SECTION 1–1

RECEIVED
JUN 1 0 2019
TOWN OF CALEDON
BUILDING SECTION
FILE NO.

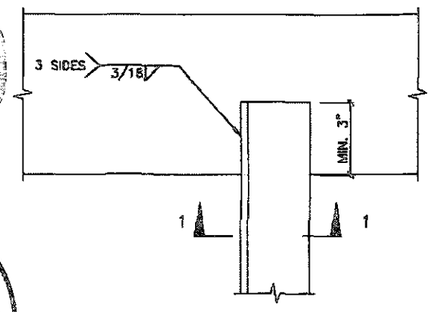


PLAN VIEW

REGISTERED PROFESSIONAL ENGINEER
B. MARINKOVIC
PROVINCE OF ONTARIO

STRUDET INC.
FOR STRUCTURE ONLY

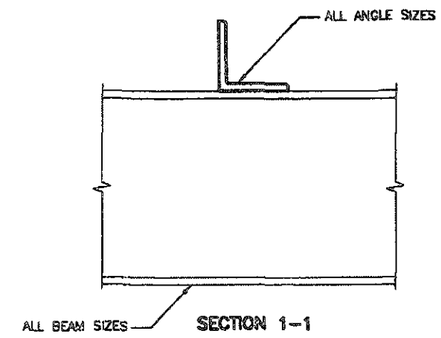


SECTION 1–1

## DETAIL 6.

ANGLE
TO
BEAM
CONNECTION

FEB 1 4 2019

# 2012 CODE ENERGY STAR

| no. | description | date | by |
|---|---|---|---|
| 9 | | | |
| 8 | | | |
| 7 | | | |
| 6 | | | |
| 5 | | | |
| 4 | | | |
| 3 | | | |
| 2 | INSUL. UPDATED. RE-ISSUED FOR PERMIT. | JAN 30/19 | GW |
| 1 | ISSUED FOR PERMIT. | DEC 19/18 | GW |

The undersigned has reviewed and takes responsibility for this design and has the qualifications and meets the requirements set out in the Ontario Building Code to be a Designer.
qualification information
Richard Vink — signature — 24498
name — registration information
VAS Design Inc. — 42659

Contractor must verify all dimensions on the job and report any discrepancy to the Designer before proceeding with the work. All drawings and specifications are instruments of service and the property of the Designer which must be returned at the completion of the work. Drawings are not to be scaled.

VAS DESIGN
255 Consumers Rd Suite 120
Toronto ON M2J 1R4
t 416.630.2255 f 416.630.4782
vas design.com

Greenpark

| | |
|---|---|
| project name | LAMBERTS LANE HOME CORP. PH.2 |
| municipality | CALEDON |
| project no. | 18023 |
| date | SEPT. 2018 |
| drawing title | STEEL BEAM CONNECTIONS |
| drawn by | GW |
| checked by | - |
| scale | Not to Scale |
| file name | 18023-GP-STD_DETAILS_ES17 |
| drawing no. | 6 |

All drawings specifications, related documents and design are the copyright property of VAS DESIGN. Reproduction of this property in whole or in part is strictly prohibited without VAS DESIGN's written permission.

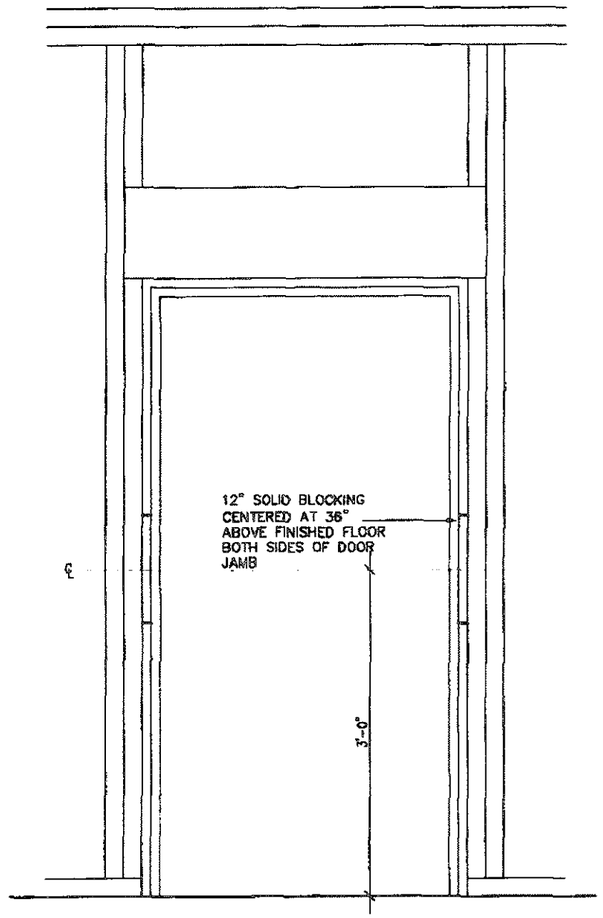


RESISTANCE TO FORCED ENTRY (OBC 9.6.8.)

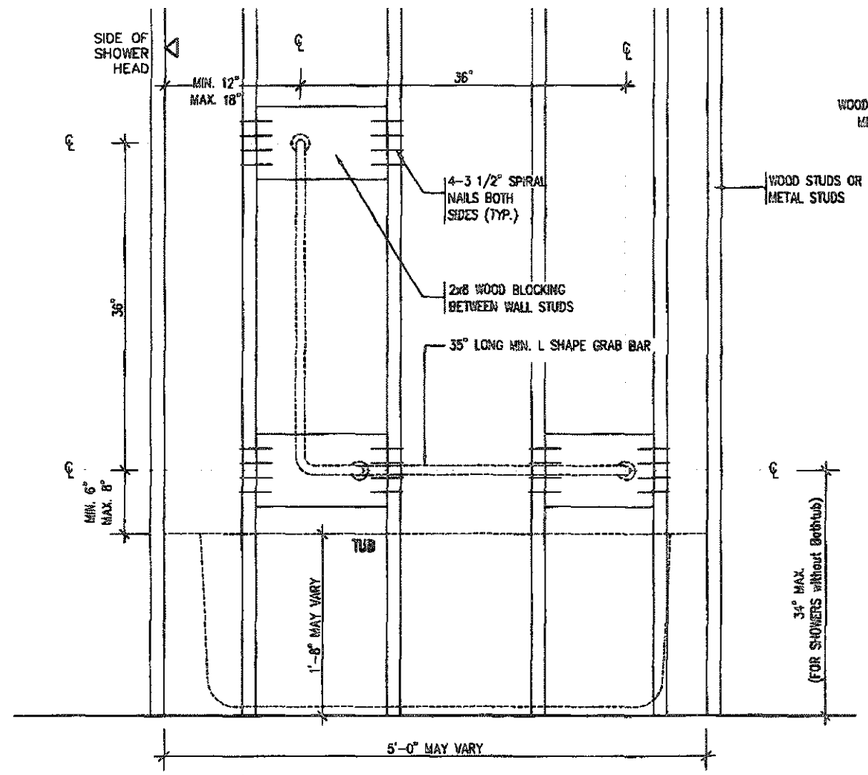


BATH TUB/ SHOWER FRONT ELEVATION

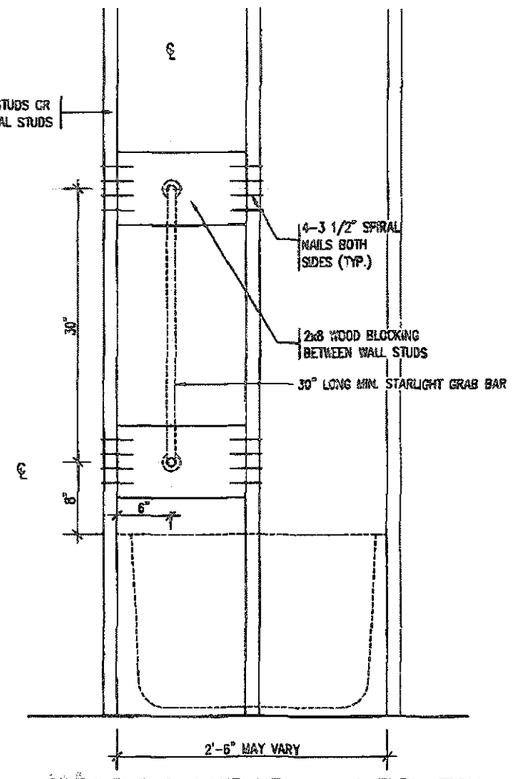


BATH TUB SHOWER HEAD SIDE ELEVATION

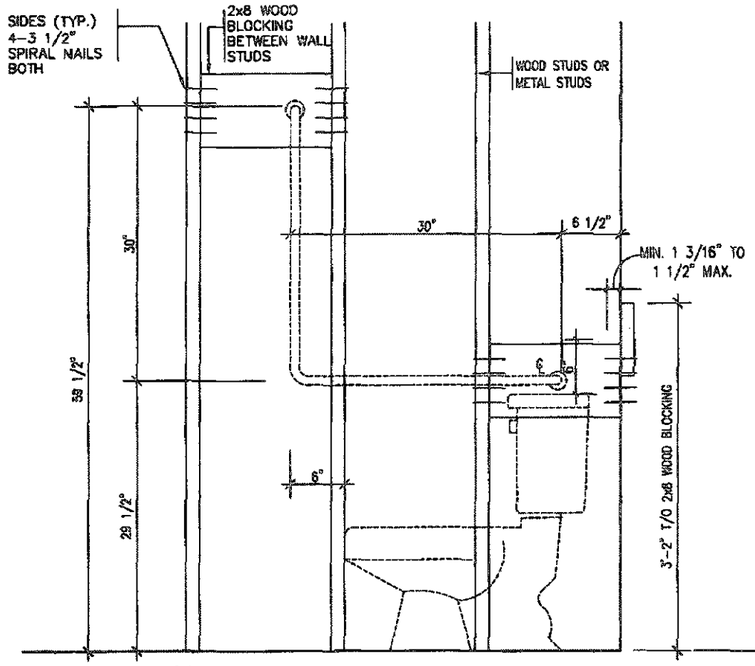


TOILET SIDE ELEVATION

STRUCTURAL REINFORCEMENT FOR GRAB BAR (OBC 9.5.2.3.)

FOR MAIN BATH ONLY

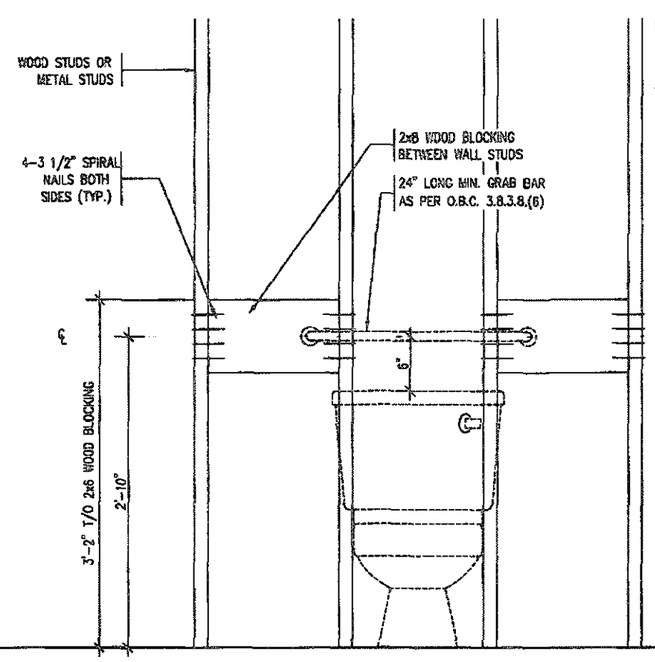


THIS STRUCTURE MUST BE CONSTRUCTED TO MEET OR EXCEED THE ONTARIO BUILDING CODE

RECEIVED
JUN 1 0 2019
TOWN OF CALEDON
BUILDING SECTION
FILE NO.

REGISTERED PROFESSIONAL ENGINEER
B. MARINKOVIC
PROVINCE OF ONTARIO

STRUDET INC.
FOR STRUCTURE ONLY

FEB 1 4 2019

# 2012 CODE ENERGY STAR

| no. | description | date | by |
|---|---|---|---|
| 9 | | | |
| 8 | | | |
| 7 | | | |
| 6 | | | |
| 5 | | | |
| 4 | | | |
| 3 | | | |
| 2 | INSUL. UPDATED. RE-ISSUED FOR PERMIT. | JAN 30/19 | GW |
| 1 | ISSUED FOR PERMIT. | DEC 19/18 | GW |

The undersigned has reviewed and takes responsibility for this design and has the qualifications and meets the requirements set out in the Ontario Building Code to be a Designer.
qualification information: Richard Vink, 24498
signature
registration information: VA3 Design Inc., 42658

Contractor must verify all dimensions on the job and report any discrepancy to the Designer before proceeding with the work. All drawings and specifications are instruments of service and the property of the Designer which must be returned at the completion of the work. Drawings are not to be scaled.

VA3 DESIGN
255 Consumers Rd Suite 120
Toronto ON M2J 1R4
t 416.630.2255 f 416.630.4782
va3design.com

Greenpark
project name: LAMBERTS LANE HOME CORP. PH.2
municipality: CALEDON
project no.: 18023
date: SEPT. 2018
title: STUD WALL REINFORCEMENT
drawn by: GW
checked by: –
scale: Not to Scale
file name: 18023-GP-STD_DETAILS_ES17
drawing no.: 7

All drawings specifications, related documents and design are the copyright property of VA3 DESIGN. Reproduction of this property in whole or in part is strictly prohibited without VA3 DESIGN's written permission.

THIS STRUCTURE MUST BE CONSTRUCTED TO MEET OR EXCEED THE PROVISIONS OF THE ONTARIO BUILDING CODE

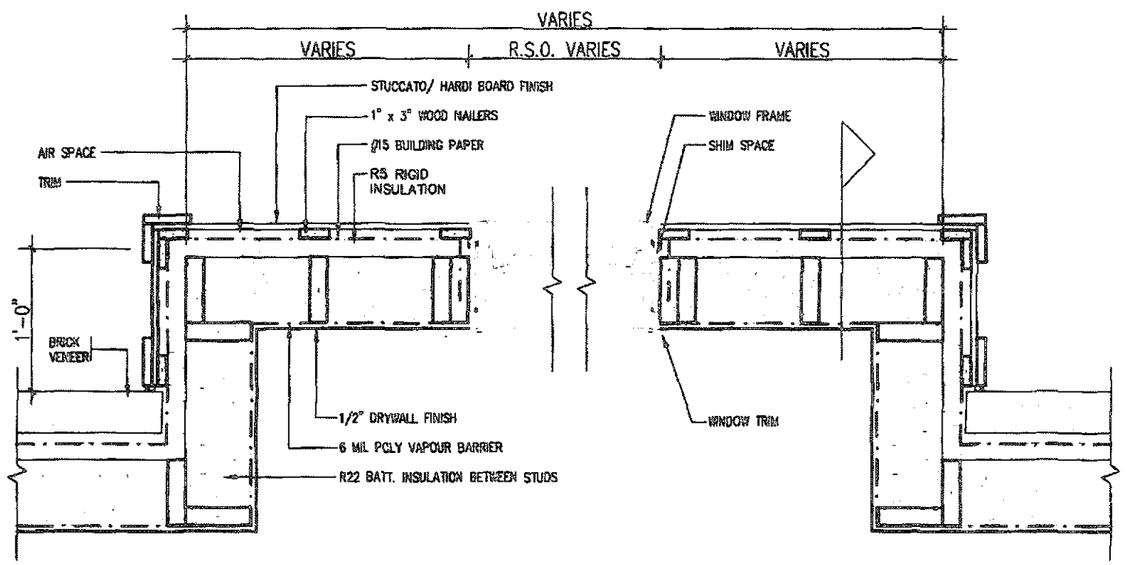


PLAN VIEW

STUCCATO BOARD FINISH CLADDING OR EQUAL (OBC 9.27.)

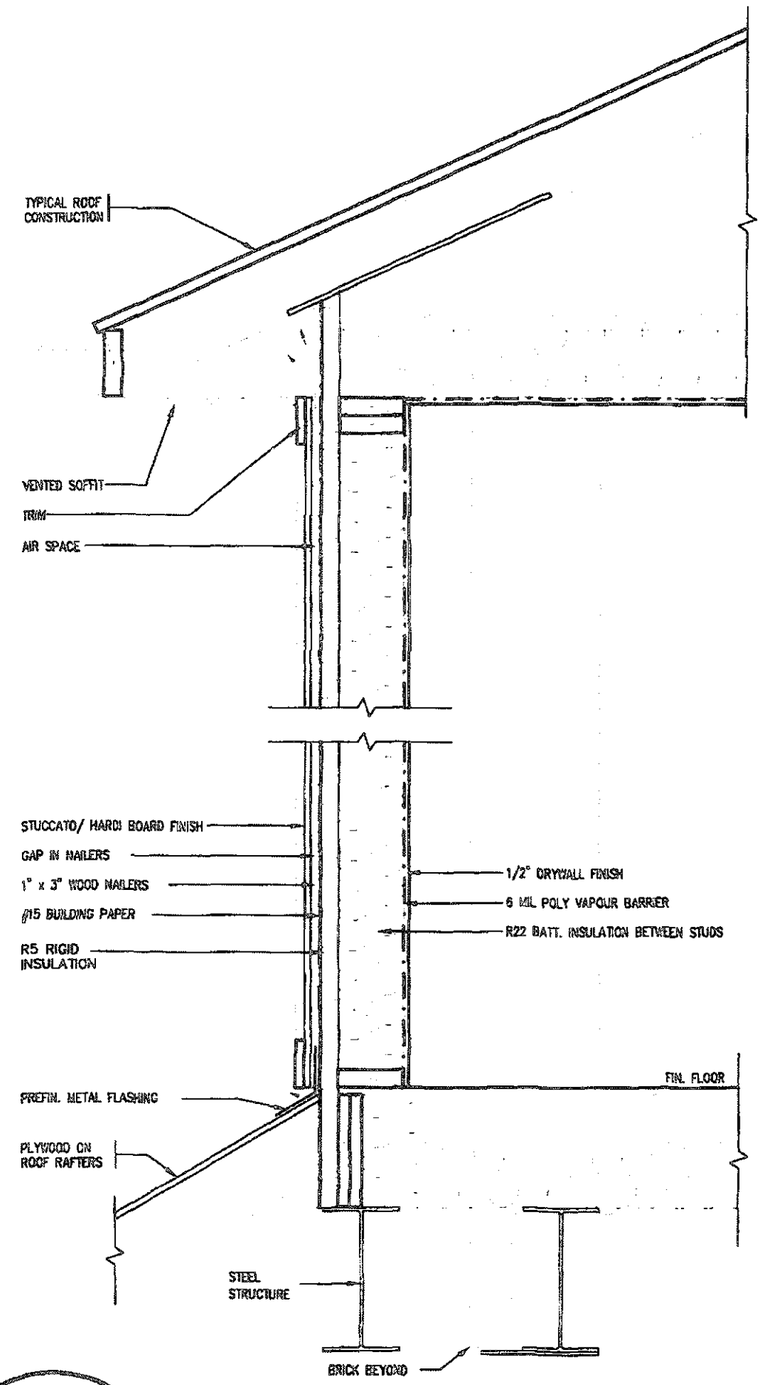


CROSS SECTION

REGISTERED PROFESSIONAL ENGINEER
B. MARINKOVIC
PROVINCE OF ONTARIO

STRUDET INC.
FOR STRUCTURE ONLY

RECEIVED
JUN 10 2019
TOWN OF CALEDON
BUILDING SECTION
FILE NO.

RECEIVED
FEB 14 2019

# 2012 CODE ENERGY STAR

| no. | description | date | by |
|---|---|---|---|
| 9 | | | |
| 8 | | | |
| 7 | | | |
| 6 | | | |
| 5 | | | |
| 4 | | | |
| 3 | | | |
| 2 | INSUL. UPDATED. RE-ISSUED FOR PERMIT. | JAN 30/19 | GW |
| 1 | ISSUED FOR PERMIT. | DEC 19/18 | GW |

The undersigned has reviewed and takes responsibility for this design and has the qualifications and meets the requirements set out in the Ontario Building Code to be a Designer.
specification information
Richard Vink — signature R Vink — 24498
name — BCIN
registration information
VA3 Design Inc. — 42658

Contractor must verify all dimensions on the job and report any discrepancy to the Designer before proceeding with the work. All drawings and specifications are instruments of service and the property of the Designer which must be returned at the completion of the work. Drawings are not to be scaled.

VA3 DESIGN
255 Consumers Rd Suite 120
Toronto ON M2J 1R4
t 416.630.2255 f 416.630.4782
va3design.com

Greenpark

project name: LAMBERTS LANE HOME CORP. PH.2
municipality: CALEDON
project no.: 18023
date: SEPT. 2018
STUCCATO/ HARDI BOARD FINISH
drawn by: GW
checked by: -
scale: Not to Scale
18023-GP-STD_DETAILS_ES17
drawing no.: 8

All drawings specifications, related documents and design are the copyright property of VA3 DESIGN. Reproduction of this property in whole or in part is strictly prohibited without VA3 DESIGN's written permission.

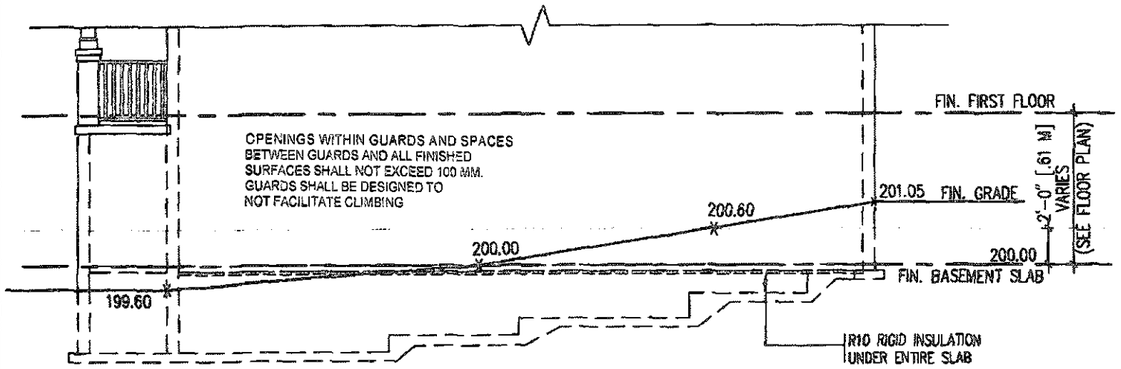


TYPICAL RIGHT SIDE ELEVATION

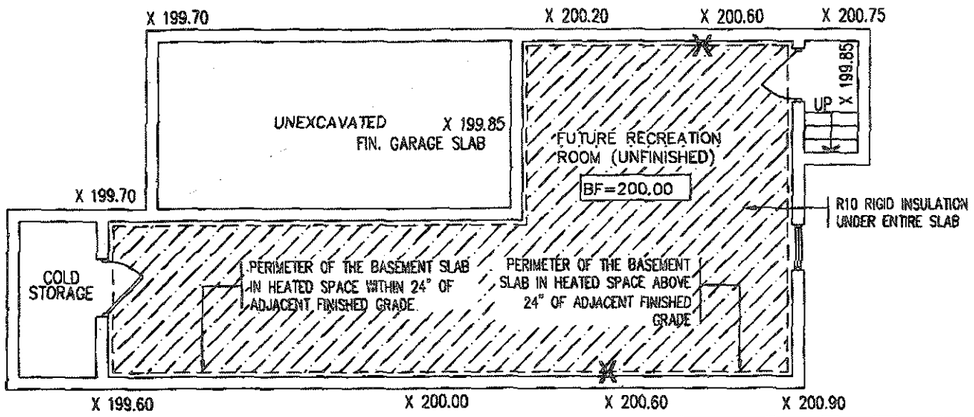


TYPICAL BASEMENT PLAN

## SLAB ON GRADE CONDITION

NOTES:
1. LEVELS SHOWN ON THE PLANS ARE FOR ILLUSTRATION PURPOSE ONLY, SEE FINAL GRADING PLAN FOR ACTUAL LEVELS
2. ALL LEVELS ARE SHOWN IN METRIC

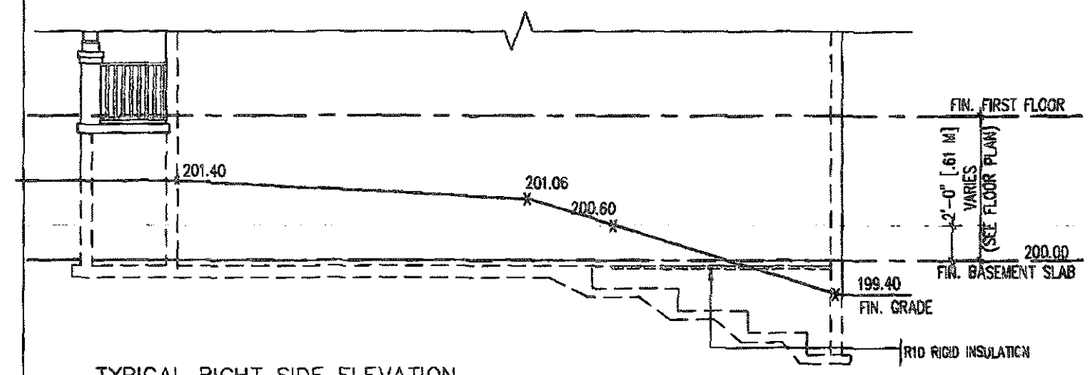


TYPICAL RIGHT SIDE ELEVATION

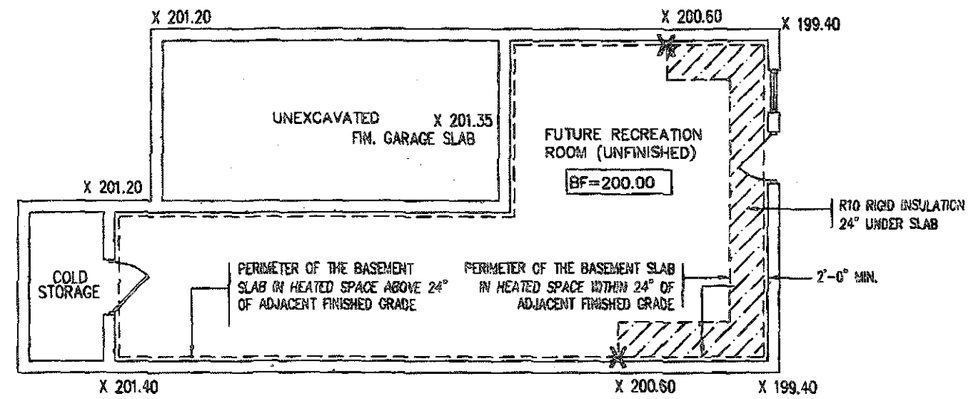


TYPICAL BASEMENT PLAN

## WALK OUT BASEMENT CONDITION

NOTES:
1. LEVELS SHOWN ON THE PLANS ARE FOR ILLUSTRATION PURPOSE ONLY, SEE FINAL GRADING PLAN FOR ACTUAL LEVELS
2. ALL LEVELS ARE SHOWN IN METRIC

RECEIVED
JUN 10 2019
TOWN OF CALEDON
PLANNING & DEVELOPMENT
FILE NO

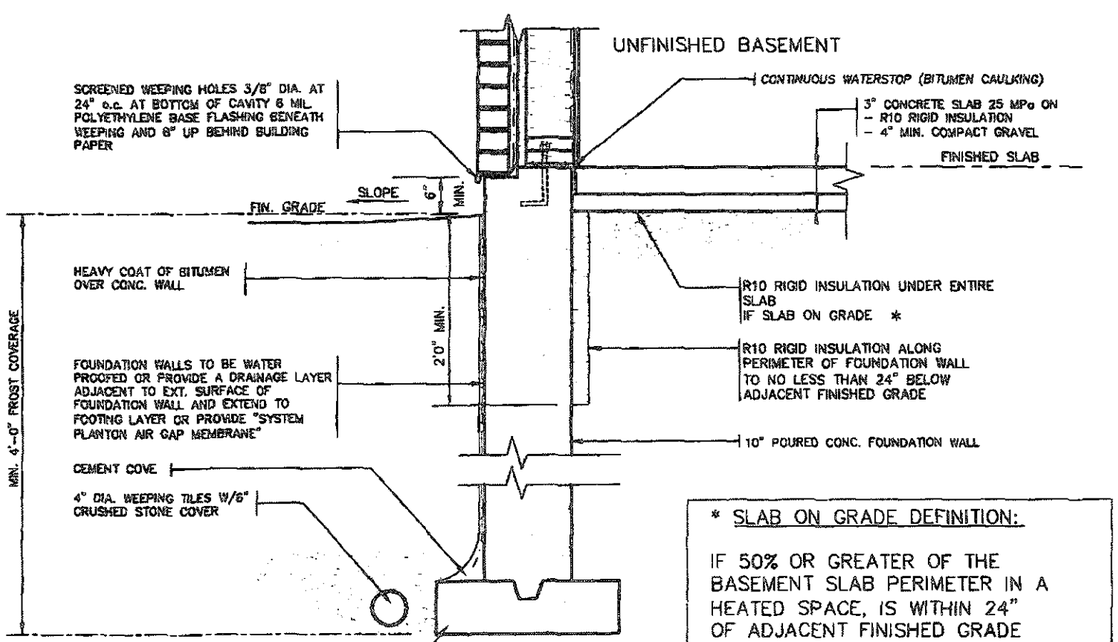


* SLAB ON GRADE DEFINITION:

IF 50% OR GREATER OF THE BASEMENT SLAB PERIMETER IN A HEATED SPACE, IS WITHIN 24" OF ADJACENT FINISHED GRADE

## SLAB ON GRADE

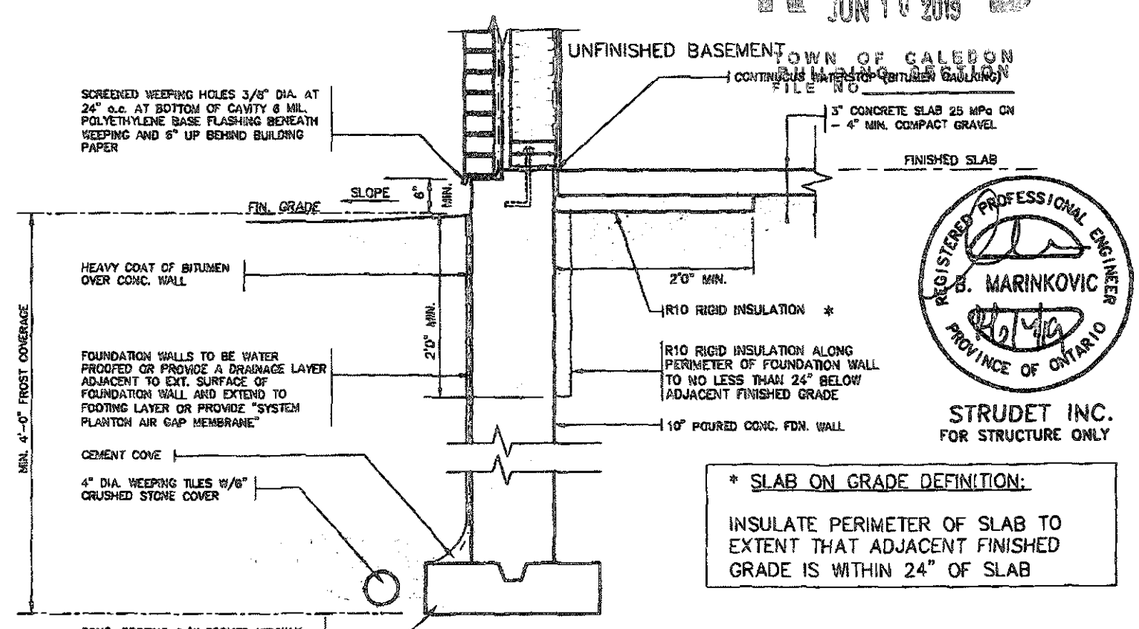


REGISTERED PROFESSIONAL ENGINEER
B. MARINKOVIC
PROVINCE OF ONTARIO

STRUDET INC.
FOR STRUCTURE ONLY

* SLAB ON GRADE DEFINITION:

INSULATE PERIMETER OF SLAB TO EXTENT THAT ADJACENT FINISHED GRADE IS WITHIN 24" OF SLAB

## WALK OUT BASEMENT

# 2012 CODE ENERGY STAR

FEB 14 2019

THIS STRUCTURE MUST BE CONSTRUCTED TO MEET OR EXCEED THE PROVISIONS OF THE ONTARIO BUILDING CODE

| no. | description | date | by |
|---|---|---|---|
| 9 | | | |
| 8 | | | |
| 7 | | | |
| 6 | | | |
| 5 | | | |
| 4 | | | |
| 3 | | | |
| 2 | INSUL. UPDATED. RE-ISSUED FOR PERMIT. | JAN 30/19 | GW |
| 1 | ISSUED FOR PERMIT. | DEC 19/18 | GW |

The undersigned has reviewed and takes responsibility for this design and has the qualifications and meets the requirements set out in the Ontario Building Code to be a Designer.
qualification information
Richard Vink — signature — 24488
name — registration information — VA3 Design Inc. — 42658

Contractor must verify all dimensions on the job and report any discrepancy to the Designer before proceeding with the work. All drawings and specifications are instruments of service and the property of the Designer which must be returned at the completion of the work. Drawings are not to be scaled.

VA3 DESIGN
255 Consumers Rd Suite 120
Toronto ON M2J 1R4
t 416.630.2255 f 416.630.4782
va3design.com

Greenpark

project name: LAMBERTS LANE HOME CORP. PH.2
municipality: CALEDON
project no.: 18023
date: SEPT. 2018
drawn by: GW
checked by: -
scale: Not to Scale
SLAB ON GRADE INSULATION
file name: 18023-GP-STD_DETAILS_ES17
drawing no.: 9

All drawings specifications, related documents and design are the copyright property of VA3 DESIGN. Reproduction of this property in whole or in part is strictly prohibited without VA3 DESIGN's written permission.