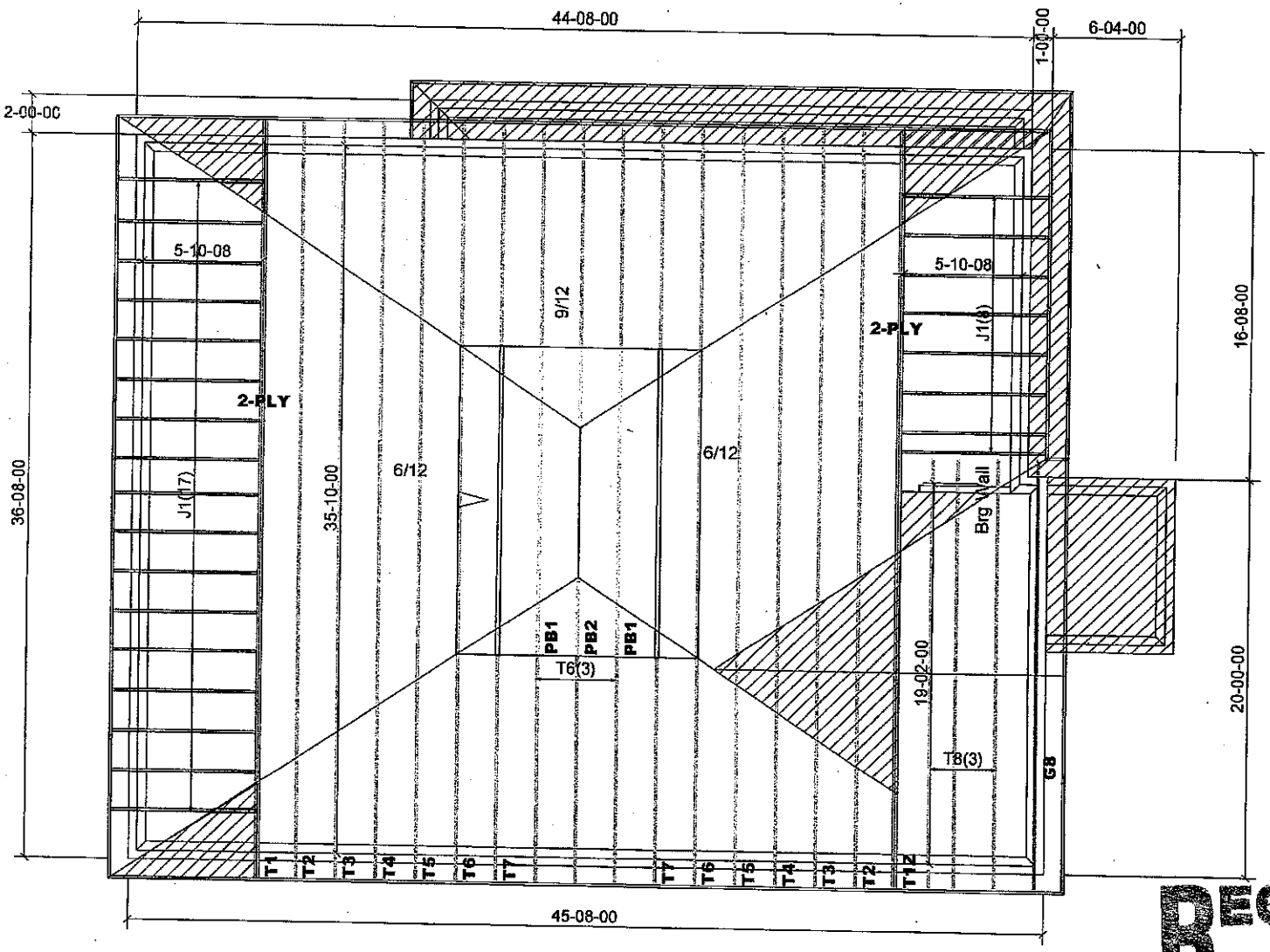

ASPHALT SHINGLES
12" FINISHED OH.
R.T.M.C.
2X6 EXTERIOR WALLS
2X6 FASCIA BOARD

DENOTES CONV. FRAMING

GSL 37.6 PSF

DESIGN CONFORMS WITH O.B.C. 2012 PART 9
DESIGN LOADS:

TC LIVE	29 PSF
TC DEAD	3 PSF
BC LIVE	10.5 PSF
BC DEAD	7 PSF

T - 180737

ALL CONV. FRAMINGS TO CONFORM WITH PART 9 OF O.B.C.2012
ROOF RAFTERS THAT CROSS MEET OVER TRUSSES TO BE 2x4 SPF @ 24" O.C. WITH A 2x4 VERT. POST TO THE TRUSS UNDERNEATH AT EACH CROSS PT. VERT. POST LONGER THAN 6' TO HAVE LATERAL BRACING SO THAT THE DISTANCE BETWEEN END PT. & BETWEEN ROWS OF BRACING DOES NOT EXCEED 6'

RECEIVED
JUN 10 2019
TOWN OF CALEDON
BUILDING SECTION
FILE NO

TAMARACK LUMBER INC.

Job Track: 50033	Builder / Location: GREENPARK HOMES / CALEDON		Model / Elevation: WOODCROFT 3 / 2 (4 OR 5 BEDROOM)
Plan Log: 200625	Project: LAMBERT LANE PH.2		
Layout ID: 401704	Date: 3/6/2019	Sales: Mario DiCano	Designer: Dan.s/ JG

THESE DRAWINGS CONSTITUTE THE PROPERTY OF TAMARACK ROOF TRUSSES INC., SHALL NOT BE REPRODUCED, PUBLISHED, OR REDISTRIBUTED IN ANY MANNER OR UTILIZED FOR ANY PURPOSE OTHER THAN THE MANUFACTURE OF TRUSSES BY TAMARACK ROOF TRUSSES INC AND WILL BE RETRACTED BY TAMARACK ROOF TRUSSES INC IF UTLILZED FOR ANY OTHER PURPOSE.

Mitek ver 8.2.3.229

DELIVERY SHIPLIST

Lumber Yard:	TAMARACK LUMBER	Job Track:	50033
Builder:	GREENPARK HOMES	PlanLog:	200625
Project:	LAMBERT LANE PH.2	Layout ID:	401704
Location:	CALEDON	Ref #	
Model:	WOODCROFT 3	Page:	1 of 1
Lot #:		Date:	03/06/2019
Elevation:	2 (4 OR 5 BEDROOM)	Designer:	Jane Gong
		Sales Rep:	Mario DiCano

Roof Trusses

PROFILE	QTY PLY	MARK TYPE	PITCH	SPAN	HEIGHT	LUMBER	OVERHANG LEFT RIGHT	HEEL HEIGHT LEFT RIGHT	LBS. BFT.	BUNDLE # STACK #	LOAD BY REMARKS
	1 2-ply	T1 Hip Girder	9 /12	**35-10-00**	4-01-04	2 x 4 2 x 6	1-03-08 1-03-08	1-06-04 1-06-04	354.14 216.67		
	1 2-ply	T1Z Hip Girder	9 /12	**35-10-00**	4-01-04	2 x 4 2 x 6	1-03-08 1-03-08	1-06-04 1-06-04	354.14 216.67		
	2	T2 Hip	9 /12	**35-10-00**	5-01-04	2 x 4	1-03-08 1-03-08	1-06-04 1-06-04	299.62 188.33		
	2	T3 Hip	9 /12	**35-10-00**	6-01-04	2 x 4	1-03-08 1-03-08	1-06-04 1-06-04	309.43 194.67		
	2	T4 Hip	9 /12	**35-10-00**	7-01-04	2 x 4	1-03-08 1-03-08	1-06-04 1-06-04	326.47 209.00		
	2	T5 Hip	9 /12	**35-10-00**	8-01-04	2 x 4	1-03-08 1-03-08	1-06-04 1-06-04	322.29 202.00		
	5	T6 Hip	9 /12	**35-10-00**	9-01-04	2 x 4	1-03-08 1-03-08	1-06-04 1-06-04	864.46 548.33		
	2	T7 Hip	9 /12	**35-10-00**	10-01-04	2 x 4	1-03-08 1-03-08	1-06-04 1-06-04	336.84 212.67		
	3	T8 Common	9 /12	**19-02-00**	8-08-08	2 x 4	1-03-08 1-03-08	1-06-04 1-06-04	264.35 167.00		
	1	G8 GABLE	9 /12	**19-02-00**	8-08-08	2 x 4	1-03-08 1-03-08	1-06-04 1-06-04	93.55 61.17		
	2	PB1 Piggyback	9 /12	**15-07-05**	2-00-00	2 x 4			93.72 61.33		
	1	PB2 Piggyback	9 /12	**15-07-05**	2-11-14	2 x 4			48.71 31.50		
	25	J1 Jack-Open	6 /12	**5-10-08**	4-01-04	2 x 4	1-03-08	1-02-00 4-01-04	451.94 291.67		

RECEIVED JUN 10 2019 TOWN OF CALEDON BUILDING SECTION FILE NO.

TOTAL # TRUSS= **51** TOTAL BFT OF ALL TRUSSES= **2601.01** BFT. TOTAL WEIGHT OF ALL TRSSES **4119.66** LBS

JOB NAME	TRUSS NAME	QUANTITY	PLY	JOB DESC. GREENPARK HOMES	DRWG NO.
401703	T1	1	2	TRUSS DESC.	

Tamarack Roof Truss, Burlington

Version 8.230 S Nov 17 2018 MiTek Industries, Inc. Thu Mar 7 08:06:38 2019 Page 1
ID:guB8GIR_dNo9QvDKo3horvyNxSw-tWlawDrcXlwRJ_BeKWMWt6o8JVyh2an1U47YGzdO4V

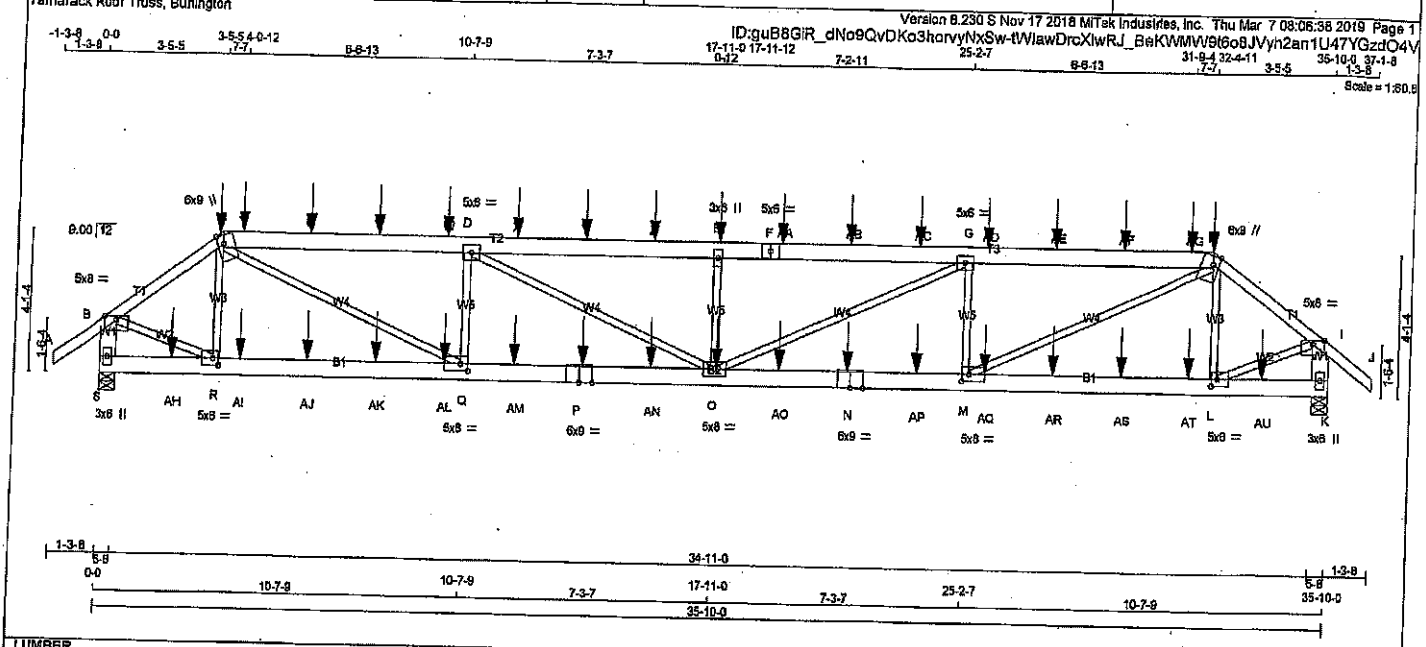

TOTAL WEIGHT = 2 X 177 = 354 lb [M]

LUMBER

N. L. G. A. RULES

CHORDS	SIZE		LUMBER	DESCR.
A - C	2x4	DRY	No.2	SPF
C - F	2x6	DRY	No.2	SPF
F - H	2x5	DRY	No.2	SPF
H - J	2x4	DRY	No.2	SPF
S - B	2x6	DRY	No.2	SPF
K - I	2x6	DRY	No.2	SPF
S - P	2x6	DRY	No.2	SPF
P - N	2x6	DRY	No.2	SPF
N - K	2x6	DRY	No.2	SPF
ALL WEBS EXCEPT	2x3	DRY	No.2	SPF

DRY: SEASONED LUMBER.

DESIGN CONSISTS OF 2 TRUSSES BUILT SEPARATELY THEN FASTENED TOGETHER AS FOLLOWS:

CHORDS	#ROWS	SURFACE SPACING (IN)	LOAD(PLF)
TOP CHORDS : (0.122"X3") SPIRAL NAILS			
A- C	1	12	SIDE(61.0)
H- J	1	12	SIDE(61.0)
C- F	2	12	SIDE(61.0)
F- H	2	12	SIDE(61.0)
S- B	2	12	SIDE(61.0)
K- I	2	12	TOP
BOTTOM CHORDS : (0.122"X3") SPIRAL NAILS			TOP
S- P	2	12	SIDE(0.0)
P- N	2	12	SIDE(183.1)
N- K	2	12	SIDE(0.0)
WEBS : (0.122"X3") SPIRAL NAILS			
2x3	1	6	

NAILS TO BE DRIVEN FROM ONE SIDE ONLY.

GIRDER NAILING ASSUMES NAILED HANGERS ARE FASTENED WITH MIN. 3-0 INCH NAILS.

TOP - COMPONENTS ARE LOADED FROM THE TOP AND MUST BE PLACED ON TOP EDGE OF ALL PLIES FOR THE LOAD TO BE TRANSFERRED TO EACH PLY.

SIDE - PLF SHOWN IS THE EQUIVALENT UDL APPLIED TO ONE SIDE THAT THE CORRESPONDING NAILING PATTERN SHALL BE CAPABLE OF TRANSFERING. REMAINING PLF MUST BE APPLIED ON THE OPPOSITE SIDE OR ON THE TOP.

PLATES (table is in inches)

JT	TYPE	PLATES	W	LEN	Y	X
B	TMW-p	MT20	5.0	8.0	Edge	
C	TTWW+m	MT20	6.0	9.0	Edge 2.00	
D	TMWW-t	MT20	5.0	6.0		
E	TMW+w	MT20	3.0	6.0		
F	TS-t	MT20	5.0	6.0		
G	TMWW-t	MT20	5.0	6.0		
H	TTWW+m	MT20	6.0	9.0	Edge 2.00	
I	TMW-p	MT20	5.0	8.0	Edge	
K	BMV1+p	MT20	3.0	6.0		
L	BMWW-t	MT20	5.0	6.0	2.50	2.00
M	BMWW-t	MT20	5.0	8.0	2.50	2.50
N	BS-t	MT20	6.0	9.0		
O	BMWWW-t	MT20	5.0	8.0		
P	BS-t	MT20	6.0	9.0		
Q	BMWW-t	MT20	5.0	8.0	2.50	2.50
R	BMWW-t	MT20	5.0	6.0	2.50	2.00
S	BMV1+p	MT20	3.0	6.0		

DIMENSIONS, SUPPORTS AND LOADINGS SPECIFIED BY FABRICATOR TO BE VERIFIED BY BUILDING DESIGNER

BEARINGS

JT	FACTORED GROSS REACTION VERT	HORZ	MAXIMUM FACTORED GROSS REACTION DOWN	HORZ	UPLIFT	INPUT BRG	REQRD BRG
S	5087	0	5087	0	0	5-8	5-8
K	5087	0	5087	0	0	5-8	5-8

UNFACTORED REACTIONS

JT	1ST LCASE COMBINED	MAX /MIN. COMPONENT REACTIONS SNOW	LIVE	PERM.LIVE	WIND	DEAD	SOIL
S	3786	2140 / 0	722 / 0	0 / 0	0 / 0	924 / 0	0 / 0
K	3786	2140 / 0	722 / 0	0 / 0	0 / 0	924 / 0	0 / 0

BEARING MATERIAL TO BE SPF NO.2 OR BETTER AT JOINT(S) S, K

BRACING

TOP CHORD TO BE SHEATHED OR MAX. PURLIN SPACING = 2.91 FT.
MAX. UNBRACED BOTTOM CHORD LENGTH = 10.00 FT OR RIGID CEILING DIRECTLY APPLIED.

ALL PITCH BREAKS AND PERIMETER CORNER JOINTS MUST BE LATERALLY RESTRAINED.

LOADING

TOTAL LOAD CASES: (4)

CHORDS

MEMB. FR-TO	MAX. FACTORED FORCE (LBS)	FACTORED VERT. LOAD (PLF) FROM	TO	LC1	MAX CSI (LC)	MAX. UNBRAC LENGTH
A- B	0 / 42	-102.1	-102.1	0.08 (1)	10.00	
B- C	-5545 / 0	-102.1	-102.1	0.24 (1)	3.95	
C- T	-10687 / 0	-102.1	-102.1	0.63 (1)	3.26	
T- U	-10687 / 0	-102.1	-102.1	0.63 (1)	3.26	
U- V	-10687 / 0	-102.1	-102.1	0.63 (1)	3.26	
V- W	-10687 / 0	-102.1	-102.1	0.63 (1)	3.26	
W- D	-10687 / 0	-102.1	-102.1	0.63 (1)	3.26	
D- X	-12651 / 0	-102.1	-102.1	0.74 (1)	2.91	
X- Y	-12651 / 0	-102.1	-102.1	0.74 (1)	2.91	
Y- Z	-12651 / 0	-102.1	-102.1	0.74 (1)	2.91	
Z- E	-12651 / 0	-102.1	-102.1	0.74 (1)	2.91	
E- F	-12651 / 0	-102.1	-102.1	0.74 (1)	2.91	
F-AA	-12651 / 0	-102.1	-102.1	0.74 (1)	2.91	
AA-AB	-12651 / 0	-102.1	-102.1	0.74 (1)	2.91	
AB-AC	-12651 / 0	-102.1	-102.1	0.74 (1)	2.91	
AC- G	-12651 / 0	-102.1	-102.1	0.74 (1)	2.91	
G-AD	-10686 / 0	-102.1	-102.1	0.63 (1)	3.26	
AD-AE	-10686 / 0	-102.1	-102.1	0.63 (1)	3.26	
AE-AF	-10686 / 0	-102.1	-102.1	0.63 (1)	3.26	
AF-AG	-10686 / 0	-102.1	-102.1	0.63 (1)	3.26	
AG- H	-10686 / 0	-102.1	-102.1	0.63 (1)	3.26	
H- I	-5542 / 0	-102.1	-102.1	0.24 (1)	3.96	
I- J	0 / 42	-102.1	-102.1	0.08 (1)	10.00	
S- B	-5102 / 0	0.0	0.0	0.19 (1)	6.45	
K- I	-5100 / 0	0.0	0.0	0.18 (1)	6.45	
S-AH	0 / 0	-38.5	-38.5	0.15 (2)	10.00	
AH- R	0 / 0	-38.5	-38.5	0.15 (2)	10.00	
R-AI	0 / 4477	-38.5	-38.5	0.42 (1)	10.00	
AI-AJ	0 / 4477	-38.5	-38.5	0.42 (1)	10.00	
AJ-AK	0 / 4477	-38.5	-38.5	0.42 (1)	10.00	
AK-AL	0 / 4477	-38.5	-38.5	0.42 (1)	10.00	
AL- Q	0 / 4477	-38.5	-38.5	0.42 (1)	10.00	
Q-AM	0 / 10686	-38.5	-38.5	0.83 (1)	10.00	
AM- P	0 / 10686	-38.5	-38.5	0.83 (1)	10.00	
P-AN	0 / 10686	-38.5	-38.5	0.83 (1)	10.00	
AN- O	0 / 10686	-38.5	-38.5	0.83 (1)	10.00	
O-AO	0 / 10685	-38.5	-38.5	0.83 (1)	10.00	
AO- N	0 / 10685	-38.5	-38.5	0.83 (1)	10.00	
N-AP	0 / 10685	-38.5	-38.5	0.83 (1)	10.00	

WEBS

MEMB. FR-TO	MAX. FACTORED FORCE (LBS)	MAX CSI (LC)
R- C	-944 / 0	0.12 (1)
L- H	-946 / 0	0.12 (1)
B- R	0 / 4669	0.58 (1)
L- I	0 / 4667	0.58 (1)
M- H	0 / 6973	0.86 (1)
C- Q	0 / 6972	0.86 (1)
M- G	-2648 / 0	0.32 (1)
Q- D	-2648 / 0	0.32 (1)
O- G	0 / 2199	0.27 (1)
D- O	0 / 2197	0.27 (1)
O- E	-1405 / 0	0.17 (1)

LICENSED PROFESSIONAL ENGINEER
03/07/19
H. J. G. ALVES
100089024
PROVINCE OF ONTARIO

DWG NO. TAM T190T135
STRUCTURAL
COMPONENT ONLY 1/2

DESIGN CRITERIA

*** SPECIAL LOADS ANALYSIS ***
GEOMETRY AND/OR BASIC LOADS CHANGED BY USER.
LOADS WERE DERIVED FROM USER INPUT
NO FURTHER MODIFICATIONS WERE MADE

SPECIFIED LOADS:

TOP CH.	LL =	29.0	PSF
	DL =	6.0	PSF
BOT CH.	LL =	10.5	PSF
	DL =	7.0	PSF
TOTAL LOAD	=	52.5	PSF

SPACING = 24.0 IN. C/C

LOADING IN FLAT SECTION BASED ON A SLOPE OF 6.00/12

*** NON STANDARD GIRDER ***
ADDT'L USER-DEFINED LOADS APPLIED TO ALL LOAD CASES.

THIS TRUSS IS DESIGNED FOR RESIDENTIAL OR SMALL BUILDING REQUIREMENTS OF PART 9, NBCC 2010, NBCC 2015

THIS DESIGN COMPLIES WITH:
- PART 9 OF BCBC 2018 , OBC 2012
- CSA 086-09, CSA 086-14
- TPIC 2011, TPIC 2014

(55 % OF 37.6 P.S.F. G.S.L. PLUS 8.4 P.S.F. RAIN LOAD) EQUALS 29.0 P.S.F. SPECIFIED ROOF LIVE LOAD

ALLOWABLE DEFL.(LL)= L/360 (1.19")
CALCULATED VERT. DEFL.(LL) = L/ 999 (0.36")
ALLOWABLE DEFL.(TL)= L/360 (1.19")
CALCULATED VERT. DEFL.(TL) = L/ 714 (0.60")

CSI: TC=0.74/1.00 (E-G:1) , BC=0.83/1.00 (O-Q:1) , WB=0.86/1.00 (H-M:1) , SSI=0.30/1.00 (C-D:1)

DOL LUMBER=1.00 NAIL=1.00 LS BEND=1.00 COMP=1.00 SHEAR=1.00 TENS= 1.00

COMPANION LIVE LOAD FACTOR = 1.00

TRUSS PLATE MANUFACTURER IS NOT RESPONSIBLE FOR QUALITY CONTROL IN THE TRUSS MANUFACTURING PLANT .

NAIL VALUES

PLATE	GRIP(DRY) (PSI) MAX	MIN	SHEAR (PLI) MAX	MIN	SECTION (PLI) MAX	MIN
MT20	618	354	1867	788	1987	1656

PLATE PLACEMENT TOL. = 0.250 Inches

PLATE ROTATION TOL. = 5.0 Deg.

JSI GRIP= 0.89 (Q) (INPUT = 0.90)
JSI METAL= 0.88 (P) (INPUT = 1.00)

CONTINUED ON PAGE 2

JOB NAME	TRUSS NAME	QUANTITY	PLY	JOB DESC. GREENPARK HOMES	DRWG NO.
401703	T1	1	2	TRUSS DESC.	

Tamarack Roof Truss, Burlington

ID:guB8GiR_dNo9QvDKo3horvyNxSw-tWlawDrcXlwRJ_BeKWMW9t6o8JVyh2an1U47YGzdO4V

Edge - INDICATES REFERENCE CORNER OF PLATE TOUCHES EDGE OF CHORD.

LOADING
TOTAL LOAD CASES: (4)

CHORDS

MEMB. FR-TO	MAX. FACTORED FORCE (LBS)	FACTORED VERT. LOAD LC1 (PLF) FROM	TO	MAX CSI (LC)	MAX. UNBRAC LENGTH
AP- M	0 / 10685	-38.5	-38.5	0.63 (1)	10.00
M-AQ	0 / 4475	-38.5	-38.5	0.42 (1)	10.00
AQ-AR	0 / 4475	-38.5	-38.5	0.42 (1)	10.00
AR-AS	0 / 4475	-38.5	-38.5	0.42 (1)	10.00
AS-AT	0 / 4475	-38.5	-38.5	0.42 (1)	10.00
AT- L	0 / 4475	-38.5	-38.5	0.42 (1)	10.00
L-AU	0 / 0	-38.5	-38.5	0.15 (2)	10.00
AU- K	0 / 0	-38.5	-38.5	0.15 (2)	10.00

WEBS

MEMB. FR-TO	MAX. FACTORED FORCE (LBS)	MAX CSI (LC)

FACTORED CONCENTRATED LOADS (LBS)

JT	LOC.	LC1	MAX-	MAX+	FACE	DIR.	TYPE	HEEL	CONN.
C	3-5-5	-43	-48	—	FRONT	VERT	DEAD	—	—
C	3-5-5	-248	-248	—	FRONT	VERT	SNOW	—	—
E	17-11-12	-198	-198	—	BACK	VERT	TOTAL	—	—
H	32-4-11	-43	-48	—	FRONT	VERT	DEAD	—	—
H	32-4-11	-248	-248	—	FRONT	VERT	SNOW	—	—
N	21-9-4	-75	-95	—	BACK	VERT	TOTAL	—	—
O	17-11-12	-75	-95	—	BACK	VERT	TOTAL	—	—
P	14-0-12	-75	-95	—	BACK	VERT	TOTAL	—	—
T	4-0-12	-217	-217	—	BACK	VERT	TOTAL	—	—
U	6-0-12	-198	-198	—	BACK	VERT	TOTAL	—	—
V	8-0-12	-198	-198	—	BACK	VERT	TOTAL	—	—
W	10-0-12	-198	-198	—	BACK	VERT	TOTAL	—	—
X	12-0-12	-198	-198	—	BACK	VERT	TOTAL	—	—
Y	14-0-12	-198	-198	—	BACK	VERT	TOTAL	—	—
Z	16-0-12	-198	-198	—	BACK	VERT	TOTAL	—	—
AA	19-9-4	-198	-198	—	BACK	VERT	TOTAL	—	—
AB	21-9-4	-198	-198	—	BACK	VERT	TOTAL	—	—
AC	23-9-4	-198	-198	—	BACK	VERT	TOTAL	—	—
AD	25-9-4	-198	-198	—	BACK	VERT	TOTAL	—	—
AE	27-9-4	-198	-198	—	BACK	VERT	TOTAL	—	—
AF	29-9-4	-198	-198	—	BACK	VERT	TOTAL	—	—
AG	31-9-4	-217	-217	—	BACK	VERT	TOTAL	—	—
AH	2-0-12	-75	-95	—	BACK	VERT	TOTAL	—	—
AI	4-0-12	-75	-95	—	BACK	VERT	TOTAL	—	—
AJ	6-0-12	-75	-95	—	BACK	VERT	TOTAL	—	—
AK	8-0-12	-75	-95	—	BACK	VERT	TOTAL	—	—
AL	10-0-12	-75	-95	—	BACK	VERT	TOTAL	—	—
AM	12-0-12	-75	-95	—	BACK	VERT	TOTAL	—	—
AN	16-0-12	-75	-95	—	BACK	VERT	TOTAL	—	—
AO	19-9-4	-75	-95	—	BACK	VERT	TOTAL	—	—
AP	23-9-4	-75	-95	—	BACK	VERT	TOTAL	—	—
AQ	25-9-4	-75	-95	—	BACK	VERT	TOTAL	—	—
AR	27-9-4	-75	-95	—	BACK	VERT	TOTAL	—	—
AS	29-9-4	-75	-95	—	BACK	VERT	TOTAL	—	—
AT	31-9-4	-75	-95	—	BACK	VERT	TOTAL	—	—
AU	33-10-12	-75	-95	—	BACK	VERT	TOTAL	—	—

RECEIVED
JUN 10 2019
TOWN OF CALEDON
PLANNING & DEVELOPMENT

LICENSED PROFESSIONAL ENGINEER
03/07/19
H J G ALVES
100009024
PROVINCE OF ONTARIO

DWG NO. TAM 7190 5735
STRUCTURAL
COMPONENT ONLY 2/2

JOB NAME	TRUSS NAME	QUANTITY	PLY	JOB DESC.	DRWG NO.
401703	T1Z	1	2	GREENPARK HOMES TRUSS DESC.	

Tamarack Roof Truss, Burlington

Version 8.230 S Nov 17 2018 MiTek Industries, Inc. Thu Mar 7 08:06:40 2019 Page 1
ID:guB8GiR_dNo9QvDKo3horvyNxSw-qvQLLuts3vA9YIK1SxP_EIBAu7CM9?z3UoZEd9zdO4T

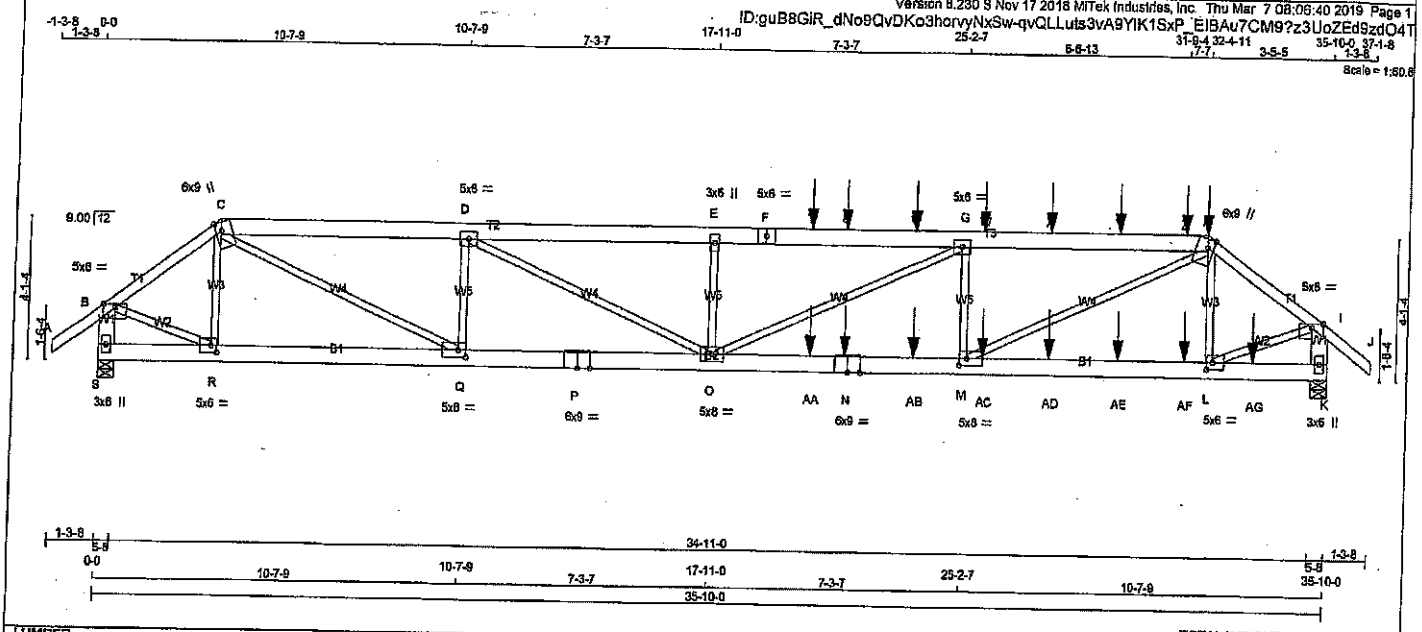

TOTAL WEIGHT = 2 X 177 = 354 lb [M]

LUMBER
N. L. G. A. RULES

CHORDS	SIZE		LUMBER	DESCR.
A - C	2x4	DRY	No.2	SPF
C - F	2x6	DRY	No.2	SPF
F - H	2x6	DRY	No.2	SPF
H - J	2x4	DRY	No.2	SPF
S - B	2x6	DRY	No.2	SPF
K - I	2x6	DRY	No.2	SPF
S - P	2x6	DRY	No.2	SPF
P - N	2x6	DRY	No.2	SPF
N - K	2x6	DRY	No.2	SPF
ALL WEBS EXCEPT	2x3	DRY	No.2	SPF

DRY: SEASONED LUMBER.

DESIGN CONSISTS OF 2 TRUSSES BUILT SEPARATELY THEN FASTENED TOGETHER AS FOLLOWS:

CHORDS	#ROWS	SURFACE SPACING (IN)	LOAD(PLF)
TOP CHORDS : (0.122"X3") SPIRAL NAILS			
A- C	1	12	TOP
H- J	1	12	SIDE(61.0)
C- F	2	12	TOP
F- H	2	12	SIDE(61.0)
S- B	2	12	TOP
K- I	2	12	TOP
BOTTOM CHORDS : (0.122"X3") SPIRAL NAILS			
S- P	2	12	TOP
P- N	2	12	SIDE(0.0)
N- K	2	12	SIDE(0.0)
WEBS : (0.122"X3") SPIRAL NAILS			
2x3	1	6	

NAILS TO BE DRIVEN FROM ONE SIDE ONLY.

GIRDER NAILING ASSUMES NAILED HANGERS ARE FASTENED WITH MIN. 3-0 INCH NAILS.

TOP - COMPONENTS ARE LOADED FROM THE TOP AND MUST BE PLACED ON TOP EDGE OF ALL PLIES FOR THE LOAD TO BE TRANSFERRED TO EACH PLY.

SIDE - PLF SHOWN IS THE EQUIVALENT UDL APPLIED TO ONE SIDE THAT THE CORRESPONDING NAILING PATTERN SHALL BE CAPABLE OF TRANSFERING. REMAINING PLF MUST BE APPLIED ON THE OPPOSITE SIDE OR ON THE TOP.

PLATES (table 's in inches)

JT	TYPE	PLATES	W	LEN	Y	X
B	TMW-p	MT20	5.0	8.0	Edge	
C	TTWW+m	MT20	6.0	9.0	Edge	2.00
D	TMWW-t	MT20	5.0	6.0		
E	TMW+w	MT20	3.0	8.0		
F	TS-t	MT20	5.0	6.0		
G	TMWW-t	MT20	5.0	6.0		
H	TTWW+m	MT20	6.0	9.0	Edge	2.00
I	TMW-p	MT20	5.0	8.0	Edge	
K	BMV1+p	MT20	3.0	6.0		
L	BMWW-t	MT20	5.0	6.0	2.50	2.00
M	BMWW-t	MT20	5.0	8.0	2.50	2.50
N	BS-t	MT20	6.0	9.0		
O	BMWWW-t	MT20	5.0	8.0		
P	BS-t	MT20	6.0	9.0		
Q	BMWW-t	MT20	5.0	8.0	2.50	2.50
R	BMWW-t	MT20	5.0	6.0	2.50	2.00
S	BMV1+p	MT20	3.0	6.0		

DIMENSIONS, SUPPORTS AND LOADINGS SPECIFIED BY FABRICATOR TO BE VERIFIED BY BUILDING DESIGNER

BEARINGS

JT	FACTORED GROSS REACTION VERT	HORZ	MAXIMUM FACTORED GROSS REACTION DOWN	HORZ	UPLIFT	INPUT BRG IN-SX	REQRD BRG IN-SX
S	3222	0	3222	0	0	5-8	5-8
K	4389	0	4389	0	0	5-8	5-8

UNFACTORED REACTIONS

MAX./MIN. COMPONENT REACTIONS

JT	1ST LCASE COMBINED	SNOW	LIVE	PERM.LIVE	WIND	DEAD	SOIL
S	2396	1356 / 0	457 / 0	0 / 0	0 / 0	585 / 0	0 / 0
K	3265	1849 / 0	621 / 0	0 / 0	0 / 0	796 / 0	0 / 0

BEARING MATERIAL TO BE SPF NO.2 OR BETTER AT JOINT(S) S, K

BRACING
TOP CHORD TO BE SHEATHED OR MAX. PURLIN SPACING = 3.52 FT.
MAX. UNBRACED BOTTOM CHORD LENGTH = 10.00 FT OR RIGID CEILING DIRECTLY APPLIED.

ALL PITCH BREAKS AND PERIMETER CORNER JOINTS MUST BE LATERALLY RESTRAINED.

LOADING
TOTAL LOAD CASES: (4)

CHORDS

MEMB. FR-TO	MAX. FACTORED FORCE (LBS)	FACTORED VERT. LOAD (PLF) FROM	TO	LC1	MAX CSI (LC)	MAX. UNBRAC LENGTH
A- B	0 / 42	-102.1	-102.1	0.08 (1)	10.00	
B- C	-3365 / 0	-102.1	-102.1	0.16 (1)	4.94	
C- D	-6924 / 0	-102.1	-102.1	0.29 (1)	4.34	
D- E	-9114 / 0	-102.1	-102.1	0.37 (1)	3.80	
E- F	-9114 / 0	-102.1	-102.1	0.59 (1)	3.52	
F- T	-9114 / 0	-102.1	-102.1	0.59 (1)	3.52	
T- U	-9114 / 0	-102.1	-102.1	0.59 (1)	3.52	
U- V	-9114 / 0	-102.1	-102.1	0.59 (1)	3.52	
V- G	-9114 / 0	-102.1	-102.1	0.59 (1)	3.52	
G- W	-8688 / 0	-102.1	-102.1	0.57 (1)	3.61	
W- X	-8688 / 0	-102.1	-102.1	0.57 (1)	3.61	
X- Y	-8688 / 0	-102.1	-102.1	0.57 (1)	3.61	
Y- Z	-8688 / 0	-102.1	-102.1	0.57 (1)	3.61	
Z- H	-8688 / 0	-102.1	-102.1	0.57 (1)	3.61	
H- I	-4725 / 0	-102.1	-102.1	0.21 (1)	4.27	
I- J	0 / 42	-102.1	-102.1	0.08 (1)	10.00	
S- B	-3221 / 0	0.0	0.0	0.12 (1)	7.72	
K- I	-4394 / 0	0.0	0.0	0.16 (1)	6.85	
S- R	0 / 0	-38.5	-38.5	0.09 (2)	10.00	
R- Q	0 / 2718	-38.5	-38.5	0.25 (1)	10.00	
Q- P	0 / 6924	-38.5	-38.5	0.52 (1)	10.00	
P- O	0 / 6924	-38.5	-38.5	0.52 (1)	10.00	
O-AA	0 / 8687	-38.5	-38.5	0.71 (1)	10.00	
AA- N	0 / 8687	-38.5	-38.5	0.71 (1)	10.00	
N-AB	0 / 8687	-38.5	-38.5	0.71 (1)	10.00	
AB- M	0 / 8687	-38.5	-38.5	0.71 (1)	10.00	
M-AC	0 / 3813	-38.5	-38.5	0.37 (1)	10.00	
AC-AD	0 / 3813	-38.5	-38.5	0.37 (1)	10.00	
AD-AE	0 / 3813	-38.5	-38.5	0.37 (1)	10.00	
AE-AF	0 / 3813	-38.5	-38.5	0.37 (1)	10.00	
AF- L	0 / 3813	-38.5	-38.5	0.37 (1)	10.00	
L-AG	0 / 0	-38.5	-38.5	0.14 (2)	10.00	
AG- K	0 / 0	-38.5	-38.5	0.14 (2)	10.00	

WEBS

MEMB. FR-TO	MAX. FACTORED FORCE (LBS)	MAX CSI (LC)
R- C	-605 / 0	0.07 (1)
L- H	-746 / 22	0.09 (1)
B- R	0 / 2846	0.35 (1)
L- I	0 / 3996	0.49 (1)
M- H	0 / 5473	0.68 (1)
C- Q	0 / 4723	0.58 (1)
M- G	-1937 / 0	0.23 (1)
Q- D	-1904 / 0	0.23 (1)
O- G	0 / 477	0.06 (1)
D- O	0 / 2448	0.30 (1)
O- E	891 / 0	0.11 (1)

FACTORED CONCENTRATED LOADS (LBS)

JT	LOC.	LC1	MAX-	MAX+	FACE	DIR.	TYPE	HEEL	CONN.
H	32-4-11	-43	-48	—	FRONT	VERT	DEAD	—	—
H	32-4-11	-248	-248	—	FRONT	VERT	SNOW	—	—
N	21-9-4	-75	-95	—	FRONT	VERT	TOTAL	—	—

DESIGN CRITERIA

*** SPECIAL LOADS ANALYSIS ***
GEOMETRY AND/OR BASIC LOADS CHANGED BY USER.
LOADS WERE DERIVED FROM USER INPUT
NO FURTHER MODIFICATIONS WERE MADE

SPECIFIED LOADS:

TOP CH.	LL =	29.0	PSF	
	DL =	6.0	PSF	
BOT CH.	LL =	10.5	PSF	
	DL =	7.0	PSF	
TOTAL LOAD	=	52.5	PSF	

SPACING = 24.0 IN. C/C

LOADING IN FLAT SECTION BASED ON A SLOPE OF 6.00/12

*** NON STANDARD GIRDER ***
ADDT'L USER-DEFINED LOADS APPLIED TO ALL LOAD CASES.

THIS TRUSS IS DESIGNED FOR RESIDENTIAL OR SMALL BUILDING REQUIREMENTS OF PART 9, NBCC 2010, NBCC 2015

THIS DESIGN COMPLIES WITH:
- PART 9 OF BCBC 2018 , OBC 2012
- CSA 086-09, CSA 086-14
- TPIC 2011, TPIC 2014

(55 % OF 37.6 P.S.F. G.S.L. PLUS 8.4 P.S.F. RAIN LOAD) EQUALS 29.0 P.S.F. SPECIFIED ROOF LIVE LOAD

ALLOWABLE DEFL.(LL)= L/360 (1.19")
CALCULATED VERT. DEFL.(LL) = L/ 999 (0.27")
ALLOWABLE DEFL.(TL)= L/360 (1.19")
CALCULATED VERT. DEFL.(TL) = L/ 958 (0.45")

CSI: TC=0.59/1.00 (E-G:1) , BC=0.71/1.00 (M-O:1) , WB=0.68/1.00 (H-M:1) , SSI=0.30/1.00 (G-H:1)

DOL LUMBER=1.00 NAIL=1.00 LS BEND=1.00
COMP=1.00 SHEAR=1.00 TENS= 1.00

COMPANION LIVE LOAD FACTOR = 1.00

TRUSS PLATE MANUFACTURER IS NOT RESPONSIBLE FOR QUALITY CONTROL IN THE TRUSS MANUFACTURING PLANT .

NAIL VALUES

PLATE	GRIP(DRY) (PSI) MAX	MIN	SHEAR (PLI) MAX	MIN	SECTION (PLI) MAX	MIN
MT20	618	354	1667	788	1987	1856

PLATE PLACEMENT TOL. = 0.250 inches

PLATE ROTATION TOL. = 5.0 Deg.

JSI GRIP= 0.75 (O) (INPUT = 0.90)
JSI METAL= 0.75 (P) (INPUT = 1.00)

LICENSED PROFESSIONAL ENGINEER
03/07/19
H J G ALVES
100000904
PROVINCE OF ONTARIO

DWG NO. TAM TM05136
STRUCTURAL COMPONENT ONLY 1/2

CONTINUED ON PAGE 2

JOB NAME	TRUSS NAME	QUANTITY	PLY	JOB DESC. GREENPARK HOMES	DRWG NO.
401703	T1Z	1	2	TRUSS DESC.	

Tamarack Roof Truss, Burlington

ID:guB8GIR_dNo9QvDKo3horvyNxSw-qvQLLuts3vA9YIK1SxP_EIBAu7CM9?z3UoZEd9zdO4T

Edge - INDICATES REFERENCE CORNER OF PLATE TOUCHES EDGE OF CHORD.

FACTORED CONCENTRATED LOADS (LBS)

JT	LOC.	LC1	MAX-	MAX+	FACE	DIR.	TYPE	HEEL	CONN.
T	20-9-4	-198	-198	—	FRONT	VERT	TOTAL	—	—
U	21-9-4	-198	-198	—	FRONT	VERT	TOTAL	—	—
V	23-9-4	-198	-198	—	FRONT	VERT	TOTAL	—	—
W	25-9-4	-198	-198	—	FRONT	VERT	TOTAL	—	—
X	27-9-4	-198	-198	—	FRONT	VERT	TOTAL	—	—
Y	29-9-4	-198	-198	—	FRONT	VERT	TOTAL	—	—
Z	31-9-4	-217	-217	—	FRONT	VERT	TOTAL	—	—
AA	20-9-4	-75	-95	—	FRONT	VERT	TOTAL	—	—
AB	23-9-4	-75	-95	—	FRONT	VERT	TOTAL	—	—
AC	25-9-4	-75	-95	—	FRONT	VERT	TOTAL	—	—
AD	27-9-4	-75	-95	—	FRONT	VERT	TOTAL	—	—
AE	29-9-4	-75	-95	—	FRONT	VERT	TOTAL	—	—
AF	31-9-4	-75	-95	—	FRONT	VERT	TOTAL	—	—
AG	33-9-4	-75	-95	—	FRONT	VERT	TOTAL	—	—

LICENSED PROFESSIONAL ENGINEER
03/07/19
M. J. G. ALVES
100009994
PROVINCE OF ONTARIO

DWG NO. TAM 7405736
STRUCTURAL
COMPONENT ONLY 2/2

JOB NAME	TRUSS NAME	QUANTITY	PLY	JOB DESC. GREENPARK HOMES	DRWG NO.
401703	T2	2	1	TRUSS DESC.	

Tamarack Roof Truss, Burlington

Version 8.230 S Nov 17 2018 MiTek Industries, Inc. Thu Mar 7 08:08:24 2019 Page 1
ID:EOeHuqPduBFr_cwVjO44UGyOdeU-nvlfAS75ZsHO1HH0XnGNSDVtU2fbX4KNPzlkG7zdO2c

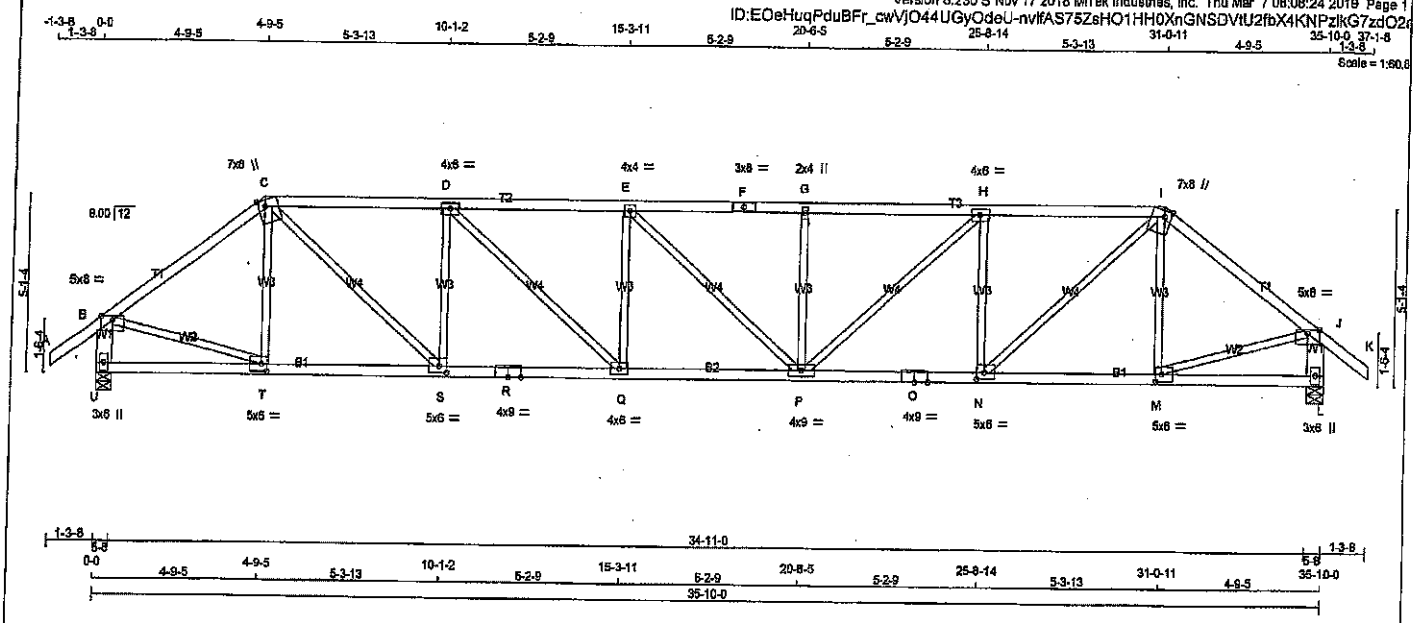

TOTAL WEIGHT = 2 X 150 = 300 lb [M]

LUMBER
N. L. G. A. RULES

CHORDS	SIZE		LUMBER	DESCR.
A - C	2x4	DRY	No.2	SPF
C - F	2x4	DRY	No.2	SPF
F - I	2x4	DRY	No.2	SPF
I - K	2x4	DRY	No.2	SPF
U - B	2x6	DRY	No.2	SPF
L - J	2x6	DRY	No.2	SPF
U - R	2x4	DRY	No.2	SPF
R - O	2x4	DRY	No.2	SPF
O - L	2x4	DRY	No.2	SPF
ALL WEBS EXCEPT	2x3	DRY	No.2	SPF

DRY: SEASONED LUMBER.

PLATES (table is in inches)

JT	TYPE	PLATES	W	LEN	Y	X
B	TMVW-p	MT20	5.0	8.0	Edge	
C	TTWW+m	MT20	7.0	8.0	Edge 2.50	
D	TMWW-t	MT20	4.0	6.0		
E	TMWW-t	MT20	4.0	4.0		
F	TS-t	MT20	3.0	8.0		
G	TMW+w	MT20	2.0	4.0		
H	TMWW-t	MT20	4.0	6.0		
I	TTWW+m	MT20	7.0	8.0	Edge 2.50	
J	TMVW-p	MT20	5.0	8.0	Edge	
L	BMV1+p	MT20	3.0	6.0		
M	BMWW-t	MT20	5.0	6.0	2.50	2.00
N	BMWW-t	MT20	5.0	6.0	2.25	2.50
O	BS-t	MT20	4.0	9.0		
P	BMWWW-t	MT20	4.0	9.0		
Q	BMWW-t	MT20	4.0	6.0		
R	BS-t	MT20	4.0	9.0		
S	BMWW-t	MT20	5.0	6.0	2.25	2.50
T	BMWW-t	MT20	5.0	6.0	2.50	2.00
U	BMV1+p	MT20	3.0	6.0		

Edge - INDICATES REFERENCE CORNER OF PLATE TOUCHES EDGE OF CHORD.

DIMENSIONS, SUPPORTS AND LOADINGS SPECIFIED BY FABRICATOR TO BE VERIFIED BY BUILDING DESIGNER

BEARINGS

JT	FACTORED GROSS REACTION VERT	HORZ	MAXIMUM FACTORED GROSS REACTION DOWN	HORZ	UPLIFT	INPUT BRG IN-SX	REQRD BRG IN-SX
U	2660	0	2660	0	0	5-8	5-8
L	2660	0	2660	0	0	5-8	5-8

UNFACTORED REACTIONS

JT	1ST LCASE COMBINED	SNOW	MAX./MIN. COMPONENT REACTIONS LIVE	PERM.LIVE	WIND	DEAD	SOIL
U	1979	1120 / 0	376 / 0	0 / 0	0 / 0	482 / 0	0 / 0
L	1979	1120 / 0	376 / 0	0 / 0	0 / 0	482 / 0	0 / 0

BEARING MATERIAL TO BE SPF NO.2 OR BETTER AT JOINT(S) U, L

BRACING
TOP CHORD TO BE SHEATHED OR MAX. PURLIN SPACING = 2.61 FT.
MAX. UNBRACED BOTTOM CHORD LENGTH = 10.00 FT OR RIGID CEILING DIRECTLY APPLIED.

ALL PITCH BREAKS AND PERIMETER CORNER JOINTS MUST BE LATERALLY RESTRAINED.

LOADING
TOTAL LOAD CASES: (4)

CHORDS

MEMB. FR-TO	MAX. FACTORED FORCE (LBS)	FROM	TO	VERT. LOAD LC1 (PLF)	MAX CSI (LC)	MAX. UNBRAC LENGTH
A- B	0 / 42	-102.1	-102.1	0.14 (1)	10.00	
B- C	-2762 / 0	-102.1	-102.1	0.62 (1)	3.60	
C- D	-3686 / 0	-102.1	-102.1	0.73 (1)	2.98	
D- E	-4647 / 0	-102.1	-102.1	0.86 (1)	2.61	
E- F	-4646 / 0	-102.1	-102.1	0.72 (1)	2.79	
F- G	-4646 / 0	-102.1	-102.1	0.72 (1)	2.79	
G- H	-4646 / 0	-102.1	-102.1	0.86 (1)	2.61	
H- I	-3869 / 0	-102.1	-102.1	0.73 (1)	2.98	
I- J	-2762 / 0	-102.1	-102.1	0.62 (1)	3.60	
J- K	0 / 42	-102.1	-102.1	0.14 (1)	10.00	
U- B	-2566 / 0	0.0	0.0	0.18 (1)	6.45	
L- J	-2566 / 0	0.0	0.0	0.18 (1)	6.45	
U- T	0 / 0	-38.5	-38.5	0.18 (3)	10.00	
T- S	0 / 2199	-38.5	-38.5	0.49 (1)	10.00	
S- R	0 / 3868	-38.5	-38.5	0.72 (1)	10.00	
R- Q	0 / 3868	-38.5	-38.5	0.72 (1)	10.00	
Q- P	0 / 4647	-38.5	-38.5	0.84 (1)	10.00	
P- O	0 / 3869	-38.5	-38.5	0.71 (1)	10.00	
O- N	0 / 3869	-38.5	-38.5	0.71 (1)	10.00	
N- M	0 / 2199	-38.5	-38.5	0.49 (1)	10.00	
M- L	0 / 0	-38.5	-38.5	0.18 (3)	10.00	

WEBS

MEMB. FR-TO	MAX. FACTORED FORCE (LBS)	MAX CSI (LC)
T- C	-319 / 29	0.12 (1)
C- S	0 / 2248	0.51 (1)
S- D	-1310 / 0	0.50 (1)
D- Q	0 / 1060	0.24 (1)
Q- E	-517 / 0	0.20 (1)
E- P	-2 / 0	0.00 (1)
P- G	-516 / 0	0.20 (1)
P- H	0 / 1057	0.24 (1)
N- H	-1310 / 0	0.50 (1)
N- I	0 / 2248	0.51 (1)
M- I	-319 / 29	0.12 (1)
B- T	0 / 2270	0.51 (1)
M- J	0 / 2270	0.51 (1)

DESIGN CRITERIA

SPECIFIED LOADS:

TOP CH.	LL =	29.0	PSF
	DL =	8.0	PSF
BOT CH.	LL =	10.5	PSF
	DL =	7.0	PSF
TOTAL LOAD	=	52.5	PSF

SPACING = 24.0 IN. C/C

LOADING IN FLAT SECTION BASED ON A SLOPE OF 6.00/12

THIS TRUSS IS DESIGNED FOR RESIDENTIAL OR SMALL BUILDING REQUIREMENTS OF PART 9, NBCC 2010, NBCC 2015

THIS DESIGN COMPLIES WITH:
- PART 9 OF BCBC 2018 , OBC 2012
- CSA 086-09, CSA 086-14
- TPIC 2011, TPIC 2014

(55 % OF 37.6 P.S.F. G.S.L. PLUS 6.4 P.S.F. RAIN LOAD) EQUALS 29.0 P.S.F. SPECIFIED ROOF LIVE LOAD

ALLOWABLE DEFL.(LL)= L/360 (1.19")
CALCULATED VERT. DEFL.(LL) = L/999 (0.30")
ALLOWABLE DEFL.(TL)= L/360 (1.19")
CALCULATED VERT. DEFL.(TL) = L/872 (0.49")

CSI: TC=0.88/1.00 (G-H:1) , BC=0.84/1.00 (P-Q:1) , WB=0.51/1.00 (B-T:1) , SSI=0.25/1.00 (H-I:1)

DOL LUMBER=1.00 NAIL=1.00 LS BEND=1.10 COMP=1.10 SHEAR=1.10 TENS= 1.10

COMPANION LIVE LOAD FACTOR = 1.00

TRUSS PLATE MANUFACTURER IS NOT RESPONSIBLE FOR QUALITY CONTROL IN THE TRUSS MANUFACTURING PLANT .

NAIL VALUES

PLATE	GRIP(DRY) (PSI) MAX	MIN	SHEAR (PLI) MAX	MIN	SECTION (PLI) MAX	MIN
MT20	618	354	1667	788	1987	1656

PLATE PLACEMENT TOL. = 0.250 inches

PLATE ROTATION TOL. = 5.0 Deg.

JSI GRIP= 0.89 (N) (INPUT = 0.90)
JSI METAL= 0.90 (O) (INPUT = 1.00)

RECEIVED
JUN 10 2019
TOWN OF CALEDON
BUILDING SECTION
FILE NO

LICENSED PROFESSIONAL ENGINEER
03/07/19
H. J. G. ALVES
100089024
PROVINCE OF ONTARIO

DWG NO. TAM T7&D 5137
STRUCTURAL
COMPONEMT ONLY

JOB NAME	TRUSS NAME	QUANTITY	PLY	JOB DESC. GREENPARK HOMES	DRWG NO.
401703	T3	2	1	TRUSS DESC.	

Tamarack Roof Truss, Burlington

Version 6.230 S Nov 17 2018 MiTek Industries, Inc. Thu Mar 7 08:08:25 2019 Page 1

ID:EOeHuqPduBFr_cwVjO44UGyOdeU-F6G1No8|KAPFeRsC5Vnc?R21lR20GUbXedVloZzdO2q

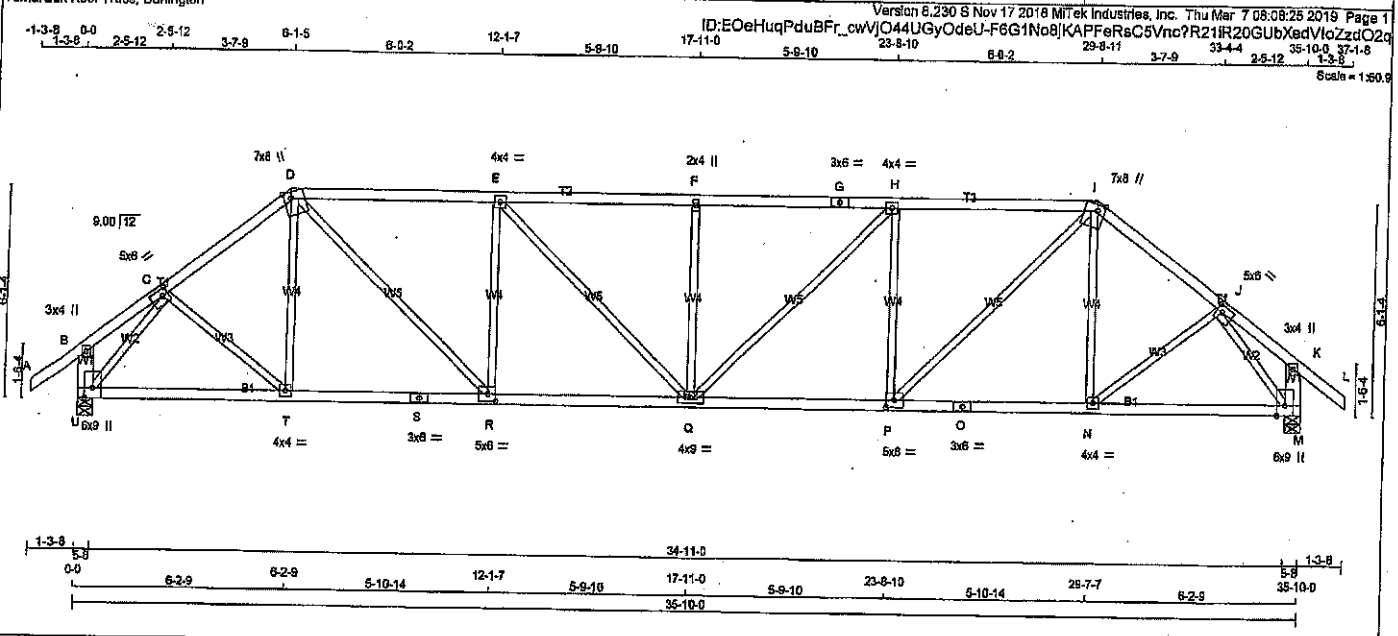

TOTAL WEIGHT = 2 X 155 = 309 lb [M]

LUMBER

N. L. G. A. RULES

CHORDS	SIZE		LUMBER	DESCR.
A - D	2x4	DRY	No.2	SPF
D - G	2x4	DRY	No.2	SPF
G - I	2x4	DRY	No.2	SPF
I - L	2x4	DRY	No.2	SPF
U - B	2x6	DRY	No.2	SPF
M - K	2x6	DRY	No.2	SPF
U - S	2x4	DRY	No.2	SPF
S - O	2x4	DRY	No.2	SPF
O - M	2x4	DRY	No.2	SPF
ALL WEBS EXCEPT	2x3	DRY	No.2	SPF

DRY: SEASONED LUMBER.

PLATES (table is in inches)

JT	TYPE	PLATES	W	LEN	Y	X
B	TMV+p	MT20	3.0	4.0		
C	TMWW-t	MT20	5.0	6.0	2.25	2.00
D	TTWW+m	MT20	7.0	8.0	Edge	2.50
E	TMWW-t	MT20	4.0	4.0		
F	TMW+w	MT20	2.0	4.0		
G	TS-t	MT20	3.0	6.0		
H	TMWW-t	MT20	4.0	4.0		
I	TTWW+m	MT20	7.0	8.0	Edge	2.50
J	TMWW-t	MT20	5.0	6.0	2.25	2.00
K	TMV+p	MT20	3.0	4.0		
M	BMVW1+p	MT20	6.0	9.0	Edge	
N	BMWW-t	MT20	4.0	4.0		
O	BS-t	MT20	3.0	6.0		
P	BMWW-t	MT20	5.0	6.0	2.50	2.75
Q	BMWWW-t	MT20	4.0	9.0		
R	BMWW-t	MT20	5.0	6.0	2.50	2.75
S	BS-t	MT20	3.0	6.0		
T	BMWW-t	MT20	4.0	4.0		
U	BMVW1+p	MT20	6.0	9.0	Edge	

Edge - INDICATES REFERENCE CORNER OF PLATE TOUCHES EDGE OF CHORD.

DIMENSIONS, SUPPORTS AND LOADINGS SPECIFIED BY FABRICATOR TO BE VERIFIED BY BUILDING DESIGNER

BEARINGS

JT	FACTORED GROSS REACTION VERT	HORZ	MAXIMUM FACTORED GROSS REACTION DOWN	HORZ	UPLIFT	INPUT BRG IN-SX	REQRD BRG IN-SX
M	2660	0	2660	0	0	5-8	5-8
U	2660	0	2660	0	0	5-8	5-8

UNFACTORED REACTIONS

JT	1ST LCASE COMBINED	MAX./MIN. COMPONENT REACTIONS SNOW	LIVE	PERM.LIVE	WIND	DEAD	SOIL
M	1979	1120 / 0	376 / 0	0 / 0	0 / 0	482 / 0	0 / 0
U	1979	1120 / 0	376 / 0	0 / 0	0 / 0	482 / 0	0 / 0

BEARING MATERIAL TO BE SPF NO.2 OR BETTER AT JOINT(S) M, U

BRACING

TOP CHORD TO BE SHEATHED OR MAX. PURLIN SPACING = 2.70 FT.
MAX. UNBRACED BOTTOM CHORD LENGTH = 10.00 FT OR RIGID CEILING DIRECTLY APPLIED.

ALL PITCH BREAKS AND PERIMETER CORNER JOINTS MUST BE LATERALLY RESTRAINED.

LOADING

TOTAL LOAD CASES: (4)

CHORDS

MEMB. FR-TO	MAX. FACTORED FORCE (LBS)	FACTORED VERT. LOAD LC1 (PLF) FROM	TO	MAX CSI (LC)	MAX. UNBRAC LENGTH
A- B	0 / 42	-102.1	-102.1	0.14 (1)	10.00
B- C	0 / 26	-102.1	-102.1	0.14 (1)	10.00
C- D	-2812 / 0	-102.1	-102.1	0.31 (1)	3.89
D- E	-3547 / 0	-102.1	-102.1	0.89 (1)	2.91
E- F	-3940 / 0	-102.1	-102.1	0.96 (1)	2.70
F- G	-3940 / 0	-102.1	-102.1	0.96 (1)	2.70
G- H	-3940 / 0	-102.1	-102.1	0.96 (1)	2.70
H- I	-3547 / 0	-102.1	-102.1	0.89 (1)	2.91
I- J	-2812 / 0	-102.1	-102.1	0.31 (1)	3.89
J- K	0 / 26	-102.1	-102.1	0.14 (1)	10.00
K- L	0 / 42	-102.1	-102.1	0.14 (1)	10.00
U- B	-219 / 0	0.0	0.0	0.01 (1)	7.81
M- K	-219 / 0	0.0	0.0	0.01 (1)	7.81
U- T	0 / 1868	-38.5	-38.5	0.51 (2)	10.00
T- S	0 / 2231	-38.5	-38.5	0.57 (2)	10.00
S- R	0 / 2231	-38.5	-38.5	0.57 (2)	10.00
R- Q	0 / 3547	-38.5	-38.5	0.70 (1)	10.00
Q- P	0 / 3547	-38.5	-38.5	0.70 (1)	10.00
P- O	0 / 2231	-38.5	-38.5	0.57 (2)	10.00
O- N	0 / 2231	-38.5	-38.5	0.57 (2)	10.00
N- M	0 / 1868	-38.5	-38.5	0.51 (2)	10.00

WEBS

MEMB. FR-TO	MAX. FACTORED FORCE (LBS)	MAX CSI (LC)
T- D	-13 / 160	0.04 (3)
N- I	-13 / 160	0.04 (3)
C- T	0 / 458	0.10 (1)
D- R	0 / 1636	0.41 (1)
R- E	-1066 / 0	0.62 (1)
E- Q	0 / 553	0.12 (1)
Q- F	-551 / 0	0.32 (1)
Q- H	0 / 553	0.12 (1)
P- H	-1066 / 0	0.62 (1)
P- I	0 / 1636	0.41 (1)
N- J	0 / 458	0.10 (1)
U- C	-2999 / 0	0.70 (1)
J- M	-2999 / 0	0.70 (1)

DESIGN CRITERIA

SPECIFIED LOADS:

TOP CH.	LL	=	29.0	PSF
	DL	=	6.0	PSF
BOT CH.	LL	=	10.5	PSF
	DL	=	7.0	PSF
TOTAL LOAD		=	52.5	PSF

SPACING = 24.0 IN. C/C

LOADING IN FLAT SECTION BASED ON A SLOPE OF 6.00/12

THIS TRUSS IS DESIGNED FOR RESIDENTIAL OR SMALL BUILDING REQUIREMENTS OF PART 9, NBCC 2010, NBCC 2015

THIS DESIGN COMPLIES WITH:
- PART 9 OF BCBC 2018 , OBC 2012
- CSA 086-09, CSA 086-14
- TPIC 2011, TPIC 2014

(55 % OF 37.6 P.S.F. G.S.L. PLUS 8.4 P.S.F. RAIN LOAD) EQUALS 29.0 P.S.F. SPECIFIED ROOF LIVE LOAD

ALLOWABLE DEFL.(LL)= L/360 (1.19")
CALCULATED VERT. DEFL.(LL) = L/ 999 (0.22")
ALLOWABLE DEFL.(TL)= L/360 (1.19")
CALCULATED VERT. DEFL.(TL) = L/ 999 (0.37")

CSI: TC=0.96/1.00 (E-F:1) , BC=0.70/1.00 (Q-R:1) , WB=0.70/1.00 (J-M:1) , SSI=0.29/1.00 (D-E:1)

DOL LUMBER=1.00 NAIL=1.00 LS BEND=1.10 COMP=1.10 SHEAR=1.10 TENS= 1.10

COMPANION LIVE LOAD FACTOR = 1.00

AUTOSOLVE HEELS OFF

TRUSS PLATE MANUFACTURER IS NOT RESPONSIBLE FOR QUALITY CONTROL IN THE TRUSS MANUFACTURING PLANT .

NAIL VALUES

PLATE	GRIP(DRY) (PSI) MAX	MIN	SHEAR (PLI) MAX	MIN	SECTION (PLI) MAX	MIN
MT20	618	354	1667	768	1867	1656

PLATE PLACEMENT TOL. = 0.250 inches

PLATE ROTATION TOL. = 5.0 Deg.

JSI GRIP= 0.88 (C) (INPUT = 0.60)
JSI METAL= 0.76 (J) (INPUT = 1.00)

LICENSED PROFESSIONAL ENGINEER
03/07/19
H. J. G. ALVES
100009024
PROVINCE OF ONTARIO

DWG NO. TAM 77905138
STRUCTURAL
COMPONENT ONLY

JOB NAME	TRUSS NAME	QUANTITY	PLY	JOB DESC. GREENPARK HOMES	DRWG NO.
401703	T4	2	1	TRUSS DESC.	

Temerack Roof Truss, Burlington

Version 6.230 S Nov 17 2018 MiTek Industries, Inc. Thu Mar 7 08:08:25 2019 Page 1
ID:EOsHuqPduBFr_cwVjO44UGyOdeU-F6G1No8jKAPFeRsC5Vnc?R25UR2IGP9XedVloZzdO2q

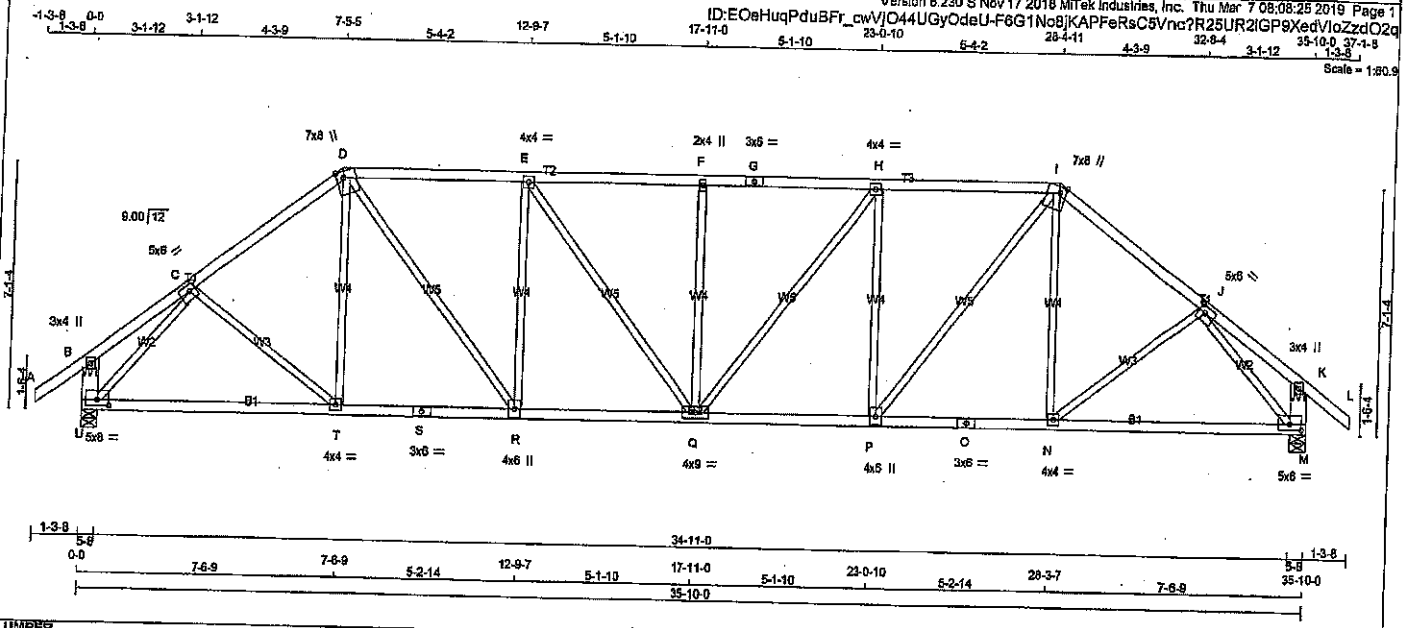

TOTAL WEIGHT = 2 X 163 = 326 lb

LUMBER

N. L. G. A. RULES

CHORDS	SIZE		LUMBER	DESCR.
A - D	2x4	DRY	No.2	SPF
D - G	2x4	DRY	No.2	SPF
G - I	2x4	DRY	No.2	SPF
I - L	2x4	DRY	No.2	SPF
U - B	2x6	DRY	No.2	SPF
M - K	2x6	DRY	No.2	SPF
U - S	2x4	DRY	No.2	SPF
S - O	2x4	DRY	No.2	SPF
O - M	2x4	DRY	No.2	SPF
ALL WEBS EXCEPT	2x3	DRY	No.2	SPF

DRY: SEASONED LUMBER.

PLATES (table is in inches)

JT	TYPE	PLATES	W	LEN	Y	X
B	TMV+p	MT20	3.0	4.0		
C	TMWW-t	MT20	5.0	6.0	2.25	2.25
D	TTWW+m	MT20	7.0	8.0	Edge	2.50
E	TMWW-t	MT20	4.0	4.0		
F	TMW+w	MT20	2.0	4.0		
G	TS-t	MT20	3.0	6.0		
H	TMWW-t	MT20	4.0	4.0		
I	TTWW+m	MT20	7.0	8.0	Edge	2.50
J	TMWW-t	MT20	5.0	6.0	2.25	2.25
K	TMV+p	MT20	3.0	4.0		
M	BMVW1-t	MT20	5.0	8.0	2.00	4.00
N	BMWW-t	MT20	4.0	4.0		
O	BS-t	MT20	3.0	6.0		
P	BMWW+t	MT20	4.0	6.0		
Q	BMWWW-t	MT20	4.0	9.0		
R	BMWW+t	MT20	4.0	6.0		
S	BS-t	MT20	3.0	6.0		
T	BMWW-t	MT20	4.0	4.0		
U	BMVW1-t	MT20	5.0	8.0	2.00	4.00

Edge - INDICATES REFERENCE CORNER OF PLATE TOUCHES EDGE OF CHORD.

DIMENSIONS, SUPPORTS AND LOADINGS SPECIFIED BY FABRICATOR TO BE VERIFIED BY BUILDING DESIGNER

BEARINGS

JT	FACTORED GROSS REACTION VERT	HORZ	MAXIMUM FACTORED GROSS REACTION DOWN	HORZ	UPLIFT	INPUT BRG IN-SX	REQRD BRG IN-SX
M	2660	0	2660	0	0	5-8	5-8
U	2660	0	2660	0	0	5-8	5-8

UNFACTORED REACTIONS

JT	1ST LCASE COMBINED	MAX./MIN. COMPONENT REACTIONS SNOW	LIVE	PERM.LIVE	WIND	DEAD	SOIL
M	1979	1120 / 0	376 / 0	0 / 0	0 / 0	482 / 0	0 / 0
U	1979	1120 / 0	376 / 0	0 / 0	0 / 0	482 / 0	0 / 0

BEARING MATERIAL TO BE SPF NO.2 OR BETTER AT JOINT(S) M, U

BRACING

TOP CHORD TO BE SHEATHED OR MAX. PURLIN SPACING = 3.23 FT.
MAX. UNBRACED BOTTOM CHORD LENGTH = 10.00 FT OR RIGID CEILING DIRECTLY APPLIED.

ALL PITCH BREAKS AND PERIMETER CORNER JOINTS MUST BE LATERALLY RESTRAINED.

LOADING

TOTAL LOAD CASES: (4)

CHORDS

MEMB. FR-TO	MAX. FACTORED FORCE (LBS)	FACTORED VERT. LOAD (PLF) FROM	TO	LC1 CSI (LC)	MAX UNBRAC LENGTH
A- B	0 / 42	-102.1	-102.1	0.14 (1)	10.00
B- C	0 / 32	-102.1	-102.1	0.23 (1)	10.00
C- D	-2797 / 0	-102.1	-102.1	0.40 (1)	3.83
D- E	-3085 / 0	-102.1	-102.1	0.62 (1)	3.39
E- F	-3352 / 0	-102.1	-102.1	0.65 (1)	3.23
F- G	-3352 / 0	-102.1	-102.1	0.65 (1)	3.23
G- H	-3352 / 0	-102.1	-102.1	0.65 (1)	3.23
H- I	-3085 / 0	-102.1	-102.1	0.62 (1)	3.39
I- J	-2797 / 0	-102.1	-102.1	0.40 (1)	3.83
J- K	0 / 32	-102.1	-102.1	0.23 (1)	10.00
K- L	0 / 42	-102.1	-102.1	0.14 (1)	10.00
U- B	-242 / 0	0.0	0.0	0.02 (1)	7.81
M- K	-242 / 0	0.0	0.0	0.02 (1)	7.81
U- T	0 / 2009	-38.5	-38.5	0.62 (2)	10.00
T- S	0 / 2218	-38.5	-38.5	0.65 (2)	10.00
S- R	0 / 2218	-38.5	-38.5	0.65 (2)	10.00
R- Q	0 / 3085	-38.5	-38.5	0.61 (1)	10.00
Q- P	0 / 3085	-38.5	-38.5	0.61 (1)	10.00
P- O	0 / 2218	-38.5	-38.5	0.65 (2)	10.00
O- N	0 / 2218	-38.5	-38.5	0.65 (2)	10.00
N- M	0 / 2009	-38.5	-38.5	0.62 (2)	10.00

WEBS

MEMB. FR-TO	MAX. FACTORED FORCE (LBS)	MAX CSI (LC)
T- D	0 / 246	0.06 (3)
N- I	0 / 246	0.06 (3)
C- T	0 / 277	0.06 (2)
D- R	0 / 1413	0.32 (1)
R- E	-950 / 0	0.83 (1)
E- Q	0 / 440	0.10 (1)
Q- F	-497 / 0	0.43 (1)
Q- H	0 / 440	0.10 (1)
P- H	-950 / 0	0.83 (1)
P- I	0 / 1413	0.32 (1)
N- J	0 / 277	0.06 (2)
U- C	-3053 / 0	0.99 (1)
J- M	-3053 / 0	0.99 (1)

DESIGN CRITERIA

SPECIFIED LOADS:

TOP CH.	LL =	29.0	PSF
	DL =	6.0	PSF
BOT CH.	LL =	10.5	PSF
	DL =	7.0	PSF
TOTAL LOAD	=	52.5	PSF

SPACING = 24.0 IN. O/C

LOADING IN FLAT SECTION BASED ON A SLOPE OF 6.00/12

THIS TRUSS IS DESIGNED FOR RESIDENTIAL OR SMALL BUILDING REQUIREMENTS OF PART 9, NBCC 2010, NBCC 2015

THIS DESIGN COMPLIES WITH:
- PART 9 OF BCBC 2018 , OBC 2012
- CSA 086-09, CSA 086-14
- TPIC 2011, TPIC 2014

(55 % OF 37.6 P.S.F. G.S.L. PLUS 8.4 P.S.F. RAIN LOAD) EQUALS 29.0 P.S.F. SPECIFIED ROOF LIVE LOAD

ALLOWABLE DEFL.(LL)= L/360 (1.19")
CALCULATED VERT. DEFL.(LL) = L/ 999 (0.18")
ALLOWABLE DEFL.(TL)= L/360 (1.19")
CALCULATED VERT. DEFL.(TL) = L/ 999 (0.30")

CSI: TC=0.65/1.00 (F-H:1) , BC=0.65/1.00 (R-T:2) , WB=0.99/1.00 (J-M:1) , SSI=0.25/1.00 (D-E:1)

DOL LUMBER=1.00 NAIL=1.00 LS BEND=1.10 COMP=1.10 SHEAR=1.10 TENS= 1.10

COMPANION LIVE LOAD FACTOR = 1.00

TRUSS PLATE MANUFACTURER IS NOT RESPONSIBLE FOR QUALITY CONTROL IN THE TRUSS MANUFACTURING PLANT .

NAIL VALUES

PLATE	GRIP(DRY) (PSI) MAX	MIN	SHEAR (PLI) MAX	MIN	SECTION (PLI) MAX	MIN
MT20	618	354	1667	788	1987	1656

PLATE PLACEMENT TOL. = 0.250 Inches

PLATE ROTATION TOL. = 5.0 Deg.

JSI GRIP= 0.90 (M) (INPUT = 0.90)
JSI METAL= 0.76 (J) (INPUT = 1.00)

LICENSED PROFESSIONAL ENGINEER
03/07/19
H. J. G. ALVES
100009994
PROVINCE OF ONTARIO

DWG NO. TAM 77905139
STRUCTURAL COMPONENT ONLY

JOB NAME	TRUSS NAME	QUANTITY	PLY	JOB DESC.	DRWG NO.
401706	T5	2	1	GREENPARK HOMES TRUSS DESC.	

Tamarack Roof Truss, Burlington

Version 8.230 S Nov 17 2018 MiTek Industries, Inc. Thu Mar 7 08:28:09 2019 Page 1
ID:EOeHuqPduBFr_cwVjO44UGyOdeU-aupetfTPVyaGhONmS91F_64PfjGlgvPourJyMxzdNmK

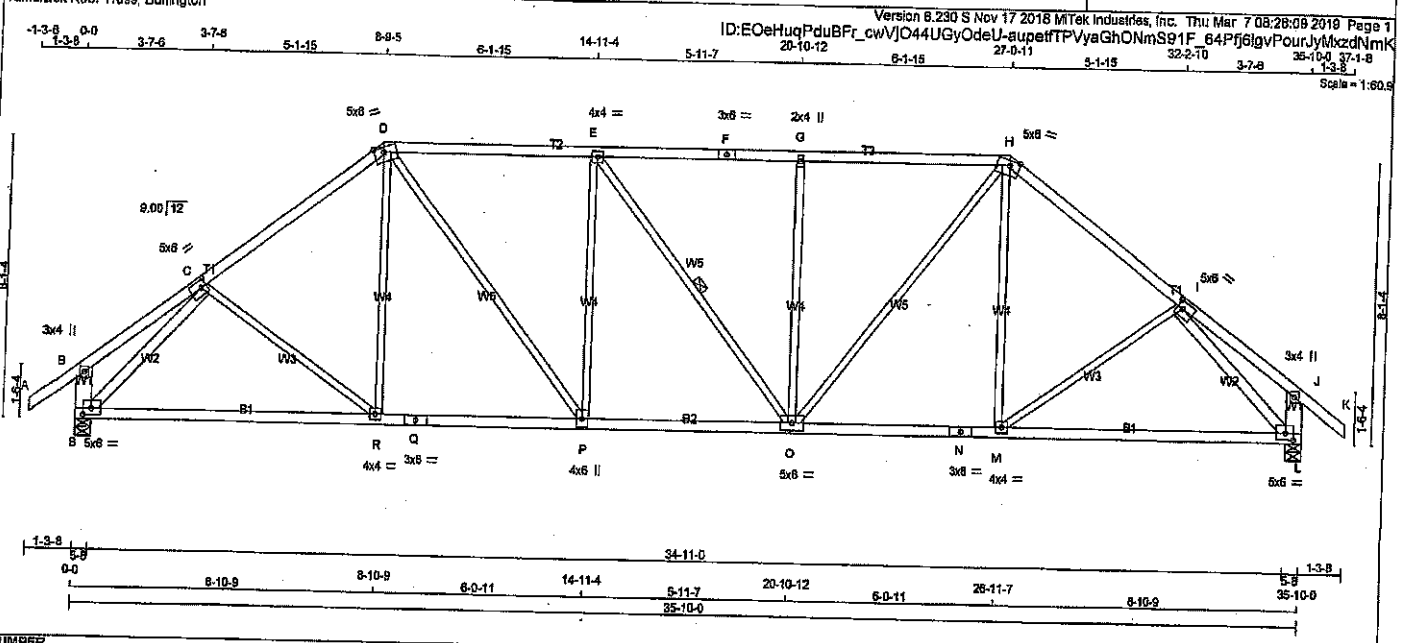

TOTAL WEIGHT = 2 X 164 = 328 lb [M]

LUMBER
N. L. G. A. RULES

CHORDS	SIZE		LUMBER	DESCR.
A - D	2x4	DRY	No.2	SPF
D - F	2x4	DRY	No.2	SPF
F - H	2x4	DRY	No.2	SPF
H - K	2x4	DRY	No.2	SPF
S - B	2x6	DRY	No.2	SPF
L - J	2x6	DRY	No.2	SPF
S - Q	2x4	DRY	No.2	SPF
Q - N	2x4	DRY	No.2	SPF
N - L	2x4	DRY	No.2	SPF
ALL WEBS EXCEPT	2x3	DRY	No.2	SPF
S - C	2x4	DRY	No.2	SPF
I - L	2x4	DRY	No.2	SPF

DRY: SEASONED LUMBER.

PLATES (table is in inches)

JT	TYPE	PLATES	W	LEN	Y	X
B	TMV+p	MT20	3.0	4.0		
C	TMWW-t	MT20	5.0	6.0	2.50	2.00
D	TTWW-m	MT20	5.0	8.0	Edge	3.50
E	TMWW-t	MT20	4.0	4.0		
F	TS-t	MT20	3.0	6.0		
G	TMW+w	MT20	2.0	4.0		
H	TTWW-m	MT20	5.0	8.0	Edge	3.50
I	TMWW-t	MT20	5.0	6.0	2.50	2.00
J	TMV+p	MT20	3.0	4.0		
L	BMVW1-t	MT20	5.0	6.0	2.25	2.75
M	BMWW-t	MT20	4.0	4.0		
N	BS-t	MT20	3.0	6.0		
O	BMWWW-t	MT20	5.0	8.0		
P	BMWW+t	MT20	4.0	6.0		
Q	BS-t	MT20	3.0	8.0		
R	BMWW-t	MT20	4.0	4.0		
S	BMVW1-t	MT20	5.0	6.0	2.25	2.75

Edge - INDICATES REFERENCE CORNER OF PLATE TOUCHES EDGE OF CHORD.

DIMENSIONS, SUPPORTS AND LOADINGS SPECIFIED BY FABRICATOR TO BE VERIFIED BY BUILDING DESIGNER

BEARINGS

JT	FACTORED GROSS REACTION VERT	HORZ	MAXIMUM FACTORED GROSS REACTION DOWN	HORZ	UPLIFT	INPUT BRG IN-SX	REQRD BRG IN-SX
S	2660	0	2660	0	0	5-8	5-8
L	2660	0	2660	0	0	5-8	5-8

UNFACTORED REACTIONS

JT	1ST LCASE COMBINED	MAX./MIN. COMPONENT REACTIONS SNOW	LIVE	PERM.LIVE	WIND	DEAD	SOIL
S	1979	1120 / 0	378 / 0	0 / 0	0 / 0	482 / 0	0 / 0
L	1979	1120 / 0	378 / 0	0 / 0	0 / 0	482 / 0	0 / 0

BEARING MATERIAL TO BE SPF NO.2 OR BETTER AT JOINT(S) S, L

BRACING
TOP CHORD TO BE SHEATHED OR MAX. PURLIN SPACING = 3.33 FT.
MAX. UNBRACED BOTTOM CHORD LENGTH = 10.00 FT OR RIGID CEILING DIRECTLY APPLIED.

ALL PITCH BREAKS AND PERIMETER CORNER JOINTS MUST BE LATERALLY RESTRAINED.

1 LATERAL BRACE(S) AT 1/2 LENGTH OF E-O.

END VERTICAL(S) MUST BE SHEATHED OR HAVE BRACES AS INDICATED IN THE MAX. UNBRACED LENGTH COLUMN OF THE TABLE BELOW

LOADING
TOTAL LOAD CASES: (4)

CHORDS

MEMB. FR-TO	MAX. FACTORED FORCE (LBS)	FACTORED VERT. LOAD LC1 (PLF) FROM	TO	MAX CSI (LC)	MAX. UNBRAC LENGTH
A- B	0 / 42	-102.1	-102.1	0.14 (1)	10.00
B- C	0 / 43	-102.1	-102.1	0.35 (1)	10.00
C- D	-2752 / 0	-102.1	-102.1	0.59 (1)	3.70
D- E	-2864 / 0	-102.1	-102.1	0.78 (1)	3.33
E- F	-2863 / 0	-102.1	-102.1	0.77 (1)	3.33
F- G	-2863 / 0	-102.1	-102.1	0.77 (1)	3.33
G- H	-2863 / 0	-102.1	-102.1	0.77 (1)	3.34
H- I	-2752 / 0	-102.1	-102.1	0.59 (1)	3.70
I- J	0 / 43	-102.1	-102.1	0.35 (1)	10.00
J- K	0 / 42	-102.1	-102.1	0.14 (1)	10.00
S- B	-249 / 0	0.0	0.0	0.02 (1)	7.81
L- J	-249 / 0	0.0	0.0	0.02 (1)	7.81
S- R	0 / 2083	-38.5	-38.5	0.76 (2)	10.00
R- Q	0 / 2179	-38.5	-38.5	0.78 (2)	10.00
Q- P	0 / 2179	-38.5	-38.5	0.78 (2)	10.00
P- O	0 / 2864	-38.5	-38.5	0.60 (1)	10.00
O- N	0 / 2179	-38.5	-38.5	0.78 (2)	10.00
N- M	0 / 2179	-38.5	-38.5	0.78 (2)	10.00
M- L	0 / 2083	-38.5	-38.5	0.76 (2)	10.00

WEBS

MEMB. FR-TO	MAX. FACTORED FORCE (LBS)	MAX CSI (LC)
R- D	0 / 352	0.08 (3)
M- H	0 / 353	0.08 (3)
P- E	-671 / 0	0.85 (1)
O- G	-670 / 0	0.85 (1)
C- R	0 / 179	0.04 (3)
D- P	0 / 1109	0.25 (1)
E- O	-2 / 0	0.00 (1)
O- H	0 / 1106	0.25 (1)
M- I	0 / 179	0.04 (3)
S- C	-3082 / 0	0.91 (1)
I- L	-3082 / 0	0.91 (1)

LICENSED PROFESSIONAL ENGINEER
09/07/19
H. J. G. ALVES
100009979
PROVINCE OF ONTARIO

DESIGN CRITERIA

SPECIFIED LOADS:

TOP CH.	LL =	29.0	PSF
	DL =	6.0	PSF
BOT CH.	LL =	10.5	PSF
	DL =	7.0	PSF
TOTAL LOAD	=	52.5	PSF

SPACING = 24.0 IN. O/C

LOADING IN FLAT SECTION BASED ON A SLOPE OF 6.00/12

THIS TRUSS IS DESIGNED FOR RESIDENTIAL OR SMALL BUILDING REQUIREMENTS OF PART 9, NBCC 2010, NBCC 2015

THIS DESIGN COMPLIES WITH:
- PART 9 OF BCBC 2018 , OBC 2012
- CSA 086-09, CSA 086-14
- TPIC 2011, TPIC 2014

(55 % OF 37.6 P.S.F. G.S.L. PLUS 8.4 P.S.F. RAIN LOAD) EQUALS 29.0 P.S.F. SPECIFIED ROOF LIVE LOAD

ALLOWABLE DEFL.(LL)= L/360 (1.19")
CALCULATED VERT. DEFL.(LL) = L/ 999 (0.26")
ALLOWABLE DEFL.(TL)= L/360 (1.19")
CALCULATED VERT. DEFL.(TL) = L/ 981 (0.44")

CSI: TC=0.78/1.00 (D-E:1) , BC=0.78/1.00 (M-O:2) , WB=0.91/1.00 (I-L:1) , SSI=0.29/1.00 (D-E:1)

DOL LUMBER=1.00 NAIL=1.00 LS BEND=1.10 COMP=1.10 SHEAR=1.10 TENS= 1.10

COMPANION LIVE LOAD FACTOR = 1.00

AUTOSOLVE HEELS OFF

TRUSS PLATE MANUFACTURER IS NOT RESPONSIBLE FOR QUALITY CONTROL IN THE TRUSS MANUFACTURING PLANT .

NAIL VALUES

PLATE	GRIP(DRY) (PSI) MAX	MIN	SHEAR (PLI) MAX	MIN	SECTION (PLI) MAX	MIN
MT20	618	354	1667	788	1987	1656

PLATE PLACEMENT TOL. = 0.250 Inches

PLATE ROTATION TOL. = 5.0 Deg.

JSI GRIP= 0.90 (I) (INPUT = 0.90)
JSI METAL= 0.99 (Q) (INPUT = 1.00)

DWG NO. TAM T19005140
STRUCTURAL
COMPONENT ONLY

JOB NAME	TRUSS NAME	QUANTITY	PLY	JOB DESC. GREENPARK HOMES	DRWG NO.
401703	T6	5	1	TRUSS DESC.	

Tamarack Roof Truss, Burlington

Version 6.230 S Nov 17 2018 MiTek Industries, Inc. Thu Mar 7 08:08:26 2019 Page 1
ID:EOeHuqPduBFr_cwVjO44UGyOdeU-jlqPa89L5TX6GbRPfClrXeal1rQ9?zbgsHErL0zdO2p

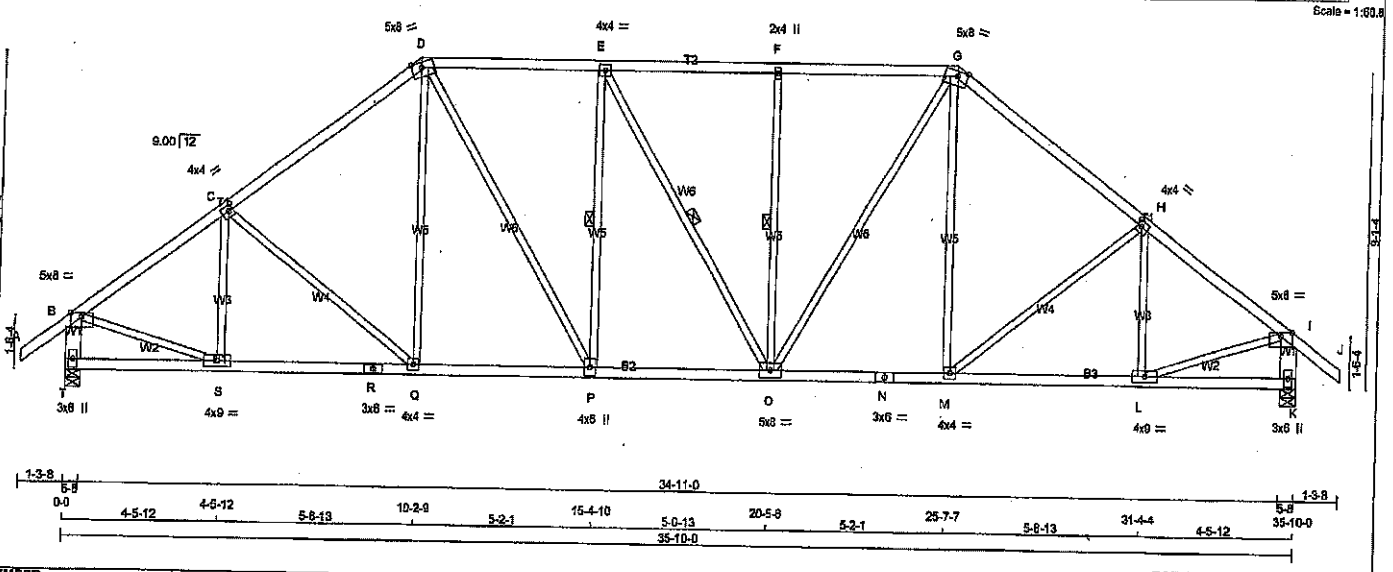

TOTAL WEIGHT = 5 X 173 = 864 lb
[M][F]

LUMBER
N. L. G. A. RULES

CHORDS	SIZE		LUMBER	DESCR.
A - D	2x4	DRY	No.2	SPF
D - G	2x4	DRY	No.2	SPF
G - J	2x4	DRY	No.2	SPF
T - B	2x6	DRY	No.2	SPF
K - I	2x6	DRY	No.2	SPF
T - R	2x4	DRY	No.2	SPF
R - N	2x4	DRY	No.2	SPF
N - K	2x4	DRY	No.2	SPF
ALL WEBS EXCEPT	2x3	DRY	No.2	SPF

DRY: SEASONED LUMBER.

PLATES (table is in inches)

JT	TYPE	PLATES	W	LEN	Y	X
B	TMWW-p	MT20	5.0	6.0	Edge	
C	TMWW-t	MT20	4.0	4.0	2.00	1.50
D	TTWW-m	MT20	5.0	8.0	Edge	3.50
E	TMWW-t	MT20	4.0	4.0		
F	TMW+w	MT20	2.0	4.0		
G	TTWW-m	MT20	5.0	8.0	Edge	3.50
H	TMWW-t	MT20	4.0	4.0	2.00	1.50
I	TMWW-p	MT20	5.0	8.0	Edge	
K	BMV1+p	MT20	3.0	6.0		
L	BMWW-t	MT20	4.0	9.0		
M	BMWW-t	MT20	4.0	4.0		
N	BS-t	MT20	3.0	6.0		
O	BMWWW-t	MT20	5.0	8.0		
P	BMWW+t	MT20	4.0	6.0		
Q	BMWW-t	MT20	4.0	4.0		
R	BS-t	MT20	3.0	6.0		
S	BMWW-t	MT20	4.0	9.0		
T	BMV1+p	MT20	3.0	6.0		

Edge - INDICATES REFERENCE CORNER OF PLATE TOUCHES EDGE OF CHORD.

DIMENSIONS, SUPPORTS AND LOADINGS SPECIFIED BY FABRICATOR TO BE VERIFIED BY BUILDING DESIGNER

BEARINGS

JT	FACTORED GROSS REACTION VERT	HORZ	MAXIMUM FACTORED GROSS REACTION DOWN	HORZ	UPLIFT	INPUT BRG IN-SX	REQRD BRG IN-SX
T	2660	0	2660	0	0	5-8	5-8
K	2660	0	2660	0	0	5-8	5-8

UNFACTORED REACTIONS

JT	1ST LCASE COMBINED	MAX./MIN. COMPONENT REACTIONS SNOW	LIVE	PERM.LIVE	WIND	DEAD	SOIL
T	1979	1120 / 0	376 / 0	0 / 0	0 / 0	482 / 0	0 / 0
K	1979	1120 / 0	376 / 0	0 / 0	0 / 0	482 / 0	0 / 0

BEARING MATERIAL TO BE SPF NO.2 OR BETTER AT JOINT(S) T, K

BRACING
TOP CHORD TO BE SHEATHED OR MAX. PURLIN SPACING = 3.75 FT.
MAX. UNBRACED BOTTOM CHORD LENGTH = 10.00 FT OR RIGID CEILING DIRECTLY APPLIED.

ALL PITCH BREAKS AND PERIMETER CORNER JOINTS MUST BE LATERALLY RESTRAINED.

1 LATERAL BRACE(S) AT 1/ 2 LENGTH OF E-P, F-O, E-O.

END VERTICAL(S) MUST BE SHEATHED OR HAVE BRACES AS INDICATED IN THE MAX. UNBRACED LENGTH COLUMN OF THE TABLE BELOW

LOADING
TOTAL LOAD CASES: (4)

CHORDS

MEMB. FR-TO	MAX. FACTORED FORCE (LBS)	FACTORED VERT. LOAD LC1 (PLF) FROM	TO	MAX CSI (LC)	MAX. UNBRAC LENGTH
A-B	0 / 42	-102.1	-102.1	0.14 (1)	10.00
B-C	-2778 / 0	-102.1	-102.1	0.46 (1)	3.75
C-D	-2648 / 0	-102.1	-102.1	0.53 (1)	3.79
D-E	-2547 / 0	-102.1	-102.1	0.40 (1)	3.98
E-F	-2546 / 0	-102.1	-102.1	0.38 (1)	3.99
F-G	-2546 / 0	-102.1	-102.1	0.40 (1)	3.96
G-H	-2648 / 0	-102.1	-102.1	0.54 (1)	3.79
H-I	-2778 / 0	-102.1	-102.1	0.46 (1)	3.75
I-J	0 / 42	-102.1	-102.1	0.14 (1)	10.00
T-B	-2592 / 0	0.0	0.0	0.18 (1)	6.45
K-I	-2592 / 0	0.0	0.0	0.18 (1)	6.45
T-S	0 / 0	-38.5	-38.5	0.17 (3)	10.00
S-R	0 / 2257	-38.5	-38.5	0.50 (1)	10.00
R-Q	0 / 2257	-38.5	-38.5	0.50 (1)	10.00
Q-P	0 / 2092	-38.5	-38.5	0.47 (1)	10.00
P-O	0 / 2548	-38.5	-38.5	0.51 (1)	10.00
O-N	0 / 2092	-38.5	-38.5	0.47 (1)	10.00
N-M	0 / 2092	-38.5	-38.5	0.47 (1)	10.00
M-L	0 / 2257	-38.5	-38.5	0.50 (1)	10.00
L-K	0 / 0	-38.5	-38.5	0.17 (3)	10.00

WEBS

MEMB. FR-TO	MAX. FACTORED FORCE (LBS)	MAX CSI (LC)
Q-D	0 / 385	0.09 (2)
M-G	0 / 387	0.09 (2)
S-C	-390 / 5	0.14 (1)
P-E	-570 / 0	0.31 (1)
O-F	-569 / 0	0.31 (1)
L-H	-390 / 5	0.14 (1)
C-Q	-216 / 0	0.23 (1)
D-P	0 / 891	0.20 (1)
E-O	-3 / 0	0.00 (1)
G-O	0 / 887	0.20 (1)
M-H	-215 / 0	0.23 (1)
B-S	0 / 2335	0.53 (1)
L-I	0 / 2335	0.53 (1)

LICENSED PROFESSIONAL ENGINEER
03/07/19
H. J. G ALVES
100000027
PROVINCE OF ONTARIO

DESIGN CRITERIA

SPECIFIED LOADS:

TOP CH.	LL	=	29.0	PSF
	DL	=	6.0	PSF
BOT CH.	LL	=	10.5	PSF
	DL	=	7.0	PSF
TOTAL LOAD		=	52.5	PSF

SPACING = 24.0 IN. C/C

LOADING IN FLAT SECTION BASED ON A SLOPE OF 6.00/12

THIS TRUSS IS DESIGNED FOR RESIDENTIAL OR SMALL BUILDING REQUIREMENTS OF PART 9, NBCC 2010, NBCC 2015

THIS DESIGN COMPLIES WITH:
- PART 9 OF BCBC 2018 , OBC 2012
- CSA 086-09, CSA 086-14
- TPIC 2011, TPIC 2014

(55 % OF 37.6 P.S.F. G.S.L. PLUS 6.4 P.S.F. RAIN LOAD) EQUALS 29.0 P.S.F. SPECIFIED ROOF LIVE LOAD

ALLOWABLE DEFL.(LL)= L/360 (1.19")
CALCULATED VERT. DEFL.(LL) = L/ 999 (0.13")
ALLOWABLE DEFL.(TL)= L/360 (1.19")
CALCULATED VERT. DEFL.(TL) = L/ 999 (0.22")

CSI: TC=0.54/1.00 (G-H:1) , BC=0.51/1.00 (O-P:1) , WB=0.53/1.00 (B-S:1) , SSI=0.25/1.00 (D-E:1)

DOL LUMBER=1.00 NAIL=1.00 LS BEND=1.10 COMP=1.10 SHEAR=1.10 TENS= 1.10

COMPANION LIVE LOAD FACTOR = 1.00

TRUSS PLATE MANUFACTURER IS NOT RESPONSIBLE FOR QUALITY CONTROL IN THE TRUSS MANUFACTURING PLANT .

NAIL VALUES

PLATE	GRIP(DRY) (PSI) MAX	MIN	SHEAR (PLI) MAX	MIN	SECTION (PLI) MAX	MIN
MT20	518	354	1667	788	1967	1656

PLATE PLACEMENT TOL. = 0.250 Inches

PLATE ROTATION TOL. = 5.0 Deg.

JSI GRIP= 0.88 (B) (INPUT = 0.90)
JSI METAL= 0.68 (R) (INPUT = 1.00)

DWG NO. TAM T1905741
STRUCTURAL
COMPONENT ONLY

JOB NAME	TRUSS NAME	QUANTITY	PLY	JOB DESC. GREENPARK HOMES	DRWG NO.
401703	T7	2	1	TRUSS DESC.	

Tamarack Roof Truss, Burlington

Version 8.230 S Nov 17 2018 MiTek Industries, Inc. Thu Mar 7 08:08:27 2019 Page 1

ID:EOeHuqPduBFr_cwVjO44UGyOdeU-BUOooUAzsnfzul0bDwp44s7RxFmCkQFp5x_PtSzdO2o

Scale: 3/16"=1'

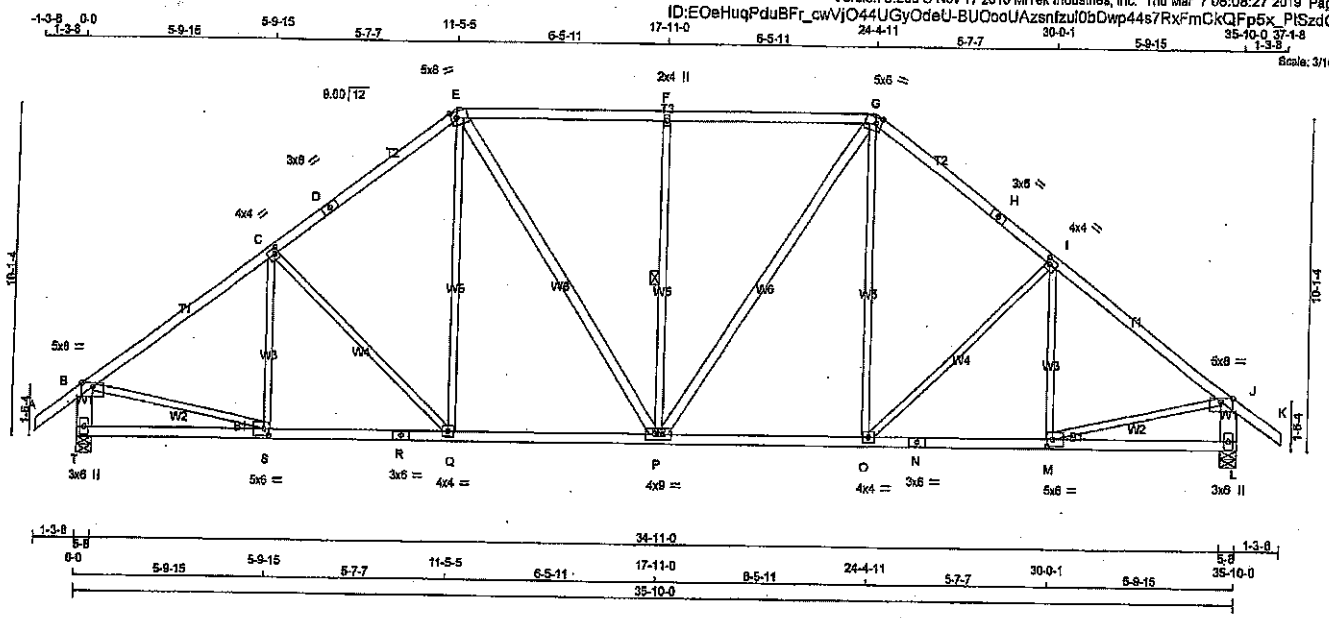

TOTAL WEIGHT = 2 X 176 = 352 lb

[M][F]

LUMBER

N. L. G. A. RULES

CHORDS	SIZE		LUMBER	DESCR.
A - D	2x4	DRY	No.2	SPF
D - E	2x4	DRY	No.2	SPF
E - G	2x4	DRY	No.2	SPF
G - H	2x4	DRY	No.2	SPF
H - K	2x4	DRY	No.2	SPF
T - B	2x6	DRY	No.2	SPF
L - J	2x6	DRY	No.2	SPF
T - R	2x4	DRY	No.2	SPF
R - N	2x4	DRY	No.2	SPF
N - L	2x4	DRY	No.2	SPF
ALL WEBS EXCEPT	2x3	DRY	No.2	SPF
E - P	2x4	DRY	No.2	SPF
P - G	2x4	DRY	No.2	SPF

DRY: SEASONED LUMBER.

PLATES (table is in inches)

JT	TYPE	PLATES	W	LEN	Y	X
B	TMWW-p	MT20	6.0	8.0	Edge	
C	TMWW-t	MT20	4.0	4.0	2.00	1.50
D	TS-t	MT20	3.0	6.0		
E	TTWW-m	MT20	5.0	6.0	Edge	2.00
F	TMW+w	MT20	2.0	4.0		
G	TTWW-m	MT20	5.0	6.0	Edge	2.00
H	TS-t	MT20	3.0	6.0		
I	TMWW-t	MT20	4.0	4.0	2.00	1.50
J	TMW-p	MT20	6.0	8.0	Edge	
L	BMV1+p	MT20	3.0	6.0		
M	BMWW-t	MT20	5.0	6.0	2.50	2.00
N	BS-t	MT20	3.0	6.0		
O	BMWW-t	MT20	4.0	4.0		
P	BMWWW-t	MT20	4.0	9.0		
Q	BMWW-t	MT20	4.0	4.0		
R	BS-t	MT20	3.0	6.0		
S	BMWW-t	MT20	5.0	6.0	2.50	2.00
T	BMV1+p	MT20	3.0	6.0		

Edge - INDICATES REFERENCE CORNER OF PLATE TOUCHES EDGE OF CHORD.

DIMENSIONS, SUPPORTS AND LOADINGS SPECIFIED BY FABRICATOR TO BE VERIFIED BY BUILDING DESIGNER

BEARINGS

JT	FACTORED GROSS REACTION VERT	HORZ	MAXIMUM FACTORED GROSS REACTION DOWN	HORZ	UPLIFT	INPUT BRG IN-SX	REQRD BRG IN-SX
T	2660	0	2660	0	0	5-8	5-8
L	2660	0	2660	0	0	5-8	5-8

UNFACTORED REACTIONS

JT	1ST LCASE COMBINED	MAX./MIN. COMPONENT REACTIONS SNOW	LIVE	PERM.LIVE	WIND	DEAD	SOIL
T	1979	1120 / 0	376 / 0	0 / 0	0 / 0	482 / 0	0 / 0
L	1979	1120 / 0	376 / 0	0 / 0	0 / 0	482 / 0	0 / 0

BEARING MATERIAL TO BE SPF NO.2 OR BETTER AT JOINT(S) T, L

BRACING

TOP CHORD TO BE SHEATHED OR MAX. PURLIN SPACING = 3.56 FT.
MAX. UNBRACED BOTTOM CHORD LENGTH = 10.00 FT OR RIGID CEILING DIRECTLY APPLIED.

ALL PITCH BREAKS AND PERIMETER CORNER JOINTS MUST BE LATERALLY RESTRAINED.

1 LATERAL BRACE(S) AT 1/ 2 LENGTH OF F-P.

END VERTICAL(S) MUST BE SHEATHED OR HAVE BRACES AS INDICATED IN THE MAX. UNBRACED LENGTH COLUMN OF THE TABLE BELOW

LOADING

TOTAL LOAD CASES: (4)

CHORDS

MEMB. FR-TO	MAX. FACTORED FORCE (LBS)	FACTORED VERT. LOAD (PLF) FROM	TO	LC1	MAX CSI (LC)	MAX. UNBRAC LENGTH
A- B	0 / 42	-102.1	-102.1	0.14 (1)	10.00	
B- C	-2836 / 0	-102.1	-102.1	0.63 (1)	3.56	
C- D	-2560 / 0	-102.1	-102.1	0.57 (1)	3.77	
D- E	-2560 / 0	-102.1	-102.1	0.57 (1)	3.77	
E- F	-2366 / 0	-102.1	-102.1	0.65 (1)	3.70	
F- G	-2366 / 0	-102.1	-102.1	0.65 (1)	3.70	
G- H	-2560 / 0	-102.1	-102.1	0.57 (1)	3.77	
H- I	-2560 / 0	-102.1	-102.1	0.57 (1)	3.77	
I- J	-2836 / 0	-102.1	-102.1	0.63 (1)	3.56	
J- K	0 / 42	-102.1	-102.1	0.14 (1)	10.00	
T- B	-2567 / 0	0.0	0.0	0.17 (1)	6.48	
L- J	-2567 / 0	0.0	0.0	0.17 (1)	6.48	
T- S	0 / 0	-38.5	-38.5	0.23 (3)	10.00	
S- R	0 / 2302	-38.5	-38.5	0.53 (2)	10.00	
R- Q	0 / 2302	-38.5	-38.5	0.53 (2)	10.00	
Q- P	0 / 2016	-38.5	-38.5	0.52 (2)	10.00	
P- O	0 / 2016	-38.5	-38.5	0.52 (2)	10.00	
O- N	0 / 2302	-38.5	-38.5	0.53 (2)	10.00	
N- M	0 / 2302	-38.5	-38.5	0.53 (2)	10.00	
	0 / 0	-38.5	-38.5	0.23 (3)	10.00	

WEBS

MEMB. FR-TO	MAX. FACTORED FORCE (LBS)	MAX CSI (LC)
S- C	-229 / 100	0.12 (1)
C- Q	-407 / 0	0.54 (1)
Q- E	0 / 529	0.12 (2)
E- P	0 / 636	0.10 (1)
P- F	-808 / 0	0.56 (1)
P- G	0 / 636	0.10 (1)
Q- G	0 / 529	0.12 (2)
Q- I	-407 / 0	0.54 (1)
M- I	-229 / 100	0.12 (1)
B- S	0 / 2350	0.53 (1)
M- J	0 / 2350	0.53 (1)

DESIGN CRITERIA

SPECIFIED LOADS:

TOP CH.	LL =	29.0	PSF
	DL =	6.0	PSF
BOT CH.	LL =	10.5	PSF
	DL =	7.0	PSF
TOTAL LOAD	=	52.5	PSF

SPACING = 24.0 IN. C/C

LOADING IN FLAT SECTION BASED ON A SLOPE OF 6.00/12

THIS TRUSS IS DESIGNED FOR RESIDENTIAL OR SMALL BUILDING REQUIREMENTS OF PART 9, NBCC 2010, NBCC 2015

THIS DESIGN COMPLIES WITH:
- PART 9 OF BCBC 2018 , OBC 2012
- CSA 086-09, CSA 086-14
- TPIC 2011, TPIC 2014

(55 % OF 37.6 P.S.F. G.S.L. PLUS 8.4 P.S.F. RAIN LOAD) EQUALS 29.0 P.S.F. SPECIFIED ROOF LIVE LOAD

ALLOWABLE DEFL.(LL)= L/360 (1.19")
CALCULATED VERT. DEFL.(LL) = L/ 999 (0.12")
ALLOWABLE DEFL.(TL)= L/360 (1.19")
CALCULATED VERT. DEFL.(TL) = L/ 999 (0.21")

CSI: TC=0.65/1.00 (F-G:1) , BC=0.53/1.00 (Q-S:2) , WB=0.56/1.00 (F-P:1) , SSI=0.32/1.00 (F-G:1)

DOL LUMBER=1.00 NAIL=1.00 LS BEND=1.10 COMP=1.10 SHEAR=1.10 TENS= 1.10

COMPANION LIVE LOAD FACTOR = 1.00

TRUSS PLATE MANUFACTURER IS NOT RESPONSIBLE FOR QUALITY CONTROL IN THE TRUSS MANUFACTURING PLANT .

NAIL VALUES

PLATE	GRIP(DRY) (PSI) MAX	MIN	SHEAR (PLI) MAX	MIN	SECTION (PLI) MAX	MIN
MT20	618	354	1667	768	1987	1656

PLATE PLACEMENT TOL. = 0.250 Inches

PLATE ROTATION TOL. = 5.0 Deg.

LSI GRIP= 0.90 (G) (INPUT = 0.90)
LSI METAL= 0.69 (R) (INPUT = 1.00)

RECEIVED
JUN 10 2019
TOWN OF CALEDON
BUILDING SECTION
FILE NO.

PROFESSIONAL ENGINEER
02/07/19
M. J. G. ALVES
100009024
PROVINCE OF ONTARIO

DWG NO. TAM 7905742
STRUCTURAL
COMPONENT ONLY

JOB NAME	TRUSS NAME	QUANTITY	PLY	JOB DESC. GREENPARK HOMES	DRWG NO.
401706	T8	2	1	TRUSS DESC.	

Tamarack Roof Truss, Burlington

Version 8.230 S Nov 17 2018 MiTek Industries, Inc. Thu Mar 7 08:29:26 2019 Page 1
ID:guB8GiR_dNo9QvDKo3harvyNxSw-qlzl1_PiMcGKQDmZTqvJbLmgRmUeDI07bJSXa_zdNj7

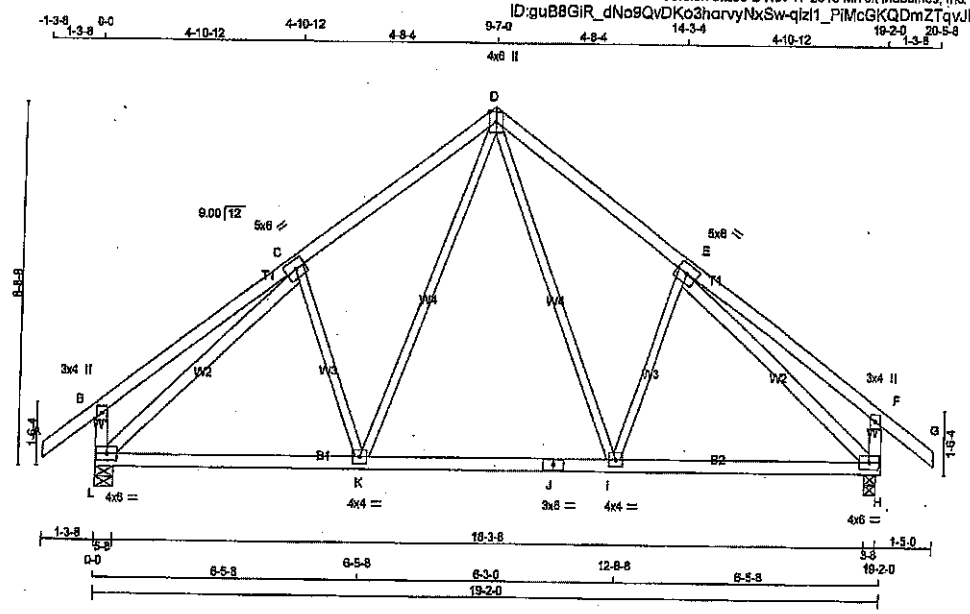

TOTAL WEIGHT = 2 X 92 = 185 lb

LUMBER
N. L. G. A. RULES

CHORDS	SIZE		LUMBER	DESCR.
A - D	2x4	DRY	No.2	SPF
D - G	2x4	DRY	No.2	SPF
L - B	2x4	DRY	No.2	SPF
H - F	2x4	DRY	No.2	SPF
L - J	2x4	DRY	No.2	SPF
J - H	2x4	DRY	No.2	SPF
ALL WEBS EXCEPT	2x3	DRY	No.2	SPF
L - C	2x4	DRY	No.2	SPF
E - H	2x4	DRY	No.2	SPF

DRY: SEASONED LUMBER.

PLATES (table is in inches)

JT	TYPE	PLATES	W	LEN	Y	X
B	TMV+p	MT20	3.0	4.0		
C	TMWW-t	MT20	5.0	6.0		
D	TTWW+p	MT20	4.0	6.0	Edge	
E	TMWW-t	MT20	5.0	6.0		
F	TMV+p	MT20	3.0	4.0		
H	BMWW1-t	MT20	4.0	6.0		
I	BMWW-t	MT20	4.0	4.0		
J	BS-t	MT20	3.0	6.0		
K	BMWW-t	MT20	4.0	4.0		
L	BMWW1-t	MT20	4.0	6.0		

Edge - INDICATES REFERENCE CORNER OF PLATE TOUCHES EDGE OF CHORD.

DIMENSIONS, SUPPORTS AND LOADINGS SPECIFIED BY FABRICATOR TO BE VERIFIED BY BUILDING DESIGNER

BEARINGS

JT	FACTORED GROSS REACTION VERT	HORZ	MAXIMUM FACTORED GROSS REACTION DOWN	HORZ	UPLIFT	INPUT BRG IN-SX	REQRD BRG IN-SX
L	1488	0	1488	0	0	5-8	5-8
H	1488	0	1488	0	0	3-8	3-8

UNFACTORED REACTIONS

JT	1ST LCASE COMBINED	MAX./MIN. COMPONENT REACTIONS SNOW	LIVE	PERM.LIVE	WIND	DEAD	SOIL
L	1104	637 / 0	201 / 0	0 / 0	0 / 0	286 / 0	0 / 0
H	1104	637 / 0	201 / 0	0 / 0	0 / 0	286 / 0	0 / 0

BEARING MATERIAL TO BE SPF NO.2 OR BETTER AT JOINT(S) L, H

BRACING
TOP CHORD TO BE SHEATHED OR MAX. PURLIN SPACING = 5.41 FT.
MAX. UNBRACED BOTTOM CHORD LENGTH = 10.00 FT OR RIGID CEILING DIRECTLY APPLIED.

ALL PITCH BREAKS AND PERIMETER CORNER JOINTS MUST BE LATERALLY RESTRAINED.

LOADING
TOTAL LOAD CASES: (4)

CHORDS

MEMB. FR-TO	MAX. FACTORED FORCE (LBS)	FACTORED VERT. LOAD (PLF) FROM	TO	LC1	MAX CSI (LC)	MAX. UNBRAC LENGTH
A- B	0 / 42	-102.1	-102.1	0.14 (1)	10.00	
B- C	0 / 35	-102.1	-102.1	0.38 (1)	10.00	
C- D	-1235 / 0	-102.1	-102.1	0.32 (1)	5.41	
D- E	-1235 / 0	-102.1	-102.1	0.32 (1)	5.41	
E- F	0 / 35	-102.1	-102.1	0.38 (1)	10.00	
F- G	0 / 42	-102.1	-102.1	0.14 (1)	10.00	
L- B	-324 / 0	0.0	0.0	0.03 (1)	7.81	
H- F	-324 / 0	0.0	0.0	0.03 (1)	7.81	
L- K	0 / 1059	-38.5	-38.5	0.41 (2)	10.00	
K- J	0 / 766	-38.5	-38.5	0.37 (2)	10.00	
J- I	0 / 766	-38.5	-38.5	0.37 (2)	10.00	
I- H	0 / 1059	-38.5	-38.5	0.41 (2)	10.00	

WEBS

MEMB. FR-TO	MAX. FACTORED FORCE (LBS)	MAX CSI (LC)
D- I	0 / 564	0.13 (1)
I- E	-262 / 23	0.12 (1)
K- D	0 / 564	0.13 (1)
C- K	-262 / 23	0.12 (1)
L- C	-1500 / 0	0.88 (1)
E- H	-1500 / 0	0.88 (1)

LICENSED PROFESSIONAL ENGINEER
03/07/19
H. J. G. ALVES
100009084
PROVINCE OF ONTARIO

DESIGN CRITERIA

SPECIFIED LOADS:

TOP CH.	LL	=	29.0	PSF
	DL	=	6.0	PSF
BOT CH.	LL	=	10.5	PSF
	DL	=	7.0	PSF
TOTAL LOAD		=	52.5	PSF

SPACING = 24.0 IN. C/C

THIS TRUSS IS DESIGNED FOR RESIDENTIAL OR SMALL BUILDING REQUIREMENTS OF PART 9, NBCC 2010, NBCC 2015

THIS DESIGN COMPLIES WITH:
- PART 9 OF BCBC 2018 , OBC 2012
- CSA 086-09, CSA 086-14
- TPIC 2011, TPIC 2014

(55 % OF 37.6 P.S.F. G.S.L. PLUS 6.4 P.S.F. RAIN LOAD) EQUALS 29.0 P.S.F. SPECIFIED ROOF LIVE LOAD

ALLOWABLE DEFL.(LL)= L/360 (0.64")
CALCULATED VERT. DEFL.(LL) = L/ 999 (0.08")
ALLOWABLE DEFL.(TL)= L/360 (0.64")
CALCULATED VERT. DEFL.(TL) = L/ 999 (0.13")

CSI: TC=0.38/1.00 (B-C:1) , BC=0.41/1.00 (K-L:2) , WB=0.88/1.00 (E-H:1) , SSI=0.18/1.00 (D-E:1)

DOL LUMBER=1.00 NAIL=1.00 LS BEND=1.10 COMP=1.10 SHEAR=1.10 TENS= 1.10

COMPANION LIVE LOAD FACTOR = 1.00

AUTOSOLVE HEELS OFF

TRUSS PLATE MANUFACTURER IS NOT RESPONSIBLE FOR QUALITY CONTROL IN THE TRUSS MANUFACTURING PLANT .

NAIL VALUES

PLATE	GRIP(DRY) (PSI) MAX	MIN	SHEAR (PLI) MAX	MIN	SECTION (PLI) MAX	MIN
MT20	618	354	1667	768	1987	1658

PLATE PLACEMENT TOL. = 0.250 Inches

PLATE ROTATION TOL. = 5.0 Deg.

JSI GRIP= 0.67 (I) (INPUT = 0.90)
JSI METAL= 0.39 (E) (INPUT = 1.00)

DWG NO. TAM 7905143
STRUCTURAL
COMPONENT ONLY

JOB NAME	TRUSS NAME	QUANTITY	PLY	JOB DESC. GREENPARK HOMES	DRWG NO.
401703	PB1	2	1	TRUSS DESC.	

Tamarack Roof Truss, Burlington

Version 8.230 S Nov 17 2018 MiTek Industries, Inc. Thu Mar 7 08:06:36 2019 Page 1
ID:F_p41RssbN_g3ApPmZicDwyNwB2-x7BqVXqL?ggj3h1GD8K24S1W0VzsDK4UZAb1UOzdO4X

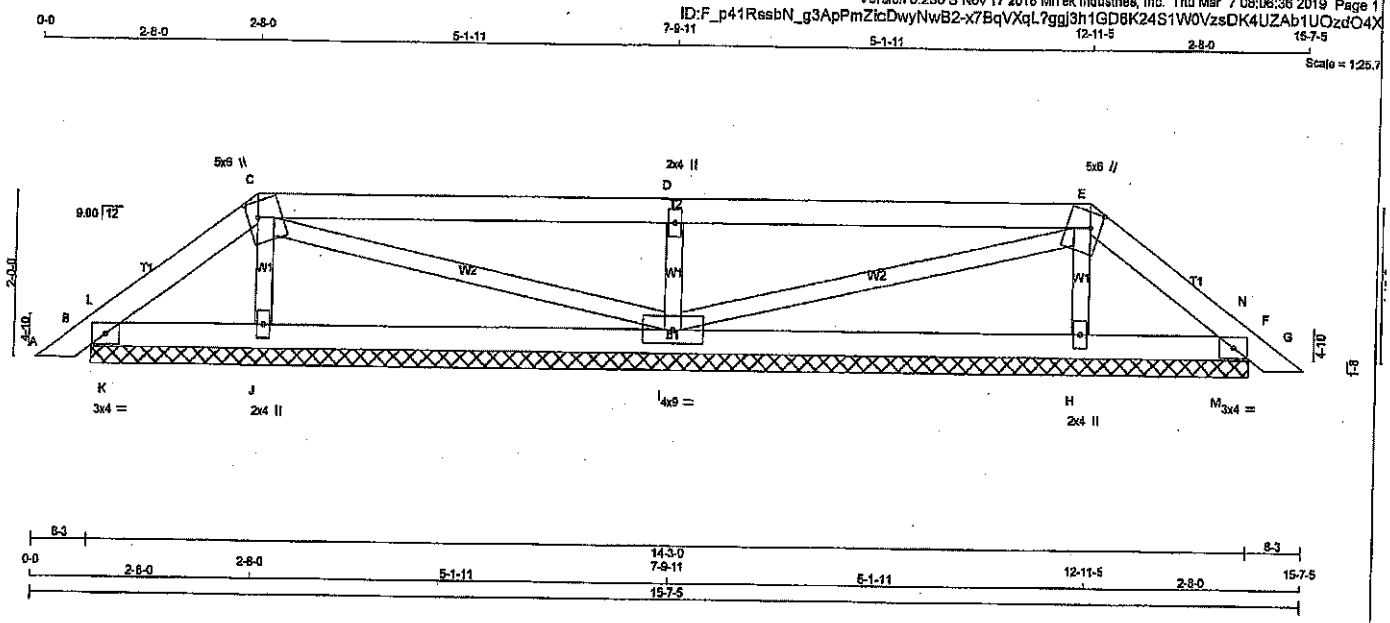

TOTAL WEIGHT = 2 X 47 = 94 lb (M)

LUMBER
N. L. G. A. RULES

CHORDS	SIZE		LUMBER	DESCR.
A - C	2x4	DRY	No.2	SPF
C - E	2x4	DRY	No.2	SPF
E - G	2x4	DRY	No.2	SPF
B - F	2x4	DRY	No.2	SPF
ALL WEBS	2x3	DRY	No.2	SPF

DRY: SEASONED LUMBER.

PLATES (table is in inches)

JT	TYPE	PLATES	W	LEN	Y	X
B	TMB1-I	MT20	3.0	4.0		
C	TTWW+m	MT20	5.0	6.0	2.25	1.50
D	TMW+w	MT20	2.0	4.0		
E	TTWW+m	MT20	5.0	6.0	2.25	1.50
F	TMB1-I	MT20	3.0	4.0		
H	BMW1+w	MT20	2.0	4.0		
I	BMWWW1-t	MT20	4.0	8.0		
J	BMW1+w	MT20	2.0	4.0		

DIMENSIONS, SUPPORTS AND LOADINGS SPECIFIED BY FABRICATOR TO BE VERIFIED BY BUILDING DESIGNER

BEARINGS

JT	FACTORED GROSS REACTION VERT	HORZ	MAXIMUM FACTORED GROSS REACTION DOWN	HORZ	UPLIFT	INPUT BRG IN-SX	REQRD BRG IN-SX
B	209	0	209	0	0	14-3-0	14-3-0
F	209	0	209	0	0	14-3-0	14-3-0
J	418	0	418	0	0	14-3-0	14-3-0
I	872	0	872	0	0	14-3-0	14-3-0
H	418	0	418	0	0	14-3-0	14-3-0

UNFACTORED REACTIONS

JT	1ST LCASE COMBINED	MAX./MIN. COMPONENT REACTIONS SNOW	LIVE	PERM.LIVE	WIND	DEAD	SOIL
B	145	113 / 0	5 / 0	0 / 0	0 / 0	27 / 0	0 / 0
F	145	113 / 0	5 / 0	0 / 0	0 / 0	27 / 0	0 / 0
J	323	146 / 0	68 / 0	0 / 0	0 / 0	89 / 0	0 / 0
I	644	379 / 0	112 / 0	0 / 0	0 / 0	153 / 0	0 / 0
H	323	146 / 0	68 / 0	0 / 0	0 / 0	89 / 0	0 / 0

BEARING MATERIAL TO BE SPF NO.2 OR BETTER AT JOINT(S) B, F, J, I, H

BRACING
TOP CHORD TO BE SHEATHED OR MAX. PURLIN SPACING = 6.25 FT.
MAX. UNBRACED BOTTOM CHORD LENGTH = 10.00 FT OR RIGID CEILING DIRECTLY APPLIED.

ALL PITCH BREAKS AND PERIMETER CORNER JOINTS MUST BE LATERALLY RESTRAINED.

LOADING
TOTAL LOAD CASES: (4)

CHORDS

MEMB. FR-TO	MAX. FACTORED FORCE (LBS)	FACTORED VERT. LOAD LC1 (PLF) FROM	TO	MAX CSI (LC)	MAX. UNBRAC LENGTH
A- B	0 / 17	-102.1	-102.1	0.03 (1)	10.00
B- L	-28 / 12	-102.1	-102.1	0.02 (1)	6.25
L- C	-65 / 0	-102.1	-102.1	0.04 (1)	6.25
C- D	-8 / 0	-102.1	-102.1	0.46 (1)	10.00
D- E	-8 / 0	-102.1	-102.1	0.46 (1)	10.00
E- N	-65 / 0	-102.1	-102.1	0.04 (1)	6.25
N- F	-28 / 12	-102.1	-102.1	0.02 (1)	6.25
F- G	0 / 17	-102.1	-102.1	0.03 (1)	10.00
B- K	0 / 47	-38.5	-38.5	0.06 (1)	10.00
K- J	0 / 47	-38.5	-38.5	0.12 (2)	10.00
J- I	0 / 32	-38.5	-38.5	0.17 (3)	10.00
I- H	0 / 32	-38.5	-38.5	0.17 (3)	10.00
H- M	0 / 47	-38.5	-38.5	0.12 (2)	10.00
M- F	0 / 47	-38.5	-38.5	0.06 (1)	10.00

WEBS

MEMB. FR-TO	MAX. FACTORED FORCE (LBS)	MAX CSI (LC)
J- C	-233 / 0	0.03 (1)
C- I	-24 / 0	0.01 (1)
I- D	-656 / 0	0.10 (1)
I- E	-24 / 0	0.01 (1)
H- E	-233 / 0	0.03 (1)
K- L	-155 / 0	0.00 (1)
M- N	-155 / 0	0.00 (1)

DESIGN CRITERIA

SPECIFIED LOADS:

TOP CH.	LL =	29.0	PSF
	DL =	6.0	PSF
BOT CH.	LL =	10.5	PSF
	DL =	7.0	PSF
TOTAL LOAD	=	52.5	PSF

SPACING = 24.0 IN. C/C

LOADING IN FLAT SECTION BASED ON A SLOPE OF 6.00/12

THIS TRUSS IS DESIGNED FOR RESIDENTIAL OR SMALL BUILDING REQUIREMENTS OF PART 9, NBCC 2010, NBCC 2015

THIS DESIGN COMPLIES WITH:
- PART 9 OF BCBC 2018 , OBC 2012
- CSA 086-09, CSA 086-14
- TPIC 2011, TPIC 2014

(55 % OF 37.6 P.S.F. G.S.L. PLUS 8.4 P.S.F. RAIN LOAD) EQUALS 28.0 P.S.F. SPECIFIED ROOF LIVE LOAD

CSI: TC=0.46/1.00 (C-D:1) , BC=0.17/1.00 (H-I:3) , WB=0.10/1.00 (D-I:1) , SSI=0.26/1.00 (C-D:1)

DOL LUMBER=1.00 NAIL=1.00 LS BEND=1.10 COMP=1.10 SHEAR=1.10 TENS= 1.10

COMPANION LIVE LOAD FACTOR = 1.00

TRUSS PLATE MANUFACTURER IS NOT RESPONSIBLE FOR QUALITY CONTROL IN THE TRUSS MANUFACTURING PLANT .

NAIL VALUES

PLATE	GRIP(DRY) (PSI) MAX	MIN	SHEAR (PLI) MAX	MIN	SECTION (PLI) MAX	MIN
MT20	618	354	1667	788	1987	1656

PLATE PLACEMENT TOL. = 0.250 inches

PLATE ROTATION TOL. = 5.0 Deg.

JSI GRIP= 0.34 (D) (INPUT = 0.90)
JSI METAL= 0.14 (D) (INPUT = 1.00)

LICENSED PROFESSIONAL ENGINEER
03/07/19
H. J. G. ALVES
100009024
PROVINCE OF ONTARIO

DWG NO. TAM 17205747
STRUCTURAL
COMPONENT ONLY

JOB NAME	TRUSS NAME	QUANTITY	PLY	JOB DESC. GREENPARK HOMES	DRWG NO.
401703	PB2	1	1	TRUSS DESC.	

Tamarack Roof Truss, Burlington

Version 8.230 S Nov 17 2018 MiTek Industries, Inc. Thu Mar 7 08:08:37 2019 Page 1
ID:F_p41RssbN_g3ApPmZicDwyNwB2-PKICitqzm_oahrcSmprHcfZlzvKkynWdoqKa0qzdO4W

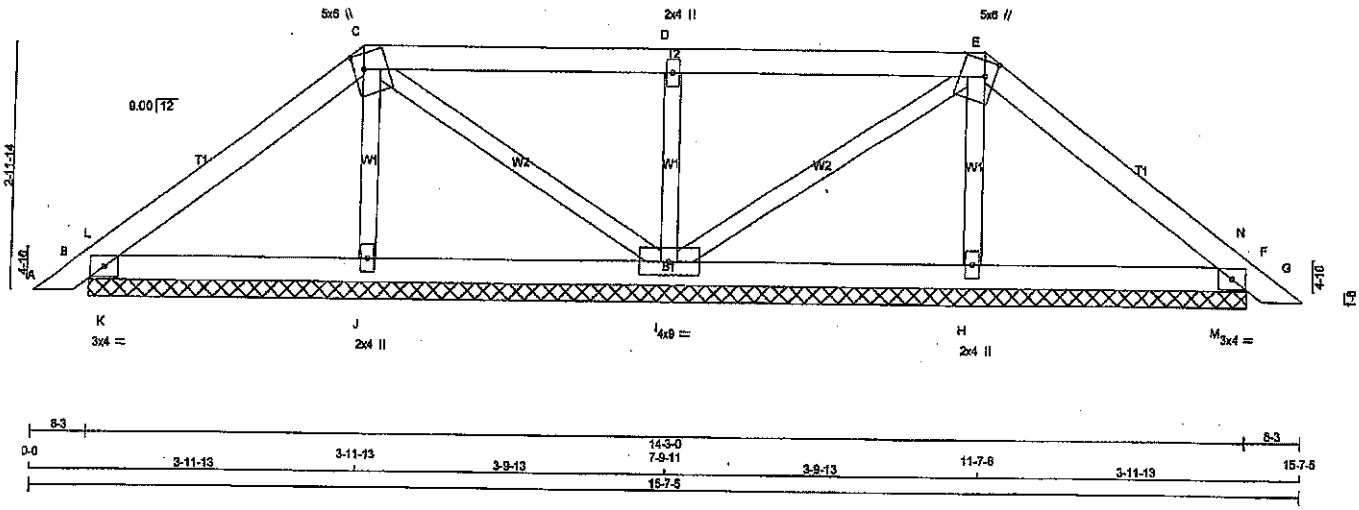

TOTAL WEIGHT = 49 lb

LUMBER
N. L. G. A. RULES

CHORDS	SIZE		LUMBER	DESCR.
A - C	2x4	DRY	No.2	SPF
C - E	2x4	DRY	No.2	SPF
E - G	2x4	DRY	No.2	SPF
B - F	2x4	DRY	No.2	SPF
ALL WEBS	2x3	DRY	No.2	SPF

DRY: SEASONED LUMBER.

PLATES (table is in inches)

JT	TYPE	PLATES	W	LEN	Y	X
B	TMB1-I	MT20	3.0	4.0		
C	TTWW+m	MT20	5.0	6.0	2.25	1.50
D	TMW+w	MT20	2.0	4.0		
E	TTWW+m	MT20	5.0	6.0	2.25	1.50
F	TMB1-I	MT20	3.0	4.0		
H	BMW1+w	MT20	2.0	4.0		
I	BMWWW1-t	MT20	4.0	9.0		
J	BMW1+w	MT20	2.0	4.0		

DIMENSIONS, SUPPORTS AND LOADINGS SPECIFIED BY FABRICATOR TO BE VERIFIED BY BUILDING DESIGNER

BEARINGS

JT	FACTORED GROSS REACTION VERT	HORZ	MAXIMUM FACTORED GROSS REACTION DOWN	HORZ	UPLIFT	INPUT BRG IN-SX	REQRD BRG IN-SX
B	343	0	343	0	0	14-3-0	14-3-0
F	343	0	343	0	0	14-3-0	14-3-0
J	378	0	378	0	0	14-3-0	14-3-0
I	683	0	683	0	0	14-3-0	14-3-0
H	378	0	378	0	0	14-3-0	14-3-0

UNFACTORED REACTIONS

JT	1ST LCASE COMBINED	MAX./MIN. COMPONENT REACTIONS SNOW	LIVE	PERM.LIVE	WIND	DEAD	SOIL
B	246	162 / 0	32 / 0	0 / 0	0 / 0	55 / 0	0 / 0
F	249	162 / 0	32 / 0	0 / 0	0 / 0	55 / 0	0 / 0
J	292	133 / 0	78 / 0	0 / 0	0 / 0	80 / 0	0 / 0
I	501	306 / 0	79 / 0	0 / 0	0 / 0	116 / 0	0 / 0
H	292	133 / 0	78 / 0	0 / 0	0 / 0	80 / 0	0 / 0

BEARING MATERIAL TO BE SPF NO.2 OR BETTER AT JOINT(S) B, F, J, I, H

BRACING
TOP CHORD TO BE SHEATHED OR MAX. PURLIN SPACING = 6.25 FT.
MAX. UNBRACED BOTTOM CHORD LENGTH = 10.00 FT OR RIGID CEILING DIRECTLY APPLIED.

ALL PITCH BREAKS AND PERIMETER CORNER JOINTS MUST BE LATERALLY RESTRAINED.

LOADING
TOTAL LOAD CASES: (4)

CHORDS

MEMB. FR-TO	MAX. FACTORED FORCE (LBS)	FACTORED VERT. LOAD LC1 (PLF) FROM	TO	MAX CSI (LC)	MAX. UNBRAC LENGTH
A- B	0 / 17	-102.1	-102.1	0.03 (1)	10.00
B- L	-63 / 0	-102.1	-102.1	0.04 (1)	6.25
L- C	-116 / 0	-102.1	-102.1	0.14 (1)	6.25
C- D	-24 / 0	-102.1	-102.1	0.25 (1)	6.25
D- E	-24 / 0	-102.1	-102.1	0.25 (1)	6.25
E- N	-116 / 0	-102.1	-102.1	0.14 (1)	6.25
N- F	-63 / 0	-102.1	-102.1	0.04 (1)	6.25
F- G	0 / 17	-102.1	-102.1	0.03 (1)	10.00
B- K	0 / 88	-38.5	-38.5	0.12 (1)	10.00
K- J	0 / 88	-38.5	-38.5	0.13 (1)	10.00
J- I	0 / 80	-38.5	-38.5	0.11 (2)	10.00
I- H	0 / 80	-38.5	-38.5	0.11 (2)	10.00
H- M	0 / 88	-38.5	-38.5	0.13 (1)	10.00
M- G	0 / 88	-38.5	-38.5	0.12 (1)	10.00

WEBS

MEMB. FR-TO	MAX. FACTORED FORCE (LBS)	MAX CSI (LC)
J- C	-187 / 0	0.03 (1)
C- I	-68 / 0	0.02 (1)
I- D	-486 / 0	0.06 (1)
I- E	-66 / 0	0.02 (1)
H- E	-187 / 0	0.03 (1)
K- L	-279 / 30	0.00 (1)
M- N	-279 / 30	0.00 (1)

DESIGN CRITERIA

SPECIFIED LOADS:

TOP CH.	LL =	29.0	PSF
	DL =	6.0	PSF
BOT CH.	LL =	10.5	PSF
	DL =	7.0	PSF
TOTAL LOAD	=	52.5	PSF

SPACING = 24.0 IN. C/C

LOADING IN FLAT SECTION BASED ON A SLOPE OF 6.00/12

THIS TRUSS IS DESIGNED FOR RESIDENTIAL OR SMALL BUILDING REQUIREMENTS OF PART 9, NBCC 2010, NBCC 2015

THIS DESIGN COMPLIES WITH:
- PART 9 OF BCBC 2018 , OBC 2012
- CSA 086-09, CSA 086-14
- TPIC 2011, TPIC 2014

(55 % OF 37.6 P.S.F. G.S.L. PLUS 6.4 P.S.F. RAIN LOAD) EQUALS 29.0 P.S.F. SPECIFIED ROOF LIVE LOAD

CSI: TC=0.25/1.00 (C-D:1) , BC=0.13/1.00 (J-K:1) , WB=0.08/1.00 (D-I:1) , SSI=0.24/1.00 (F-M:1)

DOL LUMBER=1.00 NAIL=1.00 LS BEND=1.10 COMP=1.10 SHEAR=1.10 TENS= 1.10

COMPANION LIVE LOAD FACTOR = 1.00

TRUSS PLATE MANUFACTURER IS NOT RESPONSIBLE FOR QUALITY CONTROL IN THE TRUSS MANUFACTURING PLANT .

NAIL VALUES

PLATE	GRIP(DRY) (PSI) MAX	MIN	SHEAR (PLI) MAX	MIN	SECTION (PLI) MAX	MIN
MT20	618	354	1667	786	1987	1656

PLATE PLACEMENT TOL. = 0.250 Inches

PLATE ROTATION TOL. = 5.0 Deg.

JSI GRIP= 0.26 (B) (INPUT = 0.80)
JSI METAL= 0.10 (D) (INPUT = 1.00)

RECEIVED
JUN 10 2019
TOWN OF CALEDON
BUILDING SECTION
FILE NO

LICENSED PROFESSIONAL ENGINEER
03/07/19
H. J. GALVES
100009924
PROVINCE OF ONTARIO

DWG NO. TAM 7905748
STRUCTURAL
COMPONENT ONLY

JOB NAME	TRUSS NAME	QUANTITY	PLY	JOB DESC. GREENPARK HOMES	DRWG NO.
401703	J1	25	1	TRUSS DESC.	

Tamarack Roof Truss, Burlington

Version 6.230 S Nov 17 2018 MiTek Industries, Inc. Thu Mar 7 08:06:32 2019 Page 1
ID:guB8GIR_dNo9QvDKo3horvyNxSw-3MxJf9nrxS9Hb3jU_GF6vcsoouahHXaufYdpLdzdO4b

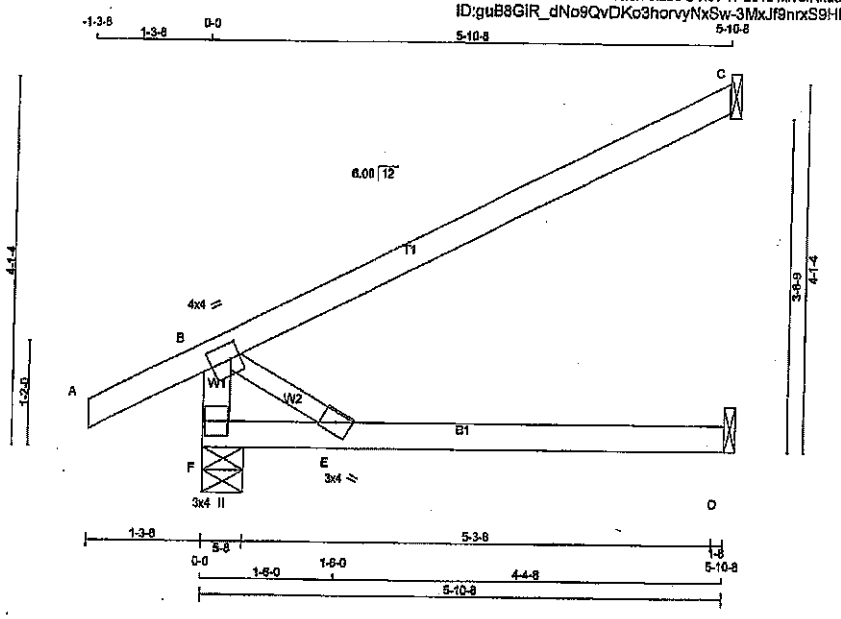

TOTAL WEIGHT = 25 X 18 = 452 lb [M]

LUMBER
N. L. G. A. RULES

CHORDS	SIZE		LUMBER	DESCR.
F - B	2x4	DRY	No.2	SPF
A - C	2x4	DRY	No.2	SPF
F - D	2x4	DRY	No.2	SPF
ALL WEBS	2x3	DRY	No.2	SPF

DRY: SEASONED LUMBER.

PLATES (table is in inches)

JT	TYPE	PLATES	W	LEN	Y	X
B	TMVW-t	MT20	4.0	4.0	2.00	1.25
E	BMW+w	MT20	3.0	4.0		
F	BMV1+p	MT20	3.0	4.0		

DIMENSIONS, SUPPORTS AND LOADINGS SPECIFIED BY FABRICATOR TO BE VERIFIED BY BUILDING DESIGNER

BEARINGS

JT	FACTORED GROSS REACTION VERT	HORZ	MAXIMUM FACTORED GROSS REACTION DOWN	HORZ	UPLIFT	INPUT BRG IN-SX	REQRD BRG IN-SX
F	552	0	552	0	0	5-8	5-8
C	300	0	300	0	0	1-8	1-8
D	113	0	144	0	0	1-8	1-8

SEE MITEK STANDARD DETAIL 837821H FOR CONNECTION TO JOINT(S) C , D

UNFACTORED REACTIONS

JT	1ST LCASE COMBINED	MAX./MIN. COMPONENT REACTIONS SNOW	LIVE	PERM.LIVE	WIND	DEAD	SOIL
F	404	249 / 0	62 / 0	0 / 0	0 / 0	93 / 0	0 / 0
C	206	171 / 0	0 / 0	0 / 0	0 / 0	35 / 0	0 / 0
D	103	0 / 0	62 / 0	0 / 0	0 / 0	41 / 0	0 / 0

BEARING MATERIAL TO BE SPF NO.2 OR BETTER AT JOINT(S) F

BRACING
TOP CHORD TO BE SHEATHED OR MAX. PURLIN SPACING = 10.00 FT.
MAX. UNBRACED BOTTOM CHORD LENGTH = 10.00 FT OR RIGID CEILING DIRECTLY APPLIED.

ALL PITCH BREAKS AND PERIMETER CORNER JOINTS MUST BE LATERALLY RESTRAINED.

LOADING
TOTAL LOAD CASES: (4)

CHORDS

MEMB. FR-TO	MAX. FACTORED FORCE (LBS)	FACTORED VERT. LOAD (PLF) FROM	TO	LC1 MAX CSI (LC)	MAX. UNBRAC LENGTH
F- B	-438 / 0	0.0	0.0	0.04 (1)	7.81
A- B	0 / 31	-102.1	-102.1	0.13 (1)	10.00
B- C	0 / 0	-102.1	-102.1	0.80 (1)	10.00
F- E	0 / 0	-38.5	-38.5	0.24 (3)	10.00
E- D	0 / 0	-38.5	-38.5	0.31 (3)	10.00

WEBS

MEMB. FR-TO	MAX. FACTORED FORCE (LBS)	MAX CSI (LC)
B- E	0 / 0	0.00 (1)

DESIGN CRITERIA

SPECIFIED LOADS:

TOP CH.	LL =	29.0	PSF
	DL =	6.0	PSF
BOT CH.	LL =	10.5	PSF
	DL =	7.0	PSF
TOTAL LOAD	=	52.5	PSF

SPACING = 24.0 IN. C/C

THIS TRUSS IS DESIGNED FOR RESIDENTIAL OR SMALL BUILDING REQUIREMENTS OF PART 9, NBCC 2010, NBCC 2015

THIS DESIGN COMPLIES WITH:
- PART 9 OF BCEC 2018 , OBC 2012
- CSA 086-09, CSA 086-14
- TPIC 2011, TPIC 2014

(55 % OF 37.6 P.S.F. G.S.L. PLUS 8.4 P.S.F. RAIN LOAD) EQUALS 29.0 P.S.F. SPECIFIED ROOF LIVE LOAD

ALLOWABLE DEFL.(LL)= L/360 (0.20")
CALCULATED VERT. DEFL.(LL) = L/ 925 (0.08")
ALLOWABLE DEFL.(TL)= L/360 (0.20")
CALCULATED VERT. DEFL.(TL) = L/ 555 (0.13")

CSI: TC=0.60/1.00 (B-C:1) , BC=0.31/1.00 (D-E:3) , WB=0.00/1.00 (B-E:1) , SSI=0.21/1.00 (B-C:1)

DOL LUMBER=1.00 NAIL=1.00 LS BEND=1.10 COMP=1.10 SHEAR=1.10 TENS= 1.10

COMPANION LIVE LOAD FACTOR = 1.00

AUTOSOLVE RIGHT HEEL ONLY

TRUSS PLATE MANUFACTURER IS NOT RESPONSIBLE FOR QUALITY CONTROL IN THE TRUSS MANUFACTURING PLANT .

NAIL VALUES

PLATE	GRIP(DRY) (PSI) MAX	MIN	SHEAR (PLI) MAX	MIN	SECTION (PLI) MAX	MIN
MT20	618	354	1667	788	1987	1658

PLATE PLACEMENT TOL. = 0.250 inches

PLATE ROTATION TOL. = 5.0 Deg.

JSI GRIP= 0.27 (B) (INPUT = 0.60)
JSI METAL= 0.07 (B) (INPUT = 1.00)

LICENSED PROFESSIONAL ENGINEER
03/07/19
H. J. G ALVES
100000024
PROVINCE OF ONTARIO

DWG NO. TAM 77905154
STRUCTURAL
COMPONENT ONLY

Alves Engineering Services Inc.
5208 Easton road
Burlington, Ontario L7L 6N6
(289) 259 5455

LICENSED PROFESSIONAL ENGINEER
06/11/19
H.J.G. ALVES
PROVINCE OF ONTARIO

RESPONSABILITIES

1-Alves Engineering Services Inc. is responsible for the design of trusses as individual components

2-It is the responsibility of others to ascertain that the design loads utilized on this drawing meet or exceed the actual dead load imposed by the structure and the live load imposed by the local building code or the authorities having jurisdictions.

3- All dimensions are to be verified by owner, contractor, architect or other authority before manufacture.

4- Alves Engineering Services Inc. bears no responsibility for the erection of the trusses. Persons erecting trusses are cautioned to seek professional advice regarding temporary and permanent bracing system. Bracing shown on Alves Engineering Services Inc. drawings is specified for the truss as a single component and forms an integral part of the truss design, but is not meant to represent the only required bracing for that truss when trusses are installed in a series of trusses forming a roof truss system.

5- It is the manufactures responsibility to ensure that the trusses are manufactured in conformance with Alves Engineering Services Inc. specifications outlined below.

SPECIFICATIONS

1-Truss components sealed by Alves Engineering Services Inc. conform to the relevant sections of the current Building Code of Ontario and Canada (part 4 or part 9) or the current Canadian code for Farm Buildings in accordance with the application specified on the sealed truss component drawing. All truss component design procedures must conform to the current design standard issued by the truss plate institute of Canada (TPIC). All lumber and nailing stresses to conform to the current CSA wood design standard identified on the current Building Code and TPIC.

2- Lumber is to be the sizes and grade specified on the truss drawing.

3- Moist content of lumber is not to exceed 19% in service unless otherwise specified.

4- Plates shall be applied to both faces of the each truss joint and shall be positioned as shown on the truss drawings

5- Lumber used on manufacture of trusses is not to be treated with chemicals unless otherwise specified on the truss drawings.

6- The top chord is assumed to be continuously laterally braced by the roof sheathing or purlins at intervals specified on the truss drawing but not exceeding 24" c/c for (part 9) and not exceeding 48" for (part 4 or farm design)

7- When rigid ceiling is not attached directly to the bottom chord, lateral bracing is required and it should not exceed more than 3m or 10' intervals.

8-Refer to Mitek sheet MII74 [illegible] attached for information on symbols, numbering system and General Safety notes.

RECEIVED
JUN 1 4 2019
T-1900218

Feb 09, 2018

TOWN OF SALEDON
BUILDING SECTION
FILE No.

Symbols

PLATE LOCATION AND ORIENTATION

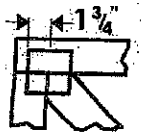

Center plate on joint unless x, y offsets are indicated. Dimensions are in ft-in-sixteenths or mm. Apply plates to both sides of truss and fully embed teeth.

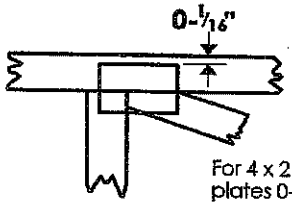

For 4 x 2 orientation, locate plates 0-1/16" from outside edge of truss.

This symbol indicates the required direction of slots in connector plates.

*Plate location details available in MiTek software or upon request.

PLATE SIZE

4 X 4

The first dimension is the plate width measured perpendicular to slots. Second dimension is the length parallel to slots.

LATERAL BRACING LOCATION

Indicated by symbol shown and/or by text in the bracing section of the output. Use T, I or Eliminator bracing if indicated.

BEARING

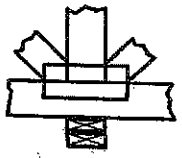

Indicates location where bearings (supports) occur. Icons vary but reaction section indicates joint number where bearings occur.

Industry Standards:

TPIC: Truss Design Procedures and Specifications for Light Metal Plate Connected Wood Trusses

DSB-89: Design Standard for Bracing.

BCSI: Building Component Safety Information, Guide to Good Practice for Handling, Installing & Bracing of Metal Plate Connected Wood Trusses.

Numbering System

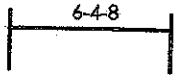

dimensions shown in ft-in-sixteenths or mm (Drawings not to scale)

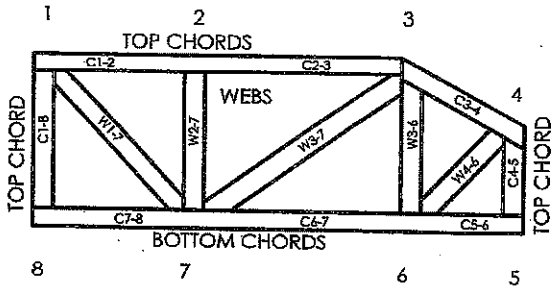

JOINTS ARE GENERALLY NUMBERED/LETTERED CLOCKWISE AROUND THE TRUSS STARTING AT THE JOINT FARTHEST TO THE LEFT.

CHORDS AND WEBS ARE IDENTIFIED BY END JOINT NUMBERS/LETTERS.

PRODUCT CODE APPROVALS

CCMC Reports:

11996-L, 10319-L, 13270-L, 12691-R

© 2007 MiTek® All Rights Reserved

MiTek®

POWER TO PERFORM.™

MiTek Engineering Reference Sheet: MII-7473C rev. 10-'08

General Safety Notes

Failure to Follow Could Cause Property Damage or Personal Injury

1. Additional stability bracing for truss system, e.g. diagonal or X-bracing, is always required. See BCSI.
2. Truss bracing must be designed by an engineer. For wide truss spacing, individual lateral braces themselves may require bracing, or alternative T, I, or Eliminator bracing should be considered.
3. Never exceed the design loading shown and never stack materials on inadequately braced trusses.
4. Provide copies of this truss design to the building designer, erection supervisor, property owner and all other interested parties.
5. Cut members to bear tightly against each other.
6. Place plates on each face of truss at each joint and embed fully. Knots and wane at joint locations are regulated by TPIC.
7. Design assumes trusses will be suitably protected from the environment in accord with TPIC.
8. Unless otherwise noted, moisture content of lumber shall not exceed 19% at time of fabrication.
9. Unless expressly noted, this design is not applicable for use with fire retardant, preservative treated, or green lumber.
10. Camber is a non-structural consideration and is the responsibility of truss fabricator. General practice is to camber for dead load deflection.
11. Plate type, size, orientation and location dimensions indicated are minimum plating requirements.
12. Lumber used shall be of the species and size, and in all respects, equal to or better than that specified.
13. Top chords must be sheathed or purlins provided at spacing indicated on design.
14. Bottom chords require lateral bracing at 10 ft. spacing, or less, if no ceiling is installed, unless otherwise noted.
15. Connections not shown are the responsibility of others.
16. Do not cut or alter truss member or plate without prior approval of an engineer.
17. Install and load vertically unless indicated otherwise.
18. Use of green or treated lumber may pose unacceptable environmental, health or performance risks. Consult with project engineer before use.
19. Review all portions of this design (front, back, words and pictures) before use. Reviewing pictures alone is not sufficient.
20. Design assumes manufacture in accordance with TPIC Quality Criteria.

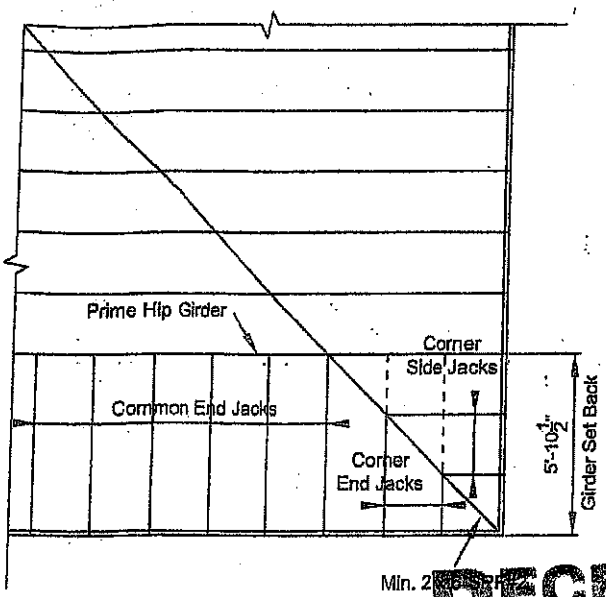

45° Hip End

LUMBER SPECIFICATION

TOP CHORD : 2 x 4 SPF#2
BOTTOM CHORD : 2 x 4 SPF#2
WEBS : 2 x 3 SPF#2
UNLESS OTHERWISE SHOWN

DESIGN LOAD

TOP CHORD SNOW LOAD	:	40.5 P.S.F.
TOP CHORD DEAD LOAD	:	3.0 P.S.F.
BOTTOM CHORD LIVE LOAD	:	0.0 P.S.F.
BOTTOM CHORD DEAD LOAD	:	7.0 P.S.F.
TOTAL LOAD	:	50.5 P.S.F

RECEIVED
JUN 1 4 2019
TOWN OF SALMON ARM
BUILDING SECTION
FILE NO.

LICENSED PROFESSIONAL ENGINEER
06/11/19
H.J.G. ALVES
PROVINCE OF ONTARIO

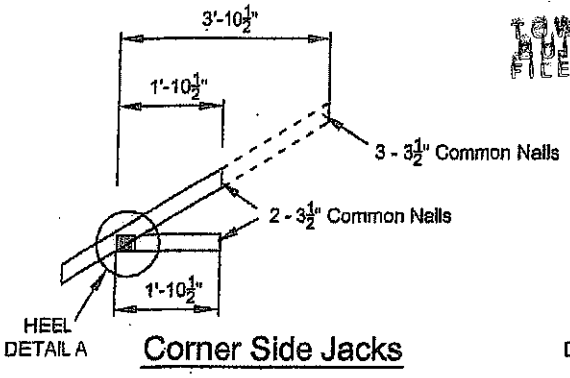

Corner Side Jacks

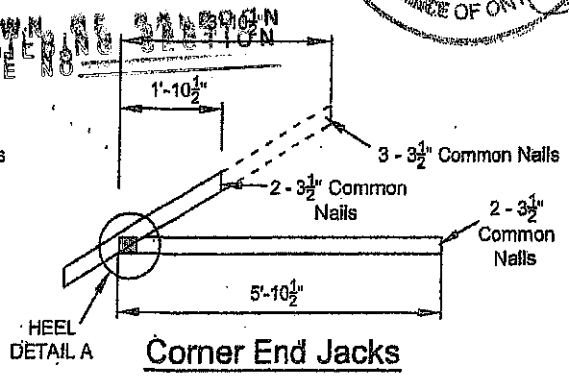

Corner End Jacks

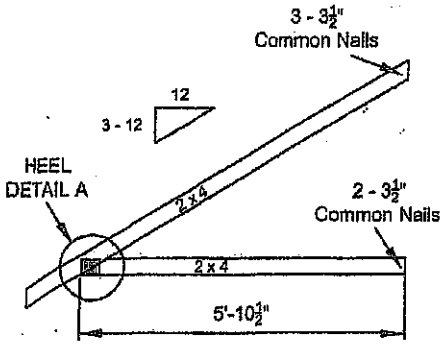

Common End Jacks

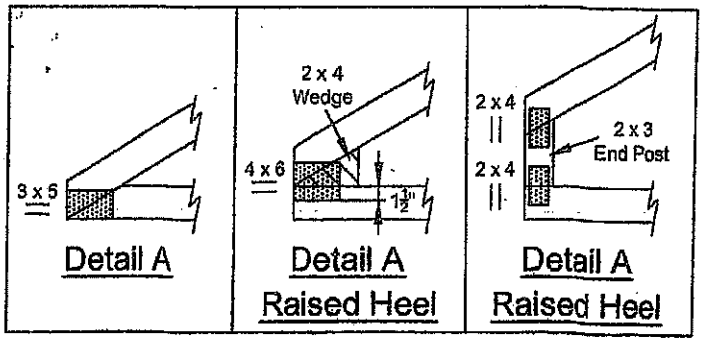

Detail A | Detail A Raised Heel | Detail A Raised Heel

NOTE: DESIGN CONFORMS TO PART 9, O.B.C. 2012 (L.S.D. DESIGN)

T-1800216

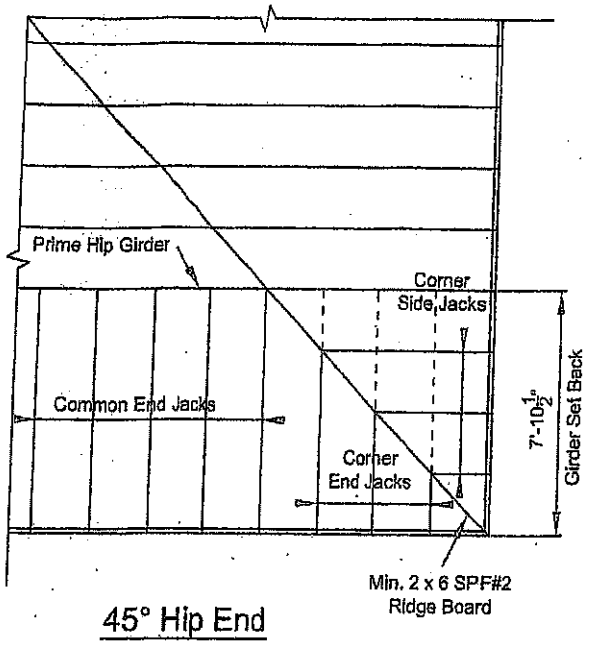

45° Hip End

LUMBER SPECIFICATION

TOP CHORD : 2 x 4 SPF#2
BOTTOM CHORD : 2 x 4 SPF#2
WEBS : 2 x 3 SPF#2
UNLESS OTHERWISE SHOWN

DESIGN LOAD

TOP CHORD SNOW LOAD	:	40.5 P.S.F.
TOP CHORD DEAD LOAD	:	3.0 P.S.F.
BOTTOM CHORD LIVE LOAD	:	0.0 P.S.F.
BOTTOM CHORD DEAD LOAD	:	7.0 P.S.F.
TOTAL LOAD		50.5 P.S.F

LICENSED PROFESSIONAL ENGINEER
06/11/2018
H.J.G. ALVES
PROVINCE OF ONTARIO

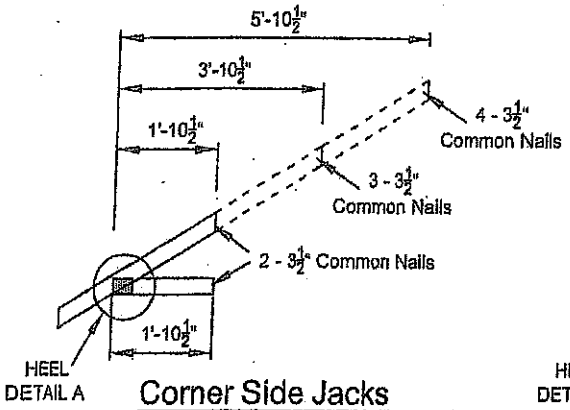

Corner Side Jacks

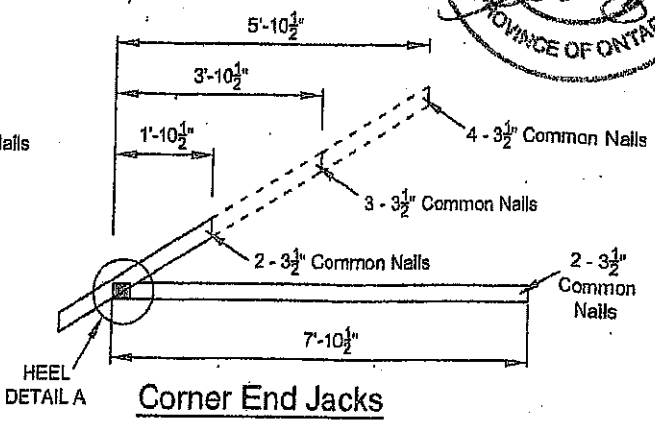

Corner End Jacks

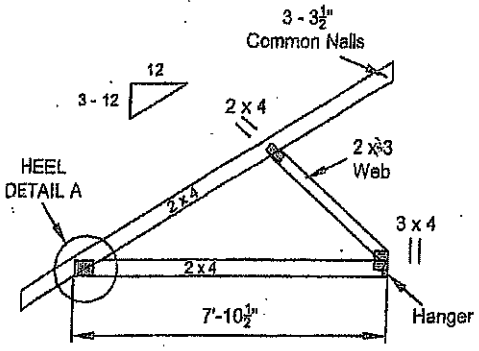

Common End Jacks

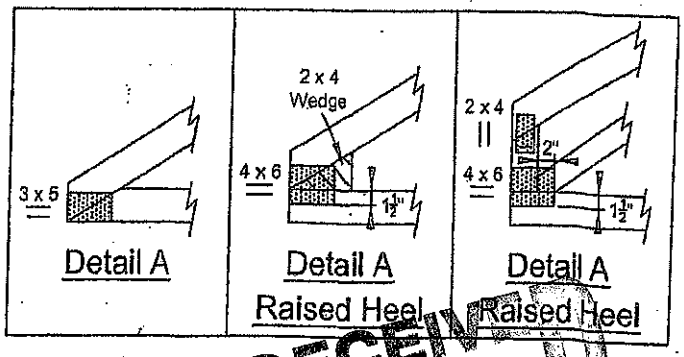

NOTE: DESIGN CONFORMS TO PART 9, O.B.C. 2012 (L.S.D. DESIGN)

RECEIVED
JUN 1 0 2018
TOWN OF CALEDON
BUILDING SECTION
FILE NO. 18-800217