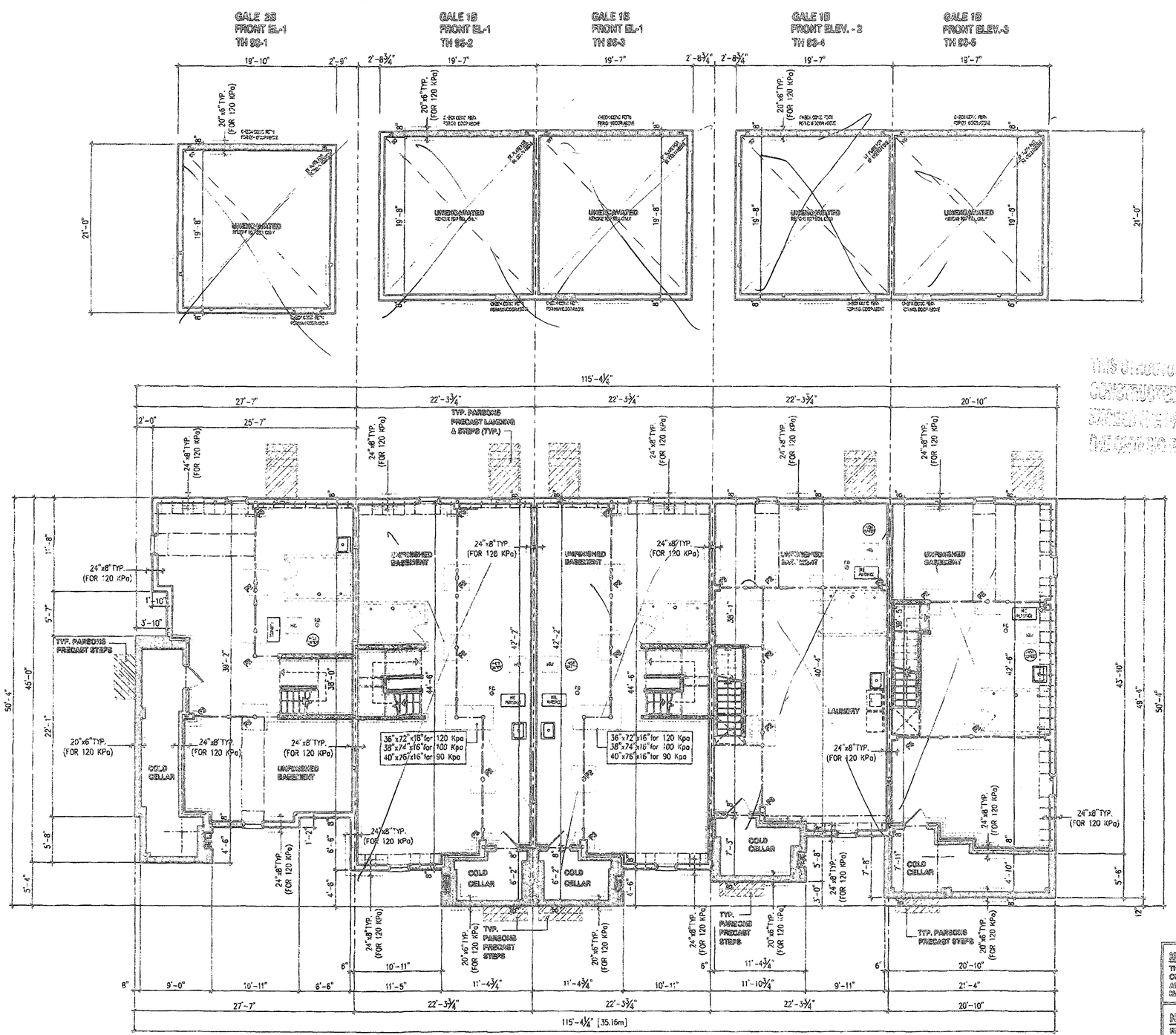

Block 96-1

THIS STRUCTURE MUST BE CONSTRUCTED TO MEET OR EXCEED THE REQUIREMENTS OF THE ONTARIO BUILDING CODE

NOTE:
WHERE WATER CUT IS GREATER THAN 30" A 16" POURED CONC. FOUNDATION WALL IS REQUIRED. (FOUNDATION PLAN TO BE REVIEWED IN CONJUNCTION WITH SITE PLAN)

PAD FOOTINGS

120 KPa NATIVE SOIL
- F1 = 42"x42"x16" CONCRETE PAD
- F2 = 38"x38"x16" CONCRETE PAD
- F3 = 30"x30"x12" CONCRETE PAD
- F4 = 24"x24"x12" CONCRETE PAD
- F5 = 18"x18"x8" CONCRETE PAD

90 KPa ENGINEERED FILL SOIL
- F1 = 48"x48"x16" CONCRETE PAD
- F2 = 40"x40"x16 CONCRETE PAD
- F3 = 34"x34"x14 CONCRETE PAD
- F4 = 28"x28"x12 CONCRETE PAD
- F5 = 19"x19"x8" CONCRETE PAD

100 KPa NATIVE SOIL
- F1 = 44"x44"x16" CONCRETE PAD
- F2 = 36"x36"x16" CONCRETE PAD
- F3 = 32"x32"x14" CONCRETE PAD
- F4 = 26"x26"x12" CONCRETE PAD
- F5 = 17"x17"x8" CONCRETE PAD

(REFER TO FLOOR PLAN FOR UNUSUAL SIZE PADS NOT ON CHART)

STRIP FOOTINGS FOR HORIZONS

REFER TO FOUNDATION PLAN FOR DIMENSIONS AND FOOTING DETAIL FOR REINFORCEMENT

120 KPa NATIVE SOIL
- 20"x8" CONCRETE STRIP FOOTINGS BELOW EXTERIOR WALLS AS NOTED ON PLANS
- 24"x8" CONCRETE STRIP FOOTINGS BELOW EXTERIOR WALLS (UNLESS OTHERWISE NOTED)
- 24"x8" CONCRETE STRIP FOOTINGS (WITH REINF.) BELOW PARTY WALLS

90 KPa ENGINEERED FILL SOIL
- 24"x8" CONCRETE STRIP FOOTINGS - WITH REINF., AS NOTED ON PLANS
- 32"x8" CONCRETE STRIP FTGS BELOW EXT. WALLS - WITH REINF. (UNLESS OTHERWISE NOTED)
- 32"x8" CONCRETE STRIP FOOTINGS - WITH REINF., BELOW PARTY WALLS

100 KPa NATIVE SOIL
- 22"x8" CONCRETE STRIP FOOTINGS BELOW FOUNDATION WALLS.
- 28"x8" CONCRETE STRIP FOOTINGS WITH REINFORCING BELOW EXTERIOR WALLS
- 28"x8" CONCRETE STRIP FOOTINGS WITH REINFORCING BELOW PARTY WALLS

GENERAL NOTE
ASSUMED 120 KPa NATIVE SOIL BEARING CAPACITY OR 90 KPa FOR ENGINEERED FILL. TO BE VERIFIED ON SITE. REFER TO ENGINEERED FILL FOOTING DETAIL FOR REINFORCEMENT.

(REFER TO ENG. FILL FOOTING DETAIL)

PARTY WALL FOOTING SIZE
- 24"x8" (WITH REBAR) FOR 120 KPa
- 28"x8" (WITH REBAR) FOR 100 KPa
- 32"x8" (WITH REBAR) FOR 90 KPa

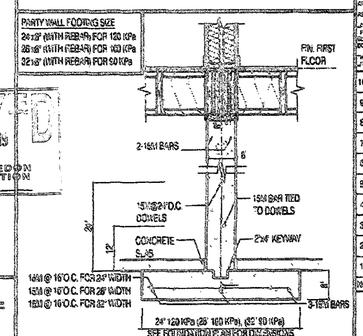

PARTY WALL FOOTINGS

EXTERIOR STRIP FOOTING SIZE
- 24"x8" (WITH REBAR) FOR 90 KPa
- 28"x8" (WITH REBAR) FOR 100 KPa
- 32"x8" (WITH REBAR) FOR 90 KPa

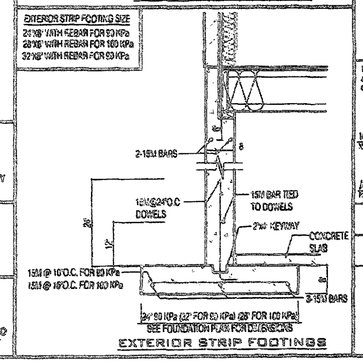

EXTERIOR STRIP FOOTINGS

RECEIVED
AUG 12 2019
TOWN OF CALEDON
BUILDING SECTION
FILE NO

JUL 18 2019

REFER TO INDIVIDUAL UNITS FOR THE FOLLOWING:
- GROUND FLOOR FROST STRUCTURE
- BASEMENT AND GROUND FLOOR LINTELS
- GROUND FLOOR AND SECOND FLOOR STRUCTURE
- DOUBLE VOLUME WALL LOCATION AND DETAILS
- CONCRETE SLABS

NOTE:
THESE DRAWINGS ARE TO BE READ IN CONJUNCTION WITH GOVERNMENT APPROVED FLOOR TRUSS DRAWINGS BY MANUFACTURER

NOTE:
REFER TO GRADING PLAN FOR NUMBER OF STEPS

NOTE:
ALL GARAGE SLABS, PORCH SLABS, STAIRS (REPORED CONC. FLAT WORK) TO BE 32 MPa WITH 5-8% AIR ENTRAINMENT

BLOCK 96

It is the builder's complete responsibility to ensure that all plans submitted for approval fully comply with the Architectural Guidelines and all applicable regulations and requirements including zoning provisions and any provisions in the subdivision agreement. The Control Architect is not responsible in any way for examining or approving site (lotting) plans or working drawings with respect to any zoning or building code or permit matter or that any house can be properly built or located on its lot.

This is to certify that these plans comply with the applicable Architectural Design Guidelines approved by the Town of CALEDON.

JOHN G. WILLIAMS LTD., ARCHITECT
ARCHITECTURAL CONTROL REVIEW AND APPROVAL
APPROVED BY:
DATE: JUL 17, 2019
This stamp certifies compliance with the applicable Design Guidelines only and bears no further professional responsibility

STRUDET INC.

REGISTERED PROFESSIONAL ENGINEER
B. MARINKOVIC
PROVINCE OF ONTARIO

FOR STRUCTURE ONLY

No	DATE:	WORK DESCRIPTION.
10		
9		
8		
7		
6		
5		
4		
3		
2	JUNE 5, 2019	REVISED GRADING PER NEW GRADING PLAN ISSUED TO CLIENT
1	DEC. 18, 2018	ISSUED FOR BUILDING PERMIT

jardin DESIGN GROUP INC
64 JARDIN DR. SUITE 3A
VAUGHAN ONT. L4K 3P3
TEL: 905 660-3377 FAX: 905 660-3713
EMAIL: info@jardindesign.ca

Walter Sutter — 21691 — REGISTRATION INFORMATION
Required unless design is exempt under Division C, Subsection 3.2.4 of the building code
jardin design group inc. — 27753

BASEMENT PLAN
LAMBERTS LANE - PHASE 2
TOWN OF CALEDON

BILD

DWG.	T
SCALE	1/8"=1'-0"
PROJ. No.	18-18
SHEET No.	1

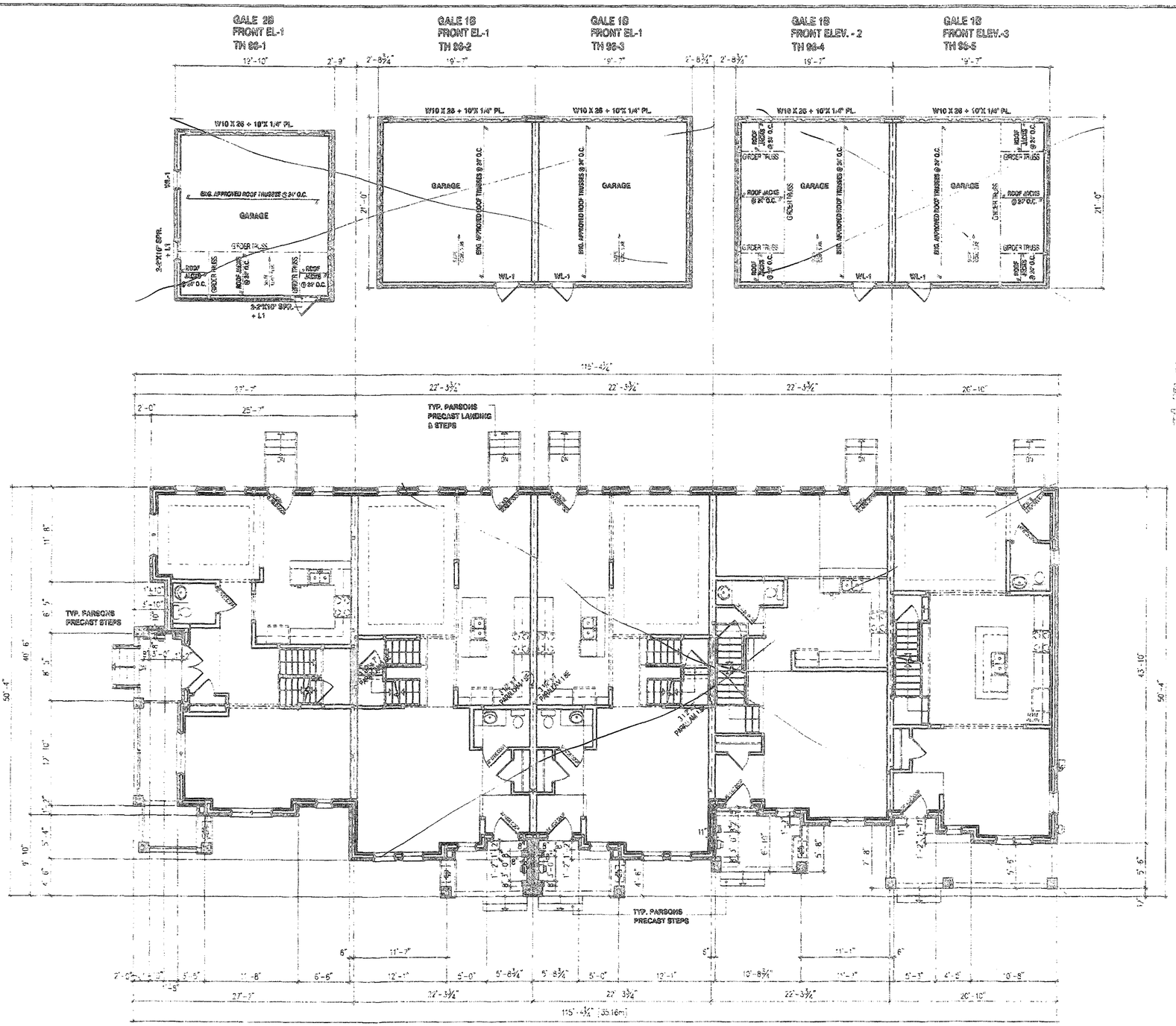

Block 96-1

HORIZON 12
ELEV-1
TH 96-1

HORIZON 2
ELEV-1
TH 96-2

HORIZON 2
ELEV-1
TH 96-3

HORIZON 1
ELEV-1
TH 96-4

HORIZON 3E
ELEV-1
TH 96-5

BLOCK 96

THIS STRUCTURE MUST BE CONSTRUCTED TO MEET OR EXCEED THE PROVISIONS OF THE ONTARIO BUILDING CODE

RECEIVED
AUG 12 2016
TOWN OF CALEDON
BUILDING SECTION
FILE NO.

JUN 12 2018

BUILDING AREA

IN ACCORDANCE WITH OBC, DIV.A 1.4.1.2.

BLOCK TH 316-1 TO TH 316-6

BUILDING AREA = 4744 SQ FT.
= 441 m2

NOTE:

REFER TO INDIVIDUAL PLANS FOR STANDARD WOOD, STEEL BEAMS AND LINTELS OVER WINDOWS

NOTE:

THESE DRAWINGS ARE TO BE READ IN CONJUNCTION WITH ENGINEER APPROVED ROOF TRUSS DRAWINGS BY MANUFACTURER

STEEL LINTELS:

L1 = 3 1/2"x3 1/2"x1/4" (90x90x6)
L2 = 4"x3 1/2"x5/16" (100x90x8)
L3 = 5"x3 1/2"x3/8" (125x90x9)
L4 = 6"x3 1/2"x3/8" (152x90x10)
L5 = 6"x4"x3/8" (150x100x10)
L6 = 7"x4"x3/8" (180x100x10)

WOOD LINTELS:

WB1 = 2-2"x6" SPRUCE BEAM
WB2 = 3-2"x8" SPRUCE BEAM
WB3 = 2-2"x10" SPRUCE BEAM
WB4 = 3-2"x10" SPRUCE BEAM
WB5 = 2-2"x12" SPRUCE BEAM
WB6 = 3-2"x12" SPRUCE BEAM
WB7 = 5-2"x12" SPRUCE BEAM
WB10 = 4-2"x8" SPRUCE BEAM
WB11 = 4-2"x10" SPRUCE BEAM
WB12 = 4-2"x12" SPRUCE BEAM
LBL = TYVEBERT AND BOARD

BRICK VENEER LINTELS:

WL1 = 3"x3 1/2"x5/16" (90x90x8) + 2-2"x6" SPR.
WL2 = 4"x3 1/2"x5/16" (100x90x8) + 2-2"x6" SPR.
WL3 = 5"x3 1/2"x5/16" (125x90x8) + 2-2"x10" SPR.
WL4 = 6"x3 1/2"x3/8" (150x90x10) + 2-2"x12" SPR.
WL5 = 6"x4"x3/8" (150x100x10) + 2-2"x12" SPR.
WL6 = 5"x3 1/2"x5/16" (125x90x8) + 2-2"x12" SPR.
WL7 = 5"x3 1/2"x5/16" (125x90x8) + 3-2"x10" SPR.
WL8 = 5"x3 1/2"x5/16" (125x90x8) + 3-2"x12" SPR.
WL9 = 6"x4"x3/8" (150x100x10) + 3-2"x12" SPR.

BLOCK 96

It is the builder's complete responsibilit
ensure that all plans submitted for appro
fully comply with the Architectural Guideli
and all applicable regulations and requirem
including zoning provisions and any provisi
in the subdivision agreement. The Con
Architect is not responsible in any way
examining or approving site (footing) plan
working drawings with respect to any zoning
building code or permit matter or that t
house can be properly built or located on its

This is to certify that these plans com
with the applicable Architectural Des
Guidelines approved by the Town
CALEDON.

JOHN G. WILLIAMS LTD. - ARCHITECT
ARCHITECTURAL CONTROL REVIEW
APPROVED BY
DATE

STRUDET INC.

REGISTERED PROFESSIONAL ENGINEER
B. MARINKOVIC
PROVINCE OF ONTARIO

FOR STRUCTURE ONL

No	DATE:	WORK DESCRIPTION
10		
9		
8		
7		
6		
5		
4		
3		
2	JUNE 5, 2018	REVISED DRAWING PER NEW GRADING P REISSUED TO CLIENT
1	DEC 13 2016	ISSUED FOR BUILDING PERMIT

jardin
DESIGN GROUP INC
64 JARDIN DR. SUITE 3A
VAUGHAN ONT. L4K 3P3
TEL: 905 660-3377 FAX: 905 660-3713
EMAIL: info@jardindesign.ca

The undersigned has reviewed and takes responsibility for this de and has the qualifications and meets the requirements set out in Ontario Building Code to be a designer

QUALIFICATION INFORMATION
Registered Building Designer
NAME: Walter Sotter
SIGNATURE:
REGISTRATION INFORMATION
Required unless design is exempt under Division C, Subsectio 3.2.4 of the building code
FIRM NAME: jardin design group inc.

FIRST FLOOR PLAN

LAMBERTS LANE - PHASE 2
TOWN OF CALEDON

BILD

TYPE	T
AREA	---
SCALE	1/8" = 1'-0"
JOB NO.	18-18
DWG. NO.	2

DRAWN BY
DRAWING NAME

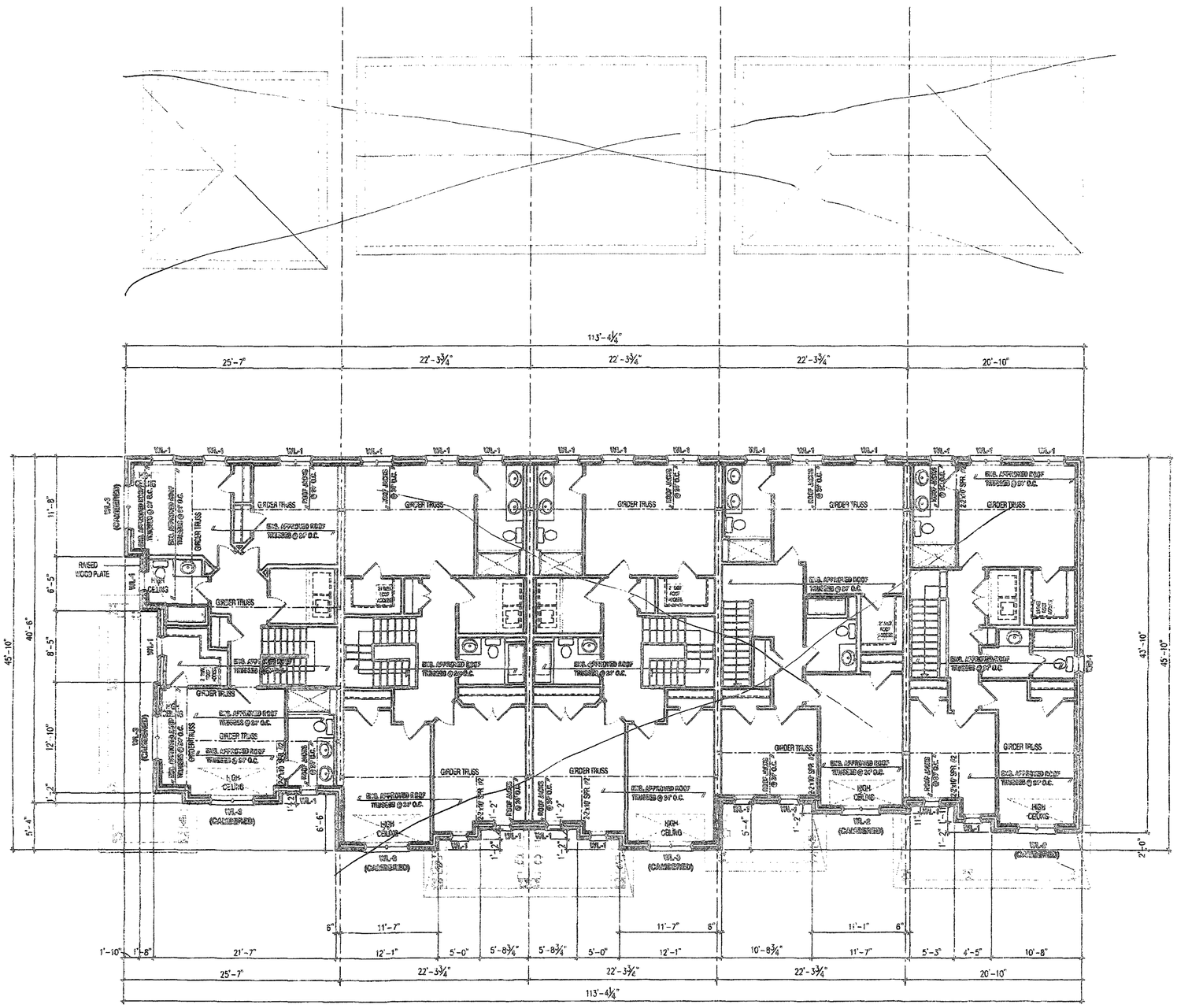

Block 96-1

HORIZON 12
ELEV-1
TH 96-1

HORIZON 2
ELEV-1
TH 96-2

HORIZON 2
ELEV-1
TH 96-3

HORIZON 1
ELEV-1
TH 96-4

HORIZON 3E
ELEV-1
TH 96-5

BLOCK 96

THIS STRUCTURE MUST BE CONSTRUCTED TO MEET OR EXCEED THE REQUIREMENTS OF THE ONTARIO BUILDING CODE

JUL 16 2019

RECEIVED
AUG 12 2019
TOWN OF CALEDON
BUILDING SECTION

WOOD LINTELS:

WB1 = 2-2"x6" SPRUCE BEAM
WB2 = 3-2"x8" SPRUCE BEAM
WB3 = 2-2"x10" SPRUCE BEAM
WB4 = 2-2"x10" SPRUCE BEAM
WB5 = 2-2"x12" SPRUCE BEAM
WB6 = 3-2"x12" SPRUCE BEAM
WB7 = 5-2"x12" SPRUCE BEAM
WB10 = 4-2"x8" SPRUCE BEAM
WB11 = 4-2"x10" SPRUCE BEAM
WB12 = 4-2"x12" SPRUCE BEAM
LSL = TIMBERSTRAND BOARD

NOTE:

REFER TO INDIVIDUAL PLANS FOR STANDARD WOOD, STEEL BEAMS AND LINTELS OVER WINDOWS

NOTE:

THESE DRAWINGS ARE TO BE READ IN CONJUNCTION WITH ENGINEER APPROVED ROOF TRUSS DRAWINGS BY MANUFACTURER

STEEL LINTELS:

L1 = 3 1/2"x3 1/2"x1/4" (90x90x6)
L2 = 4"x3 1/2"x5/16" (100x90x8)
L3 = 5"x3 1/2"x5/16" (125x90x8)
L4 = 6"x3 1/2"x3/8" (150x90x10)
L5 = 6"x4"x3/8" (150x100x10)
L6 = 7"x4"x3/8" (180x100x10)

BRICK VENEER LINTELS:

WL1 = 3 1/2"x3 1/2"x1/4" (90x90x6) + 2-2"x6" SPR.
WL2 = 4"x3 1/2"x5/16 (100x90x8) + 2-2"x8" SPR.
WL3 = 5"x3 1/2"x5/16 (125x90x8) + 2-2"x10" SPR.
WL4 = 6"x3 1/2"x3/8" (150x90x10) + 2-2"x12" SPR.
WL5 = 6"x4"x3/8" (150x100x10) - 2-2"x12" SPR.
WL6 = 5"x3 1/2"x5/16 (125x90x8) + 2-2"x12" SPR.
WL7 = 5"x3 1/2"x5/16 (125x90x8) + 3-2"x10" SPR.
WL8 = 6"x3 1/2"x5/16" (150x90x8) + 3-2"x12" SPR.
WL9 = 6"x4"x3/8" (150x100x10) - 3-2"x12" SPR.

BLOCK 96

It is the builder's complete responsibility to ensure that all plans submitted for approval fully comply with the Architectural Guidelines and all applicable regulations and requirements including zoning provisions and any provisions in the subdivision agreement. The Control Architect is not responsible in any way for examining or approving site (fitting) plans or working drawings with respect to any zoning or building code or permit matter or that any house can be properly built or located on its lot.

This is to certify that these plans comply with the applicable Architectural Design Guidelines approved by the Town of CALEDON.

JOHN G. WILLIAMS LTD., ARCHITECT
ARCHITECTURAL CONTROL REVIEW AND APPROVAL
APPROVED BY
DATE JUL 17, 2019
This stamp certifies compliance with the applicable Design Guidelines only and bears no further professional responsibility.

STRUDET INC.

REGISTERED PROFESSIONAL ENGINEER
B. MARINKOVIC
PROVINCE OF ONTARIO

FOR STRUCTURE ONLY

No.	DATE:	WORK DESCRIPTION:
10		
9		
8		
7		
6		
5		
4		
3	JULY 11, 2019	REV. FOR NEW TRUSS LAYOUTS REISSUED TO CLIENT
2	JUNE 5, 2019	REVISED TO SUITE PER NEW GRADING PLAN REISSUED TO CLIENT
1	DEC 13, 2018	ISSUED FOR BUILDING PERMIT

jardin DESIGN GROUP INC
64 JARDIN DR. SUITE 3A
VAUGHAN ONT. L4K 3P3
TEL: 905 660-3377 FAX: 905 660-3713
EMAIL: info@jardindesign.co

This architectural plan is the exclusive property of the design consultant. Any reproduction and/or use without written consent is prohibited.

CLASSIFICATION AND DESIGNATION
Designed unless design is signed under Division C, Subsection 3.2.5 of the building code

Walter Sutter — 21821

SIGNATURE INFORMATION
Designed unless design is signed under Division C, Subsection 3.2.4 of the building code

jardin design group inc. — 27759

SECOND FLOOR PLAN

LAMBERTS LANE - PHASE 2
TOWN OF CALEDON

BILD

TYPE: T	SCALE: —
SCALE: 1/8"=1'-0"	
DWG. No. 18-18	SHEET No. 3

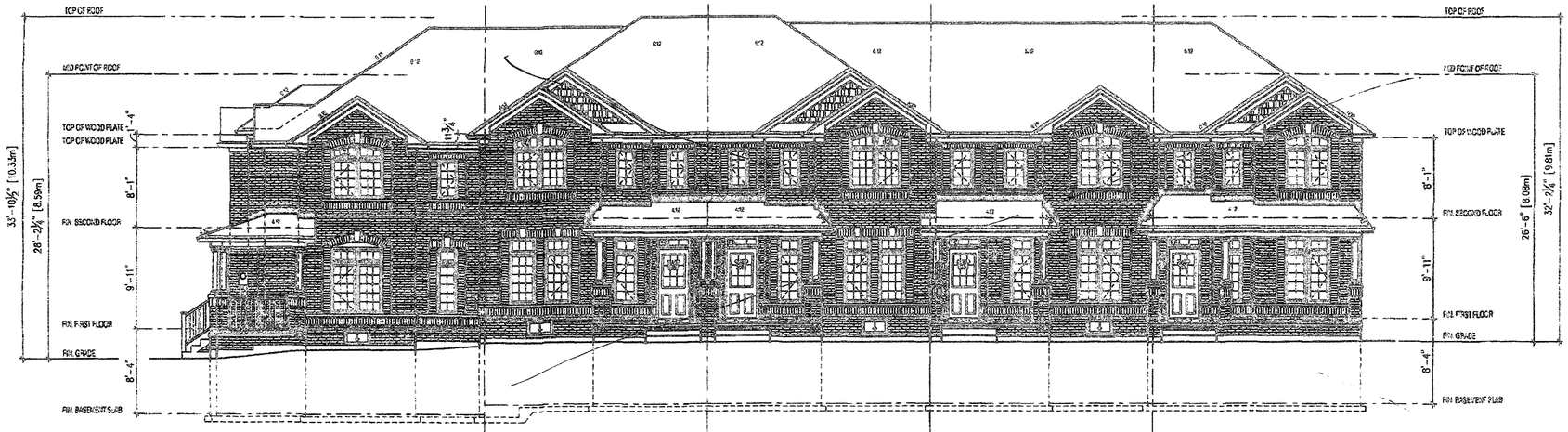

Block 96-1

HORIZON 12
FRONT ELEV-1
TH 93-1

HORIZON 2
FRONT ELEV-1
TH 93-2

HORIZON 2
FRONT ELEV-1
TH 93-3

HORIZON 1
FRONT ELEV-1
TH 93-4

HORIZON 3E
FRONT ELEV-1
TH 93-5

BLOCK 96

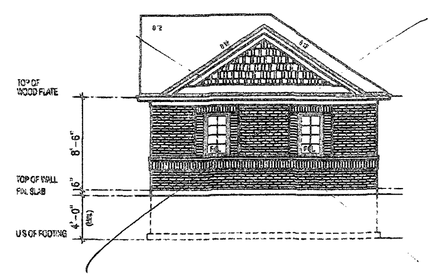

GALE 2B
LEFT SIDE ELEV.-1
TH 93-1

HORIZON 12
FLANKAGE ELEV.-1
TH 93-1

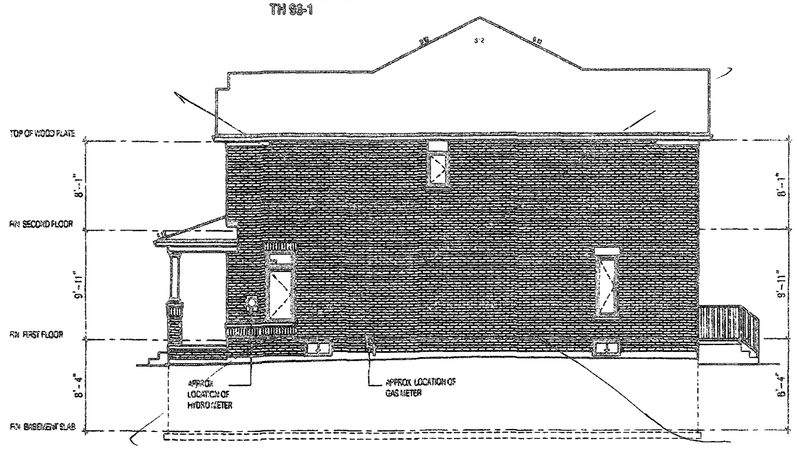

HORIZON 3E
SIDE ELEV.-2
TH 93-5

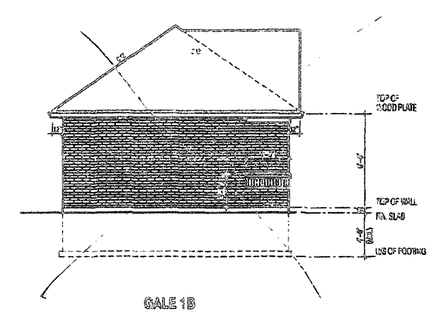

GALE 1B
SIDE ELEV. - 3
TH 93-5

THIS STRUCTURE MUST BE CONSTRUCTED TO MEET OR EXCEED THE REQUIREMENTS OF THE ONTARIO BUILDING CODE

RECEIVED
AUG 12 2019
TOWN OF CALEDON
BUILDING SECTION
FILE NO

JUN 27 2019

BLOCK 96

It is the builder's complete responsibility to ensure that all plans submitted for approval fully comply with the Architectural Guidelines and all applicable regulations and requirements including zoning provisions and any provisions in the subdivision agreement. The Control Architect is not responsible in any way for examining or approving site (lotting) plans or working drawings with respect to any zoning or building code or permit matter or that any house can be properly built or located on its lot.

This is to certify that these plans comply with the applicable Architectural Design Guidelines approved by the Town of CALEDON.

KEITH G. WILLIAMS LTD., ARCHITECT
ARCHITECTURAL CONTROL REVIEW AND APPROVAL
APPROVED BY:
DATE: AUG 27, 2019

No.	DATE:	WORK DESCRIPTION:
10		
9		
8		
7		
6		
5		
4		
3	JUNE 27, 2019	SHOWED ROOF TO GRADE DIMENSIONS RESSUED TO CLIENT
2	JUNE 5, 2019	REVISED DRAWING PER NEW GRADE PLAN REISSUED TO CLIENT
1	DEC. 13, 2018	ISSUED FOR BUILDING PERMIT

jardin
DESIGN GROUP INC
64 JARDIN DR. SUITE 3A
VAUGHAN ONT. L4K 3P3
TEL: 905 660-3377 FAX: 905 660-3713
EMAIL: info@jardindesign.ca

The undersigned has reviewed and takes responsibility for this design and has the qualifications and meets the requirements set out in the Ontario Building Code to be a designer

CLAUSE/JARDIN INFORMATION
Required unless design is exempt under Division C, Subsection 3.2.4 of the building code

Walter Sellar — 21031
NAME — SIGNATURE — BCIN

REGISTRATION INFORMATION
Required unless design is exempt under Division C, Subsection 3.2.4 of the building code

Jardin design group inc. — 27759
FIRM NAME — BCIN

STREETSCAPE

LAMBERTS LANE - PHASE 2
TOWN OF CALEDON

BILD

TYPE	DATE
T	—
SCALE	
1/8"=1'-0"	
JOB No.	DRAWING No.
18-18	4

DRAWING: 1 DRAWING(S) --

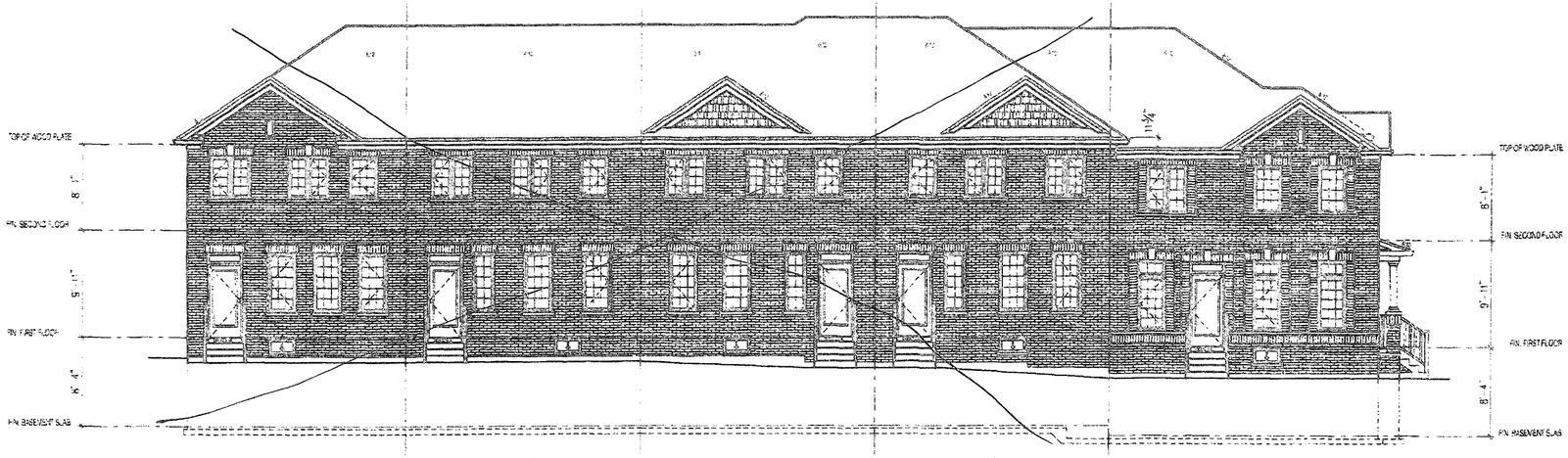

HORIZON 3E
REAR ELEV-1
TH 96-5

HORIZON 1
REAR ELEV-1
TH 96-4

HORIZON 2
REAR ELEV-1
TH 96-3

HORIZON 2
REAR ELEV-1
TH 96-2

HORIZON 1E
REAR ELEV-1 - UPGRADE
TH 96-1

Block 96-1

BLOCK 96

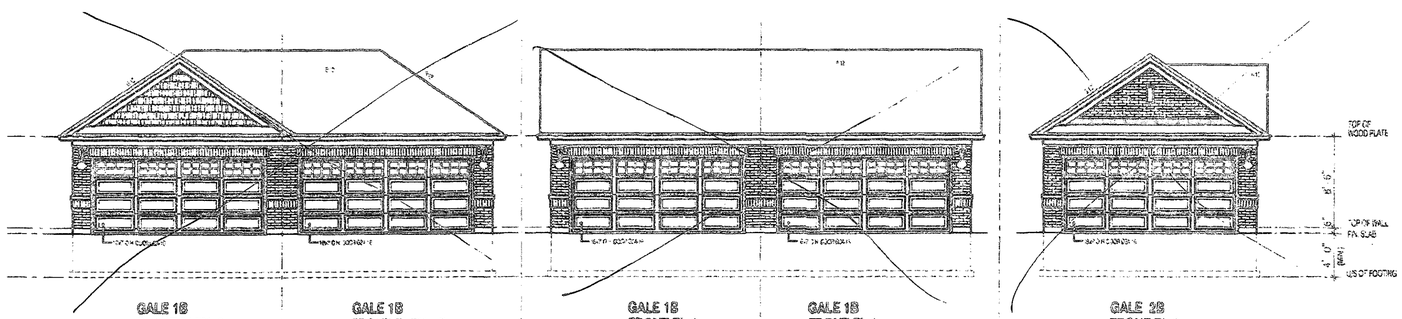

GALE 1B
FRONT ELEV.-3
TH 96-5

GALE 1B
FRONT ELEV. - 2
TH 96-4

GALE 1B
FRONT EL-1
TH 96-3

GALE 1B
FRONT EL-1
TH 96-2

GALE 2B
FRONT EL-1
TH 96-1

THIS STRUCTURE MUST BE CONSTRUCTED TO MEET OR EXCEED THE REQUIREMENTS OF THE ONTARIO BUILDING CODE

RECEIVED
AUG 12 2019
TOWN OF CALEDON
BUILDING SECTION
FILE NO

JUN 12 2019

BLOCK 96

It is the builder's complete respons
ensure that all plans submitted for
fully comply with the Architectural G
and all applicable regulations and req
including zoning provisions and any
in the subdivision agreement. Tha
Architect is not responsible in any
examining or approving site (lotting)
working drawings with respect to any
building code or permit matter or
house can be properly built or located

This is to certify that these plans
with the applicable Architectural
Guidelines approved by the T
CALEDON.

JOHN C. WILLIAMS LTD., ARCHITECT
ARCHITECTURAL CONTROL REVIEW
AND APPROVAL
APPROVED BY:
DATE: JUN 25 2019
This approval applies only to design as shown
Design Guidelines may be found on file at the
Town of Caledon

No	DATE:	WORK DESCRIPTION
10		
9		
8		
7		
6		
5		
4		
3		
2	JUNE 5, 2019	REVISED DRAWING PER NEW CI ISSUED TO CLIENT
1	DEC 13, 2018	ISSUED FOR BUILDING PERMIT

jardin
DESIGN GROUP IN
64 JARDIN DR. SUITE 3A
VAUGHAN ONT. L4K 3P3
TEL: 905 660-3377 FAX: 905 660-3
EMAIL: info@jardindesign.co

The undersigned has reviewed and takes responsibility
and has the qualifications and meets the requirements
Ontario Building Code to be a designer

QUALIFICATION INFORMATION
Required unless design is exempt under Division C, S
3.2.4 of the building code

Walter Batko
NAME
SIGNATURE

REGISTRATION INFORMATION
Required unless design is exempt under Division C, S
3.2.4 of the building code

jardin design group inc.
FIRM NAME

STREETSCAPE

LAMBERTS LANE - PHASE 2
TOWN OF CALEDON

BILD

TYPE	T
SCALE	1/8" = 1'-
PROJ. No.	18-18

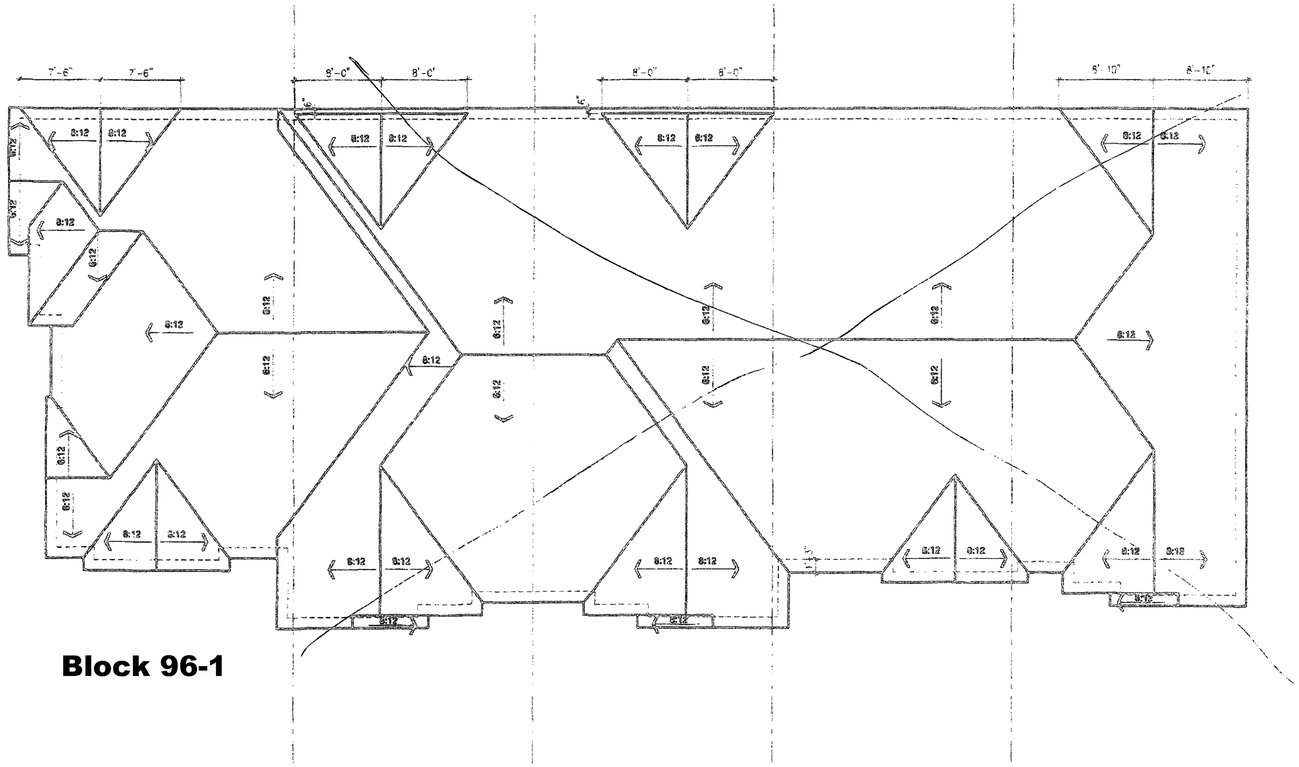

Block 96-1

BLOCK 96

This structure must be constructed to meet or exceed the provisions of the Ontario Building Code

RECEIVED
AUG 12 2019
TOWN OF CALEDON
BUILDING SECTION
FILE NO

JUN 12 2019

BLOCK 96

It is the builder's complete respons
ensure that all plans submitted for
fully comply with the Architectural G
and all applicable regulations and req
including zoning provisions and any p
in the subdivision agreement. The
Architect is not responsible in any
examining or approving site (lotting)
working drawings with respect to any
building code or permit matter or
house can be properly built or located

This is to certify that these plans
with the applicable Architectural
Guidelines approved by the T
CALEDON.

No	DATE	WORK DESCRIPTION
10		
9		
8		
7		
6		
5		
4		
3		
2	JUNE 5 2019	REVISED GRADING PER NEW G ISSUED TO CLIENT
1	DEC. 13. 2018	ISSUED FOR BUILDING PERMIT

jardin
DESIGN GROUP IN
64 JARDIN DR SUITE 3A
VAUGHAN ONT. L4K 3R3
TEL: 905 660-3377 FAX: 905 660-
EMAIL. info@jardindesign.co

The undersigned has reviewed and takes responsibility for this design and has the qualifications and meets the requirements p Ontario Building Code to be a designer

QUALIFICATION INFORMATION
Required unless design is exempt under Division C, S

Walter Botta
NAME
SIGNATURE

REGISTRATION INFORMATION
Required unless design is exempt under Division C, S 3.2.4 of the building code

jardin design group inc.
FIRM NAME

ROOF PLAN

LAMBERTS LANE - PHASE 2
TOWN OF CALEDON

BILD

SCALE	1/8"=1'
REC. TO	18-18

DRAWN BY
DRAFT TO MUNI