greg - H:\ARCHIVE\WORKING\2019\19014.GRE\CONSTR_NOTES & DETAILS\SINGLES\GP-14x18-NOTES-2020-VA3-PKG-A1-19014.dwg - Thu, Dec 3 2020 - 2:15 PM

# CONSTRUCTION NOTES *(Unless otherwise noted)*

ALL CONSTRUCTION TO ADHERE TO THESE PLANS AND SPEC'S AND TO CONFORM TO THE ONTARIO BUILDING CODE AND ALL OTHER APPLICABLE CODES AND AUTHORITIES HAVING JURISDICTION. THESE REQUIREMENTS ARE TO BE TAKEN AS MINIMUM SPECIFICATIONS. ONT. REG. 332/12-2012 OBC.

(1.) **ROOF CONSTRUCTION**
NO.210 (10.25kg/m2) ASPHALT SHINGLES, 10mm (3/8") PLYWOOD SHEATHING WITH "H" CLIPS. APPROVED WOOD TRUSSES @ 610mm (24") O.C. MAX. APPROVED EAVES PROTECTION TO EXTEND 900mm (3'-0") FROM EDGE OF ROOF AND MIN. 300mm (12") BEYOND INNER FACE OF EXTERIOR WALL, (EAVES PROTECTION NOT REQ'D FOR ROOF SLOPES 8:12 OR GREATER) 38x89 (2"x4") TRUSS BRACING @ 1830mm (6'-0") O.C. AT BOTTOM CHORD. PREFIN. ALUM. EAVESTROUGH, FASCIA, RWL & VENTED SOFFIT. PROVIDE ICE & WATER SHIELD TO ALL ROOF/WALL SURFACES SUSCEPTIBLE TO ICE DAMMING. ROOF SHEATHING TO BE FASTENED 150 (6") c/c ALONG EDGES & INTERMEDIATE SUPPORTS WHEN TRUSSES SPACED GREATER THAN 406 (16"). ATTIC VENTILATION 1:300 OF INSULATED CEILING AREA WITH MIN. 25% AT EAVES & MIN. 25% AT RIDGE (OBC 9.19.1.2.).

(2.) **FRAME WALL CONSTRUCTION (2"x6") (SB-12-TABLE 3.1.1.2.A)**
SIDING AS PER ELEV., 19x38 (1"x2") VERTICAL WOOD FURRING, CONTIN. SHEATHING MEMBRANE, 11mm (7/16") EXT. TYPE SHEATHING OR OBC COMPLIANT EQUIVALENT, 38x140 (2"x6") STUDS @ 400mm (16") O.C., RSI 3.87 (R22) INSULATION AND APPR. VAPOUR BARRIER AND APPR. CONTIN. AIR BARRIER, 13mm (1/2") INT. DRYWALL FINISH. SIDING TO BE MIN. 200mm (8") ABOVE FINISH GRADE. REFER TO OBC SB-12, CHAPTER 3 FOR REQUIRED MINIMUM THERMAL INSULATION REQUIREMENTS.

(2B.) **FRAME WALL CONSTRUCTION (2"x4")- GARAGE WALLS**
SIDING AS PER ELEV., 19x38 (1"x2") VERTICAL WOOD FURRING, CONTIN. SHEATHING MEMBRANE, 11mm (7/16") EXT. TYPE SHEATHING OR OBC COMPLIANT EQUIVALENT, 38x89 (2"x4") STUDS @ 406mm (16") O.C. (MAX. HEIGHT 3000mm (9'-10")), WITH APPR. DIAGONAL WALL BRACING. REFER TO NOTE 19 WHERE FLOOR EXISTS ABOVE GARAGE.
SIDING TO BE MIN. 200mm (8") ABOVE FINISH GRADE.

(2C.) **STUCCO WALL CONSTRUCTION (2"x6") (SB-12-TABLE 3.1.1.2.A)**
STUCCO CLADDING SYSTEM CONFORMING TO O.B.C. 9.27.1.1.(2) & 9.28 THAT EMPLOY A MINIMUM 10mm AIR SPACE BEHIND THE CLADDING WITH POSITIVE DRAINAGE TO THE EXT. AND APPLIED PER MANUFACTURERS SPECIFICATIONS ON 25mm (1") MIN. EXTRUDED OR EXPANDED RIGID POLYSTYRENE ON APPR. AIR/MOISTURE BARRIER ON 38x140 (2"x6") STUDS @ 406 (16") O.C., RSI 3.87 (R22) BATT INSUL., APPR. 6 MIL. POLYETHYLENE VAPOUR BARRIER, 13mm (1/2") GYPSUM BOARD INTERIOR FINISH. STUCCO TO BE MIN. 200 (8") ABOVE FINISH GRADE. REFER TO OBC SB-12, CHAPTER 3 FOR REQUIRED MINIMUM THERMAL INSULATION REQUIREMENTS.

(2D.) **STUCCO WALL CONSTRUCTION (2"x4") -GARAGE WALLS**
STUCCO CLADDING SYSTEM CONFORMING TO O.B.C. 9.27.1.1.(2) & 9.28 THAT EMPLOY A MINIMUM 10mm AIR SPACE BEHIND THE CLADDING WITH POSITIVE DRAINAGE TO THE EXTERIOR AND APPLIED PER MANUFACTURERS SPECIFICATIONS OVER 25mm (1") MIN. EXPANDED OR EXTRUDED RIGID POLYSTYRENE ON APPROVED AIR/MOISTURE BARRIER ON 38x89 (2"x4") STUDS @ 406 (16") O.C. (MAX. HEIGHT 3000mm (9'-10")), WITH APPR. DIAGONAL WALL BRACING. REFER TO NOTE 19 WHERE FLOOR EXISTS ABOVE GARAGE.
STUCCO TO BE MIN. 200 (8") ABOVE FINISH GRADE.

(2E.) **WALLS ADJACENT TO ATTIC – NO CLADDING**
11mm (7/16") EXT. TYPE SHEATHING OR OBC COMPLIANT EQUIVALENT, 38x140 (2"x6") STUDS @ 400mm (16") O.C., RSI 3.87 (R22) INSULATION AND APPR. VAPOUR BARRIER AND APPR. CONTIN. AIR BARRIER, 13mm (1/2") INTERIOR DRYWALL FINISH. MID-HEIGHT BLOCKING REQ'D. IF NO SHEATHING APPLIED. REFER TO OBC SB-12, CHAPTER 3 FOR ADDITIONAL THERMAL INSULATION REQUIREMENTS.

(3.) **BRICK VENEER CONSTRUCTION (2"x6") (SB-12-TABLE 3.1.1.2.A)**
90mm (4") FACE BRICK, 25mm (1") AIR SPACE, 22x180x0.76mm (7/8"x7"x0.03") GALV. METAL TIES @ 406mm (16") O.C. HORIZONTAL 610mm (24") O.C. VERTICAL. APPROVED SHEATHING PAPER, 11mm (7/16") EXTERIOR TYPE SHEATHING OR OBC COMPLIANT EQUIVALENT, 38x140 (2"x6") STUDS @ 406mm (16") O.C., RSI 3.87 (R22) INSULATION AND APPROVED VAPOUR BARRIER WITH APPROVED CONTIN. AIR BARRIER. 13mm (1/2") INT. DRYWALL FINISH. PROVIDE WEEP HOLES @ 800mm (32") O.C. BOTTOM COURSE AND OVER OPENINGS. PROVIDE BASE FLASHING UP MIN. 150mm (6") BEHIND BUILDING PAPER. BRICK TO BE MIN. 150mm (6") ABOVE FINISH GRADE. REFER TO OBC SB-12, CHAPTER 3 FOR REQUIRED MINIMUM THERMAL INSULATION REQUIREMENTS.

(3B.) **BRICK VENEER CONSTRUCTION (2"x4")- GARAGE WALLS**
90mm (4") FACE BRICK, 25mm (1") AIR SPACE, 22x180x0.76mm (7/8"x7"x0.03") GALV. METAL TIES @ 406mm (16") O.C. HORIZONTAL 610mm (24") O.C. VERTICAL. APPROVED SHEATHING PAPER, 11mm (7/16") EXTERIOR TYPE SHEATHING OR OBC COMPLIANT EQUIVALENT, 38x89 (2"x4") STUDS @ 406mm (16") O.C. (MAX. HEIGHT 3000mm (9'-10")) WITH APPROVED DIAGONAL WALL BRACING. REFER TO NOTE 19 WHERE FLOOR EXISTS ABOVE GARAGE. PROVIDE WEEP HOLES @ 800mm (32") O.C. BOTTOM COURSE AND OVER OPENINGS. PROVIDE BASE FLASHING UP MIN. 150mm (6") BEHIND BUILDING PAPER.
BRICK TO BE MIN. 150mm (6") ABOVE FINISH GRADE.

(3C.) **STUCCO WALL CONSTRUCTION (2"x6") (SB-12-TABLE 3.1.1.2.A)**
STUCCO CLADDING SYSTEM CONFORMING TO O.B.C. 9.27.1.1.(2) & 9.28 THAT EMPLOYS A MINIMUM 10mm AIR SPACE BEHIND THE CLADDING WITH POSITIVE DRAINAGE TO THE EXTERIOR AND APPLIED PER MANUFACTURERS SPECIFICATIONS OVER 25mm (1") MIN. EXTRUDED OR EXPANDED RIGID POLYSTYRENE ON APPR. CONTIN. AIR/MOISTURE BARRIER ON 38x140 (2"x6") STUDS @ 406mm (16") O.C., RSI 3.87 (R22) BATT INSUL., APPR. 6 MIL. POLYETHYLENE VAPOUR BARRIER, 13mm (1/2") GYPSUM WALLBOARD INTERIOR FINISH. STUCCO TO BE MIN. 200 (8") ABOVE FINISH GRADE. REFER TO OBC SB-12, CHAPTER 3 FOR REQUIRED MINIMUM THERMAL INSULATION REQUIREMENTS.

B. MARINKOVIC
December 4/2020

STRUDET INC.
FOR STRUCTURE ONLY

(4.) **INTERIOR STUD PARTITIONS**
FOR BEARING PARTITIONS 38x89 (2"x4") @ 406mm (16") O.C. FOR 2 STOREYS AND 305mm (12") O.C. FOR 3 STOREYS, NON-BEARING PARTITIONS 38x89 (2"x4") @ 610mm (24") O.C. PROVIDE 38x89 (2"x4") BOTTOM PLATE AND 2/38x89 (2/2"x4") TOP PLATE. 13mm (1/2") INT. DRYWALL BOTH SIDES OF STUDS, PROVIDE 38x140 (2"x6") STUDS/PLATES WHERE NOTED.

(5.) **FOUNDATION WALL/FOOTINGS: (9.15.3, 9.15.4, 9.13.2, 9.14.2.1.(2))**
200mm (8") POURED CONC. FDTN. WALL 15MPa (2200psi) WITH BITUMENOUS DAMPPROOFING AND DRAINAGE LAYER. DRAINAGE LAYER REQ'D. WHEN BASEMENT INSUL. EXTENDS 900 (2'-11") BELOW FIN. GRADE. DRAINGE LAYER IS NOT REQ'D. IF FOUNDATION WALL IS WATERPROOFED. MAXIMUM POUR HEIGHT 2390 (7'-10") ON 500x155 (20"x6") CONTINUOUS KEYED CONC. FTG. BRACE FDTN. WALL PRIOR TO BACKFILLING. ALL FOOTINGS SHALL REST ON NATURAL UNDISTURBED SOIL OR COMPACTED ENGINEERED FILL.

**STRIP FOOTINGS – FOR TOWNHOUSES**
FOR STRIP FOOTING SIZES REFER TO BLOCK FOUNDATION PLAN. ASSUMED 120 KPa (18 p.s.i.) SOIL BEARING CAPACITY FOR TOWNHOUSES, TO BE VERIFIED ON SITE.

-*MAXIMUM FLOOR LIVE LOAD OF 2.4kPa. (50psf.) PER FLOOR.*
-REFER TO SOILS REPORT FOR SOIL CONDITIONS AND BEARING CAPACITY.

(6.) **FOUNDATION DRAINAGE OBC. 9.14.2. & 9.14.3.**
100mm (4") DIA. FOUNDATION DRAINAGE TILE 150mm (6") CRUSHED STONE OVER AND AROUND DRAINAGE TILES.

(7.) **BASEMENT SLAB OBC. 9.3.1.6.(1)(b), 9.16.4.5.(1), 9.25.3.3.(15)**
80mm (3")MIN. 25MPa (3600psi) CONC. SLAB ON 100mm (4") COARSE GRANULAR FILL, OR 20MPa. (3000psi) CONC. WITH DAMPPROOFING BELOW SLAB. UNDER SLAB INSULATION PER SB-12; 3.1.1.7.(5)(6) *where required.*
ALL SLAB JOINTS & PENETRATIONS TO BE SEALED TO MAINTAIN AIR BARRIER.

(8.) **WOOD SUBFLOORS (SEE OBC. 9.23.14. & 9.30.2.1)**
-19mm (3/4") MIN. T & G SUBFLOOR UNDER GROUND FLOOR FINISH FLOOR.
16mm (5/8") T&G SUBFLOOR UNDER SECOND FLOOR FINISH FLOOR.
16mm (5/8") PANEL-TYPE UNDERLAY FOR CERAMIC TILE APPLICATION.
6mm (1/4") PANEL-TYPE UNDERLAYMENT UNDER RESILIENT & PARQUET FLOORING.

(9.) **ATTIC INSULATION (SB-12-TABLE 3.1.1.2.A) (SB-12-3.1.1.8)**
RSI 10.56 (R60) BLOWN IN ROOF INSULATION AND APPROVED VAPOUR BARRIER, 16mm (5/8") INT. DRYWALL FINISH OR APPROVED EQUAL. RSI 3.52 (R20) MIN. ABOVE INNER SURFACE OF EXTERIOR WALL

(10.) **ALL STAIRS/EXTERIOR STAIRS -OBC. 9.8.-**
UNIFORM RISE -5mm (1/4") MAX BETWEEN ADJACENT TREADS OR LANDINGS
-10mm (1/2") MAX BETWEEN TALLEST & SHORTEST RISE IN FLIGHT

MAX. RISE = 200 (7-7/8")
MIN. RUN = 210 (8-1/4")
MIN. TREAD = 235 (9-1/4")
MAX. NOSING = 25 (1")
MIN. HEADROOM = 1950 (6'-5")
RAIL @ LANDING = 900 (2'-11")
RAIL @ STAIR = 865 (2'-10") to 965 (3'-2")
MIN. STAIR WIDTH = 860 (2'-10")

**FOR CURVED STAIRS**
MIN. RUN = 150 (6")
MIN. AVG. RUN = 200 (8")

(11.) **HANDRAILS -OBC. 9.8.7.-**
FINISHED RAILING ON PICKETS SPACED MAXIMUM 100mm (4") BETWEEN PICKETS. CLEARANCE BETWEEN HANDRAIL AND SURFACE BEHIND IT TO BE 50 (2") MIN. HANDRAILS TO BE CONTINUOUS EXCEPT FOR NEWEL POST AT CHANGES OF DIRECTION .

**INTERIOR GUARDS -OBC. 9.8.8.-**
*INTERIOR GUARDS: 900mm (2'-11") MIN. HIGH*

**EXTERIOR GUARDS – OBC. 9.8.8.**
900mm (36") HIGH GUARD WHERE DISTANCE FROM PORCH TO FIN. GRADE IS LESS THAN 1800mm (71"). 1070mm (42") HIGH GUARD IS REQUIRED WHERE DISTANCE EXCEEDS 1800mm (71").

(12.) **SILL PLATE ANCHORAGE**
38x89 (2"x4") SILL PLATE WITH 13mm (1/2") DIA. ANCHOR BOLTS 200mm (8") LONG, EMBEDDED MIN. 100mm (4") INTO CONC. @ 2400mm (7'-10") O.C., CAULKING OR 25 (1") MIN. MINERAL WOOL BETWEEN PLATE AND TOP OF FDTN. WALL.
USE NON-SHRINK GROUT TO LEVEL SILL PLATE WHEN REQUIRED.

(13.) **BASEMENT INSULATION (SB-12-3.1.1.7), 9.25.2.3, 9.13.2.6)**
FOUNDATION WALLS ENCLOSING HEATED SPACE SHALL BE INSULATED FROM THE UNDERSIDE OF THE SUBFLOOR TO NOT MORE THAN 200mm (8") ABOVE THE FINISHED FLOOR & NO CLOSER THAN 50mm (2") OF THE BASEMENT SLAB. RSI 3.52ci (R20ci) BLANKET INSULATION TO HAVE APPROVED VAPOUR BARRIER. RECOMMEND DAMPPROOF WITH BUILDING PAPER BETWEEN THE FOUNDATION WALL AND INSULATION UP TO GRADE LEVEL. NOTE: FULL HEIGHT INSULATION AT COLD CELLAR WALLS. AIR BARRIER TO BE SEALED TO FOUNDATION WALL WITH CAULKING. CONTINUOUS INSULATION (ci) IS NOT TO BE INTERRUPTED BY FRAMING.

(14.) **BASEMENT BEARING STUD PARTITION**
38x89 (2"x4") STUDS @ 406mm (16") O.C. 38x89 (2"x4") SILL PLATE ON DAMPPROOFING MATERIAL, 13mm (1/2") DIA. ANCHOR BOLTS 200mm (8") LONG, EMBEDDED MIN. 100mm (4") INTO CONC. @ 2400mm (7'-10") O.C. 100mm (4") HIGH CONC. CURB ON 305x155 (12"x6") CONC. FOOTING. ADD HORIZ. BLOCKING AT MID-HEIGHT IF WALL IS UNFINISHED.

(15.) **STEEL BASEMENT COLUMN (SEE O.B.C. 9.15.3.3)**
89mm(3-1/2") DIA x 4.78mm(0.188") STL. COL. WITH A MIN. CAPACITY OF 108.6kN (24,000lbs.) WITH 150x150x9.5 (6"x6"x3/8") STL. TOP & BOTTOM PLATE.

(15A) **STEEL COLUMN**
90mm(3-1/2") DIA x 4.76mm(0.188") STL. COL. WITH 100x100x6.0 (4"x4"x1/4") TOP & BOTTOM PLATES. FIELD WELD BOTTOM PLATE TO 100x250x12.5 (4"x10"x1/2") BASE PLATE C/W 2-12mm DIA. x 300mm LONG x50mm HOOK ANCHORS (2-1/2"x12"x2"). TIE COLUMN TO STUD WALL WITH 2-32x3.175 (1 1/4"x 1/8") STEEL STRAP WELDED TO COLUMN AND FASTENED TO STUD WITH 2-SDS 6.35x38 (1/4"x1 1/2") SCREWS MANUF. BY SIMPSON STRONG TIE.

(16.) **CONCRETE PILASTER**
BEAM POCKET OR 200x200 (8"x8") POURED CONC. NIB WALLS. MIN. BEARING 90mm (3-1/2")

(17.) 19x38 (1"x2") CONTINUOUS WOOD STRAPPING BOTH SIDES OF STEEL BEAM. (OBC. 9.23.4.3.(3c))

(18.) **GARAGE SLAB**
100mm (4") 32MPa (4640psi) CONC. SLAB WITH 5-8% AIR ENTRAINMENT ON OPTIONAL 100 (4") COARSE GRANULAR FILL WITH COMPACTED SUB-BASE OR COMPACTED NATIVE FILL.
SLOPE TO FRONT (EXTERIOR) AT 1% MIN.

(19.) **INTERIOR GARAGE WALLS & CEILINGS (SB-12-TABLE 3.1.1.2.A)**
13mm (1/2") GYPSUM BOARD ON WALL AND CEILING BETWEEN HOUSE AND GARAGE, RSI 3.87 (R22) IN WALLS, RSI 5.46 (R31) IN CEILING. TAPE AND SEAL ALL JOINTS AIRTIGHT PER O.B.C. 9.10.9.16. REFER TO SB-12, TABLE 3.1.1.2.A. FOR REQUIRED THERMAL INSULATION.

(20.) DOOR AND FRAME GASPROOFED. DOOR EQUIPPED WITH SELF CLOSING DEVICE AND WEATHERSTRIPPING PER OBC 9.10.13.15.

(21.) **EXTERIOR STEP**
PRECAST CONCRETE STEP OR WOOD STEP WHERE NOT EXPOSED TO WEATHER. MAX. RISE 200mm (7-7/8") MIN. TREAD 250mm (9-27/32"). SEE OBC. 9.8.9.2., 9.8.9.3. & 9.8.10.

(22.) **DRYER VENT(OBC-6.2.3.8.(7). & 6.2.4.1.1)**
CAPPED DRYER EXHAUST VENTED TO EXTERIOR.
(USE 100mm (4") DIA. SMOOTH WALL VENT PIPE).

(23.) **INSULATED ATTIC ACCESS (OBC-9.19.2.1. & SB12-3.1.1.8)**
ATTIC ACCESS HATCH WITH MIN. DIMENSION OF 545x700mm (21-1/2"x27-1/2") & A MIN. AREA OF 0.32 SQ.M. (3.44 SQ.FT.) WITH WEATHERSTRIPPING. RSI 3.52 (R20) RIGID INSULATION BACKING. SEE OBC SB-12, 3.1.1.8.

(24.) **FIREPLACE CHIMNEYS -OBC. 9.21.-**
TOP OF FIREPLACE CHIMNEY SHALL BE 915mm (3'-0") ABOVE THE HIGHEST POINT AT WHICH IT COMES IN CONTACT WITH THE ROOF AND 610mm (2'-0") ABOVE THE ROOF SURFACE WITHIN A HORIZ. DISTANCE OF 3050mm (10'-0") FROM THE CHIMNEY.

(25.) **LINEN CLOSETS**
4 SHELVES MIN. 350mm (14") DEEP.

(26.) **MECHANICAL EXHAUST**
MECHANICAL EXHAUST FAN, VENTED TO EXTERIOR AS REQUIRED BY OBC. 9.32.3.5. & 9.32.3.10.

(27.) **STEEL BEARING PLATE FOR MASONRY WALLS**
280x280x16 (11"x11"x5/8") STL. PLATE FOR STL. BEAMS AND 280x280x12 (11"x11"x1/2") STL. PLATE FOR WOOD BEAMS BEARING ON CONC. BLOCK PARTYWALL, ANCHORED WITH 2-19mm (3/4") x 200mm (8") LONG GALV. ANCHORS WITHIN SOLID BLOCK COURSE. LEVEL WITH NON-SHRINK GROUT.

(27A) **SOLID WOOD BEARING FOR WOOD STUD WALLS**
SOLID BEARING TO BE AT LEAST AS WIDE AS THE SUPPORTED MEMBER. SOLID WOOD BEARING COMPRISED OF BUILT-UP WOOD STUDS TO BE CONSTRUCTED IN ACCORDANCE WITH OBC 9.17.4.2(2).

(28.) **CLASS 'B' VENT**
U.L.C. RATED CLASS "B" VENT 610mm (2'-0") ABOVE THE POINT IN CONTACT WITH THE ROOF FOR SLOPES UP TO 9/12, REFER TO THE ONTARIO GAS UTILIZATION CODE.

(29.) **BASEMENT WOOD POST (OBC 9.17.4.)**
3-38x140 (3-2"x6") BUILT-UP-POST ON METAL BASE SHOE ANCHORED TO CONC. WITH 12.7 DIA. BOLT, 406x406x203 (16"x16"x8") CONC. FTG. OR AS OTHERWISE SPECIFIED ON DRAWING.

(30.) **STEPPED FOOTINGS (OBC 9.15.3.9.)**
MIN. HORIZ. STEP = 600mm (24").
MAX. VERT. STEP = 600mm (24").

(31.) **SLAB ON GRADE**
MIN. 100mm (4") CONCRETE SLAB ON GRADE ON 100mm (4") COARSE GRANULAR FILL. REINFORCED WITH 6x6-W2.9xW2.9 MESH PLACED NEAR MID-DEPTH OF SLAB. CONC. STRENGTH 32 MPa (4640 psi) WITH 5-8% AIR ENTRAINMENT ON COMPACTED SUB-GRADE. UNDER SLAB INSULATION AS PER OBC. SB-12 3.1.1.7.(5)(6) AND SB-12, TABLE 3.1.1.2.A. *where required.*
ALL JOINTS & PENETRATIONS OF INTERIOR SLABS TO BE SEALED TO MAINTAIN AIR BARRIER.

(32.) **DIRECT VENTING GAS FURNACE VENT**
DIRECT VENT FURNACE TERMINAL MIN. 900mm (36") FROM A GAS REGULATOR. MIN. 300mm (12") ABOVE FIN. GRADE, FROM ALL OPENINGS, EXHAUST AND INTAKE VENTS. HRV INTAKE TO BE A MIN. OF 1830mm (6'-0") FROM ALL EXHAUST TERMINALS. REFER TO GAS UTILIZATION CODE. ALL AIR INTAKES SHALL BE LOCATED SO THAT THEY ARE SEPARATED FROM KITCHEN EXHAUST BY 3.0M IN COMPLIANCE WITH O.B.C. DIV.-B TABLE 6.2.3.12..

(33.) **DIRECT VENTING GAS FIREPLACE VENT**
DIRECT VENT GAS FIREPLACE. VENT TO BE A MINIMUM 300mm (12") FROM ANY OPENING AND ABOVE FIN. GRADE. REFER TO GAS UTILIZATION CODE.

(34.) **JOIST STRAPPING AND BRIDGING (SEE OBC. 9.23.9.4)**
16mm (5/8") T & G SUBFLOOR ON WOOD FLOOR JOISTS. FOR CERAMIC TILE APPLICATION (* SEE OBC 9.30.6. *) 6mm (1/4") PANEL TYPE UNDERLAY UNDER RESILIENT & PARQUET FLOORING. (* SEE OBC 9.30.2.*)
*FLOOR JOISTS WITH SPANS OVER 2100mm (6'-11") TO BE BRIDGED* WITH 38x38 (2"x2") CROSS BRACING OR SOLID BLOCKING @ 2100mm (6'-11") O.C. MAX. AND WHERE SPECIFIED BY JOIST TABLES A-1 OR A-2 STRAPPING SHALL BE 19x64 (1"x3") @ 2100mm (6'-11") O.C. UNLESS A PANEL TYPE CEILING FINISH IS APPLIED. (* SEE OBC 9.23.9.4. *)

(35.) **EXPOSED BUILDING FACE -OBC. 9.10.15.**
EXTERIOR WALLS TO HAVE A FIRE RESISTANCE RATING OF NOT LESS THAN 45 min. WHERE LIMITING DISTANCE (LD) IS LESS THAN 1.2M (3'-11"). WHERE THE LD IS LESS THAN 600mm (1'-11") THE EXPOSING FACE SHALL BE CLAD IN NON-COMBUSTIBLE MATERIAL. SEE ELEVATIONS FOR ADDITIONAL NOTES.

(36.) **COLD CELLAR PORCH SLAB (OBC 9.39.)**
FOR MAX. 2500 mm (8'-2") PORCH DEPTH (SHORTEST DIM.), 125mm (4 7/8") 32MPa (4640psi) CONC. SLAB WITH 5-8% AIR ENTRAINMENT. REINF. WITH 10M BARS @ 200mm (7 7/8") O.C. EACH WAY IN BOTTOM THIRD OF SLAB, 600x600 (23 5/8"x 23 5/8") 10M DOWELS @ 600mm (23 5/8") O.C., ANCHORED IN PERIMETER FDTN. WALLS. SLOPE SLAB MIN. 1.0% FROM DOOR. SLAB TO HAVE MIN 75mm (3") BEARING ON FDTN. WALLS. PROVIDE (L1) LINTELS OVER CELLAR DOOR AND WITH 100mm (4") END BEARING.

(37.) **BRICK CHECK**
THE FDTN. WALL SHALL NOT BE REDUCED TO LESS THAN 90mm (3-1/2") THICK TO A MAX. DEPTH OF 660mm (26") AND SHALL BE TIED TO THE FACING MATERIAL WITH METAL TIES SPACED 200mm (8") O.C. VERTICALLY AND 900mm (36") O.C. HORIZONTALLY. FILL SPACE BETWEEN WALL AND FACING SOLID WITH MORTAR.

(38.) **CONVENTIONAL ROOF FRAMING (2.0Kpa. SNOW LOAD)**
38x140 (2"x6") RAFTERS @ 406mm (16"O.C.) FOR MAX 11'-7" SPAN, 38x184 (2"x8") RIDGE BOARD. 38x89 (2"x4") COLLAR TIES AT MIDSPANS. CEILING JOISTS TO BE 38x89 (2"x4") @ 406mm (16") O.C. FOR MAX. 2830mm (9'-3") SPAN & 38x140 (2"x6") @ 406 (16") O.C. FOR MAX. 4450mm (14'-7") SPAN.
RAFTERS FOR BUILT-UP ROOF TO BE 38x89 (2"x4") @ 610mm (24") O.C. WITH A 38x89 (2"x4") CENTRE POST TO THE TRUSS BELOW, LATERALLY BRACED @ 1800mm (6'-0") O.C. VERTICALLY.

(39.) **TWO STOREY VOLUME SPACES**
-FOR A MAXIMUM 5490 mm (18'-0") HEIGHT AND MAXIMUM SUPPORTED ROOF TRUSS LENGTH OF 6.0m, PROVIDE 2-38x140 (2-2"x6") SPR.#2 CONTIN. STUDS @ 305mm (12") O.C. (TRIPLE UP AT EVERY THIRD DOUBLE STUD FOR BRICK WALLS) C/W 9.6 (3/8") THICK EXT. PLYWOOD SHEATHING. PROVIDE SOLID WOOD BLOCKING BETWEEN WOOD STUDS @ 1220 mm (4'-0") O.C. VERTICALLY. -FOR WALLS WITH HORIZ. DISTANCES NOT EXCEEDING 2900 mm (9'-6"), PROVIDE 38x140 (2"x6") STUDS @ 406 (16") O.C. WITH CONTINUOUS 2-38x140 (2-2"x6")TOP PLATES + 1-38x140 (1-2"x6") BOTTOM PLATE & MINIMUM OF 3-38x184 (3-2"x8") CONT. HEADER AT GRND. CEILING LEVEL TOE-NAILED & GLUED AT TOP, BOTTOM PLATES AND HEADERS.

(40.) **EXPOSED FLOOR TO EXTERIOR (SB-12-TABLE 3.1.1.2.A)**
PROVIDE RSI 5.46 (R31) INSULATION, APPROVED VAPOUR BARRIER AND CONTINUOUS AIR BARRIER, FINISHED SOFFIT.

(41.) **PARTYWALLS**
TYPICAL 1 HOUR RATED PARTYWALL.
REFER TO DETAILS FOR TYPE AND SPECIFICATIONS.

(42.) **EXTERIOR WALLS FOR WALK-OUT CONDITIONS**
THE EXTERIOR BASEMENT STUD WALL TO BE 38x140 (2"x6") STUDS @ 406mm (16") o.c. OR 38x89 (2"x4") STUDS @ 305mm (12") o.c.

| LOOSE STEEL LINTELS | |
|---|---|
| L1 | =3-1/2" x 3-1/2" x 1/4"L (90x90x6.0L) |
| L2 | =4" x 3-1/2" x 5/16"L (100x90x8.0L) |
| L3 | =5" x 3-1/2" x 5/16"L (125x90x8.0L) |
| L4 | =6" x 3-1/2" x 3/8"L (150x90x10.0L) |
| L5 | =6" x 4" x 3/8"L (150x100x10.0L) |
| L6 | =7" x 4" x 3/8"L (180x100x10.0L) |

| LAMINATED VENEER LUMBER (LVL) BEAMS | | |
|---|---|---|
| LVL1A | =1-1 3/4"x7 1/4" | (1-45x184) |
| LVL1 | =2-1 3/4"x7 1/4" | (2-45x184) |
| LVL2 | =3-1 3/4"x7 1/4" | (3-45x184) |
| LVL3 | =4-1 3/4"x7 1/4" | (4-45x184) |
| LVL4A | =1-1 3/4"x9 1/4" | (1-45x235) |
| LVL4 | =2-1 3/4"x9 1/4" | (2-45x235) |
| LVL5 | =3-1 3/4"x9 1/4" | (3-45x235) |
| LVL5A | =4-1 3/4"x9 1/4" | (4-45x235) |
| LVL6A | =1-1 3/4"x11 7/8" | (1-45x300) |
| LVL6 | =2-1 3/4"x11 7/8" | (2-45x300) |
| LVL7 | =3-1 3/4"x11 7/8" | (3-45x300) |
| LVL7A | =4-1 3/4"x11 7/8" | (4-45x300) |
| LVL8 | =2-1 3/4"x14" | (2-45x356) |
| LVL9 | =3-1 3/4"x14" | (3-45x356) |

| PAD FOOTINGS | |
|---|---|
| 120 KPa. NATIVE SOIL | 90 KPa. ENGINEERED FILL SOIL |
| F1 = 42"x42"x18" CONCRETE PAD | F1 = 48"x48"x20" CONCRETE PAD |
| F2 = 36"x36"x16" CONCRETE PAD | F2 = 40"x40"x16" CONCRETE PAD |
| F3 = 30"x30"x12" CONCRETE PAD | F3 = 34"x34"x14" CONCRETE PAD |
| F4 = 24"x24"x12" CONCRETE PAD | F4 = 28"x28"x12" CONCRETE PAD |
| F5 = 16"x16"x8" CONCRETE PAD | F5 = 18"x18"x8" CONCRETE PAD |

(REFER TO FLOOR PLAN FOR UNUSUAL SIZE PADS NOT ON CHART.)

**DOOR SCHEDULE**

| NOS. | WIDTH | HEIGHT 8' to 9' CEILING | HEIGHT 10' OR MORE CEILING | TYPE |
|---|---|---|---|---|
| 1 | 2'-10" | 6'-8" | 8'-0" | INSULATED ENTRANCE DOOR |
| 1a | 2'-8" | 6'-8" | 8'-0" | INSULATED FRONT DOORS |
| 2 | 2'-8" | 6'-8" | 8'-0" | WOOD & GLASS DOOR |
| 3 | 2'-8" | 6'-8" | 8'-0" | EXTERIOR SLAB DOOR |
| 4 | 2'-8" | 6'-8" | 8'-0" | INTERIOR SLAB DOOR |
| 5 | 2'-6" | 6'-8" | 8'-0" | INTERIOR SLAB DOOR |
| 6 | 2'-2" | 6'-8" | 8'-0" | INTERIOR SLAB DOOR |
| 7 | 1'-6" | 6'-8" | 8'-0" | INTERIOR SLAB DOOR |

| BRICK VENEER LINTELS | | |
|---|---|---|
| WL1 | =3-1/2" x 3-1/2" x 1/4"L (89x89x6.4L) | + 2-2"x8" SPR. No.2 |
| WL2 | =4" x 3-1/2" x 5/16"L (102x89x7.9L) | + 2-2"x8" SPR. No.2 |
| WL3 | =5" x 3-1/2" x 5/16"L (127x89x7.9L) | + 2-2"x10" SPR. No.2 |
| WL4 | =6" x 3-1/2" x 7/16"L (152x89x11.0L) | + 2-2"x12" SPR. No.2 |
| WL5 | =6" x 4" x 7/16"L (152x102x11.0L) | + 2-2"x12" SPR. No.2 |
| WL6 | =5" x 3-1/2" x 5/16"L (127x89x7.9L) | + 2-2"x12" SPR. No.2 |
| WL7 | =5" x 3-1/2" x 5/16"L (127x89x7.9L) | + 3-2"x12" SPR. No.2 |
| WL8 | =5" x 3-1/2" x 5/16"L (127x89x7.9L) | + 3-2"x10" SPR. No.2 |
| WL9 | =6" x 4" x 7/16"L (152x102x11.0L) | + 3-2"x10" SPR. No.2 |

| WOOD LINTELS AND BEAMS | |
|---|---|
| WB1 | =2-2"x8" (2-38x184) SPR. No.2 |
| WB2 | =3-2"x8" (3-38x184) SPR. No.2 |
| WB3 | =2-2"x10" (2-38x235) SPR. No.2 |
| WB4 | =3-2"x10" (3-38x235) SPR. No.2 |
| WB5 | =2-2"x12" (2-38x286) SPR. No.2 |
| WB6 | =3-2"x12" (3-38x286) SPR. No.2 |
| WB7 | =5-2"x12" (5-38x286) SPR. No.2 |
| WB11 | =4-2"x10" (4-38x235) SPR. No.2 |
| WB12 | =4-2"x12" (4-38x286) SPR. No.2 |

**WINDOWS:**
1) **MINIMUM BEDROOM WINDOW -OBC. 9.9.10.1-**
AT LEAST ONE BEDROOM WINDOW ON A GIVEN FLOOR IS TO HAVE MIN. 0.35m2 UNOBSTRUCTED GLAZED OR OPENABLE AREA WITH MIN. CLEAR WIDTH OF 380 mm (1'-3").
2) **WINDOW GUARDS -OBC. 9.8.8.1.(6)**
A GUARD IS REQUIRED WHERE THE TOP OF THE WINDOW SILL IS LOCATED LESS THAN 480mm (1'-7") ABOVE FIN. FLOOR AND THE DISTANCE FROM THE FIN. FLOOR TO THE ADJACENT GRADE IS GREATER THAN 1800mm (5'-11")
3) **WINDOW WELLS -OBC. 9.14.6.3.**
ALL WINDOW WELLS TO DRAIN TO FOOTING LEVEL PER OBC 9.14.6.3. CHECK WITH THE LOCAL AUTHORITY.
4) **EXTERIOR WINDOWS**
ALL EXTERIOR WINDOWS TO COMPLY WITH REQUIREMENTS STATED IN O.B.C.-DIV. B-9.7.1.7. & SB12-3.1.1.9.

**DOORS:**
1) **EXTERIOR DOORS- THERMAL RESISTANCE**
ALL EXTERIOR DOORS TO COMPLY WITH THERMAL RESISTANCE AS STATED IN O.B.C. SB-12-3.1.1.9.
2) **EXTERIOR SLIDING GLASS DOORS- THERMAL RESISTANCE**
ALL EXTERIOR SLIDING GLASS DOORS TO COMPLY WITH THERMAL PERFORMANCE AS STATED IN O.B.C. SB-12-3.1.1.9.

**GENERAL:**
1) MECHANICAL VENTILATION IS REQUIRED TO PROVIDE 0.3 AIR CHANGES PER HOUR AVERAGED OVER 24 HOURS. SEE MECHANICAL DRAWINGS.
2) ALL DOWNSPOUTS TO DRAIN AWAY FROM THE BUILDING AS PER OBC 9.26.18.2. AND MUNICIPAL STANDARDS.
3) **STUD WALL REINFORCEMENT FOR FUTURE GRAB BARS IN MAIN BATHROOM**
● REINFORCEMENT OF STUD WALLS SHALL BE INSTALLED ADJACENT TO WATER CLOSETS AND SHOWER OR BATHTUB IN MAIN BATHROOM. REFER TO OBC. 9.5.2.3, 3.8.3.8.(3)(a), 3.8.3.8.(3)(c), 3.8.3.13.(2)(g) & 3.8.3.13.(4)(a).
4) **AIR BARRIERS**
ALL AIR BARRIER SYSTEMS TO COMPLY WITH O.B.C.-DIV. B, 9.25.3.
5) **OUTDOOR AIR INTAKE**
● ALL OUTDOOR AIR INTAKES SHALL BE LOCATED SO THAT THEY ARE SEPARATED FROM SOURCES OF CONTAMINATION (EXHAUST VENTS) IN COMPLIANCE WITH O.B.C. DIV.-B 6.2.3.12. AND TABLE 6.2.3.12.

**LUMBER:**
1) ALL LUMBER SHALL BE SPRUCE NO.2 GRADE, UNLESS NOTED OTHERWISE.
2) LUMBER EXPOSED TO THE EXTERIOR TO BE SPRUCE No.2 GRADE PRESSURE TREATED OR CEDAR, UNLESS NOTED OTHERWISE.
3) ALL LAMINATED VENEER LUMBER (L.V.L.) BEAMS, GIRDER TRUSSES, AND METAL HANGER CONNECTIONS SUPPORTING ROOF FRAMING TO BE DESIGNED & CERTIFIED BY ROOF TRUSS MANUF.
4) LVL BEAMS SHALL BE 2.0E-2950Fb MIN.. NAIL EACH PLY OF LVL WITH 89mm (3 1/2") LONG COMMON WIRE NAILS @ 300mm (12") O.C. STAGGERED IN 2 ROWS FOR 184,240 & 300mm (7 1/4",9 1/2", 11 7/8") DEPTHS AND STAGGERED IN 3 ROWS FOR GREATER DEPTHS AND FOR 4 PLY MEMBERS ADD 13mm (1/2") DIA. GALV. BOLTS BOLTED AT MID-DEPTH OF BEAM @ 915mm (3'-0") O.C.
5) PROVIDE TOP MOUNT BEAM HANGERS TYPE "SCL" MANUFACTURED BY SIMPSON STRONG-TIE OR EQUAL FOR ALL LVL BEAM TO BEAM CONNECTIONS UNLESS NOTED OTHERWISE.
6) JOIST HANGERS: PROVIDE METAL HANGERS FOR ALL JOISTS AND BUILT-UP WOOD MEMBERS INTERSECTING FLUSH BUILT-UP WOOD MEMBERS.
7) WOOD FRAMING NOT TREATED WITH A WOOD PRESERVATIVE, IN CONTACT WITH CONCRETE, SHALL BE SEPARATED FROM THE CONCRETE BY AT LEAST 2 mil. POLYETHYLENE FILM, No. 50 (45lbs.) ROLL ROOFING OR OTHER DAMPPROOFING MATERIAL, EXCEPT WHERE THE WOOD MEMBER IS AT LEAST 150mm (6") ABOVE THE GROUND.

**STEEL:**
1) STRUCTURAL STEEL SHALL CONFORM TO CAN/CSA-G40.21 GRADE 350W. "STRUCTURAL QUALITY". PER OBC. B-9.23.4.3.
2) REINFORCING STEEL SHALL CONFORM TO CSA-G30-18M GRADE 400R.

**STUCCO:**
1) ALL STUCCO WALLS TO HAVE A MINIMUM 10mm AIR SPACE BEHIND THE CLADDING WITH POSITIVE DRAINAGE TO THE EXTERIOR. THE EXTERIOR SHEATHING MUST NOT BE GYPSUM BASED. ALL STUCCO TO BE INSTALLED AS PER MANUFACTURERS SPECIFICATIONS.

THE MINIMAL THERMAL PERFORMANCE OF BUILDING ENVELOPE AND EQUIPMENT SHALL CONFORM TO THE FOLLOWING SB-12 COMPLIANCE PACKAGE AS PER OBC SUPPLEMENTARY STANDARD SB-12, SECTION 3.1.1.1.

**USE SB-12 COMPLIANCE PACKAGE (A1):**

| COMPONENT | A1 | Notes: |
|---|---|---|
| Ceiling with Attic Space<br>Minimum RSI (R) value | 10.56 (R60) | R20 at inner face of exterior walls |
| Ceiling without Attic Space<br>Minimum RSI (R) value | 5.46 (R31) | BATT or SPRAY |
| Exposed Floor<br>Minimum RSI (R) value | 5.46 (R31) | BATT or SPRAY |
| Walls Above Grade<br>Minimum RSI (R) value | 3.87 (R22) | 6" R22 BATT |
| Basement Walls<br>Minimum RSI (R) value | 3.52ci (R20ci) | OPTION TO USE R12+R10ci. |
| Edge of Below Grade Slab ≤600mm below grade<br>Minimum RSI (R) value | 1.76 (R10) | RIGID INSUL |
| Windows & Sliding glass Doors<br>Maximum U-value | 1.6U (0.28) | |
| Skylights<br>Maximum U-value | 2.8U (0.49) | |
| Space Heating Equipment<br>Minimum AFUE | 96% Min. | NATURAL GAS |
| Hot Water Heater<br>Minimum EF | 0.66 (0.8) | NATURAL GAS |
| HRV<br>Minimum Efficiency | 75% | – |
| Drain Water Heat Recovery Unit (DWHR) | Minimum 1 OR Maximum 2 Required. Dependent on number of showers installed. Refer to SB12-3.1.1.12 for information | |

ci- Denotes Continuous Insulation without framing interruption.

## LEGEND

| | |
|---|---|
| CLASS 'B' VENT | EXHAUST FAN TO EXTERIOR |
| DUPLEX OUTLET (12" ABOVE SURFACE) | 42" DUPLEX OUTLET (HEIGHT A.F.F) |
| WP WEATHERPROOF DUPLEX OUTLET | 42" GFI GFI DUPLEX OUTLET (HEIGHT A.F.F) |
| PL POT LIGHT | HEAVY DUTY OUTLET (220 volt) |
| PC LIGHT FIXTURE (PULL CHAIN) | LIGHT FIXTURE (CEILING MOUNTED) |
| SWITCH | LIGHT FIXTURE (WALL MOUNTED) |
| FD FLOOR DRAIN | HB HOSE BIB (NON-FREEZE) |
| S.A. COD. COMBINED SMOKE ALARM AND CARBON MONOXIDE DETECTOR/ALARM | |
| DJ — DOUBLE JOIST | TJ — TRIPLE JOIST |
| SJ — SINGLE JOIST | LVL — LAMINATED VENEER LUMBER |
| PL POINT LOAD FROM ABOVE | |
| P.T. PRESSURE TREATED LUMBER | |
| G.T. GIRDER TRUSS BY ROOF TRUSS MANUF. | |
| F.A. FLAT ARCH | |
| C.A. CURVED ARCH | |
| M.C. MEDICINE CABINET | |
| CONC. BLOCK WALL | |
| SPECIAL WALL CONSTRUCTION SEE NOTE ON PLANS | |
| SB **SOLID WOOD BEARING (SPRUCE No. 2).** SOLID BEARING IS TO BE AS WIDE AS SUPPORTED MEMBER OR AS DIRECTED BY STRUCTURAL ENGINEER. SOLID BEARING TO BE MINIMUM 2 PIECES. THE NUMBER SHOWN AFTER "SB" REPRESENTS THE NUMBER OF PLIES REQUIRED. EXAMPLE SB3 = 3 PLY SOLID BEARING. | |
| SBFA SOLID WOOD BEARING TO MATCH FROM ABOVE | |

**NOTE:** SOLID BEARING TO BE AT LEAST AS WIDE AS THE SUPPORTED LINTEL/BEAM

■ SA **SMOKE ALARM (REFER TO OBC 9.10.19)**
● PROVIDE 1 PER FLOOR, NEAR THE STAIRS CONNECTING THE FLOOR LEVEL AND ALSO 1 IN EACH BEDROOM NEAR HALL DOOR. ALARMS TO BE CONNECTED TO AN ELECTRICAL CIRCUIT AND INTERCONNECTED TO ACTIVATE ALL ALARMS IF 1 SOUNDS. BATTERY BACK-UP REQUIRED. SMOKE ALARMS TO INCORPORATE VISUAL SIGNALLING COMPONENT.

CMA **CARBON MONOXIDE ALARM (OBC 9.33.4.)**
WHERE A FUEL-BURNING APPLIANCE IS INSTALLED IN A DWELLING UNIT, A CARBON MONOXIDE DETECTOR CONFORMING TO CAN./CGA-6.19,CSA 6.19 OR UL2034 SHALL BE INSTALLED ADJACENT TO EACH SLEEPING AREA. CARBON MONOXIDE DETECTOR(S) SHALL BE PERMANENTLY WIRED SO THAT ITS ACTIVATION WILL ACTIVATE ALL CARBON MONOXIDE DETECTORS AND BE EQUIPPED WITH AN ALARM THAT IS AUDIBLE WITHIN BEDROOMS WHEN THE INTERVENING DOORS ARE CLOSED.

**SOIL GAS CONTROL (OBC 9.13.4.1 & 9.13.4.2)**
PROVIDE CONSTRUCTION TO PREVENT LEAKAGE OF SOIL GAS INTO THE BUILDING IF REQUIRED.

**DRAIN WATER HEAT RECOVERY UNIT (DWHR)**
PER SB12-3.1.1.12 - A DRAIN WATER HEAT RECOVERY (DWHR) UNIT SHALL BE INSTALLED IN EACH DWELLING UNIT TO RECEIVE DRAIN WATER FROM ALL SHOWERS, OR FROM AT LEAST TWO SHOWERS WHERE THERE ARE TWO OR MORE SHOWERS IN THE DWELLING UNIT. DOES NOT APPLY IF THERE ARE NO SHOWERS OR NO STOREY BENEATH ANY OF THE SHOWERS.

Permit No. 21-105895

THESE STAMPED DRAWINGS SHALL BE AVAILABLE ON SITE

THE OWNER AND/OR CONTRACTOR SHALL COMPLY WITH ONTARIO BUILDING CODE AND ALL OTHER APPLICABLE LAW

These drawings and/or specifications have been reviewed by
FEB.23/2

CONTRACTOR MUST VERIFY ALL DIMENSIONS ON THE JOB AND REPORT ANY DISCREPANCY TO VA3 DESIGN INC. BEFORE PROCEEDING WITH THE WORK.
ALL DRAWINGS AND SPECIFICATIONS ARE INSTRUMENTS OF SERVICE AND THE PROPERTY OF THE DESIGNER WHICH MUST BE RETURNED AT THE COMPLETION OF THE WORK.
ALL DRAWINGS TO BE USED FOR CONSTRUCTION ONLY AFTER BUILDING PERMIT HAS BEEN ISSUED.

**SB-12 COMPLIANCE PACKAGE 'A1' TO BE USED FOR THIS MODEL.**
The minimum thermal performance of building envelope and equipment shall conform to the selected package unless otherwise noted.

REVISION: ● ONT. REG. 332/12-2012 OBC
Amendment O. Reg. 88/19
JAN. 01, 2020

# PACKAGE 'A1'

| no. | description | date | by |
|---|---|---|---|
| 9 | . | . | . |
| 8 | . | . | . |
| 7 | . | . | . |
| 6 | . | . | . |
| 5 | . | . | . |
| 4 | . | . | . |
| 3 | SB NOTE FURTHER DEFINED. | DEC 03/20 | GW |
| 2 | RE-ISSUED. | AUG 24/20 | GW |
| 1 | ISSUED FOR PERMIT. | APR. 13/20 | GW |

The undersigned has reviewed and takes responsibility for this design and has the qualifications and meets the requirements set out in the Ontario Building Code to be a Designer.
qualification information
Richard Vink R Vink 24488
name signature BCIN
registration information
VA3 Design Inc. 42658

Contractor must verify all dimensions on the job and report any discrepancy to the Designer before proceeding with the work. All drawings and specifications are instruments of service and the property of the Designer which must be returned at the completion of the work. Drawings are not to be scaled.

VA3 DESIGN
255 Consumers Rd Suite 120
Toronto ON M2J 1R4
t 416.630.2255 f 416.630.4782
va3design.com

Greenpark

SINGLES

project name: RUSSELL GARDENS PH.3
municipality: WATERDOWN
project no.: 19014
TYPICAL CONSTRUCTION NOTES
drawing no.: 1
date: APRIL 2020
drawn by: GW
checked by: GW
scale: 3/16" = 1'-0"
file name: GP-14X18-NOTES-2020-VA3-PKG-A1-19014

REFER TO STANDARD WALL SECTION SHEET FOR FURTHER INFORMATION ON WALL CONSTRUCTION.

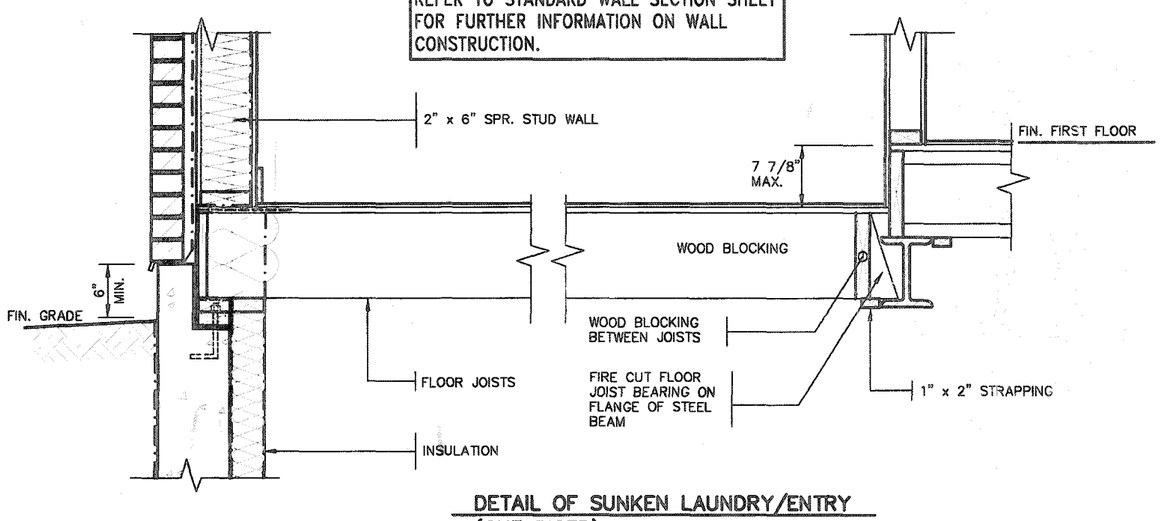


DETAIL OF SUNKEN LAUNDRY/ENTRY
(ONE RISER)

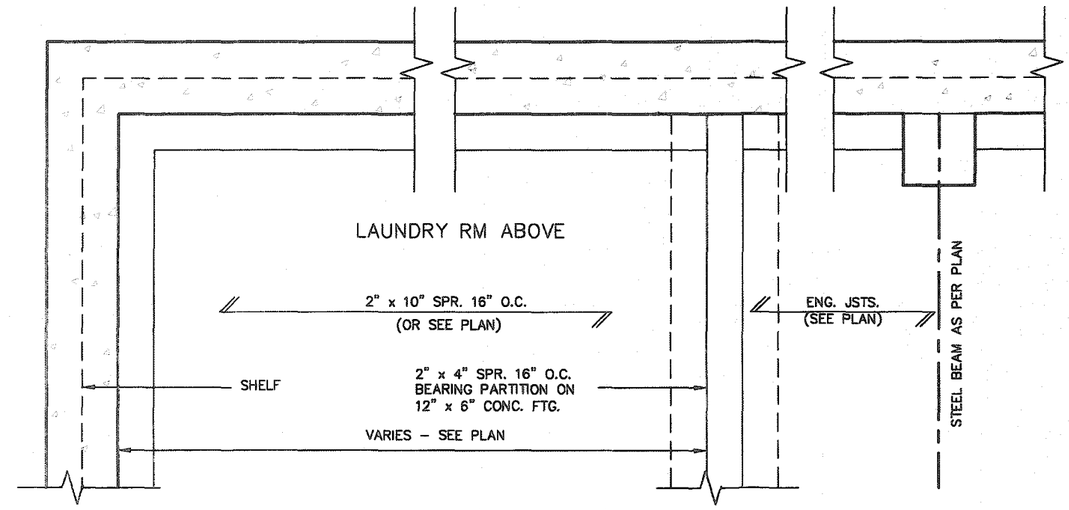


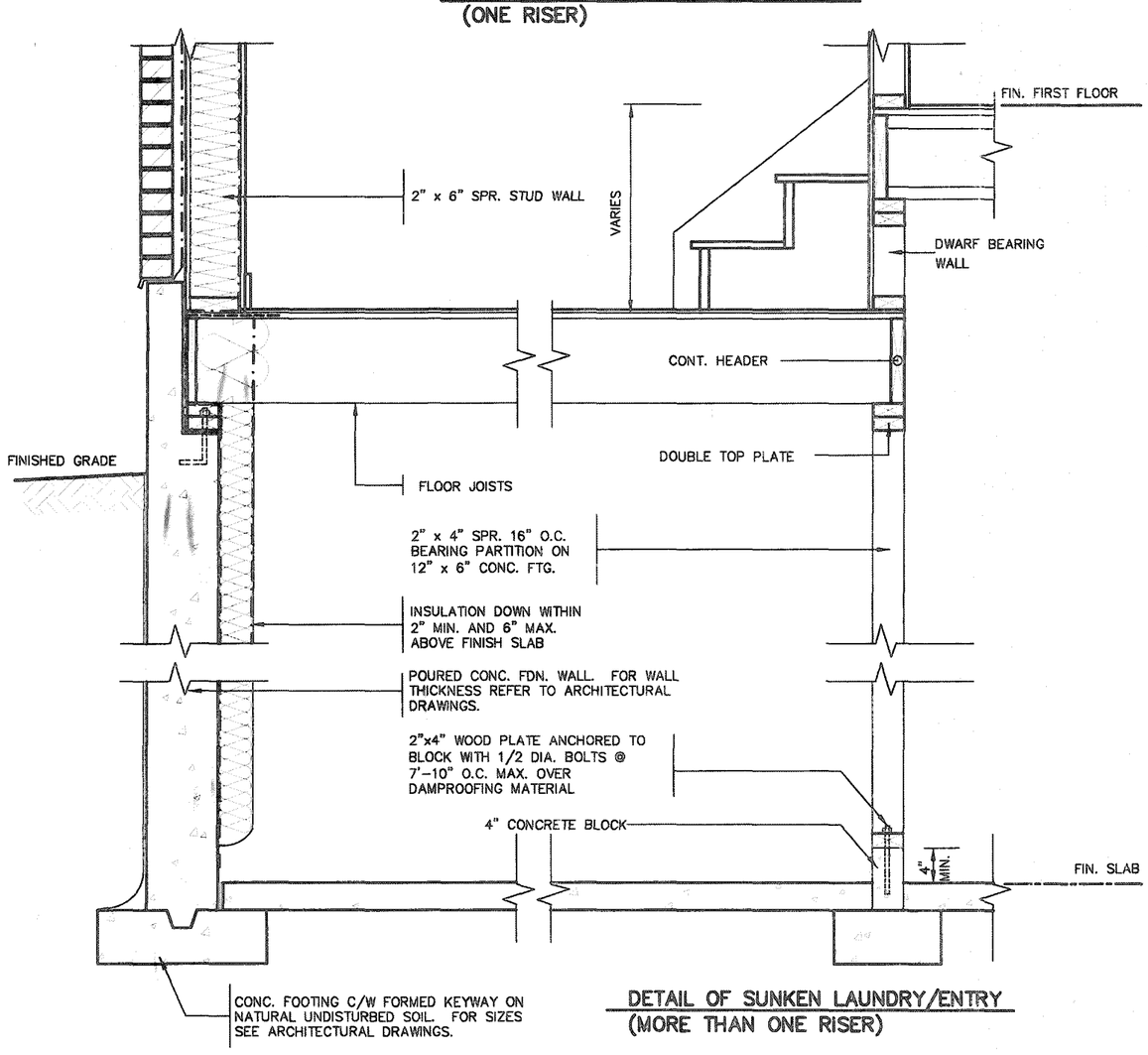


DETAIL OF SUNKEN LAUNDRY/ENTRY
(MORE THAN ONE RISER)

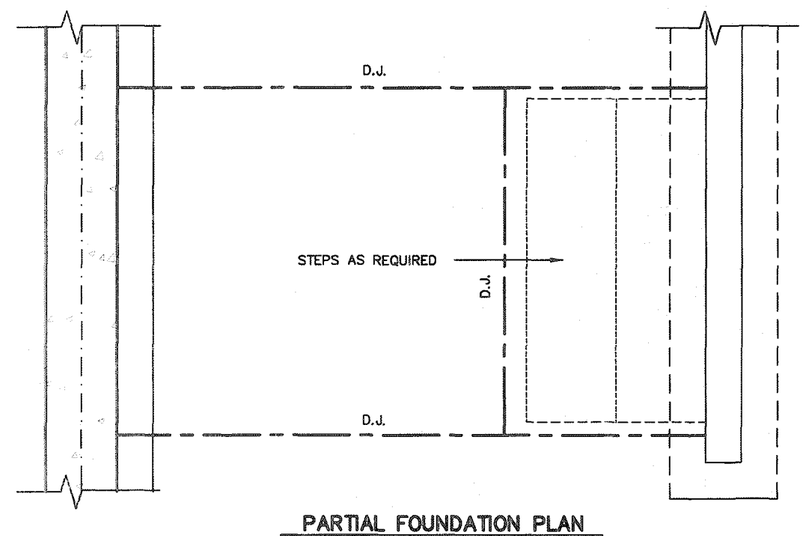


PARTIAL FOUNDATION PLAN

STRUDET INC.

REGISTERED PROFESSIONAL ENGINEER
B. MARINKOVIC
APRIL 15, 2020
PROVINCE OF ONTARIO

FOR STRUCTURE ONLY

CITY OF HAMILTON
Building Division
Permit No. 21-105895
THESE STAMPED DRAWINGS SHALL BE AVAILABLE ON SITE
THE OWNER AND/OR CONTRACTOR SHALL COMPLY WITH THE ONTARIO BUILDING CODE AND ALL OTHER APPLICABLE LAW
These drawings and/or specifications have been reviewed by
FOR CHIEF BUILDING OFFICIAL
FEB. 23/21
DATE

# 2012 CODE COMPLIANCE PACKAGE A1

| no. | description | date | by |
|---|---|---|---|
| 9 | . | . | . |
| 8 | . | . | . |
| 7 | . | . | . |
| 6 | . | . | . |
| 5 | . | . | . |
| 4 | . | . | . |
| 3 | . | . | . |
| 2 | . | . | . |
| 1 | ISSUED FOR PERMIT. | APR 13/20 | GW |

The undersigned has reviewed and takes responsibility for this design and has the qualifications and meets the requirements set out in the Ontario Building Code to be a Designer.
qualification information
Richard Vink — signature — 24488
name — registration information — BCIN
VA3 Design Inc. — 42658
Contractor must verify all dimensions on the job and report any discrepancy to the Designer before proceeding with the work. All drawings and specifications are instruments of service and the property of the Designer which must be returned at the completion of the work. Drawings are not to be scaled.


VA3 DESIGN
255 Consumers Rd Suite 120
Toronto ON M2J 1R4
t 416.630.2255 f 416.630.4782
va3design.com


Greenpark™

SINGLES
–

| project name | municipality | project no. |
|---|---|---|
| RUSSELL GARDENS PH. 3 | WATERDOWN | 19014 |

| date | drawn by | checked by | scale | file name | drawing no. |
|---|---|---|---|---|---|
| APRIL 2020 | GW | – | Not to Scale | 19014-GP-STD_DETAILS_A1 | 2 |

SUNKEN FLOOR DETAILS

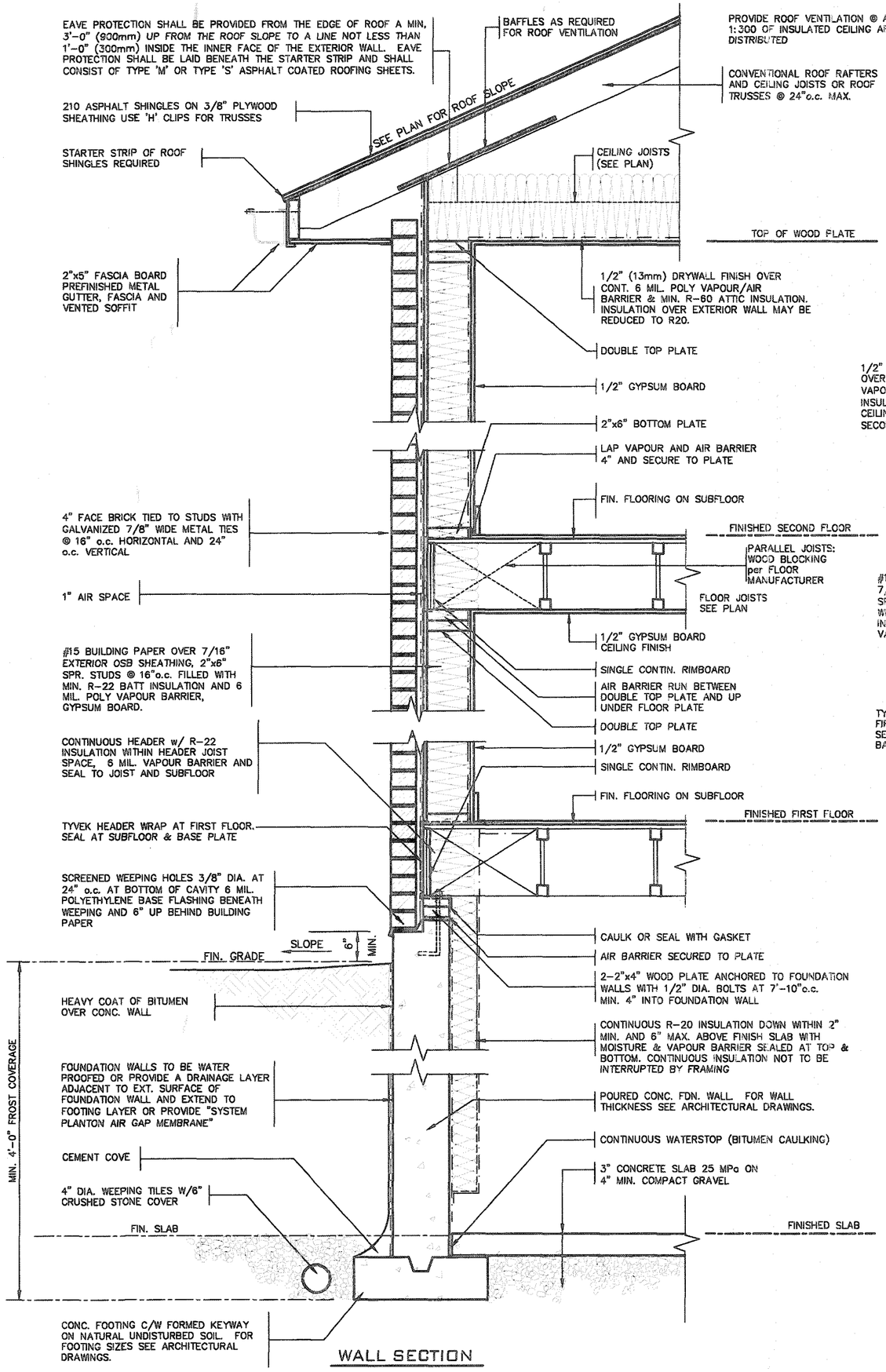


WALL SECTION

CITY OF HAMILTON
Building Division
Permit No. 21-105895
THESE STAMPED DRAWINGS SHALL BE AVAILABLE ON SITE
THE OWNER AND/OR CONTRACTOR SHALL COMPLY WITH THE ONTARIO BUILDING CODE AND ALL OTHER APPLICABLE LAW
These drawings and/or specifications have been reviewed by
FOR CHIEF BUILDING OFFICIAL
FEB.23/21
DATE

STRUDET INC.
REGISTERED PROFESSIONAL ENGINEER
B. MARINKOVIC
APRIL 15, 2020
PROVINCE OF ONTARIO
FOR STRUCTURE ONLY

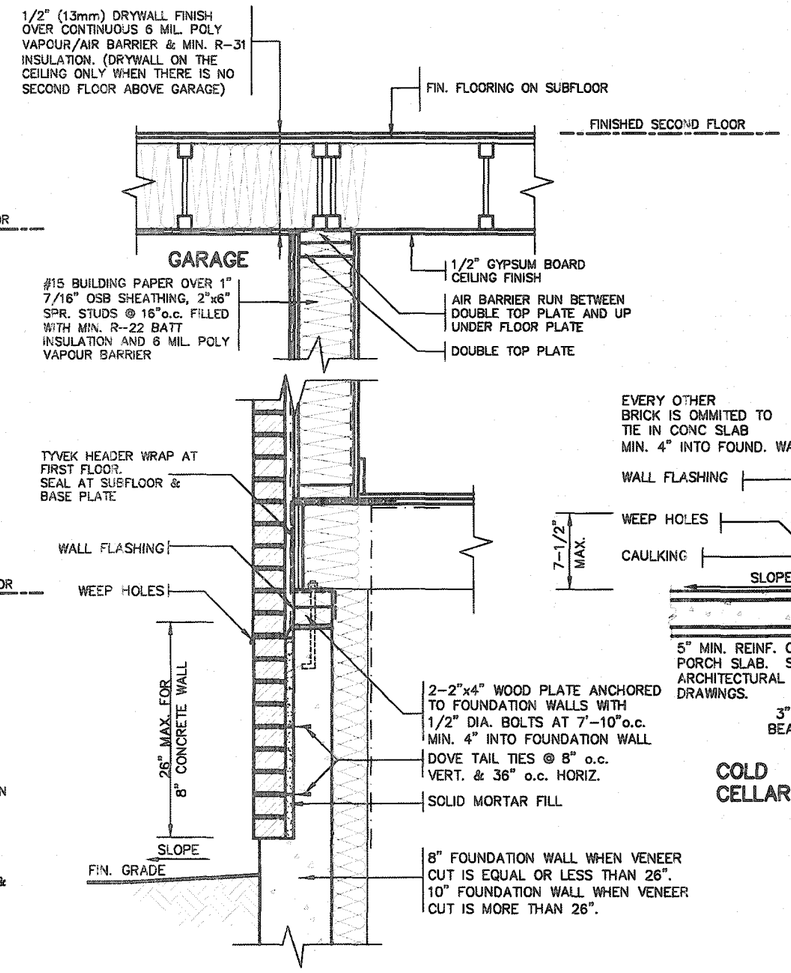


DETAIL FOR CONCRETE VENEER DROPPED GRADE

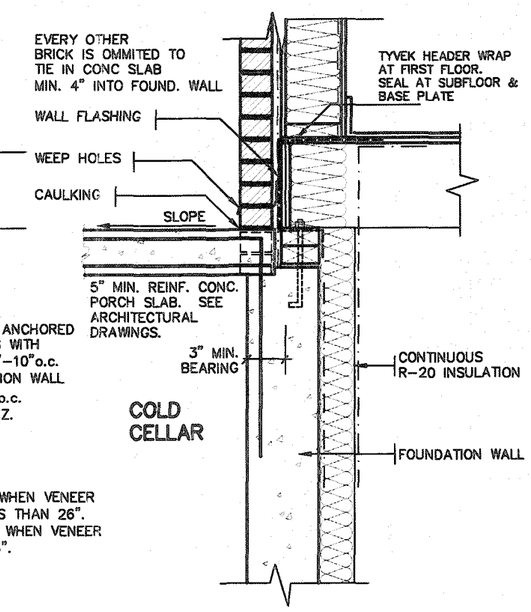


DETAIL FOR COLD CELLAR PORCH SLAB

# 2012 CODE COMPLIANCE PACKAGE A1

| no. | description | date | by |
|---|---|---|---|
| 9 | . | . | . |
| 8 | . | . | . |
| 7 | . | . | . |
| 6 | . | . | . |
| 5 | . | . | . |
| 4 | . | . | . |
| 3 | . | . | . |
| 2 | . | . | . |
| 1 | ISSUED FOR PERMIT. | APR 13/20 | GW |

The undersigned has reviewed and takes responsibility for this design and has the qualifications and meets the requirements set out in the Ontario Building Code to be a Designer.
qualification information
Richard Vink — signature — 24488
name — registration information — BCIN
VA3 Design Inc. — 42658
Contractor must verify all dimensions on the job and report any discrepancy to the Designer before proceeding with the work. All drawings and specifications are instruments of service and the property of the Designer which must be returned at the completion of the work. Drawings are not to be scaled.

VA3 DESIGN
255 Consumers Rd Suite 120
Toronto ON M2J 1R4
t 416.630.2255 f 416.630.4782
va3design.com

Greenpark
SINGLES
project name: RUSSELL GARDENS PH. 3
municipality: WATERDOWN
project no. 19014
date: APRIL 2020
2"x6" BRICK VENEER SECTIONS
drawing no. 3
drawn by: GW
checked by: -
scale: Not to Scale
file name: 19014-GP-STD_DETAILS_A1

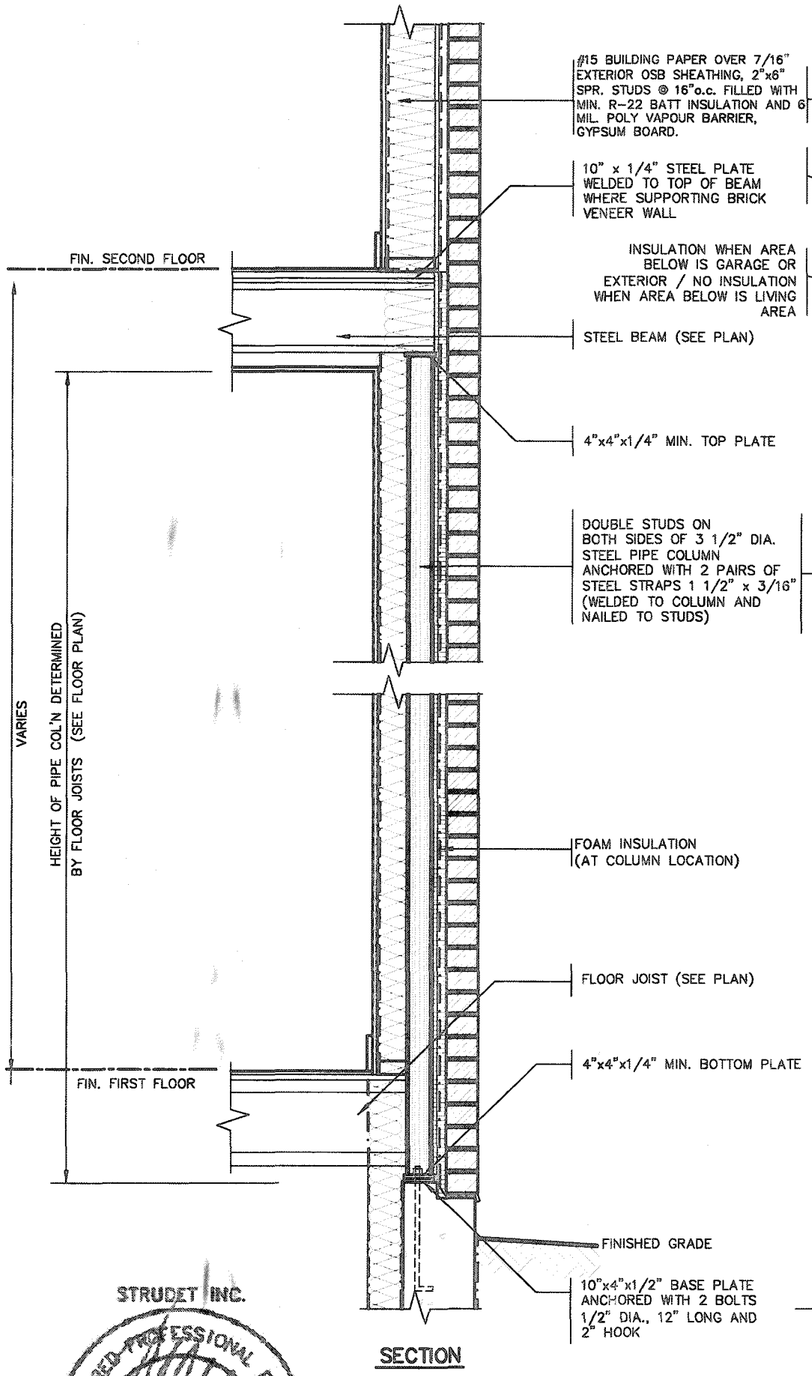


SECTION

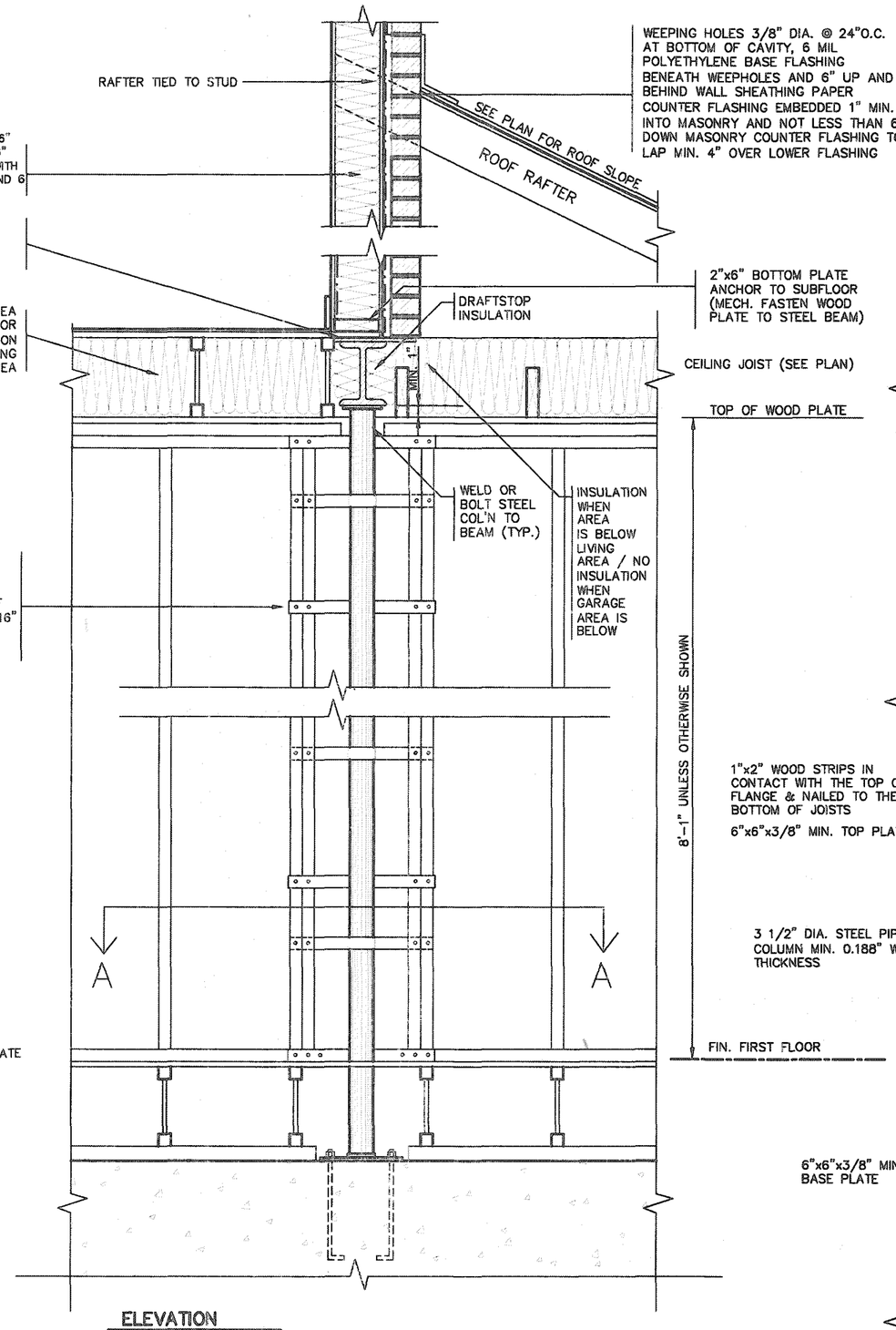


ELEVATION

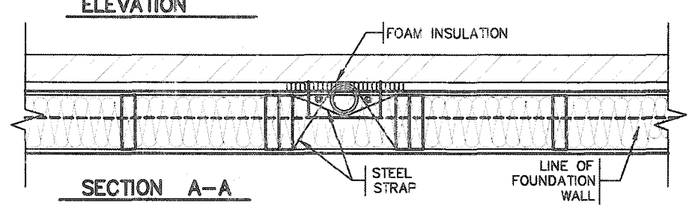


SECTION A–A

## SECTION THROUGH STEEL BEAM SUPPORTING MASONRY & BEARING STUD PARTITION

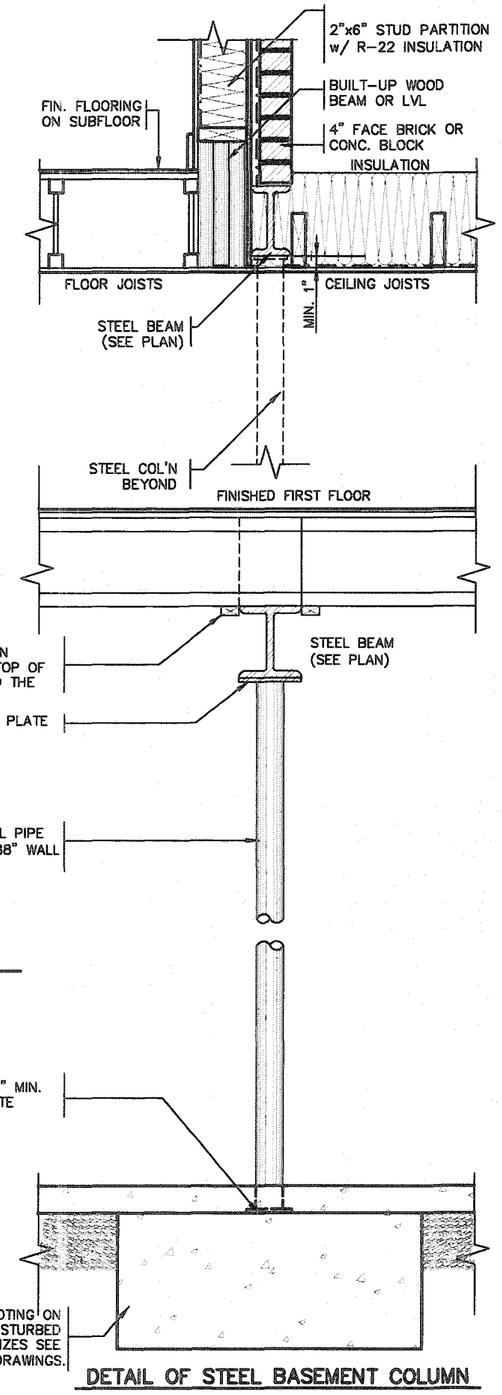


DETAIL OF STEEL BASEMENT COLUMN

STRUDET INC.
REGISTERED PROFESSIONAL ENGINEER
B. MARINKOVIC
APRIL 15, 2020
PROVINCE OF ONTARIO
FOR STRUCTURE ONLY

CITY OF HAMILTON
Building Division
Permit No. 21-105895
THESE STAMPED DRAWINGS SHALL BE AVAILABLE ON SITE
THE OWNER AND/OR CONTRACTOR SHALL COMPLY WITH THE ONTARIO BUILDING CODE AND ALL OTHER APPLICABLE LAW
These drawings and/or specifications have been reviewed by
FOR CHIEF BUILDING OFFICIAL
FEB.23/21
DATE

# 2012 CODE COMPLIANCE PACKAGE A1

| no. | description | date | by |
|---|---|---|---|
| 9 | . | . | . |
| 8 | . | . | . |
| 7 | . | . | . |
| 6 | . | . | . |
| 5 | . | . | . |
| 4 | . | . | . |
| 3 | . | . | . |
| 2 | . | . | . |
| 1 | ISSUED FOR PERMIT. | APR 13/20 | GW |

The undersigned has reviewed and takes responsibility for this design and has the qualifications and meets the requirements set out in the Ontario Building Code to be a Designer.
qualification information
name: Richard Vink — signature: R Vink — BCIN: 24488
registration information
VA3 Design Inc. — 42658

Contractor must verify all dimensions on the job and report any discrepancy to the Designer before proceeding with the work. All drawings and specifications are instruments of service and the property of the Designer which must be returned at the completion of the work. Drawings are not to be scaled.

VA3 DESIGN
255 Consumers Rd Suite 120
Toronto ON M2J 1R4
t 416.630.2255 f 416.630.4782
va3design.com

Greenpark
SINGLES
project name: RUSSELL GARDENS PH. 3 — municipality: WATERDOWN — project no. 19014
date: APRIL 2020 — STEEL COLUMN DETAILS — drawing no. 4
drawn by: GW — checked by: – — scale: As Shown — file name: 19014-GP-STD_DETAILS_A1

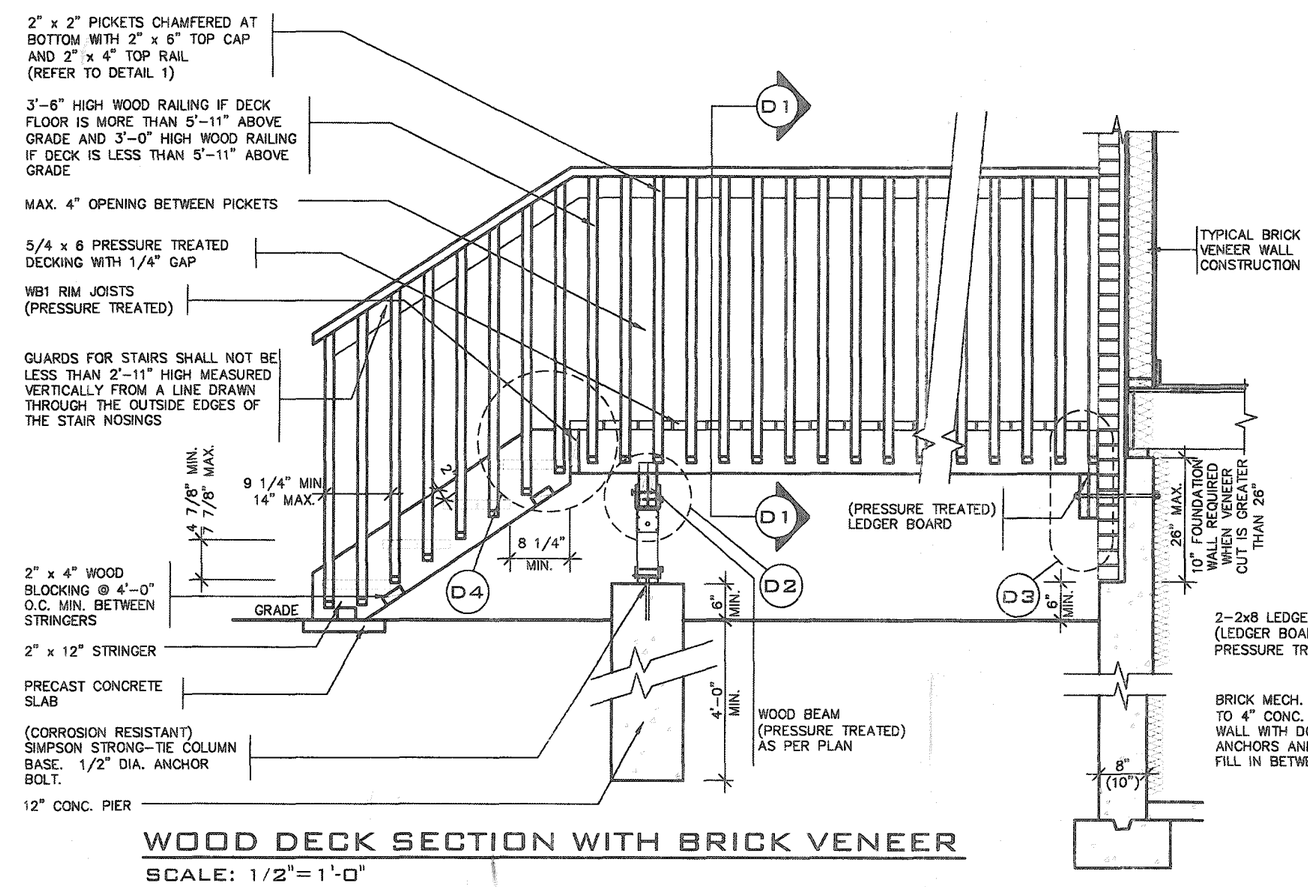


## WOOD DECK SECTION WITH BRICK VENEER

SCALE: 1/2"=1'-0"

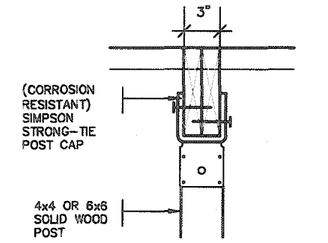


## DETAIL 2 - BEAM-TO-POST

SCALE: 1" = 1'-0"

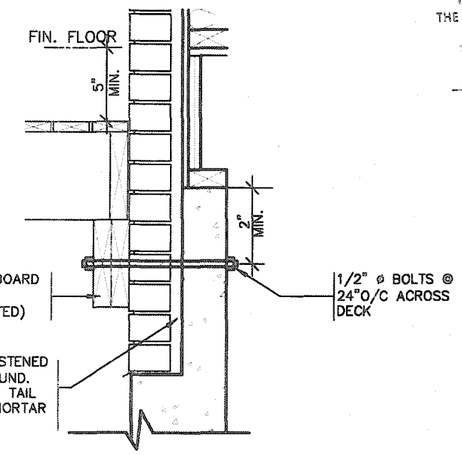


## DETAIL 3
## STEEL ANGLE

SCALE: 1" = 1'-0"

CITY OF HAMILTON
Building Division
Permit No. 21-105895
THESE STAMPED DRAWINGS SHALL BE AVAILABLE ON SITE
THE OWNER AND/OR CONTRACTOR SHALL COMPLY WITH THE ONTARIO BUILDING CODE AND ALL OTHER APPLICABLE LAW
These drawings and/or specifications have been reviewed by
FOR CHIEF BUILDING OFFICIAL — DATE FEB. 23\21

## DETAIL 1
## CANTILEVERED PICKET SCREWED TO RIM JOIST AND DECK

### GUARD PARALLEL TO FLOOR JOISTS

SCALE: 1" = 1'-0"

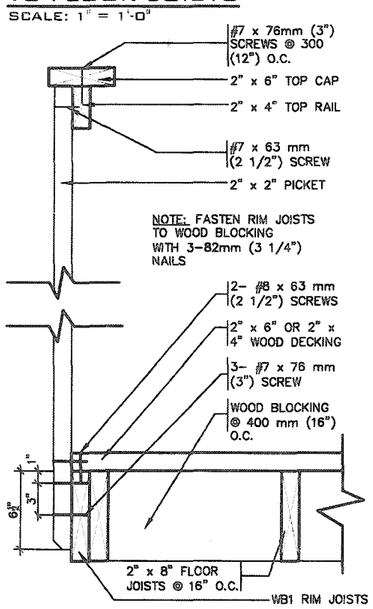


### GUARD PERPENDICULAR TO FLOOR JOISTS

SCALE: 1" = 1'-0"

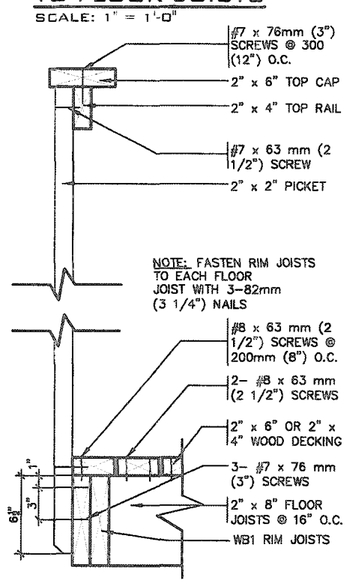


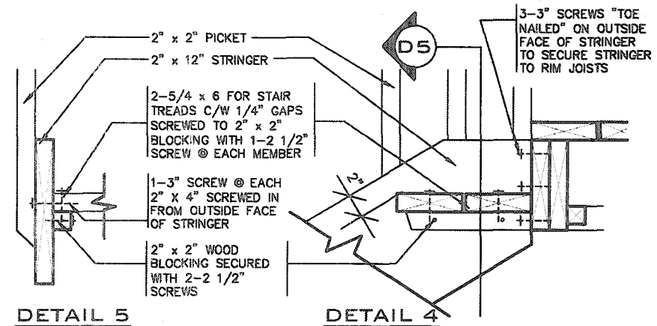


## DETAIL 5
## SECTION THROUGH STAIR STRINGER

SCALE: 1" = 1'-0"

## DETAIL 4
## SECTION @ TREAD AND STRINGER SECUREMENT

SCALE: 1" = 1'-0"

STRUDET INC.
REGISTERED PROFESSIONAL ENGINEER
B. MARINKOVIC
APRIL 15, 2020
PROVINCE OF ONTARIO
FOR STRUCTURE ONLY

## GENERAL NOTES

1. BRICK TO HAVE COMPRESSIVE STRENGTH OG 15mPa (2200 p.s.i) MIN.UNITS TO BE LAID WITH FULL HEAD AND BED JOINTS.
2. MORTAR TO BE TYPE 'S' WITH JOINT THICKNESS OF 10mm (3/8") MIN. AND 20mm (3/4") MAX.
3. THE DECK HAS BEEN DESIGNED TO SAFELY SUPPORT A SUPERIMPOSED LOAD OF 1.9kPa. [40psf].
4. ALL NAILS AND SCREWS TO BE GALVANIZED.
5. WOOD FOR CANTILEVERED PICKETS SHALL BE DOUGLAS FIR-LARCH, SPRUCE-PINE-FIR, OR HEM-FIR SPECIES.
6. CONCRETE SHALL HAVE COMPRESSIVE STRENGTH OF 20MPa. AT 28 DAYS AND 5-8% AIR ENTRAINED.
7. FOOTING TO BE PLACED ON UNDISTURBED SOIL WITH MINIMUM BEARING PRESSURE OF 150kPa [3130psf].
8. WB1= 2- 2"x8" (PRESSURE TREATED)
   WB3= 2- 2"x10" (PRESSURE TREATED)

# 2012 CODE COMPLIANCE PACKAGE A1

| no. | description | date | by |
|---|---|---|---|
| 9 | . | . | . |
| 8 | . | . | . |
| 7 | . | . | . |
| 6 | . | . | . |
| 5 | . | . | . |
| 4 | . | . | . |
| 3 | . | . | . |
| 2 | . | . | . |
| 1 | ISSUED FOR PERMIT. | APR 13/20 | GW |

The undersigned has reviewed and takes responsibility for this design and has the qualifications and meets the requirements set out in the Ontario Building Code to be a Designer.
qualification information: Richard Vink — 24488
name — signature — BCIN
registration information: VA3 Design Inc. — 42658

Contractor must verify all dimensions on the job and report any discrepancy to the Designer before proceeding with the work. All drawings and specifications are instruments of service and the property of the Designer which must be returned at the completion of the work. Drawings are not to be scaled.

VA3 DESIGN
255 Consumers Rd Suite 120
Toronto ON M2J 1R4
t 416.630.2255 f 416.630.4782
va3design.com

Greenpark
project name: RUSSELL GARDENS PH. 3
municipality: WATERDOWN
SINGLES
project no. 19014
date: APRIL 2020
WOOD DECK DETAILS
drawn by: GW
checked by: –
scale: As Shown
file name: 19014-GP-STD_DETAILS_A1
drawing no. 5

CITY OF HAMILTON
Building Division
Permit No. 21-105895
THESE STAMPED DRAWINGS SHALL BE AVAILABLE ON SITE
THE OWNER AND/OR CONTRACTOR SHALL COMPLY WITH THE ONTARIO BUILDING CODE AND ALL OTHER APPLICABLE LAW
These drawings and/or specifications have been reviewed by
FOR CHIEF BUILDING OFFICIAL FEB. 23\21 DATE

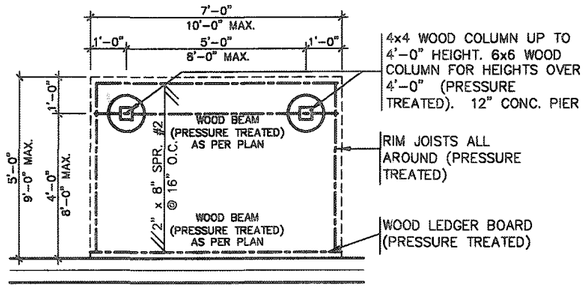


## TYPICAL DECK LAYOUT
SCALE: 1/4"=1'-0"

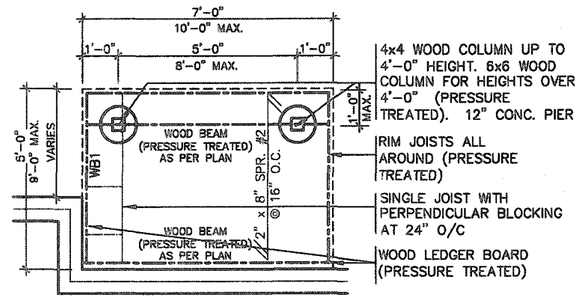


## TYPICAL DECK LAYOUT
SCALE: 1/4"=1'-0"

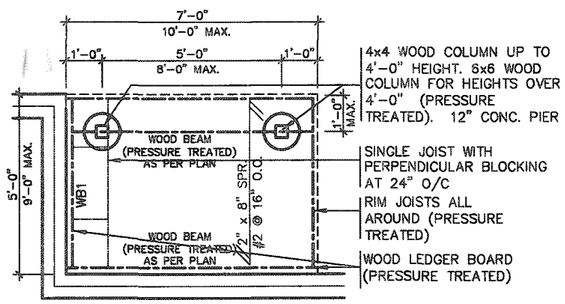


## TYPICAL DECK LAYOUT
SCALE: 1/4"=1'-0"

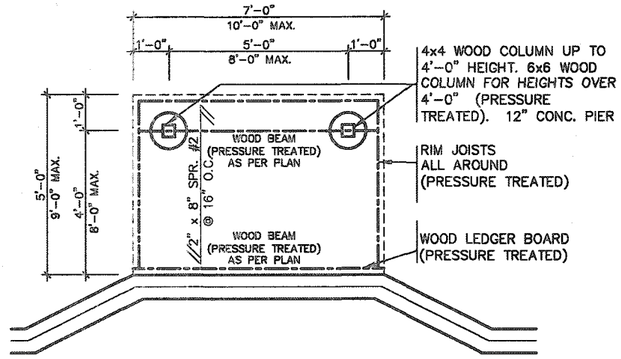


## TYPICAL DECK LAYOUT
SCALE: 1/4"=1'-0"

STRUDET INC.
REGISTERED PROFESSIONAL ENGINEER
B. MARINKOVIC
APRIL 15, 2020
PROVINCE OF ONTARIO
FOR STRUCTURE ONLY

# 2012 CODE COMPLIANCE PACKAGE A1

| no. | description | date | by |
|---|---|---|---|
| 9 | . | . | . |
| 8 | . | . | . |
| 7 | . | . | . |
| 6 | . | . | . |
| 5 | . | . | . |
| 4 | . | . | . |
| 3 | . | . | . |
| 2 | . | . | . |
| 1 | ISSUED FOR PERMIT. | APR 13/20 | GW |

The undersigned has reviewed and takes responsibility for this design and has the qualifications and meets the requirements set out in the Ontario Building Code to be a Designer.
qualification information
name: Richard Vink — signature — BCIN: 24486
registration information: VA3 Design Inc. — 42658

Contractor must verify all dimensions on the job and report any discrepancy to the Designer before proceeding with the work. All drawings and specifications are instruments of service and the property of the Designer which must be returned at the completion of the work. Drawings are not to be scaled.


VA3 DESIGN
255 Consumers Rd Suite 120
Toronto ON M2J 1R4
t 416.630.2255 f 416.630.4762
va3design.com


Greenpark
SINGLES
project name: RUSSELL GARDENS PH. 3 — municipality: WATERDOWN — project no. 19014
date: APRIL 2020 — WOOD DECK PLANS
drawn by: GW — checked by: – — scale: As Shown — file name: 19014-GP-STD_DETAILS_A1 — drawing no. 5-1

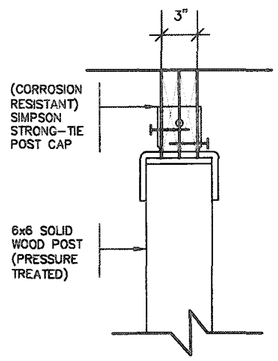


DETAIL 2 - BEAM-TO-POST
SCALE: 1" = 1'-0"

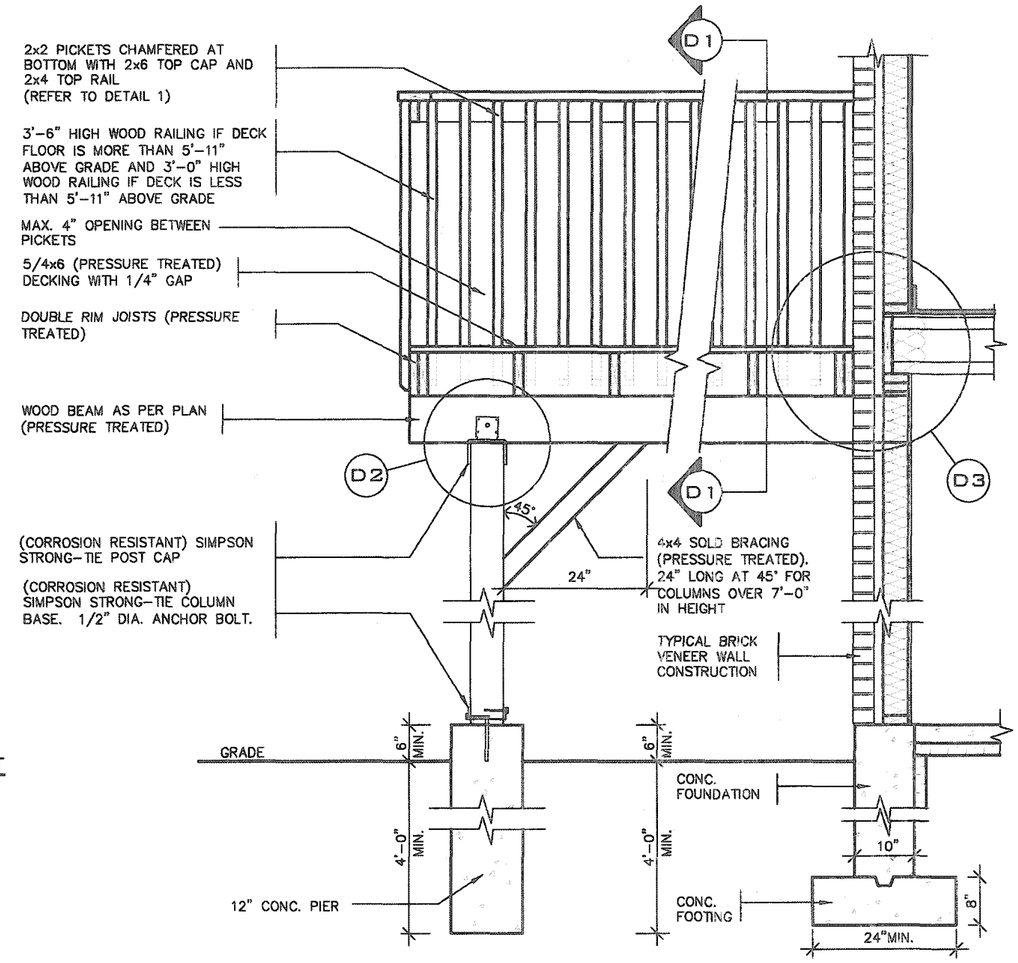


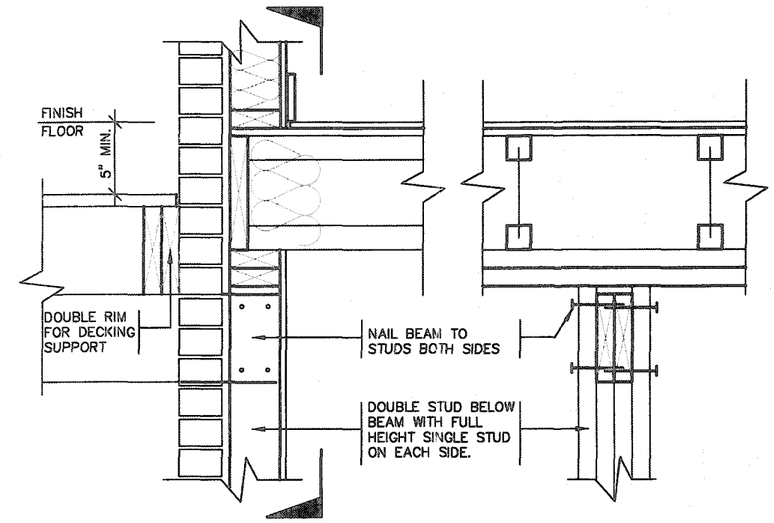


DETAIL 3
BEAM-TO-STUD WALL
SCALE: 1" = 1'-0"

## DECK SECTION WITH BRICK VENEER

SCALE: 1/2"=1'-0"

DETAIL 1
CANTILEVERED PICKET SCREWED TO RIM JOIST AND DECK

GUARD PARALLEL TO FLOOR JOISTS
SCALE: 1" = 1'-0"

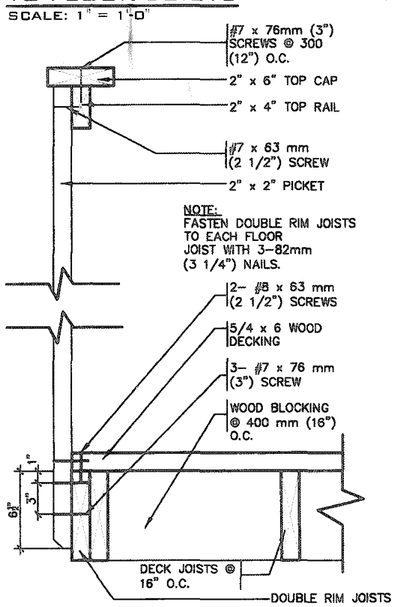


GUARD PERPENDICULAR TO FLOOR JOISTS
SCALE: 1" = 1'-0"

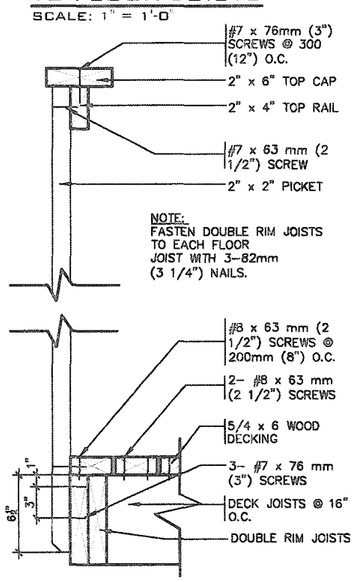


CITY OF HAMILTON
Building Division
Permit No. 21-105895
THESE STAMPED DRAWINGS SHALL BE AVAILABLE ON SITE
THE OWNER AND/OR CONTRACTOR SHALL COMPLY WITH THE ONTARIO BUILDING CODE AND ALL OTHER APPLICABLE LAW
These drawings and/or specifications have been reviewed by
FOR CHIEF BUILDING OFFICIAL — DATE FEB 23/21

STRUDET INC.
REGISTERED PROFESSIONAL ENGINEER
B. MARINKOVIC
APRIL 15, 2020
PROVINCE OF ONTARIO
FOR STRUCTURE ONLY

## GENERAL NOTES

1. BRICK TO HAVE COMPRESSIVE STRENGTH OG 15mPa (2200 p.s.i) MIN.UNITS TO BE LAID WITH FULL HEAD AND BED JOINTS.
2. MORTAR TO BE TYPE 'S' WITH JOINT THICKNESS OF 10mm (3/8") MIN. AND 20mm (3/4") MAX.
3. THE DECK HAS BEEN DESIGNED TO SAFELY SUPPORT A SUPERIMPOSED LOAD OF 1.9kPa. [40psf].
4. ALL NAILS AND SCREWS TO BE GALVANIZED.
5. WOOD FOR CANTILEVERED PICKETS SHALL BE DOUGLAS FIR-LARCH, SPRUCE-PINE-FIR, OR HEM-FIR SPECIES.
6. CONCRETE SHALL HAVE COMPRESSIVE STRENGTH OF 20MPa. AT 28 DAYS AND 5-8% AIR ENTRAINED.
7. FOOTING TO BE PLACED ON UNDISTURBED SOIL WITH MINIMUM BEARING PRESSURE OF 150kPa [3130psf].
8. WB1= 2- 2"x8" (PRESSURE TREATED)
   WB3= 2- 2"x10" (PRESSURE TREATED)

# 2012 CODE COMPLIANCE PACKAGE A1

| no. | description | date | by |
|---|---|---|---|
| 9 | . | . | . |
| 8 | . | . | . |
| 7 | . | . | . |
| 6 | . | . | . |
| 5 | . | . | . |
| 4 | . | . | . |
| 3 | . | . | . |
| 2 | . | . | . |
| 1 | ISSUED FOR PERMIT. | APR 13/20 | GW |

The undersigned has reviewed and takes responsibility for this design and has the qualifications and meets the requirements set out in the Ontario Building Code to be a Designer.
qualification information
Richard Vink — signature — 24488 BCIN
registration information
VA3 Design Inc. — 42658

Contractor must verify all dimensions on the job and report any discrepancy to the Designer before proceeding with the work. All drawings and specifications are instruments of service and the property of the Designer which must be returned at the completion of the work. Drawings are not to be scaled.


VA3 DESIGN
255 Consumers Rd Suite 120
Toronto ON M2J 1R4
t 416.630.2255 f 416.630.4782
va3design.com


Greenpark
SINGLES
project name: RUSSELL GARDENS PH. 3 — municipality: WATERDOWN — project no. 19014
date: APRIL 2020 — WOOD DECK DETAILS-WALK-OUT CONDITION — drawing no. 6
drawn by: GW — checked by: - — scale: As Shown — file name: 19014-GP-STD_DETAILS_A1

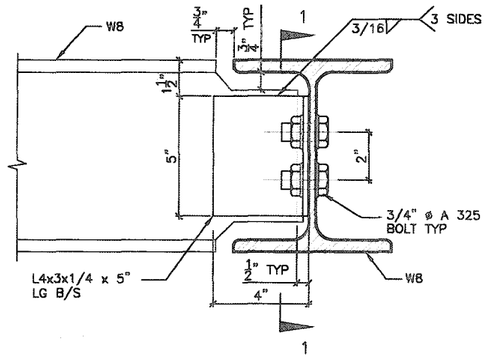


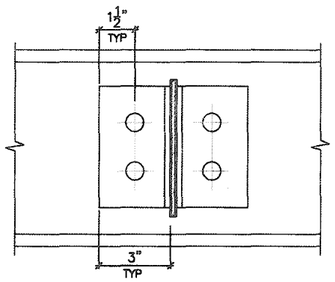


SECTION 1–1

## DETAIL 1.

W8
TO
W8
CONNECTION

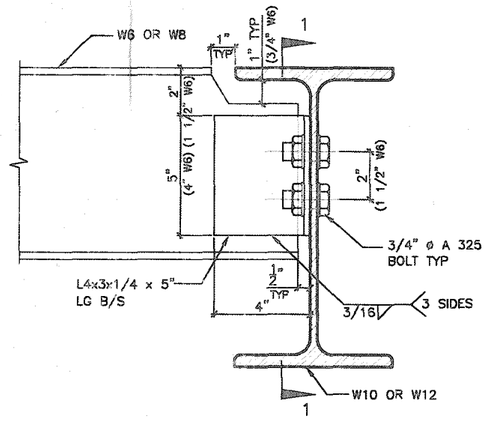


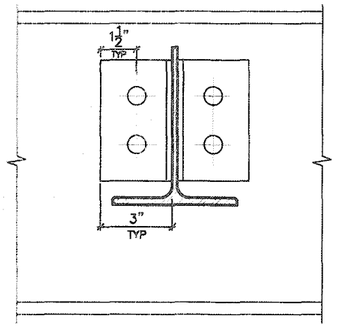


SECTION 1–1

## DETAIL 2.

W6(W8)
TO
W10(W12)
CONNECTION

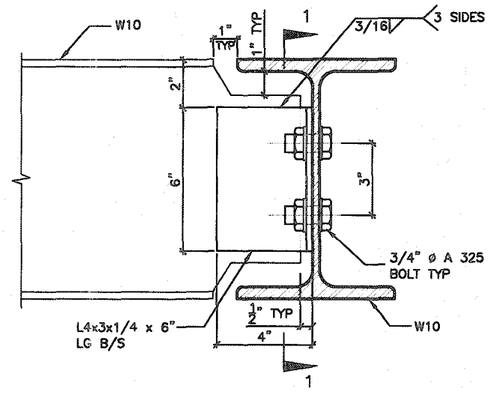


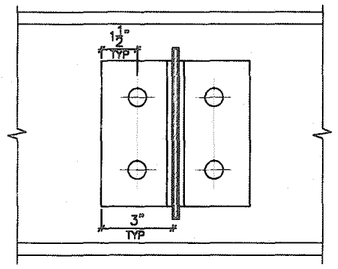


SECTION 1–1

## DETAIL 3.

W10
TO
W10
CONNECTION

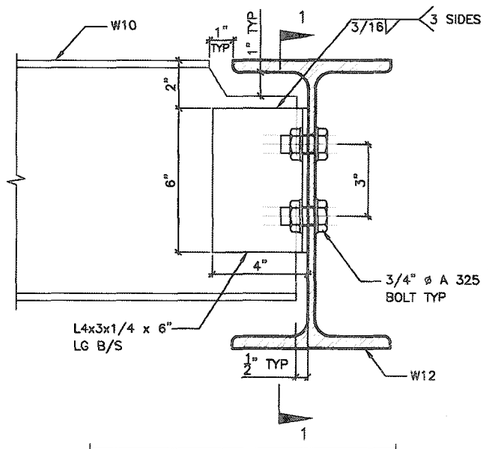


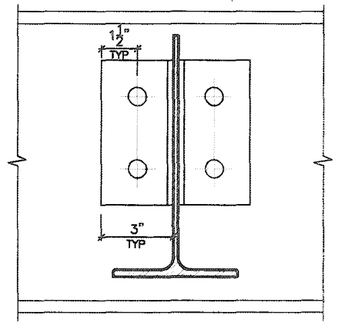


SECTION 1–1

## DETAIL 4.

W10
TO
W12
CONNECTION

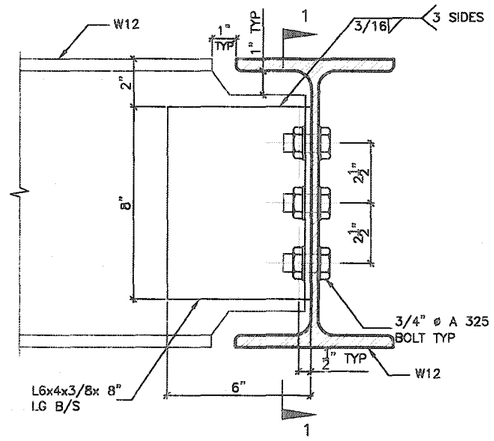


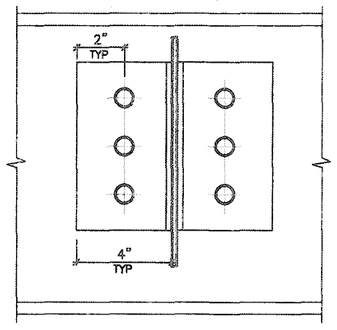


SECTION 1–1

## DETAIL 5.

W12
TO
W12
CONNECTION

STRUDET INC.

REGISTERED PROFESSIONAL ENGINEER
R. B. MARINKOVIC
APRIL 15, 2020
PROVINCE OF ONTARIO

FOR STRUCTURE ONLY

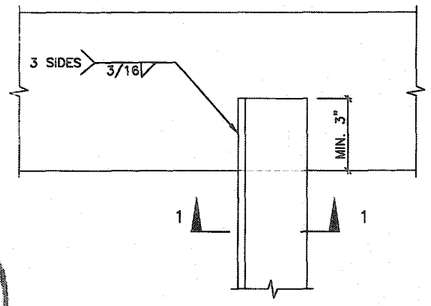


PLAN VIEW

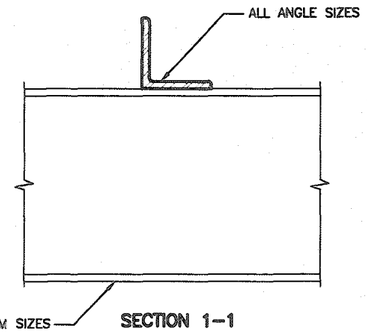


SECTION 1–1

## DETAIL 6.

ANGLE
TO
BEAM
CONNECTION

# 2012 CODE COMPLIANCE PACKAGE

CITY OF HAMILTON
Building Division

Permit No. 21-105893

THESE STAMPED DRAWINGS SHALL BE AVAILABLE ON SITE

THE OWNER AND/OR CONTRACTOR SHALL COMPLY WITH THE ONTARIO BUILDING CODE AND ALL OTHER APPLICABLE LAW

These drawings and/or specifications have been reviewed by

FEB.23\21
DATE

| no. | description | date | by |
|---|---|---|---|
| 9 | . | . | . |
| 8 | . | . | . |
| 7 | . | . | . |
| 6 | . | . | . |
| 5 | . | . | . |
| 4 | . | . | . |
| 3 | . | . | . |
| 2 | . | . | . |
| 1 | ISSUED FOR PERMIT. | APR 13/20 | GW |

The undersigned has reviewed and takes responsibility for this design and has the qualifications and meets the requirements set out in the Ontario Building Code to be a Designer.

qualification information
name: Richard Vink — signature: R Vink — BCIN: 24486
registration information
VA3 Design Inc. — 42656

Contractor must verify all dimensions on the job and report any discrepancy to the Designer before proceeding with the work. All drawings and specifications are instruments of service and the property of the Designer which must be returned at the completion of the work. Drawings are not to be scaled.

VA3 DESIGN
255 Consumers Rd Suite 120
Toronto ON M2J 1R4
t 416.630.2255 f 416.630.4782
va3design.com

Greenpark

| | |
|---|---|
| project name: RUSSELL GARDENS PH. 3 | municipality: WATERDOWN |
| SINGLES – | project no. 19014 |
| date: APRIL 2020 | STEEL BEAM CONNECTIONS |
| drawn by: GW | checked by: – |
| scale: Not to Scale | file name: 19014-GP-STD_DETAILS_A1 |
| drawing no. 7 | |

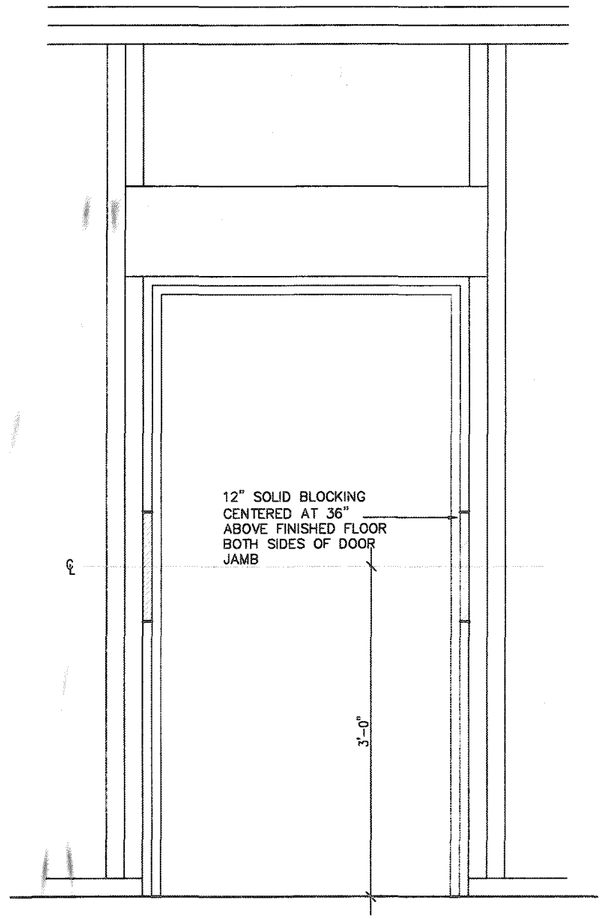


RESISTANCE TO FORCED ENTRY (OBC 9.6.8.)

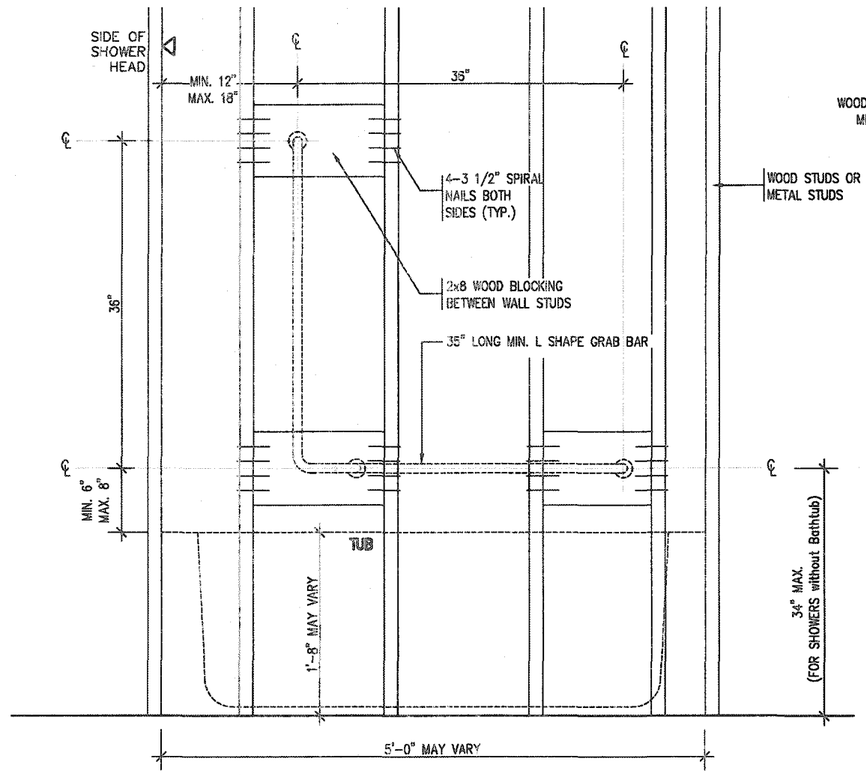


BATH TUB/ SHOWER FRONT ELEVATION

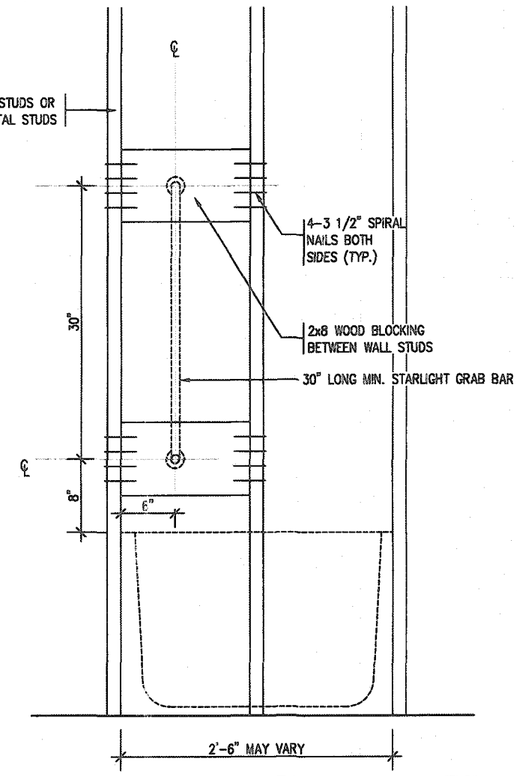


BATH TUB SHOWER HEAD SIDE ELEVATION

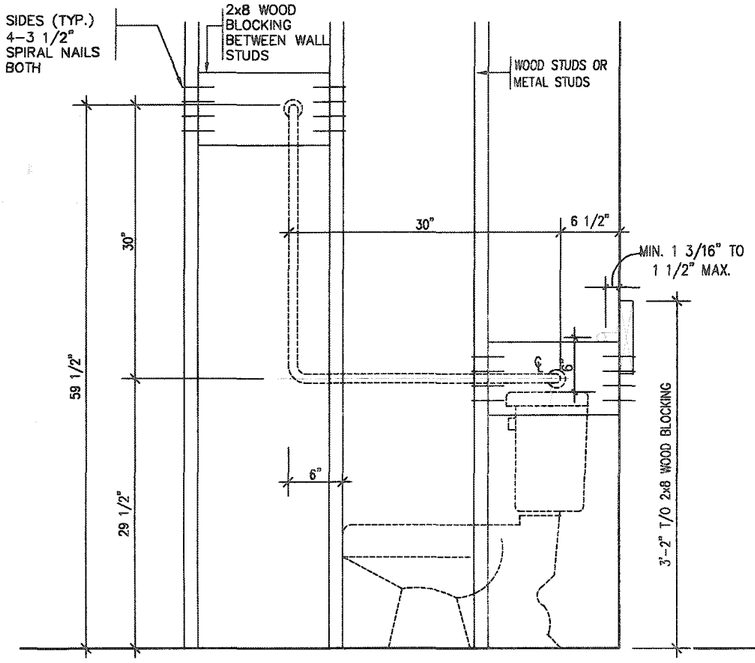


TOILET SIDE ELEVATION

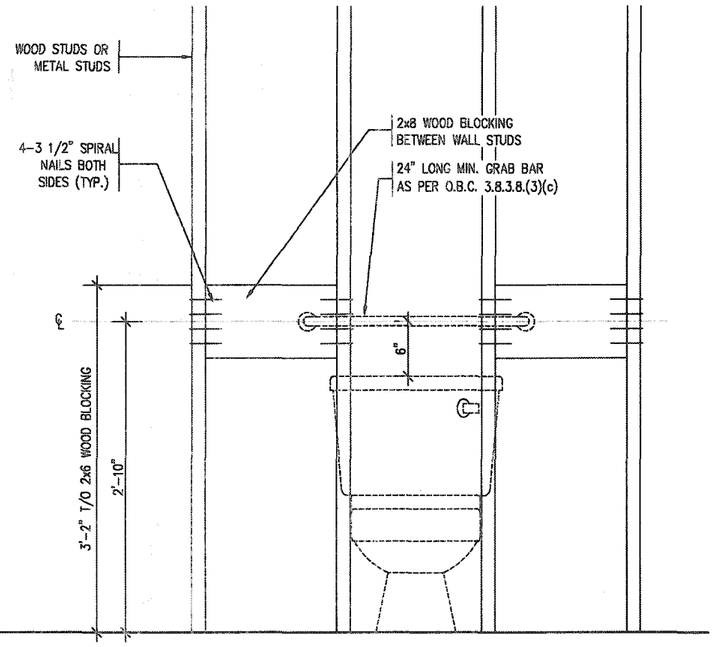


STRUCTURAL REINFORCEMENT FOR GRAB BAR (OBC 9.5.2.3.)

FOR MAIN BATH ONLY

CITY OF HAMILTON
Building Division
Permit No. 21-105895
THESE STAMPED DRAWINGS SHALL BE AVAILABLE ON SITE
THE OWNER AND/OR CONTRACTOR SHALL COMPLY WITH THE ONTARIO BUILDING CODE AND ALL OTHER APPLICABLE LAW
These drawings and/or specifications have been reviewed by
FOR CHIEF BUILDING OFFICIAL
FEB.23/21
DATE

STRUCET INC.
REGISTERED PROFESSIONAL ENGINEER
B. MARINKOVIC
APRIL 15, 2020
PROVINCE OF ONTARIO
FOR STRUCTURE ONLY

# 2012 CODE COMPLIANCE PACKAGE

| no. | description | date | by |
|---|---|---|---|
| 9 | | | |
| 8 | | | |
| 7 | | | |
| 6 | | | |
| 5 | | | |
| 4 | | | |
| 3 | | | |
| 2 | | | |
| 1 | ISSUED FOR PERMIT. | APR 13/20 | GW |

The undersigned has reviewed and takes responsibility for this design and has the qualifications and meets the requirements set out in the Ontario Building Code to be a Designer.
qualification information
Richard Vink — signature — 24488
name — registration information
VA3 Design Inc. — BCIN — 42658

Contractor must verify all dimensions on the job and report any discrepancy to the Designer before proceeding with the work. All drawings and specifications are instruments of service and the property of the Designer which must be returned at the completion of the work. Drawings are not to be scaled.

VA3 DESIGN
255 Consumers Rd Suite 120
Toronto ON M2J 1R4
t 416.630.2255 f 416.630.4782
va3design.com

Greenpark™

SINGLES
-

project name: RUSSELL GARDENS PH. 3
municipality: WATERDOWN
project no.: 19014
date: APRIL 2020
STUD WALL REINFORCEMENT
drawn by: GW
checked by: -
scale: Not to Scale
file name: 19014-GP-STD_DETAILS_A1
drawing no.: 8

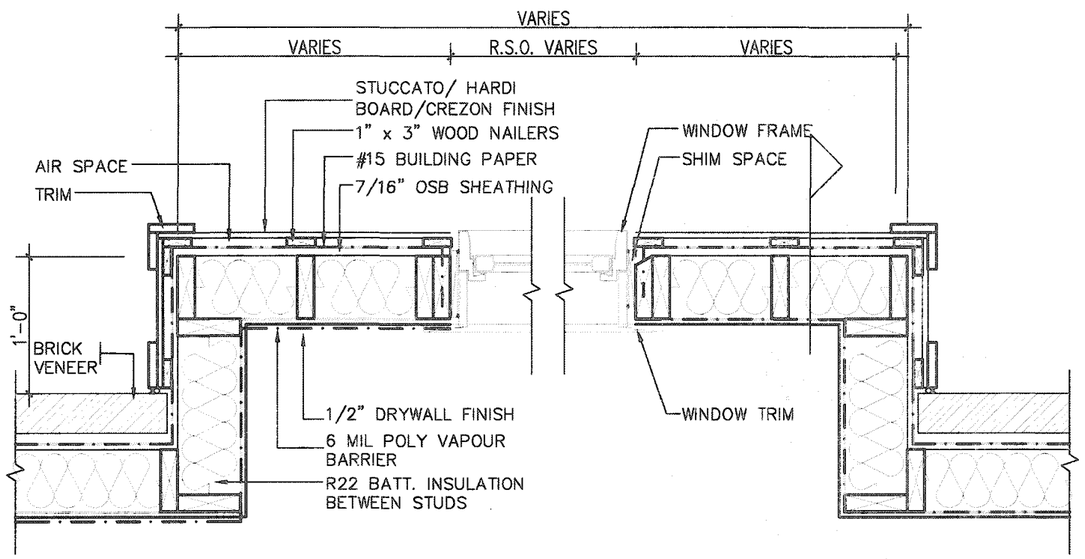


PLAN VIEW

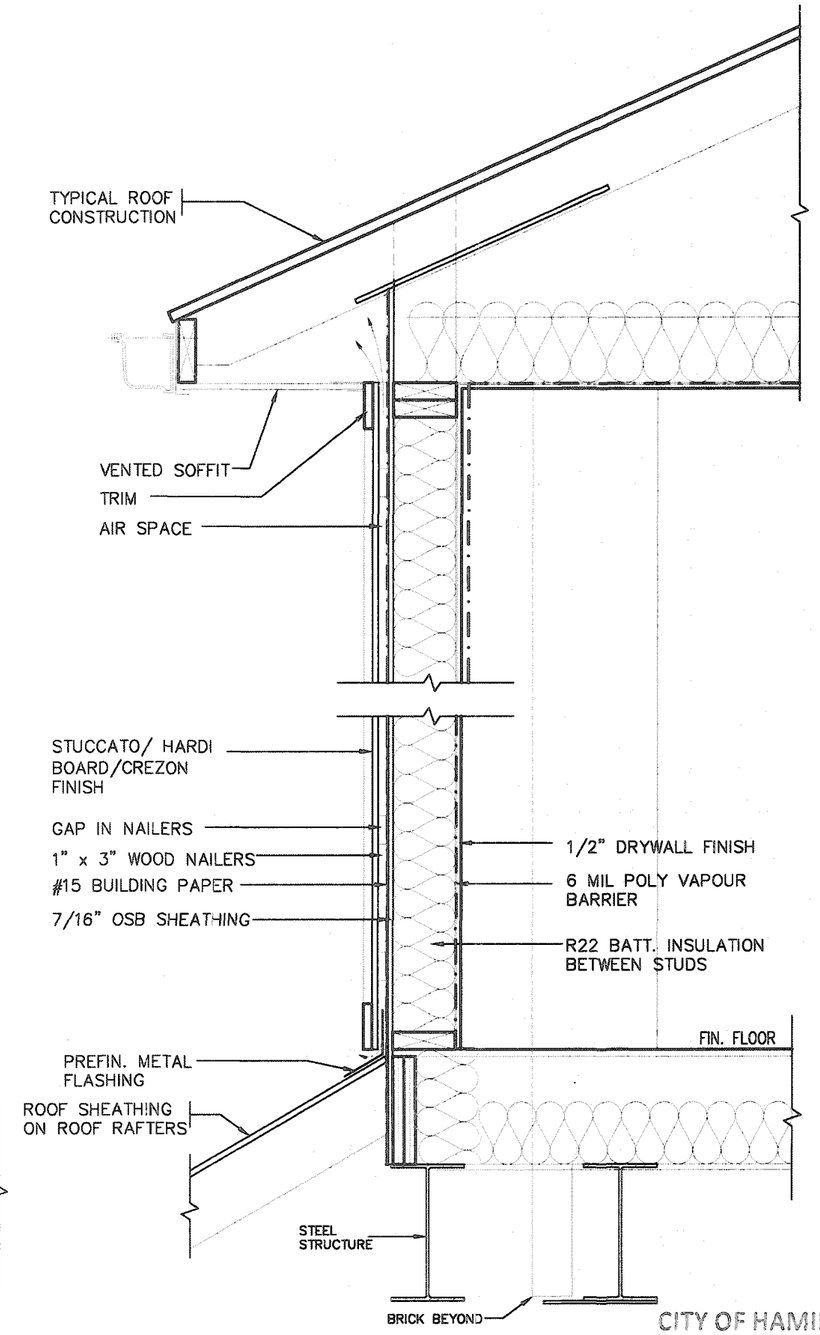


CROSS SECTION

## STUCCATO BOARD FINISH CLADDING OR EQUAL (OBC 9.27.)

STRUDET INC.

REGISTERED PROFESSIONAL ENGINEER
B. MARINKOVIC
APRIL 15, 2020
PROVINCE OF ONTARIO

FOR STRUCTURE ONLY

CITY OF HAMILTON
Building Division
Permit No. 21-165895

THESE STAMPED DRAWINGS SHALL BE AVAILABLE ON SITE

THE OWNER AND/OR CONTRACTOR SHALL COMPLY WITH THE ONTARIO BUILDING CODE AND ALL OTHER APPLICABLE LAW

These drawings and/or specifications have been reviewed by

FOR CHIEF BUILDING OFFICIAL — DATE FEB. 23/21

# 2012 CODE COMPLIANCE PACKAGE A1

| no. | description | date | by |
|---|---|---|---|
| 9 | . | . | . |
| 8 | . | . | . |
| 7 | . | . | . |
| 6 | . | . | . |
| 5 | . | . | . |
| 4 | . | . | . |
| 3 | . | . | . |
| 2 | . | . | . |
| 1 | ISSUED FOR PERMIT. | APR 13/20 | GW |

The undersigned has reviewed and takes responsibility for this design and has the qualifications and meets the requirements set out in the Ontario Building Code to be a Designer.

qualification information
name: Richard Vink — signature — BCIN 24486
registration information
VA3 Design Inc. — 42658

Contractor must verify all dimensions on the job and report any discrepancy to the Designer before proceeding with the work. All drawings and specifications are instruments of service and the property of the Designer which must be returned at the completion of the work. Drawings are not to be scaled.

VA3 DESIGN
255 Consumers Rd Suite 120
Toronto ON M2J 1R4
t 416.630.2255 f 416.630.4782
va3design.com

Greenpark

SINGLES
-

project name: RUSSELL GARDENS PH. 3 — municipality: WATERDOWN — project no. 19014

date: APRIL 2020 — STUCCATO/ HARDI BOARD FINISH — drawing no. 9

drawn by: GW — checked by: - — scale: Not to Scale — file name: 19014-GP-STD_DETAILS_A1

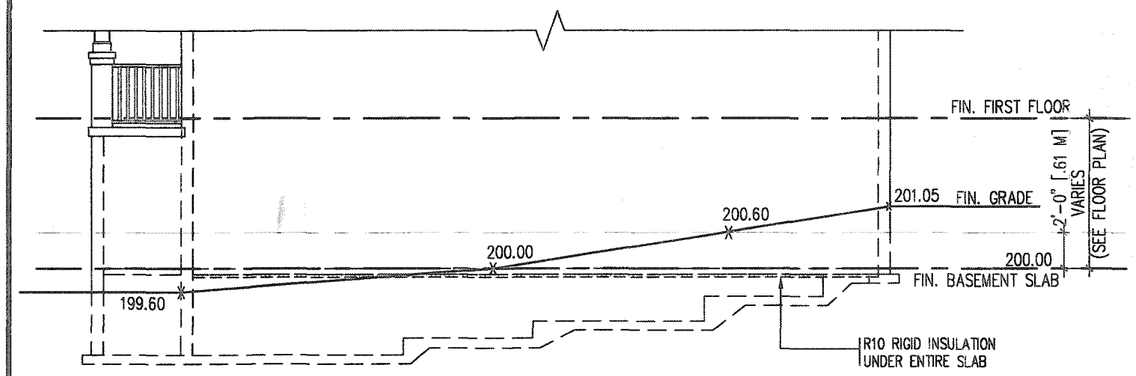


TYPICAL RIGHT SIDE ELEVATION

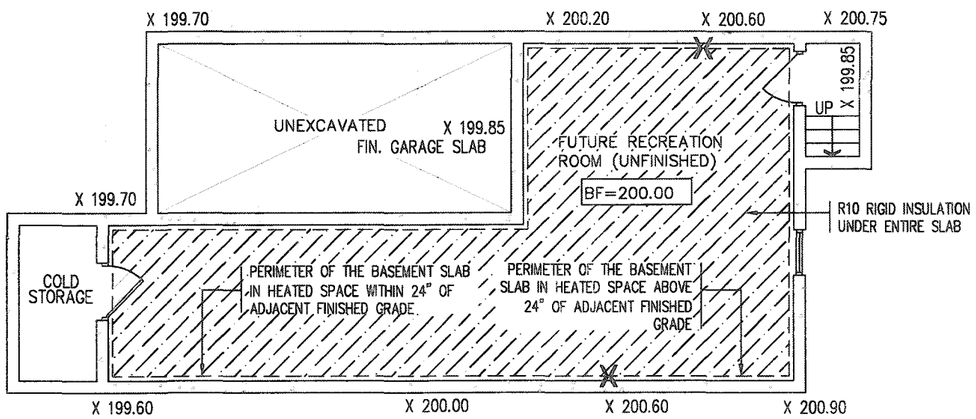


TYPICAL BASEMENT PLAN

NOTES:
1. LEVELS SHOWN ON THE PLANS ARE FOR ILLUSTRATION PURPOSE ONLY, SEE FINAL GRADING PLAN FOR ACTUAL LEVELS
2. ALL LEVELS ARE SHOWN IN METRIC

## SLAB ON GRADE CONDITION

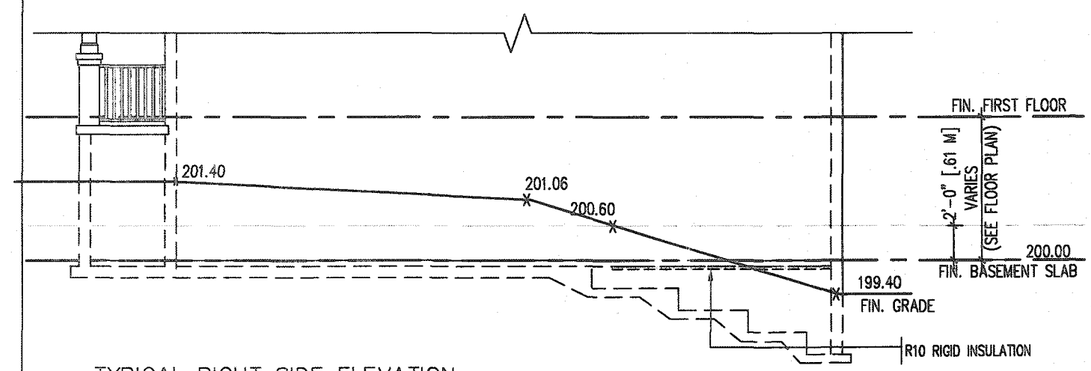


TYPICAL RIGHT SIDE ELEVATION

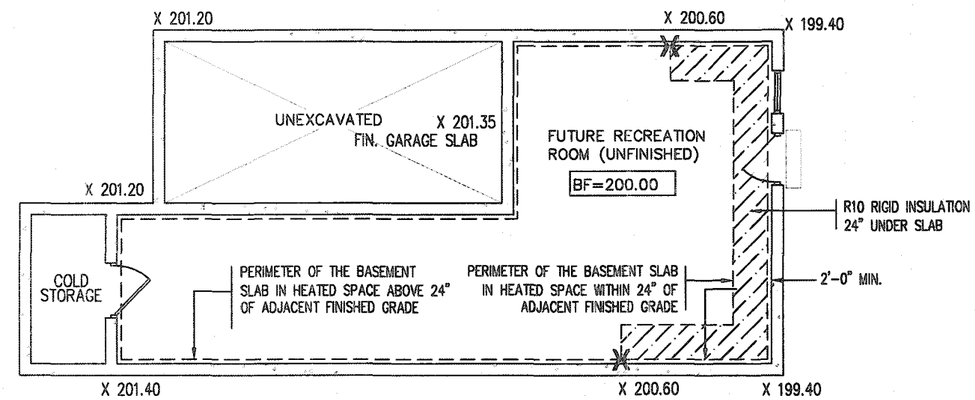


TYPICAL BASEMENT PLAN

NOTES:
1. LEVELS SHOWN ON THE PLANS ARE FOR ILLUSTRATION PURPOSE ONLY, SEE FINAL GRADING PLAN FOR ACTUAL LEVELS
2. ALL LEVELS ARE SHOWN IN METRIC

## WALK OUT BASEMENT CONDITION

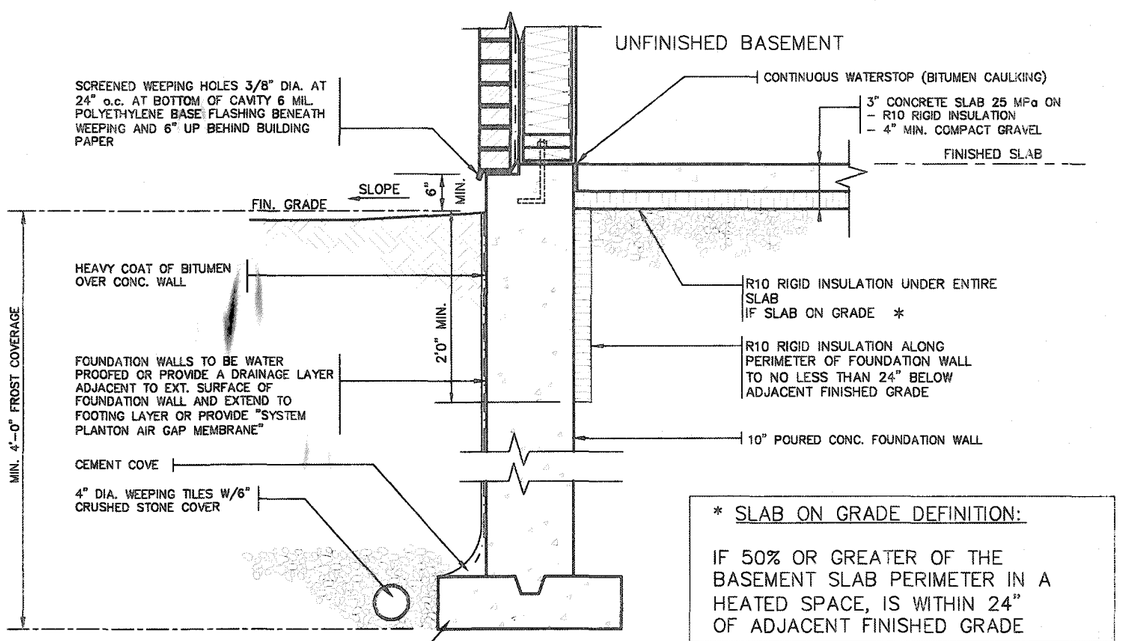


* SLAB ON GRADE DEFINITION:

IF 50% OR GREATER OF THE BASEMENT SLAB PERIMETER IN A HEATED SPACE, IS WITHIN 24" OF ADJACENT FINISHED GRADE

## SLAB ON GRADE

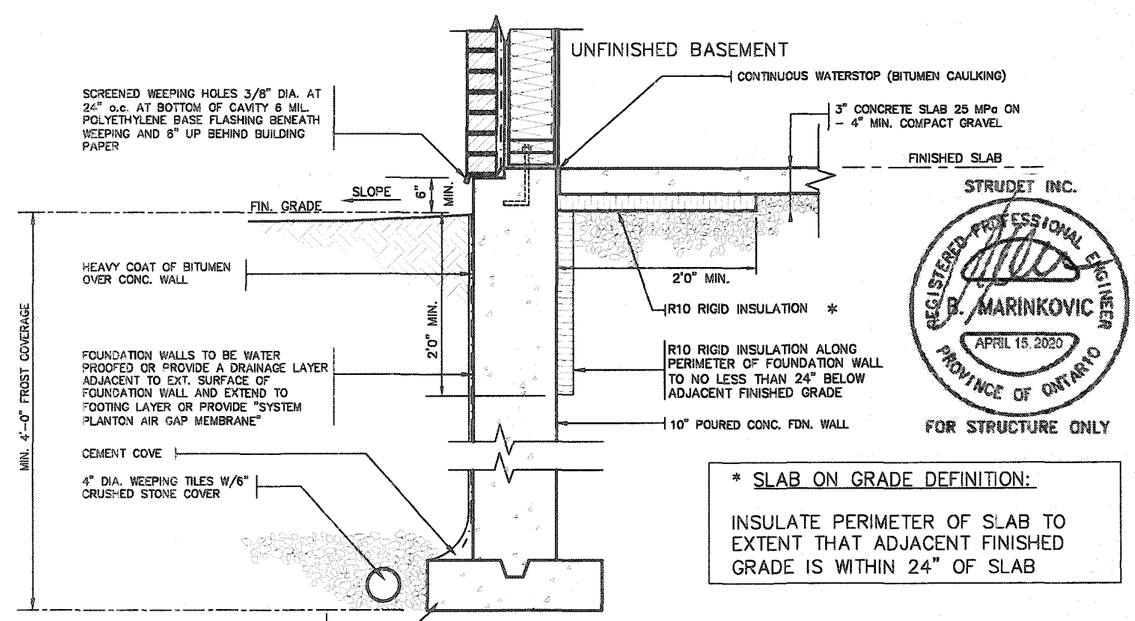


STRUDET INC.
REGISTERED PROFESSIONAL ENGINEER
B. MARINKOVIC
APRIL 15, 2020
PROVINCE OF ONTARIO
FOR STRUCTURE ONLY

* SLAB ON GRADE DEFINITION:

INSULATE PERIMETER OF SLAB TO EXTENT THAT ADJACENT FINISHED GRADE IS WITHIN 24" OF SLAB

## WALK OUT BASEMENT

# 2012 CODE COMPLIANCE PACKAGE

CITY OF HAMILTON
Building Division

Permit No. 21-105895

THESE STAMPED DRAWINGS SHALL BE AVAILABLE ON SITE

THE OWNER AND/OR CONTRACTOR SHALL COMPLY WITH THE ONTARIO BUILDING CODE AND ALL OTHER APPLICABLE LAW

These drawings and/or specifications have been reviewed by

FOR CHIEF BUILDING OFFICIAL — DATE FEB. 23/21

| no. | description | date | by |
|---|---|---|---|
| 9 | . | . | . |
| 8 | . | . | . |
| 7 | . | . | . |
| 6 | . | . | . |
| 5 | . | . | . |
| 4 | . | . | . |
| 3 | . | . | . |
| 2 | . | . | . |
| 1 | ISSUED FOR PERMIT. | APR 13/20 | GW |

The undersigned has reviewed and takes responsibility for this design and has the qualifications and meets the requirements set out in the Ontario Building Code to be a Designer.

qualification information — Richard Vink — signature — BCIN 24486

registration information — VA3 Design Inc. — 42656

Contractor must verify all dimensions on the job and report any discrepancy to the Designer before proceeding with the work. All drawings and specifications are instruments of service and the property of the Designer which must be returned at the completion of the work. Drawings are not to be scaled.

VA3 DESIGN
255 Consumers Rd Suite 120
Toronto ON M2J 1R4
t 416.630.2255 f 416.630.4782
va3design.com

Greenpark

SINGLES

| | |
|---|---|
| project name: RUSSELL GARDENS PH. 3 | municipality: WATERDOWN |
| project no. | 19014 |
| date: APRIL 2020 | SLAB ON GRADE INSULATION |
| drawing no. | 10 |
| drawn by: GW | checked by: – |
| scale: Not to Scale | file name: 19014-GP-STD_DETAILS_A1 |

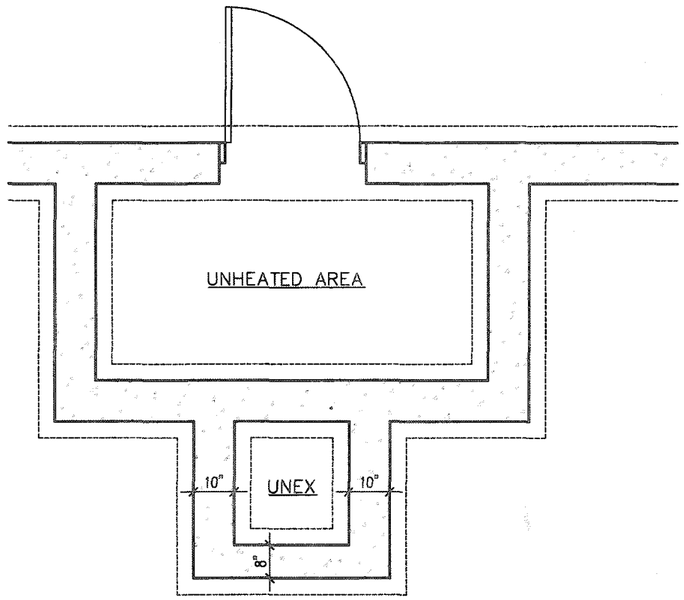


FOUNDATION PLAN

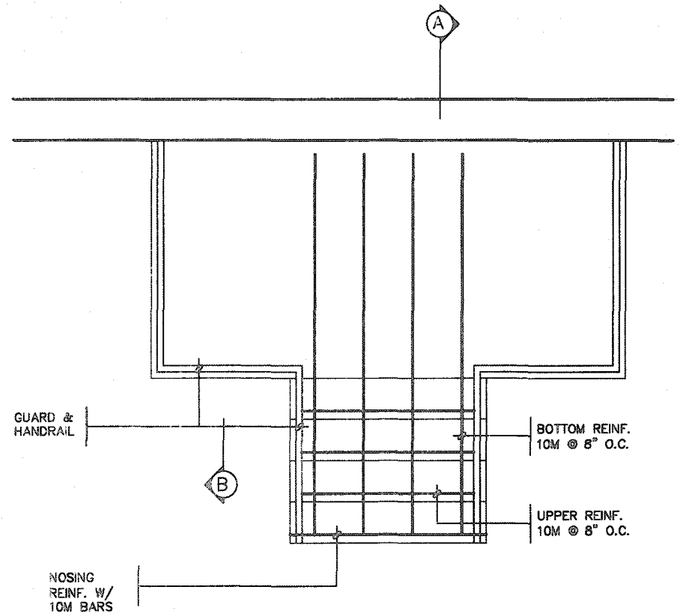


GROUND FLOOR PLAN

## GENERAL NOTES

1. EXTERIOR STAIRS

   7 7/8" RISE MAXIMUM
   8 1/4" RUN MINIMUM
   9 1/4" TREAD MINIMUM

2. MASONRY TIES

   WHEN BRICK FACING IS USED ABOVE GROUND LEVEL, PROVIDE 3/16" DIA. CORROSION RESISTANT METAL TIES @ 36" HORIZONTAL & 8" VERTICAL

3. GUARDS

   ARE REQUIRED AROUND CONCRETE SLAB IF MORE THAN 2'-0" ABOVE GRADE & ON BOTH SIDES OF STAIRS CONTAINING MORE THAN 6 RISERS. MINIMUM 34" HIGH FOR STAIRS MINIMUM 36" HIGH FOR PORCHES UP TO 5'-11" ABOVE GRADE. MINIMUM 42" HIGH FOR GREATER HTS.

4. HANDRAIL

   ARE REQUIRED WHERE STEPS HAVE MORE THAN 3 RISERS . HANDRAIL HEIGHT 34" – 38".

5. FOUNDATION WALLS

   THICKNESS OF FOUNDATION WALLS IS DEPENDANT UPON VENEER CUT 8" FOR UP TO 26" VENEER CUT HEIGHT 10" FOR VENEER CUT OVER 26" HIGH

6. CONCRETE

   MINIMUM CONCRETE STRENGTH SHALL BE 4650 PSI [32MPa] W/ 5%–8% AIR ENTRAINMENT MINIMUM CONCRETE SLAB THICKNESS 5"

7. CONCRETE COVER

   PROVIDE MINIMUM 3/4" CLEAR CONCRETE COVER TO REINFORCING BARS

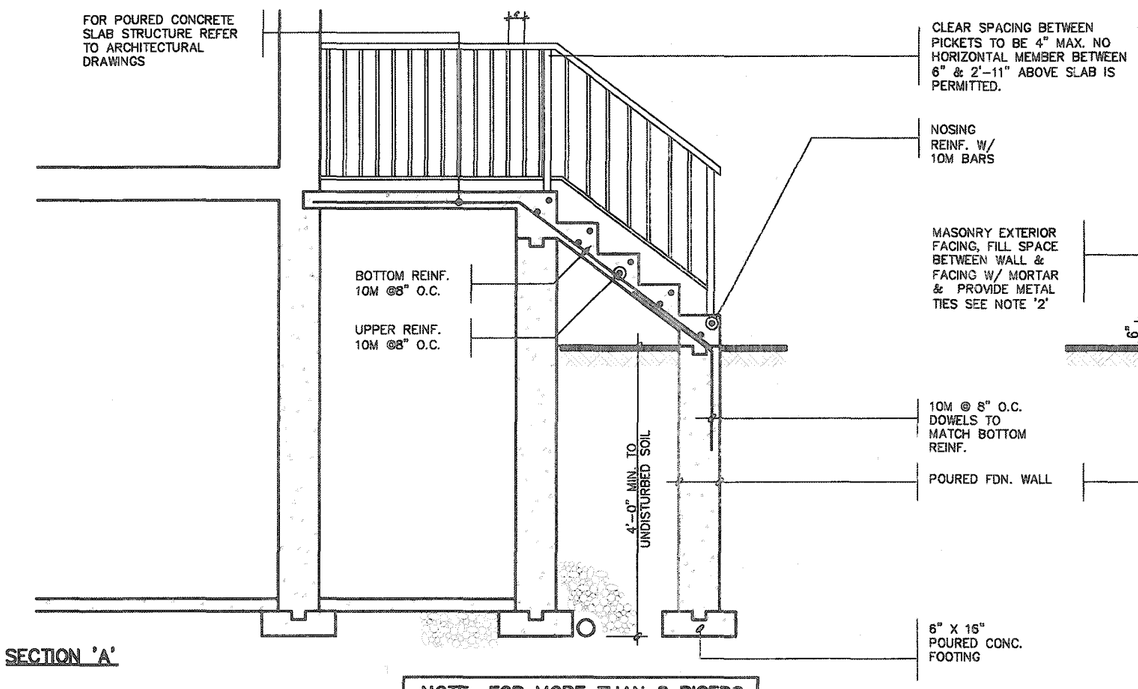


SECTION 'A'

NOTE: FOR MORE THAN 8 RISERS

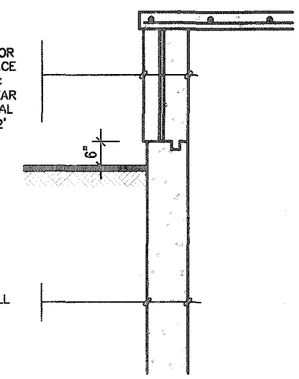


SECTION 'B'

STRUDET INC.
REGISTERED PROFESSIONAL ENGINEER
B. MARINKOVIC
APRIL 15, 2020
PROVINCE OF ONTARIO
FOR STRUCTURE ONLY

CITY OF HAMILTON
Building Division
Permit No. 21-105895
THESE STAMPED DRAWINGS SHALL BE AVAILABLE ON SITE
THE OWNER AND/OR CONTRACTOR SHALL COMPLY WITH THE ONTARIO BUILDING CODE AND ALL OTHER APPLICABLE LAW
These drawings and/or specifications have been reviewed by
FOR CHIEF BUILDING OFFICIAL — DATE FEB. 23/21

# 2012 CODE COMPLIANCE PACKAGE A1

| no. | description | date | by |
|---|---|---|---|
| 9 | . | . | . |
| 8 | . | . | . |
| 7 | . | . | . |
| 6 | . | . | . |
| 5 | . | . | . |
| 4 | . | . | . |
| 3 | . | . | . |
| 2 | . | . | . |
| 1 | ISSUED FOR PERMIT. | APR 13/20 | GW |

The undersigned has reviewed and takes responsibility for this design and has the qualifications and meets the requirements set out in the Ontario Building Code to be a Designer.
qualification information — name: Richard Vink — signature: R Vink — BCIN: 24488
registration information — VA3 Design Inc. — 42658

Contractor must verify all dimensions on the job and report any discrepancy to the Designer before proceeding with the work. All drawings and specifications are instruments of service and the property of the Designer which must be returned at the completion of the work. Drawings are not to be scaled.

VA3 DESIGN
255 Consumers Rd Suite 120
Toronto ON M2J 1R4
t 416.630.2255 f 416.630.4782
va3design.com

Greenpark

SINGLES
–

project name: RUSSELL GARDENS PH. 3
municipality: WATERDOWN
project no.: 19014
date: APRIL 2020
POURED CONC. PORCH STEPS
drawn by: GW
checked by: –
scale: Not to Scale
file name: 19014-GP-STD_DETAILS_A1
drawing no.: 11

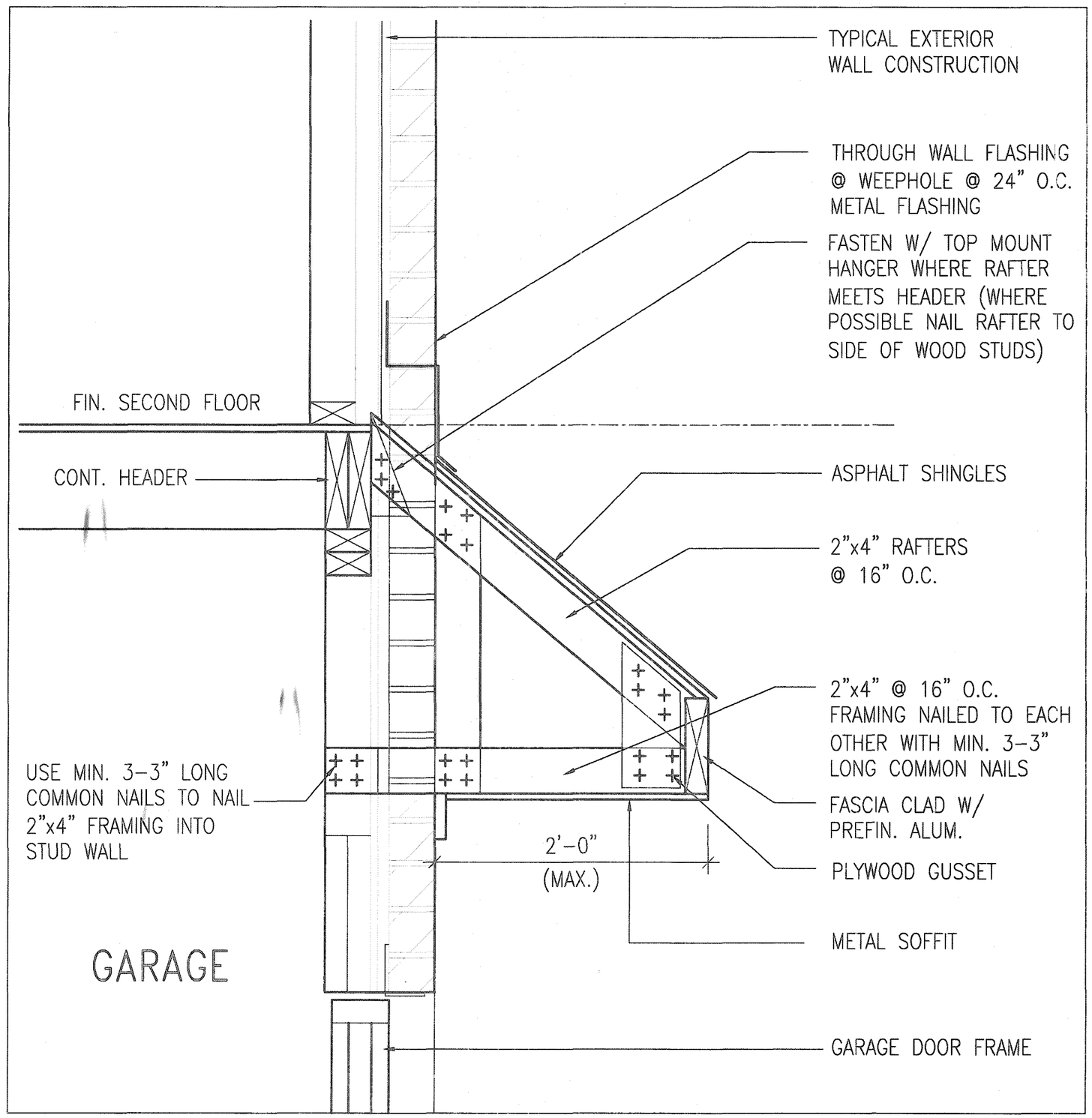


B ROOF OVERHANG DETAIL OVER GARAGE

CITY OF HAMILTON
Building Division
Permit No. 21-105895
THESE STAMPED DRAWINGS SHALL BE AVAILABLE ON SITE
THE OWNER AND/OR CONTRACTOR SHALL COMPLY WITH THE ONTARIO BUILDING CODE AND ALL OTHER APPLICABLE LAW
These drawings and/or specifications have been reviewed by
FOR CHIEF BUILDING OFFICIAL FEB.23/21 DATE

STRUDET INC.
REGISTERED PROFESSIONAL ENGINEER
B. MARINKOVIC
APRIL 15, 2020
PROVINCE OF ONTARIO
FOR STRUCTURE ONLY

# 2012 CODE COMPLIANCE PACKAGE A1

| no. | description | date | by |
|---|---|---|---|
| 9 | . | . | . |
| 8 | . | . | . |
| 7 | . | . | . |
| 6 | . | . | . |
| 5 | . | . | . |
| 4 | . | . | . |
| 3 | . | . | . |
| 2 | . | . | . |
| 1 | ISSUED FOR PERMIT. | APR 13/20 | GW |

The undersigned has reviewed and takes responsibility for this design and has the qualifications and meets the requirements set out in the Ontario Building Code to be a Designer.
qualification information
Richard Vink — signature — 24488
name — registration information — BCIN
VA3 Design Inc. — 42658

Contractor must verify all dimensions on the job and report any discrepancy to the Designer before proceeding with the work. All drawings and specifications are instruments of service and the property of the Designer which must be returned at the completion of the work. Drawings are not to be scaled.

VA3 DESIGN
255 Consumers Rd Suite 120
Toronto ON M2J 1R4
t 416.630.2255 f 416.630.4782
va3design.com

Greenpark

SINGLES
-

project name: RUSSELL GARDENS PH. 3
municipality: WATERDOWN
project no.: 19014
date: APRIL 2020
DETAIL OF EXTENDED ROOF
drawn by: GW
checked by: -
scale: Not to Scale
file name: 19014-GP-STD_DETAILS_A1
drawing no.: 12

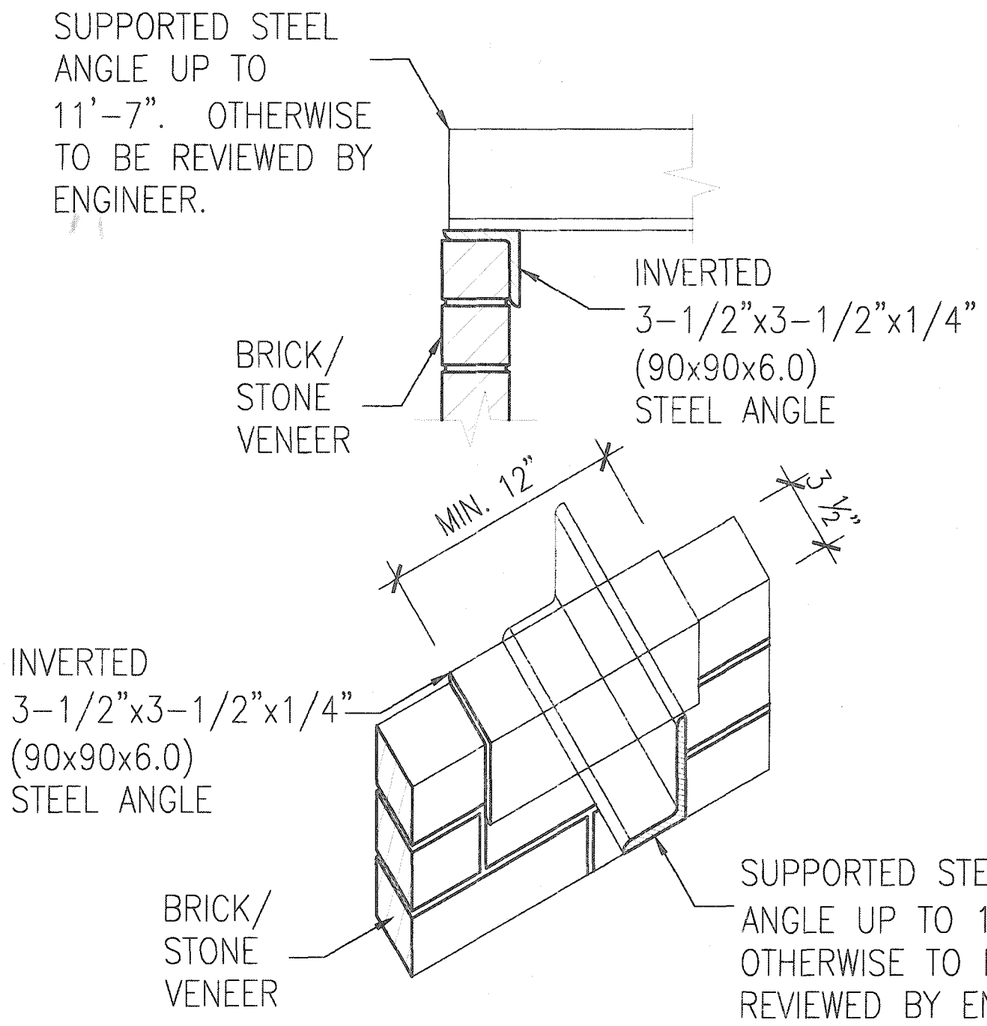


# INVERTED STEEL ANGLE DETAIL

CITY OF HAMILTON
Building Division
Permit No. 21-105895
THESE STAMPED DRAWINGS SHALL BE AVAILABLE ON SITE
THE OWNER AND/OR CONTRACTOR SHALL COMPLY WITH THE ONTARIO BUILDING CODE AND ALL OTHER APPLICABLE LAW
These drawings and/or specifications have been reviewed by
FOR CHIEF BUILDING OFFICIAL
FEB. 23/21
DATE

STRUDET INC.
REGISTERED PROFESSIONAL ENGINEER
B. MARINKOVIC
APRIL 15, 2020
PROVINCE OF ONTARIO
FOR STRUCTURE ONLY

## 2012 CODE COMPLIANCE PACKAGE A1

| no. | description | date | by |
|---|---|---|---|
| 9 | | | |
| 8 | | | |
| 7 | | | |
| 6 | | | |
| 5 | | | |
| 4 | | | |
| 3 | | | |
| 2 | | | |
| 1 | ISSUED FOR PERMIT. | APR 13/20 | GW |

The undersigned has reviewed and takes responsibility for this design and has the qualifications and meets the requirements set out in the Ontario Building Code to be a Designer.
qualification information
name: Richard Vink — signature: R Vink — BCIN: 24488
registration information
VA3 Design Inc. — 42658

Contractor must verify all dimensions on the job and report any discrepancy to the Designer before proceeding with the work. All drawings and specifications are instruments of service and the property of the Designer which must be returned at the completion of the work. Drawings are not to be scaled.

VA3 DESIGN
255 Consumers Rd Suite 120
Toronto ON M2J 1R4
t 416.630.2255 f 416.630.4782
va3design.com

Greenpark
SINGLES
project name: RUSSELL GARDENS PH. 3 — municipality: WATERDOWN — project no. 19014
date: APRIL 2020 — INVERTED STEEL ANGLE — drawing no. 13
drawn by: GW — checked by: - — scale: Not to Scale — file name: 19014-GP-STD_DETAILS_A1
APRIL 14, 2020 - 4:19 PM

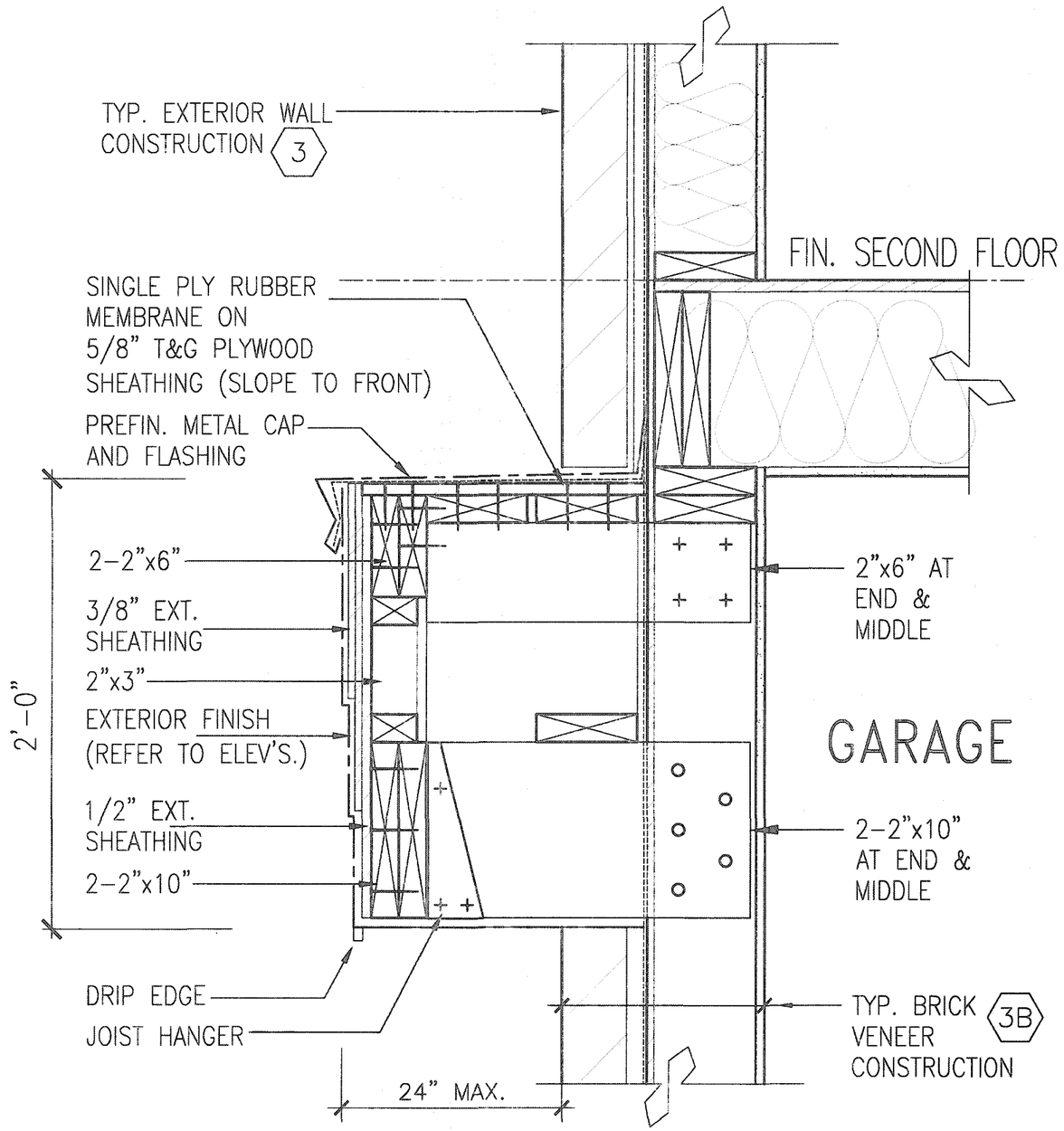


C2 CANOPY DETAIL

SCALE: N.T.S

CITY OF HAMILTON
Building Division
Permit No. 21-105895
THESE STAMPED DRAWINGS SHALL BE AVAILABLE ON SITE
THE OWNER AND/OR CONTRACTOR SHALL COMPLY WITH THE ONTARIO BUILDING CODE AND ALL OTHER APPLICABLE LAW
These drawings and/or specifications have been reviewed by
FOR CHIEF BUILDING OFFICIAL FEB. 23/21 DATE

STRUDET INC.
REGISTERED PROFESSIONAL ENGINEER
B. MARINKOVIC
APRIL 15, 2020
PROVINCE OF ONTARIO
FOR STRUCTURE ONLY

# 2012 CODE COMPLIANCE PACKAGE A1

| no. | description | date | by |
|---|---|---|---|
| 9 | . | . | . |
| 8 | . | . | . |
| 7 | . | . | . |
| 6 | . | . | . |
| 5 | . | . | . |
| 4 | . | . | . |
| 3 | . | . | . |
| 2 | . | . | . |
| 1 | ISSUED FOR PERMIT. | APR 13/20 | GW |

The undersigned has reviewed and takes responsibility for this design and has the qualifications and meets the requirements set out in the Ontario Building Code to be a Designer.
qualification information
name: Richard Vink — signature: R Vink — BCIN: 24488
registration information
VA3 Design Inc. — 42658

Contractor must verify all dimensions on the job and report any discrepancy to the Designer before proceeding with the work. All drawings and specifications are instruments of service and the property of the Designer which must be returned at the completion of the work. Drawings are not to be scaled.

VA3 DESIGN
255 Consumers Rd Suite 120
Toronto ON M2J 1R4
t 416.630.2255 f 416.630.4782
va3design.com

Greenpark

SINGLES

project name: RUSSELL GARDENS PH. 3
municipality: WATERDOWN
project no.: 19014
date: APRIL 2020
CANOPY ROOF AT GARAGE DETAIL
drawn by: GW
checked by: –
scale: Not to Scale
file name: 19014-GP-STD_DETAILS_A1
drawing no.: 14