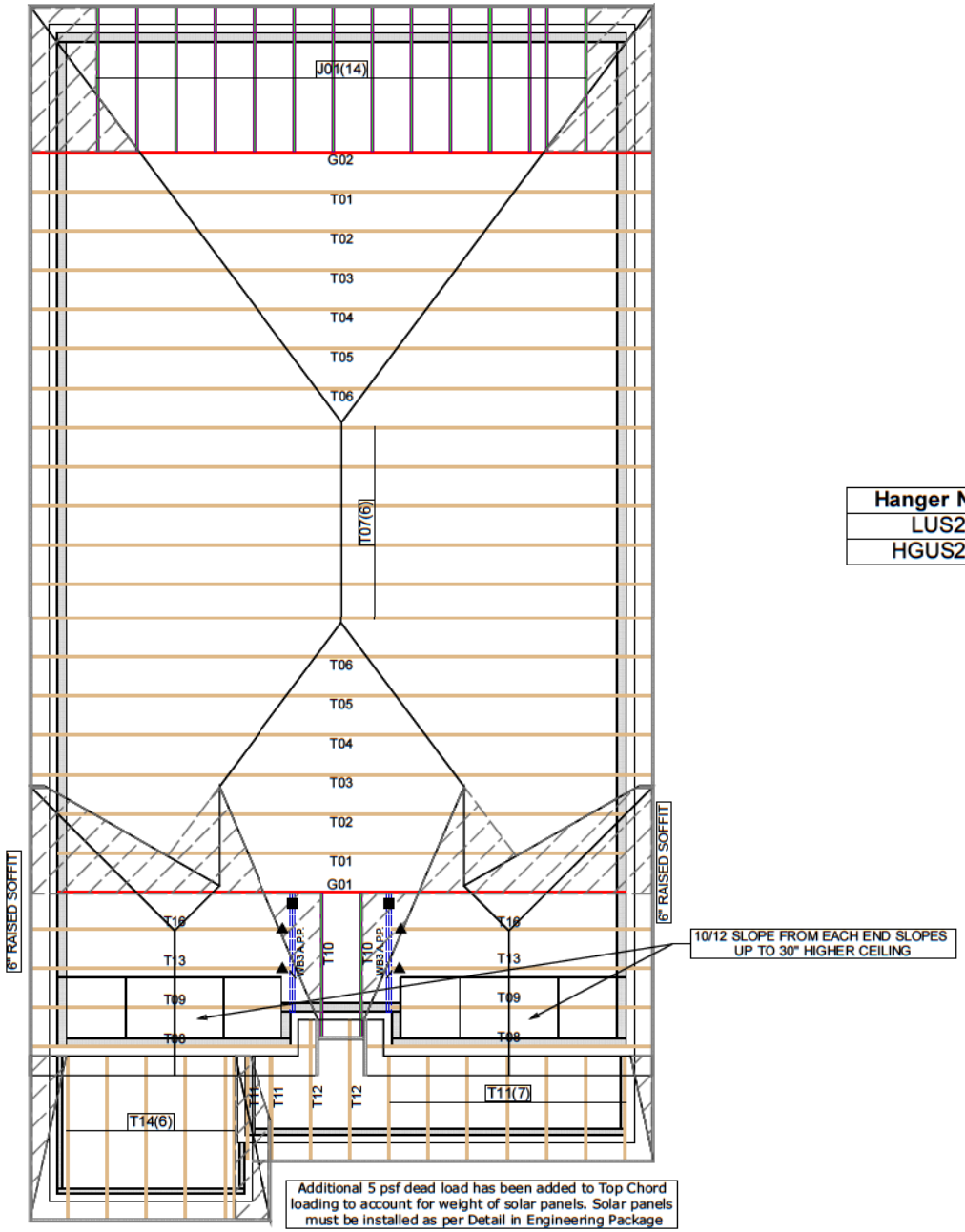

Hanger Name	Symbol	QTY
LUS24	▲	4
HGUS26-2	■	2

Town of East Gwillimbury
Building Standards Branch BCIN #16487

These plans have been reviewed for use with the corrections as noted. No other changes may be made without written approval of the Building Standards Branch. All work must comply with Zoning By-Law 2018-043, as amended, and the Ontario Building Code, as amended. These approved documents must be kept on site at all times. The building permit must be clearly posted on site at all times.

Discipline	Reviewer	BCIN	Date
Building Code	H. Authier	43236	2021-02-04
Sewage System			
Zoning			

CONVENTIONAL FRAMING BY OTHERS

ALL CONVENTIONAL FRAMING TO CONFORM WITH PART 9 OF THE OBC. ROOF RAFTERS THAT CROSS OVER TRUSSES TO BE MIN. 2x4 SPF @ 24" C/C WITH A 2x4 VERTICAL POST TO THE TRUSS BELOW. VERTICAL POSTS TO BE LATERALLY BRACED SO THAT UNBRACED LENGTH DOES NOT EXCEED 6'. DESIGN OF CONVENTIONAL FRAMING IS THE RESPONSIBILITY OF THE PROJECT ENGINEER.

JOB INFORMATION

Customer	GREENPARK HOMES
Job #	20-00419R0
Address	TRINAR HALL EAST GWILLIMBURY,ON
Model	BRENTWOOD 2 EL 2
Sales Rep	RALPH MIRIGELLO
Designer	KR
Date	12/17/2020
Path	C:\MITEK\CA\JOBS\GREENPARK HOMES\TRINAR HALL\BRENTWOOD 2\ELEV 2\T-BRENTWOOD2-2\

DESIGN INFORMATION

Code	NBCC 2015
Bldg	Residential - HSB (NBCC Part 9)
TC LL	34.8 lb/ft²
TC DL	8.0 lb/ft²
BC LL	10.5 lb/ft²
BC DL	7.3 lb/ft²
Deflection	LL=L/360 TL=L/360
Spacing	24" O/C unless otherwise noted
Complies With	OBC 2012 (2019 Amendment) CSA O86-14 and TPIC 2014

IMPORTANT INFORMATION

Refer to truss drawings in the Truss Engineering Package for ply-to-ply attachment notes

For site-framed valleys: top chords of all roof trusses must be laterally supported using 2x4 continuous bracing @24 O/C - all bracing must be anchored at ends as per TPIC Installation Guidelines

Read all notes on this page in addition to those shown on the KOTT Truss Engineering package

Field erection, handling and bracing are not the responsibility of KOTT, or KOTT Engineering

Unless noted otherwise, hurricane ties are to be installed at the bearings of all trusses > 40 ft clear span, and any girder or beam supporting trusses with a clear span >40 ft. See hanger legend for type.

Unless noted otherwise, for Part 9 bldgs, all trusses are to be anchored to the top of supporting walls as follows: trusses with a clear span <40 ft use 3-1/4" nails @ each bearing; trusses with a clear span >40 ft use 3-1/4" nails @ each bearing in addition to the appropriate hurricane tie.

KOTT Inc.
14 Anderson Blvd.
Uxbridge, ON
905.642.4400

KOTT

Town of East Gwillimbury
Building Standards Branch BCIN #16487

These plans have been reviewed for use with the corrections as noted. No other changes may be made without written approval of the Building Standards Branch. All work must comply with Zoning By-Law 2018-043, as amended, and the Ontario Building Code, as amended. These approved documents must be kept on site at all times. The building permit must be clearly posted on site at all times.

Discipline	Reviewer	BCIN	Date
Building Code	H. Authier	43236	2021-02-04
Sewage System			
Zoning			

NE1220-127
GREENPARK - TRINAR HALL -
BRENTWOOD 2 EL 2

ENGINEERING NOTE PAGE (ENP-1)

PLEASE READ PRIOR TO INSTALLATION

RESPONSIBILITIES

THIS DESIGN IS FOR AN INDIVIDUAL BUILDING COMPONENT AND HAS BEEN BASED ON INFORMATION PROVIDED BY KOTT DESIGN. THE UNDERSIGNED ENGINEER DISCLAIMS ANY RESPONSIBILITY FOR DAMAGES AS A RESULT OF FAULTY OR INCORRECT INFORMATION, SPECIFICATION AND/OR DESIGNS FURNISHED TO THE ENGINEER. THE UNDERSIGNED ENGINEER IS ONLY RESPONSIBLE FOR THE STRUCTURAL INTEGRITY OF THIS BUILDING COMPONENT FOR THE CONDITIONS AND LOADS SHOWN ON THIS DRAWING. THE STRUCTURAL INTEGRITY OF THE BUILDING AND THE VERIFICATION OF THE DIMENSIONS AND THE DESIGN LOADS USED ARE THE RESPONSIBILITY OF THE BUILDING DESIGNER.

TRUSSES ARE DESIGNED IN CONFORMANCE WITH THE RELEVANT SECTIONS OF THE NATIONAL BUILDING CODE OF CANADA OR THE CANADIAN CODE FOR FARM BUILDINGS, WHICHEVER APPLIES TO THE BUILDING TYPE INDICATED ON THE DRAWING

IT IS THE RESPONSIBILITY OF KOTT TO ENSURE THAT TRUSSES ARE MANUFACTURED IN CONFORMANCE WITH THESE DESIGNS AND WITH THE SPECIFICATIONS OUTLINED BELOW. THE UNDERSIGNED ENGINEER IS NOT RESPONSIBLE FOR QUALITY CONTROL IN THE TRUSS MANUFACTURING PLANT.

USE AND OCCUPANCY

- The building is of the type indicated on the drawing

LOADING

- The truss loading intensity and distribution as well as load transfer mechanism is that indicated on the drawing
- No buildings, trees, parapets or other projections higher than the roof for which the trusses are used are located within a distance less than ten (10) times the difference in height, or five metres (16 ft) whichever is greater, unless the drawing indicates that the snow drifting has been taken into account

HANDLING, INSTALLATION AND BRACING

- The trusses must be handled and installed by a qualified professional as per the supplied document titled *Information for Truss Installers* and the BCSI-B1 and BCSI-B3 Summary Sheets
- The compression chords are laterally braced by continuous rigid diaphragm sheathing or as specified on the drawing
- Temporary and permanent bracing must be installed as indicated on the truss drawing and according to the BCSI-B1 and BCSI-B3 Summary Sheets. Bracing for the lateral stability of the truss is to be provided by the building designer
- **It is recommended that a Professional Engineer's advice be obtained for the bracing of trusses spanning more than 12.37m (40'-7")**

SUPPORTS

- The trusses are to be supported at the bearing points indicated and anchored to the supports where considered necessary by the designer of the overall structure
- Bearing sizes shown are the minimum required to prevent crushing of the truss members and do not necessarily take into account stability of the overall building structure
- Elevation of bearings must be carefully checked and shimmed to alignment for solid bearings
- Adequate wood truss bearing is the responsibility of the building designer.

DIMENSIONS

- Geometry of the truss and dimensions indicated on the drawing are identical to those of the installed truss.

JOB NAME	TRUSS NAME	QUANTITY	PLY	JOB DESC.	DRWG NO.
NE1220-127	G01	1	1	TRUSS DESC. GREENPARK - TRINAR HALL - BRENTWOOD 2 EL 2	**Page 2 of 22**

Version 8.420 S Oct 9 2020 MiTek Industries, Inc. Fri Dec 18 08:50:33 2020 Page 1
ID:mCCrycxnlfAPc08wPalNt0zHzlx-vcGXmBilkBVQ? vOkHF6dwRNSKifeFibI2UApGy7o

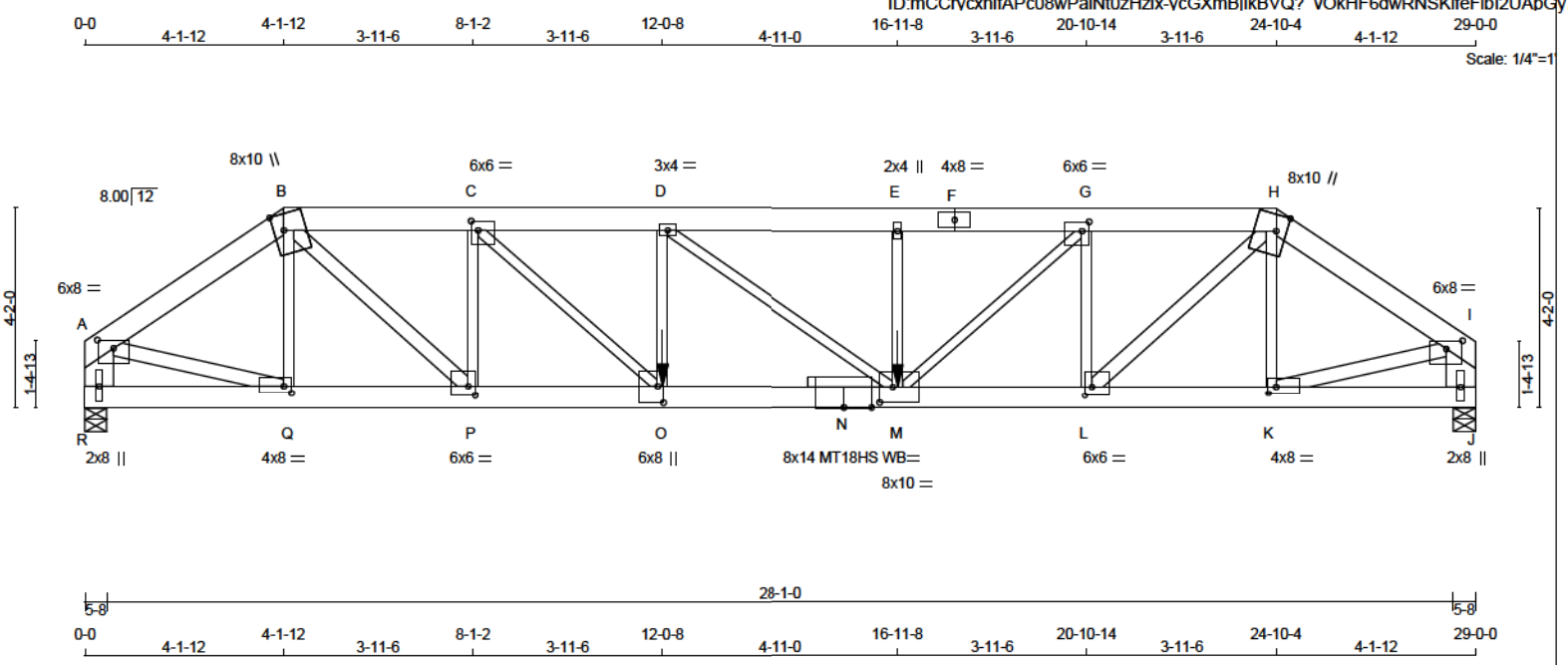

TOTAL WEIGHT = 161 lb

LUMBER
N. L. G. A. RULES

CHORDS	SIZE		LUMBER	DESCR.
A - B	2x6	DRY	2100F 1.8E	SPF
B - F	2x6	DRY	2100F 1.8E	SPF
F - H	2x6	DRY	2100F 1.8E	SPF
H - I	2x6	DRY	2100F 1.8E	SPF
R - A	2x8	DRY	No.2	SPF
J - I	2x8	DRY	No.2	SPF
R - N	2x6	DRY	2100F 1.8E	SPF
N - J	2x6	DRY	2100F 1.8E	SPF
ALL WEBS	2x3	DRY	No.2	SPF
EXCEPT				
B - P	2x4	DRY	No.2	SPF
L - H	2x4	DRY	No.2	SPF
A - Q	2x4	DRY	No.2	SPF
K - I	2x4	DRY	No.2	SPF

DRY: SEASONED LUMBER.

PLATES (table is in inches)

JT	TYPE	PLATES	W	LEN	Y	X
A	TMVW-p	MT20	6.0	8.0	2.00	4.00
B	TTWW+m	MT20	8.0	10.0	Edge	2.50
C	TMWW-t	MT20	6.0	6.0	2.25	1.75
D	TMWW-t	MT20	3.0	4.0		
E	TMW+w	MT20	2.0	4.0		
F	TS-t	MT20	4.0	8.0		
G	TMWW-t	MT20	6.0	6.0	2.25	1.75
H	TTWW+m	MT20	8.0	10.0	Edge	2.50
I	TMVW-p	MT20	6.0	8.0	2.00	4.00
J	BMV1+p	MT20	2.0	8.0		
K	BMWW-t	MT20	4.0	8.0	1.75	2.00
L	BMWW-t	MT20	6.0	6.0	2.25	1.75
M	BMWWW-t	MT20	8.0	10.0	4.25	3.25
N	BS-t	MT18HS	8.0	14.0		
O	BMWW+t	MT20	6.0	8.0	4.25	1.50
P	BMWW-t	MT20	6.0	6.0	2.25	1.75
Q	BMWW-t	MT20	4.0	8.0	1.75	2.00
R	BMV1+p	MT20	2.0	8.0		

Edge - INDICATES REFERENCE CORNER OF PLATE TOUCHES EDGE OF CHORD.

WB - INDICATES BLOCKING REQUIRED

DIMENSIONS, SUPPORTS AND LOADINGS SPECIFIED BY FABRICATOR TO BE VERIFIED BY BUILDING DESIGNER [M]

BEARINGS

JT	FACTORED GROSS REACTION VERT	HORZ	MAXIMUM GROSS REACTION DOWN	HORZ	FACTORED UPLIFT	INPUT BRG IN-SX	REQRD BRG IN-SX
R	4146	0	4146	0	0	5-8	4-8
J	4146	0	4146	0	0	5-8	4-8

UNFACTORED REACTIONS

JT	1ST LCASE COMBINED	SNOW	MAX./MIN. COMPONENT REACTIONS LIVE	PERM.LIVE	WIND	DEAD	SOIL
R	3059	1783 / 0	570 / 0	0 / 0	0 / 0	894 / 0	0 / 0
J	3059	1783 / 0	570 / 0	0 / 0	0 / 0	894 / 0	0 / 0

BEARING MATERIAL TO BE SPF NO.2 OR BETTER AT JOINT(S) R, J

BRACING
TOP CHORD TO BE SHEATHED OR MAX. PURLIN SPACING = 3.12 FT.
MAX. UNBRACED BOTTOM CHORD LENGTH = 10.00 FT OR RIGID CEILING DIRECTLY APPLIED.

ALL PITCH BREAKS AND PERIMETER CORNER JOINTS MUST BE LATERALLY RESTRAINED.

LOADING
TOTAL LOAD CASES: (4)

CHORDS

MEMB. FR-TO	MAX. FORCE (LBS)	FACTORED VERT. LOAD (PLF) FROM	TO	LC1 MAX CSI (LC)	MAX. UNBRAC LENGTH
A- B	-5211 / 0	-124.4	-124.4	0.16 (1)	4.54
B- C	-7634 / 0	-124.4	-124.4	0.21 (1)	3.84
C- D	-10272 / 0	-124.4	-124.4	0.30 (1)	3.29
D- E	-10257 / 0	-234.6	-234.6	0.47 (1)	3.12
E- F	-10257 / 0	-124.4	-124.4	0.28 (1)	3.31
F- G	-10257 / 0	-124.4	-124.4	0.28 (1)	3.31
G- H	-7637 / 0	-124.4	-124.4	0.21 (1)	3.84
H- I	-5210 / 0	-124.4	-124.4	0.16 (1)	4.54
R- A	-4077 / 0	0.0	0.0	0.22 (1)	5.96
J- I	-4077 / 0	0.0	0.0	0.22 (1)	5.96
R- Q	0 / 0	-39.2	-39.2	0.04 (3)	10.00
Q- P	0 / 4304	-39.2	-39.2	0.25 (1)	10.00
P- O	0 / 7634	-39.2	-39.2	0.46 (1)	10.00
O- N	0 / 10272	-55.4	-55.4	0.67 (1)	10.00
N- M	0 / 10272	-55.4	-55.4	0.67 (1)	10.00
M- L	0 / 7637	-39.2	-39.2	0.47 (1)	10.00
L- K	0 / 4303	-39.2	-39.2	0.25 (1)	10.00
K- J	0 / 0	-39.2	-39.2	0.04 (3)	10.00

WEBS

MEMB. FR-TO	MAX. FORCE (LBS)	MAX CSI (LC)
Q- B	-733 / 0	0.18 (1)
B- P	0 / 4556	0.81 (1)
P- C	-2917 / 0	0.71 (1)
C- O	0 / 3621	0.90 (1)
O- D	-843 / 0	0.21 (1)
D- M	-19 / 0	0.01 (1)
M- E	-834 / 0	0.20 (1)
M- G	0 / 3596	0.89 (1)
L- G	-2910 / 0	0.71 (1)
L- H	0 / 4561	0.81 (1)
K- H	-735 / 0	0.18 (1)
A- Q	0 / 4420	0.78 (1)
K- I	0 / 4419	0.78 (1)

FACTORED CONCENTRATED LOADS (LBS)

JT	LOC.	LC1	MAX-	MAX+	FACE	DIR.	TYPE	HEEL	CONN.
M	16-11-8	-1462	-1462	---	FRONT	VERT	TOTAL	---	C1
O	12-0-8	-1462	-1462	---	FRONT	VERT	TOTAL	---	C1

CONNECTION REQUIREMENTS

1) C1: A SUITABLE HANGER/MECHANICAL CONNECTION IS REQUIRED.

DESIGN CRITERIA

*** SPECIAL LOADS ANALYSIS ***
GEOMETRY AND/OR BASIC LOADS CHANGED BY USER.
LOADS WERE DERIVED FROM USER INPUT
NO FURTHER MODIFICATIONS WERE MADE

SPECIFIED LOADS:
TOP CH. LL = 34.8 PSF
DL = 8.0 PSF
BOT CH. LL = 10.5 PSF
DL = 7.3 PSF
TOTAL LOAD = 60.6 PSF

SPACING = 24.0 IN. C/C

LOADING IN FLAT SECTION BASED ON A SLOPE OF 2.00/12 MINIMUM

*** NON STANDARD GIRDER ***
ADDT'L USER-DEFINED LOADS APPLIED TO ALL LOAD CASES.

THIS TRUSS IS DESIGNED FOR RESIDENTIAL OR SMALL BUILDING REQUIREMENTS OF PART 9, NBCC 2015

THIS DESIGN COMPLIES WITH:
- PART 9 OF BCBC 2018 , ABC 2019
- PART 9 OF OBC 2012 (2019 AMENDMENT)
- CSA 086-14
- TPIC 2014

(55 % OF 48.1 P.S.F. G.S.L. PLUS 8.4 P.S.F. RAIN LOAD) EQUALS 34.8 P.S.F. SPECIFIED ROOF LIVE LOAD

ALLOWABLE DEFL.(LL)= L/360 (0.97")
CALCULATED VERT. DEFL.(LL) = L/ 999 (0.30")
ALLOWABLE DEFL.(TL)= L/360 (0.97")
CALCULATED VERT. DEFL.(TL) = L/ 681 (0.51")

CSI: TC=0.47/1.00 (D-E:1) , BC=0.67/1.00 (M-O:1) , WB=0.90/1.00 (C-O:1) , SSI=0.39/1.00 (D-E:1)

DOL LUMBER=1.00 NAIL=1.00 LS BEND=1.00 COMP=1.00 SHEAR=1.00 TENS= 1.00

COMPANION LIVE LOAD FACTOR = 1.00

TRUSS PLATE MANUFACTURER IS NOT RESPONSIBLE FOR QUALITY CONTROL IN THE TRUSS MANUFACTURING PLANT .

NAIL VALUES

PLATE	GRIP(DRY) (PSI) MAX	MIN	SHEAR (PLI) MAX	MIN	SECTION (PLI) MAX	MIN
MT20	650	371	1747	788	1987	1873
MT18HS	586	403	2455	1382	3163	3004

PLATE PLACEMENT TOL. = 0.250 inches

PLATE ROTATION TOL. = 5.0 Deg.

JSI GRIP= 0.89 (A) (INPUT = 0.90)
JSI METAL= 0.97 (N) (INPUT = 1.00)

LICENSED PROFESSIONAL ENGINEER
N.A. EL-MASRI
PROVINCE OF ONTARIO
Dec 18, 2020

READ ALL NOTES ON THIS PAGE AND ON ENGINEERING NOTE PAGE ENP-1. THIS NOTE PAGE IS AN INTEGRAL PART OF THIS DRAWING AS IT CONTAINS SPECIFICATIONS AND CRITERIA USED IN THE DESIGN OF THIS COMPONENT.

Town of East Gwillimbury
Building Standards Branch BCIN #16487

These plans have been reviewed for use with the corrections as noted. No other changes may be made without written approval of the Building Standards Branch. All work must comply with Zoning By-Law 2018-043, as amended, and the Ontario Building Code, as amended. These approved documents must be kept on site at all times. The building permit must be clearly posted on site at all times.

Discipline	Reviewer	BCIN	Date
Building Code	H. Authier	43236	2021-02-04
Sewage System			
Zoning			

KOTT

JOB NAME	TRUSS NAME	QUANTITY	PLY	JOB DESC.	DRWG NO.
NE1220-127	G02	1	1	GREENPARK - TRINAR HALL - BRENTWOOD 2 EL 2 (TRUSS DESC.)	

Version 8.420 S Oct 9 2020 MiTek Industries, Inc. Fri Dec 18 08:50:34 2020 Page 1
ID:mCCrvcxnIfAPc08wPalNt0zHzIx-QoqwzXiwVVdHd8UbH mL97zQ0j3DNk4kXiDiLty7o

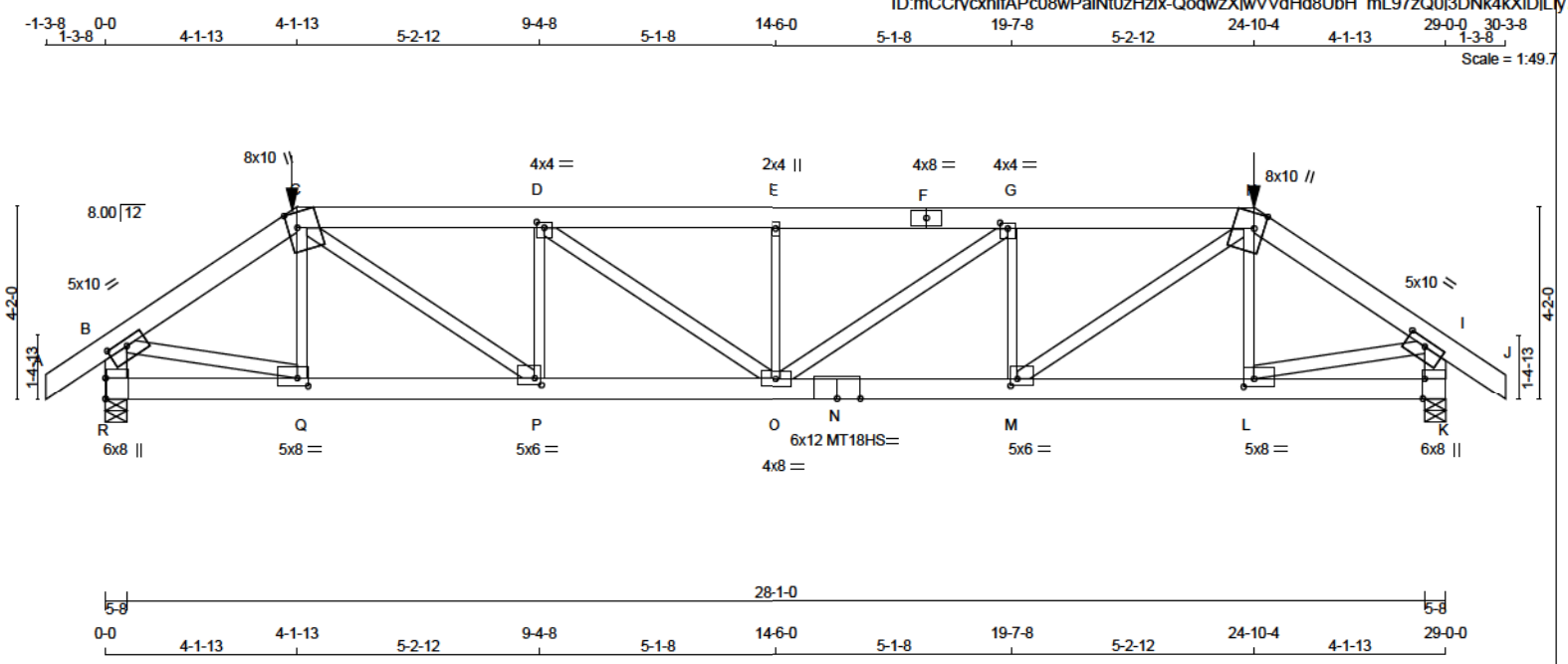

TOTAL WEIGHT = 165 lb

LUMBER
N. L. G. A. RULES

CHORDS	SIZE		LUMBER	DESCR.
A - C	2x6	DRY	No.2	SPF
C - F	2x6	DRY	No.2	SPF
F - H	2x6	DRY	No.2	SPF
H - J	2x6	DRY	No.2	SPF
R - B	2x6	DRY	No.2	SPF
K - I	2x6	DRY	No.2	SPF
R - N	2x6	DRY	2100F 1.8E	SPF
N - K	2x6	DRY	2100F 1.8E	SPF
ALL WEBS	2x4	DRY	No.2	SPF
EXCEPT				
Q - C	2x3	DRY	No.2	SPF
P - D	2x3	DRY	No.2	SPF
O - E	2x3	DRY	No.2	SPF
M - G	2x3	DRY	No.2	SPF
L - H	2x3	DRY	No.2	SPF

DRY: SEASONED LUMBER.

PLATES (table is in inches)

JT	TYPE	PLATES	W	LEN	Y	X
B	TMVW-t	MT20	5.0	10.0	1.75	5.00
C	TTWW+m	MT20	8.0	10.0	Edge	2.50
D	TMWW-t	MT20	4.0	4.0	1.50	2.00
E	TMW+w	MT20	2.0	4.0		
F	TS-t	MT20	4.0	8.0		
G	TMWW-t	MT20	4.0	4.0	1.50	2.00
H	TTWW+m	MT20	8.0	10.0	Edge	2.50
I	TMVW-t	MT20	5.0	10.0	1.75	5.00
K	BMV1+p	MT20	6.0	8.0	Edge	0.50
L	BMWW-t	MT20	5.0	8.0	2.00	2.75
M	BMWW-t	MT20	5.0	6.0	1.75	1.75
N	BS-t	MT18HS	6.0	12.0		
O	BMWWW-t	MT20	4.0	8.0		
P	BMWW-t	MT20	5.0	6.0	1.75	1.75
Q	BMWW-t	MT20	5.0	8.0	2.00	2.75
R	BMV1+p	MT20	6.0	8.0	5.50	

Edge - INDICATES REFERENCE CORNER OF PLATE TOUCHES EDGE OF CHORD.

DIMENSIONS, SUPPORTS AND LOADINGS SPECIFIED BY FABRICATOR TO BE VERIFIED BY BUILDING DESIGNER

BEARINGS

JT	FACTORED GROSS REACTION VERT	HORZ	MAXIMUM GROSS REACTION DOWN	HORZ	FACTORED UPLIFT	INPUT BRG IN-SX	REQRD BRG IN-SX
R	4582	0	4582	0	0	5-8	5-8
K	4582	0	4582	0	0	5-8	5-8

UNFACTORED REACTIONS

JT	1ST LCASE COMBINED	MAX./MIN. COMPONENT REACTIONS SNOW	LIVE	PERM.LIVE	WIND	DEAD	SOIL
R	3387	1963 / 0	574 / 0	0 / 0	0 / 0	850 / 0	0 / 0
K	3387	1963 / 0	574 / 0	0 / 0	0 / 0	850 / 0	0 / 0

BEARING MATERIAL TO BE SPF NO.2 OR BETTER AT JOINT(S) R, K

BRACING
TOP CHORD TO BE SHEATHED OR MAX. PURLIN SPACING = 1.88 FT.
MAX. UNBRACED BOTTOM CHORD LENGTH = 10.00 FT OR RIGID CEILING DIRECTLY APPLIED.

ALL PITCH BREAKS AND PERIMETER CORNER JOINTS MUST BE LATERALLY RESTRAINED.

LOADING
TOTAL LOAD CASES: (4)

CHORDS

MEMB. FR-TO	FORCE (LBS)	VERT. LOAD (PLF) FROM	TO	LC1 MAX CSI (LC)	MAX. UNBRAC LENGTH
A- B	0 / 49	-124.4	-124.4	0.10 (1)	10.00
B- C	-5491 / 0	-124.4	-124.4	0.38 (1)	3.41
C- D	-7991 / 0	-234.6	-234.6	0.88 (1)	2.23
D- E	-8998 / 0	-234.6	-234.6	0.99 (1)	1.88
E- F	-8998 / 0	-234.6	-234.6	0.99 (1)	1.88
F- G	-8998 / 0	-234.6	-234.6	0.99 (1)	1.88
G- H	-7991 / 0	-234.6	-234.6	0.88 (1)	2.23
H- I	-5491 / 0	-124.4	-124.4	0.38 (1)	3.41
I- J	0 / 49	-124.4	-124.4	0.10 (1)	10.00
R- B	-4459 / 0	0.0	0.0	0.32 (1)	5.05
K- I	-4459 / 0	0.0	0.0	0.32 (1)	5.05
R- Q	0 / 0	-74.0	-74.0	0.08 (3)	10.00
Q- P	0 / 4541	-74.0	-74.0	0.30 (1)	10.00
P- O	0 / 7992	-74.0	-74.0	0.52 (1)	10.00
O- N	0 / 7992	-74.0	-74.0	0.52 (1)	10.00
N- M	0 / 7992	-74.0	-74.0	0.52 (1)	10.00
M- L	0 / 4541	-74.0	-74.0	0.30 (1)	10.00
L- K	0 / 0	-74.0	-74.0	0.08 (3)	10.00

WEBS

MEMB. FR-TO	FORCE (LBS)	LC1 MAX CSI (LC)
Q- C	-557 / 87	0.14 (1)
C- P	0 / 4221	0.75 (1)
P- D	-2061 / 0	0.50 (1)
D- O	0 / 1242	0.22 (1)
O- E	-1106 / 0	0.27 (1)
O- G	0 / 1242	0.22 (1)
M- G	-2061 / 0	0.50 (1)
M- H	0 / 4221	0.75 (1)
L- H	-557 / 87	0.14 (1)
B- Q	0 / 4657	0.82 (1)
L- I	0 / 4657	0.82 (1)

FACTORED CONCENTRATED LOADS (LBS)

JT	LOC.	LC1	MAX-	MAX+	FACE	DIR.	TYPE	HEEL	CONN.
C	4-1-13	-387	-387	---	FRONT	VERT	TOTAL	---	C1
H	24-10-4	-387	-387	---	FRONT	VERT	TOTAL	---	C1

CONNECTION REQUIREMENTS

1) C1: A SUITABLE HANGER/MECHANICAL CONNECTION IS REQUIRED.

DESIGN CRITERIA [M]

SPECIFIED LOADS:

TOP CH.	LL	=	34.8	PSF
	DL	=	8.0	PSF
BOT CH.	LL	=	10.5	PSF
	DL	=	7.3	PSF
TOTAL LOAD		=	60.6	PSF

SPACING = 24.0 IN. C/C

LOADING IN FLAT SECTION BASED ON A SLOPE OF 2.00/12 MINIMUM

GIRDER TYPE: CPrimeHip
SIDE SETBACK = 4-1-13
END SETBACK = 6-0-0
END WALL WIDTH = 5-8
CORNER FRAMING TYPE: CONVENTIONAL
END JACK TYPE: CONVENTIONAL
APPLIED TO FRONT SIDE
- ADDT'L LOADS BASED ON 55 % OF GSL.

THIS TRUSS IS DESIGNED FOR RESIDENTIAL OR SMALL BUILDING REQUIREMENTS OF PART 9, NBCC 2015

THIS DESIGN COMPLIES WITH:
- PART 9 OF BCBC 2018 , ABC 2019
- PART 9 OF OBC 2012 (2019 AMENDMENT)
- CSA 086-14
- TPIC 2014

(55 % OF 48.1 P.S.F. G.S.L. PLUS 8.4 P.S.F. RAIN LOAD) EQUALS 34.8 P.S.F. SPECIFIED ROOF LIVE LOAD

ALLOWABLE DEFL.(LL)= L/360 (0.97")
CALCULATED VERT. DEFL.(LL) = L/ 999 (0.30")
ALLOWABLE DEFL.(TL)= L/360 (0.97")
CALCULATED VERT. DEFL.(TL) = L/ 699 (0.50")

CSI: TC=0.99/1.00 (E-G:1) , BC=0.52/1.00 (M-O:1) , WB=0.82/1.00 (I-L:1) , SSI=0.48/1.00 (G-H:1)

DOL LUMBER=1.00 NAIL=1.00 LS BEND=1.00 COMP=1.00 SHEAR=1.00 TENS= 1.00

COMPANION LIVE LOAD FACTOR = 1.00

TRUSS PLATE MANUFACTURER IS NOT RESPONSIBLE FOR QUALITY CONTROL IN THE TRUSS MANUFACTURING PLANT .

NAIL VALUES

PLATE	GRIP(DRY) (PSI) MAX	MIN	SHEAR (PLI) MAX	MIN	SECTION (PLI) MAX	MIN
MT20	650	371	1747	788	1987	1873
MT18HS	586	403	2455	1382	3163	3004

PLATE PLACEMENT TOL. = 0.250 inches

PLATE ROTATION TOL. = 5.0 Deg.

JSI GRIP= 0.88 (G) (INPUT = 0.90)
JSI METAL= 0.84 (N) (INPUT = 1.00)

LICENSED PROFESSIONAL ENGINEER
N.A. EL-MASRI
PROVINCE OF ONTARIO
Dec 18, 2020

READ ALL NOTES ON THIS PAGE AND ON ENGINEERING NOTE PAGE ENP-1. THIS NOTE PAGE IS AN INTEGRAL PART OF THIS DRAWING AS IT CONTAINS SPECIFICATIONS AND CRITERIA USED IN THE DESIGN OF THIS COMPONENT.

Town of East Gwillimbury
Building Standards Branch BCIN #16487

These plans have been reviewed for use with the corrections as noted. No other changes may be made without written approval of the Building Standards Branch. All work must comply with Zoning By-Law 2018-043, as amended, and the Ontario Building Code, as amended. These approved documents must be kept on site at all times. The building permit must be clearly posted on site at all times.

Discipline	Reviewer	BCIN	Date
Building Code	H. Authier	43236	2021-02-04
Sewage System			
Zoning			

KOTT

JOB NAME	TRUSS NAME	QUANTITY	PLY	JOB DESC.		DRWG NO.
NE1220-127	J01	14	1	TRUSS DESC.	GREENPARK - TRINAR HALL - BRENTWOOD 2 EL 2	**Page 4 of 22**

Version 8.420 S Oct 9 2020 MiTek Industries, Inc. Fri Dec 18 08:50:35 2020 Page 1
ID:mCCrycxnlfAPc08wPalNt0zHzlx-u?OIAtkZGol8El2nrhIaiLWfM7Up6NBulMzHu9y7

Scale = 1:23.7

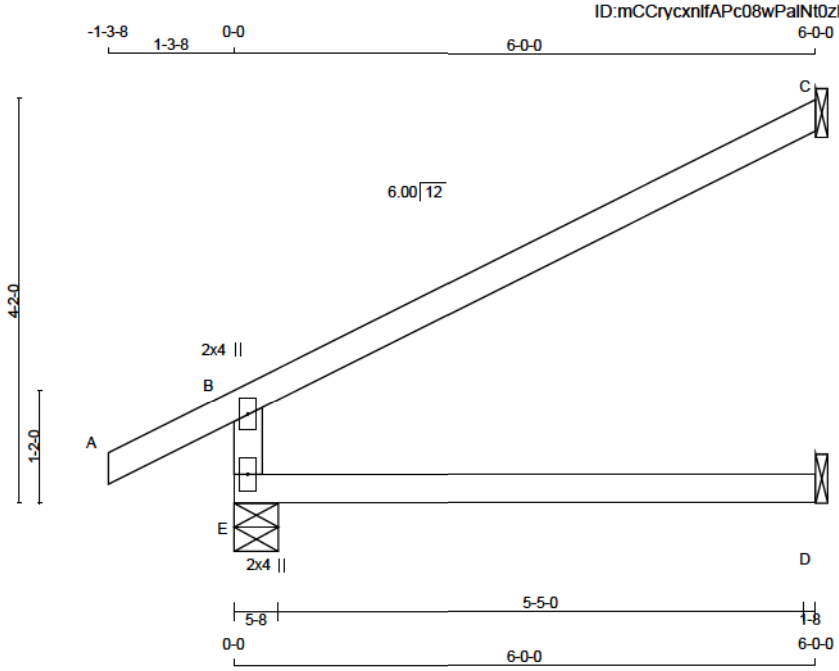

TOTAL WEIGHT = 14 X 17 = 239 lb

LUMBER
N. L. G. A. RULES

CHORDS	SIZE		LUMBER	DESCR.
E - B	2x4	DRY	No.2	SPF
A - C	2x4	DRY	No.2	SPF
E - D	2x4	DRY	No.2	SPF

DRY: SEASONED LUMBER.

PLATES (table is in inches)

JT	TYPE	PLATES	W	LEN	Y	X
B	TMV+p	MT20	2.0	4.0		
E	BMV1+p	MT20	2.0	4.0		

DIMENSIONS, SUPPORTS AND LOADINGS SPECIFIED BY FABRICATOR TO BE VERIFIED BY BUILDING DESIGNER

BEARINGS

JT	FACTORED GROSS REACTION VERT	HORZ	MAXIMUM FACTORED GROSS REACTION DOWN	HORZ	UPLIFT	INPUT BRG IN-SX	REQRD BRG IN-SX
E	774	0	774	0	0	5-8	1-8
C	280	0	280	0	0	1-8	1-8
D	97	0	123	0	0	1-8	1-8

SEE MITEK STANDARD DETAIL B97791H FOR CONNECTION TO JOINT(S) C , D

UNFACTORED REACTIONS

JT	1ST LCASE COMBINED	MAX /MIN COMPONENT REACTIONS SNOW	LIVE	PERM.LIVE	WIND	DEAD	SOIL
E	563	355 / 0	74 / 0	0 / 0	0 / 0	133 / 0	0 / 0
C	193	157 / 0	0 / 0	0 / 0	0 / 0	36 / 0	0 / 0
D	88	0 / 0	52 / 0	0 / 0	0 / 0	36 / 0	0 / 0

BEARING MATERIAL TO BE SPF NO.2 OR BETTER AT JOINT(S) E, C

BRACING
TOP CHORD TO BE SHEATHED OR MAX. PURLIN SPACING = 6.25 FT.
MAX. UNBRACED BOTTOM CHORD LENGTH = 10.00 FT OR RIGID CEILING DIRECTLY APPLIED.

ALL PITCH BREAKS AND PERIMETER CORNER JOINTS MUST BE LATERALLY RESTRAINED.

LOADING
TOTAL LOAD CASES: (4)

CHORDS MEMB. FR-TO	MAX. FACTORED FORCE (LBS)	FACTORED VERT. LOAD (PLF) FROM	TO	LC1 MAX CSI (LC)	MAX. UNBRAC LENGTH	WEBS MEMB. FR-TO	MAX. FACTORED FORCE (LBS)	MAX CSI (LC)
E- B	-635 / 0	0.0	0.0	0.24 (3)	7.81			
A- B	0 / 38	-124.4	-124.4	0.16 (1)	10.00			
B- C	-42 / 0	-124.4	-124.4	0.76 (1)	6.25			
E- D	0 / 0	-39.2	-39.2	0.24 (3)	10.00			

[M]

DESIGN CRITERIA

SPECIFIED LOADS:

TOP CH.	LL	=	34.8	PSF
	DL	=	8.0	PSF
BOT CH.	LL	=	10.5	PSF
	DL	=	7.3	PSF
TOTAL LOAD		=	60.6	PSF

SPACING = 24.0 IN. C/C

THIS TRUSS IS DESIGNED FOR RESIDENTIAL OR SMALL BUILDING REQUIREMENTS OF PART 9, NBCC 2015

THIS DESIGN COMPLIES WITH:
- PART 9 OF BCBC 2018 , ABC 2019
- PART 9 OF OBC 2012 (2019 AMENDMENT)
- CSA 086-14
- TPIC 2014

DESIGN ASSUMPTIONS
-OVERHANG NOT TO BE ALTERED OR CUT OFF.

(55 % OF 48.1 P.S.F. G.S.L. PLUS 8.4 P.S.F. RAIN LOAD) EQUALS 34.8 P.S.F. SPECIFIED ROOF LIVE LOAD

ALLOWABLE DEFL.(LL)= L/360 (0.20")
CALCULATED VERT. DEFL.(LL) = L/ 999 (0.05")
ALLOWABLE DEFL.(TL)= L/360 (0.20")
CALCULATED VERT. DEFL.(TL) = L/ 874 (0.08")

CSI: TC=0.76/1.00 (B-C:1) , BC=0.24/1.00 (D-E:3) , WB=0.00/1.00 (n/a:0) , SSI=0.33/1.00 (B-C:1)

DOL LUMBER=1.00 NAIL=1.00 LS BEND=1.10 COMP=1.10 SHEAR=1.10 TENS= 1.10

COMPANION LIVE LOAD FACTOR = 1.00

TRUSS PLATE MANUFACTURER IS NOT RESPONSIBLE FOR QUALITY CONTROL IN THE TRUSS MANUFACTURING PLANT .

NAIL VALUES

PLATE	GRIP(DRY) (PSI) MAX	MIN	SHEAR (PLI) MAX	MIN	SECTION (PLI) MAX	MIN
MT20	650	371	1747	788	1987	1873

PLATE PLACEMENT TOL. = 0.250 inches

PLATE ROTATION TOL. = 5.0 Deg.

JSI GRIP= 0.36 (B) (INPUT = 0.90)
JSI METAL= 0.26 (B) (INPUT = 1.00)

LICENSED PROFESSIONAL ENGINEER
N.A. EL-MASRI
PROVINCE OF ONTARIO
Dec 18, 2020

READ ALL NOTES ON THIS PAGE AND ON ENGINEERING NOTE PAGE ENP-1. THIS NOTE PAGE IS AN INTEGRAL PART OF THIS DRAWING AS IT CONTAINS SPECIFICATIONS AND CRITERIA USED IN THE DESIGN OF THIS COMPONENT.

Town of East Gwillimbury
Building Standards Branch BCIN #16487

These plans have been reviewed for use with the corrections as noted. No other changes may be made without written approval of the Building Standards Branch. All work must comply with Zoning By-Law 2018-043, as amended, and the Ontario Building Code, as amended. These approved documents must be kept on site at all times. The building permit must be clearly posted on site at all times.

Discipline	Reviewer	BCIN	Date
Building Code	H. Authier	43236	2021-02-04
Sewage System			
Zoning			

KOTT

JOB NAME	TRUSS NAME	QUANTITY	PLY	JOB DESC.	DRWG NO.
NE1220-127	T01	2	1	GREENPARK - TRINAR HALL - BRENTWOOD 2 EL 2 (TRUSS DESC.)	**Page 5 of 22**

Version 8.420 S Oct 9 2020 MiTek Industries, Inc. Fri Dec 18 08:50:35 2020 Page 1
ID:mCCrvcxnlfAPc08wPalNt0zHzIx-u?OIAtkZGol8EI2nrhIaiLWcV7Ns6BquIMzHu9y7

Scale = 1:49.7

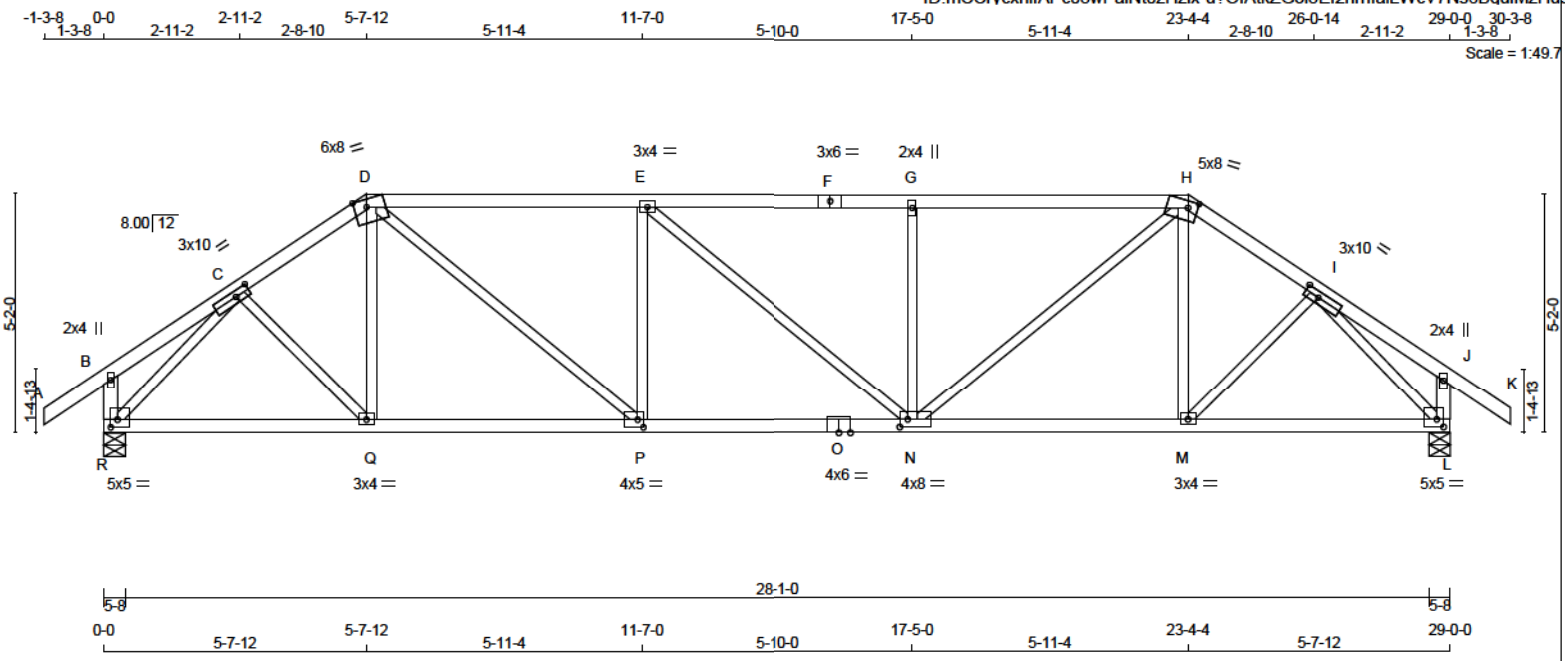

TOTAL WEIGHT = 2 X 120 = 240 lb

LUMBER
N. L. G. A. RULES

CHORDS	SIZE		LUMBER	DESCR.
A - D	2x4	DRY	No.2	SPF
D - F	2x4	DRY	No.2	SPF
F - H	2x4	DRY	No.2	SPF
H - K	2x4	DRY	No.2	SPF
R - B	2x4	DRY	No.2	SPF
L - J	2x4	DRY	No.2	SPF
R - O	2x4	DRY	No.2	SPF
O - L	2x4	DRY	No.2	SPF
ALL WEBS EXCEPT	2x3	DRY	No.2	SPF

DRY: SEASONED LUMBER.

PLATES (table is in inches)

JT	TYPE	PLATES	W	LEN	Y	X
B	TMV+p	MT20	2.0	4.0		
C	TMWW-t	MT20	3.0	10.0	1.50	3.75
D	TTWW-m	MT20	6.0	8.0	2.00	3.25
E	TMWW-t	MT20	3.0	4.0		
F	TS-t	MT20	3.0	6.0		
G	TMW+w	MT20	2.0	4.0		
H	TTWW-m	MT20	5.0	8.0	1.75	2.50
I	TMWW-t	MT20	3.0	10.0	1.50	3.75
J	TMV+p	MT20	2.0	4.0		
L	BMVW1-t	MT20	5.0	5.0	2.00	1.75
M	BMWW-t	MT20	3.0	4.0		
N	BMWWW-t	MT20	4.0	8.0	2.00	2.00
O	BS-t	MT20	4.0	6.0		
P	BMWW-t	MT20	4.0	5.0	2.00	1.50
Q	BMWW-t	MT20	3.0	4.0		
R	BMVW1-t	MT20	5.0	5.0	2.00	1.75

DIMENSIONS, SUPPORTS AND LOADINGS SPECIFIED BY FABRICATOR TO BE VERIFIED BY BUILDING DESIGNER

BEARINGS

JT	FACTORED GROSS REACTION VERT	HORZ	MAXIMUM GROSS REACTION DOWN	HORZ	FACTORED UPLIFT	INPUT BRG IN-SX	REQRD BRG IN-SX
R	2544	0	2544	0	0	5-8	3-1
L	2544	0	2544	0	0	5-8	3-1

UNFACTORED REACTIONS

JT	1ST LCASE COMBINED	MAX./MIN. COMPONENT REACTIONS SNOW	LIVE	PERM.LIVE	WIND	DEAD	SOIL
R	1875	1105 / 0	305 / 0	0 / 0	0 / 0	466 / 0	0 / 0
L	1875	1105 / 0	305 / 0	0 / 0	0 / 0	466 / 0	0 / 0

BEARING MATERIAL TO BE SPF NO.2 OR BETTER AT JOINT(S) R, L

BRACING
TOP CHORD TO BE SHEATHED OR MAX. PURLIN SPACING = 2.80 FT.
MAX. UNBRACED BOTTOM CHORD LENGTH = 10.00 FT OR RIGID CEILING DIRECTLY APPLIED.

ALL PITCH BREAKS AND PERIMETER CORNER JOINTS MUST BE LATERALLY RESTRAINED.

LOADING
TOTAL LOAD CASES: (4)

CHORDS

MEMB. FR-TO	MAX. FORCE (LBS)	FACTORED VERT. LOAD (PLF) FROM	TO	LC1 MAX CSI (LC)	MAX. UNBRAC LENGTH
A- B	0 / 47	-124.4	-124.4	0.17 (1)	10.00
B- C	0 / 16	-124.4	-124.4	0.12 (1)	10.00
C- D	-2726 / 0	-124.4	-124.4	0.21 (1)	4.03
D- E	-3490 / 0	-124.4	-124.4	0.95 (1)	2.80
E- F	-3488 / 0	-124.4	-124.4	0.93 (1)	2.80
F- G	-3488 / 0	-124.4	-124.4	0.93 (1)	2.80
G- H	-3488 / 0	-124.4	-124.4	0.94 (1)	2.81
H- I	-2727 / 0	-124.4	-124.4	0.21 (1)	4.03
I- J	0 / 16	-124.4	-124.4	0.12 (1)	10.00
J- K	0 / 47	-124.4	-124.4	0.17 (1)	10.00
R- B	-317 / 0	0.0	0.0	0.03 (1)	7.81
L- J	-317 / 0	0.0	0.0	0.03 (1)	7.81
R- Q	0 / 2037	-39.2	-39.2	0.50 (1)	10.00
Q- P	0 / 2250	-39.2	-39.2	0.54 (1)	10.00
P- O	0 / 3490	-39.2	-39.2	0.68 (1)	10.00
O- N	0 / 3490	-39.2	-39.2	0.68 (1)	10.00
N- M	0 / 2251	-39.2	-39.2	0.54 (1)	10.00
M- L	0 / 2037	-39.2	-39.2	0.51 (1)	10.00

WEBS

MEMB. FR-TO	MAX. FORCE (LBS)	FACTORED CSI (LC)
C- Q	0 / 303	0.07 (1)
Q- D	0 / 172	0.04 (3)
D- P	0 / 1603	0.36 (1)
P- E	-792 / 0	0.31 (1)
E- N	-2 / 0	0.00 (1)
N- G	-792 / 0	0.31 (1)
N- H	0 / 1600	0.36 (1)
M- H	0 / 172	0.04 (3)
M- I	0 / 303	0.07 (1)
R- C	-2952 / 0	0.80 (1)
I- L	-2952 / 0	0.80 (1)

DESIGN CRITERIA [M]

SPECIFIED LOADS:
TOP CH. LL = 34.8 PSF
DL = 8.0 PSF
BOT CH. LL = 10.5 PSF
DL = 7.3 PSF
TOTAL LOAD = 60.6 PSF

SPACING = 24.0 IN. C/C

LOADING IN FLAT SECTION BASED ON A SLOPE OF 2.00/12 MINIMUM

THIS TRUSS IS DESIGNED FOR RESIDENTIAL OR SMALL BUILDING REQUIREMENTS OF PART 9, NBCC 2015

THIS DESIGN COMPLIES WITH:
- PART 9 OF BCBC 2018 , ABC 2019
- PART 9 OF OBC 2012 (2019 AMENDMENT)
- CSA 086-14
- TPIC 2014

(55 % OF 48.1 P.S.F. G.S.L. PLUS 8.4 P.S.F. RAIN LOAD) EQUALS 34.8 P.S.F. SPECIFIED ROOF LIVE LOAD

ALLOWABLE DEFL.(LL)= L/360 (0.97")
CALCULATED VERT. DEFL.(LL) = L/ 999 (0.17")
ALLOWABLE DEFL.(TL)= L/360 (0.97")
CALCULATED VERT. DEFL.(TL) = L/ 999 (0.29")

CSI: TC=0.95/1.00 (D-E:1) , BC=0.68/1.00 (N-P:1) , WB=0.80/1.00 (I-L:1) , SSI=0.34/1.00 (D-E:1)

DOL LUMBER=1.00 NAIL=1.00 LS BEND=1.10 COMP=1.10 SHEAR=1.10 TENS= 1.10

COMPANION LIVE LOAD FACTOR = 1.00

TRUSS PLATE MANUFACTURER IS NOT RESPONSIBLE FOR QUALITY CONTROL IN THE TRUSS MANUFACTURING PLANT .

NAIL VALUES

PLATE	GRIP(DRY) (PSI) MAX	MIN	SHEAR (PLI) MAX	MIN	SECTION (PLI) MAX	MIN
MT20	650	371	1747	788	1987	1873

PLATE PLACEMENT TOL. = 0.250 inches

PLATE ROTATION TOL. = 5.0 Deg.

JSI GRIP= 0.90 (H) (INPUT = 0.90)
JSI METAL= 0.81 (O) (INPUT = 1.00)

LICENSED PROFESSIONAL ENGINEER
N.A. EL-MASRI
PROVINCE OF ONTARIO
Dec 18, 2020

READ ALL NOTES ON THIS PAGE AND ON ENGINEERING NOTE PAGE ENP-1. THIS NOTE PAGE IS AN INTEGRAL PART OF THIS DRAWING AS IT CONTAINS SPECIFICATIONS AND CRITERIA USED IN THE DESIGN OF THIS COMPONENT.

Town of East Gwillimbury
Building Standards Branch BCIN #16487

These plans have been reviewed for use with the corrections as noted. No other changes may be made without written approval of the Building Standards Branch. All work must comply with Zoning By-Law 2018-043, as amended, and the Ontario Building Code, as amended. These approved documents must be kept on site at all times. The building permit must be clearly posted on site at all times.

Discipline	Reviewer	BCIN	Date
Building Code	H. Authier	43236	2021-02-04
Sewage System			
Zoning			

KOTT

JOB NAME	TRUSS NAME	QUANTITY	PLY	JOB DESC.		DRWG NO.
NE1220-127	T02	2	1	TRUSS DESC.	GREENPARK - TRINAR HALL - BRENTWOOD 2 EL 2	**Page 6 of 22**

Version 8.420 S Oct 9 2020 MiTek Industries, Inc. Fri Dec 18 08:50:36 2020 Page 1
ID:mCCrycxnlfAPc08wPalNt0zHzlx-NBygODIB16t?sSdzPPppEY3tEXl0riK1 0iqQby7o

Scale = 1:49.7

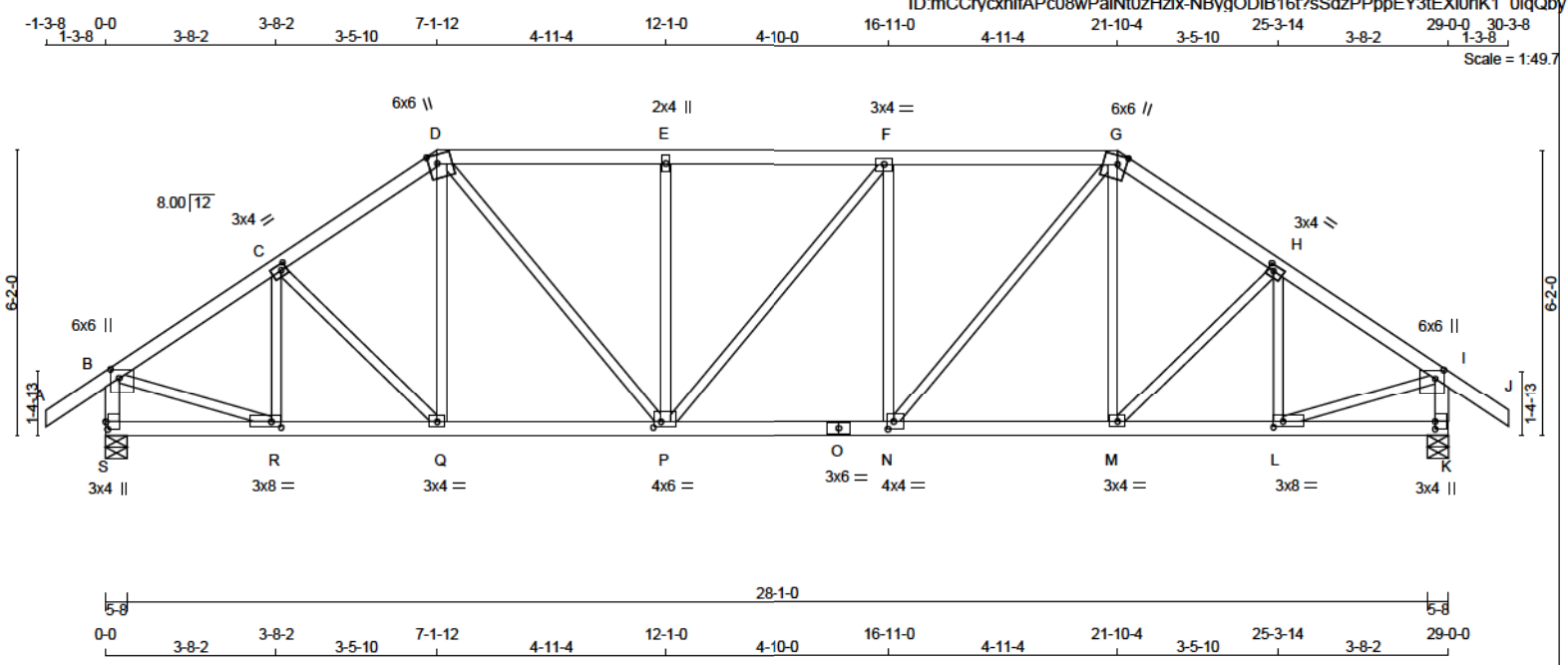

TOTAL WEIGHT = 2 X 130 = 260 lb

LUMBER
N. L. G. A. RULES

CHORDS	SIZE		LUMBER	DESCR.
A - D	2x4	DRY	No.2	SPF
D - G	2x4	DRY	No.2	SPF
G - J	2x4	DRY	No.2	SPF
S - B	2x4	DRY	No.2	SPF
K - I	2x4	DRY	No.2	SPF
S - O	2x4	DRY	No.2	SPF
O - K	2x4	DRY	No.2	SPF
ALL WEBS EXCEPT	2x3	DRY	No.2	SPF

DRY: SEASONED LUMBER.

PLATES (table is in inches)

JT	TYPE	PLATES	W	LEN	Y	X
B	TMVW+p	MT20	6.0	6.0	2.25	2.25
C	TMWW-t	MT20	3.0	4.0	1.50	1.50
D	TTWW+m	MT20	6.0	6.0	2.25	2.25
E	TMW+w	MT20	2.0	4.0		
F	TMWW-t	MT20	3.0	4.0		
G	TTWW+m	MT20	6.0	6.0	2.25	2.25
H	TMWW-t	MT20	3.0	4.0	1.50	1.50
I	TMVW+p	MT20	6.0	6.0	2.25	2.25
K	BMV1+p	MT20	3.0	4.0	2.00	
L	BMWW-t	MT20	3.0	8.0	1.50	2.50
M	BMWW-t	MT20	3.0	4.0		
N	BMWW-t	MT20	4.0	4.0	2.00	1.50
O	BS-t	MT20	3.0	6.0		
P	BMWWW-t	MT20	4.0	6.0	1.50	2.00
Q	BMWW-t	MT20	3.0	4.0		
R	BMWW-t	MT20	3.0	8.0	1.50	2.50
S	BMV1+p	MT20	3.0	4.0	2.00	0.50

DIMENSIONS, SUPPORTS AND LOADINGS SPECIFIED BY FABRICATOR TO BE VERIFIED BY BUILDING DESIGNER

BEARINGS

JT	FACTORED GROSS REACTION VERT	HORZ	MAXIMUM GROSS REACTION DOWN	HORZ	FACTORED UPLIFT	INPUT BRG IN-SX	REQRD BRG IN-SX
S	2544	0	2544	0	0	5-8	4-12
K	2544	0	2544	0	0	5-8	4-12

UNFACTORED REACTIONS

JT	1ST LCASE COMBINED	SNOW	MAX./MIN. COMPONENT REACTIONS LIVE	PERM.LIVE	WIND	DEAD	SOIL
S	1875	1105 / 0	305 / 0	0 / 0	0 / 0	466 / 0	0 / 0
K	1875	1105 / 0	305 / 0	0 / 0	0 / 0	466 / 0	0 / 0

BEARING MATERIAL TO BE SPF NO.2 OR BETTER AT JOINT(S) S, K

BRACING
TOP CHORD TO BE SHEATHED OR MAX. PURLIN SPACING = 3.52 FT.
MAX. UNBRACED BOTTOM CHORD LENGTH = 10.00 FT OR RIGID CEILING DIRECTLY APPLIED.

ALL PITCH BREAKS AND PERIMETER CORNER JOINTS MUST BE LATERALLY RESTRAINED.

LOADING
TOTAL LOAD CASES: (4)

CHORDS

MEMB. FR-TO	MAX. FORCE (LBS)	FACTORED VERT. LOAD (PLF) FROM	TO	LC1 MAX CSI (LC)	MAX. UNBRAC LENGTH
A- B	0 / 47	-124.4	-124.4	0.17 (1)	10.00
B- C	-2633 / 0	-124.4	-124.4	0.35 (1)	3.94
C- D	-2666 / 0	-124.4	-124.4	0.34 (1)	3.92
D- E	-2905 / 0	-124.4	-124.4	0.55 (1)	3.53
E- F	-2905 / 0	-124.4	-124.4	0.56 (1)	3.52
F- G	-2908 / 0	-124.4	-124.4	0.56 (1)	3.52
G- H	-2665 / 0	-124.4	-124.4	0.34 (1)	3.92
H- I	-2634 / 0	-124.4	-124.4	0.35 (1)	3.94
I- J	0 / 47	-124.4	-124.4	0.17 (1)	10.00
S- B	-2478 / 0	0.0	0.0	0.26 (1)	5.45
K- I	-2478 / 0	0.0	0.0	0.26 (1)	5.44
S- R	0 / 0	-39.2	-39.2	0.09 (3)	10.00
R- Q	0 / 2213	-39.2	-39.2	0.44 (1)	10.00
Q- P	0 / 2194	-39.2	-39.2	0.44 (1)	10.00
P- O	0 / 2908	-39.2	-39.2	0.56 (1)	10.00
O- N	0 / 2908	-39.2	-39.2	0.56 (1)	10.00
N- M	0 / 2194	-39.2	-39.2	0.45 (1)	10.00
M- L	0 / 2213	-39.2	-39.2	0.44 (1)	10.00
L- K	0 / 0	-39.2	-39.2	0.09 (3)	10.00

WEBS

MEMB. FR-TO	MAX. FORCE (LBS)	FACTORED CSI (LC)
R- C	-514 / 0	0.12 (1)
C- Q	-31 / 2	0.01 (1)
Q- D	0 / 233	0.05 (2)
D- P	0 / 1104	0.25 (1)
P- E	-654 / 0	0.39 (1)
P- F	-4 / 0	0.00 (1)
N- F	-655 / 0	0.39 (1)
N- G	0 / 1108	0.25 (1)
M- G	0 / 231	0.05 (3)
M- H	-32 / 2	0.01 (1)
L- H	-513 / 0	0.12 (1)
B- R	0 / 2306	0.52 (1)
L- I	0 / 2306	0.52 (1)

DESIGN CRITERIA

SPECIFIED LOADS:
TOP CH. LL = 34.8 PSF
DL = 8.0 PSF
BOT CH. LL = 10.5 PSF
DL = 7.3 PSF
TOTAL LOAD = 60.6 PSF

SPACING = 24.0 IN. C/C

LOADING IN FLAT SECTION BASED ON A SLOPE OF 2.00/12 MINIMUM

THIS TRUSS IS DESIGNED FOR RESIDENTIAL OR SMALL BUILDING REQUIREMENTS OF PART 9, NBCC 2015

THIS DESIGN COMPLIES WITH:
- PART 9 OF BCBC 2018 , ABC 2019
- PART 9 OF OBC 2012 (2019 AMENDMENT)
- CSA 086-14
- TPIC 2014

(55 % OF 48.1 P.S.F. G.S.L. PLUS 8.4 P.S.F. RAIN LOAD) EQUALS 34.8 P.S.F. SPECIFIED ROOF LIVE LOAD

ALLOWABLE DEFL.(LL)= L/360 (0.97")
CALCULATED VERT. DEFL.(LL) = L/ 999 (0.12")
ALLOWABLE DEFL.(TL)= L/360 (0.97")
CALCULATED VERT. DEFL.(TL) = L/ 999 (0.21")

CSI: TC=0.56/1.00 (F-G:1) , BC=0.56/1.00 (N-P:1) , WB=0.52/1.00 (I-L:1) , SSI=0.28/1.00 (F-G:1)

DOL LUMBER=1.00 NAIL=1.00 LS BEND=1.10 COMP=1.10 SHEAR=1.10 TENS= 1.10

COMPANION LIVE LOAD FACTOR = 1.00

TRUSS PLATE MANUFACTURER IS NOT RESPONSIBLE FOR QUALITY CONTROL IN THE TRUSS MANUFACTURING PLANT .

NAIL VALUES

PLATE	GRIP(DRY) (PSI) MAX	MIN	SHEAR (PLI) MAX	MIN	SECTION (PLI) MAX	MIN
MT20	650	371	1747	788	1987	1873

PLATE PLACEMENT TOL. = 0.250 inches

PLATE ROTATION TOL. = 5.0 Deg.

JSI GRIP= 0.90 (K) (INPUT = 0.90)
JSI METAL= 0.85 (O) (INPUT = 1.00)

LICENSED PROFESSIONAL ENGINEER
N.A. EL-MASRI
PROVINCE OF ONTARIO
Dec 18, 2020

READ ALL NOTES ON THIS PAGE AND ON ENGINEERING NOTE PAGE ENP-1. THIS NOTE PAGE IS AN INTEGRAL PART OF THIS DRAWING AS IT CONTAINS SPECIFICATIONS AND CRITERIA USED IN THE DESIGN OF THIS COMPONENT.

Town of East Gwillimbury
Building Standards Branch BCIN #16487

These plans have been reviewed for use with the corrections as noted. No other changes may be made without written approval of the Building Standards Branch. All work must comply with Zoning By-Law 2018-043, as amended, and the Ontario Building Code, as amended. These approved documents must be kept on site at all times. The building permit must be clearly posted on site at all times.

Discipline	Reviewer	BCIN	Date
Building Code	H. Authier	43236	2021-02-04
Sewage System			
Zoning			

KOTT

JOB NAME	TRUSS NAME	QUANTITY	PLY	JOB DESC.	DRWG NO.
NE1220-127	T03	2	1	GREENPARK - TRINAR HALL - BRENTWOOD 2 EL 2 (TRUSS DESC.)	**Page 7 of 22**

Version 8.420 S Oct 9 2020 MiTek Industries, Inc. Fri Dec 18 08:50:37 2020 Page 1
ID:mCCrvcxnlfAPc08wPalNt0zHzlx-rNW2bZmpoQ?sUcC9z6K2nmb0qx6Ta5FBDqSOv1y7o

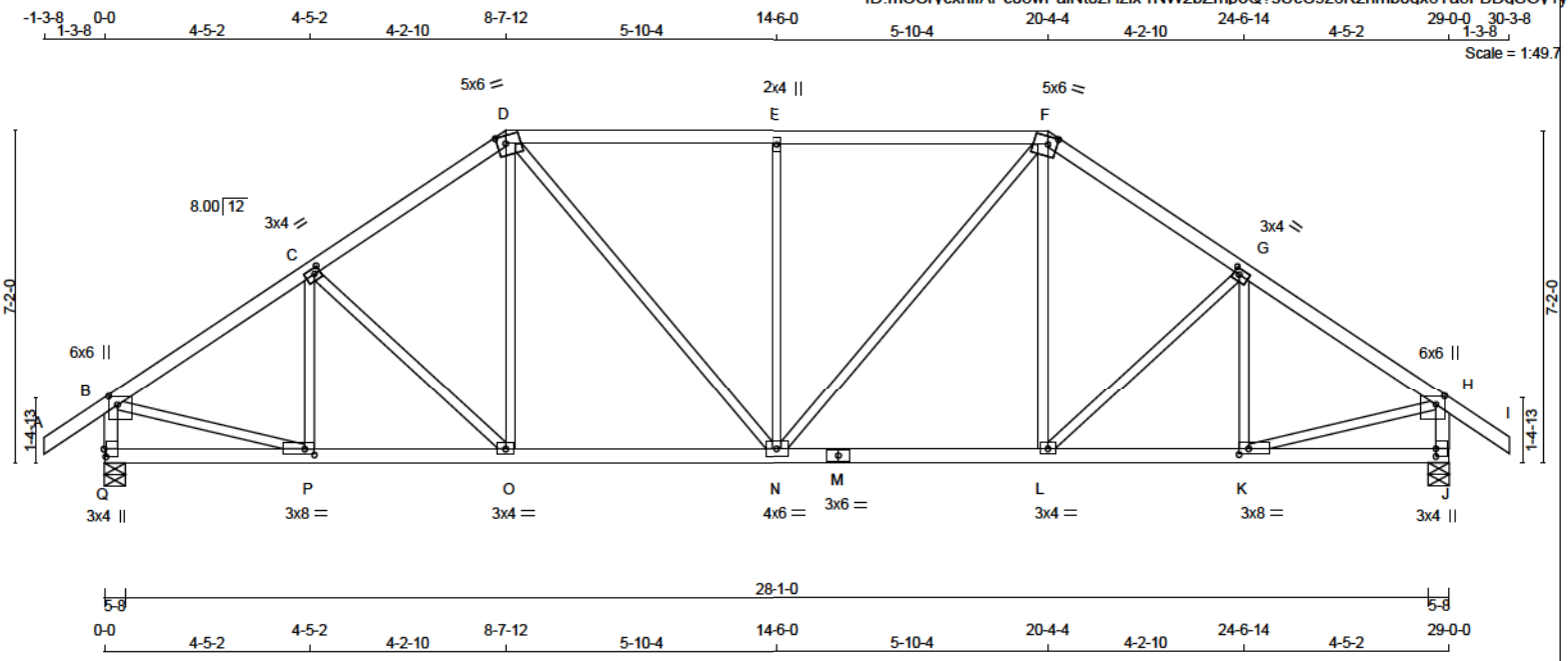

TOTAL WEIGHT = 2 X 128 = 257 lb

LUMBER
N. L. G. A. RULES

CHORDS	SIZE		LUMBER	DESCR.
A - D	2x4	DRY	No.2	SPF
D - F	2x4	DRY	No.2	SPF
F - I	2x4	DRY	No.2	SPF
Q - B	2x4	DRY	No.2	SPF
J - H	2x4	DRY	No.2	SPF
Q - M	2x4	DRY	No.2	SPF
M - J	2x4	DRY	No.2	SPF
ALL WEBS EXCEPT	2x3	DRY	No.2	SPF

DRY: SEASONED LUMBER.

PLATES (table is in inches)

JT	TYPE	PLATES	W	LEN	Y	X
B	TMVW+p	MT20	6.0	6.0	2.25	2.25
C	TMWW-t	MT20	3.0	4.0	1.50	1.50
D	TTWW-m	MT20	5.0	6.0	2.00	2.25
E	TMW+w	MT20	2.0	4.0		
F	TTWW-m	MT20	5.0	6.0	2.00	2.25
G	TMWW-t	MT20	3.0	4.0	1.50	1.50
H	TMVW+p	MT20	6.0	6.0	2.25	2.25
J	BMV1+p	MT20	3.0	4.0	2.00	
K	BMWW-t	MT20	3.0	8.0	1.50	2.50
L	BMWW-t	MT20	3.0	4.0		
M	BS-t	MT20	3.0	6.0		
N	BMWWW-t	MT20	4.0	6.0		
O	BMWW-t	MT20	3.0	4.0		
P	BMWW-t	MT20	3.0	8.0	1.50	2.50
Q	BMV1+p	MT20	3.0	4.0	2.00	0.50

DIMENSIONS, SUPPORTS AND LOADINGS SPECIFIED BY FABRICATOR TO BE VERIFIED BY BUILDING DESIGNER [M][F]

BEARINGS

JT	FACTORED GROSS REACTION VERT	HORZ	MAXIMUM GROSS REACTION DOWN	HORZ	FACTORED UPLIFT	INPUT BRG IN-SX	REQRD BRG IN-SX
Q	2544	0	2544	0	0	5-8	4-12
J	2544	0	2544	0	0	5-8	4-12

UNFACTORED REACTIONS

JT	1ST LCASE COMBINED	SNOW	MAX./MIN. COMPONENT REACTIONS LIVE	PERM.LIVE	WIND	DEAD	SOIL
Q	1875	1105 / 0	304 / 0	0 / 0	0 / 0	466 / 0	0 / 0
J	1875	1105 / 0	304 / 0	0 / 0	0 / 0	466 / 0	0 / 0

BEARING MATERIAL TO BE SPF NO.2 OR BETTER AT JOINT(S) Q, J

BRACING
TOP CHORD TO BE SHEATHED OR MAX. PURLIN SPACING = 3.55 FT.
MAX. UNBRACED BOTTOM CHORD LENGTH = 10.00 FT OR RIGID CEILING DIRECTLY APPLIED.

ALL PITCH BREAKS AND PERIMETER CORNER JOINTS MUST BE LATERALLY RESTRAINED.

LOADING
TOTAL LOAD CASES: (4)

CHORDS

MEMB. FR-TO	MAX. FACTORED FORCE (LBS)	FACTORED VERT. LOAD (PLF) FROM	TO	LC1 MAX CSI (LC)	MAX. UNBRAC LENGTH
A- B	0 / 47	-124.4	-124.4	0.17 (1)	10.00
B- C	-2714 / 0	-124.4	-124.4	0.39 (1)	3.87
C- D	-2573 / 0	-124.4	-124.4	0.37 (1)	3.97
D- E	-2592 / 0	-124.4	-124.4	0.65 (1)	3.55
E- F	-2592 / 0	-124.4	-124.4	0.65 (1)	3.55
F- G	-2573 / 0	-124.4	-124.4	0.37 (1)	3.97
G- H	-2714 / 0	-124.4	-124.4	0.39 (1)	3.87
H- I	0 / 47	-124.4	-124.4	0.17 (1)	10.00
Q- B	-2468 / 0	0.0	0.0	0.25 (1)	5.46
J- H	-2468 / 0	0.0	0.0	0.25 (1)	5.46
Q- P	0 / 0	-39.2	-39.2	0.13 (3)	10.00
P- O	0 / 2286	-39.2	-39.2	0.48 (1)	10.00
O- N	0 / 2114	-39.2	-39.2	0.48 (1)	10.00
N- M	0 / 2114	-39.2	-39.2	0.48 (1)	10.00
M- L	0 / 2114	-39.2	-39.2	0.48 (1)	10.00
L- K	0 / 2286	-39.2	-39.2	0.48 (1)	10.00
K- J	0 / 0	-39.2	-39.2	0.13 (3)	10.00

WEBS

MEMB. FR-TO	MAX. FACTORED FORCE (LBS)	MAX CSI (LC)
P- C	-384 / 0	0.11 (1)
C- O	-243 / 0	0.15 (1)
O- D	0 / 388	0.09 (2)
D- N	0 / 738	0.17 (1)
N- E	-890 / 0	0.80 (1)
N- F	0 / 738	0.17 (1)
L- F	0 / 388	0.09 (2)
L- G	-243 / 0	0.15 (1)
K- G	-384 / 0	0.11 (1)
B- P	0 / 2353	0.53 (1)
K- H	0 / 2353	0.53 (1)

DESIGN CRITERIA

SPECIFIED LOADS:

TOP CH.	LL	=	34.8	PSF
	DL	=	8.0	PSF
BOT CH.	LL	=	10.5	PSF
	DL	=	7.3	PSF
TOTAL LOAD		=	60.6	PSF

SPACING = 24.0 IN. C/C

LOADING IN FLAT SECTION BASED ON A SLOPE OF 2.00/12 MINIMUM

THIS TRUSS IS DESIGNED FOR RESIDENTIAL OR SMALL BUILDING REQUIREMENTS OF PART 9, NBCC 2015

THIS DESIGN COMPLIES WITH:
- PART 9 OF BCBC 2018 , ABC 2019
- PART 9 OF OBC 2012 (2019 AMENDMENT)
- CSA 086-14
- TPIC 2014

(55 % OF 48.1 P.S.F. G.S.L. PLUS 8.4 P.S.F. RAIN LOAD) EQUALS 34.8 P.S.F. SPECIFIED ROOF LIVE LOAD

ALLOWABLE DEFL.(LL)= L/360 (0.97")
CALCULATED VERT. DEFL.(LL) = L/ 999 (0.11")
ALLOWABLE DEFL.(TL)= L/360 (0.97")
CALCULATED VERT. DEFL.(TL) = L/ 999 (0.19")

CSI: TC=0.65/1.00 (D-E:1) , BC=0.48/1.00 (O-P:1) , WB=0.80/1.00 (E-N:1) , SSI=0.35/1.00 (E-F:1)

DOL LUMBER=1.00 NAIL=1.00 LS BEND=1.10 COMP=1.10 SHEAR=1.10 TENS= 1.10

COMPANION LIVE LOAD FACTOR = 1.00

TRUSS PLATE MANUFACTURER IS NOT RESPONSIBLE FOR QUALITY CONTROL IN THE TRUSS MANUFACTURING PLANT .

NAIL VALUES

PLATE	GRIP(DRY) (PSI) MAX	MIN	SHEAR (PLI) MAX	MIN	SECTION (PLI) MAX	MIN
MT20	650	371	1747	788	1987	1873

PLATE PLACEMENT TOL. = 0.250 inches

PLATE ROTATION TOL. = 5.0 Deg.

JSI GRIP= 0.90 (Q) (INPUT = 0.90)
JSI METAL= 0.63 (M) (INPUT = 1.00)

LICENSED PROFESSIONAL ENGINEER
N.A. EL-MASRI
PROVINCE OF ONTARIO
Dec 18, 2020

READ ALL NOTES ON THIS PAGE AND ON ENGINEERING NOTE PAGE ENP-1. THIS NOTE PAGE IS AN INTEGRAL PART OF THIS DRAWING AS IT CONTAINS SPECIFICATIONS AND CRITERIA USED IN THE DESIGN OF THIS COMPONENT.

Town of East Gwillimbury
Building Standards Branch BCIN #16487

These plans have been reviewed for use with the corrections as noted. No other changes may be made without written approval of the Building Standards Branch. All work must comply with Zoning By-Law 2018-043, as amended, and the Ontario Building Code, as amended. These approved documents must be kept on site at all times. The building permit must be clearly posted on site at all times.

Discipline	Reviewer	BCIN	Date
Building Code	H. Authier	43236	2021-02-04
Sewage System			
Zoning			

KOTT

JOB NAME	TRUSS NAME	QUANTITY	PLY	JOB DESC.		DRWG NO.
NE1220-127	T04	2	1	TRUSS DESC.	GREENPARK - TRINAR HALL - BRENTWOOD 2 EL 2	**Page 8 of 22**

Version 8.420 S Oct 9 2020 MiTek Industries, Inc. Fri Dec 18 08:50:38 2020 Page 1

ID:mCCrycxnIfAPc08wPalNt0zHzIx-JZ3QpvmRYi7i5mnMWqrHJz8D9LSZJXmKRKBxUTy7o

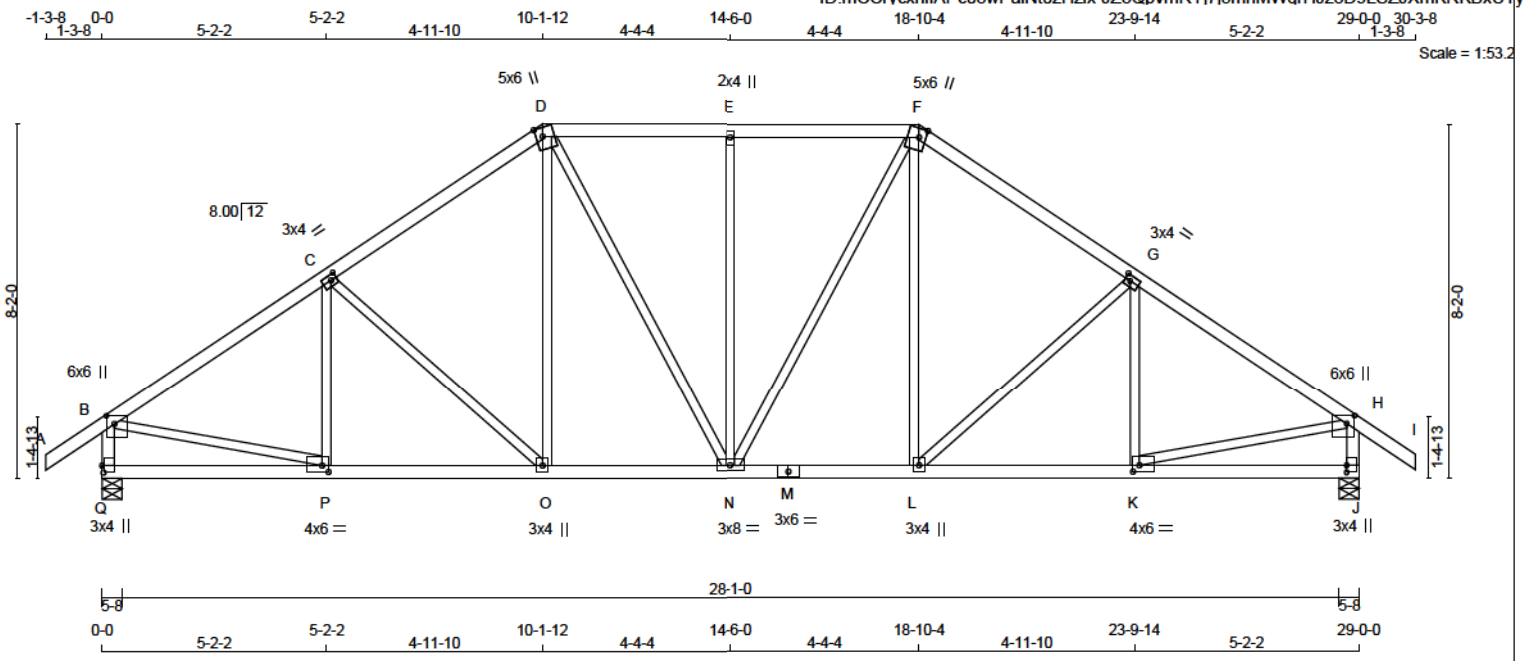

TOTAL WEIGHT = 2 X 135 = 270 lb

[M][F]

LUMBER

N. L. G. A. RULES

CHORDS	SIZE		LUMBER	DESCR.
A - D	2x4	DRY	No.2	SPF
D - F	2x4	DRY	No.2	SPF
F - I	2x4	DRY	No.2	SPF
Q - B	2x4	DRY	No.2	SPF
J - H	2x4	DRY	No.2	SPF
Q - M	2x4	DRY	No.2	SPF
M - J	2x4	DRY	No.2	SPF
ALL WEBS EXCEPT	2x3	DRY	No.2	SPF

DRY: SEASONED LUMBER.

PLATES (table is in inches)

JT	TYPE	PLATES	W	LEN	Y	X
B	TMVW+p	MT20	6.0	6.0	2.25	2.25
C	TMWW-t	MT20	3.0	4.0	1.50	1.50
D	TTWW+m	MT20	5.0	6.0	Edge	1.75
E	TMW+w	MT20	2.0	4.0		
F	TTWW+m	MT20	5.0	6.0	Edge	1.75
G	TMWW-t	MT20	3.0	4.0	1.50	1.50
H	TMVW+p	MT20	6.0	6.0	2.25	2.25
J	BMV1+p	MT20	3.0	4.0	2.00	
K	BMWW-t	MT20	4.0	6.0	1.75	1.75
L	BMWW+t	MT20	3.0	4.0		
M	BS-t	MT20	3.0	6.0		
N	BMWWW-t	MT20	3.0	8.0		
O	BMWW+t	MT20	3.0	4.0		
P	BMWW-t	MT20	4.0	6.0	1.75	1.75
Q	BMV1+p	MT20	3.0	4.0	2.00	0.50

Edge - INDICATES REFERENCE CORNER OF PLATE TOUCHES EDGE OF CHORD.

DIMENSIONS, SUPPORTS AND LOADINGS SPECIFIED BY FABRICATOR TO BE VERIFIED BY BUILDING DESIGNER

BEARINGS

JT	FACTORED GROSS REACTION VERT	HORZ	MAXIMUM GROSS REACTION DOWN	HORZ	FACTORED UPLIFT	INPUT BRG IN-SX	REQRD BRG IN-SX
Q	2544	0	2544	0	0	5-8	4-12
J	2544	0	2544	0	0	5-8	4-12

UNFACTORED REACTIONS

JT	1ST LCASE COMBINED	MAX./MIN. COMPONENT REACTIONS SNOW	LIVE	PERM.LIVE	WIND	DEAD	SOIL
Q	1875	1105 / 0	304 / 0	0 / 0	0 / 0	466 / 0	0 / 0
J	1875	1105 / 0	305 / 0	0 / 0	0 / 0	466 / 0	0 / 0

BEARING MATERIAL TO BE SPF NO.2 OR BETTER AT JOINT(S) Q, J

BRACING

TOP CHORD TO BE SHEATHED OR MAX. PURLIN SPACING = 3.67 FT.
MAX. UNBRACED BOTTOM CHORD LENGTH = 10.00 FT OR RIGID CEILING DIRECTLY APPLIED.

ALL PITCH BREAKS AND PERIMETER CORNER JOINTS MUST BE LATERALLY RESTRAINED.

LOADING

TOTAL LOAD CASES: (4)

CHORDS

MEMB. FR-TO	MAX. FORCE (LBS)	FACTORED VERT. LOAD (PLF) FROM	TO	LC1 MAX CSI (LC)	MAX. UNBRAC LENGTH
A- B	0 / 47	-124.4	-124.4	0.17 (1)	10.00
B- C	-2760 / 0	-124.4	-124.4	0.54 (1)	3.67
C- D	-2444 / 0	-124.4	-124.4	0.50 (1)	3.91
D- E	-2225 / 0	-124.4	-124.4	0.35 (1)	4.24
E- F	-2225 / 0	-124.4	-124.4	0.35 (1)	4.24
F- G	-2444 / 0	-124.4	-124.4	0.50 (1)	3.91
G- H	-2760 / 0	-124.4	-124.4	0.54 (1)	3.67
H- I	0 / 47	-124.4	-124.4	0.17 (1)	10.00
Q- B	-2459 / 0	0.0	0.0	0.25 (1)	5.46
J- H	-2459 / 0	0.0	0.0	0.25 (1)	5.46
Q- P	0 / 0	-39.2	-39.2	0.20 (3)	10.00
P- O	0 / 2330	-39.2	-39.2	0.49 (1)	10.00
O- N	0 / 2002	-39.2	-39.2	0.41 (1)	10.00
N- M	0 / 2002	-39.2	-39.2	0.41 (1)	10.00
M- L	0 / 2002	-39.2	-39.2	0.41 (1)	10.00
L- K	0 / 2330	-39.2	-39.2	0.49 (1)	10.00
K- J	0 / 0	-39.2	-39.2	0.20 (3)	10.00

WEBS

MEMB. FR-TO	MAX. FORCE (LBS)	MAX CSI (LC)
P- C	-264 / 83	0.09 (1)
C- O	-449 / 0	0.39 (1)
O- D	0 / 483	0.11 (1)
D- N	0 / 462	0.10 (1)
N- E	-652 / 0	0.84 (1)
N- F	0 / 462	0.10 (1)
L- F	0 / 483	0.11 (1)
L- G	-449 / 0	0.39 (1)
K- G	-264 / 83	0.09 (1)
B- P	0 / 2380	0.54 (1)
K- H	0 / 2380	0.54 (1)

DESIGN CRITERIA

SPECIFIED LOADS:

TOP CH.	LL	=	34.8	PSF
	DL	=	8.0	PSF
BOT CH.	LL	=	10.5	PSF
	DL	=	7.3	PSF
TOTAL LOAD		=	60.6	PSF

SPACING = 24.0 IN. C/C

LOADING IN FLAT SECTION BASED ON A SLOPE OF 2.00/12 MINIMUM

THIS TRUSS IS DESIGNED FOR RESIDENTIAL OR SMALL BUILDING REQUIREMENTS OF PART 9, NBCC 2015

THIS DESIGN COMPLIES WITH:
- PART 9 OF BCBC 2018 , ABC 2019
- PART 9 OF OBC 2012 (2019 AMENDMENT)
- CSA 086-14
- TPIC 2014

(55 % OF 48.1 P.S.F. G.S.L. PLUS 8.4 P.S.F. RAIN LOAD) EQUALS 34.8 P.S.F. SPECIFIED ROOF LIVE LOAD

ALLOWABLE DEFL.(LL)= L/360 (0.97")
CALCULATED VERT. DEFL.(LL) = L/ 999 (0.10")
ALLOWABLE DEFL.(TL)= L/360 (0.97")
CALCULATED VERT. DEFL.(TL) = L/ 999 (0.16")

CSI: TC=0.54/1.00 (B-C:1) , BC=0.49/1.00 (O-P:1) , WB=0.84/1.00 (E-N:1) , SSI=0.26/1.00 (D-E:1)

DOL LUMBER=1.00 NAIL=1.00 LS BEND=1.10 COMP=1.10 SHEAR=1.10 TENS= 1.10

COMPANION LIVE LOAD FACTOR = 1.00

TRUSS PLATE MANUFACTURER IS NOT RESPONSIBLE FOR QUALITY CONTROL IN THE TRUSS MANUFACTURING PLANT .

NAIL VALUES

PLATE	GRIP(DRY) (PSI) MAX	MIN	SHEAR (PLI) MAX	MIN	SECTION (PLI) MAX	MIN
MT20	650	371	1747	788	1987	1873

PLATE PLACEMENT TOL. = 0.250 inches

PLATE ROTATION TOL. = 5.0 Deg.

JSI GRIP= 0.90 (B) (INPUT = 0.90)
JSI METAL= 0.62 (M) (INPUT = 1.00)

LICENSED PROFESSIONAL ENGINEER
N.A. EL-MASRI
PROVINCE OF ONTARIO
Dec 18, 2020

READ ALL NOTES ON THIS PAGE AND ON ENGINEERING NOTE PAGE ENP-1. THIS NOTE PAGE IS AN INTEGRAL PART OF THIS DRAWING AS IT CONTAINS SPECIFICATIONS AND CRITERIA USED IN THE DESIGN OF THIS COMPONENT.

Town of East Gwillimbury
Building Standards Branch BCIN #16487

These plans have been reviewed for use with the corrections as noted. No other changes may be made without written approval of the Building Standards Branch. All work must comply with Zoning By-Law 2018-043, as amended, and the Ontario Building Code, as amended. These approved documents must be kept on site at all times. The building permit must be clearly posted on site at all times.

Discipline	Reviewer	BCIN	Date
Building Code	H. Authier	43236	2021-02-04
Sewage System			
Zoning			

KOTT

JOB NAME	TRUSS NAME	QUANTITY	PLY	JOB DESC.	DRWG NO.
NE1220-127	T05	2	1	GREENPARK - TRINAR HALL - BRENTWOOD 2 EL 2 (TRUSS DESC.)	**Page 9 of 22**

Version 8.420 S Oct 9 2020 MiTek Industries, Inc. Fri Dec 18 08:50:38 2020 Page 1
ID:mCCrycxnlfAPc08wPalNt0zHzlx-JZ3QpvmRYj7i5mnMWqrHJz8AFLRIJZ4KRKBxUTy7o

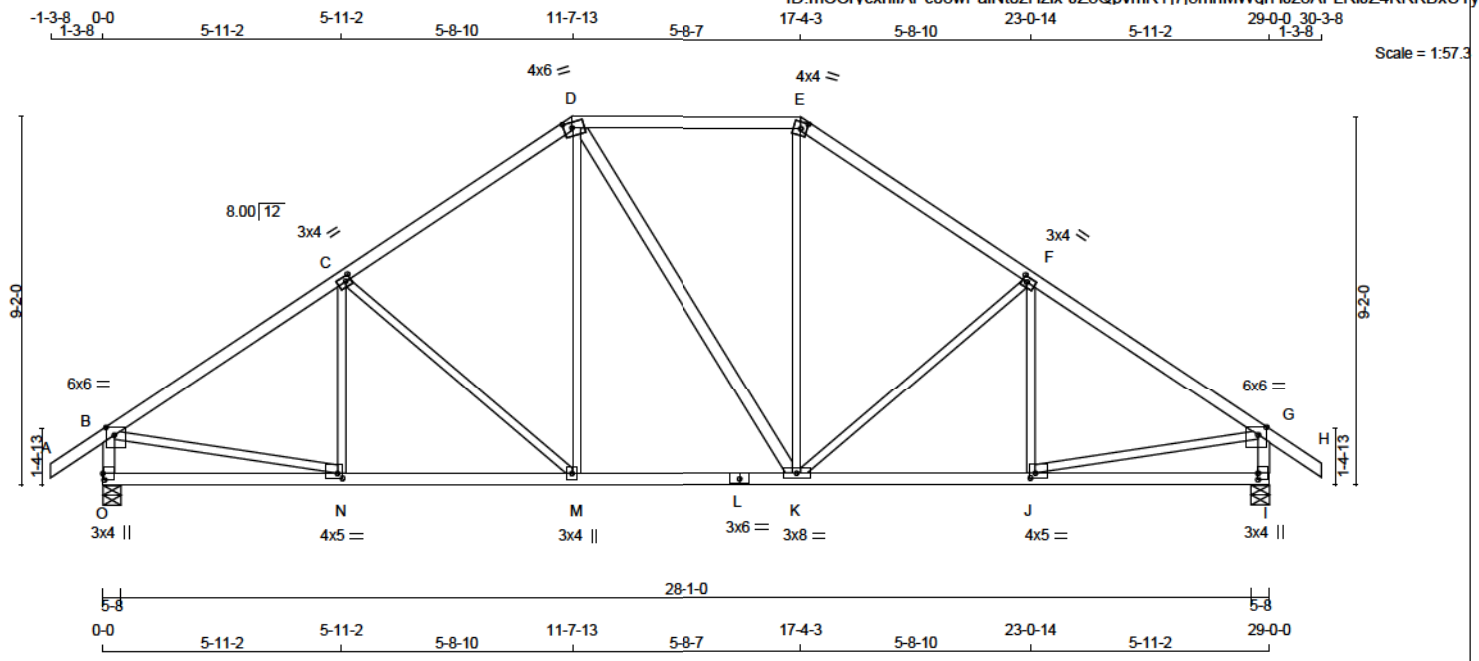

TOTAL WEIGHT = 2 X 132 = 264 lb

LUMBER
N. L. G. A. RULES

CHORDS	SIZE		LUMBER	DESCR.
A - D	2x4	DRY	No.2	SPF
D - E	2x4	DRY	No.2	SPF
E - H	2x4	DRY	No.2	SPF
O - B	2x4	DRY	No.2	SPF
I - G	2x4	DRY	No.2	SPF
O - L	2x4	DRY	No.2	SPF
L - I	2x4	DRY	No.2	SPF
ALL WEBS EXCEPT	2x3	DRY	No.2	SPF
D - K	2x4	DRY	No.2	SPF

DRY: SEASONED LUMBER.

PLATES (table is in inches)

JT	TYPE	PLATES	W	LEN	Y	X
B	TMVW-p	MT20	6.0	6.0	2.25	2.50
C	TMWW-t	MT20	3.0	4.0	1.50	1.50
D	TTWW-m	MT20	4.0	6.0	1.75	2.50
E	TTW-m	MT20	4.0	4.0	2.00	1.75
F	TMWW-t	MT20	3.0	4.0	1.50	1.50
G	TMVW-p	MT20	6.0	6.0	2.25	2.50
I	BMV1+p	MT20	3.0	4.0	2.00	
J	BMWW-t	MT20	4.0	5.0	1.50	1.50
K	BMWWW-t	MT20	3.0	8.0		
L	BS-t	MT20	3.0	6.0		
M	BMWW+t	MT20	3.0	4.0		
N	BMWW-t	MT20	4.0	5.0	1.50	1.50
O	BMV1+p	MT20	3.0	4.0	2.00	0.50

DIMENSIONS, SUPPORTS AND LOADINGS SPECIFIED BY FABRICATOR TO BE VERIFIED BY BUILDING DESIGNER

BEARINGS

JT	FACTORED GROSS REACTION VERT	HORZ	MAXIMUM GROSS REACTION DOWN	HORZ	FACTORED UPLIFT	INPUT BRG IN-SX	REQRD BRG IN-SX
O	2544	0	2544	0	0	5-8	4-12
I	2544	0	2544	0	0	5-8	4-12

UNFACTORED REACTIONS

JT	1ST LCASE COMBINED	SNOW	MAX./MIN. COMPONENT REACTIONS LIVE	PERM.LIVE	WIND	DEAD	SOIL
O	1875	1105 / 0	305 / 0	0 / 0	0 / 0	466 / 0	0 / 0
I	1875	1105 / 0	305 / 0	0 / 0	0 / 0	466 / 0	0 / 0

BEARING MATERIAL TO BE SPF NO.2 OR BETTER AT JOINT(S) O, I

BRACING
TOP CHORD TO BE SHEATHED OR MAX. PURLIN SPACING = 3.41 FT.
MAX. UNBRACED BOTTOM CHORD LENGTH = 10.00 FT OR RIGID CEILING DIRECTLY APPLIED.

ALL PITCH BREAKS AND PERIMETER CORNER JOINTS MUST BE LATERALLY RESTRAINED.

LOADING
TOTAL LOAD CASES: (4)

CHORDS MEMB. FR-TO	MAX. FACTORED FORCE (LBS)	FACTORED VERT. LOAD (PLF) FROM	TO	LC1 MAX CSI (LC)	MAX. UNBRAC LENGTH	WEBS MEMB. FR-TO	MAX. FACTORED FORCE (LBS)	MAX CSI (LC)
A- B	0 / 47	-124.4	-124.4	0.17 (1)	10.00	N- C	-172 / 149	0.07 (1)
B- C	-2776 / 0	-124.4	-124.4	0.72 (1)	3.41	C- M	-632 / 0	0.76 (1)
C- D	-2301 / 0	-124.4	-124.4	0.65 (1)	3.78	M- D	0 / 629	0.14 (1)
D- E	-1880 / 0	-124.4	-124.4	0.57 (1)	4.20	D- K	0 / 2	0.00 (1)
E- F	-2302 / 0	-124.4	-124.4	0.65 (1)	3.78	K- E	0 / 631	0.14 (1)
F- G	-2776 / 0	-124.4	-124.4	0.72 (1)	3.41	K- F	-630 / 0	0.76 (1)
G- H	0 / 47	-124.4	-124.4	0.17 (1)	10.00	J- F	-174 / 148	0.07 (1)
O- B	-2448 / 0	0.0	0.0	0.25 (1)	5.47	B- N	0 / 2388	0.54 (1)
I- G	-2448 / 0	0.0	0.0	0.25 (1)	5.47	J- G	0 / 2388	0.54 (1)
O- N	0 / 0	-39.2	-39.2	0.26 (3)	10.00			
N- M	0 / 2349	-39.2	-39.2	0.54 (2)	10.00			
M- L	0 / 1879	-39.2	-39.2	0.44 (1)	10.00			
L- K	0 / 1879	-39.2	-39.2	0.44 (1)	10.00			
K- J	0 / 2349	-39.2	-39.2	0.54 (2)	10.00			
J- I	0 / 0	-39.2	-39.2	0.26 (3)	10.00			

[M][F]

DESIGN CRITERIA

SPECIFIED LOADS:

TOP CH.	LL	=	34.8	PSF
	DL	=	8.0	PSF
BOT CH.	LL	=	10.5	PSF
	DL	=	7.3	PSF
TOTAL LOAD		=	60.6	PSF

SPACING = 24.0 IN. C/C

LOADING IN FLAT SECTION BASED ON A SLOPE OF 2.00/12 MINIMUM

THIS TRUSS IS DESIGNED FOR RESIDENTIAL OR SMALL BUILDING REQUIREMENTS OF PART 9, NBCC 2015

THIS DESIGN COMPLIES WITH:
- PART 9 OF BCBC 2018 , ABC 2019
- PART 9 OF OBC 2012 (2019 AMENDMENT)
- CSA 086-14
- TPIC 2014

(55 % OF 48.1 P.S.F. G.S.L. PLUS 8.4 P.S.F. RAIN LOAD) EQUALS 34.8 P.S.F. SPECIFIED ROOF LIVE LOAD

ALLOWABLE DEFL.(LL)= L/360 (0.97")
CALCULATED VERT. DEFL.(LL) = L/ 999 (0.10")
ALLOWABLE DEFL.(TL)= L/360 (0.97")
CALCULATED VERT. DEFL.(TL) = L/ 999 (0.17")

CSI: TC=0.72/1.00 (B-C:1) , BC=0.54/1.00 (M-N:2) , WB=0.76/1.00 (C-M:1) , SSI=0.29/1.00 (F-G:1)

DOL LUMBER=1.00 NAIL=1.00 LS BEND=1.10 COMP=1.10 SHEAR=1.10 TENS= 1.10

COMPANION LIVE LOAD FACTOR = 1.00

TRUSS PLATE MANUFACTURER IS NOT RESPONSIBLE FOR QUALITY CONTROL IN THE TRUSS MANUFACTURING PLANT .

NAIL VALUES

PLATE	GRIP(DRY) (PSI) MAX	MIN	SHEAR (PLI) MAX	MIN	SECTION (PLI) MAX	MIN
MT20	650	371	1747	788	1987	1873

PLATE PLACEMENT TOL. = 0.250 inches

PLATE ROTATION TOL. = 5.0 Deg.

JSI GRIP= 0.89 (K) (INPUT = 0.90)
JSI METAL= 0.67 (N) (INPUT = 1.00)

LICENSED PROFESSIONAL ENGINEER
N.A. EL-MASRI
PROVINCE OF ONTARIO
Dec 18, 2020

READ ALL NOTES ON THIS PAGE AND ON ENGINEERING NOTE PAGE ENP-1. THIS NOTE PAGE IS AN INTEGRAL PART OF THIS DRAWING AS IT CONTAINS SPECIFICATIONS AND CRITERIA USED IN THE DESIGN OF THIS COMPONENT.

Town of East Gwillimbury
Building Standards Branch BCIN #16487

These plans have been reviewed for use with the corrections as noted. No other changes may be made without written approval of the Building Standards Branch. All work must comply with Zoning By-Law 2018-043, as amended, and the Ontario Building Code, as amended. These approved documents must be kept on site at all times. The building permit must be clearly posted on site at all times.

Discipline	Reviewer	BCIN	Date
Building Code	H. Authier	43236	2021-02-04
Sewage System			
Zoning			

KOTT

JOB NAME	TRUSS NAME	QUANTITY	PLY	JOB DESC.	DRWG NO.
NE1220-127	T06	2	1	GREENPARK - TRINAR HALL - BRENTWOOD 2 EL 2 (TRUSS DESC.)	

Version 8.420 S Oct 9 2020 MiTek Industries, Inc. Fri Dec 18 08:50:40 2020 Page 1
ID:mCCrycxnlfAPc08wPalNt0zHzlx-FyBBEaoh4LNRL3xkeFtlPODT785pnV3dveq2ZMy7o

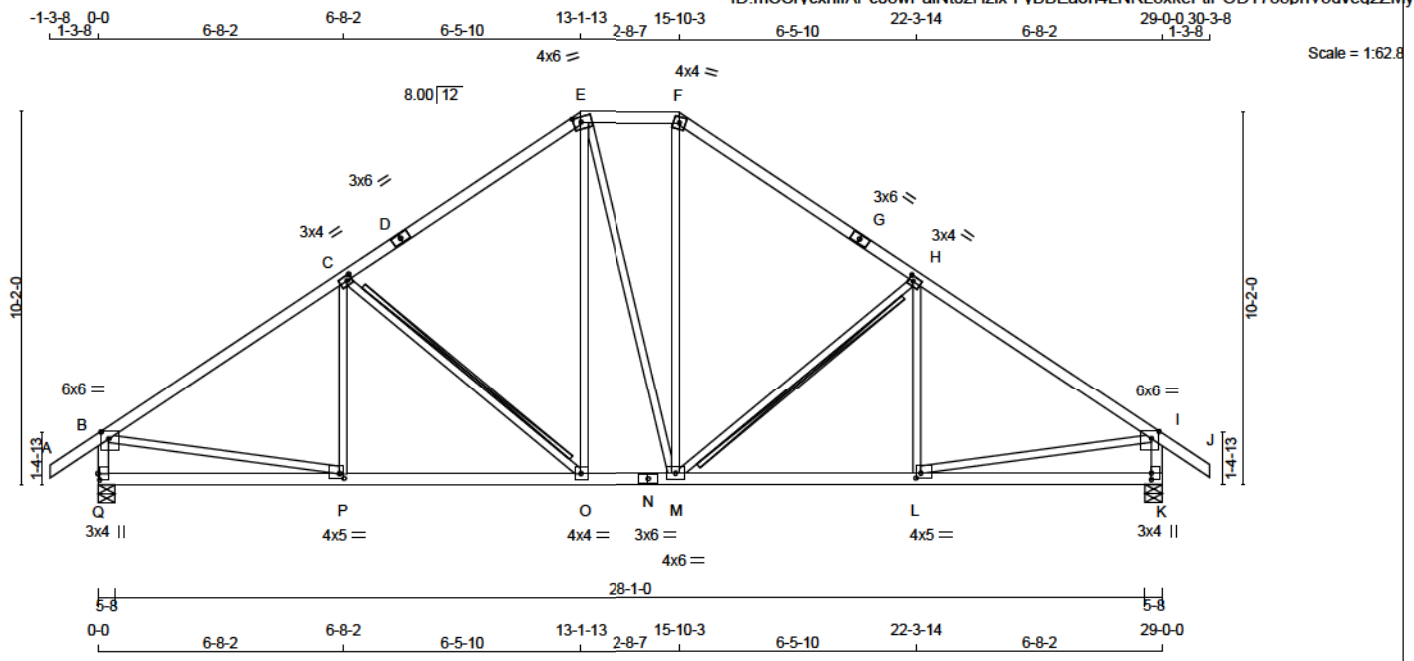

TOTAL WEIGHT = 2 X 134 = 269 lb

LUMBER
N. L. G. A. RULES

CHORDS	SIZE		LUMBER	DESCR.
A - D	2x4	DRY	No.2	SPF
D - E	2x4	DRY	No.2	SPF
E - F	2x4	DRY	No.2	SPF
F - G	2x4	DRY	No.2	SPF
G - J	2x4	DRY	No.2	SPF
Q - B	2x4	DRY	No.2	SPF
K - I	2x4	DRY	No.2	SPF
Q - N	2x4	DRY	No.2	SPF
N - K	2x4	DRY	No.2	SPF
ALL WEBS EXCEPT	2x3	DRY	No.2	SPF

DRY: SEASONED LUMBER.

PLATES (table is in inches)

JT	TYPE	PLATES	W	LEN	Y	X
B	TMVW-p	MT20	6.0	6.0	2.25	2.50
C	TMWW-t	MT20	3.0	4.0	1.50	1.50
D	TS-t	MT20	3.0	6.0		
E	TTWW-m	MT20	4.0	6.0	1.75	2.50
F	TTW-m	MT20	4.0	4.0		
G	TS-t	MT20	3.0	6.0		
H	TMWW-t	MT20	3.0	4.0	1.50	1.50
I	TMVW-p	MT20	6.0	6.0	2.25	2.50
K	BMV1+p	MT20	3.0	4.0	2.00	
L	BMWW-t	MT20	4.0	5.0	1.50	1.50
M	BMWWW-t	MT20	4.0	6.0		
N	BS-t	MT20	3.0	6.0		
O	BMWW-t	MT20	4.0	4.0		
P	BMWW-t	MT20	4.0	5.0	1.50	1.50
Q	BMV1+p	MT20	3.0	4.0	2.00	0.50

DIMENSIONS, SUPPORTS AND LOADINGS SPECIFIED BY FABRICATOR TO BE VERIFIED BY BUILDING DESIGNER

BEARINGS

JT	FACTORED GROSS REACTION VERT	HORZ	MAXIMUM GROSS REACTION DOWN	HORZ	FACTORED UPLIFT	INPUT BRG IN-SX	REQRD BRG IN-SX
Q	2544	0	2544	0	0	5-8	4-12
K	2544	0	2544	0	0	5-8	4-12

UNFACTORED REACTIONS

1ST LCASE MAX./MIN. COMPONENT REACTIONS

JT	COMBINED	SNOW	LIVE	PERM.LIVE	WIND	DEAD	SOIL
Q	1875	1105 / 0	305 / 0	0 / 0	0 / 0	466 / 0	0 / 0
K	1875	1105 / 0	305 / 0	0 / 0	0 / 0	466 / 0	0 / 0

BEARING MATERIAL TO BE SPF NO.2 OR BETTER AT JOINT(S) Q, K

BRACING
TOP CHORD TO BE SHEATHED OR MAX. PURLIN SPACING = 2.98 FT.
MAX. UNBRACED BOTTOM CHORD LENGTH = 10.00 FT OR RIGID CEILING DIRECTLY APPLIED.

ALL PITCH BREAKS AND PERIMETER CORNER JOINTS MUST BE LATERALLY RESTRAINED.

2x4 DRY SPF No.2 T-BRACE AT C-O, H-M

FASTEN T AND I-BRACES TO NARROW EDGE OF WEB WITH ONE ROW PER PLY OF 3" COMMON WIRE NAILS @ 6" O.C. WITH 3" MINIMUM END DISTANCE. BRACE MUST COVER 90% OF WEB LENGTH.

END VERTICAL(S) MUST BE SHEATHED OR HAVE BRACES AS INDICATED IN THE MAX. UNBRACED LENGTH COLUMN OF THE TABLE BELOW

LOADING
TOTAL LOAD CASES: (4)

CHORDS

MEMB. FR-TO	MAX. FACTORED FORCE (LBS)	FACTORED VERT. LOAD (PLF) FROM	TO	LC1 MAX CSI (LC)	MAX. UNBRAC LENGTH
A- B	0 / 47	-124.4	-124.4	0.17 (1)	10.00
B- C	-2776 / 0	-124.4	-124.4	0.95 (1)	2.98
C- D	-2138 / 0	-124.4	-124.4	0.83 (1)	3.53
D- E	-2138 / 0	-124.4	-124.4	0.83 (1)	3.53
E- F	-1740 / 0	-124.4	-124.4	0.15 (1)	4.93
F- G	-2141 / 0	-124.4	-124.4	0.83 (1)	3.53
G- H	-2141 / 0	-124.4	-124.4	0.83 (1)	3.53
H- I	-2775 / 0	-124.4	-124.4	0.95 (1)	2.98
I- J	0 / 47	-124.4	-124.4	0.17 (1)	10.00
Q- B	-2439 / 0	0.0	0.0	0.25 (1)	5.48
K- I	-2438 / 0	0.0	0.0	0.25 (1)	5.48
Q- P	0 / 0	-39.2	-39.2	0.36 (3)	10.00
P- O	0 / 2355	-39.2	-39.2	0.63 (2)	10.00
O- N	0 / 1738	-39.2	-39.2	0.41 (1)	10.00
N- M	0 / 1738	-39.2	-39.2	0.41 (1)	10.00
M- L	0 / 2354	-39.2	-39.2	0.63 (2)	10.00
L- K	0 / 0	-39.2	-39.2	0.35 (3)	10.00

WEBS

MEMB. FR-TO	MAX. FACTORED FORCE (LBS)	MAX CSI (LC)
P- C	-79 / 225	0.06 (3)
C- O	-816 / 0	0.46 (1)
O- E	0 / 679	0.15 (1)
E- M	0 / 9	0.00 (1)
M- F	0 / 690	0.16 (1)
M- H	-812 / 0	0.46 (1)
L- H	-84 / 222	0.05 (3)
B- P	0 / 2386	0.54 (1)
L- I	0 / 2385	0.54 (1)

DESIGN CRITERIA

SPECIFIED LOADS:

TOP CH.	LL	=	34.8	PSF
	DL	=	8.0	PSF
BOT CH.	LL	=	10.5	PSF
	DL	=	7.3	PSF
TOTAL LOAD		=	60.6	PSF

SPACING = 24.0 IN. C/C

LOADING IN FLAT SECTION BASED ON A SLOPE OF 2.00/12 MINIMUM

THIS TRUSS IS DESIGNED FOR RESIDENTIAL OR SMALL BUILDING REQUIREMENTS OF PART 9, NBCC 2015

THIS DESIGN COMPLIES WITH:
- PART 9 OF BCBC 2018 , ABC 2019
- PART 9 OF OBC 2012 (2019 AMENDMENT)
- CSA 086-14
- TPIC 2014

(55 % OF 48.1 P.S.F. G.S.L. PLUS 8.4 P.S.F. RAIN LOAD) EQUALS 34.8 P.S.F. SPECIFIED ROOF LIVE LOAD

ALLOWABLE DEFL.(LL)= L/360 (0.97")
CALCULATED VERT. DEFL.(LL) = L/ 999 (0.12")
ALLOWABLE DEFL.(TL)= L/360 (0.97")
CALCULATED VERT. DEFL.(TL) = L/ 999 (0.21")

CSI: TC=0.95/1.00 (B-C:1) , BC=0.63/1.00 (O-P:2) , WB=0.54/1.00 (B-P:1) , SSI=0.33/1.00 (B-C:1)

DOL LUMBER=1.00 NAIL=1.00 LS BEND=1.10 COMP=1.10 SHEAR=1.10 TENS= 1.10

COMPANION LIVE LOAD FACTOR = 1.00

TRUSS PLATE MANUFACTURER IS NOT RESPONSIBLE FOR QUALITY CONTROL IN THE TRUSS MANUFACTURING PLANT .

NAIL VALUES

PLATE	GRIP(DRY) (PSI) MAX	MIN	SHEAR (PLI) MAX	MIN	SECTION (PLI) MAX	MIN
MT20	650	371	1747	788	1987	1873

PLATE PLACEMENT TOL. = 0.250 inches

PLATE ROTATION TOL. = 5.0 Deg.

JSI GRIP= 0.88 (Q) (INPUT = 0.90)
JSI METAL= 0.67 (P) (INPUT = 1.00)

LICENSED PROFESSIONAL ENGINEER
N.A. EL-MASRI
PROVINCE OF ONTARIO
Dec 18, 2020

READ ALL NOTES ON THIS PAGE AND ON ENGINEERING NOTE PAGE ENP-1. THIS NOTE PAGE IS AN INTEGRAL PART OF THIS DRAWING AS IT CONTAINS SPECIFICATIONS AND CRITERIA USED IN THE DESIGN OF THIS COMPONENT.

Town of East Gwillimbury
Building Standards Branch BCIN #16487

These plans have been reviewed for use with the corrections as noted. No other changes may be made without written approval of the Building Standards Branch. All work must comply with Zoning By-Law 2018-043, as amended, and the Ontario Building Code, as amended. These approved documents must be kept on site at all times. The building permit must be clearly posted on site at all times.

Discipline	Reviewer	BCIN	Date
Building Code	H. Authier	43236	2021-02-04
Sewage System			
Zoning			

KOTT

JOB NAME	TRUSS NAME	QUANTITY	PLY	JOB DESC.		DRWG NO.
NE1220-127	T07	6	1	TRUSS DESC.	GREENPARK - TRINAR HALL - BRENTWOOD 2 EL 2	**Page 11 of 22**

Version 8.420 S Oct 9 2020 MiTek Industries, Inc. Fri Dec 18 08:50:41 2020 Page 1
ID:mCCrycxnIfAPc08wPaINt0zHzIx-j8IZRwpKreVIyDWxCyO xcmixYQKWxqm8IQb5cy7o

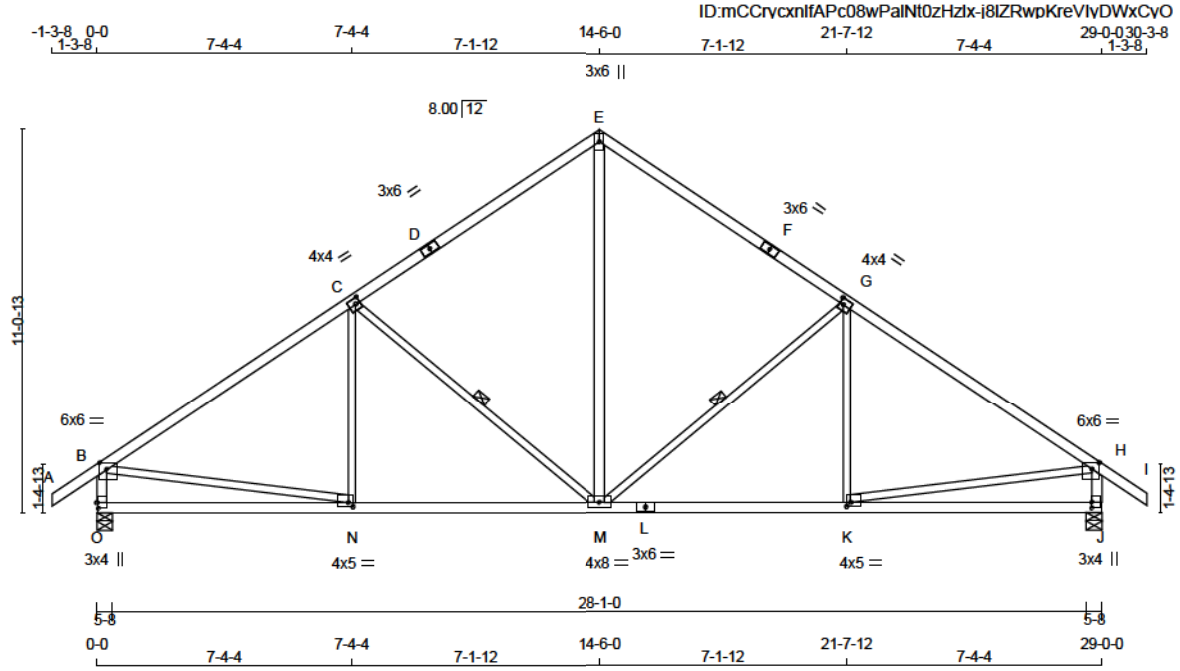

TOTAL WEIGHT = 6 X 126 = 757 lb

LUMBER
N. L. G. A. RULES

CHORDS	SIZE		LUMBER	DESCR.
A - D	2x4	DRY	2100F 1.8E	SPF
D - E	2x4	DRY	2100F 1.8E	SPF
E - F	2x4	DRY	2100F 1.8E	SPF
F - I	2x4	DRY	2100F 1.8E	SPF
O - B	2x4	DRY	No.2	SPF
J - H	2x4	DRY	No.2	SPF
O - L	2x4	DRY	No.2	SPF
L - J	2x4	DRY	No.2	SPF
ALL WEBS	2x3	DRY	No.2	SPF
EXCEPT				
M - E	2x4	DRY	No.2	SPF

DRY: SEASONED LUMBER.

PLATES (table is in inches)

JT	TYPE	PLATES	W	LEN	Y	X
B	TMVW-p	MT20	6.0	6.0	2.25	2.50
C	TMWW-t	MT20	4.0	4.0	2.00	1.50
D	TS-t	MT20	3.0	6.0		
E	TTW+p	MT20	3.0	6.0		
F	TS-t	MT20	3.0	6.0		
G	TMWW-t	MT20	4.0	4.0	2.00	1.50
H	TMVW-p	MT20	6.0	6.0	2.25	2.50
J	BMV1+p	MT20	3.0	4.0	2.00	
K	BMWW-t	MT20	4.0	5.0	1.50	1.50
L	BS-t	MT20	3.0	6.0		
M	BMWWW-t	MT20	4.0	8.0		
N	BMWW-t	MT20	4.0	5.0	1.50	1.50
O	BMV1+p	MT20	3.0	4.0	2.00	0.50

DIMENSIONS, SUPPORTS AND LOADINGS SPECIFIED BY FABRICATOR TO BE VERIFIED BY BUILDING DESIGNER [M][F]

BEARINGS

JT	FACTORED GROSS REACTION VERT	HORZ	MAXIMUM GROSS REACTION DOWN	HORZ	FACTORED UPLIFT	INPUT BRG IN-SX	REQRD BRG IN-SX
O	2544	0	2544	0	0	5-8	4-12
J	2544	0	2544	0	0	5-8	4-12

UNFACTORED REACTIONS

JT	1ST LCASE COMBINED	SNOW	MAX./MIN. COMPONENT REACTIONS LIVE	PERM.LIVE	WIND	DEAD	SOIL
O	1875	1105 / 0	305 / 0	0 / 0	0 / 0	466 / 0	0 / 0
J	1875	1105 / 0	305 / 0	0 / 0	0 / 0	466 / 0	0 / 0

BEARING MATERIAL TO BE SPF NO.2 OR BETTER AT JOINT(S) O, J

BRACING
TOP CHORD TO BE SHEATHED OR MAX. PURLIN SPACING = 4.25 FT.
MAX. UNBRACED BOTTOM CHORD LENGTH = 10.00 FT OR RIGID CEILING DIRECTLY APPLIED.

ALL PITCH BREAKS AND PERIMETER CORNER JOINTS MUST BE LATERALLY RESTRAINED.

1 - 1x4 LATERAL BRACE(S) AT 1/ 2 LENGTH OF G-M, C-M. DBS = 20-0-0 . CBF = 119 LBS.

DBS = DIAGONAL BRACE SPACING (MAX). CBF = CUMULATIVE BRACING FORCE (PER BRACE). FASTEN LATERAL BRACE(S) USING (0.122"X3") SPIRAL NAILS : 1 NAIL FOR 2x3 BRACE(S), 2 FOR 1x4, 2x4, 2x5, 3 FOR 2x6, 4 FOR 2x8, 5 FOR 2x10, AND 6 FOR 2x12.

END VERTICAL(S) MUST BE SHEATHED OR HAVE BRACES AS INDICATED IN THE MAX. UNBRACED LENGTH COLUMN OF THE TABLE BELOW

LOADING
TOTAL LOAD CASES: (4)

CHORDS

MEMB. FR-TO	FORCE (LBS)	FACTORED VERT. LOAD (PLF) FROM	TO	LC1 MAX CSI (LC)	MAX. UNBRAC LENGTH
A- B	0 / 47	-124.4	-124.4	0.11 (1)	10.00
B- C	-2757 / 0	-124.4	-124.4	0.69 (1)	4.25
C- D	-2002 / 0	-124.4	-124.4	0.62 (1)	4.88
D- E	-2002 / 0	-124.4	-124.4	0.62 (1)	4.88
E- F	-2002 / 0	-124.4	-124.4	0.62 (1)	4.88
F- G	-2002 / 0	-124.4	-124.4	0.62 (1)	4.88
G- H	-2757 / 0	-124.4	-124.4	0.69 (1)	4.25
H- I	0 / 47	-124.4	-124.4	0.11 (1)	10.00
O- B	-2427 / 0	0.0	0.0	0.25 (1)	5.49
J- H	-2427 / 0	0.0	0.0	0.25 (1)	5.49

WEBS

MEMB. FR-TO	FORCE (LBS)	MAX CSI (LC)
M- E	0 / 1486	0.24 (1)
M- G	-951 / 0	0.58 (1)
K- G	-24 / 265	0.07 (3)
C- M	-951 / 0	0.58 (1)
N- C	-24 / 265	0.07 (3)
B- N	0 / 2369	0.53 (1)
K- H	0 / 2369	0.53 (1)

O- N	0 / 0	-39.2	-39.2	0.41 (3)	10.00
N- M	0 / 2344	-39.2	-39.2	0.68 (2)	10.00
M- L	0 / 2344	-39.2	-39.2	0.68 (2)	10.00
L- K	0 / 2344	-39.2	-39.2	0.68 (2)	10.00
K- J	0 / 0	-39.2	-39.2	0.41 (3)	10.00

DESIGN CRITERIA

SPECIFIED LOADS:

TOP CH.	LL	=	34.8	PSF
	DL	=	8.0	PSF
BOT CH.	LL	=	10.5	PSF
	DL	=	7.3	PSF
TOTAL LOAD		=	60.6	PSF

SPACING = 24.0 IN. C/C

THIS TRUSS IS DESIGNED FOR RESIDENTIAL OR SMALL BUILDING REQUIREMENTS OF PART 9, NBCC 2015

THIS DESIGN COMPLIES WITH:
- PART 9 OF BCBC 2018 , ABC 2019
- PART 9 OF OBC 2012 (2019 AMENDMENT)
- CSA 086-14
- TPIC 2014

(55 % OF 48.1 P.S.F. G.S.L. PLUS 8.4 P.S.F. RAIN LOAD) EQUALS 34.8 P.S.F. SPECIFIED ROOF LIVE LOAD

ALLOWABLE DEFL.(LL)= L/360 (0.97")
CALCULATED VERT. DEFL.(LL) = L/ 999 (0.13")
ALLOWABLE DEFL.(TL)= L/360 (0.97")
CALCULATED VERT. DEFL.(TL) = L/ 999 (0.22")

CSI: TC=0.69/1.00 (B-C:1) , BC=0.68/1.00 (K-M:2) , WB=0.58/1.00 (G-M:1) , SSI=0.37/1.00 (B-C:1)

DOL LUMBER=1.00 NAIL=1.00 LS BEND=1.10 COMP=1.10 SHEAR=1.10 TENS= 1.10

COMPANION LIVE LOAD FACTOR = 1.00

TRUSS PLATE MANUFACTURER IS NOT RESPONSIBLE FOR QUALITY CONTROL IN THE TRUSS MANUFACTURING PLANT .

NAIL VALUES

PLATE	GRIP(DRY) (PSI) MAX	MIN	SHEAR (PLI) MAX	MIN	SECTION (PLI) MAX	MIN
MT20	650	371	1747	788	1987	1873

PLATE PLACEMENT TOL. = 0.250 inches

PLATE ROTATION TOL. = 5.0 Deg.

JSI GRIP= 0.88 (O) (INPUT = 0.90)
JSI METAL= 0.67 (K) (INPUT = 1.00)

LICENSED PROFESSIONAL ENGINEER
N.A. EL-MASRI
PROVINCE OF ONTARIO
Dec 18, 2020

READ ALL NOTES ON THIS PAGE AND ON ENGINEERING NOTE PAGE ENP-1. THIS NOTE PAGE IS AN INTEGRAL PART OF THIS DRAWING AS IT CONTAINS SPECIFICATIONS AND CRITERIA USED IN THE DESIGN OF THIS COMPONENT.

Town of East Gwillimbury
Building Standards Branch BCIN #16487

These plans have been reviewed for use with the corrections as noted. No other changes may be made without written approval of the Building Standards Branch. All work must comply with Zoning By-Law 2018-043, as amended, and the Ontario Building Code, as amended. These approved documents must be kept on site at all times. The building permit must be clearly posted on site at all times.

Discipline	Reviewer	BCIN	Date
Building Code	H. Authier	43236	2021-02-04
Sewage System			
Zoning			

KOTT

JOB NAME	TRUSS NAME	QUANTITY	PLY	JOB DESC.		DRWG NO.
NE1220-127	T08	2	1	TRUSS DESC.	GREENPARK - TRINAR HALL - BRENTWOOD 2 EL 2	**Page 12 of 22**

Version 8.420 S Oct 9 2020 MiTek Industries, Inc. Fri Dec 18 08:50:41 2020 Page 1

ID:TuTOQa0IN0CxzxwdRwZMIDzHe7m-j8IZRwpKreVIvDWxCvO xcmpmYYpW2km8IQb5oy7c

Scale = 1:60.5

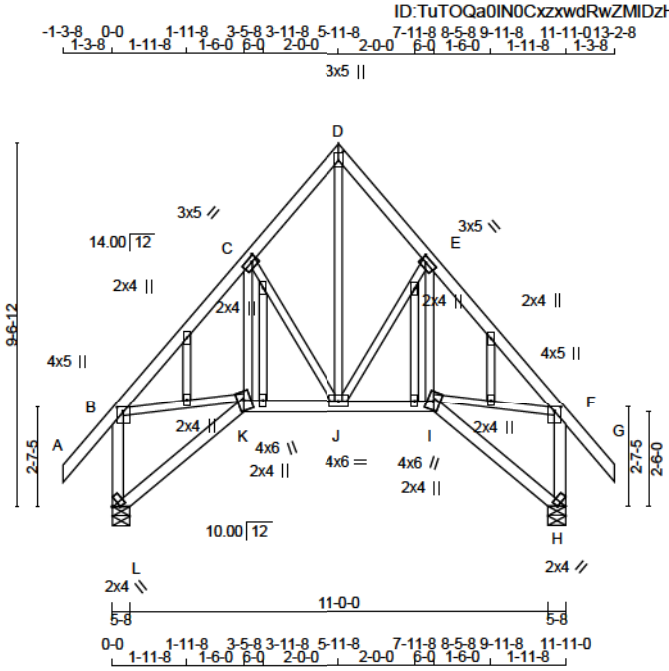

TOTAL WEIGHT = 2 X 79 = 158 lb

LUMBER

N. L. G. A. RULES

CHORDS	SIZE		LUMBER	DESCR.
A - D	2x4	DRY	No.2	SPF
D - G	2x4	DRY	No.2	SPF
L - B	2x4	DRY	No.2	SPF
H - F	2x4	DRY	No.2	SPF
L - K	2x4	DRY	No.2	SPF
K - I	2x4	DRY	No.2	SPF
I - H	2x4	DRY	No.2	SPF
ALL WEBS EXCEPT	2x3	DRY	No.2	SPF
ALL GABLE WEBS	2x3	DRY	No.2	SPF

DRY: SEASONED LUMBER.

GABLE STUDS SPACED AT 2-0-0 OC.

PLATES (table is in inches)

JT	TYPE	PLATES	W	LEN	Y	X
B	TMVW+p	MT20	4.0	5.0	1.25	2.00
C	TMWW-t	MT20	3.0	5.0	1.50	1.75
D	TTW+p	MT20	3.0	5.0	2.75	1.50
E	TMWW-t	MT20	3.0	5.0	1.50	1.75
F	TMVW+p	MT20	4.0	5.0	1.25	2.00
H	BMV1+l	MT20	2.0	4.0	Edge	2.00
I	BBWW+m	MT20	4.0	6.0		
J	BMWWW-t	MT20	4.0	6.0		
K	BBWW+m	MT20	4.0	6.0		
L	BMV1+l	MT20	2.0	4.0	Edge	2.00
M, N, O, P, Q, R, S, T						
M	NP+w	MT20	2.0	4.0		

Edge - INDICATES REFERENCE CORNER OF PLATE TOUCHES EDGE OF CHORD.

DIMENSIONS, SUPPORTS AND LOADINGS SPECIFIED BY FABRICATOR TO BE VERIFIED BY BUILDING DESIGNER [M][F]

BEARINGS

JT	FACTORED GROSS REACTION VERT	HORZ	MAXIMUM GROSS REACTION DOWN	FACTORED HORZ	UPLIFT	INPUT BRG IN-SX	REQRD BRG IN-SX
L	1150	0	1150	0	0	5-8 (5-7)	1-8
H	1150	0	1150	0	0	5-8 (5-7)	1-8

VALUE IN PARENTHESIS INDICATES EFFECTIVE BEARING LENGTH

UNFACTORED REACTIONS

JT	1ST LCASE COMBINED	MAX./MIN. COMPONENT REACTIONS SNOW	LIVE	PERM.LIVE	WIND	DEAD	SOIL
L	842	512 / 0	125 / 0	0 / 0	0 / 0	205 / 0	0 / 0
H	842	512 / 0	125 / 0	0 / 0	0 / 0	205 / 0	0 / 0

BEARING MATERIAL TO BE SPF NO.2 OR BETTER AT JOINT(S) L, H

BRACING

TOP CHORD TO BE SHEATHED OR MAX. PURLIN SPACING = 6.04 FT.
MAX. UNBRACED BOTTOM CHORD LENGTH = 10.00 FT OR RIGID CEILING DIRECTLY APPLIED.

ALL PITCH BREAKS AND PERIMETER CORNER JOINTS MUST BE LATERALLY RESTRAINED.

LOADING

TOTAL LOAD CASES: (4)

CHORDS

MEMB. FR-TO	MAX. FORCE (LBS)	FACTORED VERT. LOAD (PLF) FROM	TO	LC1 MAX CSI (LC)	MAX. UNBRAC LENGTH
A- B	0 / 66	-124.4	-124.4	0.18 (1)	10.00
B- C	-996 / 0	-124.4	-124.4	0.19 (1)	6.04
C- D	-716 / 0	-124.4	-124.4	0.15 (1)	6.25
D- E	-716 / 0	-124.4	-124.4	0.15 (1)	6.25
E- F	-996 / 0	-124.4	-124.4	0.19 (1)	6.04
F- G	0 / 66	-124.4	-124.4	0.18 (1)	10.00
L- B	-1082 / 0	0.0	0.0	0.17 (1)	7.59
H- F	-1082 / 0	0.0	0.0	0.17 (1)	7.59
L- K	0 / 0	-39.2	-39.2	0.11 (3)	10.00
K- J	0 / 663	-39.2	-39.2	0.14 (1)	10.00
J- I	0 / 663	-39.2	-39.2	0.14 (1)	10.00
I- H	0 / 0	-39.2	-39.2	0.11 (3)	10.00

WEBS

MEMB. FR-TO	MAX. FORCE (LBS)	MAX CSI (LC)
J- D	0 / 837	0.19 (1)
J- E	-429 / 0	0.15 (1)
I- E	0 / 186	0.04 (2)
C- J	-429 / 0	0.15 (1)
K- C	0 / 186	0.04 (2)
B- K	0 / 669	0.15 (1)
I- F	0 / 669	0.15 (1)

DESIGN CRITERIA

SPECIFIED LOADS:

TOP CH.	LL	=	34.8	PSF
	DL	=	8.0	PSF
BOT CH.	LL	=	10.5	PSF
	DL	=	7.3	PSF
TOTAL LOAD		=	60.6	PSF

SPACING = 24.0 IN. C/C

THIS TRUSS IS DESIGNED FOR RESIDENTIAL OR SMALL BUILDING REQUIREMENTS OF PART 9, NBCC 2015

THIS DESIGN COMPLIES WITH:
- PART 9 OF BCBC 2018 , ABC 2019
- PART 9 OF OBC 2012 (2019 AMENDMENT)
- CSA 086-14
- TPIC 2014

(55 % OF 48.1 P.S.F. G.S.L. PLUS 8.4 P.S.F. RAIN LOAD) EQUALS 34.8 P.S.F. SPECIFIED ROOF LIVE LOAD

ALLOWABLE DEFL.(LL)= L/360 (0.40")
CALCULATED VERT. DEFL.(LL) = L/ 999 (0.02")
ALLOWABLE DEFL.(TL)= L/360 (0.40")
CALCULATED VERT. DEFL.(TL) = L/ 999 (0.04")

CSI: TC=0.19/1.00 (E-F:1) , BC=0.14/1.00 (I-J:1) , WB=0.19/1.00 (D-J:1) , SSI=0.13/1.00 (E-F:1)

DOL LUMBER=1.00 NAIL=1.00 LS BEND=1.10 COMP=1.10 SHEAR=1.10 TENS= 1.10

COMPANION LIVE LOAD FACTOR = 1.00

AUTOSOLVE HEELS OFF

TRUSS PLATE MANUFACTURER IS NOT RESPONSIBLE FOR QUALITY CONTROL IN THE TRUSS MANUFACTURING PLANT .

NAIL VALUES

PLATE	GRIP(DRY) (PSI) MAX	MIN	SHEAR (PLI) MAX	MIN	SECTION (PLI) MAX	MIN
MT20	650	371	1747	788	1987	1873

PLATE PLACEMENT TOL. = 0.250 inches

PLATE ROTATION TOL. = 5.0 Deg.

JSI GRIP= 0.83 (L) (INPUT = 0.90)
JSI METAL= 0.61 (L) (INPUT = 1.00)

LICENSED PROFESSIONAL ENGINEER
N.A. EL-MASRI
PROVINCE OF ONTARIO
Dec 18, 2020

READ ALL NOTES ON THIS PAGE AND ON ENGINEERING NOTE PAGE ENP-1. THIS NOTE PAGE IS AN INTEGRAL PART OF THIS DRAWING AS IT CONTAINS SPECIFICATIONS AND CRITERIA USED IN THE DESIGN OF THIS COMPONENT.

Town of East Gwillimbury
Building Standards Branch BCIN #16487

These plans have been reviewed for use with the corrections as noted. No other changes may be made without written approval of the Building Standards Branch. All work must comply with Zoning By-Law 2018-043, as amended, and the Ontario Building Code, as amended. These approved documents must be kept on site at all times. The building permit must be clearly posted on site at all times.

Discipline	Reviewer	BCIN	Date
Building Code	H. Authier	43236	2021-02-04
Sewage System			
Zoning			

KOTT

JOB NAME	TRUSS NAME	QUANTITY	PLY	JOB DESC.	DRWG NO.
NE1220-127	T09	2	1	GREENPARK - TRINAR HALL - BRENTWOOD 2 EL 2 (TRUSS DESC.)	**Page 13 of 22**

Version 8.420 S Oct 9 2020 MiTek Industries, Inc. Fri Dec 18 08:50:42 2020 Page 1

ID:TuTOQa0IN0CxzxwdRwZMIDzHe7m-BLJxfGpvcvd9aN57IfwDUpJ Wvu2FV wMy98dFy7c

Scale = 1:60.5

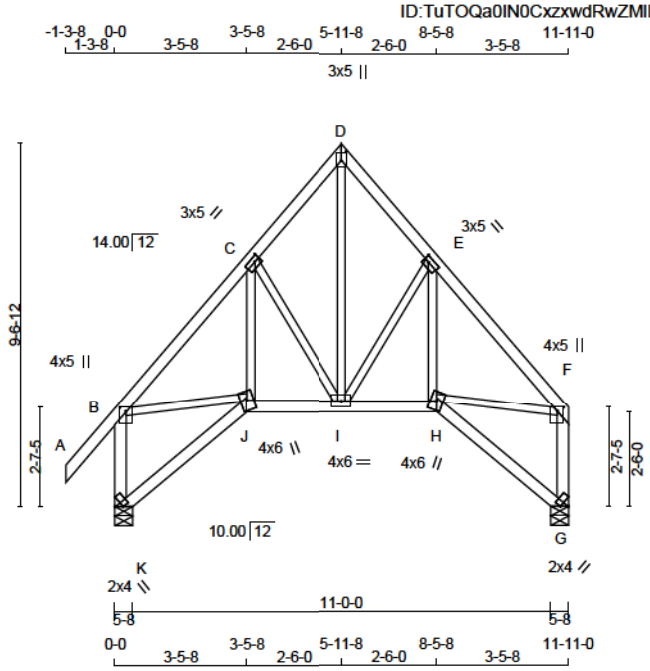

TOTAL WEIGHT = 2 X 69 = 138 lb

LUMBER
N. L. G. A. RULES

CHORDS	SIZE		LUMBER	DESCR.
A - D	2x4	DRY	No.2	SPF
D - F	2x4	DRY	No.2	SPF
K - B	2x4	DRY	No.2	SPF
G - F	2x4	DRY	No.2	SPF
K - J	2x4	DRY	No.2	SPF
J - H	2x4	DRY	No.2	SPF
H - G	2x4	DRY	No.2	SPF
ALL WEBS EXCEPT	2x3	DRY	No.2	SPF

DRY: SEASONED LUMBER.

PLATES (table is in inches)

JT	TYPE	PLATES	W	LEN	Y	X
B	TMVW+p	MT20	4.0	5.0	1.25	2.00
C	TMWW-t	MT20	3.0	5.0	1.50	1.75
D	TTW+p	MT20	3.0	5.0	2.75	1.50
E	TMWW-t	MT20	3.0	5.0	1.50	1.75
F	TMVW+p	MT20	4.0	5.0	1.25	2.00
G	BMV1+I	MT20	2.0	4.0	Edge	2.00
H	BBWW+m	MT20	4.0	6.0		
I	BMWWW-t	MT20	4.0	6.0		
J	BBWW+m	MT20	4.0	6.0		
K	BMV1+I	MT20	2.0	4.0	Edge	2.00

Edge - INDICATES REFERENCE CORNER OF PLATE TOUCHES EDGE OF CHORD.

DIMENSIONS, SUPPORTS AND LOADINGS SPECIFIED BY FABRICATOR TO BE VERIFIED BY BUILDING DESIGNER [M][F]

BEARINGS

JT	FACTORED GROSS REACTION VERT	HORZ	MAXIMUM GROSS REACTION DOWN	HORZ	UPLIFT	INPUT BRG IN-SX	REQRD BRG IN-SX
K	1150	0	1150	0	0	5-8 (5-7)	1-8
G	975	0	975	0	0	5-8 (5-7)	1-8

VALUE IN PARENTHESIS INDICATES EFFECTIVE BEARING LENGTH

UNFACTORED REACTIONS

JT	1ST LCASE COMBINED	MAX./MIN. COMPONENT REACTIONS SNOW	LIVE	PERM.LIVE	WIND	DEAD	SOIL
K	842	512 / 0	125 / 0	0 / 0	0 / 0	205 / 0	0 / 0
G	722	415 / 0	125 / 0	0 / 0	0 / 0	162 / 0	0 / 0

BEARING MATERIAL TO BE SPF NO.2 OR BETTER AT JOINT(S) K, G

BRACING
TOP CHORD TO BE SHEATHED OR MAX. PURLIN SPACING = 6.04 FT.
MAX. UNBRACED BOTTOM CHORD LENGTH = 10.00 FT OR RIGID CEILING DIRECTLY APPLIED.

ALL PITCH BREAKS AND PERIMETER CORNER JOINTS MUST BE LATERALLY RESTRAINED.

LOADING
TOTAL LOAD CASES: (4)

CHORDS

MEMB. FR-TO	MAX. FACTORED FORCE (LBS)	FACTORED VERT. LOAD (PLF) FROM	TO	LC1 MAX CSI (LC)	MAX. UNBRAC LENGTH
A- B	0 / 66	-124.4	-124.4	0.18 (1)	10.00
B- C	-996 / 0	-124.4	-124.4	0.19 (1)	6.04
C- D	-716 / 0	-124.4	-124.4	0.15 (1)	6.25
D- E	-716 / 0	-124.4	-124.4	0.15 (1)	6.25
E- F	-996 / 0	-124.4	-124.4	0.19 (1)	6.04
K- B	-1082 / 0	0.0	0.0	0.17 (1)	7.59
G- F	-907 / 0	0.0	0.0	0.14 (1)	7.81
K- J	0 / 0	-39.2	-39.2	0.11 (3)	10.00
J- I	0 / 663	-39.2	-39.2	0.14 (1)	10.00
I- H	0 / 663	-39.2	-39.2	0.14 (1)	10.00
H- G	0 / 0	-39.2	-39.2	0.11 (3)	10.00

WEBS

MEMB. FR-TO	MAX. FACTORED FORCE (LBS)	MAX CSI (LC)
I- D	0 / 837	0.19 (1)
I- E	-429 / 0	0.15 (1)
H- E	0 / 186	0.04 (2)
C- I	-429 / 0	0.15 (1)
J- C	0 / 186	0.04 (2)
B- J	0 / 669	0.15 (1)
H- F	0 / 669	0.15 (1)

DESIGN CRITERIA

SPECIFIED LOADS:

TOP CH.	LL	=	34.8	PSF
	DL	=	8.0	PSF
BOT CH.	LL	=	10.5	PSF
	DL	=	7.3	PSF
TOTAL LOAD		=	60.6	PSF

SPACING = 24.0 IN. C/C

THIS TRUSS IS DESIGNED FOR RESIDENTIAL OR SMALL BUILDING REQUIREMENTS OF PART 9, NBCC 2015

THIS DESIGN COMPLIES WITH:
- PART 9 OF BCBC 2018 , ABC 2019
- PART 9 OF OBC 2012 (2019 AMENDMENT)
- CSA 086-14
- TPIC 2014

(55 % OF 48.1 P.S.F. G.S.L. PLUS 8.4 P.S.F. RAIN LOAD) EQUALS 34.8 P.S.F. SPECIFIED ROOF LIVE LOAD

ALLOWABLE DEFL.(LL)= L/360 (0.40")
CALCULATED VERT. DEFL.(LL) = L/ 999 (0.02")
ALLOWABLE DEFL.(TL)= L/360 (0.40")
CALCULATED VERT. DEFL.(TL) = L/ 999 (0.04")

CSI: TC=0.19/1.00 (E-F:1) , BC=0.14/1.00 (H-I:1) , WB=0.19/1.00 (D-I:1) , SSI=0.13/1.00 (E-F:1)

DOL LUMBER=1.00 NAIL=1.00 LS BEND=1.10 COMP=1.10 SHEAR=1.10 TENS= 1.10

COMPANION LIVE LOAD FACTOR = 1.00

AUTOSOLVE HEELS OFF

TRUSS PLATE MANUFACTURER IS NOT RESPONSIBLE FOR QUALITY CONTROL IN THE TRUSS MANUFACTURING PLANT .

NAIL VALUES

PLATE	GRIP(DRY) (PSI) MAX	MIN	SHEAR (PLI) MAX	MIN	SECTION (PLI) MAX	MIN
MT20	650	371	1747	788	1987	1873

PLATE PLACEMENT TOL. = 0.250 inches

PLATE ROTATION TOL. = 5.0 Deg.

JSI GRIP= 0.83 (G) (INPUT = 0.90)
JSI METAL= 0.61 (K) (INPUT = 1.00)

LICENSED PROFESSIONAL ENGINEER
N.A. EL-MASRI
PROVINCE OF ONTARIO
Dec 18, 2020

READ ALL NOTES ON THIS PAGE AND ON ENGINEERING NOTE PAGE ENP-1. THIS NOTE PAGE IS AN INTEGRAL PART OF THIS DRAWING AS IT CONTAINS SPECIFICATIONS AND CRITERIA USED IN THE DESIGN OF THIS COMPONENT.

Town of East Gwillimbury
Building Standards Branch BCIN #16487

These plans have been reviewed for use with the corrections as noted. No other changes may be made without written approval of the Building Standards Branch. All work must comply with Zoning By-Law 2018-043, as amended, and the Ontario Building Code, as amended. These approved documents must be kept on site at all times. The building permit must be clearly posted on site at all times.

Discipline	Reviewer	BCIN	Date
Building Code	H. Authier	43236	2021-02-04
Sewage System			
Zoning			

KOTT

JOB NAME	TRUSS NAME	QUANTITY	PLY	JOB DESC.		DRWG NO.
NE1220-127	T10	2	1	TRUSS DESC.	GREENPARK - TRINAR HALL - BRENTWOOD 2 EL 2	**Page 14 of 22**

Version 8.420 S Oct 9 2020 MiTek Industries, Inc. Fri Dec 18 08:50:43 2020 Page 1
ID:mCCrycxnlfAPc08wPalNt0zHzlx-fXtJscqaNGI0CXqJJNRS01r1LMDh A3bcviAhy7o

Scale = 1:23.7

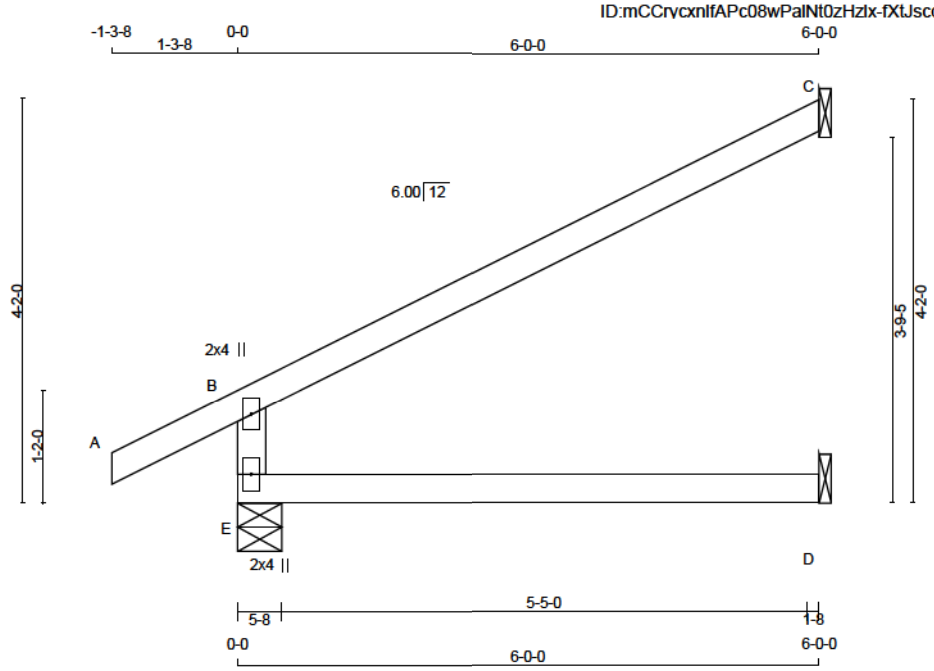

TOTAL WEIGHT = 2 X 17 = 34 lb

LUMBER
N. L. G. A. RULES

CHORDS	SIZE		LUMBER	DESCR.
E - B	2x4	DRY	No.2	SPF
A - C	2x4	DRY	No.2	SPF
E - D	2x4	DRY	No.2	SPF

DRY: SEASONED LUMBER.

PLATES (table is in inches)

JT	TYPE	PLATES	W	LEN	Y	X
B	TMV+p	MT20	2.0	4.0		
E	BMV1+p	MT20	2.0	4.0		

DIMENSIONS, SUPPORTS AND LOADINGS SPECIFIED BY FABRICATOR TO BE VERIFIED BY BUILDING DESIGNER

BEARINGS

JT	FACTORED GROSS REACTION VERT	HORZ	MAXIMUM GROSS REACTION DOWN	HORZ	UPLIFT	INPUT BRG IN-SX	REQRD BRG IN-SX
E	774	0	774	0	0	5-8	1-8
C	280	0	280	0	0	1-8	1-8
D	97	0	123	0	0	1-8	1-8

SEE MITEK STANDARD DETAIL B97791H FOR CONNECTION TO JOINT(S) C , D

UNFACTORED REACTIONS

JT	1ST LCASE COMBINED	MAX /MIN COMPONENT REACTIONS SNOW	LIVE	PERM.LIVE	WIND	DEAD	SOIL
E	563	355 / 0	74 / 0	0 / 0	0 / 0	133 / 0	0 / 0
C	193	157 / 0	0 / 0	0 / 0	0 / 0	36 / 0	0 / 0
D	88	0 / 0	52 / 0	0 / 0	0 / 0	36 / 0	0 / 0

BEARING MATERIAL TO BE SPF NO.2 OR BETTER AT JOINT(S) E

BRACING
TOP CHORD TO BE SHEATHED OR MAX. PURLIN SPACING = 6.25 FT.
MAX. UNBRACED BOTTOM CHORD LENGTH = 10.00 FT OR RIGID CEILING DIRECTLY APPLIED.

ALL PITCH BREAKS AND PERIMETER CORNER JOINTS MUST BE LATERALLY RESTRAINED.

LOADING
TOTAL LOAD CASES: (4)

CHORDS MEMB. FR-TO	MAX. FACTORED FORCE (LBS)	FACTORED VERT. LOAD (PLF) FROM	TO	LC1 MAX CSI (LC)	MAX. UNBRAC LENGTH	WEBS MEMB. FR-TO	MAX. FACTORED FORCE (LBS)	MAX CSI (LC)
E- B	-635 / 0	0.0	0.0	0.24 (3)	7.81			
A- B	0 / 38	-124.4	-124.4	0.16 (1)	10.00			
B- C	-42 / 0	-124.4	-124.4	0.76 (1)	6.25			
E- D	0 / 0	-39.2	-39.2	0.24 (3)	10.00			

[M]

DESIGN CRITERIA

SPECIFIED LOADS:

TOP CH.	LL	=	34.8	PSF
	DL	=	8.0	PSF
BOT CH.	LL	=	10.5	PSF
	DL	=	7.3	PSF
TOTAL LOAD		=	60.6	PSF

SPACING = 24.0 IN. C/C

THIS TRUSS IS DESIGNED FOR RESIDENTIAL OR SMALL BUILDING REQUIREMENTS OF PART 9, NBCC 2015

THIS DESIGN COMPLIES WITH:
- PART 9 OF BCBC 2018 , ABC 2019
- PART 9 OF OBC 2012 (2019 AMENDMENT)
- CSA 086-14
- TPIC 2014

DESIGN ASSUMPTIONS
-OVERHANG NOT TO BE ALTERED OR CUT OFF.

(55 % OF 48.1 P.S.F. G.S.L. PLUS 8.4 P.S.F. RAIN LOAD) EQUALS 34.8 P.S.F. SPECIFIED ROOF LIVE LOAD

ALLOWABLE DEFL.(LL)= L/360 (0.20")
CALCULATED VERT. DEFL.(LL) = L/ 999 (0.05")
ALLOWABLE DEFL.(TL)= L/360 (0.20")
CALCULATED VERT. DEFL.(TL) = L/ 874 (0.08")

CSI: TC=0.76/1.00 (B-C:1) , BC=0.24/1.00 (D-E:3) , WB=0.00/1.00 (n/a:0) , SSI=0.33/1.00 (B-C:1)

DOL LUMBER=1.00 NAIL=1.00 LS BEND=1.10 COMP=1.10 SHEAR=1.10 TENS= 1.10

COMPANION LIVE LOAD FACTOR = 1.00

TRUSS PLATE MANUFACTURER IS NOT RESPONSIBLE FOR QUALITY CONTROL IN THE TRUSS MANUFACTURING PLANT .

NAIL VALUES

PLATE	GRIP(DRY) (PSI) MAX	MIN	SHEAR (PLI) MAX	MIN	SECTION (PLI) MAX	MIN
MT20	650	371	1747	788	1987	1873

PLATE PLACEMENT TOL. = 0.250 inches

PLATE ROTATION TOL. = 5.0 Deg.

JSI GRIP= 0.36 (B) (INPUT = 0.90)
JSI METAL= 0.26 (B) (INPUT = 1.00)

LICENSED PROFESSIONAL ENGINEER
N.A. EL-MASRI
PROVINCE OF ONTARIO
Dec 18, 2020

READ ALL NOTES ON THIS PAGE AND ON ENGINEERING NOTE PAGE ENP-1. THIS NOTE PAGE IS AN INTEGRAL PART OF THIS DRAWING AS IT CONTAINS SPECIFICATIONS AND CRITERIA USED IN THE DESIGN OF THIS COMPONENT.

Town of East Gwillimbury
Building Standards Branch BCIN #16487

These plans have been reviewed for use with the corrections as noted. No other changes may be made without written approval of the Building Standards Branch. All work must comply with Zoning By-Law 2018-043, as amended, and the Ontario Building Code, as amended. These approved documents must be kept on site at all times. The building permit must be clearly posted on site at all times.

Discipline	Reviewer	BCIN	Date
Building Code	H. Authier	43236	2021-02-04
Sewage System			
Zoning			

KOTT

JOB NAME	TRUSS NAME	QUANTITY	PLY	JOB DESC.	DRWG NO.
NE1220-127	T11	9	1	GREENPARK - TRINAR HALL - BRENTWOOD 2 EL 2 (TRUSS DESC.)	**Page 15 of 22**

Version 8.420 S Oct 9 2020 MiTek Industries, Inc. Fri Dec 18 08:50:43 2020 Page 1
ID:TuTOQa0IN0CxzxwdRwZMIDzHe7m-fXtJscqaNGI0CXqJJNRS01r8RMBz A3bcviAhy7o

Scale = 1:15.3

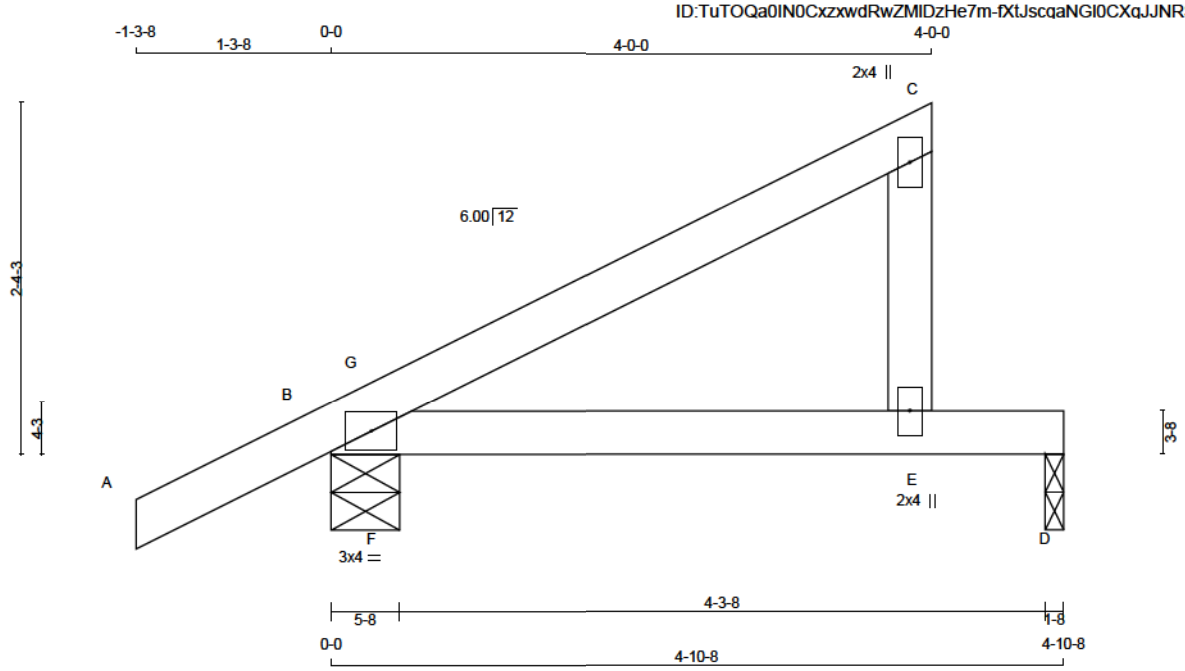

TOTAL WEIGHT = 9 X 14 = 130 lb

LUMBER
N. L. G. A. RULES

CHORDS	SIZE		LUMBER	DESCR.
A - C	2x4	DRY	No.2	SPF
E - C	2x4	DRY	No.2	SPF
B - D	2x4	DRY	No.2	SPF

DRY: SEASONED LUMBER.

PLATES (table is in inches)

JT	TYPE	PLATES	W	LEN	Y	X
B	TMB1-I	MT20	3.0	4.0		
C	TMV+p	MT20	2.0	4.0		
E	BMV+p	MT20	2.0	4.0		

DIMENSIONS, SUPPORTS AND LOADINGS SPECIFIED BY FABRICATOR TO BE VERIFIED BY BUILDING DESIGNER

BEARINGS

JT	FACTORED GROSS REACTION VERT	HORZ	MAXIMUM GROSS REACTION DOWN	HORZ	UPLIFT	INPUT BRG IN-SX	REQRD BRG IN-SX
B	558	0	558	0	0	5-8	1-8
D	300	0	300	0	0	1-8	1-8

UNFACTORED REACTIONS

JT	1ST LCASE COMBINED	MAX./MIN. COMPONENT REACTIONS SNOW	LIVE	PERM.LIVE	WIND	DEAD	SOIL
B	405	259 / 0	51 / 0	0 / 0	0 / 0	95 / 0	0 / 0
D	227	114 / 0	51 / 0	0 / 0	0 / 0	62 / 0	0 / 0

BEARING MATERIAL TO BE SPF NO.2 OR BETTER AT JOINT(S) B, D

BRACING
TOP CHORD TO BE SHEATHED OR MAX. PURLIN SPACING = 6.25 FT.
MAX. UNBRACED BOTTOM CHORD LENGTH = 10.00 FT OR RIGID CEILING DIRECTLY APPLIED.

ALL PITCH BREAKS AND PERIMETER CORNER JOINTS MUST BE LATERALLY RESTRAINED.

LOADING
TOTAL LOAD CASES: (4)

CHORDS

MEMB. FR-TO	MAX. FACTORED FORCE (LBS)	FACTORED VERT. LOAD (PLF) FROM	TO	LC1 MAX CSI (LC)	MAX. UNBRAC LENGTH
A- B	0 / 36	-124.4	-124.4	0.16 (1)	10.00
B- G	-92 / 0	-124.4	-124.4	0.11 (3)	6.25
G- C	0 / 9	-124.4	-124.4	0.31 (1)	10.00
E- C	-238 / 0	0.0	0.0	0.03 (1)	7.81
B- F	0 / 0	-39.2	-39.2	0.13 (1)	10.00
F- E	0 / 0	-39.2	-39.2	0.35 (1)	10.00
E- D	0 / 0	-39.2	-39.2	0.34 (1)	10.00

WEBS

MEMB. FR-TO	MAX. FACTORED FORCE (LBS)	MAX CSI (LC)
F- G	-107 / 159	0.00 (1)

DESIGN CRITERIA

SPECIFIED LOADS:

TOP CH.	LL	=	34.8	PSF
	DL	=	8.0	PSF
BOT CH.	LL	=	10.5	PSF
	DL	=	7.3	PSF
TOTAL LOAD		=	60.6	PSF

SPACING = 24.0 IN. C/C

THIS TRUSS IS DESIGNED FOR RESIDENTIAL OR SMALL BUILDING REQUIREMENTS OF PART 9, NBCC 2015

THIS DESIGN COMPLIES WITH:
- PART 9 OF BCBC 2018 , ABC 2019
- PART 9 OF OBC 2012 (2019 AMENDMENT)
- CSA 086-14
- TPIC 2014

(55 % OF 48.1 P.S.F. G.S.L. PLUS 8.4 P.S.F. RAIN LOAD) EQUALS 34.8 P.S.F. SPECIFIED ROOF LIVE LOAD

ALLOWABLE DEFL.(LL)= L/360 (0.19")
CALCULATED VERT. DEFL.(LL) = L/ 831 (0.07")
ALLOWABLE DEFL.(TL)= L/360 (0.19")
CALCULATED VERT. DEFL.(TL) = L/ 483 (0.12")

CSI: TC=0.31/1.00 (C-G:1) , BC=0.35/1.00 (E-F:1) , WB=0.00/1.00 (F-G:1) , SSI=0.23/1.00 (D-E:1)

DOL LUMBER=1.00 NAIL=1.00 LS BEND=1.10 COMP=1.10 SHEAR=1.10 TENS= 1.10

COMPANION LIVE LOAD FACTOR = 1.00

TRUSS PLATE MANUFACTURER IS NOT RESPONSIBLE FOR QUALITY CONTROL IN THE TRUSS MANUFACTURING PLANT .

NAIL VALUES

PLATE	GRIP(DRY) (PSI) MAX	MIN	SHEAR (PLI) MAX	MIN	SECTION (PLI) MAX	MIN
MT20	650	371	1747	788	1987	1873

PLATE PLACEMENT TOL. = 0.250 inches

PLATE ROTATION TOL. = 5.0 Deg.

JSI GRIP= 0.35 (B) (INPUT = 0.90)
JSI METAL= 0.10 (C) (INPUT = 1.00)

LICENSED PROFESSIONAL ENGINEER
N.A. EL-MASRI
PROVINCE OF ONTARIO
Dec 18, 2020

READ ALL NOTES ON THIS PAGE AND ON ENGINEERING NOTE PAGE ENP-1. THIS NOTE PAGE IS AN INTEGRAL PART OF THIS DRAWING AS IT CONTAINS SPECIFICATIONS AND CRITERIA USED IN THE DESIGN OF THIS COMPONENT.

Town of East Gwillimbury
Building Standards Branch BCIN #16487

These plans have been reviewed for use with the corrections as noted. No other changes may be made without written approval of the Building Standards Branch. All work must comply with Zoning By-Law 2018-043, as amended, and the Ontario Building Code, as amended. These approved documents must be kept on site at all times. The building permit must be clearly posted on site at all times.

Discipline	Reviewer	BCIN	Date
Building Code	H. Authier	43236	2021-02-04
Sewage System			
Zoning			

KOTT

JOB NAME	TRUSS NAME	QUANTITY	PLY	JOB DESC.		DRWG NO.
NE1220-127	T12	2	1	TRUSS DESC.	GREENPARK - TRINAR HALL - BRENTWOOD 2 EL 2	**Page 16 of 22**

Version 8.420 S Oct 9 2020 MiTek Industries, Inc. Fri Dec 18 08:50:43 2020 Page 1
ID:TuTOQa0IN0CxzxwdRwZMIDzHe7m-fXtJscqaNGl0CXgJJNRS01rAmM7f yk3bcviAhy7o

Scale = 1:20.5

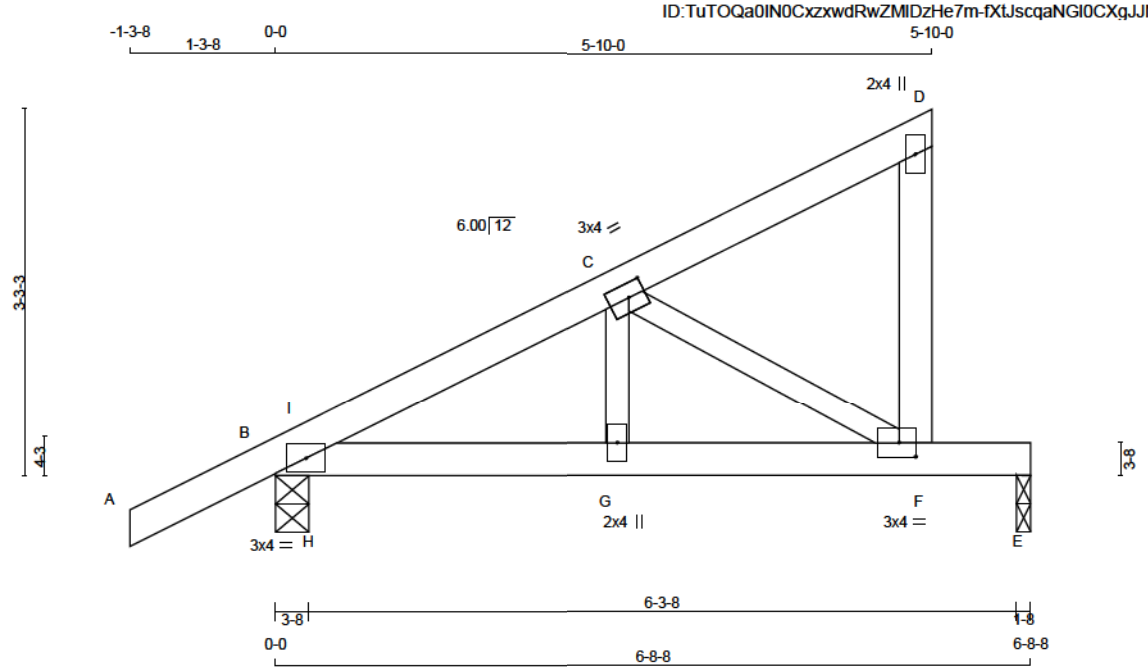

TOTAL WEIGHT = 2 X 23 = 46 lb

LUMBER
N. L. G. A. RULES

CHORDS	SIZE		LUMBER	DESCR.
A - D	2x4	DRY	No.2	SPF
F - D	2x4	DRY	No.2	SPF
B - E	2x4	DRY	No.2	SPF
ALL WEBS	2x3	DRY	No.2	SPF

DRY: SEASONED LUMBER.

PLATES (table is in inches)

JT	TYPE	PLATES	W	LEN	Y	X
B	TMB1-I	MT20	3.0	4.0		
C	TMWW-t	MT20	3.0	4.0	1.50	1.75
D	TMV+p	MT20	2.0	4.0		
F	BMVW-t	MT20	3.0	4.0	1.50	1.75
G	BMW+w	MT20	2.0	4.0		

DIMENSIONS, SUPPORTS AND LOADINGS SPECIFIED BY FABRICATOR TO BE VERIFIED BY BUILDING DESIGNER

BEARINGS

JT	FACTORED GROSS REACTION VERT	HORZ	MAXIMUM GROSS REACTION DOWN	HORZ	UPLIFT	INPUT BRG IN-SX	REQRD BRG IN-SX
B	711	0	711	0	0	3-8	1-8
E	447	0	447	0	0	1-8	1-8

UNFACTORED REACTIONS

JT	1ST LCASE COMBINED	MAX./MIN. COMPONENT REACTIONS SNOW	LIVE	PERM.LIVE	WIND	DEAD	SOIL
B	518	324 / 0	70 / 0	0 / 0	0 / 0	123 / 0	0 / 0
E	337	177 / 0	70 / 0	0 / 0	0 / 0	90 / 0	0 / 0

BEARING MATERIAL TO BE SPF NO.2 OR BETTER AT JOINT(S) B, E

BRACING
TOP CHORD TO BE SHEATHED OR MAX. PURLIN SPACING = 6.25 FT.
MAX. UNBRACED BOTTOM CHORD LENGTH = 10.00 FT OR RIGID CEILING DIRECTLY APPLIED.

ALL PITCH BREAKS AND PERIMETER CORNER JOINTS MUST BE LATERALLY RESTRAINED.

LOADING
TOTAL LOAD CASES: (4)

CHORDS

MEMB. FR-TO	MAX. FACTORED FORCE (LBS)	FACTORED VERT. LOAD (PLF) FROM	TO	LC1 MAX CSI (LC)	MAX. UNBRAC LENGTH
A- B	0 / 36	-124.4	-124.4	0.16 (1)	10.00
B- I	-794 / 0	-124.4	-124.4	0.03 (1)	6.25
I- C	-777 / 0	-124.4	-124.4	0.10 (1)	6.25
C- D	-14 / 0	-124.4	-124.4	0.10 (1)	6.25
F- D	-142 / 0	0.0	0.0	0.02 (1)	7.81
B- H	0 / 705	-39.2	-39.2	0.19 (1)	10.00
H- G	0 / 705	-39.2	-39.2	0.28 (1)	10.00
G- F	0 / 705	-39.2	-39.2	0.63 (1)	10.00
F- E	0 / 0	-39.2	-39.2	0.51 (1)	10.00

WEBS

MEMB. FR-TO	MAX. FACTORED FORCE (LBS)	MAX CSI (LC)
G- C	0 / 354	0.08 (2)
C- F	-807 / 0	0.16 (1)
H- I	-149 / 12	0.00 (1)

DESIGN CRITERIA

SPECIFIED LOADS:

TOP CH.	LL	=	34.8	PSF
	DL	=	8.0	PSF
BOT CH.	LL	=	10.5	PSF
	DL	=	7.3	PSF
TOTAL LOAD		=	60.6	PSF

SPACING = 24.0 IN. C/C

THIS TRUSS IS DESIGNED FOR RESIDENTIAL OR SMALL BUILDING REQUIREMENTS OF PART 9, NBCC 2015

THIS DESIGN COMPLIES WITH:
- PART 9 OF BCBC 2018 , ABC 2019
- PART 9 OF OBC 2012 (2019 AMENDMENT)
- CSA 086-14
- TPIC 2014

(55 % OF 48.1 P.S.F. G.S.L. PLUS 8.4 P.S.F. RAIN LOAD) EQUALS 34.8 P.S.F. SPECIFIED ROOF LIVE LOAD

ALLOWABLE DEFL.(LL)= L/360 (0.22")
CALCULATED VERT. DEFL.(LL) = L/ 999 (0.05")
ALLOWABLE DEFL.(TL)= L/360 (0.22")
CALCULATED VERT. DEFL.(TL) = L/ 878 (0.09")

CSI: TC=0.16/1.00 (A-B:1) , BC=0.63/1.00 (F-G:1) , WB=0.16/1.00 (C-F:1) , SSI=0.35/1.00 (E-F:1)

DOL LUMBER=1.00 NAIL=1.00 LS BEND=1.10 COMP=1.10 SHEAR=1.10 TENS= 1.10

COMPANION LIVE LOAD FACTOR = 1.00

TRUSS PLATE MANUFACTURER IS NOT RESPONSIBLE FOR QUALITY CONTROL IN THE TRUSS MANUFACTURING PLANT .

NAIL VALUES

PLATE	GRIP(DRY) (PSI) MAX	MIN	SHEAR (PLI) MAX	MIN	SECTION (PLI) MAX	MIN
MT20	650	371	1747	788	1987	1873

PLATE PLACEMENT TOL. = 0.250 inches

PLATE ROTATION TOL. = 5.0 Deg.

JSI GRIP= 0.86 (F) (INPUT = 0.90)
JSI METAL= 0.26 (B) (INPUT = 1.00)

LICENSED PROFESSIONAL ENGINEER
N.A. EL-MASRI
PROVINCE OF ONTARIO
Dec 18, 2020

READ ALL NOTES ON THIS PAGE AND ON ENGINEERING NOTE PAGE ENP-1. THIS NOTE PAGE IS AN INTEGRAL PART OF THIS DRAWING AS IT CONTAINS SPECIFICATIONS AND CRITERIA USED IN THE DESIGN OF THIS COMPONENT.

Town of East Gwillimbury
Building Standards Branch BCIN #16487

These plans have been reviewed for use with the corrections as noted. No other changes may be made without written approval of the Building Standards Branch. All work must comply with Zoning By-Law 2018-043, as amended, and the Ontario Building Code, as amended. These approved documents must be kept on site at all times. The building permit must be clearly posted on site at all times.

Discipline	Reviewer	BCIN	Date
Building Code	H. Authier	43236	2021-02-04
Sewage System			
Zoning			

KOTT

JOB NAME	TRUSS NAME	QUANTITY	PLY	JOB DESC.		DRWG NO.
NE1220-127	T13	2	1	TRUSS DESC.	GREENPARK - TRINAR HALL - BRENTWOOD 2 EL 2	**Page 17 of 22**

Version 8.420 S Oct 9 2020 MiTek Industries, Inc. Fri Dec 18 08:50:44 2020 Page 1
ID:TuTOQa0IN0CxzxwdRwZMIDzHe7m-8jRi3vrC8ZtsphEWt4vhZEOLGlXDjI1CqGeFi7y7c

Scale = 1:57.7

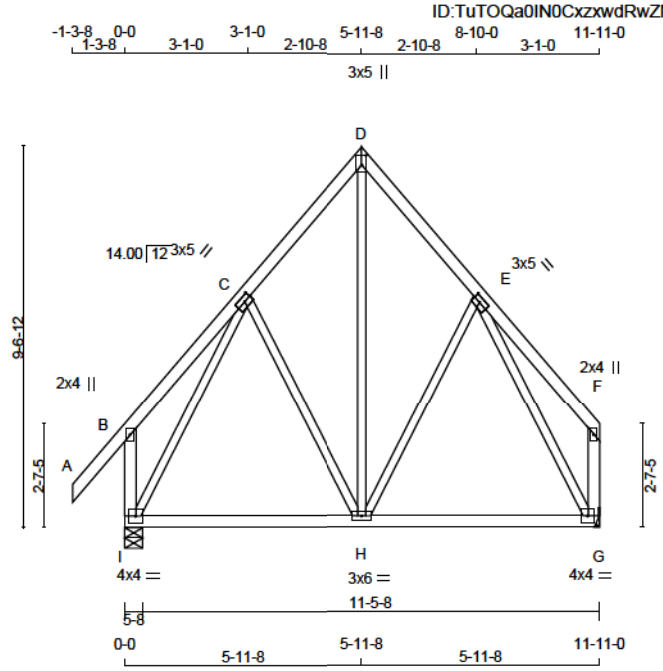

TOTAL WEIGHT = 2 X 70 = 139 lb

LUMBER
N. L. G. A. RULES

CHORDS	SIZE		LUMBER	DESCR.
A - D	2x4	DRY	No.2	SPF
D - F	2x4	DRY	No.2	SPF
I - B	2x4	DRY	No.2	SPF
G - F	2x4	DRY	No.2	SPF
I - G	2x4	DRY	No.2	SPF
ALL WEBS EXCEPT	2x3	DRY	No.2	SPF

DRY: SEASONED LUMBER.

PLATES (table is in inches)

JT	TYPE	PLATES	W	LEN	Y	X
B	TMV+p	MT20	2.0	4.0		
C	TMWW-t	MT20	3.0	5.0	1.50	2.25
D	TTW+p	MT20	3.0	5.0	2.75	1.50
E	TMWW-t	MT20	3.0	5.0	1.50	2.25
F	TMV+p	MT20	2.0	4.0		
G	BMVW1-t	MT20	4.0	4.0		
H	BMWWW-t	MT20	3.0	6.0		
I	BMVW1-t	MT20	4.0	4.0		

DIMENSIONS, SUPPORTS AND LOADINGS SPECIFIED BY FABRICATOR TO BE VERIFIED BY BUILDING DESIGNER [M][F]

BEARINGS

JT	FACTORED GROSS REACTION VERT	HORZ	MAXIMUM FACTORED GROSS REACTION DOWN	HORZ	UPLIFT	INPUT BRG IN-SX	REQRD BRG IN-SX
I	1150	0	1150	0	0	5-8	1-8
G	975	0	975	0	0	MECHANICAL	

A SUITABLE HANGER/MECHANICAL CONNECTION IS REQUIRED AT JOINT G. MINIMUM BEARING LENGTH AT JOINT G = 1-8.

UNFACTORED REACTIONS

JT	1ST LCASE COMBINED	MAX./MIN. COMPONENT REACTIONS SNOW	LIVE	PERM.LIVE	WIND	DEAD	SOIL
I	842	512 / 0	125 / 0	0 / 0	0 / 0	205 / 0	0 / 0
G	722	415 / 0	125 / 0	0 / 0	0 / 0	182 / 0	0 / 0

BEARING MATERIAL TO BE SPF NO.2 OR BETTER AT JOINT(S) I

BRACING
TOP CHORD TO BE SHEATHED OR MAX. PURLIN SPACING = 6.25 FT.
MAX. UNBRACED BOTTOM CHORD LENGTH = 10.00 FT OR RIGID CEILING DIRECTLY APPLIED.

ALL PITCH BREAKS AND PERIMETER CORNER JOINTS MUST BE LATERALLY RESTRAINED.

LOADING
TOTAL LOAD CASES: (4)

CHORDS

MEMB. FR-TO	MAX. FACTORED FORCE (LBS)	FACTORED VERT. LOAD (PLF) FROM	TO	LC1 MAX CSI (LC)	MAX. UNBRAC LENGTH
A- B	0 / 66	-124.4	-124.4	0.18 (1)	10.00
B- C	0 / 31	-124.4	-124.4	0.17 (1)	10.00
C- D	-545 / 0	-124.4	-124.4	0.13 (1)	6.25
D- E	-545 / 0	-124.4	-124.4	0.13 (1)	6.25
E- F	0 / 31	-124.4	-124.4	0.17 (1)	10.00
I- B	-321 / 0	0.0	0.0	0.04 (1)	7.81
G- F	-146 / 0	0.0	0.0	0.02 (1)	7.81
I- H	0 / 387	-39.2	-39.2	0.35 (3)	10.00
H- G	0 / 387	-39.2	-39.2	0.35 (3)	10.00

WEBS

MEMB. FR-TO	MAX. FACTORED FORCE (LBS)	MAX CSI (LC)
H- D	0 / 496	0.11 (1)
H- E	-117 / 27	0.09 (1)
C- H	-117 / 27	0.09 (1)
I- C	-835 / 0	0.60 (1)
E- G	-835 / 0	0.60 (1)

DESIGN CRITERIA

SPECIFIED LOADS:

TOP CH.	LL	=	34.8	PSF
	DL	=	8.0	PSF
BOT CH.	LL	=	10.5	PSF
	DL	=	7.3	PSF
TOTAL LOAD		=	60.6	PSF

SPACING = 24.0 IN. C/C

THIS TRUSS IS DESIGNED FOR RESIDENTIAL OR SMALL BUILDING REQUIREMENTS OF PART 9, NBCC 2015

THIS DESIGN COMPLIES WITH:
- PART 9 OF BCBC 2018 , ABC 2019
- PART 9 OF OBC 2012 (2019 AMENDMENT)
- CSA 086-14
- TPIC 2014

(55 % OF 48.1 P.S.F. G.S.L. PLUS 8.4 P.S.F. RAIN LOAD) EQUALS 34.8 P.S.F. SPECIFIED ROOF LIVE LOAD

ALLOWABLE DEFL.(LL)= L/360 (0.40")
CALCULATED VERT. DEFL.(LL) = L/ 999 (0.04")
ALLOWABLE DEFL.(TL)= L/360 (0.40")
CALCULATED VERT. DEFL.(TL) = L/ 999 (0.07")

CSI: TC=0.18/1.00 (A-B:1) , BC=0.35/1.00 (H-I:3) , WB=0.60/1.00 (C-I:1) , SSI=0.16/1.00 (H-I:3)

DOL LUMBER=1.00 NAIL=1.00 LS BEND=1.10 COMP=1.10 SHEAR=1.10 TENS= 1.10

COMPANION LIVE LOAD FACTOR = 1.00

TRUSS PLATE MANUFACTURER IS NOT RESPONSIBLE FOR QUALITY CONTROL IN THE TRUSS MANUFACTURING PLANT .

NAIL VALUES

PLATE	GRIP(DRY) (PSI) MAX	MIN	SHEAR (PLI) MAX	MIN	SECTION (PLI) MAX	MIN
MT20	650	371	1747	788	1987	1873

PLATE PLACEMENT TOL. = 0.250 inches

PLATE ROTATION TOL. = 5.0 Deg.

JSI GRIP= 0.82 (E) (INPUT = 0.90)
JSI METAL= 0.24 (C) (INPUT = 1.00)

LICENSED PROFESSIONAL ENGINEER
N.A. EL-MASRI
PROVINCE OF ONTARIO
Dec 18, 2020

READ ALL NOTES ON THIS PAGE AND ON ENGINEERING NOTE PAGE ENP-1. THIS NOTE PAGE IS AN INTEGRAL PART OF THIS DRAWING AS IT CONTAINS SPECIFICATIONS AND CRITERIA USED IN THE DESIGN OF THIS COMPONENT.

Town of East Gwillimbury
Building Standards Branch BCIN #16487

These plans have been reviewed for use with the corrections as noted. No other changes may be made without written approval of the Building Standards Branch. All work must comply with Zoning By-Law 2018-043, as amended, and the Ontario Building Code, as amended. These approved documents must be kept on site at all times. The building permit must be clearly posted on site at all times.

Discipline	Reviewer	BCIN	Date
Building Code	H. Authier	43236	2021-02-04
Sewage System			
Zoning			

KOTT

JOB NAME	TRUSS NAME	QUANTITY	PLY	JOB DESC.		DRWG NO.
NE1220-127	T14	6	1	TRUSS DESC.	GREENPARK - TRINAR HALL - BRENTWOOD 2 EL 2	**Page 18 of 22**

Version 8.420 S Oct 9 2020 MiTek Industries, Inc. Fri Dec 18 08:50:44 2020 Page 1
ID:TuTOQa0lN0CxzxwdRwZMlDzHe7m-8jRi3yrC8ZtsphEWt4yhZEOLclQ iNJCqGeFi7y7c

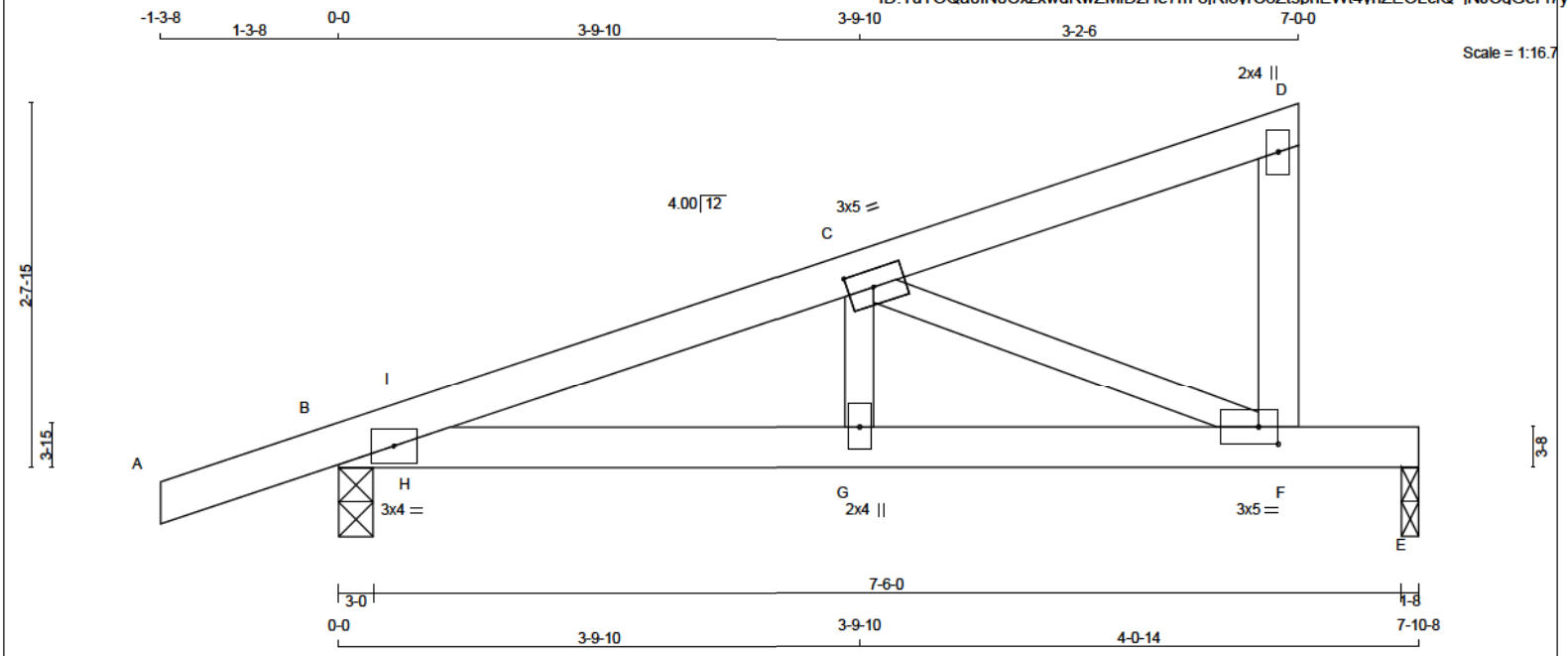

TOTAL WEIGHT = 6 X 25 = 148 lb

LUMBER
N. L. G. A. RULES

CHORDS	SIZE		LUMBER	DESCR.
A - D	2x4	DRY	No.2	SPF
F - D	2x4	DRY	No.2	SPF
B - E	2x4	DRY	No.2	SPF
ALL WEBS	2x3	DRY	No.2	SPF

DRY: SEASONED LUMBER.

PLATES (table is in inches)

JT	TYPE	PLATES	W	LEN	Y	X
B	TMB1-I	MT20	3.0	4.0		
C	TMWW-t	MT20	3.0	5.0	1.50	2.25
D	TMV+p	MT20	2.0	4.0		
F	BMVW-t	MT20	3.0	5.0	1.50	1.75
G	BMW+w	MT20	2.0	4.0		

DIMENSIONS, SUPPORTS AND LOADINGS SPECIFIED BY FABRICATOR TO BE VERIFIED BY BUILDING DESIGNER [M][F]

BEARINGS

JT	FACTORED GROSS REACTION VERT	HORZ	MAXIMUM GROSS REACTION DOWN	HORZ	UPLIFT	INPUT BRG IN-SX	REQRD BRG IN-SX
B	805	0	805	0	0	3-0	1-8
E	542	0	542	0	0	1-8	1-8

UNFACTORED REACTIONS

JT	1ST LCASE COMBINED	MAX./MIN. COMPONENT REACTIONS SNOW	LIVE	PERM.LIVE	WIND	DEAD	SOIL
B	588	364 / 0	83 / 0	0 / 0	0 / 0	141 / 0	0 / 0
E	407	217 / 0	83 / 0	0 / 0	0 / 0	107 / 0	0 / 0

BEARING MATERIAL TO BE SPF NO.2 OR BETTER AT JOINT(S) B, E

BRACING
TOP CHORD TO BE SHEATHED OR MAX. PURLIN SPACING = 5.67 FT.
MAX. UNBRACED BOTTOM CHORD LENGTH = 10.00 FT OR RIGID CEILING DIRECTLY APPLIED.

ALL PITCH BREAKS AND PERIMETER CORNER JOINTS MUST BE LATERALLY RESTRAINED.

LOADING
TOTAL LOAD CASES: (4)

CHORDS MEMB. FR-TO	MAX. FACTORED FORCE (LBS)	FACTORED VERT. LOAD (PLF) FROM	TO	LC1 MAX CSI (LC)	MAX. UNBRAC LENGTH	WEBS MEMB. FR-TO	MAX. FACTORED FORCE (LBS)	MAX CSI (LC)
A- B	0 / 25	-124.4	-124.4	0.16 (1)	10.00	G- C	0 / 395	0.09 (2)
B- I	-1240 / 0	-124.4	-124.4	0.02 (1)	5.76	C- F	-1255 / 0	0.26 (1)
I- C	-1215 / 0	-124.4	-124.4	0.14 (1)	5.67	H- I	-162 / 20	0.00 (1)
C- D	-12 / 0	-124.4	-124.4	0.13 (1)	6.25			
F- D	-162 / 0	0.0	0.0	0.02 (1)	7.81			
B- H	0 / 1163	-39.2	-39.2	0.32 (1)	10.00			
H- G	0 / 1163	-39.2	-39.2	0.38 (1)	10.00			
G- F	0 / 1163	-39.2	-39.2	0.81 (1)	10.00			
F- E	0 / 0	-39.2	-39.2	0.62 (1)	10.00			

DESIGN CRITERIA

SPECIFIED LOADS:

TOP CH.	LL	=	34.8	PSF
	DL	=	8.0	PSF
BOT CH.	LL	=	10.5	PSF
	DL	=	7.3	PSF
TOTAL LOAD		=	60.6	PSF

SPACING = 24.0 IN. C/C

THIS TRUSS IS DESIGNED FOR RESIDENTIAL OR SMALL BUILDING REQUIREMENTS OF PART 9, NBCC 2015

THIS DESIGN COMPLIES WITH:
- PART 9 OF BCBC 2018 , ABC 2019
- PART 9 OF OBC 2012 (2019 AMENDMENT)
- CSA 086-14
- TPIC 2014

(55 % OF 48.1 P.S.F. G.S.L. PLUS 8.4 P.S.F. RAIN LOAD) EQUALS 34.8 P.S.F. SPECIFIED ROOF LIVE LOAD

ALLOWABLE DEFL.(LL)= L/360 (0.26")
CALCULATED VERT. DEFL.(LL) = L/ 999 (0.08")
ALLOWABLE DEFL.(TL)= L/360 (0.26")
CALCULATED VERT. DEFL.(TL) = L/ 658 (0.14")

CSI: TC=0.16/1.00 (A-B:1) , BC=0.81/1.00 (F-G:1) , WB=0.26/1.00 (C-F:1) , SSI=0.42/1.00 (E-F:1)

DOL LUMBER=1.00 NAIL=1.00 LS BEND=1.10 COMP=1.10 SHEAR=1.10 TENS= 1.10

COMPANION LIVE LOAD FACTOR = 1.00

TRUSS PLATE MANUFACTURER IS NOT RESPONSIBLE FOR QUALITY CONTROL IN THE TRUSS MANUFACTURING PLANT .

NAIL VALUES

PLATE	GRIP(DRY) (PSI) MAX	MIN	SHEAR (PLI) MAX	MIN	SECTION (PLI) MAX	MIN
MT20	650	371	1747	788	1987	1873

PLATE PLACEMENT TOL. = 0.250 inches

PLATE ROTATION TOL. = 5.0 Deg.

JSI GRIP= 0.86 (C) (INPUT = 0.90)
JSI METAL= 0.48 (B) (INPUT = 1.00)

LICENSED PROFESSIONAL ENGINEER
N.A. EL-MASRI
PROVINCE OF ONTARIO
Dec 18, 2020

READ ALL NOTES ON THIS PAGE AND ON ENGINEERING NOTE PAGE ENP-1. THIS NOTE PAGE IS AN INTEGRAL PART OF THIS DRAWING AS IT CONTAINS SPECIFICATIONS AND CRITERIA USED IN THE DESIGN OF THIS COMPONENT.

Town of East Gwillimbury
Building Standards Branch BCIN #16487

These plans have been reviewed for use with the corrections as noted. No other changes may be made without written approval of the Building Standards Branch. All work must comply with Zoning By-Law 2018-043, as amended, and the Ontario Building Code, as amended. These approved documents must be kept on site at all times. The building permit must be clearly posted on site at all times.

Discipline	Reviewer	BCIN	Date
Building Code	H. Authier	43236	2021-02-04
Sewage System			
Zoning			

KOTT

JOB NAME	TRUSS NAME	QUANTITY	PLY	JOB DESC.	DRWG NO.
NE1220-127	T16	2	1	GREENPARK - TRINAR HALL - BRENTWOOD 2 EL 2 (TRUSS DESC.)	**Page 19 of 22**

Version 8.420 S Oct 9 2020 MiTek Industries, Inc. Fri Dec 18 08:50:45 2020 Page 1

ID:TuTOQa0IN0CxzxwdRwZMIDzHe7m-cw?4HIsqvt?iRqpiRoTw6SwV?9tSSmhM2wOpEZy7c

Scale = 1:57.4

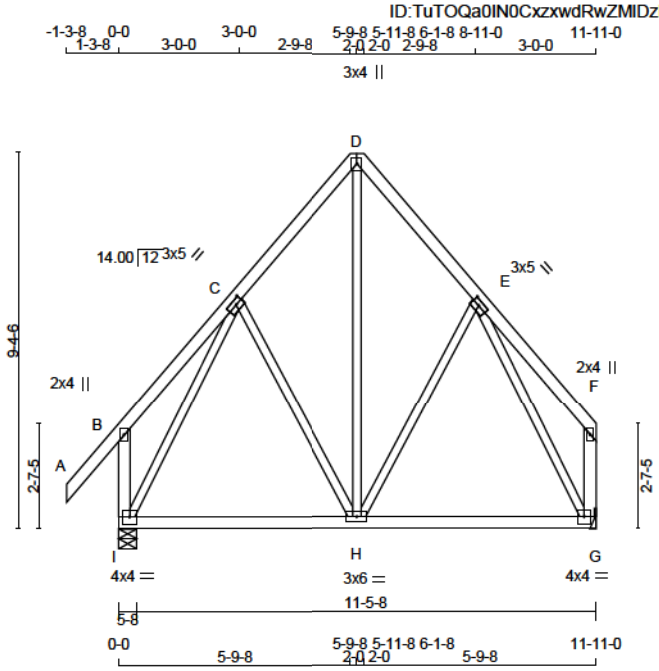

TOTAL WEIGHT = 2 X 69 = 138 lb

LUMBER

N. L. G. A. RULES

CHORDS	SIZE		LUMBER	DESCR.
A - D	2x4	DRY	No.2	SPF
D - F	2x4	DRY	No.2	SPF
I - B	2x4	DRY	No.2	SPF
G - F	2x4	DRY	No.2	SPF
I - G	2x4	DRY	No.2	SPF
ALL WEBS EXCEPT	2x3	DRY	No.2	SPF

DRY: SEASONED LUMBER.

PLATES (table is in inches)

JT	TYPE	PLATES	W	LEN	Y	X
B	TMV+p	MT20	2.0	4.0		
C	TMWW-t	MT20	3.0	5.0	1.50	2.25
D	TTW+p	MT20	3.0	4.0		
E	TMWW-t	MT20	3.0	5.0	1.50	2.25
F	TMV+p	MT20	2.0	4.0		
G	BMVW1-t	MT20	4.0	4.0		
H	BMWWW-t	MT20	3.0	6.0		
I	BMVW1-t	MT20	4.0	4.0		

DIMENSIONS, SUPPORTS AND LOADINGS SPECIFIED BY FABRICATOR TO BE VERIFIED BY BUILDING DESIGNER [M][F]

BEARINGS

JT	FACTORED GROSS REACTION VERT	HORZ	MAXIMUM GROSS REACTION DOWN	HORZ	FACTORED UPLIFT	INPUT BRG IN-SX	REQRD BRG IN-SX
I	1150	0	1150	0	0	5-8	1-8
G	975	0	975	0	0	MECHANICAL	

A SUITABLE HANGER/MECHANICAL CONNECTION IS REQUIRED AT JOINT G. MINIMUM BEARING LENGTH AT JOINT G = 1-8.

UNFACTORED REACTIONS

MAX./MIN. COMPONENT REACTIONS

JT	1ST LCASE COMBINED	SNOW	LIVE	PERM.LIVE	WIND	DEAD	SOIL
I	842	512 / 0	125 / 0	0 / 0	0 / 0	205 / 0	0 / 0
G	722	415 / 0	125 / 0	0 / 0	0 / 0	182 / 0	0 / 0

BEARING MATERIAL TO BE SPF NO.2 OR BETTER AT JOINT(S) I

BRACING

TOP CHORD TO BE SHEATHED OR MAX. PURLIN SPACING = 6.25 FT.
MAX. UNBRACED BOTTOM CHORD LENGTH = 10.00 FT OR RIGID CEILING DIRECTLY APPLIED.

ALL PITCH BREAKS AND PERIMETER CORNER JOINTS MUST BE LATERALLY RESTRAINED.

LOADING

TOTAL LOAD CASES: (4)

CHORDS

MEMB. FR-TO	MAX. FACTORED FORCE (LBS)	FACTORED VERT. LOAD (PLF) FROM	TO	LC1 MAX CSI (LC)	MAX. UNBRAC LENGTH
A- B	0 / 66	-124.4	-124.4	0.18 (1)	10.00
B- C	0 / 32	-124.4	-124.4	0.17 (1)	10.00
C- D	-544 / 0	-124.4	-124.4	0.13 (1)	6.25
D- E	-544 / 0	-124.4	-124.4	0.13 (1)	6.25
E- F	0 / 32	-124.4	-124.4	0.17 (1)	10.00
I- B	-314 / 0	0.0	0.0	0.04 (1)	7.81
G- F	-140 / 0	0.0	0.0	0.02 (1)	7.81
I- H	0 / 386	-39.2	-39.2	0.35 (3)	10.00
H- G	0 / 386	-39.2	-39.2	0.35 (3)	10.00

WEBS

MEMB. FR-TO	MAX. FACTORED FORCE (LBS)	MAX CSI (LC)
C- H	-111 / 28	0.08 (1)
H- E	-110 / 28	0.08 (1)
I- C	-840 / 0	0.58 (1)
E- G	-840 / 0	0.58 (1)
H- D	0 / 484	0.11 (1)

DESIGN CRITERIA

SPECIFIED LOADS:

TOP CH.	LL	=	34.8	PSF
	DL	=	8.0	PSF
BOT CH.	LL	=	10.5	PSF
	DL	=	7.3	PSF
TOTAL LOAD		=	60.6	PSF

SPACING = 24.0 IN. C/C

THIS TRUSS IS DESIGNED FOR RESIDENTIAL OR SMALL BUILDING REQUIREMENTS OF PART 9, NBCC 2015

THIS DESIGN COMPLIES WITH:
- PART 9 OF BCBC 2018 , ABC 2019
- PART 9 OF OBC 2012 (2019 AMENDMENT)
- CSA 086-14
- TPIC 2014

(55 % OF 48.1 P.S.F. G.S.L. PLUS 8.4 P.S.F. RAIN LOAD) EQUALS 34.8 P.S.F. SPECIFIED ROOF LIVE LOAD

ALLOWABLE DEFL.(LL)= L/360 (0.40")
CALCULATED VERT. DEFL.(LL) = L/ 999 (0.04")
ALLOWABLE DEFL.(TL)= L/360 (0.40")
CALCULATED VERT. DEFL.(TL) = L/ 999 (0.07")

CSI: TC=0.18/1.00 (A-B:1) , BC=0.35/1.00 (H-I:3) , WB=0.58/1.00 (C-I:1) , SSI=0.16/1.00 (G-H:3)

DOL LUMBER=1.00 NAIL=1.00 LS BEND=1.10 COMP=1.10 SHEAR=1.10 TENS= 1.10

COMPANION LIVE LOAD FACTOR = 1.00

TRUSS PLATE MANUFACTURER IS NOT RESPONSIBLE FOR QUALITY CONTROL IN THE TRUSS MANUFACTURING PLANT .

NAIL VALUES

PLATE	GRIP(DRY) (PSI) MAX	MIN	SHEAR (PLI) MAX	MIN	SECTION (PLI) MAX	MIN
MT20	650	371	1747	788	1987	1873

PLATE PLACEMENT TOL. = 0.250 inches

PLATE ROTATION TOL. = 5.0 Deg.

JSI GRIP= 0.82 (E) (INPUT = 0.90)
JSI METAL= 0.24 (C) (INPUT = 1.00)

LICENSED PROFESSIONAL ENGINEER
N.A. EL-MASRI
PROVINCE OF ONTARIO
Dec 18, 2020

READ ALL NOTES ON THIS PAGE AND ON ENGINEERING NOTE PAGE ENP-1. THIS NOTE PAGE IS AN INTEGRAL PART OF THIS DRAWING AS IT CONTAINS SPECIFICATIONS AND CRITERIA USED IN THE DESIGN OF THIS COMPONENT.

Town of East Gwillimbury
Building Standards Branch BCIN #16487

These plans have been reviewed for use with the corrections as noted. No other changes may be made without written approval of the Building Standards Branch. All work must comply with Zoning By-Law 2018-043, as amended, and the Ontario Building Code, as amended. These approved documents must be kept on site at all times. The building permit must be clearly posted on site at all times.

Discipline	Reviewer	BCIN	Date
Building Code	H. Authier	43236	2021-02-04
Sewage System			
Zoning			

KOTT

1) ENSURE TRUSS HAS BEEN DESIGNED WITH ADDITIONAL TOP CHORD DEAD LOAD EQUAL TO OR GREATER THAN WEIGHT OF SOLAR PANELS BEING INSTALLED

2) ATTACH SOLAR PANELS TO EACH TRUSS LOCATED UNDER THE SOLAR PANELS (I.E. @ 24" C/C PERPENDICULAR TO THE TRUSS DIRECTION)

3) ATTACH A SPF No.1/2 SCAB OF THE SAME SIZE AS TRUSS CHORD ON ONE SIDE ALONG THE FULL LENGTH OF THE MEMBER UNDER THE SOLAR PANELS USING 2 ROWS OF 3" WIRE NAILS @ 6" C/C

4) ATTACH SOLAR PANELS TO SCAB AT A MAXIMUM SPACING OF 48" C/C ALONG THE MEMBER (PARALLEL TO TRUSS DIRECTION) AS PER MANUFACTURER'S INSTRUCTIONS

5) DO NOT USE LAG SCREWS IN TRUSS MEMBERS. LAG SCREWS SHOULD ATTACH TO SCABS ONLY

6) MAXIMUM NUMBER OF SCAB SPLICES IS TWO

7) THIS DETAIL IS APPLICABLE TO PART 9 BUILDINGS ONLY

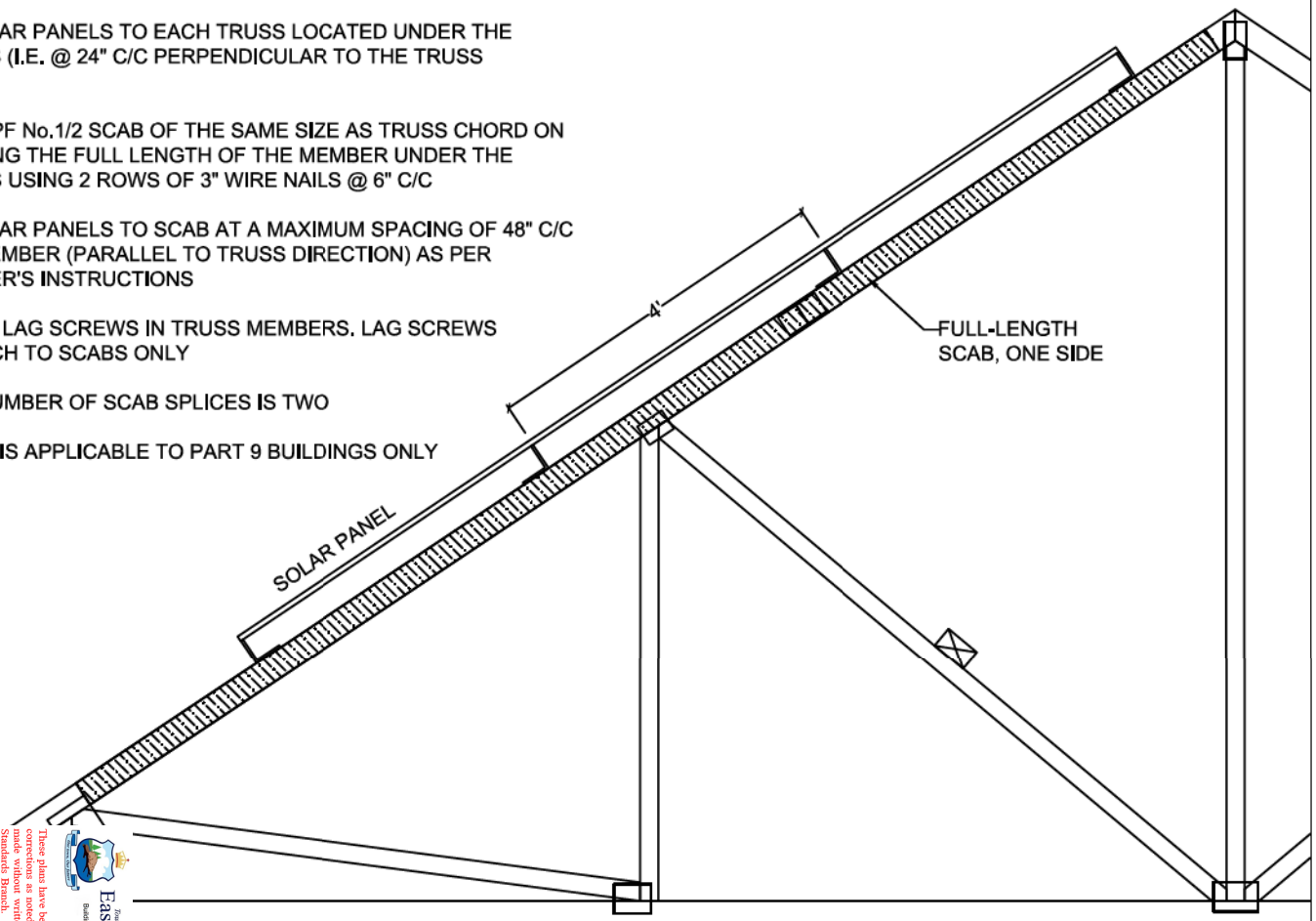

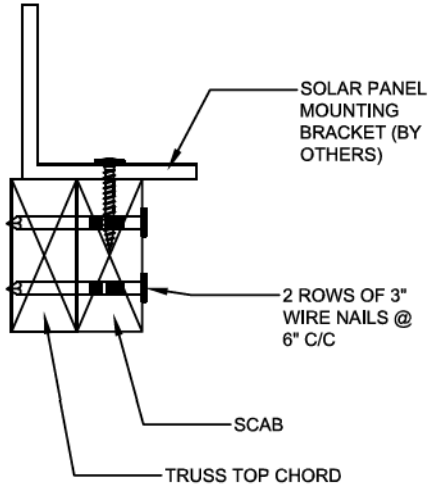

Town of East Gwillimbury
Building Standards Branch BCIN #16487

These plans have been reviewed for use with the corrections as noted. No other changes may be made without written approval of the Building Standards Branch. All work must comply with Zoning By-Law 2018-043, as amended, and the Ontario Building Code, as amended. These approved documents must be kept on site at all times. The building permit must be clearly posted on site at all times.

Discipline	Reviewer	BCIN	Date
Building Code	H. Auffier	43236	2021-02-04
Sewage System			
Zoning			

NE1220-127
GREENPARK - TRINAR HALL
- BRENTWOOD 2 EL 2

LICENSED PROFESSIONAL ENGINEER
N.A. EL-MASRI
PROVINCE OF ONTARIO
Dec 18, 2020

Detail for Installation of Solar Panels - Scab Method

KOTT

NE1220-127
GREENPARK - TRINAR HALL -
BRENTWOOD 2 EL 2

BEARING ANCHORAGE BY TOE-NAILS FOR LATERAL CAPACITY

B97791H1

NAIL TYPE	LENGTH (IN)	DIAMETER (IN)	NAIL LATERAL CAPACITY (LB)	
			S-P-F	D. FIR
COMMON WIRE	3.00	0.144	132	147
	3.25	0.144	132	147
	3.50	0.160	159	177
COMMON SPIRAL	3.00	0.122	97	108
	3.25	0.122	97	108
	3.50	0.152	145	162

NOTES:

1. Rafter and ceiling members may be anchored to top and bottom chords of girder truss by toe-nailing rafter and ceiling members to girder chords provided the reaction does not exceed the lateral capacities in the table. Hangers (specified by others) are required for reactions higher than the maximum toe-nail capacity. Reactions are based on factored loads.
2. Toe nail capacities shown in the table are for **one** toe-nail. For additional toe-nails multiply values in table by the number of toe-nails used. Toe-nail capacities take into account toe-nailing factor J_A in CSA O86-14, section 12.9.4.1.
3. For 9- 3/4 gauge 3.25" common wire gun nails (diameter = 0.120") use 3" common spiral nail values.
4. Maximum number of toe-nails allowed depends on the lumber size & species to be toe-nailed to supporting member and nail diameter, as shown in tables below.
5. Nail values in table are based on the following relative lumber densities: G = 0.42 (SPF), G = 0.49 (D. Fir).
6. Toe-nails shall be driven at approximately 1/3 the nail length from the edge of the joist/truss chord and driven at an angle of 30º to the grain of the member (See next page for nailing on bearing plate).
7. For loads due to **wind** the nail lateral capacity in this table may be multiplied by 1.15 (K_D factor).
8. Lumber must be dry (< 19% moisture content) at the time of nail installation.
9. Nail values in this table comply with CSA O86-14, section 12.9.4
10. This design is not valid after March 31, 2021.

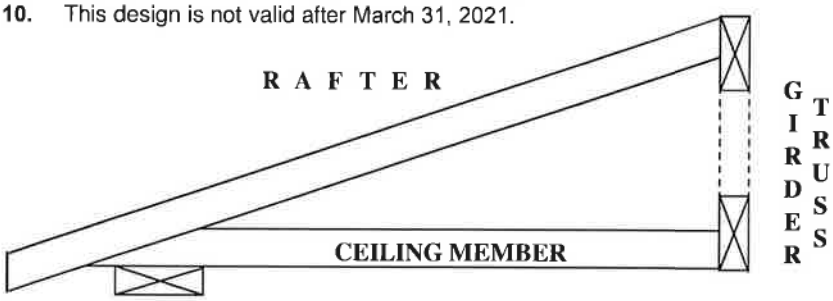

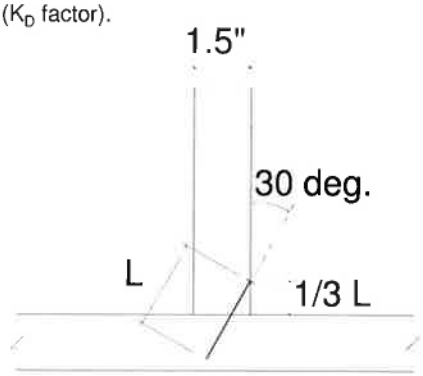

TOE-NAIL INSTALLATION

Nail type	Common wire	Common spiral	Common wire	Common spiral
Nail dia. (in)	0.160	0.152	0.144	0.122
	(3.5" nail)		(3" and 3.25" nail)	
LUMBER SIZE	**MAXIMUM NUMBER OF TOE-NAILS**			
2X4 SPF	2	2	3	3
2X4 D. Fir	2	2	2	2
2X6 SPF	4	4	4	5
2X6 D. Fir	3	3	3	4

MiTek®
MiTek Canada Inc
100 Industrial Rd.
Bradford, Ontario L3Z 3G7

PEO
Certificate No. 10889485

LICENSED PROFESSIONAL ENGINEER
rdogiannis
1553736
PROVINCE OF ONTARIO

Town of East Gwillimbury
Building Standards Branch BCIN #16487

These plans have been reviewed for use with the corrections as noted. No other changes may be made without written approval of the Building Standards Branch. All work must comply with Zoning By-Law 2018-043, as amended, and the Ontario Building Code, as amended. These approved documents must be kept on site at all times. The building permit must be clearly posted on site at all times.

Discipline	Reviewer	BCIN	Date
Building Code	H. Authier	43236	2021-02-04
Sewage System			
Zoning			

December 2,

NE1220-127
GREENPARK - TRINAR HALL -
BRENTWOOD 2 EL 2

BEARING ANCHORAGE BY TOE-NAILS FOR WIND LOADING

B97791H2

NAIL TYPE	LENGTH (IN)	DIAMETER (IN)	NAIL WITHDRAWAL CAPACITY (LB)	
			S-P-F	D. FIR
COMMON WIRE	3.00	0.144	30	42
	3.25	0.144	32	45
	3.50	0.160	38	52
COMMON SPIRAL	3.00	0.122	26	36
	3.25	0.122	28	40
	3.50	0.152	36	50

Note: If using truss with D. Fir lumber and S-P-F bearing plate, use values in table for S-P-F.

NOTES:

1. Truss chord, rafter, or ceiling members may be anchored to bearing plate by toe-nails, provided that the actual factored uplift force due to **wind** or **earthquake** load does not exceed the withdrawal capacities in the table. Hangers (specified by others) are required for uplift forces that are higher than the maximum toe-nail withdrawal capacity.
2. Toe nail capacities shown in the table are for **one** toe-nail. For additional toe-nails multiply values in table by the number of toe-nails used. Toe-nail capacities take into account toe-nailing factor J_A in CSA O86-14, section 12.9.5.2.
3. For 9- 3/4 gauge 3.25" common wire gun nails (diameter = 0.120") use 3" common spiral nail values.
4. Maximum number of toe-nails allowed depends on the lumber size & species to be toe-nailed to supporting member and nail diameter, as shown in table above.
5. Nail values in table are based on the following relative lumber densities: G = 0.42(SPF), G = 0.49(D. Fir).
6. Toe-nails shall be driven at approximately 1/3 the nail length from the edge of the joist/truss chord and driven at an angle of 30° to the grain of the member (See drawing on detail B37579H1).
7. Lumber must be dry (< 19% moisture content) at the time of nail installation.
8. Nail values in this table comply with CSA O86-14, section 12.9.5
9. This design is not valid after March 31, 2021.

Toe-nailing on 2x6 Bearing Plate

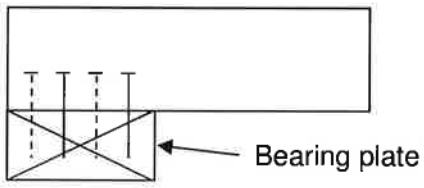

Elevation view

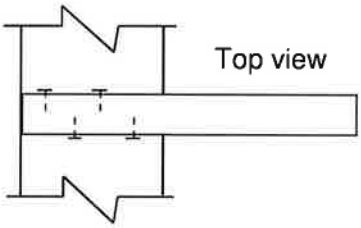

Top view

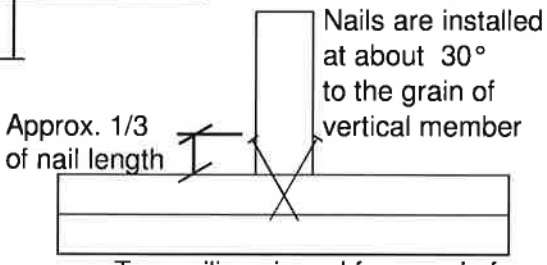

Toe-nailing viewed from end of joist or truss

Toe-nailing on 2x4 Bearing Plate

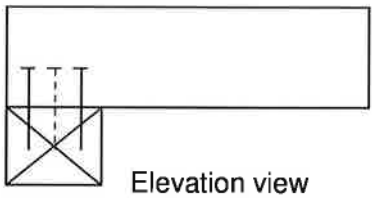

Elevation view

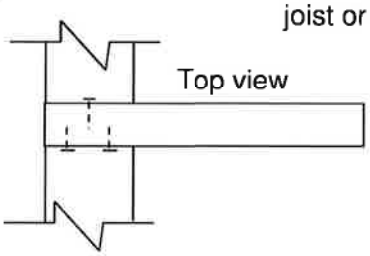

Top view

MiTek®

MiTek Canada Inc
100 Industrial Rd.
Bradford, Ontario L3Z 3G7

PEO
Certificate No. 10889485

LICENSED PROFESSIONAL ENGINEER
Cordogiannis
90553736
PROVINCE OF ONTARIO

Town of East Gwillimbury
Building Standards Branch BCIN #16487

These plans have been reviewed for use with the corrections as noted. No other changes may be made without written approval of the Building Standards Branch. All work must comply with Zoning By-Law 2018-043, as amended, and the Ontario Building Code, as amended. These approved documents must be kept on site at all times. The building permit must be clearly posted on site at all times.

Dece

Discipline	Reviewer	BCIN	Date
Building Code	H. Authier	43236	2021-02-04
Sewage System			
Zoning			