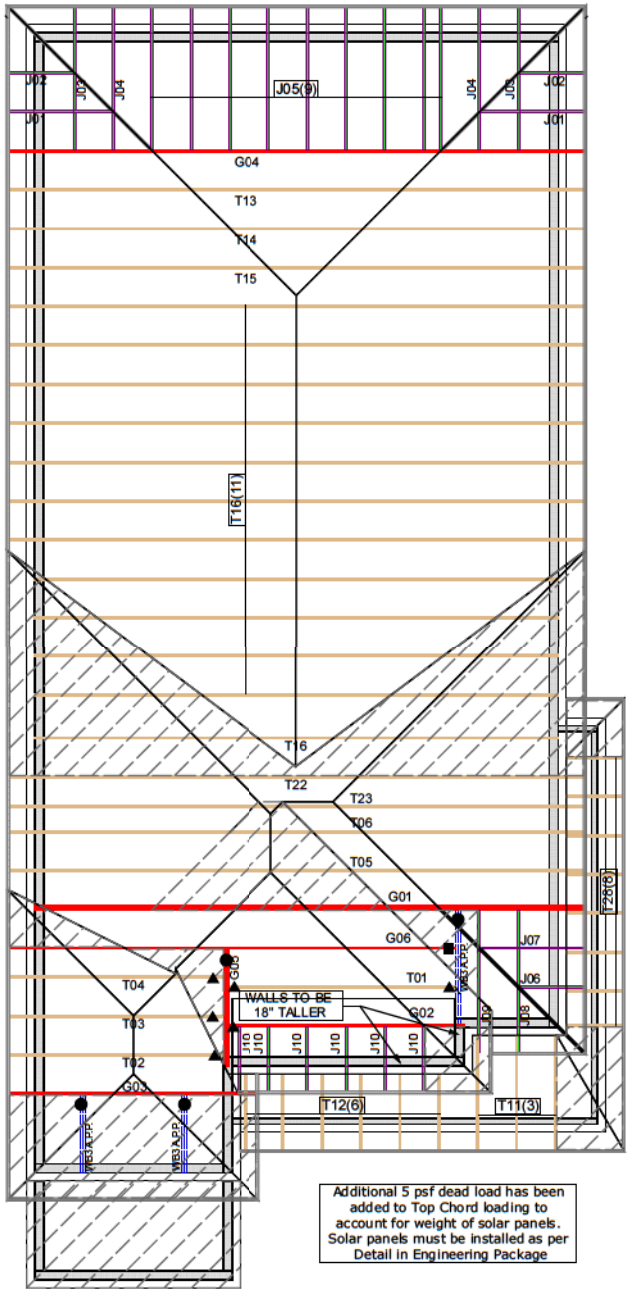

Additional 5 psf dead load has been added to Top Chord loading to account for weight of solar panels. Solar panels must be installed as per Detail in Engineering Package

Hanger Name	Symbol	QTY
LUS24	▲	6
LJS26DS	■	1
HGUS26-2	●	4

Town of East Gwillimbury
Building Standards Branch BCIN #16487

These plans have been reviewed for use with the corrections as noted. No other changes may be made without written approval of the Building Standards Branch. All work must comply with Zoning By-Law 2018-043, as amended, and the Ontario Building Code, as amended. These approved documents must be kept on site at all times. The building permit must be clearly posted on site at all times.

Discipline	Reviewer	BCIN	Date
Building Code	H. Authier	43236	2021-02-05
Sewage System			
Zoning			

CONVENTIONAL FRAMING BY OTHERS

ALL CONVENTIONAL FRAMING TO CONFORM WITH PART 9 OF THE OBC. ROOF RAFTERS THAT CROSS OVER TRUSSES TO BE MIN. 2x4 SPF @ 24" C/C WITH A 2x4 VERTICAL POST TO THE TRUSS BELOW. VERTICAL POSTS TO BE LATERALLY BRACED SO THAT UNBRACED LENGTH DOES NOT EXCEED 6'. DESIGN OF CONVENTIONAL FRAMING IS THE RESPONSIBILITY OF THE PROJECT ENGINEER.

JOB INFORMATION

Customer	GREENPARK HOMES
Job #	20-00420R0
Address	TRINAR HALL EAST GWILLIMBURY,ON
Model	BRENTWOOD 3 EL 1
Sales Rep	RALPH MIRIGELLO
Designer	KR
Date	12/18/2020
Path	C:\MITEK\CA\JOBS\GREENPARK HOMES\TRINAR HALL\BRENTWOOD 3\ELEV 1\T-BRENTWOOD3-1\

DESIGN INFORMATION

Code	NBCC 2015
Bldg	Residential - HSB (NBCC Part 9)
TC LL	34.8 lb/ft²
TC DL	8.0 lb/ft²
BC LL	10.5 lb/ft²
BC DL	7.3 lb/ft²
Deflection	LL=L/360 TL=L/360
Spacing	24" O/C unless otherwise noted
Complies With	OBC 2012 (2019 Amendment) CSA O86-14 and TPIC 2014

IMPORTANT INFORMATION

Refer to truss drawings in the Truss Engineering Package for ply-to-ply attachment notes

For site-framed valleys: top chords of all roof trusses must be laterally supported using 2x4 continuous bracing @24 O/C - all bracing must be anchored at ends as per TPIC Installation Guidelines

Read all notes on this page in addition to those shown on the KOTT Truss Engineering package

Field erection, handling and bracing are not the responsibility of KOTT, or KOTT Engineering

Unless noted otherwise, hurricane ties are to be installed at the bearings of all trusses > 40 ft clear span, and any girder or beam supporting trusses with a clear span >40 ft. See hanger legend for type.

Unless noted otherwise, for Part 9 bldgs, all trusses are to be anchored to the top of supporting walls as follows: trusses with a clear span <40 ft use 3-1/4" nails @ each bearing; trusses with a clear span >40 ft use 3-1/4" nails @ each bearing in addition to the appropriate hurricane tie.

KOTT Inc.
14 Anderson Blvd.
Uxbridge, ON
905.642.4400

KOTT

NE1220-129
GREENPARK - TRINAR HALL -
BRENTWOOD 3 EL 1

ENGINEERING NOTE PAGE (ENP-1)

PLEASE READ PRIOR TO INSTALLATION

RESPONSIBILITIES

THIS DESIGN IS FOR AN INDIVIDUAL BUILDING COMPONENT AND HAS BEEN BASED ON INFORMATION PROVIDED BY KOTT DESIGN. THE UNDERSIGNED ENGINEER DISCLAIMS ANY RESPONSIBILITY FOR DAMAGES AS A RESULT OF FAULTY OR INCORRECT INFORMATION, SPECIFICATION AND/OR DESIGNS FURNISHED TO THE ENGINEER. THE UNDERSIGNED ENGINEER IS ONLY RESPONSIBLE FOR THE STRUCTURAL INTEGRITY OF THIS BUILDING COMPONENT FOR THE CONDITIONS AND LOADS SHOWN ON THIS DRAWING. THE STRUCTURAL INTEGRITY OF THE BUILDING AND THE VERIFICATION OF THE DIMENSIONS AND THE DESIGN LOADS USED ARE THE RESPONSIBILITY OF THE BUILDING DESIGNER.

TRUSSES ARE DESIGNED IN CONFORMANCE WITH THE RELEVANT SECTIONS OF THE NATIONAL BUILDING CODE OF CANADA OR THE CANADIAN CODE FOR FARM BUILDINGS, WHICHEVER APPLIES TO THE BUILDING TYPE INDICATED ON THE DRAWING

IT IS THE RESPONSIBILITY OF KOTT TO ENSURE THAT TRUSSES ARE MANUFACTURED IN CONFORMANCE WITH THESE DESIGNS AND WITH THE SPECIFICATIONS OUTLINED BELOW. THE UNDERSIGNED ENGINEER IS NOT RESPONSIBLE FOR QUALITY CONTROL IN THE TRUSS MANUFACTURING PLANT.

USE AND OCCUPANCY

- The building is of the type indicated on the drawing

LOADING

- The truss loading intensity and distribution as well as load transfer mechanism is that indicated on the drawing
- No buildings, trees, parapets or other projections higher than the roof for which the trusses are used are located within a distance less than ten (10) times the difference in height, or five metres (16 ft) whichever is greater, unless the drawing indicates that the snow drifting has been taken into account

HANDLING, INSTALLATION AND BRACING

- The trusses must be handled and installed by a qualified professional as per the supplied document titled *Information for Truss Installers* and the BCSI-B1 and BCSI-B3 Summary Sheets
- The compression chords are laterally braced by continuous rigid diaphragm sheathing or as specified on the drawing
- Temporary and permanent bracing must be installed as indicated on the truss drawing and according to the BCSI-B1 and BCSI-B3 Summary Sheets. Bracing for the lateral stability of the truss is to be provided by the building designer
- **It is recommended that a Professional Engineer's advice be obtained for the bracing of trusses spanning more than 12.37m (40'-7")**

SUPPORTS

- The trusses are to be supported at the bearing points indicated and anchored to the supports where considered necessary by the designer of the overall structu
- Bearing sizes shown are the minimum required to prevent c members and do not necessarily take into account stability of the overall building
- Elevation of bearings must be carefully checked and shimm olid bearings
- Adequate wood truss bearing is the responsibility of the bui

DIMENSIONS

- Geometry of the truss and dimensions indicated on the dra hose of the installed truss.

Town of East Gwillimbury
Building Standards Branch BCIN #16487

These plans have been reviewed for use with the corrections as noted. No other changes may be made without written approval of the Building Standards Branch. All work must comply with Zoning By-Law 2018-043, as amended, and the Ontario Building Code, as amended. These approved documents must be kept on site at all times. The building permit must be clearly posted on site at all times.

Discipline	Reviewer	BCIN	Date
Building Code	H. Authier	43236	2021-02-05
Sewage System			
Zoning			

KOTT

2020/04/22

JOB NAME	TRUSS NAME	QUANTITY	PLY	JOB DESC.	DRWG NO.
NE1220-129	G01	1	2	GREENPARK - TRINAR HALL - BRENTWOOD 3 EL 1 (TRUSS DESC.)	

Version 8.420 S Oct 9 2020 MiTek Industries, Inc. Fri Dec 18 09:14:04 2020 Page 1
ID:qKv8nLSCtBps7zaDJTm7k2zFzGC-831vufnNRjGDnqGau63_ITNXN6J_kPpHl4nLr_y7r

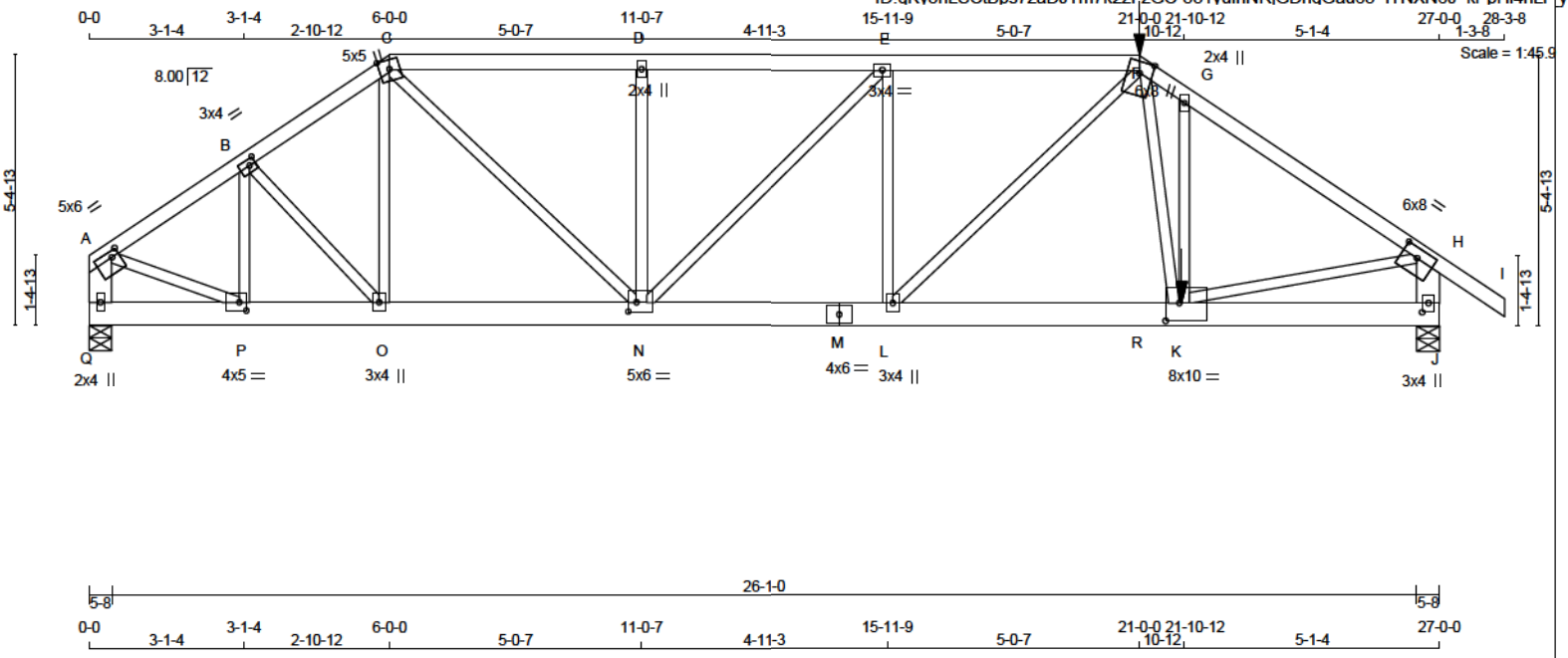

LUMBER

N. L. G. A. RULES

CHORDS	SIZE		LUMBER	DESCR.
A - C	2x4	DRY	2100F 1.8E	SPF
C - F	2x4	DRY	No.2	SPF
F - I	2x4	DRY	2100F 1.8E	SPF
Q - A	2x6	DRY	No.2	SPF
J - H	2x6	DRY	No.2	SPF
Q - M	2x6	DRY	No.2	SPF
M - J	2x6	DRY	No.2	SPF
ALL WEBS EXCEPT	2x3	DRY	No.2	SPF

DRY: SEASONED LUMBER.

DESIGN CONSISTS OF 2 TRUSSES BUILT SEPARATELY THEN FASTENED TOGETHER AS FOLLOWS:

CHORDS	#ROWS	SURFACE SPACING (IN)	LOAD(PLF)
TOP CHORDS : (0.122"X3") SPIRAL NAILS			
A- C	1	12	TOP
C- F	1	12	SIDE(0.0)
F- I	1	12	SIDE(0.0)
Q- A	2	12	TOP
J- H	2	12	TOP
BOTTOM CHORDS : (0.122"X3") SPIRAL NAILS			
Q- M	2	12	TOP
M- J	2	12	SIDE(22.0)
WEBS : (0.122"X3") SPIRAL NAILS			
2x3	1	6	

NAILS TO BE DRIVEN FROM ONE SIDE ONLY.

GIRDER NAILING ASSUMES NAILED HANGERS ARE FASTENED WITH MIN. 3-0 INCH NAILS.

TOP - COMPONENTS ARE LOADED FROM THE TOP AND MUST BE PLACED ON TOP EDGE OF ALL PLIES FOR THE LOAD TO BE TRANSFERRED TO EACH PLY.

SIDE - PLF SHOWN IS THE EQUIVALENT UDL APPLIED TO ONE SIDE THAT THE CORRESPONDING NAILING PATTERN SHALL BE CAPABLE OF TRANSFERING. REMAINING PLF MUST BE APPLIED ON THE OPPOSITE SIDE OR ON THE TOP.

LICENSED PROFESSIONAL ENGINEER
N.A. EL-MASRI
PROVINCE OF ONTARIO
Dec 18, 2020

READ ALL NOTES ON THIS PAGE AND ON ENGINEERING NOTE PAGE ENP-1. THIS NOTE PAGE IS AN INTEGRAL PART OF THIS DRAWING AS IT CONTAINS SPECIFICATIONS AND CRITERIA USED IN THE DESIGN OF THIS COMPONENT.

DIMENSIONS, SUPPORTS AND LOADINGS SPECIFIED BY FABRICATOR TO BE VERIFIED BY BUILDING DESIGNER [M]

BEARINGS

JT	FACTORED GROSS REACTION VERT	HORZ	MAXIMUM GROSS REACTION DOWN	HORZ	FACTORED UPLIFT	INPUT BRG IN-SX	REQRD BRG IN-SX
Q	3175	0	3175	0	0	5-8	1-12
J	6423	0	6423	0	0	5-8	4-15

UNFACTORED REACTIONS

1ST LCASE MAX./MIN. COMPONENT REACTIONS

JT	COMBINED	SNOW	LIVE	PERM.LIVE	WIND	DEAD	SOIL
Q	2349	1357 / 0	401 / 0	0 / 0	0 / 0	591 / 0	0 / 0
J	4756	2734 / 0	822 / 0	0 / 0	0 / 0	1200 / 0	0 / 0

BEARING MATERIAL TO BE SPF NO.2 OR BETTER AT JOINT(S) Q, J

BRACING

TOP CHORD TO BE SHEATHED OR MAX. PURLIN SPACING = 3.66 FT.
MAX. UNBRACED BOTTOM CHORD LENGTH = 10.00 FT OR RIGID CEILING DIRECTLY APPLIED.

ALL PITCH BREAKS AND PERIMETER CORNER JOINTS MUST BE LATERALLY RESTRAINED.

LOADING

TOTAL LOAD CASES: (4)

CHORDS

MEMB. FR-TO	MAX. FORCE (LBS)	FACTORED VERT. LOAD (PLF) FROM	TO	LC1 MAX CSI (LC)	MAX. UNBRAC LENGTH
A- B	-3539 / 0	-124.4	-124.4	0.07 (1)	5.91
B- C	-3918 / 0	-124.4	-124.4	0.07 (1)	5.68
C- D	-5037 / 0	-124.4	-124.4	0.35 (1)	4.01
D- E	-5037 / 0	-124.4	-124.4	0.35 (1)	4.00
E- F	-6015 / 0	-124.4	-124.4	0.41 (1)	3.66
F- G	-8136 / 0	-124.4	-124.4	0.12 (1)	4.21
G- H	-8041 / 0	-124.4	-124.4	0.32 (1)	4.08
H- I	0 / 47	-124.4	-124.4	0.06 (1)	10.00
Q- A	-3084 / 0	0.0	0.0	0.11 (1)	7.81
J- H	-6212 / 0	0.0	0.0	0.22 (1)	5.94
Q- P	0 / 0	-39.2	-39.2	0.04 (1)	10.00
P- O	0 / 2960	-39.2	-39.2	0.24 (1)	10.00
O- N	0 / 3237	-39.2	-39.2	0.26 (1)	10.00
N- M	0 / 6015	-39.2	-39.2	0.43 (1)	10.00
M- L	0 / 6015	-39.2	-39.2	0.43 (1)	10.00
L- R	0 / 6073	-39.2	-39.2	0.46 (1)	10.00
R- K	0 / 6073	-74.0	-74.0	0.46 (1)	10.00
K- J	0 / 0	-74.0	-74.0	0.12 (2)	10.00

WEBS

MEMB. FR-TO	MAX. FORCE (LBS)	FACTORED MAX CSI (LC)
P- B	-945 / 0	0.10 (1)
B- O	0 / 411	0.05 (1)
O- C	-35 / 105	0.01 (3)
C- N	0 / 2540	0.31 (1)
N- D	-660 / 0	0.14 (1)
N- E	-1396 / 0	0.65 (1)
L- E	0 / 366	0.05 (2)
L- F	-81 / 0	0.04 (1)
K- G	-579 / 0	0.10 (1)
A- P	0 / 3108	0.38 (1)
K- H	0 / 6821	0.84 (1)
F- K	0 / 3863	0.48 (1)

FACTORED CONCENTRATED LOADS (LBS)

JT	LOC.	LC1	MAX-	MAX+	FACE	DIR.	TYPE	HEEL	CONN.
F	21-0-0	-560	-560	---	FRONT	VERT	TOTAL	---	C1
K	21-10-0	-991	-1110	---	FRONT	VERT	DEAD	---	C1
K	21-10-0	-544	-816	---	FRONT	VERT	LIVE	---	C1
K	21-10-0	-2704	-2704	---	FRONT	VERT	SNOW	---	C1

CONNECTION REQUIREMENTS

1) C1: A SUITABLE HANGER/MECHANICAL CONNECTION IS REQUIRED.

Town of East Gwillimbury
Building Standards Branch BCIN #16487

These plans have been reviewed for use with the corrections as noted. No other changes may be made without written approval of the Building Standards Branch. All work must comply with Zoning By-Law 2018-043, as amended, and the Ontario Building Code, as amended. These approved documents must be kept on site at all times. The building permit must be clearly posted on site at all times.

Discipline	Reviewer	BCIN	Date
Building Code	H. Authier	43236	2021-02-05
Sewage System			
Zoning			

DESIGN CRITERIA

*** SPECIAL LOADS ANALYSIS ***
GEOMETRY AND/OR BASIC LOADS CHANGED BY USER.
LOADS WERE DERIVED FROM USER INPUT
NO FURTHER MODIFICATIONS WERE MADE

SPECIFIED LOADS:

TOP CH.	LL	=	34.8	PSF
	DL	=	8.0	PSF
BOT CH.	LL	=	10.5	PSF
	DL	=	7.3	PSF
TOTAL LOAD		=	60.6	PSF

SPACING = 24.0 IN. C/C

LOADING IN FLAT SECTION BASED ON A SLOPE OF 2.00/12 MINIMUM

GIRDER TYPE: CPrimeHip
SIDE SETBACK = 6-0-0
END SETBACK = 6-0-0
END WALL WIDTH = 5-8
CORNER FRAMING TYPE: CONVENTIONAL
END JACK TYPE: CONVENTIONAL
APPLIED TO FRONT SIDE
- ADDT'L LOADS BASED ON 55 % OF GSL.
LOADS APPLIED TO FIRST 6-2-0 OF SPAN MEASURED FROM THE RIGHT.

*** NON STANDARD GIRDER ***
ADDT'L USER-DEFINED LOADS APPLIED TO ALL LOAD CASES.

THIS TRUSS IS DESIGNED FOR RESIDENTIAL OR SMALL BUILDING REQUIREMENTS OF PART 9, NBCC 2015

THIS DESIGN COMPLIES WITH:
- PART 9 OF BCBC 2018 , ABC 2019
- PART 9 OF OBC 2012 (2019 AMENDMENT)
- CSA 086-14
- TPIC 2014

(55 % OF 48.1 P.S.F. G.S.L. PLUS 8.4 P.S.F. RAIN LOAD) EQUALS 34.8 P.S.F. SPECIFIED ROOF LIVE LOAD

ALLOWABLE DEFL.(LL)= L/360 (0.90")
CALCULATED VERT. DEFL.(LL) = L/ 999 (0.10")
ALLOWABLE DEFL.(TL)= L/360 (0.90")
CALCULATED VERT. DEFL.(TL) = L/ 999 (0.17")

CSI: TC=0.41/1.00 (E-F:1) , BC=0.46/1.00 (K-L:1) , WB=0.84/1.00 (H-K:1) , SSI=0.16/1.00 (E-F:1)

DOL LUMBER=1.00 NAIL=1.00 LS BEND=1.00 COMP=1.00 SHEAR=1.00 TENS= 1.00

COMPANION LIVE LOAD FACTOR = 1.00

TRUSS PLATE MANUFACTURER IS NOT RESPONSIBLE FOR QUALITY CONTROL IN THE TRUSS MANUFACTURING PLANT .

NAIL VALUES

PLATE	GRIP(DRY) (PSI) MAX	MIN	SHEAR (PLI) MAX	MIN	SECTION (PLI) MAX	MIN
MT20	650	371	1747	788	1987	1873

CONTINUED ON PAGE 2

KOTT

PLATES (table is in inches)

JT	TYPE	PLATES	W	LEN	Y	X
A	TMVW-t	MT20	5.0	6.0	1.50	1.75
B	TMWW-t	MT20	3.0	4.0	1.50	1.50
C	TTWW+m	MT20	5.0	5.0	Edge	
D	TMW+w	MT20	2.0	4.0		
E	TMWW-t	MT20	3.0	4.0		
F	TTWW+m	MT20	6.0	8.0	Edge	
G	TMW+w	MT20	2.0	4.0		
H	TMVW-t	MT20	6.0	8.0	2.25	3.75
J	BMV1+p	MT20	3.0	4.0	2.25	1.50
K	BMWWW-t	MT20	8.0	10.0	4.25	3.25
L	BMWW+t	MT20	3.0	4.0		
M	BS-t	MT20	4.0	6.0		
N	BMWWW-t	MT20	5.0	6.0	2.25	2.00
O	BMWW+t	MT20	3.0	4.0		
P	BMWW-t	MT20	4.0	5.0	2.00	1.75
Q	BMV1+p	MT20	2.0	4.0		

Edge - INDICATES REFERENCE CORNER OF PLATE TOUCHES EDGE OF CHORD.

PLATE PLACEMENT TOL. = 0.250 inches

PLATE ROTATION TOL. = 5.0 Deg.

JSI GRIP= 0.90 (N) (INPUT = 0.90)
JSI METAL= 0.74 (H) (INPUT = 1.00)

READ ALL NOTES ON THIS PAGE AND ON ENGINEERING NOTE PAGE ENP-1. THIS NOTE PAGE IS AN INTEGRAL PART OF THIS DRAWING AS IT CONTAINS SPECIFICATIONS AND CRITERIA USED IN THE DESIGN OF THIS COMPONENT.

Town of East Gwillimbury
Building Standards Branch BCIN #16487

These plans have been reviewed for use with the corrections as noted. No other changes may be made without written approval of the Building Standards Branch. All work must comply with Zoning By-Law 2018-043, as amended, and the Ontario Building Code, as amended. These approved documents must be kept on site at all times. The building permit must be clearly posted on site at all times.

Discipline	Reviewer	BCIN	Date
Building Code	H. Authier	43236	2021-02-05
Sewage System			
Zoning			

KOTT

JOB NAME	TRUSS NAME	QUANTITY	PLY	JOB DESC.		DRWG NO.
NE1220-129	G02	1	1	TRUSS DESC.	GREENPARK - TRINAR HALL - BRENTWOOD 3 EL 1	**Page 4 of 37**

Version 8.420 S Oct 9 2020 MiTek Industries, Inc. Fri Dec 18 09:14:05 2020 Page 1
ID:qKv8nLSCtBps7zaDJTm7k2zFzGC-cFbK6?o?C1O4O rmSpbDrhvqsWjVT vQ kWuNQy7n

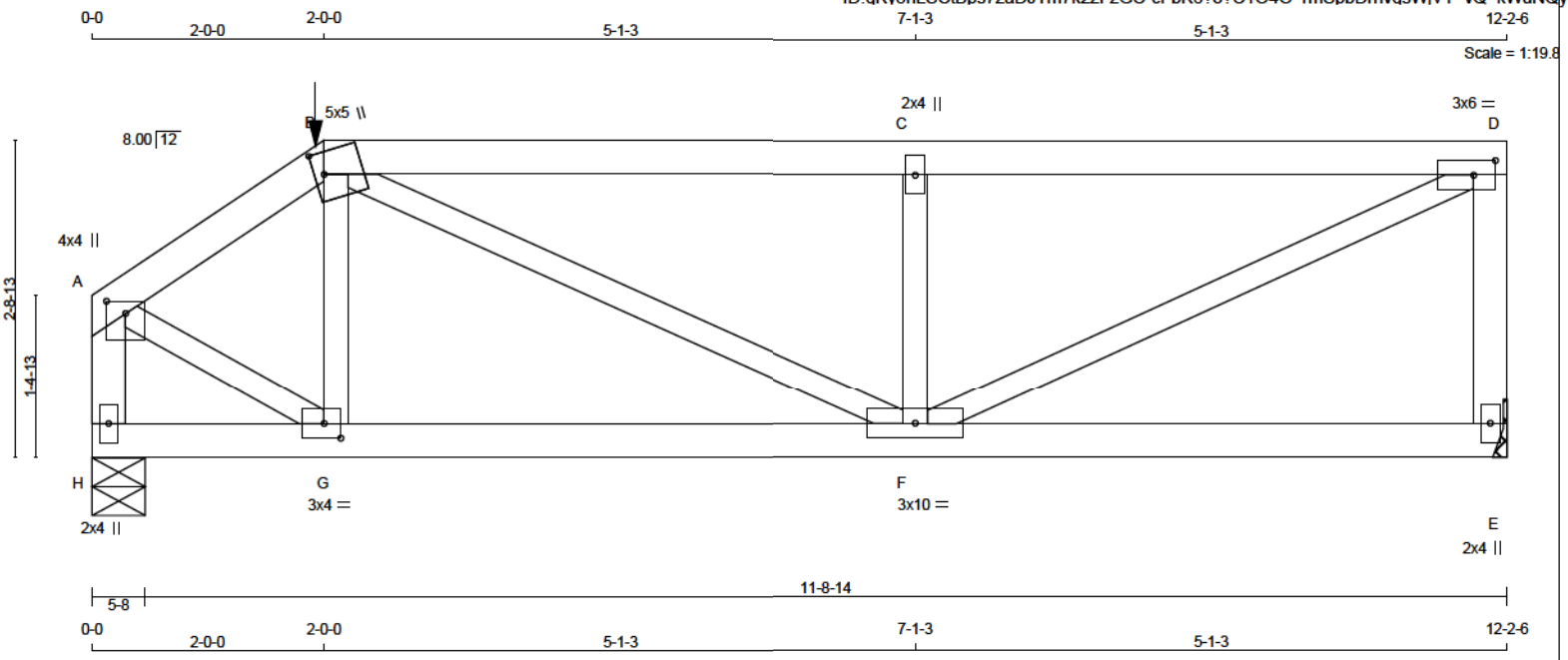

TOTAL WEIGHT = 46 lb

LUMBER
N. L. G. A. RULES

CHORDS	SIZE		LUMBER	DESCR.
A - B	2x4	DRY	No.2	SPF
B - D	2x4	DRY	No.2	SPF
E - D	2x4	DRY	No.2	SPF
H - A	2x4	DRY	No.2	SPF
H - E	2x4	DRY	No.2	SPF
ALL WEBS EXCEPT	2x3	DRY	No.2	SPF

DRY: SEASONED LUMBER.

PLATES (table is in inches)

JT	TYPE	PLATES	W	LEN	Y	X
A	TMVW+p	MT20	4.0	4.0	1.25	2.00
B	TTWW+m	MT20	5.0	5.0	2.25	1.00
C	TMW+w	MT20	2.0	4.0		
D	TMVW-t	MT20	3.0	6.0	1.50	2.25
E	BMV1+p	MT20	2.0	4.0		
F	BMWWW-t	MT20	3.0	10.0		
G	BMWW-t	MT20	3.0	4.0	1.50	1.75
H	BMV1+p	MT20	2.0	4.0		

DIMENSIONS, SUPPORTS AND LOADINGS SPECIFIED BY FABRICATOR TO BE VERIFIED BY BUILDING DESIGNER [M]

BEARINGS

JT	FACTORED GROSS REACTION VERT	HORZ	MAXIMUM GROSS REACTION DOWN	HORZ	UPLIFT	INPUT BRG IN-SX	REQRD BRG IN-SX
E	890	0	890	0	0	MECHANICAL	
H	927	0	927	0	0	5-8	1-8

A SUITABLE HANGER/MECHANICAL CONNECTION IS REQUIRED AT JOINT E. MINIMUM BEARING LENGTH AT JOINT E = 1-8.

UNFACTORED REACTIONS

JT	1ST LCASE COMBINED	MAX./MIN. COMPONENT REACTIONS SNOW	LIVE	PERM.LIVE	WIND	DEAD	SOIL
E	659	379 / 0	113 / 0	0 / 0	0 / 0	166 / 0	0 / 0
H	685	400 / 0	113 / 0	0 / 0	0 / 0	171 / 0	0 / 0

BEARING MATERIAL TO BE SPF NO.2 OR BETTER AT JOINT(S) H

BRACING
TOP CHORD TO BE SHEATHED OR MAX. PURLIN SPACING = 4.91 FT.
MAX. UNBRACED BOTTOM CHORD LENGTH = 10.00 FT OR RIGID CEILING DIRECTLY APPLIED.

ALL PITCH BREAKS AND PERIMETER CORNER JOINTS MUST BE LATERALLY RESTRAINED.

LOADING
TOTAL LOAD CASES: (4)

CHORDS

MEMB. FR-TO	MAX. FACTORED FORCE (LBS)	FACTORED VERT. LOAD (PLF) FROM	TO	LC1 MAX CSI (LC)	MAX. UNBRAC LENGTH
A- B	-804 / 0	-124.4	-124.4	0.10 (1)	6.25
B- C	-1249 / 0	-110.2	-110.2	0.55 (1)	4.91
C- D	-1249 / 0	-110.2	-110.2	0.55 (1)	4.91
E- D	-815 / 0	0.0	0.0	0.12 (1)	7.81
H- A	-916 / 0	0.0	0.0	0.10 (1)	7.81
H- G	0 / 0	-34.8	-34.8	0.10 (3)	10.00
G- F	0 / 659	-34.8	-34.8	0.25 (2)	10.00
F- E	0 / 0	-34.8	-34.8	0.19 (3)	10.00

WEBS

MEMB. FR-TO	MAX. FACTORED FORCE (LBS)	MAX CSI (LC)
G- B	-197 / 25	0.04 (1)
B- F	0 / 654	0.16 (1)
F- C	-688 / 0	0.12 (1)
F- D	0 / 1385	0.34 (1)
A- G	0 / 750	0.19 (1)

FACTORED CONCENTRATED LOADS (LBS)

JT	LOC.	LC1	MAX-	MAX+	FACE	DIR.	TYPE	HEEL	CONN.
B	2-0-0	-21	-21	---	FRONT	VERT	TOTAL	---	C1

CONNECTION REQUIREMENTS

1) C1: A SUITABLE HANGER/MECHANICAL CONNECTION IS REQUIRED.

DESIGN CRITERIA

SPECIFIED LOADS:

TOP CH.	LL	=	34.8	PSF
	DL	=	8.0	PSF
BOT CH.	LL	=	10.5	PSF
	DL	=	7.3	PSF
TOTAL LOAD		=	60.6	PSF

SPACING = 24.0 IN. C/C

LOADING IN FLAT SECTION BASED ON A SLOPE OF 2.00/12 MINIMUM

GIRDER TYPE: CPrimeHip
LEFT SETBACK = 2-0-0
RIGHT SETBACK = 0-0
END SETBACK = 2-0-0
END WALL WIDTH = 5-8
CORNER FRAMING TYPE: CONVENTIONAL
END JACK TYPE: CONVENTIONAL
APPLIED TO FRONT SIDE
- ADDT'L LOADS BASED ON 55 % OF GSL.

THIS TRUSS IS DESIGNED FOR RESIDENTIAL OR SMALL BUILDING REQUIREMENTS OF PART 9, NBCC 2015

THIS DESIGN COMPLIES WITH:
- PART 9 OF BCBC 2018 , ABC 2019
- PART 9 OF OBC 2012 (2019 AMENDMENT)
- CSA 086-14
- TPIC 2014

(55 % OF 48.1 P.S.F. G.S.L. PLUS 8.4 P.S.F. RAIN LOAD) EQUALS 34.8 P.S.F. SPECIFIED ROOF LIVE LOAD

ALLOWABLE DEFL.(LL)= L/360 (0.41")
CALCULATED VERT. DEFL.(LL) = L/ 999 (0.03")
ALLOWABLE DEFL.(TL)= L/360 (0.41")
CALCULATED VERT. DEFL.(TL) = L/ 999 (0.06")

CSI: TC=0.55/1.00 (C-D:1) , BC=0.25/1.00 (F-G:2) , WB=0.34/1.00 (D-F:1) , SSI=0.30/1.00 (C-D:1)

DOL LUMBER=1.00 NAIL=1.00 LS BEND=1.00 COMP=1.00 SHEAR=1.00 TENS= 1.00

COMPANION LIVE LOAD FACTOR = 1.00

TRUSS PLATE MANUFACTURER IS NOT RESPONSIBLE FOR QUALITY CONTROL IN THE TRUSS MANUFACTURING PLANT .

NAIL VALUES

PLATE	GRIP(DRY) (PSI) MAX	MIN	SHEAR (PLI) MAX	MIN	SECTION (PLI) MAX	MIN
MT20	650	371	1747	788	1987	1873

PLATE PLACEMENT TOL. = 0.250 inches

PLATE ROTATION TOL. = 5.0 Deg.

JSI GRIP= 0.88 (B) (INPUT = 0.90)
JSI METAL= 0.30 (D) (INPUT = 1.00)

LICENSED PROFESSIONAL ENGINEER
N.A. EL-MASRI
PROVINCE OF ONTARIO
Dec 18, 2020

READ ALL NOTES ON THIS PAGE AND ON ENGINEERING NOTE PAGE ENP-1. THIS NOTE PAGE IS AN INTEGRAL PART OF THIS DRAWING AS IT CONTAINS SPECIFICATIONS AND CRITERIA USED IN THE DESIGN OF THIS COMPONENT.

Town of East Gwillimbury
Building Standards Branch BCIN #16487

These plans have been reviewed for use with the corrections as noted. No other changes may be made without written approval of the Building Standards Branch. All work must comply with Zoning By-Law 2018-043, as amended, and the Ontario Building Code, as amended. These approved documents must be kept on site at all times. The building permit must be clearly posted on site at all times.

Discipline	Reviewer	BCIN	Date
Building Code	H. Authier	43236	2021-02-05
Sewage System			
Zoning			

KOTT

JOB NAME	TRUSS NAME	QUANTITY	PLY	JOB DESC.	DRWG NO.
NE1220-129	G03	1	1	GREENPARK - TRINAR HALL - BRENTWOOD 3 EL 1 (TRUSS DESC.)	**Page 5 of 37**

Version 8.420 S Oct 9 2020 MiTek Industries, Inc. Fri Dec 18 09:14:05 2020 Page 1

ID:qKy8nLSCtBps7zaDJTm7k2zFzGC-cFbK6?o?C1O4O_rmSpbDrhvhEWelT0pQ_kWuNQy7n

Scale = 1:43.6

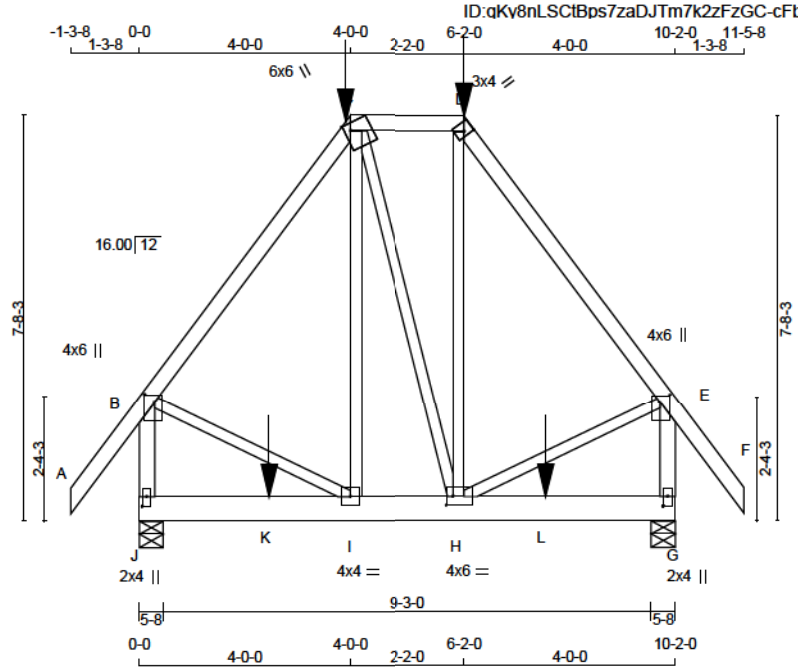

TOTAL WEIGHT = 70 lb

LUMBER

N. L. G. A. RULES

CHORDS	SIZE		LUMBER	DESCR.
A - C	2x4	DRY	No.2	SPF
C - D	2x4	DRY	No.2	SPF
D - F	2x4	DRY	No.2	SPF
J - B	2x4	DRY	No.2	SPF
G - E	2x4	DRY	No.2	SPF
J - G	2x6	DRY	No.2	SPF
ALL WEBS EXCEPT	2x3	DRY	No.2	SPF

DRY: SEASONED LUMBER.

PLATES (table is in inches)

JT	TYPE	PLATES	W	LEN	Y	X
B	TMVW+p	MT20	4.0	6.0	1.75	2.25
C	TTWW+m	MT20	6.0	6.0	Edge	1.50
D	TTW+h	MT20	3.0	4.0	2.00	1.00
E	TMVW+p	MT20	4.0	6.0	1.75	2.25
G	BMV1+p	MT20	2.0	4.0	2.25	1.00
H	BMWWW-t	MT20	4.0	6.0	2.00	1.50
I	BMWW-t	MT20	4.0	4.0		
J	BMV1+p	MT20	2.0	4.0	2.25	1.00

Edge - INDICATES REFERENCE CORNER OF PLATE TOUCHES EDGE OF CHORD.

DIMENSIONS, SUPPORTS AND LOADINGS SPECIFIED BY FABRICATOR TO BE VERIFIED BY BUILDING DESIGNER [M]

BEARINGS

JT	FACTORED GROSS REACTION VERT	HORZ	MAXIMUM GROSS REACTION DOWN	HORZ	FACTORED UPLIFT	INPUT BRG IN-SX	REQRD BRG IN-SX
J	2241	0	2241	0	0	5-8	3-13
G	2241	0	2241	0	0	5-8	3-13

UNFACTORED REACTIONS

1ST LCASE MAX./MIN. COMPONENT REACTIONS

JT	COMBINED	SNOW	LIVE	PERM.LIVE	WIND	DEAD	SOIL
J	1650	979 / 0	263 / 0	0 / 0	0 / 0	408 / 0	0 / 0
G	1650	979 / 0	263 / 0	0 / 0	0 / 0	408 / 0	0 / 0

BEARING MATERIAL TO BE SPF NO.2 OR BETTER AT JOINT(S) J, G

BRACING

TOP CHORD TO BE SHEATHED OR MAX. PURLIN SPACING = 4.99 FT.
MAX. UNBRACED BOTTOM CHORD LENGTH = 10.00 FT OR RIGID CEILING DIRECTLY APPLIED.

ALL PITCH BREAKS AND PERIMETER CORNER JOINTS MUST BE LATERALLY RESTRAINED.

LOADING

TOTAL LOAD CASES: (4)

CHORDS

MEMB. FR-TO	MAX. FORCE (LBS)	FACTORED VERT. LOAD (PLF) FROM	TO	LC1 MAX CSI (LC)	MAX. UNBRAC LENGTH
A- B	0 / 70	-124.4	-124.4	0.20 (1)	10.00
B- C	-1342 / 0	-124.4	-124.4	0.46 (1)	5.01
C- D	-815 / 0	-172.4	-172.4	0.16 (1)	6.25
D- E	-1356 / 0	-124.4	-124.4	0.46 (1)	4.99
E- F	0 / 70	-124.4	-124.4	0.20 (1)	10.00
J- B	-1868 / 0	0.0	0.0	0.24 (1)	6.09
G- E	-1882 / 0	0.0	0.0	0.25 (1)	6.07
J- K	0 / 0	-54.4	-54.4	0.56 (1)	10.00
K- I	0 / 0	-54.4	-54.4	0.56 (1)	10.00
I- H	0 / 807	-54.4	-54.4	0.44 (1)	10.00
H- L	0 / 0	-54.4	-54.4	0.53 (1)	10.00
L- G	0 / 0	-54.4	-54.4	0.53 (1)	10.00

WEBS

MEMB. FR-TO	MAX. FORCE (LBS)	MAX CSI (LC)
I- C	0 / 416	0.10 (2)
C- H	0 / 32	0.01 (2)
H- D	0 / 458	0.11 (2)
B- I	0 / 880	0.22 (1)
H- E	0 / 889	0.22 (1)

FACTORED CONCENTRATED LOADS (LBS)

JT	LOC.	LC1	MAX-	MAX+	FACE	DIR.	TYPE	HEEL	CONN.
C	4-0-0	-207	-207	---	FRONT	VERT	TOTAL	---	C1
C	4-0-0	1	-33	---	FRONT	VERT	DEAD	---	C1
D	6-2-0	-207	-207	---	FRONT	VERT	TOTAL	---	C1
K	2-5-8	-898	-898	---	FRONT	VERT	TOTAL	---	C1
L	7-8-8	-898	-898	---	FRONT	VERT	TOTAL	---	C1

CONNECTION REQUIREMENTS

1) C1: A SUITABLE HANGER/MECHANICAL CONNECTION IS REQUIRED.

DESIGN CRITERIA

*** SPECIAL LOADS ANALYSIS ***
GEOMETRY AND/OR BASIC LOADS CHANGED BY USER.
LOADS WERE DERIVED FROM USER INPUT
NO FURTHER MODIFICATIONS WERE MADE

SPECIFIED LOADS:

TOP	CH.	LL	= 34.8	PSF
		DL	= 8.0	PSF
BOT	CH.	LL	= 10.5	PSF
		DL	= 7.3	PSF
TOTAL LOAD			= 60.6	PSF

SPACING = 24.0 IN. C/C

LOADING IN FLAT SECTION BASED ON A SLOPE OF 2.00/12 MINIMUM

GIRDER TYPE: CPrimeHip
SIDE SETBACK = 4-0-0
END SETBACK = 4-0-0
END WALL WIDTH = 5-8
CORNER FRAMING TYPE: CONVENTIONAL
END JACK TYPE: CONVENTIONAL
APPLIED TO FRONT SIDE
- ADDT'L LOADS BASED ON 55 % OF GSL.

*** NON STANDARD GIRDER ***
ADDT'L USER-DEFINED LOADS APPLIED TO ALL LOAD CASES.

THIS TRUSS IS DESIGNED FOR RESIDENTIAL OR SMALL BUILDING REQUIREMENTS OF PART 9, NBCC 2015

THIS DESIGN COMPLIES WITH:
- PART 9 OF BCBC 2018 , ABC 2019
- PART 9 OF OBC 2012 (2019 AMENDMENT)
- CSA 086-14
- TPIC 2014

(55 % OF 48.1 P.S.F. G.S.L. PLUS 8.4 P.S.F. RAIN LOAD) EQUALS 34.8 P.S.F. SPECIFIED ROOF LIVE LOAD

ALLOWABLE DEFL.(LL)= L/360 (0.34")
CALCULATED VERT. DEFL.(LL) = L/ 999 (0.04")
ALLOWABLE DEFL.(TL)= L/360 (0.34")
CALCULATED VERT. DEFL.(TL) = L/ 999 (0.06")

CSI. TC=0.40/1.00 (D-E.1) , BC=0.50/1.00 (I-J.1) , WB=0.22/1.00 (E-H:1) , SSI=0.51/1.00 (G-H:1)

DOL LUMBER=1.00 NAIL=1.00 LS BEND=1.00 COMP=1.00 SHEAR=1.00 TENS= 1.00

COMPANION LIVE LOAD FACTOR = 1.00

TRUSS PLATE MANUFACTURER IS NOT RESPONSIBLE FOR QUALITY CONTROL IN THE TRUSS MANUFACTURING PLANT .

NAIL VALUES

PLATE	GRIP(DRY) (PSI) MAX	MIN	SHEAR (PLI) MAX	MIN	SECTION (PLI) MAX	MIN
MT20	650	371	1747	788	1987	1873

PLATE PLACEMENT TOL. = 0.250 inches

PLATE ROTATION TOL. = 5.0 Deg.

CONTINUED ON PAGE 2

LICENSED PROFESSIONAL ENGINEER
N.A. EL-MASRI
PROVINCE OF ONTARIO
Dec 18, 2020

READ ALL NOTES ON THIS PAGE AND ON ENGINEERING NOTE PAGE ENP-1. THIS NOTE PAGE IS AN INTEGRAL PART OF THIS DRAWING AS IT CONTAINS SPECIFICATIONS AND CRITERIA USED IN THE DESIGN OF THIS COMPONENT.

Town of East Gwillimbury
Building Standards Branch BCIN #16487

These plans have been reviewed for use with the corrections as noted. No other changes may be made without written approval of the Building Standards Branch. All work must comply with Zoning By-Law 2018-043, as amended, and the Ontario Building Code, as amended. These approved documents must be kept on site at all times. The building permit must be clearly posted on site at all times.

Discipline	Reviewer	BCIN	Date
Building Code	H. Authier	43236	2021-02-05
Sewage System			
Zoning			

KOTT

JOB NAME	TRUSS NAME	QUANTITY	PLY	JOB DESC.	DRWG NO.
NE1220-129	G04	1	1	GREENPARK - TRINAR HALL - BRENTWOOD 3 EL 1 (TRUSS DESC.)	

Version 8.420 S Oct 9 2020 MiTek Industries, Inc. Fri Dec 18 09:14:06 2020 Page 1
ID:qKv8nLSCtBps7zaDJTm7k2zFzGC-4S8iJLpdzKWx08Qz?X6SOuSoqv?HCIPaDOGSvsy7r

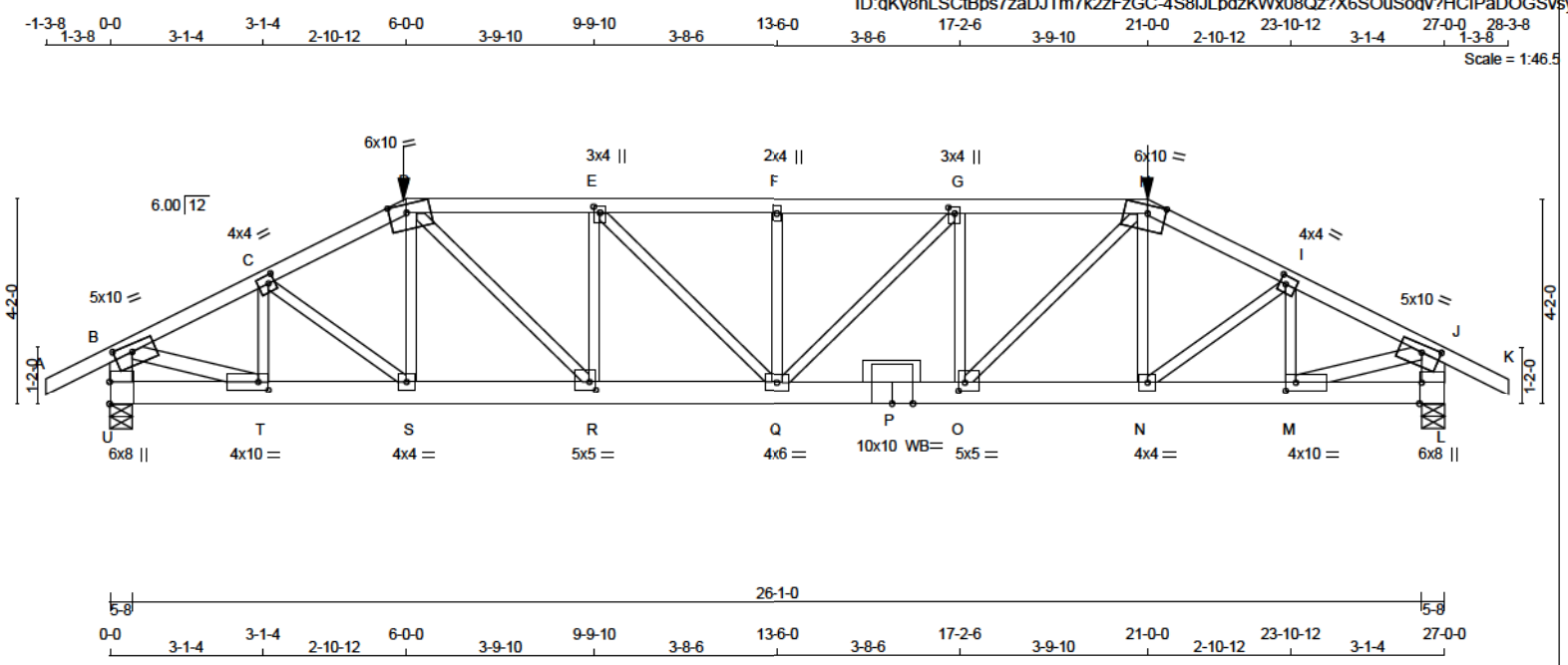

TOTAL WEIGHT = 133 lb

LUMBER
N. L. G. A. RULES

CHORDS	SIZE		LUMBER	DESCR.
A - D	2x4	DRY	No.2	SPF
D - H	2x4	DRY	2100F 1.8E	SPF
H - K	2x4	DRY	No.2	SPF
U - B	2x6	DRY	No.2	SPF
L - J	2x6	DRY	No.2	SPF
U - P	2x6	DRY	2100F 1.8E	SPF
P - L	2x6	DRY	2100F 1.8E	SPF
ALL WEBS	2x3	DRY	No.2	SPF
EXCEPT				
B - T	2x4	DRY	No.2	SPF
M - J	2x4	DRY	No.2	SPF

DRY: SEASONED LUMBER.

PLATES (table is in inches)

JT	TYPE	PLATES	W	LEN	Y	X
B	TMVWm	MT20	5.0	10.0	1.75	4.50
C	TMWW-t	MT20	4.0	4.0	2.00	1.50
D	TTWW-m	MT20	6.0	10.0	2.00	4.25
E	TMWW+t	MT20	3.0	4.0	1.50	1.50
F	TMW+w	MT20	2.0	4.0		
G	TMWW+t	MT20	3.0	4.0	1.50	1.50
H	TTWW-m	MT20	6.0	10.0	2.00	4.25
I	TMWW-t	MT20	4.0	4.0	2.00	1.50
J	TMVWm	MT20	5.0	10.0	1.75	4.50
L	BMV1+p	MT20	6.0	8.0	Edge	0.50
M	BMWW-t	MT20	4.0	10.0	2.00	2.50
N	BMWW-t	MT20	4.0	4.0		
O	BMWW-t	MT20	5.0	5.0	2.00	1.50
P	BS-t	MT20	10.0	10.0		
Q	BMWWW-t	MT20	4.0	6.0		
R	BMWW-t	MT20	5.0	5.0	2.00	1.50
S	BMWW-t	MT20	4.0	4.0		
T	BMWW-t	MT20	4.0	10.0	2.00	2.50
U	BMV1+p	MT20	6.0	8.0	5.50	

Edge - INDICATES REFERENCE CORNER OF PLATE TOUCHES EDGE OF CHORD.

WB - INDICATES BLOCKING REQUIRED

DIMENSIONS, SUPPORTS AND LOADINGS SPECIFIED BY FABRICATOR TO BE VERIFIED BY BUILDING DESIGNER

BEARINGS

JT	FACTORED GROSS REACTION VERT	HORZ	MAXIMUM GROSS REACTION DOWN	HORZ	FACTORED UPLIFT	INPUT BRG IN-SX	REQRD BRG IN-SX
U	4234	0	4234	0	0	5-8	5-8
L	4234	0	4234	0	0	5-8	5-8

UNFACTORED REACTIONS

1ST LCASE MAX./MIN. COMPONENT REACTIONS

JT	COMBINED	SNOW	LIVE	PERM.LIVE	WIND	DEAD	SOIL
U	3132	1810 / 0	535 / 0	0 / 0	0 / 0	788 / 0	0 / 0
L	3132	1810 / 0	535 / 0	0 / 0	0 / 0	788 / 0	0 / 0

BEARING MATERIAL TO BE SPF NO.2 OR BETTER AT JOINT(S) U, L

BRACING
TOP CHORD TO BE SHEATHED OR MAX. PURLIN SPACING = 2.20 FT.
MAX. UNBRACED BOTTOM CHORD LENGTH = 10.00 FT OR RIGID CEILING DIRECTLY APPLIED.

ALL PITCH BREAKS AND PERIMETER CORNER JOINTS MUST BE LATERALLY RESTRAINED.

LOADING
TOTAL LOAD CASES: (4)

CHORDS

MEMB. FR-TO	MAX. FORCE (LBS)	FACTORED VERT. LOAD (PLF) FROM	TO	LC1 MAX CSI (LC)	MAX. UNBRAC LENGTH
A- B	0 / 38	-124.4	-124.4	0.18 (1)	10.00
B- C	-5526 / 0	-124.4	-124.4	0.60 (1)	2.45
C- D	-6211 / 0	-124.4	-124.4	0.67 (1)	2.20
D- E	-7295 / 0	-234.6	-234.6	0.61 (1)	2.73
E- F	-7789 / 0	-234.6	-234.6	0.64 (1)	2.59
F- G	-7789 / 0	-234.6	-234.6	0.64 (1)	2.59
G- H	-7295 / 0	-234.6	-234.6	0.61 (1)	2.73
H- I	-6211 / 0	-124.4	-124.4	0.67 (1)	2.20
I- J	-5526 / 0	-124.4	-124.4	0.60 (1)	2.45
J- K	0 / 38	-124.4	-124.4	0.18 (1)	10.00
U- B	-4048 / 0	0.0	0.0	0.29 (1)	5.29
L- J	-4048 / 0	0.0	0.0	0.29 (1)	5.29
U- T	0 / 0	-74.0	-74.0	0.09 (1)	10.00
T- S	0 / 4954	-74.0	-74.0	0.35 (1)	10.00
S- R	0 / 5536	-74.0	-74.0	0.33 (1)	10.00
R- Q	0 / 7295	-74.0	-74.0	0.47 (1)	10.00
Q- P	0 / 7295	-74.0	-74.0	0.47 (1)	10.00
P- O	0 / 7295	-74.0	-74.0	0.47 (1)	10.00
O- N	0 / 5536	-74.0	-74.0	0.33 (1)	10.00
N- M	0 / 4954	-74.0	-74.0	0.35 (1)	10.00
M- L	0 / 0	-74.0	-74.0	0.09 (1)	10.00

WEBS

MEMB. FR-TO	MAX. FORCE (LBS)	MAX CSI (LC)
T- C	-1190 / 0	0.21 (1)
C- S	0 / 738	0.18 (1)
S- D	-57 / 232	0.06 (3)
D- R	0 / 2482	0.61 (1)
R- E	-1489 / 0	0.39 (1)
E- Q	0 / 707	0.17 (1)
Q- F	-794 / 0	0.21 (1)
Q- G	0 / 707	0.17 (1)
O- G	-1488 / 0	0.39 (1)
O- H	0 / 2482	0.61 (1)
N- H	-57 / 232	0.06 (3)
N- I	0 / 738	0.18 (1)
M- I	-1190 / 0	0.21 (1)
B- T	0 / 5106	0.90 (1)
M- J	0 / 5106	0.90 (1)

FACTORED CONCENTRATED LOADS (LBS)

JT	LOC.	LC1	MAX-	MAX+	FACE	DIR.	TYPE	HEEL	CONN.
D	6-0-0	-560	-560	---	FRONT	VERT	TOTAL	---	C1
H	21-0-0	-560	-560	---	FRONT	VERT	TOTAL	---	C1

CONNECTION REQUIREMENTS

1) C1: A SUITABLE HANGER/MECHANICAL CONNECTION IS REQUIRED.

DESIGN CRITERIA

SPECIFIED LOADS:

TOP CH.	LL	=	34.8	PSF
	DL	=	8.0	PSF
BOT CH.	LL	=	10.5	PSF
	DL	=	7.3	PSF
TOTAL LOAD		=	60.6	PSF

SPACING = 24.0 IN. C/C

LOADING IN FLAT SECTION BASED ON A SLOPE OF 2.00/12 MINIMUM

GIRDER TYPE: CPrimeHip
SIDE SETBACK = 6-0-0
END SETBACK = 6-0-0
END WALL WIDTH = 5-8
CORNER FRAMING TYPE: CONVENTIONAL
END JACK TYPE: CONVENTIONAL
APPLIED TO FRONT SIDE
- ADDT'L LOADS BASED ON 55 % OF GSL.

THIS TRUSS IS DESIGNED FOR RESIDENTIAL OR SMALL BUILDING REQUIREMENTS OF PART 9, NBCC 2015

THIS DESIGN COMPLIES WITH:
- PART 9 OF BCBC 2018 , ABC 2019
- PART 9 OF OBC 2012 (2019 AMENDMENT)
- CSA 086-14
- TPIC 2014

(55 % OF 48.1 P.S.F. G.S.L. PLUS 8.4 P.S.F. RAIN LOAD) EQUALS 34.8 P.S.F. SPECIFIED ROOF LIVE LOAD

ALLOWABLE DEFL.(LL)= L/360 (0.90")
CALCULATED VERT. DEFL.(LL) = L/ 999 (0.27")
ALLOWABLE DEFL.(TL)= L/360 (0.90")
CALCULATED VERT. DEFL.(TL) = L/ 729 (0.44")

CSI: TC=0.67/1.00 (H-I:1) , BC=0.47/1.00 (O-Q:1) , WB=0.90/1.00 (J-M:1) , SSI=0.45/1.00 (D-E:1)

DOL LUMBER=1.00 NAIL=1.00 LS BEND=1.00 COMP=1.00 SHEAR=1.00 TENS= 1.00

COMPANION LIVE LOAD FACTOR = 1.00

TRUSS PLATE MANUFACTURER IS NOT RESPONSIBLE FOR QUALITY CONTROL IN THE TRUSS MANUFACTURING PLANT .

NAIL VALUES

PLATE	GRIP(DRY) (PSI) MAX	MIN	SHEAR (PLI) MAX	MIN	SECTION (PLI) MAX	MIN
MT20	650	371	1747	788	1987	1873

PLATE PLACEMENT TOL. = 0.250 inches

PLATE ROTATION TOL. = 5.0 Deg.

JSI GRIP= 0.89 (T) (INPUT = 0.90)
JSI METAL= 0.99 (P) (INPUT = 1.00)

LICENSED PROFESSIONAL ENGINEER
N.A. EL-MASRI
PROVINCE OF ONTARIO
Dec 18, 2020

READ ALL NOTES ON THIS PAGE AND ON ENGINEERING NOTE PAGE ENP-1. THIS NOTE PAGE IS AN INTEGRAL PART OF THIS DRAWING AS IT CONTAINS SPECIFICATIONS AND CRITERIA USED IN THE DESIGN OF THIS COMPONENT.

Town of East Gwillimbury
Building Standards Branch BCIN #16487

These plans have been reviewed for use with the corrections as noted. No other changes may be made without written approval of the Building Standards Branch. All work must comply with Zoning By-Law 2018-043, as amended, and the Ontario Building Code, as amended. These approved documents must be kept on site at all times. The building permit must be clearly posted on site at all times.

Discipline	Reviewer	BCIN	Date
Building Code	H. Authier	43236	2021-02-05
Sewage System			
Zoning			

KOTT

JOB NAME	TRUSS NAME	QUANTITY	PLY	JOB DESC.	DRWG NO.
NE1220-129	G05	1	2	GREENPARK - TRINAR HALL - BRENTWOOD 3 EL 1 (TRUSS DESC.)	

Version 8.420 S Oct 9 2020 MiTek Industries, Inc. Fri Dec 18 09:14:07 2020 Page 1
ID:qKv8nLSCtBps7zaDJTm7k2zFzGC-Yei5XhqFkeeoeI?9ZEdhw6?4RJE0xsvjR2??RJy7r

Scale = 1:39.8

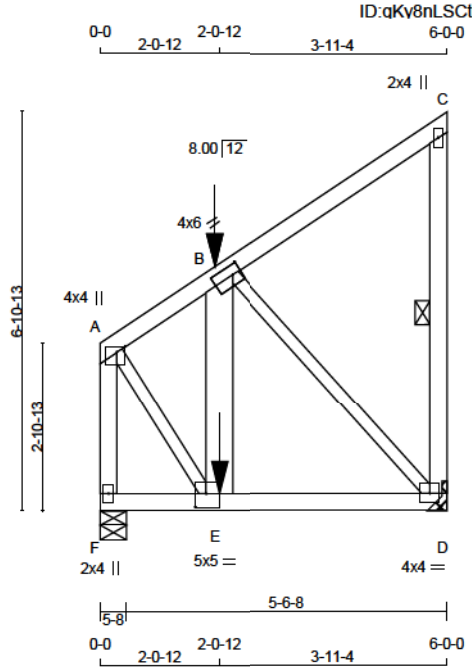

TOTAL WEIGHT = 2 X 39 = 77 lb

LUMBER

N. L. G. A. RULES

CHORDS	SIZE		LUMBER	DESCR.
F - A	2x4	DRY	No.2	SPF
A - C	2x4	DRY	No.2	SPF
D - C	2x4	DRY	No.2	SPF
F - D	2x4	DRY	No.2	SPF
ALL WEBS EXCEPT	2x3	DRY	No.2	SPF
E - B	2x6	DRY	No.2	SPF

DRY: SEASONED LUMBER.

DESIGN CONSISTS OF 2 TRUSSES BUILT SEPARATELY THEN FASTENED TOGETHER AS FOLLOWS:

CHORDS	#ROWS	SURFACE SPACING (IN)	LOAD(PLF)
TOP CHORDS : (0.122"X3") SPIRAL NAILS			
F- A	1	12	TOP
A- C	1	12	SIDE(0.0)
C- D	1	12	TOP
BOTTOM CHORDS : (0.122"X3") SPIRAL NAILS			
F- D	1	4	SIDE(241.0)
WEBS : (0.122"X3") SPIRAL NAILS			
2x3	1	6	
2x6	2	6	

NAILS TO BE DRIVEN FROM ONE SIDE ONLY.

GIRDER NAILING ASSUMES NAILED HANGERS ARE FASTENED WITH MIN. 3-0 INCH NAILS.

TOP - COMPONENTS ARE LOADED FROM THE TOP AND MUST BE PLACED ON TOP EDGE OF ALL PLIES FOR THE LOAD TO BE TRANSFERRED TO EACH PLY.

SIDE - PLF SHOWN IS THE EQUIVALENT UDL APPLIED TO ONE SIDE THAT THE CORRESPONDING NAILING PATTERN SHALL BE CAPABLE OF TRANSFERING. REMAINING PLF MUST BE APPLIED ON THE OPPOSITE SIDE OR ON THE TOP.

PLATES (table is in inches)

JT	TYPE	PLATES	W	LEN	Y	X
A	TMVW+p	MT20	4.0	4.0	1.25	1.75
B	TMWW-t	MT20	4.0	6.0	2.00	1.75
C	TMV+p	MT20	2.0	4.0		

LICENSED PROFESSIONAL ENGINEER
N.A. EL-MASRI
PROVINCE OF ONTARIO
Dec 18, 2020

READ ALL NOTES ON THIS PAGE AND ON ENGINEERING NOTE PAGE ENP-1. THIS NOTE PAGE IS AN INTEGRAL PART OF THIS DRAWING AS IT CONTAINS SPECIFICATIONS AND CRITERIA USED IN THE DESIGN OF THIS COMPONENT.

DIMENSIONS, SUPPORTS, AND LOADINGS SPECIFIED BY FABRICATOR TO BE VERIFIED BY BUILDING DESIGNER [M]

BEARINGS

JT	FACTORED GROSS REACTION VERT	HORZ	MAXIMUM GROSS REACTION DOWN	HORZ	UPLIFT	INPUT BRG IN-SX	REQRD BRG IN-SX
F	2587	0	2587	0	0	5-8	1-8
D	2962	0	2962	0	0	MECHANICAL	

A SUITABLE HANGER/MECHANICAL CONNECTION IS REQUIRED AT JOINT D. MINIMUM BEARING LENGTH AT JOINT D = 1-10.

UNFACTORED REACTIONS

MAX./MIN. COMPONENT REACTIONS

JT	1ST LCASE COMBINED	SNOW	LIVE	PERM.LIVE	WIND	DEAD	SOIL
F	1916	1101 / 0	331 / 0	0 / 0	0 / 0	483 / 0	0 / 0
D	2193	1260 / 0	380 / 0	0 / 0	0 / 0	553 / 0	0 / 0

BEARING MATERIAL TO BE SPF NO.2 OR BETTER AT JOINT(S) F

BRACING

TOP CHORD TO BE SHEATHED OR MAX. PURLIN SPACING = 6.25 FT.
MAX. UNBRACED BOTTOM CHORD LENGTH = 10.00 FT OR RIGID CEILING DIRECTLY APPLIED.

ALL PITCH BREAKS AND PERIMETER CORNER JOINTS MUST BE LATERALLY RESTRAINED.

1 - 1x4 LATERAL BRACE(S) AT 1/ 2 LENGTH OF C-D. DBS = 20-0-0 . CBF = 26 LBS.

DBS = DIAGONAL BRACE SPACING (MAX). CBF = CUMULATIVE BRACING FORCE (PER BRACE). FASTEN LATERAL BRACE(S) TO EACH PLY USING (0.122"X3") SPIRAL NAILS : 1 NAIL FOR 2x3 BRACE(S), 2 FOR 1x4, 2x4, 2x5, 3 FOR 2x6, 4 FOR 2x8, 5 FOR 2x10, AND 6 FOR 2x12.

END VERTICAL(S) MUST BE SHEATHED OR HAVE BRACES AS INDICATED IN THE MAX. UNBRACED LENGTH COLUMN OF THE TABLE BELOW

LOADING

TOTAL LOAD CASES: (4)

CHORDS

MEMB. FR-TO	FORCE (LBS)	FACTORED VERT. LOAD (PLF) FROM	TO	LC1	MAX CSI (LC)	MAX. UNBRAC LENGTH
F- A	-2746 / 0	0.0	0.0	0.23 (1)	6.90	
A- B	-1646 / 0	-124.4	-124.4	0.12 (1)	6.25	
B- C	-21 / 0	-124.4	-124.4	0.13 (1)	6.25	
D- C	-207 / 0	0.0	0.0	0.02 (1)	6.25	
F- E	0 / 0	-335.9	-335.9	0.78 (1)	10.00	
E- D	0 / 1403	-817.9	-817.9	0.95 (1)	10.00	

WEBS

MEMB. FR-TO	FORCE (LBS)	MAX CSI (LC)
A- E	0 / 2247	0.28 (1)
E- B	0 / 1084	0.07 (1)
B- D	-1989 / 0	0.50 (1)

FACTORED CONCENTRATED LOADS (LBS)

JT	LOC.	LC1	MAX-	MAX+	FACE	DIR.	TYPE	HEEL	CONN.
B	2-0-12	-208	-232	---	BACK	VERT	DEAD	---	C1
B	2-0-12	-568	-568	---	BACK	VERT	SNOW	---	C1
E	2-0-12	-113	-170	---	BACK	VERT	LIVE	---	C1

CONNECTION REQUIREMENTS

1) C1: A SUITABLE HANGER/MECHANICAL CONNECTION IS REQUIRED.

Town of East Gwillimbury
Building Standards Branch BCIN #16487

These plans have been reviewed for use with the corrections as noted. No other changes may be made without written approval of the Building Standards Branch. All work must comply with Zoning By-Law 2018-043, as amended, and the Ontario Building Code, as amended. These approved documents must be kept on site at all times. The building permit must be clearly posted on site at all times.

Discipline	Reviewer	BCIN	Date
Building Code	H. Authier	43236	2021-02-05
Sewage System			
Zoning			

DESIGN CRITERIA

*** SPECIAL LOADS ANALYSIS ***
GEOMETRY AND/OR BASIC LOADS CHANGED BY USER.
LOADS WERE DERIVED FROM USER INPUT
NO FURTHER MODIFICATIONS WERE MADE

SPECIFIED LOADS:

TOP CH.	LL	=	34.8	PSF
	DL	=	8.0	PSF
BOT CH.	LL	=	10.5	PSF
	DL	=	7.3	PSF
TOTAL LOAD		=	60.6	PSF

SPACING = 24.0 IN. C/C

GIRDER TYPE: CStdGirder
START DISTANCE = 0-0
START SPAN CARRIED = 9-8-8
END DISTANCE = 6-0-0
END SPAN CARRIED = 9-8-8
END WALL WIDTH = 5-8
APPLIED TO FRONT SIDE OF BOTTOM CHORD.
- ADDT'L LOADS BASED ON 55 % OF GSL. (DEFINED BY USER)

*** NON STANDARD GIRDER ***
ADDT'L USER-DEFINED LOADS APPLIED TO ALL LOAD CASES.

THIS TRUSS IS DESIGNED FOR RESIDENTIAL OR SMALL BUILDING REQUIREMENTS OF PART 9, NBCC 2015

THIS DESIGN COMPLIES WITH:
- PART 9 OF BCBC 2018 , ABC 2019
- PART 9 OF OBC 2012 (2019 AMENDMENT)
- CSA 086-14
- TPIC 2014

(55 % OF 48.1 P.S.F. G.S.L. PLUS 8.4 P.S.F. RAIN LOAD) EQUALS 34.8 P.S.F. SPECIFIED ROOF LIVE LOAD

ALLOWABLE DEFL.(LL)= L/360 (0.20")
CALCULATED VERT. DEFL.(LL) = L/ 781 (0.09")
ALLOWABLE DEFL.(TL)= L/360 (0.20")
CALCULATED VERT. DEFL.(TL) = L/ 463 (0.16")

CSI: TC=0.23/1.00 (A-F:1) , BC=0.95/1.00 (D-E:1) , WB=0.50/1.00 (B-D:1) , SSI=0.80/1.00 (D-E:1)

DOL LUMBER=1.00 NAIL=1.00 LS BEND=1.00 COMP=1.00 SHEAR=1.00 TENS= 1.00

COMPANION LIVE LOAD FACTOR = 1.00

TRUSS PLATE MANUFACTURER IS NOT RESPONSIBLE FOR QUALITY CONTROL IN THE TRUSS MANUFACTURING PLANT .

NAIL VALUES

PLATE	GRIP(DRY) (PSI) MAX	MIN	SHEAR (PLI) MAX	MIN	SECTION (PLI) MAX	MIN
MT20	650	371	1747	788	1987	1873

PLATE PLACEMENT TOL. = 0.250 inches

PLATE ROTATION TOL. = 5.0 Deg.

CONTINUED ON PAGE 2

KOTT

PLATES (table is in inches)

JT	TYPE	PLATES	W	LEN	Y	X
D	BMVW1-t	MT20	4.0	4.0		
E	BMWW-t	MT20	5.0	5.0	2.75	2.25
F	BMV1+p	MT20	2.0	4.0		

JSI GRIP= 0.88 (E) (INPUT = 0.90)
JSI METAL= 0.29 (F) (INPUT = 1.00)

READ ALL NOTES ON THIS PAGE AND ON ENGINEERING NOTE PAGE ENP-1. THIS NOTE PAGE IS AN INTEGRAL PART OF THIS DRAWING AS IT CONTAINS SPECIFICATIONS AND CRITERIA USED IN THE DESIGN OF THIS COMPONENT.

Town of East Gwillimbury
Building Standards Branch BCIN #16487

These plans have been reviewed for use with the corrections as noted. No other changes may be made without written approval of the Building Standards Branch. All work must comply with Zoning By-Law 2018-043, as amended, and the Ontario Building Code, as amended. These approved documents must be kept on site at all times. The building permit must be clearly posted on site at all times.

Discipline	Reviewer	BCIN	Date
Building Code	H. Authier	43236	2021-02-05
Sewage System			
Zoning			

KOTT

JOB NAME	TRUSS NAME	QUANTITY	PLY	JOB DESC.		DRWG NO.
NE1220-129	G06	1	1	TRUSS DESC.	GREENPARK - TRINAR HALL - BRENTWOOD 3 EL 1	**Page 9 of 37**

Version 8.420 S Oct 9 2020 MiTek Industries, Inc. Fri Dec 18 09:14:08 2020 Page 1
ID:qKv8nLSCtBps7zaDJTm7k2zFzGC-1qGTk1qtVvymfFSaL7v8wTJX8sjqRqBlsqilY_ly7n

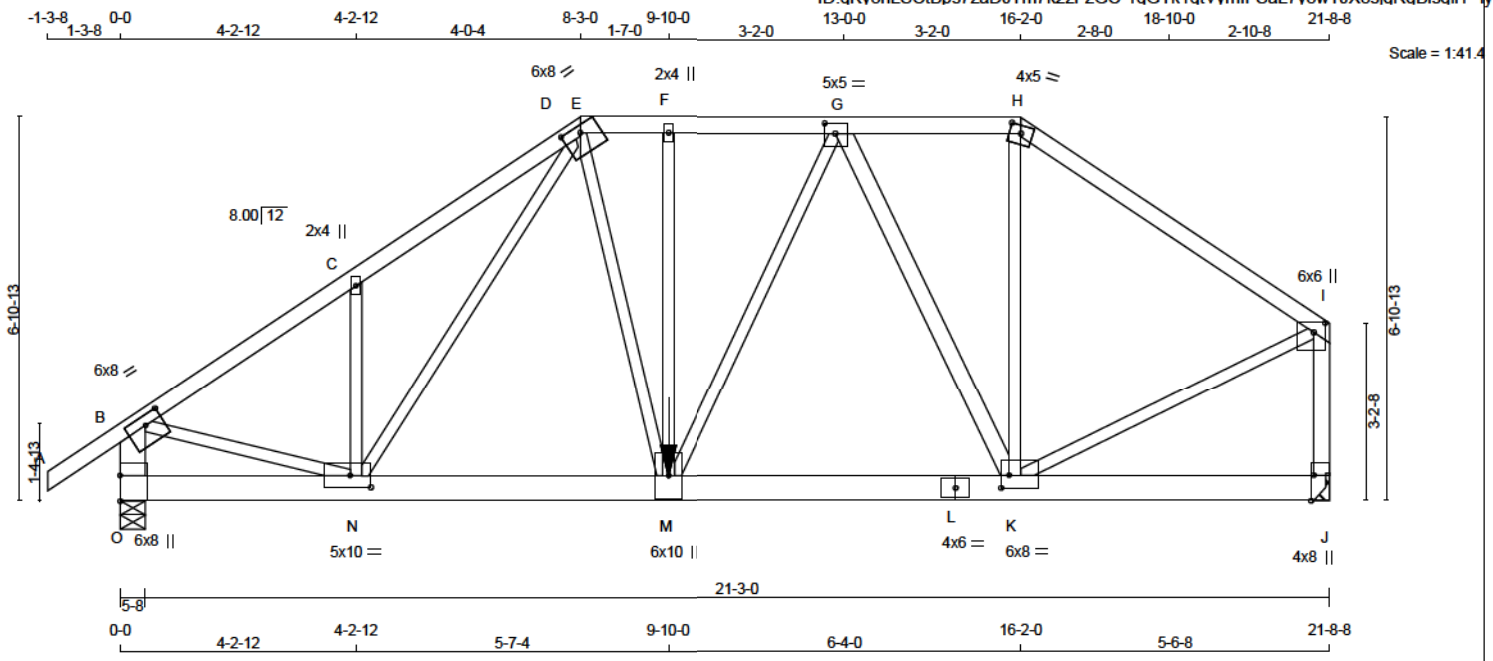

TOTAL WEIGHT = 119 lb

LUMBER
N. L. G. A. RULES

CHORDS	SIZE		LUMBER	DESCR.
A - E	2x4	DRY	No.2	SPF
E - H	2x4	DRY	No.2	SPF
H - I	2x4	DRY	2100F 1.8E	SPF
O - B	2x6	DRY	No.2	SPF
J - I	2x4	DRY	No.2	SPF
O - L	2x6	DRY	No.2	SPF
L - J	2x6	DRY	No.2	SPF
ALL WEBS	2x3	DRY	No.2	SPF
EXCEPT				
G - K	2x4	DRY	2100F 1.8E	SPF

DRY: SEASONED LUMBER.

PLATES (table is in inches)

JT	TYPE	PLATES	W	LEN	Y	X
B	TMVW-t	MT20	6.0	8.0	2.00	3.75
C	TMW+w	MT20	2.0	4.0		
D						
E						
E	TTWW-h	MT20	6.0	8.0	1.50	4.00
F	TMW+w	MT20	2.0	4.0		
G	TMWW-t	MT20	5.0	5.0	2.25	2.25
H	TTW-m	MT20	4.0	5.0	1.75	2.50
I	TMVW+p	MT20	6.0	6.0	2.00	2.50
J	BMV1+t	MT20	4.0	8.0	Edge	0.50
K	BMWWW-t	MT20	6.0	8.0	2.75	1.75
L	BS-t	MT20	4.0	6.0		
M	BMWWW+t	MT20	6.0	10.0		
N	BMWWW-t	MT20	5.0	10.0	2.50	4.50
O	BMV1+p	MT20	6.0	8.0	5.50	

Edge - INDICATES REFERENCE CORNER OF PLATE TOUCHES EDGE OF CHORD.

DIMENSIONS, SUPPORTS AND LOADINGS SPECIFIED BY FABRICATOR TO BE VERIFIED BY BUILDING DESIGNER [M]

BEARINGS

JT	FACTORED GROSS REACTION VERT	HORZ	MAXIMUM GROSS REACTION DOWN	HORZ	FACTORED UPLIFT	INPUT BRG IN-SX	REQRD BRG IN-SX
O	3567	0	3567	0	0	5-8	5-8
J	3118	0	3118	0	0	MECHANICAL	

A SUITABLE HANGER/MECHANICAL CONNECTION IS REQUIRED AT JOINT J. MINIMUM BEARING LENGTH AT JOINT J = 3-8.

UNFACTORED REACTIONS

MAX./MIN. COMPONENT REACTIONS

JT	1ST LCASE COMBINED	SNOW	LIVE	PERM.LIVE	WIND	DEAD	SOIL
O	2633	1540 / 0	436 / 0	0 / 0	0 / 0	657 / 0	0 / 0
J	2309	1326 / 0	400 / 0	0 / 0	0 / 0	583 / 0	0 / 0

BEARING MATERIAL TO BE SPF NO.2 OR BETTER AT JOINT(S) O

BRACING
TOP CHORD TO BE SHEATHED OR MAX. PURLIN SPACING = 2.80 FT.
MAX. UNBRACED BOTTOM CHORD LENGTH = 10.00 FT OR RIGID CEILING DIRECTLY APPLIED.

ALL PITCH BREAKS AND PERIMETER CORNER JOINTS MUST BE LATERALLY RESTRAINED.

LOADING
TOTAL LOAD CASES: (4)

CHORDS

MEMB. FR-TO	MAX. FACTORED FORCE (LBS)	FACTORED VERT. LOAD (PLF) FROM	TO	LC1 MAX CSI (LC)	MAX. UNBRAC LENGTH
A- B	0 / 47	-124.4	-124.4	0.18 (1)	10.00
B- C	-4097 / 0	-124.4	-124.4	0.69 (1)	2.83
C- D	-4157 / 0	-124.4	-124.4	0.67 (1)	2.80
D- E	-4032 / 0	-124.4	-124.4	0.34 (1)	3.18
E- F	-3910 / 0	-124.4	-124.4	0.28 (1)	3.30
F- G	-3909 / 0	-124.4	-124.4	0.45 (1)	3.11
G- H	-2318 / 0	-124.4	-124.4	0.32 (1)	4.14
H- I	-2769 / 0	-124.4	-124.4	0.62 (1)	4.30
O- B	-3473 / 0	0.0	0.0	0.25 (1)	5.66
J- I	-3027 / 0	0.0	0.0	0.53 (1)	4.89
O- N	0 / 0	-39.2	-39.2	0.08 (1)	10.00
N- M	0 / 3434	-39.2	-39.2	0.56 (1)	10.00
M- L	0 / 3236	-39.2	-39.2	0.50 (1)	10.00
L- K	0 / 3236	-39.2	-39.2	0.50 (1)	10.00
K- J	0 / 0	-39.2	-39.2	0.14 (3)	10.00

WEBS

MEMB. FR-TO	MAX. FACTORED FORCE (LBS)	MAX CSI (LC)
N- C	-626 / 0	0.17 (1)
N- D	-26 / 5	0.03 (1)
E- M	0 / 2011	0.50 (1)
M- F	-166 / 10	0.13 (1)
M- G	0 / 1569	0.39 (1)
G- K	-2123 / 0	0.98 (1)
K- H	0 / 1032	0.26 (1)
B- N	0 / 3528	0.87 (1)
K- I	0 / 2569	0.64 (1)

FACTORED CONCENTRATED LOADS (LBS)

JT	LOC.	LC1	MAX-	MAX+	FACE	DIR.	TYPE	HEEL	CONN.
M	9-10-0	-691	-774	---	FRONT	VERT	DEAD	---	C1
M	9-10-0	-380	-570	---	FRONT	VERT	LIVE	---	C1
M	9-10-0	-1890	-1890	---	FRONT	VERT	SNOW	---	C1

CONNECTION REQUIREMENTS

1) C1: A SUITABLE HANGER/MECHANICAL CONNECTION IS REQUIRED.

DESIGN CRITERIA

*** SPECIAL LOADS ANALYSIS ***
GEOMETRY AND/OR BASIC LOADS CHANGED BY USER.
LOADS WERE DERIVED FROM USER INPUT
NO FURTHER MODIFICATIONS WERE MADE

SPECIFIED LOADS:
TOP CH. LL = 34.8 PSF
DL = 8.0 PSF
BOT CH. LL = 10.5 PSF
DL = 7.3 PSF
TOTAL LOAD = 60.6 PSF

SPACING = 24.0 IN. C/C

LOADING IN FLAT SECTION BASED ON A SLOPE OF 2.00/12 MINIMUM

*** NON STANDARD GIRDER ***
ADDT'L USER-DEFINED LOADS APPLIED TO ALL LOAD CASES.

THIS TRUSS IS DESIGNED FOR RESIDENTIAL OR SMALL BUILDING REQUIREMENTS OF PART 9, NBCC 2015

THIS DESIGN COMPLIES WITH:
- PART 9 OF BCBC 2018 , ABC 2019
- PART 9 OF OBC 2012 (2019 AMENDMENT)
- CSA 086-14
- TPIC 2014

(55 % OF 48.1 P.S.F. G.S.L. PLUS 8.4 P.S.F. RAIN LOAD)
EQUALS 34.8 P.S.F. SPECIFIED ROOF LIVE LOAD

ALLOWABLE DEFL.(LL)= L/360 (0.72")
CALCULATED VERT. DEFL.(LL) = L/ 999 (0.10")
ALLOWABLE DEFL.(TL)= L/360 (0.72")
CALCULATED VERT. DEFL.(TL) = L/ 999 (0.18")

CSI: TC=0.69/1.00 (B-C:1) , BC=0.56/1.00 (M-N:1) , WB=0.98/1.00 (G-K:1) , SSI=0.25/1.00 (D-E:1)

DOL LUMBER=1.00 NAIL=1.00 LS BEND=1.00 COMP=1.00 SHEAR=1.00 TENS= 1.00

COMPANION LIVE LOAD FACTOR = 1.00

TRUSS PLATE MANUFACTURER IS NOT RESPONSIBLE FOR QUALITY CONTROL IN THE TRUSS MANUFACTURING PLANT .

NAIL VALUES

PLATE	GRIP(DRY) (PSI) MAX	MIN	SHEAR (PLI) MAX	MIN	SECTION (PLI) MAX	MIN
MT20	650	371	1747	788	1987	1873

PLATE PLACEMENT TOL. = 0.250 inches

PLATE ROTATION TOL. = 5.0 Deg.

JSI GRIP= 0.89 (I) (INPUT = 0.90)
JSI METAL= 0.77 (B) (INPUT = 1.00)

LICENSED PROFESSIONAL ENGINEER
N.A. EL-MASRI
PROVINCE OF ONTARIO
Dec 18, 2020

READ ALL NOTES ON THIS PAGE AND ON ENGINEERING NOTE PAGE ENP-1. THIS NOTE PAGE IS AN INTEGRAL PART OF THIS DRAWING AS IT CONTAINS SPECIFICATIONS AND CRITERIA USED IN THE DESIGN OF THIS COMPONENT.

Town of East Gwillimbury
Building Standards Branch BCIN #16487

These plans have been reviewed for use with the corrections as noted. No other changes may be made without written approval of the Building Standards Branch. All work must comply with Zoning By-Law 2018-043, as amended, and the Ontario Building Code, as amended. These approved documents must be kept on site at all times. The building permit must be clearly posted on site at all times.

Discipline	Reviewer	BCIN	Date
Building Code	H. Authier	43236	2021-02-05
Sewage System			
Zoning			

KOTT

JOB NAME	TRUSS NAME	QUANTITY	PLY	JOB DESC.		DRWG NO.
NE1220-129	J01	2	1	TRUSS DESC.	GREENPARK - TRINAR HALL - BRENTWOOD 3 EL 1	**Page 10 of 37**

Version 8.420 S Oct 9 2020 MiTek Industries, Inc. Fri Dec 18 09:14:08 2020 Page 1
ID:qKy8nLSCtBps7zaDJTm7k2zFzGC-1qGTk1qtVymfFSaL7y8wTJXDKjobqQ?sqilY_ly7n

Scale = 1:19.2

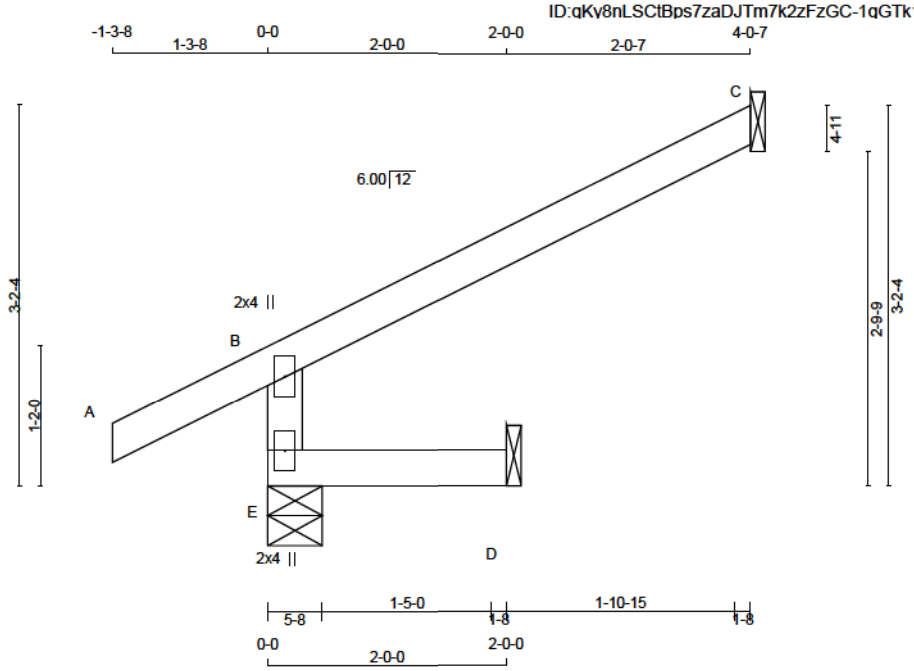

TOTAL WEIGHT = 2 X 10 = 20 lb

LUMBER
N. L. G. A. RULES

CHORDS	SIZE		LUMBER	DESCR.
E - B	2x4	DRY	No.2	SPF
A - C	2x4	DRY	No.2	SPF
E - D	2x4	DRY	No.2	SPF

DRY: SEASONED LUMBER.

PLATES (table is in inches)

JT	TYPE	PLATES	W	LEN	Y	X
B	TMV+p	MT20	2.0	4.0		
E	BMV1+p	MT20	2.0	4.0		

DIMENSIONS, SUPPORTS AND LOADINGS SPECIFIED BY FABRICATOR TO BE VERIFIED BY BUILDING DESIGNER [M]

BEARINGS

JT	FACTORED GROSS REACTION VERT	HORZ	MAXIMUM FACTORED GROSS REACTION DOWN	HORZ	UPLIFT	INPUT BRG IN-SX	REQRD BRG IN-SX
E	526	0	526	0	0	5-8	1-8
C	188	0	188	0	0	1-8	1-8
D	35	0	44	0	0	1-8	1-8

SEE MITEK STANDARD DETAIL B97791H FOR CONNECTION TO JOINT(S) C , D

UNFACTORED REACTIONS

JT	1ST LCASE COMBINED	MAX /MIN COMPONENT REACTIONS SNOW	LIVE	PERM.LIVE	WIND	DEAD	SOIL
E	372	270 / 0	23 / 0	0 / 0	0 / 0	78 / 0	0 / 0
C	130	105 / 0	0 / 0	0 / 0	0 / 0	24 / 0	0 / 0
D	32	0 / 0	19 / 0	0 / 0	0 / 0	13 / 0	0 / 0

BEARING MATERIAL TO BE SPF NO.2 OR BETTER AT JOINT(S) E

BRACING
TOP CHORD TO BE SHEATHED OR MAX. PURLIN SPACING = 6.25 FT.
MAX. UNBRACED BOTTOM CHORD LENGTH = 10.00 FT OR RIGID CEILING DIRECTLY APPLIED.

ALL PITCH BREAKS AND PERIMETER CORNER JOINTS MUST BE LATERALLY RESTRAINED.

LOADING
TOTAL LOAD CASES: (4)

CHORDS MEMB. FR-TO	MAX. FACTORED FORCE (LBS)	FACTORED VERT. LOAD (PLF) FROM	TO	LC1 MAX CSI (LC)	MAX. UNBRAC LENGTH	WEBS MEMB. FR-TO	MAX. FACTORED FORCE (LBS)	MAX CSI (LC)
E- B	-483 / 0	0.0	0.0	0.02 (3)	7.81			
A- B	0 / 38	-124.4	-124.4	0.16 (1)	10.00			
B- C	-28 / 0	-124.4	-124.4	0.34 (1)	6.25			
E- D	0 / 0	-39.2	-39.2	0.03 (3)	10.00			

DESIGN CRITERIA

SPECIFIED LOADS:

TOP CH.	LL	=	34.8	PSF
	DL	=	8.0	PSF
BOT CH.	LL	=	10.5	PSF
	DL	=	7.3	PSF
TOTAL LOAD		=	60.6	PSF

SPACING = 24.0 IN. C/C

THIS TRUSS IS DESIGNED FOR RESIDENTIAL OR SMALL BUILDING REQUIREMENTS OF PART 9, NBCC 2015

THIS DESIGN COMPLIES WITH:
- PART 9 OF BCBC 2018 , ABC 2019
- PART 9 OF OBC 2012 (2019 AMENDMENT)
- CSA 086-14
- TPIC 2014

DESIGN ASSUMPTIONS
-OVERHANG NOT TO BE ALTERED OR CUT OFF.

(55 % OF 48.1 P.S.F. G.S.L. PLUS 8.4 P.S.F. RAIN LOAD) EQUALS 34.8 P.S.F. SPECIFIED ROOF LIVE LOAD

ALLOWABLE DEFL.(LL)= L/360 (0.19")
CALCULATED VERT. DEFL.(LL) = L/ 999 (0.00")
ALLOWABLE DEFL.(TL)= L/360 (0.19")
CALCULATED VERT. DEFL.(TL) = L/ 999 (0.00")

CSI: TC=0.34/1.00 (B-C:1) , BC=0.03/1.00 (D-E:3) , WB=0.00/1.00 (n/a:0) , SSI=0.22/1.00 (B-C:1)

DOL LUMBER=1.00 NAIL=1.00 LS BEND=1.10 COMP=1.10 SHEAR=1.10 TENS= 1.10

COMPANION LIVE LOAD FACTOR = 1.00

TRUSS PLATE MANUFACTURER IS NOT RESPONSIBLE FOR QUALITY CONTROL IN THE TRUSS MANUFACTURING PLANT .

NAIL VALUES

PLATE	GRIP(DRY) (PSI) MAX	MIN	SHEAR (PLI) MAX	MIN	SECTION (PLI) MAX	MIN
MT20	650	371	1747	788	1987	1873

PLATE PLACEMENT TOL. = 0.250 inches

PLATE ROTATION TOL. = 5.0 Deg.

JSI GRIP= 0.27 (B) (INPUT = 0.90)
JSI METAL= 0.20 (B) (INPUT = 1.00)

LICENSED PROFESSIONAL ENGINEER
N.A. EL-MASRI
PROVINCE OF ONTARIO
Dec 18, 2020

READ ALL NOTES ON THIS PAGE AND ON ENGINEERING NOTE PAGE ENP-1. THIS NOTE PAGE IS AN INTEGRAL PART OF THIS DRAWING AS IT CONTAINS SPECIFICATIONS AND CRITERIA USED IN THE DESIGN OF THIS COMPONENT.

Town of East Gwillimbury
Building Standards Branch BCIN #16487

These plans have been reviewed for use with the corrections as noted. No other changes may be made without written approval of the Building Standards Branch. All work must comply with Zoning By-Law 2018-043, as amended, and the Ontario Building Code, as amended. These approved documents must be kept on site at all times. The building permit must be clearly posted on site at all times.

Discipline	Reviewer	BCIN	Date
Building Code	H. Authier	43236	2021-02-05
Sewage System			
Zoning			

KOTT

JOB NAME	TRUSS NAME	QUANTITY	PLY	JOB DESC.		DRWG NO.
NE1220-129	J02	2	1	TRUSS DESC.	GREENPARK - TRINAR HALL - BRENTWOOD 3 EL 1	**Page 11 of 37**

Version 8.420 S Oct 9 2020 MiTek Industries, Inc. Fri Dec 18 09:14:08 2020 Page 1
ID:qKy8nLSCtBps7zaDJTm7k2zFzGC-1qGTk1qtVymfFSaL7y8wTJXGBjoeqQ?sqilY y7n

Scale = 1:14.0

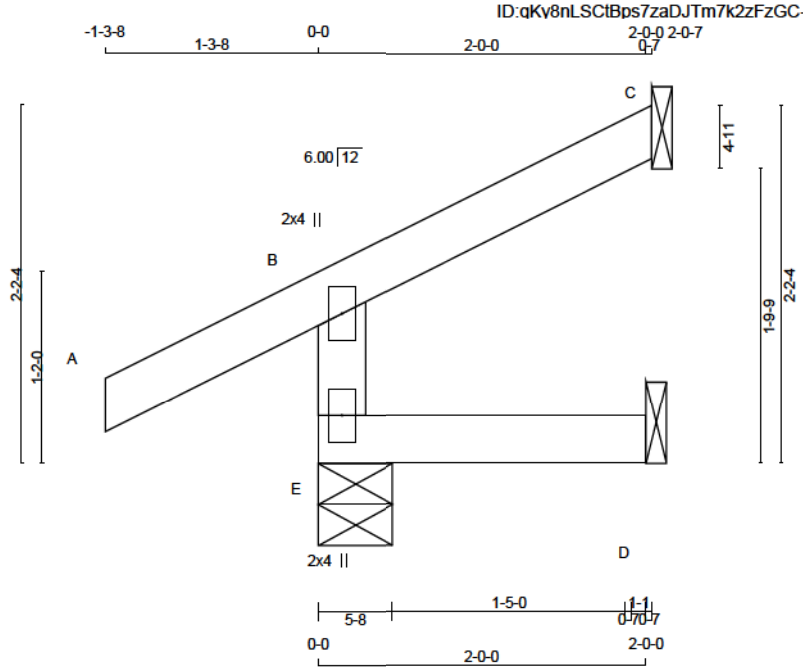

TOTAL WEIGHT = 2 X 7 = 15 lb

LUMBER
N. L. G. A. RULES

CHORDS	SIZE		LUMBER	DESCR.
E - B	2x4	DRY	No.2	SPF
A - C	2x4	DRY	No.2	SPF
E - D	2x4	DRY	No.2	SPF

DRY: SEASONED LUMBER.

PLATES (table is in inches)

JT	TYPE	PLATES	W	LEN	Y	X
B	TMV+p	MT20	2.0	4.0		
E	BMV1+p	MT20	2.0	4.0		

DIMENSIONS, SUPPORTS AND LOADINGS SPECIFIED BY FABRICATOR TO BE VERIFIED BY BUILDING DESIGNER [M]

BEARINGS

JT	FACTORED GROSS REACTION VERT	HORZ	MAXIMUM FACTORED GROSS REACTION DOWN	HORZ	UPLIFT	INPUT BRG IN-SX	REQRD BRG IN-SX
E	370	0	370	0	0	5-8	1-8
C	96	0	96	0	0	1-8	1-8
D	35	0	44	0	0	1-8	1-8

SEE MITEK STANDARD DETAIL B97791H FOR CONNECTION TO JOINT(S) C , D

UNFACTORED REACTIONS

JT	1ST LCASE COMBINED	MAX /MIN COMPONENT REACTIONS SNOW	LIVE	PERM.LIVE	WIND	DEAD	SOIL
E	264	183 / 0	23 / 0	0 / 0	0 / 0	58 / 0	0 / 0
C	66	54 / 0	0 / 0	0 / 0	0 / 0	12 / 0	0 / 0
D	32	0 / 0	19 / 0	0 / 0	0 / 0	13 / 0	0 / 0

BEARING MATERIAL TO BE SPF NO.2 OR BETTER AT JOINT(S) E

BRACING
TOP CHORD TO BE SHEATHED OR MAX. PURLIN SPACING = 6.25 FT.
MAX. UNBRACED BOTTOM CHORD LENGTH = 10.00 FT OR RIGID CEILING DIRECTLY APPLIED.

ALL PITCH BREAKS AND PERIMETER CORNER JOINTS MUST BE LATERALLY RESTRAINED.

LOADING
TOTAL LOAD CASES: (5)

CHORDS MEMB. FR-TO	MAX. FACTORED FORCE (LBS)	FACTORED VERT. LOAD (PLF) FROM	TO	LC1 MAX CSI (LC)	MAX. UNBRAC LENGTH	WEBS MEMB. FR-TO	MAX. FACTORED FORCE (LBS)	MAX CSI (LC)
E- B	-327 / 0	0.0	0.0	0.02 (3)	7.81			
A- B	0 / 38	-124.4	-124.4	0.16 (1)	10.00			
B- C	-14 / 0	-124.4	-124.4	0.09 (1)	6.25			
E- D	0 / 0	-39.2	-39.2	0.03 (3)	10.00			

CANTILEVER ANALYSIS HAS BEEN CONSIDERED IN THIS DESIGN

DESIGN CRITERIA

SPECIFIED LOADS:

TOP CH.	LL	=	34.8	PSF
	DL	=	8.0	PSF
BOT CH.	LL	=	10.5	PSF
	DL	=	7.3	PSF
TOTAL LOAD		=	60.6	PSF

SPACING = 24.0 IN. C/C

THIS TRUSS IS DESIGNED FOR RESIDENTIAL OR SMALL BUILDING REQUIREMENTS OF PART 9, NBCC 2015

THIS DESIGN COMPLIES WITH:
- PART 9 OF BCBC 2018 , ABC 2019
- PART 9 OF OBC 2012 (2019 AMENDMENT)
- CSA 086-14
- TPIC 2014

DESIGN ASSUMPTIONS
-OVERHANG NOT TO BE ALTERED OR CUT OFF.

(55 % OF 48.1 P.S.F. G.S.L. PLUS 8.4 P.S.F. RAIN LOAD) EQUALS 34.8 P.S.F. SPECIFIED ROOF LIVE LOAD

ALLOWABLE DEFL.(LL)= L/360 (0.19")
CALCULATED VERT. DEFL.(LL) = L/ 999 (0.00")
ALLOWABLE DEFL.(TL)= L/360 (0.19")
CALCULATED VERT. DEFL.(TL) = L/ 999 (0.00")

CSI: TC=0.16/1.00 (A-B:1) , BC=0.03/1.00 (D-E:3) , WB=0.00/1.00 (n/a:0) , SSI=0.12/1.00 (A-B:1)

DOL LUMBER=1.00 NAIL=1.00 LS BEND=1.10 COMP=1.10 SHEAR=1.10 TENS= 1.10

COMPANION LIVE LOAD FACTOR = 1.00

TRUSS PLATE MANUFACTURER IS NOT RESPONSIBLE FOR QUALITY CONTROL IN THE TRUSS MANUFACTURING PLANT .

NAIL VALUES

PLATE	GRIP(DRY) (PSI) MAX	MIN	SHEAR (PLI) MAX	MIN	SECTION (PLI) MAX	MIN
MT20	650	371	1747	788	1987	1873

PLATE PLACEMENT TOL. = 0.250 inches

PLATE ROTATION TOL. = 5.0 Deg.

JSI GRIP= 0.18 (B) (INPUT = 0.90)
JSI METAL= 0.14 (B) (INPUT = 1.00)

LICENSED PROFESSIONAL ENGINEER
N.A. EL-MASRI
PROVINCE OF ONTARIO
Dec 18, 2020

READ ALL NOTES ON THIS PAGE AND ON ENGINEERING NOTE PAGE ENP-1. THIS NOTE PAGE IS AN INTEGRAL PART OF THIS DRAWING AS IT CONTAINS SPECIFICATIONS AND CRITERIA USED IN THE DESIGN OF THIS COMPONENT.

Town of East Gwillimbury
Building Standards Branch BCIN #16487

These plans have been reviewed for use with the corrections as noted. No other changes may be made without written approval of the Building Standards Branch. All work must comply with Zoning By-Law 2018-043, as amended, and the Ontario Building Code, as amended. These approved documents must be kept on site at all times. The building permit must be clearly posted on site at all times.

Discipline	Reviewer	BCIN	Date
Building Code	H. Authier	43236	2021-02-05
Sewage System			
Zoning			

KOTT

JOB NAME	TRUSS NAME	QUANTITY	PLY	JOB DESC.		DRWG NO.
NE1220-129	J03	2	1	TRUSS DESC.	GREENPARK - TRINAR HALL - BRENTWOOD 3 EL 1	**Page 12 of 37**

Version 8.420 S Oct 9 2020 MiTek Industries, Inc. Fri Dec 18 09:14:09 2020 Page 1
ID:qKy8nLSCtBps7zaDJTm7k2zFzGC-V0qryNrWGFuWtb9XhffA?X4Q174xPtF0vMU6WBy7n

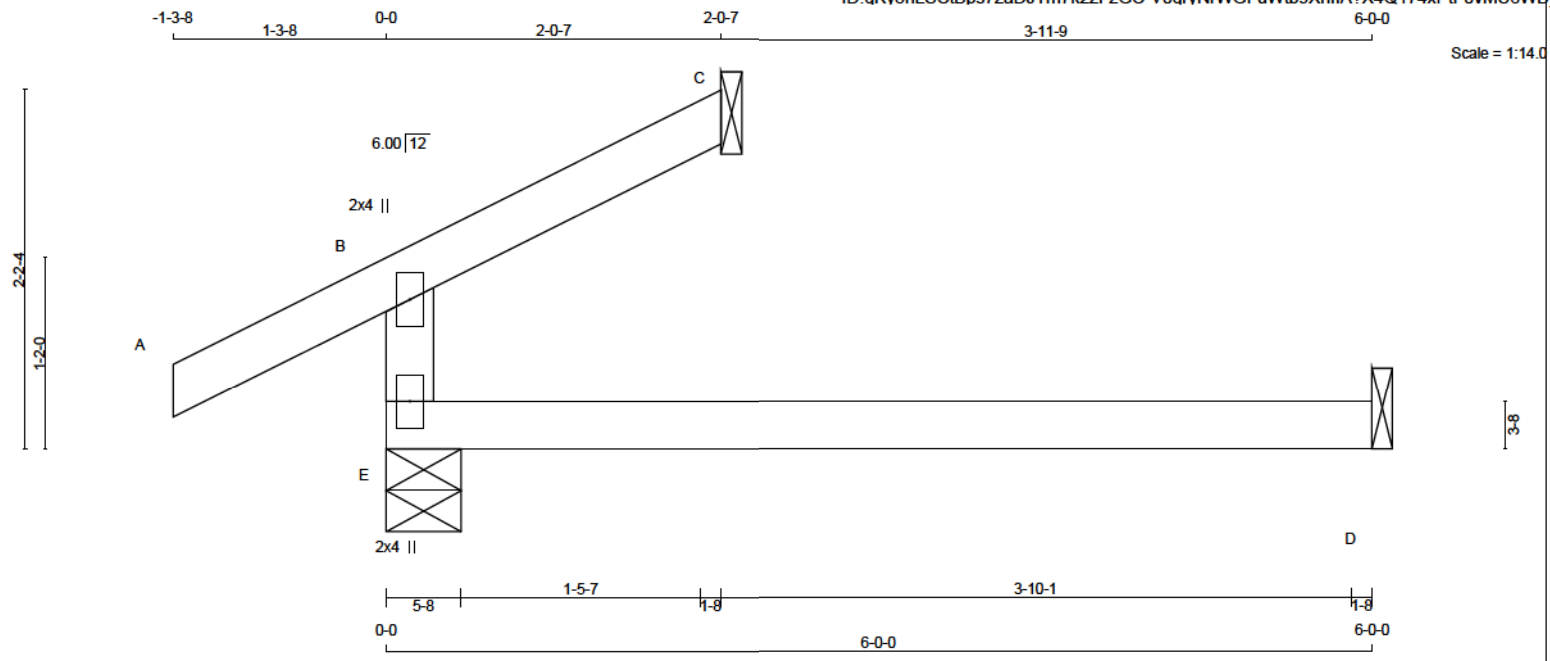

TOTAL WEIGHT = 2 X 12 = 24 lb

LUMBER
N. L. G. A. RULES

CHORDS	SIZE		LUMBER	DESCR.
E - B	2x4	DRY	No.2	SPF
A - C	2x4	DRY	No.2	SPF
E - D	2x4	DRY	No.2	SPF

DRY: SEASONED LUMBER.

PLATES (table is in inches)

JT	TYPE	PLATES	W	LEN	Y	X
B	TMV+p	MT20	2.0	4.0		
E	BMV1+p	MT20	2.0	4.0		

DIMENSIONS, SUPPORTS AND LOADINGS SPECIFIED BY FABRICATOR TO BE VERIFIED BY BUILDING DESIGNER

BEARINGS

JT	FACTORED GROSS REACTION VERT	HORZ	MAXIMUM GROSS REACTION DOWN	HORZ	FACTORED UPLIFT	INPUT BRG IN-SX	REQRD BRG IN-SX
E	465	0	465	0	0	5-8	1-8
C	96	0	96	0	0	1-8	1-8
D	97	0	123	0	0	1-8	1-8

SEE MITEK STANDARD DETAIL B97791H FOR CONNECTION TO JOINT(S) C , D

UNFACTORED REACTIONS

JT	1ST LCASE COMBINED	MAX /MIN COMPONENT REACTIONS SNOW	LIVE	PERM.LIVE	WIND	DEAD	SOIL
E	350	183 / 0	74 / 0	0 / 0	0 / 0	93 / 0	0 / 0
C	66	54 / 0	0 / 0	0 / 0	0 / 0	12 / 0	0 / 0
D	88	0 / 0	52 / 0	0 / 0	0 / 0	36 / 0	0 / 0

BEARING MATERIAL TO BE SPF NO.2 OR BETTER AT JOINT(S) E, C

BRACING
TOP CHORD TO BE SHEATHED OR MAX. PURLIN SPACING = 6.25 FT.
MAX. UNBRACED BOTTOM CHORD LENGTH = 10.00 FT OR RIGID CEILING DIRECTLY APPLIED.

ALL PITCH BREAKS AND PERIMETER CORNER JOINTS MUST BE LATERALLY RESTRAINED.

LOADING
TOTAL LOAD CASES: (4)

CHORDS MEMB. FR-TO	MAX. FACTORED FORCE (LBS)	FACTORED VERT. LOAD (PLF) FROM	TO	LC1 MAX CSI (LC)	MAX. UNBRAC LENGTH	WEBS MEMB. FR-TO	MAX. FACTORED FORCE (LBS)	MAX CSI (LC)
E- B	-327 / 0	0.0	0.0	0.22 (3)	7.81			
A- B	0 / 38	-124.4	-124.4	0.16 (1)	10.00			
B- C	-14 / 0	-124.4	-124.4	0.09 (1)	6.25			
E- D	0 / 0	-39.2	-39.2	0.22 (3)	10.00			

DESIGN CRITERIA [M]

SPECIFIED LOADS:

TOP CH.	LL	=	34.8	PSF
	DL	=	8.0	PSF
BOT CH.	LL	=	10.5	PSF
	DL	=	7.3	PSF
TOTAL LOAD		=	60.6	PSF

SPACING = 24.0 IN. C/C

THIS TRUSS IS DESIGNED FOR RESIDENTIAL OR SMALL BUILDING REQUIREMENTS OF PART 9, NBCC 2015

THIS DESIGN COMPLIES WITH:
- PART 9 OF BCBC 2018 , ABC 2019
- PART 9 OF OBC 2012 (2019 AMENDMENT)
- CSA 086-14
- TPIC 2014

DESIGN ASSUMPTIONS
-OVERHANG NOT TO BE ALTERED OR CUT OFF.

(55 % OF 48.1 P.S.F. G.S.L. PLUS 8.4 P.S.F. RAIN LOAD) EQUALS 34.8 P.S.F. SPECIFIED ROOF LIVE LOAD

ALLOWABLE DEFL.(LL)= L/360 (0.20")
CALCULATED VERT. DEFL.(LL) = L/ 999 (0.05")
ALLOWABLE DEFL.(TL)= L/360 (0.20")
CALCULATED VERT. DEFL.(TL) = L/ 874 (0.08")

CSI: TC=0.22/1.00 (B-E:3) , BC=0.22/1.00 (D-E:3) , WB=0.00/1.00 (n/a:0) , SSI=0.14/1.00 (D-E:3)

DOL LUMBER=1.00 NAIL=1.00 LS BEND=1.10 COMP=1.10 SHEAR=1.10 TENS= 1.10

COMPANION LIVE LOAD FACTOR = 1.00

TRUSS PLATE MANUFACTURER IS NOT RESPONSIBLE FOR QUALITY CONTROL IN THE TRUSS MANUFACTURING PLANT .

NAIL VALUES

PLATE	GRIP(DRY) (PSI) MAX	MIN	SHEAR (PLI) MAX	MIN	SECTION (PLI) MAX	MIN
MT20	650	371	1747	788	1987	1873

PLATE PLACEMENT TOL. = 0.250 inches

PLATE ROTATION TOL. = 5.0 Deg.

JSI GRIP= 0.18 (B) (INPUT = 0.90)
JSI METAL= 0.14 (B) (INPUT = 1.00)

LICENSED PROFESSIONAL ENGINEER
N.A. EL-MASRI
PROVINCE OF ONTARIO
Dec 18, 2020

READ ALL NOTES ON THIS PAGE AND ON ENGINEERING NOTE PAGE ENP-1. THIS NOTE PAGE IS AN INTEGRAL PART OF THIS DRAWING AS IT CONTAINS SPECIFICATIONS AND CRITERIA USED IN THE DESIGN OF THIS COMPONENT.

Town of East Gwillimbury
Building Standards Branch BCIN #16487

These plans have been reviewed for use with the corrections as noted. No other changes may be made without written approval of the Building Standards Branch. All work must comply with Zoning By-Law 2018-043, as amended, and the Ontario Building Code, as amended. These approved documents must be kept on site at all times. The building permit must be clearly posted on site at all times.

Discipline	Reviewer	BCIN	Date
Building Code	H. Authier	43236	2021-02-05
Sewage System			
Zoning			

KOTT

JOB NAME	TRUSS NAME	QUANTITY	PLY	JOB DESC.		DRWG NO.
NE1220-129	J04	2	1	TRUSS DESC.	GREENPARK - TRINAR HALL - BRENTWOOD 3 EL 1	**Page 13 of 37**

Version 8.420 S Oct 9 2020 MiTek Industries, Inc. Fri Dec 18 09:14:09 2020 Page 1
ID:qKv8nLSCtBps7zaDJTm7k2zFzGC-V0qryNrWGFuWtb9XhffA?X4O474nPtF0vMU6WEy7n

Scale = 1:19.0

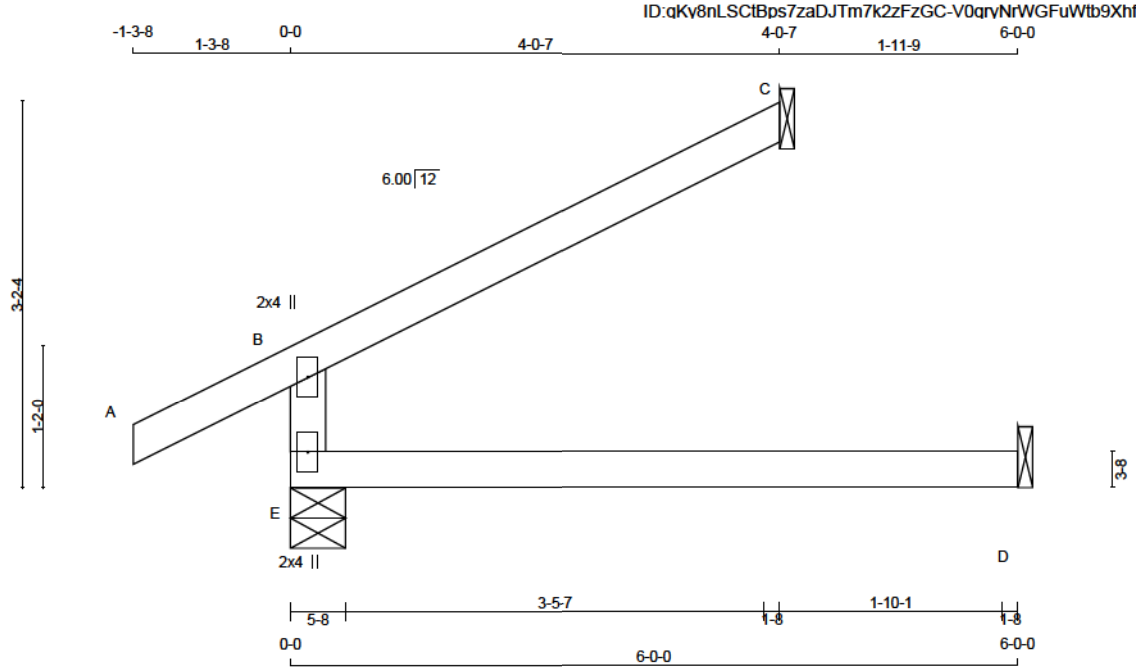

TOTAL WEIGHT = 2 X 15 = 29 lb

LUMBER
N. L. G. A. RULES

CHORDS	SIZE		LUMBER	DESCR.
E - B	2x4	DRY	No.2	SPF
A - C	2x4	DRY	No.2	SPF
E - D	2x4	DRY	No.2	SPF

DRY: SEASONED LUMBER.

PLATES (table is in inches)

JT	TYPE	PLATES	W	LEN	Y	X
B	TMV+p	MT20	2.0	4.0		
E	BMV1+p	MT20	2.0	4.0		

DIMENSIONS, SUPPORTS AND LOADINGS SPECIFIED BY FABRICATOR TO BE VERIFIED BY BUILDING DESIGNER [M]

BEARINGS

JT	FACTORED GROSS REACTION VERT	HORZ	MAXIMUM FACTORED GROSS REACTION DOWN	HORZ	UPLIFT	INPUT BRG IN-SX	REQRD BRG IN-SX
E	621	0	621	0	0	5-8	1-8
C	188	0	188	0	0	1-8	1-8
D	97	0	123	0	0	1-8	1-8

SEE MITEK STANDARD DETAIL B97791H FOR CONNECTION TO JOINT(S) C , D

UNFACTORED REACTIONS

JT	1ST LCASE COMBINED	MAX /MIN COMPONENT REACTIONS SNOW	LIVE	PERM.LIVE	WIND	DEAD	SOIL
E	458	270 / 0	74 / 0	0 / 0	0 / 0	114 / 0	0 / 0
C	130	105 / 0	0 / 0	0 / 0	0 / 0	24 / 0	0 / 0
D	88	0 / 0	52 / 0	0 / 0	0 / 0	36 / 0	0 / 0

BEARING MATERIAL TO BE SPF NO.2 OR BETTER AT JOINT(S) E, C

BRACING
TOP CHORD TO BE SHEATHED OR MAX. PURLIN SPACING = 6.25 FT.
MAX. UNBRACED BOTTOM CHORD LENGTH = 10.00 FT OR RIGID CEILING DIRECTLY APPLIED.

ALL PITCH BREAKS AND PERIMETER CORNER JOINTS MUST BE LATERALLY RESTRAINED.

LOADING
TOTAL LOAD CASES: (4)

CHORDS MEMB. FR-TO	MAX. FACTORED FORCE (LBS)	FACTORED VERT. LOAD (PLF) FROM	TO	LC1 MAX CSI (LC)	MAX. UNBRAC LENGTH
E- B	-483 / 0	0.0	0.0	0.23 (3)	7.81
A- B	0 / 38	-124.4	-124.4	0.16 (1)	10.00
B- C	-28 / 0	-124.4	-124.4	0.34 (1)	6.25
E- D	0 / 0	-39.2	-39.2	0.23 (3)	10.00

WEBS MEMB. FR-TO	MAX. FACTORED FORCE (LBS)	MAX CSI (LC)

DESIGN CRITERIA

SPECIFIED LOADS:

TOP CH.	LL	=	34.8	PSF
	DL	=	8.0	PSF
BOT CH.	LL	=	10.5	PSF
	DL	=	7.3	PSF
TOTAL LOAD		=	60.6	PSF

SPACING = 24.0 IN. C/C

THIS TRUSS IS DESIGNED FOR RESIDENTIAL OR SMALL BUILDING REQUIREMENTS OF PART 9, NBCC 2015

THIS DESIGN COMPLIES WITH:
- PART 9 OF BCBC 2018 , ABC 2019
- PART 9 OF OBC 2012 (2019 AMENDMENT)
- CSA 086-14
- TPIC 2014

DESIGN ASSUMPTIONS
-OVERHANG NOT TO BE ALTERED OR CUT OFF.

(55 % OF 48.1 P.S.F. G.S.L. PLUS 8.4 P.S.F. RAIN LOAD) EQUALS 34.8 P.S.F. SPECIFIED ROOF LIVE LOAD

ALLOWABLE DEFL.(LL)= L/360 (0.20")
CALCULATED VERT. DEFL.(LL) = L/ 999 (0.05")
ALLOWABLE DEFL.(TL)= L/360 (0.20")
CALCULATED VERT. DEFL.(TL) = L/ 874 (0.08")

CSI: TC=0.34/1.00 (B-C:1) , BC=0.23/1.00 (D-E:3) , WB=0.00/1.00 (n/a:0) , SSI=0.22/1.00 (B-C:1)

DOL LUMBER=1.00 NAIL=1.00 LS BEND=1.10 COMP=1.10 SHEAR=1.10 TENS= 1.10

COMPANION LIVE LOAD FACTOR = 1.00

TRUSS PLATE MANUFACTURER IS NOT RESPONSIBLE FOR QUALITY CONTROL IN THE TRUSS MANUFACTURING PLANT .

NAIL VALUES

PLATE	GRIP(DRY) (PSI) MAX	MIN	SHEAR (PLI) MAX	MIN	SECTION (PLI) MAX	MIN
MT20	650	371	1747	788	1987	1873

PLATE PLACEMENT TOL. = 0.250 inches

PLATE ROTATION TOL. = 5.0 Deg.

JSI GRIP= 0.27 (B) (INPUT = 0.90)
JSI METAL= 0.20 (B) (INPUT = 1.00)

LICENSED PROFESSIONAL ENGINEER
N.A. EL-MASRI
PROVINCE OF ONTARIO
Dec 18, 2020

READ ALL NOTES ON THIS PAGE AND ON ENGINEERING NOTE PAGE ENP-1. THIS NOTE PAGE IS AN INTEGRAL PART OF THIS DRAWING AS IT CONTAINS SPECIFICATIONS AND CRITERIA USED IN THE DESIGN OF THIS COMPONENT.

Town of East Gwillimbury
Building Standards Branch BCIN #16487

These plans have been reviewed for use with the corrections as noted. No other changes may be made without written approval of the Building Standards Branch. All work must comply with Zoning By-Law 2018-043, as amended, and the Ontario Building Code, as amended. These approved documents must be kept on site at all times. The building permit must be clearly posted on site at all times.

Discipline	Reviewer	BCIN	Date
Building Code	H. Authier	43236	2021-02-05
Sewage System			
Zoning			

KOTT

JOB NAME	TRUSS NAME	QUANTITY	PLY	JOB DESC.		DRWG NO.
NE1220-129	J05	9	1	TRUSS DESC.	GREENPARK - TRINAR HALL - BRENTWOOD 3 EL 1	**Page 14 of 37**

Version 8.420 S Oct 9 2020 MiTek Industries, Inc. Fri Dec 18 09:14:10 2020 Page 1
ID:qKv8nLSCtBps7zaDJTm7k2zFzGC-zDOD9js81Z0NVlkkENAPYkdTGXQs8KU980Ef2ey7r

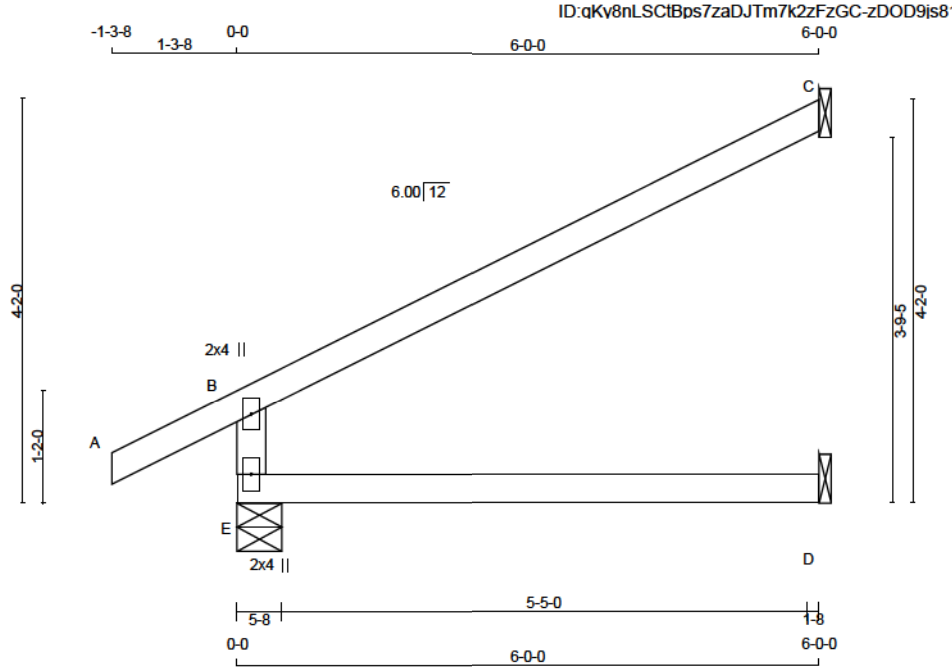

TOTAL WEIGHT = 9 X 17 = 154 lb

LUMBER
N. L. G. A. RULES

CHORDS	SIZE		LUMBER	DESCR.
E - B	2x4	DRY	No.2	SPF
A - C	2x4	DRY	No.2	SPF
E - D	2x4	DRY	No.2	SPF

DRY: SEASONED LUMBER.

PLATES (table is in inches)

JT	TYPE	PLATES	W	LEN	Y	X
B	TMV+p	MT20	2.0	4.0		
E	BMV1+p	MT20	2.0	4.0		

DIMENSIONS, SUPPORTS AND LOADINGS SPECIFIED BY FABRICATOR TO BE VERIFIED BY BUILDING DESIGNER [M]

BEARINGS

JT	FACTORED GROSS REACTION VERT	HORZ	MAXIMUM GROSS REACTION DOWN	HORZ	FACTORED UPLIFT	INPUT BRG IN-SX	REQRD BRG IN-SX
E	774	0	774	0	0	5-8	1-8
C	280	0	280	0	0	1-8	1-8
D	97	0	123	0	0	1-8	1-8

SEE MITEK STANDARD DETAIL B97791H FOR CONNECTION TO JOINT(S) C , D

UNFACTORED REACTIONS

JT	1ST LCASE COMBINED	MAX /MIN COMPONENT REACTIONS SNOW	LIVE	PERM.LIVE	WIND	DEAD	SOIL
E	563	355 / 0	74 / 0	0 / 0	0 / 0	133 / 0	0 / 0
C	193	157 / 0	0 / 0	0 / 0	0 / 0	36 / 0	0 / 0
D	88	0 / 0	52 / 0	0 / 0	0 / 0	36 / 0	0 / 0

BEARING MATERIAL TO BE SPF NO.2 OR BETTER AT JOINT(S) E

BRACING
TOP CHORD TO BE SHEATHED OR MAX. PURLIN SPACING = 6.25 FT.
MAX. UNBRACED BOTTOM CHORD LENGTH = 10.00 FT OR RIGID CEILING DIRECTLY APPLIED.

ALL PITCH BREAKS AND PERIMETER CORNER JOINTS MUST BE LATERALLY RESTRAINED.

LOADING
TOTAL LOAD CASES: (4)

CHORDS

MEMB. FR-TO	MAX. FACTORED FORCE (LBS)	FACTORED VERT. LOAD (PLF) FROM	TO	LC1 MAX CSI (LC)	MAX. UNBRAC LENGTH
E- B	-635 / 0	0.0	0.0	0.24 (3)	7.81
A- B	0 / 38	-124.4	-124.4	0.16 (1)	10.00
B- C	-42 / 0	-124.4	-124.4	0.76 (1)	6.25
E- D	0 / 0	-39.2	-39.2	0.24 (3)	10.00

WEBS

MEMB. FR-TO	MAX. FACTORED FORCE (LBS)	MAX CSI (LC)

DESIGN CRITERIA

SPECIFIED LOADS:

TOP CH.	LL	=	34.8	PSF
	DL	=	8.0	PSF
BOT CH.	LL	=	10.5	PSF
	DL	=	7.3	PSF
TOTAL LOAD		=	60.6	PSF

SPACING = 24.0 IN. C/C

THIS TRUSS IS DESIGNED FOR RESIDENTIAL OR SMALL BUILDING REQUIREMENTS OF PART 9, NBCC 2015

THIS DESIGN COMPLIES WITH:
- PART 9 OF BCBC 2018 , ABC 2019
- PART 9 OF OBC 2012 (2019 AMENDMENT)
- CSA 086-14
- TPIC 2014

DESIGN ASSUMPTIONS
-OVERHANG NOT TO BE ALTERED OR CUT OFF.

(55 % OF 48.1 P.S.F. G.S.L. PLUS 8.4 P.S.F. RAIN LOAD) EQUALS 34.8 P.S.F. SPECIFIED ROOF LIVE LOAD

ALLOWABLE DEFL.(LL)= L/360 (0.20")
CALCULATED VERT. DEFL.(LL) = L/ 999 (0.05")
ALLOWABLE DEFL.(TL)= L/360 (0.20")
CALCULATED VERT. DEFL.(TL) = L/ 874 (0.08")

CSI: TC=0.76/1.00 (B-C:1) , BC=0.24/1.00 (D-E:3) , WB=0.00/1.00 (n/a:0) , SSI=0.33/1.00 (B-C:1)

DOL LUMBER=1.00 NAIL=1.00 LS BEND=1.10 COMP=1.10 SHEAR=1.10 TENS= 1.10

COMPANION LIVE LOAD FACTOR = 1.00

TRUSS PLATE MANUFACTURER IS NOT RESPONSIBLE FOR QUALITY CONTROL IN THE TRUSS MANUFACTURING PLANT .

NAIL VALUES

PLATE	GRIP(DRY) (PSI) MAX	MIN	SHEAR (PLI) MAX	MIN	SECTION (PLI) MAX	MIN
MT20	650	371	1747	788	1987	1873

PLATE PLACEMENT TOL. = 0.250 inches

PLATE ROTATION TOL. = 5.0 Deg.

JSI GRIP= 0.36 (B) (INPUT = 0.90)
JSI METAL= 0.26 (B) (INPUT = 1.00)

LICENSED PROFESSIONAL ENGINEER
N.A. EL-MASRI
PROVINCE OF ONTARIO
Dec 18, 2020

READ ALL NOTES ON THIS PAGE AND ON ENGINEERING NOTE PAGE ENP-1. THIS NOTE PAGE IS AN INTEGRAL PART OF THIS DRAWING AS IT CONTAINS SPECIFICATIONS AND CRITERIA USED IN THE DESIGN OF THIS COMPONENT.

Town of East Gwillimbury
Building Standards Branch BCIN #16487

These plans have been reviewed for use with the corrections as noted. No other changes may be made without written approval of the Building Standards Branch. All work must comply with Zoning By-Law 2018-043, as amended, and the Ontario Building Code, as amended. These approved documents must be kept on site at all times. The building permit must be clearly posted on site at all times.

Discipline	Reviewer	BCIN	Date
Building Code	H. Authier	43236	2021-02-05
Sewage System			
Zoning			

KOTT

JOB NAME	TRUSS NAME	QUANTITY	PLY	JOB DESC.		DRWG NO.
NE1220-129	J06	1	1	TRUSS DESC.	GREENPARK - TRINAR HALL - BRENTWOOD 3 EL 1	**Page 15 of 37**

Version 8.420 S Oct 9 2020 MiTek Industries, Inc. Fri Dec 18 09:14:10 2020 Page 1
ID:qKv8nLSCtBps7zaDJTm7k2zFzGC-zDOD9js81Z0NVlkkENAPYkdcbXT58KU980Ef2ey7r

Scale = 1:16.9

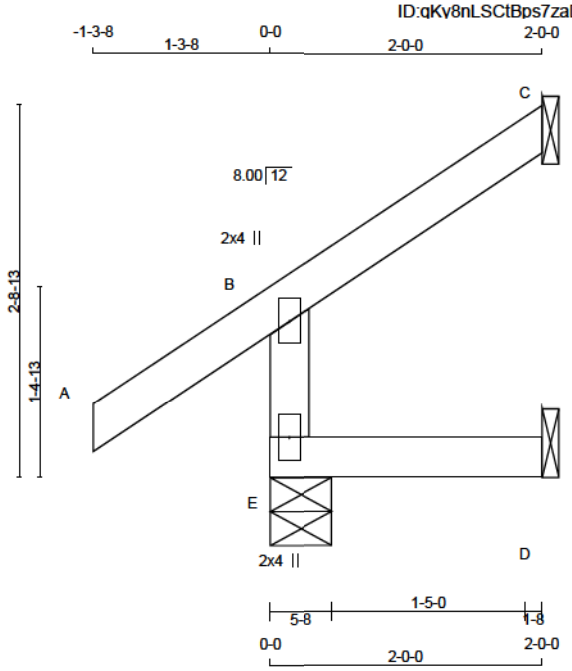

TOTAL WEIGHT = 8 lb

LUMBER
N. L. G. A. RULES

CHORDS	SIZE		LUMBER	DESCR.
E - B	2x4	DRY	No.2	SPF
A - C	2x4	DRY	No.2	SPF
E - D	2x4	DRY	No.2	SPF

DRY: SEASONED LUMBER.

PLATES (table is in inches)

JT	TYPE	PLATES	W	LEN	Y	X
B	TMV+p	MT20	2.0	4.0		
E	BMV1+p	MT20	2.0	4.0		

DIMENSIONS, SUPPORTS AND LOADINGS SPECIFIED BY FABRICATOR TO BE VERIFIED BY BUILDING DESIGNER [M]

BEARINGS

JT	FACTORED GROSS REACTION VERT	HORZ	MAXIMUM FACTORED GROSS REACTION DOWN	HORZ	UPLIFT	INPUT BRG IN-SX	REQRD BRG IN-SX
E	368	0	368	0	0	5-8	1-8
C	94	0	94	0	0	1-8	1-8
D	36	0	45	0	0	1-8	1-8

SEE MITEK STANDARD DETAIL B97791H FOR CONNECTION TO JOINT(S) C , D

UNFACTORED REACTIONS

JT	1ST LCASE COMBINED	MAX /MIN COMPONENT REACTIONS SNOW	LIVE	PERM.LIVE	WIND	DEAD	SOIL
E	263	182 / 0	23 / 0	0 / 0	0 / 0	58 / 0	0 / 0
C	65	53 / 0	0 / 0	0 / 0	0 / 0	12 / 0	0 / 0
D	32	0 / 0	19 / 0	0 / 0	0 / 0	13 / 0	0 / 0

BEARING MATERIAL TO BE SPF NO.2 OR BETTER AT JOINT(S) E, C

BRACING
TOP CHORD TO BE SHEATHED OR MAX. PURLIN SPACING = 6.25 FT.
MAX. UNBRACED BOTTOM CHORD LENGTH = 10.00 FT OR RIGID CEILING DIRECTLY APPLIED.

ALL PITCH BREAKS AND PERIMETER CORNER JOINTS MUST BE LATERALLY RESTRAINED.

LOADING
TOTAL LOAD CASES: (5)

CHORDS MEMB. FR-TO	MAX. FACTORED FORCE (LBS)	FACTORED VERT. LOAD (PLF) FROM	TO	LC1 MAX CSI (LC)	MAX. UNBRAC LENGTH	WEBS MEMB. FR-TO	MAX. FACTORED FORCE (LBS)	MAX CSI (LC)
E- B	-325 / 0	0.0	0.0	0.02 (3)	7.81			
A- B	0 / 47	-124.4	-124.4	0.17 (1)	10.00			
B- C	-17 / 0	-124.4	-124.4	0.08 (1)	6.25			
E- D	0 / 0	-39.2	-39.2	0.03 (3)	10.00			

CANTILEVER ANALYSIS HAS BEEN CONSIDERED IN THIS DESIGN

DESIGN CRITERIA

SPECIFIED LOADS:

TOP CH.	LL	=	34.8	PSF
	DL	=	8.0	PSF
BOT CH.	LL	=	10.5	PSF
	DL	=	7.3	PSF
TOTAL LOAD		=	60.6	PSF

SPACING = 24.0 IN. C/C

THIS TRUSS IS DESIGNED FOR RESIDENTIAL OR SMALL BUILDING REQUIREMENTS OF PART 9, NBCC 2015

THIS DESIGN COMPLIES WITH:
- PART 9 OF BCBC 2018 , ABC 2019
- PART 9 OF OBC 2012 (2019 AMENDMENT)
- CSA 086-14
- TPIC 2014

DESIGN ASSUMPTIONS
-OVERHANG NOT TO BE ALTERED OR CUT OFF.

(55 % OF 48.1 P.S.F. G.S.L. PLUS 8.4 P.S.F. RAIN LOAD) EQUALS 34.8 P.S.F. SPECIFIED ROOF LIVE LOAD

ALLOWABLE DEFL.(LL)= L/360 (0.19")
CALCULATED VERT. DEFL.(LL) = L/ 999 (0.00")
ALLOWABLE DEFL.(TL)= L/360 (0.19")
CALCULATED VERT. DEFL.(TL) = L/ 999 (0.00")

CSI: TC=0.17/1.00 (A-B:1) , BC=0.03/1.00 (D-E:3) , WB=0.00/1.00 (n/a:0) , SSI=0.11/1.00 (A-B:1)

DOL LUMBER=1.00 NAIL=1.00 LS BEND=1.10 COMP=1.10 SHEAR=1.10 TENS= 1.10

COMPANION LIVE LOAD FACTOR = 1.00

TRUSS PLATE MANUFACTURER IS NOT RESPONSIBLE FOR QUALITY CONTROL IN THE TRUSS MANUFACTURING PLANT .

NAIL VALUES

PLATE	GRIP(DRY) (PSI) MAX	MIN	SHEAR (PLI) MAX	MIN	SECTION (PLI) MAX	MIN
MT20	650	371	1747	788	1987	1873

PLATE PLACEMENT TOL. = 0.250 inches

PLATE ROTATION TOL. = 5.0 Deg.

JSI GRIP= 0.20 (B) (INPUT = 0.90)
JSI METAL= 0.17 (B) (INPUT = 1.00)

LICENSED PROFESSIONAL ENGINEER
N.A. EL-MASRI
PROVINCE OF ONTARIO
Dec 18, 2020

READ ALL NOTES ON THIS PAGE AND ON ENGINEERING NOTE PAGE ENP-1. THIS NOTE PAGE IS AN INTEGRAL PART OF THIS DRAWING AS IT CONTAINS SPECIFICATIONS AND CRITERIA USED IN THE DESIGN OF THIS COMPONENT.

Town of East Gwillimbury
Building Standards Branch BCIN #16487

These plans have been reviewed for use with the corrections as noted. No other changes may be made without written approval of the Building Standards Branch. All work must comply with Zoning By-Law 2018-043, as amended, and the Ontario Building Code, as amended. These approved documents must be kept on site at all times. The building permit must be clearly posted on site at all times.

Discipline	Reviewer	BCIN	Date
Building Code	H. Authier	43236	2021-02-05
Sewage System			
Zoning			

KOTT

JOB NAME	TRUSS NAME	QUANTITY	PLY	JOB DESC.		DRWG NO.
NE1220-129	J07	1	1	TRUSS DESC.	GREENPARK - TRINAR HALL - BRENTWOOD 3 EL 1	**Page 16 of 37**

Version 8.420 S Oct 9 2020 MiTek Industries, Inc. Fri Dec 18 09:14:11 2020 Page 1
ID:qKv8nLSCtBps7zaDJTm7k2zFzGC-RPvbM3tmos8E6vIwo4he5v9kvwpHtnkJMqzDb4y7r

Scale = 1:23.5

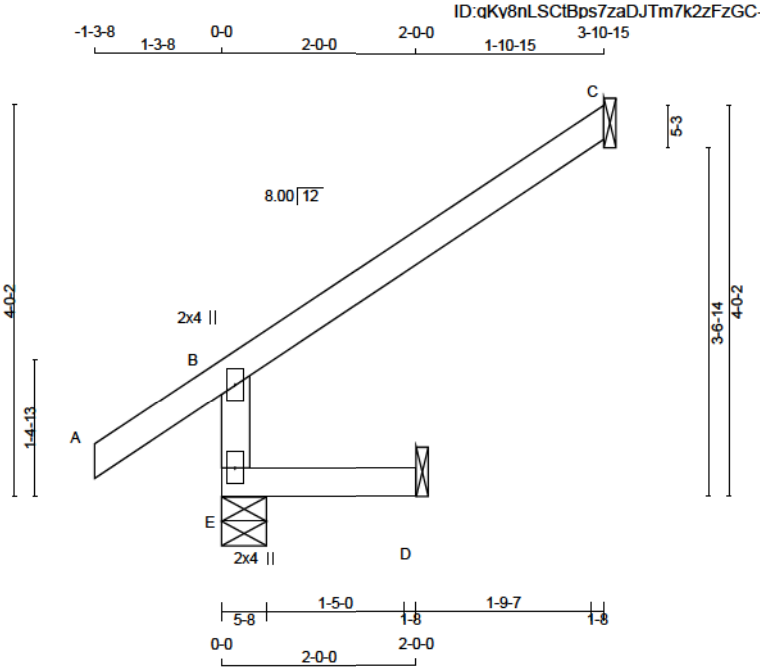

TOTAL WEIGHT = 11 lb

LUMBER
N. L. G. A. RULES

CHORDS	SIZE		LUMBER	DESCR.
E - B	2x4	DRY	No.2	SPF
A - C	2x4	DRY	No.2	SPF
E - D	2x4	DRY	No.2	SPF

DRY: SEASONED LUMBER.

PLATES (table is in inches)

JT	TYPE	PLATES	W	LEN	Y	X
B	TMV+p	MT20	2.0	4.0		
E	BMV1+p	MT20	2.0	4.0		

DIMENSIONS, SUPPORTS AND LOADINGS SPECIFIED BY FABRICATOR TO BE VERIFIED BY BUILDING DESIGNER

BEARINGS

JT	FACTORED GROSS REACTION VERT	HORZ	MAXIMUM FACTORED GROSS REACTION DOWN	HORZ	UPLIFT	INPUT BRG IN-SX	REQRD BRG IN-SX
E	518	0	518	0	0	5-8	1-8
C	183	0	183	0	0	1-8	1-8
D	36	0	45	0	0	1-8	1-8

SEE MITEK STANDARD DETAIL B97791H FOR CONNECTION TO JOINT(S) C , D

UNFACTORED REACTIONS

JT	1ST LCASE COMBINED	MAX /MIN COMPONENT REACTIONS SNOW	LIVE	PERM.LIVE	WIND	DEAD	SOIL
E	366	266 / 0	23 / 0	0 / 0	0 / 0	77 / 0	0 / 0
C	126	102 / 0	0 / 0	0 / 0	0 / 0	23 / 0	0 / 0
D	32	0 / 0	19 / 0	0 / 0	0 / 0	13 / 0	0 / 0

BEARING MATERIAL TO BE SPF NO.2 OR BETTER AT JOINT(S) E

BRACING
TOP CHORD TO BE SHEATHED OR MAX. PURLIN SPACING = 6.25 FT.
MAX. UNBRACED BOTTOM CHORD LENGTH = 10.00 FT OR RIGID CEILING DIRECTLY APPLIED.

ALL PITCH BREAKS AND PERIMETER CORNER JOINTS MUST BE LATERALLY RESTRAINED.

LOADING
TOTAL LOAD CASES: (5)

CHORDS MEMB. FR-TO	MAX. FACTORED FORCE (LBS)	FACTORED VERT. LOAD (PLF) FROM	TO	LC1 MAX CSI (LC)	MAX. UNBRAC LENGTH	WEBS MEMB. FR-TO	MAX. FACTORED FORCE (LBS)	MAX CSI (LC)
E- B	-475 / 0	0.0	0.0	0.02 (3)	7.81			
A- B	0 / 47	-124.4	-124.4	0.17 (5)	10.00			
B- C	-34 / 0	-124.4	-124.4	0.32 (1)	6.25			
E- D	0 / 0	-39.2	-39.2	0.04 (3)	10.00			

CANTILEVER ANALYSIS HAS BEEN CONSIDERED IN THIS DESIGN

[M]

DESIGN CRITERIA

SPECIFIED LOADS:

TOP CH.	LL	=	34.8	PSF
	DL	=	8.0	PSF
BOT CH.	LL	=	10.5	PSF
	DL	=	7.3	PSF
TOTAL LOAD		=	60.6	PSF

SPACING = 24.0 IN. C/C

THIS TRUSS IS DESIGNED FOR RESIDENTIAL OR SMALL BUILDING REQUIREMENTS OF PART 9, NBCC 2015

THIS DESIGN COMPLIES WITH:
- PART 9 OF BCBC 2018 , ABC 2019
- PART 9 OF OBC 2012 (2019 AMENDMENT)
- CSA 086-14
- TPIC 2014

DESIGN ASSUMPTIONS
-OVERHANG NOT TO BE ALTERED OR CUT OFF.

(55 % OF 48.1 P.S.F. G.S.L. PLUS 8.4 P.S.F. RAIN LOAD) EQUALS 34.8 P.S.F. SPECIFIED ROOF LIVE LOAD

ALLOWABLE DEFL.(LL)= L/360 (0.19")
CALCULATED VERT. DEFL.(LL) = L/ 999 (0.00")
ALLOWABLE DEFL.(TL)= L/360 (0.19")
CALCULATED VERT. DEFL.(TL) = L/ 999 (0.00")

CSI: TC=0.32/1.00 (B-C:1) , BC=0.04/1.00 (D-E:3) , WB=0.00/1.00 (n/a:0) , SSI=0.20/1.00 (B-C:1)

DOL LUMBER=1.00 NAIL=1.00 LS BEND=1.10 COMP=1.10 SHEAR=1.10 TENS= 1.10

COMPANION LIVE LOAD FACTOR = 1.00

TRUSS PLATE MANUFACTURER IS NOT RESPONSIBLE FOR QUALITY CONTROL IN THE TRUSS MANUFACTURING PLANT .

NAIL VALUES

PLATE	GRIP(DRY) (PSI) MAX	MIN	SHEAR (PLI) MAX	MIN	SECTION (PLI) MAX	MIN
MT20	650	371	1747	788	1987	1873

PLATE PLACEMENT TOL. = 0.250 inches

PLATE ROTATION TOL. = 5.0 Deg.

JSI GRIP= 0.29 (B) (INPUT = 0.90)
JSI METAL= 0.24 (B) (INPUT = 1.00)

LICENSED PROFESSIONAL ENGINEER
N.A. EL-MASRI
PROVINCE OF ONTARIO
Dec 18, 2020

READ ALL NOTES ON THIS PAGE AND ON ENGINEERING NOTE PAGE ENP-1. THIS NOTE PAGE IS AN INTEGRAL PART OF THIS DRAWING AS IT CONTAINS SPECIFICATIONS AND CRITERIA USED IN THE DESIGN OF THIS COMPONENT.

Town of East Gwillimbury
Building Standards Branch BCIN #16487

These plans have been reviewed for use with the corrections as noted. No other changes may be made without written approval of the Building Standards Branch. All work must comply with Zoning By-Law 2018-043, as amended, and the Ontario Building Code, as amended. These approved documents must be kept on site at all times. The building permit must be clearly posted on site at all times.

Discipline	Reviewer	BCIN	Date
Building Code	H. Authier	43236	2021-02-05
Sewage System			
Zoning			

KOTT

JOB NAME	TRUSS NAME	QUANTITY	PLY	JOB DESC.	DRWG NO.
NE1220-129	J08	1	1	GREENPARK - TRINAR HALL - BRENTWOOD 3 EL 1 TRUSS DESC.	**Page 17 of 37**

Version 8.420 S Oct 9 2020 MiTek Industries, Inc. Fri Dec 18 09:14:11 2020 Page 1
ID:qKv8nLSCtBps7zaDJTm7k2zFzGC-RPvbM3tmos8E6vIwo4he5v9nlwmAtnkJMqzDb4y7r

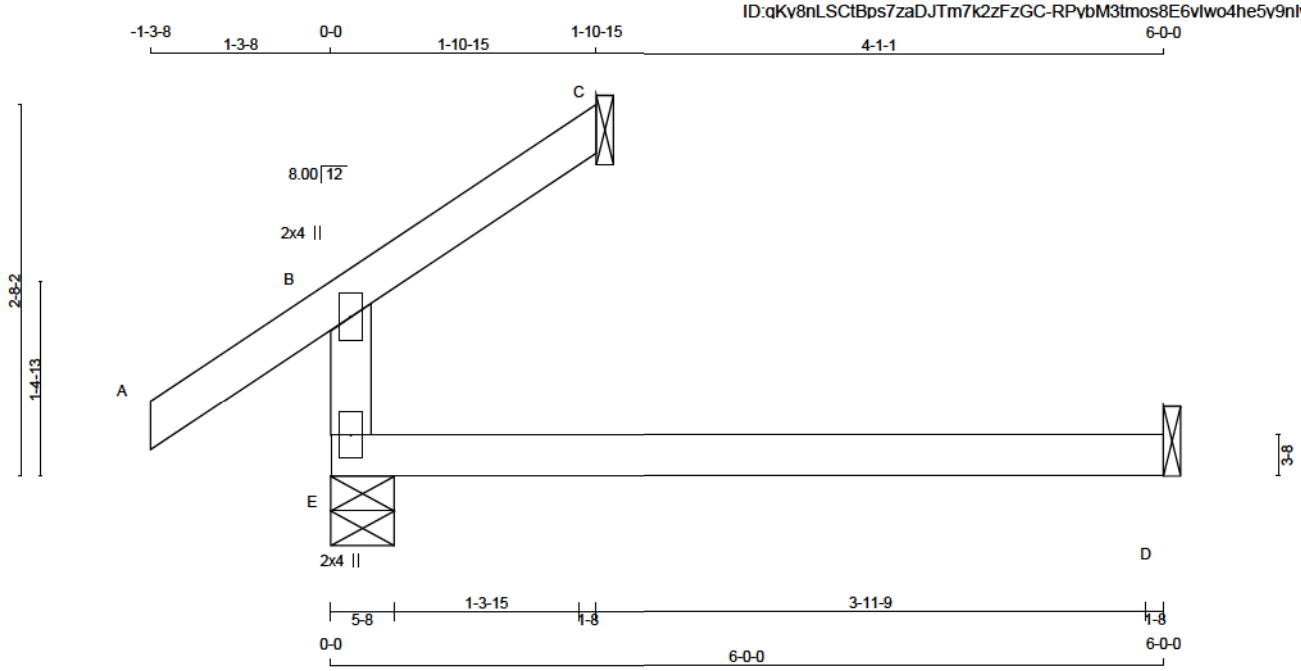

TOTAL WEIGHT = 13 lb

LUMBER
N. L. G. A. RULES

CHORDS	SIZE		LUMBER	DESCR.
E - B	2x4	DRY	No.2	SPF
A - C	2x4	DRY	No.2	SPF
E - D	2x4	DRY	No.2	SPF

DRY: SEASONED LUMBER.

PLATES (table is in inches)

JT	TYPE	PLATES	W	LEN	Y	X
B	TMV+p	MT20	2.0	4.0		
E	BMV1+p	MT20	2.0	4.0		

DIMENSIONS, SUPPORTS AND LOADINGS SPECIFIED BY FABRICATOR TO BE VERIFIED BY BUILDING DESIGNER [M]

BEARINGS

JT	FACTORED GROSS REACTION VERT	HORZ	MAXIMUM GROSS REACTION DOWN	HORZ	FACTORED UPLIFT	INPUT BRG IN-SX	REQRD BRG IN-SX
E	432	0	432	0	0	5-8	1-8
C	112	0	112	0	0	1-8	1-8
D	100	0	130	0	0	1-8	1-8

SEE MITEK STANDARD DETAIL B97791H FOR CONNECTION TO JOINT(S) C , D

UNFACTORED REACTIONS

JT	1ST LCASE COMBINED	MAX /MIN COMPONENT REACTIONS SNOW	LIVE	PERM.LIVE	WIND	DEAD	SOIL
E	316	194 / 0	45 / 0	0 / 0	0 / 0	76 / 0	0 / 0
C	88	36 / 0	26 / 0	0 / 0	0 / 0	26 / 0	0 / 0
D	92	0 / -1	55 / 0	0 / 0	0 / 0	38 / 0	0 / 0

BEARING MATERIAL TO BE SPF NO.2 OR BETTER AT JOINT(S) E, C

BRACING
TOP CHORD TO BE SHEATHED OR MAX. PURLIN SPACING = 10.00 FT.
MAX. UNBRACED BOTTOM CHORD LENGTH = 10.00 FT OR RIGID CEILING DIRECTLY APPLIED.

ALL PITCH BREAKS AND PERIMETER CORNER JOINTS MUST BE LATERALLY RESTRAINED.

LOADING
TOTAL LOAD CASES: (4)

CHORDS

MEMB. FR-TO	MAX. FACTORED FORCE (LBS)	FACTORED VERT. LOAD (PLF) FROM	TO	LC1 MAX CSI (LC)	MAX. UNBRAC LENGTH
E- B	-297 / 5	0.0	0.0	0.17 (2)	7.81
A- B	0 / 47	-124.4	-124.4	0.17 (1)	10.00
B- C	-4 / 29	-124.4	-124.4	0.14 (3)	10.00
E- D	0 / 0	-39.2	-39.2	0.23 (3)	10.00

WEBS

MEMB. FR-TO	MAX. FACTORED FORCE (LBS)	MAX CSI (LC)

DESIGN CRITERIA

SPECIFIED LOADS:

TOP CH.	LL	=	34.8	PSF
	DL	=	8.0	PSF
BOT CH.	LL	=	10.5	PSF
	DL	=	7.3	PSF
TOTAL LOAD		=	60.6	PSF

SPACING = 24.0 IN. C/C

THIS TRUSS IS DESIGNED FOR RESIDENTIAL OR SMALL BUILDING REQUIREMENTS OF PART 9, NBCC 2015

THIS DESIGN COMPLIES WITH:
- PART 9 OF BCBC 2018 , ABC 2019
- PART 9 OF OBC 2012 (2019 AMENDMENT)
- CSA 086-14
- TPIC 2014

DESIGN ASSUMPTIONS
-OVERHANG NOT TO BE ALTERED OR CUT OFF.

(55 % OF 48.1 P.S.F. G.S.L. PLUS 8.4 P.S.F. RAIN LOAD) EQUALS 34.8 P.S.F. SPECIFIED ROOF LIVE LOAD

ALLOWABLE DEFL.(LL)= L/360 (0.20")
CALCULATED VERT. DEFL.(LL) = L/ 999 (0.06")
ALLOWABLE DEFL.(TL)= L/360 (0.20")
CALCULATED VERT. DEFL.(TL) = L/ 747 (0.10")

CSI: TC=0.17/1.00 (B-E:2) , BC=0.23/1.00 (D-E:3) , WB=0.00/1.00 (n/a:0) , SSI=0.13/1.00 (D-E:3)

DOL LUMBER=1.00 NAIL=1.00 LS BEND=1.10 COMP=1.10 SHEAR=1.10 TENS= 1.10

COMPANION LIVE LOAD FACTOR = 1.00

TRUSS PLATE MANUFACTURER IS NOT RESPONSIBLE FOR QUALITY CONTROL IN THE TRUSS MANUFACTURING PLANT .

NAIL VALUES

PLATE	GRIP(DRY) (PSI) MAX	MIN	SHEAR (PLI) MAX	MIN	SECTION (PLI) MAX	MIN
MT20	650	371	1747	788	1987	1873

PLATE PLACEMENT TOL. = 0.250 inches

PLATE ROTATION TOL. = 5.0 Deg.

JSI GRIP= 0.18 (B) (INPUT = 0.90)
JSI METAL= 0.15 (B) (INPUT = 1.00)

LICENSED PROFESSIONAL ENGINEER
N.A. EL-MASRI
PROVINCE OF ONTARIO
Dec 18, 2020

READ ALL NOTES ON THIS PAGE AND ON ENGINEERING NOTE PAGE ENP-1. THIS NOTE PAGE IS AN INTEGRAL PART OF THIS DRAWING AS IT CONTAINS SPECIFICATIONS AND CRITERIA USED IN THE DESIGN OF THIS COMPONENT.

Town of East Gwillimbury
Building Standards Branch BCIN #16487

These plans have been reviewed for use with the corrections as noted. No other changes may be made without written approval of the Building Standards Branch. All work must comply with Zoning By-Law 2018-043, as amended, and the Ontario Building Code, as amended. These approved documents must be kept on site at all times. The building permit must be clearly posted on site at all times.

Discipline	Reviewer	BCIN	Date
Building Code	H. Authier	43236	2021-02-05
Sewage System			
Zoning			

KOTT

JOB NAME	TRUSS NAME	QUANTITY	PLY	JOB DESC.		DRWG NO.
NE1220-129	J09	1	1	TRUSS DESC.	GREENPARK - TRINAR HALL - BRENTWOOD 3 EL 1	**Page 18 of 37**

Version 8.420 S Oct 9 2020 MiTek Industries, Inc. Fri Dec 18 09:14:11 2020 Page 1
ID:qKy8nLSCtBps7zaDJTm7k2zFzGC-RPvbM3tmos8E6vIwo4he5y9kvwmFtnkJMqzDb4y7r

Scale = 1:23.3

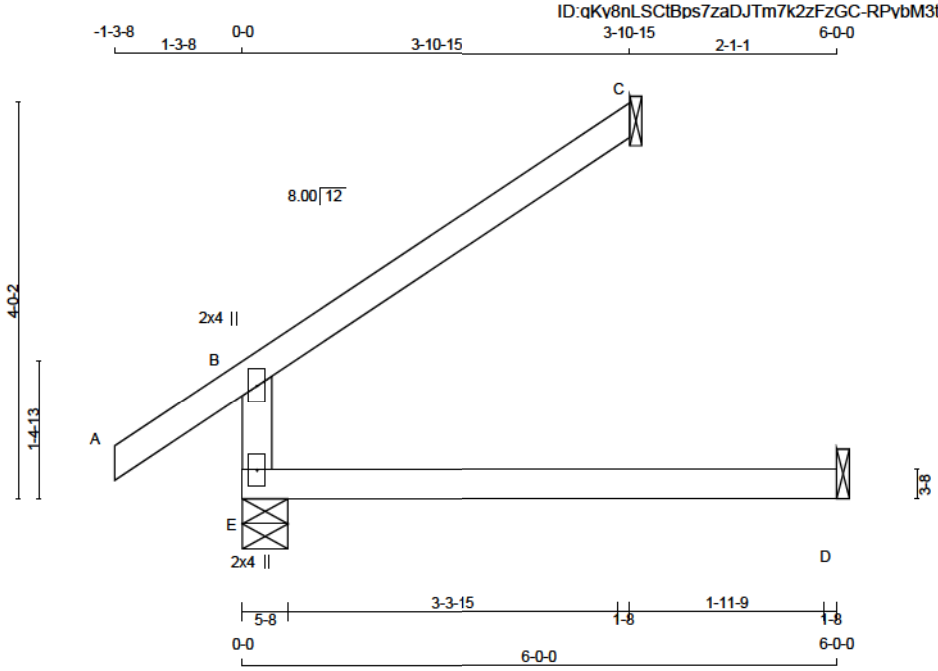

TOTAL WEIGHT = 15 lb

LUMBER
N. L. G. A. RULES

CHORDS	SIZE		LUMBER	DESCR.
E - B	2x4	DRY	No.2	SPF
A - C	2x4	DRY	No.2	SPF
E - D	2x4	DRY	No.2	SPF

DRY: SEASONED LUMBER.

PLATES (table is in inches)

JT	TYPE	PLATES	W	LEN	Y	X
B	TMV+p	MT20	2.0	4.0		
E	BMV1+p	MT20	2.0	4.0		

DIMENSIONS, SUPPORTS AND LOADINGS SPECIFIED BY FABRICATOR TO BE VERIFIED BY BUILDING DESIGNER [M]

BEARINGS

JT	FACTORED GROSS REACTION VERT	HORZ	MAXIMUM GROSS REACTION DOWN	HORZ	FACTORED UPLIFT	INPUT BRG IN-SX	REQRD BRG IN-SX
E	612	0	612	0	0	5-8	1-8
C	183	0	183	0	0	1-8	1-8
D	99	0	125	0	0	1-8	1-8

SEE MITEK STANDARD DETAIL B97791H FOR CONNECTION TO JOINT(S) C , D

UNFACTORED REACTIONS

JT	1ST LCASE COMBINED	MAX /MIN COMPONENT REACTIONS SNOW	LIVE	PERM.LIVE	WIND	DEAD	SOIL
E	451	266 / 0	73 / 0	0 / 0	0 / 0	112 / 0	0 / 0
C	126	102 / 0	0 / 0	0 / 0	0 / 0	23 / 0	0 / 0
D	89	0 / 0	53 / 0	0 / 0	0 / 0	37 / 0	0 / 0

BEARING MATERIAL TO BE SPF NO.2 OR BETTER AT JOINT(S) E, C

BRACING
TOP CHORD TO BE SHEATHED OR MAX. PURLIN SPACING = 6.25 FT.
MAX. UNBRACED BOTTOM CHORD LENGTH = 10.00 FT OR RIGID CEILING DIRECTLY APPLIED.

ALL PITCH BREAKS AND PERIMETER CORNER JOINTS MUST BE LATERALLY RESTRAINED.

LOADING
TOTAL LOAD CASES: (4)

CHORDS MEMB. FR-TO	MAX. FACTORED FORCE (LBS)	FACTORED VERT. LOAD (PLF) FROM	TO	LC1 MAX CSI (LC)	MAX. UNBRAC LENGTH	WEBS MEMB. FR-TO	MAX. FACTORED FORCE (LBS)	MAX CSI (LC)
E- B	-475 / 0	0.0	0.0	0.21 (3)	7.81			
A- B	0 / 47	-124.4	-124.4	0.17 (1)	10.00			
B- C	-34 / 0	-124.4	-124.4	0.32 (1)	6.25			
E- D	0 / 0	-39.2	-39.2	0.23 (3)	10.00			

DESIGN CRITERIA

SPECIFIED LOADS:

TOP CH.	LL	=	34.8	PSF
	DL	=	8.0	PSF
BOT CH.	LL	=	10.5	PSF
	DL	=	7.3	PSF
TOTAL LOAD		=	60.6	PSF

SPACING = 24.0 IN. C/C

THIS TRUSS IS DESIGNED FOR RESIDENTIAL OR SMALL BUILDING REQUIREMENTS OF PART 9, NBCC 2015

THIS DESIGN COMPLIES WITH:
- PART 9 OF BCBC 2018 , ABC 2019
- PART 9 OF OBC 2012 (2019 AMENDMENT)
- CSA 086-14
- TPIC 2014

DESIGN ASSUMPTIONS
-OVERHANG NOT TO BE ALTERED OR CUT OFF.

(55 % OF 48.1 P.S.F. G.S.L. PLUS 8.4 P.S.F. RAIN LOAD) EQUALS 34.8 P.S.F. SPECIFIED ROOF LIVE LOAD

ALLOWABLE DEFL.(LL)= L/360 (0.20")
CALCULATED VERT. DEFL.(LL) = L/ 999 (0.05")
ALLOWABLE DEFL.(TL)= L/360 (0.20")
CALCULATED VERT. DEFL.(TL) = L/ 832 (0.09")

CSI: TC=0.32/1.00 (B-C:1) , BC=0.23/1.00 (D-E:3) , WB=0.00/1.00 (n/a:0) , SSI=0.20/1.00 (B-C:1)

DOL LUMBER=1.00 NAIL=1.00 LS BEND=1.10 COMP=1.10 SHEAR=1.10 TENS= 1.10

COMPANION LIVE LOAD FACTOR = 1.00

TRUSS PLATE MANUFACTURER IS NOT RESPONSIBLE FOR QUALITY CONTROL IN THE TRUSS MANUFACTURING PLANT .

NAIL VALUES

PLATE	GRIP(DRY) (PSI) MAX	MIN	SHEAR (PLI) MAX	MIN	SECTION (PLI) MAX	MIN
MT20	650	371	1747	788	1987	1873

PLATE PLACEMENT TOL. = 0.250 inches

PLATE ROTATION TOL. = 5.0 Deg.

JSI GRIP= 0.29 (B) (INPUT = 0.90)
JSI METAL= 0.24 (B) (INPUT = 1.00)

LICENSED PROFESSIONAL ENGINEER
N.A. EL-MASRI
PROVINCE OF ONTARIO
Dec 18, 2020

READ ALL NOTES ON THIS PAGE AND ON ENGINEERING NOTE PAGE ENP-1. THIS NOTE PAGE IS AN INTEGRAL PART OF THIS DRAWING AS IT CONTAINS SPECIFICATIONS AND CRITERIA USED IN THE DESIGN OF THIS COMPONENT.

Town of East Gwillimbury
Building Standards Branch BCIN #16487

These plans have been reviewed for use with the corrections as noted. No other changes may be made without written approval of the Building Standards Branch. All work must comply with Zoning By-Law 2018-043, as amended, and the Ontario Building Code, as amended. These approved documents must be kept on site at all times. The building permit must be clearly posted on site at all times.

Discipline	Reviewer	BCIN	Date
Building Code	H. Authier	43236	2021-02-05
Sewage System			
Zoning			

KOTT

JOB NAME	TRUSS NAME	QUANTITY	PLY	JOB DESC.	DRWG NO.
NE1220-129	J10	6	1	GREENPARK - TRINAR HALL - BRENTWOOD 3 EL 1 (TRUSS DESC.)	**Page 19 of 37**

Version 8.420 S Oct 9 2020 MiTek Industries, Inc. Fri Dec 18 09:14:12 2020 Page 1
ID:qKy8nLSCtBps7zaDJTm7k2zFzGC-vbW aOuOZAG5k3t6MnDtd9iy5K9ZcE SbKjm7Wy7r

Scale = 1:16.9

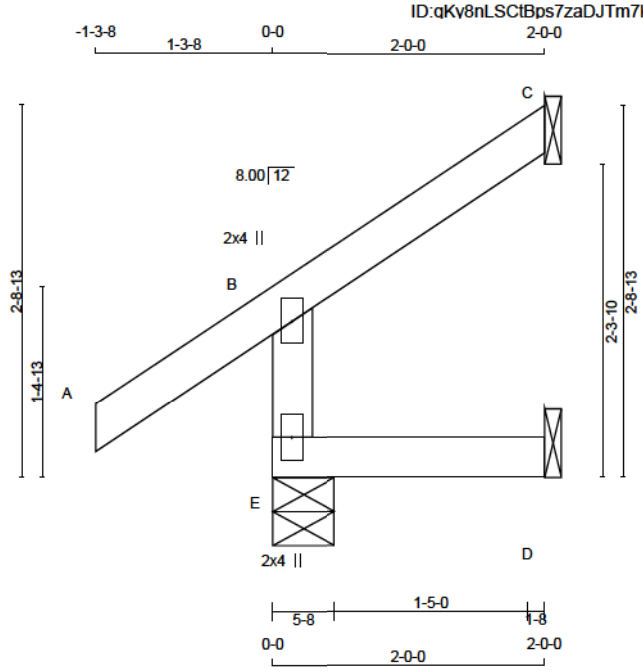

TOTAL WEIGHT = 6 X 8 = 49 lb

LUMBER
N. L. G. A. RULES

CHORDS	SIZE		LUMBER	DESCR.
E - B	2x4	DRY	No.2	SPF
A - C	2x4	DRY	No.2	SPF
E - D	2x4	DRY	No.2	SPF

DRY: SEASONED LUMBER.

PLATES (table is in inches)

JT	TYPE	PLATES	W	LEN	Y	X
B	TMV+p	MT20	2.0	4.0		
E	BMV1+p	MT20	2.0	4.0		

DIMENSIONS, SUPPORTS AND LOADINGS SPECIFIED BY FABRICATOR TO BE VERIFIED BY BUILDING DESIGNER [M]

BEARINGS

JT	FACTORED GROSS REACTION VERT	HORZ	MAXIMUM GROSS REACTION DOWN	HORZ	FACTORED UPLIFT	INPUT BRG IN-SX	REQRD BRG IN-SX
E	368	0	368	0	0	5-8	1-8
C	94	0	94	0	0	1-8	1-8
D	36	0	45	0	0	1-8	1-8

SEE MITEK STANDARD DETAIL B97791H FOR CONNECTION TO JOINT(S) C , D

UNFACTORED REACTIONS

JT	1ST LCASE COMBINED	MAX /MIN COMPONENT REACTIONS SNOW	LIVE	PERM.LIVE	WIND	DEAD	SOIL
E	263	182 / 0	23 / 0	0 / 0	0 / 0	58 / 0	0 / 0
C	65	53 / 0	0 / 0	0 / 0	0 / 0	12 / 0	0 / 0
D	32	0 / 0	19 / 0	0 / 0	0 / 0	13 / 0	0 / 0

BEARING MATERIAL TO BE SPF NO.2 OR BETTER AT JOINT(S) E

BRACING
TOP CHORD TO BE SHEATHED OR MAX. PURLIN SPACING = 6.25 FT.
MAX. UNBRACED BOTTOM CHORD LENGTH = 10.00 FT OR RIGID CEILING DIRECTLY APPLIED.

ALL PITCH BREAKS AND PERIMETER CORNER JOINTS MUST BE LATERALLY RESTRAINED.

LOADING
TOTAL LOAD CASES: (5)

CHORDS

MEMB. FR-TO	MAX. FACTORED FORCE (LBS)	FACTORED VERT. LOAD (PLF) FROM	TO	LC1 MAX CSI (LC)	MAX. UNBRAC LENGTH
E- B	-325 / 0	0.0	0.0	0.02 (3)	7.81
A- B	0 / 47	-124.4	-124.4	0.17 (1)	10.00
B- C	-17 / 0	-124.4	-124.4	0.08 (1)	6.25
E- D	0 / 0	-39.2	-39.2	0.03 (3)	10.00

WEBS

MEMB. FR-TO	MAX. FACTORED FORCE (LBS)	MAX CSI (LC)

CANTILEVER ANALYSIS HAS BEEN CONSIDERED IN THIS DESIGN

DESIGN CRITERIA

SPECIFIED LOADS:

TOP CH.	LL	=	34.8	PSF
	DL	=	8.0	PSF
BOT CH.	LL	=	10.5	PSF
	DL	=	7.3	PSF
TOTAL LOAD		=	60.6	PSF

SPACING = 24.0 IN. C/C

THIS TRUSS IS DESIGNED FOR RESIDENTIAL OR SMALL BUILDING REQUIREMENTS OF PART 9, NBCC 2015

THIS DESIGN COMPLIES WITH:
- PART 9 OF BCBC 2018 , ABC 2019
- PART 9 OF OBC 2012 (2019 AMENDMENT)
- CSA 086-14
- TPIC 2014

DESIGN ASSUMPTIONS
-OVERHANG NOT TO BE ALTERED OR CUT OFF.

(55 % OF 48.1 P.S.F. G.S.L. PLUS 8.4 P.S.F. RAIN LOAD) EQUALS 34.8 P.S.F. SPECIFIED ROOF LIVE LOAD

ALLOWABLE DEFL.(LL)= L/360 (0.19")
CALCULATED VERT. DEFL.(LL) = L/ 999 (0.00")
ALLOWABLE DEFL.(TL)= L/360 (0.19")
CALCULATED VERT. DEFL.(TL) = L/ 999 (0.00")

CSI: TC=0.17/1.00 (A-B:1) , BC=0.03/1.00 (D-E:3) , WB=0.00/1.00 (n/a:0) , SSI=0.11/1.00 (A-B:1)

DOL LUMBER=1.00 NAIL=1.00 LS BEND=1.10 COMP=1.10 SHEAR=1.10 TENS= 1.10

COMPANION LIVE LOAD FACTOR = 1.00

TRUSS PLATE MANUFACTURER IS NOT RESPONSIBLE FOR QUALITY CONTROL IN THE TRUSS MANUFACTURING PLANT .

NAIL VALUES

PLATE	GRIP(DRY) (PSI) MAX	MIN	SHEAR (PLI) MAX	MIN	SECTION (PLI) MAX	MIN
MT20	650	371	1747	788	1987	1873

PLATE PLACEMENT TOL. = 0.250 inches

PLATE ROTATION TOL. = 5.0 Deg.

JSI GRIP= 0.20 (B) (INPUT = 0.90)
JSI METAL= 0.17 (B) (INPUT = 1.00)

LICENSED PROFESSIONAL ENGINEER
N.A. EL-MASRI
PROVINCE OF ONTARIO
Dec 18, 2020

READ ALL NOTES ON THIS PAGE AND ON ENGINEERING NOTE PAGE ENP-1. THIS NOTE PAGE IS AN INTEGRAL PART OF THIS DRAWING AS IT CONTAINS SPECIFICATIONS AND CRITERIA USED IN THE DESIGN OF THIS COMPONENT.

Town of East Gwillimbury
Building Standards Branch BCIN #16487

These plans have been reviewed for use with the corrections as noted. No other changes may be made without written approval of the Building Standards Branch. All work must comply with Zoning By-Law 2018-043, as amended, and the Ontario Building Code, as amended. These approved documents must be kept on site at all times. The building permit must be clearly posted on site at all times.

Discipline	Reviewer	BCIN	Date
Building Code	H. Authier	43236	2021-02-05
Sewage System			
Zoning			

KOTT

JOB NAME	TRUSS NAME	QUANTITY	PLY	JOB DESC.		DRWG NO.
NE1220-129	T01	1	1	TRUSS DESC.	GREENPARK - TRINAR HALL - BRENTWOOD 3 EL 1	**Page 20 of 37**

Version 8.420 S Oct 9 2020 MiTek Industries, Inc. Fri Dec 18 09:14:12 2020 Page 1
ID:qKv8nLSCtBps7zaDJTm7k2zFzGC-vbW aOuOZAG5k3t6MnDtd9iv9K5Fc4mSbKjm7Wy7r

Scale = 1:32.6

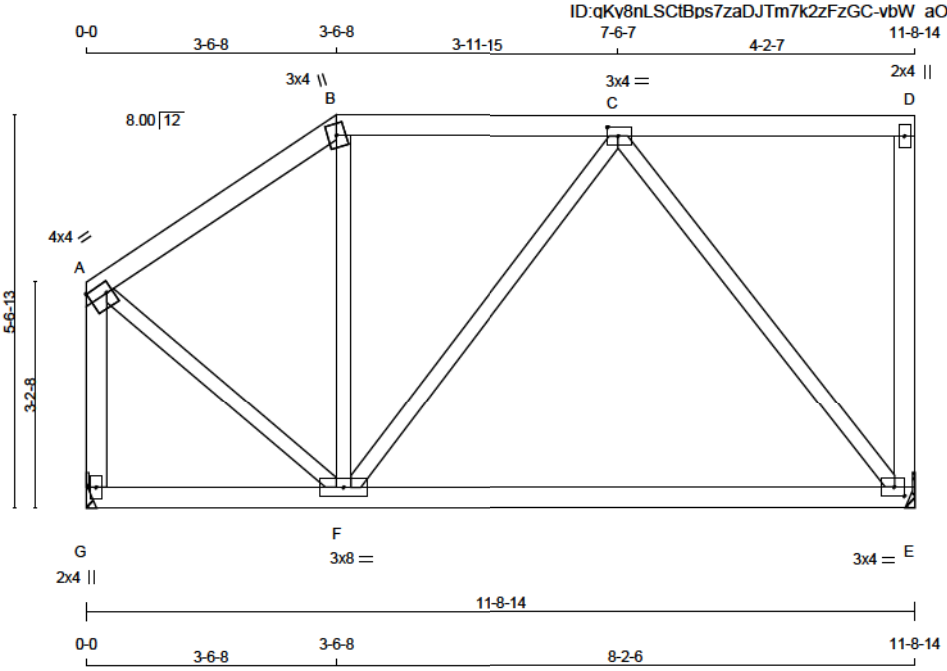

TOTAL WEIGHT = 54 lb

LUMBER
N. L. G. A. RULES

CHORDS	SIZE		LUMBER	DESCR.
A - B	2x4	DRY	No.2	SPF
B - D	2x4	DRY	No.2	SPF
E - D	2x4	DRY	No.2	SPF
G - A	2x4	DRY	No.2	SPF
G - E	2x4	DRY	2100F 1.8E	SPF
ALL WEBS EXCEPT	2x3	DRY	No.2	SPF

DRY: SEASONED LUMBER.

PLATES (table is in inches)

JT	TYPE	PLATES	W	LEN	Y	X
A	TMVW-t	MT20	4.0	4.0	1.75	Edge
B	TTW+m	MT20	3.0	4.0		
C	TMWW-t	MT20	3.0	4.0	1.50	1.75
D	TMV+p	MT20	2.0	4.0		
E	BMVW1-t	MT20	3.0	4.0	1.50	1.75
F	BMWWW-t	MT20	3.0	8.0		
G	BMV1+p	MT20	2.0	4.0		

Edge - INDICATES REFERENCE CORNER OF PLATE TOUCHES EDGE OF CHORD.

DIMENSIONS, SUPPORTS AND LOADINGS SPECIFIED BY FABRICATOR TO BE VERIFIED BY BUILDING DESIGNER

BEARINGS

JT	FACTORED GROSS REACTION VERT	HORZ	MAXIMUM GROSS REACTION DOWN	HORZ	UPLIFT	INPUT BRG IN-SX	REQRD BRG IN-SX
E	961	0	961	0	0	MECHANICAL	
G	961	0	961	0	0	MECHANICAL	

A SUITABLE HANGER/MECHANICAL CONNECTION IS REQUIRED AT JOINT E, G. MINIMUM BEARING LENGTH AT JOINT E = 1-8, JOINT G = 1-8.

UNFACTORED REACTIONS

JT	1ST LCASE COMBINED	MAX./MIN. COMPONENT REACTIONS SNOW	LIVE	PERM.LIVE	WIND	DEAD	SOIL
E	712	409 / 0	123 / 0	0 / 0	0 / 0	180 / 0	0 / 0
G	712	409 / 0	123 / 0	0 / 0	0 / 0	180 / 0	0 / 0

BRACING
TOP CHORD TO BE SHEATHED OR MAX. PURLIN SPACING = 6.25 FT.
MAX. UNBRACED BOTTOM CHORD LENGTH = 10.00 FT OR RIGID CEILING DIRECTLY APPLIED.

ALL PITCH BREAKS AND PERIMETER CORNER JOINTS MUST BE LATERALLY RESTRAINED.

LOADING
TOTAL LOAD CASES: (4)

CHORDS

MEMB. FR-TO	MAX. FACTORED FORCE (LBS)	FACTORED VERT. LOAD (PLF) FROM	TO	LC1 MAX CSI (LC)	MAX. UNBRAC LENGTH
A- B	-603 / 0	-124.4	-124.4	0.28 (1)	6.25
B- C	-499 / 0	-124.4	-124.4	0.36 (1)	6.25
C- D	0 / 0	-124.4	-124.4	0.35 (1)	10.00
E- D	-201 / 0	0.0	0.0	0.11 (1)	7.81
G- A	-953 / 0	0.0	0.0	0.17 (1)	7.81
G- F	0 / 0	-39.2	-39.2	0.29 (3)	10.00
F- E	0 / 502	-39.2	-39.2	0.31 (3)	10.00

WEBS

MEMB. FR-TO	MAX. FACTORED FORCE (LBS)	MAX CSI (LC)
F- B	-71 / 102	0.03 (1)
F- C	-4 / 139	0.03 (3)
C- E	-805 / 0	0.65 (1)
A- F	0 / 639	0.14 (1)

DESIGN CRITERIA

SPECIFIED LOADS:

TOP CH.	LL	=	34.8	PSF
	DL	=	8.0	PSF
BOT CH.	LL	=	10.5	PSF
	DL	=	7.3	PSF
TOTAL LOAD		=	60.6	PSF

SPACING = 24.0 IN. C/C

LOADING IN FLAT SECTION BASED ON A SLOPE OF 2.00/12 MINIMUM

THIS TRUSS IS DESIGNED FOR RESIDENTIAL OR SMALL BUILDING REQUIREMENTS OF PART 9, NBCC 2015

THIS DESIGN COMPLIES WITH:
- PART 9 OF BCBC 2018 , ABC 2019
- PART 9 OF OBC 2012 (2019 AMENDMENT)
- CSA 086-14
- TPIC 2014

(55 % OF 48.1 P.S.F. G.S.L. PLUS 8.4 P.S.F. RAIN LOAD) EQUALS 34.8 P.S.F. SPECIFIED ROOF LIVE LOAD

ALLOWABLE DEFL.(LL)= L/360 (0.39")
CALCULATED VERT. DEFL.(LL) = L/ 999 (0.12")
ALLOWABLE DEFL.(TL)= L/360 (0.39")
CALCULATED VERT. DEFL.(TL) = L/ 679 (0.21")

CSI: TC=0.36/1.00 (B-C:1) , BC=0.31/1.00 (E-F:3) , WB=0.65/1.00 (C-E:1) , SSI=0.25/1.00 (C-D:1)

DOL LUMBER=1.00 NAIL=1.00 LS BEND=1.10 COMP=1.10 SHEAR=1.10 TENS= 1.10

COMPANION LIVE LOAD FACTOR = 1.00

TRUSS PLATE MANUFACTURER IS NOT RESPONSIBLE FOR QUALITY CONTROL IN THE TRUSS MANUFACTURING PLANT .

NAIL VALUES

PLATE	GRIP(DRY) (PSI) MAX	MIN	SHEAR (PLI) MAX	MIN	SECTION (PLI) MAX	MIN
MT20	650	371	1747	788	1987	1873

PLATE PLACEMENT TOL. = 0.250 inches

PLATE ROTATION TOL. = 5.0 Deg.

JSI GRIP= 0.87 (E) (INPUT = 0.90)
JSI METAL= 0.25 (A) (INPUT = 1.00)

LICENSED PROFESSIONAL ENGINEER
N.A. EL-MASRI
PROVINCE OF ONTARIO
Dec 18, 2020

READ ALL NOTES ON THIS PAGE AND ON ENGINEERING NOTE PAGE ENP-1. THIS NOTE PAGE IS AN INTEGRAL PART OF THIS DRAWING AS IT CONTAINS SPECIFICATIONS AND CRITERIA USED IN THE DESIGN OF THIS COMPONENT.

Town of East Gwillimbury
Building Standards Branch BCIN #16487

These plans have been reviewed for use with the corrections as noted. No other changes may be made without written approval of the Building Standards Branch. All work must comply with Zoning By-Law 2018-043, as amended, and the Ontario Building Code, as amended. These approved documents must be kept on site at all times. The building permit must be clearly posted on site at all times.

Discipline	Reviewer	BCIN	Date
Building Code	H. Authier	43236	2021-02-05
Sewage System			
Zoning			

KOTT

JOB NAME	TRUSS NAME	QUANTITY	PLY	JOB DESC.	DRWG NO.
NE1220-129	T02	1	1	GREENPARK - TRINAR HALL - BRENTWOOD 3 EL 1 (TRUSS DESC.)	**Page 21 of 37**

Version 8.420 S Oct 9 2020 MiTek Industries, Inc. Fri Dec 18 09:14:13 2020 Page 1
ID:qKv8nLSCtBps7zaDJTm7k2zFzGC-No3Mnku0JUPyMDSJwVk6ANF44kSvLhJcqzSJfyy7

Scale = 1:57.9

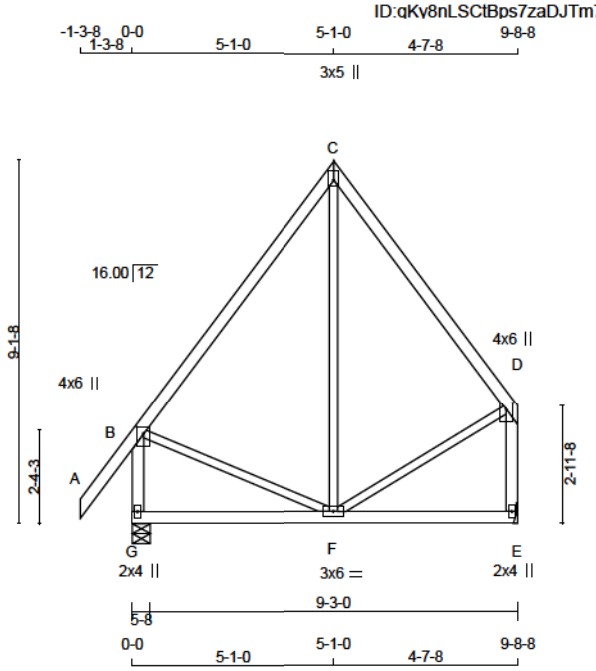

TOTAL WEIGHT = 53 lb

LUMBER
N. L. G. A. RULES

CHORDS	SIZE		LUMBER	DESCR.
A - C	2x4	DRY	2100F 1.8E	SPF
C - D	2x4	DRY	No.2	SPF
G - B	2x4	DRY	No.2	SPF
E - D	2x4	DRY	No.2	SPF
G - E	2x4	DRY	No.2	SPF
ALL WEBS EXCEPT	2x3	DRY	No.2	SPF

DRY: SEASONED LUMBER.

PLATES (table is in inches)

JT	TYPE	PLATES	W	LEN	Y	X
B	TMVW+p	MT20	4.0	6.0	2.00	2.00
C	TTW+p	MT20	3.0	5.0	2.00	Edge
D	TMVW+p	MT20	4.0	6.0	2.00	2.00
E	BMV1+p	MT20	2.0	4.0		
F	BMWWW-t	MT20	3.0	6.0		
G	BMV1+p	MT20	2.0	4.0		

Edge - INDICATES REFERENCE CORNER OF PLATE TOUCHES EDGE OF CHORD.

DIMENSIONS, SUPPORTS AND LOADINGS SPECIFIED BY FABRICATOR TO BE VERIFIED BY BUILDING DESIGNER [M][F]

BEARINGS

JT	FACTORED GROSS REACTION VERT	HORZ	MAXIMUM GROSS REACTION DOWN	HORZ	UPLIFT	INPUT BRG IN-SX	REQRD BRG IN-SX
G	970	0	970	0	0	5-8	1-8
E	795	0	795	0	0	MECHANICAL	

A SUITABLE HANGER/MECHANICAL CONNECTION IS REQUIRED AT JOINT E. MINIMUM BEARING LENGTH AT JOINT E = 1-8.

UNFACTORED REACTIONS

JT	1ST LCASE COMBINED	MAX./MIN. COMPONENT REACTIONS SNOW	LIVE	PERM.LIVE	WIND	DEAD	SOIL
G	709	436 / 0	102 / 0	0 / 0	0 / 0	171 / 0	0 / 0
E	588	338 / 0	102 / 0	0 / 0	0 / 0	149 / 0	0 / 0

BEARING MATERIAL TO BE SPF NO.2 OR BETTER AT JOINT(S) G

BRACING
TOP CHORD TO BE SHEATHED OR MAX. PURLIN SPACING = 6.25 FT.
MAX. UNBRACED BOTTOM CHORD LENGTH = 10.00 FT OR RIGID CEILING DIRECTLY APPLIED.

ALL PITCH BREAKS AND PERIMETER CORNER JOINTS MUST BE LATERALLY RESTRAINED.

LOADING
TOTAL LOAD CASES: (4)

CHORDS

MEMB. FR-TO	MAX. FACTORED FORCE (LBS)	FACTORED VERT. LOAD (PLF) FROM	TO	LC1 MAX CSI (LC)	MAX. UNBRAC LENGTH
A- B	0 / 70	-124.4	-124.4	0.12 (1)	10.00
B- C	-388 / 0	-124.4	-124.4	0.27 (1)	6.25
C- D	-388 / 0	-124.4	-124.4	0.34 (1)	6.25
G- B	-892 / 0	0.0	0.0	0.11 (1)	7.81
E- D	-728 / 0	0.0	0.0	0.12 (1)	7.81
G- F	0 / 0	-39.2	-39.2	0.22 (3)	10.00
F- E	0 / 0	-39.2	-39.2	0.22 (3)	10.00

WEBS

MEMB. FR-TO	MAX. FACTORED FORCE (LBS)	MAX CSI (LC)
F- C	0 / 197	0.05 (3)
B- F	0 / 250	0.06 (1)
F- D	0 / 267	0.06 (1)

DESIGN CRITERIA

SPECIFIED LOADS:

TOP CH.	LL	=	34.8	PSF
	DL	=	8.0	PSF
BOT CH.	LL	=	10.5	PSF
	DL	=	7.3	PSF
TOTAL LOAD		=	60.6	PSF

SPACING = 24.0 IN. C/C

THIS TRUSS IS DESIGNED FOR RESIDENTIAL OR SMALL BUILDING REQUIREMENTS OF PART 9, NBCC 2015

THIS DESIGN COMPLIES WITH:
- PART 9 OF BCBC 2018 , ABC 2019
- PART 9 OF OBC 2012 (2019 AMENDMENT)
- CSA 086-14
- TPIC 2014

(55 % OF 48.1 P.S.F. G.S.L. PLUS 8.4 P.S.F. RAIN LOAD) EQUALS 34.8 P.S.F. SPECIFIED ROOF LIVE LOAD

ALLOWABLE DEFL.(LL)= L/360 (0.32")
CALCULATED VERT. DEFL.(LL) = L/ 999 (0.02")
ALLOWABLE DEFL.(TL)= L/360 (0.32")
CALCULATED VERT. DEFL.(TL) = L/ 999 (0.04")

CSI: TC=0.34/1.00 (C-D:1) , BC=0.22/1.00 (F-G:3) , WB=0.06/1.00 (D-F:1) , SSI=0.15/1.00 (B-C:1)

DOL LUMBER=1.00 NAIL=1.00 LS BEND=1.10 COMP=1.10 SHEAR=1.10 TENS= 1.10

COMPANION LIVE LOAD FACTOR = 1.00

TRUSS PLATE MANUFACTURER IS NOT RESPONSIBLE FOR QUALITY CONTROL IN THE TRUSS MANUFACTURING PLANT .

NAIL VALUES

PLATE	GRIP(DRY) (PSI) MAX	MIN	SHEAR (PLI) MAX	MIN	SECTION (PLI) MAX	MIN
MT20	650	371	1747	788	1987	1873

PLATE PLACEMENT TOL. = 0.250 inches

PLATE ROTATION TOL. = 5.0 Deg.

JSI GRIP= 0.50 (B) (INPUT = 0.90)
JSI METAL= 0.24 (B) (INPUT = 1.00)

LICENSED PROFESSIONAL ENGINEER
N.A. EL-MASRI
PROVINCE OF ONTARIO
Dec 18, 2020

READ ALL NOTES ON THIS PAGE AND ON ENGINEERING NOTE PAGE ENP-1. THIS NOTE PAGE IS AN INTEGRAL PART OF THIS DRAWING AS IT CONTAINS SPECIFICATIONS AND CRITERIA USED IN THE DESIGN OF THIS COMPONENT.

Town of East Gwillimbury
Building Standards Branch BCIN #16487

These plans have been reviewed for use with the corrections as noted. No other changes may be made without written approval of the Building Standards Branch. All work must comply with Zoning By-Law 2018-043, as amended, and the Ontario Building Code, as amended. These approved documents must be kept on site at all times. The building permit must be clearly posted on site at all times.

Discipline	Reviewer	BCIN	Date
Building Code	H. Authier	43236	2021-02-05
Sewage System			
Zoning			

KOTT

JOB NAME	TRUSS NAME	QUANTITY	PLY	JOB DESC.	DRWG NO.
NE1220-129	T03	1	1	GREENPARK - TRINAR HALL - BRENTWOOD 3 EL 1 (TRUSS DESC.)	**Page 22 of 37**

Version 8.420 S Oct 9 2020 MiTek Industries, Inc. Fri Dec 18 09:14:13 2020 Page 1
ID:qKv8nLSCtBps7zaDJTm7k2zFzGC-No3Mnku0JUPyMDSJwVk6ANF44kSvLhJcqzSJfyy7

Scale = 1:57.8

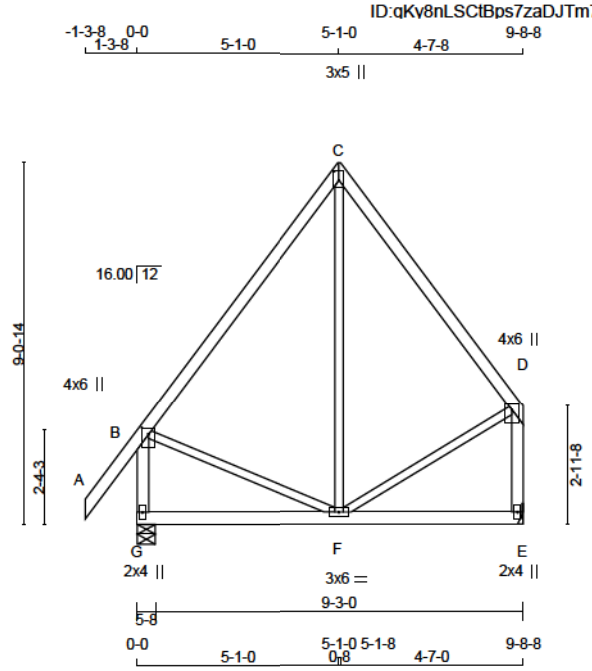

TOTAL WEIGHT = 53 lb

LUMBER
N. L. G. A. RULES

CHORDS	SIZE		LUMBER	DESCR.
A - C	2x4	DRY	2100F 1.8E	SPF
C - D	2x4	DRY	No.2	SPF
G - B	2x4	DRY	No.2	SPF
E - D	2x4	DRY	No.2	SPF
G - E	2x4	DRY	No.2	SPF
ALL WEBS EXCEPT	2x3	DRY	No.2	SPF

DRY: SEASONED LUMBER.

PLATES (table is in inches)

JT	TYPE	PLATES	W	LEN	Y	X
B	TMVW+p	MT20	4.0	6.0	2.00	2.00
C	TTW+p	MT20	3.0	5.0	2.75	1.50
D	TMVW+p	MT20	4.0	6.0	2.00	2.00
E	BMV1+p	MT20	2.0	4.0		
F	BMWWW-t	MT20	3.0	6.0		
G	BMV1+p	MT20	2.0	4.0		

DIMENSIONS, SUPPORTS AND LOADINGS SPECIFIED BY FABRICATOR TO BE VERIFIED BY BUILDING DESIGNER [M][F]

BEARINGS

JT	FACTORED GROSS REACTION VERT	HORZ	MAXIMUM GROSS REACTION DOWN	HORZ	FACTORED UPLIFT	INPUT BRG IN-SX	REQRD BRG IN-SX
G	970	0	970	0	0	5-8	1-8
E	795	0	795	0	0	MECHANICAL	

A SUITABLE HANGER/MECHANICAL CONNECTION IS REQUIRED AT JOINT E. MINIMUM BEARING LENGTH AT JOINT E = 1-8.

UNFACTORED REACTIONS

JT	1ST LCASE COMBINED	MAX./MIN. COMPONENT REACTIONS SNOW	LIVE	PERM.LIVE	WIND	DEAD	SOIL
G	709	436 / 0	102 / 0	0 / 0	0 / 0	171 / 0	0 / 0
E	588	338 / 0	102 / 0	0 / 0	0 / 0	149 / 0	0 / 0

BEARING MATERIAL TO BE SPF NO.2 OR BETTER AT JOINT(S) G

BRACING
TOP CHORD TO BE SHEATHED OR MAX. PURLIN SPACING = 6.25 FT.
MAX. UNBRACED BOTTOM CHORD LENGTH = 10.00 FT OR RIGID CEILING DIRECTLY APPLIED.

ALL PITCH BREAKS AND PERIMETER CORNER JOINTS MUST BE LATERALLY RESTRAINED.

LOADING
TOTAL LOAD CASES: (4)

CHORDS

MEMB. FR-TO	MAX. FACTORED FORCE (LBS)	FACTORED VERT. LOAD (PLF) FROM	TO	LC1 MAX CSI (LC)	MAX. UNBRAC LENGTH
A- B	0 / 70	-124.4	-124.4	0.12 (1)	10.00
B- C	-388 / 0	-124.4	-124.4	0.27 (1)	6.25
C- D	-388 / 0	-124.4	-124.4	0.34 (1)	6.25
G- B	-892 / 0	0.0	0.0	0.11 (1)	7.81
E- D	-728 / 0	0.0	0.0	0.12 (1)	7.81
G- F	0 / 0	-39.2	-39.2	0.22 (3)	10.00
F- E	0 / 0	-39.2	-39.2	0.22 (3)	10.00

WEBS

MEMB. FR-TO	MAX. FACTORED FORCE (LBS)	MAX CSI (LC)
B- F	0 / 250	0.06 (1)
F- D	0 / 267	0.06 (1)
F- C	0 / 197	0.05 (3)

DESIGN CRITERIA

SPECIFIED LOADS:

TOP CH.	LL	=	34.8	PSF
	DL	=	8.0	PSF
BOT CH.	LL	=	10.5	PSF
	DL	=	7.3	PSF
TOTAL LOAD		=	60.6	PSF

SPACING = 24.0 IN. C/C

THIS TRUSS IS DESIGNED FOR RESIDENTIAL OR SMALL BUILDING REQUIREMENTS OF PART 9, NBCC 2015

THIS DESIGN COMPLIES WITH:
- PART 9 OF BCBC 2018 , ABC 2019
- PART 9 OF OBC 2012 (2019 AMENDMENT)
- CSA 086-14
- TPIC 2014

(55 % OF 48.1 P.S.F. G.S.L. PLUS 8.4 P.S.F. RAIN LOAD) EQUALS 34.8 P.S.F. SPECIFIED ROOF LIVE LOAD

ALLOWABLE DEFL.(LL)= L/360 (0.32")
CALCULATED VERT. DEFL.(LL) = L/ 999 (0.02")
ALLOWABLE DEFL.(TL)= L/360 (0.32")
CALCULATED VERT. DEFL.(TL) = L/ 999 (0.04")

CSI: TC=0.34/1.00 (C-D:1) , BC=0.22/1.00 (F-G:3) , WB=0.06/1.00 (D-F:1) , SSI=0.15/1.00 (B-C:1)

DOL LUMBER=1.00 NAIL=1.00 LS BEND=1.10 COMP=1.10 SHEAR=1.10 TENS= 1.10

COMPANION LIVE LOAD FACTOR = 1.00

AUTOSOLVE HEELS OFF

TRUSS PLATE MANUFACTURER IS NOT RESPONSIBLE FOR QUALITY CONTROL IN THE TRUSS MANUFACTURING PLANT .

NAIL VALUES

PLATE	GRIP(DRY) (PSI) MAX	MIN	SHEAR (PLI) MAX	MIN	SECTION (PLI) MAX	MIN
MT20	650	371	1747	788	1987	1873

PLATE PLACEMENT TOL. = 0.250 inches

PLATE ROTATION TOL. = 5.0 Deg.

JSI GRIP= 0.50 (B) (INPUT = 0.90)
JSI METAL= 0.24 (B) (INPUT = 1.00)

LICENSED PROFESSIONAL ENGINEER
N.A. EL-MASRI
PROVINCE OF ONTARIO
Dec 18, 2020

READ ALL NOTES ON THIS PAGE AND ON ENGINEERING NOTE PAGE ENP-1. THIS NOTE PAGE IS AN INTEGRAL PART OF THIS DRAWING AS IT CONTAINS SPECIFICATIONS AND CRITERIA USED IN THE DESIGN OF THIS COMPONENT.

Town of East Gwillimbury
Building Standards Branch BCIN #16487

These plans have been reviewed for use with the corrections as noted. No other changes may be made without written approval of the Building Standards Branch. All work must comply with Zoning By-Law 2018-043, as amended, and the Ontario Building Code, as amended. These approved documents must be kept on site at all times. The building permit must be clearly posted on site at all times.

Discipline	Reviewer	BCIN	Date
Building Code	H. Authier	43236	2021-02-05
Sewage System			
Zoning			

KOTT

JOB NAME	TRUSS NAME	QUANTITY	PLY	JOB DESC.	DRWG NO.
NE1220-129	T04	1	1	GREENPARK - TRINAR HALL - BRENTWOOD 3 EL 1 (TRUSS DESC.)	

Version 8.420 S Oct 9 2020 MiTek Industries, Inc. Fri Dec 18 09:14:14 2020 Page 1
ID:qKv8nLSCtBps7zaDJTm7k2zFzGC-r dk?4ve4nXozN1VTCFLianG28qf47El2dCtBPy7r

Scale = 1:37.6

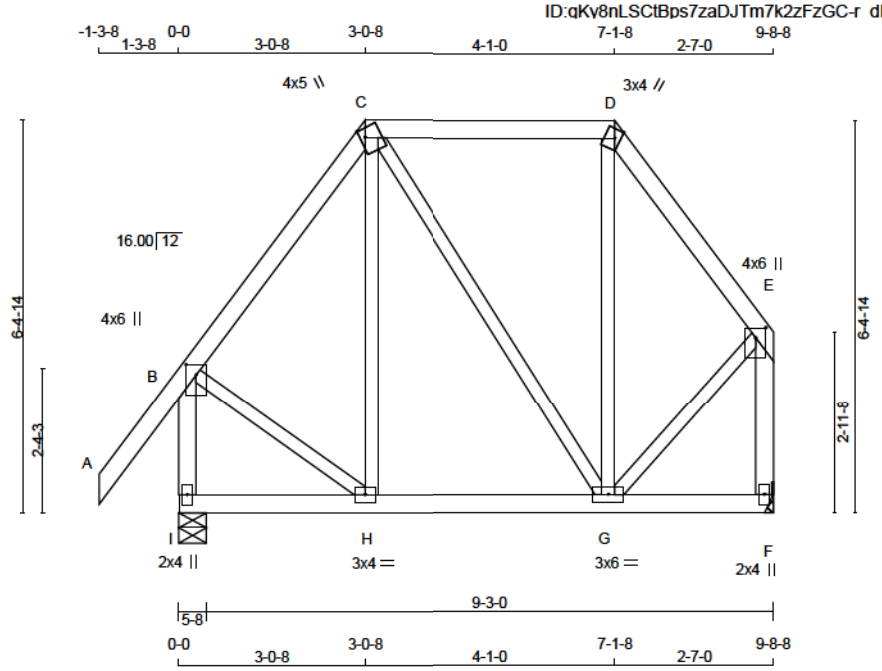

TOTAL WEIGHT = 56 lb

LUMBER
N. L. G. A. RULES

CHORDS	SIZE		LUMBER	DESCR.
A - C	2x4	DRY	No.2	SPF
C - D	2x4	DRY	No.2	SPF
D - E	2x4	DRY	No.2	SPF
I - B	2x4	DRY	No.2	SPF
F - E	2x4	DRY	No.2	SPF
I - F	2x4	DRY	No.2	SPF
ALL WEBS EXCEPT	2x3	DRY	No.2	SPF

DRY: SEASONED LUMBER.

PLATES (table is in inches)

JT	TYPE	PLATES	W	LEN	Y	X
B	TMVW+p	MT20	4.0	6.0	2.00	2.00
C	TTWW+m	MT20	4.0	5.0	1.75	1.00
D	TTW+m	MT20	3.0	4.0	1.75	1.00
E	TMVW+p	MT20	4.0	6.0	2.00	2.00
F	BMV1+p	MT20	2.0	4.0		
G	BMWWW-t	MT20	3.0	6.0		
H	BMWW-t	MT20	3.0	4.0		
I	BMV1+p	MT20	2.0	4.0		

DIMENSIONS, SUPPORTS AND LOADINGS SPECIFIED BY FABRICATOR TO BE VERIFIED BY BUILDING DESIGNER

BEARINGS

JT	FACTORED GROSS REACTION VERT	HORZ	MAXIMUM GROSS REACTION DOWN	HORZ	FACTORED UPLIFT	INPUT BRG IN-SX	REQRD BRG IN-SX
I	970	0	970	0	0	5-8	1-8
F	795	0	795	0	0	MECHANICAL	

A SUITABLE HANGER/MECHANICAL CONNECTION IS REQUIRED AT JOINT F. MINIMUM BEARING LENGTH AT JOINT F = 1-8.

UNFACTORED REACTIONS

JT	1ST LCASE COMBINED	MAX./MIN. COMPONENT REACTIONS SNOW	LIVE	PERM.LIVE	WIND	DEAD	SOIL
I	709	436 / 0	102 / 0	0 / 0	0 / 0	171 / 0	0 / 0
F	588	338 / 0	102 / 0	0 / 0	0 / 0	149 / 0	0 / 0

BEARING MATERIAL TO BE SPF NO.2 OR BETTER AT JOINT(S) I

BRACING
TOP CHORD TO BE SHEATHED OR MAX. PURLIN SPACING = 6.25 FT.
MAX. UNBRACED BOTTOM CHORD LENGTH = 10.00 FT OR RIGID CEILING DIRECTLY APPLIED.

ALL PITCH BREAKS AND PERIMETER CORNER JOINTS MUST BE LATERALLY RESTRAINED.

LOADING
TOTAL LOAD CASES: (4)

CHORDS

MEMB. FR-TO	MAX. FACTORED FORCE (LBS)	FACTORED VERT. LOAD (PLF) FROM	TO	LC1 MAX CSI (LC)	MAX. UNBRAC LENGTH
A- B	0 / 70	-124.4	-124.4	0.18 (1)	10.00
B- C	-475 / 0	-124.4	-124.4	0.15 (1)	6.25
C- D	-257 / 0	-124.4	-124.4	0.27 (1)	6.25
D- E	-434 / 0	-124.4	-124.4	0.11 (1)	6.25
I- B	-923 / 0	0.0	0.0	0.12 (1)	7.81
F- E	-756 / 0	0.0	0.0	0.12 (1)	7.81
I- H	0 / 0	-39.2	-39.2	0.09 (3)	10.00
H- G	0 / 283	-39.2	-39.2	0.12 (2)	10.00
G- F	0 / 0	-39.2	-39.2	0.08 (3)	10.00

WEBS

MEMB. FR-TO	MAX. FACTORED FORCE (LBS)	MAX CSI (LC)
H- C	-22 / 117	0.03 (3)
C- G	-47 / 0	0.05 (1)
G- D	-66 / 89	0.04 (1)
B- H	0 / 333	0.08 (1)
G- E	0 / 357	0.08 (1)

DESIGN CRITERIA [M][F]

SPECIFIED LOADS:

TOP CH.	LL	=	34.8	PSF
	DL	=	8.0	PSF
BOT CH.	LL	=	10.5	PSF
	DL	=	7.3	PSF
TOTAL LOAD		=	60.6	PSF

SPACING = 24.0 IN. C/C

LOADING IN FLAT SECTION BASED ON A SLOPE OF 2.00/12 MINIMUM

THIS TRUSS IS DESIGNED FOR RESIDENTIAL OR SMALL BUILDING REQUIREMENTS OF PART 9, NBCC 2015

THIS DESIGN COMPLIES WITH:
- PART 9 OF BCBC 2018 , ABC 2019
- PART 9 OF OBC 2012 (2019 AMENDMENT)
- CSA 086-14
- TPIC 2014

(55 % OF 48.1 P.S.F. G.S.L. PLUS 8.4 P.S.F. RAIN LOAD) EQUALS 34.8 P.S.F. SPECIFIED ROOF LIVE LOAD

ALLOWABLE DEFL.(LL)= L/360 (0.32")
CALCULATED VERT. DEFL.(LL) = L/ 999 (0.01")
ALLOWABLE DEFL.(TL)= L/360 (0.32")
CALCULATED VERT. DEFL.(TL) = L/ 999 (0.01")

CSI: TC=0.27/1.00 (C-D:1) , BC=0.12/1.00 (G-H:2) , WB=0.08/1.00 (E-G:1) , SSI=0.20/1.00 (C-D:1)

DOL LUMBER=1.00 NAIL=1.00 LS BEND=1.10 COMP=1.10 SHEAR=1.10 TENS= 1.10

COMPANION LIVE LOAD FACTOR = 1.00

TRUSS PLATE MANUFACTURER IS NOT RESPONSIBLE FOR QUALITY CONTROL IN THE TRUSS MANUFACTURING PLANT .

NAIL VALUES

PLATE	GRIP(DRY) (PSI) MAX	MIN	SHEAR (PLI) MAX	MIN	SECTION (PLI) MAX	MIN
MT20	650	371	1747	788	1987	1873

PLATE PLACEMENT TOL. = 0.250 inches

PLATE ROTATION TOL. = 5.0 Deg.

JSI GRIP= 0.67 (G) (INPUT = 0.90)
JSI METAL= 0.24 (B) (INPUT = 1.00)

LICENSED PROFESSIONAL ENGINEER
N.A. EL-MASRI
PROVINCE OF ONTARIO
Dec 18, 2020

READ ALL NOTES ON THIS PAGE AND ON ENGINEERING NOTE PAGE ENP-1. THIS NOTE PAGE IS AN INTEGRAL PART OF THIS DRAWING AS IT CONTAINS SPECIFICATIONS AND CRITERIA USED IN THE DESIGN OF THIS COMPONENT.

Town of East Gwillimbury
Building Standards Branch BCIN #16487

These plans have been reviewed for use with the corrections as noted. No other changes may be made without written approval of the Building Standards Branch. All work must comply with Zoning By-Law 2018-043, as amended, and the Ontario Building Code, as amended. These approved documents must be kept on site at all times. The building permit must be clearly posted on site at all times.

Discipline	Reviewer	BCIN	Date
Building Code	H. Authier	43236	2021-02-05
Sewage System			
Zoning			

KOTT

JOB NAME	TRUSS NAME	QUANTITY	PLY	JOB DESC.	DRWG NO.
NE1220-129	T05	1	1	GREENPARK - TRINAR HALL - BRENTWOOD 3 EL 1 (TRUSS DESC.)	

Version 8.420 S Oct 9 2020 MiTek Industries, Inc. Fri Dec 18 09:14:14 2020 Page 1
ID:qKv8nLSCtBps7zaDJTm7k2zFzGC-r dk?4ve4nXozN1VTCFLianCR8li4?dI2dCtBPy7r

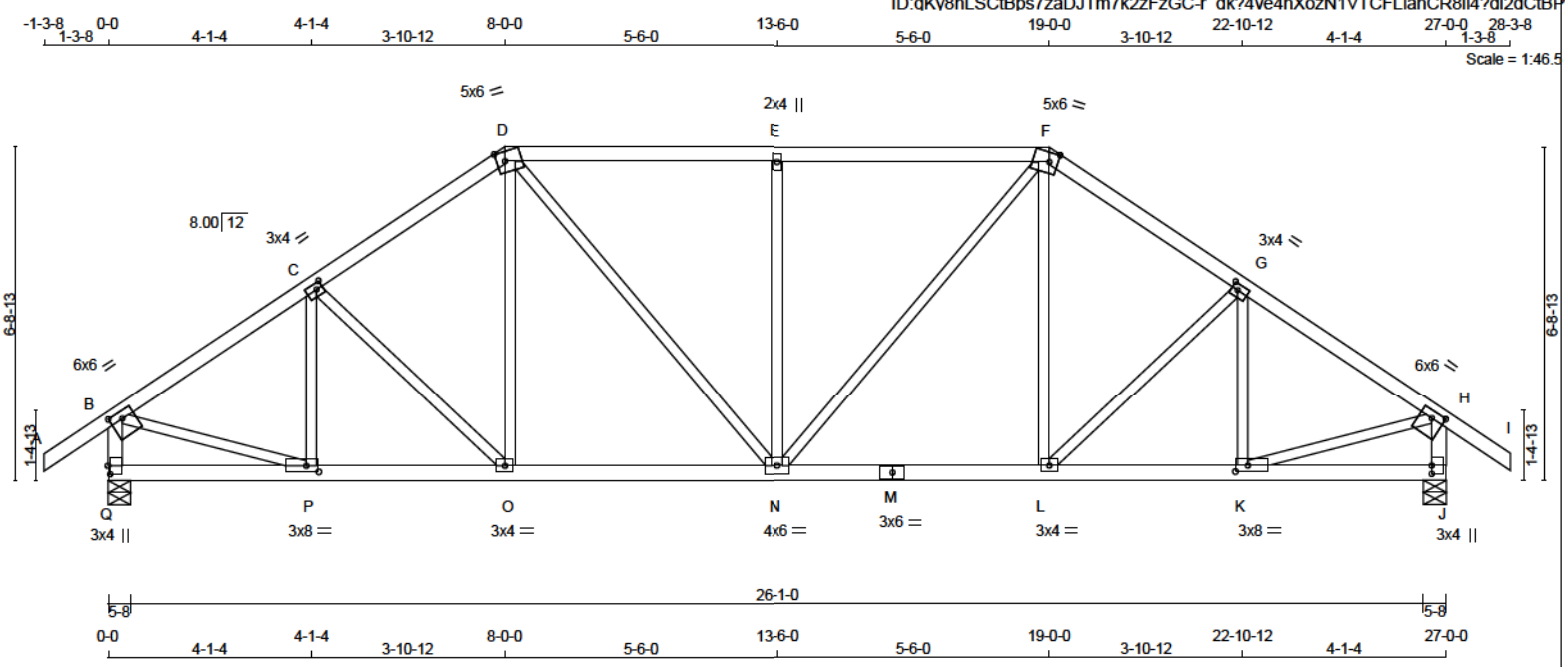

TOTAL WEIGHT = 120 lb

LUMBER
N. L. G. A. RULES

CHORDS	SIZE		LUMBER	DESCR.
A - D	2x4	DRY	No.2	SPF
D - F	2x4	DRY	No.2	SPF
F - I	2x4	DRY	No.2	SPF
Q - B	2x4	DRY	No.2	SPF
J - H	2x4	DRY	No.2	SPF
Q - M	2x4	DRY	No.2	SPF
M - J	2x4	DRY	No.2	SPF
ALL WEBS EXCEPT	2x3	DRY	No.2	SPF

DRY: SEASONED LUMBER.

PLATES (table is in inches)

JT	TYPE	PLATES	W	LEN	Y	X
B	TMVW-t	MT20	6.0	6.0	1.75	3.00
C	TMWW-t	MT20	3.0	4.0	1.50	1.50
D	TTWW-m	MT20	5.0	6.0	2.25	2.00
E	TMW+w	MT20	2.0	4.0		
F	TTWW-m	MT20	5.0	6.0	2.25	2.00
G	TMWW-t	MT20	3.0	4.0	1.50	1.50
H	TMVW-t	MT20	6.0	6.0	1.75	3.00
J	BMV1+p	MT20	3.0	4.0	2.00	
K	BMWW-t	MT20	3.0	8.0	1.50	3.00
L	BMWW-t	MT20	3.0	4.0		
M	BS-t	MT20	3.0	6.0		
N	BMWWW-t	MT20	4.0	6.0		
O	BMWW-t	MT20	3.0	4.0		
P	BMWW-t	MT20	3.0	8.0	1.50	3.00
Q	BMV1+p	MT20	3.0	4.0	2.00	0.50

DIMENSIONS, SUPPORTS AND LOADINGS SPECIFIED BY FABRICATOR TO BE VERIFIED BY BUILDING DESIGNER

BEARINGS

JT	FACTORED GROSS REACTION VERT	HORZ	MAXIMUM GROSS REACTION DOWN	HORZ	FACTORED UPLIFT	INPUT BRG IN-SX	REQRD BRG IN-SX
Q	2380	0	2380	0	0	5-8	4-4
J	2380	0	2380	0	0	5-8	4-4

UNFACTORED REACTIONS

1ST LCASE MAX./MIN. COMPONENT REACTIONS

JT	COMBINED	SNOW	LIVE	PERM.LIVE	WIND	DEAD	SOIL
Q	1754	1035 / 0	284 / 0	0 / 0	0 / 0	435 / 0	0 / 0
J	1754	1035 / 0	284 / 0	0 / 0	0 / 0	435 / 0	0 / 0

BEARING MATERIAL TO BE SPF NO.2 OR BETTER AT JOINT(S) Q, J

BRACING
TOP CHORD TO BE SHEATHED OR MAX. PURLIN SPACING = 3.81 FT.
MAX. UNBRACED BOTTOM CHORD LENGTH = 10.00 FT OR RIGID CEILING DIRECTLY APPLIED.

ALL PITCH BREAKS AND PERIMETER CORNER JOINTS MUST BE LATERALLY RESTRAINED.

LOADING
TOTAL LOAD CASES: (4)

CHORDS

MEMB. FR-TO	MAX. FORCE (LBS)	FACTORED VERT. LOAD (PLF) FROM	TO	LC1 MAX CSI (LC)	MAX. UNBRAC LENGTH
A- B	0 / 47	-124.4	-124.4	0.17 (1)	10.00
B- C	-2474 / 0	-124.4	-124.4	0.32 (1)	4.10
C- D	-2372 / 0	-124.4	-124.4	0.31 (1)	4.18
D- E	-2399 / 0	-124.4	-124.4	0.56 (1)	3.81
E- F	-2399 / 0	-124.4	-124.4	0.56 (1)	3.81
F- G	-2372 / 0	-124.4	-124.4	0.31 (1)	4.18
G- H	-2474 / 0	-124.4	-124.4	0.32 (1)	4.10
H- I	0 / 47	-124.4	-124.4	0.17 (1)	10.00
Q- B	-2309 / 0	0.0	0.0	0.24 (1)	5.62
J- H	-2309 / 0	0.0	0.0	0.24 (1)	5.62
Q- P	0 / 0	-39.2	-39.2	0.11 (3)	10.00
P- O	0 / 2084	-39.2	-39.2	0.44 (1)	10.00
O- N	0 / 1949	-39.2	-39.2	0.44 (1)	10.00
N- M	0 / 1949	-39.2	-39.2	0.44 (1)	10.00
M- L	0 / 1949	-39.2	-39.2	0.44 (1)	10.00
L- K	0 / 2084	-39.2	-39.2	0.44 (1)	10.00
K- J	0 / 0	-39.2	-39.2	0.11 (3)	10.00

WEBS

MEMB. FR-TO	MAX. FORCE (LBS)	MAX CSI (LC)
P- C	-390 / 0	0.10 (1)
C- O	-194 / 0	0.10 (1)
O- D	0 / 346	0.08 (2)
D- N	0 / 693	0.16 (1)
N- E	-835 / 0	0.63 (1)
N- F	0 / 693	0.16 (1)
L- F	0 / 346	0.08 (2)
L- G	-194 / 0	0.10 (1)
K- G	-390 / 0	0.10 (1)
B- P	0 / 2155	0.48 (1)
K- H	0 / 2155	0.48 (1)

DESIGN CRITERIA [M][F]

SPECIFIED LOADS:

TOP CH.	LL	=	34.8	PSF
	DL	=	8.0	PSF
BOT CH.	LL	=	10.5	PSF
	DL	=	7.3	PSF
TOTAL LOAD		=	60.6	PSF

SPACING = 24.0 IN. C/C

LOADING IN FLAT SECTION BASED ON A SLOPE OF 2.00/12 MINIMUM

THIS TRUSS IS DESIGNED FOR RESIDENTIAL OR SMALL BUILDING REQUIREMENTS OF PART 9, NBCC 2015

THIS DESIGN COMPLIES WITH:
- PART 9 OF BCBC 2018 , ABC 2019
- PART 9 OF OBC 2012 (2019 AMENDMENT)
- CSA 086-14
- TPIC 2014

(55 % OF 48.1 P.S.F. G.S.L. PLUS 8.4 P.S.F. RAIN LOAD) EQUALS 34.8 P.S.F. SPECIFIED ROOF LIVE LOAD

ALLOWABLE DEFL.(LL)= L/360 (0.90")
CALCULATED VERT. DEFL.(LL) = L/ 999 (0.09")
ALLOWABLE DEFL.(TL)= L/360 (0.90")
CALCULATED VERT. DEFL.(TL) = L/ 999 (0.16")

CSI: TC=0.56/1.00 (D-E:1) , BC=0.44/1.00 (L-N:1) , WB=0.63/1.00 (E-N:1) , SSI=0.33/1.00 (D-E:1)

DOL LUMBER=1.00 NAIL=1.00 LS BEND=1.10 COMP=1.10 SHEAR=1.10 TENS= 1.10

COMPANION LIVE LOAD FACTOR = 1.00

TRUSS PLATE MANUFACTURER IS NOT RESPONSIBLE FOR QUALITY CONTROL IN THE TRUSS MANUFACTURING PLANT .

NAIL VALUES

PLATE	GRIP(DRY) (PSI) MAX	MIN	SHEAR (PLI) MAX	MIN	SECTION (PLI) MAX	MIN
MT20	650	371	1747	788	1987	1873

PLATE PLACEMENT TOL. = 0.250 inches

PLATE ROTATION TOL. = 5.0 Deg.

JSI GRIP= 0.90 (H) (INPUT = 0.90)
JSI METAL= 0.69 (M) (INPUT = 1.00)

LICENSED PROFESSIONAL ENGINEER
N.A. EL-MASRI
PROVINCE OF ONTARIO
Dec 18, 2020

READ ALL NOTES ON THIS PAGE AND ON ENGINEERING NOTE PAGE ENP-1. THIS NOTE PAGE IS AN INTEGRAL PART OF THIS DRAWING AS IT CONTAINS SPECIFICATIONS AND CRITERIA USED IN THE DESIGN OF THIS COMPONENT.

Town of East Gwillimbury
Building Standards Branch BCIN #16487

These plans have been reviewed for use with the corrections as noted. No other changes may be made without written approval of the Building Standards Branch. All work must comply with Zoning By-Law 2018-043, as amended, and the Ontario Building Code, as amended. These approved documents must be kept on site at all times. The building permit must be clearly posted on site at all times.

Discipline	Reviewer	BCIN	Date
Building Code	H. Authier	43236	2021-02-05
Sewage System			
Zoning			

KOTT

JOB NAME	TRUSS NAME	QUANTITY	PLY	JOB DESC.	DRWG NO.
NE1220-129	T06	1	1	GREENPARK - TRINAR HALL - BRENTWOOD 3 EL 1 (TRUSS DESC.)	**Page 25 of 37**

Version 8.420 S Oct 9 2020 MiTek Industries, Inc. Fri Dec 18 09:14:15 2020 Page 1
ID:qKv8nLSCtBps7zaDJTm7k2zFzGC-JAB6CQwGr5ffbWch1wmaFoKO7X2mpU3uHHxQkry7r

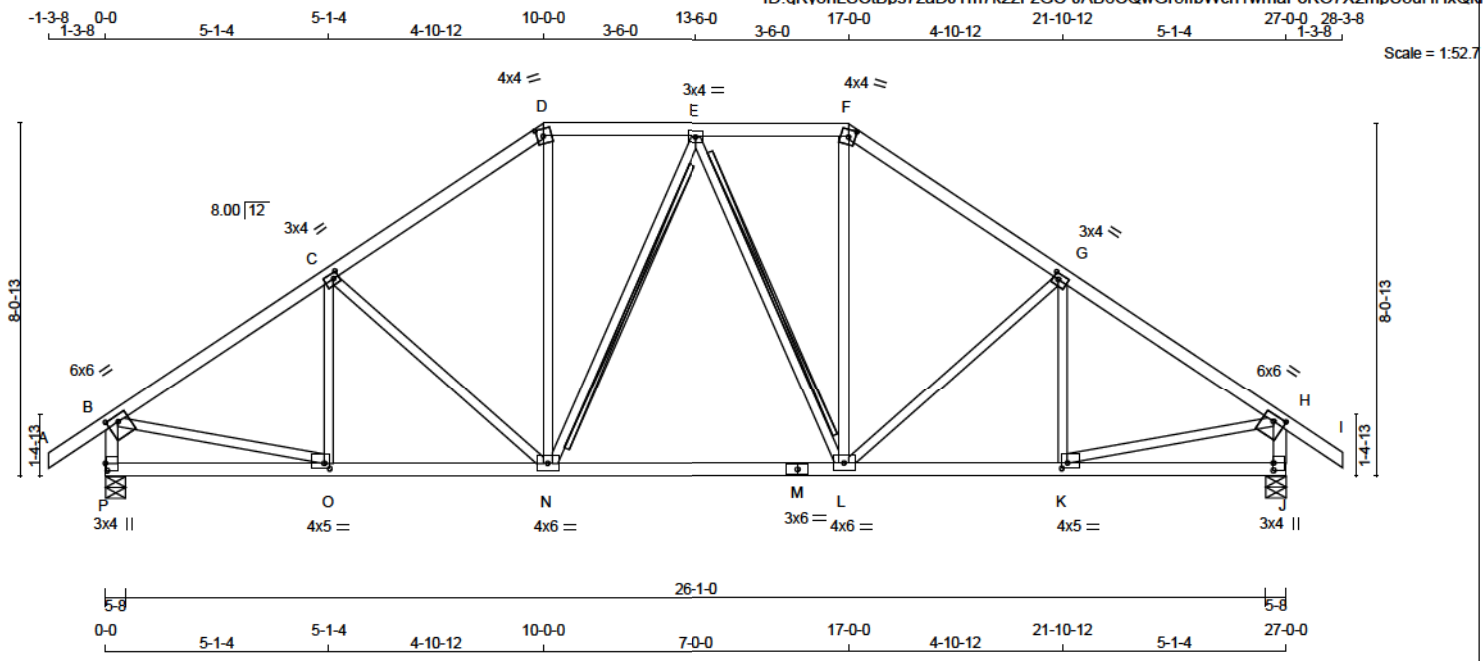

TOTAL WEIGHT = 123 lb

LUMBER
N. L. G. A. RULES

CHORDS	SIZE		LUMBER	DESCR.
A - D	2x4	DRY	No.2	SPF
D - F	2x4	DRY	No.2	SPF
F - I	2x4	DRY	No.2	SPF
P - B	2x4	DRY	No.2	SPF
J - H	2x4	DRY	No.2	SPF
P - M	2x4	DRY	No.2	SPF
M - J	2x4	DRY	No.2	SPF
ALL WEBS EXCEPT	2x3	DRY	No.2	SPF

DRY: SEASONED LUMBER.

PLATES (table is in inches)

JT	TYPE	PLATES	W	LEN	Y	X
B	TMVW-t	MT20	6.0	6.0	1.75	3.00
C	TMWW-t	MT20	3.0	4.0	1.50	1.50
D	TTW-m	MT20	4.0	4.0	2.00	1.75
E	TMWW-t	MT20	3.0	4.0		
F	TTW-m	MT20	4.0	4.0	2.00	1.75
G	TMWW-t	MT20	3.0	4.0	1.50	1.50
H	TMVW-t	MT20	6.0	6.0	1.75	3.00
J	BMV1+p	MT20	3.0	4.0	2.00	
K	BMWW-t	MT20	4.0	5.0	1.50	1.50
L	BMWWW-t	MT20	4.0	6.0		
M	BS-t	MT20	3.0	6.0		
N	BMWWW-t	MT20	4.0	6.0		
O	BMWW-t	MT20	4.0	5.0	1.50	1.50
P	BMV1+p	MT20	3.0	4.0	2.00	0.50

DIMENSIONS, SUPPORTS AND LOADINGS SPECIFIED BY FABRICATOR TO BE VERIFIED BY BUILDING DESIGNER

BEARINGS

JT	FACTORED GROSS REACTION VERT	HORZ	MAXIMUM GROSS REACTION DOWN	HORZ	FACTORED UPLIFT	INPUT BRG IN-SX	REQRD BRG IN-SX
P	2380	0	2380	0	0	5-8	4-4
J	2380	0	2380	0	0	5-8	4-4

UNFACTORED REACTIONS

1ST LCASE MAX./MIN. COMPONENT REACTIONS

JT	COMBINED	SNOW	LIVE	PERM.LIVE	WIND	DEAD	SOIL
P	1754	1035 / 0	284 / 0	0 / 0	0 / 0	435 / 0	0 / 0
J	1754	1035 / 0	284 / 0	0 / 0	0 / 0	435 / 0	0 / 0

BEARING MATERIAL TO BE SPF NO.2 OR BETTER AT JOINT(S) P, J

BRACING
TOP CHORD TO BE SHEATHED OR MAX. PURLIN SPACING = 3.86 FT.
MAX. UNBRACED BOTTOM CHORD LENGTH = 10.00 FT OR RIGID CEILING DIRECTLY APPLIED.

ALL PITCH BREAKS AND PERIMETER CORNER JOINTS MUST BE LATERALLY RESTRAINED.

2x4 DRY SPF No.2 T-BRACE AT E-N, E-L

FASTEN T AND I-BRACES TO NARROW EDGE OF WEB WITH ONE ROW PER PLY OF 3" COMMON WIRE NAILS @ 6" O.C. WITH 3" MINIMUM END DISTANCE. BRACE MUST COVER 90% OF WEB LENGTH.

END VERTICAL(S) MUST BE SHEATHED OR HAVE BRACES AS INDICATED IN THE MAX. UNBRACED LENGTH COLUMN OF THE TABLE BELOW

LOADING
TOTAL LOAD CASES: (4)

CHORDS MEMB. FR-TO	MAX. FACTORED FORCE (LBS)	FACTORED VERT. LOAD (PLF) FROM	TO	LC1 MAX CSI (LC)	MAX. UNBRAC LENGTH	WEBS MEMB. FR-TO	MAX. FACTORED FORCE (LBS)	MAX CSI (LC)
A- B	0 / 47	-124.4	-124.4	0.17 (1)	10.00	O- C	-251 / 71	0.09 (1)
B- C	-2529 / 0	-124.4	-124.4	0.50 (1)	3.86	C- N	-449 / 0	0.37 (1)
C- D	-2212 / 0	-124.4	-124.4	0.47 (1)	4.11	N- D	0 / 799	0.18 (1)
D- E	-1814 / 0	-124.4	-124.4	0.21 (1)	4.78	N- E	-280 / 0	0.16 (1)
E- F	-1814 / 0	-124.4	-124.4	0.21 (1)	4.78	E- L	-280 / 0	0.16 (1)
F- G	-2212 / 0	-124.4	-124.4	0.47 (1)	4.11	L- F	0 / 799	0.18 (1)
G- H	-2529 / 0	-124.4	-124.4	0.50 (1)	3.86	L- G	-449 / 0	0.37 (1)
H- I	0 / 47	-124.4	-124.4	0.17 (1)	10.00	K- G	-251 / 71	0.09 (1)
P- B	-2294 / 0	0.0	0.0	0.24 (1)	5.63	B- O	0 / 2185	0.49 (1)
J- H	-2294 / 0	0.0	0.0	0.24 (1)	5.63	K- H	0 / 2185	0.49 (1)
P- O	0 / 0	-39.2	-39.2	0.17 (3)	10.00			
O- N	0 / 2138	-39.2	-39.2	0.51 (1)	10.00			
N- M	0 / 1926	-39.2	-39.2	0.48 (1)	10.00			
M- L	0 / 1926	-39.2	-39.2	0.48 (1)	10.00			
L- K	0 / 2138	-39.2	-39.2	0.51 (1)	10.00			
K- J	0 / 0	-39.2	-39.2	0.17 (3)	10.00			

DESIGN CRITERIA [M][F]

SPECIFIED LOADS:

TOP CH.	LL	=	34.8	PSF
	DL	=	8.0	PSF
BOT CH.	LL	=	10.5	PSF
	DL	=	7.3	PSF
TOTAL LOAD		=	60.6	PSF

SPACING = 24.0 IN. C/C

LOADING IN FLAT SECTION BASED ON A SLOPE OF 2.00/12 MINIMUM

THIS TRUSS IS DESIGNED FOR RESIDENTIAL OR SMALL BUILDING REQUIREMENTS OF PART 9, NBCC 2015

THIS DESIGN COMPLIES WITH:
- PART 9 OF BCBC 2018 , ABC 2019
- PART 9 OF OBC 2012 (2019 AMENDMENT)
- CSA 086-14
- TPIC 2014

(55 % OF 48.1 P.S.F. G.S.L. PLUS 8.4 P.S.F. RAIN LOAD) EQUALS 34.8 P.S.F. SPECIFIED ROOF LIVE LOAD

ALLOWABLE DEFL.(LL)= L/360 (0.90")
CALCULATED VERT. DEFL.(LL) = L/ 999 (0.10")
ALLOWABLE DEFL.(TL)= L/360 (0.90")
CALCULATED VERT. DEFL.(TL) = L/ 999 (0.19")

CSI: TC=0.50/1.00 (G-H:1) , BC=0.51/1.00 (K-L:1) , WB=0.49/1.00 (H-K:1) , SSI=0.25/1.00 (G-H:1)

DOL LUMBER=1.00 NAIL=1.00 LS BEND=1.10 COMP=1.10 SHEAR=1.10 TENS= 1.10

COMPANION LIVE LOAD FACTOR = 1.00

TRUSS PLATE MANUFACTURER IS NOT RESPONSIBLE FOR QUALITY CONTROL IN THE TRUSS MANUFACTURING PLANT .

NAIL VALUES

PLATE	GRIP(DRY) (PSI) MAX	MIN	SHEAR (PLI) MAX	MIN	SECTION (PLI) MAX	MIN
MT20	650	371	1747	788	1987	1873

PLATE PLACEMENT TOL. = 0.250 inches

PLATE ROTATION TOL. = 5.0 Deg.

JSI GRIP= 0.89 (H) (INPUT = 0.90)
JSI METAL= 0.67 (B) (INPUT = 1.00)

LICENSED PROFESSIONAL ENGINEER
N.A. EL-MASRI
PROVINCE OF ONTARIO
Dec 18, 2020

READ ALL NOTES ON THIS PAGE AND ON ENGINEERING NOTE PAGE ENP-1. THIS NOTE PAGE IS AN INTEGRAL PART OF THIS DRAWING AS IT CONTAINS SPECIFICATIONS AND CRITERIA USED IN THE DESIGN OF THIS COMPONENT.

Town of East Gwillimbury
Building Standards Branch BCIN #16487

These plans have been reviewed for use with the corrections as noted. No other changes may be made without written approval of the Building Standards Branch. All work must comply with Zoning By-Law 2018-043, as amended, and the Ontario Building Code, as amended. These approved documents must be kept on site at all times. The building permit must be clearly posted on site at all times.

Discipline	Reviewer	BCIN	Date
Building Code	H. Authier	43236	2021-02-05
Sewage System			
Zoning			

KOTT

JOB NAME	TRUSS NAME	QUANTITY	PLY	JOB DESC.		DRWG NO.
NE1220-129	T11	3	1	TRUSS DESC.	GREENPARK - TRINAR HALL - BRENTWOOD 3 EL 1	**Page 26 of 37**

Version 8.420 S Oct 9 2020 MiTek Industries, Inc. Fri Dec 18 09:14:16 2020 Page 1
ID:qKv8nLSCtBps7zaDJTm7k2zFzGC-oNlUQmxvcPnWDqBubdHpo?tbuxSUY2z2WxhzGHy7r

Scale = 1:19.3

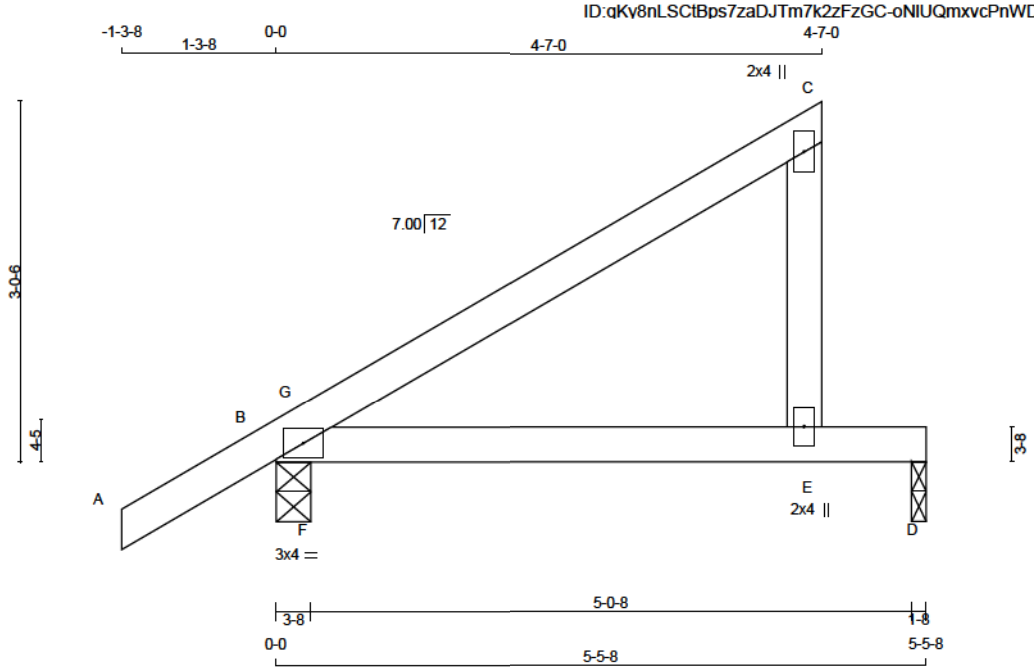

TOTAL WEIGHT = 3 X 17 = 51 lb

LUMBER
N. L. G. A. RULES

CHORDS	SIZE		LUMBER	DESCR.
A - C	2x4	DRY	No.2	SPF
E - C	2x4	DRY	No.2	SPF
B - D	2x4	DRY	2100F 1.8E	SPF

DRY: SEASONED LUMBER.

PLATES (table is in inches)

JT	TYPE	PLATES	W	LEN Y	X
B	TMB1-I	MT20	3.0	4.0	
C	TMV+p	MT20	2.0	4.0	
E	BMV+p	MT20	2.0	4.0	

DIMENSIONS, SUPPORTS AND LOADINGS SPECIFIED BY FABRICATOR TO BE VERIFIED BY BUILDING DESIGNER [M]

BEARINGS

JT	FACTORED GROSS REACTION VERT	HORZ	MAXIMUM GROSS REACTION DOWN	HORZ	UPLIFT	INPUT BRG IN-SX	REQRD BRG IN-SX
B	608	0	608	0	0	3-8	1-8
D	347	0	347	0	0	1-8	1-8

UNFACTORED REACTIONS

JT	1ST LCASE COMBINED	MAX./MIN. COMPONENT REACTIONS SNOW	LIVE	PERM.LIVE	WIND	DEAD	SOIL
B	442	280 / 0	57 / 0	0 / 0	0 / 0	104 / 0	0 / 0
D	262	134 / 0	57 / 0	0 / 0	0 / 0	71 / 0	0 / 0

BEARING MATERIAL TO BE SPF NO.2 OR BETTER AT JOINT(S) B, D

BRACING
TOP CHORD TO BE SHEATHED OR MAX. PURLIN SPACING = 6.25 FT.
MAX. UNBRACED BOTTOM CHORD LENGTH = 10.00 FT OR RIGID CEILING DIRECTLY APPLIED.

ALL PITCH BREAKS AND PERIMETER CORNER JOINTS MUST BE LATERALLY RESTRAINED.

LOADING
TOTAL LOAD CASES: (4)

CHORDS

MEMB. FR-TO	MAX. FACTORED FORCE (LBS)	FACTORED VERT. LOAD (PLF) FROM	TO	LC1 MAX CSI (LC)	MAX. UNBRAC LENGTH
A- B	0 / 41	-124.4	-124.4	0.16 (1)	10.00
B- G	-108 / 22	-124.4	-124.4	0.10 (3)	6.25
G- C	-2 / 8	-124.4	-124.4	0.37 (1)	10.00
E- C	-260 / 0	0.0	0.0	0.04 (1)	7.81
B- F	0 / 0	-39.2	-39.2	0.14 (1)	10.00
F- E	0 / 0	-39.2	-39.2	0.29 (1)	10.00
E- D	0 / 0	-39.2	-39.2	0.26 (1)	10.00

WEBS

MEMB. FR-TO	MAX. FACTORED FORCE (LBS)	MAX CSI (LC)
F- G	-326 / 155	0.00 (1)

DESIGN CRITERIA

SPECIFIED LOADS:

TOP CH.	LL	=	34.8	PSF
	DL	=	8.0	PSF
BOT CH.	LL	=	10.5	PSF
	DL	=	7.3	PSF
TOTAL LOAD		=	60.6	PSF

SPACING = 24.0 IN. C/C

THIS TRUSS IS DESIGNED FOR RESIDENTIAL OR SMALL BUILDING REQUIREMENTS OF PART 9, NBCC 2015

THIS DESIGN COMPLIES WITH:
- PART 9 OF BCBC 2018 , ABC 2019
- PART 9 OF OBC 2012 (2019 AMENDMENT)
- CSA 086-14
- TPIC 2014

(55 % OF 48.1 P.S.F. G.S.L. PLUS 8.4 P.S.F. RAIN LOAD) EQUALS 34.8 P.S.F. SPECIFIED ROOF LIVE LOAD

ALLOWABLE DEFL.(LL)= L/360 (0.19")
CALCULATED VERT. DEFL.(LL) = L/ 736 (0.09")
ALLOWABLE DEFL.(TL)= L/360 (0.19")
CALCULATED VERT. DEFL.(TL) = L/ 427 (0.15")

CSI: TC=0.37/1.00 (C-G:1) , BC=0.29/1.00 (E-F:1) , WB=0.00/1.00 (F-G:1) , SSI=0.35/1.00 (B-F:1)

DOL LUMBER=1.00 NAIL=1.00 LS BEND=1.10 COMP=1.10 SHEAR=1.10 TENS= 1.10

COMPANION LIVE LOAD FACTOR = 1.00

TRUSS PLATE MANUFACTURER IS NOT RESPONSIBLE FOR QUALITY CONTROL IN THE TRUSS MANUFACTURING PLANT .

NAIL VALUES

PLATE	GRIP(DRY) (PSI) MAX	MIN	SHEAR (PLI) MAX	MIN	SECTION (PLI) MAX	MIN
MT20	650	371	1747	788	1987	1873

PLATE PLACEMENT TOL. = 0.250 inches

PLATE ROTATION TOL. = 5.0 Deg.

JSI GRIP= 0.41 (B) (INPUT = 0.90)
JSI METAL= 0.12 (C) (INPUT = 1.00)

LICENSED PROFESSIONAL ENGINEER
N.A. EL-MASRI
PROVINCE OF ONTARIO
Dec 18, 2020

READ ALL NOTES ON THIS PAGE AND ON ENGINEERING NOTE PAGE ENP-1. THIS NOTE PAGE IS AN INTEGRAL PART OF THIS DRAWING AS IT CONTAINS SPECIFICATIONS AND CRITERIA USED IN THE DESIGN OF THIS COMPONENT.

Town of East Gwillimbury
Building Standards Branch BCIN #16487

These plans have been reviewed for use with the corrections as noted. No other changes may be made without written approval of the Building Standards Branch. All work must comply with Zoning By-Law 2018-043, as amended, and the Ontario Building Code, as amended. These approved documents must be kept on site at all times. The building permit must be clearly posted on site at all times.

Discipline	Reviewer	BCIN	Date
Building Code	H. Authier	43236	2021-02-05
Sewage System			
Zoning			

KOTT

JOB NAME	TRUSS NAME	QUANTITY	PLY	JOB DESC.	DRWG NO.
NE1220-129	T12	6	1	GREENPARK - TRINAR HALL - BRENTWOOD 3 EL 1 (TRUSS DESC.)	**Page 27 of 37**

Version 8.420 S Oct 9 2020 MiTek Industries, Inc. Fri Dec 18 09:14:16 2020 Page 1
ID:qKv8nLSCtBps7zaDJTm7k2zFzGC-oNlUQmxvcPnWDqBubdHpo?te0xTqY2z2WxhzGHy7r

Scale = 1:13.5

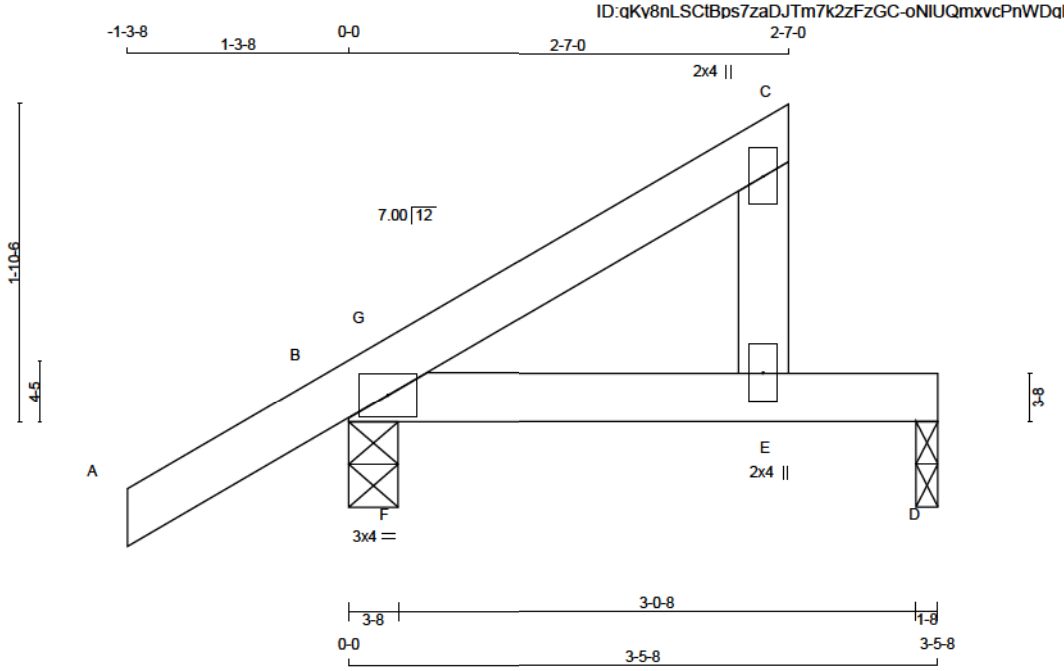

TOTAL WEIGHT = 6 X 11 = 64 lb

LUMBER
N. L. G. A. RULES

CHORDS	SIZE		LUMBER	DESCR.
A - C	2x4	DRY	No.2	SPF
E - C	2x4	DRY	No.2	SPF
B - D	2x4	DRY	No.2	SPF

DRY: SEASONED LUMBER.

PLATES (table is in inches)

JT	TYPE	PLATES	W	LEN Y	X
B	TMB1-I	MT20	3.0	4.0	
C	TMV+p	MT20	2.0	4.0	
E	BMV+p	MT20	2.0	4.0	

DIMENSIONS, SUPPORTS AND LOADINGS SPECIFIED BY FABRICATOR TO BE VERIFIED BY BUILDING DESIGNER [M]

BEARINGS

JT	FACTORED GROSS REACTION VERT	HORZ	MAXIMUM GROSS REACTION DOWN	HORZ	UPLIFT	INPUT BRG IN-SX	REQRD BRG IN-SX
B	439	0	439	0	0	3-8	1-8
D	188	0	188	0	0	1-8	1-8

UNFACTORED REACTIONS

JT	1ST LCASE COMBINED	MAX./MIN. COMPONENT REACTIONS SNOW	LIVE	PERM.LIVE	WIND	DEAD	SOIL
B	317	208 / 0	36 / 0	0 / 0	0 / 0	73 / 0	0 / 0
D	144	67 / 0	36 / 0	0 / 0	0 / 0	41 / 0	0 / 0

BEARING MATERIAL TO BE SPF NO.2 OR BETTER AT JOINT(S) B, D

BRACING
TOP CHORD TO BE SHEATHED OR MAX. PURLIN SPACING = 6.25 FT.
MAX. UNBRACED BOTTOM CHORD LENGTH = 10.00 FT OR RIGID CEILING DIRECTLY APPLIED.

ALL PITCH BREAKS AND PERIMETER CORNER JOINTS MUST BE LATERALLY RESTRAINED.

LOADING
TOTAL LOAD CASES: (5)

CHORDS

MEMB. FR-TO	MAX. FORCE (LBS)	FACTORED VERT. LOAD (PLF) FROM	TO	LC1 MAX CSI (LC)	MAX. UNBRAC LENGTH
A- B	0 / 41	-124.4	-124.4	0.17 (5)	10.00
B- G	-76 / 0	-124.4	-124.4	0.06 (2)	6.25
G- C	0 / 10	-124.4	-124.4	0.14 (1)	10.00
E- C	-158 / 0	0.0	0.0	0.02 (1)	7.81
B- F	0 / 0	-39.2	-39.2	0.06 (1)	10.00
F- E	0 / 0	-39.2	-39.2	0.20 (1)	10.00
E- D	0 / 0	-39.2	-39.2	0.20 (1)	10.00

WEBS

MEMB. FR-TO	MAX. FORCE (LBS)	MAX CSI (LC)
F- G	-22 / 100	0.00 (1)

CANTILEVER ANALYSIS HAS BEEN CONSIDERED IN THIS DESIGN

DESIGN CRITERIA

SPECIFIED LOADS:
TOP CH. LL = 34.8 PSF
DL = 8.0 PSF
BOT CH. LL = 10.5 PSF
DL = 7.3 PSF
TOTAL LOAD = 60.6 PSF

SPACING = 24.0 IN. C/C

THIS TRUSS IS DESIGNED FOR RESIDENTIAL OR SMALL BUILDING REQUIREMENTS OF PART 9, NBCC 2015

THIS DESIGN COMPLIES WITH:
- PART 9 OF BCBC 2018 , ABC 2019
- PART 9 OF OBC 2012 (2019 AMENDMENT)
- CSA 086-14
- TPIC 2014

(55 % OF 48.1 P.S.F. G.S.L. PLUS 8.4 P.S.F. RAIN LOAD) EQUALS 34.8 P.S.F. SPECIFIED ROOF LIVE LOAD

ALLOWABLE DEFL.(LL)= L/360 (0.19")
CALCULATED VERT. DEFL.(LL) = L/ 999 (0.02")
ALLOWABLE DEFL.(TL)= L/360 (0.19")
CALCULATED VERT. DEFL.(TL) = L/ 999 (0.03")

CSI: TC=0.17/1.00 (A-B:5) , BC=0.20/1.00 (E-F:1) , WB=0.00/1.00 (F-G:1) , SSI=0.15/1.00 (D-E:1)

DOL LUMBER=1.00 NAIL=1.00 LS BEND=1.10 COMP=1.10 SHEAR=1.10 TENS= 1.10

COMPANION LIVE LOAD FACTOR = 1.00

TRUSS PLATE MANUFACTURER IS NOT RESPONSIBLE FOR QUALITY CONTROL IN THE TRUSS MANUFACTURING PLANT .

NAIL VALUES

PLATE	GRIP(DRY) (PSI) MAX	MIN	SHEAR (PLI) MAX	MIN	SECTION (PLI) MAX	MIN
MT20	650	371	1747	788	1987	1873

PLATE PLACEMENT TOL. = 0.250 inches

PLATE ROTATION TOL. = 5.0 Deg.

JSI GRIP= 0.27 (B) (INPUT = 0.90)
JSI METAL= 0.07 (C) (INPUT = 1.00)

LICENSED PROFESSIONAL ENGINEER
N.A. EL-MASRI
PROVINCE OF ONTARIO
Dec 18, 2020

READ ALL NOTES ON THIS PAGE AND ON ENGINEERING NOTE PAGE ENP-1. THIS NOTE PAGE IS AN INTEGRAL PART OF THIS DRAWING AS IT CONTAINS SPECIFICATIONS AND CRITERIA USED IN THE DESIGN OF THIS COMPONENT.

Town of East Gwillimbury
Building Standards Branch BCIN #16487

These plans have been reviewed for use with the corrections as noted. No other changes may be made without written approval of the Building Standards Branch. All work must comply with Zoning By-Law 2018-043, as amended, and the Ontario Building Code, as amended. These approved documents must be kept on site at all times. The building permit must be clearly posted on site at all times.

Discipline	Reviewer	BCIN	Date
Building Code	H. Authier	43236	2021-02-05
Sewage System			
Zoning			

KOTT

JOB NAME	TRUSS NAME	QUANTITY	PLY	JOB DESC.	DRWG NO.
NE1220-129	T13	1	1	GREENPARK - TRINAR HALL - BRENTWOOD 3 EL 1 (TRUSS DESC.)	

Version 8.420 S Oct 9 2020 MiTek Industries, Inc. Fri Dec 18 09:14:17 2020 Page 1
ID:qKv8nLSCtBps7zaDJTm7k2zFzGC-GZJtd6xXNivNrqm49Lo2KDPiiLklHMSBlbQXoky7r

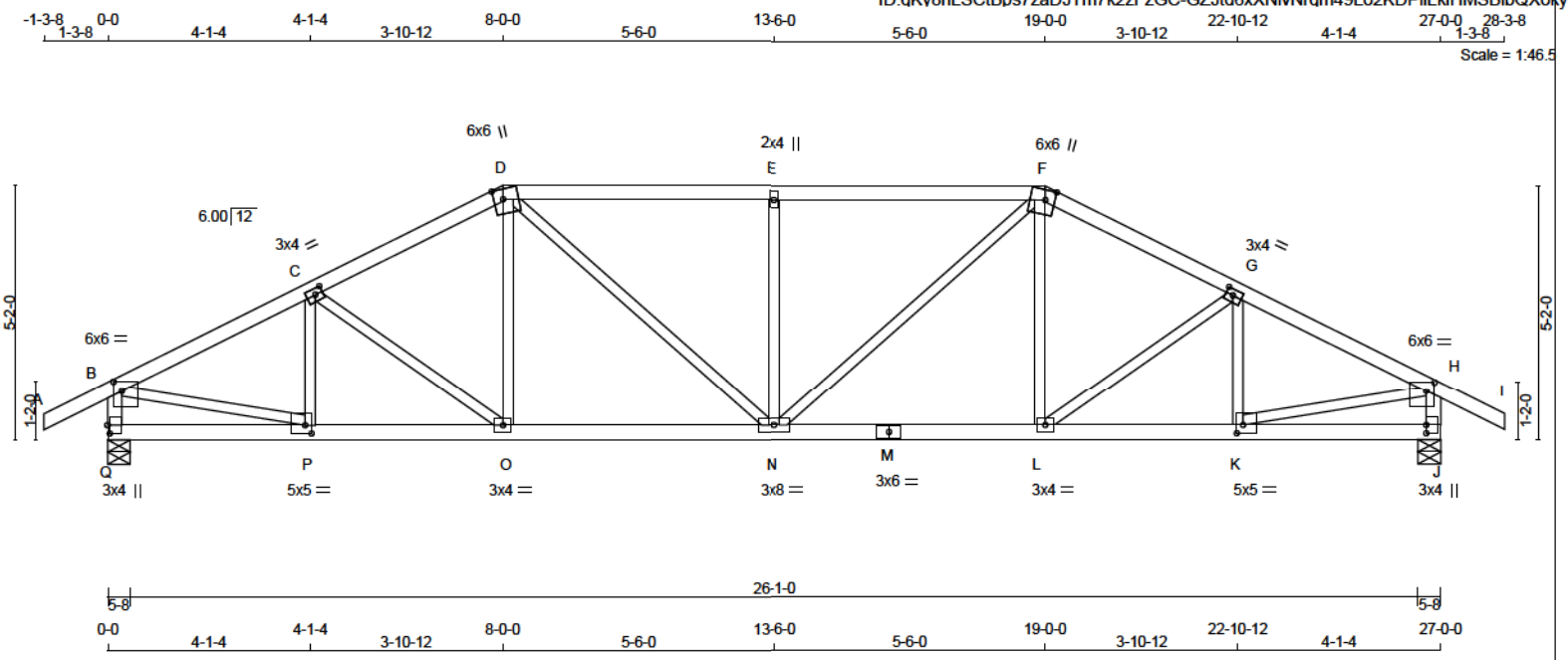

TOTAL WEIGHT = 109 lb

LUMBER
N. L. G. A. RULES

CHORDS	SIZE		LUMBER	DESCR.
A - D	2x4	DRY	No.2	SPF
D - F	2x4	DRY	No.2	SPF
F - I	2x4	DRY	No.2	SPF
Q - B	2x4	DRY	No.2	SPF
J - H	2x4	DRY	No.2	SPF
Q - M	2x4	DRY	No.2	SPF
M - J	2x4	DRY	No.2	SPF
ALL WEBS EXCEPT	2x3	DRY	No.2	SPF

DRY: SEASONED LUMBER.

PLATES (table is in inches)

JT	TYPE	PLATES	W	LEN	Y	X
B	TMVW-p	MT20	6.0	6.0	2.25	2.00
C	TMWW-t	MT20	3.0	4.0	1.50	1.75
D	TTWW+m	MT20	6.0	6.0	2.50	2.25
E	TMW+w	MT20	2.0	4.0		
F	TTWW+m	MT20	6.0	6.0	2.50	2.25
G	TMWW-t	MT20	3.0	4.0	1.50	1.75
H	TMVW-p	MT20	6.0	6.0	2.25	2.00
J	BMV1+p	MT20	3.0	4.0	2.00	
K	BMWW-t	MT20	5.0	5.0	2.00	1.50
L	BMWW-t	MT20	3.0	4.0		
M	BS-t	MT20	3.0	6.0		
N	BMWWW-t	MT20	3.0	8.0		
O	BMWW-t	MT20	3.0	4.0		
P	BMWW-t	MT20	5.0	5.0	2.00	1.50
Q	BMV1+p	MT20	3.0	4.0	2.00	0.50

DIMENSIONS, SUPPORTS AND LOADINGS SPECIFIED BY FABRICATOR TO BE VERIFIED BY BUILDING DESIGNER [M][F]

BEARINGS

JT	FACTORED GROSS REACTION VERT	HORZ	MAXIMUM GROSS REACTION DOWN	HORZ	FACTORED UPLIFT	INPUT BRG IN-SX	REQRD BRG IN-SX
Q	2378	0	2378	0	0	5-8	4-4
J	2378	0	2378	0	0	5-8	4-4

UNFACTORED REACTIONS

1ST LCASE MAX./MIN. COMPONENT REACTIONS

JT	COMBINED	SNOW	LIVE	PERM.LIVE	WIND	DEAD	SOIL
Q	1753	1034 / 0	284 / 0	0 / 0	0 / 0	435 / 0	0 / 0
J	1753	1034 / 0	284 / 0	0 / 0	0 / 0	435 / 0	0 / 0

BEARING MATERIAL TO BE SPF NO.2 OR BETTER AT JOINT(S) Q, J

BRACING
TOP CHORD TO BE SHEATHED OR MAX. PURLIN SPACING = 3.30 FT.
MAX. UNBRACED BOTTOM CHORD LENGTH = 10.00 FT OR RIGID CEILING DIRECTLY APPLIED.

ALL PITCH BREAKS AND PERIMETER CORNER JOINTS MUST BE LATERALLY RESTRAINED.

LOADING
TOTAL LOAD CASES: (4)

CHORDS

MEMB. FR-TO	MAX. FORCE (LBS)	FACTORED VERT. LOAD (PLF) FROM	TO	LC1 MAX CSI (LC)	MAX. UNBRAC LENGTH
A- B	0 / 38	-124.4	-124.4	0.16 (1)	10.00
B- C	-3021 / 0	-124.4	-124.4	0.34 (1)	3.74
C- D	-2898 / 0	-124.4	-124.4	0.33 (1)	3.82
D- E	-3167 / 0	-124.4	-124.4	0.62 (1)	3.30
E- F	-3167 / 0	-124.4	-124.4	0.62 (1)	3.30
F- G	-2898 / 0	-124.4	-124.4	0.33 (1)	3.82
G- H	-3021 / 0	-124.4	-124.4	0.34 (1)	3.74
H- I	0 / 38	-124.4	-124.4	0.16 (1)	10.00
Q- B	-2303 / 0	0.0	0.0	0.23 (1)	5.62
J- H	-2303 / 0	0.0	0.0	0.23 (1)	5.62
Q- P	0 / 0	-39.2	-39.2	0.11 (2)	10.00
P- O	0 / 2723	-39.2	-39.2	0.54 (1)	10.00
O- N	0 / 2574	-39.2	-39.2	0.53 (1)	10.00
N- M	0 / 2574	-39.2	-39.2	0.53 (1)	10.00
M- L	0 / 2574	-39.2	-39.2	0.53 (1)	10.00
L- K	0 / 2723	-39.2	-39.2	0.54 (1)	10.00
K- J	0 / 0	-39.2	-39.2	0.11 (2)	10.00

WEBS

MEMB. FR-TO	MAX. FORCE (LBS)	MAX CSI (LC)
P- C	-419 / 0	0.08 (1)
C- O	-192 / 0	0.08 (1)
O- D	0 / 333	0.07 (2)
D- N	0 / 792	0.18 (1)
N- E	-836 / 0	0.33 (1)
N- F	0 / 792	0.18 (1)
L- F	0 / 333	0.07 (2)
L- G	-192 / 0	0.08 (1)
K- G	-419 / 0	0.08 (1)
B- P	0 / 2782	0.63 (1)
K- H	0 / 2782	0.63 (1)

DESIGN CRITERIA

SPECIFIED LOADS:

TOP CH.	LL	=	34.8	PSF
	DL	=	8.0	PSF
BOT CH.	LL	=	10.5	PSF
	DL	=	7.3	PSF
TOTAL LOAD		=	60.6	PSF

SPACING = 24.0 IN. C/C

LOADING IN FLAT SECTION BASED ON A SLOPE OF 2.00/12 MINIMUM

THIS TRUSS IS DESIGNED FOR RESIDENTIAL OR SMALL BUILDING REQUIREMENTS OF PART 9, NBCC 2015

THIS DESIGN COMPLIES WITH:
- PART 9 OF BCBC 2018 , ABC 2019
- PART 9 OF OBC 2012 (2019 AMENDMENT)
- CSA 086-14
- TPIC 2014

(55 % OF 48.1 P.S.F. G.S.L. PLUS 8.4 P.S.F. RAIN LOAD) EQUALS 34.8 P.S.F. SPECIFIED ROOF LIVE LOAD

ALLOWABLE DEFL.(LL)= L/360 (0.90")
CALCULATED VERT. DEFL.(LL) = L/ 999 (0.14")
ALLOWABLE DEFL.(TL)= L/360 (0.90")
CALCULATED VERT. DEFL.(TL) = L/ 999 (0.24")

CSI: TC=0.62/1.00 (D-E:1) , BC=0.54/1.00 (K-L:1) , WB=0.63/1.00 (H-K:1) , SSI=0.33/1.00 (D-E:1)

DOL LUMBER=1.00 NAIL=1.00 LS BEND=1.10 COMP=1.10 SHEAR=1.10 TENS= 1.10

COMPANION LIVE LOAD FACTOR = 1.00

TRUSS PLATE MANUFACTURER IS NOT RESPONSIBLE FOR QUALITY CONTROL IN THE TRUSS MANUFACTURING PLANT .

NAIL VALUES

PLATE	GRIP(DRY) (PSI) MAX	MIN	SHEAR (PLI) MAX	MIN	SECTION (PLI) MAX	MIN
MT20	650	371	1747	788	1987	1873

PLATE PLACEMENT TOL. = 0.250 inches

PLATE ROTATION TOL. = 5.0 Deg.

JSI GRIP= 0.87 (H) (INPUT = 0.90)
JSI METAL= 0.88 (M) (INPUT = 1.00)

LICENSED PROFESSIONAL ENGINEER
N.A. EL-MASRI
PROVINCE OF ONTARIO
Dec 18, 2020

READ ALL NOTES ON THIS PAGE AND ON ENGINEERING NOTE PAGE ENP-1. THIS NOTE PAGE IS AN INTEGRAL PART OF THIS DRAWING AS IT CONTAINS SPECIFICATIONS AND CRITERIA USED IN THE DESIGN OF THIS COMPONENT.

Town of East Gwillimbury
Building Standards Branch BCIN #16487

These plans have been reviewed for use with the corrections as noted. No other changes may be made without written approval of the Building Standards Branch. All work must comply with Zoning By-Law 2018-043, as amended, and the Ontario Building Code, as amended. These approved documents must be kept on site at all times. The building permit must be clearly posted on site at all times.

Discipline	Reviewer	BCIN	Date
Building Code	H. Authier	43236	2021-02-05
Sewage System			
Zoning			

KOTT

JOB NAME	TRUSS NAME	QUANTITY	PLY	JOB DESC.	DRWG NO.
NE1220-129	T14	1	1	GREENPARK - TRINAR HALL - BRENTWOOD 3 EL 1 (TRUSS DESC.)	

Version 8.420 S Oct 9 2020 MiTek Industries, Inc. Fri Dec 18 09:14:18 2020 Page 1
ID:qKv8nLSCtBps7zaDJTm7k2zFzGC-kltFrSv9801ES LGi2JHtQvuwl3o0pULzFA4KAy7r

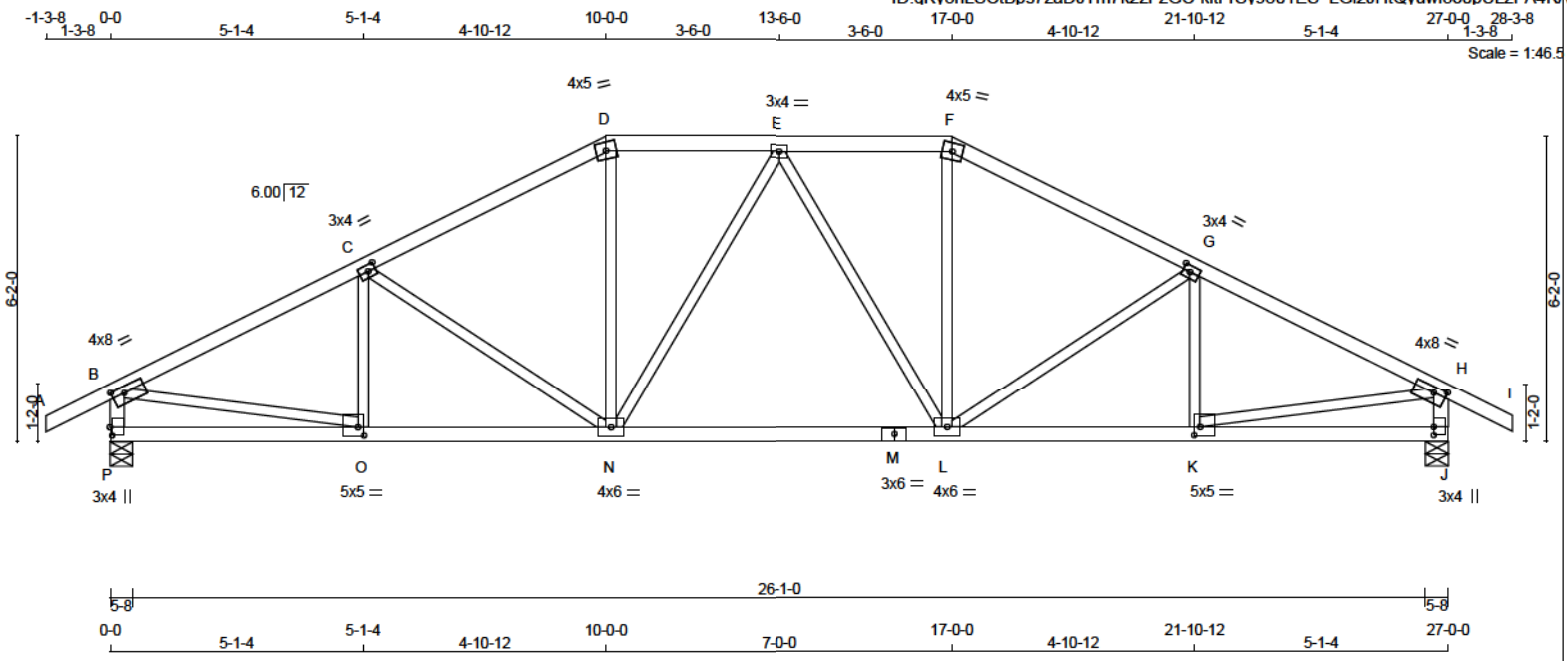

TOTAL WEIGHT = 111 lb

LUMBER
N. L. G. A. RULES

CHORDS	SIZE		LUMBER	DESCR.
A - D	2x4	DRY	No.2	SPF
D - F	2x4	DRY	No.2	SPF
F - I	2x4	DRY	No.2	SPF
P - B	2x4	DRY	No.2	SPF
J - H	2x4	DRY	No.2	SPF
P - M	2x4	DRY	No.2	SPF
M - J	2x4	DRY	No.2	SPF
ALL WEBS EXCEPT	2x3	DRY	No.2	SPF

DRY: SEASONED LUMBER.

PLATES (table is in inches)

JT	TYPE	PLATES	W	LEN	Y	X
B	TMVW-t	MT20	4.0	8.0	1.50	3.00
C	TMWW-t	MT20	3.0	4.0	1.50	1.75
D	TTW-m	MT20	4.0	5.0		
E	TMWW-t	MT20	3.0	4.0		
F	TTW-m	MT20	4.0	5.0		
G	TMWW-t	MT20	3.0	4.0	1.50	1.75
H	TMVW-t	MT20	4.0	8.0	1.50	3.00
J	BMV1+p	MT20	3.0	4.0	2.00	
K	BMWW-t	MT20	5.0	5.0	2.00	1.50
L	BMWWW-t	MT20	4.0	6.0		
M	BS-t	MT20	3.0	6.0		
N	BMWWW-t	MT20	4.0	6.0		
O	BMWW-t	MT20	5.0	5.0	2.00	1.50
P	BMV1+p	MT20	3.0	4.0	2.00	0.50

DIMENSIONS, SUPPORTS AND LOADINGS SPECIFIED BY FABRICATOR TO BE VERIFIED BY BUILDING DESIGNER

BEARINGS

JT	FACTORED GROSS REACTION VERT	HORZ	MAXIMUM GROSS REACTION DOWN	HORZ	FACTORED UPLIFT	INPUT BRG IN-SX	REQRD BRG IN-SX
P	2378	0	2378	0	0	5-8	4-4
J	2378	0	2378	0	0	5-8	4-4

UNFACTORED REACTIONS

1ST LCASE MAX./MIN. COMPONENT REACTIONS

JT	COMBINED	SNOW	LIVE	PERM.LIVE	WIND	DEAD	SOIL
P	1753	1034 / 0	284 / 0	0 / 0	0 / 0	435 / 0	0 / 0
J	1753	1034 / 0	284 / 0	0 / 0	0 / 0	435 / 0	0 / 0

BEARING MATERIAL TO BE SPF NO.2 OR BETTER AT JOINT(S) P, J

BRACING
TOP CHORD TO BE SHEATHED OR MAX. PURLIN SPACING = 3.49 FT.
MAX. UNBRACED BOTTOM CHORD LENGTH = 10.00 FT OR RIGID CEILING DIRECTLY APPLIED.

ALL PITCH BREAKS AND PERIMETER CORNER JOINTS MUST BE LATERALLY RESTRAINED.

LOADING
TOTAL LOAD CASES: (4)

CHORDS

MEMB. FR-TO	MAX. FORCE (LBS)	FACTORED VERT. LOAD (PLF) FROM	TO	LC1 MAX CSI (LC)	MAX. UNBRAC LENGTH
A- B	0 / 38	-124.4	-124.4	0.16 (1)	10.00
B- C	-3103 / 0	-124.4	-124.4	0.53 (1)	3.49
C- D	-2702 / 0	-124.4	-124.4	0.48 (1)	3.75
D- E	-2400 / 0	-124.4	-124.4	0.24 (1)	4.24
E- F	-2400 / 0	-124.4	-124.4	0.24 (1)	4.24
F- G	-2702 / 0	-124.4	-124.4	0.48 (1)	3.75
G- H	-3103 / 0	-124.4	-124.4	0.53 (1)	3.49
H- I	0 / 38	-124.4	-124.4	0.16 (1)	10.00
P- B	-2290 / 0	0.0	0.0	0.23 (1)	5.63
J- H	-2290 / 0	0.0	0.0	0.23 (1)	5.63

WEBS

MEMB. FR-TO	MAX. FORCE (LBS)	MAX CSI (LC)
O- C	-275 / 61	0.06 (1)
C- N	-505 / 0	0.32 (1)
N- D	0 / 788	0.18 (1)
N- E	-299 / 0	0.26 (1)
E- L	-299 / 0	0.26 (1)
L- F	0 / 788	0.18 (1)
L- G	-505 / 0	0.32 (1)
K- G	-275 / 61	0.06 (1)
B- O	0 / 2842	0.64 (1)
K- H	0 / 2842	0.64 (1)
P- O	0 / 0	-39.2 -39.2 0.17 (3) 10.00
O- N	0 / 2803	-39.2 -39.2 0.62 (1) 10.00
N- M	0 / 2549	-39.2 -39.2 0.58 (1) 10.00
M- L	0 / 2549	-39.2 -39.2 0.58 (1) 10.00
L- K	0 / 2803	-39.2 -39.2 0.62 (1) 10.00
K- J	0 / 0	-39.2 -39.2 0.17 (3) 10.00

[M][F]

DESIGN CRITERIA

SPECIFIED LOADS:
TOP CH. LL = 34.8 PSF
DL = 8.0 PSF
BOT CH. LL = 10.5 PSF
DL = 7.3 PSF
TOTAL LOAD = 60.6 PSF

SPACING = 24.0 IN. C/C

LOADING IN FLAT SECTION BASED ON A SLOPE OF 2.00/12 MINIMUM

THIS TRUSS IS DESIGNED FOR RESIDENTIAL OR SMALL BUILDING REQUIREMENTS OF PART 9, NBCC 2015

THIS DESIGN COMPLIES WITH:
- PART 9 OF BCBC 2018 , ABC 2019
- PART 9 OF OBC 2012 (2019 AMENDMENT)
- CSA 086-14
- TPIC 2014

(55 % OF 48.1 P.S.F. G.S.L. PLUS 8.4 P.S.F. RAIN LOAD) EQUALS 34.8 P.S.F. SPECIFIED ROOF LIVE LOAD

ALLOWABLE DEFL.(LL)= L/360 (0.90")
CALCULATED VERT. DEFL.(LL) = L/ 999 (0.14")
ALLOWABLE DEFL.(TL)= L/360 (0.90")
CALCULATED VERT. DEFL.(TL) = L/ 999 (0.25")

CSI: TC=0.53/1.00 (G-H:1) , BC=0.62/1.00 (K-L:1) , WB=0.64/1.00 (H-K:1) , SSI=0.27/1.00 (G-H:1)

DOL LUMBER=1.00 NAIL=1.00 LS BEND=1.10 COMP=1.10 SHEAR=1.10 TENS= 1.10

COMPANION LIVE LOAD FACTOR = 1.00

TRUSS PLATE MANUFACTURER IS NOT RESPONSIBLE FOR QUALITY CONTROL IN THE TRUSS MANUFACTURING PLANT .

NAIL VALUES

PLATE	GRIP(DRY) (PSI) MAX	MIN	SHEAR (PLI) MAX	MIN	SECTION (PLI) MAX	MIN
MT20	650	371	1747	788	1987	1873

PLATE PLACEMENT TOL. = 0.250 inches

PLATE ROTATION TOL. = 5.0 Deg.

JSI GRIP= 0.90 (B) (INPUT = 0.90)
JSI METAL= 0.76 (O) (INPUT = 1.00)

LICENSED PROFESSIONAL ENGINEER
N.A. EL-MASRI
PROVINCE OF ONTARIO
Dec 18, 2020

READ ALL NOTES ON THIS PAGE AND ON ENGINEERING NOTE PAGE ENP-1. THIS NOTE PAGE IS AN INTEGRAL PART OF THIS DRAWING AS IT CONTAINS SPECIFICATIONS AND CRITERIA USED IN THE DESIGN OF THIS COMPONENT.

Town of East Gwillimbury
Building Standards Branch BCIN #16487

These plans have been reviewed for use with the corrections as noted. No other changes may be made without written approval of the Building Standards Branch. All work must comply with Zoning By-Law 2018-043, as amended, and the Ontario Building Code, as amended. These approved documents must be kept on site at all times. The building permit must be clearly posted on site at all times.

Discipline	Reviewer	BCIN	Date
Building Code	H. Authier	43236	2021-02-05
Sewage System			
Zoning			

KOTT

JOB NAME	TRUSS NAME	QUANTITY	PLY	JOB DESC.	DRWG NO.
NE1220-129	T15	1	1	GREENPARK - TRINAR HALL - BRENTWOOD 3 EL 1 (TRUSS DESC.)	**Page 30 of 37**

Version 8.420 S Oct 9 2020 MiTek Industries, Inc. Fri Dec 18 09:14:18 2020 Page 1
ID:qKy8nLSCtBps7zaDJTm7k2zFzGC-kltFrSy9801ES_LGi2JHtQyq3l3b0miLzFA4KAy7r

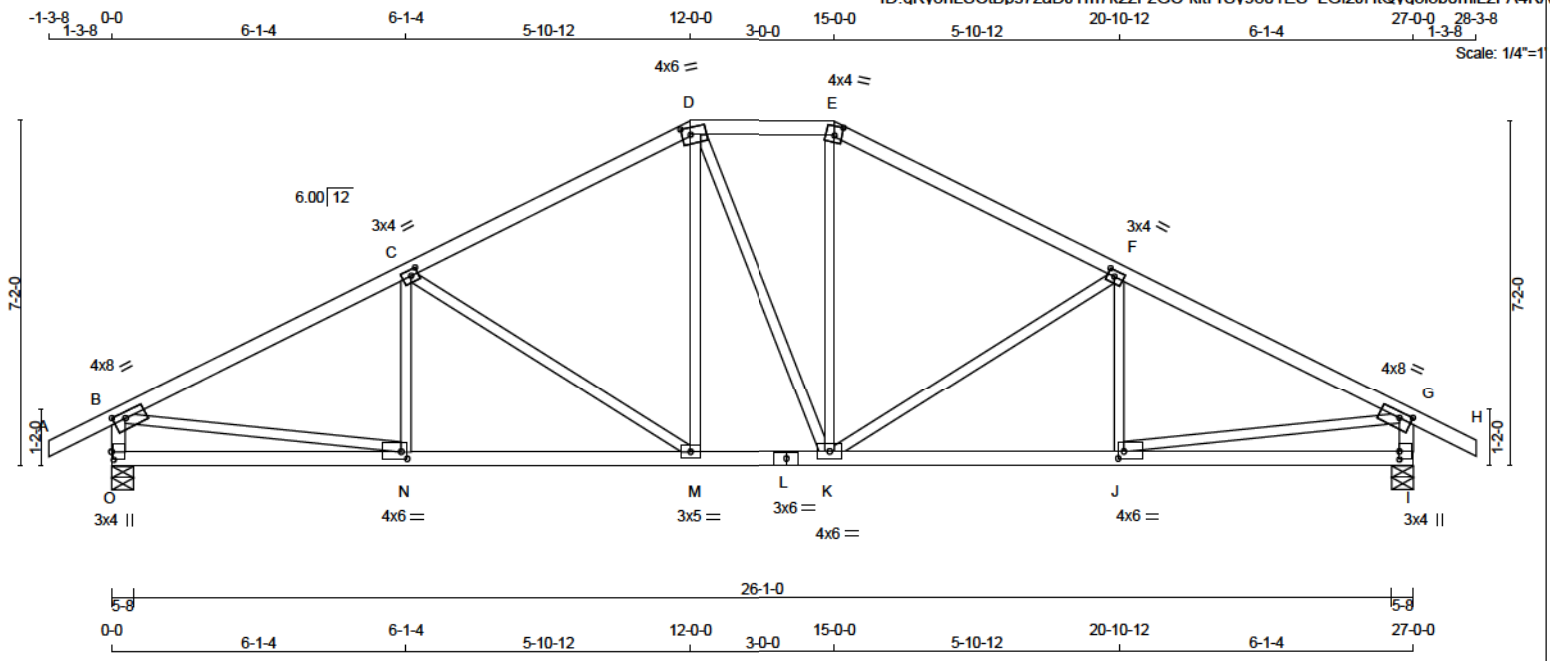

TOTAL WEIGHT = 113 lb

LUMBER
N. L. G. A. RULES

CHORDS	SIZE		LUMBER	DESCR.
A - D	2x4	DRY	No.2	SPF
D - E	2x4	DRY	No.2	SPF
E - H	2x4	DRY	No.2	SPF
O - B	2x4	DRY	No.2	SPF
I - G	2x4	DRY	No.2	SPF
O - L	2x4	DRY	No.2	SPF
L - I	2x4	DRY	No.2	SPF
ALL WEBS EXCEPT	2x3	DRY	No.2	SPF

DRY: SEASONED LUMBER.

PLATES (table is in inches)

JT	TYPE	PLATES	W	LEN	Y	X
B	TMVW-t	MT20	4.0	8.0	1.50	3.00
C	TMWW-t	MT20	3.0	4.0	1.50	1.75
D	TTWW-m	MT20	4.0	6.0	1.75	2.25
E	TTW-m	MT20	4.0	4.0	2.25	1.75
F	TMWW-t	MT20	3.0	4.0	1.50	1.75
G	TMVW-t	MT20	4.0	8.0	1.50	3.00
I	BMV1+p	MT20	3.0	4.0	2.00	
J	BMWW-t	MT20	4.0	6.0	1.75	1.50
K	BMWWW-t	MT20	4.0	6.0		
L	BS-t	MT20	3.0	6.0		
M	BMWW-t	MT20	3.0	5.0		
N	BMWW-t	MT20	4.0	6.0	1.75	1.50
O	BMV1+p	MT20	3.0	4.0	2.00	0.50

DIMENSIONS, SUPPORTS AND LOADINGS SPECIFIED BY FABRICATOR TO BE VERIFIED BY BUILDING DESIGNER [M][F]

BEARINGS

JT	FACTORED GROSS REACTION VERT	HORZ	MAXIMUM GROSS REACTION DOWN	HORZ	FACTORED UPLIFT	INPUT BRG IN-SX	REQRD BRG IN-SX
O	2378	0	2378	0	0	5-8	4-4
I	2378	0	2378	0	0	5-8	4-4

UNFACTORED REACTIONS

JT	1ST LCASE COMBINED	SNOW	MAX./MIN. COMPONENT REACTIONS LIVE	PERM.LIVE	WIND	DEAD	SOIL
O	1753	1034 / 0	284 / 0	0 / 0	0 / 0	435 / 0	0 / 0
I	1753	1034 / 0	284 / 0	0 / 0	0 / 0	435 / 0	0 / 0

BEARING MATERIAL TO BE SPF NO.2 OR BETTER AT JOINT(S) O, I

BRACING
TOP CHORD TO BE SHEATHED OR MAX. PURLIN SPACING = 3.12 FT.
MAX. UNBRACED BOTTOM CHORD LENGTH = 10.00 FT OR RIGID CEILING DIRECTLY APPLIED.

ALL PITCH BREAKS AND PERIMETER CORNER JOINTS MUST BE LATERALLY RESTRAINED.

LOADING
TOTAL LOAD CASES: (4)

CHORDS

MEMB. FR-TO	MAX. FORCE (LBS)	FACTORED VERT. LOAD (PLF) FROM	TO	LC1 MAX CSI (LC)	MAX. UNBRAC LENGTH
A- B	0 / 38	-124.4	-124.4	0.16 (1)	10.00
B- C	-3134 / 0	-124.4	-124.4	0.78 (1)	3.12
C- D	-2441 / 0	-124.4	-124.4	0.67 (1)	3.63
D- E	-2158 / 0	-124.4	-124.4	0.19 (1)	4.47
E- F	-2443 / 0	-124.4	-124.4	0.67 (1)	3.63
F- G	-3133 / 0	-124.4	-124.4	0.78 (1)	3.12
G- H	0 / 38	-124.4	-124.4	0.16 (1)	10.00
O- B	-2280 / 0	0.0	0.0	0.23 (1)	5.65
I- G	-2279 / 0	0.0	0.0	0.23 (1)	5.65

WEBS

MEMB. FR-TO	MAX. FORCE (LBS)	MAX CSI (LC)
N- C	-129 / 181	0.04 (3)
C- M	-826 / 0	0.82 (1)
M- D	0 / 608	0.14 (1)
D- K	0 / 5	0.00 (1)
K- E	0 / 614	0.14 (1)
K- F	-822 / 0	0.81 (1)
J- F	-132 / 179	0.04 (3)
B- N	0 / 2866	0.64 (1)
J- G	0 / 2865	0.64 (1)

O- N	0 / 0	-39.2	-39.2	0.29 (3)	10.00
N- M	0 / 2838	-39.2	-39.2	0.63 (1)	10.00
M- L	0 / 2156	-39.2	-39.2	0.45 (1)	10.00
L- K	0 / 2156	-39.2	-39.2	0.45 (1)	10.00
K- J	0 / 2837	-39.2	-39.2	0.63 (1)	10.00
J- I	0 / 0	-39.2	-39.2	0.28 (3)	10.00

DESIGN CRITERIA

SPECIFIED LOADS:

TOP CH.	LL	=	34.8	PSF
	DL	=	8.0	PSF
BOT CH.	LL	=	10.5	PSF
	DL	=	7.3	PSF
TOTAL LOAD		=	60.6	PSF

SPACING = 24.0 IN. C/C

LOADING IN FLAT SECTION BASED ON A SLOPE OF 2.00/12 MINIMUM

THIS TRUSS IS DESIGNED FOR RESIDENTIAL OR SMALL BUILDING REQUIREMENTS OF PART 9, NBCC 2015

THIS DESIGN COMPLIES WITH:
- PART 9 OF BCBC 2018 , ABC 2019
- PART 9 OF OBC 2012 (2019 AMENDMENT)
- CSA 086-14
- TPIC 2014

(55 % OF 48.1 P.S.F. G.S.L. PLUS 8.4 P.S.F. RAIN LOAD) EQUALS 34.8 P.S.F. SPECIFIED ROOF LIVE LOAD

ALLOWABLE DEFL.(LL)= L/360 (0.90")
CALCULATED VERT. DEFL.(LL) = L/ 999 (0.14")
ALLOWABLE DEFL.(TL)= L/360 (0.90")
CALCULATED VERT. DEFL.(TL) = L/ 999 (0.23")

CSI: TC=0.78/1.00 (B-C:1) , BC=0.63/1.00 (M-N:1) , WB=0.82/1.00 (C-M:1) , SSI=0.33/1.00 (F-G:1)

DOL LUMBER=1.00 NAIL=1.00 LS BEND=1.10 COMP=1.10 SHEAR=1.10 TENS= 1.10

COMPANION LIVE LOAD FACTOR = 1.00

TRUSS PLATE MANUFACTURER IS NOT RESPONSIBLE FOR QUALITY CONTROL IN THE TRUSS MANUFACTURING PLANT .

NAIL VALUES

PLATE	GRIP(DRY) (PSI) MAX	MIN	SHEAR (PLI) MAX	MIN	SECTION (PLI) MAX	MIN
MT20	650	371	1747	788	1987	1873

PLATE PLACEMENT TOL. = 0.250 inches

PLATE ROTATION TOL. = 5.0 Deg.

JSI GRIP= 0.89 (B) (INPUT = 0.90)
JSI METAL= 0.71 (L) (INPUT = 1.00)

LICENSED PROFESSIONAL ENGINEER
N.A. EL-MASRI
PROVINCE OF ONTARIO
Dec 18, 2020

READ ALL NOTES ON THIS PAGE AND ON ENGINEERING NOTE PAGE ENP-1. THIS NOTE PAGE IS AN INTEGRAL PART OF THIS DRAWING AS IT CONTAINS SPECIFICATIONS AND CRITERIA USED IN THE DESIGN OF THIS COMPONENT.

Town of East Gwillimbury
Building Standards Branch BCIN #16487

These plans have been reviewed for use with the corrections as noted. No other changes may be made without written approval of the Building Standards Branch. All work must comply with Zoning By-Law 2018-043, as amended, and the Ontario Building Code, as amended. These approved documents must be kept on site at all times. The building permit must be clearly posted on site at all times.

Discipline	Reviewer	BCIN	Date
Building Code	H. Authier	43236	2021-02-05
Sewage System			
Zoning			

KOTT

JOB NAME	TRUSS NAME	QUANTITY	PLY	JOB DESC.	DRWG NO.
NE1220-129	T16	12	1	TRUSS DESC. GREENPARK - TRINAR HALL - BRENTWOOD 3 EL 1	**Page 31 of 37**

Version 8.420 S Oct 9 2020 MiTek Industries, Inc. Fri Dec 18 09:14:19 2020 Page 1
ID:qKv8nLSCtBps7zaDJTm7k2zFzGC-CyRd2oznvK9548wSGmrWPeV2u9O1IFhUCvvetcy7r

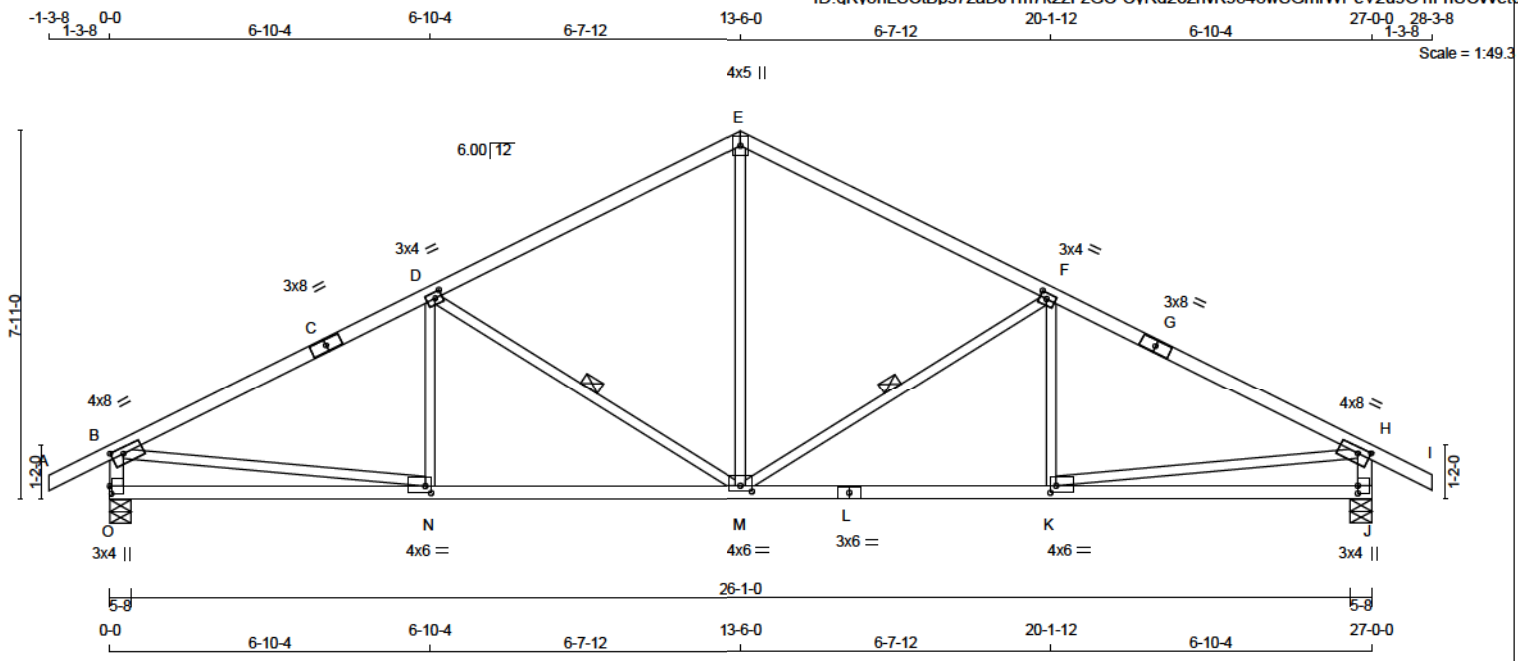

TOTAL WEIGHT = 12 X 106 = 1271 lb

LUMBER
N. L. G. A. RULES

CHORDS	SIZE		LUMBER	DESCR.
A - C	2x4	DRY	2100F 1.8E	SPF
C - E	2x4	DRY	2100F 1.8E	SPF
E - G	2x4	DRY	2100F 1.8E	SPF
G - I	2x4	DRY	2100F 1.8E	SPF
O - B	2x4	DRY	No.2	SPF
J - H	2x4	DRY	No.2	SPF
O - L	2x4	DRY	No.2	SPF
L - J	2x4	DRY	No.2	SPF
ALL WEBS EXCEPT	2x3	DRY	No.2	SPF

DRY: SEASONED LUMBER.

PLATES (table is in inches)

JT	TYPE	PLATES	W	LEN	Y	X
B	TMVW-t	MT20	4.0	8.0	1.50	3.00
C	TS-t	MT20	3.0	8.0		
D	TMWW-t	MT20	3.0	4.0	1.50	1.75
E	TTW+p	MT20	4.0	5.0		
F	TMWW-t	MT20	3.0	4.0	1.50	1.75
G	TS-t	MT20	3.0	8.0		
H	TMVW-t	MT20	4.0	8.0	1.50	3.00
J	BMV1+p	MT20	3.0	4.0	2.00	
K	BMWW-t	MT20	4.0	6.0	1.75	1.50
L	BS-t	MT20	3.0	6.0		
M	BMWWW-t	MT20	4.0	6.0	1.50	3.00
N	BMWW-t	MT20	4.0	6.0	1.75	1.50
O	BMV1+p	MT20	3.0	4.0	2.00	0.50

DIMENSIONS, SUPPORTS AND LOADINGS SPECIFIED BY FABRICATOR TO BE VERIFIED BY BUILDING DESIGNER

BEARINGS

JT	FACTORED GROSS REACTION VERT	HORZ	MAXIMUM GROSS REACTION DOWN	HORZ	FACTORED UPLIFT	INPUT BRG IN-SX	REQRD BRG IN-SX
O	2378	0	2378	0	0	5-8	4-4
J	2378	0	2378	0	0	5-8	4-4

UNFACTORED REACTIONS

JT	1ST LCASE COMBINED	SNOW	MAX./MIN. COMPONENT REACTIONS LIVE	PERM.LIVE	WIND	DEAD	SOIL
O	1753	1034 / 0	284 / 0	0 / 0	0 / 0	435 / 0	0 / 0
J	1753	1034 / 0	284 / 0	0 / 0	0 / 0	435 / 0	0 / 0

BEARING MATERIAL TO BE SPF NO.2 OR BETTER AT JOINT(S) O, J

BRACING
TOP CHORD TO BE SHEATHED OR MAX. PURLIN SPACING = 4.20 FT.
MAX. UNBRACED BOTTOM CHORD LENGTH = 10.00 FT OR RIGID CEILING DIRECTLY APPLIED.

ALL PITCH BREAKS AND PERIMETER CORNER JOINTS MUST BE LATERALLY RESTRAINED.

1 - 1x4 LATERAL BRACE(S) AT 1/ 2 LENGTH OF F-M, D-M. DBS = 20-0-0 . CBF = 127 LBS.

DBS = DIAGONAL BRACE SPACING (MAX). CBF = CUMULATIVE BRACING FORCE (PER BRACE). FASTEN LATERAL BRACE(S) USING (0.122"X3") SPIRAL NAILS : 1 NAIL FOR 2x3 BRACE(S), 2 FOR 1x4, 2x4, 2x5, 3 FOR 2x6, 4 FOR 2x8, 5 FOR 2x10, AND 6 FOR 2x12.

END VERTICAL(S) MUST BE SHEATHED OR HAVE BRACES AS INDICATED IN THE MAX. UNBRACED LENGTH COLUMN OF THE TABLE BELOW

LOADING
TOTAL LOAD CASES: (4)

CHORDS MEMB. FR-TO	MAX. FACTORED FORCE (LBS)	FACTORED VERT. LOAD (PLF) FROM	TO	LC1 MAX CSI (LC)	MAX. UNBRAC LENGTH
A- B	0 / 38	-124.4	-124.4	0.11 (1)	10.00
B- C	-3122 / 0	-124.4	-124.4	0.58 (1)	4.20
C- D	-3122 / 0	-124.4	-124.4	0.58 (1)	4.20
D- E	-2257 / 0	-124.4	-124.4	0.52 (1)	4.84
E- F	-2257 / 0	-124.4	-124.4	0.52 (1)	4.84
F- G	-3122 / 0	-124.4	-124.4	0.58 (1)	4.20
G- H	-3122 / 0	-124.4	-124.4	0.58 (1)	4.20
H- I	0 / 38	-124.4	-124.4	0.11 (1)	10.00
O- B	-2267 / 0	0.0	0.0	0.23 (1)	5.66
J- H	-2267 / 0	0.0	0.0	0.23 (1)	5.66
O- N	0 / 0	-39.2	-39.2	0.35 (3)	10.00
N- M	0 / 2832	-39.2	-39.2	0.68 (2)	10.00
M- L	0 / 2832	-39.2	-39.2	0.68 (2)	10.00
L- K	0 / 2832	-39.2	-39.2	0.68 (2)	10.00
K- J	0 / 0	-39.2	-39.2	0.35 (3)	10.00

WEBS MEMB. FR-TO	MAX. FACTORED FORCE (LBS)	MAX CSI (LC)
M- E	0 / 1353	0.30 (1)
M- F	-1016 / 0	0.43 (1)
K- F	-62 / 230	0.06 (3)
D- M	-1016 / 0	0.43 (1)
N- D	-62 / 230	0.06 (3)
B- N	0 / 2854	0.64 (1)
K- H	0 / 2854	0.64 (1)

DESIGN CRITERIA [M][F]

SPECIFIED LOADS:

TOP CH.	LL	=	34.8	PSF
	DL	=	8.0	PSF
BOT CH.	LL	=	10.5	PSF
	DL	=	7.3	PSF
TOTAL LOAD		=	60.6	PSF

SPACING = 24.0 IN. C/C

THIS TRUSS IS DESIGNED FOR RESIDENTIAL OR SMALL BUILDING REQUIREMENTS OF PART 9, NBCC 2015

THIS DESIGN COMPLIES WITH:
- PART 9 OF BCBC 2018 , ABC 2019
- PART 9 OF OBC 2012 (2019 AMENDMENT)
- CSA 086-14
- TPIC 2014

(55 % OF 48.1 P.S.F. G.S.L. PLUS 8.4 P.S.F. RAIN LOAD) EQUALS 34.8 P.S.F. SPECIFIED ROOF LIVE LOAD

ALLOWABLE DEFL.(LL)= L/360 (0.90")
CALCULATED VERT. DEFL.(LL) = L/ 999 (0.13")
ALLOWABLE DEFL.(TL)= L/360 (0.90")
CALCULATED VERT. DEFL.(TL) = L/ 999 (0.22")

CSI: TC=0.58/1.00 (F-H:1) , BC=0.68/1.00 (K-M:2) , WB=0.64/1.00 (H-K:1) , SSI=0.37/1.00 (F-H:1)

DOL LUMBER=1.00 NAIL=1.00 LS BEND=1.10 COMP=1.10 SHEAR=1.10 TENS= 1.10

COMPANION LIVE LOAD FACTOR = 1.00

TRUSS PLATE MANUFACTURER IS NOT RESPONSIBLE FOR QUALITY CONTROL IN THE TRUSS MANUFACTURING PLANT .

NAIL VALUES

PLATE	GRIP(DRY) (PSI) MAX	MIN	SHEAR (PLI) MAX	MIN	SECTION (PLI) MAX	MIN
MT20	650	371	1747	788	1987	1873

PLATE PLACEMENT TOL. = 0.250 inches

PLATE ROTATION TOL. = 5.0 Deg.

JSI GRIP= 0.89 (B) (INPUT = 0.90)
JSI METAL= 0.94 (L) (INPUT = 1.00)

LICENSED PROFESSIONAL ENGINEER
N.A. EL-MASRI
PROVINCE OF ONTARIO
Dec 18, 2020

READ ALL NOTES ON THIS PAGE AND ON ENGINEERING NOTE PAGE ENP-1. THIS NOTE PAGE IS AN INTEGRAL PART OF THIS DRAWING AS IT CONTAINS SPECIFICATIONS AND CRITERIA USED IN THE DESIGN OF THIS COMPONENT.

Town of East Gwillimbury
Building Standards Branch BCIN #16487

These plans have been reviewed for use with the corrections as noted. No other changes may be made without written approval of the Building Standards Branch. All work must comply with Zoning By-Law 2018-043, as amended, and the Ontario Building Code, as amended. These approved documents must be kept on site at all times. The building permit must be clearly posted on site at all times.

Discipline	Reviewer	BCIN	Date
Building Code	H. Authier	43236	2021-02-05
Sewage System			
Zoning			

KOTT

JOB NAME	TRUSS NAME	QUANTITY	PLY	JOB DESC.	DRWG NO.
NE1220-129	T22	1	1	GREENPARK - TRINAR HALL - BRENTWOOD 3 EL 1 (TRUSS DESC.)	**Page 32 of 37**

Version 8.420 S Oct 9 2020 MiTek Industries, Inc. Fri Dec 18 09:14:20 2020 Page 1
ID:qKy8nLSCtBps7zaDJTm7k2zFzGC-q8??F8 PqdHyilUfqTMlyr1ETYnDUlHeRZfBP2y7r

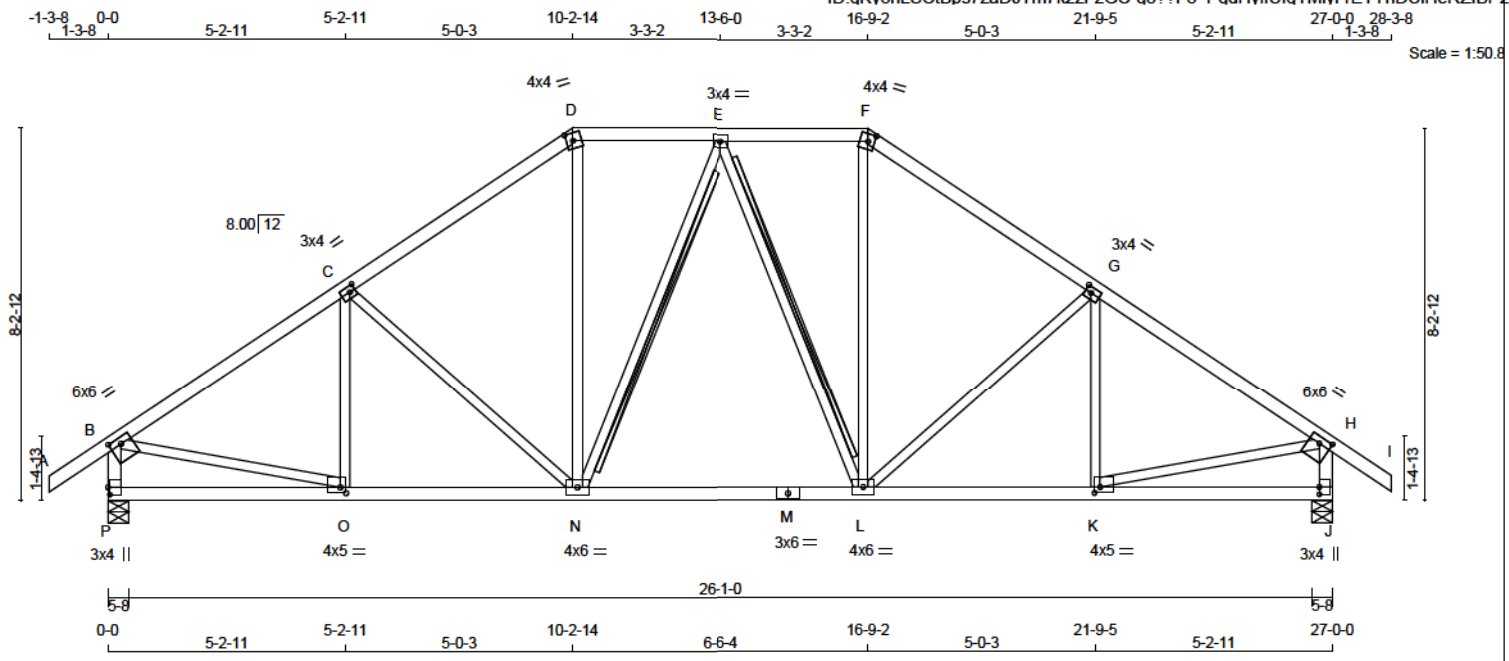

TOTAL WEIGHT = 124 lb

LUMBER
N. L. G. A. RULES

CHORDS	SIZE		LUMBER	DESCR.
A - D	2x4	DRY	No.2	SPF
D - F	2x4	DRY	No.2	SPF
F - I	2x4	DRY	No.2	SPF
P - B	2x4	DRY	No.2	SPF
J - H	2x4	DRY	No.2	SPF
P - M	2x4	DRY	No.2	SPF
M - J	2x4	DRY	No.2	SPF
ALL WEBS EXCEPT	2x3	DRY	No.2	SPF

DRY: SEASONED LUMBER.

PLATES (table is in inches)

JT	TYPE	PLATES	W	LEN	Y	X
B	TMVW-t	MT20	6.0	6.0	1.75	3.00
C	TMWW-t	MT20	3.0	4.0	1.50	1.50
D	TTW-m	MT20	4.0	4.0	2.00	1.75
E	TMWW-t	MT20	3.0	4.0		
F	TTW-m	MT20	4.0	4.0	2.00	1.75
G	TMWW-t	MT20	3.0	4.0	1.50	1.50
H	TMVW-t	MT20	6.0	6.0	1.75	3.00
J	BMV1+p	MT20	3.0	4.0	2.00	
K	BMWW-t	MT20	4.0	5.0	1.50	1.50
L	BMWWW-t	MT20	4.0	6.0		
M	BS-t	MT20	3.0	6.0		
N	BMWWW-t	MT20	4.0	6.0		
O	BMWW-t	MT20	4.0	5.0	1.50	1.50
P	BMV1+p	MT20	3.0	4.0	2.00	0.50

DIMENSIONS, SUPPORTS AND LOADINGS SPECIFIED BY FABRICATOR TO BE VERIFIED BY BUILDING DESIGNER

BEARINGS

JT	FACTORED GROSS REACTION VERT	HORZ	MAXIMUM GROSS REACTION DOWN	HORZ	UPLIFT	INPUT BRG IN-SX	REQRD BRG IN-SX
P	2380	0	2380	0	0	5-8	4-4
J	2380	0	2380	0	0	5-8	4-4

UNFACTORED REACTIONS

1ST LCASE MAX./MIN. COMPONENT REACTIONS

JT	COMBINED	SNOW	LIVE	PERM.LIVE	WIND	DEAD	SOIL
P	1754	1035 / 0	284 / 0	0 / 0	0 / 0	435 / 0	0 / 0
J	1754	1035 / 0	284 / 0	0 / 0	0 / 0	435 / 0	0 / 0

BEARING MATERIAL TO BE SPF NO.2 OR BETTER AT JOINT(S) P, J

BRACING
TOP CHORD TO BE SHEATHED OR MAX. PURLIN SPACING = 3.82 FT.
MAX. UNBRACED BOTTOM CHORD LENGTH = 10.00 FT OR RIGID CEILING DIRECTLY APPLIED.

ALL PITCH BREAKS AND PERIMETER CORNER JOINTS MUST BE LATERALLY RESTRAINED.

2x4 DRY SPF No.2 T-BRACE AT E-N, E-L

FASTEN T AND I-BRACES TO NARROW EDGE OF WEB WITH ONE ROW PER PLY OF 3" COMMON WIRE NAILS @ 6" O.C. WITH 3" MINIMUM END DISTANCE. BRACE MUST COVER 90% OF WEB LENGTH.

END VERTICAL(S) MUST BE SHEATHED OR HAVE BRACES AS INDICATED IN THE MAX. UNBRACED LENGTH COLUMN OF THE TABLE BELOW

LOADING
TOTAL LOAD CASES: (4)

CHORDS

MEMB. FR-TO	MAX. FACTORED FORCE (LBS)	FACTORED VERT. LOAD (PLF) FROM	TO	LC1 MAX CSI (LC)	MAX. UNBRAC LENGTH
A- B	0 / 47	-124.4	-124.4	0.17 (1)	10.00
B- C	-2534 / 0	-124.4	-124.4	0.53 (1)	3.82
C- D	-2187 / 0	-124.4	-124.4	0.49 (1)	4.10
D- E	-1792 / 0	-124.4	-124.4	0.18 (1)	4.84
E- F	-1792 / 0	-124.4	-124.4	0.18 (1)	4.84
F- G	-2187 / 0	-124.4	-124.4	0.49 (1)	4.10
G- H	-2534 / 0	-124.4	-124.4	0.53 (1)	3.82
H- I	0 / 47	-124.4	-124.4	0.17 (1)	10.00
P- B	-2293 / 0	0.0	0.0	0.24 (1)	5.63
J- H	-2293 / 0	0.0	0.0	0.24 (1)	5.63
P- O	0 / 0	-39.2	-39.2	0.18 (3)	10.00
O- N	0 / 2143	-39.2	-39.2	0.49 (1)	10.00
N- M	0 / 1886	-39.2	-39.2	0.45 (1)	10.00
M- L	0 / 1886	-39.2	-39.2	0.45 (1)	10.00
L- K	0 / 2143	-39.2	-39.2	0.49 (1)	10.00
K- J	0 / 0	-39.2	-39.2	0.18 (3)	10.00

WEBS

MEMB. FR-TO	MAX. FACTORED FORCE (LBS)	MAX CSI (LC)
O- C	-230 / 89	0.08 (1)
C- N	-484 / 0	0.43 (1)
N- D	0 / 789	0.18 (1)
N- E	-255 / 0	0.14 (1)
E- L	-255 / 0	0.14 (1)
L- F	0 / 789	0.18 (1)
L- G	-484 / 0	0.43 (1)
K- G	-230 / 89	0.08 (1)
B- O	0 / 2188	0.49 (1)
K- H	0 / 2188	0.49 (1)

DESIGN CRITERIA

SPECIFIED LOADS:

TOP CH.	LL	=	34.8	PSF
	DL	=	8.0	PSF
BOT CH.	LL	=	10.5	PSF
	DL	=	7.3	PSF
TOTAL LOAD		=	60.6	PSF

SPACING = 24.0 IN. C/C

LOADING IN FLAT SECTION BASED ON A SLOPE OF 2.00/12 MINIMUM

THIS TRUSS IS DESIGNED FOR RESIDENTIAL OR SMALL BUILDING REQUIREMENTS OF PART 9, NBCC 2015

THIS DESIGN COMPLIES WITH:
- PART 9 OF BCBC 2018 , ABC 2019
- PART 9 OF OBC 2012 (2019 AMENDMENT)
- CSA 086-14
- TPIC 2014

(55 % OF 48.1 P.S.F. G.S.L. PLUS 8.4 P.S.F. RAIN LOAD) EQUALS 34.8 P.S.F. SPECIFIED ROOF LIVE LOAD

ALLOWABLE DEFL.(LL)= L/360 (0.90")
CALCULATED VERT. DEFL.(LL) = L/ 999 (0.10")
ALLOWABLE DEFL.(TL)= L/360 (0.90")
CALCULATED VERT. DEFL.(TL) = L/ 999 (0.17")

CSI: TC=0.53/1.00 (G-H:1) , BC=0.49/1.00 (K-L:1) , WB=0.49/1.00 (H-K:1) , SSI=0.26/1.00 (B-C:1)

DOL LUMBER=1.00 NAIL=1.00 LS BEND=1.10 COMP=1.10 SHEAR=1.10 TENS= 1.10

COMPANION LIVE LOAD FACTOR = 1.00

TRUSS PLATE MANUFACTURER IS NOT RESPONSIBLE FOR QUALITY CONTROL IN THE TRUSS MANUFACTURING PLANT .

NAIL VALUES

PLATE	GRIP(DRY) (PSI) MAX	MIN	SHEAR (PLI) MAX	MIN	SECTION (PLI) MAX	MIN
MT20	650	371	1747	788	1987	1873

PLATE PLACEMENT TOL. = 0.250 inches

PLATE ROTATION TOL. = 5.0 Deg.

JSI GRIP= 0.89 (B) (INPUT = 0.90)
JSI METAL= 0.67 (B) (INPUT = 1.00)

LICENSED PROFESSIONAL ENGINEER
N.A. EL-MASRI
PROVINCE OF ONTARIO
Dec 18, 2020

READ ALL NOTES ON THIS PAGE AND ON ENGINEERING NOTE PAGE ENP-1. THIS NOTE PAGE IS AN INTEGRAL PART OF THIS DRAWING AS IT CONTAINS SPECIFICATIONS AND CRITERIA USED IN THE DESIGN OF THIS COMPONENT.

Town of East Gwillimbury
Building Standards Branch BCIN #16487

These plans have been reviewed for use with the corrections as noted. No other changes may be made without written approval of the Building Standards Branch. All work must comply with Zoning By-Law 2018-043, as amended, and the Ontario Building Code, as amended. These approved documents must be kept on site at all times. The building permit must be clearly posted on site at all times.

Discipline	Reviewer	BCIN	Date
Building Code	H. Authier	43236	2021-02-05
Sewage System			
Zoning			

KOTT

JOB NAME	TRUSS NAME	QUANTITY	PLY	JOB DESC.		DRWG NO.
NE1220-129	T23	1	1	TRUSS DESC.	GREENPARK - TRINAR HALL - BRENTWOOD 3 EL 1	**Page 33 of 37**

Version 8.420 S Oct 9 2020 MiTek Industries, Inc. Fri Dec 18 09:14:20 2020 Page 1

ID:qKv8nLSCtBps7zaDJTm7k2zFzGC-q8??F8 PqdHyilUfqTMlyr1CaYmVUhzeRZfBP2y7r

Scale = 1:53.1

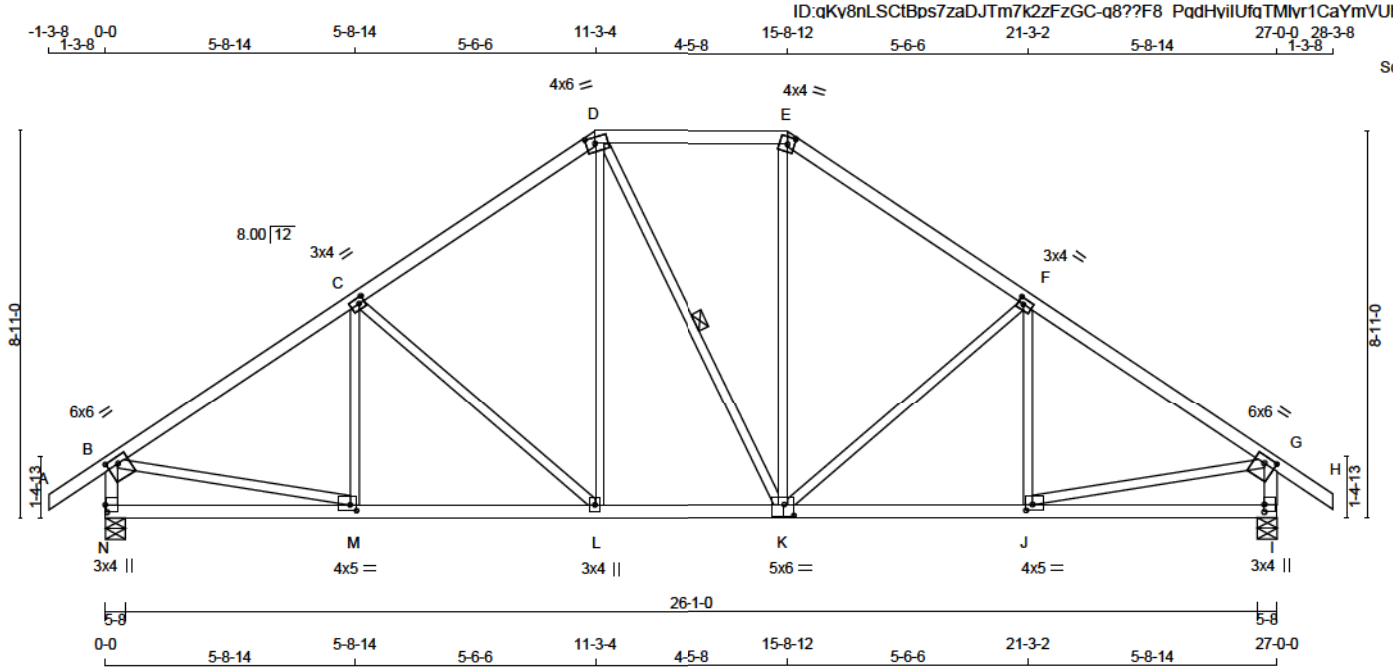

TOTAL WEIGHT = 122 lb

LUMBER

N. L. G. A. RULES

CHORDS	SIZE		LUMBER	DESCR.
A - D	2x4	DRY	No.2	SPF
D - E	2x4	DRY	No.2	SPF
E - H	2x4	DRY	No.2	SPF
N - B	2x4	DRY	No.2	SPF
I - G	2x4	DRY	No.2	SPF
N - K	2x4	DRY	No.2	SPF
K - I	2x4	DRY	No.2	SPF
ALL WEBS EXCEPT	2x3	DRY	No.2	SPF

DRY: SEASONED LUMBER.

PLATES (table is in inches)

JT	TYPE	PLATES	W	LEN	Y	X
B	TMVW-t	MT20	6.0	6.0	1.75	3.00
C	TMWW-t	MT20	3.0	4.0	1.50	1.50
D	TTWW-m	MT20	4.0	6.0	1.75	2.50
E	TTW-m	MT20	4.0	4.0	2.00	1.75
F	TMWW-t	MT20	3.0	4.0	1.50	1.50
G	TMVW-t	MT20	6.0	6.0	1.75	3.00
I	BMV1+p	MT20	3.0	4.0	2.00	
J	BMWW-t	MT20	4.0	5.0	1.50	1.75
K	BSWWW-l	MT20	5.0	6.0	3.00	2.75
L	BMWW+t	MT20	3.0	4.0		
M	BMWW-t	MT20	4.0	5.0	1.50	1.75
N	BMV1+p	MT20	3.0	4.0	2.00	0.50

DIMENSIONS, SUPPORTS AND LOADINGS SPECIFIED BY FABRICATOR TO BE VERIFIED BY BUILDING DESIGNER

BEARINGS

JT	FACTORED GROSS REACTION VERT	HORZ	MAXIMUM GROSS REACTION DOWN	HORZ	FACTORED UPLIFT	INPUT BRG IN-SX	REQRD BRG IN-SX
N	2380	0	2380	0	0	5-8	4-4
I	2380	0	2380	0	0	5-8	4-4

UNFACTORED REACTIONS

1ST LCASE MAX./MIN. COMPONENT REACTIONS

JT	COMBINED	SNOW	LIVE	PERM.LIVE	WIND	DEAD	SOIL
N	1754	1035 / 0	284 / 0	0 / 0	0 / 0	435 / 0	0 / 0
I	1754	1035 / 0	284 / 0	0 / 0	0 / 0	435 / 0	0 / 0

BEARING MATERIAL TO BE SPF NO.2 OR BETTER AT JOINT(S) N, I

BRACING

TOP CHORD TO BE SHEATHED OR MAX. PURLIN SPACING = 3.64 FT.
MAX. UNBRACED BOTTOM CHORD LENGTH = 10.00 FT OR RIGID CEILING DIRECTLY APPLIED.

ALL PITCH BREAKS AND PERIMETER CORNER JOINTS MUST BE LATERALLY RESTRAINED.

1 - 1x4 LATERAL BRACE(S) AT 1/ 2 LENGTH OF D-K. DBS = 20-0-0 . CBF = 4 LBS.

DBS = DIAGONAL BRACE SPACING (MAX). CBF = CUMULATIVE BRACING FORCE (PER BRACE). FASTEN LATERAL BRACE(S) USING (0.122"X3") SPIRAL NAILS : 1 NAIL FOR 2x3 BRACE(S), 2 FOR 1x4, 2x4, 2x5, 3 FOR 2x6, 4 FOR 2x8, 5 FOR 2x10, AND 6 FOR 2x12.

END VERTICAL(S) MUST BE SHEATHED OR HAVE BRACES AS INDICATED IN THE MAX. UNBRACED LENGTH COLUMN OF THE TABLE BELOW

LOADING

TOTAL LOAD CASES: (4)

CHORDS

MEMB. FR-TO	FORCE (LBS)	FACTORED VERT. LOAD FROM (PLF)	TO	LC1 MAX CSI (LC)	MAX. UNBRAC LENGTH
A- B	0 / 47	-124.4	-124.4	0.17 (1)	10.00
B- C	-2545 / 0	-124.4	-124.4	0.65 (1)	3.65
C- D	-2080 / 0	-124.4	-124.4	0.59 (1)	4.04
D- E	-1686 / 0	-124.4	-124.4	0.35 (1)	4.74
E- F	-2070 / 0	-124.4	-124.4	0.58 (1)	4.05
F- G	-2550 / 0	-124.4	-124.4	0.65 (1)	3.64
G- H	0 / 47	-124.4	-124.4	0.17 (1)	10.00
N- B	-2288 / 0	0.0	0.0	0.24 (1)	5.64
I- G	-2291 / 0	0.0	0.0	0.24 (1)	5.63
N- M	0 / 0	-39.2	-39.2	0.24 (3)	10.00
M- L	0 / 2155	-39.2	-39.2	0.50 (2)	10.00
L- K	0 / 1697	-39.2	-39.2	0.39 (1)	10.00
K- J	0 / 2159	-39.2	-39.2	0.54 (2)	10.00
J- I	0 / 0	-39.2	-39.2	0.28 (3)	10.00

WEBS

MEMB. FR-TO	MAX. FORCE (LBS)	MAX CSI (LC)
M- C	-157 / 149	0.06 (1)
C- L	-618 / 0	0.68 (1)
L- D	0 / 615	0.14 (1)
D- K	-29 / 0	0.02 (3)
K- E	0 / 589	0.13 (1)
K- F	-636 / 0	0.70 (1)
J- F	-136 / 176	0.06 (1)
B- M	0 / 2193	0.49 (1)
J- G	0 / 2197	0.49 (1)

DESIGN CRITERIA [M][F]

SPECIFIED LOADS:

TOP CH.	LL	=	34.8	PSF
	DL	=	8.0	PSF
BOT CH.	LL	=	10.5	PSF
	DL	=	7.3	PSF
TOTAL LOAD		=	60.6	PSF

SPACING = 24.0 IN. C/C

LOADING IN FLAT SECTION BASED ON A SLOPE OF 2.00/12 MINIMUM

THIS TRUSS IS DESIGNED FOR RESIDENTIAL OR SMALL BUILDING REQUIREMENTS OF PART 9, NBCC 2015

THIS DESIGN COMPLIES WITH:
- PART 9 OF BCBC 2018 , ABC 2019
- PART 9 OF OBC 2012 (2019 AMENDMENT)
- CSA 086-14
- TPIC 2014

(55 % OF 48.1 P.S.F. G.S.L. PLUS 8.4 P.S.F. RAIN LOAD) EQUALS 34.8 P.S.F. SPECIFIED ROOF LIVE LOAD

ALLOWABLE DEFL.(LL)= L/360 (0.90")
CALCULATED VERT. DEFL.(LL) = L/ 999 (0.09")
ALLOWABLE DEFL.(TL)= L/360 (0.90")
CALCULATED VERT. DEFL.(TL) = L/ 999 (0.16")

CSI: TC=0.65/1.00 (F-G:1) , BC=0.54/1.00 (J-K:2) , WB=0.70/1.00 (F-K:1) , SSI=0.29/1.00 (F-G:1)

DOL LUMBER=1.00 NAIL=1.00 LS BEND=1.10 COMP=1.10 SHEAR=1.10 TENS= 1.10

COMPANION LIVE LOAD FACTOR = 1.00

TRUSS PLATE MANUFACTURER IS NOT RESPONSIBLE FOR QUALITY CONTROL IN THE TRUSS MANUFACTURING PLANT .

NAIL VALUES

PLATE	GRIP(DRY) (PSI) MAX	MIN	SHEAR (PLI) MAX	MIN	SECTION (PLI) MAX	MIN
MT20	650	371	1747	788	1987	1873

PLATE PLACEMENT TOL. = 0.250 inches

PLATE ROTATION TOL. = 5.0 Deg.

JSI GRIP= 0.89 (G) (INPUT = 0.90)
JSI METAL= 0.68 (G) (INPUT = 1.00)

LICENSED PROFESSIONAL ENGINEER
N.A. EL-MASRI
PROVINCE OF ONTARIO
Dec 18, 2020

READ ALL NOTES ON THIS PAGE AND ON ENGINEERING NOTE PAGE ENP-1. THIS NOTE PAGE IS AN INTEGRAL PART OF THIS DRAWING AS IT CONTAINS SPECIFICATIONS AND CRITERIA USED IN THE DESIGN OF THIS COMPONENT.

Town of East Gwillimbury
Building Standards Branch BCIN #16487

These plans have been reviewed for use with the corrections as noted. No other changes may be made without written approval of the Building Standards Branch. All work must comply with Zoning By-Law 2018-043, as amended, and the Ontario Building Code, as amended. These approved documents must be kept on site at all times. The building permit must be clearly posted on site at all times.

Discipline	Reviewer	BCIN	Date
Building Code	H. Authier	43236	2021-02-05
Sewage System			
Zoning			

KOTT

JOB NAME	TRUSS NAME	QUANTITY	PLY	JOB DESC.		DRWG NO.
NE1220-129	T28	8	1	TRUSS DESC.	GREENPARK - TRINAR HALL - BRENTWOOD 3 EL 1	**Page 34 of 37**

Version 8.420 S Oct 9 2020 MiTek Industries, Inc. Fri Dec 18 09:14:21 2020 Page 1
ID:qKv8nLSCtBps7zaDJTm7k2zFzGC-8KYNTT?1RxPpJR3rOAt_V3aUivDDDJDnfDOkxVy7

Scale = 1:17.2

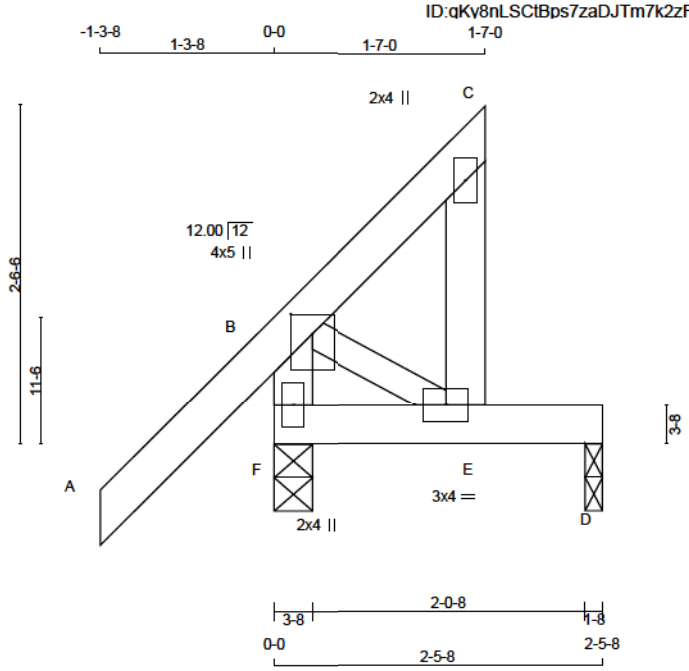

TOTAL WEIGHT = 8 X 11 = 91 lb

LUMBER
N. L. G. A. RULES

CHORDS	SIZE		LUMBER	DESCR.
A - C	2x4	DRY	No.2	SPF
E - C	2x4	DRY	No.2	SPF
F - B	2x4	DRY	No.2	SPF
F - D	2x4	DRY	No.2	SPF
ALL WEBS	2x3	DRY	No.2	SPF

DRY: SEASONED LUMBER.

PLATES (table is in inches)

JT	TYPE	PLATES	W	LEN	Y	X
B	TMVW+p	MT20	4.0	5.0	1.75	2.00
C	TMV+p	MT20	2.0	4.0		
E	BMVW-t	MT20	3.0	4.0		
F	BMV1+p	MT20	2.0	4.0		

DIMENSIONS, SUPPORTS AND LOADINGS SPECIFIED BY FABRICATOR TO BE VERIFIED BY BUILDING DESIGNER

BEARINGS

JT	FACTORED GROSS REACTION VERT	HORZ	MAXIMUM GROSS REACTION DOWN	HORZ	FACTORED UPLIFT	INPUT BRG IN-SX	REQRD BRG IN-SX
F	405	0	405	0	0	3-8	1-8
D	62	0	71	0	-26	1-8	1-8

PROVIDE ANCHORAGE AT BEARING JOINT D FOR 150 LBS. FACTORED UPLIFT

UNFACTORED REACTIONS

JT	1ST LCASE COMBINED	MAX /MIN COMPONENT REACTIONS SNOW	LIVE	PERM.LIVE	WIND	DEAD	SOIL
F	289	199 / 0	26 / 0	0 / 0	0 / 0	64 / 0	0 / 0
D	54	8 / -28	26 / 0	0 / 0	0 / 0	20 / 0	0 / 0

BEARING MATERIAL TO BE SPF NO.2 OR BETTER AT JOINT(S) F, D

BRACING
TOP CHORD TO BE SHEATHED OR MAX. PURLIN SPACING = 6.25 FT.
MAX. UNBRACED BOTTOM CHORD LENGTH = 10.00 FT OR RIGID CEILING DIRECTLY APPLIED.

ALL PITCH BREAKS AND PERIMETER CORNER JOINTS MUST BE LATERALLY RESTRAINED.

LOADING
TOTAL LOAD CASES: (5)

CHORDS

MEMB. FR-TO	MAX. FORCE (LBS)	FACTORED VERT. LOAD (PLF) FROM	TO	LC1 MAX CSI (LC)	MAX. UNBRAC LENGTH
A- B	0 / 61	-124.4	-124.4	0.17 (1)	10.00
B- C	-54 / 0	-124.4	-124.4	0.16 (1)	6.25
E- C	-22 / 65	0.0	0.0	0.01 (5)	7.81
F- B	-348 / 0	0.0	0.0	0.03 (1)	7.81
F- E	0 / 0	-39.2	-39.2	0.06 (2)	10.00
E- D	0 / 0	-39.2	-39.2	0.06 (2)	10.00

WEBS

MEMB. FR-TO	MAX. FORCE (LBS)	FACTORED MAX CSI (LC)
B- E	0 / 0	0.00 (1)

CANTILEVER ANALYSIS HAS BEEN CONSIDERED IN THIS DESIGN

DESIGN CRITERIA

SPECIFIED LOADS:

TOP CH.	LL	=	34.8	PSF
	DL	=	8.0	PSF
BOT CH.	LL	=	10.5	PSF
	DL	=	7.3	PSF
TOTAL LOAD		=	60.6	PSF

SPACING = 24.0 IN. C/C

THIS TRUSS IS DESIGNED FOR RESIDENTIAL OR SMALL BUILDING REQUIREMENTS OF PART 9, NBCC 2015

THIS DESIGN COMPLIES WITH:
- PART 9 OF BCBC 2018 , ABC 2019
- PART 9 OF OBC 2012 (2019 AMENDMENT)
- CSA 086-14
- TPIC 2014

DESIGN ASSUMPTIONS
-OVERHANG NOT TO BE ALTERED OR CUT OFF.

(55 % OF 48.1 P.S.F. G.S.L. PLUS 8.4 P.S.F. RAIN LOAD) EQUALS 34.8 P.S.F. SPECIFIED ROOF LIVE LOAD

ALLOWABLE DEFL.(LL)= L/360 (0.19")
CALCULATED VERT. DEFL.(LL) = L/ 999 (0.00")
ALLOWABLE DEFL.(TL)= L/360 (0.19")
CALCULATED VERT. DEFL.(TL) = L/ 999 (0.00")

CSI: TC=0.17/1.00 (A-B:1) , BC=0.06/1.00 (E-F:2) , WB=0.00/1.00 (B-E:1) , SSI=0.10/1.00 (B-C:1)

DOL LUMBER=1.00 NAIL=1.00 LS BEND=1.10 COMP=1.10 SHEAR=1.10 TENS= 1.10

COMPANION LIVE LOAD FACTOR = 1.00

TRUSS PLATE MANUFACTURER IS NOT RESPONSIBLE FOR QUALITY CONTROL IN THE TRUSS MANUFACTURING PLANT .

NAIL VALUES

PLATE	GRIP(DRY) (PSI) MAX	MIN	SHEAR (PLI) MAX	MIN	SECTION (PLI) MAX	MIN
MT20	650	371	1747	788	1987	1873

PLATE PLACEMENT TOL. = 0.250 inches

PLATE ROTATION TOL. = 5.0 Deg.

JSI GRIP= 0.23 (B) (INPUT = 0.90)
JSI METAL= 0.08 (B) (INPUT = 1.00)

LICENSED PROFESSIONAL ENGINEER
N.A. EL-MASRI
PROVINCE OF ONTARIO
Dec 18, 2020

READ ALL NOTES ON THIS PAGE AND ON ENGINEERING NOTE PAGE ENP-1. THIS NOTE PAGE IS AN INTEGRAL PART OF THIS DRAWING AS IT CONTAINS SPECIFICATIONS AND CRITERIA USED IN THE DESIGN OF THIS COMPONENT.

Town of East Gwillimbury
Building Standards Branch BCIN #16487

These plans have been reviewed for use with the corrections as noted. No other changes may be made without written approval of the Building Standards Branch. All work must comply with Zoning By-Law 2018-043, as amended, and the Ontario Building Code, as amended. These approved documents must be kept on site at all times. The building permit must be clearly posted on site at all times.

Discipline	Reviewer	BCIN	Date
Building Code	H. Authier	43236	2021-02-05
Sewage System			
Zoning			

KOTT

1) ENSURE TRUSS HAS BEEN DESIGNED WITH ADDITIONAL TOP CHORD DEAD LOAD EQUAL TO OR GREATER THAN WEIGHT OF SOLAR PANELS BEING INSTALLED

2) ATTACH SOLAR PANELS TO EACH TRUSS LOCATED UNDER THE SOLAR PANELS (I.E. @ 24" C/C PERPENDICULAR TO THE TRUSS DIRECTION)

3) ATTACH A SPF No.1/2 SCAB OF THE SAME SIZE AS TRUSS CHORD ON ONE SIDE ALONG THE FULL LENGTH OF THE MEMBER UNDER THE SOLAR PANELS USING 2 ROWS OF 3" WIRE NAILS @ 6" C/C

4) ATTACH SOLAR PANELS TO SCAB AT A MAXIMUM SPACING OF 48" C/C ALONG THE MEMBER (PARALLEL TO TRUSS DIRECTION) AS PER MANUFACTURER'S INSTRUCTIONS

5) DO NOT USE LAG SCREWS IN TRUSS MEMBERS. LAG SCREWS SHOULD ATTACH TO SCABS ONLY

6) MAXIMUM NUMBER OF SCAB SPLICES IS TWO

7) THIS DETAIL IS APPLICABLE TO PART 9 BUILDINGS ONLY

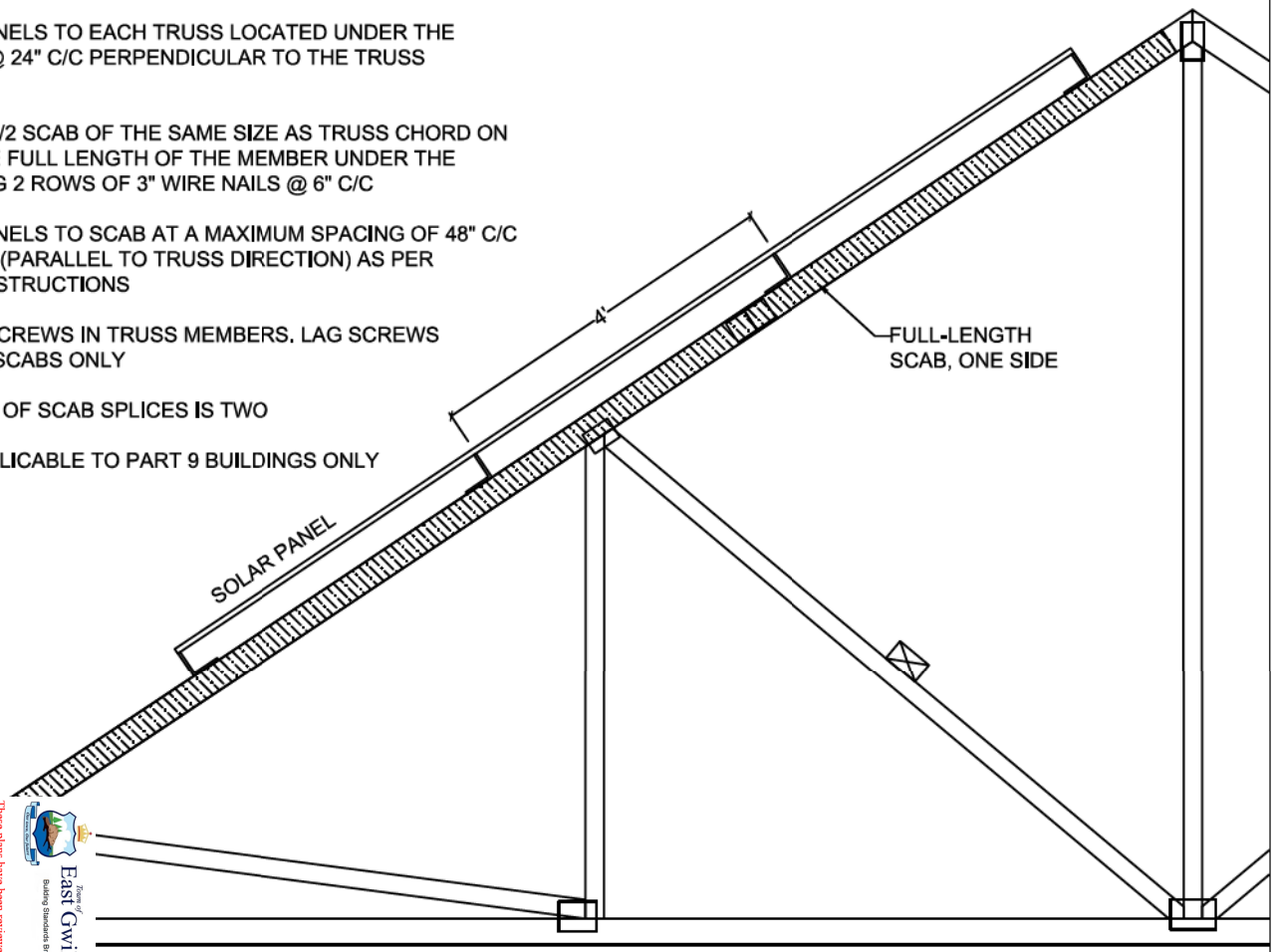

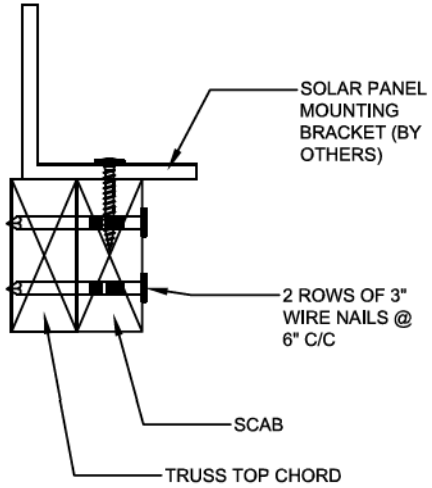

Town of East Gwillimbury
Building Standards Branch BCIN #16487

These plans have been reviewed for use with the corrections as noted. No other changes may be made without written approval of the Building Standards Branch. All work must comply with Zoning By-Law 2018-043, as amended, and the Ontario Building Code, as amended. These approved documents must be kept on site at all times. The building permit must be clearly posted on site at all times.

Discipline	Reviewer	BCIN	Date
Building Code	H. Auther	43236	2021-02-05
Sewage System			
Zoning			

NE1220-129
GREENPARK - TRINAR HALL
- BRENTWOOD 3 EL 1

LICENSED PROFESSIONAL ENGINEER
N.A. EL-MASRI
PROVINCE OF ONTARIO
Dec 18, 2020

Detail for Installation of Solar Panels - Scab Method

KOTT

NE1220-129
GREENPARK - TRINAR HALL -
BRENTWOOD 3 EL 1

BEARING ANCHORAGE BY TOE-NAILS FOR LATERAL CAPACITY

B97791H1

NAIL TYPE	LENGTH (IN)	DIAMETER (IN)	NAIL LATERAL CAPACITY (LB)	
			S-P-F	D. FIR
COMMON WIRE	3.00	0.144	132	147
	3.25	0.144	132	147
	3.50	0.160	159	177
COMMON SPIRAL	3.00	0.122	97	108
	3.25	0.122	97	108
	3.50	0.152	145	162

NOTES:

1. Rafter and ceiling members may be anchored to top and bottom chords of girder truss by toe-nailing rafter and ceiling members to girder chords provided the reaction does not exceed the lateral capacities in the table. Hangers (specified by others) are required for reactions higher than the maximum toe-nail capacity. Reactions are based on factored loads.
2. Toe nail capacities shown in the table are for **one** toe-nail. For additional toe-nails multiply values in table by the number of toe-nails used. Toe-nail capacities take into account toe-nailing factor J_A in CSA O86-14, section 12.9.4.1.
3. For 9- 3/4 gauge 3.25" common wire gun nails (diameter = 0.120") use 3" common spiral nail values.
4. Maximum number of toe-nails allowed depends on the lumber size & species to be toe-nailed to supporting member and nail diameter, as shown in tables below.
5. Nail values in table are based on the following relative lumber densities: G = 0.42 (SPF), G = 0.49 (D. Fir).
6. Toe-nails shall be driven at approximately 1/3 the nail length from the edge of the joist/truss chord and driven at an angle of 30° to the grain of the member (See next page for nailing on bearing plate).
7. For loads due to **wind** the nail lateral capacity in this table may be multiplied by 1.15 (K_D factor).
8. Lumber must be dry (< 19% moisture content) at the time of nail installation.
9. Nail values in this table comply with CSA O86-14, section 12.9.4
10. This design is not valid after March 31, 2021.

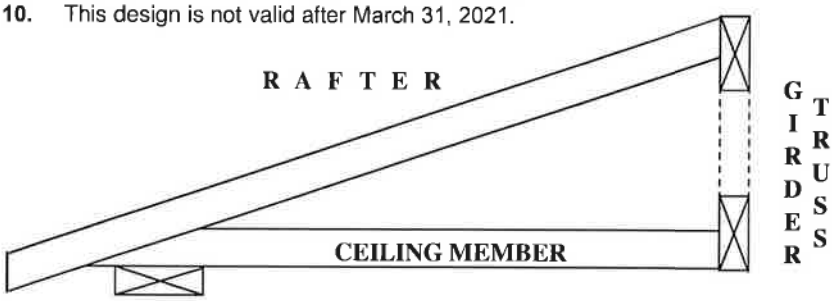

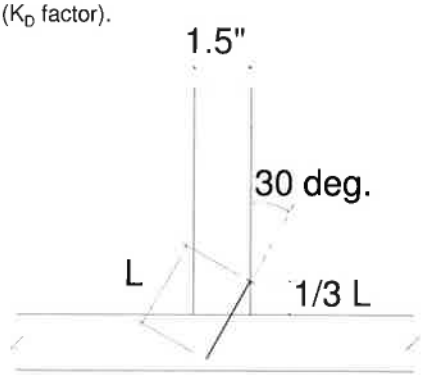

TOE-NAIL INSTALLATION

Nail type	Common wire	Common spiral	Common wire	Common spiral
Nail dia. (in)	0.160	0.152	0.144	0.122
	(3.5" nail)		(3" and 3.25" nail)	
LUMBER SIZE	**MAXIMUM NUMBER OF TOE-NAILS**			
2X4 SPF	2	2	3	3
2X4 D. Fir	2	2	2	2
2X6 SPF	4	4	4	5
2X6 D. Fir	3	3	3	4

PEO
Certificate No. 10889485

PROFESSIONAL ENGINEER
. Cordogiannis
90553736
PROVINCE OF ONTARIO

MiTek®

MiTek Canada Inc
100 Industrial Rd.
Bradford, Ontario L3Z 3G7

Town of East Gwillimbury
Building Standards Branch BCIN #16487

These plans have been reviewed for use with the corrections as noted. No other changes may be made without written approval of the Building Standards Branch. All work must comply with Zoning By-Law 2018-043, as amended, and the Ontario Building Code, as amended. These approved documents must be kept on site at all times. The building permit must be clearly posted on site at all times.

Discipline	Reviewer	BCIN	Date
Building Code	H. Authier	43236	2021-02-05
Sewage System			
Zoning			

Decembe

NE1220-129
GREENPARK - TRINAR HALL -
BRENTWOOD 3 EL 1

BEARING ANCHORAGE BY TOE-NAILS FOR WIND LOADING

B97791H2

NAIL TYPE	LENGTH (IN)	DIAMETER (IN)	NAIL WITHDRAWAL CAPACITY (LB)	
			S-P-F	D. FIR
COMMON WIRE	3.00	0.144	30	42
	3.25	0.144	32	45
	3.50	0.160	38	52
COMMON SPIRAL	3.00	0.122	26	36
	3.25	0.122	28	40
	3.50	0.152	36	50

Note: If using truss with D. Fir lumber and S-P-F bearing plate, use values in table for S-P-F.

NOTES:

1. Truss chord, rafter, or ceiling members may be anchored to bearing plate by toe-nails, provided that the actual factored uplift force due to **wind** or **earthquake** load does not exceed the withdrawal capacities in the table. Hangers (specified by others) are required for uplift forces that are higher than the maximum toe-nail withdrawal capacity.
2. Toe nail capacities shown in the table are for **one** toe-nail. For additional toe-nails multiply values in table by the number of toe-nails used. Toe-nail capacities take into account toe-nailing factor J_A in CSA O86-14, section 12.9.5.2.
3. For 9- 3/4 gauge 3.25" common wire gun nails (diameter = 0.120") use 3" common spiral nail values.
4. Maximum number of toe-nails allowed depends on the lumber size & species to be toe-nailed to supporting member and nail diameter, as shown in table above.
5. Nail values in table are based on the following relative lumber densities: G = 0.42(SPF), G = 0.49(D. Fir).
6. Toe-nails shall be driven at approximately 1/3 the nail length from the edge of the joist/truss chord and driven at an angle of 30° to the grain of the member (See drawing on detail B37579H1).
7. Lumber must be dry (< 19% moisture content) at the time of nail installation.
8. Nail values in this table comply with CSA O86-14, section 12.9.5
9. This design is not valid after March 31, 2021.

Toe-nailing on 2x6 Bearing Plate

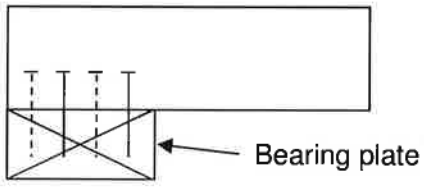

Elevation view

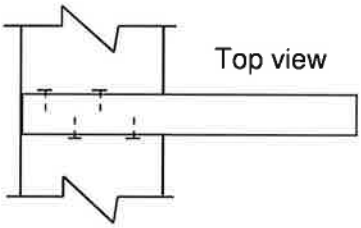

Top view

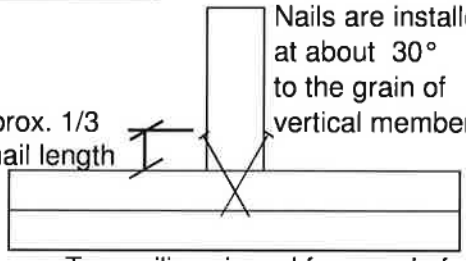

Toe-nailing viewed from end of joist or truss

Toe-nailing on 2x4 Bearing Plate

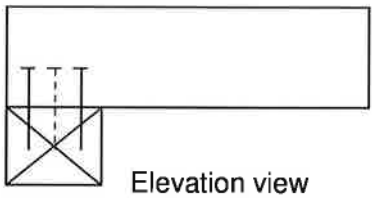

Elevation view

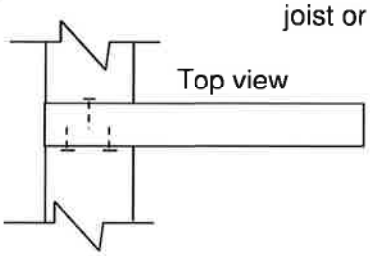

Top view

MiTek®

MiTek Canada Inc
100 Industrial Rd.
Bradford, Ontario L3Z 3G7

Town of East Gwillimbury
Building Standards Branch BCIN #16487

These plans have been reviewed for use with the corrections as noted. No other changes may be made without written approval of the Building Standards Branch. All work must comply with Zoning By-Law 2018-043, as amended, and the Ontario Building Code, as amended. These approved documents must be kept on site at all times. The building permit must be clearly posted on site at all times.

Discipline	Reviewer	BCIN	Date
Building Code	H. Authier	43236	2021-02-05
Sewage System			
Zoning			

PEO
Certificate No. 10889485

LICENSED PROFESSIONAL ENGINEER
C. Cordogiannis
90553736
PROVINCE OF ONTARIO