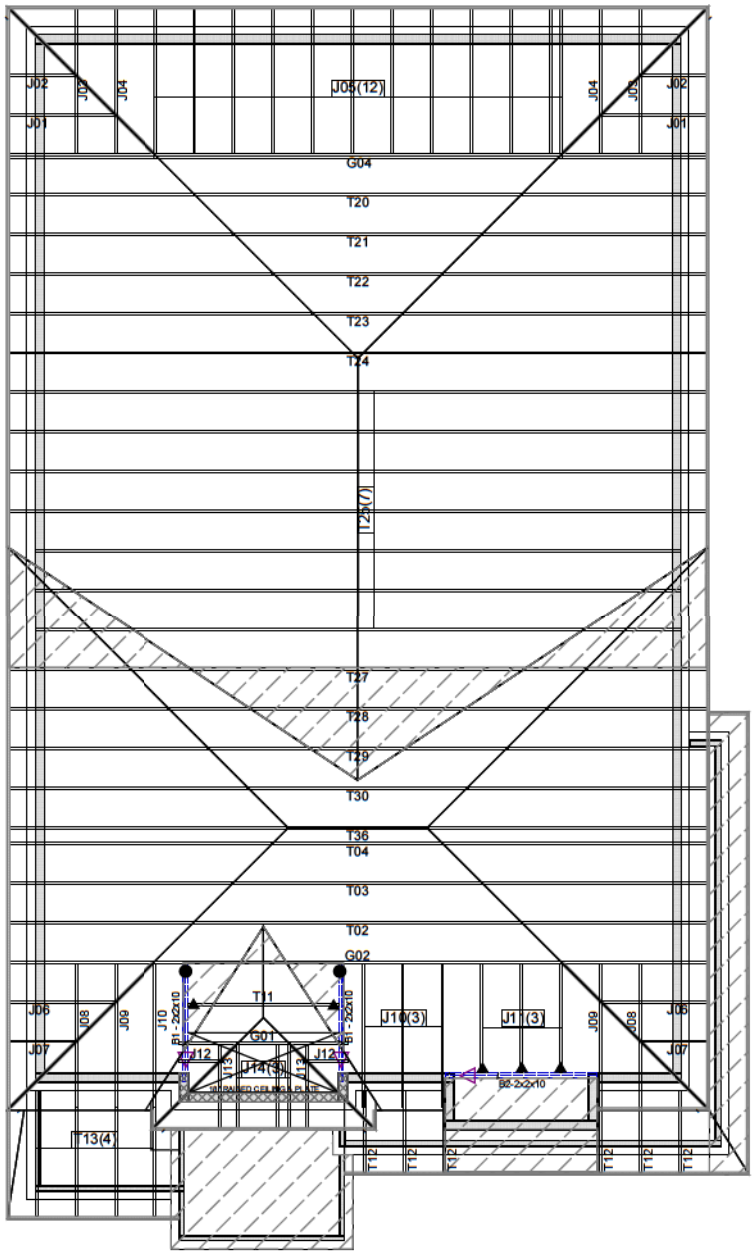

Hanger Name	Symbol	QTY
LUS24	▲	5
LJS26DS	■	0
HGUS26-2	●	2

Additional 5 psf dead load has been added to Top Chord loading to account for weight of solar panels. Solar panels must be installed as per Detail in Engineering Package

Town of East Gwillimbury
Building Standards Branch BCIN #16487

These plans have been reviewed for use with the corrections as noted. No other changes may be made without written approval of the Building Standards Branch. All work must comply with Zoning By-Law 2018-043, as amended, and the Ontario Building Code, as amended. These approved documents must be kept on site at all times. The building permit must be clearly posted on site at all times.

Discipline	Reviewer	BCIN	Date
Building Code	H. Authier	43236	2021-02-05
Sewage System			
Zoning			

CONVENTIONAL FRAMING BY OTHERS

ALL CONVENTIONAL FRAMING TO CONFORM WITH PART 9 OF THE OBC. ROOF RAFTERS THAT CROSS OVER TRUSSES TO BE MIN. 2x4 SPF @ 24" C/C WITH A 2x4 VERTICAL POST TO THE TRUSS BELOW. VERTICAL POSTS TO BE LATERALLY BRACED SO THAT UNBRACED LENGTH DOES NOT EXCEED 6'. DESIGN OF CONVENTIONAL FRAMING IS THE RESPONSIBILITY OF THE PROJECT ENGINEER.

JOB INFORMATION

Customer	GREENPARK HOMES
Job #	T20-00768
Address	TRINAR HALL EAST GWILLIMBURY,ON
Model	GLENWAY 7A ELEV 3
Sales Rep	RALPH MIRIGELLO
Designer	DM
Date	12/16/2020
Path	C:\DATA\JOBS\GREENPARK\TRINAR HALL\MODELS\GLENWAY 7A\ELEV 3\T-GLENWAY7A-3\

DESIGN INFORMATION

Code	NBCC 2015
Bldg	Residential - HSB (NBCC Part 9)
TC LL	34.8 lb/ft²
TC DL	8.0 lb/ft²
BC LL	10.5 lb/ft²
BC DL	7.3 lb/ft²
Deflection	LL=L/360 TL=L/360
Spacing	24" O/C unless otherwise noted
Complies With	OBC 2012 (2019 Amendment) CSA O86-14 and TPIC 2014

IMPORTANT INFORMATION

Refer to truss drawings in the Truss Engineering Package for ply-to-ply attachment notes

For site-framed valleys: top chords of all roof trusses must be laterally supported using 2x4 continuous bracing @24 O/C - all bracing must be anchored at ends as per TPIC Installation Guidelines

Read all notes on this page in addition to those shown on the KOTT Truss Engineering package

Field erection, handling and bracing are not the responsibility of KOTT, or KOTT Engineering

Unless noted otherwise, hurricane ties are to be installed at the bearings of all trusses > 40 ft clear span, and any girder or beam supporting trusses with a clear span >40 ft. See hanger legend for type.

Unless noted otherwise, for Part 9 bldgs, all trusses are to be anchored to the top of supporting walls as follows: trusses with a clear span <40 ft use 3-1/4" nails @ each bearing; trusses with a clear span >40 ft use 3-1/4" nails @ each bearing in addition to the appropriate hurricane tie.

KOTT Inc.
14 Anderson Blvd.
Uxbridge, ON
905.642.4400

KOTT

NE1220-120
GREENPARK - TRINAR HALL
- GLENWAY 7A ELE 3

ENGINEERING NOTE PAGE (ENP-1)

PLEASE READ PRIOR TO INSTALLATION

RESPONSIBILITIES

THIS DESIGN IS FOR AN INDIVIDUAL BUILDING COMPONENT AND HAS BEEN BASED ON INFORMATION PROVIDED BY KOTT DESIGN. THE UNDERSIGNED ENGINEER DISCLAIMS ANY RESPONSIBILITY FOR DAMAGES AS A RESULT OF FAULTY OR INCORRECT INFORMATION, SPECIFICATION AND/OR DESIGNS FURNISHED TO THE ENGINEER. THE UNDERSIGNED ENGINEER IS ONLY RESPONSIBLE FOR THE STRUCTURAL INTEGRITY OF THIS BUILDING COMPONENT FOR THE CONDITIONS AND LOADS SHOWN ON THIS DRAWING. THE STRUCTURAL INTEGRITY OF THE BUILDING AND THE VERIFICATION OF THE DIMENSIONS AND THE DESIGN LOADS USED ARE THE RESPONSIBILITY OF THE BUILDING DESIGNER.

TRUSSES ARE DESIGNED IN CONFORMANCE WITH THE RELEVANT SECTIONS OF THE NATIONAL BUILDING CODE OF CANADA OR THE CANADIAN CODE FOR FARM BUILDINGS, WHICHEVER APPLIES TO THE BUILDING TYPE INDICATED ON THE DRAWING

IT IS THE RESPONSIBILITY OF KOTT TO ENSURE THAT TRUSSES ARE MANUFACTURED IN CONFORMANCE WITH THESE DESIGNS AND WITH THE SPECIFICATIONS OUTLINED BELOW. THE UNDERSIGNED ENGINEER IS NOT RESPONSIBLE FOR QUALITY CONTROL IN THE TRUSS MANUFACTURING PLANT.

USE AND OCCUPANCY

- The building is of the type indicated on the drawing

LOADING

- The truss loading intensity and distribution as well as load transfer mechanism is that indicated on the drawing
- No buildings, trees, parapets or other projections higher than the roof for which the trusses are used are located within a distance less than ten (10) times the difference in height, or five metres (16 ft) whichever is greater, unless the drawing indicates that the snow drifting has been taken into account

HANDLING, INSTALLATION AND BRACING

- The trusses must be handled and installed by a qualified professional as per the supplied document titled *Information for Truss Installers* and the BCSI-B1 and BCSI-B3 Summary Sheets
- The compression chords are laterally braced by continuous rigid diaphragm sheathing or as specified on the drawing
- Temporary and permanent bracing must be installed as indicated on the truss drawing and according to the BCSI-B1 and BCSI-B3 Summary Sheets. Bracing for the lateral stability of the truss is to be provided by the building designer
- **It is recommended that a Professional Engineer's advice be obtained for the bracing of trusses spanning more than 12.37m (40'-7")**

SUPPORTS

- The trusses are to be supported at the bearing points indicated and anchored to the supports where considered necessary by the designer of the overall structure
- Bearing sizes shown are the minimum required to prevent crus mbers and do not necessarily take into account stability of the overall building str
- Elevation of bearings must be carefully checked and shimmed d bearings
- Adequate wood truss bearing is the responsibility of the buildin

DIMENSIONS

- Geometry of the truss and dimensions indicated on the drawin se of the installed truss.

Town of East Gwillimbury
Building Standards Branch BCIN #16487

These plans have been reviewed for use with the corrections as noted. No other changes may be made without written approval of the Building Standards Branch. All work must comply with Zoning By-Law 2018-043, as amended, and the Ontario Building Code, as amended. These approved documents must be kept on site at all times. The building permit must be clearly posted on site at all times.

Discipline	Reviewer	BCIN	Date
Building Code	H. Authier	43236	2021-02-05
Sewage System			
Zoning			

KOTT

2020/04/22

JOB NAME	TRUSS NAME	QUANTITY	PLY	JOB DESC.		DWG NO.
NE1220-120	G01	1	1	TRUSS DESC.	GREENPARK - TRINAR HALL - GLENWAY 7A ELE 3	

Version 8.420 S Oct 9 2020 MiTek Industries, Inc. Thu Dec 17 20:49:14 2020 Page 1
ID:qKv8nLSCtBps7zaDJTm7k2zFzGC-fRhISbyv?joDGxpWuPI02FSNhInvojtIIB9YIHy7y

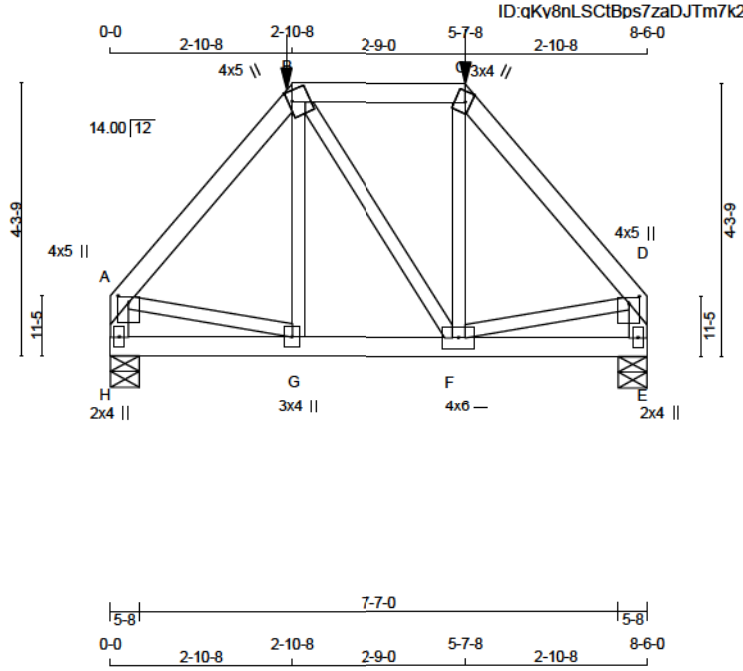

Scale = 1:36.4

TOTAL WEIGHT = 39 lb

LUMBER
N. L. G. A. RULES

CHORDS	SIZE		LUMBER	DESCR.
A - B	2x4	DRY	No.2	SPF
B - C	2x4	DRY	No.2	SPF
C - D	2x4	DRY	No.2	SPF
H - A	2x4	DRY	No.2	SPF
E - D	2x4	DRY	No.2	SPF
H - E	2x4	DRY	No.2	SPF
ALL WEBS EXCEPT	2x3	DRY	No.2	SPF

DRY: SEASONED LUMBER.

PLATES (table is in inches)

JT	TYPE	PLATES	W	LEN	Y	X
A	TMVW+p	MT20	4.0	5.0	1.25	2.00
B	TTWW+m	MT20	4.0	5.0	2.00	0.75
C	TTW+m	MT20	3.0	4.0	2.00	1.00
D	TMVW+p	MT20	4.0	5.0	1.25	2.00
E	BMV1+p	MT20	2.0	4.0		
F	BMWWW-t	MT20	4.0	6.0		
G	BMWW+t	MT20	3.0	4.0		
H	BMV1+p	MT20	2.0	4.0		

DIMENSIONS, SUPPORTS AND LOADINGS SPECIFIED BY FABRICATOR TO BE VERIFIED BY BUILDING DESIGNER

BEARINGS

JT	FACTORED GROSS REACTION VERT	HORZ	MAXIMUM GROSS REACTION DOWN	HORZ	FACTORED UPLIFT	INPUT BRG IN-SX	REQRD BRG IN-SX
H	813	0	813	0	0	5-8	1-8
E	813	0	813	0	0	5-8	1-8

UNFACTORED REACTIONS

JT	1ST LCASE COMBINED	MAX./MIN. COMPONENT REACTIONS SNOW	LIVE	PERM.LIVE	WIND	DEAD	SOIL
H	600	352 / 0	99 / 0	0 / 0	0 / 0	149 / 0	0 / 0
E	600	352 / 0	99 / 0	0 / 0	0 / 0	149 / 0	0 / 0

BEARING MATERIAL TO BE SPF NO.2 OR BETTER AT JOINT(S) H, E

BRACING
TOP CHORD TO BE SHEATHED OR MAX. PURLIN SPACING = 6.25 FT.
MAX. UNBRACED BOTTOM CHORD LENGTH = 10.00 FT OR RIGID CEILING DIRECTLY APPLIED.

ALL PITCH BREAKS AND PERIMETER CORNER JOINTS MUST BE LATERALLY RESTRAINED.

LOADING
TOTAL LOAD CASES: (4)

CHORDS MEMB. FR-TO	MAX. FACTORED FORCE (LBS)	FACTORED VERT. LOAD (PLF) FROM	TO	LC1 MAX CSI (LC)	MAX. UNBRAC LENGTH	WEBS MEMB. FR-TO	MAX. FACTORED FORCE (LBS)	MAX CSI (LC)
A- B	-652 / 0	-124.4	-124.4	0.20 (1)	6.25	G- B	0 / 128	0.03 (3)
B- C	-424 / 0	-137.4	-137.4	0.20 (1)	6.25	B- F	0 / 4	0.00 (3)
C- D	-653 / 0	-124.4	-124.4	0.20 (1)	6.25	F- C	0 / 132	0.04 (3)
H- A	-757 / 0	0.0	0.0	0.08 (1)	7.81	A- G	0 / 429	0.11 (1)
E- D	-756 / 0	0.0	0.0	0.08 (1)	7.81	F- D	0 / 429	0.11 (1)
H- G	0 / 0	-43.3	-43.3	0.07 (3)	10.00			
G- F	0 / 422	-43.3	-43.3	0.12 (2)	10.00			
F- E	0 / 0	-43.3	-43.3	0.07 (3)	10.00			

FACTORED CONCENTRATED LOADS (LBS)

JT	LOC.	LC1	MAX-	MAX+	FACE	DIR.	TYPE	HEEL	CONN.
B	2-10-8	-82	-82	---	FRONT	VERT	TOTAL	---	C1
C	5-7-8	-82	-82	---	FRONT	VERT	TOTAL	---	C1

CONNECTION REQUIREMENTS

1) C1: A SUITABLE HANGER/MECHANICAL CONNECTION IS REQUIRED.

DESIGN CRITERIA

SPECIFIED LOADS:

TOP CH.	LL	=	34.8	PSF
	DL	=	8.0	PSF
BOT CH.	LL	=	10.5	PSF
	DL	=	7.3	PSF
TOTAL LOAD		=	60.6	PSF

SPACING = 24.0 IN. C/C

LOADING IN FLAT SECTION BASED ON A SLOPE OF 2.00/12 MINIMUM

GIRDER TYPE: CPrimeHip
SIDE SETBACK = 2-10-8
END SETBACK = 2-10-8
END WALL WIDTH = 5-8
CORNER FRAMING TYPE: CONVENTIONAL
END JACK TYPE: CONVENTIONAL
APPLIED TO FRONT SIDE
- ADDT'L LOADS BASED ON 55 % OF GSL.

THIS TRUSS IS DESIGNED FOR RESIDENTIAL OR SMALL BUILDING REQUIREMENTS OF PART 9, NBCC 2015

THIS DESIGN COMPLIES WITH:
- PART 9 OF BCBC 2018 , ABC 2019
- PART 9 OF OBC 2012 (2019 AMENDMENT)
- CSA 086-14
- TPIC 2014

(55 % OF 48.1 P.S.F. G.S.L. PLUS 8.4 P.S.F. RAIN LOAD) EQUALS 34.8 P.S.F. SPECIFIED ROOF LIVE LOAD

ALLOWABLE DEFL.(LL)= L/360 (0.28")
CALCULATED VERT. DEFL.(LL) = L/ 999 (0.01")
ALLOWABLE DEFL.(TL)= L/360 (0.28")
CALCULATED VERT. DEFL.(TL) = L/ 999 (0.01")

CSI: TC=0.20/1.00 (C-D:1) , BC=0.12/1.00 (F-G:2) , WB=0.11/1.00 (D-F:1) , SSI=0.16/1.00 (B-C:1)

DOL LUMBER=1.00 NAIL=1.00 LS BEND=1.00 COMP=1.00 SHEAR=1.00 TENS= 1.00

COMPANION LIVE LOAD FACTOR = 1.00

TRUSS PLATE MANUFACTURER IS NOT RESPONSIBLE FOR QUALITY CONTROL IN THE TRUSS MANUFACTURING PLANT .

NAIL VALUES

PLATE	GRIP(DRY) (PSI) MAX	MIN	SHEAR (PLI) MAX	MIN	SECTION (PLI) MAX	MIN
MT20	650	371	1747	788	1987	1873

PLATE PLACEMENT TOL. = 0.250 inches

PLATE ROTATION TOL. = 5.0 Deg.

JSI GRIP= 0.87 (G) (INPUT = 0.90)
JSI METAL= 0.30 (D) (INPUT = 1.00)

LICENSED PROFESSIONAL ENGINEER
N.A. EL-MASRI
PROVINCE OF ONTARIO
Dec 16, 2020

READ ALL NOTES ON THIS PAGE AND ON ENGINEERING NOTE PAGE ENP-1. THIS NOTE PAGE IS AN INTEGRAL PART OF THIS DRAWING AS IT CONTAINS SPECIFICATIONS AND CRITERIA USED IN THE DESIGN OF THIS COMPONENT.

Town of East Gwillimbury
Building Standards Branch BCIN #16487

These plans have been reviewed for use with the corrections as noted. No other changes may be made without written approval of the Building Standards Branch. All work must comply with Zoning By-Law 2018-043, as amended, and the Ontario Building Code, as amended. These approved documents must be kept on site at all times. The building permit must be clearly posted on site at all times.

Discipline	Reviewer	BCIN	Date
Building Code	H. Authier	43236	2021-02-05
Sewage System			
Zoning			

KOTT

JOB NAME	TRUSS NAME	QUANTITY	PLY	JOB DESC.		DWG NO.
NE1220-120	G02	1	1	TRUSS DESC.	GREENPARK - TRINAR HALL - GLENWAY 7A ELE 3	

Version 8.420 S Oct 9 2020 MiTek Industries, Inc. Thu Dec 17 20:49:15 2020 Page 1
ID:qKv8nLSCtBps7zaDJTm7k2zFzGC-7dFqfxvXm0w4u5OiS7pFbT O i1XXziSXrv5qjy7y

Scale = 1:55.7

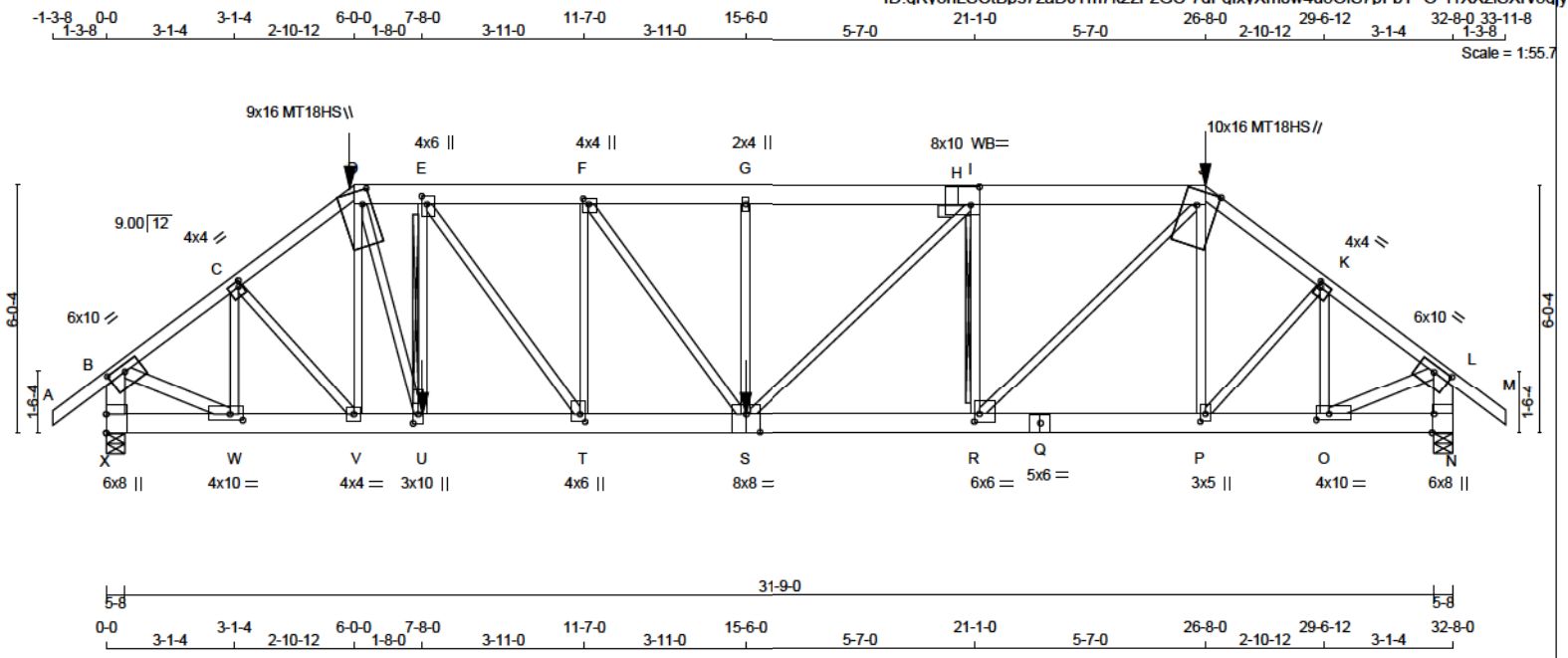

TOTAL WEIGHT = 191 lb

LUMBER
N. L. G. A. RULES

CHORDS	SIZE		LUMBER	DESCR.
A - D	2x4	DRY	No.2	SPF
D - H	2x6	DRY	No.2	SPF
H - J	2x6	DRY	2100F 1.8E	SPF
J - M	2x4	DRY	No.2	SPF
X - B	2x6	DRY	No.2	SPF
N - L	2x6	DRY	No.2	SPF
X - S	2x6	DRY	2100F 1.8E	SPF
S - Q	2x6	DRY	2100F 1.8E	SPF
Q - N	2x6	DRY	2100F 1.8E	SPF
ALL WEBS EXCEPT	2x3	DRY	No.2	SPF
B - W	2x4	DRY	No.2	SPF
O - L	2x4	DRY	No.2	SPF

DRY: SEASONED LUMBER.

PLATES (table is in inches)

JT	TYPE	PLATES	W	LEN	Y	X
B	TMVW-t	MT20	6.0	10.0	2.00	5.00
C	TMWW-t	MT20	4.0	4.0	1.50	1.00
D	TTWW+m	MT18HS	9.0	16.0	4.00	2.50
E	TMWW+t	MT20	4.0	6.0	2.25	1.50
F	TMWW+t	MT20	4.0	4.0	1.50	1.50
G	TMW+w	MT20	2.0	4.0		
H						
H	TSWW-l	MT20	8.0	10.0	5.25	2.50
I						
J	TTWW+m	MT18HS	10.0	16.0	Edge	6.00
K	TMWW-t	MT20	4.0	4.0	1.50	1.00
L	TMVW-t	MT20	6.0	10.0	2.00	5.00
N	BMV1+t	MT20	6.0	8.0	Edge	0.50
O	BMWW-t	MT20	4.0	10.0	1.75	3.75
P	BMWW+t	MT20	3.0	5.0	2.25	1.50
Q	BS-t	MT20	5.0	6.0		
R	BMWW-t	MT20	6.0	6.0	2.25	1.50
S	BSWWW-l	MT20	8.0	8.0	5.25	4.00
T	BMWW+t	MT20	4.0	6.0	2.25	1.50
U	BMWW+t	MT20	3.0	10.0	2.75	1.50
V	BMWW-t	MT20	4.0	4.0		
W	BMWW-t	MT20	4.0	10.0	1.75	3.75
X	BMV1+t	MT20	6.0	8.0	5.50	

DIMENSIONS, SUPPORTS AND LOADINGS SPECIFIED BY FABRICATOR TO BE VERIFIED BY BUILDING DESIGNER [M]

BEARINGS

JT	FACTORED GROSS REACTION VERT	HORZ	MAXIMUM GROSS REACTION DOWN	HORZ	FACTORED UPLIFT	INPUT BRG IN-SX	REQRD BRG IN-SX
X	5305	0	5305	0	0	5-8	5-8
N	5218	0	5218	0	0	5-8	5-8

UNFACTORED REACTIONS

JT	1ST LCASE COMBINED	SNOW	MAX./MIN. COMPONENT REACTIONS LIVE	PERM.LIVE	WIND	DEAD	SOIL
X	3925	2266 / 0	672 / 0	0 / 0	0 / 0	988 / 0	0 / 0
N	3861	2229 / 0	660 / 0	0 / 0	0 / 0	971 / 0	0 / 0

BEARING MATERIAL TO BE SPF NO.2 OR BETTER AT JOINT(S) X, N
BEARING SIZE FACTOR = 1.15 AT JNT(S) X, N (BASED ON SUPPORT DEPTH = 1-8)

BRACING
TOP CHORD TO BE SHEATHED OR MAX. PURLIN SPACING = 2.18 FT.
MAX. UNBRACED BOTTOM CHORD LENGTH = 10.00 FT OR RIGID CEILING DIRECTLY APPLIED.

ALL PITCH BREAKS AND PERIMETER CORNER JOINTS MUST BE LATERALLY RESTRAINED.

2x4 DRY SPF No.2 T-BRACE AT E-U, I-R

FASTEN T AND I-BRACES TO NARROW EDGE OF WEB WITH ONE ROW PER PLY OF 3" COMMON WIRE NAILS @ 6" O.C. WITH 3" MINIMUM END DISTANCE. BRACE MUST COVER 90% OF WEB LENGTH.

END VERTICAL(S) MUST BE SHEATHED OR HAVE BRACES AS INDICATED IN THE MAX. UNBRACED LENGTH COLUMN OF THE TABLE BELOW

LOADING
TOTAL LOAD CASES: (4)

CHORDS

MEMB. FR-TO	FORCE (LBS)	FACTORED VERT. LOAD (PLF) FROM	TO	LC1 MAX CSI (LC)	MAX. UNBRAC LENGTH
A- B	0 / 51	-124.4	-124.4	0.19 (1)	10.00
B- C	-5413 / 0	-124.4	-124.4	0.60 (1)	2.51
C- D	-6168 / 0	-124.4	-124.4	0.70 (1)	2.18
D- E	-5785 / 0	-234.6	-234.6	0.32 (1)	3.41
E- F	-7136 / 0	-124.4	-124.4	0.53 (1)	2.87
F- G	-8003 / 0	-124.4	-124.4	0.60 (1)	2.64
G- H	-8001 / 0	-234.6	-234.6	0.81 (1)	2.39
H- I	-8001 / 0	-234.6	-234.6	0.81 (1)	2.39
I- J	-7395 / 0	-234.6	-234.6	0.43 (1)	3.65
J- K	-6028 / 0	-124.4	-124.4	0.68 (1)	2.24
K- L	-5324 / 0	-124.4	-124.4	0.58 (1)	2.55
L- M	0 / 51	-124.4	-124.4	0.19 (1)	10.00
X- B	-5144 / 0	0.0	0.0	0.37 (1)	4.70
N- L	-5065 / 0	0.0	0.0	0.37 (1)	4.74
X- W	0 / 0	-74.0	-74.0	0.07 (1)	10.00
W- V	0 / 4347	-74.0	-74.0	0.35 (1)	10.00
V- U	0 / 4935	-74.0	-74.0	0.38 (1)	10.00
U- T	0 / 5785	-39.2	-39.2	0.37 (1)	10.00
T- S	0 / 7136	-39.2	-39.2	0.41 (1)	10.00
S- R	0 / 7394	-74.0	-74.0	0.48 (1)	10.00
R- Q	0 / 4820	-74.0	-74.0	0.33 (1)	10.00
Q- P	0 / 4820	-74.0	-74.0	0.33 (1)	10.00
P- O	0 / 4275	-74.0	-74.0	0.30 (1)	10.00
O- N	0 / 0	-74.0	-74.0	0.06 (1)	10.00

WEBS

MEMB. FR-TO	FORCE (LBS)	MAX CSI (LC)
W- C	-1521 / 0	0.35 (1)
C- V	0 / 897	0.22 (1)
V- D	-79 / 139	0.04 (1)
D- U	0 / 2974	0.74 (1)
U- E	-2307 / 0	0.59 (1)
E- T	0 / 2346	0.58 (1)
T- F	-1738 / 0	0.88 (1)
F- S	0 / 1504	0.37 (1)
S- G	-849 / 0	0.43 (1)
S- I	0 / 858	0.21 (1)
R- I	-2161 / 0	0.55 (1)
R- J	0 / 3042	0.90 (1)
P- J	-196 / 217	0.10 (1)
P- K	0 / 834	0.21 (1)
O- K	-1444 / 0	0.34 (1)
B- W	0 / 4616	0.82 (1)
O- L	0 / 4540	0.80 (1)

FACTORED CONCENTRATED LOADS (LBS)

JT	LOC.	LC1	MAX-	MAX+	FACE	DIR.	TYPE	HEE
D	6-0-0	-560	-560	---	FRONT	VERT	TOTAL	---
D	6-0-0	1	-90	---	FRONT	VERT	DEAD	---
J	26-8-0	-560	-560	---	FRONT	VERT	TOTAL	---
S	15-6-0	-718	-718	---	FRONT	VERT	TOTAL	---
U	7-8-0	-718	-718	---	FRONT	VERT	TOTAL	---

CONNECTION REQUIREMENTS

1) C1: A SUITABLE HANGER/MECHANICAL CONNECTION IS REQUIRED.

DESIGN CRITERIA

*** SPECIAL LOADS ANALYSIS ***
GEOMETRY AND/OR BASIC LOADS CHANGED BY USER.
LOADS WERE DERIVED FROM USER INPUT
NO FURTHER MODIFICATIONS WERE MADE

SPECIFIED LOADS:
TOP CH. LL = 34.8 PSF
DL = 8.0 PSF
BOT CH. LL = 10.5 PSF
DL = 7.3 PSF
TOTAL LOAD = 60.6 PSF

SPACING = 24.0 IN. C/C

LOADING IN FLAT SECTION BASED ON A SLOPE OF 2.00/12 MINIMUM

GIRDER TYPE: CPrimeHip
SIDE SETBACK = 6-0-0
END SETBACK = 6-0-0
END WALL WIDTH = 5-8
CORNER FRAMING TYPE: CONVENTIONAL
END JACK TYPE: CONVENTIONAL
APPLIED TO FRONT SIDE
- ADDT'L LOADS BASED ON 55 % OF GSL.
LOADS APPLIED TO FIRST 7-8-0 OF SPAN MEASURED FROM THE LEFT.

GIRDER TYPE: CPrimeHip
SIDE SETBACK = 6-0-0
END SETBACK = 6-0-0
END WALL WIDTH = 5-8
CORNER FRAMING TYPE: CONVENTIONAL
END JACK TYPE: CONVENTIONAL
APPLIED TO FRONT SIDE
- ADDT'L LOADS BASED ON 55 % OF GSL.
LOADS APPLIED TO FIRST 17-2-0 OF SPAN MEASURED FROM THE RIGHT.

*** NON STANDARD GIRDER ***
ADDT'L USER-DEFINED LOADS APPLIED TO ALL LOAD CASES.

THIS TRUSS IS DESIGNED FOR RESIDENTIAL OR SMALL BUILDING REQUIREMENTS OF PART 9, NBCC 2015

THIS DESIGN COMPLIES WITH:
- PART 9 OF BCBC 2018 , ABC 2019
- PART 9 OF OBC 2012 (2019 AMENDMENT)
- CSA 086-14
- TPIC 2014

(55 % OF 48.1 P.S.F. G.S.L. PLUS 8.4 P.S.F. RAIN LOAD) EQUALS 34.8 P.S.F. SPECIFIED ROOF LIVE LOAD

ALLOWABLE DEFL.(LL)= L/360 (1.09")
CALCULATED VERT. DEFL.(LL) = L/ 999 (0.28")
ALLOWABLE DEFL.(TL)= L/360 (1.09")
CALCULATED VERT. DEFL.(TL) = L/ 841 (0.47")

CSI: TC=0.81/1.00 (G-I:1) , BC=0.48/1.00 (R-S:1) , WB=0.90/1.00 (J-R:1) , SSI=0.52/1.00 (I-J:1)

DOL LUMBER=1.00 NAIL=1.00 LS BEND=1.00 COMP=1.00 SHEAR=1.00 TENS= 1.00

COMPANION LIVE LOAD FACTOR = 1.00

CONTINUED ON PAGE 2

LICENSED PROFESSIONAL ENGINEER
N.A. EL-MASRI
PROVINCE OF ONTARIO
Dec 16, 2020

READ ALL NOTES ON THIS PAGE AND ON ENGINEERING NOTE PAGE ENP-1. THIS NOTE PAGE IS AN INTEGRAL PART OF THIS DRAWING AS IT CONTAINS SPECIFICATIONS AND CRITERIA USED IN THE DESIGN OF THIS COMPONENT.

Town of East Gwillimbury
Building Standards Branch BCIN #16487

These plans have been reviewed for use with the corrections as noted. No other changes may be made without written approval of the Building Standards Branch. All work must comply with Zoning By-Law 2018-043, as amended, and the Ontario Building Code, as amended. These approved documents must be kept on site at all times. The building permit must be clearly posted on site at all times.

Discipline	Reviewer	BCIN	Date
Building Code	H. Authier	43236	2021-02-05
Sewage System			
Zoning			

KOTT

Edge - INDICATES REFERENCE CORNER OF PLATE TOUCHES EDGE OF CHORD.

WB - INDICATES BLOCKING REQUIRED

TRUSS PLATE MANUFACTURER IS NOT RESPONSIBLE FOR QUALITY CONTROL IN THE TRUSS MANUFACTURING PLANT .

NAIL VALUES

PLATE	GRIP(DRY) (PSI)		SHEAR (PLI)		SECTION (PLI)	
	MAX	MIN	MAX	MIN	MAX	MIN
MT18HS	586	403	2455	1382	3163	3004
MT20	650	371	1747	788	1987	1873

PLATE PLACEMENT TOL. = 0.250 inches

PLATE ROTATION TOL. = 5.0 Deg.

JSI GRIP= 0.90 (W) (INPUT = 0.90)
JSI METAL= 0.99 (S) (INPUT = 1.00)

READ ALL NOTES ON THIS PAGE AND ON ENGINEERING NOTE PAGE ENP-1. THIS NOTE PAGE IS AN INTEGRAL PART OF THIS DRAWING AS IT CONTAINS SPECIFICATIONS AND CRITERIA USED IN THE DESIGN OF THIS COMPONENT.

Town of East Gwillimbury
Building Standards Branch BCIN #16487

These plans have been reviewed for use with the corrections as noted. No other changes may be made without written approval of the Building Standards Branch. All work must comply with Zoning By-Law 2018-043, as amended, and the Ontario Building Code, as amended. These approved documents must be kept on site at all times. The building permit must be clearly posted on site at all times.

Discipline	Reviewer	BCIN	Date
Building Code	H. Authier	43236	2021-02-05
Sewage System			
Zoning			

KOTT

JOB NAME	TRUSS NAME	QUANTITY	PLY	JOB DESC.		DWG NO.
NE1220-120	G04	1	2	TRUSS DESC.	GREENPARK - TRINAR HALL - GLENWAY 7A ELE 3	

Version 8.420 S Oct 9 2020 MiTek Industries, Inc. Thu Dec 17 20:49:16 2020 Page 1
ID:qKv8nLSCtBps7zaDJTm7k2zFzGC-bqo2sHz9XK2wWFzv0qLU7qXdd5EvGT3bmVefMAy7y

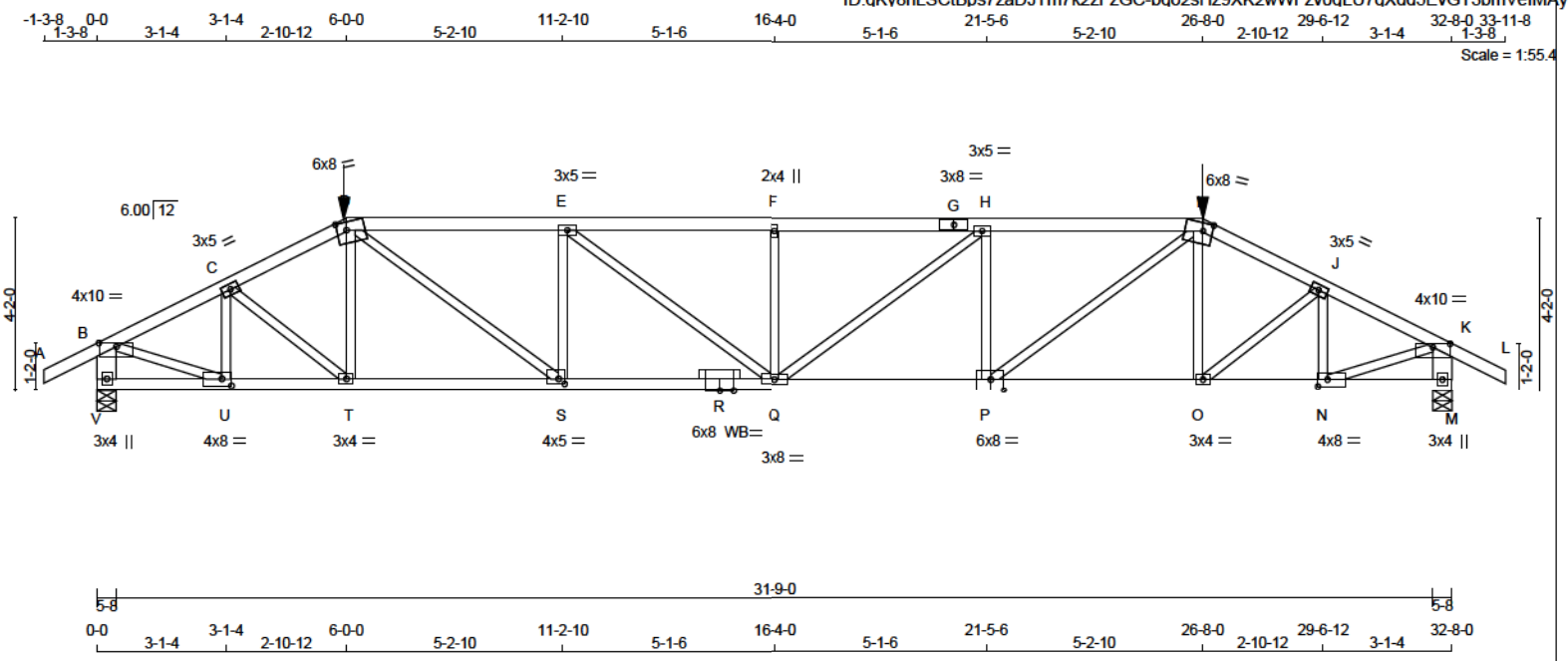

TOTAL WEIGHT = 2 X 131 = 263 lb

LUMBER
N. L. G. A. RULES

CHORDS	SIZE		LUMBER	DESCR.
A - D	2x4	DRY	No.2	SPF
D - G	2x4	DRY	2100F 1.8E	SPF
G - I	2x4	DRY	2100F 1.8E	SPF
I - L	2x4	DRY	No.2	SPF
V - B	2x6	DRY	No.2	SPF
M - K	2x6	DRY	No.2	SPF
V - R	2x4	DRY	No.2	SPF
R - P	2x4	DRY	2100F 1.8E	SPF
P - M	2x4	DRY	No.2	SPF
ALL WEBS EXCEPT	2x3	DRY	No.2	SPF

DRY: SEASONED LUMBER.

DESIGN CONSISTS OF 2 TRUSSES BUILT SEPARATELY THEN FASTENED TOGETHER AS FOLLOWS:

CHORDS	#ROWS	SURFACE SPACING (IN)	LOAD(PLF)
TOP CHORDS : (0.122"X3") SPIRAL NAILS			
A- D	1	12	SIDE(0.0)
D- G	1	12	SIDE(55.1)
G- I	1	12	SIDE(55.1)
I- L	1	12	SIDE(0.0)
V- B	2	12	TOP
M- K	2	12	TOP
BOTTOM CHORDS : (0.122"X3") SPIRAL NAILS			
V- R	1	12	SIDE(22.0)
R- P	1	12	SIDE(22.0)
P- M	1	12	SIDE(22.0)
WEBS : (0.122"X3") SPIRAL NAILS			
2x3	1	6	

NAILS TO BE DRIVEN FROM ONE SIDE ONLY.

GIRDER NAILING ASSUMES NAILED HANGERS ARE FASTENED WITH MIN. 3-0 INCH NAILS.

TOP - COMPONENTS ARE LOADED FROM THE TOP AND MUST BE PLACED ON TOP EDGE OF ALL PLIES FOR THE LOAD TO BE TRANSFERRED TO EACH PLY.

DIMENSIONS, SUPPORTS AND LOADINGS SPECIFIED BY FABRICATOR TO BE VERIFIED BY BUILDING DESIGNER [M]

BEARINGS

JT	FACTORED GROSS REACTION VERT	HORZ	MAXIMUM GROSS REACTION DOWN	HORZ	FACTORED UPLIFT	INPUT BRG IN-SX	REQRD BRG IN-SX
V	5108	0	5108	0	0	5-8	2-13
M	5108	0	5108	0	0	5-8	2-13

UNFACTORED REACTIONS

1ST LCASE MAX./MIN. COMPONENT REACTIONS

JT	COMBINED	SNOW	LIVE	PERM.LIVE	WIND	DEAD	SOIL
V	3780	2182 / 0	647 / 0	0 / 0	0 / 0	951 / 0	0 / 0
M	3780	2182 / 0	647 / 0	0 / 0	0 / 0	951 / 0	0 / 0

BEARING MATERIAL TO BE SPF NO.2 OR BETTER AT JOINT(S) V, M

BRACING
TOP CHORD TO BE SHEATHED OR MAX. PURLIN SPACING = 3.28 FT.
MAX. UNBRACED BOTTOM CHORD LENGTH = 10.00 FT OR RIGID CEILING DIRECTLY APPLIED.

ALL PITCH BREAKS AND PERIMETER CORNER JOINTS MUST BE LATERALLY RESTRAINED.

LOADING
TOTAL LOAD CASES: (4)

CHORDS

MEMB. FR-TO	MAX. FORCE (LBS)	FACTORED VERT. LOAD (PLF) FROM	TO	LC1 MAX CSI (LC)	MAX. UNBRAC LENGTH
A- B	0 / 38	-124.4	-124.4	0.09 (1)	10.00
B- C	-6671 / 0	-124.4	-124.4	0.25 (1)	3.61
C- D	-7609 / 0	-124.4	-124.4	0.28 (1)	3.38
D- E	-10121 / 0	-234.6	-234.6	0.52 (1)	3.47
E- F	-11109 / 0	-234.6	-234.6	0.55 (1)	3.29
F- G	-11109 / 0	-234.6	-234.6	0.56 (1)	3.28
G- H	-11109 / 0	-234.6	-234.6	0.56 (1)	3.28
H- I	-10094 / 0	-234.6	-234.6	0.52 (1)	3.47
I- J	-7619 / 0	-124.4	-124.4	0.28 (1)	3.37
J- K	-6666 / 0	-124.4	-124.4	0.25 (1)	3.62
K- L	0 / 38	-124.4	-124.4	0.09 (1)	10.00
V- B	-4982 / 0	0.0	0.0	0.18 (1)	6.52
M- K	-4979 / 0	0.0	0.0	0.18 (1)	6.52
V- U	0 / 0	-74.0	-74.0	0.09 (2)	10.00
U- T	0 / 5973	-74.0	-74.0	0.63 (1)	10.00
T- S	0 / 6782	-74.0	-74.0	0.70 (1)	10.00
S- R	0 / 10121	-74.0	-74.0	0.98 (1)	10.00
R- Q	0 / 10121	-74.0	-74.0	0.98 (1)	10.00
Q- P	0 / 10094	-74.0	-74.0	0.51 (1)	10.00
P- O	0 / 6792	-74.0	-74.0	0.73 (1)	10.00
O- N	0 / 5970	-74.0	-74.0	0.66 (1)	10.00
N- M	0 / 0	-74.0	-74.0	0.09 (2)	10.00

WEBS

MEMB. FR-TO	FORCE (LBS)	MAX CSI (LC)
U- C	-1494 / 0	0.13 (1)
C- T	0 / 1047	0.13 (1)
T- D	-294 / 181	0.04 (1)
D- S	0 / 4156	0.51 (1)
S- E	-2104 / 0	0.29 (1)
E- Q	0 / 1240	0.15 (1)
Q- F	-1110 / 0	0.15 (1)
Q- H	0 / 1274	0.16 (1)
P- H	-2127 / 0	0.29 (1)
P- I	0 / 4109	0.51 (1)
O- I	-260 / 236	0.04 (1)
O- J	0 / 1064	0.13 (1)
N- J	-1510 / 0	0.14 (1)
B- U	0 / 6197	0.77 (1)
N- K	0 / 6193	0.77 (1)

FACTORED CONCENTRATED LOADS (LBS)

JT	LOC.	LC1	MAX-	MAX+	FACE	DIR.	TYPE	HEEL	CONN.
D	6-0-0	-560	-560	---	FRONT	VERT	TOTAL	---	C1
I	26-8-0	-560	-560	---	FRONT	VERT	TOTAL	---	C1

CONNECTION REQUIREMENTS

1) C1: A SUITABLE HANGER/MECHANICAL CONNECTION IS REQUIRED.

DESIGN CRITERIA

SPECIFIED LOADS:
TOP CH. LL = 34.8 PSF
DL = 8.0 PSF
BOT CH. LL = 10.5 PSF
DL = 7.3 PSF
TOTAL LOAD = 60.6 PSF

SPACING = 24.0 IN. C/C

LOADING IN FLAT SECTION BASED ON A SLOPE OF 2.00/12 MINIMUM

GIRDER TYPE: CPrimeHip
SIDE SETBACK = 6-0-0
END SETBACK = 6-0-0
END WALL WIDTH = 5-8
CORNER FRAMING TYPE: CONVENTIONAL
END JACK TYPE: CONVENTIONAL
APPLIED TO FRONT SIDE
- ADDT'L LOADS BASED ON 55 % OF GSL.

THIS TRUSS IS DESIGNED FOR RESIDENTIAL OR SMALL BUILDING REQUIREMENTS OF PART 9, NBCC 2015

THIS DESIGN COMPLIES WITH:
- PART 9 OF BCBC 2018 , ABC 2019
- PART 9 OF OBC 2012 (2019 AMENDMENT)
- CSA 086-14
- TPIC 2014

(55 % OF 48.1 P.S.F. G.S.L. PLUS 8.4 P.S.F. RAIN LOAD) EQUALS 34.8 P.S.F. SPECIFIED ROOF LIVE LOAD

ALLOWABLE DEFL.(LL)= L/360 (1.09")
CALCULATED VERT. DEFL.(LL) = L/ 999 (0.29")
ALLOWABLE DEFL.(TL)= L/360 (1.09")
CALCULATED VERT. DEFL.(TL) = L/ 798 (0.49")

CSI: TC=0.56/1.00 (F-H:1) , BC=0.98/1.00 (Q-S:1) , WB=0.77/1.00 (B-U:1) , SSI=0.31/1.00 (H-I:1)

DOL LUMBER=1.00 NAIL=1.00 LS BEND=1.00 COMP=1.00 SHEAR=1.00 TENS= 1.00

COMPANION LIVE LOAD FACTOR = 1.00

TRUSS PLATE MANUFACTURER IS NOT RESPONSIBLE FOR QUALITY CONTROL IN THE TRUSS MANUFACTURING PLANT .

NAIL VALUES

PLATE	GRIP(DRY) (PSI) MAX	MIN	SHEAR (PLI) MAX	MIN	SECTION (PLI) MAX	MIN
MT20	650	371	1747	788	1987	1873

PLATE PLACEMENT TOL. = 0.250 inches

PLATE ROTATION TOL. = 5.0 Deg.

JSI GRIP= 0.90 (P) (INPUT = 0.90)
JSI METAL= 0.97 (P) (INPUT = 1.00)

LICENSED PROFESSIONAL ENGINEER
N.A. EL-MASRI
PROVINCE OF ONTARIO
Dec 16, 2020

READ ALL NOTES ON THIS PAGE AND ON ENGINEERING NOTE PAGE ENP-1. THIS NOTE PAGE IS AN INTEGRAL PART OF THIS DRAWING AS IT CONTAINS SPECIFICATIONS AND CRITERIA USED IN THE DESIGN OF THIS COMPONENT.

Town of East Gwillimbury
Building Standards Branch BCIN #16487

These plans have been reviewed for use with the corrections as noted. No other changes may be made without written approval of the Building Standards Branch. All work must comply with Zoning By-Law 2018-043, as amended, and the Ontario Building Code, as amended. These approved documents must be kept on site at all times. The building permit must be clearly posted on site at all times.

Discipline	Reviewer	BCIN	Date
Building Code	H. Authier	43236	2021-02-05
Sewage System			
Zoning			

CONTINUED ON PAGE 2

KOTT

PLATES (table is in inches)

JT	TYPE	PLATES	W	LEN	Y	X
B	TMVW-p	MT20	4.0	10.0	1.00	5.00
C, E, H, J						
C	TMWW-t	MT20	3.0	5.0		
D	TTWW-m	MT20	6.0	8.0	2.25	2.75
F	TMW+w	MT20	2.0	4.0		
G	TS-t	MT20	3.0	8.0		
I	TTWW-m	MT20	6.0	8.0	2.25	2.75
K	TMVW-p	MT20	4.0	10.0	1.00	5.00
M	BMV1+p	MT20	3.0	4.0		
N	BMWW-t	MT20	4.0	8.0	2.00	2.75
O	BMWW-t	MT20	3.0	4.0		
P	BSWW-l	MT20	6.0	8.0	3.25	3.75
Q	BMWWW-t	MT20	3.0	8.0		
R	BS-t	MT20	6.0	8.0		
S	BMWW-t	MT20	4.0	5.0	1.50	1.75
T	BMWW-t	MT20	3.0	4.0		
U	BMWW-t	MT20	4.0	8.0	2.00	2.75
V	BMV1+p	MT20	3.0	4.0		

WB - INDICATES BLOCKING REQUIRED

READ ALL NOTES ON THIS PAGE AND ON ENGINEERING NOTE PAGE ENP-1. THIS NOTE PAGE IS AN INTEGRAL PART OF THIS DRAWING AS IT CONTAINS SPECIFICATIONS AND CRITERIA USED IN THE DESIGN OF THIS COMPONENT.

Town of East Gwillimbury
Building Standards Branch BCIN #16487

These plans have been reviewed for use with the corrections as noted. No other changes may be made without written approval of the Building Standards Branch. All work must comply with Zoning By-Law 2018-043, as amended, and the Ontario Building Code, as amended. These approved documents must be kept on site at all times. The building permit must be clearly posted on site at all times.

Discipline	Reviewer	BCIN	Date
Building Code	H. Authier	43236	2021-02-05
Sewage System			
Zoning			

KOTT

JOB NAME	TRUSS NAME	QUANTITY	PLY	JOB DESC.		DRWG NO.
NE1220-120	J01	2	1	TRUSS DESC.	GREENPARK - TRINAR HALL - GLENWAY 7A ELE 3	**Page 7 of 42**

Version 8.420 S Oct 9 2020 MiTek Industries, Inc. Thu Dec 17 20:49:16 2020 Page 1

ID:qKv8nLSCtBps7zaDJTm7k2zFzGC-bqo2sHz9XK2wWFzv0qLU7qXqz5TlGe1bmVefMAy7y

Scale = 1:19.2

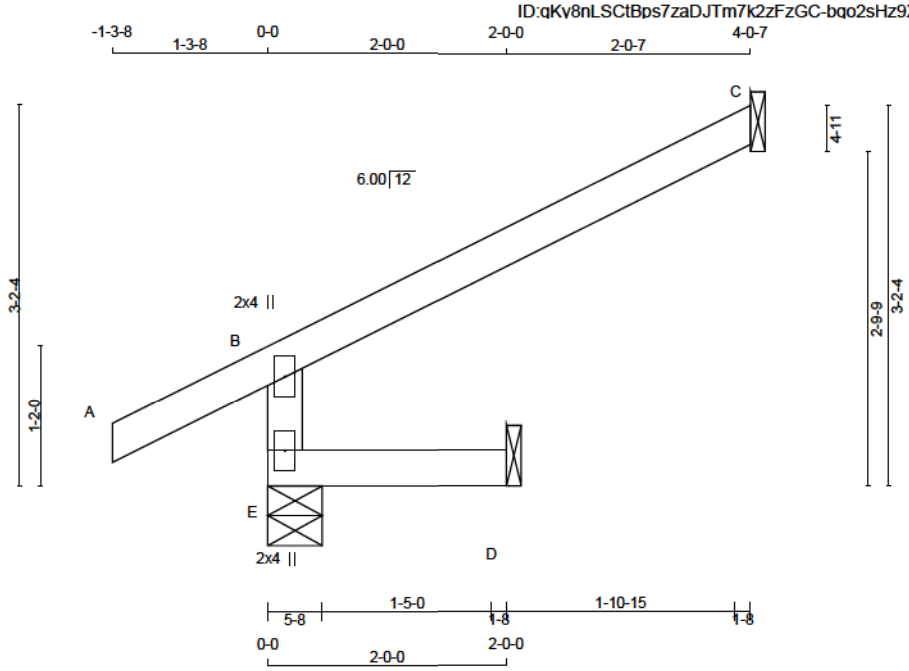

TOTAL WEIGHT = 2 X 10 = 20 lb

LUMBER
N. L. G. A. RULES

CHORDS	SIZE		LUMBER	DESCR.
E - B	2x4	DRY	No.2	SPF
A - C	2x4	DRY	No.2	SPF
E - D	2x4	DRY	No.2	SPF

DRY: SEASONED LUMBER.

PLATES (table is in inches)

JT	TYPE	PLATES	W	LEN	Y	X
B	TMV+p	MT20	2.0	4.0		
E	BMV1+p	MT20	2.0	4.0		

DIMENSIONS, SUPPORTS AND LOADINGS SPECIFIED BY FABRICATOR TO BE VERIFIED BY BUILDING DESIGNER

BEARINGS

JT	FACTORED GROSS REACTION VERT	HORZ	MAXIMUM FACTORED GROSS REACTION DOWN	HORZ	UPLIFT	INPUT BRG IN-SX	REQRD BRG IN-SX
E	526	0	526	0	0	5-8	1-8
C	188	0	188	0	0	1-8	1-8
D	35	0	44	0	0	1-8	1-8

SEE MITEK STANDARD DETAIL B97791H FOR CONNECTION TO JOINT(S) C , D

UNFACTORED REACTIONS

JT	1ST LCASE COMBINED	MAX /MIN COMPONENT REACTIONS SNOW	LIVE	PERM.LIVE	WIND	DEAD	SOIL
E	372	270 / 0	23 / 0	0 / 0	0 / 0	78 / 0	0 / 0
C	130	105 / 0	0 / 0	0 / 0	0 / 0	24 / 0	0 / 0
D	32	0 / 0	19 / 0	0 / 0	0 / 0	13 / 0	0 / 0

BEARING MATERIAL TO BE SPF NO.2 OR BETTER AT JOINT(S) E

BRACING
TOP CHORD TO BE SHEATHED OR MAX. PURLIN SPACING = 6.25 FT.
MAX. UNBRACED BOTTOM CHORD LENGTH = 10.00 FT OR RIGID CEILING DIRECTLY APPLIED.

ALL PITCH BREAKS AND PERIMETER CORNER JOINTS MUST BE LATERALLY RESTRAINED.

LOADING
TOTAL LOAD CASES: (4)

CHORDS

MEMB. FR-TO	MAX. FACTORED FORCE (LBS)	FACTORED VERT. LOAD (PLF)	LC1 MAX CSI (LC)	MAX. UNBRAC LENGTH FROM	TO
E- B	-483 / 0	0.0	0.0 0.02 (3)	7.81	
A- B	0 / 38	-124.4	-124.4 0.16 (1)	10.00	
B- C	-28 / 0	-124.4	-124.4 0.34 (1)	6.25	

WEBS

MEMB. FR-TO	MAX. FACTORED FORCE (LBS)	MAX CSI (LC)
E- D	0 / 0	-39.2 -39.2 0.03 (3) 10.00

DESIGN CRITERIA [M]

SPECIFIED LOADS:

TOP CH.	LL	=	34.8	PSF
	DL	=	8.0	PSF
BOT CH.	LL	=	10.5	PSF
	DL	=	7.3	PSF
TOTAL LOAD		=	60.6	PSF

SPACING = 24.0 IN. C/C

THIS TRUSS IS DESIGNED FOR RESIDENTIAL OR SMALL BUILDING REQUIREMENTS OF PART 9, NBCC 2015

THIS DESIGN COMPLIES WITH:
- PART 9 OF BCBC 2018 , ABC 2019
- PART 9 OF OBC 2012 (2019 AMENDMENT)
- CSA 086-14
- TPIC 2014

DESIGN ASSUMPTIONS
-OVERHANG NOT TO BE ALTERED OR CUT OFF.

(55 % OF 48.1 P.S.F. G.S.L. PLUS 8.4 P.S.F. RAIN LOAD) EQUALS 34.8 P.S.F. SPECIFIED ROOF LIVE LOAD

ALLOWABLE DEFL.(LL)= L/360 (0.19")
CALCULATED VERT. DEFL.(LL) = L/ 999 (0.00")
ALLOWABLE DEFL.(TL)= L/360 (0.19")
CALCULATED VERT. DEFL.(TL) = L/ 999 (0.00")

CSI: TC=0.34/1.00 (B-C:1) , BC=0.03/1.00 (D-E:3) , WB=0.00/1.00 (n/a:0) , SSI=0.22/1.00 (B-C:1)

DOL LUMBER=1.00 NAIL=1.00 LS BEND=1.10 COMP=1.10 SHEAR=1.10 TENS= 1.10

COMPANION LIVE LOAD FACTOR = 1.00

TRUSS PLATE MANUFACTURER IS NOT RESPONSIBLE FOR QUALITY CONTROL IN THE TRUSS MANUFACTURING PLANT .

NAIL VALUES

PLATE	GRIP(DRY) (PSI) MAX	MIN	SHEAR (PLI) MAX	MIN	SECTION (PLI) MAX	MIN
MT20	650	371	1747	788	1987	1873

PLATE PLACEMENT TOL. = 0.250 inches

PLATE ROTATION TOL. = 5.0 Deg.

JSI GRIP= 0.27 (B) (INPUT = 0.90)
JSI METAL= 0.20 (B) (INPUT = 1.00)

LICENSED PROFESSIONAL ENGINEER
N.A. EL-MASRI
PROVINCE OF ONTARIO
Dec 16, 2020

READ ALL NOTES ON THIS PAGE AND ON ENGINEERING NOTE PAGE ENP-1. THIS NOTE PAGE IS AN INTEGRAL PART OF THIS DRAWING AS IT CONTAINS SPECIFICATIONS AND CRITERIA USED IN THE DESIGN OF THIS COMPONENT.

Town of East Gwillimbury
Building Standards Branch BCIN #16487

These plans have been reviewed for use with the corrections as noted. No other changes may be made without written approval of the Building Standards Branch. All work must comply with Zoning By-Law 2018-043, as amended, and the Ontario Building Code, as amended. These approved documents must be kept on site at all times. The building permit must be clearly posted on site at all times.

Discipline	Reviewer	BCIN	Date
Building Code	H. Authier	43236	2021-02-05
Sewage System			
Zoning			

KOTT

JOB NAME	TRUSS NAME	QUANTITY	PLY	JOB DESC.		DRWG NO.
NE1220-120	J02	2	1	TRUSS DESC.	GREENPARK - TRINAR HALL - GLENWAY 7A ELE 3	**Page 8 of 42**

Version 8.420 S Oct 9 2020 MiTek Industries, Inc. Thu Dec 17 20:49:17 2020 Page 1
ID:qKy8nLSCtBps7zaDJTm7k2zFzGC-30MQ4d nIeAn7OY5ZYsjqu4uaVp1?4HI?9OCvcy7y

Scale = 1:14.0

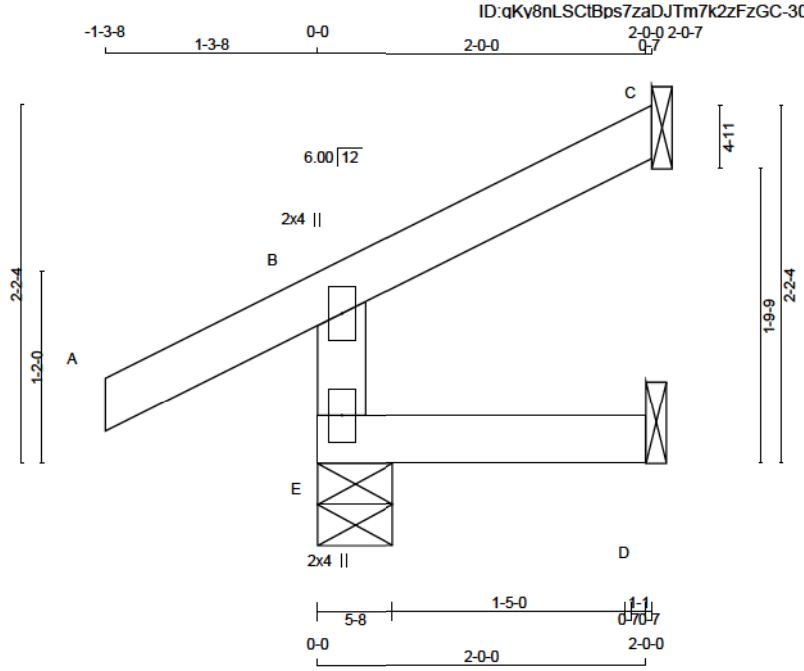

TOTAL WEIGHT = 2 X 7 = 15 lb

LUMBER
N. L. G. A. RULES

CHORDS	SIZE		LUMBER	DESCR.
E - B	2x4	DRY	No.2	SPF
A - C	2x4	DRY	No.2	SPF
E - D	2x4	DRY	No.2	SPF

DRY: SEASONED LUMBER.

PLATES (table is in inches)

JT	TYPE	PLATES	W	LEN	Y	X
B	TMV+p	MT20	2.0	4.0		
E	BMV1+p	MT20	2.0	4.0		

DIMENSIONS, SUPPORTS AND LOADINGS SPECIFIED BY FABRICATOR TO BE VERIFIED BY BUILDING DESIGNER

BEARINGS

JT	FACTORED GROSS REACTION VERT	HORZ	MAXIMUM GROSS REACTION DOWN	HORZ	FACTORED UPLIFT	INPUT BRG IN-SX	REQRD BRG IN-SX
E	370	0	370	0	0	5-8	1-8
C	96	0	96	0	0	1-8	1-8
D	35	0	44	0	0	1-8	1-8

SEE MITEK STANDARD DETAIL B97791H FOR CONNECTION TO JOINT(S) C , D

UNFACTORED REACTIONS

JT	1ST LCASE COMBINED	MAX /MIN COMPONENT REACTIONS SNOW	LIVE	PERM.LIVE	WIND	DEAD	SOIL
E	264	183 / 0	23 / 0	0 / 0	0 / 0	58 / 0	0 / 0
C	66	54 / 0	0 / 0	0 / 0	0 / 0	12 / 0	0 / 0
D	32	0 / 0	19 / 0	0 / 0	0 / 0	13 / 0	0 / 0

BEARING MATERIAL TO BE SPF NO.2 OR BETTER AT JOINT(S) E

BRACING
TOP CHORD TO BE SHEATHED OR MAX. PURLIN SPACING = 6.25 FT.
MAX. UNBRACED BOTTOM CHORD LENGTH = 10.00 FT OR RIGID CEILING DIRECTLY APPLIED.

ALL PITCH BREAKS AND PERIMETER CORNER JOINTS MUST BE LATERALLY RESTRAINED.

LOADING
TOTAL LOAD CASES: (5)

CHORDS MEMB. FR-TO	MAX. FACTORED FORCE (LBS)	FACTORED VERT. LOAD (PLF) FROM	TO	LC1 MAX CSI (LC)	MAX. UNBRAC LENGTH	WEBS MEMB. FR-TO	MAX. FACTORED FORCE (LBS)	MAX CSI (LC)
E- B	-327 / 0	0.0	0.0	0.02 (3)	7.81			
A- B	0 / 38	-124.4	-124.4	0.16 (1)	10.00			
B- C	-14 / 0	-124.4	-124.4	0.09 (1)	6.25			
E- D	0 / 0	-39.2	-39.2	0.03 (3)	10.00			

CANTILEVER ANALYSIS HAS BEEN CONSIDERED IN THIS DESIGN

DESIGN CRITERIA [M]

SPECIFIED LOADS:

TOP CH.	LL	=	34.8	PSF
	DL	=	8.0	PSF
BOT CH.	LL	=	10.5	PSF
	DL	=	7.3	PSF
TOTAL LOAD		=	60.6	PSF

SPACING = 24.0 IN. C/C

THIS TRUSS IS DESIGNED FOR RESIDENTIAL OR SMALL BUILDING REQUIREMENTS OF PART 9, NBCC 2015

THIS DESIGN COMPLIES WITH:
- PART 9 OF BCBC 2018 , ABC 2019
- PART 9 OF OBC 2012 (2019 AMENDMENT)
- CSA 086-14
- TPIC 2014

DESIGN ASSUMPTIONS
-OVERHANG NOT TO BE ALTERED OR CUT OFF.

(55 % OF 48.1 P.S.F. G.S.L. PLUS 8.4 P.S.F. RAIN LOAD) EQUALS 34.8 P.S.F. SPECIFIED ROOF LIVE LOAD

ALLOWABLE DEFL.(LL)= L/360 (0.19")
CALCULATED VERT. DEFL.(LL) = L/ 999 (0.00")
ALLOWABLE DEFL.(TL)= L/360 (0.19")
CALCULATED VERT. DEFL.(TL) = L/ 999 (0.00")

CSI: TC=0.16/1.00 (A-B:1) , BC=0.03/1.00 (D-E:3) , WB=0.00/1.00 (n/a:0) , SSI=0.12/1.00 (A-B:1)

DOL LUMBER=1.00 NAIL=1.00 LS BEND=1.10 COMP=1.10 SHEAR=1.10 TENS= 1.10

COMPANION LIVE LOAD FACTOR = 1.00

TRUSS PLATE MANUFACTURER IS NOT RESPONSIBLE FOR QUALITY CONTROL IN THE TRUSS MANUFACTURING PLANT .

NAIL VALUES

PLATE	GRIP(DRY) (PSI) MAX	MIN	SHEAR (PLI) MAX	MIN	SECTION (PLI) MAX	MIN
MT20	650	371	1747	788	1987	1873

PLATE PLACEMENT TOL. = 0.250 inches

PLATE ROTATION TOL. = 5.0 Deg.

JSI GRIP= 0.18 (B) (INPUT = 0.90)
JSI METAL= 0.14 (B) (INPUT = 1.00)

LICENSED PROFESSIONAL ENGINEER
N.A. EL-MASRI
PROVINCE OF ONTARIO
Dec 16, 2020

READ ALL NOTES ON THIS PAGE AND ON ENGINEERING NOTE PAGE ENP-1. THIS NOTE PAGE IS AN INTEGRAL PART OF THIS DRAWING AS IT CONTAINS SPECIFICATIONS AND CRITERIA USED IN THE DESIGN OF THIS COMPONENT.

Town of East Gwillimbury
Building Standards Branch BCIN #16487

These plans have been reviewed for use with the corrections as noted. No other changes may be made without written approval of the Building Standards Branch. All work must comply with Zoning By-Law 2018-043, as amended, and the Ontario Building Code, as amended. These approved documents must be kept on site at all times. The building permit must be clearly posted on site at all times.

Discipline	Reviewer	BCIN	Date
Building Code	H. Authier	43236	2021-02-05
Sewage System			
Zoning			

KOTT

JOB NAME	TRUSS NAME	QUANTITY	PLY	JOB DESC.		DRWG NO.
NE1220-120	J03	2	1	TRUSS DESC.	GREENPARK - TRINAR HALL - GLENWAY 7A ELE 3	

Version 8.420 S Oct 9 2020 MiTek Industries, Inc. Thu Dec 17 20:49:17 2020 Page 1
ID:qKv8nLSCtBps7zaDJTm7k2zFzGC-30MQ4d nleAn7OY5ZYsjqu4tqVm5?4HI?9OCvcy7y

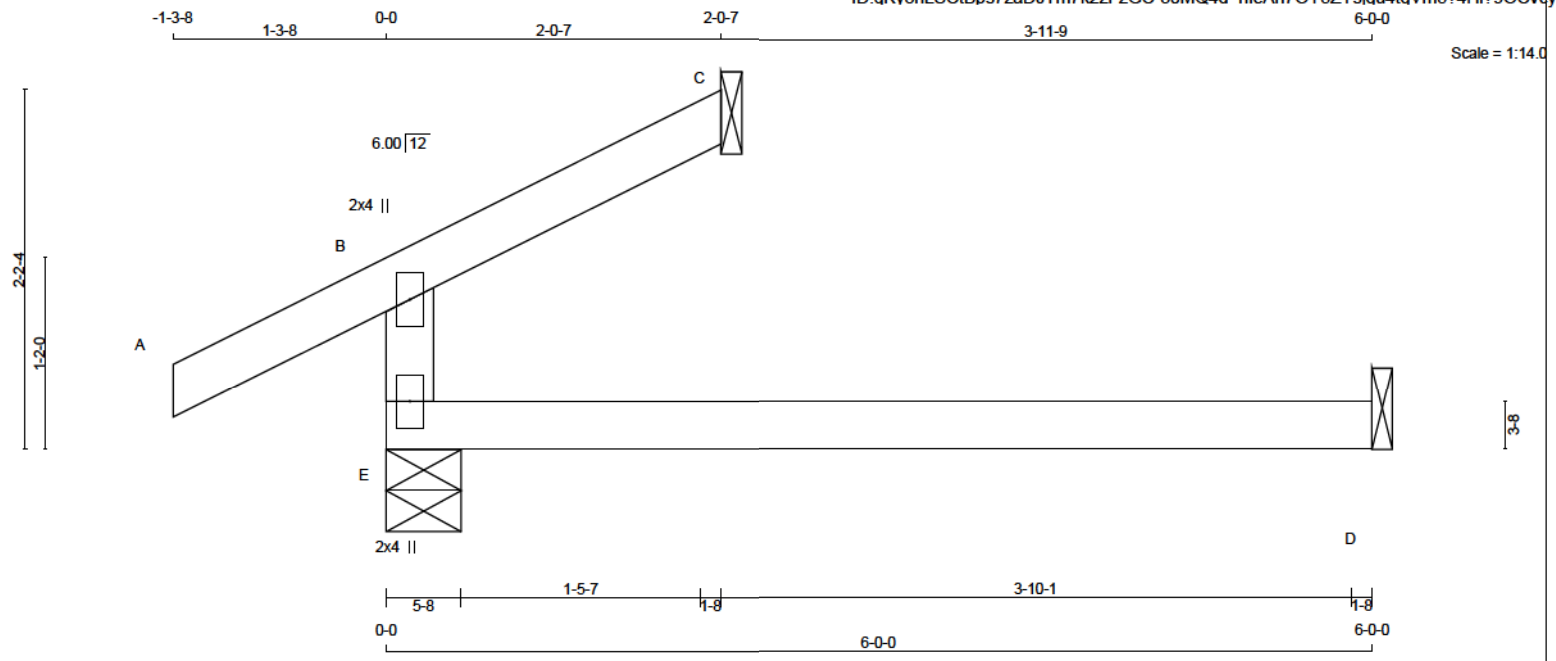

TOTAL WEIGHT = 2 X 12 = 24 lb

LUMBER
N. L. G. A. RULES

CHORDS	SIZE		LUMBER	DESCR.
E - B	2x4	DRY	No.2	SPF
A - C	2x4	DRY	No.2	SPF
E - D	2x4	DRY	No.2	SPF

DRY: SEASONED LUMBER.

PLATES (table is in inches)

JT	TYPE	PLATES	W	LEN	Y	X
B	TMV+p	MT20	2.0	4.0		
E	BMV1+p	MT20	2.0	4.0		

DIMENSIONS, SUPPORTS AND LOADINGS SPECIFIED BY FABRICATOR TO BE VERIFIED BY BUILDING DESIGNER

BEARINGS

JT	FACTORED GROSS REACTION VERT	HORZ	MAXIMUM GROSS REACTION DOWN	HORZ	UPLIFT	INPUT BRG IN-SX	REQRD BRG IN-SX
E	465	0	465	0	0	5-8	1-8
C	96	0	96	0	0	1-8	1-8
D	97	0	123	0	0	1-8	1-8

SEE MITEK STANDARD DETAIL B97791H FOR CONNECTION TO JOINT(S) C , D

UNFACTORED REACTIONS

JT	1ST LCASE COMBINED	MAX /MIN COMPONENT REACTIONS SNOW	LIVE	PERM.LIVE	WIND	DEAD	SOIL
E	350	183 / 0	74 / 0	0 / 0	0 / 0	93 / 0	0 / 0
C	66	54 / 0	0 / 0	0 / 0	0 / 0	12 / 0	0 / 0
D	88	0 / 0	52 / 0	0 / 0	0 / 0	36 / 0	0 / 0

BEARING MATERIAL TO BE SPF NO.2 OR BETTER AT JOINT(S) E, C

BRACING
TOP CHORD TO BE SHEATHED OR MAX. PURLIN SPACING = 6.25 FT.
MAX. UNBRACED BOTTOM CHORD LENGTH = 10.00 FT OR RIGID CEILING DIRECTLY APPLIED.

ALL PITCH BREAKS AND PERIMETER CORNER JOINTS MUST BE LATERALLY RESTRAINED.

LOADING
TOTAL LOAD CASES: (4)

CHORDS MEMB. FR-TO	MAX. FACTORED FORCE (LBS)	FACTORED VERT. LOAD (PLF) FROM	TO	LC1 MAX CSI (LC)	MAX. UNBRAC LENGTH	WEBS MEMB. FR-TO	MAX. FACTORED FORCE (LBS)	MAX CSI (LC)
E- B	-327 / 0	0.0	0.0	0.22 (3)	7.81			
A- B	0 / 38	-124.4	-124.4	0.16 (1)	10.00			
B- C	-14 / 0	-124.4	-124.4	0.09 (1)	6.25			
E- D	0 / 0	-39.2	-39.2	0.22 (3)	10.00			

DESIGN CRITERIA [M]

SPECIFIED LOADS:

TOP CH.	LL	=	34.8	PSF
	DL	=	8.0	PSF
BOT CH.	LL	=	10.5	PSF
	DL	=	7.3	PSF
TOTAL LOAD		=	60.6	PSF

SPACING = 24.0 IN. C/C

THIS TRUSS IS DESIGNED FOR RESIDENTIAL OR SMALL BUILDING REQUIREMENTS OF PART 9, NBCC 2015

THIS DESIGN COMPLIES WITH:
- PART 9 OF BCBC 2018 , ABC 2019
- PART 9 OF OBC 2012 (2019 AMENDMENT)
- CSA 086-14
- TPIC 2014

DESIGN ASSUMPTIONS
-OVERHANG NOT TO BE ALTERED OR CUT OFF.

(55 % OF 48.1 P.S.F. G.S.L. PLUS 8.4 P.S.F. RAIN LOAD) EQUALS 34.8 P.S.F. SPECIFIED ROOF LIVE LOAD

ALLOWABLE DEFL.(LL)= L/360 (0.20")
CALCULATED VERT. DEFL.(LL) = L/ 999 (0.05")
ALLOWABLE DEFL.(TL)= L/360 (0.20")
CALCULATED VERT. DEFL.(TL) = L/ 874 (0.08")

CSI: TC=0.22/1.00 (B-E:3) , BC=0.22/1.00 (D-E:3) , WB=0.00/1.00 (n/a:0) , SSI=0.14/1.00 (D-E:3)

DOL LUMBER=1.00 NAIL=1.00 LS BEND=1.10 COMP=1.10 SHEAR=1.10 TENS= 1.10

COMPANION LIVE LOAD FACTOR = 1.00

TRUSS PLATE MANUFACTURER IS NOT RESPONSIBLE FOR QUALITY CONTROL IN THE TRUSS MANUFACTURING PLANT .

NAIL VALUES

PLATE	GRIP(DRY) (PSI) MAX	MIN	SHEAR (PLI) MAX	MIN	SECTION (PLI) MAX	MIN
MT20	650	371	1747	788	1987	1873

PLATE PLACEMENT TOL. = 0.250 inches

PLATE ROTATION TOL. = 5.0 Deg.

JSI GRIP= 0.18 (B) (INPUT = 0.90)
JSI METAL= 0.14 (B) (INPUT = 1.00)

LICENSED PROFESSIONAL ENGINEER
N.A. EL-MASRI
PROVINCE OF ONTARIO
Dec 16, 2020

READ ALL NOTES ON THIS PAGE AND ON ENGINEERING NOTE PAGE ENP-1. THIS NOTE PAGE IS AN INTEGRAL PART OF THIS DRAWING AS IT CONTAINS SPECIFICATIONS AND CRITERIA USED IN THE DESIGN OF THIS COMPONENT.

Town of East Gwillimbury
Building Standards Branch BCIN #16487

These plans have been reviewed for use with the corrections as noted. No other changes may be made without written approval of the Building Standards Branch. All work must comply with Zoning By-Law 2018-043, as amended, and the Ontario Building Code, as amended. These approved documents must be kept on site at all times. The building permit must be clearly posted on site at all times.

Discipline	Reviewer	BCIN	Date
Building Code	H. Authier	43236	2021-02-05
Sewage System			
Zoning			

KOTT

JOB NAME	TRUSS NAME	QUANTITY	PLY	JOB DESC.		DWG NO.
NE1220-120	J04	2	1	TRUSS DESC.	GREENPARK - TRINAR HALL - GLENWAY 7A ELE 3	

Version 8.420 S Oct 9 2020 MiTek Industries, Inc. Thu Dec 17 20:49:17 2020 Page 1
ID:qKv8nLSCtBps7zaDJTm7k2zFzGC-30MQ4d nleAn7OY5ZYsiqu4rjVmx?4HI?9OCvcy7y

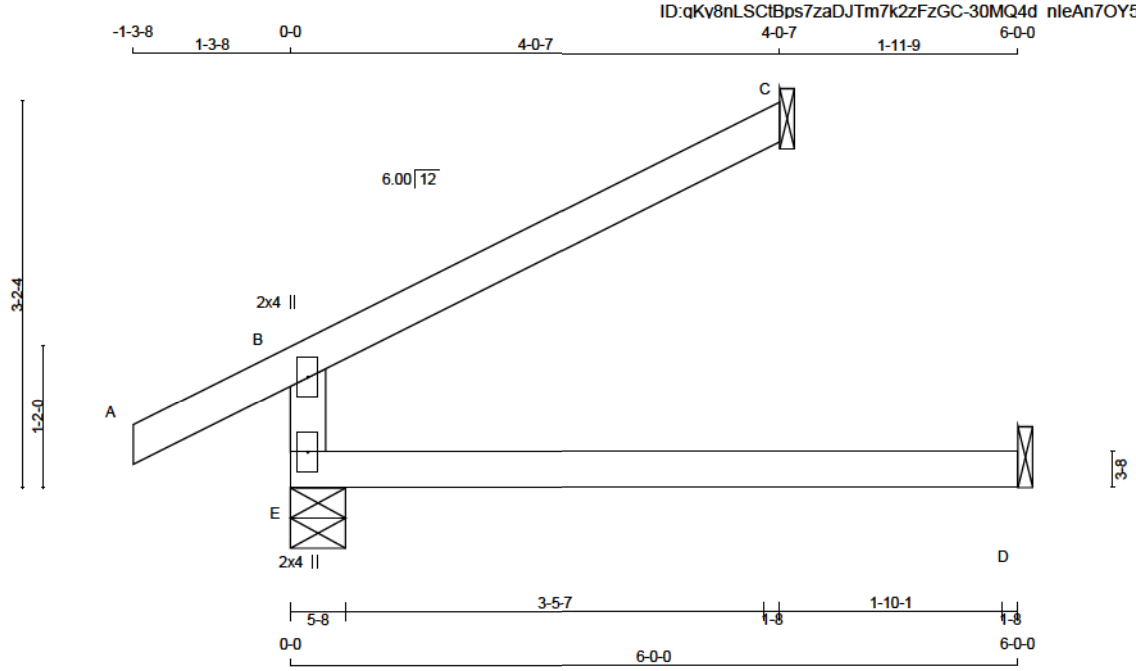

TOTAL WEIGHT = 2 X 15 = 29 lb

LUMBER
N. L. G. A. RULES

CHORDS	SIZE		LUMBER	DESCR.
E - B	2x4	DRY	No.2	SPF
A - C	2x4	DRY	No.2	SPF
E - D	2x4	DRY	No.2	SPF

DRY: SEASONED LUMBER.

PLATES (table is in inches)

JT	TYPE	PLATES	W	LEN	Y	X
B	TMV+p	MT20	2.0	4.0		
E	BMV1+p	MT20	2.0	4.0		

DIMENSIONS, SUPPORTS AND LOADINGS SPECIFIED BY FABRICATOR TO BE VERIFIED BY BUILDING DESIGNER

BEARINGS

JT	FACTORED GROSS REACTION VERT	HORZ	MAXIMUM GROSS REACTION DOWN	HORZ	FACTORED UPLIFT	INPUT BRG IN-SX	REQRD BRG IN-SX
E	621	0	621	0	0	5-8	1-8
C	188	0	188	0	0	1-8	1-8
D	97	0	123	0	0	1-8	1-8

SEE MITEK STANDARD DETAIL B97791H FOR CONNECTION TO JOINT(S) C , D

UNFACTORED REACTIONS

JT	1ST LCASE COMBINED	MAX /MIN COMPONENT REACTIONS SNOW	LIVE	PERM.LIVE	WIND	DEAD	SOIL
E	458	270 / 0	74 / 0	0 / 0	0 / 0	114 / 0	0 / 0
C	130	105 / 0	0 / 0	0 / 0	0 / 0	24 / 0	0 / 0
D	88	0 / 0	52 / 0	0 / 0	0 / 0	36 / 0	0 / 0

BEARING MATERIAL TO BE SPF NO.2 OR BETTER AT JOINT(S) E, C

BRACING
TOP CHORD TO BE SHEATHED OR MAX. PURLIN SPACING = 6.25 FT.
MAX. UNBRACED BOTTOM CHORD LENGTH = 10.00 FT OR RIGID CEILING DIRECTLY APPLIED.

ALL PITCH BREAKS AND PERIMETER CORNER JOINTS MUST BE LATERALLY RESTRAINED.

LOADING
TOTAL LOAD CASES: (4)

CHORDS

MEMB. FR-TO	MAX. FACTORED FORCE (LBS)	FACTORED VERT. LOAD (PLF) FROM	TO	LC1 MAX CSI (LC)	MAX. UNBRAC LENGTH
E- B	-483 / 0	0.0	0.0	0.23 (3)	7.81
A- B	0 / 38	-124.4	-124.4	0.16 (1)	10.00
B- C	-28 / 0	-124.4	-124.4	0.34 (1)	6.25
E- D	0 / 0	-39.2	-39.2	0.23 (3)	10.00

WEBS

MEMB. FR-TO	MAX. FACTORED FORCE (LBS)	MAX CSI (LC)

DESIGN CRITERIA

SPECIFIED LOADS:

TOP CH.	LL	=	34.8	PSF
	DL	=	8.0	PSF
BOT CH.	LL	=	10.5	PSF
	DL	=	7.3	PSF
TOTAL LOAD		=	60.6	PSF

SPACING = 24.0 IN. C/C

THIS TRUSS IS DESIGNED FOR RESIDENTIAL OR SMALL BUILDING REQUIREMENTS OF PART 9, NBCC 2015

THIS DESIGN COMPLIES WITH:
- PART 9 OF BCBC 2018 , ABC 2019
- PART 9 OF OBC 2012 (2019 AMENDMENT)
- CSA 086-14
- TPIC 2014

DESIGN ASSUMPTIONS
-OVERHANG NOT TO BE ALTERED OR CUT OFF.

(55 % OF 48.1 P.S.F. G.S.L. PLUS 8.4 P.S.F. RAIN LOAD) EQUALS 34.8 P.S.F. SPECIFIED ROOF LIVE LOAD

ALLOWABLE DEFL.(LL)= L/360 (0.20")
CALCULATED VERT. DEFL.(LL) = L/ 999 (0.05")
ALLOWABLE DEFL.(TL)= L/360 (0.20")
CALCULATED VERT. DEFL.(TL) = L/ 874 (0.08")

CSI: TC=0.34/1.00 (B-C:1) , BC=0.23/1.00 (D-E:3) , WB=0.00/1.00 (n/a:0) , SSI=0.22/1.00 (B-C:1)

DOL LUMBER=1.00 NAIL=1.00 LS BEND=1.10 COMP=1.10 SHEAR=1.10 TENS= 1.10

COMPANION LIVE LOAD FACTOR = 1.00

TRUSS PLATE MANUFACTURER IS NOT RESPONSIBLE FOR QUALITY CONTROL IN THE TRUSS MANUFACTURING PLANT .

NAIL VALUES

PLATE	GRIP(DRY) (PSI) MAX	MIN	SHEAR (PLI) MAX	MIN	SECTION (PLI) MAX	MIN
MT20	650	371	1747	788	1987	1873

PLATE PLACEMENT TOL. = 0.250 inches

PLATE ROTATION TOL. = 5.0 Deg.

JSI GRIP= 0.27 (B) (INPUT = 0.90)
JSI METAL= 0.20 (B) (INPUT = 1.00)

LICENSED PROFESSIONAL ENGINEER
N.A. EL-MASRI
PROVINCE OF ONTARIO
Dec 16, 2020

READ ALL NOTES ON THIS PAGE AND ON ENGINEERING NOTE PAGE ENP-1. THIS NOTE PAGE IS AN INTEGRAL PART OF THIS DRAWING AS IT CONTAINS SPECIFICATIONS AND CRITERIA USED IN THE DESIGN OF THIS COMPONENT.

Town of East Gwillimbury
Building Standards Branch BCIN #16487

These plans have been reviewed for use with the corrections as noted. No other changes may be made without written approval of the Building Standards Branch. All work must comply with Zoning By-Law 2018-043, as amended, and the Ontario Building Code, as amended. These approved documents must be kept on site at all times. The building permit must be clearly posted on site at all times.

Discipline	Reviewer	BCIN	Date
Building Code	H. Authier	43236	2021-02-05
Sewage System			
Zoning			

KOTT

JOB NAME	TRUSS NAME	QUANTITY	PLY	JOB DESC.		DRWG NO.
NE1220-120	J05	12	1	TRUSS DESC.	GREENPARK - TRINAR HALL - GLENWAY 7A ELE 3	**Page 11 of 42**

Version 8.420 S Oct 9 2020 MiTek Industries, Inc. Thu Dec 17 20:49:18 2020 Page 1
ID:qKv8nLSCtBps7zaDJTm7k2zFzGC-XCwoHz?P3xlelY7H7FNvC5cwvv60kXWuDp7lR2y7y

Scale = 1:23.7

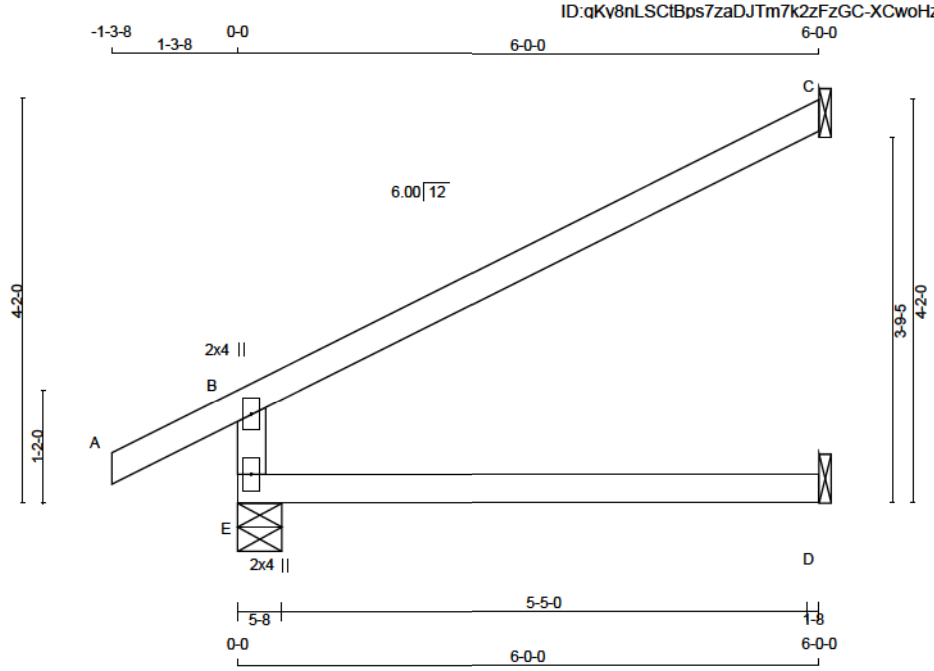

TOTAL WEIGHT = 12 X 17 = 205 lb

LUMBER
N. L. G. A. RULES

CHORDS	SIZE		LUMBER	DESCR.
E - B	2x4	DRY	No.2	SPF
A - C	2x4	DRY	No.2	SPF
E - D	2x4	DRY	No.2	SPF

DRY: SEASONED LUMBER.

PLATES (table is in inches)

JT	TYPE	PLATES	W	LEN	Y	X
B	TMV+p	MT20	2.0	4.0		
E	BMV1+p	MT20	2.0	4.0		

DIMENSIONS, SUPPORTS AND LOADINGS SPECIFIED BY FABRICATOR TO BE VERIFIED BY BUILDING DESIGNER [M]

BEARINGS

JT	FACTORED GROSS REACTION VERT	HORZ	MAXIMUM GROSS REACTION DOWN	HORZ	FACTORED UPLIFT	INPUT BRG IN-SX	REQRD BRG IN-SX
E	774	0	774	0	0	5-8	1-8
C	280	0	280	0	0	1-8	1-8
D	97	0	123	0	0	1-8	1-8

SEE MITEK STANDARD DETAIL B97791H FOR CONNECTION TO JOINT(S) C , D

UNFACTORED REACTIONS

JT	1ST LCASE COMBINED	MAX /MIN COMPONENT REACTIONS SNOW	LIVE	PERM.LIVE	WIND	DEAD	SOIL
E	563	355 / 0	74 / 0	0 / 0	0 / 0	133 / 0	0 / 0
C	193	157 / 0	0 / 0	0 / 0	0 / 0	36 / 0	0 / 0
D	88	0 / 0	52 / 0	0 / 0	0 / 0	36 / 0	0 / 0

BEARING MATERIAL TO BE SPF NO.2 OR BETTER AT JOINT(S) E

BRACING
TOP CHORD TO BE SHEATHED OR MAX. PURLIN SPACING = 6.25 FT.
MAX. UNBRACED BOTTOM CHORD LENGTH = 10.00 FT OR RIGID CEILING DIRECTLY APPLIED.

ALL PITCH BREAKS AND PERIMETER CORNER JOINTS MUST BE LATERALLY RESTRAINED.

LOADING
TOTAL LOAD CASES: (4)

CHORDS

MEMB. FR-TO	MAX. FACTORED FORCE (LBS)	FACTORED VERT. LOAD (PLF) FROM	TO	LC1 MAX CSI (LC)	MAX. UNBRAC LENGTH
E- B	-635 / 0	0.0	0.0	0.24 (3)	7.81
A- B	0 / 38	-124.4	-124.4	0.16 (1)	10.00
B- C	-42 / 0	-124.4	-124.4	0.76 (1)	6.25
E- D	0 / 0	-39.2	-39.2	0.24 (3)	10.00

WEBS

MEMB. FR-TO	MAX. FACTORED FORCE (LBS)	MAX CSI (LC)

DESIGN CRITERIA

SPECIFIED LOADS:

TOP CH.	LL	=	34.8	PSF
	DL	=	8.0	PSF
BOT CH.	LL	=	10.5	PSF
	DL	=	7.3	PSF
TOTAL LOAD		=	60.6	PSF

SPACING = 24.0 IN. C/C

THIS TRUSS IS DESIGNED FOR RESIDENTIAL OR SMALL BUILDING REQUIREMENTS OF PART 9, NBCC 2015

THIS DESIGN COMPLIES WITH:
- PART 9 OF BCBC 2018 , ABC 2019
- PART 9 OF OBC 2012 (2019 AMENDMENT)
- CSA 086-14
- TPIC 2014

DESIGN ASSUMPTIONS
-OVERHANG NOT TO BE ALTERED OR CUT OFF.

(55 % OF 48.1 P.S.F. G.S.L. PLUS 8.4 P.S.F. RAIN LOAD) EQUALS 34.8 P.S.F. SPECIFIED ROOF LIVE LOAD

ALLOWABLE DEFL.(LL)= L/360 (0.20")
CALCULATED VERT. DEFL.(LL) = L/ 999 (0.05")
ALLOWABLE DEFL.(TL)= L/360 (0.20")
CALCULATED VERT. DEFL.(TL) = L/ 874 (0.08")

CSI: TC=0.76/1.00 (B-C:1) , BC=0.24/1.00 (D-E:3) , WB=0.00/1.00 (n/a:0) , SSI=0.33/1.00 (B-C:1)

DOL LUMBER=1.00 NAIL=1.00 LS BEND=1.10 COMP=1.10 SHEAR=1.10 TENS= 1.10

COMPANION LIVE LOAD FACTOR = 1.00

TRUSS PLATE MANUFACTURER IS NOT RESPONSIBLE FOR QUALITY CONTROL IN THE TRUSS MANUFACTURING PLANT .

NAIL VALUES

PLATE	GRIP(DRY) (PSI) MAX	MIN	SHEAR (PLI) MAX	MIN	SECTION (PLI) MAX	MIN
MT20	650	371	1747	788	1987	1873

PLATE PLACEMENT TOL. = 0.250 inches

PLATE ROTATION TOL. = 5.0 Deg.

JSI GRIP= 0.36 (B) (INPUT = 0.90)
JSI METAL= 0.26 (B) (INPUT = 1.00)

LICENSED PROFESSIONAL ENGINEER
N.A. EL-MASRI
PROVINCE OF ONTARIO
Dec 16, 2020

READ ALL NOTES ON THIS PAGE AND ON ENGINEERING NOTE PAGE ENP-1. THIS NOTE PAGE IS AN INTEGRAL PART OF THIS DRAWING AS IT CONTAINS SPECIFICATIONS AND CRITERIA USED IN THE DESIGN OF THIS COMPONENT.

Town of East Gwillimbury
Building Standards Branch BCIN #16487

These plans have been reviewed for use with the corrections as noted. No other changes may be made without written approval of the Building Standards Branch. All work must comply with Zoning By-Law 2018-043, as amended, and the Ontario Building Code, as amended. These approved documents must be kept on site at all times. The building permit must be clearly posted on site at all times.

Discipline	Reviewer	BCIN	Date
Building Code	H. Authier	43236	2021-02-05
Sewage System			
Zoning			

KOTT

JOB NAME	TRUSS NAME	QUANTITY	PLY	JOB DESC.		DRWG NO.
NE1220-120	J06	2	1	TRUSS DESC.	GREENPARK - TRINAR HALL - GLENWAY 7A ELE 3	**Page 12 of 42**

Version 8.420 S Oct 9 2020 MiTek Industries, Inc. Thu Dec 17 20:49:18 2020 Page 1

ID:qKv8nLSCtBps7zaDJTm7k2zFzGC-XCwoHz?P3xlelY7H7FNvC5c0Tv9CkXWuDp7lR2y7y

Scale = 1:26.4

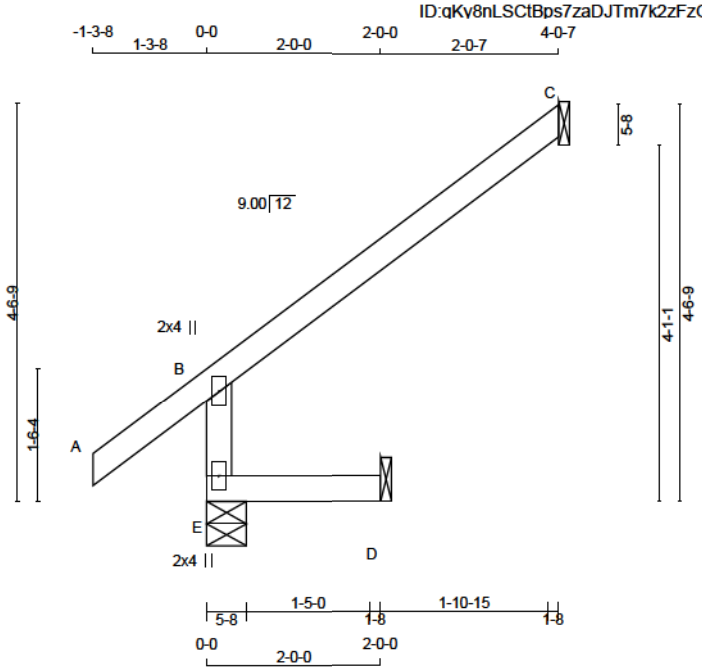

TOTAL WEIGHT = 2 X 11 = 23 lb

LUMBER

N. L. G. A. RULES

CHORDS	SIZE		LUMBER	DESCR.
E - B	2x4	DRY	No.2	SPF
A - C	2x4	DRY	No.2	SPF
E - D	2x4	DRY	No.2	SPF

DRY: SEASONED LUMBER.

PLATES (table is in inches)

JT	TYPE	PLATES	W	LEN	Y	X
B	TMV+p	MT20	2.0	4.0		
E	BMV1+p	MT20	2.0	4.0		

DIMENSIONS, SUPPORTS AND LOADINGS SPECIFIED BY FABRICATOR TO BE VERIFIED BY BUILDING DESIGNER [M]

BEARINGS

JT	FACTORED GROSS REACTION VERT	HORZ	MAXIMUM FACTORED GROSS REACTION DOWN	HORZ	UPLIFT	INPUT BRG IN-SX	REQRD BRG IN-SX
E	528	0	528	0	0	5-8	1-8
C	189	0	189	0	0	1-8	1-8
D	36	0	45	0	0	1-8	1-8

SEE MITEK STANDARD DETAIL B97791H FOR CONNECTION TO JOINT(S) C , D

UNFACTORED REACTIONS

JT	1ST LCASE COMBINED	MAX /MIN COMPONENT REACTIONS SNOW	LIVE	PERM.LIVE	WIND	DEAD	SOIL
E	373	272 / 0	23 / 0	0 / 0	0 / 0	78 / 0	0 / 0
C	130	105 / 0	0 / 0	0 / 0	0 / 0	24 / 0	0 / 0
D	32	0 / 0	19 / 0	0 / 0	0 / 0	13 / 0	0 / 0

BEARING MATERIAL TO BE SPF NO.2 OR BETTER AT JOINT(S) E

BRACING

TOP CHORD TO BE SHEATHED OR MAX. PURLIN SPACING = 6.25 FT.
MAX. UNBRACED BOTTOM CHORD LENGTH = 10.00 FT OR RIGID CEILING DIRECTLY APPLIED.

ALL PITCH BREAKS AND PERIMETER CORNER JOINTS MUST BE LATERALLY RESTRAINED.

LOADING

TOTAL LOAD CASES: (4)

CHORDS MEMB. FR-TO	MAX. FACTORED FORCE (LBS)	FACTORED VERT. LOAD (PLF) FROM	TO	LC1 MAX CSI (LC)	MAX. UNBRAC LENGTH	WEBS MEMB. FR-TO	MAX. FACTORED FORCE (LBS)	MAX CSI (LC)
E- B	-485 / 0	0.0	0.0	0.02 (3)	7.81			
A- B	0 / 51	-124.4	-124.4	0.17 (1)	10.00			
B- C	-38 / 0	-124.4	-124.4	0.34 (1)	6.25			
E- D	0 / 0	-39.2	-39.2	0.04 (3)	10.00			

DESIGN CRITERIA

SPECIFIED LOADS:

TOP CH.	LL	=	34.8	PSF
	DL	=	8.0	PSF
BOT CH.	LL	=	10.5	PSF
	DL	=	7.3	PSF
TOTAL LOAD		=	60.6	PSF

SPACING = 24.0 IN. C/C

THIS TRUSS IS DESIGNED FOR RESIDENTIAL OR SMALL BUILDING REQUIREMENTS OF PART 9, NBCC 2015

THIS DESIGN COMPLIES WITH:
- PART 9 OF BCBC 2018 , ABC 2019
- PART 9 OF OBC 2012 (2019 AMENDMENT)
- CSA 086-14
- TPIC 2014

DESIGN ASSUMPTIONS
-OVERHANG NOT TO BE ALTERED OR CUT OFF.

(55 % OF 48.1 P.S.F. G.S.L. PLUS 8.4 P.S.F. RAIN LOAD) EQUALS 34.8 P.S.F. SPECIFIED ROOF LIVE LOAD

ALLOWABLE DEFL.(LL)= L/360 (0.19")
CALCULATED VERT. DEFL.(LL) = L/ 999 (0.00")
ALLOWABLE DEFL.(TL)= L/360 (0.19")
CALCULATED VERT. DEFL.(TL) = L/ 999 (0.00")

CSI: TC=0.34/1.00 (B-C:1) , BC=0.04/1.00 (D-E:3) , WB=0.00/1.00 (n/a:0) , SSI=0.20/1.00 (B-C:1)

DOL LUMBER=1.00 NAIL=1.00 LS BEND=1.10 COMP=1.10 SHEAR=1.10 TENS= 1.10

COMPANION LIVE LOAD FACTOR = 1.00

TRUSS PLATE MANUFACTURER IS NOT RESPONSIBLE FOR QUALITY CONTROL IN THE TRUSS MANUFACTURING PLANT .

NAIL VALUES

PLATE	GRIP(DRY) (PSI) MAX	MIN	SHEAR (PLI) MAX	MIN	SECTION (PLI) MAX	MIN
MT20	650	371	1747	788	1987	1873

PLATE PLACEMENT TOL. = 0.250 inches

PLATE ROTATION TOL. = 5.0 Deg.

JSI GRIP= 0.32 (B) (INPUT = 0.90)
JSI METAL= 0.26 (B) (INPUT = 1.00)

LICENSED PROFESSIONAL ENGINEER
N.A. EL-MASRI
PROVINCE OF ONTARIO

Dec 16, 2020

READ ALL NOTES ON THIS PAGE AND ON ENGINEERING NOTE PAGE ENP-1. THIS NOTE PAGE IS AN INTEGRAL PART OF THIS DRAWING AS IT CONTAINS SPECIFICATIONS AND CRITERIA USED IN THE DESIGN OF THIS COMPONENT.

Town of East Gwillimbury
Building Standards Branch BCIN #16487

These plans have been reviewed for use with the corrections as noted. No other changes may be made without written approval of the Building Standards Branch. All work must comply with Zoning By-Law 2018-043, as amended, and the Ontario Building Code, as amended. These approved documents must be kept on site at all times. The building permit must be clearly posted on site at all times.

Discipline	Reviewer	BCIN	Date
Building Code	H. Authier	43236	2021-02-05
Sewage System			
Zoning			

KOTT

JOB NAME	TRUSS NAME	QUANTITY	PLY	JOB DESC.		DRWG NO.
NE1220-120	J07	2	1	TRUSS DESC.	GREENPARK - TRINAR HALL - GLENWAY 7A ELE 3	**Page 13 of 42**

Version 8.420 S Oct 9 2020 MiTek Industries, Inc. Thu Dec 17 20:49:19 2020 Page 1

ID:qKy8nLSCtBps7zaDJTm7k2zFzGC-?PUAVJ02pFQVNiiUhyuBlJ9EvJVUT m1STtJzUy7y

Scale = 1:18.5

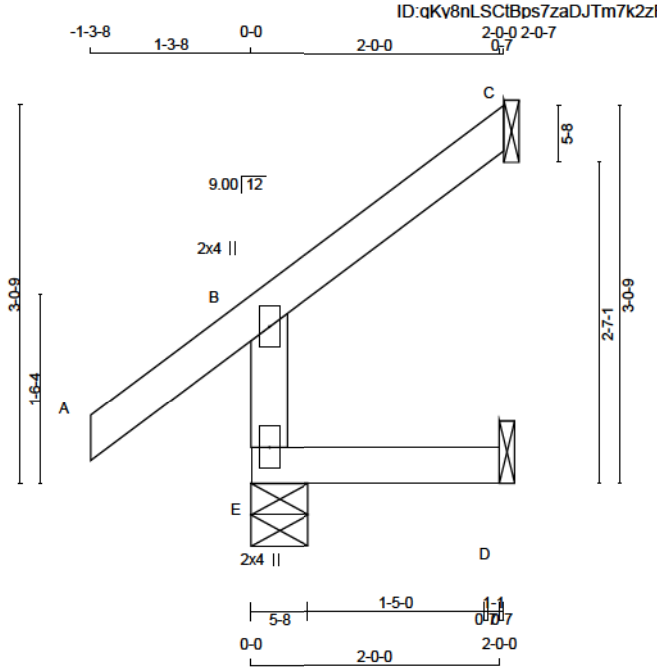

TOTAL WEIGHT = 2 X 9 = 17 lb

LUMBER
N. L. G. A. RULES

CHORDS	SIZE		LUMBER	DESCR.
E - B	2x4	DRY	No.2	SPF
A - C	2x4	DRY	No.2	SPF
E - D	2x4	DRY	No.2	SPF

DRY: SEASONED LUMBER.

PLATES (table is in inches)

JT	TYPE	PLATES	W	LEN	Y	X
B	TMV+p	MT20	2.0	4.0		
E	BMV1+p	MT20	2.0	4.0		

DIMENSIONS, SUPPORTS AND LOADINGS SPECIFIED BY FABRICATOR TO BE VERIFIED BY BUILDING DESIGNER

BEARINGS

JT	FACTORED GROSS REACTION VERT	HORZ	MAXIMUM FACTORED GROSS REACTION DOWN	HORZ	UPLIFT	INPUT BRG IN-SX	REQRD BRG IN-SX
E	372	0	372	0	0	5-8	1-8
C	96	0	96	0	0	1-8	1-8
D	36	0	45	0	0	1-8	1-8

SEE MITEK STANDARD DETAIL B97791H FOR CONNECTION TO JOINT(S) C , D

UNFACTORED REACTIONS

JT	1ST LCASE COMBINED	MAX /MIN COMPONENT REACTIONS SNOW	LIVE	PERM.LIVE	WIND	DEAD	SOIL
E	265	184 / 0	23 / 0	0 / 0	0 / 0	58 / 0	0 / 0
C	66	54 / 0	0 / 0	0 / 0	0 / 0	12 / 0	0 / 0
D	32	0 / 0	19 / 0	0 / 0	0 / 0	13 / 0	0 / 0

BEARING MATERIAL TO BE SPF NO.2 OR BETTER AT JOINT(S) E

BRACING
TOP CHORD TO BE SHEATHED OR MAX. PURLIN SPACING = 6.25 FT.
MAX. UNBRACED BOTTOM CHORD LENGTH = 10.00 FT OR RIGID CEILING DIRECTLY APPLIED.

ALL PITCH BREAKS AND PERIMETER CORNER JOINTS MUST BE LATERALLY RESTRAINED.

LOADING
TOTAL LOAD CASES: (5)

CHORDS MEMB. FR-TO	MAX. FACTORED FORCE (LBS)	FACTORED VERT. LOAD (PLF) FROM	TO	LC1 MAX CSI (LC)	MAX. UNBRAC LENGTH	WEBS MEMB. FR-TO	MAX. FACTORED FORCE (LBS)	MAX CSI (LC)
E- B	-329 / 0	0.0	0.0	0.01 (3)	7.81			
A- B	0 / 51	-124.4	-124.4	0.17 (1)	10.00			
B- C	-18 / 0	-124.4	-124.4	0.09 (1)	6.25			
E- D	0 / 0	-39.2	-39.2	0.03 (3)	10.00			

CANTILEVER ANALYSIS HAS BEEN CONSIDERED IN THIS DESIGN

[M]

DESIGN CRITERIA

SPECIFIED LOADS:

TOP CH.	LL	=	34.8	PSF
	DL	=	8.0	PSF
BOT CH.	LL	=	10.5	PSF
	DL	=	7.3	PSF
TOTAL LOAD		=	60.6	PSF

SPACING = 24.0 IN. C/C

THIS TRUSS IS DESIGNED FOR RESIDENTIAL OR SMALL BUILDING REQUIREMENTS OF PART 9, NBCC 2015

THIS DESIGN COMPLIES WITH:
- PART 9 OF BCBC 2018 , ABC 2019
- PART 9 OF OBC 2012 (2019 AMENDMENT)
- CSA 086-14
- TPIC 2014

DESIGN ASSUMPTIONS
-OVERHANG NOT TO BE ALTERED OR CUT OFF.

(55 % OF 48.1 P.S.F. G.S.L. PLUS 8.4 P.S.F. RAIN LOAD) EQUALS 34.8 P.S.F. SPECIFIED ROOF LIVE LOAD

ALLOWABLE DEFL.(LL)= L/360 (0.19")
CALCULATED VERT. DEFL.(LL) = L/ 999 (0.00")
ALLOWABLE DEFL.(TL)= L/360 (0.19")
CALCULATED VERT. DEFL.(TL) = L/ 999 (0.00")

CSI: TC=0.17/1.00 (A-B:1) , BC=0.03/1.00 (D-E:3) , WB=0.00/1.00 (n/a:0) , SSI=0.11/1.00 (A-B:1)

DOL LUMBER=1.00 NAIL=1.00 LS BEND=1.10 COMP=1.10 SHEAR=1.10 TENS= 1.10

COMPANION LIVE LOAD FACTOR = 1.00

TRUSS PLATE MANUFACTURER IS NOT RESPONSIBLE FOR QUALITY CONTROL IN THE TRUSS MANUFACTURING PLANT .

NAIL VALUES

PLATE	GRIP(DRY) (PSI) MAX	MIN	SHEAR (PLI) MAX	MIN	SECTION (PLI) MAX	MIN
MT20	650	371	1747	788	1987	1873

PLATE PLACEMENT TOL. = 0.250 inches

PLATE ROTATION TOL. = 5.0 Deg.

JSI GRIP= 0.21 (B) (INPUT = 0.90)
JSI METAL= 0.17 (B) (INPUT = 1.00)

LICENSED PROFESSIONAL ENGINEER
N.A. EL-MASRI
PROVINCE OF ONTARIO
Dec 16, 2020

READ ALL NOTES ON THIS PAGE AND ON ENGINEERING NOTE PAGE ENP-1. THIS NOTE PAGE IS AN INTEGRAL PART OF THIS DRAWING AS IT CONTAINS SPECIFICATIONS AND CRITERIA USED IN THE DESIGN OF THIS COMPONENT.

Town of East Gwillimbury
Building Standards Branch BCIN #16487

These plans have been reviewed for use with the corrections as noted. No other changes may be made without written approval of the Building Standards Branch. All work must comply with Zoning By-Law 2018-043, as amended, and the Ontario Building Code, as amended. These approved documents must be kept on site at all times. The building permit must be clearly posted on site at all times.

Discipline	Reviewer	BCIN	Date
Building Code	H. Authier	43236	2021-02-05
Sewage System			
Zoning			

KOTT

JOB NAME	TRUSS NAME	QUANTITY	PLY	JOB DESC.		DRWG NO.
NE1220-120	J08	2	1	TRUSS DESC.	GREENPARK - TRINAR HALL - GLENWAY 7A ELE 3	

Version 8.420 S Oct 9 2020 MiTek Industries, Inc. Thu Dec 17 20:49:19 2020 Page 1
ID:qKv8nLSCtBps7zaDJTm7k2zFzGC-?PUAVJ02pFQVNiiUhyuBlJ9DXJSVT m1STtJzUy7y

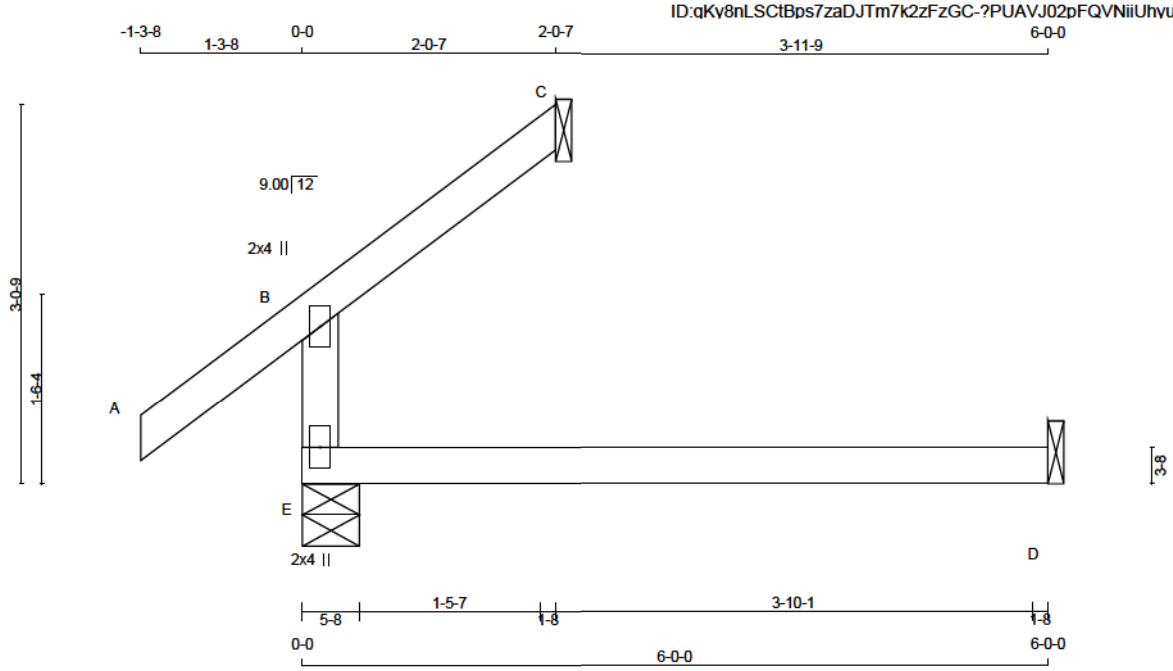

TOTAL WEIGHT = 2 X 13 = 26 lb

LUMBER
N. L. G. A. RULES

CHORDS	SIZE		LUMBER	DESCR.
E - B	2x4	DRY	No.2	SPF
A - C	2x4	DRY	No.2	SPF
E - D	2x4	DRY	No.2	SPF

DRY: SEASONED LUMBER.

PLATES (table is in inches)

JT	TYPE	PLATES	W	LEN	Y	X
B	TMV+p	MT20	2.0	4.0		
E	BMV1+p	MT20	2.0	4.0		

DIMENSIONS, SUPPORTS AND LOADINGS SPECIFIED BY FABRICATOR TO BE VERIFIED BY BUILDING DESIGNER

BEARINGS

JT	FACTORED GROSS REACTION VERT	HORZ	MAXIMUM FACTORED GROSS REACTION DOWN	HORZ	UPLIFT	INPUT BRG IN-SX	REQRD BRG IN-SX
E	465	0	465	0	0	5-8	1-8
C	96	0	96	0	0	1-8	1-8
D	99	0	126	0	0	1-8	1-8

SEE MITEK STANDARD DETAIL B97791H FOR CONNECTION TO JOINT(S) C , D

UNFACTORED REACTIONS

JT	1ST LCASE COMBINED	MAX /MIN COMPONENT REACTIONS SNOW	LIVE	PERM.LIVE	WIND	DEAD	SOIL
E	350	184 / 0	73 / 0	0 / 0	0 / 0	93 / 0	0 / 0
C	66	54 / 0	0 / 0	0 / 0	0 / 0	12 / 0	0 / 0
D	90	0 / 0	53 / 0	0 / 0	0 / 0	37 / 0	0 / 0

BEARING MATERIAL TO BE SPF NO.2 OR BETTER AT JOINT(S) E, C

BRACING
TOP CHORD TO BE SHEATHED OR MAX. PURLIN SPACING = 6.25 FT.
MAX. UNBRACED BOTTOM CHORD LENGTH = 10.00 FT OR RIGID CEILING DIRECTLY APPLIED.

ALL PITCH BREAKS AND PERIMETER CORNER JOINTS MUST BE LATERALLY RESTRAINED.

LOADING
TOTAL LOAD CASES: (4)

CHORDS

MEMB. FR-TO	MAX. FACTORED FORCE (LBS)	FACTORED VERT. LOAD (PLF) FROM	TO	LC1 MAX CSI (LC)	MAX. UNBRAC LENGTH
E- B	-329 / 0	0.0	0.0	0.20 (3)	7.81
A- B	0 / 51	-124.4	-124.4	0.17 (1)	10.00
B- C	-18 / 0	-124.4	-124.4	0.09 (1)	6.25

WEBS

MEMB. FR-TO	MAX. FACTORED FORCE (LBS)	MAX CSI (LC)
E- D	0 / 0	-39.2 -39.2 0.22 (3) 10.00

DESIGN CRITERIA

SPECIFIED LOADS:

TOP CH.	LL	=	34.8	PSF
	DL	=	8.0	PSF
BOT CH.	LL	=	10.5	PSF
	DL	=	7.3	PSF
TOTAL LOAD		=	60.6	PSF

SPACING = 24.0 IN. C/C

THIS TRUSS IS DESIGNED FOR RESIDENTIAL OR SMALL BUILDING REQUIREMENTS OF PART 9, NBCC 2015

THIS DESIGN COMPLIES WITH:
- PART 9 OF BCBC 2018 , ABC 2019
- PART 9 OF OBC 2012 (2019 AMENDMENT)
- CSA 086-14
- TPIC 2014

DESIGN ASSUMPTIONS
-OVERHANG NOT TO BE ALTERED OR CUT OFF.

(55 % OF 48.1 P.S.F. G.S.L. PLUS 8.4 P.S.F. RAIN LOAD) EQUALS 34.8 P.S.F. SPECIFIED ROOF LIVE LOAD

ALLOWABLE DEFL.(LL)= L/360 (0.20")
CALCULATED VERT. DEFL.(LL) = L/ 999 (0.05")
ALLOWABLE DEFL.(TL)= L/360 (0.20")
CALCULATED VERT. DEFL.(TL) = L/ 814 (0.09")

CSI: TC=0.20/1.00 (B-E:3) , BC=0.22/1.00 (D-E:3) , WB=0.00/1.00 (n/a:0) , SSI=0.14/1.00 (D-E:3)

DOL LUMBER=1.00 NAIL=1.00 LS BEND=1.10 COMP=1.10 SHEAR=1.10 TENS= 1.10

COMPANION LIVE LOAD FACTOR = 1.00

TRUSS PLATE MANUFACTURER IS NOT RESPONSIBLE FOR QUALITY CONTROL IN THE TRUSS MANUFACTURING PLANT .

NAIL VALUES

PLATE	GRIP(DRY) (PSI) MAX	MIN	SHEAR (PLI) MAX	MIN	SECTION (PLI) MAX	MIN
MT20	650	371	1747	788	1987	1873

PLATE PLACEMENT TOL. = 0.250 inches

PLATE ROTATION TOL. = 5.0 Deg.

JSI GRIP= 0.21 (B) (INPUT = 0.90)
JSI METAL= 0.17 (B) (INPUT = 1.00)

LICENSED PROFESSIONAL ENGINEER
N.A. EL-MASRI
PROVINCE OF ONTARIO
Dec 16, 2020

READ ALL NOTES ON THIS PAGE AND ON ENGINEERING NOTE PAGE ENP-1. THIS NOTE PAGE IS AN INTEGRAL PART OF THIS DRAWING AS IT CONTAINS SPECIFICATIONS AND CRITERIA USED IN THE DESIGN OF THIS COMPONENT.

Town of East Gwillimbury
Building Standards Branch BCIN #16487

These plans have been reviewed for use with the corrections as noted. No other changes may be made without written approval of the Building Standards Branch. All work must comply with Zoning By-Law 2018-043, as amended, and the Ontario Building Code, as amended. These approved documents must be kept on site at all times. The building permit must be clearly posted on site at all times.

Discipline	Reviewer	BCIN	Date
Building Code	H. Authier	43236	2021-02-05
Sewage System			
Zoning			

KOTT

JOB NAME	TRUSS NAME	QUANTITY	PLY	JOB DESC.		DRWG NO.
NE1220-120	J09	2	1	TRUSS DESC.	GREENPARK - TRINAR HALL - GLENWAY 7A ELE 3	**Page 15 of 42**

Version 8.420 S Oct 9 2020 MiTek Industries, Inc. Thu Dec 17 20:49:20 2020 Page 1
ID:qKy8nLSCtBps7zaDJTm7k2zFzGC-Tb2Zif0qaZYM?sHqFqPQIWiMzjobCR0Bh7csVxy7y

Scale = 1:26.0

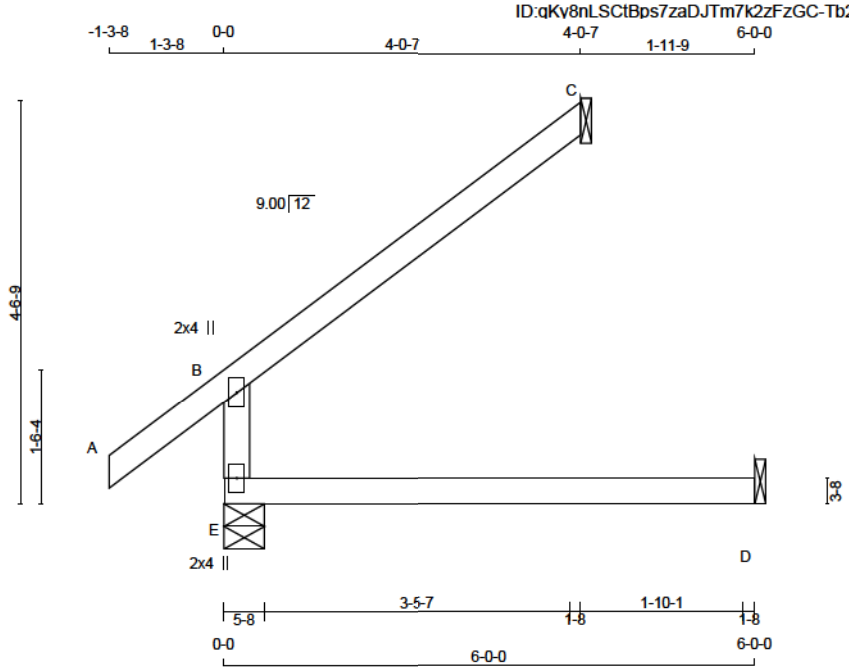

TOTAL WEIGHT = 2 X 16 = 32 lb

LUMBER
N. L. G. A. RULES

CHORDS	SIZE		LUMBER	DESCR.
E - B	2x4	DRY	No.2	SPF
A - C	2x4	DRY	No.2	SPF
E - D	2x4	DRY	No.2	SPF

DRY: SEASONED LUMBER.

PLATES (table is in inches)

JT	TYPE	PLATES	W	LEN	Y	X
B	TMV+p	MT20	2.0	4.0		
E	BMV1+p	MT20	2.0	4.0		

DIMENSIONS, SUPPORTS AND LOADINGS SPECIFIED BY FABRICATOR TO BE VERIFIED BY BUILDING DESIGNER

BEARINGS

JT	FACTORED GROSS REACTION VERT	HORZ	MAXIMUM FACTORED GROSS REACTION DOWN	HORZ	UPLIFT	INPUT BRG IN-SX	REQRD BRG IN-SX
E	622	0	622	0	0	5-8	1-8
C	189	0	189	0	0	1-8	1-8
D	99	0	126	0	0	1-8	1-8

SEE MITEK STANDARD DETAIL B97791H FOR CONNECTION TO JOINT(S) C , D

UNFACTORED REACTIONS

JT	1ST LCASE COMBINED	MAX /MIN COMPONENT REACTIONS SNOW	LIVE	PERM.LIVE	WIND	DEAD	SOIL
E	457	272 / 0	73 / 0	0 / 0	0 / 0	113 / 0	0 / 0
C	130	105 / 0	0 / 0	0 / 0	0 / 0	24 / 0	0 / 0
D	90	0 / 0	53 / 0	0 / 0	0 / 0	37 / 0	0 / 0

BEARING MATERIAL TO BE SPF NO.2 OR BETTER AT JOINT(S) E, C

BRACING
TOP CHORD TO BE SHEATHED OR MAX. PURLIN SPACING = 6.25 FT.
MAX. UNBRACED BOTTOM CHORD LENGTH = 10.00 FT OR RIGID CEILING DIRECTLY APPLIED.

ALL PITCH BREAKS AND PERIMETER CORNER JOINTS MUST BE LATERALLY RESTRAINED.

LOADING
TOTAL LOAD CASES: (4)

CHORDS FR-TO	MAX. FACTORED FORCE (LBS)	FACTORED VERT. LOAD (PLF) FROM	TO	LC1 MAX CSI (LC)	MAX. UNBRAC LENGTH	WEBS MEMB. FR-TO	MAX. FACTORED FORCE (LBS)	MAX CSI (LC)
E- B	-485 / 0	0.0	0.0	0.21 (3)	7.81			
A- B	0 / 51	-124.4	-124.4	0.17 (1)	10.00			
B- C	-38 / 0	-124.4	-124.4	0.34 (1)	6.25			
E- D	0 / 0	-39.2	-39.2	0.23 (3)	10.00			

DESIGN CRITERIA [M]

SPECIFIED LOADS:

TOP CH.	LL	=	34.8	PSF
	DL	=	8.0	PSF
BOT CH.	LL	=	10.5	PSF
	DL	=	7.3	PSF
TOTAL LOAD		=	60.6	PSF

SPACING = 24.0 IN. C/C

THIS TRUSS IS DESIGNED FOR RESIDENTIAL OR SMALL BUILDING REQUIREMENTS OF PART 9, NBCC 2015

THIS DESIGN COMPLIES WITH:
- PART 9 OF BCBC 2018 , ABC 2019
- PART 9 OF OBC 2012 (2019 AMENDMENT)
- CSA 086-14
- TPIC 2014

DESIGN ASSUMPTIONS
-OVERHANG NOT TO BE ALTERED OR CUT OFF.

(55 % OF 48.1 P.S.F. G.S.L. PLUS 8.4 P.S.F. RAIN LOAD) EQUALS 34.8 P.S.F. SPECIFIED ROOF LIVE LOAD

ALLOWABLE DEFL.(LL)= L/360 (0.20")
CALCULATED VERT. DEFL.(LL) = L/ 999 (0.05")
ALLOWABLE DEFL.(TL)= L/360 (0.20")
CALCULATED VERT. DEFL.(TL) = L/ 814 (0.09")

CSI: TC=0.34/1.00 (B-C:1) , BC=0.23/1.00 (D-E:3) , WB=0.00/1.00 (n/a:0) , SSI=0.20/1.00 (B-C:1)

DOL LUMBER=1.00 NAIL=1.00 LS BEND=1.10 COMP=1.10 SHEAR=1.10 TENS= 1.10

COMPANION LIVE LOAD FACTOR = 1.00

TRUSS PLATE MANUFACTURER IS NOT RESPONSIBLE FOR QUALITY CONTROL IN THE TRUSS MANUFACTURING PLANT .

NAIL VALUES

PLATE	GRIP(DRY) (PSI) MAX	MIN	SHEAR (PLI) MAX	MIN	SECTION (PLI) MAX	MIN
MT20	650	371	1747	788	1987	1873

PLATE PLACEMENT TOL. = 0.250 inches

PLATE ROTATION TOL. = 5.0 Deg.

JSI GRIP= 0.32 (B) (INPUT = 0.90)
JSI METAL= 0.26 (B) (INPUT = 1.00)

LICENSED PROFESSIONAL ENGINEER
N.A. EL-MASRI
PROVINCE OF ONTARIO
Dec 16, 2020

READ ALL NOTES ON THIS PAGE AND ON ENGINEERING NOTE PAGE ENP-1. THIS NOTE PAGE IS AN INTEGRAL PART OF THIS DRAWING AS IT CONTAINS SPECIFICATIONS AND CRITERIA USED IN THE DESIGN OF THIS COMPONENT.

Town of East Gwillimbury
Building Standards Branch BCIN #16487

These plans have been reviewed for use with the corrections as noted. No other changes may be made without written approval of the Building Standards Branch. All work must comply with Zoning By-Law 2018-043, as amended, and the Ontario Building Code, as amended. These approved documents must be kept on site at all times. The building permit must be clearly posted on site at all times.

Discipline	Reviewer	BCIN	Date
Building Code	H. Authier	43236	2021-02-05
Sewage System			
Zoning			

KOTT

JOB NAME	TRUSS NAME	QUANTITY	PLY	JOB DESC.		DRWG NO.
NE1220-120	J10	4	1	TRUSS DESC.	GREENPARK - TRINAR HALL - GLENWAY 7A ELE 3	**Page 16 of 42**

Version 8.420 S Oct 9 2020 MiTek Industries, Inc. Thu Dec 17 20:49:20 2020 Page 1

ID:qKv8nLSCtBps7zaDJTm7k2zFzGC-Tb2Zif0qaZYM?sHqFqPQIWiGOjoQCR0Bh7csVxy7y

Scale = 1:34.5

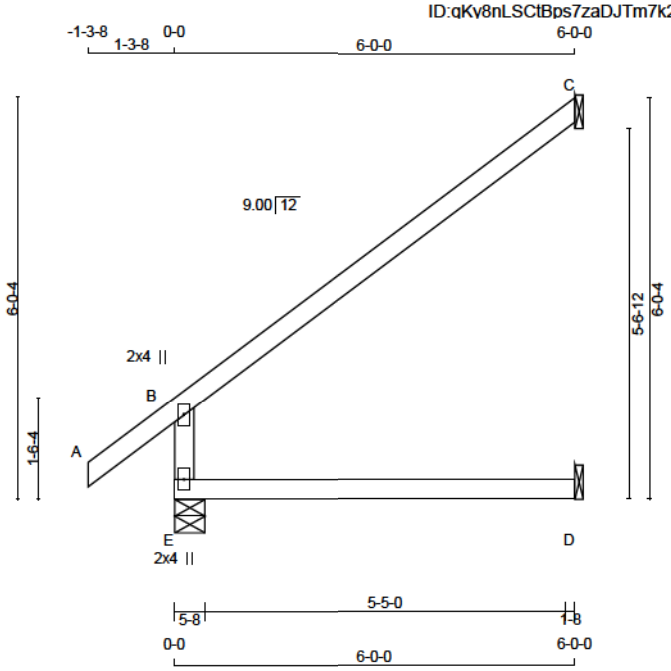

TOTAL WEIGHT = 4 X 19 = 75 lb

LUMBER

N. L. G. A. RULES

CHORDS	SIZE		LUMBER	DESCR.
E - B	2x4	DRY	No.2	SPF
A - C	2x4	DRY	No.2	SPF
E - D	2x4	DRY	No.2	SPF

DRY: SEASONED LUMBER.

PLATES (table is in inches)

JT	TYPE	PLATES	W	LEN	Y	X
B	TMV+p	MT20	2.0	4.0		
E	BMV1+p	MT20	2.0	4.0		

DIMENSIONS, SUPPORTS AND LOADINGS SPECIFIED BY FABRICATOR TO BE VERIFIED BY BUILDING DESIGNER

BEARINGS

JT	FACTORED GROSS REACTION VERT	HORZ	MAXIMUM FACTORED GROSS REACTION DOWN	HORZ	UPLIFT	INPUT BRG IN-SX	REQRD BRG IN-SX
E	774	0	774	0	0	5-8	1-8
C	280	0	280	0	0	1-8	1-8
D	99	0	126	0	0	1-8	1-8

SEE MITEK STANDARD DETAIL B97791H FOR CONNECTION TO JOINT(S) C , D

UNFACTORED REACTIONS

JT	1ST LCASE COMBINED	MAX /MIN COMPONENT REACTIONS SNOW	LIVE	PERM.LIVE	WIND	DEAD	SOIL
E	563	357 / 0	73 / 0	0 / 0	0 / 0	133 / 0	0 / 0
C	193	157 / 0	0 / 0	0 / 0	0 / 0	36 / 0	0 / 0
D	90	0 / 0	53 / 0	0 / 0	0 / 0	37 / 0	0 / 0

BEARING MATERIAL TO BE SPF NO.2 OR BETTER AT JOINT(S) E

BRACING

TOP CHORD TO BE SHEATHED OR MAX. PURLIN SPACING = 6.25 FT.
MAX. UNBRACED BOTTOM CHORD LENGTH = 10.00 FT OR RIGID CEILING DIRECTLY APPLIED.

ALL PITCH BREAKS AND PERIMETER CORNER JOINTS MUST BE LATERALLY RESTRAINED.

LOADING

TOTAL LOAD CASES: (4)

CHORDS MEMB. FR-TO	MAX. FACTORED FORCE (LBS)	FACTORED VERT. LOAD (PLF) FROM	TO	LC1 MAX CSI (LC)	MAX. UNBRAC LENGTH	WEBS MEMB. FR-TO	MAX. FACTORED FORCE (LBS)	MAX CSI (LC)
E- B	-638 / 0	0.0	0.0	0.21 (3)	7.81			
A- B	0 / 51	-124.4	-124.4	0.17 (1)	10.00			
B- C	-56 / 0	-124.4	-124.4	0.77 (1)	6.25			
E- D	0 / 0	-39.2	-39.2	0.24 (3)	10.00			

[M]

DESIGN CRITERIA

SPECIFIED LOADS:

TOP CH.	LL	=	34.8	PSF
	DL	=	8.0	PSF
BOT CH.	LL	=	10.5	PSF
	DL	=	7.3	PSF
TOTAL LOAD		=	60.6	PSF

SPACING = 24.0 IN. C/C

THIS TRUSS IS DESIGNED FOR RESIDENTIAL OR SMALL BUILDING REQUIREMENTS OF PART 9, NBCC 2015

THIS DESIGN COMPLIES WITH:
- PART 9 OF BCBC 2018 , ABC 2019
- PART 9 OF OBC 2012 (2019 AMENDMENT)
- CSA 086-14
- TPIC 2014

DESIGN ASSUMPTIONS
-OVERHANG NOT TO BE ALTERED OR CUT OFF.

(55 % OF 48.1 P.S.F. G.S.L. PLUS 8.4 P.S.F. RAIN LOAD) EQUALS 34.8 P.S.F. SPECIFIED ROOF LIVE LOAD

ALLOWABLE DEFL.(LL)= L/360 (0.20")
CALCULATED VERT. DEFL.(LL) = L/ 999 (0.05")
ALLOWABLE DEFL.(TL)= L/360 (0.20")
CALCULATED VERT. DEFL.(TL) = L/ 814 (0.09")

CSI: TC=0.77/1.00 (B-C:1) , BC=0.24/1.00 (D-E:3) , WB=0.00/1.00 (n/a:0) , SSI=0.29/1.00 (B-C:1)

DOL LUMBER=1.00 NAIL=1.00 LS BEND=1.10 COMP=1.10 SHEAR=1.10 TENS= 1.10

COMPANION LIVE LOAD FACTOR = 1.00

TRUSS PLATE MANUFACTURER IS NOT RESPONSIBLE FOR QUALITY CONTROL IN THE TRUSS MANUFACTURING PLANT .

NAIL VALUES

PLATE	GRIP(DRY) (PSI) MAX	MIN	SHEAR (PLI) MAX	MIN	SECTION (PLI) MAX	MIN
MT20	650	371	1747	788	1987	1873

PLATE PLACEMENT TOL. = 0.250 inches

PLATE ROTATION TOL. = 5.0 Deg.

JSI GRIP= 0.42 (B) (INPUT = 0.90)
JSI METAL= 0.34 (B) (INPUT = 1.00)

LICENSED PROFESSIONAL ENGINEER
N.A. EL-MASRI
PROVINCE OF ONTARIO
Dec 16, 2020

READ ALL NOTES ON THIS PAGE AND ON ENGINEERING NOTE PAGE ENP-1. THIS NOTE PAGE IS AN INTEGRAL PART OF THIS DRAWING AS IT CONTAINS SPECIFICATIONS AND CRITERIA USED IN THE DESIGN OF THIS COMPONENT.

Town of East Gwillimbury
Building Standards Branch BCIN #16487

These plans have been reviewed for use with the corrections as noted. No other changes may be made without written approval of the Building Standards Branch. All work must comply with Zoning By-Law 2018-043, as amended, and the Ontario Building Code, as amended. These approved documents must be kept on site at all times. The building permit must be clearly posted on site at all times.

Discipline	Reviewer	BCIN	Date
Building Code	H. Authier	43236	2021-02-05
Sewage System			
Zoning			

KOTT

JOB NAME	TRUSS NAME	QUANTITY	PLY	JOB DESC.		DWG NO.
NE1220-120	J11	3	1	TRUSS DESC.	GREENPARK - TRINAR HALL - GLENWAY 7A ELE 3	

Version 8.420 S Oct 9 2020 MiTek Industries, Inc. Thu Dec 17 20:49:20 2020 Page 1
ID:qKv8nLSCtBps7zaDJTm7k2zFzGC-Tb2Zif0qaZYM?sHqFqPQIWiJYjnICR0Bh7csVxy7y

Scale = 1:34.6

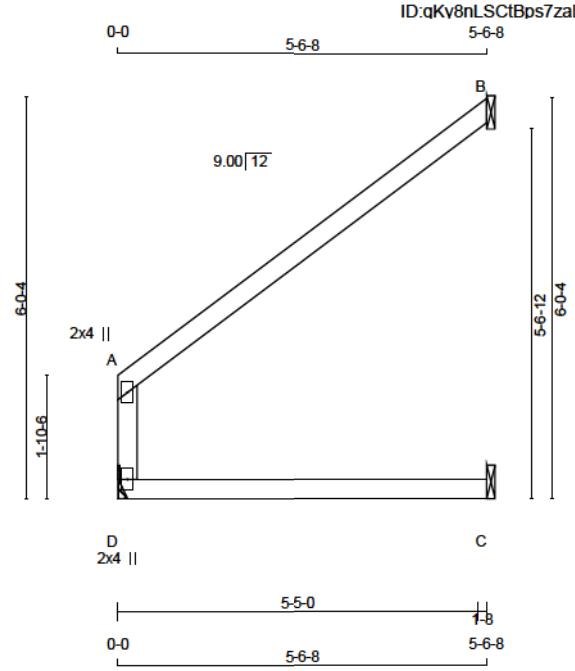

TOTAL WEIGHT = 3 X 16 = 48 lb

LUMBER
N. L. G. A. RULES

CHORDS	SIZE		LUMBER	DESCR.
D - A	2x4	DRY	No.2	SPF
A - B	2x4	DRY	No.2	SPF
D - C	2x4	DRY	No.2	SPF

DRY: SEASONED LUMBER.

PLATES (table is in inches)

JT	TYPE	PLATES	W	LEN	Y	X
A	TMV+p	MT20	2.0	4.0		
D	BMV1+p	MT20	2.0	4.0		

DIMENSIONS, SUPPORTS AND LOADINGS SPECIFIED BY FABRICATOR TO BE VERIFIED BY BUILDING DESIGNER [M][F]

BEARINGS

JT	FACTORED GROSS REACTION VERT	HORZ	MAXIMUM GROSS REACTION DOWN	HORZ	FACTORED UPLIFT	INPUT BRG IN-SX	REQRD BRG IN-SX
D	454	0	454	0	0	MECHANICAL	
B	319	0	319	0	0	1-8	1-8
C	135	0	152	0	0	1-8	1-8

A SUITABLE HANGER/MECHANICAL CONNECTION IS REQUIRED AT JOINT D. MINIMUM BEARING LENGTH AT JOINT D = 1-8.

SEE MITEK STANDARD DETAIL B97791H FOR CONNECTION TO JOINT(S) B , C

UNFACTORED REACTIONS

JT	1ST LCASE COMBINED	MAX./MIN. COMPONENT REACTIONS SNOW	LIVE	PERM.LIVE	WIND	DEAD	SOIL
D	336	193 / 0	58 / 0	0 / 0	0 / 0	85 / 0	0 / 0
B	221	173 / 0	5 / 0	0 / 0	0 / 0	43 / 0	0 / 0
C	115	20 / 0	53 / 0	0 / 0	0 / 0	42 / 0	0 / 0

BRACING
TOP CHORD TO BE SHEATHED OR MAX. PURLIN SPACING = 6.25 FT.
MAX. UNBRACED BOTTOM CHORD LENGTH = 10.00 FT OR RIGID CEILING DIRECTLY APPLIED.

ALL PITCH BREAKS AND PERIMETER CORNER JOINTS MUST BE LATERALLY RESTRAINED.

LOADING
TOTAL LOAD CASES: (4)

CHORDS MEMB. FR-TO	MAX. FACTORED FORCE (LBS)	FACTORED VERT. LOAD (PLF) FROM	TO	LC1 MAX CSI (LC)	MAX. UNBRAC LENGTH	WEBS MEMB. FR-TO	MAX. FACTORED FORCE (LBS)	MAX CSI (LC)
D- A	-371 / 0	0.0	0.0	0.18 (1)	7.81			
A- B	-16 / 3	-124.4	-124.4	0.56 (1)	6.25			
D- C	0 / 0	-39.2	-39.2	0.32 (1)	10.00			

DESIGN CRITERIA

SPECIFIED LOADS:

TOP CH.	LL	=	34.8	PSF
	DL	=	8.0	PSF
BOT CH.	LL	=	10.5	PSF
	DL	=	7.3	PSF
TOTAL LOAD		=	60.6	PSF

SPACING = 24.0 IN. C/C

THIS TRUSS IS DESIGNED FOR RESIDENTIAL OR SMALL BUILDING REQUIREMENTS OF PART 9, NBCC 2015

THIS DESIGN COMPLIES WITH:
- PART 9 OF BCBC 2018 , ABC 2019
- PART 9 OF OBC 2012 (2019 AMENDMENT)
- CSA 086-14
- TPIC 2014

(55 % OF 48.1 P.S.F. G.S.L. PLUS 8.4 P.S.F. RAIN LOAD) EQUALS 34.8 P.S.F. SPECIFIED ROOF LIVE LOAD

ALLOWABLE DEFL.(LL)= L/360 (0.19")
CALCULATED VERT. DEFL.(LL) = L/ 904 (0.07")
ALLOWABLE DEFL.(TL)= L/360 (0.19")
CALCULATED VERT. DEFL.(TL) = L/ 493 (0.13")

CSI: TC=0.56/1.00 (A-B:1) , BC=0.32/1.00 (C-D:1) , WB=0.00/1.00 (n/a:0) , SSI=0.23/1.00 (A-B:1)

DOL LUMBER=1.00 NAIL=1.00 LS BEND=1.10 COMP=1.10 SHEAR=1.10 TENS= 1.10

COMPANION LIVE LOAD FACTOR = 1.00

TRUSS PLATE MANUFACTURER IS NOT RESPONSIBLE FOR QUALITY CONTROL IN THE TRUSS MANUFACTURING PLANT .

NAIL VALUES

PLATE	GRIP(DRY) (PSI) MAX	MIN	SHEAR (PLI) MAX	MIN	SECTION (PLI) MAX	MIN
MT20	650	371	1747	788	1987	1873

PLATE PLACEMENT TOL. = 0.250 inches

PLATE ROTATION TOL. = 5.0 Deg.

JSI GRIP= 0.24 (A) (INPUT = 0.90)
JSI METAL= 0.20 (A) (INPUT = 1.00)

LICENSED PROFESSIONAL ENGINEER
N.A. EL-MASRI
PROVINCE OF ONTARIO
Dec 16, 2020

READ ALL NOTES ON THIS PAGE AND ON ENGINEERING NOTE PAGE ENP-1. THIS NOTE PAGE IS AN INTEGRAL PART OF THIS DRAWING AS IT CONTAINS SPECIFICATIONS AND CRITERIA USED IN THE DESIGN OF THIS COMPONENT.

Town of East Gwillimbury
Building Standards Branch BCIN #16487

These plans have been reviewed for use with the corrections as noted. No other changes may be made without written approval of the Building Standards Branch. All work must comply with Zoning By-Law 2018-043, as amended, and the Ontario Building Code, as amended. These approved documents must be kept on site at all times. The building permit must be clearly posted on site at all times.

Discipline	Reviewer	BCIN	Date
Building Code	H. Authier	43236	2021-02-05
Sewage System			
Zoning			

KOTT

JOB NAME	TRUSS NAME	QUANTITY	PLY	JOB DESC.		DWG NO.
NE1220-120	J12	2	1	TRUSS DESC.	GREENPARK - TRINAR HALL - GLENWAY 7A ELE 3	

Version 8.420 S Oct 9 2020 MiTek Industries, Inc. Thu Dec 17 20:49:21 2020 Page 1
ID:qKv8nLSCtBps7zaDJTm7k2zFzGC-xncxw?1ILsqDc0rsoNwfqkEb56BlxuGKvnMP2Ny7y

Scale = 1:19.9

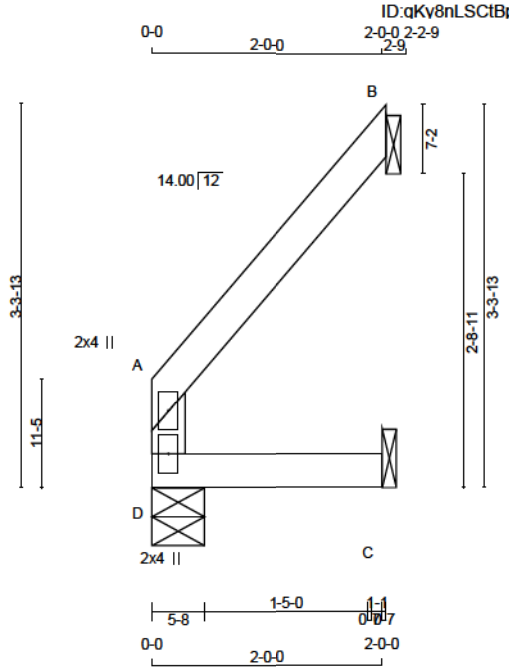

TOTAL WEIGHT = 2 X 7 = 14 lb

LUMBER
N. L. G. A. RULES

CHORDS	SIZE		LUMBER	DESCR.
D - A	2x4	DRY	No.2	SPF
A - B	2x4	DRY	No.2	SPF
D - C	2x4	DRY	No.2	SPF

DRY: SEASONED LUMBER.

PLATES (table is in inches)

JT	TYPE	PLATES	W	LEN	Y	X
A	TMV+p	MT20	2.0	4.0		
D	BMV1+p	MT20	2.0	4.0		

DIMENSIONS, SUPPORTS AND LOADINGS SPECIFIED BY FABRICATOR TO BE VERIFIED BY BUILDING DESIGNER

BEARINGS

JT	FACTORED GROSS REACTION VERT	HORZ	MAXIMUM FACTORED GROSS REACTION DOWN	HORZ	UPLIFT	INPUT BRG IN-SX	REQRD BRG IN-SX
D	166	0	166	0	0	5-8	1-8
B	115	0	115	0	0	1-8	1-8
C	51	0	57	0	0	1-8	1-8

SEE MITEK STANDARD DETAIL B97791H FOR CONNECTION TO JOINT(S) B , C

UNFACTORED REACTIONS

JT	1ST LCASE COMBINED	MAX /MIN COMPONENT REACTIONS SNOW	LIVE	PERM.LIVE	WIND	DEAD	SOIL
D	123	71 / 0	21 / 0	0 / 0	0 / 0	31 / 0	0 / 0
B	80	63 / 0	2 / 0	0 / 0	0 / 0	15 / 0	0 / 0
C	43	8 / 0	19 / 0	0 / 0	0 / 0	15 / 0	0 / 0

BEARING MATERIAL TO BE SPF NO.2 OR BETTER AT JOINT(S) D

BRACING
TOP CHORD TO BE SHEATHED OR MAX. PURLIN SPACING = 10.00 FT.
MAX. UNBRACED BOTTOM CHORD LENGTH = 10.00 FT OR RIGID CEILING DIRECTLY APPLIED.

ALL PITCH BREAKS AND PERIMETER CORNER JOINTS MUST BE LATERALLY RESTRAINED.

LOADING
TOTAL LOAD CASES: (4)

CHORDS

MEMB. FR-TO	MAX. FACTORED FORCE (LBS)	FACTORED VERT. LOAD (PLF) FROM	TO	LC1 MAX CSI (LC)	MAX. UNBRAC LENGTH
D- A	-138 / 0	0.0	0.0	0.03 (1)	7.81
A- B	-9 / 0	-124.4	-124.4	0.06 (1)	10.00
D- C	0 / 0	-39.2	-39.2	0.05 (1)	10.00

WEBS

MEMB. FR-TO	MAX. FACTORED FORCE (LBS)	MAX CSI (LC)

[M][F]

DESIGN CRITERIA

SPECIFIED LOADS:

TOP CH.	LL	=	34.8	PSF
	DL	=	8.0	PSF
BOT CH.	LL	=	10.5	PSF
	DL	=	7.3	PSF
TOTAL LOAD		=	60.6	PSF

SPACING = 24.0 IN. C/C

THIS TRUSS IS DESIGNED FOR RESIDENTIAL OR SMALL BUILDING REQUIREMENTS OF PART 9, NBCC 2015

THIS DESIGN COMPLIES WITH:
- PART 9 OF BCBC 2018 , ABC 2019
- PART 9 OF OBC 2012 (2019 AMENDMENT)
- CSA 086-14
- TPIC 2014

(55 % OF 48.1 P.S.F. G.S.L. PLUS 8.4 P.S.F. RAIN LOAD) EQUALS 34.8 P.S.F. SPECIFIED ROOF LIVE LOAD

ALLOWABLE DEFL.(LL)= L/360 (0.19")
CALCULATED VERT. DEFL.(LL) = L/ 999 (0.00")
ALLOWABLE DEFL.(TL)= L/360 (0.19")
CALCULATED VERT. DEFL.(TL) = L/ 999 (0.00")

CSI: TC=0.06/1.00 (A-B:1) , BC=0.05/1.00 (C-D:1) , WB=0.00/1.00 (n/a:0) , SSI=0.07/1.00 (A-B:1)

DOL LUMBER=1.00 NAIL=1.00 LS BEND=1.10 COMP=1.10 SHEAR=1.10 TENS= 1.10

COMPANION LIVE LOAD FACTOR = 1.00

AUTOSOLVE RIGHT HEEL ONLY

TRUSS PLATE MANUFACTURER IS NOT RESPONSIBLE FOR QUALITY CONTROL IN THE TRUSS MANUFACTURING PLANT .

NAIL VALUES

PLATE	GRIP(DRY) (PSI) MAX	MIN	SHEAR (PLI) MAX	MIN	SECTION (PLI) MAX	MIN
MT20	650	371	1747	788	1987	1873

PLATE PLACEMENT TOL. = 0.250 inches

PLATE ROTATION TOL. = 5.0 Deg.

JSI GRIP= 0.11 (A) (INPUT = 0.90)
JSI METAL= 0.07 (A) (INPUT = 1.00)

LICENSED PROFESSIONAL ENGINEER
N.A. EL-MASRI
PROVINCE OF ONTARIO
Dec 16, 2020

READ ALL NOTES ON THIS PAGE AND ON ENGINEERING NOTE PAGE ENP-1. THIS NOTE PAGE IS AN INTEGRAL PART OF THIS DRAWING AS IT CONTAINS SPECIFICATIONS AND CRITERIA USED IN THE DESIGN OF THIS COMPONENT.

Town of East Gwillimbury
Building Standards Branch BCIN #16487

These plans have been reviewed for use with the corrections as noted. No other changes may be made without written approval of the Building Standards Branch. All work must comply with Zoning By-Law 2018-043, as amended, and the Ontario Building Code, as amended. These approved documents must be kept on site at all times. The building permit must be clearly posted on site at all times.

Discipline	Reviewer	BCIN	Date
Building Code	H. Authier	43236	2021-02-05
Sewage System			
Zoning			

KOTT

JOB NAME	TRUSS NAME	QUANTITY	PLY	JOB DESC.		DWG NO.
NE1220-120	J13	2	1	TRUSS DESC.	GREENPARK - TRINAR HALL - GLENWAY 7A ELE 3	Page 19 of 42

Version 8.420 S Oct 9 2020 MiTek Industries, Inc. Thu Dec 17 20:49:21 2020 Page 1

ID:qKv8nLSCtBps7zaDJTm7k2zFzGC-xncxw?1ILsqDc0rsoNwfqkEc869ZxuGKvnMP2Ny7y

Scale = 1:19.8

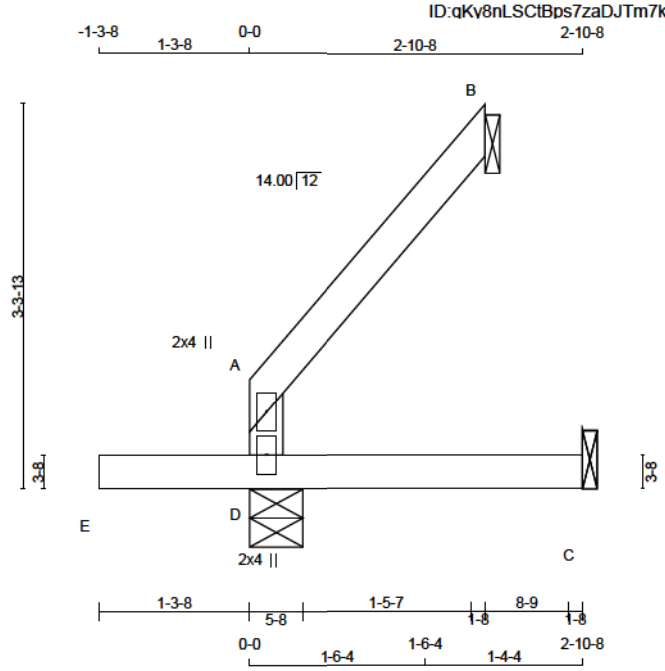

TOTAL WEIGHT = 2 X 9 = 19 lb

LUMBER

N. L. G. A. RULES

CHORDS	SIZE		LUMBER	DESCR.
D - A	2x4	DRY	No.2	SPF
A - B	2x4	DRY	No.2	SPF
E - C	2x4	DRY	No.2	SPF

DRY: SEASONED LUMBER.

PLATES (table is in inches)

JT	TYPE	PLATES	W	LEN	Y	X
A	TMV+p	MT20	2.0	4.0		
D	BMV1+p	MT20	2.0	4.0		

DIMENSIONS, SUPPORTS AND LOADINGS SPECIFIED BY FABRICATOR TO BE VERIFIED BY BUILDING DESIGNER

BEARINGS

JT	FACTORED GROSS REACTION VERT	HORZ	MAXIMUM FACTORED GROSS REACTION DOWN	HORZ	UPLIFT	INPUT BRG IN-SX	REQRD BRG IN-SX
D	429	0	429	0	0	5-8	1-8
B	106	0	106	0	0	1-8	1-8
C	42	0	54	0	0	1-8	1-8

SEE MITEK STANDARD DETAIL B97791H FOR CONNECTION TO JOINT(S) B , C

UNFACTORED REACTIONS

JT	1ST LCASE COMBINED	MAX /MIN COMPONENT REACTIONS SNOW	LIVE	PERM.LIVE	WIND	DEAD	SOIL
D	322	172 / 0	65 / 0	0 / 0	0 / 0	85 / 0	0 / 0
B	73	60 / 0	0 / 0	0 / 0	0 / 0	14 / 0	0 / 0
C	38	0 / 0	23 / 0	0 / 0	0 / 0	16 / 0	0 / 0

BEARING MATERIAL TO BE SPF NO.2 OR BETTER AT JOINT(S) D, B

BRACING

TOP CHORD TO BE SHEATHED OR MAX. PURLIN SPACING = 6.25 FT.
MAX. UNBRACED BOTTOM CHORD LENGTH = 10.00 FT OR RIGID CEILING DIRECTLY APPLIED.

ALL PITCH BREAKS AND PERIMETER CORNER JOINTS MUST BE LATERALLY RESTRAINED.

LOADING

TOTAL LOAD CASES: (5)

CHORDS

MEMB. FR-TO	MAX. FACTORED FORCE (LBS)	FACTORED VERT. LOAD (PLF) FROM	TO	LC1 MAX CSI (LC)	MAX. UNBRAC LENGTH
D- A	-147 / 0	0.0	0.0	0.06 (1)	7.81
A- B	-15 / 0	-124.4	-124.4	0.06 (1)	6.25
E- D	0 / 0	-163.7	-163.7	0.19 (1)	10.00
D- C	0 / 0	-39.2	-39.2	0.07 (3)	10.00

WEBS

MEMB. FR-TO	MAX. FACTORED FORCE (LBS)	MAX CSI (LC)

CANTILEVER ANALYSIS HAS BEEN CONSIDERED IN THIS DESIGN

DESIGN CRITERIA [M]

SPECIFIED LOADS:

TOP CH.	LL	=	34.8	PSF
	DL	=	8.0	PSF
BOT CH.	LL	=	10.5	PSF
	DL	=	7.3	PSF
TOTAL LOAD		=	60.6	PSF

SPACING = 24.0 IN. C/C

THIS TRUSS IS DESIGNED FOR RESIDENTIAL OR SMALL BUILDING REQUIREMENTS OF PART 9, NBCC 2015

THIS DESIGN COMPLIES WITH:
- PART 9 OF BCBC 2018 , ABC 2019
- PART 9 OF OBC 2012 (2019 AMENDMENT)
- CSA 086-14
- TPIC 2014

DESIGN ASSUMPTIONS
-OVERHANG NOT TO BE ALTERED OR CUT OFF.

(55 % OF 48.1 P.S.F. G.S.L. PLUS 8.4 P.S.F. RAIN LOAD) EQUALS 34.8 P.S.F. SPECIFIED ROOF LIVE LOAD

ALLOWABLE DEFL.(LL)= L/360 (0.19")
CALCULATED VERT. DEFL.(LL) = L/ 999 (0.00")
ALLOWABLE DEFL.(TL)= L/360 (0.19")
CALCULATED VERT. DEFL.(TL) = L/ 999 (0.00")

CANTILEVER DEFLECTION:
ALLOWABLE DEFL.(LL)= L/120 (0.19")
CALCULATED VERT. DEFL.(LL) = L/ 999 (0.01")
ALLOWABLE DEFL.(TL)= L/120 (0.19")
CALCULATED VERT. DEFL.(TL) = L/ 999 (0.01")

CSI: TC=0.06/1.00 (A-B:1) , BC=0.19/1.00 (D-E:1) , WB=0.00/1.00 (n/a:0) , SSI=0.16/1.00 (D-E:1)

DOL LUMBER=1.00 NAIL=1.00 LS BEND=1.10 COMP=1.10 SHEAR=1.10 TENS= 1.10

COMPANION LIVE LOAD FACTOR = 1.00

TRUSS PLATE MANUFACTURER IS NOT RESPONSIBLE FOR QUALITY CONTROL IN THE TRUSS MANUFACTURING PLANT .

NAIL VALUES

PLATE	GRIP(DRY) (PSI) MAX	MIN	SHEAR (PLI) MAX	MIN	SECTION (PLI) MAX	MIN
MT20	650	371	1747	788	1987	1873

PLATE PLACEMENT TOL. = 0.250 inches

PLATE ROTATION TOL. = 5.0 Deg.

JSI GRIP= 0.12 (A) (INPUT = 0.90)
JSI METAL= 0.07 (A) (INPUT = 1.00)

LICENSED PROFESSIONAL ENGINEER
N.A. EL-MASRI
PROVINCE OF ONTARIO
Dec 16, 2020

READ ALL NOTES ON THIS PAGE AND ON ENGINEERING NOTE PAGE ENP-1. THIS NOTE PAGE IS AN INTEGRAL PART OF THIS DRAWING AS IT CONTAINS SPECIFICATIONS AND CRITERIA USED IN THE DESIGN OF THIS COMPONENT.

Town of East Gwillimbury
Building Standards Branch BCIN #16487

These plans have been reviewed for use with the corrections as noted. No other changes may be made without written approval of the Building Standards Branch. All work must comply with Zoning By-Law 2018-043, as amended, and the Ontario Building Code, as amended. These approved documents must be kept on site at all times. The building permit must be clearly posted on site at all times.

Discipline	Reviewer	BCIN	Date
Building Code	H. Authier	43236	2021-02-05
Sewage System			
Zoning			

KOTT

JOB NAME	TRUSS NAME	QUANTITY	PLY	JOB DESC.		DWG NO.
NE1220-120	J14	3	1	TRUSS DESC.	GREENPARK - TRINAR HALL - GLENWAY 7A ELE 3	

Version 8.420 S Oct 9 2020 MiTek Industries, Inc. Thu Dec 17 20:49:21 2020 Page 1
ID:qKv8nLSCtBps7zaDJTm7k2zFzGC-xncxw?1ILsqDc0rsoNwfqkEb769ZxuGKvnMP2Ny7y

Scale = 1:24.9

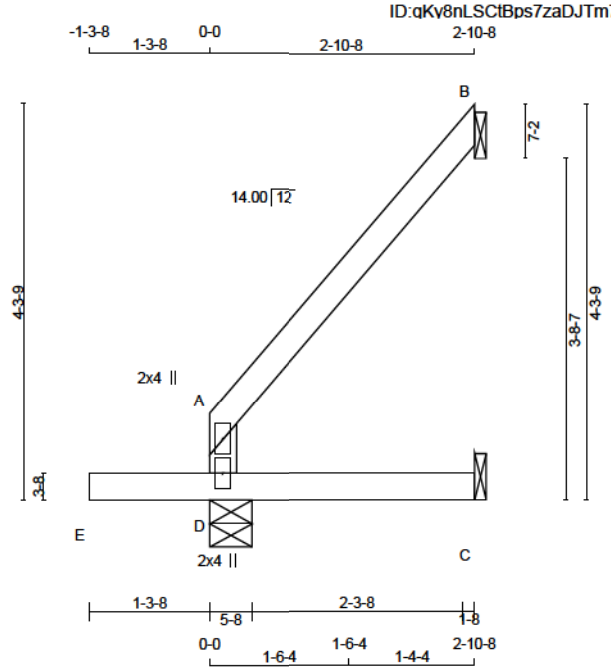

TOTAL WEIGHT = 3 X 11 = 32 lb

LUMBER
N. L. G. A. RULES

CHORDS	SIZE		LUMBER	DESCR.
D - A	2x4	DRY	No.2	SPF
A - B	2x4	DRY	No.2	SPF
E - C	2x4	DRY	No.2	SPF

DRY: SEASONED LUMBER.

PLATES (table is in inches)

JT	TYPE	PLATES	W	LEN	Y	X
A	TMV+p	MT20	2.0	4.0		
D	BMV1+p	MT20	2.0	4.0		

DIMENSIONS, SUPPORTS AND LOADINGS SPECIFIED BY FABRICATOR TO BE VERIFIED BY BUILDING DESIGNER

BEARINGS

JT	FACTORED GROSS REACTION VERT	HORZ	MAXIMUM GROSS REACTION DOWN	HORZ	UPLIFT	INPUT BRG IN-SX	REQRD BRG IN-SX
D	493	0	493	0	0	5-8	1-8
B	147	0	147	0	0	1-8	1-8
C	42	0	54	0	0	1-8	1-8

SEE MITEK STANDARD DETAIL B97791H FOR CONNECTION TO JOINT(S) B , C

UNFACTORED REACTIONS

JT	1ST LCASE COMBINED	MAX /MIN COMPONENT REACTIONS SNOW	LIVE	PERM.LIVE	WIND	DEAD	SOIL
D	366	208 / 0	65 / 0	0 / 0	0 / 0	93 / 0	0 / 0
B	101	82 / 0	0 / 0	0 / 0	0 / 0	19 / 0	0 / 0
C	38	0 / 0	23 / 0	0 / 0	0 / 0	16 / 0	0 / 0

BEARING MATERIAL TO BE SPF NO.2 OR BETTER AT JOINT(S) D

BRACING
TOP CHORD TO BE SHEATHED OR MAX. PURLIN SPACING = 6.25 FT.
MAX. UNBRACED BOTTOM CHORD LENGTH = 10.00 FT OR RIGID CEILING DIRECTLY APPLIED.

ALL PITCH BREAKS AND PERIMETER CORNER JOINTS MUST BE LATERALLY RESTRAINED.

LOADING
TOTAL LOAD CASES: (5)

CHORDS

MEMB. FR-TO	MAX. FACTORED FORCE (LBS)	FACTORED VERT. LOAD (PLF) FROM	TO	LC1 MAX CSI (LC)	MAX. UNBRAC LENGTH
D- A	-211 / 0	0.0	0.0	0.13 (1)	7.81
A- B	-24 / 0	-124.4	-124.4	0.13 (1)	6.25
E- D	0 / 0	-163.7	-163.7	0.19 (1)	10.00
D- C	0 / 0	-39.2	-39.2	0.07 (3)	10.00

WEBS

MEMB. FR-TO	MAX. FACTORED FORCE (LBS)	MAX CSI (LC)

CANTILEVER ANALYSIS HAS BEEN CONSIDERED IN THIS DESIGN

DESIGN CRITERIA

SPECIFIED LOADS:

TOP CH.	LL	=	34.8	PSF
	DL	=	8.0	PSF
BOT CH.	LL	=	10.5	PSF
	DL	=	7.3	PSF
TOTAL LOAD		=	60.6	PSF

SPACING = 24.0 IN. C/C

THIS TRUSS IS DESIGNED FOR RESIDENTIAL OR SMALL BUILDING REQUIREMENTS OF PART 9, NBCC 2015

THIS DESIGN COMPLIES WITH:
- PART 9 OF BCBC 2018 , ABC 2019
- PART 9 OF OBC 2012 (2019 AMENDMENT)
- CSA 086-14
- TPIC 2014

DESIGN ASSUMPTIONS
-OVERHANG NOT TO BE ALTERED OR CUT OFF.

(55 % OF 48.1 P.S.F. G.S.L. PLUS 8.4 P.S.F. RAIN LOAD) EQUALS 34.8 P.S.F. SPECIFIED ROOF LIVE LOAD

ALLOWABLE DEFL.(LL)= L/360 (0.19")
CALCULATED VERT. DEFL.(LL) = L/ 999 (0.00")
ALLOWABLE DEFL.(TL)= L/360 (0.19")
CALCULATED VERT. DEFL.(TL) = L/ 999 (0.00")

CANTILEVER DEFLECTION:
ALLOWABLE DEFL.(LL)= L/120 (0.19")
CALCULATED VERT. DEFL.(LL) = L/ 999 (0.01")
ALLOWABLE DEFL.(TL)= L/120 (0.19")
CALCULATED VERT. DEFL.(TL) = L/ 999 (0.01")

CSI: TC=0.13/1.00 (A-D:1) , BC=0.19/1.00 (D-E:1) , WB=0.00/1.00 (n/a:0) , SSI=0.16/1.00 (D-E:1)

DOL LUMBER=1.00 NAIL=1.00 LS BEND=1.10 COMP=1.10 SHEAR=1.10 TENS= 1.10

COMPANION LIVE LOAD FACTOR = 1.00

TRUSS PLATE MANUFACTURER IS NOT RESPONSIBLE FOR QUALITY CONTROL IN THE TRUSS MANUFACTURING PLANT .

NAIL VALUES

PLATE	GRIP(DRY) (PSI) MAX	MIN	SHEAR (PLI) MAX	MIN	SECTION (PLI) MAX	MIN
MT20	650	371	1747	788	1987	1873

PLATE PLACEMENT TOL. = 0.250 inches

PLATE ROTATION TOL. = 5.0 Deg.

JSI GRIP= 0.17 (A) (INPUT = 0.90)
JSI METAL= 0.11 (A) (INPUT = 1.00)

LICENSED PROFESSIONAL ENGINEER
N.A. EL-MASRI
PROVINCE OF ONTARIO
Dec 16, 2020

READ ALL NOTES ON THIS PAGE AND ON ENGINEERING NOTE PAGE ENP-1. THIS NOTE PAGE IS AN INTEGRAL PART OF THIS DRAWING AS IT CONTAINS SPECIFICATIONS AND CRITERIA USED IN THE DESIGN OF THIS COMPONENT.

Town of East Gwillimbury
Building Standards Branch BCIN #16487

These plans have been reviewed for use with the corrections as noted. No other changes may be made without written approval of the Building Standards Branch. All work must comply with Zoning By-Law 2018-043, as amended, and the Ontario Building Code, as amended. These approved documents must be kept on site at all times. The building permit must be clearly posted on site at all times.

Discipline	Reviewer	BCIN	Date
Building Code	H. Authier	43236	2021-02-05
Sewage System			
Zoning			

KOTT

JOB NAME	TRUSS NAME	QUANTITY	PLY	JOB DESC.		DWG NO.
NE1220-120	T02	1	1	TRUSS DESC.	GREENPARK - TRINAR HALL - GLENWAY 7A ELE 3	Page 21 of 42

Version 8.420 S Oct 9 2020 MiTek Industries, Inc. Thu Dec 17 20:49:22 2020 Page 1
ID:qKv8nLSCtBps7zaDJTm7k2zFzGC-Q AJ7K2w6Ao4EAQ2M5RuNxnczWNAqAcU8R5zapy7y

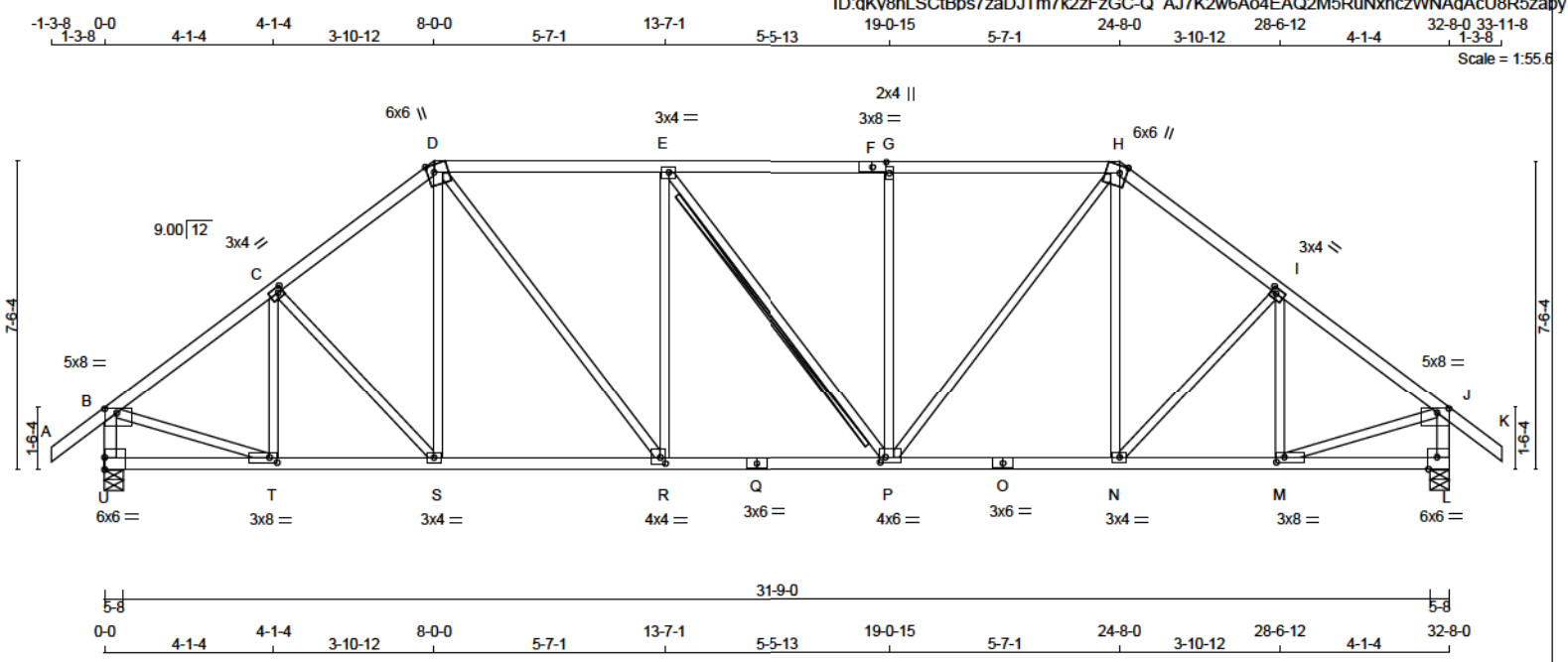

TOTAL WEIGHT = 151 lb

LUMBER
N. L. G. A. RULES

CHORDS	SIZE		LUMBER	DESCR.
A - D	2x4	DRY	No.2	SPF
D - F	2x4	DRY	No.2	SPF
F - H	2x4	DRY	No.2	SPF
H - K	2x4	DRY	No.2	SPF
U - B	2x4	DRY	No.2	SPF
L - J	2x4	DRY	No.2	SPF
U - Q	2x4	DRY	No.2	SPF
Q - O	2x4	DRY	No.2	SPF
O - L	2x4	DRY	No.2	SPF
ALL WEBS EXCEPT	2x3	DRY	No.2	SPF

DRY: SEASONED LUMBER.

PLATES (table is in inches)

JT	TYPE	PLATES	W	LEN	Y	X
B	TMVW-p	MT20	5.0	8.0	1.25	3.50
C	TMWW-t	MT20	3.0	4.0	1.50	1.50
D	TTWW+m	MT20	6.0	6.0	Edge	2.00
E	TMWW-t	MT20	3.0	4.0		
F	TS-t	MT20	3.0	8.0	1.50	4.00
G	TMW+w	MT20	2.0	4.0		
H	TTWW+m	MT20	6.0	6.0	Edge	2.00
I	TMWW-t	MT20	3.0	4.0	1.50	1.50
J	TMVW-p	MT20	5.0	8.0	1.25	3.50
L	BMV1-t	MT20	6.0	6.0	Edge	2.50
M	BMWW-t	MT20	3.0	8.0	1.50	2.25
N	BMWW-t	MT20	3.0	4.0		
O	BS-t	MT20	3.0	6.0		
P	BMWWW-t	MT20	4.0	6.0	1.50	1.50
Q	BS-t	MT20	3.0	6.0		
R	BMWW-t	MT20	4.0	4.0	1.75	1.50
S	BMWW-t	MT20	3.0	4.0		
T	BMWW-t	MT20	3.0	8.0	1.50	2.25
U	BMV1-t	MT20	6.0	6.0	3.50	

Edge - INDICATES REFERENCE CORNER OF PLATE TOUCHES EDGE OF CHORD.

DIMENSIONS, SUPPORTS AND LOADINGS SPECIFIED BY FABRICATOR TO BE VERIFIED BY BUILDING DESIGNER

BEARINGS

JT	FACTORED GROSS REACTION VERT	HORZ	MAXIMUM GROSS REACTION DOWN	HORZ	UPLIFT	INPUT BRG IN-SX	REQRD BRG IN-SX
U	2845	0	2845	0	0	5-8	5-8
L	2845	0	2845	0	0	5-8	5-8

UNFACTORED REACTIONS

JT	1ST LCASE COMBINED	SNOW	MAX./MIN. COMPONENT REACTIONS LIVE	PERM.LIVE	WIND	DEAD	SOIL
U	2098	1233 / 0	343 / 0	0 / 0	0 / 0	522 / 0	0 / 0
L	2098	1233 / 0	343 / 0	0 / 0	0 / 0	522 / 0	0 / 0

BEARING MATERIAL TO BE SPF NO.2 OR BETTER AT JOINT(S) U, L

BRACING
TOP CHORD TO BE SHEATHED OR MAX. PURLIN SPACING = 3.23 FT.
MAX. UNBRACED BOTTOM CHORD LENGTH = 10.00 FT OR RIGID CEILING DIRECTLY APPLIED.

ALL PITCH BREAKS AND PERIMETER CORNER JOINTS MUST BE LATERALLY RESTRAINED.

2x4 DRY SPF No.2 T-BRACE AT E-P

FASTEN T AND I-BRACES TO NARROW EDGE OF WEB WITH ONE ROW PER PLY OF 3" COMMON WIRE NAILS @ 6" O.C. WITH 3" MINIMUM END DISTANCE. BRACE MUST COVER 90% OF WEB LENGTH.

END VERTICAL(S) MUST BE SHEATHED OR HAVE BRACES AS INDICATED IN THE MAX. UNBRACED LENGTH COLUMN OF THE TABLE BELOW

LOADING
TOTAL LOAD CASES: (4)

CHORDS

MEMB. FR-TO	MAX. FACTORED FORCE (LBS)	FACTORED VERT. LOAD (PLF) FROM	TO	LC1	MAX CSI (LC)	MAX. UNBRAC LENGTH
A- B	0 / 51	-124.4	-124.4	0.17 (1)	10.00	
B- C	-2851 / 0	-124.4	-124.4	0.47 (1)	3.69	
C- D	-2852 / 0	-124.4	-124.4	0.46 (1)	3.69	
D- E	-2999 / 0	-124.4	-124.4	0.76 (1)	3.23	
E- F	-2997 / 0	-124.4	-124.4	0.75 (1)	3.23	
F- G	-2997 / 0	-124.4	-124.4	0.75 (1)	3.23	
G- H	-2997 / 0	-124.4	-124.4	0.75 (1)	3.25	
H- I	-2852 / 0	-124.4	-124.4	0.46 (1)	3.69	
I- J	-2851 / 0	-124.4	-124.4	0.47 (1)	3.69	
J- K	0 / 51	-124.4	-124.4	0.17 (1)	10.00	
U- B	-2773 / 0	0.0	0.0	0.29 (1)	5.17	
L- J	-2773 / 0	0.0	0.0	0.29 (1)	5.17	
U- T	0 / 0	-39.2	-39.2	0.11 (3)	10.00	
T- S	0 / 2308	-39.2	-39.2	0.48 (1)	10.00	
S- R	0 / 2252	-39.2	-39.2	0.49 (1)	10.00	
R- Q	0 / 2999	-39.2	-39.2	0.61 (1)	10.00	
Q- P	0 / 2999	-39.2	-39.2	0.61 (1)	10.00	
P- O	0 / 2253	-39.2	-39.2	0.48 (1)	10.00	
O- N	0 / 2253	-39.2	-39.2	0.48 (1)	10.00	
N- M	0 / 2307	-39.2	-39.2	0.48 (1)	10.00	
M- L	0 / 0	-39.2	-39.2	0.11 (3)	10.00	

WEBS

MEMB. FR-TO	MAX. FACTORED FORCE (LBS)	MAX CSI (LC)
T- C	-514 / 0	0.16 (1)
C- S	-86 / 0	0.05 (1)
S- D	0 / 290	0.07 (2)
D- R	0 / 1219	0.27 (1)
R- E	-744 / 0	0.76 (1)
E- P	-3 / 0	0.00 (1)
P- G	-743 / 0	0.76 (1)
P- H	0 / 1216	0.27 (1)
N- H	0 / 292	0.07 (2)
N- I	-86 / 0	0.05 (1)
M- I	-515 / 0	0.16 (1)
B- T	0 / 2403	0.54 (1)
M- J	0 / 2403	0.54 (1)

DESIGN CRITERIA

SPECIFIED LOADS:
TOP CH. LL = 34.8 PSF
DL = 8.0 PSF
BOT CH. LL = 10.5 PSF
DL = 7.3 PSF
TOTAL LOAD = 60.6 PSF

SPACING = 24.0 IN. C/C

LOADING IN FLAT SECTION BASED ON A SLOPE OF 2.00/12 MINIMUM

THIS TRUSS IS DESIGNED FOR RESIDENTIAL OR SMALL BUILDING REQUIREMENTS OF PART 9, NBCC 2015

THIS DESIGN COMPLIES WITH:
- PART 9 OF BCBC 2018 , ABC 2019
- PART 9 OF OBC 2012 (2019 AMENDMENT)
- CSA 086-14
- TPIC 2014

(55 % OF 48.1 P.S.F. G.S.L. PLUS 8.4 P.S.F. RAIN LOAD) EQUALS 34.8 P.S.F. SPECIFIED ROOF LIVE LOAD

ALLOWABLE DEFL.(LL)= L/360 (1.09")
CALCULATED VERT. DEFL.(LL) = L/ 999 (0.14")
ALLOWABLE DEFL.(TL)= L/360 (1.09")
CALCULATED VERT. DEFL.(TL) = L/ 999 (0.24")

CSI: TC=0.76/1.00 (D-E:1) , BC=0.61/1.00 (P-R:1) , WB=0.76/1.00 (E-R:1) , SSI=0.32/1.00 (D-E:1)

DOL LUMBER=1.00 NAIL=1.00 LS BEND=1.10 COMP=1.10 SHEAR=1.10 TENS= 1.10

COMPANION LIVE LOAD FACTOR = 1.00

TRUSS PLATE MANUFACTURER IS NOT RESPONSIBLE FOR QUALITY CONTROL IN THE TRUSS MANUFACTURING PLANT .

NAIL VALUES

PLATE	GRIP(DRY) (PSI) MAX	MIN	SHEAR (PLI) MAX	MIN	SECTION (PLI) MAX	MIN
MT20	650	371	1747	788	1987	1873

PLATE PLACEMENT TOL. = 0.250 inches

PLATE ROTATION TOL. = 5.0 Deg.

JSI GRIP= 0.90 (B) (INPUT = 0.90)
JSI METAL= 0.98 (Q) (INPUT = 1.00)

LICENSED PROFESSIONAL ENGINEER
N.A. EL-MASRI
PROVINCE OF ONTARIO
Dec 16, 2020

READ ALL NOTES ON THIS PAGE AND ON ENGINEERING NOTE PAGE ENP-1. THIS NOTE PAGE IS AN INTEGRAL PART OF THIS DRAWING AS IT CONTAINS SPECIFICATIONS AND CRITERIA USED IN THE DESIGN OF THIS COMPONENT.

Town of East Gwillimbury
Building Standards Branch BCIN #16487

These plans have been reviewed for use with the corrections as noted. No other changes may be made without written approval of the Building Standards Branch. All work must comply with Zoning By-Law 2018-043, as amended, and the Ontario Building Code, as amended. These approved documents must be kept on site at all times. The building permit must be clearly posted on site at all times.

Discipline	Reviewer	BCIN	Date
Building Code	H. Authier	43236	2021-02-05
Sewage System			
Zoning			

KOTT

JOB NAME	TRUSS NAME	QUANTITY	PLY	JOB DESC.		DRWG NO.
NE1220-120	T03	1	1	TRUSS DESC.	GREENPARK - TRINAR HALL - GLENWAY 7A ELE 3	Page 22 of 42

Version 8.420 S Oct 9 2020 MiTek Industries, Inc. Thu Dec 17 20:49:23 2020 Page 1
ID:qKv8nLSCtBps7zaDJTm7k2zFzGC-uAjhKq3YtUxxsJ?Fwoz7v9JniwkhPqAdN5rW6Gy7y

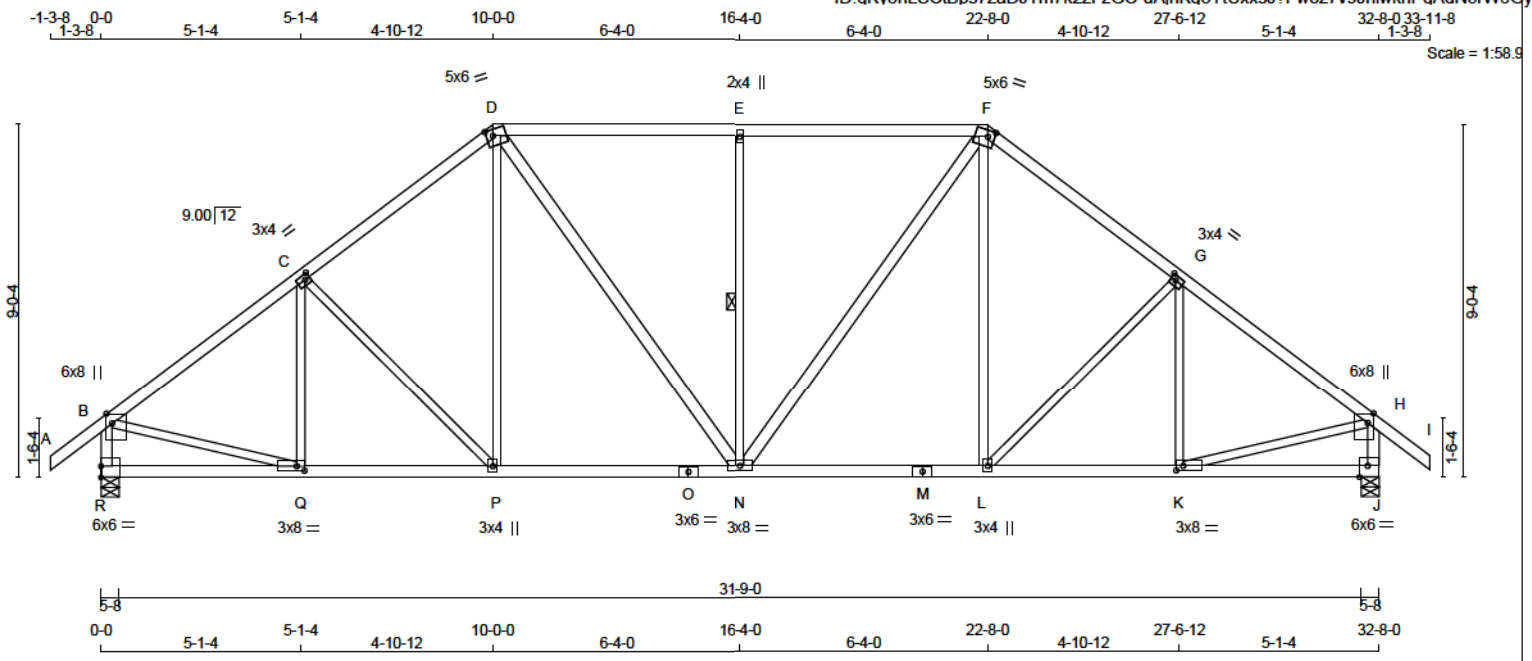

TOTAL WEIGHT = 158 lb

LUMBER
N. L. G. A. RULES

CHORDS	SIZE		LUMBER	DESCR.
A - D	2x4	DRY	No.2	SPF
D - F	2x4	DRY	No.2	SPF
F - I	2x4	DRY	No.2	SPF
R - B	2x4	DRY	No.2	SPF
J - H	2x4	DRY	No.2	SPF
R - O	2x4	DRY	No.2	SPF
O - M	2x4	DRY	No.2	SPF
M - J	2x4	DRY	No.2	SPF
ALL WEBS	2x3	DRY	No.2	SPF
EXCEPT				
D - N	2x4	DRY	No.2	SPF
N - F	2x4	DRY	No.2	SPF

DRY: SEASONED LUMBER.

PLATES (table is in inches)

JT	TYPE	PLATES	W	LEN	Y	X
B	TMVW+p	MT20	6.0	8.0	3.00	1.75
C	TMWW-t	MT20	3.0	4.0	1.50	1.50
D	TTWW-m	MT20	5.0	6.0	2.00	2.00
E	TMW+w	MT20	2.0	4.0		
F	TTWW-m	MT20	5.0	6.0	2.00	2.00
G	TMWW-t	MT20	3.0	4.0	1.50	1.50
H	TMVW+p	MT20	6.0	8.0	3.00	1.75
J	BMV1-t	MT20	6.0	6.0	Edge	2.50
K	BMWW-t	MT20	3.0	8.0	1.50	2.25
L	BMWW+t	MT20	3.0	4.0		
M	BS-t	MT20	3.0	6.0		
N	BMWWW-t	MT20	3.0	8.0		
O	BS-t	MT20	3.0	6.0		
P	BMWW+t	MT20	3.0	4.0		
Q	BMWW-t	MT20	3.0	8.0	1.50	2.25
R	BMV1-t	MT20	6.0	6.0	3.50	

Edge - INDICATES REFERENCE CORNER OF PLATE TOUCHES EDGE OF CHORD.

DIMENSIONS, SUPPORTS AND LOADINGS SPECIFIED BY FABRICATOR TO BE VERIFIED BY BUILDING DESIGNER

BEARINGS

JT	FACTORED GROSS REACTION VERT	HORZ	MAXIMUM GROSS REACTION DOWN	HORZ	FACTORED UPLIFT	INPUT BRG IN-SX	REQRD BRG IN-SX
R	2845	0	2845	0	0	5-8	5-8
J	2845	0	2845	0	0	5-8	5-8

UNFACTORED REACTIONS

JT	1ST LCASE COMBINED	SNOW	MAX./MIN. COMPONENT REACTIONS LIVE	PERM.LIVE	WIND	DEAD	SOIL
R	2098	1233 / 0	343 / 0	0 / 0	0 / 0	522 / 0	0 / 0
J	2098	1233 / 0	343 / 0	0 / 0	0 / 0	522 / 0	0 / 0

BEARING MATERIAL TO BE SPF NO.2 OR BETTER AT JOINT(S) R, J

BRACING
TOP CHORD TO BE SHEATHED OR MAX. PURLIN SPACING = 3.33 FT.
MAX. UNBRACED BOTTOM CHORD LENGTH = 10.00 FT OR RIGID CEILING DIRECTLY APPLIED.

ALL PITCH BREAKS AND PERIMETER CORNER JOINTS MUST BE LATERALLY RESTRAINED.

1 - 1x4 LATERAL BRACE(S) AT 1/ 2 LENGTH OF E-N. DBS = 20-0-0 . CBF = 121 LBS.

DBS = DIAGONAL BRACE SPACING (MAX). CBF = CUMULATIVE BRACING FORCE (PER BRACE). FASTEN LATERAL BRACE(S) USING (0.122"X3") SPIRAL NAILS : 1 NAIL FOR 2x3 BRACE(S), 2 FOR 1x4, 2x4, 2x5, 3 FOR 2x6, 4 FOR 2x8, 5 FOR 2x10, AND 6 FOR 2x12.

END VERTICAL(S) MUST BE SHEATHED OR HAVE BRACES AS INDICATED IN THE MAX. UNBRACED LENGTH COLUMN OF THE TABLE BELOW

LOADING
TOTAL LOAD CASES: (4)

CHORDS MEMB. FR-TO	MAX. FORCE (LBS)	FACTORED VERT. LOAD FROM (PLF)	TO	LC1 MAX CSI (LC)	MAX. UNBRAC LENGTH	WEBS MEMB. FR-TO	MAX. FORCE (LBS)	MAX CSI (LC)
A- B	0 / 51	-124.4	-124.4	0.17 (1)	10.00	Q- C	-348 / 36	0.15 (1)
B- C	-2934 / 0	-124.4	-124.4	0.55 (1)	3.57	C- P	-347 / 0	0.33 (1)
C- D	-2721 / 0	-124.4	-124.4	0.52 (1)	3.72	P- D	0 / 479	0.11 (2)
D- E	-2585 / 0	-124.4	-124.4	0.76 (1)	3.33	D- N	0 / 754	0.12 (1)
E- F	-2585 / 0	-124.4	-124.4	0.76 (1)	3.33	N- E	-965 / 0	0.51 (1)
F- G	-2721 / 0	-124.4	-124.4	0.52 (1)	3.72	N- F	0 / 754	0.12 (1)
G- H	-2934 / 0	-124.4	-124.4	0.55 (1)	3.57	L- F	0 / 479	0.11 (2)
H- I	0 / 51	-124.4	-124.4	0.17 (1)	10.00	L- G	-347 / 0	0.33 (1)
R- B	-2760 / 0	0.0	0.0	0.29 (1)	5.19	K- G	-348 / 36	0.15 (1)
J- H	-2760 / 0	0.0	0.0	0.29 (1)	5.19	B- Q	0 / 2446	0.55 (1)
						K- H	0 / 2446	0.55 (1)
R- Q	0 / 0	-39.2	-39.2	0.17 (3)	10.00			
Q- P	0 / 2382	-39.2	-39.2	0.52 (1)	10.00			
P- O	0 / 2142	-39.2	-39.2	0.53 (2)	10.00			
O- N	0 / 2142	-39.2	-39.2	0.53 (2)	10.00			
N- M	0 / 2142	-39.2	-39.2	0.53 (2)	10.00			
M- L	0 / 2142	-39.2	-39.2	0.53 (2)	10.00			
L- K	0 / 2382	-39.2	-39.2	0.52 (1)	10.00			
K- J	0 / 0	-39.2	-39.2	0.17 (3)	10.00			

[M][F]

DESIGN CRITERIA

SPECIFIED LOADS:

TOP CH.	LL	=	34.8	PSF
	DL	=	8.0	PSF
BOT CH.	LL	=	10.5	PSF
	DL	=	7.3	PSF
TOTAL LOAD		=	60.6	PSF

SPACING = 24.0 IN. C/C

LOADING IN FLAT SECTION BASED ON A SLOPE OF 2.00/12 MINIMUM

THIS TRUSS IS DESIGNED FOR RESIDENTIAL OR SMALL BUILDING REQUIREMENTS OF PART 9, NBCC 2015

THIS DESIGN COMPLIES WITH:
- PART 9 OF BCBC 2018 , ABC 2019
- PART 9 OF OBC 2012 (2019 AMENDMENT)
- CSA 086-14
- TPIC 2014

(55 % OF 48.1 P.S.F. G.S.L. PLUS 8.4 P.S.F. RAIN LOAD) EQUALS 34.8 P.S.F. SPECIFIED ROOF LIVE LOAD

ALLOWABLE DEFL.(LL)= L/360 (1.09")
CALCULATED VERT. DEFL.(LL) = L/ 999 (0.12")
ALLOWABLE DEFL.(TL)= L/360 (1.09")
CALCULATED VERT. DEFL.(TL) = L/ 999 (0.21")

CSI: TC=0.76/1.00 (D-E:1) , BC=0.53/1.00 (N-P:2) , WB=0.55/1.00 (B-Q:1) , SSI=0.38/1.00 (D-E:1)

DOL LUMBER=1.00 NAIL=1.00 LS BEND=1.10 COMP=1.10 SHEAR=1.10 TENS= 1.10

COMPANION LIVE LOAD FACTOR = 1.00

TRUSS PLATE MANUFACTURER IS NOT RESPONSIBLE FOR QUALITY CONTROL IN THE TRUSS MANUFACTURING PLANT .

NAIL VALUES

PLATE	GRIP(DRY) (PSI) MAX	MIN	SHEAR (PLI) MAX	MIN	SECTION (PLI) MAX	MIN
MT20	650	371	1747	788	1987	1873

PLATE PLACEMENT TOL. = 0.250 inches

PLATE ROTATION TOL. = 5.0 Deg.

JSI GRIP= 0.87 (F) (INPUT = 0.90)
JSI METAL= 0.69 (M) (INPUT = 1.00)

LICENSED PROFESSIONAL ENGINEER
N.A. EL-MASRI
PROVINCE OF ONTARIO
Dec 16, 2020

READ ALL NOTES ON THIS PAGE AND ON ENGINEERING NOTE PAGE ENP-1. THIS NOTE PAGE IS AN INTEGRAL PART OF THIS DRAWING AS IT CONTAINS SPECIFICATIONS AND CRITERIA USED IN THE DESIGN OF THIS COMPONENT.

Town of East Gwillimbury
Building Standards Branch BCIN #16487

These plans have been reviewed for use with the corrections as noted. No other changes may be made without written approval of the Building Standards Branch. All work must comply with Zoning By-Law 2018-043, as amended, and the Ontario Building Code, as amended. These approved documents must be kept on site at all times. The building permit must be clearly posted on site at all times.

Discipline	Reviewer	BCIN	Date
Building Code	H. Authier	43236	2021-02-05
Sewage System			
Zoning			

KOTT

JOB NAME	TRUSS NAME	QUANTITY	PLY	JOB DESC.		DRWG NO.
NE1220-120	T04	1	1	TRUSS DESC.	GREENPARK - TRINAR HALL - GLENWAY 7A ELE 3	

Version 8.420 S Oct 9 2020 MiTek Industries, Inc. Thu Dec 17 20:49:23 2020 Page 1
ID:qKy8nLSCtBps7zaDJTm7k2zFzGC-uAihKq3YtUxxsJ?Fwoz7v9JmewjuPq6dN5rW6Gy7y

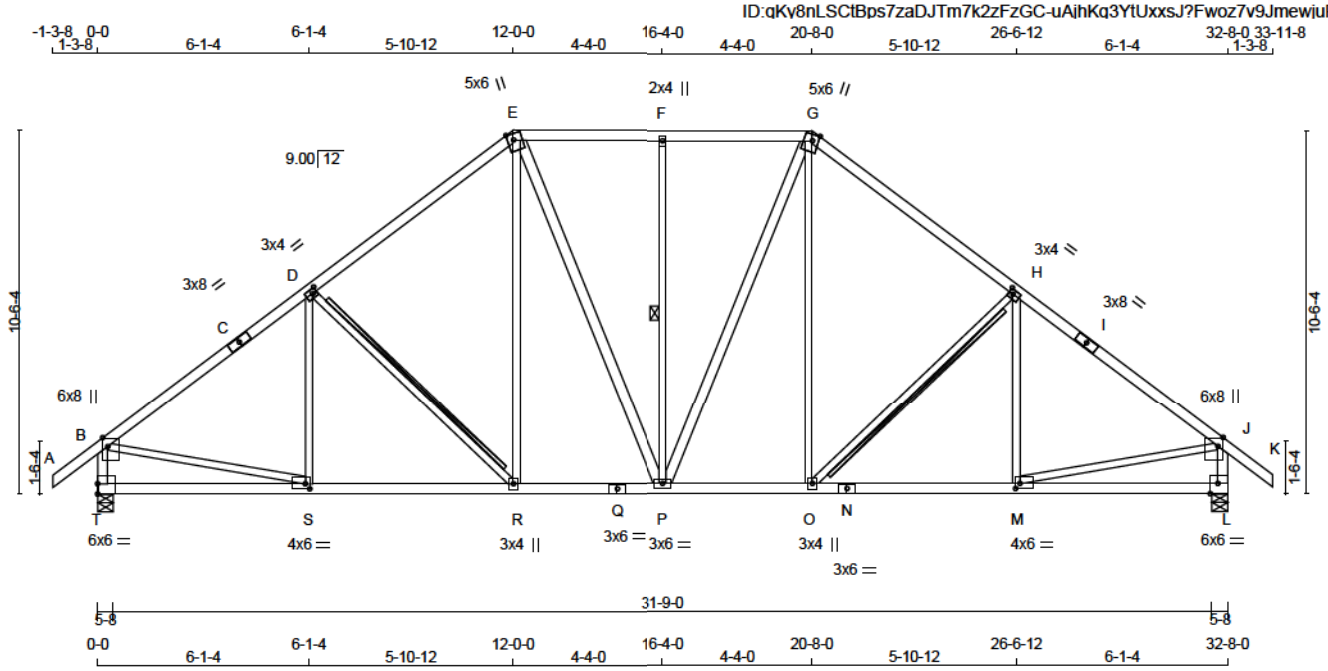

TOTAL WEIGHT = 168 lb

LUMBER
N. L. G. A. RULES

CHORDS	SIZE		LUMBER	DESCR.
A - C	2x4	DRY	No.2	SPF
C - E	2x4	DRY	No.2	SPF
E - G	2x4	DRY	No.2	SPF
G - I	2x4	DRY	No.2	SPF
I - K	2x4	DRY	No.2	SPF
T - B	2x4	DRY	No.2	SPF
L - J	2x4	DRY	No.2	SPF
T - Q	2x4	DRY	No.2	SPF
Q - N	2x4	DRY	No.2	SPF
N - L	2x4	DRY	No.2	SPF
ALL WEBS	2x3	DRY	No.2	SPF
EXCEPT				
E - P	2x4	DRY	No.2	SPF
P - G	2x4	DRY	No.2	SPF

DRY: SEASONED LUMBER.

PLATES (table is in inches)

JT	TYPE	PLATES	W	LEN	Y	X
B	TMVW+p	MT20	6.0	8.0	3.00	1.75
C	TS-t	MT20	3.0	8.0		
D	TMWW-t	MT20	3.0	4.0	1.50	1.50
E	TTWW+m	MT20	5.0	6.0	Edge	2.00
F	TMW+w	MT20	2.0	4.0		
G	TTWW+m	MT20	5.0	6.0	Edge	2.00
H	TMWW-t	MT20	3.0	4.0	1.50	1.50
I	TS-t	MT20	3.0	8.0		
J	TMVW+p	MT20	6.0	8.0	3.00	1.75
L	BMV1-t	MT20	6.0	6.0	Edge	2.50
M	BMWW-t	MT20	4.0	6.0	1.75	1.50
N	BS-t	MT20	3.0	6.0		
O	BMWW+t	MT20	3.0	4.0		
P	BMWWW-t	MT20	3.0	6.0		
Q	BS-t	MT20	3.0	6.0		
R	BMWW+t	MT20	3.0	4.0		
S	BMWW-t	MT20	4.0	6.0	1.75	1.50
T	BMV1-t	MT20	6.0	6.0	3.50	

Edge - INDICATES REFERENCE CORNER OF PLATE TOUCHES EDGE OF CHORD.

DIMENSIONS, SUPPORTS AND LOADINGS SPECIFIED BY FABRICATOR TO BE VERIFIED BY BUILDING DESIGNER

BEARINGS

JT	FACTORED GROSS REACTION VERT	HORZ	MAXIMUM GROSS REACTION DOWN	HORZ	UPLIFT	FACTORED INPUT BRG IN-SX	REQRD BRG IN-SX
T	2845	0	2845	0	0	5-8	5-8
L	2845	0	2845	0	0	5-8	5-8

UNFACTORED REACTIONS

JT	1ST LCASE COMBINED	MAX./MIN. COMPONENT REACTIONS SNOW	LIVE	PERM.LIVE	WIND	DEAD	SOIL
T	2098	1233 / 0	343 / 0	0 / 0	0 / 0	522 / 0	0 / 0
L	2098	1233 / 0	343 / 0	0 / 0	0 / 0	522 / 0	0 / 0

BEARING MATERIAL TO BE SPF NO.2 OR BETTER AT JOINT(S) T, L

BRACING
TOP CHORD TO BE SHEATHED OR MAX. PURLIN SPACING = 3.19 FT.
MAX. UNBRACED BOTTOM CHORD LENGTH = 10.00 FT OR RIGID CEILING DIRECTLY APPLIED.

ALL PITCH BREAKS AND PERIMETER CORNER JOINTS MUST BE LATERALLY RESTRAINED.

1 - 1x4 LATERAL BRACE(S) AT 1/ 2 LENGTH OF F-P. DBS = 20-0-0 . CBF = 81 LBS.
2x4 DRY SPF No.2 T-BRACE AT D-R, H-O

DBS = DIAGONAL BRACE SPACING (MAX). CBF = CUMULATIVE BRACING FORCE (PER BRACE). FASTEN LATERAL BRACE(S) USING (0.122"X3") SPIRAL NAILS : 1 NAIL FOR 2x3 BRACE(S), 2 FOR 1x4, 2x4, 2x5, 3 FOR 2x6, 4 FOR 2x8, 5 FOR 2x10, AND 6 FOR 2x12.

FASTEN T AND I-BRACES TO NARROW EDGE OF WEB WITH ONE ROW PER PLY OF 3" COMMON WIRE NAILS @ 6" O.C. WITH 3" MINIMUM END DISTANCE. BRACE MUST COVER 90% OF WEB LENGTH.

END VERTICAL(S) MUST BE SHEATHED OR HAVE BRACES AS INDICATED IN THE MAX. UNBRACED LENGTH COLUMN OF THE TABLE BELOW

LOADING
TOTAL LOAD CASES: (4)

CHORDS

MEMB. FR-TO	MAX. FACTORED FORCE (LBS)	FACTORED VERT. LOAD (PLF) FROM	TO	LC1 MAX CSI (LC)	MAX. UNBRAC LENGTH
A- B	0 / 51	-124.4	-124.4	0.17 (1)	10.00
B- C	-2968 / 0	-124.4	-124.4	0.83 (1)	3.19
C- D	-2968 / 0	-124.4	-124.4	0.83 (1)	3.19
D- E	-2547 / 0	-124.4	-124.4	0.73 (1)	3.52
E- F	-2165 / 0	-124.4	-124.4	0.34 (1)	4.30
F- G	-2165 / 0	-124.4	-124.4	0.34 (1)	4.30
G- H	-2547 / 0	-124.4	-124.4	0.73 (1)	3.52
H- I	-2968 / 0	-124.4	-124.4	0.83 (1)	3.19
I- J	-2968 / 0	-124.4	-124.4	0.83 (1)	3.19
J- K	0 / 51	-124.4	-124.4	0.17 (1)	10.00
T- B	-2748 / 0	0.0	0.0	0.29 (1)	5.20
L- J	-2748 / 0	0.0	0.0	0.29 (1)	5.20
T- S	0 / 0	-39.2	-39.2	0.29 (3)	10.00
S- R	0 / 2417	-39.2	-39.2	0.58 (2)	10.00
R- Q	0 / 1997	-39.2	-39.2	0.43 (1)	10.00
Q- P	0 / 1997	-39.2	-39.2	0.43 (1)	10.00
P- O	0 / 1997	-39.2	-39.2	0.43 (1)	10.00
O- N	0 / 2417	-39.2	-39.2	0.58 (2)	10.00
N- M	0 / 2417	-39.2	-39.2	0.58 (2)	10.00
M- L	0 / 0	-39.2	-39.2	0.29 (3)	10.00

WEBS

MEMB. FR-TO	MAX. FACTORED FORCE (LBS)	MAX CSI (LC)
S- D	-203 / 146	0.12 (1)
D- R	-592 / 0	0.31 (1)
R- E	0 / 610	0.14 (1)
E- P	0 / 432	0.07 (1)
P- F	-646 / 0	0.50 (1)
P- G	0 / 432	0.07 (1)
O- G	0 / 610	0.14 (1)
O- H	-592 / 0	0.31 (1)
M- H	-203 / 146	0.12 (1)
B- S	0 / 2462	0.55 (1)
M- J	0 / 2462	0.55 (1)

DESIGN CRITERIA

SPECIFIED LOADS:

TOP CH.	LL	=	34.8	PSF
	DL	=	8.0	PSF
BOT CH.	LL	=	10.5	PSF
	DL	=	7.3	PSF
TOTAL LOAD		=	60.6	PSF

SPACING = 24.0 IN. C/C

LOADING IN FLAT SECTION BASED ON A SLOPE OF 2.00/12 MINIMUM

THIS TRUSS IS DESIGNED FOR RESIDENTIAL OR SMALL BUILDING REQUIREMENTS OF PART 9, NBCC 2015

THIS DESIGN COMPLIES WITH:
- PART 9 OF BCBC 2018 , ABC 2019
- PART 9 OF OBC 2012 (2019 AMENDMENT)
- CSA 086-14
- TPIC 2014

(55 % OF 48.1 P.S.F. G.S.L. PLUS 8.4 P.S.F. RAIN LOAD) EQUALS 34.8 P.S.F. SPECIFIED ROOF LIVE LOAD

ALLOWABLE DEFL.(LL)= L/360 (1.09")
CALCULATED VERT. DEFL.(LL) = L/ 999 (0.11")
ALLOWABLE DEFL.(TL)= L/360 (1.09")
CALCULATED VERT. DEFL.(TL) = L/ 999 (0.19")

CSI: TC=0.83/1.00 (H-J:1) , BC=0.58/1.00 (R-S:2) , WB=0.55/1.00 (B-S:1) , SSI=0.29/1.00 (H-J:1)

DOL LUMBER=1.00 NAIL=1.00 LS BEND=1.10 COMP=1.10 SHEAR=1.10 TENS= 1.10

COMPANION LIVE LOAD FACTOR = 1.00

TRUSS PLATE MANUFACTURER IS NOT RESPONSIBLE FOR QUALITY CONTROL IN THE TRUSS MANUFACTURING PLANT .

NAIL VALUES

PLATE	GRIP(DRY) (PSI) MAX	MIN	SHEAR (PLI) MAX	MIN	SECTION (PLI) MAX	MIN
MT20	650	371	1747	788	1987	1873

PLATE PLACEMENT TOL. = 0.250 inches

PLATE ROTATION TOL. = 5.0 Deg.

JSI GRIP= 0.88 (P) (INPUT = 0.90)
JSI METAL= 0.71 (N) (INPUT = 1.00)

LICENSED PROFESSIONAL ENGINEER
N.A. EL-MASRI
PROVINCE OF ONTARIO
Dec 16, 2020

READ ALL NOTES ON THIS PAGE AND ON ENGINEERING NOTE PAGE ENP-1. THIS NOTE PAGE IS AN INTEGRAL PART OF THIS DRAWING AS IT CONTAINS SPECIFICATIONS AND CRITERIA USED IN THE DESIGN OF THIS COMPONENT.

Town of East Gwillimbury
Building Standards Branch BCIN #16487

These plans have been reviewed for use with the corrections as noted. No other changes may be made without written approval of the Building Standards Branch. All work must comply with Zoning By-Law 2018-043, as amended, and the Ontario Building Code, as amended. These approved documents must be kept on site at all times. The building permit must be clearly posted on site at all times.

Discipline	Reviewer	BCIN	Date
Building Code	H. Authier	43236	2021-02-05
Sewage System			
Zoning			

KOTT

JOB NAME	TRUSS NAME	QUANTITY	PLY	JOB DESC.		DWG NO.
NE1220-120	T11	1	1	TRUSS DESC.	GREENPARK - TRINAR HALL - GLENWAY 7A ELE 3	

Version 8.420 S Oct 9 2020 MiTek Industries, Inc. Thu Dec 17 20:49:24 2020 Page 1
ID:qKv8nLSCtBps7zaDJTm7k2zFzGC-MMH3Y03Aen3oTTaRUWUMSMs4IKBA8F9mcla4eiy7y

Scale = 1:46.9

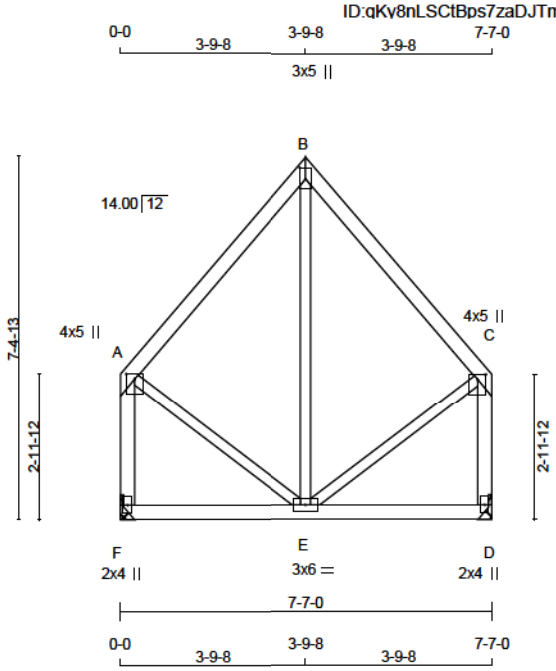

TOTAL WEIGHT = 41 lb

LUMBER
N. L. G. A. RULES

CHORDS	SIZE		LUMBER	DESCR.
A - B	2x4	DRY	No.2	SPF
B - C	2x4	DRY	No.2	SPF
F - A	2x4	DRY	No.2	SPF
D - C	2x4	DRY	No.2	SPF
F - D	2x4	DRY	No.2	SPF
ALL WEBS EXCEPT	2x3	DRY	No.2	SPF

DRY: SEASONED LUMBER.

PLATES (table is in inches)

JT	TYPE	PLATES	W	LEN	Y	X
A	TMVW+p	MT20	4.0	5.0	1.25	2.00
B	TTW+p	MT20	3.0	5.0	2.75	1.50
C	TMVW+p	MT20	4.0	5.0	1.25	2.00
D	BMV1+p	MT20	2.0	4.0		
E	BMWWW-t	MT20	3.0	6.0		
F	BMV1+p	MT20	2.0	4.0		

DIMENSIONS, SUPPORTS AND LOADINGS SPECIFIED BY FABRICATOR TO BE VERIFIED BY BUILDING DESIGNER

BEARINGS

JT	FACTORED GROSS REACTION VERT	HORZ	MAXIMUM GROSS REACTION DOWN	HORZ	UPLIFT	INPUT BRG IN-SX	REQRD BRG IN-SX
F	621	0	621	0	0	MECHANICAL	
D	621	0	621	0	0	MECHANICAL	

A SUITABLE HANGER/MECHANICAL CONNECTION IS REQUIRED AT JOINT F, D. MINIMUM BEARING LENGTH AT JOINT F = 1-8, JOINT D = 1-8.

UNFACTORED REACTIONS

JT	1ST LCASE COMBINED	MAX./MIN. COMPONENT REACTIONS SNOW	LIVE	PERM.LIVE	WIND	DEAD	SOIL
F	460	264 / 0	80 / 0	0 / 0	0 / 0	116 / 0	0 / 0
D	460	264 / 0	80 / 0	0 / 0	0 / 0	116 / 0	0 / 0

BRACING
TOP CHORD TO BE SHEATHED OR MAX. PURLIN SPACING = 6.25 FT.
MAX. UNBRACED BOTTOM CHORD LENGTH = 10.00 FT OR RIGID CEILING DIRECTLY APPLIED.

ALL PITCH BREAKS AND PERIMETER CORNER JOINTS MUST BE LATERALLY RESTRAINED.

LOADING
TOTAL LOAD CASES: (4)

CHORDS

MEMB. FR-TO	MAX. FACTORED FORCE (LBS)	FACTORED VERT. LOAD (PLF) FROM	TO	LC1 MAX CSI (LC)	MAX. UNBRAC LENGTH
A- B	-271 / 0	-124.4	-124.4	0.23 (1)	6.25
B- C	-271 / 0	-124.4	-124.4	0.23 (1)	6.25
F- A	-564 / 0	0.0	0.0	0.09 (1)	7.81
D- C	-564 / 0	0.0	0.0	0.09 (1)	7.81
F- E	0 / 0	-39.2	-39.2	0.13 (3)	10.00
E- D	0 / 0	-39.2	-39.2	0.13 (3)	10.00

WEBS

MEMB. FR-TO	MAX. FACTORED FORCE (LBS)	MAX CSI (LC)
E- B	-60 / 119	0.05 (1)
A- E	0 / 214	0.05 (1)
E- C	0 / 214	0.05 (1)

DESIGN CRITERIA [M][F]

SPECIFIED LOADS:

TOP CH.	LL	=	34.8	PSF
	DL	=	8.0	PSF
BOT CH.	LL	=	10.5	PSF
	DL	=	7.3	PSF
TOTAL LOAD		=	60.6	PSF

SPACING = 24.0 IN. C/C

THIS TRUSS IS DESIGNED FOR RESIDENTIAL OR SMALL BUILDING REQUIREMENTS OF PART 9, NBCC 2015

THIS DESIGN COMPLIES WITH:
- PART 9 OF BCBC 2018 , ABC 2019
- PART 9 OF OBC 2012 (2019 AMENDMENT)
- CSA 086-14
- TPIC 2014

(55 % OF 48.1 P.S.F. G.S.L. PLUS 8.4 P.S.F. RAIN LOAD) EQUALS 34.8 P.S.F. SPECIFIED ROOF LIVE LOAD

ALLOWABLE DEFL.(LL)= L/360 (0.25")
CALCULATED VERT. DEFL.(LL) = L/ 999 (0.01")
ALLOWABLE DEFL.(TL)= L/360 (0.25")
CALCULATED VERT. DEFL.(TL) = L/ 999 (0.01")

CSI: TC=0.23/1.00 (B-C:1) , BC=0.13/1.00 (E-F:3) , WB=0.05/1.00 (B-E:1) , SSI=0.12/1.00 (B-C:1)

DOL LUMBER=1.00 NAIL=1.00 LS BEND=1.10 COMP=1.10 SHEAR=1.10 TENS= 1.10

COMPANION LIVE LOAD FACTOR = 1.00

TRUSS PLATE MANUFACTURER IS NOT RESPONSIBLE FOR QUALITY CONTROL IN THE TRUSS MANUFACTURING PLANT .

NAIL VALUES

PLATE	GRIP(DRY) (PSI) MAX	MIN	SHEAR (PLI) MAX	MIN	SECTION (PLI) MAX	MIN
MT20	650	371	1747	788	1987	1873

PLATE PLACEMENT TOL. = 0.250 inches

PLATE ROTATION TOL. = 5.0 Deg.

JSI GRIP= 0.38 (E) (INPUT = 0.90)
JSI METAL= 0.17 (A) (INPUT = 1.00)

LICENSED PROFESSIONAL ENGINEER
N.A. EL-MASRI
PROVINCE OF ONTARIO
Dec 16, 2020

READ ALL NOTES ON THIS PAGE AND ON ENGINEERING NOTE PAGE ENP-1. THIS NOTE PAGE IS AN INTEGRAL PART OF THIS DRAWING AS IT CONTAINS SPECIFICATIONS AND CRITERIA USED IN THE DESIGN OF THIS COMPONENT.

Town of East Gwillimbury
Building Standards Branch BCIN #16487

These plans have been reviewed for use with the corrections as noted. No other changes may be made without written approval of the Building Standards Branch. All work must comply with Zoning By-Law 2018-043, as amended, and the Ontario Building Code, as amended. These approved documents must be kept on site at all times. The building permit must be clearly posted on site at all times.

Discipline	Reviewer	BCIN	Date
Building Code	H. Authier	43236	2021-02-05
Sewage System			
Zoning			

KOTT

JOB NAME	TRUSS NAME	QUANTITY	PLY	JOB DESC.		DWG NO.
NE1220-120	T12	6	1	TRUSS DESC.	GREENPARK - TRINAR HALL - GLENWAY 7A ELE 3	

Version 8.420 S Oct 9 2020 MiTek Industries, Inc. Thu Dec 17 20:49:24 2020 Page 1
ID:qKv8nLSCtBps7zaDJTm7k2zFzGC-MMH3Y03Aen3oTTaRUWUMSMs4yKAC8F?mcla4eiy7

Scale = 1:23.6

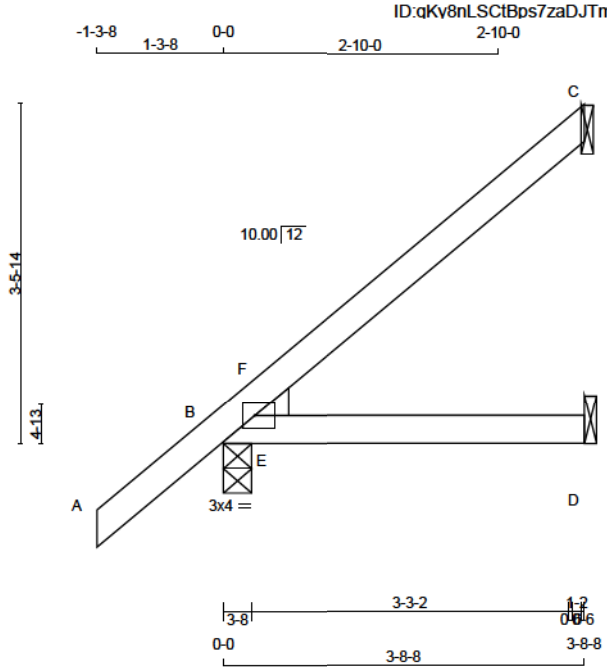

TOTAL WEIGHT = 6 X 12 = 74 lb

LUMBER
N. L. G. A. RULES

CHORDS	SIZE		LUMBER	DESCR.
A - C	2x4	DRY	No.2	SPF
B - D	2x4	DRY	No.2	SPF

DRY: SEASONED LUMBER.

PLATES (table is in inches)

JT	TYPE	PLATES	W	LEN	Y	X
B	TMBH1-I	MT20	3.0	4.0	1.50	1.50

DIMENSIONS, SUPPORTS AND LOADINGS SPECIFIED BY FABRICATOR TO BE VERIFIED BY BUILDING DESIGNER

BEARINGS

JT	FACTORED GROSS REACTION VERT	HORZ	MAXIMUM GROSS REACTION DOWN	HORZ	UPLIFT	FACTORED INPUT BRG IN-SX	REQRD BRG IN-SX	HEEL WEDGE
C	199	0	199	0	0	1-8	1-8	
B	476	0	476	0	0	3-8	1-8	2x4 L
D	105	0	110	0	0	1-8	1-8	

SEE MITEK STANDARD DETAIL B97791H FOR CONNECTION TO JOINT(S) C , D

UNFACTORED REACTIONS

JT	1ST LCASE COMBINED	MAX /MIN COMPONENT REACTIONS SNOW	LIVE	PERM.LIVE	WIND	DEAD	SOIL
C	139	106 / 0	5 / 0	0 / 0	0 / 0	28 / 0	0 / 0
B	343	226 / 0	39 / 0	0 / 0	0 / 0	79 / 0	0 / 0
D	86	23 / 0	34 / 0	0 / 0	0 / 0	29 / 0	0 / 0

BEARING MATERIAL TO BE SPF NO.2 OR BETTER AT JOINT(S) C, B

BRACING
TOP CHORD TO BE SHEATHED OR MAX. PURLIN SPACING = 6.25 FT.
MAX. UNBRACED BOTTOM CHORD LENGTH = 10.00 FT OR RIGID CEILING DIRECTLY APPLIED.

ALL PITCH BREAKS AND PERIMETER CORNER JOINTS MUST BE LATERALLY RESTRAINED.

LOADING
TOTAL LOAD CASES: (5)

CHORDS

MEMB. FR-TO	MAX. FACTORED FORCE (LBS)	FACTORED VERT. LOAD (PLF) FROM	TO	LC1 MAX CSI (LC)	MAX. UNBRAC LENGTH
A- B	0 / 53	-124.4	-124.4	0.18 (5)	10.00
B- F	-49 / 1	-124.4	-124.4	0.06 (3)	6.25
F- C	0 / 7	-124.4	-124.4	0.22 (1)	10.00
B- E	0 / 0	-39.2	-39.2	0.18 (1)	10.00
E- D	0 / 0	-39.2	-39.2	0.19 (1)	10.00

WEBS

MEMB. FR-TO	MAX. FACTORED FORCE (LBS)	MAX CSI (LC)
E- F	-233 / 44	0.00 (1)

CANTILEVER ANALYSIS HAS BEEN CONSIDERED IN THIS DESIGN

DESIGN CRITERIA

SPECIFIED LOADS:

TOP CH.	LL	=	34.8	PSF
	DL	=	8.0	PSF
BOT CH.	LL	=	10.5	PSF
	DL	=	7.3	PSF
TOTAL LOAD		=	60.6	PSF

SPACING = 24.0 IN. C/C

THIS TRUSS IS DESIGNED FOR RESIDENTIAL OR SMALL BUILDING REQUIREMENTS OF PART 9, NBCC 2015

THIS DESIGN COMPLIES WITH:
- PART 9 OF BCBC 2018 , ABC 2019
- PART 9 OF OBC 2012 (2019 AMENDMENT)
- CSA 086-14
- TPIC 2014

(55 % OF 48.1 P.S.F. G.S.L. PLUS 8.4 P.S.F. RAIN LOAD) EQUALS 34.8 P.S.F. SPECIFIED ROOF LIVE LOAD

ALLOWABLE DEFL.(LL)= L/360 (0.19")
CALCULATED VERT. DEFL.(LL) = L/ 999 (0.02")
ALLOWABLE DEFL.(TL)= L/360 (0.19")
CALCULATED VERT. DEFL.(TL) = L/ 999 (0.04")

CSI: TC=0.22/1.00 (C-F:1) , BC=0.19/1.00 (D-E:1) , WB=0.00/1.00 (E-F:1) , SSI=0.21/1.00 (B-E:1)

DOL LUMBER=1.00 NAIL=1.00 LS BEND=1.10 COMP=1.10 SHEAR=1.10 TENS= 1.10

COMPANION LIVE LOAD FACTOR = 1.00

TRUSS PLATE MANUFACTURER IS NOT RESPONSIBLE FOR QUALITY CONTROL IN THE TRUSS MANUFACTURING PLANT .

NAIL VALUES

PLATE	GRIP(DRY) (PSI) MAX	MIN	SHEAR (PLI) MAX	MIN	SECTION (PLI) MAX	MIN
MT20	650	371	1747	788	1987	1873

PLATE PLACEMENT TOL. = 0.250 inches

PLATE ROTATION TOL. = 5.0 Deg.

JSI GRIP= 0.47 (B) (INPUT = 0.90)
JSI METAL= 0.07 (B) (INPUT = 1.00)

LICENSED PROFESSIONAL ENGINEER
N.A. EL-MASRI
PROVINCE OF ONTARIO
Dec 16, 2020

READ ALL NOTES ON THIS PAGE AND ON ENGINEERING NOTE PAGE ENP-1. THIS NOTE PAGE IS AN INTEGRAL PART OF THIS DRAWING AS IT CONTAINS SPECIFICATIONS AND CRITERIA USED IN THE DESIGN OF THIS COMPONENT.

Town of East Gwillimbury
Building Standards Branch BCIN #16487

These plans have been reviewed for use with the corrections as noted. No other changes may be made without written approval of the Building Standards Branch. All work must comply with Zoning By-Law 2018-043, as amended, and the Ontario Building Code, as amended. These approved documents must be kept on site at all times. The building permit must be clearly posted on site at all times.

Discipline	Reviewer	BCIN	Date
Building Code	H. Authier	43236	2021-02-05
Sewage System			
Zoning			

KOTT

JOB NAME	TRUSS NAME	QUANTITY	PLY	JOB DESC.		DWG NO.
NE1220-120	T13	4	1	TRUSS DESC.	GREENPARK - TRINAR HALL - GLENWAY 7A ELE 3	

Version 8.420 S Oct 9 2020 MiTek Industries, Inc. Thu Dec 17 20:49:25 2020 Page 1
ID:qKv8nLSCtBps7zaDJTm7k2zFzGC-qZrSIM4pP5Bf5d9d1D?b?aPArkTHtiFwqPKdB8y7y

Scale = 1:23.4

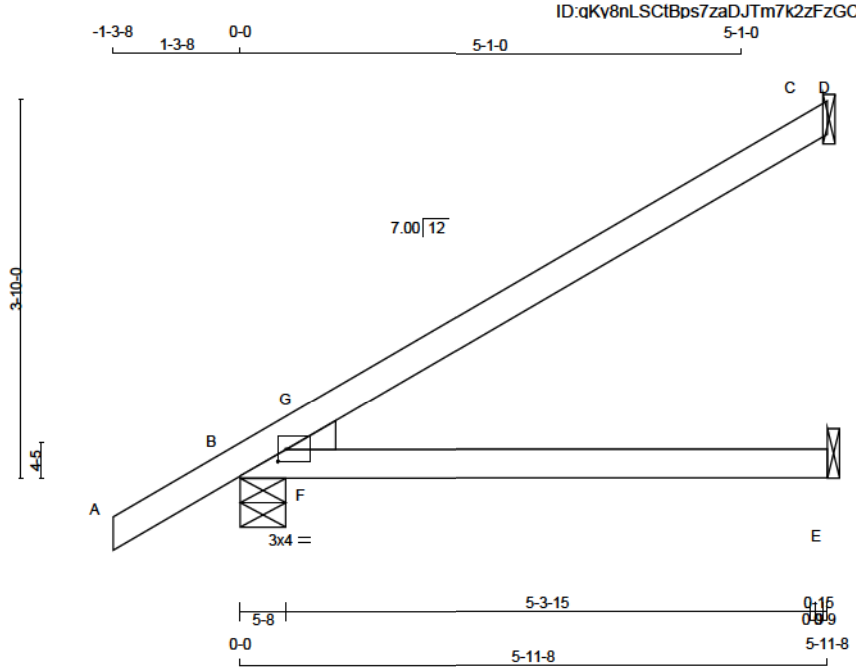

TOTAL WEIGHT = 4 X 17 = 69 lb

LUMBER
N. L. G. A. RULES

CHORDS	SIZE		LUMBER	DESCR.
A - D	2x4	DRY	No.2	SPF
B - E	2x4	DRY	2100F 1.8E	SPF

DRY: SEASONED LUMBER.

PLATES (table is in inches)

JT	TYPE	PLATES	W	LEN	Y	X
B	TMBH1-I	MT20	3.0	4.0	1.50	1.00

DIMENSIONS, SUPPORTS AND LOADINGS SPECIFIED BY FABRICATOR TO BE VERIFIED BY BUILDING DESIGNER

BEARINGS

JT	FACTORED GROSS REACTION VERT	HORZ	MAXIMUM GROSS REACTION DOWN	HORZ	UPLIFT	INPUT BRG IN-SX	REQRD BRG IN-SX	HEEL WEDGE
B	652	0	652	0	0	5-8	1-8	2x4 L
E	169	0	178	0	0	1-8	1-8	
C	314	0	314	0	0	1-8	1-8	

SEE MITEK STANDARD DETAIL B97791H FOR CONNECTION TO JOINT(S) E , C

UNFACTORED REACTIONS

JT	1ST LCASE COMBINED	MAX /MIN COMPONENT REACTIONS SNOW	LIVE	PERM.LIVE	WIND	DEAD	SOIL
B	474	299 / 0	62 / 0	0 / 0	0 / 0	112 / 0	0 / 0
E	139	38 / 0	55 / 0	0 / 0	0 / 0	47 / 0	0 / 0
C	220	165 / 0	8 / 0	0 / 0	0 / 0	47 / 0	0 / 0

BEARING MATERIAL TO BE SPF NO.2 OR BETTER AT JOINT(S) B

BRACING
TOP CHORD TO BE SHEATHED OR MAX. PURLIN SPACING = 6.25 FT.
MAX. UNBRACED BOTTOM CHORD LENGTH = 10.00 FT OR RIGID CEILING DIRECTLY APPLIED.

ALL PITCH BREAKS AND PERIMETER CORNER JOINTS MUST BE LATERALLY RESTRAINED.

LOADING
TOTAL LOAD CASES: (4)

CHORDS

MEMB. FR-TO	MAX. FACTORED FORCE (LBS)	FACTORED VERT. LOAD (PLF) FROM	TO	LC1 MAX CSI (LC)	MAX. UNBRAC LENGTH
A- B	0 / 41	-124.4	-124.4	0.16 (1)	10.00
B- G	-59 / 32	-124.4	-124.4	0.12 (3)	6.25
G- C	-4 / 8	-124.4	-124.4	0.53 (1)	10.00
C- D	-1 / 0	-20.0	-20.0	0.00 (4)	10.00
B- F	0 / 0	-39.2	-39.2	0.31 (1)	10.00
F- E	0 / 0	-39.2	-39.2	0.33 (1)	10.00

WEBS

MEMB. FR-TO	MAX. FACTORED FORCE (LBS)	MAX CSI (LC)
F- G	-432 / 66	0.00 (1)

DESIGN CRITERIA

SPECIFIED LOADS:

TOP CH.	LL	=	34.8	PSF
	DL	=	8.0	PSF
BOT CH.	LL	=	10.5	PSF
	DL	=	7.3	PSF
TOTAL LOAD		=	60.6	PSF

SPACING = 24.0 IN. C/C

THIS TRUSS IS DESIGNED FOR RESIDENTIAL OR SMALL BUILDING REQUIREMENTS OF PART 9, NBCC 2015

THIS DESIGN COMPLIES WITH:
- PART 9 OF BCBC 2018 , ABC 2019
- PART 9 OF OBC 2012 (2019 AMENDMENT)
- CSA 086-14
- TPIC 2014

(55 % OF 48.1 P.S.F. G.S.L. PLUS 8.4 P.S.F. RAIN LOAD) EQUALS 34.8 P.S.F. SPECIFIED ROOF LIVE LOAD

ALLOWABLE DEFL.(LL)= L/360 (0.20")
CALCULATED VERT. DEFL.(LL) = L/ 648 (0.11")
ALLOWABLE DEFL.(TL)= L/360 (0.20")
CALCULATED VERT. DEFL.(TL) = L/ 377 (0.19")

CSI: TC=0.53/1.00 (C-G:1) , BC=0.33/1.00 (E-F:1) , WB=0.00/1.00 (F-G:1) , SSI=0.39/1.00 (B-F:1)

DOL LUMBER=1.00 NAIL=1.00 LS BEND=1.10 COMP=1.10 SHEAR=1.10 TENS= 1.10

COMPANION LIVE LOAD FACTOR = 1.00

TRUSS PLATE MANUFACTURER IS NOT RESPONSIBLE FOR QUALITY CONTROL IN THE TRUSS MANUFACTURING PLANT .

NAIL VALUES

PLATE	GRIP(DRY) (PSI) MAX	MIN	SHEAR (PLI) MAX	MIN	SECTION (PLI) MAX	MIN
MT20	650	371	1747	788	1987	1873

PLATE PLACEMENT TOL. = 0.250 inches

PLATE ROTATION TOL. = 5.0 Deg.

JSI GRIP= 0.84 (B) (INPUT = 0.90)
JSI METAL= 0.09 (B) (INPUT = 1.00)

LICENSED PROFESSIONAL ENGINEER
N.A. EL-MASRI
PROVINCE OF ONTARIO
Dec 16, 2020

READ ALL NOTES ON THIS PAGE AND ON ENGINEERING NOTE PAGE ENP-1. THIS NOTE PAGE IS AN INTEGRAL PART OF THIS DRAWING AS IT CONTAINS SPECIFICATIONS AND CRITERIA USED IN THE DESIGN OF THIS COMPONENT.

Town of East Gwillimbury
Building Standards Branch BCIN #16487

These plans have been reviewed for use with the corrections as noted. No other changes may be made without written approval of the Building Standards Branch. All work must comply with Zoning By-Law 2018-043, as amended, and the Ontario Building Code, as amended. These approved documents must be kept on site at all times. The building permit must be clearly posted on site at all times.

Discipline	Reviewer	BCIN	Date
Building Code	H. Authier	43236	2021-02-05
Sewage System			
Zoning			

KOTT

JOB NAME	TRUSS NAME	QUANTITY	PLY	JOB DESC.		DRWG NO.
NE1220-120	T20	1	1	TRUSS DESC.	GREENPARK - TRINAR HALL - GLENWAY 7A ELE 3	

Version 8.420 S Oct 9 2020 MiTek Industries, Inc. Thu Dec 17 20:49:25 2020 Page 1
ID:qKv8nLSCtBps7zaDJTm7k2zFzGC-qZrSIM4pP5Bf5d9d1D?b?aP3qkMUtW8wqPKdB8y7y

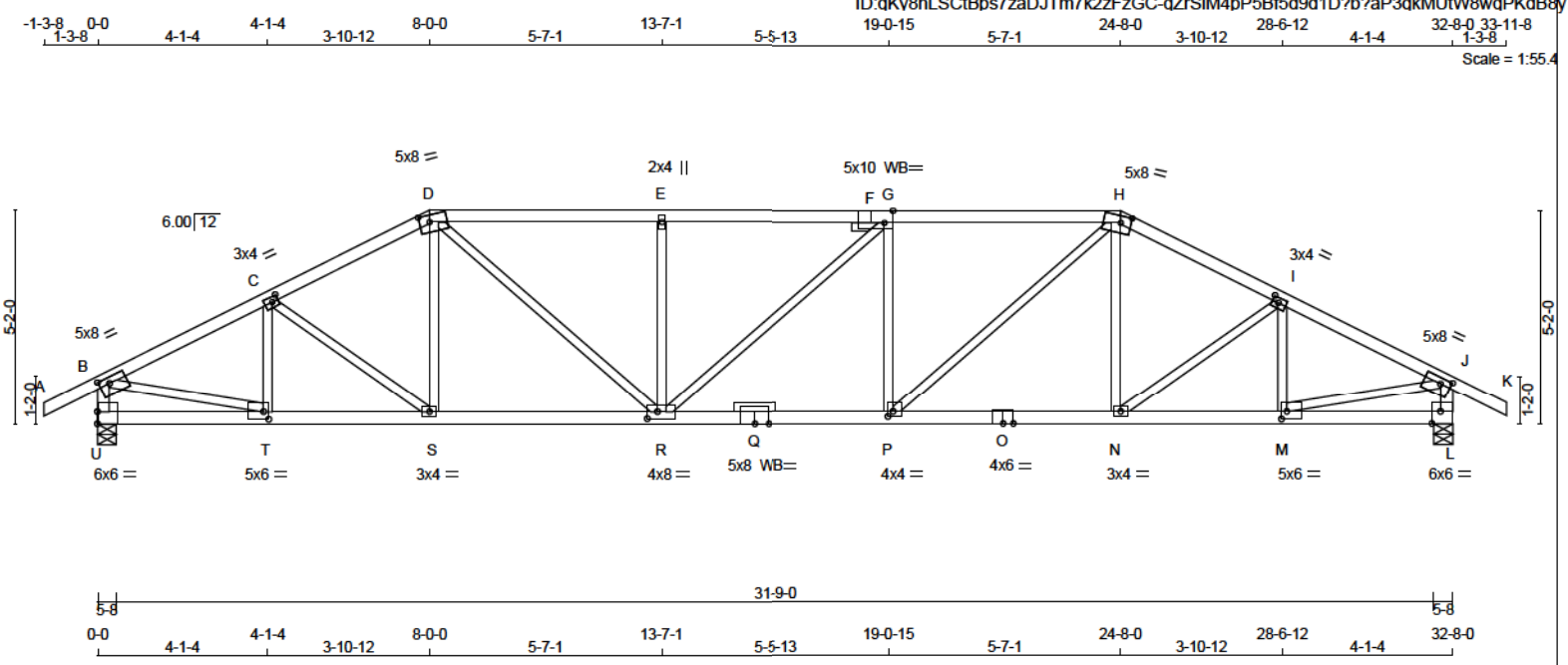

TOTAL WEIGHT = 133 lb

LUMBER
N. L. G. A. RULES

CHORDS	SIZE		LUMBER	DESCR.
A - D	2x4	DRY	No.2	SPF
D - F	2x4	DRY	No.2	SPF
F - H	2x4	DRY	No.2	SPF
H - K	2x4	DRY	No.2	SPF
U - B	2x4	DRY	No.2	SPF
L - J	2x4	DRY	No.2	SPF
U - Q	2x4	DRY	No.2	SPF
Q - O	2x4	DRY	No.2	SPF
O - L	2x4	DRY	No.2	SPF
ALL WEBS EXCEPT	2x3	DRY	No.2	SPF

DRY: SEASONED LUMBER.

PLATES (table is in inches)

JT	TYPE	PLATES	W	LEN	Y	X
B	TMVW-t	MT20	5.0	8.0	1.75	3.00
C	TMWW-t	MT20	3.0	4.0	1.50	1.75
D	TTWW-m	MT20	5.0	8.0	2.00	3.00
E	TMW+w	MT20	2.0	4.0		
F						
F	TSWW-l	MT20	5.0	10.0	Edge	2.50
G						
H	TTWW-m	MT20	5.0	8.0	2.00	3.00
I	TMWW-t	MT20	3.0	4.0	1.50	1.75
J	TMVW-t	MT20	5.0	8.0	1.75	3.00
L	BMV1-t	MT20	6.0	6.0	Edge	2.50
M	BMWW-t	MT20	5.0	6.0	2.25	1.50
N	BMWW-t	MT20	3.0	4.0		
O	BS-t	MT20	4.0	6.0		
P	BMWW-t	MT20	4.0	4.0	1.50	1.50
Q	BS-t	MT20	5.0	8.0		
R	BMWWW-t	MT20	4.0	8.0	2.00	3.00
S	BMWW-t	MT20	3.0	4.0		
T	BMWW-t	MT20	5.0	6.0	2.25	1.50
U	BMV1-t	MT20	6.0	6.0	3.50	

Edge - INDICATES REFERENCE CORNER OF PLATE TOUCHES EDGE OF CHORD.

WB - INDICATES BLOCKING REQUIRED

DIMENSIONS, SUPPORTS AND LOADINGS SPECIFIED BY FABRICATOR TO BE VERIFIED BY BUILDING DESIGNER

BEARINGS

JT	FACTORED GROSS REACTION VERT	HORZ	MAXIMUM GROSS REACTION DOWN	HORZ	FACTORED UPLIFT	INPUT BRG IN-SX	REQRD BRG IN-SX
U	2842	0	2842	0	0	5-8	5-8
L	2842	0	2842	0	0	5-8	5-8

UNFACTORED REACTIONS

JT	1ST LCASE COMBINED	SNOW	MAX./MIN. COMPONENT REACTIONS LIVE	PERM.LIVE	WIND	DEAD	SOIL
U	2096	1232 / 0	343 / 0	0 / 0	0 / 0	522 / 0	0 / 0
L	2096	1232 / 0	343 / 0	0 / 0	0 / 0	522 / 0	0 / 0

BEARING MATERIAL TO BE SPF NO.2 OR BETTER AT JOINT(S) U, L

BRACING
TOP CHORD TO BE SHEATHED OR MAX. PURLIN SPACING = 2.46 FT.
MAX. UNBRACED BOTTOM CHORD LENGTH = 10.00 FT OR RIGID CEILING DIRECTLY APPLIED.

ALL PITCH BREAKS AND PERIMETER CORNER JOINTS MUST BE LATERALLY RESTRAINED.

LOADING
TOTAL LOAD CASES: (4)

CHORDS

MEMB. FR-TO	MAX. FORCE (LBS)	FACTORED VERT. LOAD (PLF) FROM	TO	LC1 MAX CSI (LC)	MAX. UNBRAC LENGTH
A- B	0 / 38	-124.4	-124.4	0.16 (1)	10.00
B- C	-3747 / 0	-124.4	-124.4	0.51 (1)	3.21
C- D	-3753 / 0	-124.4	-124.4	0.50 (1)	3.21
D- E	-4441 / 0	-124.4	-124.4	0.98 (1)	2.48
E- F	-4441 / 0	-124.4	-124.4	0.97 (1)	2.47
F- G	-4441 / 0	-124.4	-124.4	0.97 (1)	2.47
G- H	-4443 / 0	-124.4	-124.4	0.99 (1)	2.46
H- I	-3753 / 0	-124.4	-124.4	0.50 (1)	3.21
I- J	-3747 / 0	-124.4	-124.4	0.51 (1)	3.21
J- K	0 / 38	-124.4	-124.4	0.16 (1)	10.00
U- B	-2765 / 0	0.0	0.0	0.28 (1)	5.18
L- J	-2765 / 0	0.0	0.0	0.28 (1)	5.18
U- T	0 / 0	-39.2	-39.2	0.12 (2)	10.00
T- S	0 / 3371	-39.2	-39.2	0.66 (1)	10.00
S- R	0 / 3338	-39.2	-39.2	0.65 (1)	10.00
R- Q	0 / 4443	-39.2	-39.2	0.83 (1)	10.00
Q- P	0 / 4443	-39.2	-39.2	0.83 (1)	10.00
P- O	0 / 3338	-39.2	-39.2	0.65 (1)	10.00
O- N	0 / 3338	-39.2	-39.2	0.65 (1)	10.00
N- M	0 / 3371	-39.2	-39.2	0.65 (1)	10.00
M- L	0 / 0	-39.2	-39.2	0.12 (2)	10.00

WEBS

MEMB. FR-TO	MAX. FORCE (LBS)	MAX CSI (LC)
T- C	-560 / 0	0.11 (1)
C- S	-47 / 0	0.02 (1)
S- D	0 / 269	0.06 (2)
D- R	0 / 1462	0.33 (1)
R- E	-745 / 0	0.29 (1)
R- G	-3 / 0	0.00 (1)
P- G	-746 / 0	0.29 (1)
P- H	0 / 1466	0.33 (1)
N- H	0 / 268	0.06 (2)
N- I	-48 / 0	0.02 (1)
M- I	-560 / 0	0.11 (1)
B- T	0 / 3444	0.78 (1)
M- J	0 / 3444	0.78 (1)

DESIGN CRITERIA

SPECIFIED LOADS:

TOP CH.	LL	=	34.8	PSF
	DL	=	8.0	PSF
BOT CH.	LL	=	10.5	PSF
	DL	=	7.3	PSF
TOTAL LOAD		=	60.6	PSF

SPACING = 24.0 IN. C/C

LOADING IN FLAT SECTION BASED ON A SLOPE OF 2.00/12 MINIMUM

THIS TRUSS IS DESIGNED FOR RESIDENTIAL OR SMALL BUILDING REQUIREMENTS OF PART 9, NBCC 2015

THIS DESIGN COMPLIES WITH:
- PART 9 OF BCBC 2018 , ABC 2019
- PART 9 OF OBC 2012 (2019 AMENDMENT)
- CSA 086-14
- TPIC 2014

(55 % OF 48.1 P.S.F. G.S.L. PLUS 8.4 P.S.F. RAIN LOAD) EQUALS 34.8 P.S.F. SPECIFIED ROOF LIVE LOAD

ALLOWABLE DEFL.(LL)= L/360 (1.09")
CALCULATED VERT. DEFL.(LL) = L/ 999 (0.26")
ALLOWABLE DEFL.(TL)= L/360 (1.09")
CALCULATED VERT. DEFL.(TL) = L/ 905 (0.43")

CSI: TC=0.99/1.00 (G-H:1) , BC=0.83/1.00 (P-R:1) , WB=0.78/1.00 (J-M:1) , SSI=0.32/1.00 (G-H:1)

DOL LUMBER=1.00 NAIL=1.00 LS BEND=1.10 COMP=1.10 SHEAR=1.10 TENS= 1.10

COMPANION LIVE LOAD FACTOR = 1.00

TRUSS PLATE MANUFACTURER IS NOT RESPONSIBLE FOR QUALITY CONTROL IN THE TRUSS MANUFACTURING PLANT .

NAIL VALUES

PLATE	GRIP(DRY) (PSI) MAX	MIN	SHEAR (PLI) MAX	MIN	SECTION (PLI) MAX	MIN
MT20	650	371	1747	788	1987	1873

PLATE PLACEMENT TOL. = 0.250 inches

PLATE ROTATION TOL. = 5.0 Deg.

JSI GRIP= 0.90 (R) (INPUT = 0.90)
JSI METAL= 0.97 (Q) (INPUT = 1.00)

LICENSED PROFESSIONAL ENGINEER
N.A. EL-MASRI
PROVINCE OF ONTARIO
Dec 16, 2020

READ ALL NOTES ON THIS PAGE AND ON ENGINEERING NOTE PAGE ENP-1. THIS NOTE PAGE IS AN INTEGRAL PART OF THIS DRAWING AS IT CONTAINS SPECIFICATIONS AND CRITERIA USED IN THE DESIGN OF THIS COMPONENT.

Town of East Gwillimbury
Building Standards Branch BCIN #16487

These plans have been reviewed for use with the corrections as noted. No other changes may be made without written approval of the Building Standards Branch. All work must comply with Zoning By-Law 2018-043, as amended, and the Ontario Building Code, as amended. These approved documents must be kept on site at all times. The building permit must be clearly posted on site at all times.

Discipline	Reviewer	BCIN	Date
Building Code	H. Authier	43236	2021-02-05
Sewage System			
Zoning			

KOTT

JOB NAME	TRUSS NAME	QUANTITY	PLY	JOB DESC.		DWG NO.
NE1220-120	T21	1	1	TRUSS DESC.	GREENPARK - TRINAR HALL - GLENWAY 7A ELE 3	**Page 28 of 42**

Version 8.420 S Oct 9 2020 MiTek Industries, Inc. Thu Dec 17 20:49:26 2020 Page 1
ID:qKv8nLSCtBps7zaDJTm7k2zFzGC-lIPqzi5RAPJWjnkqbxWqXnxFi7jccz23333Aiay7y

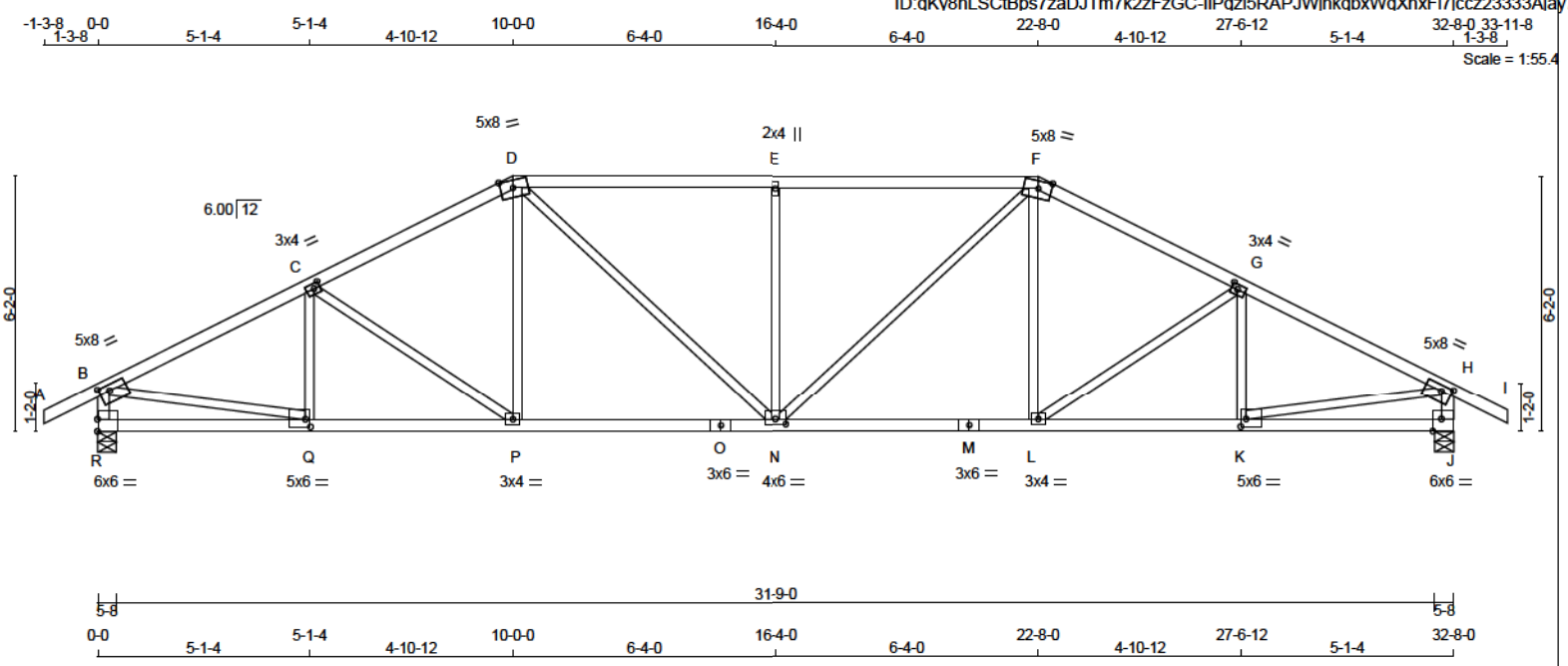

TOTAL WEIGHT = 132 lb

LUMBER
N. L. G. A. RULES

CHORDS	SIZE		LUMBER	DESCR.
A - D	2x4	DRY	No.2	SPF
D - F	2x4	DRY	No.2	SPF
F - I	2x4	DRY	No.2	SPF
R - B	2x4	DRY	No.2	SPF
J - H	2x4	DRY	No.2	SPF
R - O	2x4	DRY	No.2	SPF
O - M	2x4	DRY	No.2	SPF
M - J	2x4	DRY	No.2	SPF
ALL WEBS EXCEPT	2x3	DRY	No.2	SPF

DRY: SEASONED LUMBER.

PLATES (table is in inches)

JT	TYPE	PLATES	W	LEN	Y	X
B	TMVW-t	MT20	5.0	8.0	1.75	3.00
C	TMWW-t	MT20	3.0	4.0	1.50	1.75
D	TTWW-m	MT20	5.0	8.0	2.25	3.75
E	TMW+w	MT20	2.0	4.0		
F	TTWW-m	MT20	5.0	8.0	2.25	3.75
G	TMWW-t	MT20	3.0	4.0	1.50	1.75
H	TMVW-t	MT20	5.0	8.0	1.75	3.00
J	BMV1-t	MT20	6.0	6.0	Edge	2.50
K	BMWW-t	MT20	5.0	6.0	2.25	1.50
L	BMWW-t	MT20	3.0	4.0		
M	BS-t	MT20	3.0	6.0		
N	BMWWW-t	MT20	4.0	6.0	1.50	3.00
O	BS-t	MT20	3.0	6.0		
P	BMWW-t	MT20	3.0	4.0		
Q	BMWW-t	MT20	5.0	6.0	2.25	1.50
R	BMV1-t	MT20	6.0	6.0	3.50	

Edge - INDICATES REFERENCE CORNER OF PLATE TOUCHES EDGE OF CHORD.

DIMENSIONS, SUPPORTS AND LOADINGS SPECIFIED BY FABRICATOR TO BE VERIFIED BY BUILDING DESIGNER

BEARINGS

JT	FACTORED GROSS REACTION VERT	HORZ	MAXIMUM GROSS REACTION DOWN	HORZ	FACTORED UPLIFT	INPUT BRG IN-SX	REQRD BRG IN-SX
R	2842	0	2842	0	0	5-8	5-8
J	2842	0	2842	0	0	5-8	5-8

UNFACTORED REACTIONS

JT	1ST LCASE COMBINED	SNOW	MAX./MIN. COMPONENT REACTIONS LIVE	PERM.LIVE	WIND	DEAD	SOIL
R	2096	1232 / 0	343 / 0	0 / 0	0 / 0	522 / 0	0 / 0
J	2096	1232 / 0	343 / 0	0 / 0	0 / 0	522 / 0	0 / 0

BEARING MATERIAL TO BE SPF NO.2 OR BETTER AT JOINT(S) R, J

BRACING
TOP CHORD TO BE SHEATHED OR MAX. PURLIN SPACING = 2.55 FT.
MAX. UNBRACED BOTTOM CHORD LENGTH = 10.00 FT OR RIGID CEILING DIRECTLY APPLIED.

ALL PITCH BREAKS AND PERIMETER CORNER JOINTS MUST BE LATERALLY RESTRAINED.

LOADING
TOTAL LOAD CASES: (4)

CHORDS

MEMB. FR-TO	MAX. FORCE (LBS)	FACTORED VERT. LOAD (PLF) FROM	TO	LC1 MAX CSI (LC)	MAX. UNBRAC LENGTH
A- B	0 / 38	-124.4	-124.4	0.16 (1)	10.00
B- C	-3877 / 0	-124.4	-124.4	0.61 (1)	3.06
C- D	-3583 / 0	-124.4	-124.4	0.56 (1)	3.22
D- E	-3838 / 0	-124.4	-124.4	0.90 (1)	2.55
E- F	-3838 / 0	-124.4	-124.4	0.90 (1)	2.55
F- G	-3583 / 0	-124.4	-124.4	0.56 (1)	3.22
G- H	-3877 / 0	-124.4	-124.4	0.61 (1)	3.06
H- I	0 / 38	-124.4	-124.4	0.16 (1)	10.00
R- B	-2753 / 0	0.0	0.0	0.28 (1)	5.19
J- H	-2753 / 0	0.0	0.0	0.28 (1)	5.19
R- Q	0 / 0	-39.2	-39.2	0.17 (3)	10.00
Q- P	0 / 3495	-39.2	-39.2	0.71 (1)	10.00
P- O	0 / 3182	-39.2	-39.2	0.67 (1)	10.00
O- N	0 / 3182	-39.2	-39.2	0.67 (1)	10.00
N- M	0 / 3182	-39.2	-39.2	0.67 (1)	10.00
M- L	0 / 3182	-39.2	-39.2	0.67 (1)	10.00
L- K	0 / 3495	-39.2	-39.2	0.71 (1)	10.00
K- J	0 / 0	-39.2	-39.2	0.17 (3)	10.00

WEBS

MEMB. FR-TO	MAX. FORCE (LBS)	MAX CSI (LC)
Q- C	-388 / 19	0.09 (1)
C- P	-388 / 0	0.25 (1)
P- D	0 / 463	0.10 (2)
D- N	0 / 893	0.20 (1)
N- E	-966 / 0	0.58 (1)
N- F	0 / 893	0.20 (1)
L- F	0 / 463	0.10 (2)
L- G	-388 / 0	0.25 (1)
K- G	-388 / 19	0.09 (1)
B- Q	0 / 3544	0.80 (1)
K- H	0 / 3544	0.80 (1)

DESIGN CRITERIA

SPECIFIED LOADS:

TOP CH.	LL	=	34.8	PSF
	DL	=	8.0	PSF
BOT CH.	LL	=	10.5	PSF
	DL	=	7.3	PSF
TOTAL LOAD		=	60.6	PSF

SPACING = 24.0 IN. C/C

LOADING IN FLAT SECTION BASED ON A SLOPE OF 2.00/12 MINIMUM

THIS TRUSS IS DESIGNED FOR RESIDENTIAL OR SMALL BUILDING REQUIREMENTS OF PART 9, NBCC 2015

THIS DESIGN COMPLIES WITH:
- PART 9 OF BCBC 2018 , ABC 2019
- PART 9 OF OBC 2012 (2019 AMENDMENT)
- CSA 086-14
- TPIC 2014

(55 % OF 48.1 P.S.F. G.S.L. PLUS 8.4 P.S.F. RAIN LOAD) EQUALS 34.8 P.S.F. SPECIFIED ROOF LIVE LOAD

ALLOWABLE DEFL.(LL)= L/360 (1.09")
CALCULATED VERT. DEFL.(LL) = L/ 999 (0.21")
ALLOWABLE DEFL.(TL)= L/360 (1.09")
CALCULATED VERT. DEFL.(TL) = L/ 999 (0.36")

CSI: TC=0.90/1.00 (D-E:1) , BC=0.71/1.00 (P-Q:1) , WB=0.80/1.00 (B-Q:1) , SSI=0.38/1.00 (D-E:1)

DOL LUMBER=1.00 NAIL=1.00 LS BEND=1.10 COMP=1.10 SHEAR=1.10 TENS= 1.10

COMPANION LIVE LOAD FACTOR = 1.00

TRUSS PLATE MANUFACTURER IS NOT RESPONSIBLE FOR QUALITY CONTROL IN THE TRUSS MANUFACTURING PLANT .

NAIL VALUES

PLATE	GRIP(DRY) (PSI) MAX	MIN	SHEAR (PLI) MAX	MIN	SECTION (PLI) MAX	MIN
MT20	650	371	1747	788	1987	1873

PLATE PLACEMENT TOL. = 0.250 inches

PLATE ROTATION TOL. = 5.0 Deg.

JSI GRIP= 0.88 (O) (INPUT = 0.90)
JSI METAL= 0.98 (M) (INPUT = 1.00)

[M][F]

LICENSED PROFESSIONAL ENGINEER
N.A. EL-MASRI
PROVINCE OF ONTARIO
Dec 16, 2020

READ ALL NOTES ON THIS PAGE AND ON ENGINEERING NOTE PAGE ENP-1. THIS NOTE PAGE IS AN INTEGRAL PART OF THIS DRAWING AS IT CONTAINS SPECIFICATIONS AND CRITERIA USED IN THE DESIGN OF THIS COMPONENT.

Town of East Gwillimbury
Building Standards Branch BCIN #16487

These plans have been reviewed for use with the corrections as noted. No other changes may be made without written approval of the Building Standards Branch. All work must comply with Zoning By-Law 2018-043, as amended, and the Ontario Building Code, as amended. These approved documents must be kept on site at all times. The building permit must be clearly posted on site at all times.

Discipline	Reviewer	BCIN	Date
Building Code	H. Authier	43236	2021-02-05
Sewage System			
Zoning			

KOTT

JOB NAME	TRUSS NAME	QUANTITY	PLY	JOB DESC.		DRWG NO.
NE1220-120	T22	1	1	TRUSS DESC.	GREENPARK - TRINAR HALL - GLENWAY 7A ELE 3	

Version 8.420 S Oct 9 2020 MiTek Industries, Inc. Thu Dec 17 20:49:27 2020 Page 1
ID:qKv8nLSCtBps7zaDJTm7k2zFzGC-mxzCA263xiRNKxJ09e134?URbX3SLQ7DlipkF1y7y

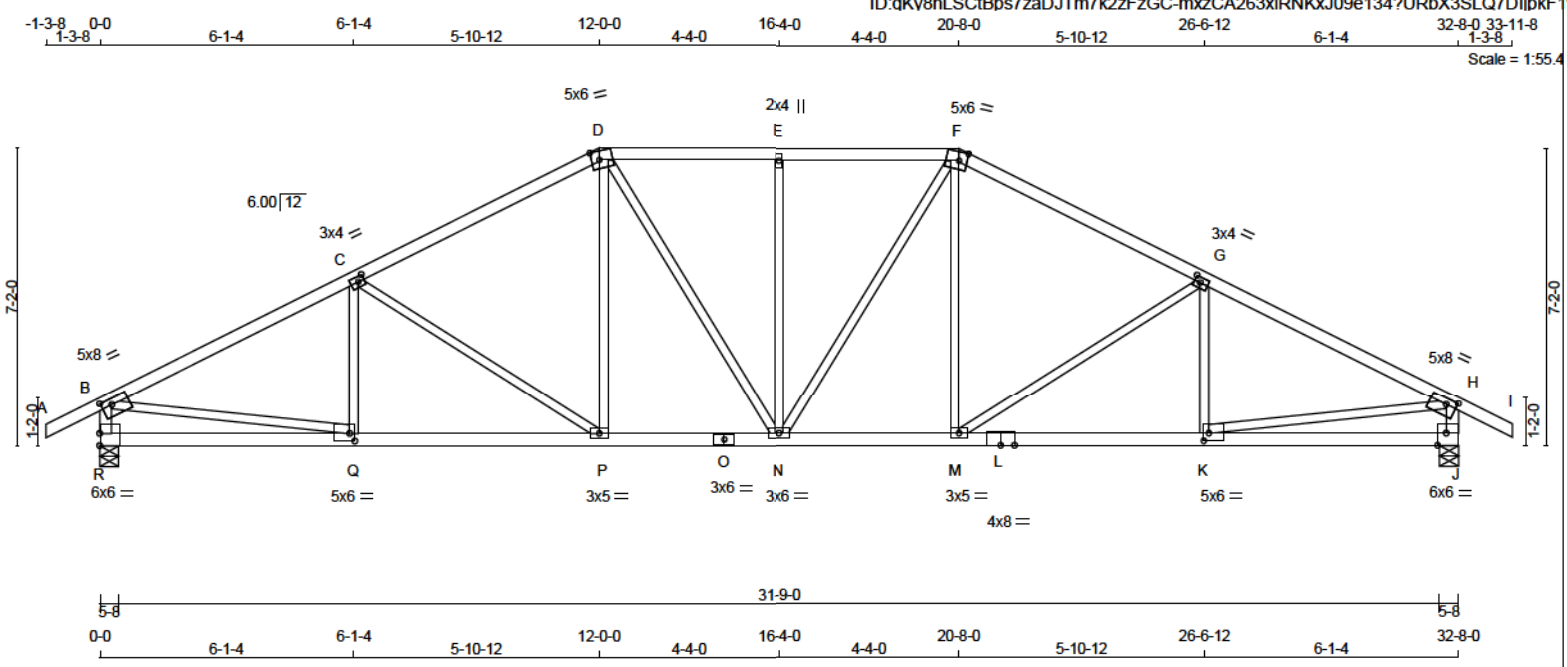

TOTAL WEIGHT = 138 lb

LUMBER
N. L. G. A. RULES

CHORDS	SIZE		LUMBER	DESCR.
A - D	2x4	DRY	No.2	SPF
D - F	2x4	DRY	No.2	SPF
F - I	2x4	DRY	No.2	SPF
R - B	2x4	DRY	No.2	SPF
J - H	2x4	DRY	No.2	SPF
R - O	2x4	DRY	No.2	SPF
O - L	2x4	DRY	No.2	SPF
L - J	2x4	DRY	No.2	SPF
ALL WEBS EXCEPT	2x3	DRY	No.2	SPF

DRY: SEASONED LUMBER.

PLATES (table is in inches)

JT	TYPE	PLATES	W	LEN	Y	X
B	TMVW-t	MT20	5.0	8.0	1.75	3.00
C	TMWW-t	MT20	3.0	4.0	1.50	1.75
D	TTWW-m	MT20	5.0	6.0	2.50	2.25
E	TMW+w	MT20	2.0	4.0		
F	TTWW-m	MT20	5.0	6.0	2.50	2.25
G	TMWW-t	MT20	3.0	4.0	1.50	1.75
H	TMVW-t	MT20	5.0	8.0	1.75	3.00
J	BMV1-t	MT20	6.0	6.0	Edge	2.50
K	BMWW-t	MT20	5.0	6.0	2.25	1.50
L	BS-t	MT20	4.0	8.0		
M	BMWW-t	MT20	3.0	5.0		
N	BMWWW-t	MT20	3.0	6.0		
O	BS-t	MT20	3.0	6.0		
P	BMWW-t	MT20	3.0	5.0		
Q	BMWW-t	MT20	5.0	6.0	2.25	1.50
R	BMV1-t	MT20	6.0	6.0	3.50	

Edge - INDICATES REFERENCE CORNER OF PLATE TOUCHES EDGE OF CHORD.

DIMENSIONS, SUPPORTS AND LOADINGS SPECIFIED BY FABRICATOR TO BE VERIFIED BY BUILDING DESIGNER [M][F]

BEARINGS

JT	FACTORED GROSS REACTION VERT	HORZ	MAXIMUM GROSS REACTION DOWN	HORZ	FACTORED UPLIFT	INPUT BRG IN-SX	REQRD BRG IN-SX
R	2842	0	2842	0	0	5-8	5-8
J	2842	0	2842	0	0	5-8	5-8

UNFACTORED REACTIONS

1ST LCASE MAX./MIN. COMPONENT REACTIONS

JT	COMBINED	SNOW	LIVE	PERM.LIVE	WIND	DEAD	SOIL
R	2096	1232 / 0	343 / 0	0 / 0	0 / 0	522 / 0	0 / 0
J	2096	1232 / 0	343 / 0	0 / 0	0 / 0	522 / 0	0 / 0

BEARING MATERIAL TO BE SPF NO.2 OR BETTER AT JOINT(S) R, J

BRACING
TOP CHORD TO BE SHEATHED OR MAX. PURLIN SPACING = 2.66 FT.
MAX. UNBRACED BOTTOM CHORD LENGTH = 10.00 FT OR RIGID CEILING DIRECTLY APPLIED.

ALL PITCH BREAKS AND PERIMETER CORNER JOINTS MUST BE LATERALLY RESTRAINED.

LOADING
TOTAL LOAD CASES: (4)

CHORDS

MEMB. FR-TO	MAX. FORCE (LBS)	FACTORED VERT. LOAD (PLF) FROM	TO	LC1 MAX CSI (LC)	MAX. UNBRAC LENGTH
A- B	0 / 38	-124.4	-124.4	0.16 (1)	10.00
B- C	-3939 / 0	-124.4	-124.4	0.90 (1)	2.66
C- D	-3352 / 0	-124.4	-124.4	0.78 (1)	3.03
D- E	-3219 / 0	-124.4	-124.4	0.41 (1)	3.55
E- F	-3219 / 0	-124.4	-124.4	0.41 (1)	3.55
F- G	-3352 / 0	-124.4	-124.4	0.78 (1)	3.03
G- H	-3939 / 0	-124.4	-124.4	0.90 (1)	2.66
H- I	0 / 38	-124.4	-124.4	0.16 (1)	10.00
R- B	-2742 / 0	0.0	0.0	0.28 (1)	5.20
J- H	-2742 / 0	0.0	0.0	0.28 (1)	5.20
R- Q	0 / 0	-39.2	-39.2	0.27 (3)	10.00
Q- P	0 / 3557	-39.2	-39.2	0.73 (1)	10.00
P- O	0 / 2970	-39.2	-39.2	0.60 (1)	10.00
O- N	0 / 2970	-39.2	-39.2	0.60 (1)	10.00
N- M	0 / 2970	-39.2	-39.2	0.60 (1)	10.00
M- L	0 / 3557	-39.2	-39.2	0.73 (1)	10.00
L- K	0 / 3557	-39.2	-39.2	0.73 (1)	10.00
K- J	0 / 0	-39.2	-39.2	0.27 (3)	10.00

WEBS

MEMB. FR-TO	MAX. FORCE (LBS)	MAX CSI (LC)
Q- C	-239 / 131	0.06 (1)
C- P	-711 / 0	0.70 (1)
P- D	0 / 598	0.13 (1)
D- N	0 / 467	0.11 (1)
N- E	-650 / 0	0.58 (1)
N- F	0 / 467	0.11 (1)
M- F	0 / 598	0.13 (1)
M- G	-711 / 0	0.70 (1)
K- G	-239 / 131	0.06 (1)
B- Q	0 / 3592	0.81 (1)
K- H	0 / 3592	0.81 (1)

DESIGN CRITERIA

SPECIFIED LOADS:

TOP CH.	LL	=	34.8	PSF
	DL	=	8.0	PSF
BOT CH.	LL	=	10.5	PSF
	DL	=	7.3	PSF
TOTAL LOAD		=	60.6	PSF

SPACING = 24.0 IN. C/C

LOADING IN FLAT SECTION BASED ON A SLOPE OF 2.00/12 MINIMUM

THIS TRUSS IS DESIGNED FOR RESIDENTIAL OR SMALL BUILDING REQUIREMENTS OF PART 9, NBCC 2015

THIS DESIGN COMPLIES WITH:
- PART 9 OF BCBC 2018 , ABC 2019
- PART 9 OF OBC 2012 (2019 AMENDMENT)
- CSA 086-14
- TPIC 2014

(55 % OF 48.1 P.S.F. G.S.L. PLUS 8.4 P.S.F. RAIN LOAD) EQUALS 34.8 P.S.F. SPECIFIED ROOF LIVE LOAD

ALLOWABLE DEFL.(LL)= L/360 (1.09")
CALCULATED VERT. DEFL.(LL) = L/ 999 (0.19")
ALLOWABLE DEFL.(TL)= L/360 (1.09")
CALCULATED VERT. DEFL.(TL) = L/ 999 (0.32")

CSI: TC=0.90/1.00 (G-H:1) , BC=0.73/1.00 (K-M:1) , WB=0.81/1.00 (H-K:1) , SSI=0.32/1.00 (G-H:1)

DOL LUMBER=1.00 NAIL=1.00 LS BEND=1.10 COMP=1.10 SHEAR=1.10 TENS= 1.10

COMPANION LIVE LOAD FACTOR = 1.00

TRUSS PLATE MANUFACTURER IS NOT RESPONSIBLE FOR QUALITY CONTROL IN THE TRUSS MANUFACTURING PLANT .

NAIL VALUES

PLATE	GRIP(DRY) (PSI) MAX	MIN	SHEAR (PLI) MAX	MIN	SECTION (PLI) MAX	MIN
MT20	650	371	1747	788	1987	1873

PLATE PLACEMENT TOL. = 0.250 inches

PLATE ROTATION TOL. = 5.0 Deg.

JSI GRIP= 0.90 (N) (INPUT = 0.90)
JSI METAL= 0.90 (O) (INPUT = 1.00)

LICENSED PROFESSIONAL ENGINEER
N.A. EL-MASRI
PROVINCE OF ONTARIO
Dec 16, 2020

READ ALL NOTES ON THIS PAGE AND ON ENGINEERING NOTE PAGE ENP-1. THIS NOTE PAGE IS AN INTEGRAL PART OF THIS DRAWING AS IT CONTAINS SPECIFICATIONS AND CRITERIA USED IN THE DESIGN OF THIS COMPONENT.

Town of East Gwillimbury
Building Standards Branch BCIN #16487

These plans have been reviewed for use with the corrections as noted. No other changes may be made without written approval of the Building Standards Branch. All work must comply with Zoning By-Law 2018-043, as amended, and the Ontario Building Code, as amended. These approved documents must be kept on site at all times. The building permit must be clearly posted on site at all times.

Discipline	Reviewer	BCIN	Date
Building Code	H. Authier	43236	2021-02-05
Sewage System			
Zoning			

KOTT

JOB NAME	TRUSS NAME	QUANTITY	PLY	JOB DESC.		DWG NO.
NE1220-120	T23	1	1	TRUSS DESC.	GREENPARK - TRINAR HALL - GLENWAY 7A ELE 3	

Version 8.420 S Oct 9 2020 MiTek Industries, Inc. Thu Dec 17 20:49:28 2020 Page 1
ID:qKv8nLSCtBps7zaDJTm7k2zFzGC-E7XaOO7hi0ZEv5uCjLYIcC1hexQF4s6MWNYHnTy7

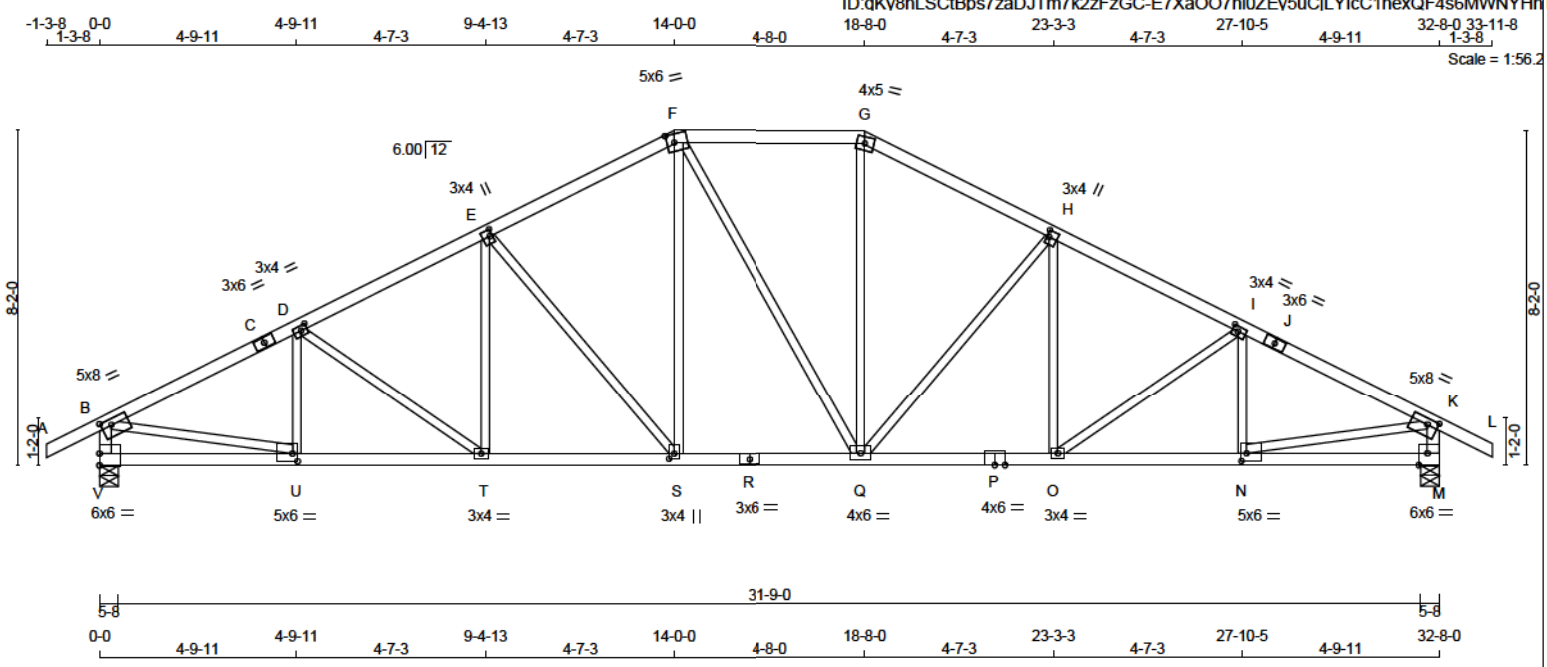

TOTAL WEIGHT = 144 lb

LUMBER
N. L. G. A. RULES

CHORDS	SIZE		LUMBER	DESCR.
A - C	2x4	DRY	No.2	SPF
C - F	2x4	DRY	No.2	SPF
F - G	2x4	DRY	No.2	SPF
G - J	2x4	DRY	No.2	SPF
J - L	2x4	DRY	No.2	SPF
V - B	2x4	DRY	No.2	SPF
M - K	2x4	DRY	No.2	SPF
V - R	2x4	DRY	No.2	SPF
R - P	2x4	DRY	No.2	SPF
P - M	2x4	DRY	No.2	SPF
ALL WEBS EXCEPT	2x3	DRY	No.2	SPF

DRY: SEASONED LUMBER.

PLATES (table is in inches)

JT	TYPE	PLATES	W	LEN	Y	X
B	TMVW-t	MT20	5.0	8.0	1.75	3.00
C	TS-t	MT20	3.0	6.0		
D	TMWW-t	MT20	3.0	4.0	1.50	1.75
E	TMWW+t	MT20	3.0	4.0	2.00	0.75
F	TTWW-m	MT20	5.0	6.0	2.50	2.25
G	TTW-m	MT20	4.0	5.0		
H	TMWW+t	MT20	3.0	4.0	2.00	0.75
I	TMWW-t	MT20	3.0	4.0	1.50	1.75
J	TS-t	MT20	3.0	6.0		
K	TMVW-t	MT20	5.0	8.0	1.75	3.00
M	BMV1-t	MT20	6.0	6.0	Edge	2.50
N	BMWW-t	MT20	5.0	6.0	2.25	1.50
O	BMWW-t	MT20	3.0	4.0		
P	BS-t	MT20	4.0	6.0		
Q	BMWWW-t	MT20	4.0	6.0		
R	BS-t	MT20	3.0	6.0		
S	BMWW+t	MT20	3.0	4.0	1.50	1.50
T	BMWW-t	MT20	3.0	4.0		
U	BMWW-t	MT20	5.0	6.0	2.25	1.50
V	BMV1-t	MT20	6.0	6.0	3.50	

Edge - INDICATES REFERENCE CORNER OF PLATE TOUCHES EDGE OF CHORD.

DIMENSIONS, SUPPORTS AND LOADINGS SPECIFIED BY FABRICATOR TO BE VERIFIED BY BUILDING DESIGNER [M][F]

BEARINGS

JT	FACTORED GROSS REACTION VERT	HORZ	MAXIMUM GROSS REACTION DOWN	HORZ	FACTORED UPLIFT	INPUT BRG IN-SX	REQRD BRG IN-SX
V	2842	0	2842	0	0	5-8	5-8
M	2842	0	2842	0	0	5-8	5-8

UNFACTORED REACTIONS

JT	1ST LCASE COMBINED	SNOW	MAX./MIN. COMPONENT REACTIONS LIVE	PERM.LIVE	WIND	DEAD	SOIL
V	2096	1232 / 0	343 / 0	0 / 0	0 / 0	522 / 0	0 / 0
M	2096	1232 / 0	343 / 0	0 / 0	0 / 0	522 / 0	0 / 0

BEARING MATERIAL TO BE SPF NO.2 OR BETTER AT JOINT(S) V, M

BRACING
TOP CHORD TO BE SHEATHED OR MAX. PURLIN SPACING = 3.14 FT.
MAX. UNBRACED BOTTOM CHORD LENGTH = 10.00 FT OR RIGID CEILING DIRECTLY APPLIED.

ALL PITCH BREAKS AND PERIMETER CORNER JOINTS MUST BE LATERALLY RESTRAINED.

LOADING
TOTAL LOAD CASES: (4)

CHORDS

MEMB. FR-TO	MAX. FORCE (LBS)	FACTORED VERT. LOAD (PLF) FROM	TO	LC1 CSI (LC)	MAX UNBRAC LENGTH
A- B	0 / 38	-124.4	-124.4	0.16 (1)	10.00
B- C	-3835 / 0	-124.4	-124.4	0.56 (1)	3.14
C- D	-3835 / 0	-124.4	-124.4	0.56 (1)	3.14
D- E	-3661 / 0	-124.4	-124.4	0.46 (1)	3.33
E- F	-3064 / 0	-124.4	-124.4	0.43 (1)	3.63
F- G	-2729 / 0	-124.4	-124.4	0.44 (1)	3.77
G- H	-3066 / 0	-124.4	-124.4	0.43 (1)	3.63
H- I	-3660 / 0	-124.4	-124.4	0.46 (1)	3.33
I- J	-3835 / 0	-124.4	-124.4	0.56 (1)	3.14
J- K	-3835 / 0	-124.4	-124.4	0.56 (1)	3.14
K- L	0 / 38	-124.4	-124.4	0.16 (1)	10.00
V- B	-2758 / 0	0.0	0.0	0.28 (1)	5.19
M- K	-2759 / 0	0.0	0.0	0.28 (1)	5.19

WEBS

MEMB. FR-TO	MAX. FORCE (LBS)	MAX CSI (LC)
U- D	-422 / 0	0.09 (1)
D- T	-215 / 0	0.12 (1)
T- E	0 / 336	0.08 (2)
E- S	-864 / 0	0.89 (1)
S- F	0 / 838	0.19 (1)
F- Q	0 / 4	0.00 (1)
Q- G	0 / 842	0.19 (1)
Q- H	-861 / 0	0.89 (1)
O- H	0 / 332	0.07 (2)
O- I	-216 / 0	0.12 (1)
N- I	-421 / 0	0.09 (1)
B- U	0 / 3505	0.79 (1)
N- K	0 / 3505	0.79 (1)

V- U	0 / 0	-39.2	-39.2	0.15 (3)	10.00
U- T	0 / 3450	-39.2	-39.2	0.63 (1)	10.00
T- S	0 / 3275	-39.2	-39.2	0.61 (1)	10.00
S- R	0 / 2728	-39.2	-39.2	0.54 (1)	10.00
R- Q	0 / 2728	-39.2	-39.2	0.54 (1)	10.00
Q- P	0 / 3274	-39.2	-39.2	0.63 (1)	10.00
P- O	0 / 3274	-39.2	-39.2	0.63 (1)	10.00
O- N	0 / 3450	-39.2	-39.2	0.63 (1)	10.00
N- M	0 / 0	-39.2	-39.2	0.15 (3)	10.00

DESIGN CRITERIA

SPECIFIED LOADS:

TOP CH.	LL	=	34.8	PSF
	DL	=	8.0	PSF
BOT CH.	LL	=	10.5	PSF
	DL	=	7.3	PSF
TOTAL LOAD		=	60.6	PSF

SPACING = 24.0 IN. C/C

LOADING IN FLAT SECTION BASED ON A SLOPE OF 2.00/12 MINIMUM

THIS TRUSS IS DESIGNED FOR RESIDENTIAL OR SMALL BUILDING REQUIREMENTS OF PART 9, NBCC 2015

THIS DESIGN COMPLIES WITH:
- PART 9 OF BCBC 2018 , ABC 2019
- PART 9 OF OBC 2012 (2019 AMENDMENT)
- CSA 086-14
- TPIC 2014

(55 % OF 48.1 P.S.F. G.S.L. PLUS 8.4 P.S.F. RAIN LOAD) EQUALS 34.8 P.S.F. SPECIFIED ROOF LIVE LOAD

ALLOWABLE DEFL.(LL)= L/360 (1.09")
CALCULATED VERT. DEFL.(LL) = L/ 999 (0.18")
ALLOWABLE DEFL.(TL)= L/360 (1.09")
CALCULATED VERT. DEFL.(TL) = L/ 999 (0.31")

CSI: TC=0.56/1.00 (I-K:1) , BC=0.63/1.00 (T-U:1) , WB=0.89/1.00 (E-S:1) , SSI=0.24/1.00 (B-D:1)

DOL LUMBER=1.00 NAIL=1.00 LS BEND=1.10 COMP=1.10 SHEAR=1.10 TENS= 1.10

COMPANION LIVE LOAD FACTOR = 1.00

TRUSS PLATE MANUFACTURER IS NOT RESPONSIBLE FOR QUALITY CONTROL IN THE TRUSS MANUFACTURING PLANT .

NAIL VALUES

PLATE	GRIP(DRY) (PSI) MAX	MIN	SHEAR (PLI) MAX	MIN	SECTION (PLI) MAX	MIN
MT20	650	371	1747	788	1987	1873

PLATE PLACEMENT TOL. = 0.250 inches

PLATE ROTATION TOL. = 5.0 Deg.

JSI GRIP= 0.89 (E) (INPUT = 0.90)
JSI METAL= 0.83 (R) (INPUT = 1.00)

LICENSED PROFESSIONAL ENGINEER
N.A. EL-MASRI
PROVINCE OF ONTARIO
Dec 16, 2020

READ ALL NOTES ON THIS PAGE AND ON ENGINEERING NOTE PAGE ENP-1. THIS NOTE PAGE IS AN INTEGRAL PART OF THIS DRAWING AS IT CONTAINS SPECIFICATIONS AND CRITERIA USED IN THE DESIGN OF THIS COMPONENT.

Town of East Gwillimbury
Building Standards Branch BCIN #16487

These plans have been reviewed for use with the corrections as noted. No other changes may be made without written approval of the Building Standards Branch. All work must comply with Zoning By-Law 2018-043, as amended, and the Ontario Building Code, as amended. These approved documents must be kept on site at all times. The building permit must be clearly posted on site at all times.

Discipline	Reviewer	BCIN	Date
Building Code	H. Authier	43236	2021-02-05
Sewage System			
Zoning			

KOTT

JOB NAME	TRUSS NAME	QUANTITY	PLY	JOB DESC.		DWG NO.
NE1220-120	T24	1	1	TRUSS DESC.	GREENPARK - TRINAR HALL - GLENWAY 7A ELE 3	

Version 8.420 S Oct 9 2020 MiTek Industries, Inc. Thu Dec 17 20:49:28 2020 Page 1
ID:qKy8nLSCtBps7zaDJTm7k2zFzGC-E7XaOO7hi0ZEy5uCjLYIcC1eGxPU4tYMWNYHnTy7

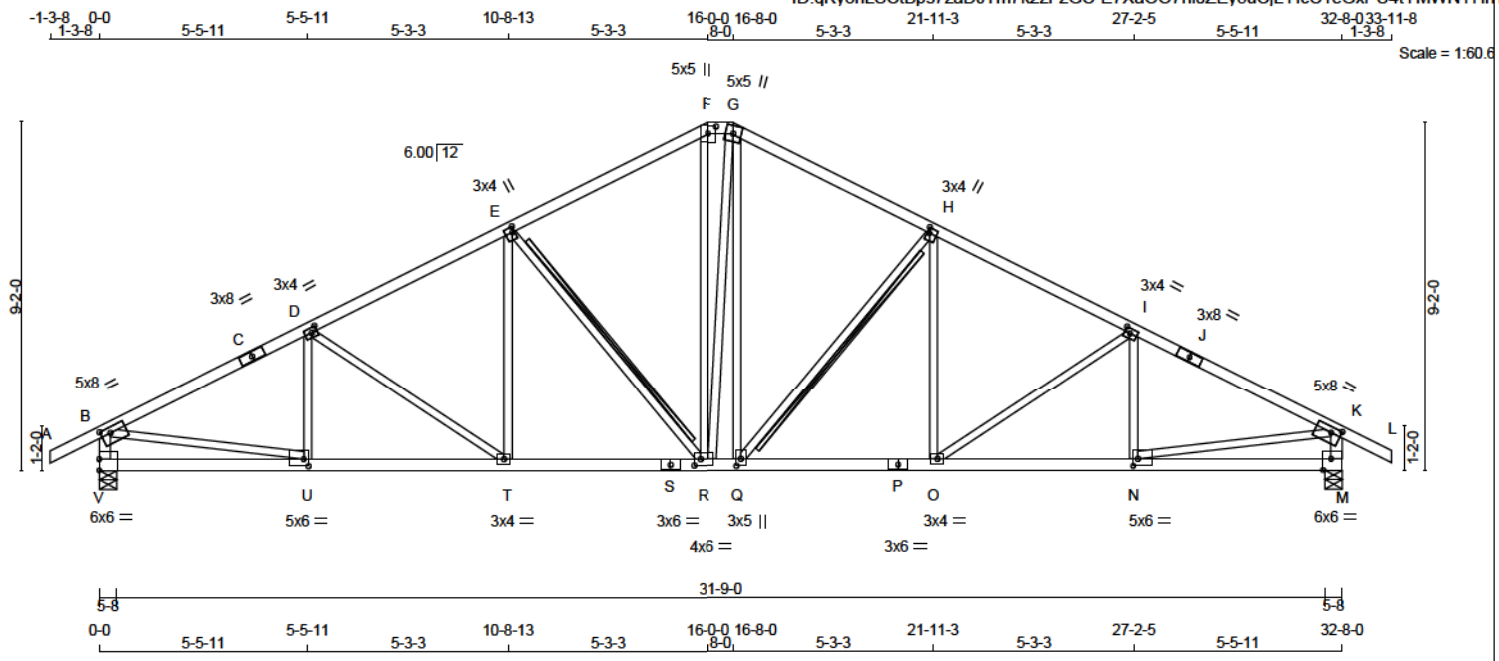

TOTAL WEIGHT = 151 lb

[M][F]

LUMBER
N. L. G. A. RULES

CHORDS	SIZE		LUMBER	DESCR.
A - C	2x4	DRY	No.2	SPF
C - F	2x4	DRY	No.2	SPF
F - G	2x4	DRY	No.2	SPF
G - J	2x4	DRY	No.2	SPF
J - L	2x4	DRY	No.2	SPF
V - B	2x4	DRY	No.2	SPF
M - K	2x4	DRY	No.2	SPF
V - S	2x4	DRY	No.2	SPF
S - P	2x4	DRY	No.2	SPF
P - M	2x4	DRY	No.2	SPF
ALL WEBS EXCEPT	2x3	DRY	No.2	SPF

DRY: SEASONED LUMBER.

PLATES (table is in inches)

JT	TYPE	PLATES	W	LEN	Y	X
B	TMVW-t	MT20	5.0	8.0	1.75	3.00
C	TS-t	MT20	3.0	8.0		
D	TMWW-t	MT20	3.0	4.0	1.50	1.75
E	TMWW+t	MT20	3.0	4.0	1.75	0.75
F	TTW+p	MT20	5.0	5.0	2.25	2.50
G	TTWW+m	MT20	5.0	5.0		
H	TMWW+t	MT20	3.0	4.0	1.75	0.75
I	TMWW-t	MT20	3.0	4.0	1.50	1.75
J	TS-t	MT20	3.0	8.0		
K	TMVW-t	MT20	5.0	8.0	1.75	3.00
M	BMV1-t	MT20	6.0	6.0	Edge	2.50
N	BMWW-t	MT20	5.0	6.0	2.25	1.50
O	BMWW-t	MT20	3.0	4.0		
P	BS-t	MT20	3.0	6.0		
Q	BMWW+t	MT20	3.0	5.0	2.25	1.50
R	BMWWW-t	MT20	4.0	6.0	2.00	2.00
S	BS-t	MT20	3.0	6.0		
T	BMWW-t	MT20	3.0	4.0		
U	BMWW-t	MT20	5.0	6.0	2.25	1.50
V	BMV1-t	MT20	6.0	6.0	3.50	

Edge - INDICATES REFERENCE CORNER OF PLATE TOUCHES EDGE OF CHORD.

DIMENSIONS, SUPPORTS AND LOADINGS SPECIFIED BY FABRICATOR TO BE VERIFIED BY BUILDING DESIGNER

BEARINGS

JT	FACTORED GROSS REACTION VERT	HORZ	MAXIMUM GROSS REACTION DOWN	HORZ	FACTORED UPLIFT	INPUT BRG IN-SX	REQRD BRG IN-SX
V	2842	0	2842	0	0	5-8	5-8
M	2842	0	2842	0	0	5-8	5-8

UNFACTORED REACTIONS

JT	1ST LCASE COMBINED	SNOW	MAX./MIN. COMPONENT REACTIONS LIVE	PERM.LIVE	WIND	DEAD	SOIL
V	2096	1232 / 0	343 / 0	0 / 0	0 / 0	522 / 0	0 / 0
M	2096	1232 / 0	343 / 0	0 / 0	0 / 0	522 / 0	0 / 0

BEARING MATERIAL TO BE SPF NO.2 OR BETTER AT JOINT(S) V, M

BRACING
TOP CHORD TO BE SHEATHED OR MAX. PURLIN SPACING = 2.97 FT.
MAX. UNBRACED BOTTOM CHORD LENGTH = 10.00 FT OR RIGID CEILING DIRECTLY APPLIED.

ALL PITCH BREAKS AND PERIMETER CORNER JOINTS MUST BE LATERALLY RESTRAINED.

2x4 DRY SPF No.2 T-BRACE AT E-R, H-Q

FASTEN T AND I-BRACES TO NARROW EDGE OF WEB WITH ONE ROW PER PLY OF 3" COMMON WIRE NAILS @ 6" O.C. WITH 3" MINIMUM END DISTANCE. BRACE MUST COVER 90% OF WEB LENGTH.

END VERTICAL(S) MUST BE SHEATHED OR HAVE BRACES AS INDICATED IN THE MAX. UNBRACED LENGTH COLUMN OF THE TABLE BELOW

LOADING
TOTAL LOAD CASES: (4)

CHORDS MEMB. FR-TO	MAX. FACTORED FORCE (LBS)	FACTORED VERT. LOAD (PLF) FROM	TO	LC1 MAX CSI (LC)	MAX. UNBRAC LENGTH	WEBS MEMB. FR-TO	MAX. FACTORED FORCE (LBS)	MAX CSI (LC)
A- B	0 / 38	-124.4	-124.4	0.16 (1)	10.00	U- D	-319 / 65	0.08 (1)
B- C	-3890 / 0	-124.4	-124.4	0.71 (1)	2.97	D- T	-418 / 0	0.30 (1)
C- D	-3890 / 0	-124.4	-124.4	0.71 (1)	2.97	T- E	0 / 446	0.10 (2)
D- E	-3531 / 0	-124.4	-124.4	0.57 (1)	3.28	E- R	-1054 / 0	0.52 (1)
E- F	-2809 / 0	-124.4	-124.4	0.52 (1)	3.66	R- F	0 / 941	0.21 (1)
F- G	-2475 / 0	-124.4	-124.4	0.07 (1)	4.35	R- G	0 / 102	0.02 (1)
G- H	-2798 / 0	-124.4	-124.4	0.52 (1)	3.67	Q- G	0 / 834	0.19 (1)
H- I	-3535 / 0	-124.4	-124.4	0.57 (1)	3.28	Q- H	-1075 / 0	0.53 (1)
I- J	-3888 / 0	-124.4	-124.4	0.71 (1)	2.97	O- H	0 / 467	0.11 (2)
J- K	-3888 / 0	-124.4	-124.4	0.71 (1)	2.97	O- I	-412 / 0	0.30 (1)
K- L	0 / 38	-124.4	-124.4	0.16 (1)	10.00	N- I	-325 / 62	0.08 (1)
V- B	-2750 / 0	0.0	0.0	0.28 (1)	5.19	B- U	0 / 3546	0.80 (1)
M- K	-2749 / 0	0.0	0.0	0.28 (1)	5.20	N- K	0 / 3545	0.80 (1)
V- U	0 / 0	-39.2	-39.2	0.20 (3)	10.00			
U- T	0 / 3503	-39.2	-39.2	0.68 (1)	10.00			
T- S	0 / 3158	-39.2	-39.2	0.67 (1)	10.00			
S- R	0 / 3158	-39.2	-39.2	0.67 (1)	10.00			
R- Q	0 / 2466	-39.2	-39.2	0.56 (1)	10.00			
Q- P	0 / 3162	-39.2	-39.2	0.62 (1)	10.00			
P- O	0 / 3162	-39.2	-39.2	0.62 (1)	10.00			
O- N	0 / 3502	-39.2	-39.2	0.68 (1)	10.00			
N- M	0 / 0	-39.2	-39.2	0.20 (3)	10.00			

DESIGN CRITERIA

SPECIFIED LOADS:

TOP CH.	LL	=	34.8	PSF
	DL	=	8.0	PSF
BOT CH.	LL	=	10.5	PSF
	DL	=	7.3	PSF
TOTAL LOAD		=	60.6	PSF

SPACING = 24.0 IN. C/C

LOADING IN FLAT SECTION BASED ON A SLOPE OF 2.00/12 MINIMUM

THIS TRUSS IS DESIGNED FOR RESIDENTIAL OR SMALL BUILDING REQUIREMENTS OF PART 9, NBCC 2015

THIS DESIGN COMPLIES WITH:
- PART 9 OF BCBC 2018 , ABC 2019
- PART 9 OF OBC 2012 (2019 AMENDMENT)
- CSA 086-14
- TPIC 2014

(55 % OF 48.1 P.S.F. G.S.L. PLUS 8.4 P.S.F. RAIN LOAD) EQUALS 34.8 P.S.F. SPECIFIED ROOF LIVE LOAD

ALLOWABLE DEFL.(LL)= L/360 (1.09")
CALCULATED VERT. DEFL.(LL) = L/ 999 (0.20")
ALLOWABLE DEFL.(TL)= L/360 (1.09")
CALCULATED VERT. DEFL.(TL) = L/ 999 (0.34")

CSI: TC=0.71/1.00 (B-D:1) , BC=0.68/1.00 (N-O:1) , WB=0.80/1.00 (B-U:1) , SSI=0.28/1.00 (B-D:1)

DOL LUMBER=1.00 NAIL=1.00 LS BEND=1.10 COMP=1.10 SHEAR=1.10 TENS= 1.10

COMPANION LIVE LOAD FACTOR = 1.00

TRUSS PLATE MANUFACTURER IS NOT RESPONSIBLE FOR QUALITY CONTROL IN THE TRUSS MANUFACTURING PLANT .

NAIL VALUES

PLATE	GRIP(DRY) (PSI) MAX	MIN	SHEAR (PLI) MAX	MIN	SECTION (PLI) MAX	MIN
MT20	650	371	1747	788	1987	1873

PLATE PLACEMENT TOL. = 0.250 inches

PLATE ROTATION TOL. = 5.0 Deg.

JSI GRIP= 0.90 (Q) (INPUT = 0.90)
JSI METAL= 0.98 (S) (INPUT = 1.00)

LICENSED PROFESSIONAL ENGINEER
N.A. EL-MASRI
PROVINCE OF ONTARIO
Dec 16, 2020

READ ALL NOTES ON THIS PAGE AND ON ENGINEERING NOTE PAGE ENP-1. THIS NOTE PAGE IS AN INTEGRAL PART OF THIS DRAWING AS IT CONTAINS SPECIFICATIONS AND CRITERIA USED IN THE DESIGN OF THIS COMPONENT.

Town of East Gwillimbury
Building Standards Branch BCIN #16487

These plans have been reviewed for use with the corrections as noted. No other changes may be made without written approval of the Building Standards Branch. All work must comply with Zoning By-Law 2018-043, as amended, and the Ontario Building Code, as amended. These approved documents must be kept on site at all times. The building permit must be clearly posted on site at all times.

Discipline	Reviewer	BCIN	Date
Building Code	H. Authier	43236	2021-02-05
Sewage System			
Zoning			

KOTT

JOB NAME	TRUSS NAME	QUANTITY	PLY	JOB DESC.		DRWG NO.
NE1220-120	T25	7	1	TRUSS DESC.	GREENPARK - TRINAR HALL - GLENWAY 7A ELE 3	**Page 32 of 42**

Version 8.420 S Oct 9 2020 MiTek Industries, Inc. Thu Dec 17 20:49:29 2020 Page 1
ID:qKv8nLSCtBps7zaDJTm7k2zFzGC-iK5ybk7JTKh4aETPG33X9QZpYLlqpKnWI1IrKvy7y

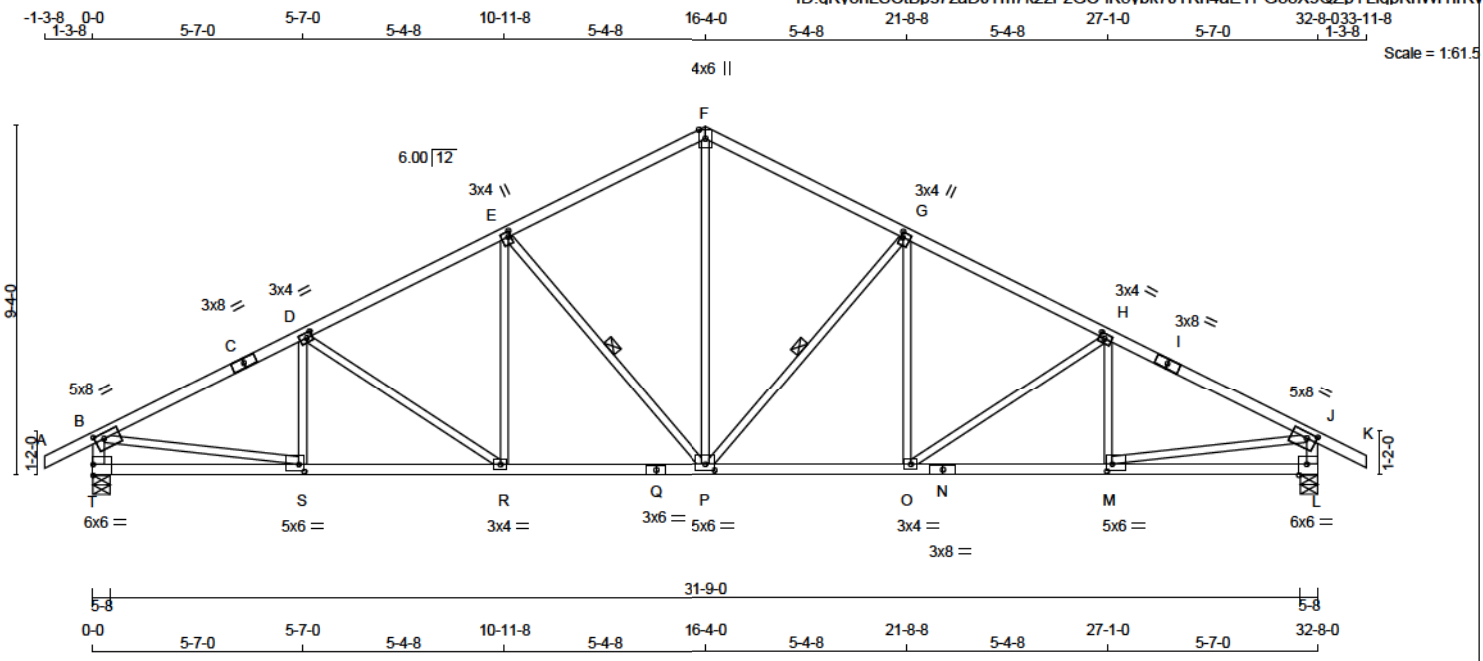

TOTAL WEIGHT = 7 X 138 = 968 lb

LUMBER
N. L. G. A. RULES

CHORDS	SIZE		LUMBER	DESCR.
A - C	2x4	DRY	No.2	SPF
C - F	2x4	DRY	No.2	SPF
F - I	2x4	DRY	No.2	SPF
I - K	2x4	DRY	No.2	SPF
T - B	2x4	DRY	No.2	SPF
L - J	2x4	DRY	No.2	SPF
T - Q	2x4	DRY	No.2	SPF
Q - N	2x4	DRY	No.2	SPF
N - L	2x4	DRY	No.2	SPF
ALL WEBS EXCEPT	2x3	DRY	No.2	SPF

DRY: SEASONED LUMBER.

PLATES (table is in inches)

JT	TYPE	PLATES	W	LEN	Y	X
B	TMVW-t	MT20	5.0	8.0	1.75	3.00
C	TS-t	MT20	3.0	8.0		
D	TMWW-t	MT20	3.0	4.0	1.50	1.75
E	TMWW+t	MT20	3.0	4.0	1.75	0.75
F	TTW+p	MT20	4.0	6.0	Edge	
G	TMWW+t	MT20	3.0	4.0	1.75	0.75
H	TMWW-t	MT20	3.0	4.0	1.50	1.75
I	TS-t	MT20	3.0	8.0		
J	TMVW-t	MT20	5.0	8.0	1.75	3.00
L	BMV1-t	MT20	6.0	6.0	Edge	2.50
M	BMWW-t	MT20	5.0	6.0	2.25	1.75
N	BS-t	MT20	3.0	8.0		
O	BMWW-t	MT20	3.0	4.0		
P	BMWWW-t	MT20	5.0	6.0	2.00	3.00
Q	BS-t	MT20	3.0	6.0		
R	BMWW-t	MT20	3.0	4.0		
S	BMWW-t	MT20	5.0	6.0	2.25	1.75
T	BMV1-t	MT20	6.0	6.0	3.50	

Edge - INDICATES REFERENCE CORNER OF PLATE TOUCHES EDGE OF CHORD.

DIMENSIONS, SUPPORTS AND LOADINGS SPECIFIED BY FABRICATOR TO BE VERIFIED BY BUILDING DESIGNER [M][F]

BEARINGS

JT	FACTORED GROSS REACTION VERT	HORZ	MAXIMUM GROSS REACTION DOWN	HORZ	FACTORED UPLIFT	INPUT BRG IN-SX	REQRD BRG IN-SX
T	2842	0	2842	0	0	5-8	5-8
L	2842	0	2842	0	0	5-8	5-8

UNFACTORED REACTIONS

JT	1ST LCASE COMBINED	SNOW	MAX./MIN. COMPONENT REACTIONS LIVE	PERM.LIVE	WIND	DEAD	SOIL
T	2096	1232 / 0	343 / 0	0 / 0	0 / 0	522 / 0	0 / 0
L	2096	1232 / 0	343 / 0	0 / 0	0 / 0	522 / 0	0 / 0

BEARING MATERIAL TO BE SPF NO.2 OR BETTER AT JOINT(S) T, L

BRACING
TOP CHORD TO BE SHEATHED OR MAX. PURLIN SPACING = 2.94 FT.
MAX. UNBRACED BOTTOM CHORD LENGTH = 10.00 FT OR RIGID CEILING DIRECTLY APPLIED.

ALL PITCH BREAKS AND PERIMETER CORNER JOINTS MUST BE LATERALLY RESTRAINED.

1 - 1x4 LATERAL BRACE(S) AT 1/ 2 LENGTH OF G-P, E-P. DBS = 20-0-0 . CBF = 137 LBS.

DBS = DIAGONAL BRACE SPACING (MAX). CBF = CUMULATIVE BRACING FORCE (PER BRACE). FASTEN LATERAL BRACE(S) USING (0.122"X3") SPIRAL NAILS : 1 NAIL FOR 2x3 BRACE(S), 2 FOR 1x4, 2x4, 2x5, 3 FOR 2x6, 4 FOR 2x8, 5 FOR 2x10, AND 6 FOR 2x12.

END VERTICAL(S) MUST BE SHEATHED OR HAVE BRACES AS INDICATED IN THE MAX. UNBRACED LENGTH COLUMN OF THE TABLE BELOW

LOADING
TOTAL LOAD CASES: (4)

CHORDS

MEMB. FR-TO	MAX. FORCE (LBS)	FACTORED VERT. LOAD (PLF) FROM	TO	LC1 MAX CSI (LC)	MAX. UNBRAC LENGTH
A- B	0 / 38	-124.4	-124.4	0.16 (1)	10.00
B- C	-3896 / 0	-124.4	-124.4	0.74 (1)	2.94
C- D	-3896 / 0	-124.4	-124.4	0.74 (1)	2.94
D- E	-3508 / 0	-124.4	-124.4	0.59 (1)	3.27
E- F	-2746 / 0	-124.4	-124.4	0.54 (1)	3.67
F- G	-2746 / 0	-124.4	-124.4	0.54 (1)	3.67
G- H	-3508 / 0	-124.4	-124.4	0.59 (1)	3.27
H- I	-3896 / 0	-124.4	-124.4	0.74 (1)	2.94
I- J	-3896 / 0	-124.4	-124.4	0.74 (1)	2.94
J- K	0 / 38	-124.4	-124.4	0.16 (1)	10.00
T- B	-2748 / 0	0.0	0.0	0.28 (1)	5.20
L- J	-2748 / 0	0.0	0.0	0.28 (1)	5.20
T- S	0 / 0	-39.2	-39.2	0.21 (3)	10.00
S- R	0 / 3509	-39.2	-39.2	0.68 (1)	10.00
R- Q	0 / 3138	-39.2	-39.2	0.64 (1)	10.00
Q- P	0 / 3138	-39.2	-39.2	0.64 (1)	10.00
P- O	0 / 3138	-39.2	-39.2	0.64 (1)	10.00
O- N	0 / 3509	-39.2	-39.2	0.68 (1)	10.00
N- M	0 / 3509	-39.2	-39.2	0.68 (1)	10.00
M- L	0 / 0	-39.2	-39.2	0.21 (3)	10.00

WEBS

MEMB. FR-TO	MAX. FORCE (LBS)	MAX CSI (LC)
P- F	0 / 1889	0.43 (1)
P- G	-1093 / 0	0.51 (1)
O- G	0 / 473	0.11 (2)
O- H	-449 / 0	0.34 (1)
M- H	-306 / 76	0.07 (1)
E- P	-1093 / 0	0.51 (1)
R- E	0 / 473	0.11 (2)
D- R	-449 / 0	0.34 (1)
S- D	-306 / 76	0.07 (1)
B- S	0 / 3551	0.80 (1)
M- J	0 / 3551	0.80 (1)

DESIGN CRITERIA

SPECIFIED LOADS:
TOP CH. LL = 34.8 PSF
DL = 8.0 PSF
BOT CH. LL = 10.5 PSF
DL = 7.3 PSF
TOTAL LOAD = 60.6 PSF

SPACING = 24.0 IN. C/C

THIS TRUSS IS DESIGNED FOR RESIDENTIAL OR SMALL BUILDING REQUIREMENTS OF PART 9, NBCC 2015

THIS DESIGN COMPLIES WITH:
- PART 9 OF BCBC 2018 , ABC 2019
- PART 9 OF OBC 2012 (2019 AMENDMENT)
- CSA 086-14
- TPIC 2014

(55 % OF 48.1 P.S.F. G.S.L. PLUS 8.4 P.S.F. RAIN LOAD) EQUALS 34.8 P.S.F. SPECIFIED ROOF LIVE LOAD

ALLOWABLE DEFL.(LL)= L/360 (1.09")
CALCULATED VERT. DEFL.(LL) = L/ 999 (0.20")
ALLOWABLE DEFL.(TL)= L/360 (1.09")
CALCULATED VERT. DEFL.(TL) = L/ 999 (0.34")

CSI: TC=0.74/1.00 (B-D:1) , BC=0.68/1.00 (M-O:1) , WB=0.80/1.00 (J-M:1) , SSI=0.29/1.00 (B-D:1)

DOL LUMBER=1.00 NAIL=1.00 LS BEND=1.10 COMP=1.10 SHEAR=1.10 TENS= 1.10

COMPANION LIVE LOAD FACTOR = 1.00

TRUSS PLATE MANUFACTURER IS NOT RESPONSIBLE FOR QUALITY CONTROL IN THE TRUSS MANUFACTURING PLANT .

NAIL VALUES

PLATE	GRIP(DRY) (PSI) MAX	MIN	SHEAR (PLI) MAX	MIN	SECTION (PLI) MAX	MIN
MT20	650	371	1747	788	1987	1873

PLATE PLACEMENT TOL. = 0.250 inches

PLATE ROTATION TOL. = 5.0 Deg.

JSI GRIP= 0.90 (M) (INPUT = 0.90)
JSI METAL= 1.00 (N) (INPUT = 1.00)

LICENSED PROFESSIONAL ENGINEER
N.A. EL-MASRI
PROVINCE OF ONTARIO
Dec 16, 2020

READ ALL NOTES ON THIS PAGE AND ON ENGINEERING NOTE PAGE ENP-1. THIS NOTE PAGE IS AN INTEGRAL PART OF THIS DRAWING AS IT CONTAINS SPECIFICATIONS AND CRITERIA USED IN THE DESIGN OF THIS COMPONENT.

Town of East Gwillimbury
Building Standards Branch BCIN #16487

These plans have been reviewed for use with the corrections as noted. No other changes may be made without written approval of the Building Standards Branch. All work must comply with Zoning By-Law 2018-043, as amended, and the Ontario Building Code, as amended. These approved documents must be kept on site at all times. The building permit must be clearly posted on site at all times.

Discipline	Reviewer	BCIN	Date
Building Code	H. Authier	43236	2021-02-05
Sewage System			
Zoning			

KOTT

JOB NAME	TRUSS NAME	QUANTITY	PLY	JOB DESC.		DRWG NO.
NE1220-120	T27	1	1	TRUSS DESC.	GREENPARK - TRINAR HALL - GLENWAY 7A ELE 3	**Page 33 of 42**

Version 8.420 S Oct 9 2020 MiTek Industries, Inc. Thu Dec 17 20:49:30 2020 Page 1

ID:qKv8nLSCtBps7zaDJTm7k2zFzGC-BWfLo48xEdpxBO1bqmbmid6 Nl3MYr9f h1OsMy7y

Scale = 1:55.6

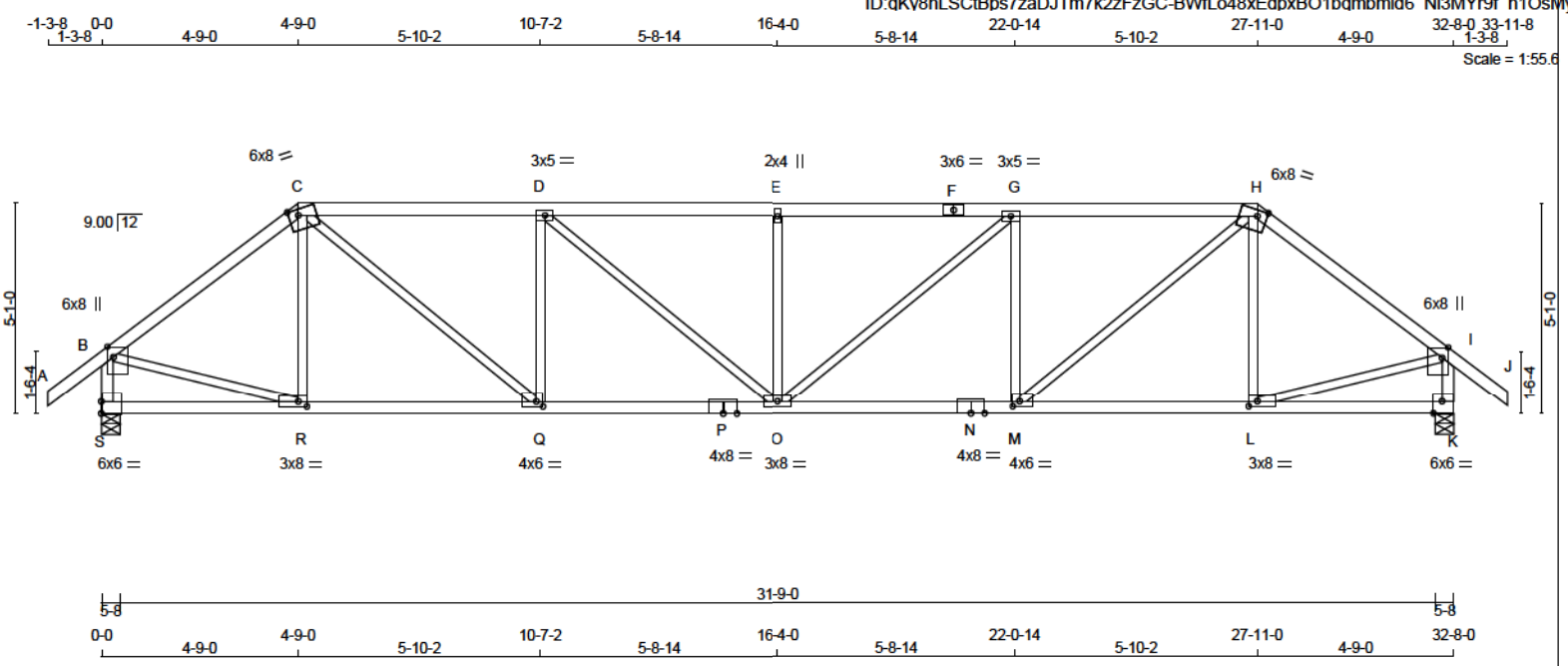

TOTAL WEIGHT = 133 lb

LUMBER

N. L. G. A. RULES

CHORDS	SIZE		LUMBER	DESCR.
A - C	2x4	DRY	No.2	SPF
C - F	2x4	DRY	2100F 1.8E	SPF
F - H	2x4	DRY	2100F 1.8E	SPF
H - J	2x4	DRY	No.2	SPF
S - B	2x4	DRY	No.2	SPF
K - I	2x4	DRY	No.2	SPF
S - P	2x4	DRY	No.2	SPF
P - N	2x4	DRY	No.2	SPF
N - K	2x4	DRY	No.2	SPF
ALL WEBS EXCEPT	2x3	DRY	No.2	SPF

DRY: SEASONED LUMBER.

PLATES (table is in inches)

JT	TYPE	PLATES	W	LEN	Y	X
B	TMVW+p	MT20	6.0	8.0	3.00	1.75
C	TTWW-m	MT20	6.0	8.0	1.75	2.75
D	TMWW-t	MT20	3.0	5.0		
E	TMW+w	MT20	2.0	4.0		
F	TS-t	MT20	3.0	6.0		
G	TMWW-t	MT20	3.0	5.0		
H	TTWW-m	MT20	6.0	8.0	1.75	2.75
I	TMVW+p	MT20	6.0	8.0	3.00	1.75
K	BMV1-t	MT20	6.0	6.0	Edge	2.50
L	BMWW-t	MT20	3.0	8.0	1.50	2.50
M	BMWW-t	MT20	4.0	6.0	1.50	2.00
N	BS-t	MT20	4.0	8.0		
O	BMWWW-t	MT20	3.0	8.0		
P	BS-t	MT20	4.0	8.0		
Q	BMWW-t	MT20	4.0	6.0	1.50	2.00
R	BMWW-t	MT20	3.0	8.0	1.50	2.50
S	BMV1-t	MT20	6.0	6.0	3.50	

Edge - INDICATES REFERENCE CORNER OF PLATE TOUCHES EDGE OF CHORD.

DIMENSIONS, SUPPORTS AND LOADINGS SPECIFIED BY FABRICATOR TO BE VERIFIED BY BUILDING DESIGNER

BEARINGS

JT	FACTORED GROSS REACTION VERT	HORZ	MAXIMUM GROSS REACTION DOWN	HORZ	FACTORED UPLIFT	INPUT BRG IN-SX	REQRD BRG IN-SX
S	2845	0	2845	0	0	5-8	5-8
K	2845	0	2845	0	0	5-8	5-8

UNFACTORED REACTIONS

JT	1ST LCASE COMBINED	SNOW	MAX./MIN. COMPONENT REACTIONS LIVE	PERM.LIVE	WIND	DEAD	SOIL
S	2098	1233 / 0	343 / 0	0 / 0	0 / 0	522 / 0	0 / 0
K	2098	1233 / 0	343 / 0	0 / 0	0 / 0	522 / 0	0 / 0

BEARING MATERIAL TO BE SPF NO.2 OR BETTER AT JOINT(S) S, K

BRACING

TOP CHORD TO BE SHEATHED OR MAX. PURLIN SPACING = 3.36 FT.
MAX. UNBRACED BOTTOM CHORD LENGTH = 10.00 FT OR RIGID CEILING DIRECTLY APPLIED.

ALL PITCH BREAKS AND PERIMETER CORNER JOINTS MUST BE LATERALLY RESTRAINED.

LOADING

TOTAL LOAD CASES: (4)

CHORDS MEMB. FR-TO	MAX. FACTORED FORCE (LBS)	FACTORED VERT. LOAD (PLF) FROM	TO	LC1 MAX CSI (LC)	MAX. UNBRAC LENGTH	WEBS MEMB. FR-TO	MAX. FACTORED FORCE (LBS)	MAX CSI (LC)
A- B	0 / 51	-124.4	-124.4	0.17 (1)	10.00	R- C	-333 / 48	0.13 (1)
B- C	-2888 / 0	-124.4	-124.4	0.73 (1)	3.36	C- Q	0 / 2326	0.52 (1)
C- D	-4100 / 0	-124.4	-124.4	0.56 (1)	3.79	Q- D	-1250 / 0	0.48 (1)
D- E	-4631 / 0	-124.4	-124.4	0.60 (1)	3.56	D- O	0 / 691	0.16 (1)
E- F	-4631 / 0	-124.4	-124.4	0.60 (1)	3.56	O- E	-660 / 0	0.25 (1)
F- G	-4631 / 0	-124.4	-124.4	0.60 (1)	3.56	O- G	0 / 691	0.16 (1)
G- H	-4100 / 0	-124.4	-124.4	0.56 (1)	3.79	M- G	-1250 / 0	0.48 (1)
H- I	-2888 / 0	-124.4	-124.4	0.73 (1)	3.36	M- H	0 / 2326	0.52 (1)
I- J	0 / 51	-124.4	-124.4	0.17 (1)	10.00	L- H	-333 / 48	0.13 (1)
S- B	-2772 / 0	0.0	0.0	0.29 (1)	5.17	B- R	0 / 2375	0.53 (1)
K- I	-2772 / 0	0.0	0.0	0.29 (1)	5.17	L- I	0 / 2375	0.53 (1)
S- R	0 / 0	-39.2	-39.2	0.21 (3)	10.00			
R- Q	0 / 2299	-39.2	-39.2	0.52 (1)	10.00			
Q- P	0 / 4100	-39.2	-39.2	0.78 (1)	10.00			
P- O	0 / 4100	-39.2	-39.2	0.78 (1)	10.00			
O- N	0 / 4100	-39.2	-39.2	0.78 (1)	10.00			
N- M	0 / 4100	-39.2	-39.2	0.78 (1)	10.00			
M- L	0 / 2299	-39.2	-39.2	0.52 (1)	10.00			
L- K	0 / 0	-39.2	-39.2	0.21 (3)	10.00			

[M]

DESIGN CRITERIA

SPECIFIED LOADS:

TOP CH.	LL	=	34.8	PSF
	DL	=	8.0	PSF
BOT CH.	LL	=	10.5	PSF
	DL	=	7.3	PSF
TOTAL LOAD		=	60.6	PSF

SPACING = 24.0 IN. C/C

LOADING IN FLAT SECTION BASED ON A SLOPE OF 2.00/12 MINIMUM

THIS TRUSS IS DESIGNED FOR RESIDENTIAL OR SMALL BUILDING REQUIREMENTS OF PART 9, NBCC 2015

THIS DESIGN COMPLIES WITH:
- PART 9 OF BCBC 2018 , ABC 2019
- PART 9 OF OBC 2012 (2019 AMENDMENT)
- CSA 086-14
- TPIC 2014

(55 % OF 48.1 P.S.F. G.S.L. PLUS 8.4 P.S.F. RAIN LOAD) EQUALS 34.8 P.S.F. SPECIFIED ROOF LIVE LOAD

ALLOWABLE DEFL.(LL)= L/360 (1.09")
CALCULATED VERT. DEFL.(LL) = L/ 999 (0.23")
ALLOWABLE DEFL.(TL)= L/360 (1.09")
CALCULATED VERT. DEFL.(TL) = L/ 999 (0.38")

CSI: TC=0.73/1.00 (H-I:1) , BC=0.78/1.00 (M-O:1) , WB=0.53/1.00 (I-L:1) , SSI=0.34/1.00 (C-D:1)

DOL LUMBER=1.00 NAIL=1.00 LS BEND=1.10 COMP=1.10 SHEAR=1.10 TENS= 1.10

COMPANION LIVE LOAD FACTOR = 1.00

TRUSS PLATE MANUFACTURER IS NOT RESPONSIBLE FOR QUALITY CONTROL IN THE TRUSS MANUFACTURING PLANT .

NAIL VALUES

PLATE	GRIP(DRY) (PSI) MAX	MIN	SHEAR (PLI) MAX	MIN	SECTION (PLI) MAX	MIN
MT20	650	371	1747	788	1987	1873

PLATE PLACEMENT TOL. = 0.250 inches

PLATE ROTATION TOL. = 5.0 Deg.

JSI GRIP= 0.89 (D) (INPUT = 0.90)
JSI METAL= 0.91 (P) (INPUT = 1.00)

LICENSED PROFESSIONAL ENGINEER
N.A. EL-MASRI
PROVINCE OF ONTARIO

Dec 16, 2020

READ ALL NOTES ON THIS PAGE AND ON ENGINEERING NOTE PAGE ENP-1. THIS NOTE PAGE IS AN INTEGRAL PART OF THIS DRAWING AS IT CONTAINS SPECIFICATIONS AND CRITERIA USED IN THE DESIGN OF THIS COMPONENT.

Town of East Gwillimbury
Building Standards Branch BCIN #16487

These plans have been reviewed for use with the corrections as noted. No other changes may be made without written approval of the Building Standards Branch. All work must comply with Zoning By-Law 2018-043, as amended, and the Ontario Building Code, as amended. These approved documents must be kept on site at all times. The building permit must be clearly posted on site at all times.

Discipline	Reviewer	BCIN	Date
Building Code	H. Authier	43236	2021-02-05
Sewage System			
Zoning			

KOTT

JOB NAME	TRUSS NAME	QUANTITY	PLY	JOB DESC.		DRWG NO.
NE1220-120	T28	1	1	TRUSS DESC.	GREENPARK - TRINAR HALL - GLENWAY 7A ELE 3	

Version 8.420 S Oct 9 2020 MiTek Industries, Inc. Thu Dec 17 20:49:31 2020 Page 1
ID:qKv8nLSCtBps7zaDJTm7k2zFzGC-fiCj0P9Z?xxopYcnOU6?Erf9V8S0HF5oDLnxOoy7

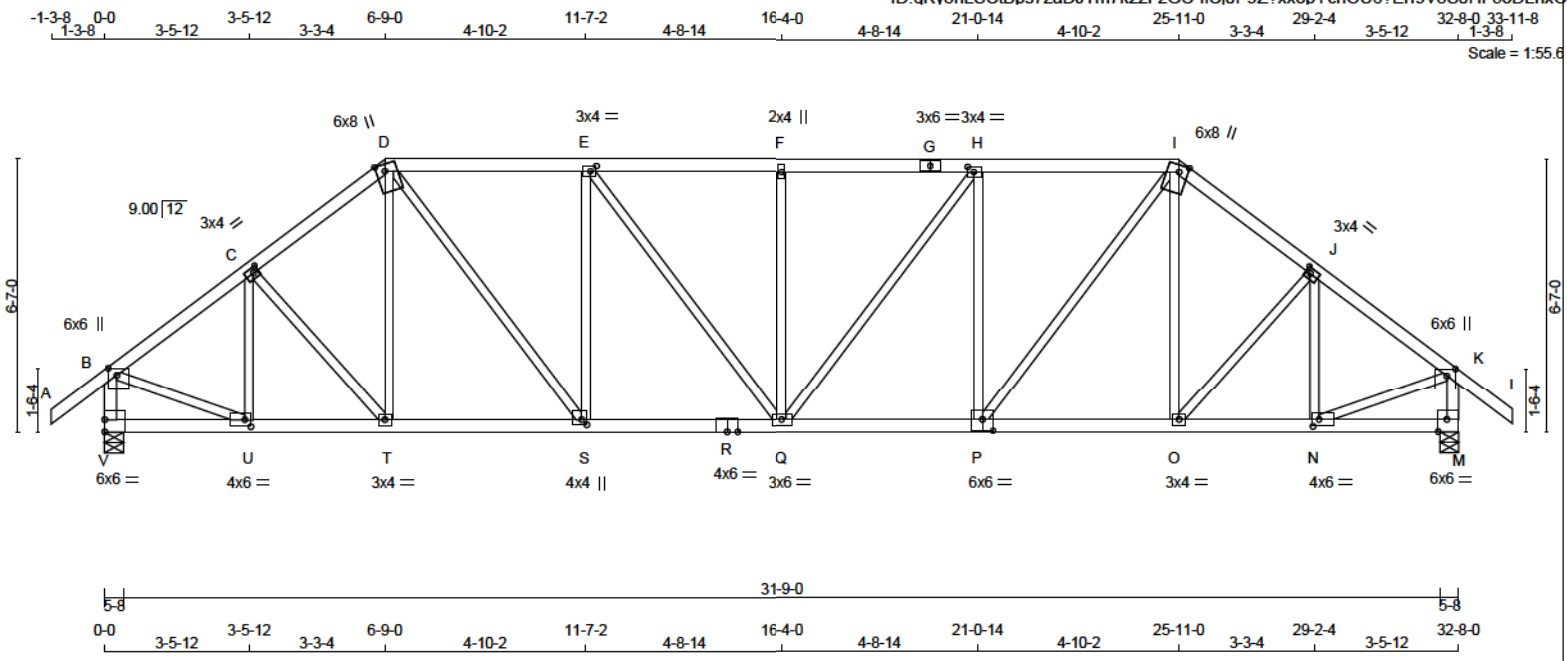

TOTAL WEIGHT = 153 lb

LUMBER
N. L. G. A. RULES

CHORDS	SIZE		LUMBER	DESCR.
A - D	2x4	DRY	No.2	SPF
D - G	2x4	DRY	No.2	SPF
G - I	2x4	DRY	No.2	SPF
I - L	2x4	DRY	No.2	SPF
V - B	2x4	DRY	No.2	SPF
M - K	2x4	DRY	No.2	SPF
V - R	2x4	DRY	No.2	SPF
R - P	2x4	DRY	No.2	SPF
P - M	2x4	DRY	No.2	SPF
ALL WEBS EXCEPT	2x3	DRY	No.2	SPF

DRY: SEASONED LUMBER.

PLATES (table is in inches)

JT	TYPE	PLATES	W	LEN	Y	X
B	TMVW+p	MT20	6.0	6.0	2.00	2.50
C	TMWW-t	MT20	3.0	4.0	1.50	1.50
D	TTWW+m	MT20	6.0	8.0	2.00	2.50
E	TMWW-t	MT20	3.0	4.0	1.50	1.75
F	TMW+w	MT20	2.0	4.0		
G	TS-t	MT20	3.0	6.0		
H	TMWW-t	MT20	3.0	4.0	1.50	1.75
I	TTWW+m	MT20	6.0	8.0	2.00	2.50
J	TMWW-t	MT20	3.0	4.0	1.50	1.50
K	TMVW+p	MT20	6.0	6.0	2.00	2.50
M	BMV1-t	MT20	6.0	6.0	Edge	2.50
N	BMWW-t	MT20	4.0	6.0	2.00	1.75
O	BMWW-t	MT20	3.0	4.0		
P	BSWW-l	MT20	6.0	6.0	3.25	3.00
Q	BMWWW-t	MT20	3.0	6.0		
R	BS-t	MT20	4.0	6.0		
S	BMWW+t	MT20	4.0	4.0	1.50	1.50
T	BMWW-t	MT20	3.0	4.0		
U	BMWW-t	MT20	4.0	6.0	2.00	1.75
V	BMV1-t	MT20	6.0	6.0	3.50	

Edge - INDICATES REFERENCE CORNER OF PLATE TOUCHES EDGE OF CHORD.

DIMENSIONS, SUPPORTS AND LOADINGS SPECIFIED BY FABRICATOR TO BE VERIFIED BY BUILDING DESIGNER

BEARINGS

JT	FACTORED GROSS REACTION VERT	HORZ	MAXIMUM GROSS REACTION DOWN	HORZ	FACTORED UPLIFT	INPUT BRG IN-SX	REQRD BRG IN-SX
V	2845	0	2845	0	0	5-8	5-8
M	2845	0	2845	0	0	5-8	5-8

UNFACTORED REACTIONS

JT	1ST LCASE COMBINED	MAX./MIN. COMPONENT REACTIONS SNOW	LIVE	PERM.LIVE	WIND	DEAD	SOIL
V	2098	1233 / 0	343 / 0	0 / 0	0 / 0	522 / 0	0 / 0
M	2098	1233 / 0	343 / 0	0 / 0	0 / 0	522 / 0	0 / 0

BEARING MATERIAL TO BE SPF NO.2 OR BETTER AT JOINT(S) V, M

BRACING
TOP CHORD TO BE SHEATHED OR MAX. PURLIN SPACING = 3.14 FT.
MAX. UNBRACED BOTTOM CHORD LENGTH = 10.00 FT OR RIGID CEILING DIRECTLY APPLIED.

ALL PITCH BREAKS AND PERIMETER CORNER JOINTS MUST BE LATERALLY RESTRAINED.

LOADING
TOTAL LOAD CASES: (4)

CHORDS

MEMB. FR-TO	MAX. FORCE (LBS)	FACTORED VERT. LOAD (PLF) FROM	TO	LC1 MAX CSI (LC)	MAX. UNBRAC LENGTH
A- B	0 / 51	-124.4	-124.4	0.17 (1)	10.00
B- C	-2762 / 0	-124.4	-124.4	0.33 (1)	3.89
C- D	-2901 / 0	-124.4	-124.4	0.33 (1)	3.80
D- E	-3234 / 0	-124.4	-124.4	0.62 (1)	3.30
E- F	-3510 / 0	-124.4	-124.4	0.64 (1)	3.14
F- G	-3510 / 0	-124.4	-124.4	0.64 (1)	3.14
G- H	-3510 / 0	-124.4	-124.4	0.64 (1)	3.14
H- I	-3224 / 0	-124.4	-124.4	0.62 (1)	3.30
I- J	-2905 / 0	-124.4	-124.4	0.33 (1)	3.80
J- K	-2760 / 0	-124.4	-124.4	0.33 (1)	3.89
K- L	0 / 51	-124.4	-124.4	0.17 (1)	10.00
V- B	-2781 / 0	0.0	0.0	0.29 (1)	5.17
M- K	-2780 / 0	0.0	0.0	0.29 (1)	5.17
V- U	0 / 0	-39.2	-39.2	0.08 (3)	10.00
U- T	0 / 2230	-39.2	-39.2	0.44 (1)	10.00
T- S	0 / 2294	-39.2	-39.2	0.46 (1)	10.00
S- R	0 / 3235	-39.2	-39.2	0.61 (1)	10.00
R- Q	0 / 3235	-39.2	-39.2	0.61 (1)	10.00
Q- P	0 / 3224	-39.2	-39.2	0.63 (1)	10.00
P- O	0 / 2297	-39.2	-39.2	0.48 (1)	10.00
O- N	0 / 2229	-39.2	-39.2	0.47 (1)	10.00
N- M	0 / 0	-39.2	-39.2	0.09 (3)	10.00

WEBS

MEMB. FR-TO	MAX. FORCE (LBS)	MAX CSI (LC)
U- C	-639 / 0	0.17 (1)
C- T	0 / 93	0.02 (1)
T- D	0 / 167	0.04 (3)
D- S	0 / 1540	0.35 (1)
S- E	-1033 / 0	0.74 (1)
E- Q	0 / 457	0.10 (1)
Q- F	-542 / 0	0.39 (1)
Q- H	0 / 474	0.11 (1)
P- H	-1047 / 0	0.75 (1)
P- I	0 / 1518	0.34 (1)
O- I	0 / 195	0.05 (3)
O- J	0 / 99	0.02 (1)
N- J	-647 / 0	0.17 (1)
B- U	0 / 2358	0.53 (1)
N- K	0 / 2357	0.53 (1)

DESIGN CRITERIA

SPECIFIED LOADS:

TOP CH.	LL	=	34.8	PSF
	DL	=	8.0	PSF
BOT CH.	LL	=	10.5	PSF
	DL	=	7.3	PSF
TOTAL LOAD		=	60.6	PSF

SPACING = 24.0 IN. C/C

LOADING IN FLAT SECTION BASED ON A SLOPE OF 2.00/12 MINIMUM

THIS TRUSS IS DESIGNED FOR RESIDENTIAL OR SMALL BUILDING REQUIREMENTS OF PART 9, NBCC 2015

THIS DESIGN COMPLIES WITH:
- PART 9 OF BCBC 2018 , ABC 2019
- PART 9 OF OBC 2012 (2019 AMENDMENT)
- CSA 086-14
- TPIC 2014

(55 % OF 48.1 P.S.F. G.S.L. PLUS 8.4 P.S.F. RAIN LOAD) EQUALS 34.8 P.S.F. SPECIFIED ROOF LIVE LOAD

ALLOWABLE DEFL.(LL)= L/360 (1.09")
CALCULATED VERT. DEFL.(LL) = L/ 999 (0.17")
ALLOWABLE DEFL.(TL)= L/360 (1.09")
CALCULATED VERT. DEFL.(TL) = L/ 999 (0.28")

CSI: TC=0.64/1.00 (F-H:1) , BC=0.63/1.00 (P-Q:1) , WB=0.75/1.00 (H-P:1) , SSI=0.28/1.00 (H-I:1)

DOL LUMBER=1.00 NAIL=1.00 LS BEND=1.10 COMP=1.10 SHEAR=1.10 TENS= 1.10

COMPANION LIVE LOAD FACTOR = 1.00

TRUSS PLATE MANUFACTURER IS NOT RESPONSIBLE FOR QUALITY CONTROL IN THE TRUSS MANUFACTURING PLANT .

NAIL VALUES

PLATE	GRIP(DRY) (PSI) MAX	MIN	SHEAR (PLI) MAX	MIN	SECTION (PLI) MAX	MIN
MT20	650	371	1747	788	1987	1873

PLATE PLACEMENT TOL. = 0.250 inches

PLATE ROTATION TOL. = 5.0 Deg.

JSI GRIP= 0.90 (C) (INPUT = 0.90)
JSI METAL= 0.75 (R) (INPUT = 1.00)

LICENSED PROFESSIONAL ENGINEER
N.A. EL-MASRI
PROVINCE OF ONTARIO
Dec 16, 2020

READ ALL NOTES ON THIS PAGE AND ON ENGINEERING NOTE PAGE ENP-1. THIS NOTE PAGE IS AN INTEGRAL PART OF THIS DRAWING AS IT CONTAINS SPECIFICATIONS AND CRITERIA USED IN THE DESIGN OF THIS COMPONENT.

Town of East Gwillimbury
Building Standards Branch BCIN #16487

These plans have been reviewed for use with the corrections as noted. No other changes may be made without written approval of the Building Standards Branch. All work must comply with Zoning By-Law 2018-043, as amended, and the Ontario Building Code, as amended. These approved documents must be kept on site at all times. The building permit must be clearly posted on site at all times.

Discipline	Reviewer	BCIN	Date
Building Code	H. Authier	43236	2021-02-05
Sewage System			
Zoning			

KOTT

JOB NAME	TRUSS NAME	QUANTITY	PLY	JOB DESC.		DRWG NO.
NE1220-120	T29	1	1	TRUSS DESC.	GREENPARK - TRINAR HALL - GLENWAY 7A ELE 3	**Page 35 of 42**

Version 8.420 S Oct 9 2020 MiTek Industries, Inc. Thu Dec 17 20:49:31 2020 Page 1
ID:qKv8nLSCtBps7zaDJTm7k2zFzGC-fiCj0P9Z?xxopYcnOU6?ErfCK8T9HDUoDLnxOoy7

Scale = 1:55.6

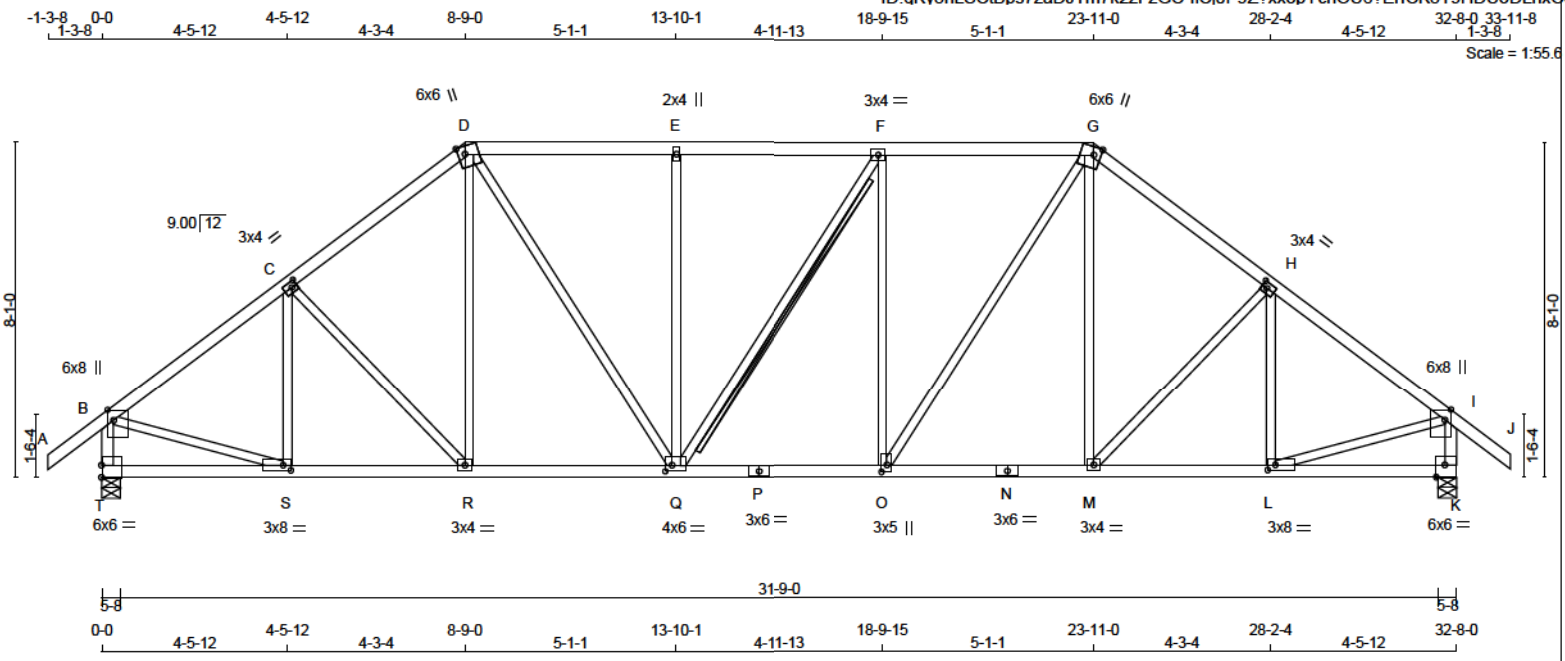

TOTAL WEIGHT = 156 lb

LUMBER
N. L. G. A. RULES

CHORDS	SIZE		LUMBER	DESCR.
A - D	2x4	DRY	No.2	SPF
D - G	2x4	DRY	No.2	SPF
G - J	2x4	DRY	No.2	SPF
T - B	2x4	DRY	No.2	SPF
K - I	2x4	DRY	No.2	SPF
T - P	2x4	DRY	No.2	SPF
P - N	2x4	DRY	No.2	SPF
N - K	2x4	DRY	No.2	SPF
ALL WEBS EXCEPT	2x3	DRY	No.2	SPF

DRY: SEASONED LUMBER.

PLATES (table is in inches)

JT	TYPE	PLATES	W	LEN	Y	X
B	TMVW+p	MT20	6.0	8.0	3.00	1.75
C	TMWW-t	MT20	3.0	4.0	1.50	1.50
D	TTWW+m	MT20	6.0	6.0	Edge	2.00
E	TMW+w	MT20	2.0	4.0		
F	TMWW-t	MT20	3.0	4.0		
G	TTWW+m	MT20	6.0	6.0	Edge	2.00
H	TMWW-t	MT20	3.0	4.0	1.50	1.50
I	TMVW+p	MT20	6.0	8.0	3.00	1.75
K	BMV1-t	MT20	6.0	6.0	Edge	2.50
L	BMWW-t	MT20	3.0	8.0	1.50	2.25
M	BMWW-t	MT20	3.0	4.0		
N	BS-t	MT20	3.0	6.0		
O	BMWW+t	MT20	3.0	5.0	2.00	1.50
P	BS-t	MT20	3.0	6.0		
Q	BMWWW-t	MT20	4.0	6.0	1.75	2.00
R	BMWW-t	MT20	3.0	4.0		
S	BMWW-t	MT20	3.0	8.0	1.50	2.25
T	BMV1-t	MT20	6.0	6.0	3.50	

Edge - INDICATES REFERENCE CORNER OF PLATE TOUCHES EDGE OF CHORD.

DIMENSIONS, SUPPORTS AND LOADINGS SPECIFIED BY FABRICATOR TO BE VERIFIED BY BUILDING DESIGNER

BEARINGS

JT	FACTORED GROSS REACTION VERT	HORZ	MAXIMUM GROSS REACTION DOWN	HORZ	FACTORED UPLIFT	INPUT BRG IN-SX	REQRD BRG IN-SX
T	2845	0	2845	0	0	5-8	5-8
K	2845	0	2845	0	0	5-8	5-8

UNFACTORED REACTIONS

JT	1ST LCASE COMBINED	SNOW	MAX./MIN. COMPONENT REACTIONS LIVE	PERM.LIVE	WIND	DEAD	SOIL
T	2098	1233 / 0	343 / 0	0 / 0	0 / 0	522 / 0	0 / 0
K	2098	1233 / 0	343 / 0	0 / 0	0 / 0	522 / 0	0 / 0

BEARING MATERIAL TO BE SPF NO.2 OR BETTER AT JOINT(S) T, K

BRACING
TOP CHORD TO BE SHEATHED OR MAX. PURLIN SPACING = 3.72 FT.
MAX. UNBRACED BOTTOM CHORD LENGTH = 10.00 FT OR RIGID CEILING DIRECTLY APPLIED.

ALL PITCH BREAKS AND PERIMETER CORNER JOINTS MUST BE LATERALLY RESTRAINED.

2x4 DRY SPF No.2 T-BRACE AT F-Q

FASTEN T AND I-BRACES TO NARROW EDGE OF WEB WITH ONE ROW PER PLY OF 3" COMMON WIRE NAILS @ 6" O.C. WITH 3" MINIMUM END DISTANCE. BRACE MUST COVER 90% OF WEB LENGTH.

END VERTICAL(S) MUST BE SHEATHED OR HAVE BRACES AS INDICATED IN THE MAX. UNBRACED LENGTH COLUMN OF THE TABLE BELOW

LOADING
TOTAL LOAD CASES: (4)

CHORDS

MEMB. FR-TO	MAX. FACTORED FORCE (LBS)	FACTORED VERT. LOAD (PLF) FROM	TO	LC1 MAX CSI (LC)	MAX. UNBRAC LENGTH
A- B	0 / 51	-124.4	-124.4	0.17 (1)	10.00
B- C	-2891 / 0	-124.4	-124.4	0.42 (1)	3.74
C- D	-2807 / 0	-124.4	-124.4	0.41 (1)	3.80
D- E	-2784 / 0	-124.4	-124.4	0.46 (1)	3.73
E- F	-2784 / 0	-124.4	-124.4	0.43 (1)	3.77
F- G	-2786 / 0	-124.4	-124.4	0.46 (1)	3.72
G- H	-2806 / 0	-124.4	-124.4	0.41 (1)	3.80
H- I	-2891 / 0	-124.4	-124.4	0.42 (1)	3.74
I- J	0 / 51	-124.4	-124.4	0.17 (1)	10.00
T- B	-2769 / 0	0.0	0.0	0.29 (1)	5.17
K- I	-2769 / 0	0.0	0.0	0.29 (1)	5.17
T- S	0 / 0	-39.2	-39.2	0.13 (3)	10.00
S- R	0 / 2342	-39.2	-39.2	0.48 (1)	10.00
R- Q	0 / 2214	-39.2	-39.2	0.46 (1)	10.00
Q- P	0 / 2786	-39.2	-39.2	0.55 (1)	10.00
P- O	0 / 2786	-39.2	-39.2	0.55 (1)	10.00
O- N	0 / 2214	-39.2	-39.2	0.46 (1)	10.00
N- M	0 / 2214	-39.2	-39.2	0.46 (1)	10.00
M- L	0 / 2342	-39.2	-39.2	0.47 (1)	10.00
L- K	0 / 0	-39.2	-39.2	0.13 (3)	10.00

WEBS

MEMB. FR-TO	MAX. FACTORED FORCE (LBS)	MAX CSI (LC)
S- C	-443 / 0	0.16 (1)
C- R	-191 / 0	0.14 (1)
R- D	0 / 348	0.08 (2)
D- Q	0 / 1040	0.23 (1)
Q- E	-674 / 0	0.85 (1)
Q- F	-4 / 0	0.00 (1)
O- F	-675 / 0	0.85 (1)
O- G	0 / 1045	0.24 (1)
M- G	0 / 346	0.08 (2)
M- H	-192 / 0	0.14 (1)
L- H	-442 / 0	0.15 (1)
B- S	0 / 2424	0.55 (1)
L- I	0 / 2424	0.55 (1)

DESIGN CRITERIA

SPECIFIED LOADS:

TOP CH.	LL	=	34.8	PSF
	DL	=	8.0	PSF
BOT CH.	LL	=	10.5	PSF
	DL	=	7.3	PSF
TOTAL LOAD		=	60.6	PSF

SPACING = 24.0 IN. C/C

LOADING IN FLAT SECTION BASED ON A SLOPE OF 2.00/12 MINIMUM

THIS TRUSS IS DESIGNED FOR RESIDENTIAL OR SMALL BUILDING REQUIREMENTS OF PART 9, NBCC 2015

THIS DESIGN COMPLIES WITH:
- PART 9 OF BCBC 2018 , ABC 2019
- PART 9 OF OBC 2012 (2019 AMENDMENT)
- CSA 086-14
- TPIC 2014

(55 % OF 48.1 P.S.F. G.S.L. PLUS 8.4 P.S.F. RAIN LOAD) EQUALS 34.8 P.S.F. SPECIFIED ROOF LIVE LOAD

ALLOWABLE DEFL.(LL)= L/360 (1.09")
CALCULATED VERT. DEFL.(LL) = L/ 999 (0.13")
ALLOWABLE DEFL.(TL)= L/360 (1.09")
CALCULATED VERT. DEFL.(TL) = L/ 999 (0.22")

CSI: TC=0.46/1.00 (D-E:1) , BC=0.55/1.00 (O-Q:1) , WB=0.85/1.00 (F-O:1) , SSI=0.29/1.00 (F-G:1)

DOL LUMBER=1.00 NAIL=1.00 LS BEND=1.10 COMP=1.10 SHEAR=1.10 TENS= 1.10

COMPANION LIVE LOAD FACTOR = 1.00

TRUSS PLATE MANUFACTURER IS NOT RESPONSIBLE FOR QUALITY CONTROL IN THE TRUSS MANUFACTURING PLANT .

NAIL VALUES

PLATE	GRIP(DRY) (PSI) MAX	MIN	SHEAR (PLI) MAX	MIN	SECTION (PLI) MAX	MIN
MT20	650	371	1747	788	1987	1873

PLATE PLACEMENT TOL. = 0.250 inches

PLATE ROTATION TOL. = 5.0 Deg.

JSI GRIP= 0.90 (Q) (INPUT = 0.90)
JSI METAL= 0.90 (P) (INPUT = 1.00)

LICENSED PROFESSIONAL ENGINEER
N.A. EL-MASRI
PROVINCE OF ONTARIO
Dec 16, 2020

READ ALL NOTES ON THIS PAGE AND ON ENGINEERING NOTE PAGE ENP-1. THIS NOTE PAGE IS AN INTEGRAL PART OF THIS DRAWING AS IT CONTAINS SPECIFICATIONS AND CRITERIA USED IN THE DESIGN OF THIS COMPONENT.

Town of East Gwillimbury
Building Standards Branch BCIN #16487

These plans have been reviewed for use with the corrections as noted. No other changes may be made without written approval of the Building Standards Branch. All work must comply with Zoning By-Law 2018-043, as amended, and the Ontario Building Code, as amended. These approved documents must be kept on site at all times. The building permit must be clearly posted on site at all times.

Discipline	Reviewer	BCIN	Date
Building Code	H. Authier	43236	2021-02-05
Sewage System			
Zoning			

KOTT

JOB NAME	TRUSS NAME	QUANTITY	PLY	JOB DESC.		DRWG NO.
NE1220-120	T30	1	1	TRUSS DESC.	GREENPARK - TRINAR HALL - GLENWAY 7A ELE 3	

Version 8.420 S Oct 9 2020 MiTek Industries, Inc. Thu Dec 17 20:49:32 2020 Page 1
ID:qKv8nLSCtBps7zaDJTm7k2zFzGC-7vm5DIACmF3fRiBzyBdEn2BKDYpu0IMyR?WVwEy7y

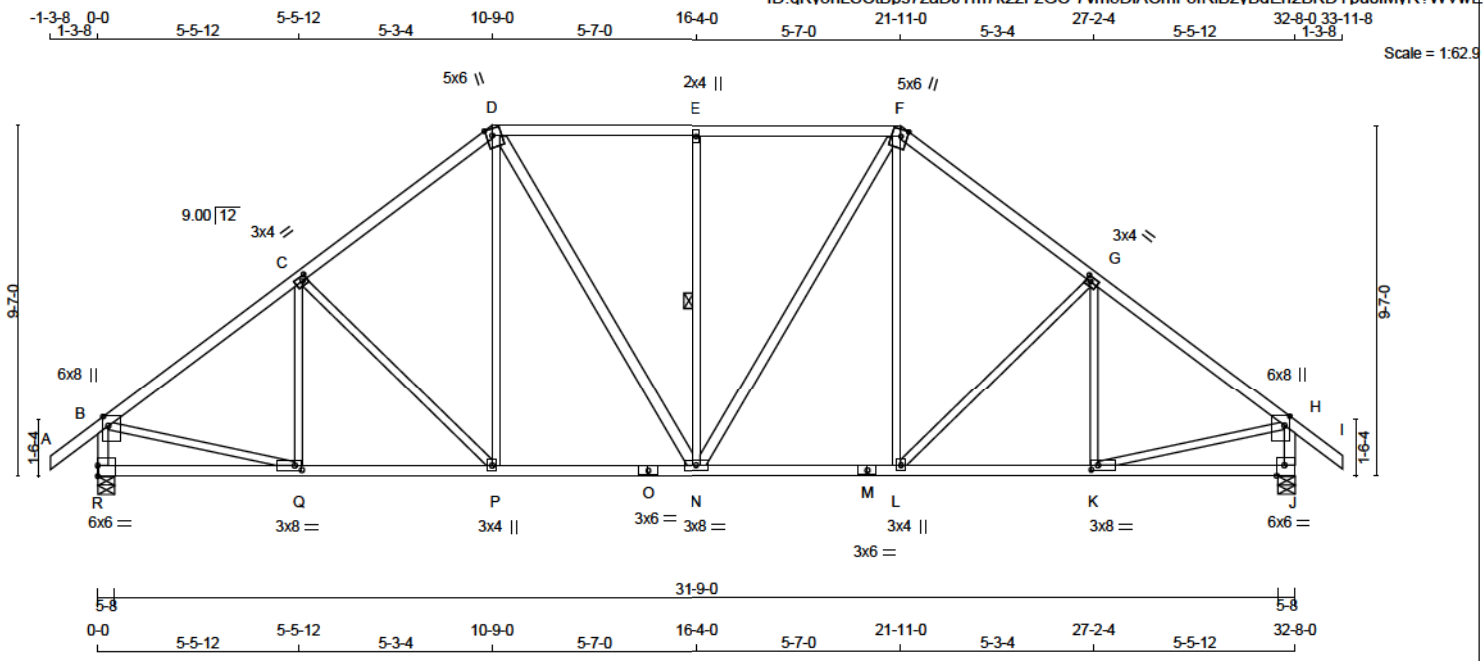

TOTAL WEIGHT = 162 lb

LUMBER
N. L. G. A. RULES

CHORDS	SIZE		LUMBER	DESCR.
A - D	2x4	DRY	No.2	SPF
D - F	2x4	DRY	No.2	SPF
F - I	2x4	DRY	No.2	SPF
R - B	2x4	DRY	No.2	SPF
J - H	2x4	DRY	No.2	SPF
R - O	2x4	DRY	No.2	SPF
O - M	2x4	DRY	No.2	SPF
M - J	2x4	DRY	No.2	SPF
ALL WEBS EXCEPT	2x3	DRY	No.2	SPF
D - N	2x4	DRY	No.2	SPF
N - F	2x4	DRY	No.2	SPF

DRY: SEASONED LUMBER.

PLATES (table is in inches)

JT	TYPE	PLATES	W	LEN	Y	X
B	TMVW+p	MT20	6.0	8.0	3.00	1.75
C	TMWW-t	MT20	3.0	4.0	1.50	1.50
D	TTWW+m	MT20	5.0	6.0	Edge	2.00
E	TMW+w	MT20	2.0	4.0		
F	TTWW+m	MT20	5.0	6.0	Edge	2.00
G	TMWW-t	MT20	3.0	4.0	1.50	1.50
H	TMVW+p	MT20	6.0	8.0	3.00	1.75
J	BMV1-t	MT20	6.0	6.0	Edge	2.50
K	BMWW-t	MT20	3.0	8.0	1.50	2.25
L	BMWW+t	MT20	3.0	4.0		
M	BS-t	MT20	3.0	6.0		
N	BMWWW-t	MT20	3.0	8.0		
O	BS-t	MT20	3.0	6.0		
P	BMWW+t	MT20	3.0	4.0		
Q	BMWW-t	MT20	3.0	8.0	1.50	2.25
R	BMV1-t	MT20	6.0	6.0	3.50	

Edge - INDICATES REFERENCE CORNER OF PLATE TOUCHES EDGE OF CHORD.

DIMENSIONS, SUPPORTS AND LOADINGS SPECIFIED BY FABRICATOR TO BE VERIFIED BY BUILDING DESIGNER

BEARINGS

JT	FACTORED GROSS REACTION VERT	HORZ	MAXIMUM GROSS REACTION DOWN	HORZ	UPLIFT	FACTORED INPUT BRG IN-SX	REQRD BRG IN-SX
R	2845	0	2845	0	0	5-8	5-8
J	2845	0	2845	0	0	5-8	5-8

UNFACTORED REACTIONS

1ST LCASE MAX./MIN. COMPONENT REACTIONS

JT	COMBINED	SNOW	LIVE	PERM.LIVE	WIND	DEAD	SOIL
R	2098	1233 / 0	343 / 0	0 / 0	0 / 0	522 / 0	0 / 0
J	2098	1233 / 0	343 / 0	0 / 0	0 / 0	522 / 0	0 / 0

BEARING MATERIAL TO BE SPF NO.2 OR BETTER AT JOINT(S) R, J

BRACING
TOP CHORD TO BE SHEATHED OR MAX. PURLIN SPACING = 3.45 FT.
MAX. UNBRACED BOTTOM CHORD LENGTH = 10.00 FT OR RIGID CEILING DIRECTLY APPLIED.

ALL PITCH BREAKS AND PERIMETER CORNER JOINTS MUST BE LATERALLY RESTRAINED.

1 - 1x4 LATERAL BRACE(S) AT 1/ 2 LENGTH OF E-N. DBS = 20-0-0 . CBF = 106 LBS.

DBS = DIAGONAL BRACE SPACING (MAX). CBF = CUMULATIVE BRACING FORCE (PER BRACE). FASTEN LATERAL BRACE(S) USING (0.122"X3") SPIRAL NAILS : 1 NAIL FOR 2x3 BRACE(S), 2 FOR 1x4, 2x4, 2x5, 3 FOR 2x6, 4 FOR 2x8, 5 FOR 2x10, AND 6 FOR 2x12.

END VERTICAL(S) MUST BE SHEATHED OR HAVE BRACES AS INDICATED IN THE MAX. UNBRACED LENGTH COLUMN OF THE TABLE BELOW

LOADING
TOTAL LOAD CASES: (4)

CHORDS

MEMB. FR-TO	MAX. FORCE (LBS)	FACTORED VERT. LOAD (PLF) FROM	TO	LC1 MAX CSI (LC)	MAX. UNBRAC LENGTH
A- B	0 / 51	-124.4	-124.4	0.17 (1)	10.00
B- C	-2952 / 0	-124.4	-124.4	0.65 (1)	3.45
C- D	-2658 / 0	-124.4	-124.4	0.59 (1)	3.66
D- E	-2410 / 0	-124.4	-124.4	0.58 (1)	3.78
E- F	-2410 / 0	-124.4	-124.4	0.58 (1)	3.78
F- G	-2658 / 0	-124.4	-124.4	0.59 (1)	3.66
G- H	-2952 / 0	-124.4	-124.4	0.65 (1)	3.45
H- I	0 / 51	-124.4	-124.4	0.17 (1)	10.00
R- B	-2756 / 0	0.0	0.0	0.29 (1)	5.19
J- H	-2756 / 0	0.0	0.0	0.29 (1)	5.19
R- Q	0 / 0	-39.2	-39.2	0.22 (3)	10.00
Q- P	0 / 2399	-39.2	-39.2	0.52 (1)	10.00
P- O	0 / 2090	-39.2	-39.2	0.47 (1)	10.00
O- N	0 / 2090	-39.2	-39.2	0.47 (1)	10.00
N- M	0 / 2090	-39.2	-39.2	0.47 (1)	10.00
M- L	0 / 2090	-39.2	-39.2	0.47 (1)	10.00
L- K	0 / 2399	-39.2	-39.2	0.52 (1)	10.00
K- J	0 / 0	-39.2	-39.2	0.22 (3)	10.00

WEBS

MEMB. FR-TO	MAX. FORCE (LBS)	MAX CSI (LC)
Q- C	-289 / 81	0.14 (1)
C- P	-442 / 0	0.50 (1)
P- D	0 / 522	0.12 (2)
D- N	0 / 621	0.10 (1)
N- E	-846 / 0	0.52 (1)
N- F	0 / 621	0.10 (1)
L- F	0 / 522	0.12 (2)
L- G	-442 / 0	0.50 (1)
K- G	-289 / 81	0.14 (1)
B- Q	0 / 2455	0.55 (1)
K- H	0 / 2455	0.55 (1)

DESIGN CRITERIA

SPECIFIED LOADS:

TOP CH.	LL	=	34.8	PSF
	DL	=	8.0	PSF
BOT CH.	LL	=	10.5	PSF
	DL	=	7.3	PSF
TOTAL LOAD		=	60.6	PSF

SPACING = 24.0 IN. C/C

LOADING IN FLAT SECTION BASED ON A SLOPE OF 2.00/12 MINIMUM

THIS TRUSS IS DESIGNED FOR RESIDENTIAL OR SMALL BUILDING REQUIREMENTS OF PART 9, NBCC 2015

THIS DESIGN COMPLIES WITH:
- PART 9 OF BCBC 2018 , ABC 2019
- PART 9 OF OBC 2012 (2019 AMENDMENT)
- CSA 086-14
- TPIC 2014

(55 % OF 48.1 P.S.F. G.S.L. PLUS 8.4 P.S.F. RAIN LOAD) EQUALS 34.8 P.S.F. SPECIFIED ROOF LIVE LOAD

ALLOWABLE DEFL.(LL)= L/360 (1.09")
CALCULATED VERT. DEFL.(LL) = L/ 999 (0.11")
ALLOWABLE DEFL.(TL)= L/360 (1.09")
CALCULATED VERT. DEFL.(TL) = L/ 999 (0.19")

CSI: TC=0.65/1.00 (G-H:1) , BC=0.52/1.00 (P-Q:1) , WB=0.55/1.00 (B-Q:1) , SSI=0.34/1.00 (D-E:1)

DOL LUMBER=1.00 NAIL=1.00 LS BEND=1.10 COMP=1.10 SHEAR=1.10 TENS= 1.10

COMPANION LIVE LOAD FACTOR = 1.00

TRUSS PLATE MANUFACTURER IS NOT RESPONSIBLE FOR QUALITY CONTROL IN THE TRUSS MANUFACTURING PLANT .

NAIL VALUES

PLATE	GRIP(DRY) (PSI) MAX	MIN	SHEAR (PLI) MAX	MIN	SECTION (PLI) MAX	MIN
MT20	650	371	1747	788	1987	1873

PLATE PLACEMENT TOL. = 0.250 inches

PLATE ROTATION TOL. = 5.0 Deg.

JSI GRIP= 0.87 (Q) (INPUT = 0.90)
JSI METAL= 0.63 (M) (INPUT = 1.00)

LICENSED PROFESSIONAL ENGINEER
N.A. EL-MASRI
PROVINCE OF ONTARIO
Dec 16, 2020

READ ALL NOTES ON THIS PAGE AND ON ENGINEERING NOTE PAGE ENP-1. THIS NOTE PAGE IS AN INTEGRAL PART OF THIS DRAWING AS IT CONTAINS SPECIFICATIONS AND CRITERIA USED IN THE DESIGN OF THIS COMPONENT.

Town of East Gwillimbury
Building Standards Branch BCIN #16487

These plans have been reviewed for use with the corrections as noted. No other changes may be made without written approval of the Building Standards Branch. All work must comply with Zoning By-Law 2018-043, as amended, and the Ontario Building Code, as amended. These approved documents must be kept on site at all times. The building permit must be clearly posted on site at all times.

Discipline	Reviewer	BCIN	Date
Building Code	H. Authier	43236	2021-02-05
Sewage System			
Zoning			

KOTT

JOB NAME	TRUSS NAME	QUANTITY	PLY	JOB DESC.		DRWG NO.
NE1220-120	T36	1	1	TRUSS DESC.	GREENPARK - TRINAR HALL - GLENWAY 7A ELE 3	

Version 8.420 S Oct 9 2020 MiTek Industries, Inc. Thu Dec 17 20:49:33 2020 Page 1
ID:qKy8nLSCtBps7zaDJTm7k2zFzGC-b5KTR5AqWYBW2smAVv8UJGkR9v8blCa5qfG2Thy7y

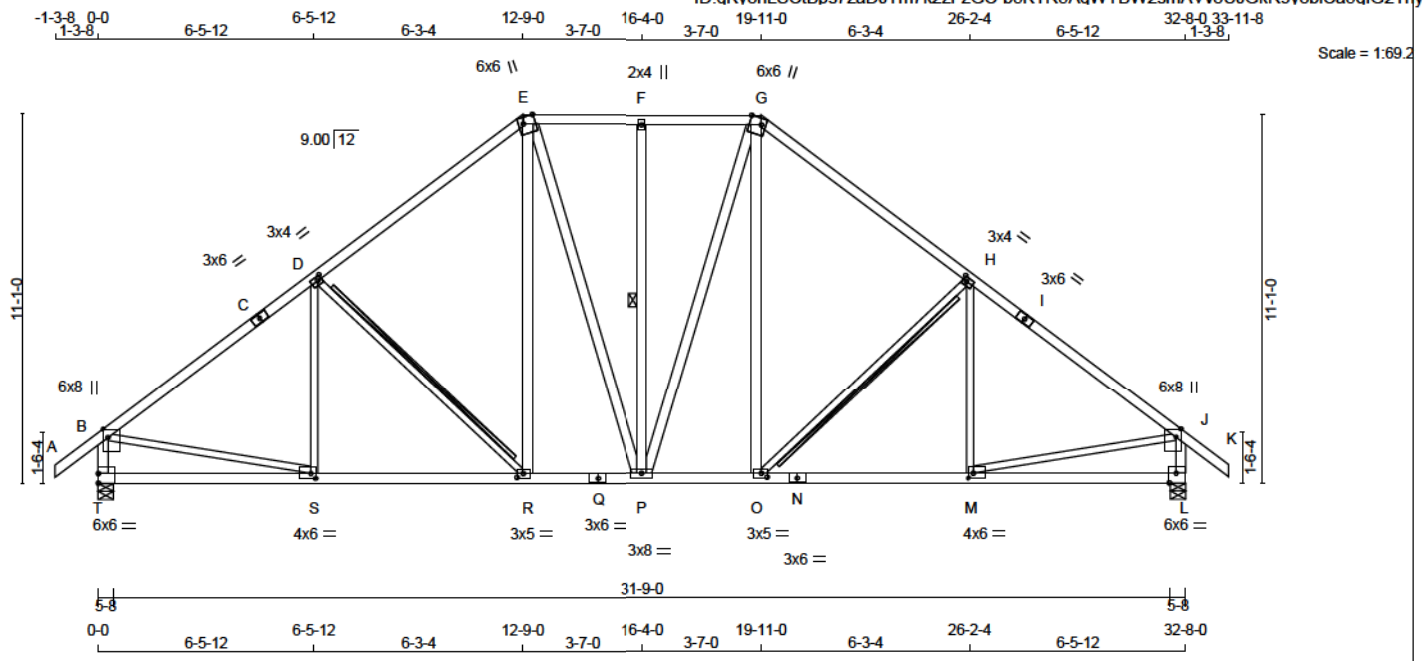

TOTAL WEIGHT = 183 lb

[M][F]

LUMBER
N. L. G. A. RULES

CHORDS	SIZE		LUMBER	DESCR.
A - C	2x4	DRY	No.2	SPF
C - E	2x4	DRY	No.2	SPF
E - G	2x4	DRY	No.2	SPF
G - I	2x4	DRY	No.2	SPF
I - K	2x4	DRY	No.2	SPF
T - B	2x4	DRY	No.2	SPF
L - J	2x4	DRY	No.2	SPF
T - Q	2x4	DRY	No.2	SPF
Q - N	2x4	DRY	No.2	SPF
N - L	2x4	DRY	No.2	SPF
ALL WEBS	2x4	DRY	No.2	SPF
EXCEPT				
S - D	2x3	DRY	No.2	SPF
D - R	2x3	DRY	No.2	SPF
O - H	2x3	DRY	No.2	SPF
M - H	2x3	DRY	No.2	SPF
B - S	2x3	DRY	No.2	SPF
M - J	2x3	DRY	No.2	SPF

DRY: SEASONED LUMBER.

PLATES (table is in inches)

JT	TYPE	PLATES	W	LEN	Y	X
B	TMVW+p	MT20	6.0	8.0	3.00	1.75
C	TS-t	MT20	3.0	6.0		
D	TMWW-t	MT20	3.0	4.0	1.50	1.50
E	TTWW+m	MT20	6.0	6.0	Edge	4.25
F	TMW+w	MT20	2.0	4.0		
G	TTWW+m	MT20	6.0	6.0	Edge	4.25
H	TMWW-t	MT20	3.0	4.0	1.50	1.50
I	TS-t	MT20	3.0	6.0		
J	TMVW+p	MT20	6.0	8.0	3.00	1.75
L	BMV1-t	MT20	6.0	6.0	Edge	2.50
M	BMWW-t	MT20	4.0	6.0	1.75	1.75
N	BS-t	MT20	3.0	6.0		
O	BMWW-t	MT20	3.0	5.0	1.50	2.25
P	BMWWW-t	MT20	3.0	8.0		
Q	BS-t	MT20	3.0	6.0		
R	BMWW-t	MT20	3.0	5.0	1.50	2.25
S	BMWW-t	MT20	4.0	6.0	1.75	1.75
T	BMV1-t	MT20	6.0	6.0	3.50	

DIMENSIONS, SUPPORTS AND LOADINGS SPECIFIED BY FABRICATOR TO BE VERIFIED BY BUILDING DESIGNER

BEARINGS

JT	FACTORED GROSS REACTION VERT	HORZ	MAXIMUM GROSS REACTION DOWN	HORZ	FACTORED UPLIFT	INPUT BRG IN-SX	REQRD BRG IN-SX
T	2845	0	2845	0	0	5-8	5-8
L	2845	0	2845	0	0	5-8	5-8

UNFACTORED REACTIONS

JT	1ST LCASE COMBINED	SNOW	MAX./MIN. COMPONENT REACTIONS LIVE	PERM.LIVE	WIND	DEAD	SOIL
T	2098	1233 / 0	343 / 0	0 / 0	0 / 0	522 / 0	0 / 0
L	2098	1233 / 0	343 / 0	0 / 0	0 / 0	522 / 0	0 / 0

BEARING MATERIAL TO BE SPF NO.2 OR BETTER AT JOINT(S) T, L

BRACING
TOP CHORD TO BE SHEATHED OR MAX. PURLIN SPACING = 2.97 FT.
MAX. UNBRACED BOTTOM CHORD LENGTH = 10.00 FT OR RIGID CEILING DIRECTLY APPLIED.

ALL PITCH BREAKS AND PERIMETER CORNER JOINTS MUST BE LATERALLY RESTRAINED.

1 - 1x4 LATERAL BRACE(S) AT 1/ 2 LENGTH OF F-P. DBS = 20-0-0 . CBF = 66 LBS.
2x4 DRY SPF No.2 T-BRACE AT D-R, H-O

DBS = DIAGONAL BRACE SPACING (MAX). CBF = CUMULATIVE BRACING FORCE (PER BRACE). FASTEN LATERAL BRACE(S) USING (0.122"X3") SPIRAL NAILS : 1 NAIL FOR 2x3 BRACE(S), 2 FOR 1x4, 2x4, 2x5, 3 FOR 2x6, 4 FOR 2x8, 5 FOR 2x10, AND 6 FOR 2x12.

FASTEN T AND I-BRACES TO NARROW EDGE OF WEB WITH ONE ROW PER PLY OF 3" COMMON WIRE NAILS @ 6" O.C. WITH 3" MINIMUM END DISTANCE. BRACE MUST COVER 90% OF WEB LENGTH.

END VERTICAL(S) MUST BE SHEATHED OR HAVE BRACES AS INDICATED IN THE MAX. UNBRACED LENGTH COLUMN OF THE TABLE BELOW

LOADING
TOTAL LOAD CASES: (4)

CHORDS

MEMB. FR-TO	MAX. FACTORED FORCE (LBS)	FACTORED VERT. LOAD (PLF) FROM	TO	LC1	MAX CSI (LC)	MAX. UNBRAC LENGTH
A- B	0 / 51	-124.4	-124.4	0.17 (1)	10.00	
B- C	-2971 / 0	-124.4	-124.4	0.95 (1)	2.97	
C- D	-2971 / 0	-124.4	-124.4	0.95 (1)	2.97	
D- E	-2474 / 0	-124.4	-124.4	0.83 (1)	3.37	
E- F	-2041 / 0	-124.4	-124.4	0.24 (1)	4.53	
F- G	-2041 / 0	-124.4	-124.4	0.24 (1)	4.53	
G- H	-2474 / 0	-124.4	-124.4	0.83 (1)	3.37	
H- I	-2971 / 0	-124.4	-124.4	0.95 (1)	2.97	
I- J	-2971 / 0	-124.4	-124.4	0.95 (1)	2.97	
J- K	0 / 51	-124.4	-124.4	0.17 (1)	10.00	
T- B	-2742 / 0	0.0	0.0	0.29 (1)	5.20	
L- J	-2742 / 0	0.0	0.0	0.29 (1)	5.20	
T- S	0 / 0	-39.2	-39.2	0.33 (3)	10.00	
S- R	0 / 2422	-39.2	-39.2	0.62 (2)	10.00	
R- Q	0 / 1939	-39.2	-39.2	0.43 (1)	10.00	
Q- P	0 / 1939	-39.2	-39.2	0.43 (1)	10.00	
P- O	0 / 1939	-39.2	-39.2	0.43 (1)	10.00	
O- N	0 / 2422	-39.2	-39.2	0.62 (2)	10.00	
N- M	0 / 2422	-39.2	-39.2	0.62 (2)	10.00	
M- L	0 / 0	-39.2	-39.2	0.33 (3)	10.00	

WEBS

MEMB. FR-TO	MAX. FACTORED FORCE (LBS)	MAX CSI (LC)
S- D	-157 / 182	0.10 (1)
D- R	-677 / 0	0.41 (1)
R- E	0 / 669	0.11 (1)
E- P	0 / 325	0.05 (1)
P- F	-526 / 0	0.33 (1)
P- G	0 / 325	0.05 (1)
O- G	0 / 669	0.11 (1)
O- H	-677 / 0	0.41 (1)
M- H	-157 / 182	0.10 (1)
B- S	0 / 2463	0.55 (1)
M- J	0 / 2463	0.55 (1)

DESIGN CRITERIA

SPECIFIED LOADS:

TOP CH.	LL	=	34.8	PSF
	DL	=	8.0	PSF
BOT CH.	LL	=	10.5	PSF
	DL	=	7.3	PSF
TOTAL LOAD		=	60.6	PSF

SPACING = 24.0 IN. C/C

LOADING IN FLAT SECTION BASED ON A SLOPE OF 2.00/12 MINIMUM

THIS TRUSS IS DESIGNED FOR RESIDENTIAL OR SMALL BUILDING REQUIREMENTS OF PART 9, NBCC 2015

THIS DESIGN COMPLIES WITH:
- PART 9 OF BCBC 2018 , ABC 2019
- PART 9 OF OBC 2012 (2019 AMENDMENT)
- CSA 086-14
- TPIC 2014

(55 % OF 48.1 P.S.F. G.S.L. PLUS 8.4 P.S.F. RAIN LOAD) EQUALS 34.8 P.S.F. SPECIFIED ROOF LIVE LOAD

ALLOWABLE DEFL.(LL)= L/360 (1.09")
CALCULATED VERT. DEFL.(LL) = L/ 999 (0.11")
ALLOWABLE DEFL.(TL)= L/360 (1.09")
CALCULATED VERT. DEFL.(TL) = L/ 999 (0.20")

CSI: TC=0.95/1.00 (H-J:1) , BC=0.62/1.00 (R-S:2) , WB=0.55/1.00 (B-S:1) , SSI=0.31/1.00 (H-J:1)

DOL LUMBER=1.00 NAIL=1.00 LS BEND=1.10 COMP=1.10 SHEAR=1.10 TENS= 1.10

COMPANION LIVE LOAD FACTOR = 1.00

TRUSS PLATE MANUFACTURER IS NOT RESPONSIBLE FOR QUALITY CONTROL IN THE TRUSS MANUFACTURING PLANT .

NAIL VALUES

PLATE	GRIP(DRY) (PSI) MAX	MIN	SHEAR (PLI) MAX	MIN	SECTION (PLI) MAX	MIN
MT20	650	371	1747	788	1987	1873

PLATE PLACEMENT TOL. = 0.250 inches

PLATE ROTATION TOL. = 5.0 Deg.

JSI GRIP= 0.88 (S) (INPUT = 0.90)
JSI METAL= 0.74 (N) (INPUT = 1.00)

LICENSED PROFESSIONAL ENGINEER
N.A. EL-MASRI
PROVINCE OF ONTARIO
Dec 16, 2020

READ ALL NOTES ON THIS PAGE AND ON ENGINEERING NOTE PAGE ENP-1. THIS NOTE PAGE IS AN INTEGRAL PART OF THIS DRAWING AS IT CONTAINS SPECIFICATIONS AND CRITERIA USED IN THE DESIGN OF THIS COMPONENT.

Town of East Gwillimbury
Building Standards Branch BCIN #16487

These plans have been reviewed for use with the corrections as noted. No other changes may be made without written approval of the Building Standards Branch. All work must comply with Zoning By-Law 2018-043, as amended, and the Ontario Building Code, as amended. These approved documents must be kept on site at all times. The building permit must be clearly posted on site at all times.

Discipline	Reviewer	BCIN	Date
Building Code	H. Authier	43236	2021-02-05
Sewage System			
Zoning			

CONTINUED ON PAGE 2

KOTT

Client:	NE1220-120	Date:	12/16/2020
Project:	GREENPARK - TRINAR HALL	Input by:	DM
Address:	- GLENWAY 7A ELE 3	Job Name:	TRINAR HALL
		Project #:	GLENWAY 7A ELE 3

B2 S-P-F #2 2.000" X 10.000" 2-Ply - PASSED

Level: Level

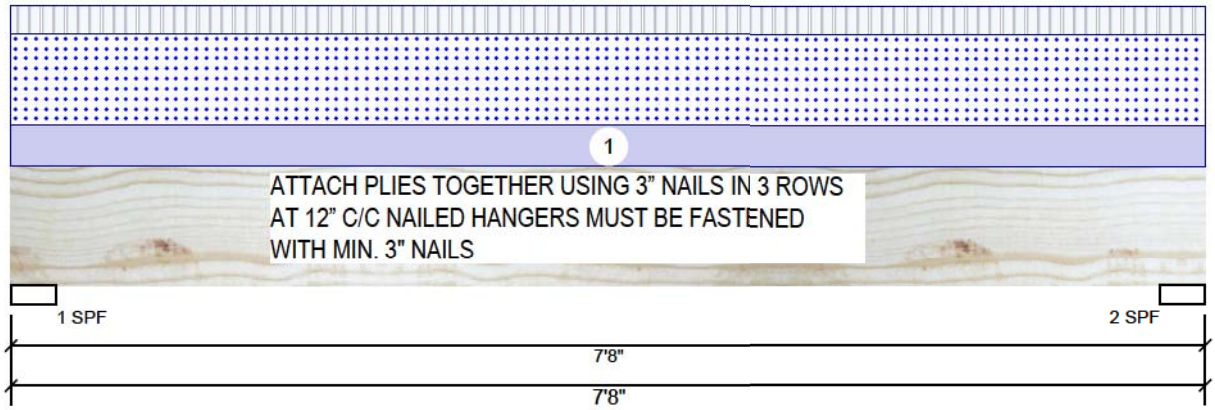

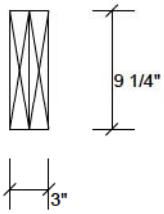

Member Information

Type:	Girder	Application:	Roof (Residential)
Plies:	2	Slope:	0/12
Moisture Condition:	Dry	Design Method:	LSD
Deflection LL:	360	Building Code:	NBCC 2015 / OBC 2012
Deflection TL:	360	Load Sharing:	No
Importance:	Normal - II	Deck:	Not Checked
		Vibration:	Not Checked

Unfactored Reactions UNPATTERNED lb (Uplift)

Brg	Live	Dead	Snow	Wind
1	121	176	400	0
2	121	176	400	0

Bearings and Factored Reactions

Bearing	Length	Cap.	React D/L lb	Total	Ld. Case	Ld. Comb.
1 - SPF	3.500"	15%	220 / 721	941	L	1.25D+1.5S +L
2 - SPF	3.500"	15%	220 / 721	941	L	1.25D+1.5S +L

Analysis Results

Analysis	Actual	Location	Allowed	Capacity	Comb.	Case
Moment	1594 ft-lb	3'10"	6039 ft-lb	0.264 (26%)	1.25D+1.5S +L	L
Unbraced	1594 ft-lb	3'10"	4500 ft-lb	0.354 (35%)	1.25D+1.5S +L	L
Shear	885 lb	1'	3984 lb	0.222 (22%)	1.25D+1.5S +L	L
LL Defl inch	0.027 (L/3230)	3'10 1/16"	0.240 (L/360)	0.110 (11%)	S+0.5L	L
TL Defl inch	0.037 (L/2337)	3'10 1/16"	0.240 (L/360)	0.150 (15%)	D+S+0.5L	L

LICENSED PROFESSIONAL ENGINEER
N.A. EL-MASRI
PROVINCE OF ONTARIO
Dec 16, 2020

Design Notes

1 Girders are designed to be supported on the bottom edge only.
2 Multiple plies must be fastened together as per manufacturer's details.
3 Top braced at bearings.
4 Bottom braced at bearings.
5 Lateral slenderness ratio based on single ply width.

ID	Load Type	Location	Trib Width	Side	Dead	Live	Snow	Wind	Comments
1	Uniform		3-0-0	Far Face	15.3 PSF	10.5 PSF	34.8 PSF	0 PSF	

READ ALL NOTES ON THIS PAGE AND ON ENGINEERING NOTE PAGE ENP-1. THIS NOTE PAGE IS AN INTEGRAL PART OF THIS DRAWING AS IT CONTAINS SPECIFICATIONS AND CRITERIA USED IN THE DESIGN OF THIS COMPONENT.

Town of East Gwillimbury
Building Standards Branch BCIN #16487

These plans have been reviewed for use with the corrections as noted. No other changes may be made without written approval of the Building Standards Branch. All work must comply with Zoning By-Law 2018-043, as amended, and the Ontario Building Code, as amended. These approved documents must be kept on site at all times. The building permit must be clearly posted on site at all times.

Discipline	Reviewer	BCIN	Date
Building Code	H. Authier	43236	2021-02-05
Sewage System			
Zoning			

This design is valid until 10/10/2023

Kott Group
14 Anderson Blvd., On
L4A7X4
905-642-4400

KOTT

CSD DRAW DESIGN BUILD

Client:	NE1220-120	Date:	12/16/2020
Project:	GREENPARK - TRINAR HALL	Input by:	DM
Address:	- GLENWAY 7A ELE 3	Job Name:	TRINAR HALL
		Project #:	GLENWAY 7A ELE 3

B1 S-P-F #2 2.000" X 10.000" 2-Ply - PASSED

Level: Level

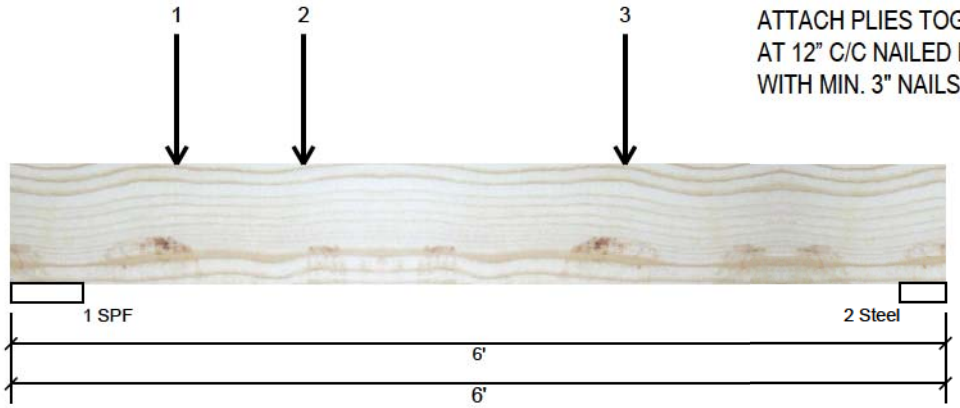

ATTACH PLIES TOGETHER USING 3" NAILS IN 3 ROWS AT 12" C/C NAILED HANGERS MUST BE FASTENED WITH MIN. 3" NAILS

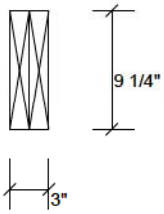

Member Information

Type:	Girder	Application:	Roof (Residential)
Plies:	2	Slope:	0/12
Moisture Condition:	Dry	Design Method:	LSD
Deflection LL:	360	Building Code:	NBCC 2015 / OBC 2012
Deflection TL:	360	Load Sharing:	No
Importance:	Normal - II	Deck:	Not Checked
		Vibration:	Not Checked

Unfactored Reactions UNPATTERNED lb (Uplift)

Brg	Live	Dead	Snow	Wind
1	117	175	407	0
2	83	121	280	0

Bearings and Factored Reactions

Bearing	Length	Cap.	React D/L lb	Total	Ld. Case	Ld. Comb.
1 - SPF	5.500"	9%	218 / 728	947	L	1.25D+1.5S +L
2 - Steel	3.500"	10%	152 / 502	654	L	1.25D+1.5S +L

Analysis Results

Analysis	Actual	Location	Allowed	Capacity	Comb.	Case
Moment	1266 ft-lb	1'10 1/2"	6039 ft-lb	0.210 (21%)	1.25D+1.5S +L	L
Unbraced	1266 ft-lb	1'10 1/2"	5183 ft-lb	0.244 (24%)	1.25D+1.5S +L	L
Shear	924 lb	1'2"	3984 lb	0.232 (23%)	1.25D+1.5S +L	L
LL Defl inch	0.012 (L/5322)	3' 1/4"	0.179 (L/360)	0.070 (7%)	S+0.5L	L
TL Defl inch	0.017 (L/3867)	3' 1/4"	0.179 (L/360)	0.090 (9%)	D+S+0.5L	L

LICENSED PROFESSIONAL ENGINEER
N.A. EL-MASRI
PROVINCE OF ONTARIO
Dec 16, 2020

Design Notes

1 Girders are designed to be supported on the bottom edge only.
2 Multiple plies must be fastened together as per manufacturer's details.
3 Top loads must be supported equally by all plies.
4 Top braced at bearings.
5 Bottom braced at bearings.
6 Lateral slenderness ratio based on single ply width.

ID	Load Type	Location	Trib Width	Side	Dead	Live	Snow	Wind	Comments
1	Point	1-0-12		Top	31 lb	21 lb	71 lb	0 lb	
2	Point	1-10-8		Top	149 lb	99 lb	352 lb	0 lb	
3	Point	3-11-4		Near Face	116 lb	80 lb	264 lb	0 lb	

READ ALL NOTES ON THIS PAGE AND ON ENGINEERING NOTE PAGE ENP-1. THIS NOTE PAGE IS AN INTEGRAL PART OF THIS DRAWING AS IT CONTAINS SPECIFICATIONS AND CRITERIA USED IN THE DESIGN OF THIS COMPONENT.

Town of East Gwillimbury
Building Standards Branch BCIN #16487

These plans have been reviewed for use with the corrections as noted. No other changes may be made without written approval of the Building Standards Branch. All work must comply with Zoning By-Law 2018-043, as amended, and the Ontario Building Code, as amended. These approved documents must be kept on site at all times. The building permit must be clearly posted on site at all times.

Discipline	Reviewer	BCIN	Date
Building Code	H. Authier	43236	2021-02-05
Sewage System			
Zoning			

This design is valid until 10/10/2023

Kott Group
14 Anderson Blvd., On
L4A7X4
905-642-4400

KOTT
CSD DRAW DESIGN BUILD

1) ENSURE TRUSS HAS BEEN DESIGNED WITH ADDITIONAL TOP CHORD DEAD LOAD EQUAL TO OR GREATER THAN WEIGHT OF SOLAR PANELS BEING INSTALLED

2) ATTACH SOLAR PANELS TO EACH TRUSS LOCATED UNDER THE SOLAR PANELS (I.E. @ 24" C/C PERPENDICULAR TO THE TRUSS DIRECTION)

3) ATTACH A SPF No.1/2 SCAB OF THE SAME SIZE AS TRUSS CHORD ON ONE SIDE ALONG THE FULL LENGTH OF THE MEMBER UNDER THE SOLAR PANELS USING 2 ROWS OF 3" WIRE NAILS @ 6" C/C

4) ATTACH SOLAR PANELS TO SCAB AT A MAXIMUM SPACING OF 48" C/C ALONG THE MEMBER (PARALLEL TO TRUSS DIRECTION) AS PER MANUFACTURER'S INSTRUCTIONS

5) DO NOT USE LAG SCREWS IN TRUSS MEMBERS. LAG SCREWS SHOULD ATTACH TO SCABS ONLY

6) MAXIMUM NUMBER OF SCAB SPLICES IS TWO

7) THIS DETAIL IS APPLICABLE TO PART 9 BUILDINGS ONLY

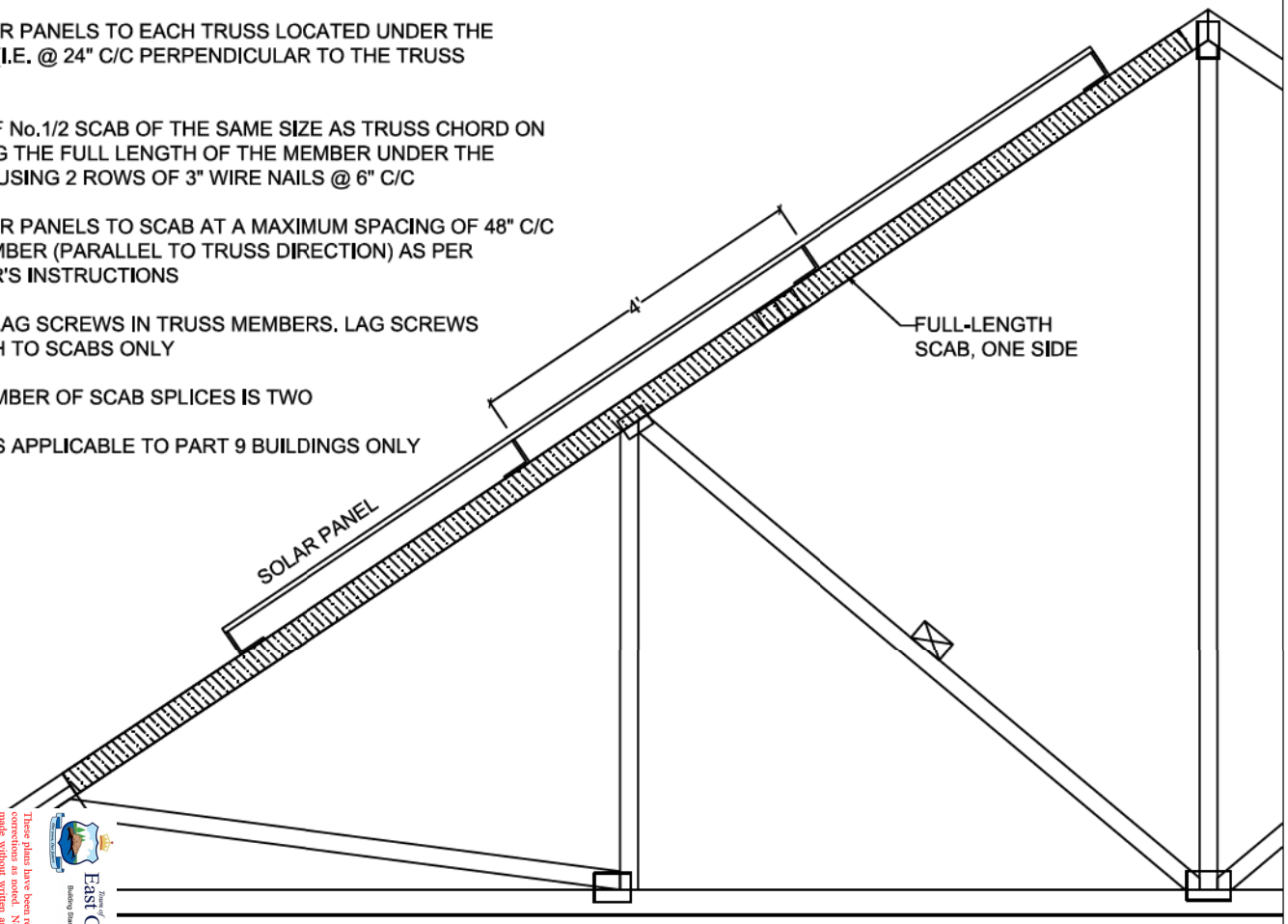

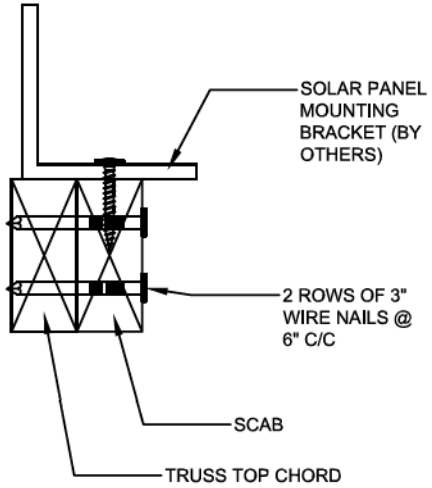

Township of East Gwillimbury
Building Standards Branch BCIN # 54487

These plans have been reviewed for use with the corrections as noted. No other changes may be made without written approval of the Building Standards Branch. All work must comply with Zoning By-Law 2018-043, as amended, and the Ontario Building Code, as amended. These approved documents must be kept on site at all times. The building permit must be clearly posted on site at all times.

Discipline	Reviewer	BCIN	Date
Building Code	H. Auffner	42236	2021/02/05
Sewage System			
Zoning			

NE1220-120
GREENPARK - TRINAR HALL
- GLENWAY 7A ELE 3

Detail for Installation of Solar Panels - Scab Method

KOTT

NE1220-120
GREENPARK - TRINAR HALL
- GLENWAY 7A ELE 3

BEARING ANCHORAGE BY TOE-NAILS FOR LATERAL CAPACITY

B97791H1

NAIL TYPE	LENGTH (IN)	DIAMETER (IN)	NAIL LATERAL CAPACITY (LB)	
			S-P-F	D. FIR
COMMON WIRE	3.00	0.144	132	147
	3.25	0.144	132	147
	3.50	0.160	159	177
COMMON SPIRAL	3.00	0.122	97	108
	3.25	0.122	97	108
	3.50	0.152	145	162

NOTES:

1. Rafter and ceiling members may be anchored to top and bottom chords of girder truss by toe-nailing rafter and ceiling members to girder chords provided the reaction does not exceed the lateral capacities in the table. Hangers (specified by others) are required for reactions higher than the maximum toe-nail capacity. Reactions are based on factored loads.
2. Toe nail capacities shown in the table are for **one** toe-nail. For additional toe-nails multiply values in table by the number of toe-nails used. Toe-nail capacities take into account toe-nailing factor J_A in CSA O86-14, section 12.9.4.1.
3. For 9- 3/4 gauge 3.25" common wire gun nails (diameter = 0.120") use 3" common spiral nail values.
4. Maximum number of toe-nails allowed depends on the lumber size & species to be toe-nailed to supporting member and nail diameter, as shown in tables below.
5. Nail values in table are based on the following relative lumber densities: G = 0.42 (SPF), G = 0.49 (D. Fir).
6. Toe-nails shall be driven at approximately 1/3 the nail length from the edge of the joist/truss chord and driven at an angle of 30º to the grain of the member (See next page for nailing on bearing plate).
7. For loads due to **wind** the nail lateral capacity in this table may be multiplied by 1.15 (K_D factor).
8. Lumber must be dry (< 19% moisture content) at the time of nail installation.
9. Nail values in this table comply with CSA O86-14, section 12.9.4
10. This design is not valid after March 31, 2021.

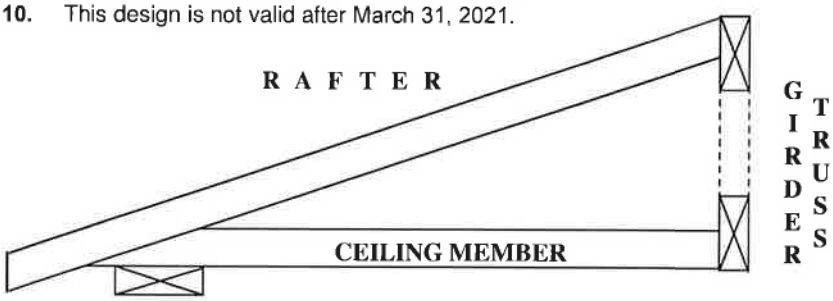

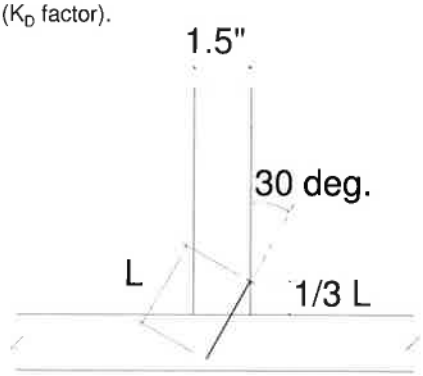

TOE-NAIL INSTALLATION

Nail type	Common wire	Common spiral	Common wire	Common spiral
Nail dia. (in)	0.160	0.152	0.144	0.122
	(3.5" nail)		(3" and 3.25" nail)	
LUMBER SIZE	**MAXIMUM NUMBER OF TOE-NAILS**			
2X4 SPF	2	2	3	3
2X4 D. Fir	2	2	2	2
2X6 SPF	4	4	4	5
2X6 D. Fir	3	3	3	4

MiTek®
MiTek Canada Inc
100 Industrial Rd.
Bradford, Ontario L3Z 3G7

PEO
Certificate No. 10889485

LICENSED PROFESSIONAL ENGINEER
Ordogiannis
0553736
PROVINCE OF ONTARIO

Town of East Gwillimbury
Building Standards Branch BCIN #16487

These plans have been reviewed for use with the corrections as noted. No other changes may be made without written approval of the Building Standards Branch. All work must comply with Zoning By-Law 2018-043, as amended, and the Ontario Building Code, as amended. These approved documents must be kept on site at all times. The building permit must be clearly posted on site at all times.

Discipline	Reviewer	BCIN	Date
Building Code	H. Authier	43236	2021-02-05
Sewage System			
Zoning			

December 2

NE1220-120
GREENPARK - TRINAR HALL
- GLENWAY 7A ELE 3

BEARING ANCHORAGE BY TOE-NAILS FOR WIND LOADING

B97791H2

NAIL TYPE	LENGTH (IN)	DIAMETER (IN)	NAIL WITHDRAWAL CAPACITY (LB)	
			S-P-F	D. FIR
COMMON WIRE	3.00	0.144	30	42
	3.25	0.144	32	45
	3.50	0.160	38	52
COMMON SPIRAL	3.00	0.122	26	36
	3.25	0.122	28	40
	3.50	0.152	36	50

Note: If using truss with D. Fir lumber and S-P-F bearing plate, use values in table for S-P-F.

NOTES:

1. Truss chord, rafter, or ceiling members may be anchored to bearing plate by toe-nails, provided that the actual factored uplift force due to **wind** or **earthquake** load does not exceed the withdrawal capacities in the table. Hangers (specified by others) are required for uplift forces that are higher than the maximum toe-nail withdrawal capacity.
2. Toe nail capacities shown in the table are for **one** toe-nail. For additional toe-nails multiply values in table by the number of toe-nails used. Toe-nail capacities take into account toe-nailing factor J_A in CSA O86-14, section 12.9.5.2.
3. For 9- 3/4 gauge 3.25" common wire gun nails (diameter = 0.120") use 3" common spiral nail values.
4. Maximum number of toe-nails allowed depends on the lumber size & species to be toe-nailed to supporting member and nail diameter, as shown in table above.
5. Nail values in table are based on the following relative lumber densities: G = 0.42(SPF), G = 0.49(D. Fir).
6. Toe-nails shall be driven at approximately 1/3 the nail length from the edge of the joist/truss chord and driven at an angle of 30° to the grain of the member (See drawing on detail B37579H1).
7. Lumber must be dry (< 19% moisture content) at the time of nail installation.
8. Nail values in this table comply with CSA O86-14, section 12.9.5
9. This design is not valid after March 31, 2021.

Toe-nailing on 2x6 Bearing Plate

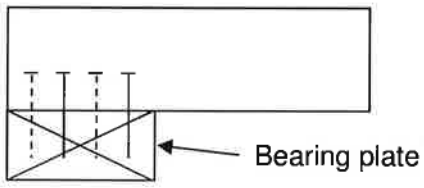

Elevation view

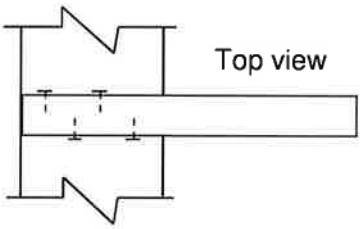

Top view

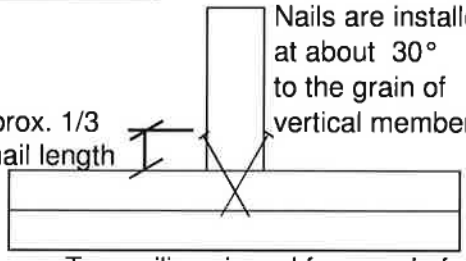

Toe-nailing viewed from end of joist or truss

Toe-nailing on 2x4 Bearing Plate

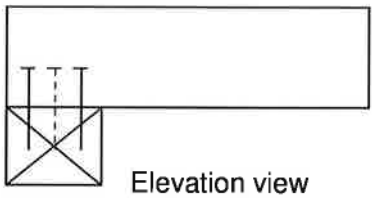

Elevation view

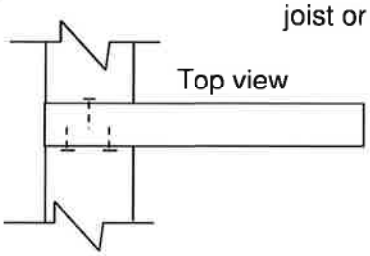

Top view

MiTek®

MiTek Canada Inc
100 Industrial Rd.
Bradford, Ontario L3Z 3G7

PEO
Certificate No. 10889485

LICENSED PROFESSIONAL ENGINEER
C. Cordogiannis
90553736
PROVINCE OF ONTARIO

Town of East Gwillimbury
Building Standards Branch BCIN #16487

These plans have been reviewed for use with the corrections as noted. No other changes may be made without written approval of the Building Standards Branch. All work must comply with Zoning By-Law 2018-043, as amended, and the Ontario Building Code, as amended. These approved documents must be kept on site at all times. The building permit must be clearly posted on site at all times.

Dec

Discipline	Reviewer	BCIN	Date
Building Code	H. Authier	43236	2021-02-05
Sewage System			
Zoning			