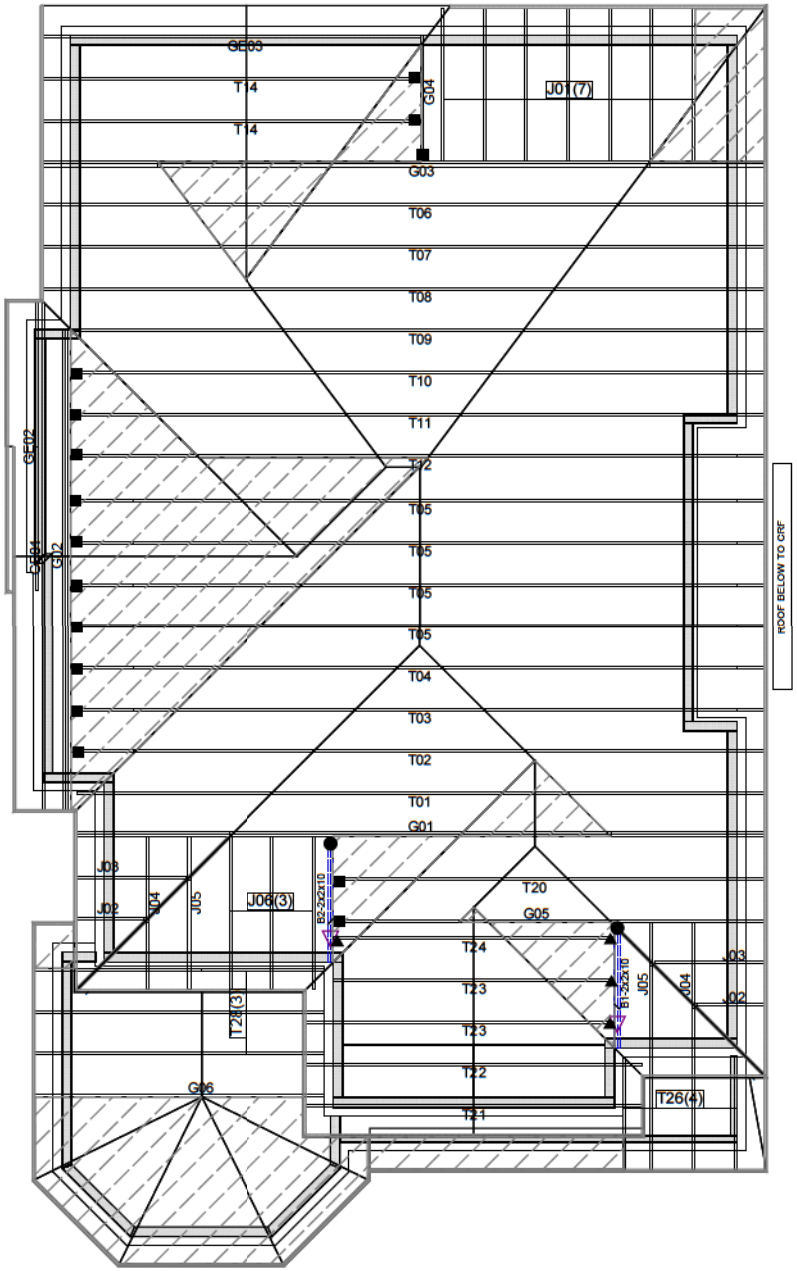

Hanger Name	Symbol	QTY
LUS24	▲	4
LJS26DS	■	15
HGUS26-2	●	2

Additional 5 psf dead load has been added to Top Chord loading to account for weight of solar panels. Solar panels must be installed as per Detail in Engineering Package

Town of East Gwillimbury
Building Standards Branch BCIN #16487

These plans have been reviewed for use with the corrections as noted. No other changes may be made without written approval of the Building Standards Branch. All work must comply with Zoning By-Law 2018-043, as amended, and the Ontario Building Code, as amended. These approved documents must be kept on site at all times. The building permit must be clearly posted on site at all times.

Discipline	Reviewer	BCIN	Date
Building Code	H. Authier	43236	2021-02-25
Sewage System			
Zoning			

CONVENTIONAL FRAMING BY OTHERS

ALL CONVENTIONAL FRAMING TO CONFORM WITH PART 9 OF THE OBC. ROOF RAFTERS THAT CROSS OVER TRUSSES TO BE MIN. 2x4 SPF @ 24" C/C WITH A 2x4 VERTICAL POST TO THE TRUSS BELOW. VERTICAL POSTS TO BE LATERALLY BRACED SO THAT UNBRACED LENGTH DOES NOT EXCEED 6'. DESIGN OF CONVENTIONAL FRAMING IS THE RESPONSIBILITY OF THE PROJECT ENGINEER.

JOB INFORMATION

Customer	GREENPARK HOMES
Job #	T20-00769
Address	TRINAR HALL EAST GWILLIMBURY,ON
Model	GLENWAY 12A ELEV 1
Sales Rep	RALPH MIRIGELLO
Designer	DM
Date	12/17/2020
Path	C:\DATA\JOBS\GREENPARK\TRINAR HALL\MODELS\GLENWAY 12A\ELEV 1\T-GLENWAY12A-1\

DESIGN INFORMATION

Code	NBCC 2015
Bldg	Residential - HSB (NBCC Part 9)
TC LL	34.8 lb/ft²
TC DL	8.0 lb/ft²
BC LL	10.5 lb/ft²
BC DL	7.3 lb/ft²
Deflection	LL=L/360 TL=L/360
Spacing	24" O/C unless otherwise noted
Complies With	OBC 2012 (2019 Amendment) CSA O86-14 and TPIC 2014

IMPORTANT INFORMATION

Refer to truss drawings in the Truss Engineering Package for ply-to-ply attachment notes

For site-framed valleys: top chords of all roof trusses must be laterally supported using 2x4 continuous bracing @24 O/C - all bracing must be anchored at ends as per TPIC Installation Guidelines

Read all notes on this page in addition to those shown on the KOTT Truss Engineering package

Field erection, handling and bracing are not the responsibility of KOTT, or KOTT Engineering

Unless noted otherwise, hurricane ties are to be installed at the bearings of all trusses > 40 ft clear span, and any girder or beam supporting trusses with a clear span >40 ft. See hanger legend for type.

Unless noted otherwise, for Part 9 bldgs, all trusses are to be anchored to the top of supporting walls as follows: trusses with a clear span <40 ft use 3-1/4" nails @ each bearing; trusses with a clear span >40 ft use 3-1/4" nails @ each bearing in addition to the appropriate hurricane tie.

KOTT Inc.
14 Anderson Blvd.
Uxbridge, ON
905.642.4400

KOTT

NE1220-124
GREENPARK - TRINAR
HALL - GLENWAY 12A ELE 1

ENGINEERING NOTE PAGE (ENP-1)

PLEASE READ PRIOR TO INSTALLATION

RESPONSIBILITIES

THIS DESIGN IS FOR AN INDIVIDUAL BUILDING COMPONENT AND HAS BEEN BASED ON INFORMATION PROVIDED BY KOTT DESIGN. THE UNDERSIGNED ENGINEER DISCLAIMS ANY RESPONSIBILITY FOR DAMAGES AS A RESULT OF FAULTY OR INCORRECT INFORMATION, SPECIFICATION AND/OR DESIGNS FURNISHED TO THE ENGINEER. THE UNDERSIGNED ENGINEER IS ONLY RESPONSIBLE FOR THE STRUCTURAL INTEGRITY OF THIS BUILDING COMPONENT FOR THE CONDITIONS AND LOADS SHOWN ON THIS DRAWING. THE STRUCTURAL INTEGRITY OF THE BUILDING AND THE VERIFICATION OF THE DIMENSIONS AND THE DESIGN LOADS USED ARE THE RESPONSIBILITY OF THE BUILDING DESIGNER.

TRUSSES ARE DESIGNED IN CONFORMANCE WITH THE RELEVANT SECTIONS OF THE NATIONAL BUILDING CODE OF CANADA OR THE CANADIAN CODE FOR FARM BUILDINGS, WHICHEVER APPLIES TO THE BUILDING TYPE INDICATED ON THE DRAWING

IT IS THE RESPONSIBILITY OF KOTT TO ENSURE THAT TRUSSES ARE MANUFACTURED IN CONFORMANCE WITH THESE DESIGNS AND WITH THE SPECIFICATIONS OUTLINED BELOW. THE UNDERSIGNED ENGINEER IS NOT RESPONSIBLE FOR QUALITY CONTROL IN THE TRUSS MANUFACTURING PLANT.

USE AND OCCUPANCY

- The building is of the type indicated on the drawing

LOADING

- The truss loading intensity and distribution as well as load transfer mechanism is that indicated on the drawing
- No buildings, trees, parapets or other projections higher than the roof for which the trusses are used are located within a distance less than ten (10) times the difference in height, or five metres (16 ft) whichever is greater, unless the drawing indicates that the snow drifting has been taken into account

HANDLING, INSTALLATION AND BRACING

- The trusses must be handled and installed by a qualified professional as per the supplied document titled *Information for Truss Installers* and the BCSI-B1 and BCSI-B3 Summary Sheets
- The compression chords are laterally braced by continuous rigid diaphragm sheathing or as specified on the drawing
- Temporary and permanent bracing must be installed as indicated on the truss drawing and according to the BCSI-B1 and BCSI-B3 Summary Sheets. Bracing for the lateral stability of the truss is to be provided by the building designer
- **It is recommended that a Professional Engineer's advice be obtained for the bracing of trusses spanning more than 12.37m (40'-7")**

SUPPORTS

- The trusses are to be supported at the bearing points indicated and anchored to the supports where considered necessary by the designer of the overall structure
- Bearing sizes shown are the minimum required to prevent crushing of the truss members and do not necessarily take into account stability of the overall building stı
- Elevation of bearings must be carefully checked and shimmed lid bearings
- Adequate wood truss bearing is the responsibility of the buildir

DIMENSIONS

- Geometry of the truss and dimensions indicated on the drawin ose of the installed truss.

Town of East Gwillimbury
Building Standards Branch BCIN #16487

These plans have been reviewed for use with the corrections as noted. No other changes may be made without written approval of the Building Standards Branch. All work must comply with Zoning By-Law 2018-043, as amended, and the Ontario Building Code, as amended. These approved documents must be kept on site at all times. The building permit must be clearly posted on site at all times.

Discipline	Reviewer	BCIN	Date
Building Code	H. Authier	43236	2021-02-25
Sewage System			
Zoning			

KOTT

2020/04/22

JOB NAME	TRUSS NAME	QUANTITY	PLY	JOB DESC.		DWG NO.
NE1220-124	G01	1	2	TRUSS DESC.	GREENPARK - TRINAR HALL - GLENWAY 12A ELE 1	

Version 8.420 S Oct 9 2020 MiTek Industries, Inc. Fri Dec 18 08:14:38 2020 Page 1
ID:9SrEih2qK4qREOqiXOaa nzGFb3-Y0YsTKdYE3 CypfD B5lnTq1EdCrDqdOlHvehqy7c

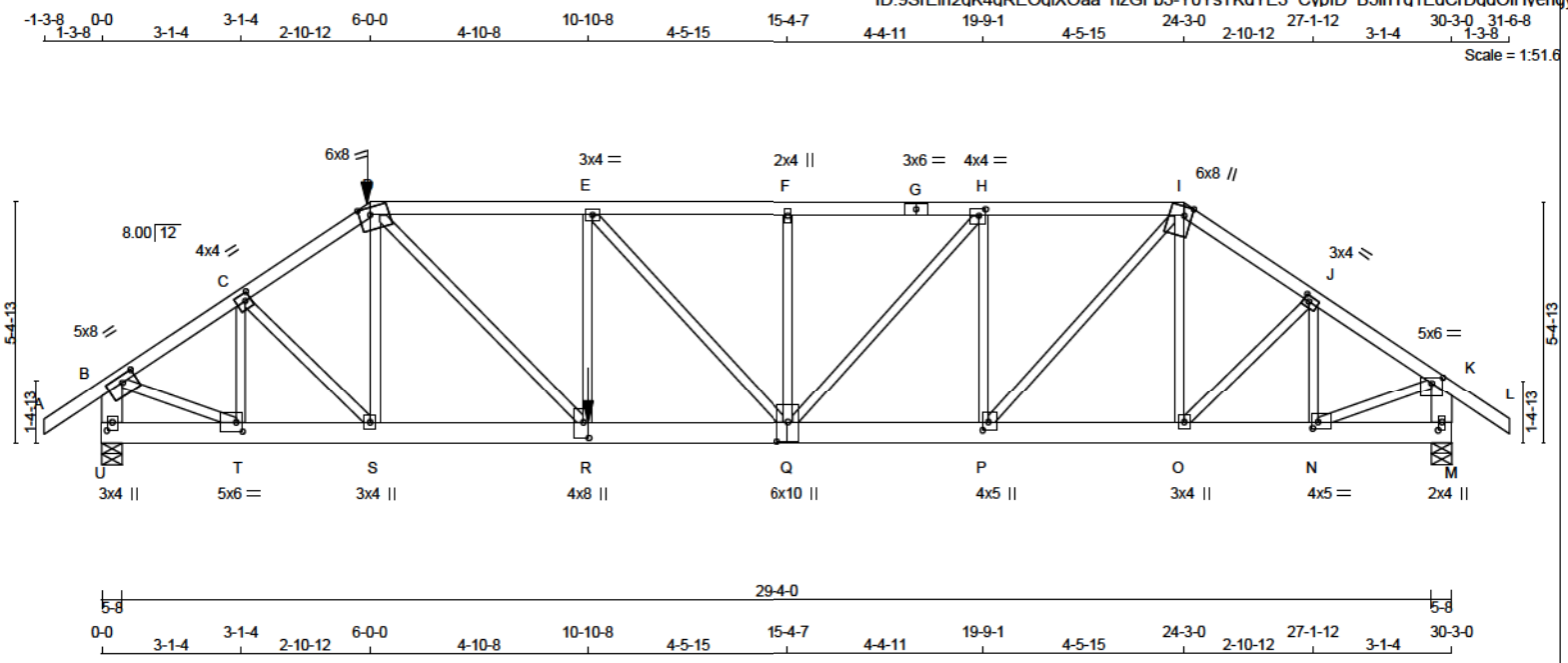

TOTAL WEIGHT = 2 X 153 = 307 lb

LUMBER

N. L. G. A. RULES

CHORDS	SIZE		LUMBER	DESCR.
A - D	2x4	DRY	No.2	SPF
D - G	2x4	DRY	No.2	SPF
G - I	2x4	DRY	No.2	SPF
I - L	2x4	DRY	No.2	SPF
U - B	2x6	DRY	No.2	SPF
M - K	2x6	DRY	No.2	SPF
U - Q	2x6	DRY	No.2	SPF
Q - M	2x6	DRY	No.2	SPF
ALL WEBS EXCEPT	2x3	DRY	No.2	SPF

DRY: SEASONED LUMBER.

DESIGN CONSISTS OF 2 TRUSSES BUILT SEPARATELY THEN FASTENED TOGETHER AS FOLLOWS:

CHORDS	#ROWS	SURFACE SPACING (IN)	LOAD(PLF)
TOP CHORDS : (0.122"X3") SPIRAL NAILS			
A- D	1	12	SIDE(0.0)
D- G	1	12	SIDE(55.1)
G- I	1	12	TOP
I- L	1	12	TOP
U- B	2	12	TOP
M- K	2	12	TOP
BOTTOM CHORDS : (0.122"X3") SPIRAL NAILS			
U- Q	2	12	SIDE(22.0)
Q- M	2	12	TOP
WEBS : (0.122"X3") SPIRAL NAILS			
2x3	1	6	

NAILS TO BE DRIVEN FROM ONE SIDE ONLY.

GIRDER NAILING ASSUMES NAILED HANGERS ARE FASTENED WITH MIN. 3-0 INCH NAILS.

TOP - COMPONENTS ARE LOADED FROM THE TOP AND MUST BE PLACED ON TOP EDGE OF ALL PLIES FOR THE LOAD TO BE TRANSFERRED TO EACH PLY.

SIDE - PLF SHOWN IS THE EQUIVALENT UDL APPLIED TO ONE SIDE THAT THE CORRESPONDING NAILING PATTERN SHALL BE CAPABLE OF TRANSFERING. REMAINING PLF MUST BE APPLIED ON THE OPPOSITE SIDE OR ON THE TOP.

LICENSED PROFESSIONAL ENGINEER
N.A. EL-MASRI
PROVINCE OF ONTARIO
Dec 18, 2020

READ ALL NOTES ON THIS PAGE AND ON ENGINEERING NOTE PAGE ENP-1. THIS NOTE PAGE IS AN INTEGRAL PART OF THIS DRAWING AS IT CONTAINS SPECIFICATIONS AND CRITERIA USED IN THE DESIGN OF THIS COMPONENT.

DIMENSIONS, SUPPORTS AND LOADINGS SPECIFIED BY FABRICATOR TO BE VERIFIED BY BUILDING DESIGNER [M]

BEARINGS

JT	FACTORED GROSS REACTION VERT	HORZ	MAXIMUM GROSS REACTION DOWN	HORZ	FACTORED UPLIFT	INPUT BRG IN-SX	REQRD BRG IN-SX
U	5655	0	5655	0	0	5-8	3-11
M	4021	0	4021	0	0	5-8	2-3

UNFACTORED REACTIONS

1ST LCASE MAX./MIN. COMPONENT REACTIONS

JT	COMBINED	SNOW	LIVE	PERM.LIVE	WIND	DEAD	SOIL
U	4187	2409 / 0	722 / 0	0 / 0	0 / 0	1056 / 0	0 / 0
M	2966	1739 / 0	488 / 0	0 / 0	0 / 0	739 / 0	0 / 0

BEARING MATERIAL TO BE SPF NO.2 OR BETTER AT JOINT(S) U, M

BRACING

TOP CHORD TO BE SHEATHED OR MAX. PURLIN SPACING = 2.62 FT.
MAX. UNBRACED BOTTOM CHORD LENGTH = 10.00 FT OR RIGID CEILING DIRECTLY APPLIED.

ALL PITCH BREAKS AND PERIMETER CORNER JOINTS MUST BE LATERALLY RESTRAINED.

LOADING

TOTAL LOAD CASES: (4)

CHORDS

MEMB.	FORCE (LBS)	FACTORED VERT. LOAD (PLF) FROM	TO	LC1	MAX CSI (LC)	MAX. UNBRAC LENGTH
FR-TO						
A- B	0 / 47	-124.4	-124.4	0.09 (1)	10.00	
B- C	-6247 / 0	-124.4	-124.4	0.22 (1)	3.75	
C- D	-7137 / 0	-124.4	-124.4	0.25 (1)	3.52	
D- E	-8780 / 0	-234.6	-234.6	0.79 (1)	2.62	
E- F	-7813 / 0	-124.4	-124.4	0.62 (1)	2.97	
F- G	-7813 / 0	-124.4	-124.4	0.46 (1)	3.18	
G- H	-7813 / 0	-124.4	-124.4	0.46 (1)	3.18	
H- I	-6291 / 0	-124.4	-124.4	0.37 (1)	3.61	
I- J	-4900 / 0	-124.4	-124.4	0.16 (1)	4.24	
J- K	-4346 / 0	-124.4	-124.4	0.15 (1)	4.47	
K- L	0 / 47	-124.4	-124.4	0.09 (1)	10.00	
U- B	-5483 / 0	0.0	0.0	0.20 (1)	6.26	
M- K	-3918 / 0	0.0	0.0	0.14 (1)	7.16	
U- T	0 / 0	-74.0	-74.0	0.07 (1)	10.00	
T- S	0 / 5210	-74.0	-74.0	0.42 (1)	10.00	
S- R	0 / 5906	-74.0	-74.0	0.47 (1)	10.00	
R- Q	0 / 8780	-39.2	-39.2	0.64 (1)	10.00	
Q- P	0 / 6291	-39.2	-39.2	0.45 (1)	10.00	
P- O	0 / 4048	-39.2	-39.2	0.31 (1)	10.00	
O- N	0 / 3631	-39.2	-39.2	0.28 (1)	10.00	
N- M	0 / 0	-39.2	-39.2	0.05 (1)	10.00	

WEBS

MEMB.	FORCE (LBS)	MAX CSI (LC)
FR-TO		
T- C	-1642 / 0	0.17 (1)
C- S	0 / 1001	0.12 (1)
S- D	-206 / 205	0.04 (1)
D- R	0 / 4122	0.51 (1)
R- E	0 / 306	0.04 (3)
E- Q	-1452 / 0	0.60 (1)
Q- F	-444 / 0	0.09 (1)
Q- H	0 / 2314	0.29 (1)
P- H	-2364 / 0	0.50 (1)
P- I	0 / 3361	0.42 (1)
O- I	-171 / 36	0.04 (1)
O- J	0 / 601	0.07 (1)
N- J	-1171 / 0	0.12 (1)
B- T	0 / 5472	0.68 (1)
N- K	0 / 3814	0.47 (1)

FACTORED CONCENTRATED LOADS (LBS)

JT	LOC.	LC1	MAX-	MAX+	FACE	DIR.	TYPE	HEEL	CONN.
D	6-0-0	-560	-560	---	FRONT	VERT	TOTAL	---	C1
R	10-10-8	-2908	-2908	---	FRONT	VERT	TOTAL	---	C1

CONNECTION REQUIREMENTS

1) C1: A SUITABLE HANGER/MECHANICAL CONNECTION IS REQUIRED.

DESIGN CRITERIA

*** SPECIAL LOADS ANALYSIS ***
GEOMETRY AND/OR BASIC LOADS CHANGED BY USER.
LOADS WERE DERIVED FROM USER INPUT
NO FURTHER MODIFICATIONS WERE MADE

SPECIFIED LOADS:

TOP CH.	LL	=	34.8	PSF
	DL	=	8.0	PSF
BOT CH.	LL	=	10.5	PSF
	DL	=	7.3	PSF
TOTAL LOAD		=	60.6	PSF

SPACING = 24.0 IN. C/C

LOADING IN FLAT SECTION BASED ON A SLOPE OF 2.00/12 MINIMUM

GIRDER TYPE: CPrimeHip
SIDE SETBACK = 6-0-0
END SETBACK = 6-0-0
END WALL WIDTH = 5-8
CORNER FRAMING TYPE: CONVENTIONAL
END JACK TYPE: CONVENTIONAL
APPLIED TO FRONT SIDE
- ADDT'L LOADS BASED ON 55 % OF GSL.
LOADS APPLIED TO FIRST 10-10-8 OF SPAN MEASURED FROM THE LEFT.

*** NON STANDARD GIRDER ***
ADDT'L USER-DEFINED LOADS APPLIED TO ALL LOAD CASES.

THIS TRUSS IS DESIGNED FOR RESIDENTIAL OR SMALL BUILDING REQUIREMENTS OF PART 9, NBCC 2015

THIS DESIGN COMPLIES WITH:
- PART 9 OF BCBC 2018 , ABC 2019
- PART 9 OF OBC 2012 (2019 AMENDMENT)
- CSA 086-14
- TPIC 2014

(55 % OF 48.1 P.S.F. G.S.L. PLUS 8.4 P.S.F. RAIN LOAD) EQUALS 34.8 P.S.F. SPECIFIED ROOF LIVE LOAD

ALLOWABLE DEFL.(LL)= L/360 (1.01")
CALCULATED VERT. DEFL.(LL) = L/ 999 (0.17")
ALLOWABLE DEFL.(TL)= L/360 (1.01")
CALCULATED VERT. DEFL.(TL) = L/ 999 (0.28")

CSI: TC=0.79/1.00 (D-E:1) , BC=0.64/1.00 (Q-R:1) , WB=0.68/1.00 (B-T:1) , SSI=0.28/1.00 (D-E:1)

DOL LUMBER=1.00 NAIL=1.00 LS BEND=1.00 COMP=1.00 SHEAR=1.00 TENS= 1.00

COMPANION LIVE LOAD FACTOR = 1.00

TRUSS PLATE MANUFACTURER IS NOT RESPONSIBLE FOR QUALITY CONTROL IN THE TRUSS MANUFACTURING PLANT .

NAIL VALUES

PLATE	GRIP(DRY) (PSI) MAX	MIN	SHEAR (PLI) MAX	MIN	SECTION (PLI) MAX	MIN
MT20	650	371	1747	788	1987	1873

CONTINUED ON PAGE 2

Town of East Gwillimbury
Building Standards Branch BCIN #16487

These plans have been reviewed for use with the corrections as noted. No other changes may be made without written approval of the Building Standards Branch. All work must comply with Zoning By-Law 2018-043, as amended, and the Ontario Building Code, as amended. These approved documents must be kept on site at all times. The building permit must be clearly posted on site at all times.

Discipline	Reviewer	BCIN	Date
Building Code	H. Authier	43236	2021-02-25
Sewage System			
Zoning			

KOTT

PLATES (table is in inches)

JT	TYPE	PLATES	W	LEN	Y	X
B	TMVW-t	MT20	5.0	8.0	1.75	3.75
C	TMWW-t	MT20	4.0	4.0	2.00	1.50
D	TTWW-m	MT20	6.0	8.0	2.00	3.00
E	TMWW-t	MT20	3.0	4.0		
F	TMW+w	MT20	2.0	4.0		
G	TS-t	MT20	3.0	6.0		
H	TMWW-t	MT20	4.0	4.0	1.75	1.75
I	TTWW+m	MT20	6.0	8.0	Edge	2.00
J	TMWW-t	MT20	3.0	4.0	1.50	1.50
K	TMVW-p	MT20	5.0	6.0	1.50	3.00
M	BMV1+p	MT20	2.0	4.0	2.25	1.00
N	BMWW-t	MT20	4.0	5.0	1.75	1.50
O	BMWW+t	MT20	3.0	4.0		
P	BMWW+t	MT20	4.0	5.0	2.25	1.50
Q	BSWWW+l	MT20	6.0	10.0	5.25	3.00
R	BMWW+t	MT20	4.0	8.0	4.25	1.50
S	BMWW+t	MT20	3.0	4.0		
T	BMWW-t	MT20	5.0	6.0	2.50	1.75
U	BMV1+p	MT20	3.0	4.0	2.25	1.50

Edge - INDICATES REFERENCE CORNER OF PLATE TOUCHES EDGE OF CHORD.

PLATE PLACEMENT TOL. = 0.250 inches

PLATE ROTATION TOL. = 5.0 Deg.

JSI GRIP= 0.89 (J) (INPUT = 0.90)
JSI METAL= 0.65 (R) (INPUT = 1.00)

READ ALL NOTES ON THIS PAGE AND ON ENGINEERING NOTE PAGE ENP-1. THIS NOTE PAGE IS AN INTEGRAL PART OF THIS DRAWING AS IT CONTAINS SPECIFICATIONS AND CRITERIA USED IN THE DESIGN OF THIS COMPONENT.

Town of East Gwillimbury
Building Standards Branch BCIN #16487

These plans have been reviewed for use with the corrections as noted. No other changes may be made without written approval of the Building Standards Branch. All work must comply with Zoning By-Law 2018-043, as amended, and the Ontario Building Code, as amended. These approved documents must be kept on site at all times. The building permit must be clearly posted on site at all times.

Discipline	Reviewer	BCIN	Date
Building Code	H. Authier	43236	2021-02-25
Sewage System			
Zoning			

KOTT

JOB NAME	TRUSS NAME	QUANTITY	PLY	JOB DESC.		DWG NO.
NE1220-124	G02	1	3	TRUSS DESC.	GREENPARK - TRINAR HALL - GLENWAY 12A ELE 1	

Version 8.420 S Oct 9 2020 MiTek Industries, Inc. Fri Dec 18 08:14:39 2020 Page 1
ID:9SrEih2qK4qREOqiXOaa nzGFb3-1D6EhqeA?N63azEPYuc JhDCb1ZHv2yY xiCD6y7

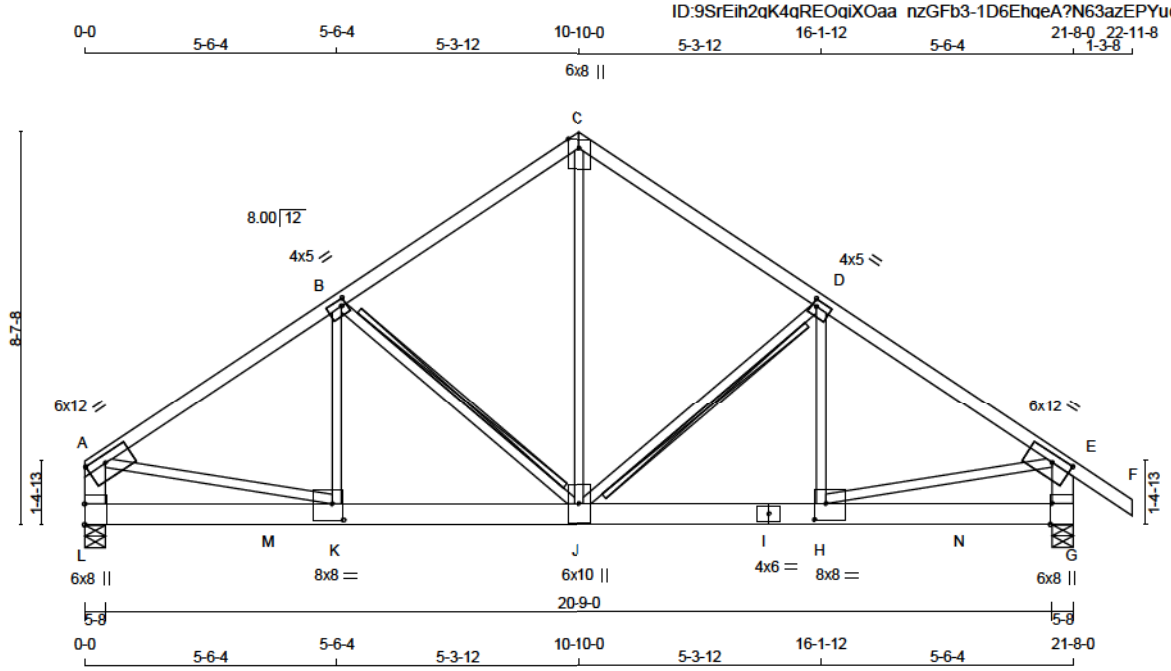

TOTAL WEIGHT = 3 X 107 = 320 lb

LUMBER
N. L. G. A. RULES

CHORDS	SIZE		LUMBER	DESCR.
A - C	2x4	DRY	No.2	SPF
C - F	2x4	DRY	No.2	SPF
L - A	2x6	DRY	No.2	SPF
G - E	2x6	DRY	No.2	SPF
L - I	2x6	DRY	2100F 1.8E	SPF
I - G	2x6	DRY	2100F 1.8E	SPF
ALL WEBS EXCEPT	2x3	DRY	No.2	SPF

DRY: SEASONED LUMBER.

DESIGN CONSISTS OF 3 TRUSSES BUILT SEPARATELY THEN FASTENED TOGETHER AS FOLLOWS:

CHORDS	#ROWS	SURFACE SPACING (IN)	LOAD(PLF)
TOP CHORDS : (0.122"X3") SPIRAL NAILS			
A- C	1	12	TOP
C- F	1	12	TOP
L- A	2	12	TOP
G- E	2	12	TOP
BOTTOM CHORDS : (0.122"X3") SPIRAL NAILS			
L- I	3	5	SIDE(801.3)
I- G	3	5	SIDE(801.3)
WEBS : (0.122"X3") SPIRAL NAILS			
2x3	1	6	

STAGGER NAILS BY HALF THE SURFACE SPACING IN ADJACENT PLIES.

TOP - COMPONENTS ARE LOADED FROM THE TOP AND MUST BE PLACED ON TOP EDGE OF ALL PLIES FOR THE LOAD TO BE TRANSFERRED TO EACH PLY.

SIDE - PLF SHOWN IS THE EQUIVALENT UDL APPLIED TO ONE SIDE THAT THE CORRESPONDING NAILING PATTERN SHALL BE CAPABLE OF TRANSFERING. REMAINING PLF MUST BE APPLIED ON THE OPPOSITE SIDE OR ON THE TOP.

PLATES (table is in inches)

JT	TYPE	PLATES	W	LEN	Y	X
A	TMVW-t	MT20	6.0	12.0	2.00	5.00
B	TMWW-t	MT20	4.0	5.0	1.75	1.25
C	TTW+p	MT20	6.0	8.0	Edge	

DIMENSIONS, SUPPORTS AND LOADINGS SPECIFIED BY FABRICATOR TO BE VERIFIED BY BUILDING DESIGNER

BEARINGS

JT	FACTORED GROSS REACTION VERT	HORZ	MAXIMUM GROSS REACTION DOWN	HORZ	FACTORED UPLIFT	INPUT BRG IN-SX	REQRD BRG IN-SX
L	14196	0	14196	0	0	5-8	5-8
G	14272	0	14272	0	0	5-8	5-8

UNFACTORED REACTIONS

JT	1ST LCASE COMBINED	SNOW	MAX./MIN. COMPONENT REACTIONS LIVE	PERM.LIVE	WIND	DEAD	SOIL
L	10513	6038 / 0	1821 / 0	0 / 0	0 / 0	2654 / 0	0 / 0
G	10561	6093 / 0	1809 / 0	0 / 0	0 / 0	2658 / 0	0 / 0

BEARING MATERIAL TO BE SPF NO.2 OR BETTER AT JOINT(S) L, G

BRACING
TOP CHORD TO BE SHEATHED OR MAX. PURLIN SPACING = 2.73 FT.
MAX. UNBRACED BOTTOM CHORD LENGTH = 10.00 FT OR RIGID CEILING DIRECTLY APPLIED.

ALL PITCH BREAKS AND PERIMETER CORNER JOINTS MUST BE LATERALLY RESTRAINED.

2x6 DRY SPF No.2 T-BRACE AT D-J, B-J

FASTEN T AND I-BRACES TO NARROW EDGE OF WEB WITH ONE ROW PER PLY OF 3" COMMON WIRE NAILS @ 6" O.C. WITH 3" MINIMUM END DISTANCE. BRACE MUST COVER 90% OF WEB LENGTH.

END VERTICAL(S) MUST BE SHEATHED OR HAVE BRACES AS INDICATED IN THE MAX. UNBRACED LENGTH COLUMN OF THE TABLE BELOW

LOADING
TOTAL LOAD CASES: (4)

CHORDS

MEMB. FR-TO	MAX. FACTORED FORCE (LBS)	FACTORED VERT. LOAD (PLF) FROM	TO	LC1 MAX CSI (LC)	MAX. UNBRAC LENGTH
A- B	-15626 / 0	-124.4	-124.4	0.82 (1)	2.73
B- C	-11444 / 0	-124.4	-124.4	0.47 (1)	3.37
C- D	-11445 / 0	-124.4	-124.4	0.48 (1)	3.37
D- E	-15554 / 0	-124.4	-124.4	0.81 (1)	2.75
E- F	0 / 47	-124.4	-124.4	0.06 (1)	10.00
L- A	-11324 / 0	0.0	0.0	0.25 (1)	5.52
G- E	-11445 / 0	0.0	0.0	0.25 (1)	5.49
L- M	0 / 0	-1241.3	-1241.3	0.40 (1)	10.00
M- K	0 / 0	-1156.0	-1156.0	0.40 (1)	10.00
K- J	0 / 13027	-1156.0	-1156.0	0.57 (1)	10.00
J- I	0 / 12968	-1156.0	-1156.0	0.56 (1)	10.00
I- H	0 / 12968	-1156.0	-1156.0	0.56 (1)	10.00
H- N	0 / 0	-1156.0	-1156.0	0.39 (1)	10.00
N- G	0 / 0	-1241.3	-1241.3	0.39 (1)	10.00

WEBS

MEMB. FR-TO	MAX. FACTORED FORCE (LBS)	MAX CSI (LC)
J- C	0 / 12115	0.91 (1)
J- D	-4626 / 0	0.48 (1)
H- D	0 / 4584	0.34 (1)
B- J	-4705 / 0	0.49 (1)
K- B	0 / 4676	0.35 (1)
A- K	0 / 13238	0.99 (1)
H- E	0 / 13177	0.99 (1)

DESIGN CRITERIA

SPECIFIED LOADS:

TOP CH.	LL	=	34.8	PSF
	DL	=	8.0	PSF
BOT CH.	LL	=	10.5	PSF
	DL	=	7.3	PSF
TOTAL LOAD		=	60.6	PSF

SPACING = 24.0 IN. C/C

GIRDER TYPE: CStdGirder
START DISTANCE = 0-0
START SPAN CARRIED = 31-10-0
END DISTANCE = 4-0-8
END SPAN CARRIED = 31-10-0
END WALL WIDTH = 5-8
APPLIED TO FRONT SIDE OF BOTTOM CHORD.
- ADDT'L LOADS BASED ON 55 % OF GSL.

GIRDER TYPE: CStdGirder
START DISTANCE = 4-0-8
START SPAN CARRIED = 29-9-0
END DISTANCE = 19-2-8
END SPAN CARRIED = 29-9-0
END WALL WIDTH = 5-8
APPLIED TO FRONT SIDE OF BOTTOM CHORD.
- ADDT'L LOADS BASED ON 55 % OF GSL.

GIRDER TYPE: CStdGirder
START DISTANCE = 19-2-8
START SPAN CARRIED = 31-10-0
END DISTANCE = 21-8-0
END SPAN CARRIED = 31-10-0
END WALL WIDTH = 5-8
APPLIED TO FRONT SIDE OF BOTTOM CHORD.
- ADDT'L LOADS BASED ON 55 % OF GSL.

THIS TRUSS IS DESIGNED FOR RESIDENTIAL OR SMALL BUILDING REQUIREMENTS OF PART 9, NBCC 2015

THIS DESIGN COMPLIES WITH:
- PART 9 OF BCBC 2018 , ABC 2019
- PART 9 OF OBC 2012 (2019 AMENDMENT)
- CSA 086-14
- TPIC 2014

(55 % OF 48.1 P.S.F. G.S.L. PLUS 8.4 P.S.F. RAIN LOAD) EQUALS 34.8 P.S.F. SPECIFIED ROOF LIVE LOAD

ALLOWABLE DEFL.(LL)= L/300 (0.72")
CALCULATED VERT. DEFL.(LL) = L/ 999 (0.16")
ALLOWABLE DEFL.(TL)= L/360 (0.72")
CALCULATED VERT. DEFL.(TL) = L/ 973 (0.27")

CSI: TC=0.82/1.00 (A-B:1) , BC=0.57/1.00 (J-K:1) , WB=0.99/1.00 (A-K:1) , SSI=0.77/1.00 (K-L:1)

DOL LUMBER=1.00 NAIL=1.00 LS BEND=1.10 COMP=1.10 SHEAR=1.10 TENS= 1.10

COMPANION LIVE LOAD FACTOR = 1.00

TRUSS PLATE MANUFACTURER IS NOT RESPONSIBLE FOR QUALITY CONTROL IN THE TRUSS MANUFACTURING PLANT .

LICENSED PROFESSIONAL ENGINEER
N.A. EL-MASRI
PROVINCE OF ONTARIO
Dec 18, 2020

READ ALL NOTES ON THIS PAGE AND ON ENGINEERING NOTE PAGE ENP-1. THIS NOTE PAGE IS AN INTEGRAL PART OF THIS DRAWING AS IT CONTAINS SPECIFICATIONS AND CRITERIA USED IN THE DESIGN OF THIS COMPONENT.

Town of East Gwillimbury
Building Standards Branch BCIN #16487

These plans have been reviewed for use with the corrections as noted. No other changes may be made without written approval of the Building Standards Branch. All work must comply with Zoning By-Law 2018-043, as amended, and the Ontario Building Code, as amended. These approved documents must be kept on site at all times. The building permit must be clearly posted on site at all times.

Discipline	Reviewer	BCIN	Date
Building Code	H. Authier	43236	2021-02-25
Sewage System			
Zoning			

CONTINUED ON PAGE 2

KOTT

PLATES (table is in inches)

JT	TYPE	PLATES	W	LEN	Y	X
D	TMWW-t	MT20	4.0	5.0	1.75	1.25
E	TMVW-t	MT20	6.0	12.0	2.00	5.00
G	BMV1+t	MT20	6.0	8.0	Edge	0.50
H	BMWW-t	MT20	8.0	8.0	4.25	3.00
I	BS-t	MT20	4.0	6.0		
J	BMWWW+t	MT20	6.0	10.0		
K	BMWW-t	MT20	8.0	8.0	4.25	3.00
L	BMV1+t	MT20	6.0	8.0	5.50	

Edge - INDICATES REFERENCE CORNER OF PLATE TOUCHES EDGE OF CHORD.

NAIL VALUES

PLATE	GRIP(DRY) (PSI)		SHEAR (PLI)		SECTION (PLI)	
	MAX	MIN	MAX	MIN	MAX	MIN
MT20	650	371	1747	788	1987	1873

PLATE PLACEMENT TOL. = 0.250 inches

PLATE ROTATION TOL. = 5.0 Deg.

JSI GRIP= 0.90 (A) (INPUT = 0.90)
JSI METAL= 0.97 (I) (INPUT = 1.00)

READ ALL NOTES ON THIS PAGE AND ON ENGINEERING NOTE PAGE ENP-1. THIS NOTE PAGE IS AN INTEGRAL PART OF THIS DRAWING AS IT CONTAINS SPECIFICATIONS AND CRITERIA USED IN THE DESIGN OF THIS COMPONENT.

Town of East Gwillimbury
Building Standards Branch BCIN #16487

These plans have been reviewed for use with the corrections as noted. No other changes may be made without written approval of the Building Standards Branch. All work must comply with Zoning By-Law 2018-043, as amended, and the Ontario Building Code, as amended. These approved documents must be kept on site at all times. The building permit must be clearly posted on site at all times.

Discipline	Reviewer	BCIN	Date
Building Code	H. Authier	43236	2021-02-25
Sewage System			
Zoning			

KOTT

JOB NAME	TRUSS NAME	QUANTITY	PLY	JOB DESC.		DRWG NO.
NE1220-124	G03	1	2	TRUSS DESC.	GREENPARK - TRINAR HALL - GLENWAY 12A ELE 1	**Page 6 of 44**

Version 8.420 S Oct 9 2020 MiTek Industries, Inc. Fri Dec 18 08:14:40 2020 Page 1

ID:9SrEih2qK4qREOqiXOaa nzGFb3-VPqcu?fomqEvC7pc6c7DsumNmRqvhaohDbRlkZy7o

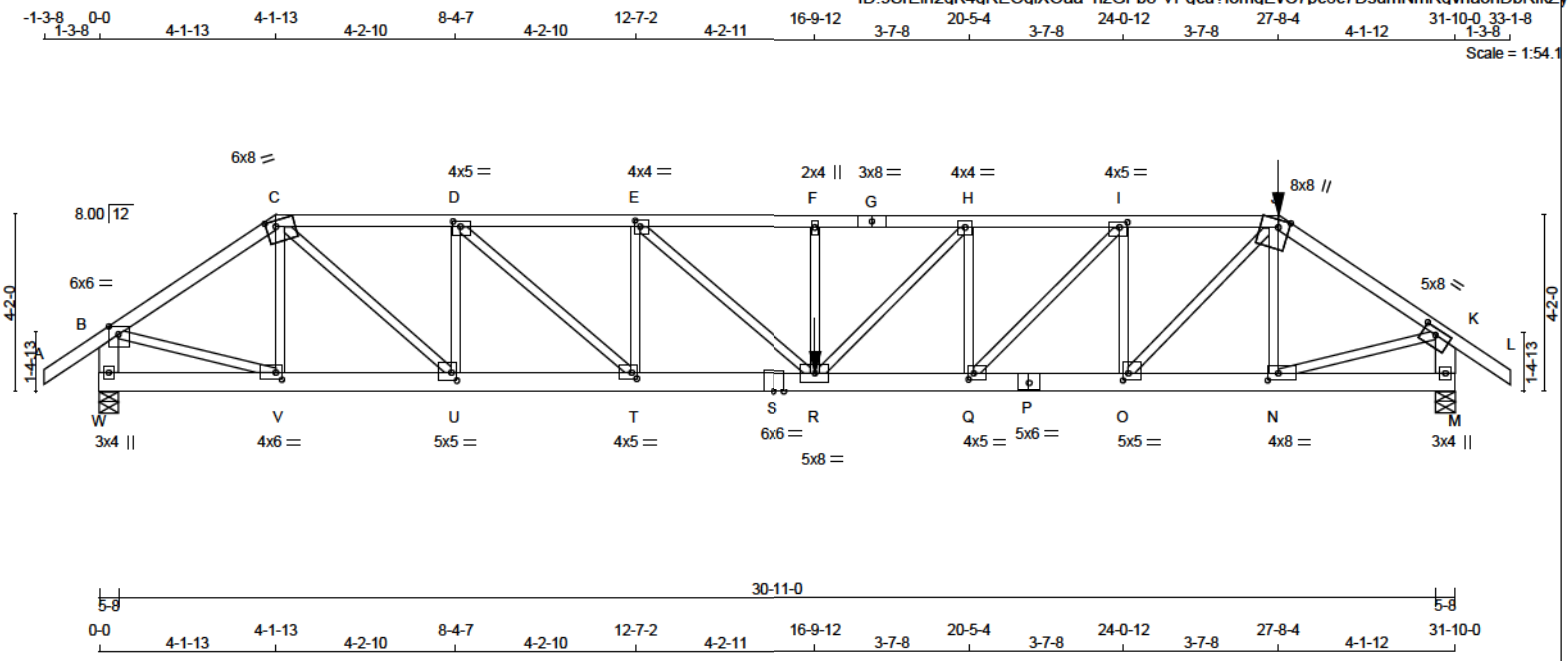

TOTAL WEIGHT = 2 X 153 = 305 lb

LUMBER

N. L. G. A. RULES

CHORDS	SIZE		LUMBER	DESCR.
A - C	2x4	DRY	No.2	SPF
C - G	2x4	DRY	No.2	SPF
G - J	2x4	DRY	No.2	SPF
J - L	2x4	DRY	No.2	SPF
W - B	2x6	DRY	No.2	SPF
M - K	2x6	DRY	No.2	SPF
W - S	2x6	DRY	No.2	SPF
S - P	2x6	DRY	No.2	SPF
P - M	2x6	DRY	No.2	SPF
ALL WEBS EXCEPT	2x3	DRY	No.2	SPF

DRY: SEASONED LUMBER.

DESIGN CONSISTS OF 2 TRUSSES BUILT SEPARATELY THEN FASTENED TOGETHER AS FOLLOWS:

CHORDS	#ROWS	SURFACE SPACING (IN)	LOAD(PLF)
TOP CHORDS : (0.122"X3") SPIRAL NAILS			
A- C	1	12	TOP
C- G	1	12	SIDE(55.1)
G- J	1	12	SIDE(55.1)
J- L	1	12	SIDE(0.0)
W- B	2	12	TOP
M- K	2	12	TOP
BOTTOM CHORDS : (0.122"X3") SPIRAL NAILS			
W- S	2	12	TOP
S- P	2	12	SIDE(22.0)
P- M	2	12	SIDE(22.0)
WEBS : (0.122"X3") SPIRAL NAILS			
2x3	1	6	

NAILS TO BE DRIVEN FROM ONE SIDE ONLY.

GIRDER NAILING ASSUMES NAILED HANGERS ARE FASTENED WITH MIN. 3-0 INCH NAILS.

TOP - COMPONENTS ARE LOADED FROM THE TOP AND MUST BE PLACED ON TOP EDGE OF ALL PLIES FOR THE LOAD TO BE TRANSFERRED TO EACH PLY.

DIMENSIONS, SUPPORTS AND LOADINGS SPECIFIED BY FABRICATOR TO BE VERIFIED BY BUILDING DESIGNER [M]

BEARINGS

JT	FACTORED GROSS REACTION VERT	HORZ	MAXIMUM GROSS REACTION DOWN	HORZ	FACTORED UPLIFT	INPUT BRG IN-SX	REQRD BRG IN-SX
W	4370	0	4370	0	0	5-8	2-6
M	5535	0	5535	0	0	5-8	3-8

UNFACTORED REACTIONS

1ST LCASE MAX./MIN. COMPONENT REACTIONS

JT	COMBINED	SNOW	LIVE	PERM.LIVE	WIND	DEAD	SOIL
W	3227	1885 / 0	536 / 0	0 / 0	0 / 0	806 / 0	0 / 0
M	4095	2365 / 0	700 / 0	0 / 0	0 / 0	1030 / 0	0 / 0

BEARING MATERIAL TO BE SPF NO.2 OR BETTER AT JOINT(S) W, M

BRACING

TOP CHORD TO BE SHEATHED OR MAX. PURLIN SPACING = 2.15 FT.
MAX. UNBRACED BOTTOM CHORD LENGTH = 10.00 FT OR RIGID CEILING DIRECTLY APPLIED.

ALL PITCH BREAKS AND PERIMETER CORNER JOINTS MUST BE LATERALLY RESTRAINED.

LOADING

TOTAL LOAD CASES: (4)

CHORDS

MEMB.	FORCE (LBS)	FACTORED VERT. LOAD (PLF)	LC1 MAX CSI (LC)	MAX. UNBRAC LENGTH	FR-TO FROM	TO
A- B	0 / 47	-124.4	-124.4 0.09 (1)	10.00		
B- C	-5156 / 0	-124.4	-124.4 0.34 (1)	3.98		
C- D	-7793 / 0	-124.4	-124.4 0.42 (1)	3.23		
D- E	-10548 / 0	-124.4	-124.4 0.64 (1)	2.59		
E- F	-12468 / 0	-124.4	-124.4 0.78 (1)	2.24		
F- G	-12468 / 0	-234.6	-234.6 0.79 (1)	2.15		
G- H	-12468 / 0	-234.6	-234.6 0.79 (1)	2.15		
H- I	-11264 / 0	-234.6	-234.6 0.73 (1)	2.34		
I- J	-8910 / 0	-234.6	-234.6 0.54 (1)	2.88		
J- K	-6612 / 0	-124.4	-124.4 0.42 (1)	3.49		
K- L	0 / 47	-124.4	-124.4 0.09 (1)	10.00		
W- B	-4303 / 0	0.0	0.0 0.15 (1)	6.90		
M- K	-5397 / 0	0.0	0.0 0.19 (1)	6.30		
W- V	0 / 0	-39.2	-39.2 0.03 (3)	10.00		
V- U	0 / 4261	-39.2	-39.2 0.31 (1)	10.00		
U- T	0 / 7794	-39.2	-39.2 0.56 (1)	10.00		
T- S	0 / 10548	-39.2	-39.2 0.81 (1)	10.00		
S- R	0 / 10548	-39.2	-39.2 0.81 (1)	10.00		
R- Q	0 / 11264	-74.0	-74.0 0.86 (1)	10.00		
Q- P	0 / 8911	-74.0	-74.0 0.64 (1)	10.00		
P- O	0 / 8911	-74.0	-74.0 0.64 (1)	10.00		
O- N	0 / 5467	-74.0	-74.0 0.40 (1)	10.00		
N- M	0 / 0	-74.0	-74.0 0.06 (3)	10.00		

WEBS

MEMB.	FORCE (LBS)	MAX CSI (LC)
V- C	-792 / 0	0.10 (1)
C- U	0 / 4740	0.59 (1)
U- D	-3035 / 0	0.39 (1)
D- T	0 / 3702	0.46 (1)
T- E	-2233 / 0	0.29 (1)
E- R	0 / 2580	0.32 (1)
R- F	-667 / 0	0.09 (1)
R- H	0 / 1742	0.22 (1)
Q- H	-2114 / 0	0.27 (1)
Q- I	0 / 3406	0.42 (1)
O- I	-3369 / 0	0.44 (1)
O- J	0 / 4974	0.62 (1)
N- J	-939 / 0	0.12 (1)
B- V	0 / 4399	0.54 (1)
N- K	0 / 5641	0.70 (1)

FACTORED CONCENTRATED LOADS (LBS)

JT	LOC.	LC1	MAX-	MAX+	FACE	DIR.	TYPE	HEEL	CONN.
J	27-8-4	-387	-387	---	FRONT	VERT	TOTAL	---	C1
R	16-9-12	-2247	-2247	---	FRONT	VERT	TOTAL	---	C1

CONNECTION REQUIREMENTS

1) C1: A SUITABLE HANGER/MECHANICAL CONNECTION IS REQUIRED.

DESIGN CRITERIA

*** SPECIAL LOADS ANALYSIS ***
GEOMETRY AND/OR BASIC LOADS CHANGED BY USER.
LOADS WERE DERIVED FROM USER INPUT
NO FURTHER MODIFICATIONS WERE MADE

SPECIFIED LOADS:

TOP CH.	LL	=	34.8	PSF
	DL	=	8.0	PSF
BOT CH.	LL	=	10.5	PSF
	DL	=	7.3	PSF
TOTAL LOAD		=	60.6	PSF

SPACING = 24.0 IN. C/C

LOADING IN FLAT SECTION BASED ON A SLOPE OF 2.00/12 MINIMUM

GIRDER TYPE: CPrimeHip
LEFT SETBACK = 4-1-13
RIGHT SETBACK = 4-1-12
END SETBACK = 6-0-0
END WALL WIDTH = 5-8
CORNER FRAMING TYPE: CONVENTIONAL
END JACK TYPE: CONVENTIONAL
APPLIED TO FRONT SIDE
- ADDT'L LOADS BASED ON 55 % OF GSL.
LOADS APPLIED TO FIRST 15-0-4 OF SPAN MEASURED FROM THE RIGHT.

*** NON STANDARD GIRDER ***
ADDT'L USER-DEFINED LOADS APPLIED TO ALL LOAD CASES.

THIS TRUSS IS DESIGNED FOR RESIDENTIAL OR SMALL BUILDING REQUIREMENTS OF PART 9, NBCC 2015

THIS DESIGN COMPLIES WITH:
- PART 9 OF BCBC 2018 , ABC 2019
- PART 9 OF OBC 2012 (2019 AMENDMENT)
- CSA 086-14
- TPIC 2014

(55 % OF 48.1 P.S.F. G.S.L. PLUS 8.4 P.S.F. RAIN LOAD) EQUALS 34.8 P.S.F. SPECIFIED ROOF LIVE LOAD

ALLOWABLE DEFL.(LL)= L/360 (1.06")
CALCULATED VERT. DEFL.(LL) = L/ 999 (0.32")
ALLOWABLE DEFL.(TL)= L/300 (1.00")
CALCULATED VERT. DEFL.(TL) = L/ 726 (0.53")

CSI: TC=0.79/1.00 (F-H:1) , BC=0.86/1.00 (Q-R:1) , WB=0.70/1.00 (K-N:1) , SSI=0.21/1.00 (I-J:1)

DOL LUMBER=1.00 NAIL=1.00 LS BEND=1.00 COMP=1.00 SHEAR=1.00 TENS= 1.00

COMPANION LIVE LOAD FACTOR = 1.00

TRUSS PLATE MANUFACTURER IS NOT RESPONSIBLE FOR QUALITY CONTROL IN THE TRUSS MANUFACTURING PLANT .

NAIL VALUES

PLATE	GRIP(DRY) (PSI) MAX	MIN	SHEAR (PLI) MAX	MIN	SECTION (PLI) MAX	MIN
MT20	650	371	1747	788	1987	1873

CONTINUED ON PAGE 2

LICENSED PROFESSIONAL ENGINEER
N.A. EL-MASRI
PROVINCE OF ONTARIO
Dec 18, 2020

READ ALL NOTES ON THIS PAGE AND ON ENGINEERING NOTE PAGE ENP-1. THIS NOTE PAGE IS AN INTEGRAL PART OF THIS DRAWING AS IT CONTAINS SPECIFICATIONS AND CRITERIA USED IN THE DESIGN OF THIS COMPONENT.

Town of East Gwillimbury
Building Standards Branch BCIN #16487

These plans have been reviewed for use with the corrections as noted. No other changes may be made without written approval of the Building Standards Branch. All work must comply with Zoning By-Law 2018-043, as amended, and the Ontario Building Code, as amended. These approved documents must be kept on site at all times. The building permit must be clearly posted on site at all times.

Discipline	Reviewer	BCIN	Date
Building Code	H. Authier	43236	2021-02-25
Sewage System			
Zoning			

KOTT

PLATES (table is in inches)

JT	TYPE	PLATES	W	LEN	Y	X
B	TMVW-p	MT20	6.0	6.0	2.25	2.75
C	TTWW-m	MT20	6.0	8.0	1.75	2.75
D	TMWW-t	MT20	4.0	5.0	1.50	2.00
E	TMWW-t	MT20	4.0	4.0	1.75	1.50
F	TMW+w	MT20	2.0	4.0		
G	TS-t	MT20	3.0	8.0		
H	TMWW-t	MT20	4.0	4.0		
I	TMWW-t	MT20	4.0	5.0	1.50	2.25
J	TTWW+m	MT20	8.0	8.0	Edge	3.00
K	TMVW-t	MT20	5.0	8.0	1.75	3.75
M	BMV1+p	MT20	3.0	4.0		
N	BMWW-t	MT20	4.0	8.0	2.00	3.00
O	BMWW-t	MT20	5.0	5.0	2.00	1.50
P	BS-t	MT20	5.0	6.0		
Q	BMWW-t	MT20	4.0	5.0	1.75	1.50
R	BMWWW-t	MT20	5.0	8.0		
S	BS-t	MT20	6.0	6.0		
T	BMWW-t	MT20	4.0	5.0	1.75	1.50
U	BMWW-t	MT20	5.0	5.0	2.25	1.50
V	BMWW-t	MT20	4.0	6.0	2.00	1.75
W	BMV1+p	MT20	3.0	4.0		

Edge - INDICATES REFERENCE CORNER OF PLATE TOUCHES EDGE OF CHORD.

PLATE PLACEMENT TOL. = 0.250 inches

PLATE ROTATION TOL. = 5.0 Deg.

JSI GRIP= 0.90 (M) (INPUT = 0.90)
JSI METAL= 0.86 (S) (INPUT = 1.00)

READ ALL NOTES ON THIS PAGE AND ON ENGINEERING NOTE PAGE ENP-1. THIS NOTE PAGE IS AN INTEGRAL PART OF THIS DRAWING AS IT CONTAINS SPECIFICATIONS AND CRITERIA USED IN THE DESIGN OF THIS COMPONENT.

Town of East Gwillimbury
Building Standards Branch BCIN #16487

These plans have been reviewed for use with the corrections as noted. No other changes may be made without written approval of the Building Standards Branch. All work must comply with Zoning By-Law 2018-043, as amended, and the Ontario Building Code, as amended. These approved documents must be kept on site at all times. The building permit must be clearly posted on site at all times.

Discipline	Reviewer	BCIN	Date
Building Code	H. Authier	43236	2021-02-25
Sewage System			
Zoning			

KOTT

JOB NAME	TRUSS NAME	QUANTITY	PLY	JOB DESC.		DWG NO.
NE1220-124	G04	1	1	TRUSS DESC.	GREENPARK - TRINAR HALL - GLENWAY 12A ELE 1	

Version 8.420 S Oct 9 2020 MiTek Industries, Inc. Fri Dec 18 08:14:41 2020 Page 1
ID:9SrEih2gK4qREOgiXOaa nzGFb3-zbE 6LqQX MmpHOofJeSO6IhirESQ3igRFBIG?y7c

Scale = 1:24.3

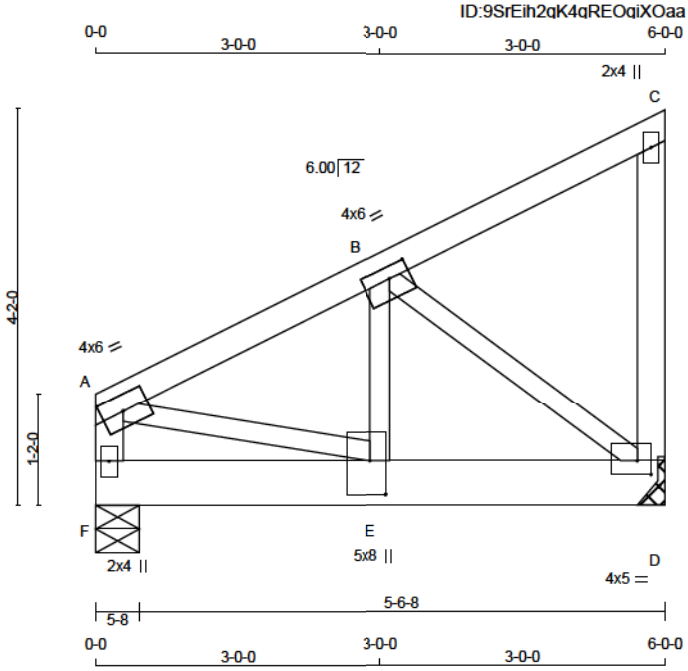

TOTAL WEIGHT = 29 lb

LUMBER
N. L. G. A. RULES

CHORDS	SIZE		LUMBER	DESCR.
A - C	2x4	DRY	No.2	SPF
D - C	2x4	DRY	No.2	SPF
F - A	2x4	DRY	No.2	SPF
F - D	2x6	DRY	No.2	SPF
ALL WEBS EXCEPT	2x3	DRY	No.2	SPF

DRY: SEASONED LUMBER.

PLATES (table is in inches)

JT	TYPE	PLATES	W	LEN	Y	X
A	TMVW-t	MT20	4.0	6.0	2.00	2.75
B	TMWW-t	MT20	4.0	6.0	1.50	2.50
C	TMV+p	MT20	2.0	4.0		
D	BMVW1-t	MT20	4.0	5.0	1.75	1.75
E	BMWW+t	MT20	5.0	8.0	4.25	2.00
F	BMV1+p	MT20	2.0	4.0		

DIMENSIONS, SUPPORTS AND LOADINGS SPECIFIED BY FABRICATOR TO BE VERIFIED BY BUILDING DESIGNER

BEARINGS

JT	FACTORED GROSS REACTION VERT	HORZ	MAXIMUM FACTORED GROSS REACTION DOWN	HORZ	UPLIFT	INPUT BRG IN-SX	REQRD BRG IN-SX
D	2245	0	2245	0	0	MECHANICAL	
F	2245	0	2245	0	0	5-8	3-13

A SUITABLE HANGER/MECHANICAL CONNECTION IS REQUIRED AT JOINT D. MINIMUM BEARING LENGTH AT JOINT D = 2-7.

UNFACTORED REACTIONS

JT	1ST LCASE COMBINED	MAX./MIN. COMPONENT REACTIONS SNOW	LIVE	PERM.LIVE	WIND	DEAD	SOIL
D	1663	955 / 0	288 / 0	0 / 0	0 / 0	420 / 0	0 / 0
F	1663	955 / 0	288 / 0	0 / 0	0 / 0	420 / 0	0 / 0

BEARING MATERIAL TO BE SPF NO.2 OR BETTER AT JOINT(S) F

BRACING
TOP CHORD TO BE SHEATHED OR MAX. PURLIN SPACING = 4.63 FT.
MAX. UNBRACED BOTTOM CHORD LENGTH = 10.00 FT OR RIGID CEILING DIRECTLY APPLIED.

ALL PITCH BREAKS AND PERIMETER CORNER JOINTS MUST BE LATERALLY RESTRAINED.

LOADING
TOTAL LOAD CASES: (4)

CHORDS

MEMB. FR-TO	MAX. FACTORED FORCE (LBS)	FACTORED VERT. LOAD (PLF) FROM	TO	LC1 MAX CSI (LC)	MAX. UNBRAC LENGTH
A- B	-1914 / 0	-124.4	-124.4	0.20 (1)	4.63
B- C	-15 / 0	-124.4	-124.4	0.15 (1)	6.25
D- C	-153 / 0	0.0	0.0	0.04 (1)	7.81
F- A	-1462 / 0	0.0	0.0	0.16 (1)	6.73
F- E	0 / 0	-624.1	-624.1	0.36 (1)	10.00
E- D	0 / 1726	-624.1	-624.1	0.59 (1)	10.00

WEBS

MEMB. FR-TO	MAX. FACTORED FORCE (LBS)	MAX CSI (LC)
E- B	0 / 1731	0.43 (1)
B- D	-2165 / 0	0.53 (1)
A- E	0 / 1782	0.44 (1)

DESIGN CRITERIA

SPECIFIED LOADS:
TOP CH. LL = 34.8 PSF
DL = 8.0 PSF
BOT CH. LL = 10.5 PSF
DL = 7.3 PSF
TOTAL LOAD = 60.6 PSF

SPACING = 24.0 IN. C/C

GIRDER TYPE: CStdGirder
START DISTANCE = 0-0
START SPAN CARRIED = 16-9-0
END DISTANCE = 6-0-0
END SPAN CARRIED = 16-9-0
END WALL WIDTH = 5-8
APPLIED TO FRONT SIDE OF BOTTOM CHORD.
- ADDT'L LOADS BASED ON 55 % OF GSL.

THIS TRUSS IS DESIGNED FOR RESIDENTIAL OR SMALL BUILDING REQUIREMENTS OF PART 9, NBCC 2015

THIS DESIGN COMPLIES WITH:
- PART 9 OF BCBC 2018 , ABC 2019
- PART 9 OF OBC 2012 (2019 AMENDMENT)
- CSA 086-14
- TPIC 2014

(55 % OF 48.1 P.S.F. G.S.L. PLUS 8.4 P.S.F. RAIN LOAD) EQUALS 34.8 P.S.F. SPECIFIED ROOF LIVE LOAD

ALLOWABLE DEFL.(LL)= L/360 (0.20")
CALCULATED VERT. DEFL.(LL) = L/ 999 (0.02")
ALLOWABLE DEFL.(TL)= L/360 (0.20")
CALCULATED VERT. DEFL.(TL) = L/ 999 (0.04")

CSI: TC=0.20/1.00 (A-B:1) , BC=0.59/1.00 (D-E:1) , WB=0.53/1.00 (B-D:1) , SSI=0.72/1.00 (E-F:1)

DOL LUMBER=1.00 NAIL=1.00 LS BEND=1.00 COMP=1.00 SHEAR=1.00 TENS= 1.00

COMPANION LIVE LOAD FACTOR = 1.00

TRUSS PLATE MANUFACTURER IS NOT RESPONSIBLE FOR QUALITY CONTROL IN THE TRUSS MANUFACTURING PLANT .

NAIL VALUES

PLATE	GRIP(DRY) (PSI) MAX	MIN	SHEAR (PLI) MAX	MIN	SECTION (PLI) MAX	MIN
MT20	650	371	1747	788	1987	1873

PLATE PLACEMENT TOL. = 0.250 inches

PLATE ROTATION TOL. = 5.0 Deg.

JSI GRIP= 0.89 (B) (INPUT = 0.90)
JSI METAL= 0.62 (E) (INPUT = 1.00)

LICENSED PROFESSIONAL ENGINEER
N.A. EL-MASRI
PROVINCE OF ONTARIO
Dec 18, 2020

READ ALL NOTES ON THIS PAGE AND ON ENGINEERING NOTE PAGE ENP-1. THIS NOTE PAGE IS AN INTEGRAL PART OF THIS DRAWING AS IT CONTAINS SPECIFICATIONS AND CRITERIA USED IN THE DESIGN OF THIS COMPONENT.

Town of East Gwillimbury
Building Standards Branch BCIN #16487

These plans have been reviewed for use with the corrections as noted. No other changes may be made without written approval of the Building Standards Branch. All work must comply with Zoning By-Law 2018-043, as amended, and the Ontario Building Code, as amended. These approved documents must be kept on site at all times. The building permit must be clearly posted on site at all times.

Discipline	Reviewer	BCIN	Date
Building Code	H. Authier	43236	2021-02-25
Sewage System			
Zoning			

KOTT

JOB NAME	TRUSS NAME	QUANTITY	PLY	JOB DESC.		DWG NO.
NE1220-124	G05	1	1	TRUSS DESC.	GREENPARK - TRINAR HALL - GLENWAY 12A ELE 1	

Version 8.420 S Oct 9 2020 MiTek Industries, Inc. Fri Dec 18 08:14:41 2020 Page 1
ID:9SrEih2qK4qREOqiXOaa nzGFb3-zbE 6LqQX MmpHOofJeSO6ledrGvQ?cqRFBIG?y7c

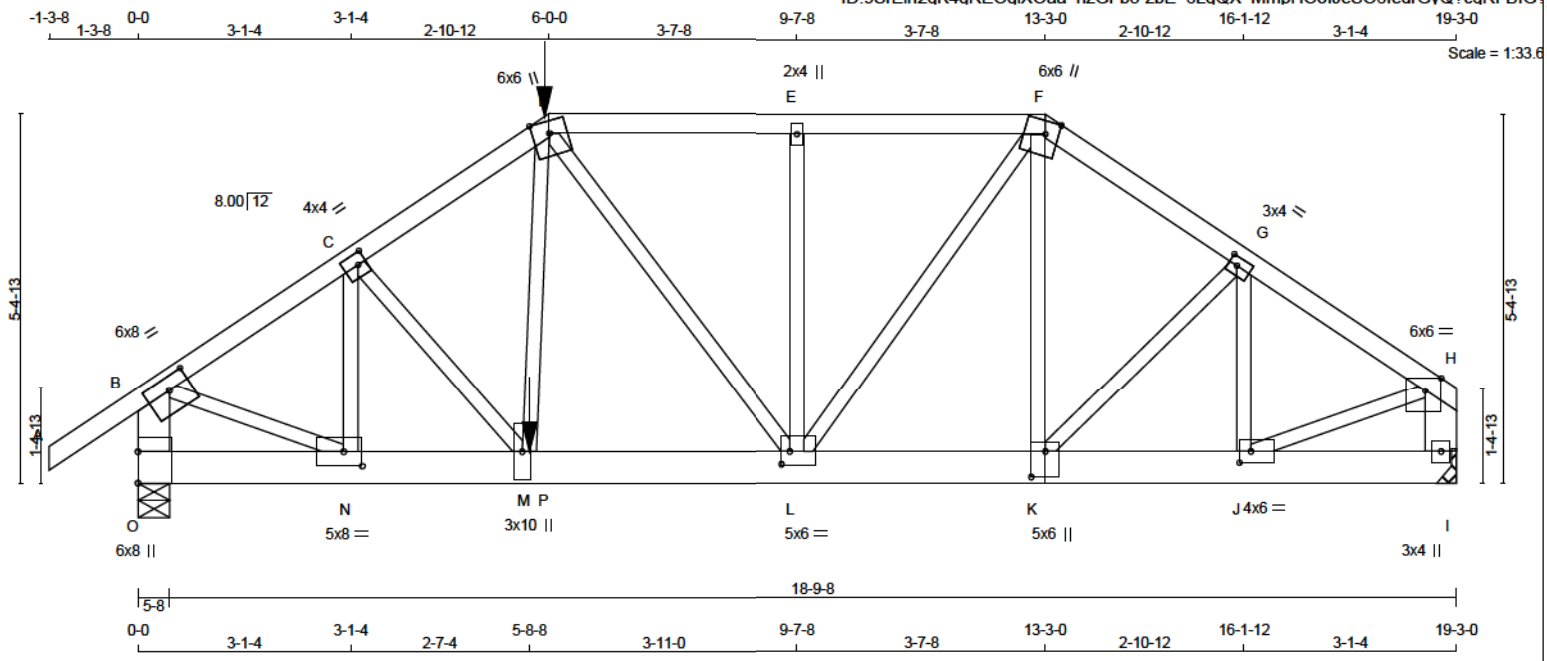

TOTAL WEIGHT = 100 lb

LUMBER
N. L. G. A. RULES

CHORDS	SIZE		LUMBER	DESCR.
A - D	2x4	DRY	No.2	SPF
D - F	2x4	DRY	No.2	SPF
F - H	2x4	DRY	No.2	SPF
O - B	2x6	DRY	No.2	SPF
I - H	2x6	DRY	No.2	SPF
O - K	2x6	DRY	No.2	SPF
K - I	2x6	DRY	No.2	SPF
ALL WEBS EXCEPT	2x3	DRY	No.2	SPF

DRY: SEASONED LUMBER.

PLATES (table is in inches)

JT	TYPE	PLATES	W	LEN	Y	X
B	TMVW-t	MT20	6.0	8.0	2.25	3.75
C	TMWW-t	MT20	4.0	4.0	2.00	1.50
D	TTWW+m	MT20	6.0	6.0	Edge	
E	TMW+w	MT20	2.0	4.0		
F	TTWW+m	MT20	6.0	6.0	2.25	2.25
G	TMWW-t	MT20	3.0	4.0	1.50	1.50
H	TMVW-p	MT20	6.0	6.0	2.25	2.75
I	BMV1+p	MT20	3.0	4.0		
J	BMWW-t	MT20	4.0	6.0	2.00	2.00
K	BSWW+l	MT20	5.0	6.0	4.50	2.50
L	BMWWW-t	MT20	5.0	6.0	2.25	1.50
M	BMWW+t	MT20	3.0	10.0		
N	BMWW-t	MT20	5.0	8.0	2.50	3.25
O	BMV1+t	MT20	6.0	8.0	5.50	

Edge - INDICATES REFERENCE CORNER OF PLATE TOUCHES EDGE OF CHORD.

DIMENSIONS, SUPPORTS AND LOADINGS SPECIFIED BY FABRICATOR TO BE VERIFIED BY BUILDING DESIGNER [M]

BEARINGS

JT	FACTORED GROSS REACTION VERT	HORZ	MAXIMUM GROSS REACTION DOWN	HORZ	UPLIFT	INPUT BRG IN-SX	REQRD BRG IN-SX
O	3466	0	3466	0	0	5-8	5-8
I	2270	0	2270	0	0	MECHANICAL	

A SUITABLE HANGER/MECHANICAL CONNECTION IS REQUIRED AT JOINT I. MINIMUM BEARING LENGTH AT JOINT I = 2-7.

UNFACTORED REACTIONS

MAX./MIN. COMPONENT REACTIONS

JT	1ST LCASE COMBINED	SNOW	LIVE	PERM.LIVE	WIND	DEAD	SOIL
O	2567	1474 / 0	445 / 0	0 / 0	0 / 0	648 / 0	0 / 0
I	1677	975 / 0	282 / 0	0 / 0	0 / 0	420 / 0	0 / 0

BEARING MATERIAL TO BE SPF NO.2 OR BETTER AT JOINT(S) O

BRACING

TOP CHORD TO BE SHEATHED OR MAX. PURLIN SPACING = 3.25 FT.
MAX. UNBRACED BOTTOM CHORD LENGTH = 10.00 FT OR RIGID CEILING DIRECTLY APPLIED.

ALL PITCH BREAKS AND PERIMETER CORNER JOINTS MUST BE LATERALLY RESTRAINED.

LOADING

TOTAL LOAD CASES: (4)

CHORDS

MEMB. FR-TO	MAX. FACTORED FORCE (LBS)	FACTORED VERT. LOAD (PLF) FROM	TO	LC1 MAX CSI (LC)	MAX. UNBRAC LENGTH
A- B	0 / 47	-124.4	-124.4	0.18 (1)	10.00
B- C	-3637 / 0	-124.4	-124.4	0.36 (1)	3.36
C- D	-3884 / 0	-124.4	-124.4	0.36 (1)	3.25
D- E	-2883 / 0	-124.4	-124.4	0.40 (1)	3.66
E- F	-2883 / 0	-124.4	-124.4	0.40 (1)	3.66
F- G	-2588 / 0	-124.4	-124.4	0.27 (1)	4.01
G- H	-2458 / 0	-124.4	-124.4	0.27 (1)	4.11
O- B	-3336 / 0	0.0	0.0	0.24 (1)	5.77
I- H	-2193 / 0	0.0	0.0	0.16 (1)	6.85
O- N	0 / 0	-74.0	-74.0	0.09 (2)	10.00
N- M	0 / 3040	-74.0	-74.0	0.49 (1)	10.00
M- P	0 / 3114	-74.0	-74.0	0.49 (1)	10.00
P- L	0 / 3114	-39.2	-39.2	0.49 (1)	10.00
L- K	0 / 2131	-39.2	-39.2	0.31 (1)	10.00
K- J	0 / 2062	-39.2	-39.2	0.32 (1)	10.00
J- I	0 / 0	-39.2	-39.2	0.06 (1)	10.00

WEBS

MEMB. FR-TO	MAX. FACTORED FORCE (LBS)	MAX CSI (LC)
N- C	-765 / 0	0.16 (1)
C- M	0 / 263	0.07 (1)
M- D	0 / 1583	0.39 (1)
D- L	-395 / 0	0.27 (1)
L- E	-526 / 0	0.22 (1)
L- F	0 / 1283	0.32 (1)
K- F	0 / 111	0.03 (3)
K- G	0 / 96	0.02 (1)
J- G	-575 / 0	0.12 (1)
B- N	0 / 3192	0.79 (1)
J- H	0 / 2166	0.54 (1)

FACTORED CONCENTRATED LOADS (LBS)

JT	LOC.	LC1	MAX-	MAX+	FACE	DIR.	TYPE	HEEL	CONN.
D	6-0-0	-560	-560	---	FRONT	VERT	TOTAL	---	C1
M	5-8-8	-1646	-1646	---	FRONT	VERT	TOTAL	---	C1

CONNECTION REQUIREMENTS

1) C1: A SUITABLE HANGER/MECHANICAL CONNECTION IS REQUIRED.

DESIGN CRITERIA

*** SPECIAL LOADS ANALYSIS ***
GEOMETRY AND/OR BASIC LOADS CHANGED BY USER.
LOADS WERE DERIVED FROM USER INPUT
NO FURTHER MODIFICATIONS WERE MADE

SPECIFIED LOADS:
TOP CH. LL = 34.8 PSF
DL = 8.0 PSF
BOT CH. LL = 10.5 PSF
DL = 7.3 PSF
TOTAL LOAD = 60.6 PSF

SPACING = 24.0 IN. C/C

LOADING IN FLAT SECTION BASED ON A SLOPE OF 2.00/12 MINIMUM

GIRDER TYPE: CPrimeHip
SIDE SETBACK = 6-0-0
END SETBACK = 6-0-0
END WALL WIDTH = 5-8
CORNER FRAMING TYPE: CONVENTIONAL
END JACK TYPE: CONVENTIONAL
APPLIED TO FRONT SIDE
- ADDT'L LOADS BASED ON 55 % OF GSL.
LOADS APPLIED TO FIRST 6-2-0 OF SPAN MEASURED FROM THE LEFT.

*** NON STANDARD GIRDER ***
ADDT'L USER-DEFINED LOADS APPLIED TO ALL LOAD CASES.

THIS TRUSS IS DESIGNED FOR RESIDENTIAL OR SMALL BUILDING REQUIREMENTS OF PART 9, NBCC 2015

THIS DESIGN COMPLIES WITH:
- PART 9 OF BCBC 2018 , ABC 2019
- PART 9 OF OBC 2012 (2019 AMENDMENT)
- CSA 086-14
- TPIC 2014

(55 % OF 48.1 P.S.F. G.S.L. PLUS 8.4 P.S.F. RAIN LOAD) EQUALS 34.8 P.S.F. SPECIFIED ROOF LIVE LOAD

ALLOWABLE DEFL.(LL)= L/360 (0.64")
CALCULATED VERT. DEFL.(LL) = L/ 999 (0.07")
ALLOWABLE DEFL.(TL)= L/360 (0.64")
CALCULATED VERT. DEFL.(TL) = L/ 999 (0.12")

CSI: TC=0.40/1.00 (D-E:1) , BC=0.49/1.00 (M-N:1) , WB=0.79/1.00 (B-N:1) , SSI=0.24/1.00 (D-E:1)

DOL LUMBER=1.00 NAIL=1.00 LS BEND=1.00 COMP=1.00 SHEAR=1.00 TENS= 1.00

COMPANION LIVE LOAD FACTOR = 1.00

TRUSS PLATE MANUFACTURER IS NOT RESPONSIBLE FOR QUALITY CONTROL IN THE TRUSS MANUFACTURING PLANT .

NAIL VALUES

PLATE	GRIP(DRY) (PSI) MAX	MIN	SHEAR (PLI) MAX	MIN	SECTION (PLI) MAX	MIN
MT20	650	371	1747	788	1987	1873

CONTINUED ON PAGE 2

LICENSED PROFESSIONAL ENGINEER
N.A. EL-MASRI
PROVINCE OF ONTARIO
Dec 18, 2020

READ ALL NOTES ON THIS PAGE AND ON ENGINEERING NOTE PAGE ENP-1. THIS NOTE PAGE IS AN INTEGRAL PART OF THIS DRAWING AS IT CONTAINS SPECIFICATIONS AND CRITERIA USED IN THE DESIGN OF THIS COMPONENT.

Town of East Gwillimbury
Building Standards Branch BCIN #16487

These plans have been reviewed for use with the corrections as noted. No other changes may be made without written approval of the Building Standards Branch. All work must comply with Zoning By-Law 2018-043, as amended, and the Ontario Building Code, as amended. These approved documents must be kept on site at all times. The building permit must be clearly posted on site at all times.

Discipline	Reviewer	BCIN	Date
Building Code	H. Authier	43236	2021-02-25
Sewage System			
Zoning			

KOTT

JOB NAME	TRUSS NAME	QUANTITY	PLY	JOB DESC.		DWG NO.
NE1220-124	G06	1	1	TRUSS DESC.	GREENPARK - TRINAR HALL - GLENWAY 12A ELE 1	

Version 8.420 S Oct 9 2020 MiTek Industries, Inc. Fri Dec 18 08:14:42 2020 Page 1
ID:9SrEih2gK4gREOgiXOaa_nzGFb3-RooNJhq3IIUdRQz_D19hxJrr9EWJ9V0_qvwspRy7o

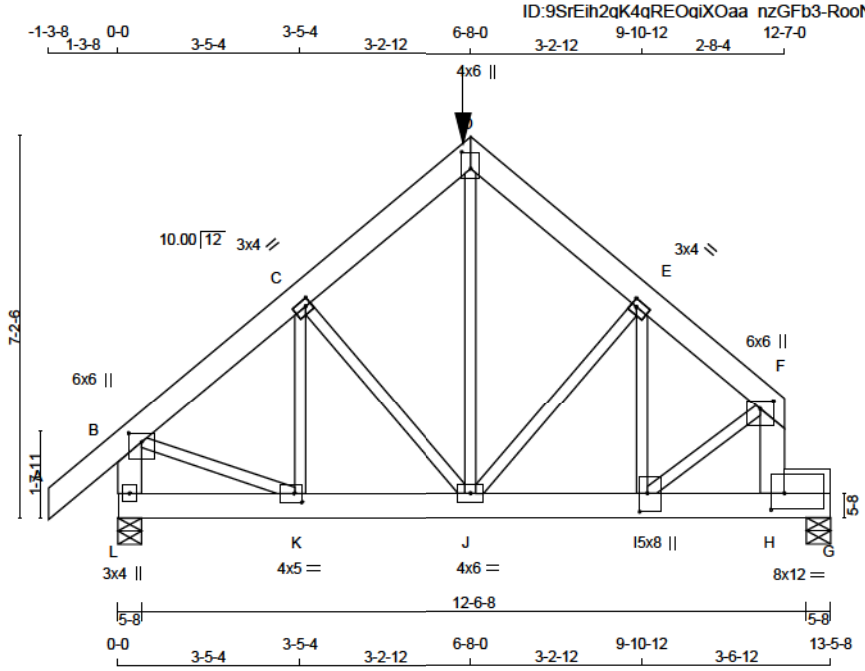

TOTAL WEIGHT = 87 lb

LUMBER
N. L. G. A. RULES

CHORDS	SIZE		LUMBER	DESCR.
A - D	2x6	DRY	No.2	SPF
D - F	2x6	DRY	No.2	SPF
L - B	2x6	DRY	No.2	SPF
H - F	2x6	DRY	No.2	SPF
L - G	2x6	DRY	2100F 1.8E	SPF
BEARING BLOCKS				
BL1	2x6	DRY	No.2	SPF
ALL WEBS EXCEPT	2x3	DRY	No.2	SPF

DRY: SEASONED LUMBER.

PLATES (table is in inches)

JT	TYPE	PLATES	W	LEN	Y	X
B	TMVW+p	MT20	6.0	6.0	2.00	3.00
C	TMWW-t	MT20	3.0	4.0	1.50	1.25
D	TTW+p	MT20	4.0	6.0	3.75	2.00
E	TMWW-t	MT20	3.0	4.0	1.50	1.25
F	TMVW+p	MT20	6.0	6.0	2.00	3.00
H	BMVK-t	MT20	8.0	12.0	3.75	3.00
I	BMWW+t	MT20	5.0	8.0	4.25	1.75
J	BMWWW-t	MT20	4.0	6.0		
K	BMWW-t	MT20	4.0	5.0	2.00	1.75
L	BMV1+p	MT20	3.0	4.0		

DIMENSIONS, SUPPORTS AND LOADINGS SPECIFIED BY FABRICATOR TO BE VERIFIED BY BUILDING DESIGNER

BEARINGS

JT	FACTORED GROSS REACTION VERT	HORZ	MAXIMUM GROSS REACTION DOWN	HORZ	FACTORED UPLIFT	INPUT BRG IN-SX	REQRD BRG IN-SX
L	2241	0	2241	0	0	5-8	2-7
G	2074	0	2074	0	0	5-8	2-4

UNFACTORED REACTIONS

1ST LCASE MAX./MIN. COMPONENT REACTIONS

JT	COMBINED	SNOW	LIVE	PERM.LIVE	WIND	DEAD	SOIL
L	1660	950 / 0	290 / 0	0 / 0	0 / 0	420 / 0	0 / 0
G	1545	857 / 0	290 / 0	0 / 0	0 / 0	399 / 0	0 / 0

BEARING MATERIAL TO BE SPF NO.2 OR BETTER AT JOINT(S) L, G

BRACING
TOP CHORD TO BE SHEATHED OR MAX. PURLIN SPACING = 5.50 FT.
MAX. UNBRACED BOTTOM CHORD LENGTH = 6.25 FT OR RIGID CEILING DIRECTLY APPLIED.

ALL PITCH BREAKS AND PERIMETER CORNER JOINTS MUST BE LATERALLY RESTRAINED.

LOADING
TOTAL LOAD CASES: (4)

CHORDS

MEMB.	FORCE (LBS)	FACTORED VERT. LOAD (PLF)	LC1 MAX CSI (LC)	MAX. UNBRAC LENGTH	FR-TO FROM	TO
A- B	0 / 57	-124.4	-124.4 0.10 (1)	10.00		
B- C	-1951 / 0	-124.4	-124.4 0.12 (1)	5.62		
C- D	-1807 / 0	-124.4	-124.4 0.10 (1)	5.81		
D- E	-1796 / 0	-124.4	-124.4 0.12 (1)	5.80		
E- F	-2103 / 0	-124.4	-124.4 0.09 (1)	5.50		
L- B	-2114 / 0	0.0	0.0 0.15 (1)	6.95		
H- F	-2815 / 0	0.0	0.0 0.22 (1)	6.20		
L- K	0 / 0	-80.5	-80.5 0.05 (3)	10.00		
K- J	0 / 1514	-80.5	-80.5 0.12 (1)	10.00		
J- I	0 / 1626	-80.5	-80.5 0.24 (1)	10.00		
I- H	-368 / 0	-80.5	-80.5 0.87 (1)	6.25		
H- G	0 / 0	-205.0	-205.0 0.36 (1)	10.00		

WEBS

MEMB.	FORCE (LBS)	MAX CSI (LC)
K- C	-185 / 166	0.05 (1)
C- J	-231 / 0	0.10 (2)
J- D	0 / 669	0.17 (2)
J- E	-403 / 0	0.17 (1)
I- E	0 / 276	0.07 (3)
B- K	0 / 1592	0.39 (1)
I- F	0 / 2374	0.59 (1)

FACTORED CONCENTRATED LOADS (LBS)

JT	LOC.	LC1	MAX-	MAX+	FACE	DIR.	TYPE	HEEL	CONN.
D	6-8-0	-1348	-1348	---	FRONT	VERT	TOTAL	---	C1

CONNECTION REQUIREMENTS

1) C1: A SUITABLE HANGER/MECHANICAL CONNECTION IS REQUIRED.

[M]

DESIGN CRITERIA

SPECIFIED LOADS:

TOP CH.	LL	=	34.8	PSF
	DL	=	8.0	PSF
BOT CH.	LL	=	10.5	PSF
	DL	=	7.3	PSF
TOTAL LOAD		=	60.6	PSF

SPACING = 24.0 IN. C/C

GIRDER TYPE: CPrimeHip
LEFT SETBACK = 6-8-0
RIGHT SETBACK = 5-11-0
END SETBACK = 6-8-0
END WALL WIDTH = 5-8
CORNER FRAMING TYPE: CONVENTIONAL
END JACK TYPE: CONVENTIONAL
APPLIED TO FRONT SIDE
- ADDT'L LOADS BASED ON 55 % OF GSL.

THIS TRUSS IS DESIGNED FOR RESIDENTIAL OR SMALL BUILDING REQUIREMENTS OF PART 9, NBCC 2015

THIS DESIGN COMPLIES WITH:
- PART 9 OF BCBC 2018 , ABC 2019
- PART 9 OF OBC 2012 (2019 AMENDMENT)
- CSA 086-14
- TPIC 2014

(55 % OF 48.1 P.S.F. G.S.L. PLUS 8.4 P.S.F. RAIN LOAD) EQUALS 34.8 P.S.F. SPECIFIED ROOF LIVE LOAD

ALLOWABLE DEFL.(LL)= L/360 (0.45")
CALCULATED VERT. DEFL.(LL) = L/ 999 (0.07")
ALLOWABLE DEFL.(TL)= L/360 (0.45")
CALCULATED VERT. DEFL.(TL) = L/ 999 (0.12")

CSI: TC=0.22/1.00 (F-H:1) , BC=0.87/1.00 (H-I:1) , WB=0.59/1.00 (F-I:1) , SSI=0.76/1.00 (H-I:1)

DOL LUMBER=1.00 NAIL=1.00 LS BEND=1.00 COMP=1.00 SHEAR=1.00 TENS= 1.00

COMPANION LIVE LOAD FACTOR = 1.00

TRUSS PLATE MANUFACTURER IS NOT RESPONSIBLE FOR QUALITY CONTROL IN THE TRUSS MANUFACTURING PLANT .

NAIL VALUES

PLATE	GRIP(DRY) (PSI) MAX	MIN	SHEAR (PLI) MAX	MIN	SECTION (PLI) MAX	MIN
MT20	650	371	1747	788	1987	1873

PLATE PLACEMENT TOL. = 0.250 inches

PLATE ROTATION TOL. = 5.0 Deg.

JSI GRIP= 0.85 (F) (INPUT = 0.90)
JSI METAL= 0.72 (I) (INPUT = 1.00)

LICENSED PROFESSIONAL ENGINEER
N.A. EL-MASRI
PROVINCE OF ONTARIO
Dec 18, 2020

READ ALL NOTES ON THIS PAGE AND ON ENGINEERING NOTE PAGE ENP-1. THIS NOTE PAGE IS AN INTEGRAL PART OF THIS DRAWING AS IT CONTAINS SPECIFICATIONS AND CRITERIA USED IN THE DESIGN OF THIS COMPONENT.

Town of East Gwillimbury
Building Standards Branch BCIN #16487

These plans have been reviewed for use with the corrections as noted. No other changes may be made without written approval of the Building Standards Branch. All work must comply with Zoning By-Law 2018-043, as amended, and the Ontario Building Code, as amended. These approved documents must be kept on site at all times. The building permit must be clearly posted on site at all times.

Discipline	Reviewer	BCIN	Date
Building Code	H. Authier	43236	2021-02-25
Sewage System			
Zoning			

KOTT

JOB NAME	TRUSS NAME	QUANTITY	PLY	JOB DESC.		DRWG NO.
NE1220-124	GE01	1	1	TRUSS DESC.	GREENPARK - TRINAR HALL - GLENWAY 12A ELE 1	**Page 11 of 44**

Version 8.420 S Oct 9 2020 MiTek Industries, Inc. Fri Dec 18 08:14:43 2020 Page 1

ID:9SrEih2gK4gREOgiXOaa_nzGFb3-v_MIW1hh3bcU3aXBnkhwUXO1ne3gu2g7vZgPLty7o

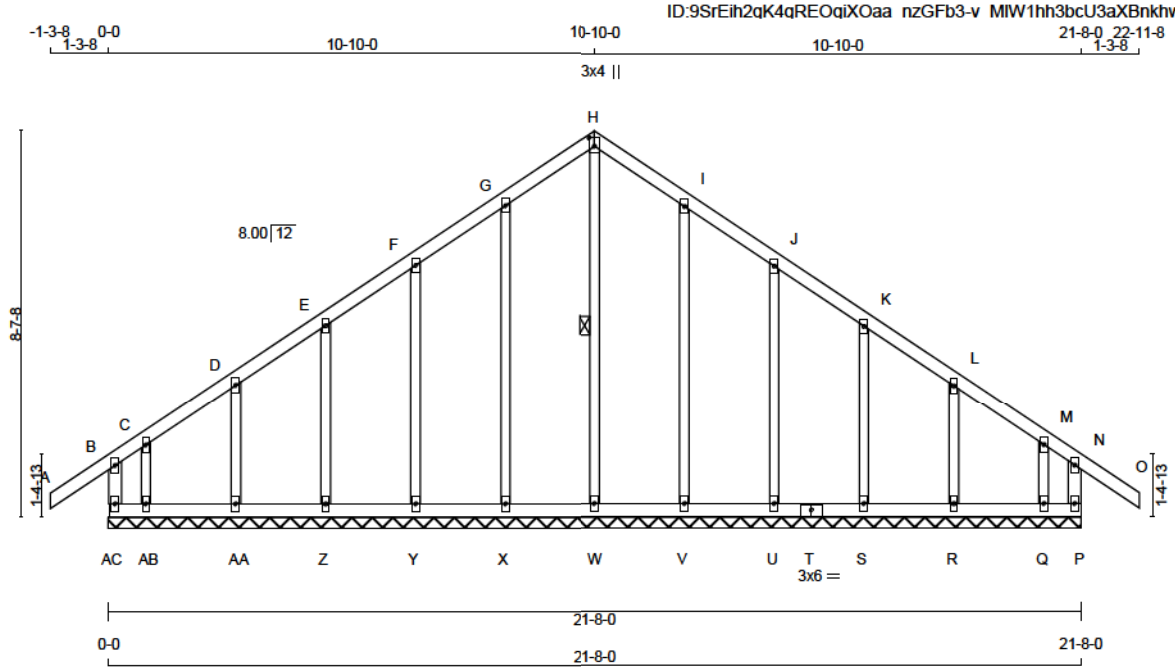

TOTAL WEIGHT = 100 lb

LUMBER
N. L. G. A. RULES

CHORDS	SIZE		LUMBER	DESCR.
AC- B	2x4	DRY	No.2	SPF
A - H	2x4	DRY	No.2	SPF
H - O	2x4	DRY	No.2	SPF
P - N	2x4	DRY	No.2	SPF
AC- T	2x4	DRY	No.2	SPF
T - P	2x4	DRY	No.2	SPF
ALL WEBS	2x3	DRY	No.2	SPF
ALL GABLE WEBS	2x3	DRY	No.2	SPF

DRY: SEASONED LUMBER.

GABLE STUDS SPACED AT 2-0-0 OC.

PLATES (table is in inches)

JT	TYPE	PLATES	W	LEN	Y	X
B	TMV+p	MT20	2.0	4.0		
C, D, E, F, G, I, J, K, L, M						
C	TMW+w	MT20	2.0	4.0		
H	TTW+p	MT20	3.0	4.0	2.25	1.50
N	TMV+p	MT20	2.0	4.0		
P	BMV1+p	MT20	2.0	4.0		
Q, R, S, U, V, W, X, Y, Z, AA, AB						
Q	BMW1+w	MT20	2.0	4.0		
T	BS-t	MT20	3.0	6.0		
AC	BMV1+p	MT20	2.0	4.0		

DIMENSIONS, SUPPORTS AND LOADINGS SPECIFIED BY FABRICATOR TO BE VERIFIED BY BUILDING DESIGNER

BEARINGS

THIS TRUSS DESIGNED FOR CONTINUOUS BEARINGS.

THIS TRUSS REQUIRES RIGID SHEATHING ON EXPOSED FACE.

BEARING MATERIAL TO BE SPF NO.2 OR BETTER AT JOINT(S)

BRACING
TOP CHORD TO BE SHEATHED OR MAX. PURLIN SPACING = 6.25 FT.
MAX. UNBRACED BOTTOM CHORD LENGTH = 6.25 FT OR RIGID CEILING DIRECTLY APPLIED.

ALL PITCH BREAKS AND PERIMETER CORNER JOINTS MUST BE LATERALLY RESTRAINED.

1 - 1x4 LATERAL BRACE(S) AT 1/ 2 LENGTH OF H-W. DBS = 20-0-0 . CBF = 36 LBS.

DBS = DIAGONAL BRACE SPACING (MAX). CBF = CUMULATIVE BRACING FORCE (PER BRACE). FASTEN LATERAL BRACE(S) USING (0.122"X3") SPIRAL NAILS : 1 NAIL FOR 2x3 BRACE(S), 2 FOR 1x4, 2x4, 2x5, 3 FOR 2x6, 4 FOR 2x8, 5 FOR 2x10, AND 6 FOR 2x12.

END VERTICAL(S) MUST BE SHEATHED OR HAVE BRACES AS INDICATED IN THE MAX. UNBRACED LENGTH COLUMN OF THE TABLE BELOW

LOADING
TOTAL LOAD CASES: (4)

CHORDS FR-TO	MAX. FACTORED MEMB. FORCE (LBS)	FACTORED VERT. LOAD (PLF) FROM	TO	LC1 MAX CSI (LC)	MAX. UNBRAC LENGTH	WEBS MEMB.	MAX. FACTORED FORCE (LBS)	MAX CSI (LC)
AC- B	-307 / 0	0.0	0.0	0.04 (1)	7.81	W- H	-291 / 0	0.14 (1)
A- B	0 / 47	-124.4	-124.4	0.17 (1)	10.00	X- G	-256 / 0	0.24 (1)
B- C	-45 / 0	-124.4	-124.4	0.13 (1)	6.25	Y- F	-245 / 0	0.14 (1)
C- D	0 / 17	-124.4	-124.4	0.06 (1)	10.00	Z- E	-243 / 0	0.08 (1)
D- E	0 / 18	-124.4	-124.4	0.06 (1)	10.00	AA- D	-258 / 0	0.05 (1)
E- F	0 / 25	-124.4	-124.4	0.06 (1)	10.00	AB- C	-64 / 0	0.01 (1)
F- G	0 / 30	-124.4	-124.4	0.07 (1)	10.00	V- I	-256 / 0	0.24 (1)
G- H	0 / 32	-124.4	-124.4	0.07 (1)	10.00	U- J	-245 / 0	0.14 (1)
H- I	0 / 32	-124.4	-124.4	0.07 (1)	10.00	S- K	-243 / 0	0.08 (1)
I- J	0 / 30	-124.4	-124.4	0.07 (1)	10.00	R- L	-258 / 0	0.05 (1)
J- K	0 / 25	-124.4	-124.4	0.06 (1)	10.00	Q- M	-64 / 0	0.01 (1)
K- L	0 / 18	-124.4	-124.4	0.06 (1)	10.00			
L- M	0 / 17	-124.4	-124.4	0.06 (1)	10.00			
M- N	-45 / 0	-124.4	-124.4	0.13 (1)	6.25			
N- O	0 / 47	-124.4	-124.4	0.17 (1)	10.00			
P- N	-307 / 0	0.0	0.0	0.04 (1)	7.81			
AC-AB	-6 / 0	-39.2	-39.2	0.03 (1)	10.00			
AB-AA	-9 / 0	-39.2	-39.2	0.03 (3)	10.00			
AA- Z	-16 / 0	-39.2	-39.2	0.03 (3)	6.25			
Z- Y	-21 / 0	-39.2	-39.2	0.03 (3)	6.25			
Y- X	-24 / 0	-39.2	-39.2	0.03 (3)	6.25			
X- W	-27 / 0	-39.2	-39.2	0.03 (3)	6.25			
W- V	-27 / 0	-39.2	-39.2	0.03 (3)	6.25			
V- U	-24 / 0	-39.2	-39.2	0.03 (3)	6.25			
U- T	-21 / 0	-39.2	-39.2	0.03 (3)	6.25			
T- S	-21 / 0	-39.2	-39.2	0.03 (3)	6.25			
S- R	-16 / 0	-39.2	-39.2	0.03 (3)	6.25			
R- Q	-9 / 0	-39.2	-39.2	0.03 (3)	10.00			
Q- P	-6 / 0	-39.2	-39.2	0.03 (1)	10.00			

DESIGN CRITERIA

SPECIFIED LOADS:

TOP CH.	LL	=	34.8	PSF
	DL	=	8.0	PSF
BOT CH.	LL	=	10.5	PSF
	DL	=	7.3	PSF
TOTAL LOAD		=	60.6	PSF

SPACING = 24.0 IN. C/C

THIS TRUSS IS DESIGNED FOR RESIDENTIAL OR SMALL BUILDING REQUIREMENTS OF PART 9, NBCC 2015

THIS DESIGN COMPLIES WITH:
- PART 9 OF BCBC 2018 , ABC 2019
- PART 9 OF OBC 2012 (2019 AMENDMENT)
- CSA 086-14
- TPIC 2014

DESIGN ASSUMPTIONS
-OVERHANG NOT TO BE ALTERED OR CUT OFF.

(55 % OF 48.1 P.S.F. G.S.L. PLUS 8.4 P.S.F. RAIN LOAD) EQUALS 34.8 P.S.F. SPECIFIED ROOF LIVE LOAD

CSI: TC=0.17/1.00 (A-B:1) , BC=0.03/1.00 (R-S:3) , WB=0.24/1.00 (I-V:1) , SSI=0.11/1.00 (N-O:1)

DOL LUMBER=1.00 NAIL=1.00 LS BEND=1.10 COMP=1.10 SHEAR=1.10 TENS= 1.10

COMPANION LIVE LOAD FACTOR = 1.00

TRUSS PLATE MANUFACTURER IS NOT RESPONSIBLE FOR QUALITY CONTROL IN THE TRUSS MANUFACTURING PLANT .

NAIL VALUES

PLATE	GRIP(DRY) (PSI) MAX	MIN	SHEAR (PLI) MAX	MIN	SECTION (PLI) MAX	MIN
MT20	650	371	1747	788	1987	1873

PLATE PLACEMENT TOL. = 0.250 inches

PLATE ROTATION TOL. = 5.0 Deg.

JSI GRIP= 0.52 (H) (INPUT = 0.90)
JSI METAL= 0.15 (N) (INPUT = 1.00)

LICENSED PROFESSIONAL ENGINEER
N.A. EL-MASRI
PROVINCE OF ONTARIO
Dec 18, 2020

READ ALL NOTES ON THIS PAGE AND ON ENGINEERING NOTE PAGE ENP-1. THIS NOTE PAGE IS AN INTEGRAL PART OF THIS DRAWING AS IT CONTAINS SPECIFICATIONS AND CRITERIA USED IN THE DESIGN OF THIS COMPONENT.

Town of East Gwillimbury
Building Standards Branch BCIN #16487

These plans have been reviewed for use with the corrections as noted. No other changes may be made without written approval of the Building Standards Branch. All work must comply with Zoning By-Law 2018-043, as amended, and the Ontario Building Code, as amended. These approved documents must be kept on site at all times. The building permit must be clearly posted on site at all times.

Discipline	Reviewer	BCIN	Date
Building Code	H. Authier	43236	2021-02-25
Sewage System			
Zoning			

KOTT

JOB NAME	TRUSS NAME	QUANTITY	PLY	JOB DESC.		DRWG NO.
NE1220-124	GE02	1	1	TRUSS DESC.	GREENPARK - TRINAR HALL - GLENWAY 12A ELE 1	

Version 8.420 S Oct 9 2020 MiTek Industries, Inc. Fri Dec 18 08:14:43 2020 Page 1
ID:9SrEih2gK4gREOgiXOaa_nzGFb3-v_MlW1hh3bcU3aXBnkhwUXO1ne3gu4d7vZgPLty7or

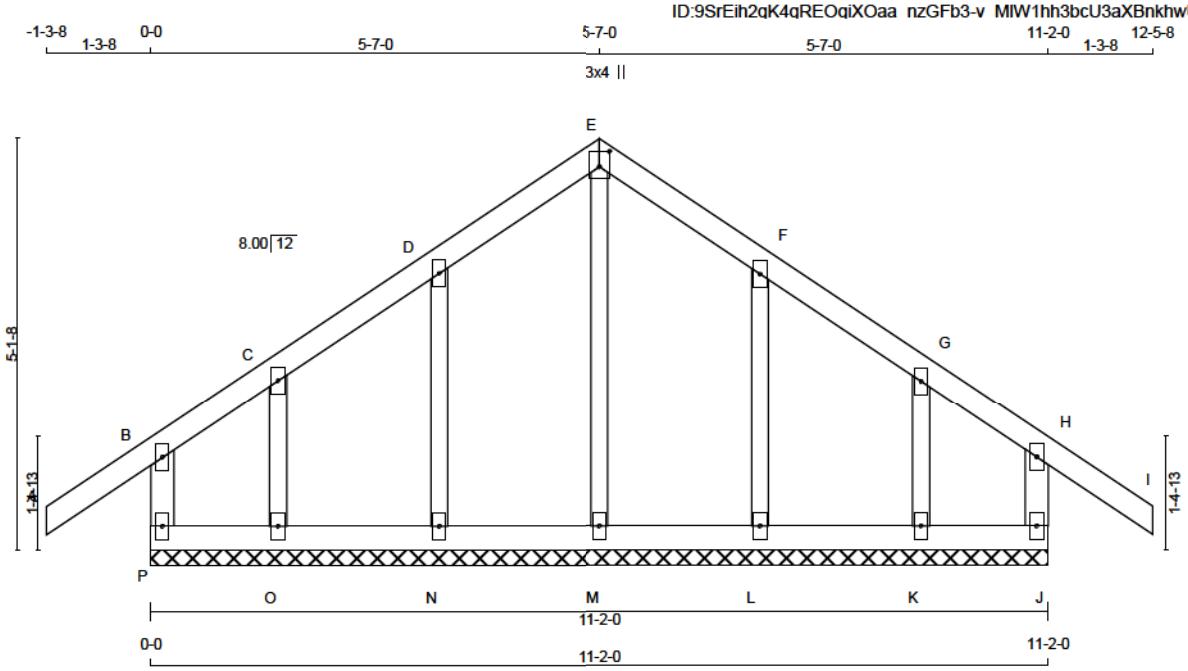

TOTAL WEIGHT = 46 lb

LUMBER
N. L. G. A. RULES

CHORDS	SIZE		LUMBER	DESCR.
P - B	2x4	DRY	No.2	SPF
A - E	2x4	DRY	No.2	SPF
E - I	2x4	DRY	No.2	SPF
J - H	2x4	DRY	No.2	SPF
P - J	2x4	DRY	No.2	SPF
ALL WEBS	2x3	DRY	No.2	SPF
ALL GABLE WEBS	2x3	DRY	No.2	SPF

DRY: SEASONED LUMBER.

GABLE STUDS SPACED AT 2-0-0 OC.

PLATES (table is in inches)

JT	TYPE	PLATES	W	LEN	Y	X
B	TMV+p	MT20	2.0	4.0		
C, D, F, G						
C	TMW+w	MT20	2.0	4.0		
E	TTW+p	MT20	3.0	4.0	2.25	1.50
H	TMV+p	MT20	2.0	4.0		
J	BMV1+p	MT20	2.0	4.0		
K, L, M, N, O						
K	BMW1+w	MT20	2.0	4.0		
P	BMV1+p	MT20	2.0	4.0		

DIMENSIONS, SUPPORTS AND LOADINGS SPECIFIED BY FABRICATOR TO BE VERIFIED BY BUILDING DESIGNER

BEARINGS

THIS TRUSS DESIGNED FOR CONTINUOUS BEARINGS.

THIS TRUSS REQUIRES RIGID SHEATHING ON EXPOSED FACE.

BEARING MATERIAL TO BE SPF NO.2 OR BETTER AT JOINT(S)

BRACING
TOP CHORD TO BE SHEATHED OR MAX. PURLIN SPACING = 10.00 FT.
MAX. UNBRACED BOTTOM CHORD LENGTH = 6.25 FT OR RIGID CEILING DIRECTLY APPLIED.

ALL PITCH BREAKS AND PERIMETER CORNER JOINTS MUST BE LATERALLY RESTRAINED.

LOADING
TOTAL LOAD CASES: (4)

CHORDS

MEMB. FR-TO	FORCE (LBS)	FACTORED VERT. LOAD (PLF) FROM	TO	LC1 MAX CSI (LC)	MAX. UNBRAC LENGTH
P- B	-277 / 0	0.0	0.0	0.06 (1)	7.81
A- B	0 / 47	-124.4	-124.4	0.17 (1)	10.00
B- C	-1 / 20	-124.4	-124.4	0.10 (1)	10.00
C- D	0 / 54	-124.4	-124.4	0.08 (1)	10.00
D- E	0 / 52	-124.4	-124.4	0.08 (1)	10.00
E- F	0 / 52	-124.4	-124.4	0.08 (1)	10.00
F- G	0 / 54	-124.4	-124.4	0.08 (1)	10.00
G- H	-1 / 20	-124.4	-124.4	0.10 (1)	10.00
H- I	0 / 47	-124.4	-124.4	0.17 (1)	10.00
J- H	-277 / 0	0.0	0.0	0.06 (1)	7.81
P- O	-32 / 0	-39.2	-39.2	0.02 (3)	6.25
O- N	-39 / 0	-39.2	-39.2	0.03 (3)	6.25
N- M	-45 / 0	-39.2	-39.2	0.03 (3)	6.25
M- L	-45 / 0	-39.2	-39.2	0.03 (3)	6.25
L- K	-39 / 0	-39.2	-39.2	0.03 (3)	6.25
K- J	-32 / 0	-39.2	-39.2	0.02 (3)	6.25

WEBS

MEMB. FR-TO	FORCE (LBS)	MAX CSI (LC)
M- E	-309 / 0	0.12 (1)
N- D	-268 / 0	0.06 (1)
O- C	-165 / 0	0.03 (1)
L- F	-268 / 0	0.06 (1)
K- G	-165 / 0	0.03 (1)

DESIGN CRITERIA

SPECIFIED LOADS:

TOP CH.	LL	=	34.8	PSF
	DL	=	8.0	PSF
BOT CH.	LL	=	10.5	PSF
	DL	=	7.3	PSF
TOTAL LOAD		=	60.6	PSF

SPACING = 24.0 IN. C/C

THIS TRUSS IS DESIGNED FOR RESIDENTIAL OR SMALL BUILDING REQUIREMENTS OF PART 9, NBCC 2015

THIS DESIGN COMPLIES WITH:
- PART 9 OF BCBC 2018 , ABC 2019
- PART 9 OF OBC 2012 (2019 AMENDMENT)
- CSA 086-14
- TPIC 2014

DESIGN ASSUMPTIONS
-OVERHANG NOT TO BE ALTERED OR CUT OFF.

(55 % OF 48.1 P.S.F. G.S.L. PLUS 8.4 P.S.F. RAIN LOAD) EQUALS 34.8 P.S.F. SPECIFIED ROOF LIVE LOAD

CSI: TC=0.17/1.00 (H-I:1) , BC=0.03/1.00 (L-M:3) , WB=0.12/1.00 (E-M:1) , SSI=0.11/1.00 (H-I:1)

DOL LUMBER=1.00 NAIL=1.00 LS BEND=1.10 COMP=1.10 SHEAR=1.10 TENS= 1.10

COMPANION LIVE LOAD FACTOR = 1.00

TRUSS PLATE MANUFACTURER IS NOT RESPONSIBLE FOR QUALITY CONTROL IN THE TRUSS MANUFACTURING PLANT .

NAIL VALUES

PLATE	GRIP(DRY) (PSI) MAX	MIN	SHEAR (PLI) MAX	MIN	SECTION (PLI) MAX	MIN
MT20	650	371	1747	788	1987	1873

PLATE PLACEMENT TOL. = 0.250 inches

PLATE ROTATION TOL. = 5.0 Deg.

JSI GRIP= 0.20 (E) (INPUT = 0.90)
JSI METAL= 0.14 (D) (INPUT = 1.00)

LICENSED PROFESSIONAL ENGINEER
N.A. EL-MASRI
PROVINCE OF ONTARIO
Dec 18, 2020

READ ALL NOTES ON THIS PAGE AND ON ENGINEERING NOTE PAGE ENP-1. THIS NOTE PAGE IS AN INTEGRAL PART OF THIS DRAWING AS IT CONTAINS SPECIFICATIONS AND CRITERIA USED IN THE DESIGN OF THIS COMPONENT.

Town of East Gwillimbury
Building Standards Branch BCIN #16487

These plans have been reviewed for use with the corrections as noted. No other changes may be made without written approval of the Building Standards Branch. All work must comply with Zoning By-Law 2018-043, as amended, and the Ontario Building Code, as amended. These approved documents must be kept on site at all times. The building permit must be clearly posted on site at all times.

Discipline	Reviewer	BCIN	Date
Building Code	H. Authier	43236	2021-02-25
Sewage System			
Zoning			

KOTT

JOB NAME	TRUSS NAME	QUANTITY	PLY	JOB DESC.		DRWG NO.
NE1220-124	GE03	1	1	TRUSS DESC.	GREENPARK - TRINAR HALL - GLENWAY 12A ELE 1	**Page 13 of 44**

Version 8.420 S Oct 9 2020 MiTek Industries, Inc. Fri Dec 18 08:14:44 2020 Page 1

ID:9SrEih2gK4gREOgiXOaa nzGFb3-NAw7kNiJgvlLhk6NLRC90kwCW2PfdWyH8CPztKy7o

Scale = 1:41.7

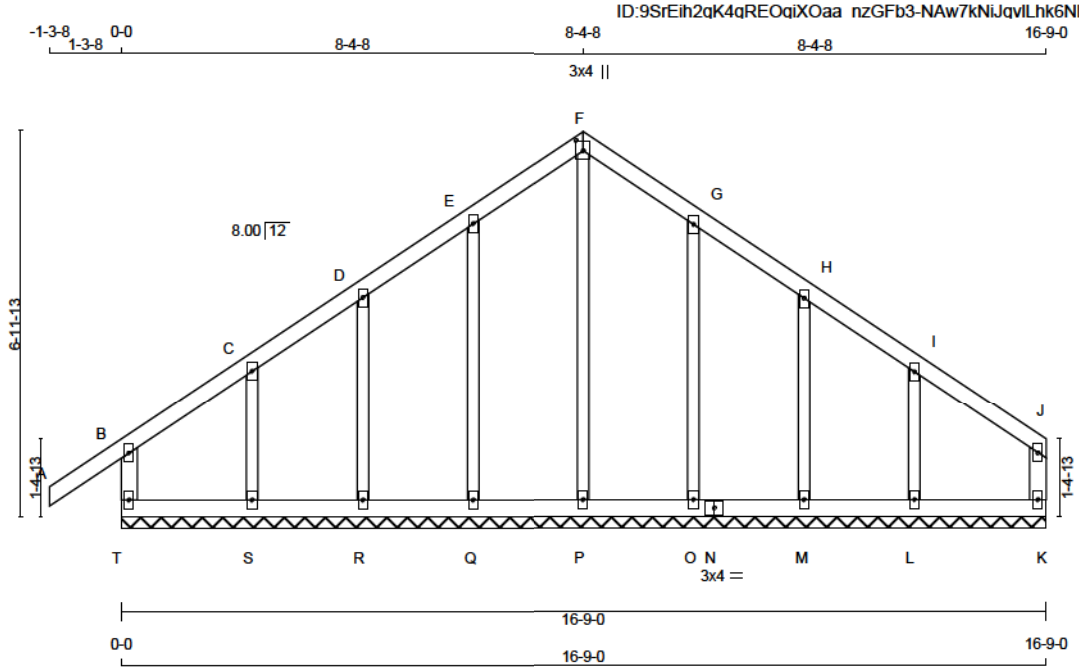

TOTAL WEIGHT = 70 lb

[M]

LUMBER

N. L. G. A. RULES

CHORDS	SIZE		LUMBER	DESCR.
T - B	2x4	DRY	No.2	SPF
A - F	2x4	DRY	No.2	SPF
F - J	2x4	DRY	No.2	SPF
K - J	2x4	DRY	No.2	SPF
T - N	2x4	DRY	No.2	SPF
N - K	2x4	DRY	No.2	SPF
ALL WEBS	2x3	DRY	No.2	SPF
ALL GABLE WEBS	2x3	DRY	No.2	SPF

DRY: SEASONED LUMBER.

GABLE STUDS SPACED AT 2-0-0 OC.

PLATES (table is in inches)

JT	TYPE	PLATES	W	LEN	Y	X
B	TMV+p	MT20	2.0	4.0		
C, D, E, G, H, I						
C	TMW+w	MT20	2.0	4.0		
F	TTW+p	MT20	3.0	4.0	2.25	1.50
J	TMV+p	MT20	2.0	4.0		
K	BMV1+p	MT20	2.0	4.0		
L, M, O, P, Q, R, S						
L	BMW1+w	MT20	2.0	4.0		
N	BS-t	MT20	3.0	4.0		
T	BMV1+p	MT20	2.0	4.0		

DIMENSIONS, SUPPORTS AND LOADINGS SPECIFIED BY FABRICATOR TO BE VERIFIED BY BUILDING DESIGNER

BEARINGS

THIS TRUSS DESIGNED FOR CONTINUOUS BEARINGS.

THIS TRUSS REQUIRES RIGID SHEATHING ON EXPOSED FACE.

BEARING MATERIAL TO BE SPF NO.2 OR BETTER AT JOINT(S)

BRACING

TOP CHORD TO BE SHEATHED OR MAX. PURLIN SPACING = 6.25 FT.
MAX. UNBRACED BOTTOM CHORD LENGTH = 10.00 FT OR RIGID CEILING DIRECTLY APPLIED.

ALL PITCH BREAKS AND PERIMETER CORNER JOINTS MUST BE LATERALLY RESTRAINED.

LOADING

TOTAL LOAD CASES: (4)

CHORDS MEMB. FR-TO	FORCE (LBS)	FACTORED VERT. LOAD (PLF) FROM	TO	LC1 MAX CSI (LC)	MAX. UNBRAC LENGTH	WEBS MEMB. FR-TO	FORCE (LBS)	FACTORED MAX CSI (LC)
T- B	-354 / 0	0.0	0.0	0.04 (1)	7.81	P- F	-215 / 0	0.18 (1)
A- B	0 / 47	-124.4	-124.4	0.17 (1)	10.00	Q- E	-251 / 0	0.12 (1)
B- C	-65 / 0	-124.4	-124.4	0.08 (1)	6.25	R- D	-241 / 0	0.07 (1)
C- D	-54 / 0	-124.4	-124.4	0.06 (1)	6.25	S- C	-260 / 0	0.05 (1)
D- E	-46 / 0	-124.4	-124.4	0.06 (1)	6.25	O- G	-252 / 0	0.12 (1)
E- F	-41 / 0	-124.4	-124.4	0.06 (1)	6.25	M- H	-237 / 0	0.07 (1)
F- G	-41 / 0	-124.4	-124.4	0.06 (1)	6.25	L- I	-273 / 0	0.05 (1)
G- H	-46 / 0	-124.4	-124.4	0.06 (1)	6.25			
H- I	-56 / 0	-124.4	-124.4	0.07 (1)	6.25			
I- J	-60 / 0	-124.4	-124.4	0.07 (1)	6.25			
K- J	-173 / 0	0.0	0.0	0.06 (1)	7.81			
T- S	0 / 52	-39.2	-39.2	0.04 (1)	10.00			
S- R	0 / 44	-39.2	-39.2	0.04 (3)	10.00			
R- Q	0 / 39	-39.2	-39.2	0.03 (3)	10.00			
Q- P	0 / 35	-39.2	-39.2	0.03 (3)	10.00			
P- O	0 / 35	-39.2	-39.2	0.03 (3)	10.00			
O- N	0 / 39	-39.2	-39.2	0.03 (3)	10.00			
N- M	0 / 39	-39.2	-39.2	0.03 (3)	10.00			
M- L	0 / 44	-39.2	-39.2	0.04 (3)	10.00			
L- K	0 / 52	-39.2	-39.2	0.04 (3)	10.00			

DESIGN CRITERIA

SPECIFIED LOADS:

TOP CH.	LL	=	34.8	PSF
	DL	=	8.0	PSF
BOT CH.	LL	=	10.5	PSF
	DL	=	7.3	PSF
TOTAL LOAD		=	60.6	PSF

SPACING = 24.0 IN. C/C

THIS TRUSS IS DESIGNED FOR RESIDENTIAL OR SMALL BUILDING REQUIREMENTS OF PART 9, NBCC 2015

THIS DESIGN COMPLIES WITH:
- PART 9 OF BCBC 2018 , ABC 2019
- PART 9 OF OBC 2012 (2019 AMENDMENT)
- CSA 086-14
- TPIC 2014

DESIGN ASSUMPTIONS
-OVERHANG NOT TO BE ALTERED OR CUT OFF.

(55 % OF 48.1 P.S.F. G.S.L. PLUS 8.4 P.S.F. RAIN LOAD) EQUALS 34.8 P.S.F. SPECIFIED ROOF LIVE LOAD

CSI: TC=0.17/1.00 (A-B:1) , BC=0.04/1.00 (S-T:1) , WB=0.18/1.00 (F-P:1) , SSI=0.11/1.00 (A-B:1)

DOL LUMBER=1.00 NAIL=1.00 LS BEND=1.10 COMP=1.10 SHEAR=1.10 TENS= 1.10

COMPANION LIVE LOAD FACTOR = 1.00

TRUSS PLATE MANUFACTURER IS NOT RESPONSIBLE FOR QUALITY CONTROL IN THE TRUSS MANUFACTURING PLANT .

NAIL VALUES

PLATE	GRIP(DRY) (PSI) MAX	MIN	SHEAR (PLI) MAX	MIN	SECTION (PLI) MAX	MIN
MT20	650	371	1747	788	1987	1873

PLATE PLACEMENT TOL. = 0.250 inches

PLATE ROTATION TOL. = 5.0 Deg.

JSI GRIP= 0.52 (F) (INPUT = 0.90)
JSI METAL= 0.22 (B) (INPUT = 1.00)

LICENSED PROFESSIONAL ENGINEER
N.A. EL-MASRI
PROVINCE OF ONTARIO

Dec 18, 2020

READ ALL NOTES ON THIS PAGE AND ON ENGINEERING NOTE PAGE ENP-1. THIS NOTE PAGE IS AN INTEGRAL PART OF THIS DRAWING AS IT CONTAINS SPECIFICATIONS AND CRITERIA USED IN THE DESIGN OF THIS COMPONENT.

Town of East Gwillimbury
Building Standards Branch BCIN #16487

These plans have been reviewed for use with the corrections as noted. No other changes may be made without written approval of the Building Standards Branch. All work must comply with Zoning By-Law 2018-043, as amended, and the Ontario Building Code, as amended. These approved documents must be kept on site at all times. The building permit must be clearly posted on site at all times.

Discipline	Reviewer	BCIN	Date
Building Code	H. Authier	43236	2021-02-25
Sewage System			
Zoning			

KOTT

JOB NAME	TRUSS NAME	QUANTITY	PLY	JOB DESC.		DWG NO.
NE1220-124	J01	7	1	TRUSS DESC.	GREENPARK - TRINAR HALL - GLENWAY 12A ELE 1	

Version 8.420 S Oct 9 2020 MiTek Industries, Inc. Fri Dec 18 08:14:45 2020 Page 1
ID:9SrEih2qK4qREOqiXOaa nzGFb3-rNUVxjjxbDtCluhZu9jOZvTExSipM?xQMs9WQmy7o

Scale = 1:23.7

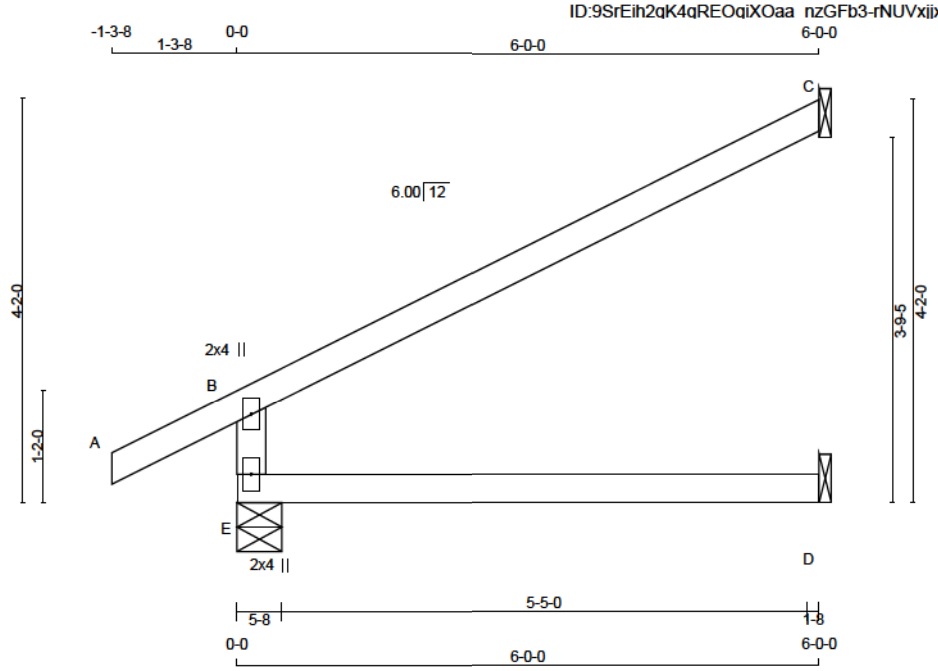

TOTAL WEIGHT = 7 X 17 = 120 lb

LUMBER
N. L. G. A. RULES

CHORDS	SIZE		LUMBER	DESCR.
E - B	2x4	DRY	No.2	SPF
A - C	2x4	DRY	No.2	SPF
E - D	2x4	DRY	No.2	SPF

DRY: SEASONED LUMBER.

PLATES (table is in inches)

JT	TYPE	PLATES	W	LEN	Y	X
B	TMV+p	MT20	2.0	4.0		
E	BMV1+p	MT20	2.0	4.0		

DIMENSIONS, SUPPORTS AND LOADINGS SPECIFIED BY FABRICATOR TO BE VERIFIED BY BUILDING DESIGNER

BEARINGS

JT	FACTORED GROSS REACTION VERT	HORZ	MAXIMUM FACTORED GROSS REACTION DOWN	HORZ	UPLIFT	INPUT BRG IN-SX	REQRD BRG IN-SX
E	774	0	774	0	0	5-8	1-8
C	280	0	280	0	0	1-8	1-8
D	97	0	123	0	0	1-8	1-8

SEE MITEK STANDARD DETAIL B97791H FOR CONNECTION TO JOINT(S) C , D

UNFACTORED REACTIONS

JT	1ST LCASE COMBINED	MAX /MIN COMPONENT REACTIONS SNOW	LIVE	PERM.LIVE	WIND	DEAD	SOIL
E	563	355 / 0	74 / 0	0 / 0	0 / 0	133 / 0	0 / 0
C	193	157 / 0	0 / 0	0 / 0	0 / 0	36 / 0	0 / 0
D	88	0 / 0	52 / 0	0 / 0	0 / 0	36 / 0	0 / 0

BEARING MATERIAL TO BE SPF NO.2 OR BETTER AT JOINT(S) E

BRACING
TOP CHORD TO BE SHEATHED OR MAX. PURLIN SPACING = 6.25 FT.
MAX. UNBRACED BOTTOM CHORD LENGTH = 10.00 FT OR RIGID CEILING DIRECTLY APPLIED.

ALL PITCH BREAKS AND PERIMETER CORNER JOINTS MUST BE LATERALLY RESTRAINED.

LOADING
TOTAL LOAD CASES: (4)

CHORDS

MEMB. FR-TO	MAX. FACTORED FORCE (LBS)	FACTORED VERT. LOAD (PLF) FROM	TO	LC1 MAX CSI (LC)	MAX. UNBRAC LENGTH
E- B	-635 / 0	0.0	0.0	0.24 (3)	7.81
A- B	0 / 38	-124.4	-124.4	0.16 (1)	10.00
B- C	-42 / 0	-124.4	-124.4	0.76 (1)	6.25
E- D	0 / 0	-39.2	-39.2	0.24 (3)	10.00

WEBS

MEMB. FR-TO	MAX. FACTORED FORCE (LBS)	MAX CSI (LC)

DESIGN CRITERIA

SPECIFIED LOADS:

TOP CH.	LL	=	34.8	PSF
	DL	=	8.0	PSF
BOT CH.	LL	=	10.5	PSF
	DL	=	7.3	PSF
TOTAL LOAD		=	60.6	PSF

SPACING = 24.0 IN. C/C

THIS TRUSS IS DESIGNED FOR RESIDENTIAL OR SMALL BUILDING REQUIREMENTS OF PART 9, NBCC 2015

THIS DESIGN COMPLIES WITH:
- PART 9 OF BCBC 2018 , ABC 2019
- PART 9 OF OBC 2012 (2019 AMENDMENT)
- CSA 086-14
- TPIC 2014

DESIGN ASSUMPTIONS
-OVERHANG NOT TO BE ALTERED OR CUT OFF.

(55 % OF 48.1 P.S.F. G.S.L. PLUS 8.4 P.S.F. RAIN LOAD) EQUALS 34.8 P.S.F. SPECIFIED ROOF LIVE LOAD

ALLOWABLE DEFL.(LL)= L/360 (0.20")
CALCULATED VERT. DEFL.(LL) = L/ 999 (0.05")
ALLOWABLE DEFL.(TL)= L/360 (0.20")
CALCULATED VERT. DEFL.(TL) = L/ 874 (0.08")

CSI: TC=0.76/1.00 (B-C:1) , BC=0.24/1.00 (D-E:3) , WB=0.00/1.00 (n/a:0) , SSI=0.33/1.00 (B-C:1)

DOL LUMBER=1.00 NAIL=1.00 LS BEND=1.10 COMP=1.10 SHEAR=1.10 TENS= 1.10

COMPANION LIVE LOAD FACTOR = 1.00

TRUSS PLATE MANUFACTURER IS NOT RESPONSIBLE FOR QUALITY CONTROL IN THE TRUSS MANUFACTURING PLANT .

NAIL VALUES

PLATE	GRIP(DRY) (PSI) MAX	MIN	SHEAR (PLI) MAX	MIN	SECTION (PLI) MAX	MIN
MT20	650	371	1747	788	1987	1873

PLATE PLACEMENT TOL. = 0.250 inches

PLATE ROTATION TOL. = 5.0 Deg.

JSI GRIP= 0.36 (B) (INPUT = 0.90)
JSI METAL= 0.26 (B) (INPUT = 1.00)

LICENSED PROFESSIONAL ENGINEER
N.A. EL-MASRI
PROVINCE OF ONTARIO
Dec 18, 2020

READ ALL NOTES ON THIS PAGE AND ON ENGINEERING NOTE PAGE ENP-1. THIS NOTE PAGE IS AN INTEGRAL PART OF THIS DRAWING AS IT CONTAINS SPECIFICATIONS AND CRITERIA USED IN THE DESIGN OF THIS COMPONENT.

Town of East Gwillimbury
Building Standards Branch BCIN #16487

These plans have been reviewed for use with the corrections as noted. No other changes may be made without written approval of the Building Standards Branch. All work must comply with Zoning By-Law 2018-043, as amended, and the Ontario Building Code, as amended. These approved documents must be kept on site at all times. The building permit must be clearly posted on site at all times.

Discipline	Reviewer	BCIN	Date
Building Code	H. Authier	43236	2021-02-25
Sewage System			
Zoning			

KOTT

JOB NAME	TRUSS NAME	QUANTITY	PLY	JOB DESC.		DRWG NO.
NE1220-124	J02	2	1	TRUSS DESC.	GREENPARK - TRINAR HALL - GLENWAY 12A ELE 1	**Page 15 of 44**

Version 8.420 S Oct 9 2020 MiTek Industries, Inc. Fri Dec 18 08:14:46 2020 Page 1

ID:9SrEih2qK4qREOqiXOaa nzGFb3-JZ1t93kZMW?3w2GISsEd590Y0s415RBabWu3yCy7c

Scale = 1:16.6

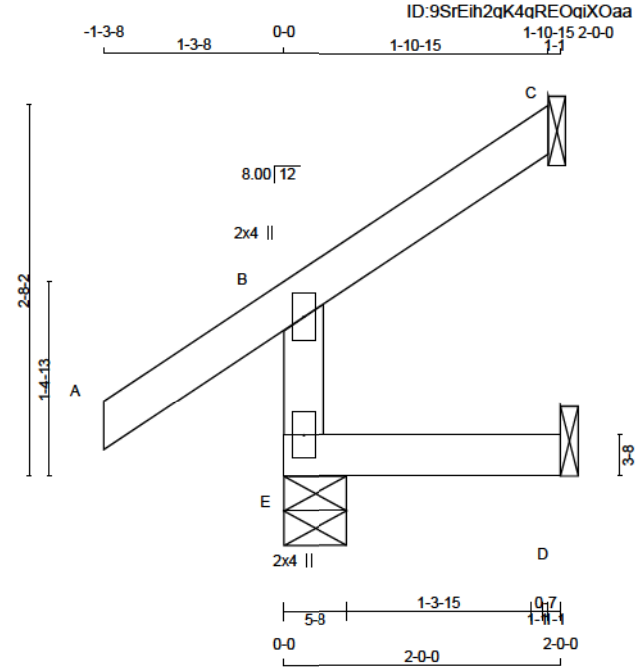

TOTAL WEIGHT = 2 X 8 = 16 lb

[M]

LUMBER

N. L. G. A. RULES

CHORDS	SIZE		LUMBER	DESCR.
E - B	2x4	DRY	No.2	SPF
A - C	2x4	DRY	No.2	SPF
E - D	2x4	DRY	No.2	SPF

DRY: SEASONED LUMBER.

PLATES (table is in inches)

JT	TYPE	PLATES	W	LEN	Y	X
B	TMV+p	MT20	2.0	4.0		
E	BMV1+p	MT20	2.0	4.0		

DIMENSIONS, SUPPORTS AND LOADINGS SPECIFIED BY FABRICATOR TO BE VERIFIED BY BUILDING DESIGNER

BEARINGS

JT	FACTORED GROSS REACTION VERT	HORZ	MAXIMUM FACTORED GROSS REACTION DOWN	HORZ	UPLIFT	INPUT BRG IN-SX	REQRD BRG IN-SX
E	390	0	390	0	0	5-8	1-8
C	70	0	70	0	-29	1-8	1-8
D	27	0	45	0	-5	1-8	1-8

SEE MITEK STANDARD DETAIL B97791H FOR CONNECTION TO JOINT(S) C , D

PROVIDE ANCHORAGE AT BEARING JOINT C FOR 150 LBS FACTORED UPLIFT
PROVIDE ANCHORAGE AT BEARING JOINT D FOR 150 LBS FACTORED UPLIFT

UNFACTORED REACTIONS

JT	1ST LCASE COMBINED	MAX /MIN COMPONENT REACTIONS SNOW	LIVE	PERM.LIVE	WIND	DEAD	SOIL
E	277	196 / 0	21 / 0	0 / 0	0 / 0	60 / 0	0 / 0
C	49	38 / -24	1 / 0	0 / 0	0 / 0	10 / 0	0 / 0
D	27	0 / -10	20 / 0	0 / 0	0 / 0	12 / 0	0 / 0

BEARING MATERIAL TO BE SPF NO.2 OR BETTER AT JOINT(S) E, C

BRACING

TOP CHORD TO BE SHEATHED OR MAX. PURLIN SPACING = 6.25 FT.
MAX. UNBRACED BOTTOM CHORD LENGTH = 10.00 FT OR RIGID CEILING DIRECTLY APPLIED.

ALL PITCH BREAKS AND PERIMETER CORNER JOINTS MUST BE LATERALLY RESTRAINED.

LOADING

TOTAL LOAD CASES: (5)

CHORDS

MEMB. FR-TO	MAX. FACTORED FORCE (LBS)	FACTORED VERT. LOAD (PLF) FROM	TO	LC1 MAX CSI (LC)	MAX. UNBRAC LENGTH
E- B	-338 / 0	0.0	0.0	0.05 (5)	7.81
A- B	0 / 47	-124.4	-124.4	0.17 (1)	10.00
B- C	-27 / 0	-124.4	-124.4	0.13 (1)	6.25
E- D	0 / 0	-39.2	-39.2	0.05 (5)	10.00

WEBS

MEMB. FR-TO	MAX. FACTORED FORCE (LBS)	MAX CSI (LC)

CANTILEVER ANALYSIS HAS BEEN CONSIDERED IN THIS DESIGN

DESIGN CRITERIA

SPECIFIED LOADS:

TOP CH.	LL	=	34.8	PSF
	DL	=	8.0	PSF
BOT CH.	LL	=	10.5	PSF
	DL	=	7.3	PSF
TOTAL LOAD		=	60.6	PSF

SPACING = 24.0 IN. C/C

THIS TRUSS IS DESIGNED FOR RESIDENTIAL OR SMALL BUILDING REQUIREMENTS OF PART 9, NBCC 2015

THIS DESIGN COMPLIES WITH:
- PART 9 OF BCBC 2018 , ABC 2019
- PART 9 OF OBC 2012 (2019 AMENDMENT)
- CSA 086-14
- TPIC 2014

DESIGN ASSUMPTIONS
-OVERHANG NOT TO BE ALTERED OR CUT OFF.

(55 % OF 48.1 P.S.F. G.S.L. PLUS 8.4 P.S.F. RAIN LOAD) EQUALS 34.8 P.S.F. SPECIFIED ROOF LIVE LOAD

ALLOWABLE DEFL.(LL)= L/360 (0.19")
CALCULATED VERT. DEFL.(LL) = L/ 999 (0.00")
ALLOWABLE DEFL.(TL)= L/360 (0.19")
CALCULATED VERT. DEFL.(TL) = L/ 999 (0.00")

CSI: TC=0.17/1.00 (A-B:1) , BC=0.05/1.00 (D-E:5) , WB=0.00/1.00 (n/a:0) , SSI=0.11/1.00 (A-B:1)

DOL LUMBER=1.00 NAIL=1.00 LS BEND=1.10 COMP=1.10 SHEAR=1.10 TENS= 1.10

COMPANION LIVE LOAD FACTOR = 1.00

TRUSS PLATE MANUFACTURER IS NOT RESPONSIBLE FOR QUALITY CONTROL IN THE TRUSS MANUFACTURING PLANT .

NAIL VALUES

PLATE	GRIP(DRY) (PSI) MAX	MIN	SHEAR (PLI) MAX	MIN	SECTION (PLI) MAX	MIN
MT20	650	371	1747	788	1987	1873

PLATE PLACEMENT TOL. = 0.250 inches

PLATE ROTATION TOL. = 5.0 Deg.

JSI GRIP= 0.21 (B) (INPUT = 0.90)
JSI METAL= 0.17 (B) (INPUT = 1.00)

LICENSED PROFESSIONAL ENGINEER
N.A. EL-MASRI
PROVINCE OF ONTARIO
Dec 18, 2020

READ ALL NOTES ON THIS PAGE AND ON ENGINEERING NOTE PAGE ENP-1. THIS NOTE PAGE IS AN INTEGRAL PART OF THIS DRAWING AS IT CONTAINS SPECIFICATIONS AND CRITERIA USED IN THE DESIGN OF THIS COMPONENT.

Town of East Gwillimbury
Building Standards Branch BCIN #16487

These plans have been reviewed for use with the corrections as noted. No other changes may be made without written approval of the Building Standards Branch. All work must comply with Zoning By-Law 2018-043, as amended, and the Ontario Building Code, as amended. These approved documents must be kept on site at all times. The building permit must be clearly posted on site at all times.

Discipline	Reviewer	BCIN	Date
Building Code	H. Authier	43236	2021-02-25
Sewage System			
Zoning			

KOTT

JOB NAME	TRUSS NAME	QUANTITY	PLY	JOB DESC.		DRWG NO.
NE1220-124	J03	2	1	TRUSS DESC.	GREENPARK - TRINAR HALL - GLENWAY 12A ELE 1	

Version 8.420 S Oct 9 2020 MiTek Industries, Inc. Fri Dec 18 08:14:46 2020 Page 1
ID:9SrEih2qK4qREOqiXOaa nzGFb3-JZ1t93kZMW?3w2GlSsEd590Vas4E5RBabWu3yCy7c

Scale = 1:23.5

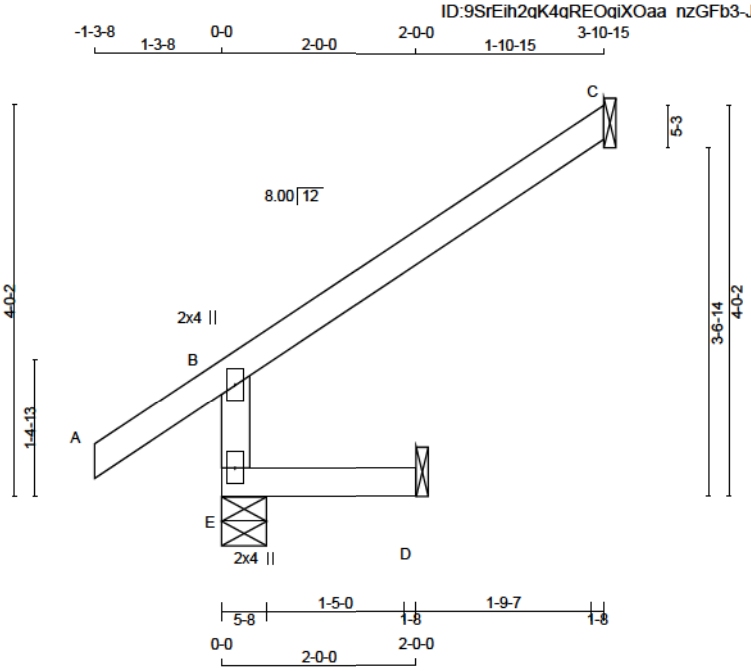

TOTAL WEIGHT = 2 X 11 = 21 lb

LUMBER
N. L. G. A. RULES

CHORDS	SIZE		LUMBER	DESCR.
E - B	2x4	DRY	No.2	SPF
A - C	2x4	DRY	No.2	SPF
E - D	2x4	DRY	No.2	SPF

DRY: SEASONED LUMBER.

PLATES (table is in inches)

JT	TYPE	PLATES	W	LEN	Y	X
B	TMV+p	MT20	2.0	4.0		
E	BMV1+p	MT20	2.0	4.0		

DIMENSIONS, SUPPORTS AND LOADINGS SPECIFIED BY FABRICATOR TO BE VERIFIED BY BUILDING DESIGNER

BEARINGS

JT	FACTORED GROSS REACTION VERT	HORZ	MAXIMUM GROSS REACTION DOWN	HORZ	FACTORED UPLIFT	INPUT BRG IN-SX	REQRD BRG IN-SX
E	518	0	518	0	0	5-8	1-8
C	183	0	183	0	0	1-8	1-8
D	36	0	45	0	0	1-8	1-8

SEE MITEK STANDARD DETAIL B97791H FOR CONNECTION TO JOINT(S) C , D

UNFACTORED REACTIONS

JT	1ST LCASE COMBINED	MAX /MIN COMPONENT REACTIONS SNOW	LIVE	PERM.LIVE	WIND	DEAD	SOIL
E	366	266 / 0	23 / 0	0 / 0	0 / 0	77 / 0	0 / 0
C	126	102 / 0	0 / 0	0 / 0	0 / 0	23 / 0	0 / 0
D	32	0 / 0	19 / 0	0 / 0	0 / 0	13 / 0	0 / 0

BEARING MATERIAL TO BE SPF NO.2 OR BETTER AT JOINT(S) E

BRACING
TOP CHORD TO BE SHEATHED OR MAX. PURLIN SPACING = 6.25 FT.
MAX. UNBRACED BOTTOM CHORD LENGTH = 10.00 FT OR RIGID CEILING DIRECTLY APPLIED.

ALL PITCH BREAKS AND PERIMETER CORNER JOINTS MUST BE LATERALLY RESTRAINED.

LOADING
TOTAL LOAD CASES: (5)

CHORDS

MEMB. FR-TO	MAX. FACTORED FORCE (LBS)	FACTORED VERT. LOAD (PLF) FROM	TO	LC1 MAX CSI (LC)	MAX. UNBRAC LENGTH
E- B	-475 / 0	0.0	0.0	0.02 (3)	7.81
A- B	0 / 47	-124.4	-124.4	0.17 (5)	10.00
B- C	-34 / 0	-124.4	-124.4	0.32 (1)	6.25
E- D	0 / 0	-39.2	-39.2	0.04 (3)	10.00

WEBS

MEMB. FR-TO	MAX. FACTORED FORCE (LBS)	MAX CSI (LC)

CANTILEVER ANALYSIS HAS BEEN CONSIDERED IN THIS DESIGN

DESIGN CRITERIA [M]

SPECIFIED LOADS:

TOP CH.	LL	=	34.8	PSF
	DL	=	8.0	PSF
BOT CH.	LL	=	10.5	PSF
	DL	=	7.3	PSF
TOTAL LOAD		=	60.6	PSF

SPACING = 24.0 IN. C/C

THIS TRUSS IS DESIGNED FOR RESIDENTIAL OR SMALL BUILDING REQUIREMENTS OF PART 9, NBCC 2015

THIS DESIGN COMPLIES WITH:
- PART 9 OF BCBC 2018 , ABC 2019
- PART 9 OF OBC 2012 (2019 AMENDMENT)
- CSA 086-14
- TPIC 2014

DESIGN ASSUMPTIONS
-OVERHANG NOT TO BE ALTERED OR CUT OFF.

(55 % OF 48.1 P.S.F. G.S.L. PLUS 8.4 P.S.F. RAIN LOAD) EQUALS 34.8 P.S.F. SPECIFIED ROOF LIVE LOAD

ALLOWABLE DEFL.(LL)= L/360 (0.19")
CALCULATED VERT. DEFL.(LL) = L/ 999 (0.00")
ALLOWABLE DEFL.(TL)= L/360 (0.19")
CALCULATED VERT. DEFL.(TL) = L/ 999 (0.00")

CSI: TC=0.32/1.00 (B-C:1) , BC=0.04/1.00 (D-E:3) , WB=0.00/1.00 (n/a:0) , SSI=0.20/1.00 (B-C:1)

DOL LUMBER=1.00 NAIL=1.00 LS BEND=1.10 COMP=1.10 SHEAR=1.10 TENS= 1.10

COMPANION LIVE LOAD FACTOR = 1.00

TRUSS PLATE MANUFACTURER IS NOT RESPONSIBLE FOR QUALITY CONTROL IN THE TRUSS MANUFACTURING PLANT .

NAIL VALUES

PLATE	GRIP(DRY) (PSI) MAX	MIN	SHEAR (PLI) MAX	MIN	SECTION (PLI) MAX	MIN
MT20	650	371	1747	788	1987	1873

PLATE PLACEMENT TOL. = 0.250 inches

PLATE ROTATION TOL. = 5.0 Deg.

JSI GRIP= 0.29 (B) (INPUT = 0.90)
JSI METAL= 0.24 (B) (INPUT = 1.00)

LICENSED PROFESSIONAL ENGINEER
N.A. EL-MASRI
PROVINCE OF ONTARIO
Dec 18, 2020

READ ALL NOTES ON THIS PAGE AND ON ENGINEERING NOTE PAGE ENP-1. THIS NOTE PAGE IS AN INTEGRAL PART OF THIS DRAWING AS IT CONTAINS SPECIFICATIONS AND CRITERIA USED IN THE DESIGN OF THIS COMPONENT.

Town of East Gwillimbury
Building Standards Branch BCIN #16487

These plans have been reviewed for use with the corrections as noted. No other changes may be made without written approval of the Building Standards Branch. All work must comply with Zoning By-Law 2018-043, as amended, and the Ontario Building Code, as amended. These approved documents must be kept on site at all times. The building permit must be clearly posted on site at all times.

Discipline	Reviewer	BCIN	Date
Building Code	H. Authier	43236	2021-02-25
Sewage System			
Zoning			

KOTT

JOB NAME	TRUSS NAME	QUANTITY	PLY	JOB DESC.		DRWG NO.
NE1220-124	J04	2	1	TRUSS DESC.	GREENPARK - TRINAR HALL - GLENWAY 12A ELE 1	**Page 17 of 44**

Version 8.420 S Oct 9 2020 MiTek Industries, Inc. Fri Dec 18 08:14:47 2020 Page 1
ID:9SrEih2gK4gREOgiXOaa_nzGFb3-olbGMPkB7q7wYCrv0alseNYjiFNMquRjqAedUfy7o

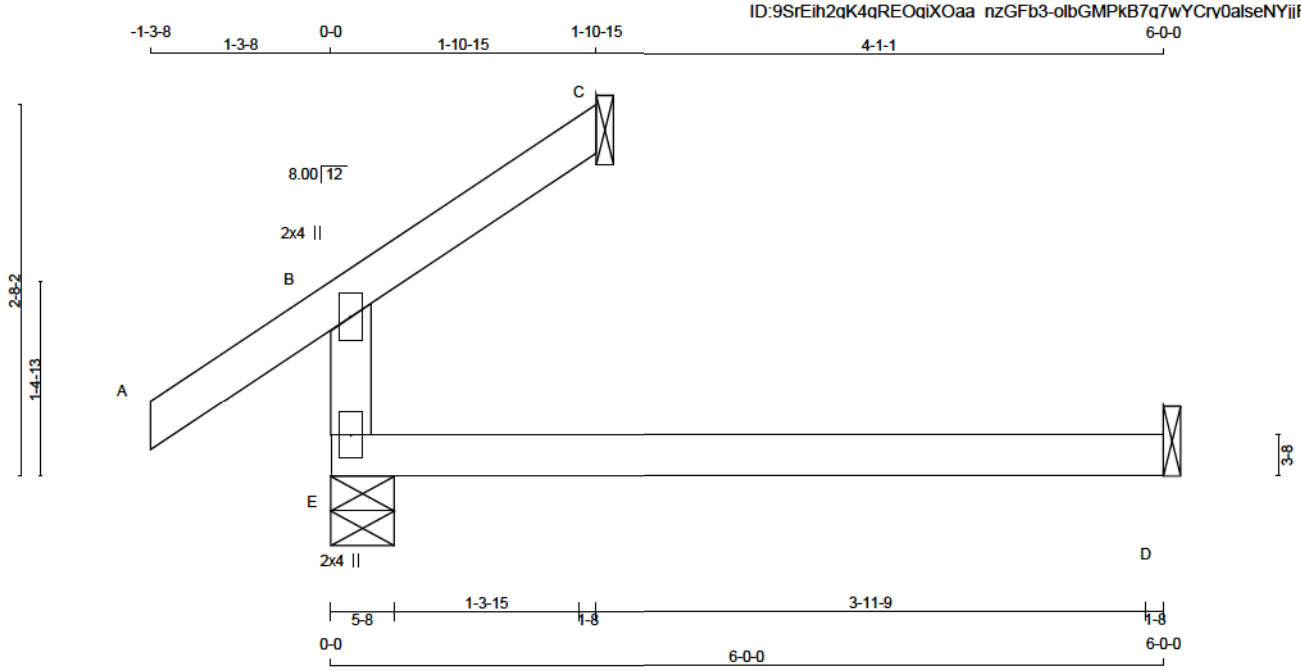

TOTAL WEIGHT = 2 X 13 = 25 lb

LUMBER
N. L. G. A. RULES

CHORDS	SIZE		LUMBER	DESCR.
E - B	2x4	DRY	No.2	SPF
A - C	2x4	DRY	No.2	SPF
E - D	2x4	DRY	No.2	SPF

DRY: SEASONED LUMBER.

PLATES (table is in inches)

JT	TYPE	PLATES	W	LEN	Y	X
B	TMV+p	MT20	2.0	4.0		
E	BMV1+p	MT20	2.0	4.0		

DIMENSIONS, SUPPORTS AND LOADINGS SPECIFIED BY FABRICATOR TO BE VERIFIED BY BUILDING DESIGNER

BEARINGS

JT	FACTORED GROSS REACTION VERT	HORZ	MAXIMUM GROSS REACTION DOWN	HORZ	UPLIFT	INPUT BRG IN-SX	REQRD BRG IN-SX
E	432	0	432	0	0	5-8	1-8
C	112	0	112	0	0	1-8	1-8
D	100	0	130	0	0	1-8	1-8

SEE MITEK STANDARD DETAIL B97791H FOR CONNECTION TO JOINT(S) C , D

UNFACTORED REACTIONS

JT	1ST LCASE COMBINED	MAX /MIN COMPONENT REACTIONS SNOW	LIVE	PERM.LIVE	WIND	DEAD	SOIL
E	316	194 / 0	45 / 0	0 / 0	0 / 0	76 / 0	0 / 0
C	88	36 / 0	26 / 0	0 / 0	0 / 0	26 / 0	0 / 0
D	92	0 / -1	55 / 0	0 / 0	0 / 0	38 / 0	0 / 0

BEARING MATERIAL TO BE SPF NO.2 OR BETTER AT JOINT(S) E, C

BRACING
TOP CHORD TO BE SHEATHED OR MAX. PURLIN SPACING = 10.00 FT.
MAX. UNBRACED BOTTOM CHORD LENGTH = 10.00 FT OR RIGID CEILING DIRECTLY APPLIED.

ALL PITCH BREAKS AND PERIMETER CORNER JOINTS MUST BE LATERALLY RESTRAINED.

LOADING
TOTAL LOAD CASES: (4)

CHORDS MEMB. FR-TO	MAX. FACTORED FORCE (LBS)	FACTORED VERT. LOAD (PLF) FROM	TO	LC1 MAX CSI (LC)	MAX. UNBRAC LENGTH	WEBS MEMB. FR-TO	MAX. FACTORED FORCE (LBS)	MAX CSI (LC)
E- B	-297 / 5	0.0	0.0	0.17 (2)	7.81			
A- B	0 / 47	-124.4	-124.4	0.17 (1)	10.00			
B- C	-4 / 29	-124.4	-124.4	0.14 (3)	10.00			
E- D	0 / 0	-39.2	-39.2	0.23 (3)	10.00			

DESIGN CRITERIA [M]

SPECIFIED LOADS:

TOP CH.	LL	=	34.8	PSF
	DL	=	8.0	PSF
BOT CH.	LL	=	10.5	PSF
	DL	=	7.3	PSF
TOTAL LOAD		=	60.6	PSF

SPACING = 24.0 IN. C/C

THIS TRUSS IS DESIGNED FOR RESIDENTIAL OR SMALL BUILDING REQUIREMENTS OF PART 9, NBCC 2015

THIS DESIGN COMPLIES WITH:
- PART 9 OF BCBC 2018 , ABC 2019
- PART 9 OF OBC 2012 (2019 AMENDMENT)
- CSA 086-14
- TPIC 2014

DESIGN ASSUMPTIONS
-OVERHANG NOT TO BE ALTERED OR CUT OFF.

(55 % OF 48.1 P.S.F. G.S.L. PLUS 8.4 P.S.F. RAIN LOAD) EQUALS 34.8 P.S.F. SPECIFIED ROOF LIVE LOAD

ALLOWABLE DEFL.(LL)= L/360 (0.20")
CALCULATED VERT. DEFL.(LL) = L/ 999 (0.06")
ALLOWABLE DEFL.(TL)= L/360 (0.20")
CALCULATED VERT. DEFL.(TL) = L/ 747 (0.10")

CSI: TC=0.17/1.00 (B-E:2) , BC=0.23/1.00 (D-E:3) , WB=0.00/1.00 (n/a:0) , SSI=0.13/1.00 (D-E:3)

DOL LUMBER=1.00 NAIL=1.00 LS BEND=1.10 COMP=1.10 SHEAR=1.10 TENS= 1.10

COMPANION LIVE LOAD FACTOR = 1.00

TRUSS PLATE MANUFACTURER IS NOT RESPONSIBLE FOR QUALITY CONTROL IN THE TRUSS MANUFACTURING PLANT .

NAIL VALUES

PLATE	GRIP(DRY) (PSI) MAX	MIN	SHEAR (PLI) MAX	MIN	SECTION (PLI) MAX	MIN
MT20	650	371	1747	788	1987	1873

PLATE PLACEMENT TOL. = 0.250 inches

PLATE ROTATION TOL. = 5.0 Deg.

JSI GRIP= 0.18 (B) (INPUT = 0.90)
JSI METAL= 0.15 (B) (INPUT = 1.00)

LICENSED PROFESSIONAL ENGINEER
N.A. EL-MASRI
PROVINCE OF ONTARIO
Dec 18, 2020

READ ALL NOTES ON THIS PAGE AND ON ENGINEERING NOTE PAGE ENP-1. THIS NOTE PAGE IS AN INTEGRAL PART OF THIS DRAWING AS IT CONTAINS SPECIFICATIONS AND CRITERIA USED IN THE DESIGN OF THIS COMPONENT.

Town of East Gwillimbury
Building Standards Branch BCIN #16487

These plans have been reviewed for use with the corrections as noted. No other changes may be made without written approval of the Building Standards Branch. All work must comply with Zoning By-Law 2018-043, as amended, and the Ontario Building Code, as amended. These approved documents must be kept on site at all times. The building permit must be clearly posted on site at all times.

Discipline	Reviewer	BCIN	Date
Building Code	H. Authier	43236	2021-02-25
Sewage System			
Zoning			

KOTT

JOB NAME	TRUSS NAME	QUANTITY	PLY	JOB DESC.		DRWG NO.
NE1220-124	J05	2	1	TRUSS DESC.	GREENPARK - TRINAR HALL - GLENWAY 12A ELE 1	**Page 18 of 44**

Version 8.420 S Oct 9 2020 MiTek Industries, Inc. Fri Dec 18 08:14:47 2020 Page 1

ID:9SrEih2qK4qREOqiXOaa_nzGFb3-olbGMPkB7q7wYCry0alseNYqKFNRquRjqAedUfy7o

Scale = 1:23.3

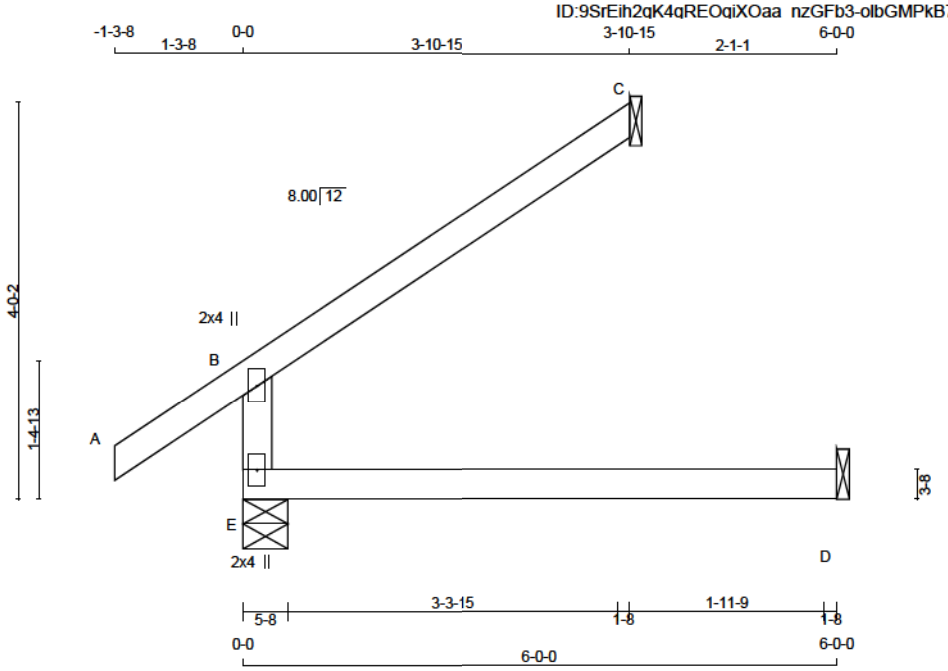

TOTAL WEIGHT = 2 X 15 = 31 lb

LUMBER

N. L. G. A. RULES

CHORDS	SIZE		LUMBER	DESCR.
E - B	2x4	DRY	No.2	SPF
A - C	2x4	DRY	No.2	SPF
E - D	2x4	DRY	No.2	SPF

DRY: SEASONED LUMBER.

PLATES (table is in inches)

JT	TYPE	PLATES	W	LEN	Y	X
B	TMV+p	MT20	2.0	4.0		
E	BMV1+p	MT20	2.0	4.0		

DIMENSIONS, SUPPORTS AND LOADINGS SPECIFIED BY FABRICATOR TO BE VERIFIED BY BUILDING DESIGNER [M]

BEARINGS

JT	FACTORED GROSS REACTION VERT	HORZ	MAXIMUM FACTORED GROSS REACTION DOWN	HORZ	UPLIFT	INPUT BRG IN-SX	REQRD BRG IN-SX
E	612	0	612	0	0	5-8	1-8
C	183	0	183	0	0	1-8	1-8
D	99	0	125	0	0	1-8	1-8

SEE MITEK STANDARD DETAIL B97791H FOR CONNECTION TO JOINT(S) C , D

UNFACTORED REACTIONS

JT	1ST LCASE COMBINED	MAX /MIN COMPONENT REACTIONS SNOW	LIVE	PERM.LIVE	WIND	DEAD	SOIL
E	451	266 / 0	73 / 0	0 / 0	0 / 0	112 / 0	0 / 0
C	126	102 / 0	0 / 0	0 / 0	0 / 0	23 / 0	0 / 0
D	89	0 / 0	53 / 0	0 / 0	0 / 0	37 / 0	0 / 0

BEARING MATERIAL TO BE SPF NO.2 OR BETTER AT JOINT(S) E, C

BRACING

TOP CHORD TO BE SHEATHED OR MAX. PURLIN SPACING = 6.25 FT.
MAX. UNBRACED BOTTOM CHORD LENGTH = 10.00 FT OR RIGID CEILING DIRECTLY APPLIED.

ALL PITCH BREAKS AND PERIMETER CORNER JOINTS MUST BE LATERALLY RESTRAINED.

LOADING

TOTAL LOAD CASES: (4)

CHORDS MEMB. FR-TO	MAX. FACTORED FORCE (LBS)	FACTORED VERT. LOAD (PLF) FROM	TO	LC1 MAX CSI (LC)	MAX. UNBRAC LENGTH	WEBS MEMB. FR-TO	MAX. FACTORED FORCE (LBS)	MAX CSI (LC)
E- B	-475 / 0	0.0	0.0	0.21 (3)	7.81			
A- B	0 / 47	-124.4	-124.4	0.17 (1)	10.00			
B- C	-34 / 0	-124.4	-124.4	0.32 (1)	6.25			
E- D	0 / 0	-39.2	-39.2	0.23 (3)	10.00			

DESIGN CRITERIA

SPECIFIED LOADS:

TOP CH.	LL	=	34.8	PSF
	DL	=	8.0	PSF
BOT CH.	LL	=	10.5	PSF
	DL	=	7.3	PSF
TOTAL LOAD		=	60.6	PSF

SPACING = 24.0 IN. C/C

THIS TRUSS IS DESIGNED FOR RESIDENTIAL OR SMALL BUILDING REQUIREMENTS OF PART 9, NBCC 2015

THIS DESIGN COMPLIES WITH:
- PART 9 OF BCBC 2018 , ABC 2019
- PART 9 OF OBC 2012 (2019 AMENDMENT)
- CSA 086-14
- TPIC 2014

DESIGN ASSUMPTIONS
-OVERHANG NOT TO BE ALTERED OR CUT OFF.

(55 % OF 48.1 P.S.F. G.S.L. PLUS 8.4 P.S.F. RAIN LOAD) EQUALS 34.8 P.S.F. SPECIFIED ROOF LIVE LOAD

ALLOWABLE DEFL.(LL)= L/360 (0.20")
CALCULATED VERT. DEFL.(LL) = L/ 999 (0.05")
ALLOWABLE DEFL.(TL)= L/360 (0.20")
CALCULATED VERT. DEFL.(TL) = L/ 832 (0.09")

CSI: TC=0.32/1.00 (B-C:1) , BC=0.23/1.00 (D-E:3) , WB=0.00/1.00 (n/a:0) , SSI=0.20/1.00 (B-C:1)

DOL LUMBER=1.00 NAIL=1.00 LS BEND=1.10 COMP=1.10 SHEAR=1.10 TENS= 1.10

COMPANION LIVE LOAD FACTOR = 1.00

TRUSS PLATE MANUFACTURER IS NOT RESPONSIBLE FOR QUALITY CONTROL IN THE TRUSS MANUFACTURING PLANT .

NAIL VALUES

PLATE	GRIP(DRY) (PSI) MAX	MIN	SHEAR (PLI) MAX	MIN	SECTION (PLI) MAX	MIN
MT20	650	371	1747	788	1987	1873

PLATE PLACEMENT TOL. = 0.250 inches

PLATE ROTATION TOL. = 5.0 Deg.

JSI GRIP= 0.29 (B) (INPUT = 0.90)
JSI METAL= 0.24 (B) (INPUT = 1.00)

LICENSED PROFESSIONAL ENGINEER
N.A. EL-MASRI
PROVINCE OF ONTARIO
Dec 18, 2020

READ ALL NOTES ON THIS PAGE AND ON ENGINEERING NOTE PAGE ENP-1. THIS NOTE PAGE IS AN INTEGRAL PART OF THIS DRAWING AS IT CONTAINS SPECIFICATIONS AND CRITERIA USED IN THE DESIGN OF THIS COMPONENT.

Town of East Gwillimbury
Building Standards Branch BCIN #16487

These plans have been reviewed for use with the corrections as noted. No other changes may be made without written approval of the Building Standards Branch. All work must comply with Zoning By-Law 2018-043, as amended, and the Ontario Building Code, as amended. These approved documents must be kept on site at all times. The building permit must be clearly posted on site at all times.

Discipline	Reviewer	BCIN	Date
Building Code	H. Authier	43236	2021-02-25
Sewage System			
Zoning			

KOTT

JOB NAME	TRUSS NAME	QUANTITY	PLY	JOB DESC.		DRWG NO.
NE1220-124	J06	3	1	TRUSS DESC.	GREENPARK - TRINAR HALL - GLENWAY 12A ELE 1	**Page 19 of 44**

Version 8.420 S Oct 9 2020 MiTek Industries, Inc. Fri Dec 18 08:14:47 2020 Page 1

ID:9SrEih2qK4qREOqiXOaa_nzGFb3-olbGMPkB7q7wYCry0alseNYaQFNGquRjqAedUfy7o

Scale = 1:30.0

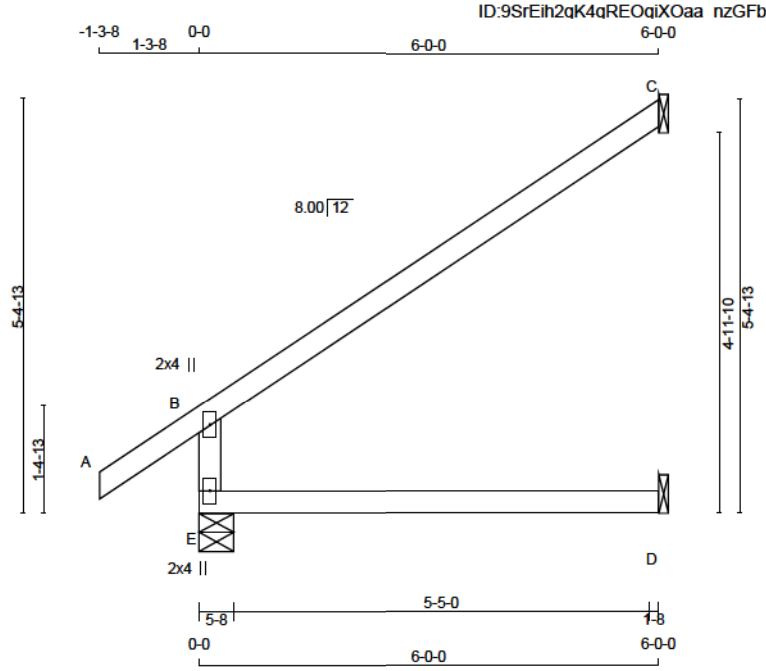

TOTAL WEIGHT = 3 X 18 = 54 lb

LUMBER

N. L. G. A. RULES

CHORDS	SIZE		LUMBER	DESCR.
E - B	2x4	DRY	No.2	SPF
A - C	2x4	DRY	No.2	SPF
E - D	2x4	DRY	No.2	SPF

DRY: SEASONED LUMBER.

PLATES (table is in inches)

JT	TYPE	PLATES	W	LEN	Y	X
B	TMV+p	MT20	2.0	4.0		
E	BMV1+p	MT20	2.0	4.0		

DIMENSIONS, SUPPORTS AND LOADINGS SPECIFIED BY FABRICATOR TO BE VERIFIED BY BUILDING DESIGNER

BEARINGS

JT	FACTORED GROSS REACTION VERT	HORZ	MAXIMUM FACTORED GROSS REACTION DOWN	HORZ	UPLIFT	INPUT BRG IN-SX	REQRD BRG IN-SX
E	774	0	774	0	0	5-8	1-8
C	280	0	280	0	0	1-8	1-8
D	99	0	125	0	0	1-8	1-8

SEE MITEK STANDARD DETAIL B97791H FOR CONNECTION TO JOINT(S) C , D

UNFACTORED REACTIONS

JT	1ST LCASE COMBINED	MAX /MIN COMPONENT REACTIONS SNOW	LIVE	PERM.LIVE	WIND	DEAD	SOIL
E	563	357 / 0	73 / 0	0 / 0	0 / 0	133 / 0	0 / 0
C	193	157 / 0	0 / 0	0 / 0	0 / 0	36 / 0	0 / 0
D	89	0 / 0	53 / 0	0 / 0	0 / 0	37 / 0	0 / 0

BEARING MATERIAL TO BE SPF NO.2 OR BETTER AT JOINT(S) E

BRACING

TOP CHORD TO BE SHEATHED OR MAX. PURLIN SPACING = 6.25 FT.
MAX. UNBRACED BOTTOM CHORD LENGTH = 10.00 FT OR RIGID CEILING DIRECTLY APPLIED.

ALL PITCH BREAKS AND PERIMETER CORNER JOINTS MUST BE LATERALLY RESTRAINED.

LOADING

TOTAL LOAD CASES: (4)

CHORDS MEMB. FR-TO	MAX. FACTORED FORCE (LBS)	FACTORED VERT. LOAD (PLF) FROM	TO	LC1 MAX CSI (LC)	MAX. UNBRAC LENGTH	WEBS MEMB. FR-TO	MAX. FACTORED FORCE (LBS)	MAX CSI (LC)
E- B	-637 / 0	0.0	0.0	0.22 (3)	7.81			
A- B	0 / 47	-124.4	-124.4	0.17 (1)	10.00			
B- C	-52 / 0	-124.4	-124.4	0.77 (1)	6.25			
E- D	0 / 0	-39.2	-39.2	0.24 (3)	10.00			

[M]

DESIGN CRITERIA

SPECIFIED LOADS:

TOP CH.	LL	=	34.8	PSF
	DL	=	8.0	PSF
BOT CH.	LL	=	10.5	PSF
	DL	=	7.3	PSF
TOTAL LOAD		=	60.6	PSF

SPACING = 24.0 IN. C/C

THIS TRUSS IS DESIGNED FOR RESIDENTIAL OR SMALL BUILDING REQUIREMENTS OF PART 9, NBCC 2015

THIS DESIGN COMPLIES WITH:
- PART 9 OF BCBC 2018 , ABC 2019
- PART 9 OF OBC 2012 (2019 AMENDMENT)
- CSA 086-14
- TPIC 2014

DESIGN ASSUMPTIONS
-OVERHANG NOT TO BE ALTERED OR CUT OFF.

(55 % OF 48.1 P.S.F. G.S.L. PLUS 8.4 P.S.F. RAIN LOAD) EQUALS 34.8 P.S.F. SPECIFIED ROOF LIVE LOAD

ALLOWABLE DEFL.(LL)= L/360 (0.20")
CALCULATED VERT. DEFL.(LL) = L/ 999 (0.05")
ALLOWABLE DEFL.(TL)= L/360 (0.20")
CALCULATED VERT. DEFL.(TL) = L/ 832 (0.09")

CSI: TC=0.77/1.00 (B-C:1) , BC=0.24/1.00 (D-E:3) , WB=0.00/1.00 (n/a:0) , SSI=0.30/1.00 (B-C:1)

DOL LUMBER=1.00 NAIL=1.00 LS BEND=1.10 COMP=1.10 SHEAR=1.10 TENS= 1.10

COMPANION LIVE LOAD FACTOR = 1.00

TRUSS PLATE MANUFACTURER IS NOT RESPONSIBLE FOR QUALITY CONTROL IN THE TRUSS MANUFACTURING PLANT .

NAIL VALUES

PLATE	GRIP(DRY) (PSI) MAX	MIN	SHEAR (PLI) MAX	MIN	SECTION (PLI) MAX	MIN
MT20	650	371	1747	788	1987	1873

PLATE PLACEMENT TOL. = 0.250 inches

PLATE ROTATION TOL. = 5.0 Deg.

JSI GRIP= 0.39 (B) (INPUT = 0.90)
JSI METAL= 0.33 (B) (INPUT = 1.00)

LICENSED PROFESSIONAL ENGINEER
N.A. EL-MASRI
PROVINCE OF ONTARIO
Dec 18, 2020

READ ALL NOTES ON THIS PAGE AND ON ENGINEERING NOTE PAGE ENP-1. THIS NOTE PAGE IS AN INTEGRAL PART OF THIS DRAWING AS IT CONTAINS SPECIFICATIONS AND CRITERIA USED IN THE DESIGN OF THIS COMPONENT.

Town of East Gwillimbury
Building Standards Branch BCIN #16487

These plans have been reviewed for use with the corrections as noted. No other changes may be made without written approval of the Building Standards Branch. All work must comply with Zoning By-Law 2018-043, as amended, and the Ontario Building Code, as amended. These approved documents must be kept on site at all times. The building permit must be clearly posted on site at all times.

Discipline	Reviewer	BCIN	Date
Building Code	H. Authier	43236	2021-02-25
Sewage System			
Zoning			

KOTT

JOB NAME	TRUSS NAME	QUANTITY	PLY	JOB DESC.		DWG NO.
NE1220-124	T01	1	1	TRUSS DESC.	GREENPARK - TRINAR HALL - GLENWAY 12A ELE 1	

Version 8.420 S Oct 9 2020 MiTek Industries, Inc. Fri Dec 18 08:14:48 2020 Page 1
ID:9SrEih2gK4gREOgiXOaa nzGFb3-Gv9eallpt8Fn9LQ8aHG5Ba5ndfdXZ9rs2gNA05y7c

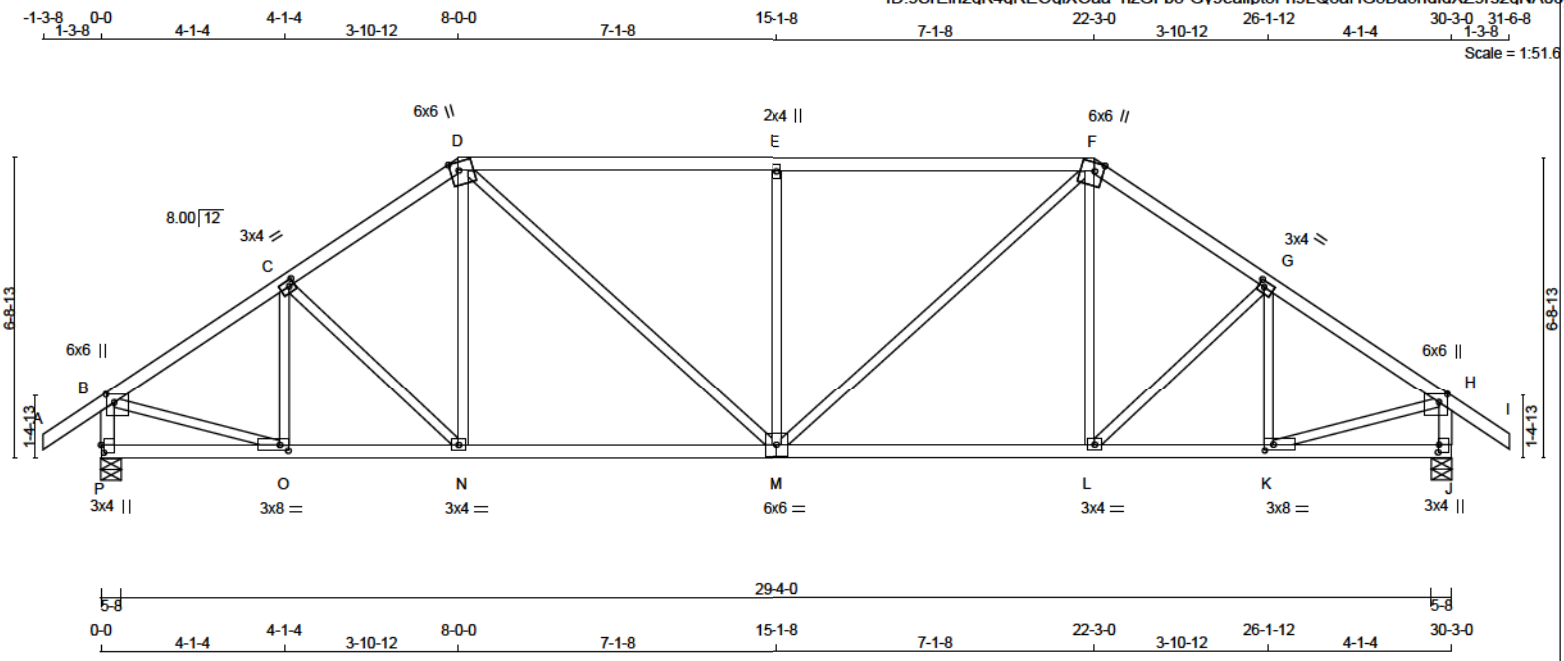

TOTAL WEIGHT = 129 lb

LUMBER
N. L. G. A. RULES

CHORDS	SIZE		LUMBER	DESCR.
A - D	2x4	DRY	No.2	SPF
D - F	2x4	DRY	2100F 1.8E	SPF
F - I	2x4	DRY	No.2	SPF
P - B	2x4	DRY	No.2	SPF
J - H	2x4	DRY	No.2	SPF
P - M	2x4	DRY	No.2	SPF
M - J	2x4	DRY	No.2	SPF
ALL WEBS EXCEPT	2x3	DRY	No.2	SPF

DRY: SEASONED LUMBER.

PLATES (table is in inches)

JT	TYPE	PLATES	W	LEN	Y	X
B	TMVW+p	MT20	6.0	6.0	2.25	2.25
C	TMWW-t	MT20	3.0	4.0	1.50	1.50
D	TTWW+m	MT20	6.0	6.0	2.25	2.25
E	TMW+w	MT20	2.0	4.0		
F	TTWW+m	MT20	6.0	6.0	2.25	2.25
G	TMWW-t	MT20	3.0	4.0	1.50	1.50
H	TMVW+p	MT20	6.0	6.0	2.25	2.25
J	BMV1+p	MT20	3.0	4.0	2.00	0.25
K	BMWW-t	MT20	3.0	8.0	1.50	2.25
L	BMWW-t	MT20	3.0	4.0		
M	BSWWW-l	MT20	6.0	6.0		
N	BMWW-t	MT20	3.0	4.0		
O	BMWW-t	MT20	3.0	8.0	1.50	2.25
P	BMV1+p	MT20	3.0	4.0	2.00	0.75

DIMENSIONS, SUPPORTS AND LOADINGS SPECIFIED BY FABRICATOR TO BE VERIFIED BY BUILDING DESIGNER

BEARINGS

JT	FACTORED GROSS REACTION VERT	HORZ	MAXIMUM GROSS REACTION DOWN	HORZ	FACTORED UPLIFT	INPUT BRG IN-SX	REQRD BRG IN-SX
P	2646	0	2646	0	0	5-8	5-2
J	2646	0	2646	0	0	5-8	5-2

UNFACTORED REACTIONS

JT	1ST LCASE COMBINED	SNOW	MAX./MIN. COMPONENT REACTIONS LIVE	PERM.LIVE	WIND	DEAD	SOIL
P	1951	1149 / 0	318 / 0	0 / 0	0 / 0	485 / 0	0 / 0
J	1951	1149 / 0	318 / 0	0 / 0	0 / 0	485 / 0	0 / 0

BEARING MATERIAL TO BE SPF NO.2 OR BETTER AT JOINT(S) P, J

BRACING
TOP CHORD TO BE SHEATHED OR MAX. PURLIN SPACING = 3.86 FT.
MAX. UNBRACED BOTTOM CHORD LENGTH = 10.00 FT OR RIGID CEILING DIRECTLY APPLIED.

ALL PITCH BREAKS AND PERIMETER CORNER JOINTS MUST BE LATERALLY RESTRAINED.

LOADING
TOTAL LOAD CASES: (4)

CHORDS

MEMB. FR-TO	MAX. FORCE (LBS)	FACTORED VERT. LOAD (PLF) FROM	TO	LC1 MAX CSI (LC)	MAX. UNBRAC LENGTH
A- B	0 / 47	-124.4	-124.4	0.17 (1)	10.00
B- C	-2809 / 0	-124.4	-124.4	0.34 (1)	3.86
C- D	-2789 / 0	-124.4	-124.4	0.34 (1)	3.88
D- E	-3024 / 0	-124.4	-124.4	0.61 (1)	4.16
E- F	-3024 / 0	-124.4	-124.4	0.61 (1)	4.16
F- G	-2789 / 0	-124.4	-124.4	0.34 (1)	3.88
G- H	-2809 / 0	-124.4	-124.4	0.34 (1)	3.86
H- I	0 / 47	-124.4	-124.4	0.17 (1)	10.00
P- B	-2568 / 0	0.0	0.0	0.26 (1)	5.36
J- H	-2568 / 0	0.0	0.0	0.26 (1)	5.36
P- O	0 / 0	-39.2	-39.2	0.13 (3)	10.00
O- N	0 / 2362	-39.2	-39.2	0.62 (2)	10.00
N- M	0 / 2296	-39.2	-39.2	0.62 (2)	10.00
M- L	0 / 2296	-39.2	-39.2	0.62 (2)	10.00
L- K	0 / 2362	-39.2	-39.2	0.62 (2)	10.00
K- J	0 / 0	-39.2	-39.2	0.13 (3)	10.00

WEBS

MEMB. FR-TO	MAX. FORCE (LBS)	FACTORED MAX CSI (LC)
O- C	-501 / 0	0.13 (1)
C- N	-99 / 0	0.05 (1)
N- D	0 / 399	0.09 (2)
D- M	0 / 981	0.22 (1)
M- E	-1088 / 0	0.82 (1)
M- F	0 / 981	0.22 (1)
L- F	0 / 399	0.09 (2)
L- G	-99 / 0	0.05 (1)
K- G	-501 / 0	0.13 (1)
B- O	0 / 2443	0.55 (1)
K- H	0 / 2443	0.55 (1)

[M][F]

DESIGN CRITERIA

SPECIFIED LOADS:
TOP CH. LL = 34.8 PSF
DL = 8.0 PSF
BOT CH. LL = 10.5 PSF
DL = 7.3 PSF
TOTAL LOAD = 60.6 PSF

SPACING = 24.0 IN. C/C

LOADING IN FLAT SECTION BASED ON A SLOPE OF 2.00/12 MINIMUM

THIS TRUSS IS DESIGNED FOR RESIDENTIAL OR SMALL BUILDING REQUIREMENTS OF PART 9, NBCC 2015

THIS DESIGN COMPLIES WITH:
- PART 9 OF BCBC 2018 , ABC 2019
- PART 9 OF OBC 2012 (2019 AMENDMENT)
- CSA 086-14
- TPIC 2014

(55 % OF 48.1 P.S.F. G.S.L. PLUS 8.4 P.S.F. RAIN LOAD) EQUALS 34.8 P.S.F. SPECIFIED ROOF LIVE LOAD

ALLOWABLE DEFL.(LL)= L/360 (1.01")
CALCULATED VERT. DEFL.(LL) = L/ 999 (0.16")
ALLOWABLE DEFL.(TL)= L/360 (1.01")
CALCULATED VERT. DEFL.(TL) = L/ 999 (0.28")

CSI: TC=0.61/1.00 (E-F:1) , BC=0.62/1.00 (N-O:2) , WB=0.82/1.00 (E-M:1) , SSI=0.43/1.00 (E-F:1)

DOL LUMBER=1.00 NAIL=1.00 LS BEND=1.10 COMP=1.10 SHEAR=1.10 TENS= 1.10

COMPANION LIVE LOAD FACTOR = 1.00

TRUSS PLATE MANUFACTURER IS NOT RESPONSIBLE FOR QUALITY CONTROL IN THE TRUSS MANUFACTURING PLANT .

NAIL VALUES

PLATE	GRIP(DRY) (PSI) MAX	MIN	SHEAR (PLI) MAX	MIN	SECTION (PLI) MAX	MIN
MT20	650	371	1747	788	1987	1873

PLATE PLACEMENT TOL. = 0.250 inches

PLATE ROTATION TOL. = 5.0 Deg.

JSI GRIP= 0.89 (B) (INPUT = 0.90)
JSI METAL= 0.72 (M) (INPUT = 1.00)

LICENSED PROFESSIONAL ENGINEER
N.A. EL-MASRI
PROVINCE OF ONTARIO
Dec 18, 2020

READ ALL NOTES ON THIS PAGE AND ON ENGINEERING NOTE PAGE ENP-1. THIS NOTE PAGE IS AN INTEGRAL PART OF THIS DRAWING AS IT CONTAINS SPECIFICATIONS AND CRITERIA USED IN THE DESIGN OF THIS COMPONENT.

Town of East Gwillimbury
Building Standards Branch BCIN #16487

These plans have been reviewed for use with the corrections as noted. No other changes may be made without written approval of the Building Standards Branch. All work must comply with Zoning By-Law 2018-043, as amended, and the Ontario Building Code, as amended. These approved documents must be kept on site at all times. The building permit must be clearly posted on site at all times.

Discipline	Reviewer	BCIN	Date
Building Code	H. Authier	43236	2021-02-25
Sewage System			
Zoning			

KOTT

JOB NAME	TRUSS NAME	QUANTITY	PLY	JOB DESC.		DWG NO.
NE1220-124	T02	1	1	TRUSS DESC.	GREENPARK - TRINAR HALL - GLENWAY 12A ELE 1	

Version 8.420 S Oct 9 2020 MiTek Industries, Inc. Fri Dec 18 08:14:49 2020 Page 1
ID:9SrEih2qK4qREOqiXOaa nzGFb3-k8i0n4mSeRNenV?K7?oKjoezD3v4IZq0HU7kZXy7o

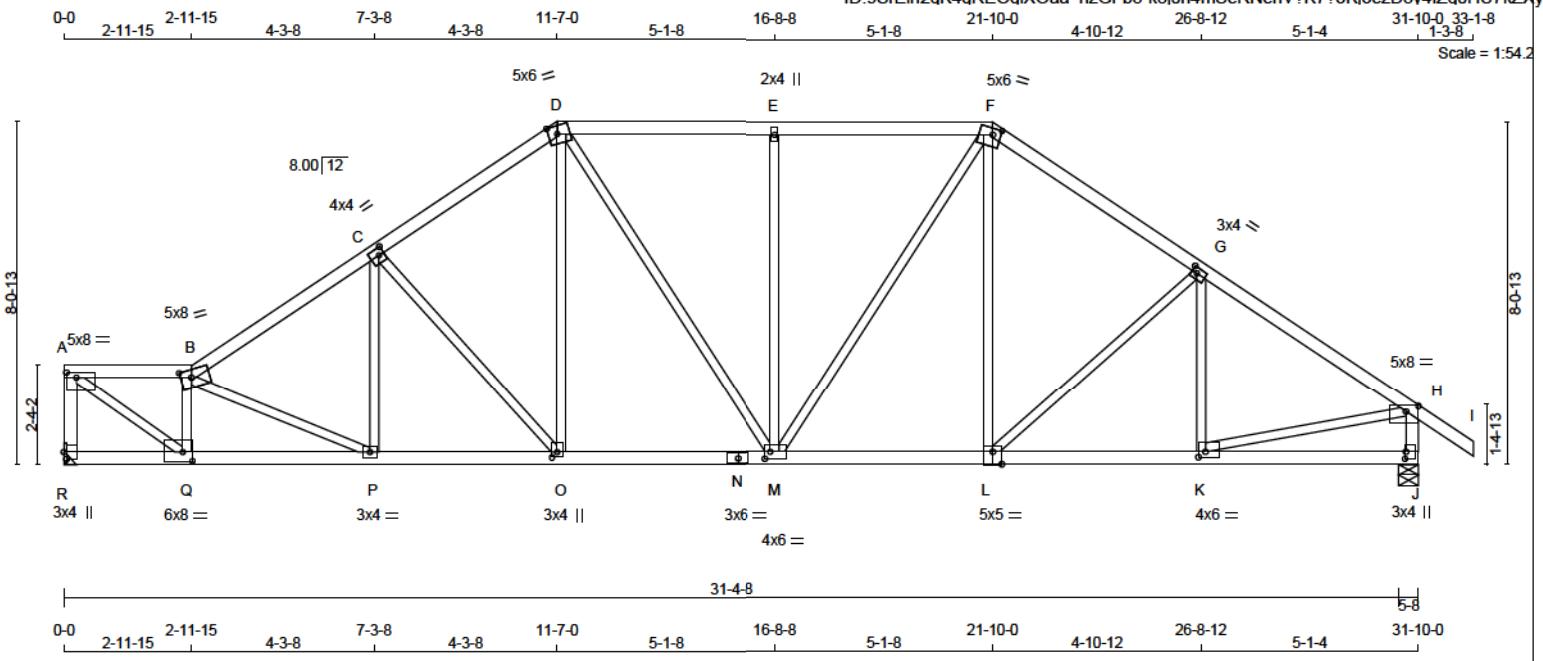

TOTAL WEIGHT = 144 lb

LUMBER
N. L. G. A. RULES

CHORDS	SIZE		LUMBER	DESCR.
R - A	2x4	DRY	No.2	SPF
A - B	2x4	DRY	No.2	SPF
B - D	2x4	DRY	No.2	SPF
D - F	2x4	DRY	No.2	SPF
F - I	2x4	DRY	No.2	SPF
J - H	2x4	DRY	No.2	SPF
R - N	2x4	DRY	No.2	SPF
N - L	2x4	DRY	No.2	SPF
L - J	2x4	DRY	No.2	SPF
ALL WEBS EXCEPT	2x3	DRY	No.2	SPF

DRY: SEASONED LUMBER.

PLATES (table is in inches)

JT	TYPE	PLATES	W	LEN	Y	X
A	TMVW-t	MT20	5.0	8.0	1.50	2.75
B	TTWW-m	MT20	5.0	8.0	2.25	3.00
C	TMWW-t	MT20	4.0	4.0	2.00	1.50
D	TTWW-m	MT20	5.0	6.0	Edge	2.50
E	TMW+w	MT20	2.0	4.0		
F	TTWW-m	MT20	5.0	6.0	1.75	2.25
G	TMWW-t	MT20	3.0	4.0	1.50	1.50
H	TMVW-p	MT20	5.0	8.0	1.50	3.50
J	BMV1+p	MT20	3.0	4.0	2.00	0.25
K	BMWW-t	MT20	4.0	6.0	1.50	2.00
L	BSWW-l	MT20	5.0	5.0	Edge	2.50
M	BMWWW-t	MT20	4.0	6.0	2.00	1.50
N	BS-t	MT20	3.0	6.0		
O	BMWW+t	MT20	3.0	4.0	1.50	1.50
P	BMWW-t	MT20	3.0	4.0		
Q	BMWW-t	MT20	6.0	8.0	2.50	2.75
R	BMV1+p	MT20	3.0	4.0	2.00	0.75

Edge - INDICATES REFERENCE CORNER OF PLATE TOUCHES EDGE OF CHORD.

DIMENSIONS, SUPPORTS AND LOADINGS SPECIFIED BY FABRICATOR TO BE VERIFIED BY BUILDING DESIGNER

BEARINGS

JT	FACTORED GROSS REACTION VERT	HORZ	MAXIMUM GROSS REACTION DOWN	HORZ	UPLIFT	INPUT BRG IN-SX	REQRD BRG IN-SX
R	2605	0	2605	0	0	MECHANICAL	
J	2776	0	2776	0	0	5-8	5-8

A SUITABLE HANGER/MECHANICAL CONNECTION IS REQUIRED AT JOINT R. MINIMUM BEARING LENGTH AT JOINT R = 5-0.

UNFACTORED REACTIONS

MAX./MIN. COMPONENT REACTIONS

JT	1ST LCASE COMBINED	SNOW	LIVE	PERM.LIVE	WIND	DEAD	SOIL
R	1929	1108 / 0	334 / 0	0 / 0	0 / 0	487 / 0	0 / 0
J	2047	1204 / 0	334 / 0	0 / 0	0 / 0	509 / 0	0 / 0

BEARING MATERIAL TO BE SPF NO.2 OR BETTER AT JOINT(S) J

BRACING
TOP CHORD TO BE SHEATHED OR MAX. PURLIN SPACING = 3.31 FT.
MAX. UNBRACED BOTTOM CHORD LENGTH = 10.00 FT OR RIGID CEILING DIRECTLY APPLIED.

ALL PITCH BREAKS AND PERIMETER CORNER JOINTS MUST BE LATERALLY RESTRAINED.

LOADING
TOTAL LOAD CASES: (4)

CHORDS

MEMB. FR-TO	MAX. FACTORED FORCE (LBS)	FACTORED VERT. LOAD (PLF) FROM	TO	LC1 MAX CSI (LC)	MAX. UNBRAC LENGTH
R- A	-2541 / 0	0.0	0.0	0.30 (1)	5.38
A- B	-3344 / 0	-124.4	-124.4	0.26 (1)	3.64
B- C	-3642 / 0	-124.4	-124.4	0.47 (1)	3.31
C- D	-3010 / 0	-124.4	-124.4	0.41 (1)	3.68
D- E	-2722 / 0	-124.4	-124.4	0.51 (1)	3.69
E- F	-2722 / 0	-124.4	-124.4	0.51 (1)	3.69
F- G	-2807 / 0	-124.4	-124.4	0.51 (1)	3.67
G- H	-3078 / 0	-124.4	-124.4	0.55 (1)	3.49
H- I	0 / 47	-124.4	-124.4	0.17 (1)	10.00
J- H	-2695 / 0	0.0	0.0	0.28 (1)	5.24
R- Q	0 / 0	-39.2	-39.2	0.07 (1)	10.00
Q- P	0 / 3459	-39.2	-39.2	0.67 (1)	10.00
P- O	0 / 3063	-39.2	-39.2	0.58 (1)	10.00
O- N	0 / 2483	-39.2	-39.2	0.53 (1)	10.00
N- M	0 / 2483	-39.2	-39.2	0.53 (1)	10.00
M- L	0 / 2303	-39.2	-39.2	0.50 (1)	10.00
L- K	0 / 2594	-39.2	-39.2	0.55 (1)	10.00
K- J	0 / 0	-39.2	-39.2	0.22 (3)	10.00

WEBS

MEMB. FR-TO	MAX. FACTORED FORCE (LBS)	MAX CSI (LC)
A- Q	0 / 4099	0.92 (1)
Q- B	-2255 / 0	0.35 (1)
B- P	-438 / 0	0.17 (1)
P- C	0 / 398	0.09 (2)
C- O	-884 / 0	0.69 (1)
O- D	0 / 837	0.19 (1)
D- M	0 / 434	0.10 (1)
M- E	-773 / 0	0.97 (1)
M- F	0 / 760	0.17 (1)
L- F	0 / 423	0.10 (2)
L- G	-398 / 0	0.33 (1)
K- G	-312 / 75	0.11 (1)
K- H	0 / 2651	0.60 (1)

[M][F]

DESIGN CRITERIA

SPECIFIED LOADS:

TOP CH.	LL	=	34.8	PSF
	DL	=	8.0	PSF
BOT CH.	LL	=	10.5	PSF
	DL	=	7.3	PSF
TOTAL LOAD		=	60.6	PSF

SPACING = 24.0 IN. C/C

LOADING IN ALL FLAT SECTIONS BASED ON A SLOPE OF 2.00/12 MINIMUM

THIS TRUSS IS DESIGNED FOR RESIDENTIAL OR SMALL BUILDING REQUIREMENTS OF PART 9, NBCC 2015

THIS DESIGN COMPLIES WITH:
- PART 9 OF BCBC 2018 , ABC 2019
- PART 9 OF OBC 2012 (2019 AMENDMENT)
- CSA 086-14
- TPIC 2014

(55 % OF 48.1 P.S.F. G.S.L. PLUS 8.4 P.S.F. RAIN LOAD) EQUALS 34.8 P.S.F. SPECIFIED ROOF LIVE LOAD

ALLOWABLE DEFL.(LL)= L/360 (1.06")
CALCULATED VERT. DEFL.(LL) = L/ 999 (0.15")
ALLOWABLE DEFL.(TL)= L/360 (1.06")
CALCULATED VERT. DEFL.(TL) = L/ 999 (0.26")

CSI: TC=0.55/1.00 (G-H:1) , BC=0.67/1.00 (P-Q:1) , WB=0.97/1.00 (E-M:1) , SSI=0.31/1.00 (E-F:1)

DOL LUMBER=1.00 NAIL=1.00 LS BEND=1.10 COMP=1.10 SHEAR=1.10 TENS= 1.10

COMPANION LIVE LOAD FACTOR = 1.00

TRUSS PLATE MANUFACTURER IS NOT RESPONSIBLE FOR QUALITY CONTROL IN THE TRUSS MANUFACTURING PLANT .

NAIL VALUES

PLATE	GRIP(DRY) (PSI) MAX	MIN	SHEAR (PLI) MAX	MIN	SECTION (PLI) MAX	MIN
MT20	650	371	1747	788	1987	1873

PLATE PLACEMENT TOL. = 0.250 inches

PLATE ROTATION TOL. = 5.0 Deg.

JSI GRIP= 0.90 (J) (INPUT = 0.90)
JSI METAL= 0.75 (N) (INPUT = 1.00)

LICENSED PROFESSIONAL ENGINEER
N.A. EL-MASRI
PROVINCE OF ONTARIO
Dec 18, 2020

READ ALL NOTES ON THIS PAGE AND ON ENGINEERING NOTE PAGE ENP-1. THIS NOTE PAGE IS AN INTEGRAL PART OF THIS DRAWING AS IT CONTAINS SPECIFICATIONS AND CRITERIA USED IN THE DESIGN OF THIS COMPONENT.

Town of East Gwillimbury
Building Standards Branch BCIN #16487

These plans have been reviewed for use with the corrections as noted. No other changes may be made without written approval of the Building Standards Branch. All work must comply with Zoning By-Law 2018-043, as amended, and the Ontario Building Code, as amended. These approved documents must be kept on site at all times. The building permit must be clearly posted on site at all times.

Discipline	Reviewer	BCIN	Date
Building Code	H. Authier	43236	2021-02-25
Sewage System			
Zoning			

KOTT

JOB NAME	TRUSS NAME	QUANTITY	PLY	JOB DESC.		DRWG NO.
NE1220-124	T03	1	1	TRUSS DESC.	GREENPARK - TRINAR HALL - GLENWAY 12A ELE 1	

Version 8.420 S Oct 9 2020 MiTek Industries, Inc. Fri Dec 18 08:14:50 2020 Page 1
ID:9SrEih2qK4qREOqiXOaa nzGFb3-CKHO Qn4PlVVPfaXhiJZG?A7sTJn1219W8sH5zy7o

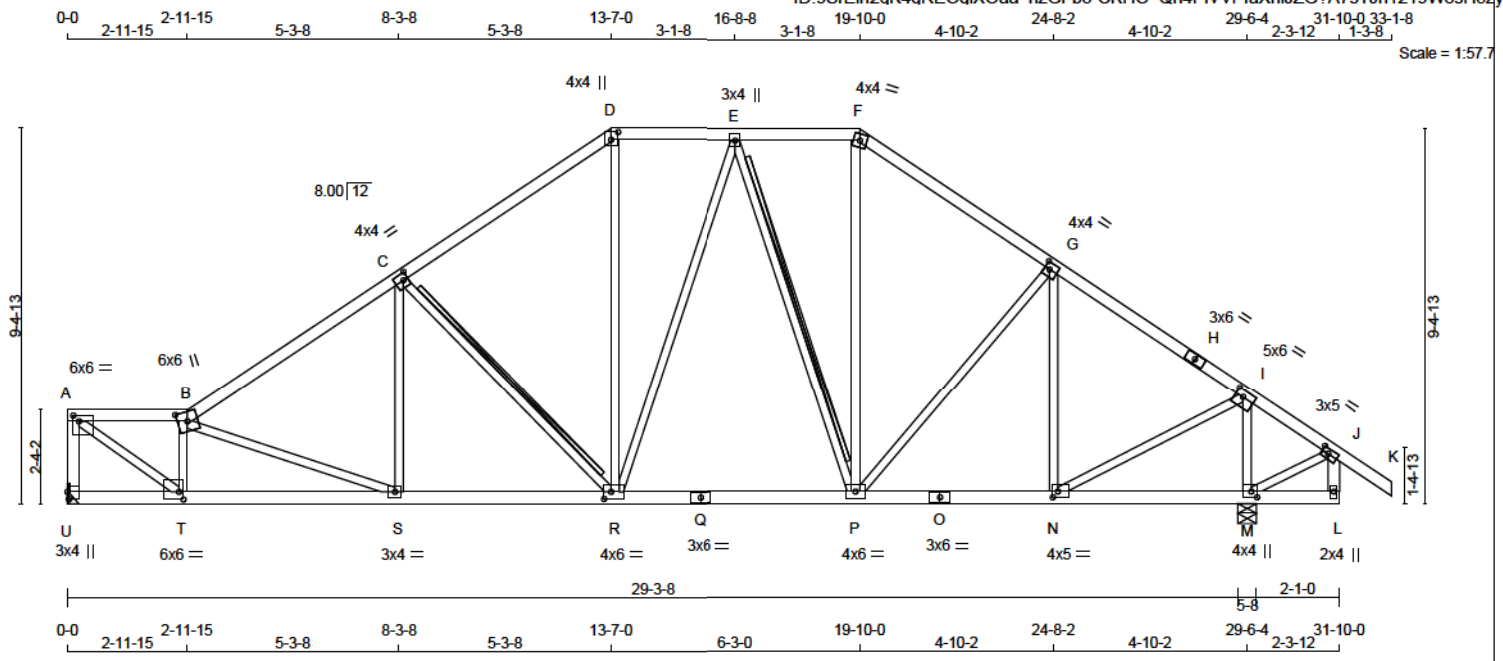

TOTAL WEIGHT = 150 lb

LUMBER
N. L. G. A. RULES

CHORDS	SIZE		LUMBER	DESCR.
U - A	2x4	DRY	No.2	SPF
A - B	2x4	DRY	No.2	SPF
B - D	2x4	DRY	No.2	SPF
D - F	2x4	DRY	No.2	SPF
F - H	2x4	DRY	No.2	SPF
H - K	2x4	DRY	No.2	SPF
L - J	2x4	DRY	No.2	SPF
U - Q	2x4	DRY	No.2	SPF
Q - O	2x4	DRY	No.2	SPF
O - L	2x4	DRY	No.2	SPF
ALL WEBS EXCEPT	2x3	DRY	No.2	SPF

DRY: SEASONED LUMBER.

PLATES (table is in inches)

JT	TYPE	PLATES	W	LEN	Y	X
A	TMVW-t	MT20	6.0	6.0	1.75	1.75
B	TTWW+m	MT20	6.0	6.0	3.00	2.75
C	TMWW-t	MT20	4.0	4.0	2.00	1.50
D	TTW+p	MT20	4.0	4.0	2.25	2.25
E	TMWW+t	MT20	3.0	4.0		
F	TTW-m	MT20	4.0	4.0		
G	TMWW-t	MT20	4.0	4.0	2.00	1.50
H	TS-t	MT20	3.0	6.0		
I	TMWW-t	MT20	5.0	6.0	2.00	2.50
J	TMVW-t	MT20	3.0	5.0	1.50	2.00
L	BMV+p	MT20	2.0	4.0		
M	BMWW1+t	MT20	4.0	4.0	1.75	1.75
N	BMWW-t	MT20	4.0	5.0	1.75	1.50
O	BS-t	MT20	3.0	6.0		
P	BMWWW-t	MT20	4.0	6.0		
Q	BS-t	MT20	3.0	6.0		
R	BMWWW-t	MT20	4.0	6.0	2.00	2.00
S	BMWW-t	MT20	3.0	4.0		
T	BMWW-t	MT20	6.0	6.0	2.25	1.50
U	BMV1+p	MT20	3.0	4.0	2.00	0.50

DIMENSIONS, SUPPORTS AND LOADINGS SPECIFIED BY FABRICATOR TO BE VERIFIED BY BUILDING DESIGNER

BEARINGS

JT	FACTORED GROSS REACTION VERT	HORZ	MAXIMUM GROSS REACTION DOWN	HORZ	FACTORED UPLIFT	INPUT BRG IN-SX	REQRD BRG IN-SX
U	2388	0	2388	0	0	MECHANICAL	
M	2993	0	2993	0	0	5-8	4-3

A SUITABLE HANGER/MECHANICAL CONNECTION IS REQUIRED AT JOINT U. MINIMUM BEARING LENGTH AT JOINT U = 4-4.

UNFACTORED REACTIONS

JT	1ST LCASE COMBINED	MAX./MIN. COMPONENT REACTIONS SNOW	LIVE	PERM.LIVE	WIND	DEAD	SOIL
U	1769	1014 / 0	308 / 0	0 / 0	0 / 0	447 / 0	0 / 0
M	2207	1298 / 0	360 / 0	0 / 0	0 / 0	549 / 0	0 / 0

BEARING MATERIAL TO BE SPF NO.2 OR BETTER AT JOINT(S) M

BRACING
TOP CHORD TO BE SHEATHED OR MAX. PURLIN SPACING = 3.37 FT.
MAX. UNBRACED BOTTOM CHORD LENGTH = 6.25 FT OR RIGID CEILING DIRECTLY APPLIED.

ALL PITCH BREAKS AND PERIMETER CORNER JOINTS MUST BE LATERALLY RESTRAINED.

2x4 DRY SPF No.2 T-BRACE AT C-R, E-P

FASTEN T AND I-BRACES TO NARROW EDGE OF WEB WITH ONE ROW PER PLY OF 3" COMMON WIRE NAILS @ 6" O.C. WITH 3" MINIMUM END DISTANCE. BRACE MUST COVER 90% OF WEB LENGTH.

END VERTICAL(S) MUST BE SHEATHED OR HAVE BRACES AS INDICATED IN THE MAX. UNBRACED LENGTH COLUMN OF THE TABLE BELOW

LOADING
TOTAL LOAD CASES: (4)

CHORDS

MEMB. FR-TO	MAX. FACTORED FORCE (LBS)	FACTORED VERT. LOAD (PLF) FROM	TO	LC1 MAX CSI (LC)	MAX. UNBRAC LENGTH
U- A	-2334 / 0	0.0	0.0	0.28 (1)	5.58
A- B	-3049 / 0	-124.4	-124.4	0.24 (1)	3.81
B- C	-3131 / 0	-124.4	-124.4	0.62 (1)	3.37
C- D	-2340 / 0	-124.4	-124.4	0.54 (1)	3.92
D- E	-1917 / 0	-124.4	-124.4	0.16 (1)	4.72
E- F	-1687 / 0	-124.4	-124.4	0.15 (1)	4.98
F- G	-2055 / 0	-124.4	-124.4	0.40 (1)	4.33
G- H	-1926 / 0	-124.4	-124.4	0.38 (1)	4.48
H- I	-1926 / 0	-124.4	-124.4	0.38 (1)	4.48
I- J	0 / 292	-124.4	-124.4	0.30 (1)	10.00
J- K	0 / 47	-124.4	-124.4	0.17 (1)	10.00
L- J	0 / 17	0.0	0.0	0.00 (3)	7.81
U- T	0 / 0	-39.2	-39.2	0.10 (3)	10.00
T- S	0 / 3152	-39.2	-39.2	0.64 (1)	10.00
S- R	0 / 2645	-39.2	-39.2	0.57 (1)	10.00
R- Q	0 / 1876	-39.2	-39.2	0.45 (1)	10.00
Q- P	0 / 1876	-39.2	-39.2	0.45 (1)	10.00
P- O	0 / 1613	-39.2	-39.2	0.40 (2)	10.00
O- N	0 / 1613	-39.2	-39.2	0.40 (2)	10.00
N- M	-206 / 0	-39.2	-39.2	0.12 (2)	6.25
M- L	0 / 0	-39.2	-39.2	0.16 (2)	10.00

WEBS

MEMB. FR-TO	MAX. FACTORED FORCE (LBS)	MAX CSI (LC)
A- T	0 / 3738	0.84 (1)
T- B	-2015 / 0	0.31 (1)
B- S	-544 / 0	0.31 (1)
S- C	0 / 452	0.10 (2)
C- R	-1057 / 0	0.48 (1)
R- D	0 / 861	0.19 (1)
R- E	0 / 144	0.03 (2)
E- P	-602 / 0	0.45 (1)
P- F	0 / 721	0.10 (1)
P- G	0 / 101	0.02 (1)
N- G	-815 / 0	0.49 (1)
N- I	0 / 2068	0.47 (1)
M- I	-2699 / 0	0.47 (1)
M- J	-227 / 0	0.04 (1)

DESIGN CRITERIA

SPECIFIED LOADS:

TOP CH.	LL	=	34.8	PSF
	DL	=	8.0	PSF
BOT CH.	LL	=	10.5	PSF
	DL	=	7.3	PSF
TOTAL LOAD		=	60.6	PSF

SPACING = 24.0 IN. C/C

LOADING IN ALL FLAT SECTIONS BASED ON A SLOPE OF 2.00/12 MINIMUM

THIS TRUSS IS DESIGNED FOR RESIDENTIAL OR SMALL BUILDING REQUIREMENTS OF PART 9, NBCC 2015

THIS DESIGN COMPLIES WITH:
- PART 9 OF BCBC 2018 , ABC 2019
- PART 9 OF OBC 2012 (2019 AMENDMENT)
- CSA 086-14
- TPIC 2014

(55 % OF 48.1 P.S.F. G.S.L. PLUS 8.4 P.S.F. RAIN LOAD) EQUALS 34.8 P.S.F. SPECIFIED ROOF LIVE LOAD

ALLOWABLE DEFL.(LL)= L/360 (0.98")
CALCULATED VERT. DEFL.(LL) = L/ 999 (0.13")
ALLOWABLE DEFL.(TL)= L/360 (0.98")
CALCULATED VERT. DEFL.(TL) = L/ 999 (0.22")

CANTILEVER DEFLECTION:
ALLOWABLE DEFL.(LL)= L/120 (0.23")
CALCULATED VERT. DEFL.(LL) = L/ 999 (0.00")
ALLOWABLE DEFL.(TL)= L/120 (0.23")
CALCULATED VERT. DEFL.(TL) = L/ 999 (0.01")

CSI: TC=0.62/1.00 (B-C:1) , BC=0.64/1.00 (S-T:1) , WB=0.84/1.00 (A-T:1) , SSI=0.27/1.00 (B-C:1)

DOL LUMBER=1.00 NAIL=1.00 LS BEND=1.10 COMP=1.10 SHEAR=1.10 TENS= 1.10

COMPANION LIVE LOAD FACTOR = 1.00

TRUSS PLATE MANUFACTURER IS NOT RESPONSIBLE FOR QUALITY CONTROL IN THE TRUSS MANUFACTURING PLANT .

NAIL VALUES

PLATE	GRIP(DRY) (PSI) MAX	MIN	SHEAR (PLI) MAX	MIN	SECTION (PLI) MAX	MIN
MT20	650	371	1747	788	1987	1873

PLATE PLACEMENT TOL. = 0.250 inches

PLATE ROTATION TOL. = 5.0 Deg.

JSI GRIP= 0.90 (A) (INPUT = 0.90)
JSI METAL= 0.73 (A) (INPUT = 1.00)

LICENSED PROFESSIONAL ENGINEER
N.A. EL-MASRI
PROVINCE OF ONTARIO
Dec 18, 2020

READ ALL NOTES ON THIS PAGE AND ON ENGINEERING NOTE PAGE ENP-1. THIS NOTE PAGE IS AN INTEGRAL PART OF THIS DRAWING AS IT CONTAINS SPECIFICATIONS AND CRITERIA USED IN THE DESIGN OF THIS COMPONENT.

Town of East Gwillimbury
Building Standards Branch BCIN #16487

These plans have been reviewed for use with the corrections as noted. No other changes may be made without written approval of the Building Standards Branch. All work must comply with Zoning By-Law 2018-043, as amended, and the Ontario Building Code, as amended. These approved documents must be kept on site at all times. The building permit must be clearly posted on site at all times.

Discipline	Reviewer	BCIN	Date
Building Code	H. Authier	43236	2021-02-25
Sewage System			
Zoning			

KOTT

JOB NAME	TRUSS NAME	QUANTITY	PLY	JOB DESC.		DRWG NO.
NE1220-124	T04	1	1	TRUSS DESC.	GREENPARK - TRINAR HALL - GLENWAY 12A ELE 1	**Page 23 of 44**

Version 8.420 S Oct 9 2020 MiTek Industries, Inc. Fri Dec 18 08:14:51 2020 Page 1
ID:9SrEih2qK4qREOqiXOaa nzGFb3-qWrmCmniA3dM0p9iFQqooDjEWtdDmVFJlocqdQy7or

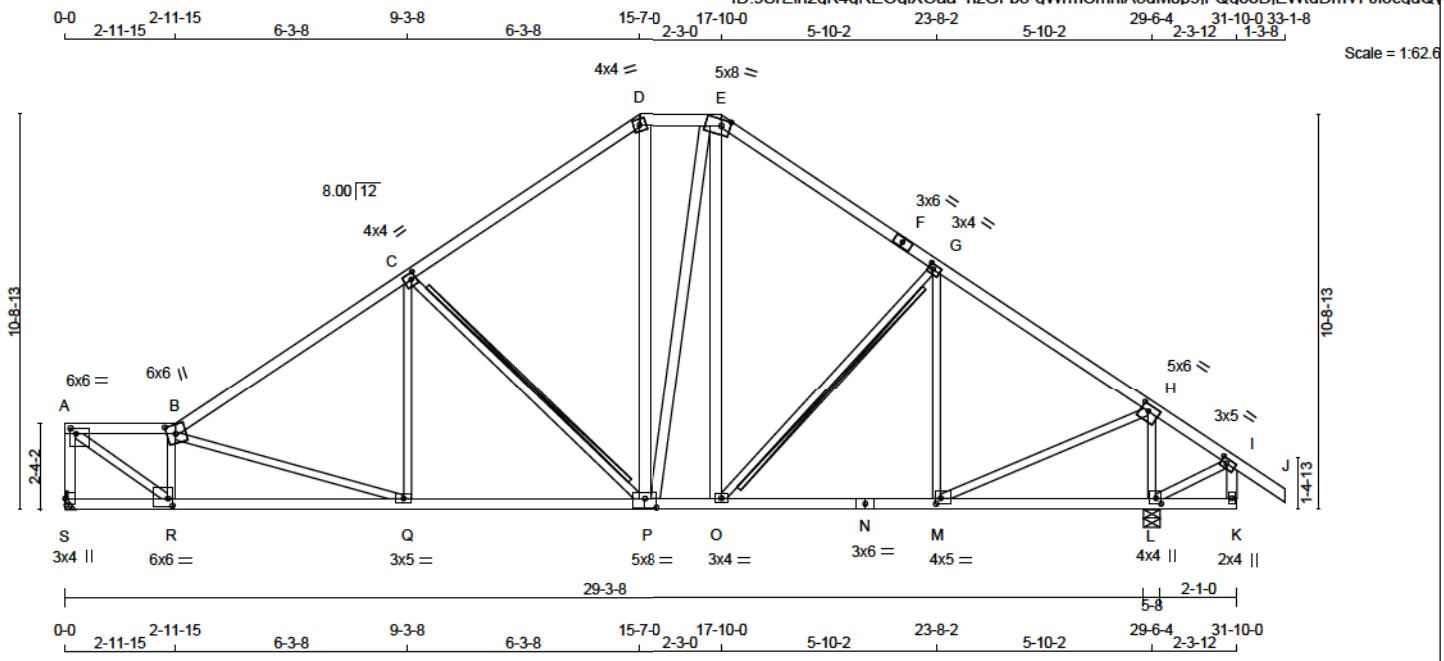

TOTAL WEIGHT = 161 lb

LUMBER
N. L. G. A. RULES

CHORDS	SIZE		LUMBER	DESCR.
S - A	2x4	DRY	No.2	SPF
A - B	2x4	DRY	No.2	SPF
B - D	2x4	DRY	No.2	SPF
D - E	2x4	DRY	No.2	SPF
E - F	2x4	DRY	No.2	SPF
F - J	2x4	DRY	No.2	SPF
K - I	2x4	DRY	No.2	SPF
S - P	2x4	DRY	No.2	SPF
P - N	2x4	DRY	No.2	SPF
N - K	2x4	DRY	No.2	SPF
ALL WEBS	2x3	DRY	No.2	SPF
EXCEPT				
P - D	2x4	DRY	No.2	SPF
P - E	2x4	DRY	No.2	SPF
O - E	2x4	DRY	No.2	SPF

DRY: SEASONED LUMBER.

PLATES (table is in inches)

JT	TYPE	PLATES	W	LEN	Y	X
A	TMVW-t	MT20	6.0	6.0	1.75	1.75
B	TTWW+m	MT20	6.0	6.0	3.00	2.75
C	TMWW-t	MT20	4.0	4.0	2.00	1.50
D	TTW-m	MT20	4.0	4.0		
E	TTWW-m	MT20	5.0	8.0	2.00	2.75
F	TS-t	MT20	3.0	6.0		
G	TMWW-t	MT20	3.0	4.0	1.50	1.50
H	TMWW-t	MT20	5.0	6.0	2.00	2.50
I	TMVW-t	MT20	3.0	5.0	1.50	2.00
K	BMV+p	MT20	2.0	4.0		
L	BMWW1+t	MT20	4.0	4.0	1.75	1.75
M	BMWW-t	MT20	4.0	5.0	1.75	1.50
N	BS-t	MT20	3.0	6.0		
O	BMWW-t	MT20	3.0	4.0		
P	BSWWW-l	MT20	5.0	8.0	3.00	4.00
Q	BMWW-t	MT20	3.0	5.0		
R	BMWW-t	MT20	6.0	6.0	2.25	1.50
S	BMV1+p	MT20	3.0	4.0	2.00	0.50

DIMENSIONS, SUPPORTS AND LOADINGS SPECIFIED BY FABRICATOR TO BE VERIFIED BY BUILDING DESIGNER

BEARINGS

JT	FACTORED GROSS REACTION VERT	HORZ	MAXIMUM GROSS REACTION DOWN	HORZ	UPLIFT	INPUT BRG IN-SX	REQRD BRG IN-SX
S	2388	0	2388	0	0	MECHANICAL	
L	2993	0	2993	0	0	5-8	4-3

A SUITABLE HANGER/MECHANICAL CONNECTION IS REQUIRED AT JOINT S. MINIMUM BEARING LENGTH AT JOINT S = 4-4.

UNFACTORED REACTIONS

JT	1ST LCASE COMBINED	MAX./MIN. COMPONENT REACTIONS SNOW	LIVE	PERM.LIVE	WIND	DEAD	SOIL
S	1769	1014 / 0	308 / 0	0 / 0	0 / 0	447 / 0	0 / 0
L	2207	1298 / 0	360 / 0	0 / 0	0 / 0	549 / 0	0 / 0

BEARING MATERIAL TO BE SPF NO.2 OR BETTER AT JOINT(S) L

BRACING
TOP CHORD TO BE SHEATHED OR MAX. PURLIN SPACING = 3.02 FT.
MAX. UNBRACED BOTTOM CHORD LENGTH = 6.25 FT OR RIGID CEILING DIRECTLY APPLIED.

ALL PITCH BREAKS AND PERIMETER CORNER JOINTS MUST BE LATERALLY RESTRAINED.

2x4 DRY SPF No.2 T-BRACE AT C-P, G-O

FASTEN T AND I-BRACES TO NARROW EDGE OF WEB WITH ONE ROW PER PLY OF 3" COMMON WIRE NAILS @ 6" O.C. WITH 3" MINIMUM END DISTANCE. BRACE MUST COVER 90% OF WEB LENGTH.

END VERTICAL(S) MUST BE SHEATHED OR HAVE BRACES AS INDICATED IN THE MAX. UNBRACED LENGTH COLUMN OF THE TABLE BELOW

LOADING
TOTAL LOAD CASES: (4)

CHORDS

MEMB. FR-TO	MAX. FACTORED FORCE (LBS)	FACTORED VERT. LOAD (PLF) FROM	TO	LC1 MAX CSI (LC)	MAX. UNBRAC LENGTH
S- A	-2339 / 0	0.0	0.0	0.28 (1)	5.58
A- B	-3056 / 0	-124.4	-124.4	0.24 (1)	3.81
B- C	-3017 / 0	-124.4	-124.4	0.89 (1)	3.02
C- D	-2029 / 0	-124.4	-124.4	0.75 (1)	3.78
D- E	-1656 / 0	-124.4	-124.4	0.11 (1)	5.07
E- F	-1959 / 0	-124.4	-124.4	0.59 (1)	4.14
F- G	-1959 / 0	-124.4	-124.4	0.59 (1)	4.14
G- H	-2049 / 0	-124.4	-124.4	0.58 (1)	4.10
H- I	0 / 269	-124.4	-124.4	0.39 (1)	10.00
I- J	0 / 47	-124.4	-124.4	0.17 (1)	10.00
K- I	-8 / 6	0.0	0.0	0.00 (3)	7.81
S- R	0 / 0	-39.2	-39.2	0.12 (3)	10.00
R- Q	0 / 3158	-39.2	-39.2	0.75 (1)	10.00
Q- P	0 / 2557	-39.2	-39.2	0.66 (2)	10.00
P- O	0 / 1597	-39.2	-39.2	0.38 (1)	10.00
O- N	0 / 1721	-39.2	-39.2	0.43 (2)	10.00
N- M	0 / 1721	-39.2	-39.2	0.43 (2)	10.00
M- L	-173 / 0	-39.2	-39.2	0.18 (3)	6.25
L- K	0 / 0	-39.2	-39.2	0.19 (2)	10.00

WEBS

MEMB. FR-TO	MAX. FACTORED FORCE (LBS)	MAX CSI (LC)
A- R	0 / 3746	0.84 (1)
R- B	-2004 / 0	0.31 (1)
B- Q	-631 / 0	0.53 (1)
Q- C	0 / 554	0.12 (2)
C- P	-1265 / 0	0.79 (1)
P- D	0 / 663	0.11 (1)
P- E	0 / 306	0.05 (1)
O- E	0 / 369	0.06 (2)
O- G	-169 / 0	0.11 (1)
M- G	-619 / 0	0.49 (1)
M- H	0 / 2076	0.47 (1)
L- H	-2695 / 0	0.47 (1)
L- I	-191 / 0	0.03 (1)

DESIGN CRITERIA

SPECIFIED LOADS:

TOP CH.	LL	=	34.8	PSF
	DL	=	8.0	PSF
BOT CH.	LL	=	10.5	PSF
	DL	=	7.3	PSF
TOTAL LOAD		=	60.6	PSF

SPACING = 24.0 IN. C/C

LOADING IN ALL FLAT SECTIONS BASED ON A SLOPE OF 2.00/12 MINIMUM

THIS TRUSS IS DESIGNED FOR RESIDENTIAL OR SMALL BUILDING REQUIREMENTS OF PART 9, NBCC 2015

THIS DESIGN COMPLIES WITH:
- PART 9 OF BCBC 2018 , ABC 2019
- PART 9 OF OBC 2012 (2019 AMENDMENT)
- CSA 086-14
- TPIC 2014

(55 % OF 48.1 P.S.F. G.S.L. PLUS 8.4 P.S.F. RAIN LOAD) EQUALS 34.8 P.S.F. SPECIFIED ROOF LIVE LOAD

ALLOWABLE DEFL.(LL)= L/360 (0.98")
CALCULATED VERT. DEFL.(LL) = L/ 999 (0.14")
ALLOWABLE DEFL.(TL)= L/360 (0.98")
CALCULATED VERT. DEFL.(TL) = L/ 999 (0.26")

CANTILEVER DEFLECTION:
ALLOWABLE DEFL.(LL)= L/120 (0.23")
CALCULATED VERT. DEFL.(LL) = L/ 999 (0.00")
ALLOWABLE DEFL.(TL)= L/120 (0.23")
CALCULATED VERT. DEFL.(TL) = L/ 999 (0.01")

CSI: TC=0.89/1.00 (B-C:1) , BC=0.75/1.00 (Q-R:1) , WB=0.84/1.00 (A-R:1) , SSI=0.32/1.00 (B-C:1)

DOL LUMBER=1.00 NAIL=1.00 LS BEND=1.10 COMP=1.10 SHEAR=1.10 TENS= 1.10

COMPANION LIVE LOAD FACTOR = 1.00

TRUSS PLATE MANUFACTURER IS NOT RESPONSIBLE FOR QUALITY CONTROL IN THE TRUSS MANUFACTURING PLANT .

NAIL VALUES

PLATE	GRIP(DRY) (PSI) MAX	MIN	SHEAR (PLI) MAX	MIN	SECTION (PLI) MAX	MIN
MT20	650	371	1747	788	1987	1873

PLATE PLACEMENT TOL. = 0.250 inches

PLATE ROTATION TOL. = 5.0 Deg.

JSI GRIP= 0.90 (A) (INPUT = 0.90)
JSI METAL= 0.73 (A) (INPUT = 1.00)

LICENSED PROFESSIONAL ENGINEER
N.A. EL-MASRI
PROVINCE OF ONTARIO
Dec 18, 2020

READ ALL NOTES ON THIS PAGE AND ON ENGINEERING NOTE PAGE ENP-1. THIS NOTE PAGE IS AN INTEGRAL PART OF THIS DRAWING AS IT CONTAINS SPECIFICATIONS AND CRITERIA USED IN THE DESIGN OF THIS COMPONENT.

Town of East Gwillimbury
Building Standards Branch BCIN #16487

These plans have been reviewed for use with the corrections as noted. No other changes may be made without written approval of the Building Standards Branch. All work must comply with Zoning By-Law 2018-043, as amended, and the Ontario Building Code, as amended. These approved documents must be kept on site at all times. The building permit must be clearly posted on site at all times.

Discipline	Reviewer	BCIN	Date
Building Code	H. Authier	43236	2021-02-25
Sewage System			
Zoning			

KOTT

JOB NAME	TRUSS NAME	QUANTITY	PLY	JOB DESC.		DWG NO.
NE1220-124	T05	4	1	TRUSS DESC.	GREENPARK - TRINAR HALL - GLENWAY 12A ELE 1	

Version 8.420 S Oct 9 2020 MiTek Industries, Inc. Fri Dec 18 08:14:52 2020 Page 1
ID:9SrEih2gK4qREOqiXOaa nzGFb3-8jP9P6oKxMlCezjvp7L1LQGRvGyeVweSzSLO9sy7c

Scale = 1:67.1

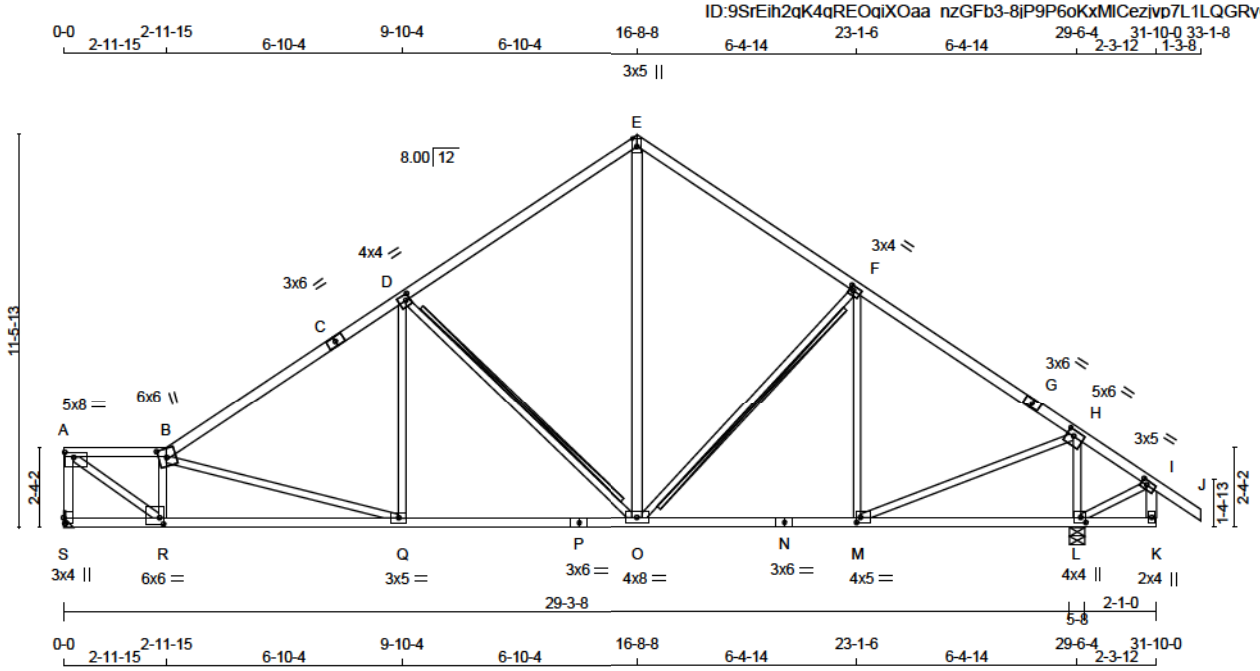

TOTAL WEIGHT = 4 X 141 = 564 lb

[M][F]

LUMBER
N. L. G. A. RULES

CHORDS	SIZE		LUMBER	DESCR.
S - A	2x4	DRY	No.2	SPF
A - B	2x4	DRY	No.2	SPF
B - C	2x4	DRY	2100F 1.8E	SPF
C - E	2x4	DRY	2100F 1.8E	SPF
E - G	2x4	DRY	No.2	SPF
G - J	2x4	DRY	2100F 1.8E	SPF
K - I	2x4	DRY	No.2	SPF
S - P	2x4	DRY	No.2	SPF
P - N	2x4	DRY	No.2	SPF
N - K	2x4	DRY	No.2	SPF
ALL WEBS	2x3	DRY	No.2	SPF
EXCEPT				
O - E	2x4	DRY	No.2	SPF

DRY: SEASONED LUMBER.

PLATES (table is in inches)

JT	TYPE	PLATES	W	LEN	Y	X
A	TMVW-t	MT20	5.0	8.0	1.75	3.00
B	TTWW+m	MT20	6.0	6.0	3.00	2.75
C	TS-t	MT20	3.0	6.0		
D	TMWW-t	MT20	4.0	4.0	2.00	1.50
E	TTW+p	MT20	3.0	5.0	2.75	1.50
F	TMWW-t	MT20	3.0	4.0	1.50	1.50
G	TS-t	MT20	3.0	6.0		
H	TMWW-t	MT20	5.0	6.0	2.00	2.50
I	TMVW-t	MT20	3.0	5.0	1.50	2.00
K	BMV+p	MT20	2.0	4.0		
L	BMWW1+t	MT20	4.0	4.0	1.75	1.75
M	BMWW-t	MT20	4.0	5.0	1.75	1.50
N	BS-t	MT20	3.0	6.0		
O	BMWWW-t	MT20	4.0	8.0		
P	BS-t	MT20	3.0	6.0		
Q	BMWW-t	MT20	3.0	5.0		
R	BMWW-t	MT20	6.0	6.0	2.25	1.50
S	BMV1+p	MT20	3.0	4.0	2.00	0.50

DIMENSIONS, SUPPORTS AND LOADINGS SPECIFIED BY FABRICATOR TO BE VERIFIED BY BUILDING DESIGNER

BEARINGS

JT	FACTORED GROSS REACTION VERT	HORZ	MAXIMUM GROSS REACTION DOWN	HORZ	FACTORED UPLIFT	INPUT BRG IN-SX	REQRD BRG IN-SX
S	2388	0	2388	0	0	MECHANICAL	
L	2993	0	2993	0	0	5-8	4-3

A SUITABLE HANGER/MECHANICAL CONNECTION IS REQUIRED AT JOINT S. MINIMUM BEARING LENGTH AT JOINT S = 4-4.

UNFACTORED REACTIONS

JT	1ST LCASE COMBINED	MAX./MIN. COMPONENT REACTIONS SNOW	LIVE	PERM.LIVE	WIND	DEAD	SOIL
S	1769	1014 / 0	308 / 0	0 / 0	0 / 0	447 / 0	0 / 0
L	2207	1298 / 0	360 / 0	0 / 0	0 / 0	549 / 0	0 / 0

BEARING MATERIAL TO BE SPF NO.2 OR BETTER AT JOINT(S) L

BRACING
TOP CHORD TO BE SHEATHED OR MAX. PURLIN SPACING = 3.80 FT.
MAX. UNBRACED BOTTOM CHORD LENGTH = 6.25 FT OR RIGID CEILING DIRECTLY APPLIED.

ALL PITCH BREAKS AND PERIMETER CORNER JOINTS MUST BE LATERALLY RESTRAINED.

2x4 DRY SPF No.2 T-BRACE AT D-O, F-O

FASTEN T AND I-BRACES TO NARROW EDGE OF WEB WITH ONE ROW PER PLY OF 3" COMMON WIRE NAILS @ 6" O.C. WITH 3" MINIMUM END DISTANCE. BRACE MUST COVER 90% OF WEB LENGTH.

END VERTICAL(S) MUST BE SHEATHED OR HAVE BRACES AS INDICATED IN THE MAX. UNBRACED LENGTH COLUMN OF THE TABLE BELOW

LOADING
TOTAL LOAD CASES: (4)

CHORDS

MEMB. FR-TO	MAX. FACTORED FORCE (LBS)	FACTORED VERT. LOAD (PLF) FROM	TO	LC1 MAX CSI (LC)	MAX. UNBRAC LENGTH
S- A	-2350 / 0	0.0	0.0	0.28 (1)	5.57
A- B	-3071 / 0	-124.4	-124.4	0.24 (1)	3.80
B- C	-2941 / 0	-124.4	-124.4	0.62 (1)	4.26
C- D	-2941 / 0	-124.4	-124.4	0.62 (1)	4.26
D- E	-1909 / 0	-124.4	-124.4	0.55 (1)	5.09
E- F	-1897 / 0	-124.4	-124.4	0.71 (1)	3.98
F- G	-2096 / 0	-124.4	-124.4	0.69 (1)	3.89
G- H	-2096 / 0	-124.4	-124.4	0.69 (1)	3.89
H- I	0 / 242	-124.4	-124.4	0.32 (1)	10.00
I- J	0 / 47	-124.4	-124.4	0.11 (1)	10.00
K- I	-17 / 0	0.0	0.0	0.00 (1)	7.81
S- R	0 / 0	-39.2	-39.2	0.18 (3)	10.00
R- Q	0 / 3172	-39.2	-39.2	0.74 (1)	10.00
Q- P	0 / 2498	-39.2	-39.2	0.63 (2)	10.00
P- O	0 / 2498	-39.2	-39.2	0.63 (2)	10.00
O- N	0 / 1759	-39.2	-39.2	0.48 (2)	10.00
N- M	0 / 1759	-39.2	-39.2	0.48 (2)	10.00
M- L	-135 / 0	-39.2	-39.2	0.19 (3)	6.25
L- K	0 / 0	-39.2	-39.2	0.22 (2)	10.00

WEBS

MEMB. FR-TO	MAX. FACTORED FORCE (LBS)	MAX CSI (LC)
A- R	0 / 3765	0.85 (1)
R- B	-1985 / 0	0.31 (1)
B- Q	-704 / 0	0.73 (1)
Q- D	0 / 544	0.12 (2)
D- O	-1329 / 0	0.96 (1)
O- E	0 / 1417	0.23 (1)
O- F	-322 / 0	0.23 (1)
M- F	-532 / 4	0.49 (1)
M- H	0 / 2040	0.40 (1)
L- H	-2693 / 0	0.47 (1)
L- I	-149 / 0	0.02 (1)

DESIGN CRITERIA

SPECIFIED LOADS:
TOP CH. LL = 34.8 PSF
DL = 8.0 PSF
BOT CH. LL = 10.5 PSF
DL = 7.3 PSF
TOTAL LOAD = 60.6 PSF

SPACING = 24.0 IN. C/C

LOADING IN ALL FLAT SECTIONS BASED ON A SLOPE OF 2.00/12 MINIMUM

THIS TRUSS IS DESIGNED FOR RESIDENTIAL OR SMALL BUILDING REQUIREMENTS OF PART 9, NBCC 2015

THIS DESIGN COMPLIES WITH:
- PART 9 OF BCBC 2018 , ABC 2019
- PART 9 OF OBC 2012 (2019 AMENDMENT)
- CSA 086-14
- TPIC 2014

(55 % OF 48.1 P.S.F. G.S.L. PLUS 8.4 P.S.F. RAIN LOAD) EQUALS 34.8 P.S.F. SPECIFIED ROOF LIVE LOAD

ALLOWABLE DEFL.(LL)= L/360 (0.98")
CALCULATED VERT. DEFL.(LL) = L/ 999 (0.15")
ALLOWABLE DEFL.(TL)= L/360 (0.98")
CALCULATED VERT. DEFL.(TL) = L/ 999 (0.27")

CANTILEVER DEFLECTION:
ALLOWABLE DEFL.(LL)= L/120 (0.23")
CALCULATED VERT. DEFL.(LL) = L/ 999 (0.00")
ALLOWABLE DEFL.(TL)= L/120 (0.23")
CALCULATED VERT. DEFL.(TL) = L/ 999 (0.01")

CSI: TC=0.71/1.00 (E-F:1) , BC=0.74/1.00 (Q-R:1) , WB=0.96/1.00 (D-O:1) , SSI=0.35/1.00 (B-D:1)

DOL LUMBER=1.00 NAIL=1.00 LS BEND=1.10 COMP=1.10 SHEAR=1.10 TENS= 1.10

COMPANION LIVE LOAD FACTOR = 1.00

TRUSS PLATE MANUFACTURER IS NOT RESPONSIBLE FOR QUALITY CONTROL IN THE TRUSS MANUFACTURING PLANT .

NAIL VALUES

PLATE	GRIP(DRY) (PSI) MAX	MIN	SHEAR (PLI) MAX	MIN	SECTION (PLI) MAX	MIN
MT20	650	371	1747	788	1987	1873

PLATE PLACEMENT TOL. = 0.250 inches

PLATE ROTATION TOL. = 5.0 Deg.

JSI GRIP= 0.89 (A) (INPUT = 0.90)
JSI METAL= 0.76 (P) (INPUT = 1.00)

LICENSED PROFESSIONAL ENGINEER
N.A. EL-MASRI
PROVINCE OF ONTARIO
Dec 18, 2020

READ ALL NOTES ON THIS PAGE AND ON ENGINEERING NOTE PAGE ENP-1. THIS NOTE PAGE IS AN INTEGRAL PART OF THIS DRAWING AS IT CONTAINS SPECIFICATIONS AND CRITERIA USED IN THE DESIGN OF THIS COMPONENT.

Town of East Gwillimbury
Building Standards Branch BCIN #16487

These plans have been reviewed for use with the corrections as noted. No other changes may be made without written approval of the Building Standards Branch. All work must comply with Zoning By-Law 2018-043, as amended, and the Ontario Building Code, as amended. These approved documents must be kept on site at all times. The building permit must be clearly posted on site at all times.

Discipline	Reviewer	BCIN	Date
Building Code	H. Authier	43236	2021-02-25
Sewage System			
Zoning			

KOTT

JOB NAME	TRUSS NAME	QUANTITY	PLY	JOB DESC.		DWG NO.
NE1220-124	T06	1	1	TRUSS DESC.	GREENPARK - TRINAR HALL - GLENWAY 12A ELE 1	

Version 8.420 S Oct 9 2020 MiTek Industries, Inc. Fri Dec 18 08:14:53 2020 Page 1
ID:9SrEih2gK4gREOgiXOaa nzGFb3-cvvXdSpviqt3G7I6MqsGueoaRqImETucC65xilV7or

Scale = 1:54.1

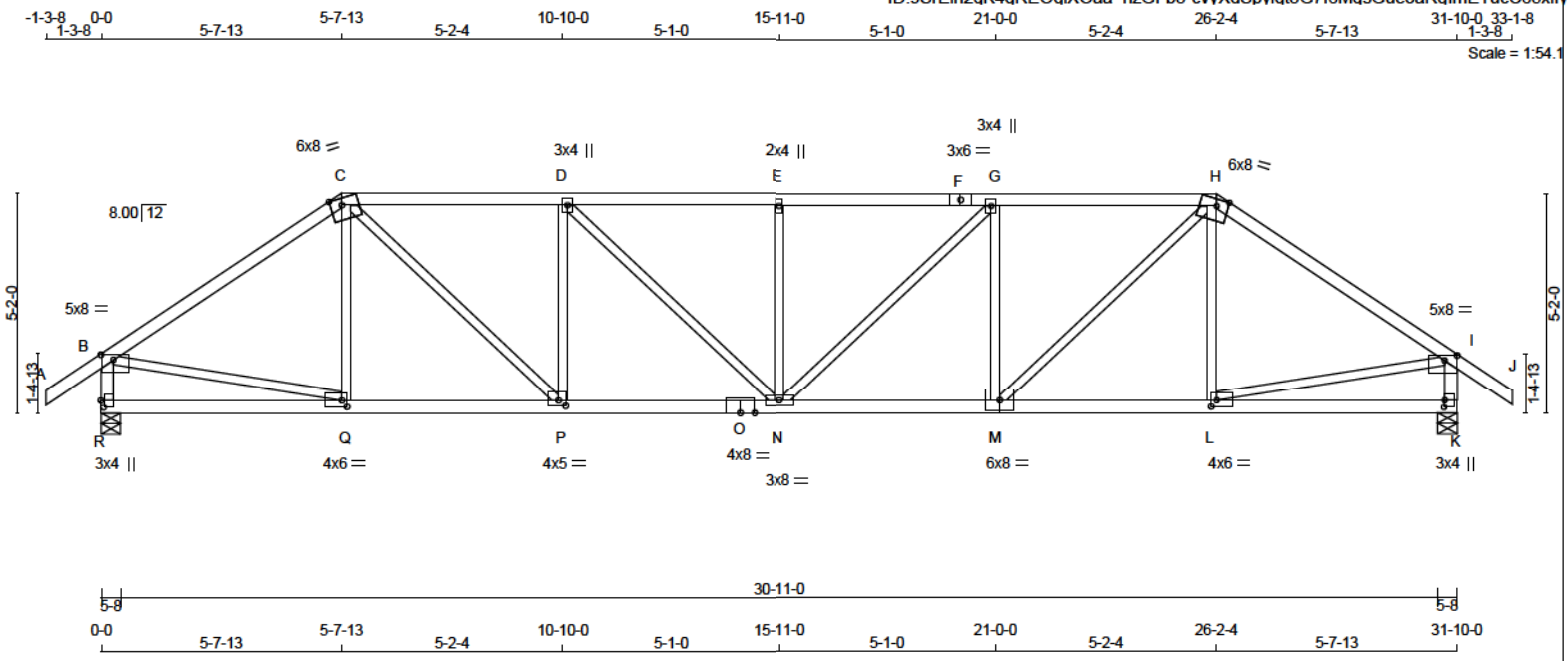

TOTAL WEIGHT = 131 lb

LUMBER
N. L. G. A. RULES

CHORDS	SIZE		LUMBER	DESCR.
A - C	2x4	DRY	2100F 1.8E	SPF
C - F	2x4	DRY	No.2	SPF
F - H	2x4	DRY	No.2	SPF
H - J	2x4	DRY	2100F 1.8E	SPF
R - B	2x4	DRY	No.2	SPF
K - I	2x4	DRY	No.2	SPF
R - O	2x4	DRY	No.2	SPF
O - M	2x4	DRY	No.2	SPF
M - K	2x4	DRY	No.2	SPF
ALL WEBS EXCEPT	2x3	DRY	No.2	SPF

DRY: SEASONED LUMBER.

PLATES (table is in inches)

JT	TYPE	PLATES	W	LEN	Y	X
B	TMVW-p	MT20	5.0	8.0	1.50	3.50
C	TTWW-m	MT20	6.0	8.0	2.00	3.25
D	TMWW+t	MT20	3.0	4.0		
E	TMW+w	MT20	2.0	4.0		
F	TS-t	MT20	3.0	6.0		
G	TMWW+t	MT20	3.0	4.0		
H	TTWW-m	MT20	6.0	8.0	2.00	3.25
I	TMVW-p	MT20	5.0	8.0	1.50	3.50
K	BMV1+p	MT20	3.0	4.0	2.00	0.25
L	BMWW-t	MT20	4.0	6.0	1.75	1.50
M	BSWW-l	MT20	6.0	8.0		
N	BMWWW-t	MT20	3.0	8.0		
O	BS-t	MT20	4.0	8.0		
P	BMWW-t	MT20	4.0	5.0	1.50	2.00
Q	BMWW-t	MT20	4.0	6.0	1.75	1.50
R	BMV1+p	MT20	3.0	4.0	2.00	0.75

DIMENSIONS, SUPPORTS AND LOADINGS SPECIFIED BY FABRICATOR TO BE VERIFIED BY BUILDING DESIGNER

BEARINGS

JT	FACTORED GROSS REACTION VERT	HORZ	MAXIMUM GROSS REACTION DOWN	HORZ	FACTORED UPLIFT	INPUT BRG IN-SX	REQRD BRG IN-SX
R	2776	0	2776	0	0	5-8	5-8
K	2776	0	2776	0	0	5-8	5-8

UNFACTORED REACTIONS

1ST LCASE MAX./MIN. COMPONENT REACTIONS

JT	COMBINED	SNOW	LIVE	PERM.LIVE	WIND	DEAD	SOIL
R	2047	1204 / 0	334 / 0	0 / 0	0 / 0	509 / 0	0 / 0
K	2047	1204 / 0	334 / 0	0 / 0	0 / 0	509 / 0	0 / 0

BEARING MATERIAL TO BE SPF NO.2 OR BETTER AT JOINT(S) R, K

BRACING
TOP CHORD TO BE SHEATHED OR MAX. PURLIN SPACING = 2.61 FT.
MAX. UNBRACED BOTTOM CHORD LENGTH = 10.00 FT OR RIGID CEILING DIRECTLY APPLIED.

ALL PITCH BREAKS AND PERIMETER CORNER JOINTS MUST BE LATERALLY RESTRAINED.

LOADING
TOTAL LOAD CASES: (4)

CHORDS

MEMB. FR-TO	MAX. FORCE (LBS)	FACTORED VERT. LOAD (PLF) FROM	TO	LC1 MAX CSI (LC)	MAX. UNBRAC LENGTH
A- B	0 / 47	-124.4	-124.4	0.11 (1)	10.00
B- C	-3036 / 0	-124.4	-124.4	0.60 (1)	4.22
C- D	-3898 / 0	-124.4	-124.4	0.80 (1)	2.83
D- E	-4312 / 0	-124.4	-124.4	0.86 (1)	2.61
E- F	-4312 / 0	-124.4	-124.4	0.86 (1)	2.61
F- G	-4312 / 0	-124.4	-124.4	0.86 (1)	2.61
G- H	-3888 / 0	-124.4	-124.4	0.80 (1)	2.83
H- I	-3039 / 0	-124.4	-124.4	0.60 (1)	4.22
I- J	0 / 47	-124.4	-124.4	0.11 (1)	10.00
R- B	-2684 / 0	0.0	0.0	0.28 (1)	5.25
K- I	-2687 / 0	0.0	0.0	0.28 (1)	5.25
R- Q	0 / 0	-39.2	-39.2	0.24 (3)	10.00
Q- P	0 / 2518	-39.2	-39.2	0.57 (1)	10.00
P- O	0 / 3899	-39.2	-39.2	0.74 (1)	10.00
O- N	0 / 3899	-39.2	-39.2	0.74 (1)	10.00
N- M	0 / 3888	-39.2	-39.2	0.75 (1)	10.00
M- L	0 / 2521	-39.2	-39.2	0.59 (1)	10.00
L- K	0 / 0	-39.2	-39.2	0.27 (3)	10.00

WEBS

MEMB. FR-TO	MAX. FORCE (LBS)	FACTORED MAX CSI (LC)
Q- C	-226 / 108	0.09 (1)
C- P	0 / 1892	0.43 (1)
P- D	-1113 / 0	0.44 (1)
D- N	0 / 573	0.13 (1)
N- E	-582 / 0	0.23 (1)
N- G	0 / 588	0.13 (1)
M- G	-1124 / 0	0.44 (1)
M- H	0 / 1873	0.42 (1)
L- H	-212 / 129	0.08 (1)
B- Q	0 / 2567	0.58 (1)
L- I	0 / 2570	0.58 (1)

DESIGN CRITERIA

SPECIFIED LOADS:

TOP CH.	LL	=	34.8	PSF
	DL	=	8.0	PSF
BOT CH.	LL	=	10.5	PSF
	DL	=	7.3	PSF
TOTAL LOAD		=	60.6	PSF

SPACING = 24.0 IN. C/C

LOADING IN FLAT SECTION BASED ON A SLOPE OF 2.00/12 MINIMUM

THIS TRUSS IS DESIGNED FOR RESIDENTIAL OR SMALL BUILDING REQUIREMENTS OF PART 9, NBCC 2015

THIS DESIGN COMPLIES WITH:
- PART 9 OF BCBC 2018 , ABC 2019
- PART 9 OF OBC 2012 (2019 AMENDMENT)
- CSA 086-14
- TPIC 2014

(55 % OF 48.1 P.S.F. G.S.L. PLUS 8.4 P.S.F. RAIN LOAD) EQUALS 34.8 P.S.F. SPECIFIED ROOF LIVE LOAD

ALLOWABLE DEFL.(LL)= L/360 (1.06")
CALCULATED VERT. DEFL.(LL) = L/ 999 (0.22")
ALLOWABLE DEFL.(TL)= L/360 (1.06")
CALCULATED VERT. DEFL.(TL) = L/ 999 (0.37")

CSI: TC=0.86/1.00 (E-G:1) , BC=0.75/1.00 (M-N:1) , WB=0.58/1.00 (I-L:1) , SSI=0.30/1.00 (G-H:1)

DOL LUMBER=1.00 NAIL=1.00 LS BEND=1.10 COMP=1.10 SHEAR=1.10 TENS= 1.10

COMPANION LIVE LOAD FACTOR = 1.00

TRUSS PLATE MANUFACTURER IS NOT RESPONSIBLE FOR QUALITY CONTROL IN THE TRUSS MANUFACTURING PLANT .

NAIL VALUES

PLATE	GRIP(DRY) (PSI) MAX	MIN	SHEAR (PLI) MAX	MIN	SECTION (PLI) MAX	MIN
MT20	650	371	1747	788	1987	1873

PLATE PLACEMENT TOL. = 0.250 inches

PLATE ROTATION TOL. = 5.0 Deg.

JSI GRIP= 0.90 (D) (INPUT = 0.90)
JSI METAL= 0.83 (O) (INPUT = 1.00)

LICENSED PROFESSIONAL ENGINEER
N.A. EL-MASRI
PROVINCE OF ONTARIO
Dec 18, 2020

READ ALL NOTES ON THIS PAGE AND ON ENGINEERING NOTE PAGE ENP-1. THIS NOTE PAGE IS AN INTEGRAL PART OF THIS DRAWING AS IT CONTAINS SPECIFICATIONS AND CRITERIA USED IN THE DESIGN OF THIS COMPONENT.

Town of East Gwillimbury
Building Standards Branch BCIN #16487

These plans have been reviewed for use with the corrections as noted. No other changes may be made without written approval of the Building Standards Branch. All work must comply with Zoning By-Law 2018-043, as amended, and the Ontario Building Code, as amended. These approved documents must be kept on site at all times. The building permit must be clearly posted on site at all times.

Discipline	Reviewer	BCIN	Date
Building Code	H. Authier	43236	2021-02-25
Sewage System			
Zoning			

KOTT

JOB NAME	TRUSS NAME	QUANTITY	PLY	JOB DESC.		DWG NO.
NE1220-124	T07	1	1	TRUSS DESC.	GREENPARK - TRINAR HALL - GLENWAY 12A ELE 1	

Version 8.420 S Oct 9 2020 MiTek Industries, Inc. Fri Dec 18 08:14:53 2020 Page 1
ID:9SrEih2qK4qREOqiXOaa nzGFb3-cvvXdSpviqt3G7I6MqsGueoZFqJVEUvcC65xilV7or

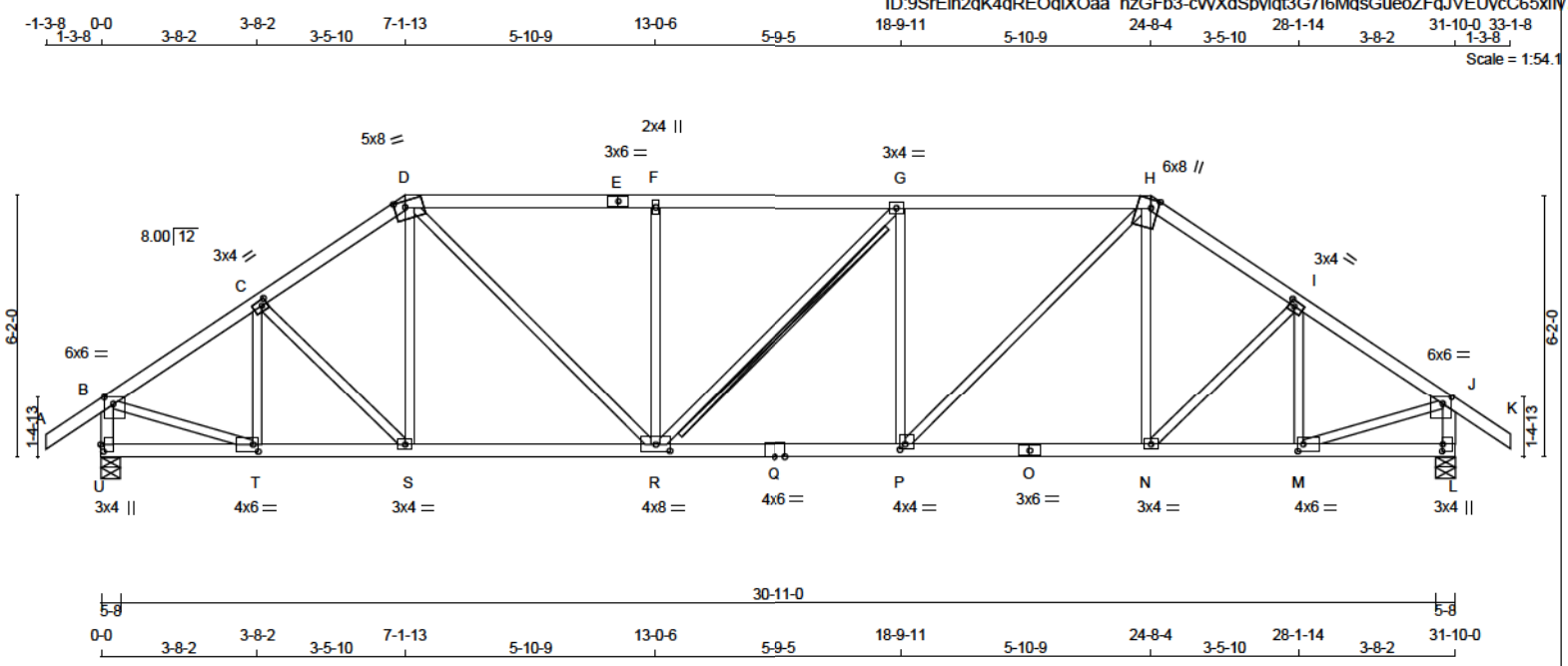

TOTAL WEIGHT = 138 lb

LUMBER
N. L. G. A. RULES

CHORDS	SIZE		LUMBER	DESCR.
A - D	2x4	DRY	No.2	SPF
D - E	2x4	DRY	No.2	SPF
E - H	2x4	DRY	No.2	SPF
H - K	2x4	DRY	No.2	SPF
U - B	2x4	DRY	No.2	SPF
L - J	2x4	DRY	No.2	SPF
U - Q	2x4	DRY	No.2	SPF
Q - O	2x4	DRY	No.2	SPF
O - L	2x4	DRY	No.2	SPF
ALL WEBS EXCEPT	2x3	DRY	No.2	SPF

DRY: SEASONED LUMBER.

PLATES (table is in inches)

JT	TYPE	PLATES	W	LEN	Y	X
B	TMVW-p	MT20	6.0	6.0	2.00	2.50
C	TMWW-t	MT20	3.0	4.0	1.50	1.50
D	TTWW-m	MT20	5.0	8.0	1.75	3.00
E	TS-t	MT20	3.0	6.0		
F	TMW+w	MT20	2.0	4.0		
G	TMWW-t	MT20	3.0	4.0		
H	TTWW+m	MT20	6.0	8.0	Edge	2.00
I	TMWW-t	MT20	3.0	4.0	1.50	1.50
J	TMVW-p	MT20	6.0	6.0	2.00	2.50
L	BMV1+p	MT20	3.0	4.0	2.00	0.25
M	BMWW-t	MT20	4.0	6.0	2.00	1.50
N	BMWW-t	MT20	3.0	4.0		
O	BS-t	MT20	3.0	6.0		
P	BMWW-t	MT20	4.0	4.0	1.50	1.50
Q	BS-t	MT20	4.0	6.0		
R	BMWWW-t	MT20	4.0	8.0	1.75	4.00
S	BMWW-t	MT20	3.0	4.0		
T	BMWW-t	MT20	4.0	6.0	2.00	1.50
U	BMV1+p	MT20	3.0	4.0	2.00	0.75

Edge - INDICATES REFERENCE CORNER OF PLATE TOUCHES EDGE OF CHORD.

DIMENSIONS, SUPPORTS AND LOADINGS SPECIFIED BY FABRICATOR TO BE VERIFIED BY BUILDING DESIGNER

BEARINGS

JT	FACTORED GROSS REACTION VERT	HORZ	MAXIMUM GROSS REACTION DOWN	HORZ	UPLIFT	INPUT BRG IN-SX	REQRD BRG IN-SX
U	2776	0	2776	0	0	5-8	5-8
L	2776	0	2776	0	0	5-8	5-8

UNFACTORED REACTIONS

JT	1ST LCASE COMBINED	SNOW	MAX./MIN. COMPONENT REACTIONS LIVE	PERM.LIVE	WIND	DEAD	SOIL
U	2047	1204 / 0	334 / 0	0 / 0	0 / 0	509 / 0	0 / 0
L	2047	1204 / 0	334 / 0	0 / 0	0 / 0	509 / 0	0 / 0

BEARING MATERIAL TO BE SPF NO.2 OR BETTER AT JOINT(S) U, L

BRACING
TOP CHORD TO BE SHEATHED OR MAX. PURLIN SPACING = 2.80 FT.
MAX. UNBRACED BOTTOM CHORD LENGTH = 10.00 FT OR RIGID CEILING DIRECTLY APPLIED.

ALL PITCH BREAKS AND PERIMETER CORNER JOINTS MUST BE LATERALLY RESTRAINED.

2x4 DRY SPF No.2 T-BRACE AT G-R

FASTEN T AND I-BRACES TO NARROW EDGE OF WEB WITH ONE ROW PER PLY OF 3" COMMON WIRE NAILS @ 6" O.C. WITH 3" MINIMUM END DISTANCE. BRACE MUST COVER 90% OF WEB LENGTH.

END VERTICAL(S) MUST BE SHEATHED OR HAVE BRACES AS INDICATED IN THE MAX. UNBRACED LENGTH COLUMN OF THE TABLE BELOW

LOADING
TOTAL LOAD CASES: (4)

CHORDS

MEMB. FR-TO	MAX. FACTORED FORCE (LBS)	FACTORED VERT. LOAD (PLF) FROM	TO	LC1 MAX CSI (LC)	MAX. UNBRAC LENGTH
A- B	0 / 47	-124.4	-124.4	0.17 (1)	10.00
B- C	-2921 / 0	-124.4	-124.4	0.37 (1)	3.75
C- D	-3012 / 0	-124.4	-124.4	0.37 (1)	3.69
D- E	-3497 / 0	-124.4	-124.4	0.92 (1)	2.84
E- F	-3497 / 0	-124.4	-124.4	0.92 (1)	2.84
F- G	-3497 / 0	-124.4	-124.4	0.92 (1)	2.81
G- H	-3500 / 0	-124.4	-124.4	0.94 (1)	2.80
H- I	-3011 / 0	-124.4	-124.4	0.37 (1)	3.69
I- J	-2921 / 0	-124.4	-124.4	0.37 (1)	3.75
J- K	0 / 47	-124.4	-124.4	0.17 (1)	10.00
U- B	-2707 / 0	0.0	0.0	0.28 (1)	5.23
L- J	-2707 / 0	0.0	0.0	0.28 (1)	5.23
U- T	0 / 0	-39.2	-39.2	0.10 (3)	10.00
T- S	0 / 2452	-39.2	-39.2	0.51 (1)	10.00
S- R	0 / 2481	-39.2	-39.2	0.53 (1)	10.00
R- Q	0 / 3500	-39.2	-39.2	0.70 (1)	10.00
Q- P	0 / 3500	-39.2	-39.2	0.70 (1)	10.00
P- O	0 / 2481	-39.2	-39.2	0.54 (1)	10.00
O- N	0 / 2481	-39.2	-39.2	0.54 (1)	10.00
N- M	0 / 2452	-39.2	-39.2	0.51 (1)	10.00
M- L	0 / 0	-39.2	-39.2	0.10 (3)	10.00

WEBS

MEMB. FR-TO	MAX. FACTORED FORCE (LBS)	MAX CSI (LC)
T- C	-595 / 0	0.14 (1)
C- S	0 / 42	0.01 (2)
S- D	0 / 221	0.05 (3)
D- R	0 / 1434	0.32 (1)
R- F	-783 / 0	0.47 (1)
R- G	-4 / 0	0.00 (1)
P- G	-785 / 0	0.47 (1)
P- H	0 / 1438	0.32 (1)
N- H	0 / 220	0.05 (3)
N- I	0 / 42	0.01 (2)
M- I	-594 / 0	0.14 (1)
B- T	0 / 2555	0.57 (1)
M- J	0 / 2555	0.57 (1)

DESIGN CRITERIA

SPECIFIED LOADS:
TOP CH. LL = 34.8 PSF
DL = 8.0 PSF
BOT CH. LL = 10.5 PSF
DL = 7.3 PSF
TOTAL LOAD = 60.6 PSF

SPACING = 24.0 IN. C/C

LOADING IN FLAT SECTION BASED ON A SLOPE OF 2.00/12 MINIMUM

THIS TRUSS IS DESIGNED FOR RESIDENTIAL OR SMALL BUILDING REQUIREMENTS OF PART 9, NBCC 2015

THIS DESIGN COMPLIES WITH:
- PART 9 OF BCBC 2018 , ABC 2019
- PART 9 OF OBC 2012 (2019 AMENDMENT)
- CSA 086-14
- TPIC 2014

(55 % OF 48.1 P.S.F. G.S.L. PLUS 8.4 P.S.F. RAIN LOAD) EQUALS 34.8 P.S.F. SPECIFIED ROOF LIVE LOAD

ALLOWABLE DEFL.(LL)= L/360 (1.06")
CALCULATED VERT. DEFL.(LL) = L/ 999 (0.17")
ALLOWABLE DEFL.(TL)= L/360 (1.06")
CALCULATED VERT. DEFL.(TL) = L/ 999 (0.29")

CSI: TC=0.94/1.00 (G-H:1) , BC=0.70/1.00 (P-R:1) , WB=0.57/1.00 (J-M:1) , SSI=0.34/1.00 (G-H:1)

DOL LUMBER=1.00 NAIL=1.00 LS BEND=1.10 COMP=1.10 SHEAR=1.10 TENS= 1.10

COMPANION LIVE LOAD FACTOR = 1.00

TRUSS PLATE MANUFACTURER IS NOT RESPONSIBLE FOR QUALITY CONTROL IN THE TRUSS MANUFACTURING PLANT .

NAIL VALUES

PLATE	GRIP(DRY) (PSI) MAX	MIN	SHEAR (PLI) MAX	MIN	SECTION (PLI) MAX	MIN
MT20	650	371	1747	788	1987	1873

PLATE PLACEMENT TOL. = 0.250 inches

PLATE ROTATION TOL. = 5.0 Deg.

JSI GRIP= 0.90 (L) (INPUT = 0.90)
JSI METAL= 0.88 (O) (INPUT = 1.00)

LICENSED PROFESSIONAL ENGINEER
N.A. EL-MASRI
PROVINCE OF ONTARIO
Dec 18, 2020

READ ALL NOTES ON THIS PAGE AND ON ENGINEERING NOTE PAGE ENP-1. THIS NOTE PAGE IS AN INTEGRAL PART OF THIS DRAWING AS IT CONTAINS SPECIFICATIONS AND CRITERIA USED IN THE DESIGN OF THIS COMPONENT.

Town of East Gwillimbury
Building Standards Branch BCIN #16487

These plans have been reviewed for use with the corrections as noted. No other changes may be made without written approval of the Building Standards Branch. All work must comply with Zoning By-Law 2018-043, as amended, and the Ontario Building Code, as amended. These approved documents must be kept on site at all times. The building permit must be clearly posted on site at all times.

Discipline	Reviewer	BCIN	Date
Building Code	H. Authier	43236	2021-02-25
Sewage System			
Zoning			

KOTT

JOB NAME	TRUSS NAME	QUANTITY	PLY	JOB DESC.		DWG NO.
NE1220-124	T08	1	1	TRUSS DESC.	GREENPARK - TRINAR HALL - GLENWAY 12A ELE 1	

Version 8.420 S Oct 9 2020 MiTek Industries, Inc. Fri Dec 18 08:14:54 2020 Page 1
ID:9SrEih2gK4qREOqiXOaa nzGFb3-45WvqogaT ?wtGtlwYNVQrLoZ4fczqelRmqVEly7c

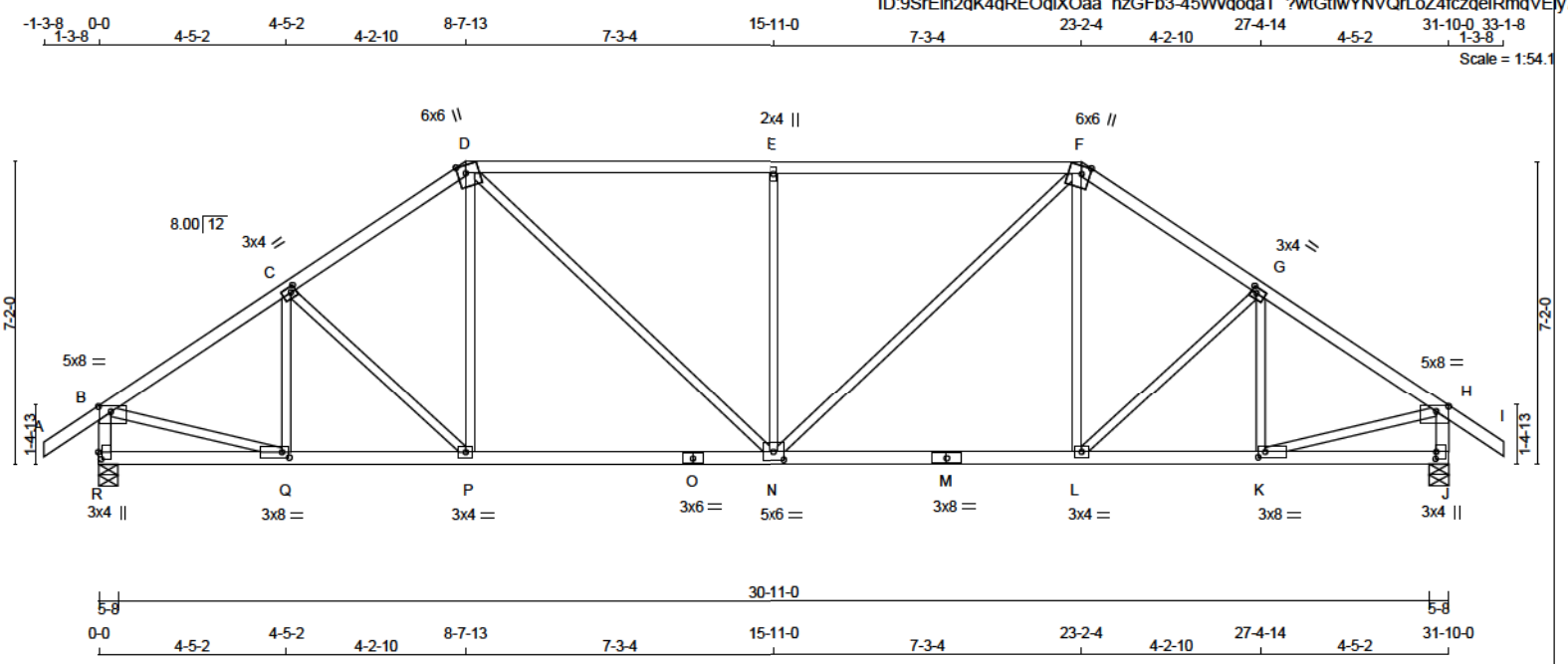

TOTAL WEIGHT = 136 lb

LUMBER
N. L. G. A. RULES

CHORDS	SIZE		LUMBER	DESCR.
A - D	2x4	DRY	No.2	SPF
D - F	2x4	DRY	2100F 1.8E	SPF
F - I	2x4	DRY	No.2	SPF
R - B	2x4	DRY	No.2	SPF
J - H	2x4	DRY	No.2	SPF
R - O	2x4	DRY	No.2	SPF
O - M	2x4	DRY	No.2	SPF
M - J	2x4	DRY	No.2	SPF
ALL WEBS EXCEPT	2x3	DRY	No.2	SPF

DRY: SEASONED LUMBER.

PLATES (table is in inches)

JT	TYPE	PLATES	W	LEN	Y	X
B	TMVW-p	MT20	5.0	8.0	1.50	3.50
C	TMWW-t	MT20	3.0	4.0	1.50	1.50
D	TTWW+m	MT20	6.0	6.0	2.25	2.25
E	TMW+w	MT20	2.0	4.0		
F	TTWW+m	MT20	6.0	6.0	2.25	2.25
G	TMWW-t	MT20	3.0	4.0	1.50	1.50
H	TMVW-p	MT20	5.0	8.0	1.50	3.50
J	BMV1+p	MT20	3.0	4.0	2.00	0.25
K	BMWW-t	MT20	3.0	8.0	1.50	2.00
L	BMWW-t	MT20	3.0	4.0		
M	BS-t	MT20	3.0	8.0		
N	BMWWW-t	MT20	5.0	6.0	2.25	3.00
O	BS-t	MT20	3.0	6.0		
P	BMWW-t	MT20	3.0	4.0		
Q	BMWW-t	MT20	3.0	8.0	1.50	2.00
R	BMV1+p	MT20	3.0	4.0	2.00	0.75

DIMENSIONS, SUPPORTS AND LOADINGS SPECIFIED BY FABRICATOR TO BE VERIFIED BY BUILDING DESIGNER [M][F]

BEARINGS

JT	FACTORED GROSS REACTION VERT	HORZ	MAXIMUM GROSS REACTION DOWN	HORZ	FACTORED UPLIFT	INPUT BRG IN-SX	REQRD BRG IN-SX
R	2776	0	2776	0	0	5-8	5-8
J	2776	0	2776	0	0	5-8	5-8

UNFACTORED REACTIONS

JT	1ST LCASE COMBINED	SNOW	MAX./MIN. COMPONENT REACTIONS LIVE	PERM.LIVE	WIND	DEAD	SOIL
R	2047	1204 / 0	334 / 0	0 / 0	0 / 0	509 / 0	0 / 0
J	2047	1204 / 0	334 / 0	0 / 0	0 / 0	509 / 0	0 / 0

BEARING MATERIAL TO BE SPF NO.2 OR BETTER AT JOINT(S) R, J

BRACING
TOP CHORD TO BE SHEATHED OR MAX. PURLIN SPACING = 3.67 FT.
MAX. UNBRACED BOTTOM CHORD LENGTH = 10.00 FT OR RIGID CEILING DIRECTLY APPLIED.

ALL PITCH BREAKS AND PERIMETER CORNER JOINTS MUST BE LATERALLY RESTRAINED.

LOADING
TOTAL LOAD CASES: (4)

CHORDS

MEMB. FR-TO	MAX. FACTORED FORCE (LBS)	FACTORED VERT. LOAD (PLF) FROM	TO	LC1 MAX CSI (LC)	MAX. UNBRAC LENGTH
A- B	0 / 47	-124.4	-124.4	0.17 (1)	10.00
B- C	-3016 / 0	-124.4	-124.4	0.41 (1)	3.67
C- D	-2932 / 0	-124.4	-124.4	0.40 (1)	3.73
D- E	-3157 / 0	-124.4	-124.4	0.64 (1)	4.04
E- F	-3157 / 0	-124.4	-124.4	0.64 (1)	4.04
F- G	-2932 / 0	-124.4	-124.4	0.40 (1)	3.73
G- H	-3016 / 0	-124.4	-124.4	0.41 (1)	3.67
H- I	0 / 47	-124.4	-124.4	0.17 (1)	10.00
R- B	-2697 / 0	0.0	0.0	0.28 (1)	5.24
J- H	-2697 / 0	0.0	0.0	0.28 (1)	5.24
R- Q	0 / 0	-39.2	-39.2	0.13 (3)	10.00
Q- P	0 / 2537	-39.2	-39.2	0.58 (1)	10.00
P- O	0 / 2412	-39.2	-39.2	0.64 (2)	10.00
O- N	0 / 2412	-39.2	-39.2	0.64 (2)	10.00
N- M	0 / 2412	-39.2	-39.2	0.64 (2)	10.00
M- L	0 / 2412	-39.2	-39.2	0.64 (2)	10.00
L- K	0 / 2537	-39.2	-39.2	0.58 (1)	10.00
K- J	0 / 0	-39.2	-39.2	0.13 (3)	10.00

WEBS

MEMB. FR-TO	MAX. FACTORED FORCE (LBS)	MAX CSI (LC)
Q- C	-460 / 0	0.13 (1)
C- P	-179 / 0	0.11 (1)
P- D	0 / 393	0.09 (2)
D- N	0 / 1024	0.23 (1)
N- E	-1110 / 0	0.99 (1)
N- F	0 / 1024	0.23 (1)
L- F	0 / 393	0.09 (2)
L- G	-179 / 0	0.11 (1)
K- G	-460 / 0	0.13 (1)
B- Q	0 / 2612	0.59 (1)
K- H	0 / 2612	0.59 (1)

DESIGN CRITERIA

SPECIFIED LOADS:

TOP CH.	LL	=	34.8	PSF
	DL	=	8.0	PSF
BOT CH.	LL	=	10.5	PSF
	DL	=	7.3	PSF
TOTAL LOAD		=	60.6	PSF

SPACING = 24.0 IN. C/C

LOADING IN FLAT SECTION BASED ON A SLOPE OF 2.00/12 MINIMUM

THIS TRUSS IS DESIGNED FOR RESIDENTIAL OR SMALL BUILDING REQUIREMENTS OF PART 9, NBCC 2015

THIS DESIGN COMPLIES WITH:
- PART 9 OF BCBC 2018 , ABC 2019
- PART 9 OF OBC 2012 (2019 AMENDMENT)
- CSA 086-14
- TPIC 2014

(55 % OF 48.1 P.S.F. G.S.L. PLUS 8.4 P.S.F. RAIN LOAD) EQUALS 34.8 P.S.F. SPECIFIED ROOF LIVE LOAD

ALLOWABLE DEFL.(LL)= L/360 (1.06")
CALCULATED VERT. DEFL.(LL) = L/ 999 (0.14")
ALLOWABLE DEFL.(TL)= L/360 (1.06")
CALCULATED VERT. DEFL.(TL) = L/ 999 (0.25")

CSI: TC=0.64/1.00 (D-E:1) , BC=0.64/1.00 (N-P:2) , WB=0.99/1.00 (E-N:1) , SSI=0.44/1.00 (D-E:1)

DOL LUMBER=1.00 NAIL=1.00 LS BEND=1.10 COMP=1.10 SHEAR=1.10 TENS= 1.10

COMPANION LIVE LOAD FACTOR = 1.00

TRUSS PLATE MANUFACTURER IS NOT RESPONSIBLE FOR QUALITY CONTROL IN THE TRUSS MANUFACTURING PLANT .

NAIL VALUES

PLATE	GRIP(DRY) (PSI) MAX	MIN	SHEAR (PLI) MAX	MIN	SECTION (PLI) MAX	MIN
MT20	650	371	1747	788	1987	1873

PLATE PLACEMENT TOL. = 0.250 inches

PLATE ROTATION TOL. = 5.0 Deg.

JSI GRIP= 0.90 (R) (INPUT = 0.90)
JSI METAL= 0.94 (M) (INPUT = 1.00)

LICENSED PROFESSIONAL ENGINEER
N.A. EL-MASRI
PROVINCE OF ONTARIO
Dec 18, 2020

READ ALL NOTES ON THIS PAGE AND ON ENGINEERING NOTE PAGE ENP-1. THIS NOTE PAGE IS AN INTEGRAL PART OF THIS DRAWING AS IT CONTAINS SPECIFICATIONS AND CRITERIA USED IN THE DESIGN OF THIS COMPONENT.

Town of East Gwillimbury
Building Standards Branch BCIN #16487

These plans have been reviewed for use with the corrections as noted. No other changes may be made without written approval of the Building Standards Branch. All work must comply with Zoning By-Law 2018-043, as amended, and the Ontario Building Code, as amended. These approved documents must be kept on site at all times. The building permit must be clearly posted on site at all times.

Discipline	Reviewer	BCIN	Date
Building Code	H. Authier	43236	2021-02-25
Sewage System			
Zoning			

KOTT

JOB NAME	TRUSS NAME	QUANTITY	PLY	JOB DESC.		DWG NO.
NE1220-124	T09	1	1	TRUSS DESC.	GREENPARK - TRINAR HALL - GLENWAY 12A ELE 1	

Version 8.420 S Oct 9 2020 MiTek Industries, Inc. Fri Dec 18 08:14:55 2020 Page 1
ID:9SrEih2gK4qREOqiXOaa nzGFb3-ZI4H28rCEH7nVQSUUFukz3uzMU1EiN4ufQa2mBy7c

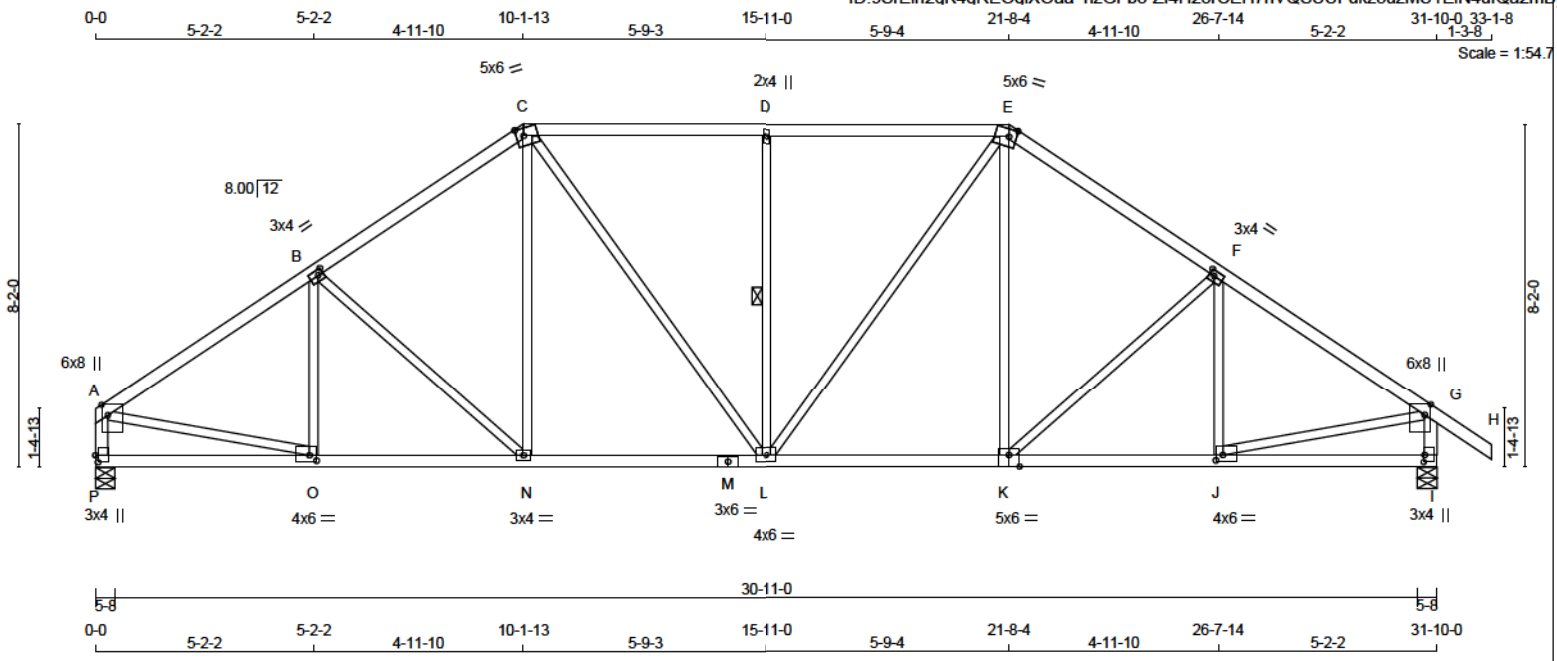

TOTAL WEIGHT = 141 lb

LUMBER
N. L. G. A. RULES

CHORDS	SIZE		LUMBER	DESCR.
A - C	2x4	DRY	No.2	SPF
C - E	2x4	DRY	No.2	SPF
E - H	2x4	DRY	No.2	SPF
P - A	2x4	DRY	No.2	SPF
I - G	2x4	DRY	No.2	SPF
P - M	2x4	DRY	No.2	SPF
M - K	2x4	DRY	No.2	SPF
K - I	2x4	DRY	No.2	SPF
ALL WEBS EXCEPT	2x3	DRY	No.2	SPF

DRY: SEASONED LUMBER.

PLATES (table is in inches)

JT	TYPE	PLATES	W	LEN	Y	X
A	TMVW+p	MT20	6.0	8.0	Edge	1.75
B	TMWW-t	MT20	3.0	4.0	1.50	1.50
C	TTWW-m	MT20	5.0	6.0	2.25	2.00
D	TMW+w	MT20	2.0	4.0		
E	TTWW-m	MT20	5.0	6.0	2.25	2.00
F	TMWW-t	MT20	3.0	4.0	1.50	1.50
G	TMVW+p	MT20	6.0	8.0	Edge	1.75
I	BMV1+p	MT20	3.0	4.0	2.00	0.25
J	BMWW-t	MT20	4.0	6.0	1.50	2.00
K	BSWW-l	MT20	5.0	6.0	3.25	3.00
L	BMWWW-t	MT20	4.0	6.0		
M	BS-t	MT20	3.0	6.0		
N	BMWW-t	MT20	3.0	4.0		
O	BMWW-t	MT20	4.0	6.0	1.50	2.00
P	BMV1+p	MT20	3.0	4.0	2.00	0.75

Edge - INDICATES REFERENCE CORNER OF PLATE TOUCHES EDGE OF CHORD.

DIMENSIONS, SUPPORTS AND LOADINGS SPECIFIED BY FABRICATOR TO BE VERIFIED BY BUILDING DESIGNER

BEARINGS

JT	FACTORED GROSS REACTION VERT	HORZ	MAXIMUM GROSS REACTION DOWN	HORZ	UPLIFT	INPUT BRG IN-SX	REQRD BRG IN-SX
P	2605	0	2605	0	0	5-8	5-0
I	2776	0	2776	0	0	5-8	5-8

UNFACTORED REACTIONS

JT	1ST LCASE COMBINED	SNOW	MAX./MIN. COMPONENT REACTIONS LIVE	PERM.LIVE	WIND	DEAD	SOIL
P	1929	1108 / 0	334 / 0	0 / 0	0 / 0	487 / 0	0 / 0
I	2047	1204 / 0	334 / 0	0 / 0	0 / 0	509 / 0	0 / 0

BEARING MATERIAL TO BE SPF NO.2 OR BETTER AT JOINT(S) P, I

BRACING
TOP CHORD TO BE SHEATHED OR MAX. PURLIN SPACING = 3.47 FT.
MAX. UNBRACED BOTTOM CHORD LENGTH = 10.00 FT OR RIGID CEILING DIRECTLY APPLIED.

ALL PITCH BREAKS AND PERIMETER CORNER JOINTS MUST BE LATERALLY RESTRAINED.

1 - 1x4 LATERAL BRACE(S) AT 1/ 2 LENGTH OF D-L. DBS = 20-0-0 . CBF = 110 LBS.

DBS = DIAGONAL BRACE SPACING (MAX). CBF = CUMULATIVE BRACING FORCE (PER BRACE). FASTEN LATERAL BRACE(S) USING (0.122"X3") SPIRAL NAILS : 1 NAIL FOR 2x3 BRACE(S), 2 FOR 1x4, 2x4, 2x5, 3 FOR 2x6, 4 FOR 2x8, 5 FOR 2x10, AND 6 FOR 2x12.

END VERTICAL(S) MUST BE SHEATHED OR HAVE BRACES AS INDICATED IN THE MAX. UNBRACED LENGTH COLUMN OF THE TABLE BELOW

LOADING
TOTAL LOAD CASES: (4)

CHORDS

MEMB. FR-TO	MAX. FACTORED FORCE (LBS)	FACTORED VERT. LOAD (PLF) FROM	TO	LC1 MAX CSI (LC)	MAX. UNBRAC LENGTH
A- B	-3076 / 0	-124.4	-124.4	0.57 (1)	3.47
B- C	-2807 / 0	-124.4	-124.4	0.53 (1)	3.65
C- D	-2711 / 0	-124.4	-124.4	0.64 (1)	3.49
D- E	-2711 / 0	-124.4	-124.4	0.64 (1)	3.49
E- F	-2794 / 0	-124.4	-124.4	0.53 (1)	3.66
F- G	-3082 / 0	-124.4	-124.4	0.57 (1)	3.47
G- H	0 / 47	-124.4	-124.4	0.17 (1)	10.00
P- A	-2519 / 0	0.0	0.0	0.26 (1)	5.40
I- G	-2694 / 0	0.0	0.0	0.28 (1)	5.24
P- O	0 / 0	-39.2	-39.2	0.19 (3)	10.00
O- N	0 / 2593	-39.2	-39.2	0.53 (1)	10.00
N- M	0 / 2303	-39.2	-39.2	0.54 (1)	10.00
M- L	0 / 2303	-39.2	-39.2	0.54 (1)	10.00
L- K	0 / 2292	-39.2	-39.2	0.54 (1)	10.00
K- J	0 / 2598	-39.2	-39.2	0.55 (1)	10.00
J- I	0 / 0	-39.2	-39.2	0.23 (3)	10.00

WEBS

MEMB. FR-TO	MAX. FACTORED FORCE (LBS)	MAX CSI (LC)
O- B	-325 / 54	0.11 (1)
B- N	-397 / 0	0.34 (1)
N- C	0 / 475	0.11 (2)
C- L	0 / 690	0.16 (1)
L- D	-876 / 0	0.37 (1)
L- E	0 / 708	0.16 (1)
K- E	0 / 448	0.10 (2)
K- F	-417 / 0	0.36 (1)
J- F	-301 / 83	0.10 (1)
A- O	0 / 2649	0.60 (1)
J- G	0 / 2653	0.60 (1)

DESIGN CRITERIA

SPECIFIED LOADS:

TOP CH.	LL	=	34.8	PSF
	DL	=	8.0	PSF
BOT CH.	LL	=	10.5	PSF
	DL	=	7.3	PSF
TOTAL LOAD		=	60.6	PSF

SPACING = 24.0 IN. C/C

LOADING IN FLAT SECTION BASED ON A SLOPE OF 2.00/12 MINIMUM

THIS TRUSS IS DESIGNED FOR RESIDENTIAL OR SMALL BUILDING REQUIREMENTS OF PART 9, NBCC 2015

THIS DESIGN COMPLIES WITH:
- PART 9 OF BCBC 2018 , ABC 2019
- PART 9 OF OBC 2012 (2019 AMENDMENT)
- CSA 086-14
- TPIC 2014

(55 % OF 48.1 P.S.F. G.S.L. PLUS 8.4 P.S.F. RAIN LOAD) EQUALS 34.8 P.S.F. SPECIFIED ROOF LIVE LOAD

ALLOWABLE DEFL.(LL)= L/360 (1.06")
CALCULATED VERT. DEFL.(LL) = L/ 999 (0.14")
ALLOWABLE DEFL.(TL)= L/360 (1.06")
CALCULATED VERT. DEFL.(TL) = L/ 999 (0.24")

CSI: TC=0.64/1.00 (D-E:1) , BC=0.55/1.00 (J-K:1) , WB=0.60/1.00 (G-J:1) , SSI=0.35/1.00 (D-E:1)

DOL LUMBER=1.00 NAIL=1.00 LS BEND=1.10 COMP=1.10 SHEAR=1.10 TENS= 1.10

COMPANION LIVE LOAD FACTOR = 1.00

TRUSS PLATE MANUFACTURER IS NOT RESPONSIBLE FOR QUALITY CONTROL IN THE TRUSS MANUFACTURING PLANT .

NAIL VALUES

PLATE	GRIP(DRY) (PSI) MAX	MIN	SHEAR (PLI) MAX	MIN	SECTION (PLI) MAX	MIN
MT20	650	371	1747	788	1987	1873

PLATE PLACEMENT TOL. = 0.250 inches

PLATE ROTATION TOL. = 5.0 Deg.

JSI GRIP= 0.90 (N) (INPUT = 0.90)
JSI METAL= 0.73 (M) (INPUT = 1.00)

LICENSED PROFESSIONAL ENGINEER
N.A. EL-MASRI
PROVINCE OF ONTARIO
Dec 18, 2020

READ ALL NOTES ON THIS PAGE AND ON ENGINEERING NOTE PAGE ENP-1. THIS NOTE PAGE IS AN INTEGRAL PART OF THIS DRAWING AS IT CONTAINS SPECIFICATIONS AND CRITERIA USED IN THE DESIGN OF THIS COMPONENT.

Town of East Gwillimbury
Building Standards Branch BCIN #16487

These plans have been reviewed for use with the corrections as noted. No other changes may be made without written approval of the Building Standards Branch. All work must comply with Zoning By-Law 2018-043, as amended, and the Ontario Building Code, as amended. These approved documents must be kept on site at all times. The building permit must be clearly posted on site at all times.

Discipline	Reviewer	BCIN	Date
Building Code	H. Authier	43236	2021-02-25
Sewage System			
Zoning			

KOTT

JOB NAME	TRUSS NAME	QUANTITY	PLY	JOB DESC.		DRWG NO.
NE1220-124	T10	1	1	TRUSS DESC.	GREENPARK - TRINAR HALL - GLENWAY 12A ELE 1	**Page 29 of 44**

Version 8.420 S Oct 9 2020 MiTek Industries, Inc. Fri Dec 18 08:14:56 2020 Page 1

ID:9SrEih2qK4qREOqiXOaa nzGFb3-1UefFUrr?bFe7a1q2zQzVGQ77uMwRoZ2u4JbIdy7c

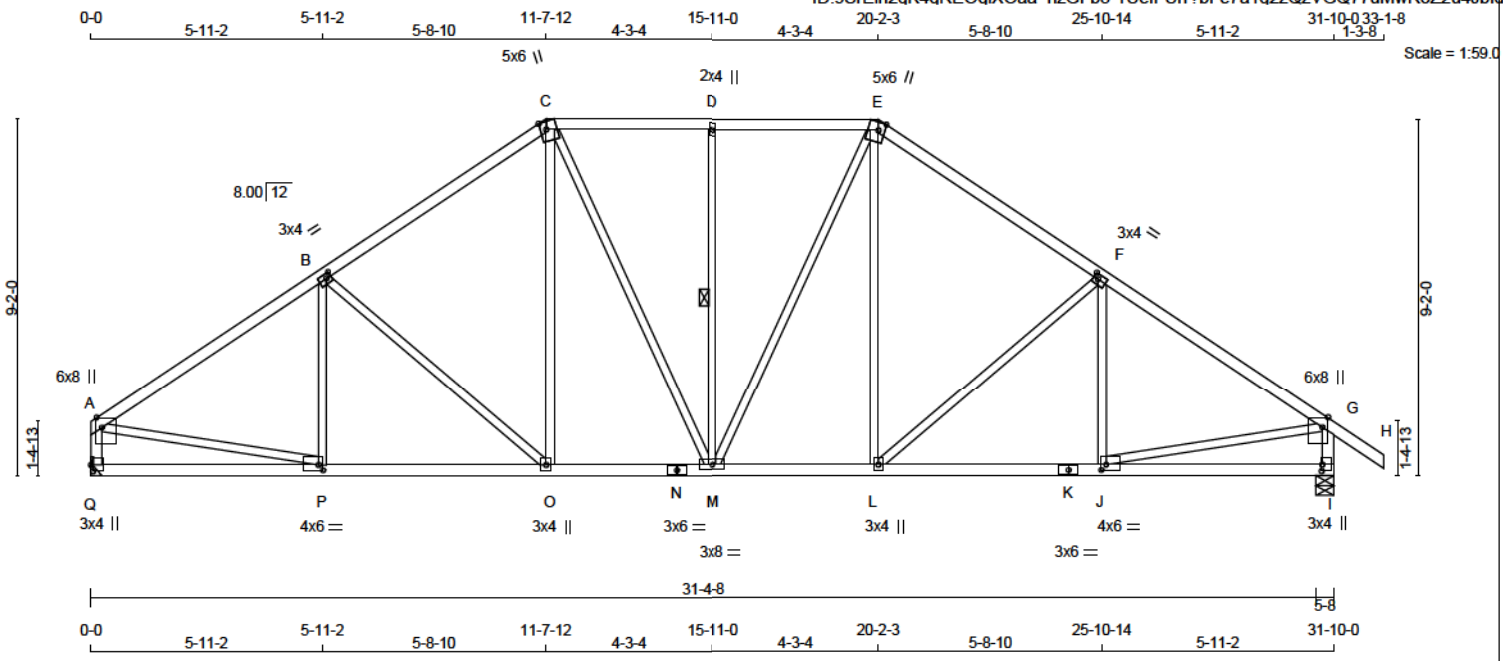

TOTAL WEIGHT = 148 lb

LUMBER
N. L. G. A. RULES

CHORDS	SIZE		LUMBER	DESCR.
A - C	2x4	DRY	No.2	SPF
C - E	2x4	DRY	No.2	SPF
E - H	2x4	DRY	No.2	SPF
Q - A	2x4	DRY	No.2	SPF
I - G	2x4	DRY	No.2	SPF
Q - N	2x4	DRY	No.2	SPF
N - K	2x4	DRY	No.2	SPF
K - I	2x4	DRY	No.2	SPF
ALL WEBS EXCEPT	2x3	DRY	No.2	SPF

DRY: SEASONED LUMBER.

PLATES (table is in inches)

JT	TYPE	PLATES	W	LEN	Y	X
A	TMVW+p	MT20	6.0	8.0	Edge	1.75
B	TMWW-t	MT20	3.0	4.0	1.50	1.50
C	TTWW+m	MT20	5.0	6.0	Edge	1.75
D	TMW+w	MT20	2.0	4.0		
E	TTWW+m	MT20	5.0	6.0	Edge	1.75
F	TMWW-t	MT20	3.0	4.0	1.50	1.50
G	TMVW+p	MT20	6.0	8.0	Edge	1.75
I	BMV1+p	MT20	3.0	4.0	2.00	0.25
J	BMWW-t	MT20	4.0	6.0	1.75	1.50
K	BS-t	MT20	3.0	6.0		
L	BMWW+t	MT20	3.0	4.0		
M	BMWWW-t	MT20	3.0	8.0		
N	BS-t	MT20	3.0	6.0		
O	BMWW+t	MT20	3.0	4.0		
P	BMWW-t	MT20	4.0	6.0	1.75	1.50
Q	BMV1+p	MT20	3.0	4.0	2.00	0.75

Edge - INDICATES REFERENCE CORNER OF PLATE TOUCHES EDGE OF CHORD.

DIMENSIONS, SUPPORTS AND LOADINGS SPECIFIED BY FABRICATOR TO BE VERIFIED BY BUILDING DESIGNER

BEARINGS

JT	FACTORED GROSS REACTION VERT	HORZ	MAXIMUM GROSS REACTION DOWN	HORZ	FACTORED UPLIFT	INPUT BRG IN-SX	REQRD BRG IN-SX
Q	2605	0	2605	0	0	MECHANICAL	
I	2776	0	2776	0	0	5-8	5-8

A SUITABLE HANGER/MECHANICAL CONNECTION IS REQUIRED AT JOINT Q. MINIMUM BEARING LENGTH AT JOINT Q = 5-0.

UNFACTORED REACTIONS

JT	1ST LCASE COMBINED	SNOW	MAX/MIN. COMPONENT REACTIONS LIVE	PERM.LIVE	WIND	DEAD	SOIL
Q	1929	1108 / 0	334 / 0	0 / 0	0 / 0	487 / 0	0 / 0
I	2047	1204 / 0	334 / 0	0 / 0	0 / 0	509 / 0	0 / 0

BEARING MATERIAL TO BE SPF NO.2 OR BETTER AT JOINT(S) I

BRACING
TOP CHORD TO BE SHEATHED OR MAX. PURLIN SPACING = 3.20 FT.
MAX. UNBRACED BOTTOM CHORD LENGTH = 10.00 FT OR RIGID CEILING DIRECTLY APPLIED.

ALL PITCH BREAKS AND PERIMETER CORNER JOINTS MUST BE LATERALLY RESTRAINED.

1 - 1x4 LATERAL BRACE(S) AT 1/ 2 LENGTH OF D-M. DBS = 20-0-0 . CBF = 80 LBS.

DBS = DIAGONAL BRACE SPACING (MAX). CBF = CUMULATIVE BRACING FORCE (PER BRACE). FASTEN LATERAL BRACE(S) USING (0.122"X3") SPIRAL NAILS : 1 NAIL FOR 2x3 BRACE(S), 2 FOR 1x4, 2x4, 2x5, 3 FOR 2x6, 4 FOR 2x8, 5 FOR 2x10, AND 6 FOR 2x12.

END VERTICAL(S) MUST BE SHEATHED OR HAVE BRACES AS INDICATED IN THE MAX. UNBRACED LENGTH COLUMN OF THE TABLE BELOW

LOADING
TOTAL LOAD CASES: (4)

CHORDS

MEMB. FR-TO	MAX. FACTORED FORCE (LBS)	FACTORED VERT. LOAD (PLF) FROM	TO	LC1 MAX CSI (LC)	MAX. UNBRAC LENGTH
A- B	-3104 / 0	-124.4	-124.4	0.77 (1)	3.20
B- C	-2666 / 0	-124.4	-124.4	0.68 (1)	3.51
C- D	-2370 / 0	-124.4	-124.4	0.34 (1)	4.14
D- E	-2370 / 0	-124.4	-124.4	0.34 (1)	4.14
E- F	-2666 / 0	-124.4	-124.4	0.68 (1)	3.51
F- G	-3104 / 0	-124.4	-124.4	0.77 (1)	3.20
G- H	0 / 47	-124.4	-124.4	0.17 (1)	10.00
Q- A	-2510 / 0	0.0	0.0	0.26 (1)	5.41
I- G	-2680 / 0	0.0	0.0	0.28 (1)	5.26
Q- P	0 / 0	-39.2	-39.2	0.27 (3)	10.00
P- O	0 / 2622	-39.2	-39.2	0.59 (1)	10.00
O- N	0 / 2182	-39.2	-39.2	0.46 (1)	10.00
N- M	0 / 2182	-39.2	-39.2	0.46 (1)	10.00
M- L	0 / 2182	-39.2	-39.2	0.46 (1)	10.00
L- K	0 / 2622	-39.2	-39.2	0.59 (1)	10.00
K- J	0 / 2622	-39.2	-39.2	0.59 (1)	10.00
J- I	0 / 0	-39.2	-39.2	0.27 (3)	10.00

WEBS

MEMB. FR-TO	MAX. FACTORED FORCE (LBS)	MAX CSI (LC)
P- B	-219 / 133	0.09 (1)
B- O	-591 / 0	0.71 (1)
O- C	0 / 585	0.13 (1)
C- M	0 / 433	0.10 (1)
M- D	-637 / 0	0.35 (1)
M- E	0 / 433	0.10 (1)
L- E	0 / 585	0.13 (1)
L- F	-591 / 0	0.71 (1)
J- F	-219 / 133	0.09 (1)
A- P	0 / 2665	0.60 (1)
J- G	0 / 2665	0.60 (1)

DESIGN CRITERIA

SPECIFIED LOADS:

TOP CH.	LL	=	34.8	PSF
	DL	=	8.0	PSF
BOT CH.	LL	=	10.5	PSF
	DL	=	7.3	PSF
TOTAL LOAD		=	60.6	PSF

SPACING = 24.0 IN. C/C

LOADING IN FLAT SECTION BASED ON A SLOPE OF 2.00/12 MINIMUM

THIS TRUSS IS DESIGNED FOR RESIDENTIAL OR SMALL BUILDING REQUIREMENTS OF PART 9, NBCC 2015

THIS DESIGN COMPLIES WITH:
- PART 9 OF BCBC 2018 , ABC 2019
- PART 9 OF OBC 2012 (2019 AMENDMENT)
- CSA 086-14
- TPIC 2014

(55 % OF 48.1 P.S.F. G.S.L. PLUS 8.4 P.S.F. RAIN LOAD) EQUALS 34.8 P.S.F. SPECIFIED ROOF LIVE LOAD

ALLOWABLE DEFL.(LL)= L/360 (1.06")
CALCULATED VERT. DEFL.(LL) = L/ 999 (0.12")
ALLOWABLE DEFL.(TL)= L/360 (1.06")
CALCULATED VERT. DEFL.(TL) = L/ 999 (0.20")

CSI: TC=0.77/1.00 (A-B:1) , BC=0.59/1.00 (O-P:1) , WB=0.71/1.00 (B-O:1) , SSI=0.29/1.00 (F-G:1)

DOL LUMBER=1.00 NAIL=1.00 LS BEND=1.10 COMP=1.10 SHEAR=1.10 TENS= 1.10

COMPANION LIVE LOAD FACTOR = 1.00

TRUSS PLATE MANUFACTURER IS NOT RESPONSIBLE FOR QUALITY CONTROL IN THE TRUSS MANUFACTURING PLANT .

NAIL VALUES

PLATE	GRIP(DRY) (PSI) MAX	MIN	SHEAR (PLI) MAX	MIN	SECTION (PLI) MAX	MIN
MT20	650	371	1747	788	1987	1873

PLATE PLACEMENT TOL. = 0.250 inches

PLATE ROTATION TOL. = 5.0 Deg.

JSI GRIP= 0.89 (P) (INPUT = 0.90)
JSI METAL= 0.82 (K) (INPUT = 1.00)

[M][F]

LICENSED PROFESSIONAL ENGINEER
N.A. EL-MASRI
PROVINCE OF ONTARIO
Dec 18, 2020

READ ALL NOTES ON THIS PAGE AND ON ENGINEERING NOTE PAGE ENP-1. THIS NOTE PAGE IS AN INTEGRAL PART OF THIS DRAWING AS IT CONTAINS SPECIFICATIONS AND CRITERIA USED IN THE DESIGN OF THIS COMPONENT.

Town of East Gwillimbury
Building Standards Branch BCIN #16487

These plans have been reviewed for use with the corrections as noted. No other changes may be made without written approval of the Building Standards Branch. All work must comply with Zoning By-Law 2018-043, as amended, and the Ontario Building Code, as amended. These approved documents must be kept on site at all times. The building permit must be clearly posted on site at all times.

Discipline	Reviewer	BCIN	Date
Building Code	H. Authier	43236	2021-02-25
Sewage System			
Zoning			

KOTT

JOB NAME	TRUSS NAME	QUANTITY	PLY	JOB DESC.		DRWG NO.
NE1220-124	T11	1	1	TRUSS DESC.	GREENPARK - TRINAR HALL - GLENWAY 12A ELE 1	**Page 30 of 44**

Version 8.420 S Oct 9 2020 MiTek Industries, Inc. Fri Dec 18 08:14:56 2020 Page 1

ID:9SrEih2qK4qREOqiXOaa nzGFb3-1UefFUrr?bFe7a1q2zQzVGQA7uLoRqH2u4JbIdy7c

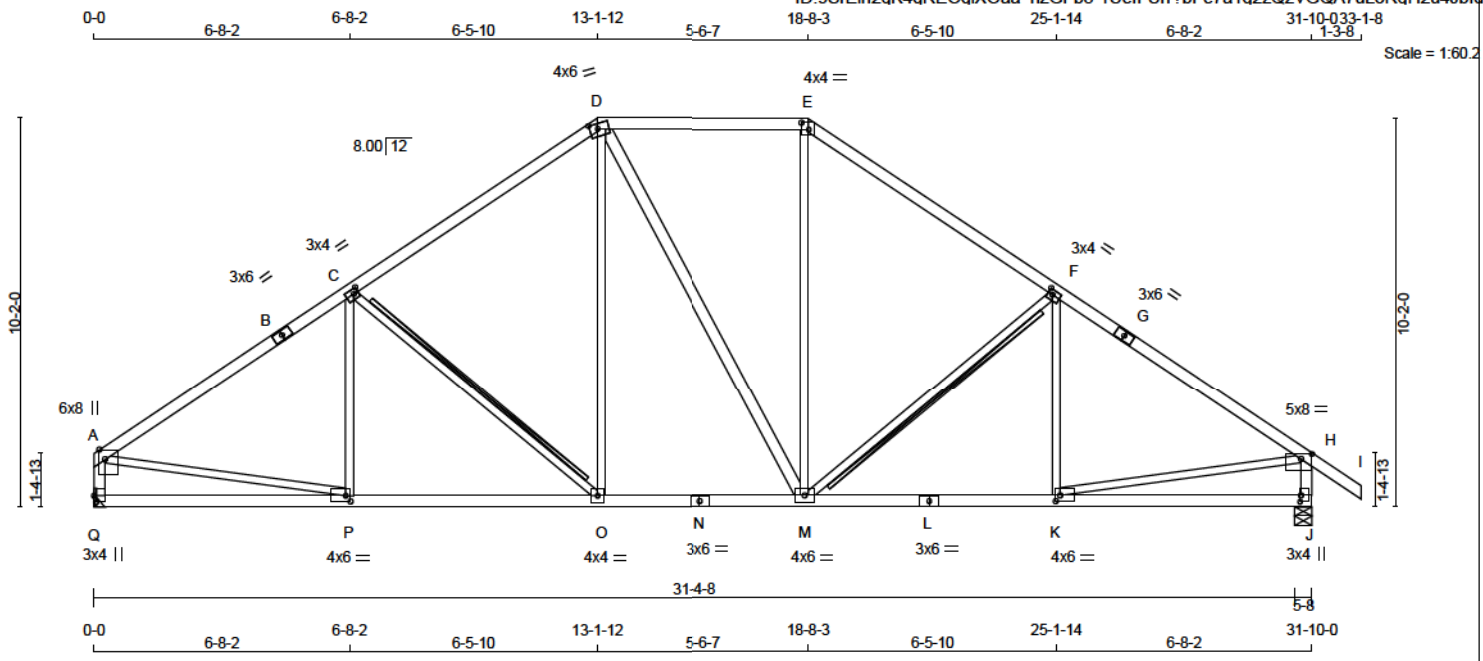

TOTAL WEIGHT = 143 lb

LUMBER
N. L. G. A. RULES

CHORDS	SIZE		LUMBER	DESCR.
A - B	2x4	DRY	2100F 1.8E	SPF
B - D	2x4	DRY	2100F 1.8E	SPF
D - E	2x4	DRY	No.2	SPF
E - G	2x4	DRY	2100F 1.8E	SPF
G - I	2x4	DRY	2100F 1.8E	SPF
Q - A	2x4	DRY	No.2	SPF
J - H	2x4	DRY	No.2	SPF
Q - N	2x4	DRY	No.2	SPF
N - L	2x4	DRY	No.2	SPF
L - J	2x4	DRY	No.2	SPF
ALL WEBS	2x3	DRY	No.2	SPF
EXCEPT				
D - M	2x4	DRY	No.2	SPF

DRY: SEASONED LUMBER.

PLATES (table is in inches)

JT	TYPE	PLATES	W	LEN	Y	X
A	TMVW+p	MT20	6.0	8.0	Edge	1.75
B	TS-t	MT20	3.0	6.0		
C	TMWW-t	MT20	3.0	4.0	1.50	1.50
D	TTWW-m	MT20	4.0	6.0	1.75	2.50
E	TTW-I	MT20	4.0	4.0	2.25	2.25
F	TMWW-t	MT20	3.0	4.0	1.50	1.50
G	TS-t	MT20	3.0	6.0		
H	TMVW-p	MT20	5.0	8.0	1.50	3.50
J	BMV1+p	MT20	3.0	4.0	2.00	0.25
K	BMWW-t	MT20	4.0	6.0	1.75	1.50
L	BS-t	MT20	3.0	6.0		
M	BMWWW-t	MT20	4.0	6.0		
N	BS-t	MT20	3.0	6.0		
O	BMWW-t	MT20	4.0	4.0		
P	BMWW-t	MT20	4.0	6.0	1.75	1.50
Q	BMV1+p	MT20	3.0	4.0	2.00	0.75

Edge - INDICATES REFERENCE CORNER OF PLATE TOUCHES EDGE OF CHORD.

DIMENSIONS, SUPPORTS AND LOADINGS SPECIFIED BY FABRICATOR TO BE VERIFIED BY BUILDING DESIGNER

BEARINGS

JT	FACTORED GROSS REACTION VERT	HORZ	MAXIMUM GROSS REACTION DOWN	HORZ	UPLIFT	INPUT BRG IN-SX	REQRD BRG IN-SX
Q	2605	0	2605	0	0	MECHANICAL	
J	2776	0	2776	0	0	5-8	5-8

A SUITABLE HANGER/MECHANICAL CONNECTION IS REQUIRED AT JOINT Q. MINIMUM BEARING LENGTH AT JOINT Q = 5-0.

UNFACTORED REACTIONS

MAX./MIN. COMPONENT REACTIONS

JT	1ST LCASE COMBINED	SNOW	LIVE	PERM.LIVE	WIND	DEAD	SOIL
Q	1929	1108 / 0	334 / 0	0 / 0	0 / 0	487 / 0	0 / 0
J	2047	1204 / 0	334 / 0	0 / 0	0 / 0	509 / 0	0 / 0

BEARING MATERIAL TO BE SPF NO.2 OR BETTER AT JOINT(S) J

BRACING
TOP CHORD TO BE SHEATHED OR MAX. PURLIN SPACING = 4.08 FT.
MAX. UNBRACED BOTTOM CHORD LENGTH = 10.00 FT OR RIGID CEILING DIRECTLY APPLIED.

ALL PITCH BREAKS AND PERIMETER CORNER JOINTS MUST BE LATERALLY RESTRAINED.

2x4 DRY SPF No.2 T-BRACE AT C-O, F-M

FASTEN T AND I-BRACES TO NARROW EDGE OF WEB WITH ONE ROW PER PLY OF 3" COMMON WIRE NAILS @ 6" O.C. WITH 3" MINIMUM END DISTANCE. BRACE MUST COVER 90% OF WEB LENGTH.

END VERTICAL(S) MUST BE SHEATHED OR HAVE BRACES AS INDICATED IN THE MAX. UNBRACED LENGTH COLUMN OF THE TABLE BELOW

LOADING
TOTAL LOAD CASES: (4)

CHORDS

MEMB. FR-TO	MAX. FACTORED FORCE (LBS)	FACTORED VERT. LOAD (PLF) FROM	TO	LC1 MAX CSI (LC)	MAX. UNBRAC LENGTH
A- B	-3110 / 0	-124.4	-124.4	0.58 (1)	4.24
B- C	-3110 / 0	-124.4	-124.4	0.58 (1)	4.24
C- D	-2513 / 0	-124.4	-124.4	0.52 (1)	4.66
D- E	-2051 / 0	-124.4	-124.4	0.55 (1)	4.08
E- F	-2514 / 0	-124.4	-124.4	0.52 (1)	4.66
F- G	-3109 / 0	-124.4	-124.4	0.58 (1)	4.24
G- H	-3109 / 0	-124.4	-124.4	0.58 (1)	4.24
H- I	0 / 47	-124.4	-124.4	0.11 (1)	10.00
Q- A	-2499 / 0	0.0	0.0	0.26 (1)	5.42
J- H	-2670 / 0	0.0	0.0	0.28 (1)	5.26
Q- P	0 / 0	-39.2	-39.2	0.34 (3)	10.00
P- O	0 / 2632	-39.2	-39.2	0.66 (2)	10.00
O- N	0 / 2050	-39.2	-39.2	0.48 (1)	10.00
N- M	0 / 2050	-39.2	-39.2	0.48 (1)	10.00
M- L	0 / 2632	-39.2	-39.2	0.66 (2)	10.00
L- K	0 / 2632	-39.2	-39.2	0.66 (2)	10.00
K- J	0 / 0	-39.2	-39.2	0.34 (3)	10.00

WEBS

MEMB. FR-TO	MAX. FACTORED FORCE (LBS)	MAX CSI (LC)
P- C	-130 / 199	0.07 (1)
C- O	-770 / 0	0.44 (1)
O- D	0 / 718	0.16 (1)
D- M	0 / 2	0.00 (1)
M- E	0 / 720	0.16 (1)
M- F	-769 / 0	0.44 (1)
K- F	-132 / 197	0.07 (1)
A- P	0 / 2666	0.60 (1)
K- H	0 / 2000	0.00 (1)

DESIGN CRITERIA

SPECIFIED LOADS:

TOP CH.	LL	=	34.8	PSF
	DL	=	8.0	PSF
BOT CH.	LL	=	10.5	PSF
	DL	=	7.3	PSF
TOTAL LOAD		=	60.6	PSF

SPACING = 24.0 IN. C/C

LOADING IN FLAT SECTION BASED ON A SLOPE OF 2.00/12 MINIMUM

THIS TRUSS IS DESIGNED FOR RESIDENTIAL OR SMALL BUILDING REQUIREMENTS OF PART 9, NBCC 2015

THIS DESIGN COMPLIES WITH:
- PART 9 OF BCBC 2018 , ABC 2019
- PART 9 OF OBC 2012 (2019 AMENDMENT)
- CSA 086-14
- TPIC 2014

(55 % OF 48.1 P.S.F. G.S.L. PLUS 8.4 P.S.F. RAIN LOAD) EQUALS 34.8 P.S.F. SPECIFIED ROOF LIVE LOAD

ALLOWABLE DEFL.(LL)= L/360 (1.06")
CALCULATED VERT. DEFL.(LL) = L/ 999 (0.12")
ALLOWABLE DEFL.(TL)= L/360 (1.06")
CALCULATED VERT. DEFL.(TL) = L/ 999 (0.21")

CSI: TC=0.58/1.00 (A-C:1) , BC=0.66/1.00 (O-P:2) , WB=0.60/1.00 (A-P:1) , SSI=0.33/1.00 (A-C:1)

DOL LUMBER=1.00 NAIL=1.00 LS BEND=1.10 COMP=1.10 SHEAR=1.10 TENS= 1.10

COMPANION LIVE LOAD FACTOR = 1.00

TRUSS PLATE MANUFACTURER IS NOT RESPONSIBLE FOR QUALITY CONTROL IN THE TRUSS MANUFACTURING PLANT .

NAIL VALUES

PLATE	GRIP(DRY) (PSI) MAX	MIN	SHEAR (PLI) MAX	MIN	SECTION (PLI) MAX	MIN
MT20	650	371	1747	788	1987	1873

PLATE PLACEMENT TOL. = 0.250 inches

PLATE ROTATION TOL. = 5.0 Deg.

JSI GRIP= 0.89 (J) (INPUT = 0.90)
JSI METAL= 0.93 (L) (INPUT = 1.00)

LICENSED PROFESSIONAL ENGINEER
N.A. EL-MASRI
PROVINCE OF ONTARIO
Dec 18, 2020

READ ALL NOTES ON THIS PAGE AND ON ENGINEERING NOTE PAGE ENP-1. THIS NOTE PAGE IS AN INTEGRAL PART OF THIS DRAWING AS IT CONTAINS SPECIFICATIONS AND CRITERIA USED IN THE DESIGN OF THIS COMPONENT.

Town of East Gwillimbury
Building Standards Branch BCIN #16487

These plans have been reviewed for use with the corrections as noted. No other changes may be made without written approval of the Building Standards Branch. All work must comply with Zoning By-Law 2018-043, as amended, and the Ontario Building Code, as amended. These approved documents must be kept on site at all times. The building permit must be clearly posted on site at all times.

Discipline	Reviewer	BCIN	Date
Building Code	H. Authier	43236	2021-02-25
Sewage System			
Zoning			

KOTT

JOB NAME	TRUSS NAME	QUANTITY	PLY	JOB DESC.	DWG NO.
NE1220-124	T12	1	1	GREENPARK - TRINAR HALL - GLENWAY 12A ELE 1 (TRUSS DESC.)	

Version 8.420 S Oct 9 2020 MiTek Industries, Inc. Fri Dec 18 08:14:58 2020 Page 1
ID:9SrEih2qK4qREOqiXOaa nzGFb3-ztmQq9t5XCVMMuB39OSRbhVWvh49vk2LMOoiNWy7o

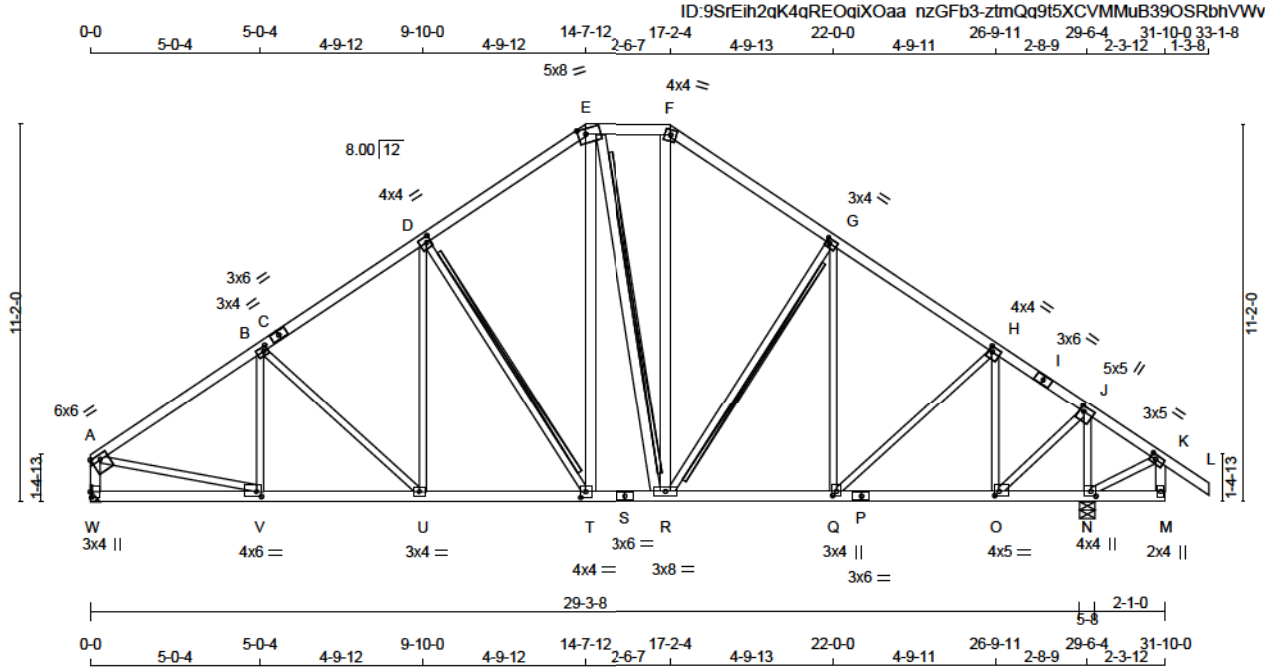

TOTAL WEIGHT = 174 lb

LUMBER
N. L. G. A. RULES

CHORDS	SIZE		LUMBER	DESCR.
A - C	2x4	DRY	No.2	SPF
C - E	2x4	DRY	No.2	SPF
E - F	2x4	DRY	No.2	SPF
F - I	2x4	DRY	No.2	SPF
I - L	2x4	DRY	No.2	SPF
W - A	2x4	DRY	No.2	SPF
M - K	2x4	DRY	No.2	SPF
W - S	2x4	DRY	No.2	SPF
S - P	2x4	DRY	No.2	SPF
P - M	2x4	DRY	No.2	SPF
ALL WEBS	2x3	DRY	No.2	SPF
EXCEPT				
T - E	2x4	DRY	No.2	SPF
E - R	2x4	DRY	No.2	SPF
R - F	2x4	DRY	No.2	SPF

DRY: SEASONED LUMBER.

PLATES (table is in inches)

JT	TYPE	PLATES	W	LEN	Y	X
A	TMVW-t	MT20	6.0	6.0	1.75	Edge
B	TMWW-t	MT20	3.0	4.0	1.50	1.50
C	TS-t	MT20	3.0	6.0		
D	TMWW-t	MT20	4.0	4.0	2.00	1.50
E	TTWW-m	MT20	5.0	8.0	2.00	2.75
F	TTW-m	MT20	4.0	4.0		
G	TMWW-t	MT20	3.0	4.0	1.50	1.50
H	TMWW-t	MT20	4.0	4.0	1.75	1.25
I	TS-t	MT20	3.0	6.0		
J	TMWW+t	MT20	5.0	5.0	1.75	1.50
K	TMVW-t	MT20	3.0	5.0	1.50	2.00
M	BMV+p	MT20	2.0	4.0		
N	BMWW1+t	MT20	4.0	4.0	1.75	1.75
O	BMWW-t	MT20	4.0	5.0	1.50	1.50
P	BS-t	MT20	3.0	6.0		
Q	BMWW+t	MT20	3.0	4.0	1.50	1.50
R	BMWWW-t	MT20	3.0	8.0		
S	BS-t	MT20	3.0	6.0		
T	BMWW-t	MT20	4.0	4.0	2.00	1.75
U	BMWW-t	MT20	3.0	4.0		
V	BMWW-t	MT20	4.0	6.0	1.75	1.75
W	BMV1+p	MT20	3.0	4.0	2.00	0.50

LICENSED PROFESSIONAL ENGINEER
N.A. EL-MASRI
PROVINCE OF ONTARIO
Dec 18, 2020

READ ALL NOTES ON THIS PAGE AND ON ENGINEERING NOTE PAGE ENP-1. THIS NOTE PAGE IS AN INTEGRAL PART OF THIS DRAWING AS IT CONTAINS SPECIFICATIONS AND CRITERIA USED IN THE DESIGN OF THIS COMPONENT.

DIMENSIONS, SUPPORTS AND LOADINGS SPECIFIED BY FABRICATOR TO BE VERIFIED BY BUILDING DESIGNER

BEARINGS

JT	FACTORED GROSS REACTION VERT	HORZ	MAXIMUM GROSS REACTION DOWN	HORZ	FACTORED UPLIFT	INPUT BRG IN-SX	REQRD BRG IN-SX
W	2388	0	2388	0	0	MECHANICAL	
N	2993	0	2993	0	0	5-8	4-3

A SUITABLE HANGER/MECHANICAL CONNECTION IS REQUIRED AT JOINT W. MINIMUM BEARING LENGTH AT JOINT W = 4-4.

UNFACTORED REACTIONS

MAX./MIN. COMPONENT REACTIONS

JT	1ST LCASE COMBINED	SNOW	LIVE	PERM.LIVE	WIND	DEAD	SOIL
W	1769	1014 / 0	308 / 0	0 / 0	0 / 0	447 / 0	0 / 0
N	2207	1298 / 0	360 / 0	0 / 0	0 / 0	549 / 0	0 / 0

BEARING MATERIAL TO BE SPF NO.2 OR BETTER AT JOINT(S) N

BRACING
TOP CHORD TO BE SHEATHED OR MAX. PURLIN SPACING = 3.74 FT.
MAX. UNBRACED BOTTOM CHORD LENGTH = 6.25 FT OR RIGID CEILING DIRECTLY APPLIED.

ALL PITCH BREAKS AND PERIMETER CORNER JOINTS MUST BE LATERALLY RESTRAINED.

2x4 DRY SPF No.2 T-BRACE AT D-T, E-R, G-R

FASTEN T AND I-BRACES TO NARROW EDGE OF WEB WITH ONE ROW PER PLY OF 3" COMMON WIRE NAILS @ 6" O.C. WITH 3" MINIMUM END DISTANCE. BRACE MUST COVER 90% OF WEB LENGTH.

END VERTICAL(S) MUST BE SHEATHED OR HAVE BRACES AS INDICATED IN THE MAX. UNBRACED LENGTH COLUMN OF THE TABLE BELOW

LOADING
TOTAL LOAD CASES: (4)

CHORDS

MEMB. FR-TO	MAX. FACTORED FORCE (LBS)	FACTORED VERT. LOAD (PLF) FROM	TO	LC1 MAX CSI (LC)	MAX. UNBRAC LENGTH
A- B	-2761 / 0	-124.4	-124.4	0.49 (1)	3.74
B- C	-2506 / 0	-124.4	-124.4	0.41 (1)	4.00
C- D	-2506 / 0	-124.4	-124.4	0.41 (1)	4.00
D- E	-1953 / 0	-124.4	-124.4	0.39 (1)	4.44
E- F	-1563 / 0	-124.4	-124.4	0.13 (1)	5.16
F- G	-1906 / 0	-124.4	-124.4	0.39 (1)	4.47
G- H	-2076 / 0	-124.4	-124.4	0.40 (1)	4.32
H- I	-1445 / 0	-124.4	-124.4	0.17 (1)	5.27
I- J	-1445 / 0	-124.4	-124.4	0.17 (1)	5.27
J- K	0 / 327	-124.4	-124.4	0.17 (1)	10.00
K- L	0 / 47	-124.4	-124.4	0.17 (1)	10.00
W- A	-2304 / 0	0.0	0.0	0.24 (1)	5.62
M- K	0 / 38	0.0	0.0	0.01 (3)	10.00
W- V	0 / 0	-39.2	-39.2	0.17 (3)	10.00
V- U	0 / 2324	-39.2	-39.2	0.48 (1)	10.00
U- T	0 / 2084	-39.2	-39.2	0.43 (1)	10.00
T- S	0 / 1608	-39.2	-39.2	0.35 (1)	10.00
S- R	0 / 1608	-39.2	-39.2	0.35 (1)	10.00
R- Q	0 / 1743	-39.2	-39.2	0.39 (1)	10.00
Q- P	0 / 1212	-39.2	-39.2	0.31 (2)	10.00
P- O	0 / 1212	-39.2	-39.2	0.31 (2)	10.00
O- N	-255 / 0	-39.2	-39.2	0.08 (1)	6.25
N- M	0 / 0	-39.2	-39.2	0.11 (1)	10.00

WEBS

MEMB. FR-TO	MAX. FACTORED FORCE (LBS)	MAX CSI (LC)
V- B	-291 / 58	0.10 (1)
B- U	-326 / 0	0.25 (1)
U- D	0 / 436	0.10 (2)
D- T	-896 / 0	0.58 (1)
T- E	0 / 875	0.14 (1)
E- R	-211 / 0	0.19 (1)
R- F	0 / 648	0.10 (1)
R- G	-348 / 0	0.23 (1)
G- Q	-285 / 04	0.34 (1)
Q- H	0 / 722	0.16 (1)
O- H	-1297 / 0	0.43 (1)
O- J	0 / 2041	0.46 (1)
N- J	-2725 / 0	0.48 (1)
A- V	0 / 2377	0.53 (1)
N- K	-282 / 0	0.05 (1)

Town of East Gwillimbury
Building Standards Branch BCIN #16487

These plans have been reviewed for use with the corrections as noted. No other changes may be made without written approval of the Building Standards Branch. All work must comply with Zoning By-Law 2018-043, as amended, and the Ontario Building Code, as amended. These approved documents must be kept on site at all times. The building permit must be clearly posted on site at all times.

Discipline	Reviewer	BCIN	Date
Building Code	H. Authier	43236	2021-02-25
Sewage System			
Zoning			

DESIGN CRITERIA [M][F]

SPECIFIED LOADS:
TOP CH. LL = 34.8 PSF
DL = 8.0 PSF
BOT CH. LL = 10.5 PSF
DL = 7.3 PSF
TOTAL LOAD = 60.6 PSF

SPACING = 24.0 IN. C/C

LOADING IN FLAT SECTION BASED ON A SLOPE OF 2.00/12 MINIMUM

THIS TRUSS IS DESIGNED FOR RESIDENTIAL OR SMALL BUILDING REQUIREMENTS OF PART 9, NBCC 2015

THIS DESIGN COMPLIES WITH:
- PART 9 OF BCBC 2018 , ABC 2019
- PART 9 OF OBC 2012 (2019 AMENDMENT)
- CSA 086-14
- TPIC 2014

(55 % OF 48.1 P.S.F. G.S.L. PLUS 8.4 P.S.F. RAIN LOAD) EQUALS 34.8 P.S.F. SPECIFIED ROOF LIVE LOAD

ALLOWABLE DEFL.(LL)= L/360 (0.98")
CALCULATED VERT. DEFL.(LL) = L/ 999 (0.10")
ALLOWABLE DEFL.(TL)= L/360 (0.98")
CALCULATED VERT. DEFL.(TL) = L/ 999 (0.17")

CANTILEVER DEFLECTION:
ALLOWABLE DEFL.(LL)= L/120 (0.23")
CALCULATED VERT. DEFL.(LL) = L/ 999 (0.00")
ALLOWABLE DEFL.(TL)= L/120 (0.23")
CALCULATED VERT. DEFL.(TL) = L/ 999 (0.00")

CSI: TC=0.49/1.00 (A-B:1) , BC=0.48/1.00 (U-V:1) , WB=0.58/1.00 (D-T:1) , SSI=0.24/1.00 (A-B:1)

DOL LUMBER=1.00 NAIL=1.00 LS BEND=1.10 COMP=1.10 SHEAR=1.10 TENS= 1.10

COMPANION LIVE LOAD FACTOR = 1.00

TRUSS PLATE MANUFACTURER IS NOT RESPONSIBLE FOR QUALITY CONTROL IN THE TRUSS MANUFACTURING PLANT .

NAIL VALUES

PLATE	GRIP(DRY) (PSI) MAX	MIN	SHEAR (PLI) MAX	MIN	SECTION (PLI) MAX	MIN
MT20	650	371	1747	788	1987	1873

PLATE PLACEMENT TOL. = 0.250 inches

PLATE ROTATION TOL. = 5.0 Deg.

JSI GRIP= 0.90 (A) (INPUT = 0.90)
JSI METAL= 0.70 (A) (INPUT = 1.00)

CONTINUED ON PAGE 2

KOTT

JOB NAME	TRUSS NAME	QUANTITY	PLY	JOB DESC.		DWG NO.
NE1220-124	T14	2	1	TRUSS DESC.	GREENPARK - TRINAR HALL - GLENWAY 12A ELE 1	

Version 8.420 S Oct 9 2020 MiTek Industries, Inc. Fri Dec 18 08:14:58 2020 Page 1
ID:9SrEih2qK4qREOqiXOaa nzGFb3-ztmQq9t5XCVMMuB39OSRbhVYAh0DvhELMOoiNWy7c

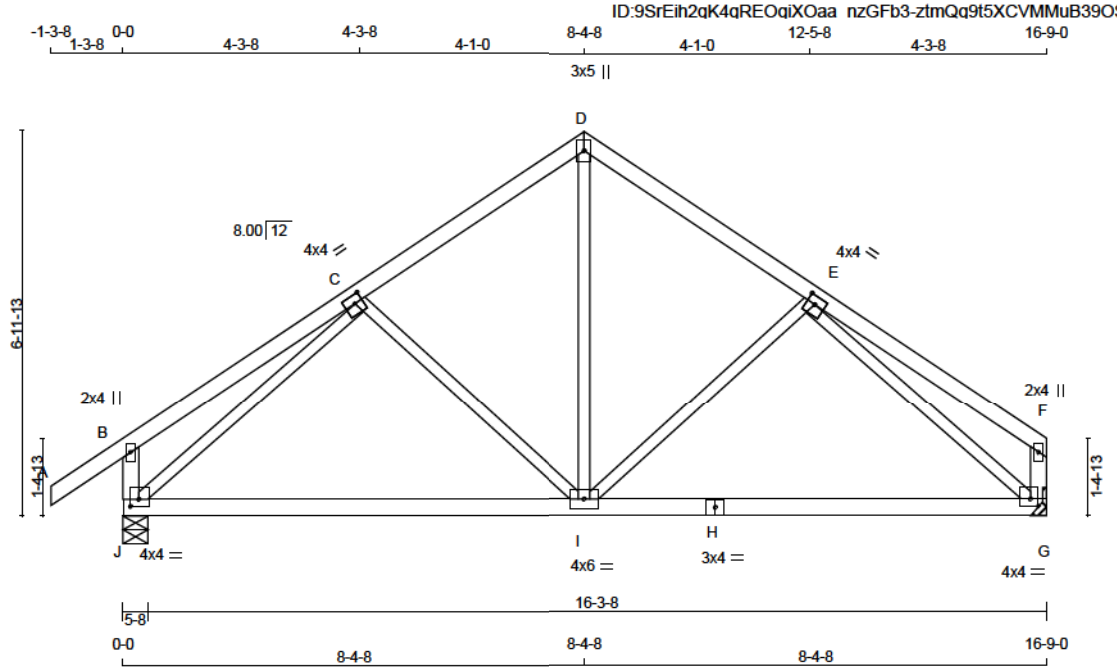

TOTAL WEIGHT = 2 X 69 = 138 lb

LUMBER
N. L. G. A. RULES

CHORDS	SIZE		LUMBER	DESCR.
A - D	2x4	DRY	No.2	SPF
D - F	2x4	DRY	No.2	SPF
J - B	2x4	DRY	No.2	SPF
G - F	2x4	DRY	No.2	SPF
J - H	2x4	DRY	No.2	SPF
H - G	2x4	DRY	No.2	SPF
ALL WEBS EXCEPT	2x3	DRY	No.2	SPF

DRY: SEASONED LUMBER.

PLATES (table is in inches)

JT	TYPE	PLATES	W	LEN	Y	X
B	TMV+p	MT20	2.0	4.0		
C	TMWW-t	MT20	4.0	4.0	1.75	1.75
D	TTW+p	MT20	3.0	5.0		
E	TMWW-t	MT20	4.0	4.0	1.75	1.75
F	TMV+p	MT20	2.0	4.0		
G	BMVW1-t	MT20	4.0	4.0	1.50	1.75
H	BS-t	MT20	3.0	4.0		
I	BMWWW-t	MT20	4.0	6.0		
J	BMVW1-t	MT20	4.0	4.0	1.50	1.75

DIMENSIONS, SUPPORTS AND LOADINGS SPECIFIED BY FABRICATOR TO BE VERIFIED BY BUILDING DESIGNER

BEARINGS

JT	FACTORED GROSS REACTION VERT	HORZ	MAXIMUM GROSS REACTION DOWN	HORZ	UPLIFT	INPUT BRG IN-SX	REQRD BRG IN-SX
J	1542	0	1542	0	0	5-8	1-11
G	1371	0	1371	0	0	MECHANICAL	

A SUITABLE HANGER/MECHANICAL CONNECTION IS REQUIRED AT JOINT G. MINIMUM BEARING LENGTH AT JOINT G = 1-8.

UNFACTORED REACTIONS

JT	1ST LCASE COMBINED	MAX./MIN. COMPONENT REACTIONS SNOW	LIVE	PERM.LIVE	WIND	DEAD	SOIL
J	1133	679 / 0	176 / 0	0 / 0	0 / 0	278 / 0	0 / 0
G	1015	583 / 0	176 / 0	0 / 0	0 / 0	256 / 0	0 / 0

BEARING MATERIAL TO BE SPF NO.2 OR BETTER AT JOINT(S) J

BRACING
TOP CHORD TO BE SHEATHED OR MAX. PURLIN SPACING = 5.65 FT.
MAX. UNBRACED BOTTOM CHORD LENGTH = 10.00 FT OR RIGID CEILING DIRECTLY APPLIED.

ALL PITCH BREAKS AND PERIMETER CORNER JOINTS MUST BE LATERALLY RESTRAINED.

LOADING
TOTAL LOAD CASES: (4)

CHORDS

MEMB. FR-TO	MAX. FACTORED FORCE (LBS)	FACTORED VERT. LOAD (PLF) FROM	TO	LC1 MAX CSI (LC)	MAX. UNBRAC LENGTH
A- B	0 / 47	-124.4	-124.4	0.17 (1)	10.00
B- C	0 / 33	-124.4	-124.4	0.35 (1)	10.00
C- D	-1129 / 0	-124.4	-124.4	0.28 (1)	5.65
D- E	-1129 / 0	-124.4	-124.4	0.28 (1)	5.65
E- F	0 / 33	-124.4	-124.4	0.35 (1)	10.00
J- B	-371 / 0	0.0	0.0	0.04 (1)	7.81
G- F	-200 / 0	0.0	0.0	0.02 (1)	7.81
J- I	0 / 1131	-39.2	-39.2	0.73 (2)	10.00
I- H	0 / 1132	-39.2	-39.2	0.73 (2)	10.00
H- G	0 / 1132	-39.2	-39.2	0.73 (2)	10.00

WEBS

MEMB. FR-TO	MAX. FACTORED FORCE (LBS)	MAX CSI (LC)
C- I	-299 / 8	0.17 (1)
I- D	0 / 813	0.18 (1)
I- E	-299 / 8	0.17 (1)
J- C	-1541 / 0	0.83 (1)
E- G	-1541 / 0	0.83 (1)

DESIGN CRITERIA [M][F]

SPECIFIED LOADS:

TOP CH.	LL	=	34.8	PSF
	DL	=	8.0	PSF
BOT CH.	LL	=	10.5	PSF
	DL	=	7.3	PSF
TOTAL LOAD		=	60.6	PSF

SPACING = 24.0 IN. C/C

THIS TRUSS IS DESIGNED FOR RESIDENTIAL OR SMALL BUILDING REQUIREMENTS OF PART 9, NBCC 2015

THIS DESIGN COMPLIES WITH:
- PART 9 OF BCBC 2018 , ABC 2019
- PART 9 OF OBC 2012 (2019 AMENDMENT)
- CSA 086-14
- TPIC 2014

(55 % OF 48.1 P.S.F. G.S.L. PLUS 8.4 P.S.F. RAIN LOAD) EQUALS 34.8 P.S.F. SPECIFIED ROOF LIVE LOAD

ALLOWABLE DEFL.(LL)= L/360 (0.56")
CALCULATED VERT. DEFL.(LL) = L/ 999 (0.15")
ALLOWABLE DEFL.(TL)= L/360 (0.56")
CALCULATED VERT. DEFL.(TL) = L/ 810 (0.25")

CSI: TC=0.35/1.00 (E-F:1) , BC=0.73/1.00 (G-I:2) , WB=0.83/1.00 (E-G:1) , SSI=0.22/1.00 (G-I:3)

DOL LUMBER=1.00 NAIL=1.00 LS BEND=1.10 COMP=1.10 SHEAR=1.10 TENS= 1.10

COMPANION LIVE LOAD FACTOR = 1.00

TRUSS PLATE MANUFACTURER IS NOT RESPONSIBLE FOR QUALITY CONTROL IN THE TRUSS MANUFACTURING PLANT .

NAIL VALUES

PLATE	GRIP(DRY) (PSI) MAX	MIN	SHEAR (PLI) MAX	MIN	SECTION (PLI) MAX	MIN
MT20	650	371	1747	788	1987	1873

PLATE PLACEMENT TOL. = 0.250 inches

PLATE ROTATION TOL. = 5.0 Deg.

JSI GRIP= 0.87 (E) (INPUT = 0.90)
JSI METAL= 0.49 (E) (INPUT = 1.00)

LICENSED PROFESSIONAL ENGINEER
N.A. EL-MASRI
PROVINCE OF ONTARIO
Dec 18, 2020

READ ALL NOTES ON THIS PAGE AND ON ENGINEERING NOTE PAGE ENP-1. THIS NOTE PAGE IS AN INTEGRAL PART OF THIS DRAWING AS IT CONTAINS SPECIFICATIONS AND CRITERIA USED IN THE DESIGN OF THIS COMPONENT.

Town of East Gwillimbury
Building Standards Branch BCIN #16487

These plans have been reviewed for use with the corrections as noted. No other changes may be made without written approval of the Building Standards Branch. All work must comply with Zoning By-Law 2018-043, as amended, and the Ontario Building Code, as amended. These approved documents must be kept on site at all times. The building permit must be clearly posted on site at all times.

Discipline	Reviewer	BCIN	Date
Building Code	H. Authier	43236	2021-02-25
Sewage System			
Zoning			

KOTT

JOB NAME	TRUSS NAME	QUANTITY	PLY	JOB DESC.		DWG NO.
NE1220-124	T20	1	1	TRUSS DESC.	GREENPARK - TRINAR HALL - GLENWAY 12A ELE 1	

Version 8.420 S Oct 9 2020 MiTek Industries, Inc. Fri Dec 18 08:14:59 2020 Page 1
ID:9SrEih2gK4gREOgiXOaa nzGFb3-R3KotVujlWdD 2mFi5zq7v2kz5SAeFIUa2YFvvy7o

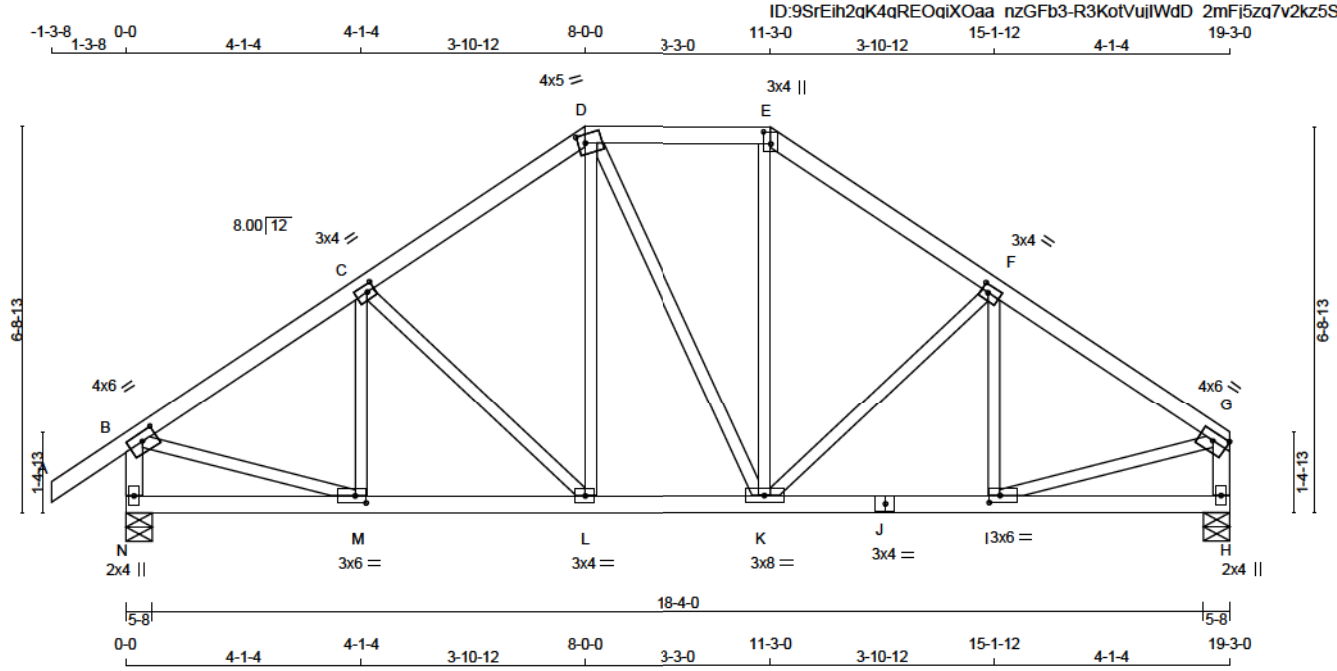

TOTAL WEIGHT = 88 lb

LUMBER
N. L. G. A. RULES

CHORDS	SIZE		LUMBER	DESCR.
A - D	2x4	DRY	No.2	SPF
D - E	2x4	DRY	No.2	SPF
E - G	2x4	DRY	No.2	SPF
N - B	2x4	DRY	No.2	SPF
H - G	2x4	DRY	No.2	SPF
N - J	2x4	DRY	No.2	SPF
J - H	2x4	DRY	No.2	SPF
ALL WEBS EXCEPT	2x3	DRY	No.2	SPF

DRY: SEASONED LUMBER.

PLATES (table is in inches)

JT	TYPE	PLATES	W	LEN	Y	X
B	TMVW-t	MT20	4.0	6.0	1.75	3.00
C	TMWW-t	MT20	3.0	4.0	1.50	1.50
D	TTWW-m	MT20	4.0	5.0	1.75	1.50
E	TTW+p	MT20	3.0	4.0	2.50	1.50
F	TMWW-t	MT20	3.0	4.0	1.50	1.50
G	TMVW-t	MT20	4.0	6.0	1.75	Edge
H	BMV1+p	MT20	2.0	4.0		
I	BMWW-t	MT20	3.0	6.0	1.50	2.25
J	BS-t	MT20	3.0	4.0		
K	BMWWW-t	MT20	3.0	8.0		
L	BMWW-t	MT20	3.0	4.0		
M	BMWW-t	MT20	3.0	6.0	1.50	2.25
N	BMV1+p	MT20	2.0	4.0		

Edge - INDICATES REFERENCE CORNER OF PLATE TOUCHES EDGE OF CHORD.

DIMENSIONS, SUPPORTS AND LOADINGS SPECIFIED BY FABRICATOR TO BE VERIFIED BY BUILDING DESIGNER

BEARINGS

JT	FACTORED GROSS REACTION VERT	HORZ	MAXIMUM GROSS REACTION DOWN	HORZ	FACTORED UPLIFT	INPUT BRG IN-SX	REQRD BRG IN-SX
N	1746	0	1746	0	0	5-8	2-3
H	1575	0	1575	0	0	5-8	1-11

UNFACTORED REACTIONS

JT	1ST LCASE COMBINED	MAX./MIN. COMPONENT REACTIONS SNOW	LIVE	PERM.LIVE	WIND	DEAD	SOIL
N	1284	766 / 0	202 / 0	0 / 0	0 / 0	316 / 0	0 / 0
H	1167	670 / 0	202 / 0	0 / 0	0 / 0	295 / 0	0 / 0

BEARING MATERIAL TO BE SPF NO.2 OR BETTER AT JOINT(S) N, H

BRACING
TOP CHORD TO BE SHEATHED OR MAX. PURLIN SPACING = 4.87 FT.
MAX. UNBRACED BOTTOM CHORD LENGTH = 10.00 FT OR RIGID CEILING DIRECTLY APPLIED.

ALL PITCH BREAKS AND PERIMETER CORNER JOINTS MUST BE LATERALLY RESTRAINED.

LOADING
TOTAL LOAD CASES: (4)

CHORDS

MEMB. FR-TO	FORCE (LBS)	FACTORED VERT. LOAD (PLF) FROM	TO	LC1 MAX CSI (LC)	MAX. UNBRAC LENGTH
A- B	0 / 47	-124.4	-124.4	0.17 (1)	10.00
B- C	-1661 / 0	-124.4	-124.4	0.28 (1)	4.87
C- D	-1412 / 0	-124.4	-124.4	0.27 (1)	5.20
D- E	-1153 / 0	-124.4	-124.4	0.18 (1)	5.73
E- F	-1414 / 0	-124.4	-124.4	0.27 (1)	5.19
F- G	-1660 / 0	-124.4	-124.4	0.28 (1)	4.87
N- B	-1679 / 0	0.0	0.0	0.17 (1)	6.41
H- G	-1507 / 0	0.0	0.0	0.16 (1)	6.68
N- M	0 / 0	-39.2	-39.2	0.12 (3)	10.00
M- L	0 / 1408	-39.2	-39.2	0.30 (1)	10.00
L- K	0 / 1152	-39.2	-39.2	0.24 (1)	10.00
K- J	0 / 1407	-39.2	-39.2	0.30 (1)	10.00
J- I	0 / 1407	-39.2	-39.2	0.30 (1)	10.00
I- H	0 / 0	-39.2	-39.2	0.12 (3)	10.00

WEBS

MEMB. FR-TO	FORCE (LBS)	MAX CSI (LC)
M- C	-193 / 74	0.05 (1)
C- L	-362 / 0	0.19 (1)
L- D	0 / 380	0.09 (1)
D- K	0 / 3	0.00 (1)
K- E	0 / 384	0.09 (1)
K- F	-360 / 0	0.18 (1)
I- F	-196 / 72	0.05 (1)
B- M	0 / 1456	0.33 (1)
I- G	0 / 1455	0.33 (1)

[M][F]

DESIGN CRITERIA

SPECIFIED LOADS:

TOP CH.	LL	=	34.8	PSF
	DL	=	8.0	PSF
BOT CH.	LL	=	10.5	PSF
	DL	=	7.3	PSF
TOTAL LOAD		=	60.6	PSF

SPACING = 24.0 IN. C/C

LOADING IN FLAT SECTION BASED ON A SLOPE OF 2.00/12 MINIMUM

THIS TRUSS IS DESIGNED FOR RESIDENTIAL OR SMALL BUILDING REQUIREMENTS OF PART 9, NBCC 2015

THIS DESIGN COMPLIES WITH:
- PART 9 OF BCBC 2018 , ABC 2019
- PART 9 OF OBC 2012 (2019 AMENDMENT)
- CSA 086-14
- TPIC 2014

(55 % OF 48.1 P.S.F. G.S.L. PLUS 8.4 P.S.F. RAIN LOAD) EQUALS 34.8 P.S.F. SPECIFIED ROOF LIVE LOAD

ALLOWABLE DEFL.(LL)= L/360 (0.64")
CALCULATED VERT. DEFL.(LL) = L/ 999 (0.04")
ALLOWABLE DEFL.(TL)= L/360 (0.64")
CALCULATED VERT. DEFL.(TL) = L/ 999 (0.07")

CSI: TC=0.28/1.00 (B-C:1) , BC=0.30/1.00 (L-M:1) , WB=0.33/1.00 (B-M:1) , SSI=0.20/1.00 (B-C:1)

DOL LUMBER=1.00 NAIL=1.00 LS BEND=1.10 COMP=1.10 SHEAR=1.10 TENS= 1.10

COMPANION LIVE LOAD FACTOR = 1.00

TRUSS PLATE MANUFACTURER IS NOT RESPONSIBLE FOR QUALITY CONTROL IN THE TRUSS MANUFACTURING PLANT .

NAIL VALUES

PLATE	GRIP(DRY) (PSI) MAX	MIN	SHEAR (PLI) MAX	MIN	SECTION (PLI) MAX	MIN
MT20	650	371	1747	788	1987	1873

PLATE PLACEMENT TOL. = 0.250 inches

PLATE ROTATION TOL. = 5.0 Deg.

JSI GRIP= 0.89 (B) (INPUT = 0.90)
JSI METAL= 0.48 (J) (INPUT = 1.00)

LICENSED PROFESSIONAL ENGINEER
N.A. EL-MASRI
PROVINCE OF ONTARIO
Dec 18, 2020

READ ALL NOTES ON THIS PAGE AND ON ENGINEERING NOTE PAGE ENP-1. THIS NOTE PAGE IS AN INTEGRAL PART OF THIS DRAWING AS IT CONTAINS SPECIFICATIONS AND CRITERIA USED IN THE DESIGN OF THIS COMPONENT.

Town of East Gwillimbury
Building Standards Branch BCIN #16487

These plans have been reviewed for use with the corrections as noted. No other changes may be made without written approval of the Building Standards Branch. All work must comply with Zoning By-Law 2018-043, as amended, and the Ontario Building Code, as amended. These approved documents must be kept on site at all times. The building permit must be clearly posted on site at all times.

Discipline	Reviewer	BCIN	Date
Building Code	H. Authier	43236	2021-02-25
Sewage System			
Zoning			

KOTT

JOB NAME	TRUSS NAME	QUANTITY	PLY	JOB DESC.		DRWG NO.
NE1220-124	T21	1	1	TRUSS DESC.	GREENPARK - TRINAR HALL - GLENWAY 12A ELE 1	

Version 8.420 S Oct 9 2020 MiTek Industries, Inc. Fri Dec 18 08:14:59 2020 Page 1

ID:9SrEih2qK4qREOqiXOaa nzGFb3-R3KotVujlWdD 2mFj5zq7v2mT5SjeG Ua2YFvvy7o

Scale = 1:35.5

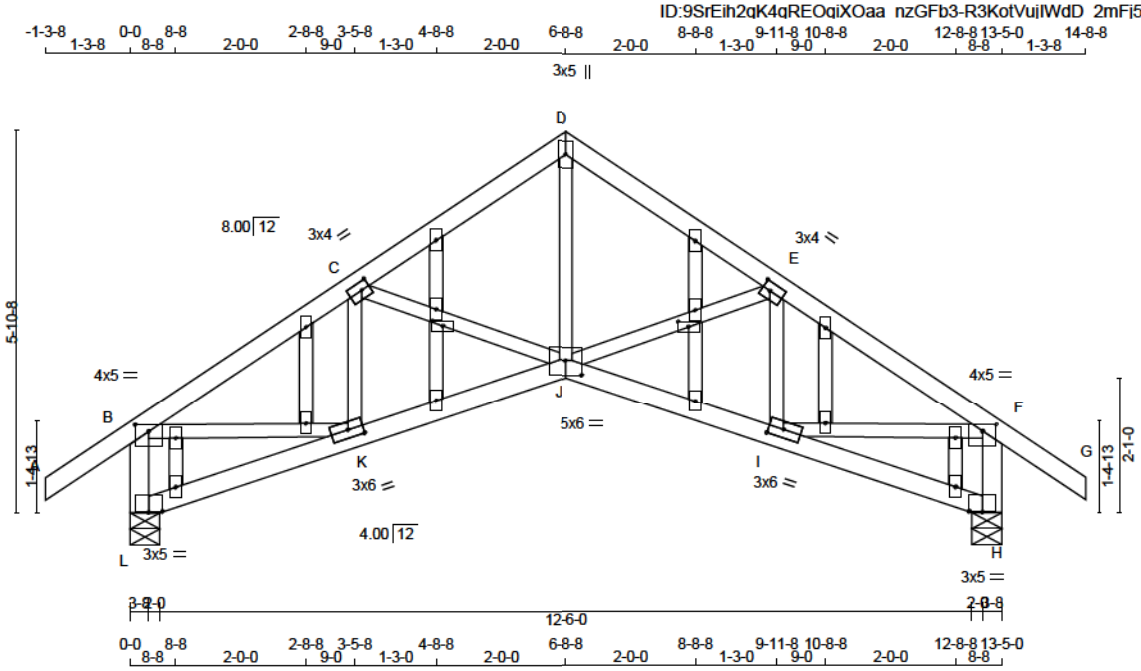

TOTAL WEIGHT = 65 lb

LUMBER

N. L. G. A. RULES

CHORDS	SIZE		LUMBER	DESCR.
A - D	2x4	DRY	No.2	SPF
D - G	2x4	DRY	No.2	SPF
L - B	2x4	DRY	No.2	SPF
H - F	2x4	DRY	No.2	SPF
L - J	2x4	DRY	No.2	SPF
J - H	2x4	DRY	No.2	SPF
ALL WEBS EXCEPT	2x3	DRY	No.2	SPF
ALL GABLE WEBS	2x3	DRY	No.2	SPF

DRY: SEASONED LUMBER.

GABLE STUDS SPACED AT 2-0-0 OC.

PLATES (table is in inches)

JT	TYPE	PLATES	W	LEN	Y	X
B	TMVW-p	MT20	4.0	5.0	1.25	2.50
C	TMWW-t	MT20	3.0	4.0	1.50	1.50
D	TTW+p	MT20	3.0	5.0		
E	TMWW-t	MT20	3.0	4.0	1.50	1.50
F	TMVW-p	MT20	4.0	5.0	1.25	2.50
H	BVM1-p	MT20	3.0	5.0	Edge	
I	BMWW-t	MT20	3.0	6.0	1.50	2.75
J	BBWWW-p	MT20	5.0	6.0	2.75	3.00
K	BMWW-t	MT20	3.0	6.0	1.50	2.75
L	BVM1-p	MT20	3.0	5.0	Edge	
M	NP-p	MT20	2.0	4.0	1.00	2.00
M, N, O, P, Q, R, S, T, U, V, W, X, Y, Z						
M	NP+w	MT20	2.0	4.0		
V	NP-p	MT20	2.0	4.0	1.00	2.00

Edge - INDICATES REFERENCE CORNER OF PLATE TOUCHES EDGE OF CHORD.

DIMENSIONS, SUPPORTS AND LOADINGS SPECIFIED BY FABRICATOR TO BE VERIFIED BY BUILDING DESIGNER

BEARINGS

JT	FACTORED GROSS REACTION VERT	HORZ	MAXIMUM GROSS REACTION DOWN	HORZ	FACTORED UPLIFT	INPUT BRG IN-SX	REQRD BRG IN-SX
L	1269	0	1269	0	0	5-8	1-8
H	1269	0	1269	0	0	5-8	1-8

UNFACTORED REACTIONS

JT	1ST LCASE COMBINED	SNOW	MAX./MIN. COMPONENT REACTIONS LIVE	PERM.LIVE	WIND	DEAD	SOIL
L	931	563 / 0	141 / 0	0 / 0	0 / 0	227 / 0	0 / 0
H	931	563 / 0	141 / 0	0 / 0	0 / 0	227 / 0	0 / 0

BEARING MATERIAL TO BE SPF NO.2 OR BETTER AT JOINT(S) L, H

BRACING

TOP CHORD TO BE SHEATHED OR MAX. PURLIN SPACING = 5.19 FT.
MAX. UNBRACED BOTTOM CHORD LENGTH = 10.00 FT OR RIGID CEILING DIRECTLY APPLIED.

ALL PITCH BREAKS AND PERIMETER CORNER JOINTS MUST BE LATERALLY RESTRAINED.

LOADING

TOTAL LOAD CASES: (4)

CHORDS MEMB. FR-TO	MAX. FORCE (LBS)	FACTORED VERT. LOAD (PLF) FROM	TO	LC1 MAX CSI (LC)	MAX. UNBRAC LENGTH	WEBS MEMB. FR-TO	MAX. FORCE (LBS)	MAX CSI (LC)
A- B	0 / 47	-124.4	-124.4	0.17 (1)	10.00	J- D	0 / 1106	0.25 (1)
B- C	-1492 / 0	-124.4	-124.4	0.18 (1)	5.19	J- E	-213 / 0	0.05 (1)
C- D	-1304 / 0	-124.4	-124.4	0.18 (1)	5.47	I- E	-296 / 12	0.05 (1)
D- E	-1304 / 0	-124.4	-124.4	0.18 (1)	5.47	C- J	-213 / 0	0.05 (1)
E- F	-1492 / 0	-124.4	-124.4	0.18 (1)	5.19	K- C	-296 / 12	0.05 (1)
F- G	0 / 47	-124.4	-124.4	0.17 (1)	10.00	B- K	0 / 1262	0.28 (1)
L- B	-1210 / 0	0.0	0.0	0.13 (1)	7.28	I- F	0 / 1262	0.28 (1)
H- F	-1210 / 0	0.0	0.0	0.13 (1)	7.28			
L- K	0 / 5	-39.3	-39.3	0.09 (3)	10.00			
K- J	0 / 1327	-39.2	-39.2	0.26 (1)	10.00			
J- I	0 / 1327	-39.2	-39.2	0.26 (1)	10.00			
I- H	0 / 5	-39.2	-39.2	0.09 (3)	10.00			

DESIGN CRITERIA [M][F]

SPECIFIED LOADS:

TOP CH.	LL	=	34.8	PSF
	DL	=	8.0	PSF
BOT CH.	LL	=	10.5	PSF
	DL	=	7.3	PSF
TOTAL LOAD		=	60.6	PSF

SPACING = 24.0 IN. C/C

THIS TRUSS IS DESIGNED FOR RESIDENTIAL OR SMALL BUILDING REQUIREMENTS OF PART 9, NBCC 2015

THIS DESIGN COMPLIES WITH:
- PART 9 OF BCBC 2018 , ABC 2019
- PART 9 OF OBC 2012 (2019 AMENDMENT)
- CSA 086-14
- TPIC 2014

(55 % OF 48.1 P.S.F. G.S.L. PLUS 8.4 P.S.F. RAIN LOAD) EQUALS 34.8 P.S.F. SPECIFIED ROOF LIVE LOAD

ALLOWABLE DEFL.(LL)= L/360 (0.45")
CALCULATED VERT. DEFL.(LL) = L/ 999 (0.04")
ALLOWABLE DEFL.(TL)= L/360 (0.45")
CALCULATED VERT. DEFL.(TL) = L/ 999 (0.07")

CSI: TC=0.18/1.00 (B-C:1) , BC=0.26/1.00 (J-K:1) , WB=0.28/1.00 (B-K:1) , SSI=0.17/1.00 (E-F:1)

DOL LUMBER=1.00 NAIL=1.00 LS BEND=1.10 COMP=1.10 SHEAR=1.10 TENS= 1.10

COMPANION LIVE LOAD FACTOR = 1.00

TRUSS PLATE MANUFACTURER IS NOT RESPONSIBLE FOR QUALITY CONTROL IN THE TRUSS MANUFACTURING PLANT .

NAIL VALUES

PLATE	GRIP(DRY) (PSI) MAX	MIN	SHEAR (PLI) MAX	MIN	SECTION (PLI) MAX	MIN
MT20	650	371	1747	788	1987	1873

PLATE PLACEMENT TOL. = 0.250 inches

PLATE ROTATION TOL. = 5.0 Deg.

JSI GRIP= 0.88 (F) (INPUT = 0.90)
JSI METAL= 0.71 (L) (INPUT = 1.00)

LICENSED PROFESSIONAL ENGINEER
N.A. EL-MASRI
PROVINCE OF ONTARIO
Dec 18, 2020

READ ALL NOTES ON THIS PAGE AND ON ENGINEERING NOTE PAGE ENP-1. THIS NOTE PAGE IS AN INTEGRAL PART OF THIS DRAWING AS IT CONTAINS SPECIFICATIONS AND CRITERIA USED IN THE DESIGN OF THIS COMPONENT.

Town of East Gwillimbury
Building Standards Branch BCIN #16487

These plans have been reviewed for use with the corrections as noted. No other changes may be made without written approval of the Building Standards Branch. All work must comply with Zoning By-Law 2018-043, as amended, and the Ontario Building Code, as amended. These approved documents must be kept on site at all times. The building permit must be clearly posted on site at all times.

Discipline	Reviewer	BCIN	Date
Building Code	H. Authier	43236	2021-02-25
Sewage System			
Zoning			

KOTT

JOB NAME	TRUSS NAME	QUANTITY	PLY	JOB DESC.		DRWG NO.
NE1220-124	T22	1	1	TRUSS DESC.	GREENPARK - TRINAR HALL - GLENWAY 12A ELE 1	**Page 35 of 44**

Version 8.420 S Oct 9 2020 MiTek Industries, Inc. Fri Dec 18 08:15:00 2020 Page 1

ID:9SrEih2qK4qREOqiXOaa nzGFb3-vFuA5ruL3qm4bBLSHpUvq6bxDVoyNiEdpiHpROy7o

Scale = 1:35.5

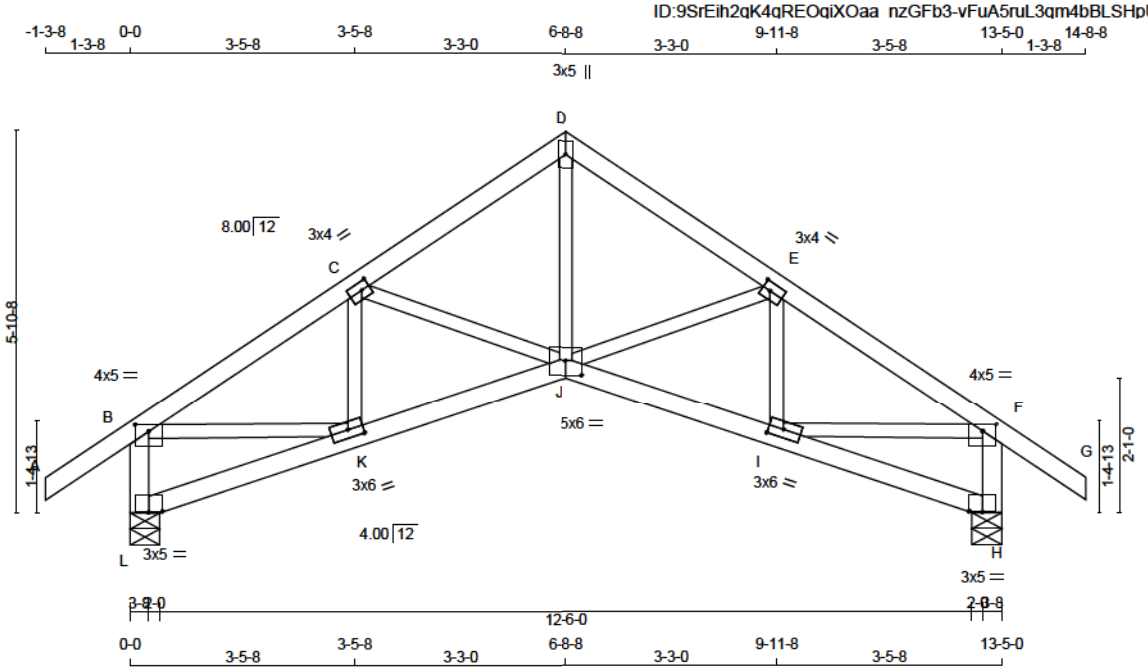

TOTAL WEIGHT = 57 lb

[M][F]

LUMBER

N. L. G. A. RULES

CHORDS	SIZE		LUMBER	DESCR.
A - D	2x4	DRY	No.2	SPF
D - G	2x4	DRY	No.2	SPF
L - B	2x4	DRY	No.2	SPF
H - F	2x4	DRY	No.2	SPF
L - J	2x4	DRY	No.2	SPF
J - H	2x4	DRY	No.2	SPF
ALL WEBS EXCEPT	2x3	DRY	No.2	SPF

DRY: SEASONED LUMBER.

PLATES (table is in inches)

JT	TYPE	PLATES	W	LEN	Y	X
B	TMVW-p	MT20	4.0	5.0	1.25	2.50
C	TMWW-t	MT20	3.0	4.0	1.50	1.50
D	TTW+p	MT20	3.0	5.0		
E	TMWW-t	MT20	3.0	4.0	1.50	1.50
F	TMVW-p	MT20	4.0	5.0	1.25	2.50
H	BVM1-p	MT20	3.0	5.0	Edge	
I	BMWW-t	MT20	3.0	6.0	1.50	2.75
J	BBWWW-p	MT20	5.0	6.0	2.75	3.00
K	BMWW-t	MT20	3.0	6.0	1.50	2.75
L	BVM1-p	MT20	3.0	5.0	Edge	

Edge - INDICATES REFERENCE CORNER OF PLATE TOUCHES EDGE OF CHORD.

DIMENSIONS, SUPPORTS AND LOADINGS SPECIFIED BY FABRICATOR TO BE VERIFIED BY BUILDING DESIGNER

BEARINGS

JT	FACTORED GROSS REACTION VERT	HORZ	MAXIMUM GROSS REACTION DOWN	HORZ	FACTORED UPLIFT	INPUT BRG IN-SX	REQRD BRG IN-SX
L	1269	0	1269	0	0	5-8	1-8
H	1269	0	1269	0	0	5-8	1-8

UNFACTORED REACTIONS

MAX./MIN. COMPONENT REACTIONS

JT	1ST LCASE COMBINED	SNOW	LIVE	PERM.LIVE	WIND	DEAD	SOIL
L	931	563 / 0	141 / 0	0 / 0	0 / 0	227 / 0	0 / 0
H	931	563 / 0	141 / 0	0 / 0	0 / 0	227 / 0	0 / 0

BEARING MATERIAL TO BE SPF NO.2 OR BETTER AT JOINT(S) L, H

BRACING

TOP CHORD TO BE SHEATHED OR MAX. PURLIN SPACING = 5.19 FT.
MAX. UNBRACED BOTTOM CHORD LENGTH = 10.00 FT OR RIGID CEILING DIRECTLY APPLIED.

ALL PITCH BREAKS AND PERIMETER CORNER JOINTS MUST BE LATERALLY RESTRAINED.

LOADING

TOTAL LOAD CASES: (4)

CHORDS MEMB. FR-TO	MAX. FORCE (LBS)	FACTORED VERT. LOAD (PLF) FROM	TO	LC1 MAX CSI (LC)	MAX. UNBRAC LENGTH	WEBS MEMB. FR-TO	MAX. FORCE (LBS)	MAX CSI (LC)
A- B	0 / 47	-124.4	-124.4	0.17 (1)	10.00	J- D	0 / 1106	0.25 (1)
B- C	-1492 / 0	-124.4	-124.4	0.18 (1)	5.19	J- E	-213 / 0	0.05 (1)
C- D	-1304 / 0	-124.4	-124.4	0.18 (1)	5.47	I- E	-296 / 12	0.05 (1)
D- E	-1304 / 0	-124.4	-124.4	0.18 (1)	5.47	C- J	-213 / 0	0.05 (1)
E- F	-1492 / 0	-124.4	-124.4	0.18 (1)	5.19	K- C	-296 / 12	0.05 (1)
F- G	0 / 47	-124.4	-124.4	0.17 (1)	10.00	B- K	0 / 1262	0.28 (1)
L- B	-1210 / 0	0.0	0.0	0.13 (1)	7.28	I- F	0 / 1262	0.28 (1)
H- F	-1210 / 0	0.0	0.0	0.13 (1)	7.28			
L- K	0 / 5	-39.3	-39.3	0.09 (3)	10.00			
K- J	0 / 1327	-39.2	-39.2	0.26 (1)	10.00			
J- I	0 / 1327	-39.2	-39.2	0.26 (1)	10.00			
I- H	0 / 5	-39.2	-39.2	0.09 (3)	10.00			

DESIGN CRITERIA

SPECIFIED LOADS:

TOP CH.	LL	=	34.8	PSF
	DL	=	8.0	PSF
BOT CH.	LL	=	10.5	PSF
	DL	=	7.3	PSF
TOTAL LOAD		=	60.6	PSF

SPACING = 24.0 IN. C/C

THIS TRUSS IS DESIGNED FOR RESIDENTIAL OR SMALL BUILDING REQUIREMENTS OF PART 9, NBCC 2015

THIS DESIGN COMPLIES WITH:
- PART 9 OF BCBC 2018 , ABC 2019
- PART 9 OF OBC 2012 (2019 AMENDMENT)
- CSA 086-14
- TPIC 2014

(55 % OF 48.1 P.S.F. G.S.L. PLUS 8.4 P.S.F. RAIN LOAD) EQUALS 34.8 P.S.F. SPECIFIED ROOF LIVE LOAD

ALLOWABLE DEFL.(LL)= L/360 (0.45")
CALCULATED VERT. DEFL.(LL) = L/ 999 (0.04")
ALLOWABLE DEFL.(TL)= L/360 (0.45")
CALCULATED VERT. DEFL.(TL) = L/ 999 (0.07")

CSI: TC=0.18/1.00 (B-C:1) , BC=0.26/1.00 (J-K:1) , WB=0.28/1.00 (B-K:1) , SSI=0.17/1.00 (E-F:1)

DOL LUMBER=1.00 NAIL=1.00 LS BEND=1.10 COMP=1.10 SHEAR=1.10 TENS= 1.10

COMPANION LIVE LOAD FACTOR = 1.00

TRUSS PLATE MANUFACTURER IS NOT RESPONSIBLE FOR QUALITY CONTROL IN THE TRUSS MANUFACTURING PLANT .

NAIL VALUES

PLATE	GRIP(DRY) (PSI) MAX	MIN	SHEAR (PLI) MAX	MIN	SECTION (PLI) MAX	MIN
MT20	650	371	1747	788	1987	1873

PLATE PLACEMENT TOL. = 0.250 inches

PLATE ROTATION TOL. = 5.0 Deg.

JSI GRIP= 0.88 (F) (INPUT = 0.90)
JSI METAL= 0.71 (L) (INPUT = 1.00)

LICENSED PROFESSIONAL ENGINEER
N.A. EL-MASRI
PROVINCE OF ONTARIO
Dec 18, 2020

READ ALL NOTES ON THIS PAGE AND ON ENGINEERING NOTE PAGE ENP-1. THIS NOTE PAGE IS AN INTEGRAL PART OF THIS DRAWING AS IT CONTAINS SPECIFICATIONS AND CRITERIA USED IN THE DESIGN OF THIS COMPONENT.

Town of East Gwillimbury
Building Standards Branch BCIN #16487

These plans have been reviewed for use with the corrections as noted. No other changes may be made without written approval of the Building Standards Branch. All work must comply with Zoning By-Law 2018-043, as amended, and the Ontario Building Code, as amended. These approved documents must be kept on site at all times. The building permit must be clearly posted on site at all times.

Discipline	Reviewer	BCIN	Date
Building Code	H. Authier	43236	2021-02-25
Sewage System			
Zoning			

KOTT

JOB NAME	TRUSS NAME	QUANTITY	PLY	JOB DESC.		DWG NO.
NE1220-124	T23	2	1	TRUSS DESC.	GREENPARK - TRINAR HALL - GLENWAY 12A ELE 1	

Version 8.420 S Oct 9 2020 MiTek Industries, Inc. Fri Dec 18 08:15:00 2020 Page 1
ID:9SrEih2qK4qREOqiXOaa nzGFb3-vFuA5ruL3qm4bBLSHpUvq6bwkVlaNh7dpiHpROy7o

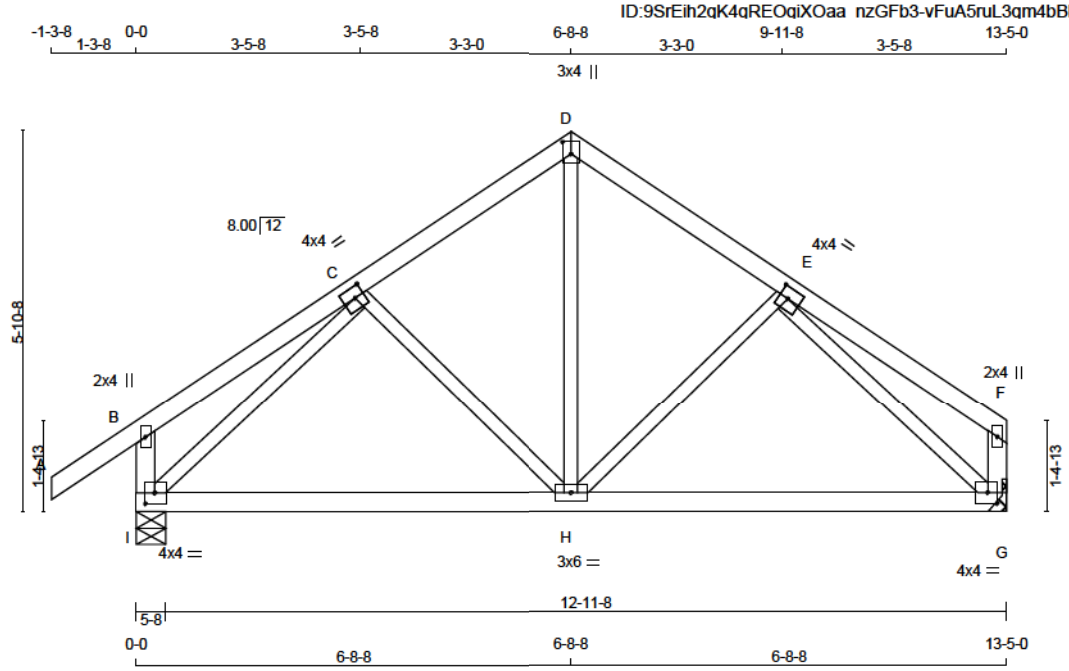

TOTAL WEIGHT = 2 X 57 = 113 lb

LUMBER
N. L. G. A. RULES

CHORDS	SIZE		LUMBER	DESCR.
A - D	2x4	DRY	No.2	SPF
D - F	2x4	DRY	No.2	SPF
I - B	2x4	DRY	No.2	SPF
G - F	2x4	DRY	No.2	SPF
I - G	2x4	DRY	No.2	SPF
ALL WEBS EXCEPT	2x3	DRY	No.2	SPF

DRY: SEASONED LUMBER.

PLATES (table is in inches)

JT	TYPE	PLATES	W	LEN	Y	X
B	TMV+p	MT20	2.0	4.0		
C	TMWW-t	MT20	4.0	4.0	2.00	1.75
D	TTW+p	MT20	3.0	4.0	2.25	1.50
E	TMWW-t	MT20	4.0	4.0	2.00	1.75
F	TMV+p	MT20	2.0	4.0		
G	BMVW1-t	MT20	4.0	4.0	2.00	1.75
H	BMWWW-t	MT20	3.0	6.0		
I	BMVW1-t	MT20	4.0	4.0	2.00	1.75

DIMENSIONS, SUPPORTS AND LOADINGS SPECIFIED BY FABRICATOR TO BE VERIFIED BY BUILDING DESIGNER

BEARINGS

JT	FACTORED GROSS REACTION VERT	HORZ	MAXIMUM GROSS REACTION DOWN	HORZ	UPLIFT	INPUT BRG IN-SX	REQRD BRG IN-SX
I	1269	0	1269	0	0	5-8	1-8
G	1098	0	1098	0	0	MECHANICAL	

A SUITABLE HANGER/MECHANICAL CONNECTION IS REQUIRED AT JOINT G. MINIMUM BEARING LENGTH AT JOINT G = 1-8.

UNFACTORED REACTIONS

JT	1ST LCASE COMBINED	MAX./MIN. COMPONENT REACTIONS SNOW	LIVE	PERM.LIVE	WIND	DEAD	SOIL
I	931	563 / 0	141 / 0	0 / 0	0 / 0	227 / 0	0 / 0
G	813	467 / 0	141 / 0	0 / 0	0 / 0	205 / 0	0 / 0

BEARING MATERIAL TO BE SPF NO.2 OR BETTER AT JOINT(S) I

BRACING
TOP CHORD TO BE SHEATHED OR MAX. PURLIN SPACING = 6.25 FT.
MAX. UNBRACED BOTTOM CHORD LENGTH = 10.00 FT OR RIGID CEILING DIRECTLY APPLIED.

ALL PITCH BREAKS AND PERIMETER CORNER JOINTS MUST BE LATERALLY RESTRAINED.

LOADING
TOTAL LOAD CASES: (4)

CHORDS

MEMB. FR-TO	MAX. FACTORED FORCE (LBS)	FACTORED VERT. LOAD (PLF) FROM	TO	LC1 MAX CSI (LC)	MAX. UNBRAC LENGTH
A- B	0 / 47	-124.4	-124.4	0.17 (1)	10.00
B- C	0 / 26	-124.4	-124.4	0.22 (1)	10.00
C- D	-868 / 0	-124.4	-124.4	0.17 (1)	6.25
D- E	-868 / 0	-124.4	-124.4	0.17 (1)	6.25
E- F	0 / 26	-124.4	-124.4	0.22 (1)	10.00
I- B	-332 / 0	0.0	0.0	0.03 (1)	7.81
G- F	-162 / 0	0.0	0.0	0.02 (1)	7.81
I- H	0 / 845	-39.2	-39.2	0.48 (2)	10.00
H- G	0 / 845	-39.2	-39.2	0.48 (2)	10.00

WEBS

MEMB. FR-TO	MAX. FACTORED FORCE (LBS)	MAX CSI (LC)
H- D	0 / 608	0.14 (1)
H- E	-201 / 20	0.07 (1)
C- H	-202 / 20	0.07 (1)
I- C	-1188 / 0	0.42 (1)
E- G	-1188 / 0	0.42 (1)

DESIGN CRITERIA

SPECIFIED LOADS:

TOP CH.	LL	=	34.8	PSF
	DL	=	8.0	PSF
BOT CH.	LL	=	10.5	PSF
	DL	=	7.3	PSF
TOTAL LOAD		=	60.6	PSF

SPACING = 24.0 IN. C/C

THIS TRUSS IS DESIGNED FOR RESIDENTIAL OR SMALL BUILDING REQUIREMENTS OF PART 9, NBCC 2015

THIS DESIGN COMPLIES WITH:
- PART 9 OF BCBC 2018 , ABC 2019
- PART 9 OF OBC 2012 (2019 AMENDMENT)
- CSA 086-14
- TPIC 2014

(55 % OF 48.1 P.S.F. G.S.L. PLUS 8.4 P.S.F. RAIN LOAD) EQUALS 34.8 P.S.F. SPECIFIED ROOF LIVE LOAD

ALLOWABLE DEFL.(LL)= L/360 (0.45")
CALCULATED VERT. DEFL.(LL) = L/ 999 (0.06")
ALLOWABLE DEFL.(TL)= L/360 (0.45")
CALCULATED VERT. DEFL.(TL) = L/ 999 (0.11")

CSI: TC=0.22/1.00 (B-C:1) , BC=0.48/1.00 (H-I:2) , WB=0.42/1.00 (C-I:1) , SSI=0.18/1.00 (G-H:3)

DOL LUMBER=1.00 NAIL=1.00 LS BEND=1.10 COMP=1.10 SHEAR=1.10 TENS= 1.10

COMPANION LIVE LOAD FACTOR = 1.00

TRUSS PLATE MANUFACTURER IS NOT RESPONSIBLE FOR QUALITY CONTROL IN THE TRUSS MANUFACTURING PLANT .

NAIL VALUES

PLATE	GRIP(DRY) (PSI) MAX	MIN	SHEAR (PLI) MAX	MIN	SECTION (PLI) MAX	MIN
MT20	650	371	1747	788	1987	1873

PLATE PLACEMENT TOL. = 0.250 inches

PLATE ROTATION TOL. = 5.0 Deg.

JSI GRIP= 0.86 (H) (INPUT = 0.90)
JSI METAL= 0.38 (E) (INPUT = 1.00)

LICENSED PROFESSIONAL ENGINEER
N.A. EL-MASRI
PROVINCE OF ONTARIO
Dec 18, 2020

READ ALL NOTES ON THIS PAGE AND ON ENGINEERING NOTE PAGE ENP-1. THIS NOTE PAGE IS AN INTEGRAL PART OF THIS DRAWING AS IT CONTAINS SPECIFICATIONS AND CRITERIA USED IN THE DESIGN OF THIS COMPONENT.

Town of East Gwillimbury
Building Standards Branch BCIN #16487

These plans have been reviewed for use with the corrections as noted. No other changes may be made without written approval of the Building Standards Branch. All work must comply with Zoning By-Law 2018-043, as amended, and the Ontario Building Code, as amended. These approved documents must be kept on site at all times. The building permit must be clearly posted on site at all times.

Discipline	Reviewer	BCIN	Date
Building Code	H. Authier	43236	2021-02-25
Sewage System			
Zoning			

KOTT

JOB NAME	TRUSS NAME	QUANTITY	PLY	JOB DESC.		DWG NO.
NE1220-124	T24	1	1	TRUSS DESC.	GREENPARK - TRINAR HALL - GLENWAY 12A ELE 1	

Version 8.420 S Oct 9 2020 MiTek Industries, Inc. Fri Dec 18 08:15:01 2020 Page 1
ID:9SrEih2qK4qREOqiXOaa nzGFb3-NSRYIBvzq7uxDLveqW?8CK75Uv5p68Nn2M1M ry7c

Scale = 1:35.5

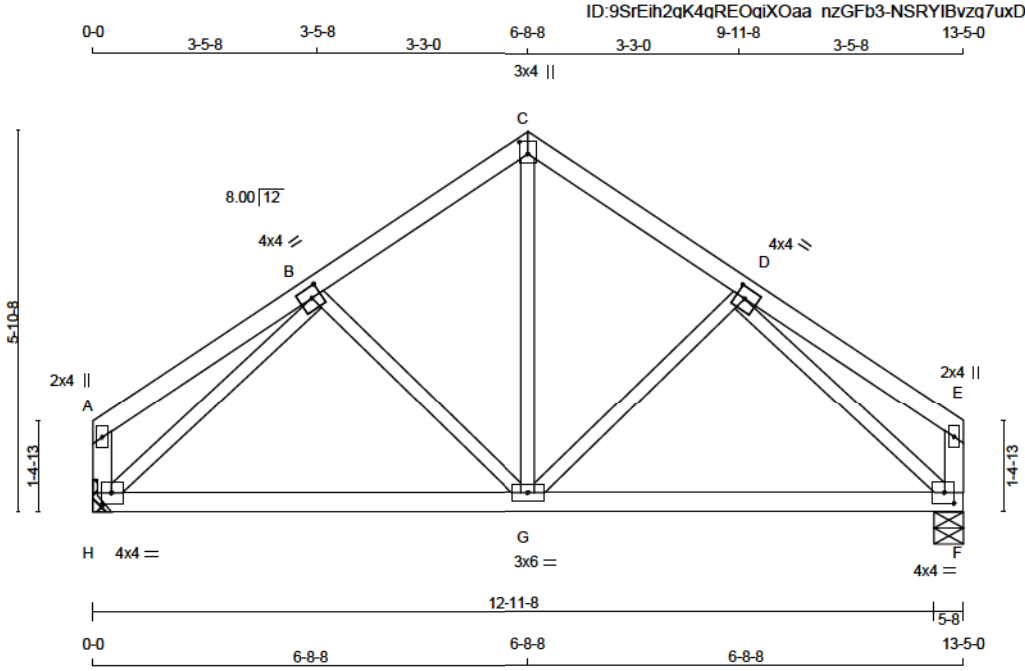

TOTAL WEIGHT = 55 lb

LUMBER
N. L. G. A. RULES

CHORDS	SIZE		LUMBER	DESCR.
A - C	2x4	DRY	No.2	SPF
C - E	2x4	DRY	No.2	SPF
H - A	2x4	DRY	No.2	SPF
F - E	2x4	DRY	No.2	SPF
H - F	2x4	DRY	No.2	SPF
ALL WEBS EXCEPT	2x3	DRY	No.2	SPF

DRY: SEASONED LUMBER.

PLATES (table is in inches)

JT	TYPE	PLATES	W	LEN	Y	X
A	TMV+p	MT20	2.0	4.0		
B	TMWW-t	MT20	4.0	4.0	2.00	1.75
C	TTW+p	MT20	3.0	4.0	2.25	1.50
D	TMWW-t	MT20	4.0	4.0	2.00	1.75
E	TMV+p	MT20	2.0	4.0		
F	BMVW1-t	MT20	4.0	4.0	2.00	1.75
G	BMWWW-t	MT20	3.0	6.0		
H	BMVW1-t	MT20	4.0	4.0	2.00	1.75

DIMENSIONS, SUPPORTS AND LOADINGS SPECIFIED BY FABRICATOR TO BE VERIFIED BY BUILDING DESIGNER

BEARINGS

JT	FACTORED GROSS REACTION VERT	HORZ	MAXIMUM GROSS REACTION DOWN	HORZ	UPLIFT	INPUT BRG IN-SX	REQRD BRG IN-SX
H	1098	0	1098	0	0	MECHANICAL	
F	1098	0	1098	0	0	5-8	1-8

A SUITABLE HANGER/MECHANICAL CONNECTION IS REQUIRED AT JOINT H. MINIMUM BEARING LENGTH AT JOINT H = 1-8.

UNFACTORED REACTIONS

JT	1ST LCASE COMBINED	MAX./MIN. COMPONENT REACTIONS SNOW	LIVE	PERM.LIVE	WIND	DEAD	SOIL
H	813	467 / 0	141 / 0	0 / 0	0 / 0	205 / 0	0 / 0
F	813	467 / 0	141 / 0	0 / 0	0 / 0	205 / 0	0 / 0

BEARING MATERIAL TO BE SPF NO.2 OR BETTER AT JOINT(S) F

BRACING
TOP CHORD TO BE SHEATHED OR MAX. PURLIN SPACING = 6.25 FT.
MAX. UNBRACED BOTTOM CHORD LENGTH = 10.00 FT OR RIGID CEILING DIRECTLY APPLIED.

ALL PITCH BREAKS AND PERIMETER CORNER JOINTS MUST BE LATERALLY RESTRAINED.

LOADING
TOTAL LOAD CASES: (4)

CHORDS

MEMB. FR-TO	MAX. FACTORED FORCE (LBS)	FACTORED VERT. LOAD (PLF) FROM	TO	LC1 MAX CSI (LC)	MAX. UNBRAC LENGTH
A- B	0 / 26	-124.4	-124.4	0.22 (1)	10.00
B- C	-868 / 0	-124.4	-124.4	0.17 (1)	6.25
C- D	-868 / 0	-124.4	-124.4	0.17 (1)	6.25
D- E	0 / 26	-124.4	-124.4	0.22 (1)	10.00
H- A	-162 / 0	0.0	0.0	0.02 (1)	7.81
F- E	-162 / 0	0.0	0.0	0.02 (1)	7.81
H- G	0 / 845	-39.2	-39.2	0.48 (2)	10.00
G- F	0 / 845	-39.2	-39.2	0.48 (2)	10.00

WEBS

MEMB. FR-TO	MAX. FACTORED FORCE (LBS)	MAX CSI (LC)
G- C	0 / 608	0.14 (1)
G- D	-201 / 20	0.07 (1)
B- G	-201 / 20	0.07 (1)
H- B	-1188 / 0	0.42 (1)
D- F	-1188 / 0	0.42 (1)

DESIGN CRITERIA

SPECIFIED LOADS:

TOP CH.	LL	=	34.8	PSF
	DL	=	8.0	PSF
BOT CH.	LL	=	10.5	PSF
	DL	=	7.3	PSF
TOTAL LOAD		=	60.6	PSF

SPACING = 24.0 IN. C/C

THIS TRUSS IS DESIGNED FOR RESIDENTIAL OR SMALL BUILDING REQUIREMENTS OF PART 9, NBCC 2015

THIS DESIGN COMPLIES WITH:
- PART 9 OF BCBC 2018 , ABC 2019
- PART 9 OF OBC 2012 (2019 AMENDMENT)
- CSA 086-14
- TPIC 2014

(55 % OF 48.1 P.S.F. G.S.L. PLUS 8.4 P.S.F. RAIN LOAD) EQUALS 34.8 P.S.F. SPECIFIED ROOF LIVE LOAD

ALLOWABLE DEFL.(LL)= L/360 (0.45")
CALCULATED VERT. DEFL.(LL) = L/ 999 (0.06")
ALLOWABLE DEFL.(TL)= L/360 (0.45")
CALCULATED VERT. DEFL.(TL) = L/ 999 (0.11")

CSI: TC=0.22/1.00 (D-E:1) , BC=0.48/1.00 (G-H:2) , WB=0.42/1.00 (D-F:1) , SSI=0.18/1.00 (G-H:3)

DOL LUMBER=1.00 NAIL=1.00 LS BEND=1.10 COMP=1.10 SHEAR=1.10 TENS= 1.10

COMPANION LIVE LOAD FACTOR = 1.00

TRUSS PLATE MANUFACTURER IS NOT RESPONSIBLE FOR QUALITY CONTROL IN THE TRUSS MANUFACTURING PLANT .

NAIL VALUES

PLATE	GRIP(DRY) (PSI) MAX	MIN	SHEAR (PLI) MAX	MIN	SECTION (PLI) MAX	MIN
MT20	650	371	1747	788	1987	1873

PLATE PLACEMENT TOL. = 0.250 inches

PLATE ROTATION TOL. = 5.0 Deg.

JSI GRIP= 0.86 (G) (INPUT = 0.90)
JSI METAL= 0.38 (B) (INPUT = 1.00)

LICENSED PROFESSIONAL ENGINEER
N.A. EL-MASRI
PROVINCE OF ONTARIO
Dec 18, 2020

READ ALL NOTES ON THIS PAGE AND ON ENGINEERING NOTE PAGE ENP-1. THIS NOTE PAGE IS AN INTEGRAL PART OF THIS DRAWING AS IT CONTAINS SPECIFICATIONS AND CRITERIA USED IN THE DESIGN OF THIS COMPONENT.

Town of East Gwillimbury
Building Standards Branch BCIN #16487

These plans have been reviewed for use with the corrections as noted. No other changes may be made without written approval of the Building Standards Branch. All work must comply with Zoning By-Law 2018-043, as amended, and the Ontario Building Code, as amended. These approved documents must be kept on site at all times. The building permit must be clearly posted on site at all times.

Discipline	Reviewer	BCIN	Date
Building Code	H. Authier	43236	2021-02-25
Sewage System			
Zoning			

KOTT

JOB NAME	TRUSS NAME	QUANTITY	PLY	JOB DESC.		DWG NO.
NE1220-124	T26	4	1	TRUSS DESC.	GREENPARK - TRINAR HALL - GLENWAY 12A ELE 1	

Version 8.420 S Oct 9 2020 MiTek Industries, Inc. Fri Dec 18 08:15:02 2020 Page 1
ID:9SrEih2gK4gREOgiXOaa nzGFb3-re?xWXwbaR0orVUqODWNIXqDAIUtrh8wG0mwWHy7o

Scale = 1:17.8

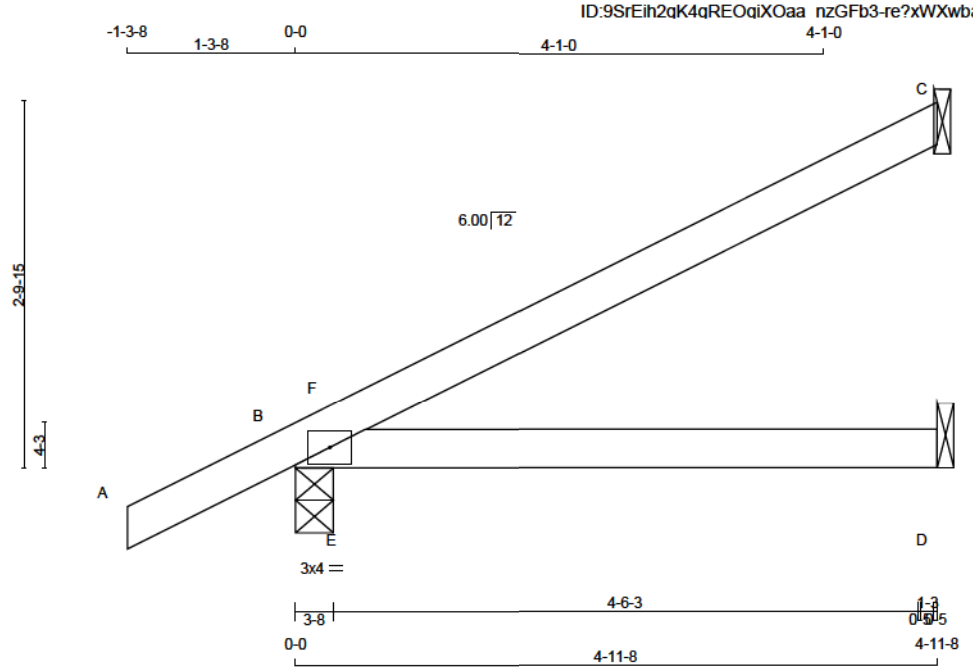

TOTAL WEIGHT = 4 X 14 = 55 lb

LUMBER
N. L. G. A. RULES

CHORDS	SIZE		LUMBER	DESCR.
A - C	2x4	DRY	No.2	SPF
B - D	2x4	DRY	No.2	SPF

DRY: SEASONED LUMBER.

PLATES (table is in inches)

JT	TYPE	PLATES	W	LEN	Y	X
B	TMB1-I	MT20	3.0	4.0		

DIMENSIONS, SUPPORTS AND LOADINGS SPECIFIED BY FABRICATOR TO BE VERIFIED BY BUILDING DESIGNER [M]

BEARINGS

JT	FACTORED GROSS REACTION VERT	HORZ	MAXIMUM GROSS REACTION DOWN	HORZ	UPLIFT	INPUT BRG IN-SX	REQRD BRG IN-SX
C	274	0	274	0	0	1-8	1-8
B	575	0	575	0	0	3-8	1-8
D	131	0	141	0	0	1-8	1-8

SEE MITEK STANDARD DETAIL B97791H FOR CONNECTION TO JOINT(S) C , D

UNFACTORED REACTIONS

JT	1ST LCASE COMBINED	MAX /MIN COMPONENT REACTIONS SNOW	LIVE	PERM.LIVE	WIND	DEAD	SOIL
C	192	146 / 0	7 / 0	0 / 0	0 / 0	39 / 0	0 / 0
B	417	267 / 0	52 / 0	0 / 0	0 / 0	98 / 0	0 / 0
D	109	27 / 0	45 / 0	0 / 0	0 / 0	37 / 0	0 / 0

BEARING MATERIAL TO BE SPF NO.2 OR BETTER AT JOINT(S) C, B

BRACING
TOP CHORD TO BE SHEATHED OR MAX. PURLIN SPACING = 6.25 FT.
MAX. UNBRACED BOTTOM CHORD LENGTH = 10.00 FT OR RIGID CEILING DIRECTLY APPLIED.

ALL PITCH BREAKS AND PERIMETER CORNER JOINTS MUST BE LATERALLY RESTRAINED.

LOADING
TOTAL LOAD CASES: (4)

CHORDS

MEMB. FR-TO	MAX. FACTORED FORCE (LBS)	FACTORED VERT. LOAD (PLF) FROM	TO	LC1 MAX CSI (LC)	MAX. UNBRAC LENGTH
A- B	0 / 36	-124.4	-124.4	0.16 (1)	10.00
B- F	-77 / 52	-124.4	-124.4	0.09 (3)	6.25
F- C	-4 / 6	-124.4	-124.4	0.41 (1)	10.00
B- E	0 / 0	-39.2	-39.2	0.26 (1)	10.00
E- D	0 / 0	-39.2	-39.2	0.30 (1)	10.00

WEBS

MEMB. FR-TO	MAX. FACTORED FORCE (LBS)	MAX CSI (LC)
E- F	-419 / 114	0.00 (1)

DESIGN CRITERIA

SPECIFIED LOADS:
TOP CH. LL = 34.8 PSF
DL = 8.0 PSF
BOT CH. LL = 10.5 PSF
DL = 7.3 PSF
TOTAL LOAD = 60.6 PSF

SPACING = 24.0 IN. C/C

THIS TRUSS IS DESIGNED FOR RESIDENTIAL OR SMALL BUILDING REQUIREMENTS OF PART 9, NBCC 2015

THIS DESIGN COMPLIES WITH:
- PART 9 OF BCBC 2018 , ABC 2019
- PART 9 OF OBC 2012 (2019 AMENDMENT)
- CSA 086-14
- TPIC 2014

(55 % OF 48.1 P.S.F. G.S.L. PLUS 8.4 P.S.F. RAIN LOAD) EQUALS 34.8 P.S.F. SPECIFIED ROOF LIVE LOAD

ALLOWABLE DEFL.(LL)= L/360 (0.19")
CALCULATED VERT. DEFL.(LL) = L/ 983 (0.06")
ALLOWABLE DEFL.(TL)= L/360 (0.19")
CALCULATED VERT. DEFL.(TL) = L/ 566 (0.11")

CSI: TC=0.41/1.00 (C-F:1) , BC=0.30/1.00 (D-E:1) , WB=0.00/1.00 (E-F:1) , SSI=0.38/1.00 (B-E:1)

DOL LUMBER=1.00 NAIL=1.00 LS BEND=1.10 COMP=1.10 SHEAR=1.10 TENS= 1.10

COMPANION LIVE LOAD FACTOR = 1.00

TRUSS PLATE MANUFACTURER IS NOT RESPONSIBLE FOR QUALITY CONTROL IN THE TRUSS MANUFACTURING PLANT .

NAIL VALUES

PLATE	GRIP(DRY) (PSI) MAX	MIN	SHEAR (PLI) MAX	MIN	SECTION (PLI) MAX	MIN
MT20	650	371	1747	788	1987	1873

PLATE PLACEMENT TOL. = 0.250 inches

PLATE ROTATION TOL. = 5.0 Deg.

JSI GRIP= 0.43 (B) (INPUT = 0.90)
JSI METAL= 0.08 (B) (INPUT = 1.00)

LICENSED PROFESSIONAL ENGINEER
N.A. EL-MASRI
PROVINCE OF ONTARIO
Dec 18, 2020

READ ALL NOTES ON THIS PAGE AND ON ENGINEERING NOTE PAGE ENP-1. THIS NOTE PAGE IS AN INTEGRAL PART OF THIS DRAWING AS IT CONTAINS SPECIFICATIONS AND CRITERIA USED IN THE DESIGN OF THIS COMPONENT.

Town of East Gwillimbury
Building Standards Branch BCIN #16487

These plans have been reviewed for use with the corrections as noted. No other changes may be made without written approval of the Building Standards Branch. All work must comply with Zoning By-Law 2018-043, as amended, and the Ontario Building Code, as amended. These approved documents must be kept on site at all times. The building permit must be clearly posted on site at all times.

Discipline	Reviewer	BCIN	Date
Building Code	H. Authier	43236	2021-02-25
Sewage System			
Zoning			

KOTT

JOB NAME	TRUSS NAME	QUANTITY	PLY	JOB DESC.		DRWG NO.
NE1220-124	T28	3	1	TRUSS DESC.	GREENPARK - TRINAR HALL - GLENWAY 12A ELE 1	

Version 8.420 S Oct 9 2020 MiTek Industries, Inc. Fri Dec 18 08:15:02 2020 Page 1
ID:9SrEih2qK4qREOqiXOaa nzGFb3-re?xWXwbaR0orVUqODWNlXqGvlMvrenwG0mwWHy7o

Scale = 1:42.4

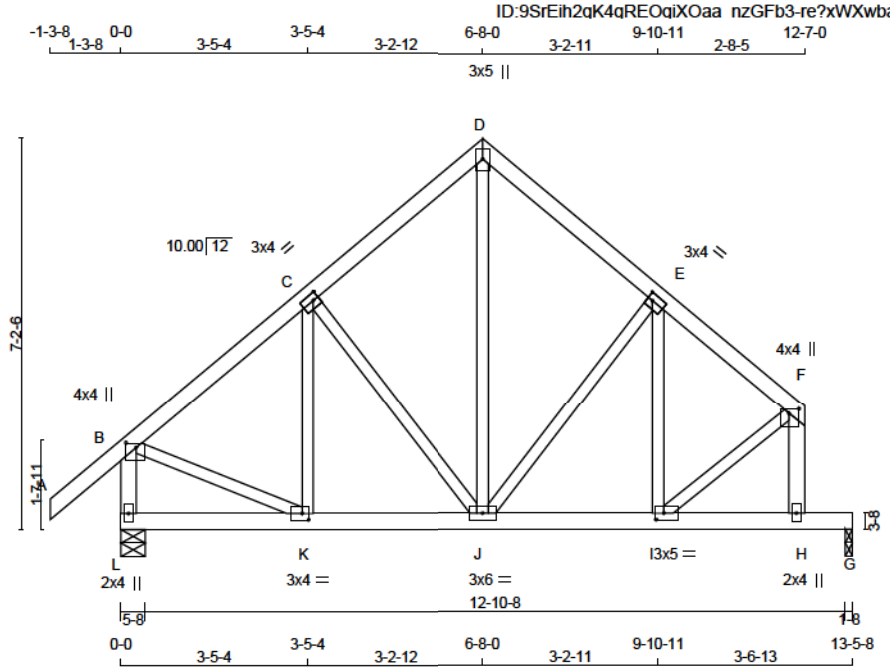

TOTAL WEIGHT = 3 X 65 = 194 lb

LUMBER
N. L. G. A. RULES

CHORDS	SIZE		LUMBER	DESCR.
A - D	2x4	DRY	No.2	SPF
D - F	2x4	DRY	No.2	SPF
L - B	2x4	DRY	No.2	SPF
H - F	2x4	DRY	No.2	SPF
L - G	2x4	DRY	2100F 1.8E	SPF
ALL WEBS EXCEPT	2x3	DRY	No.2	SPF

DRY: SEASONED LUMBER.

PLATES (table is in inches)

JT	TYPE	PLATES	W	LEN	Y	X
B	TMVW+p	MT20	4.0	4.0	1.00	2.25
C	TMWW-t	MT20	3.0	4.0	1.50	1.25
D	TTW+p	MT20	3.0	5.0		
E	TMWW-t	MT20	3.0	4.0	1.50	1.25
F	TMVW+p	MT20	4.0	4.0	1.00	2.25
H	BMV+p	MT20	2.0	4.0		
I	BMWW-t	MT20	3.0	5.0	1.50	1.75
J	BMWWW-t	MT20	3.0	6.0		
K	BMWW-t	MT20	3.0	4.0	1.50	1.50
L	BMV1+p	MT20	2.0	4.0		

DIMENSIONS, SUPPORTS AND LOADINGS SPECIFIED BY FABRICATOR TO BE VERIFIED BY BUILDING DESIGNER

BEARINGS

JT	FACTORED GROSS REACTION VERT	HORZ	MAXIMUM GROSS REACTION DOWN	HORZ	UPLIFT	INPUT BRG IN-SX	REQRD BRG IN-SX
L	1274	0	1274	0	0	5-8	1-8
G	1101	0	1101	0	0	1-8	1-8

UNFACTORED REACTIONS

JT	1ST LCASE COMBINED	SNOW	MAX./MIN. COMPONENT REACTIONS LIVE	PERM.LIVE	WIND	DEAD	SOIL
L	934	565 / 0	141 / 0	0 / 0	0 / 0	228 / 0	0 / 0
G	816	468 / 0	141 / 0	0 / 0	0 / 0	206 / 0	0 / 0

BEARING MATERIAL TO BE SPF NO.2 OR BETTER AT JOINT(S) L, G

BRACING
TOP CHORD TO BE SHEATHED OR MAX. PURLIN SPACING = 6.05 FT.
MAX. UNBRACED BOTTOM CHORD LENGTH = 10.00 FT OR RIGID CEILING DIRECTLY APPLIED.

ALL PITCH BREAKS AND PERIMETER CORNER JOINTS MUST BE LATERALLY RESTRAINED.

LOADING
TOTAL LOAD CASES: (4)

CHORDS

MEMB. FR-TO	MAX. FACTORED FORCE (LBS)	FACTORED VERT. LOAD (PLF) FROM	TO	LC1 MAX CSI (LC)	MAX. UNBRAC LENGTH
A- B	0 / 55	-124.4	-124.4	0.17 (1)	10.00
B- C	-914 / 0	-124.4	-124.4	0.24 (1)	6.14
C- D	-730 / 0	-124.4	-124.4	0.23 (1)	6.25
D- E	-723 / 0	-124.4	-124.4	0.18 (1)	6.25
E- F	-982 / 0	-124.4	-124.4	0.18 (1)	6.05
L- B	-1219 / 0	0.0	0.0	0.13 (1)	7.26
H- F	-1326 / 0	0.0	0.0	0.16 (1)	7.03
L- K	0 / 0	-39.2	-39.2	0.06 (3)	10.00
K- J	0 / 725	-39.2	-39.2	0.10 (2)	10.00
J- I	0 / 777	-39.2	-39.2	0.27 (1)	10.00
I- H	0 / 0	-39.2	-39.2	0.81 (1)	10.00
H- G	0 / 0	-163.7	-163.7	0.81 (1)	10.00

WEBS

MEMB. FR-TO	MAX. FACTORED FORCE (LBS)	MAX CSI (LC)
K- C	-110 / 78	0.03 (1)
C- J	-308 / 0	0.14 (1)
J- D	0 / 581	0.13 (1)
J- E	-393 / 0	0.18 (1)
I- E	0 / 135	0.03 (3)
B- K	0 / 776	0.17 (1)
I- F	0 / 956	0.22 (1)

DESIGN CRITERIA

SPECIFIED LOADS:

TOP CH.	LL	=	34.8	PSF
	DL	=	8.0	PSF
BOT CH.	LL	=	10.5	PSF
	DL	=	7.3	PSF
TOTAL LOAD		=	60.6	PSF

SPACING = 24.0 IN. C/C

THIS TRUSS IS DESIGNED FOR RESIDENTIAL OR SMALL BUILDING REQUIREMENTS OF PART 9, NBCC 2015

THIS DESIGN COMPLIES WITH:
- PART 9 OF BCBC 2018 , ABC 2019
- PART 9 OF OBC 2012 (2019 AMENDMENT)
- CSA 086-14
- TPIC 2014

(55 % OF 48.1 P.S.F. G.S.L. PLUS 8.4 P.S.F. RAIN LOAD) EQUALS 34.8 P.S.F. SPECIFIED ROOF LIVE LOAD

ALLOWABLE DEFL.(LL)= L/360 (0.45")
CALCULATED VERT. DEFL.(LL) = L/ 999 (0.10")
ALLOWABLE DEFL.(TL)= L/360 (0.45")
CALCULATED VERT. DEFL.(TL) = L/ 924 (0.17")

CSI: TC=0.24/1.00 (B-C:1) , BC=0.81/1.00 (H-I:1) , WB=0.22/1.00 (F-I:1) , SSI=0.86/1.00 (G-H:1)

DOL LUMBER=1.00 NAIL=1.00 LS BEND=1.10 COMP=1.10 SHEAR=1.10 TENS= 1.10

COMPANION LIVE LOAD FACTOR = 1.00

TRUSS PLATE MANUFACTURER IS NOT RESPONSIBLE FOR QUALITY CONTROL IN THE TRUSS MANUFACTURING PLANT .

NAIL VALUES

PLATE	GRIP(DRY) (PSI) MAX	MIN	SHEAR (PLI) MAX	MIN	SECTION (PLI) MAX	MIN
MT20	650	371	1747	788	1987	1873

PLATE PLACEMENT TOL. = 0.250 inches

PLATE ROTATION TOL. = 5.0 Deg.

JSI GRIP= 0.89 (B) (INPUT = 0.90)
JSI METAL= 0.28 (H) (INPUT = 1.00)

LICENSED PROFESSIONAL ENGINEER
N.A. EL-MASRI
PROVINCE OF ONTARIO
Dec 18, 2020

READ ALL NOTES ON THIS PAGE AND ON ENGINEERING NOTE PAGE ENP-1. THIS NOTE PAGE IS AN INTEGRAL PART OF THIS DRAWING AS IT CONTAINS SPECIFICATIONS AND CRITERIA USED IN THE DESIGN OF THIS COMPONENT.

Town of East Gwillimbury
Building Standards Branch BCIN #16487

These plans have been reviewed for use with the corrections as noted. No other changes may be made without written approval of the Building Standards Branch. All work must comply with Zoning By-Law 2018-043, as amended, and the Ontario Building Code, as amended. These approved documents must be kept on site at all times. The building permit must be clearly posted on site at all times.

Discipline	Reviewer	BCIN	Date
Building Code	H. Authier	43236	2021-02-25
Sewage System			
Zoning			

KOTT

Client:	NE1220-124	Date:	12/17/2020
Project:	GREENPARK - TRINAR	Input by:	DM
Address:	HALL - GLENWAY 12A ELE 1	Job Name:	TRINAR HALL
		Project #:	

B2 S-P-F #2 2.000" X 10.000" 2-Ply - PASSED

Level: Level

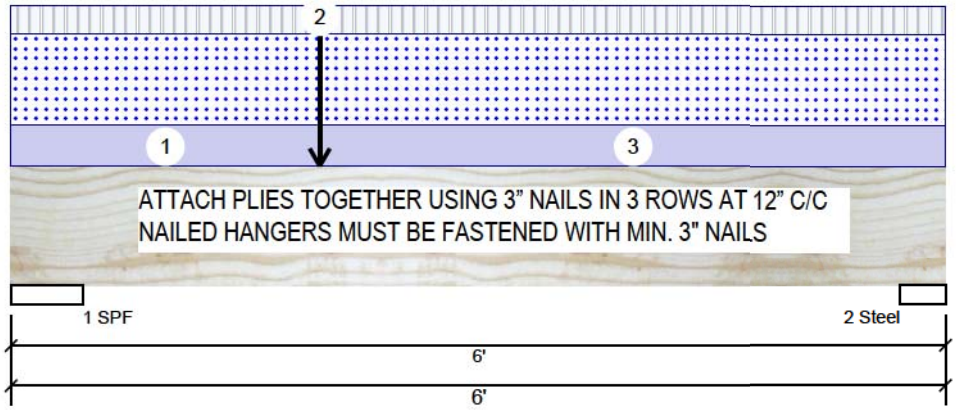

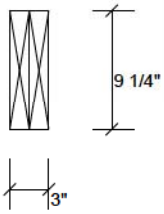

Member Information

Type:	Girder	Application:	Roof (Residential)
Plies:	2	Slope:	0/12
Moisture Condition:	Dry	Design Method:	LSD
Deflection LL:	360	Building Code:	NBCC 2015 / OBC 2012
Deflection TL:	360	Load Sharing:	No
Importance:	Normal - II	Deck:	Not Checked
		Vibration:	Not Checked

Unfactored Reactions UNPATTERNED lb (Uplift)

Brg	Live	Dead	Snow	Wind
1	457	672	1543	0
2	371	543	1240	0

Bearings and Factored Reactions

Bearing	Length	Cap.	React D/L lb	Total	Ld. Case	Ld. Comb.
1 - SPF	5.500"	36%	841 / 2772	3613	L	1.25D+1.5S +L
2 - Steel	3.500"	45%	679 / 2231	2910	L	1.25D+1.5S +L

Analysis Results

Analysis	Actual	Location	Allowed	Capacity	Comb.	Case
Moment	4730 ft-lb	2'3 11/16"	6039 ft-lb	0.783 (78%)	1.25D+1.5S +L	L
Unbraced	4730 ft-lb	2'3 11/16"	5183 ft-lb	0.912 (91%)	1.25D+1.5S +L	L
Shear	3579 lb	1'2"	3984 lb	0.899 (90%)	1.25D+1.5S +L	L
LL Defl inch	0.043 (L/1502)	2'11 3/4"	0.179 (L/360)	0.240 (24%)	S+0.5L	L
TL Defl inch	0.059 (L/1089)	2'11 3/4"	0.179 (L/360)	0.330 (33%)	D+S+0.5L	L

LICENSED PROFESSIONAL ENGINEER
N.A. EL-MASRI
PROVINCE OF ONTARIO
Dec 18, 2020

Design Notes

1 Girders are designed to be supported on the bottom edge only.
2 Multiple plies must be fastened together as per manufacturer's details.
3 Top braced at bearings.
4 Bottom braced at bearings.
5 Lateral slenderness ratio based on single ply width.

ID	Load Type	Location	Trib Width	Side	Dead	Live	Snow	Wind	Comments
1	Part. Uniform	0-0-0 to 1-11-12	6-8-8	Near Face	15.3 PSF	10.5 PSF	34.8 PSF	0 PSF	
2	Point	1-11-12		Near Face	420 lb	282 lb	975 lb	0 lb	
3	Part. Uniform	1-11-12 to 6-0-0	9-7-8	Near Face	15.3 PSF	10.5 PSF	34.8 PSF	0 PSF	

READ ALL NOTES ON THIS PAGE AND ON ENGINEERING NOTE PAGE ENP-1. THIS NOTE PAGE IS AN INTEGRAL PART OF THIS DRAWING AS IT CONTAINS SPECIFICATIONS AND CRITERIA USED IN THE DESIGN OF THIS COMPONENT.

Town of East Gwillimbury
Building Standards Branch BCIN #16487

These plans have been reviewed for use with the corrections as noted. No other changes may be made without written approval of the Building Standards Branch. All work must comply with Zoning By-Law 2018-043, as amended, and the Ontario Building Code, as amended. These approved documents must be kept on site at all times. The building permit must be clearly posted on site at all times.

Discipline	Reviewer	BCIN	Date
Building Code	H. Authier	43236	2021-02-25
Sewage System			
Zoning			

This design is valid until 10/10/2023

Kott Group
14 Anderson Blvd., On
L4A7X4
905-642-4400

KOTT

CSD | DRAW DESIGN BUILD

Client:	NE1220-124	Date:	12/17/2020
Project:	GREENPARK - TRINAR	Input by:	DM
Address:	HALL - GLENWAY 12A ELE 1	Job Name:	TRINAR HALL
		Project #:	GLENWAY 12A EL 1

B1 S-P-F #2 2.000" X 10.000" 2-Ply - PASSED

Level: Level

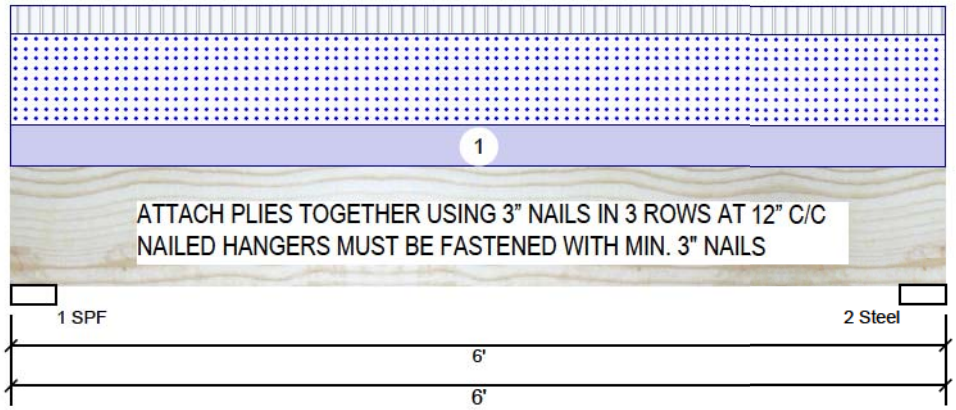

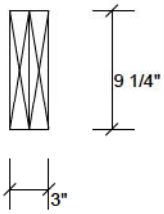

Member Information

Type:	Girder	Application:	Roof (Residential)
Plies:	2	Slope:	0/12
Moisture Condition:	Dry	Design Method:	LSD
Deflection LL:	360	Building Code:	NBCC 2015 / OBC 2012
Deflection TL:	360	Load Sharing:	No
Importance:	Normal - II	Deck:	Not Checked
		Vibration:	Not Checked

Unfactored Reactions UNPATTERNED lb (Uplift)

Brg	Live	Dead	Snow	Wind
1	211	308	700	0
2	211	308	700	0

Bearings and Factored Reactions

Bearing	Length	Cap.	React D/L lb	Total	Ld. Case	Ld. Comb.
1 - SPF	3.500"	26%	385 / 1262	1647	L	1.25D+1.5S +L
2 - Steel	3.500"	26%	385 / 1262	1647	L	1.25D+1.5S +L

Analysis Results

Analysis	Actual	Location	Allowed	Capacity	Comb.	Case
Moment	2107 ft-lb	3'	6039 ft-lb	0.349 (35%)	1.25D+1.5S +L	L
Unbraced	2107 ft-lb	3'	5129 ft-lb	0.411 (41%)	1.25D+1.5S +L	L
Shear	1521 lb	5'	3984 lb	0.382 (38%)	1.25D+1.5S +L	L
LL Defl inch	0.021 (L/3179)	3'	0.185 (L/360)	0.110 (11%)	S+0.5L	L
TL Defl inch	0.029 (L/2300)	3'	0.185 (L/360)	0.160 (16%)	D+S+0.5L	L

Design Notes

1 Girders are designed to be supported on the bottom edge only.
2 Multiple plies must be fastened together as per manufacturer's details.
3 Top braced at bearings.
4 Bottom braced at bearings.
5 Lateral slenderness ratio based on single ply width.

LICENSED PROFESSIONAL ENGINEER
N.A. EL-MASRI
PROVINCE OF ONTARIO
Dec 18, 2020

ID	Load Type	Location	Trib Width	Side	Dead	Live	Snow	Wind	Comments
1	Uniform		6-8-8	Far Face	15.3 PSF	10.5 PSF	34.8 PSF	0 PSF	

READ ALL NOTES ON THIS PAGE AND ON ENGINEERING NOTE PAGE ENP-1. THIS NOTE PAGE IS AN INTEGRAL PART OF THIS DRAWING AS IT CONTAINS SPECIFICATIONS AND CRITERIA USED IN THE DESIGN OF THIS COMPONENT.

Town of East Gwillimbury
Building Standards Branch BCIN #16487

These plans have been reviewed for use with the corrections as noted. No other changes may be made without written approval of the Building Standards Branch. All work must comply with Zoning By-Law 2018-043, as amended, and the Ontario Building Code, as amended. These approved documents must be kept on site at all times. The building permit must be clearly posted on site at all times.

Discipline	Reviewer	BCIN	Date
Building Code	H. Authier	43236	2021-02-25
Sewage System			
Zoning			

This design is valid until 10/10/2023

Kott Group
14 Anderson Blvd., On
L4A7X4
905-642-4400

KOTT

CSD | DRAW DESIGN BUILD

1) ENSURE TRUSS HAS BEEN DESIGNED WITH ADDITIONAL TOP CHORD DEAD LOAD EQUAL TO OR GREATER THAN WEIGHT OF SOLAR PANELS BEING INSTALLED

2) ATTACH SOLAR PANELS TO EACH TRUSS LOCATED UNDER THE SOLAR PANELS (I.E. @ 24" C/C PERPENDICULAR TO THE TRUSS DIRECTION)

3) ATTACH A SPF No.1/2 SCAB OF THE SAME SIZE AS TRUSS CHORD ON ONE SIDE ALONG THE FULL LENGTH OF THE MEMBER UNDER THE SOLAR PANELS USING 2 ROWS OF 3" WIRE NAILS @ 6" C/C

4) ATTACH SOLAR PANELS TO SCAB AT A MAXIMUM SPACING OF 48" C/C ALONG THE MEMBER (PARALLEL TO TRUSS DIRECTION) AS PER MANUFACTURER'S INSTRUCTIONS

5) DO NOT USE LAG SCREWS IN TRUSS MEMBERS. LAG SCREWS SHOULD ATTACH TO SCABS ONLY

6) MAXIMUM NUMBER OF SCAB SPLICES IS TWO

7) THIS DETAIL IS APPLICABLE TO PART 9 BUILDINGS ONLY

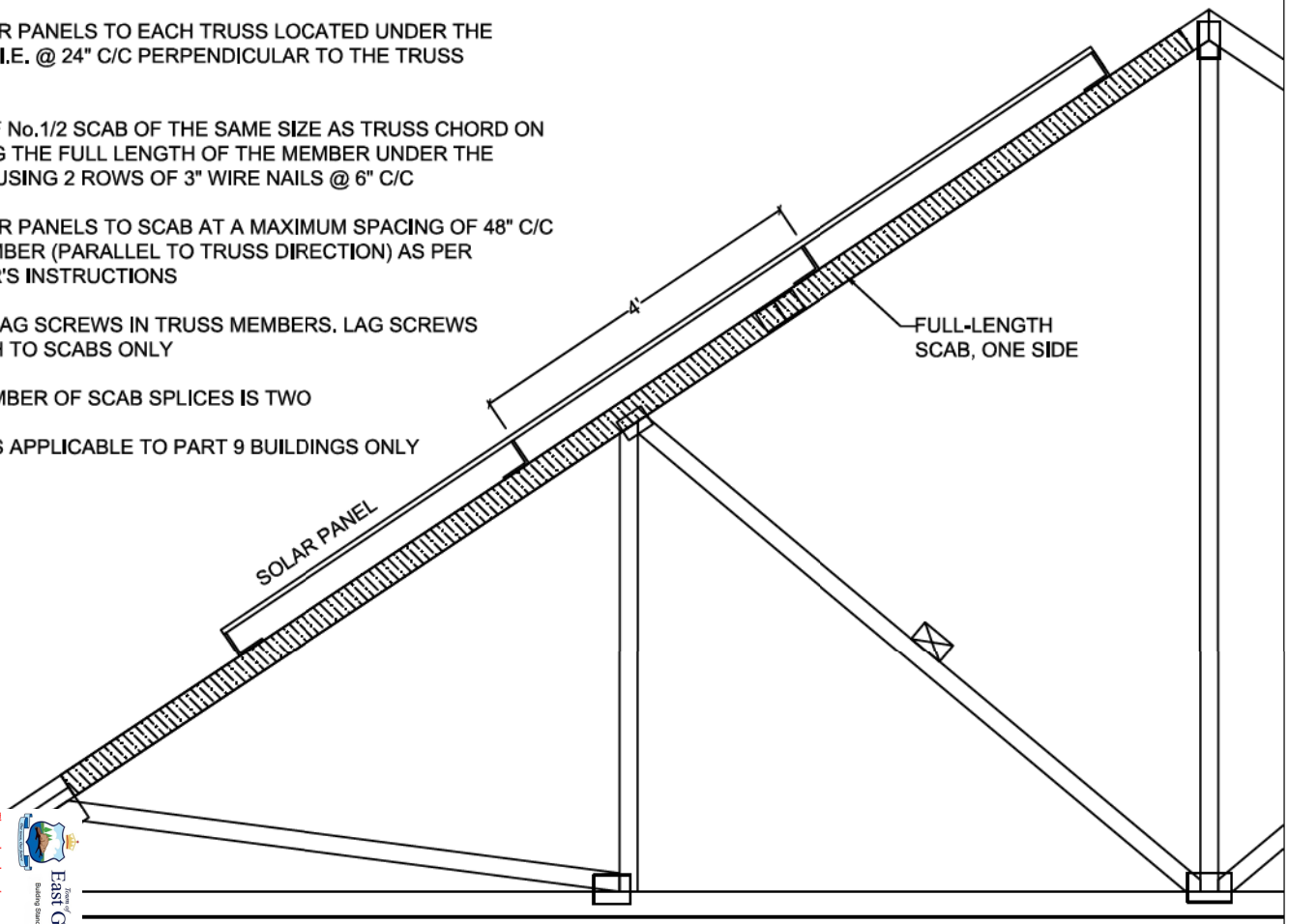

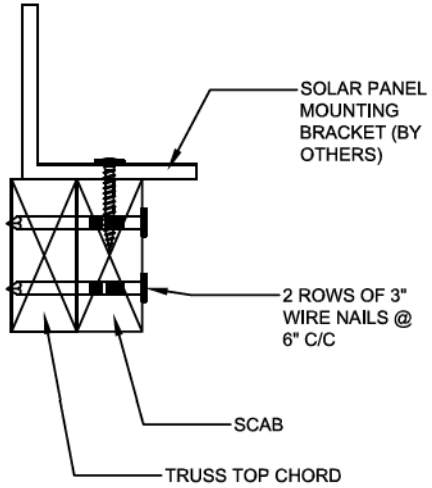

Town of East Gwillimbury
Building Standards Branch BCIN #16487

These plans have been reviewed for use with the corrections as noted. No other changes may be made without written approval of the Building Standards Branch. All work must comply with Zoning By-Law 2018-043, as amended, and the Ontario Building Code, as amended. These approved documents must be kept on site at all times. The building permit must be clearly posted on site at all times.

Discipline	Reviewer	BCIN	Date
Building Code	H. Authier	42236	2021-02-25
Sewage System			
Zoning			

NE1220-124
GREENPARK - TRINAR HALL - GLENWAY 12A ELE 1

LICENSED PROFESSIONAL ENGINEER
N.A. EL-MASRI
PROVINCE OF ONTARIO
Dec 18, 2020

Detail for Installation of Solar Panels - Scab Method

KOTT

NE1220-124
GREENPARK - TRINAR
HALL - GLENWAY 12A ELE 1

BEARING ANCHORAGE BY TOE-NAILS FOR LATERAL CAPACITY

B97791H1

NAIL TYPE	LENGTH (IN)	DIAMETER (IN)	NAIL LATERAL CAPACITY (LB)	
			S-P-F	D. FIR
COMMON WIRE	3.00	0.144	132	147
	3.25	0.144	132	147
	3.50	0.160	159	177
COMMON SPIRAL	3.00	0.122	97	108
	3.25	0.122	97	108
	3.50	0.152	145	162

NOTES:

1. Rafter and ceiling members may be anchored to top and bottom chords of girder truss by toe-nailing rafter and ceiling members to girder chords provided the reaction does not exceed the lateral capacities in the table. Hangers (specified by others) are required for reactions higher than the maximum toe-nail capacity. Reactions are based on factored loads.
2. Toe nail capacities shown in the table are for **one** toe-nail. For additional toe-nails multiply values in table by the number of toe-nails used. Toe-nail capacities take into account toe-nailing factor J_A in CSA O86-14, section 12.9.4.1.
3. For 9- 3/4 gauge 3.25" common wire gun nails (diameter = 0.120") use 3" common spiral nail values.
4. Maximum number of toe-nails allowed depends on the lumber size & species to be toe-nailed to supporting member and nail diameter, as shown in tables below.
5. Nail values in table are based on the following relative lumber densities: G = 0.42 (SPF), G = 0.49 (D. Fir).
6. Toe-nails shall be driven at approximately 1/3 the nail length from the edge of the joist/truss chord and driven at an angle of 30º to the grain of the member (See next page for nailing on bearing plate).
7. For loads due to **wind** the nail lateral capacity in this table may be multiplied by 1.15 (K_D factor).
8. Lumber must be dry (< 19% moisture content) at the time of nail installation.
9. Nail values in this table comply with CSA O86-14, section 12.9.4
10. This design is not valid after March 31, 2021.

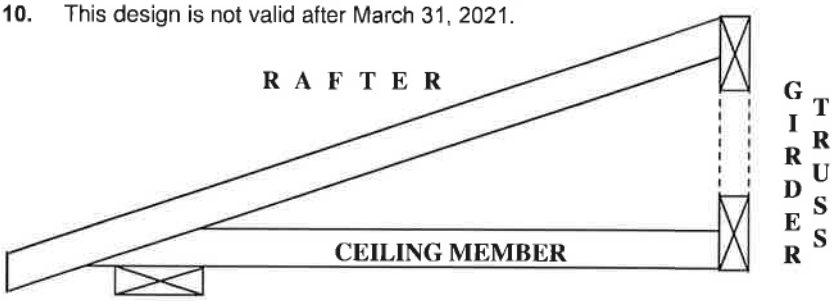

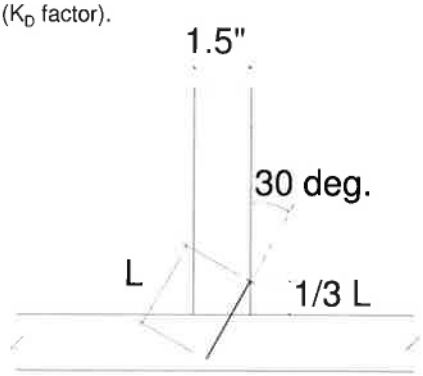

TOE-NAIL INSTALLATION

Nail type	Common wire	Common spiral	Common wire	Common spiral
Nail dia. (in)	0.160	0.152	0.144	0.122
	(3.5" nail)		**(3" and 3.25" nail)**	
LUMBER SIZE	**MAXIMUM NUMBER OF TOE-NAILS**			
2X4 SPF	2	2	3	3
2X4 D. Fir	2	2	2	2
2X6 SPF	4	4	4	5
2X6 D. Fir	3	3	3	4

PEO
Certificate No. 10889485

CENSED PROFESSIONAL ENGINEER
C. Cordogiannis
90553736
VCE OF ONTARIO

MiTek®

MiTek Canada Inc
100 Industrial Rd.
Bradford, Ontario L3Z 3G7

Town of East Gwillimbury
Building Standards Branch BCIN #16487

December 2

These plans have been reviewed for use with the corrections as noted. No other changes may be made without written approval of the Building Standards Branch. All work must comply with Zoning By-Law 2018-043, as amended, and the Ontario Building Code, as amended. These approved documents must be kept on site at all times. The building permit must be clearly posted on site at all times.

Discipline	Reviewer	BCIN	Date
Building Code	H. Authier	43236	2021-02-25
Sewage System			
Zoning			

NE1220-124
GREENPARK - TRINAR
HALL - GLENWAY 12A ELE 1

BEARING ANCHORAGE BY TOE-NAILS FOR WIND LOADING

B97791H2

NAIL TYPE	LENGTH (IN)	DIAMETER (IN)	NAIL WITHDRAWAL CAPACITY (LB)	
			S-P-F	D. FIR
COMMON WIRE	3.00	0.144	30	42
	3.25	0.144	32	45
	3.50	0.160	38	52
COMMON SPIRAL	3.00	0.122	26	36
	3.25	0.122	28	40
	3.50	0.152	36	50

Note: If using truss with D. Fir lumber and S-P-F bearing plate, use values in table for S-P-F.

NOTES:

1. Truss chord, rafter, or ceiling members may be anchored to bearing plate by toe-nails, provided that the actual factored uplift force due to **wind** or **earthquake** load does not exceed the withdrawal capacities in the table. Hangers (specified by others) are required for uplift forces that are higher than the maximum toe-nail withdrawal capacity.
2. Toe nail capacities shown in the table are for **one** toe-nail. For additional toe-nails multiply values in table by the number of toe-nails used. Toe-nail capacities take into account toe-nailing factor J_A in CSA O86-14, section 12.9.5.2.
3. For 9- 3/4 gauge 3.25" common wire gun nails (diameter = 0.120") use 3" common spiral nail values.
4. Maximum number of toe-nails allowed depends on the lumber size & species to be toe-nailed to supporting member and nail diameter, as shown in table above.
5. Nail values in table are based on the following relative lumber densities: G = 0.42(SPF), G = 0.49(D. Fir).
6. Toe-nails shall be driven at approximately 1/3 the nail length from the edge of the joist/truss chord and driven at an angle of 30° to the grain of the member (See drawing on detail B37579H1).
7. Lumber must be dry (< 19% moisture content) at the time of nail installation.
8. Nail values in this table comply with CSA O86-14, section 12.9.5
9. This design is not valid after March 31, 2021.

Toe-nailing on 2x6 Bearing Plate

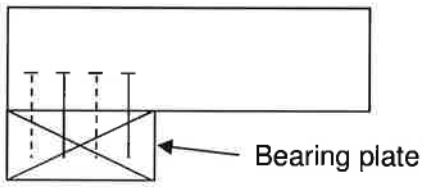

Elevation view

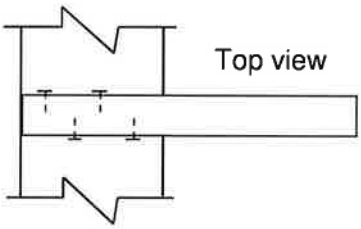

Top view

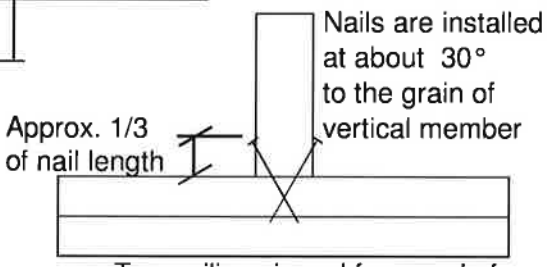

Toe-nailing viewed from end of joist or truss

Toe-nailing on 2x4 Bearing Plate

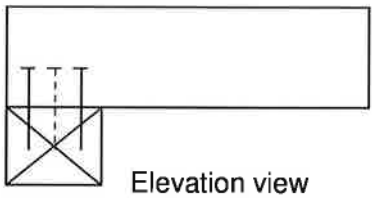

Elevation view

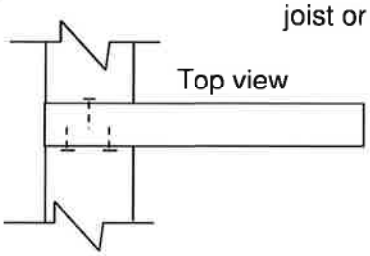

Top view

MiTek®

MiTek Canada Inc
100 Industrial Rd.
Bradford, Ontario L3Z 3G7

PEO
Certificate No. 10889485

LICENSED PROFESSIONAL ENGINEER
C. Cordogiannis
90553736
PROVINCE OF ONTARIO

Town of East Gwillimbury
Building Standards Branch BCIN #16487

These plans have been reviewed for use with the corrections as noted. No other changes may be made without written approval of the Building Standards Branch. All work must comply with Zoning By-Law 2018-043, as amended, and the Ontario Building Code, as amended. These approved documents must be kept on site at all times. The building permit must be clearly posted on site at all times.

Discipline	Reviewer	BCIN	Date
Building Code	H. Authier	43236	2021-02-25
Sewage System			
Zoning			

Dec