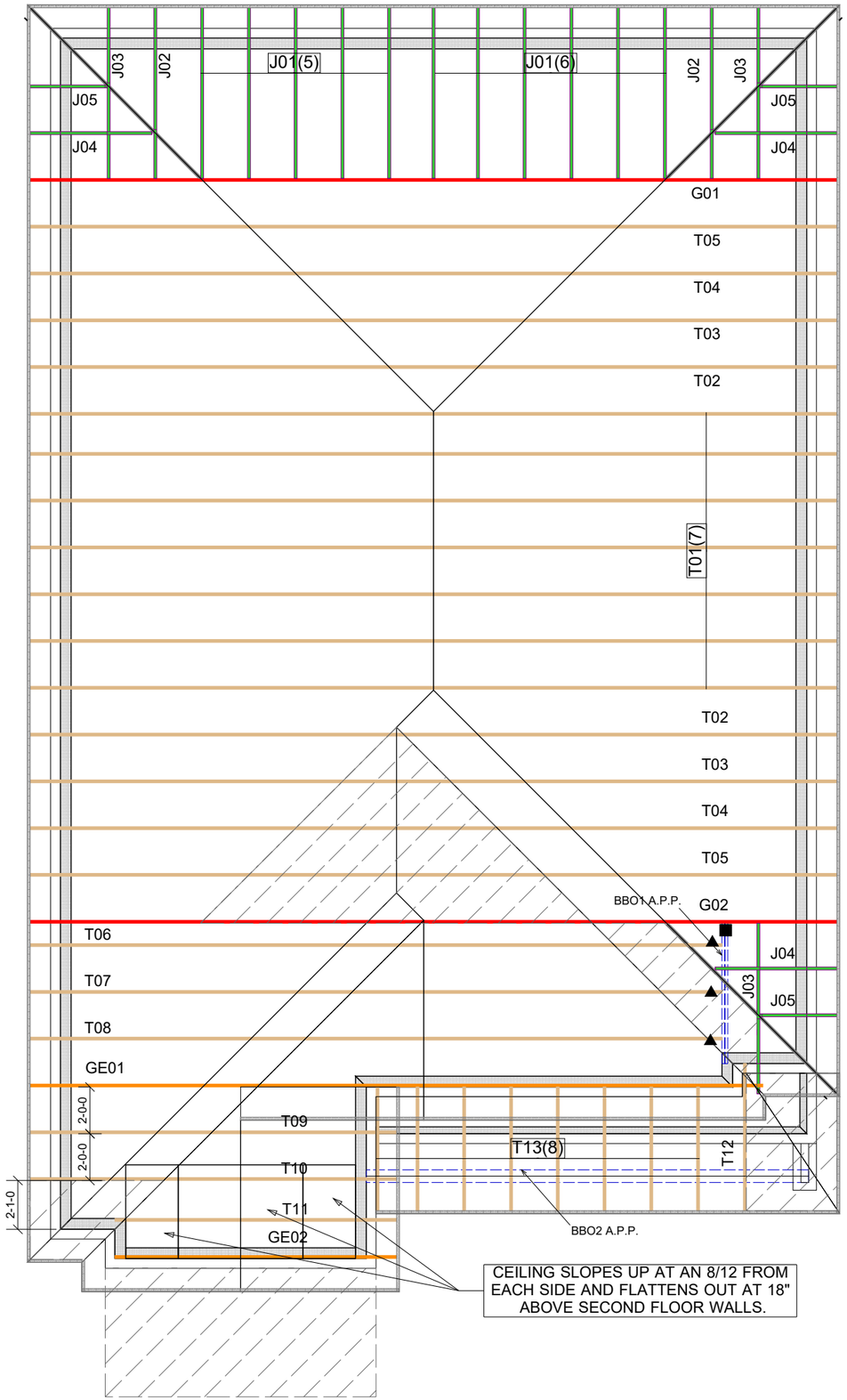

Hanger Name	Symbol	QTY
LJS26DS	▲	3
HGUS26-2	■	1

CONVENTIONAL FRAMING BY OTHERS

ALL CONVENTIONAL FRAMING TO CONFORM WITH PART 9 OF THE OBC. ROOF RAFTERS THAT CROSS OVER TRUSSES TO BE MIN. 2x4 SPF @ 24" C/C WITH A 2x4 VERTICAL POST TO THE TRUSS BELOW. VERTICAL POSTS TO BE LATERALLY BRACED SO THAT UNBRACED LENGTH DOES NOT EXCEED 6'. DESIGN OF CONVENTIONAL FRAMING IS THE RESPONSIBILITY OF THE PROJECT ENGINEER.

JOB INFORMATION

Customer	ROUNDEL HOMES INC
Job #	21-00073R0
Address	GLENROWAN 2 RICHMOND HILL,ON
Model	41-02 ELEV 1
Sales Rep	RALPH MIRIGELLO
Designer	KR
Date	3/8/2021
Path	C:\MITEK\CA\JOBS\GREENPARK GROUP\ROUNDEL HOMES INC\T-GR41-02-1\

DESIGN INFORMATION

Code	NBCC 2015
Bldg	Residential - HSB (NBCC Part 9)
TC LL	25.6 lb/ft²
TC DL	3.0 lb/ft²
BC LL	0.0 lb/ft²
BC DL	7.3 lb/ft²
Deflection	LL=L/360 TL=L/360
Spacing	24" O/C unless otherwise noted
Complies With	OBC 2012 (2019 Amendment) CSA O86-14 and TPIC 2014

IMPORTANT INFORMATION

Refer to truss drawings in the Truss Engineering Package for ply-to-ply attachment notes

For site-framed valleys: top chords of all roof trusses must be laterally supported using 2x4 continuous bracing @24 O/C - all bracing must be anchored at ends as per TPIC Installation Guidelines

Read all notes on this page in addition to those shown on the KOTT Truss Engineering package

Field erection, handling and bracing are not the responsibility of KOTT, or KOTT Engineering

Unless noted otherwise, hurricane ties are to be installed at the bearings of all trusses > 40 ft clear span, and any girder or beam supporting trusses with a clear span >40 ft. See hanger legend for type.

Unless noted otherwise, for Part 9 bldgs, all trusses are to be anchored to the top of supporting walls as follows: trusses with a clear span <40 ft use 3-1/4" nails @ each bearing, trusses with a clear span >40 ft use 3-1/4" nails @ each bearing in addition to the appropriate hurricane tie.

KOTT Inc.
14 Anderson Blvd.
Uxbridge, ON
905.642.4400

09/22/2022
RECEIVED
Per: joshua.nabua
CITY OF RICHMOND HILL
BUILDING DIVISION

ENGINEERING NOTE PAGE (ENP-1)
PLEASE READ PRIOR TO INSTALLATION

RESPONSIBILITIES

THIS DESIGN IS FOR AN INDIVIDUAL BUILDING COMPONENT AND HAS BEEN BASED ON INFORMATION PROVIDED BY KOTT DESIGN. THE UNDERSIGNED ENGINEER DISCLAIMS ANY RESPONSIBILITY FOR DAMAGES AS A RESULT OF FAULTY OR INCORRECT INFORMATION, SPECIFICATION AND/OR DESIGNS FURNISHED TO THE ENGINEER. THE UNDERSIGNED ENGINEER IS ONLY RESPONSIBLE FOR THE STRUCTURAL INTEGRITY OF THIS BUILDING COMPONENT FOR THE CONDITIONS AND LOADS SHOWN ON THIS DRAWING. THE STRUCTURAL INTEGRITY OF THE BUILDING AND THE VERIFICATION OF THE DIMENSIONS AND THE DESIGN LOADS USED ARE THE RESPONSIBILITY OF THE BUILDING DESIGNER.

TRUSSES ARE DESIGNED IN CONFORMANCE WITH THE RELEVANT SECTIONS OF THE NATIONAL BUILDING CODE OF CANADA OR THE CANADIAN CODE FOR FARM BUILDINGS, WHICHEVER APPLIES TO THE BUILDING TYPE INDICATED ON THE DRAWING

IT IS THE RESPONSIBILITY OF KOTT TO ENSURE THAT TRUSSES ARE MANUFACTURED IN CONFORMANCE WITH THESE DESIGNS AND WITH THE SPECIFICATIONS OUTLINED BELOW. THE UNDERSIGNED ENGINEER IS NOT RESPONSIBLE FOR QUALITY CONTROL IN THE TRUSS MANUFACTURING PLANT.

USE AND OCCUPANCY

- The building is of the type indicated on the drawing

LOADING

- The truss loading intensity and distribution as well as load transfer mechanism is that indicated on the drawing
- No buildings, trees, parapets or other projections higher than the roof for which the trusses are used are located within a distance less than ten (10) times the difference in height, or five metres (16 ft) whichever is greater, unless the drawing indicates that the snow drifting has been taken into account

HANDLING, INSTALLATION AND BRACING

- The trusses must be handled and installed by a qualified professional as per the supplied document titled *Information for Truss Installers* and the BCSI-B1 and BCSI-B3 Summary Sheets
- The compression chords are laterally braced by continuous rigid diaphragm sheathing or as specified on the drawing
- Temporary and permanent bracing must be installed as indicated on the truss drawing and according to the BCSI-B1 and BCSI-B3 Summary Sheets. Bracing for the lateral stability of the truss is to be provided by the building designer
- **It is recommended that a Professional Engineer's advice be obtained for the bracing of trusses spanning more than 12.37m (40'-7")**

SUPPORTS

- The trusses are to be supported at the bearing points indicated and anchored to the supports where considered necessary by the designer of the overall structure
- Bearing sizes shown are the minimum required to prevent crushing of the truss members and do not necessarily take into account stability of the overall building structure
- Elevation of bearings must be carefully checked and shimmed to alignment for solid bearings
- Adequate wood truss bearing is the responsibility of the building designer.

DIMENSIONS

- Geometry of the truss and dimensions indicated on the drawing are identical to those of the installed truss.

KOTT

CITY OF RICHMOND HILL
BUILDING DIVISION
09/22/2022
2020/04/22
RECEIVED
Per:____joshua.nabua_____

JOB NAME	TRUSS NAME	QUANTITY	PLY	JOB DESC.	DRWG NO.
IM1021-016	G01	1	1	TRUSS DESC.	

Version 8.500 S Aug 16 2021 MiTek Industries, Inc. Tue Oct 5 07:26:13 2021 Page 1
ID:rNLItaylTWAmcAy8n3bxlWzc_ly-AOD1pbDtGo03aX?dAdrQxCmV33HSfUycDZoAmryWYOe

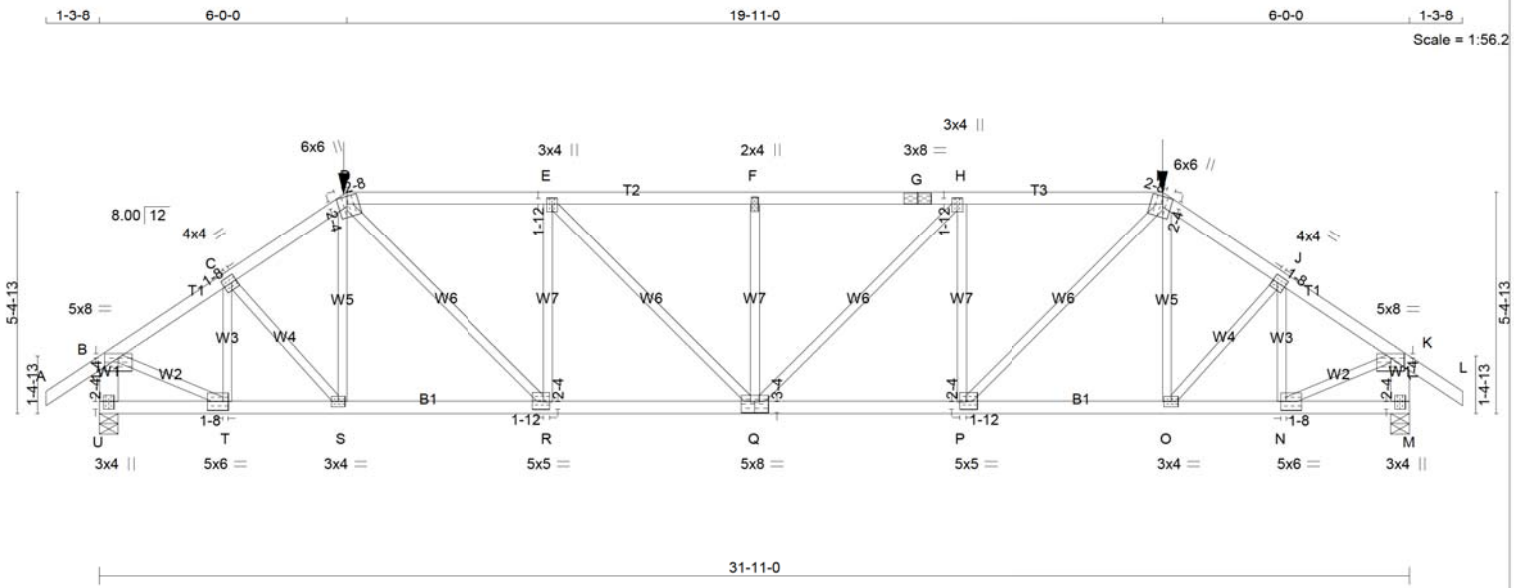

TOTAL WEIGHT = 141 lb
[M]

LUMBER
N. L. G. A. RULES

CHORDS	SIZE		LUMBER	DESCR.
A - D	2x4	DRY	No.2	SPF
D - G	2x4	DRY	2100F 1.8E	SPF
G - I	2x4	DRY	2100F 1.8E	SPF
I - L	2x4	DRY	No.2	SPF
U - B	2x6	DRY	No.2	SPF
M - K	2x6	DRY	No.2	SPF
U - Q	2x4	DRY	No.2	SPF
Q - M	2x4	DRY	No.2	SPF
ALL WEBS EXCEPT	2x3	DRY	No.2	SPF

DRY: SEASONED LUMBER.

PLATES (table is in inches)

JT	TYPE	PLATES	W	LEN	Y	X
B	TMVW-p	MT20	5.0	8.0	1.25	4.00
C	TMWW-t	MT20	4.0	4.0	2.00	1.50
D	TTWW+m	MT20	6.0	6.0	Edge	2.50
E	TMWW+t	MT20	3.0	4.0	1.75	1.50
F	TMW+w	MT20	2.0	4.0		
G	TS-t	MT20	3.0	8.0		
H	TMWW+t	MT20	3.0	4.0	1.75	1.50
I	TTWW+m	MT20	6.0	6.0	Edge	2.50
J	TMWW-t	MT20	4.0	4.0	2.00	1.50
K	TMVW-p	MT20	5.0	8.0	1.25	4.00
M	BMV1+p	MT20	3.0	4.0	2.25	1.50
N	BMWW-t	MT20	5.0	6.0	2.50	1.50
O	BMWW-t	MT20	3.0	4.0		
P	BMWW-t	MT20	5.0	5.0	2.25	1.75
Q	BSWWW-I	MT20	5.0	8.0	3.25	4.00
R	BMWW-t	MT20	5.0	5.0	2.25	1.75
S	BMWW-t	MT20	3.0	4.0		
T	BMWW-t	MT20	5.0	6.0	2.50	1.50
U	BMV1+p	MT20	3.0	4.0	2.25	1.50

Edge - INDICATES REFERENCE CORNER OF PLATE TOUCHES EDGE OF CHORD.

LICENSED PROFESSIONAL ENGINEER
I.MATIJEVIC
100528832
PROVINCE OF ONTARIO
October 05, 2021

READ ALL NOTES ON THIS PAGE AND ON THE ENGINEERING NOTE PAGE ENP-1. THE NOTE PAGE IS AN INTEGRAL PART OF THIS DRAWING AS IT CONTAINS SPECIFICATIONS AND CRITERIA USED IN THE DESIGN OF THIS COMPONENT.

DIMENSIONS, SUPPORTS AND LOADINGS SPECIFIED BY FABRICATOR TO BE VERIFIED BY BUILDING DESIGNER

BEARINGS

JT	FACTORED GROSS REACTION VERT	HORZ	MAXIMUM FACTORED GROSS REACTION DOWN	HORZ	UPLIFT	INPUT BRG IN-SX	REQRD BRG IN-SX
U	3131	0	3131	0	0	5-8	4-11
M	3131	0	3131	0	0	5-8	4-11

UNFACTORED REACTIONS

JT	1ST LCASE COMBINED	MAX./MIN. COMPONENT REACTIONS SNOW	LIVE	PERM.LIVE	WIND	DEAD	SOIL
U	2191	1568 / 0	0 / 0	0 / 0	0 / 0	623 / 0	0 / 0
M	2191	1568 / 0	0 / 0	0 / 0	0 / 0	623 / 0	0 / 0

BEARING MATERIAL TO BE SPF NO.2 OR BETTER AT JOINT(S) U, M

BRACING
TOP CHORD TO BE SHEATHED OR MAX. PURLIN SPACING = 3.33 FT.
MAX. UNBRACED BOTTOM CHORD LENGTH = 10.00 FT OR RIGID CEILING DIRECTLY APPLIED.

ALL FITCH BREAKS AND PERIMETER CORNER JOINTS MUST BE LATERALLY RESTRAINED.

LOADING
TOTAL LOAD CASES: (4)

CHORDS

MEMB. FR-TO	MAX. FACTORED FORCE (LBS)	FACTORED VERT. LOAD LC1 (PLF) FROM	TO	MAX CSI (LC)	MAX. UNBRAC LENGTH
A- B	0 / 32	-84.3	-84.3	0.12 (1)	10.00
B- C	-3364 / 0	-84.3	-84.3	0.27 (1)	3.58
C- D	-3791 / 0	-84.3	-84.3	0.30 (1)	3.36
D- E	-4610 / 0	-158.9	-158.9	0.57 (1)	3.50
E- F	-5052 / 0	-158.9	-158.9	0.61 (1)	3.33
F- G	-5052 / 0	-158.9	-158.9	0.61 (1)	3.33
G- H	-5052 / 0	-158.9	-158.9	0.61 (1)	3.33
H- I	-4610 / 0	-158.9	-158.9	0.57 (1)	3.50
I- J	-3791 / 0	-84.3	-84.3	0.30 (1)	3.36
J- K	-3364 / 0	-84.3	-84.3	0.27 (1)	3.58
K- L	0 / 32	-84.3	-84.3	0.12 (1)	10.00
U- B	-3076 / 0	0.0	0.0	0.22 (1)	5.97
M- K	-3076 / 0	0.0	0.0	0.22 (1)	5.97
U- T	0 / 0	-34.4	-34.4	0.09 (4)	10.00
T- S	0 / 2809	-34.4	-34.4	0.58 (1)	10.00
S- R	0 / 3141	-34.4	-34.4	0.67 (1)	10.00
R- Q	0 / 4610	-34.4	-34.4	0.93 (1)	10.00
Q- P	0 / 4610	-34.4	-34.4	0.93 (1)	10.00
P- O	0 / 3141	-34.4	-34.4	0.67 (1)	10.00
O- N	0 / 2809	-34.4	-34.4	0.58 (1)	10.00
N- M	0 / 0	-34.4	-34.4	0.09 (4)	10.00

WEBS

MEMB. FR-TO	MAX. FACTORED FORCE (LBS)	MAX CSI (LC)
T- C	-900 / 0	0.20 (1)
C- S	0 / 495	0.12 (1)
S- D	-218 / 68	0.10 (1)
D- R	0 / 2113	0.52 (1)
R- E	-1327 / 0	0.60 (1)
E- Q	0 / 630	0.16 (1)
Q- F	-753 / 0	0.34 (1)
Q- H	0 / 630	0.16 (1)
P- H	-1327 / 0	0.60 (1)
P- I	0 / 2113	0.52 (1)
O- I	-218 / 68	0.10 (1)
O- J	0 / 495	0.12 (1)
N- J	-900 / 0	0.20 (1)
B- T	0 / 2974	0.74 (1)
N- K	0 / 2974	0.74 (1)

FACTORED CONCENTRATED LOADS (LBS)

JT	LOC.	LC1	MAX-	MAX+	FACE	DIR.	TYPE	HEEL	CONN.
D	6-0-0	-379	-379	---	FRONT	VERT	TOTAL	---	C1
I	25-11-0	-379	-379	---	FRONT	VERT	TOTAL	---	C1

CONNECTION REQUIREMENTS

1) **C1:** A SUITABLE HANGER/MECHANICAL CONNECTION IS REQUIRED.

DESIGN CRITERIA

SPECIFIED LOADS:

TOP CH.	LL	=	25.6	PSF
	DL	=	3.0	PSF
BOT CH.	LL	=	0.0	PSF
	DL	=	7.3	PSF
TOTAL LOAD		=	35.9	PSF

SPACING = 24.0 IN. C/C

LOADING IN FLAT SECTION BASED ON A SLOPE OF 2.00/12 MINIMUM

GIRDER TYPE: CPrimeHip
SIDE SETBACK = 6-0-0
END SETBACK = 6-0-0
END WALL WIDTH = 5-8
CORNER FRAMING TYPE: CONVENTIONAL
END JACK TYPE: CONVENTIONAL
APPLIED TO FRONT SIDE
- ADDT'L LOADS BASED ON 55 % OF GSL.

THIS TRUSS IS DESIGNED FOR RESIDENTIAL OR SMALL BUILDING REQUIREMENTS OF PART 9, NBCC 2015

THIS DESIGN COMPLIES WITH:
- PART 9 OF BCBC 2018 , ABC 2019
- PART 9 OF OBC 2012 (2019 AMENDMENT)
- CSA 086-14
- TPIC 2014

(55 % OF 31.3 P.S.F. G.S.L. PLUS 8.4 P.S.F. RAIN LOAD) EQUALS 25.6 P.S.F. SPECIFIED ROOF LIVE LOAD

ALLOWABLE DEFL.(LL)= L/360 (1.06")
CALCULATED VERT. DEFL.(LL) = L/ 999 (0.23")
ALLOWABLE DEFL.(TL)= L/360 (1.06")
CALCULATED VERT. DEFL.(TL) = L/ 943 (0.41")

CSI: TC=0.61/1.00 (E-F:1) , BC=0.93/1.00 (P-Q:1) , WB=0.74/1.00 (B-T:1) , SSI=0.40/1.00 (D-E:1)

DOL LUMBER=1.00 NAIL=1.00 LS BEND=1.00 COMP=1.00 SHEAR=1.00 TENS= 1.00

COMPANION LIVE LOAD FACTOR = 1.00

TRUSS PLATE MANUFACTURER IS NOT RESPONSIBLE FOR QUALITY CONTROL IN THE TRUSS MANUFACTURING PLANT .

NAIL VALUES

PLATE	GRIP(DRY) (PSI) MAX	MIN	SHEAR (PLI) MAX	MIN	SECTION (PLI) MAX	MIN
MT20	650	371	1747	788	1987	1873

CONTINUED ON PAGE 2

CITY OF RICHMOND HILL
BUILDING DIVISION
09/22/2022
KOTT
RECEIVED
Per: joshua.nabua

JOB NAME	TRUSS NAME	QUANTITY	PLY	JOB DESC.	DRWG NO.
IM1021-016	G01	1	1	TRUSS DESC.	

Version 8.500 S Aug 16 2021 MiTek Industries, Inc. Tue Oct 5 07:26:13 2021 Page 2
ID:rNLItaylTWAmcAy8n3bxlWzc_ly-AOD1pbDtGo03aX?dAdrQxCmV33HSfUycDZoAmryWYOe

PLATE PLACEMENT TOL. = 0.250 inches

PLATE ROTATION TOL. = 5.0 Deg.

JSI GRIP= 0.89 (D) (INPUT = 0.90)
JSI METAL= 0.96 (Q) (INPUT = 1.00)

LICENSED PROFESSIONAL ENGINEER
I.MATIJEVIC
100528832
PROVINCE OF ONTARIO

October 05, 2021

READ ALL NOTES ON THIS PAGE AND ON THE ENGINEERING NOTE PAGE ENP-1. THE NOTE PAGE IS AN INTEGRAL PART OF THIS DRAWING AS IT CONTAINS SPECIFICATIONS AND CRITERIA USED IN THE DESIGN OF THIS COMPONENT.

CITY OF RICHMOND HILL
BUILDING DIVISION
09/22/2022
KOTT
RECEIVED
Per:_____joshua.nabua_____

JOB NAME	TRUSS NAME	QUANTITY	PLY	JOB DESC.	DRWG NO.
IM1021-016	G02	1	1	TRUSS DESC.	

Version 8.500 S Aug 16 2021 MiTek Industries, Inc. Tue Oct 5 07:26:14 2021 Page 1
ID:rNLltaylTWAmcAy8n3bxlWzd_ly-eanP0xEV168wChZqkLMfUPJhTSg?OtfmSDXjIHyWYOd

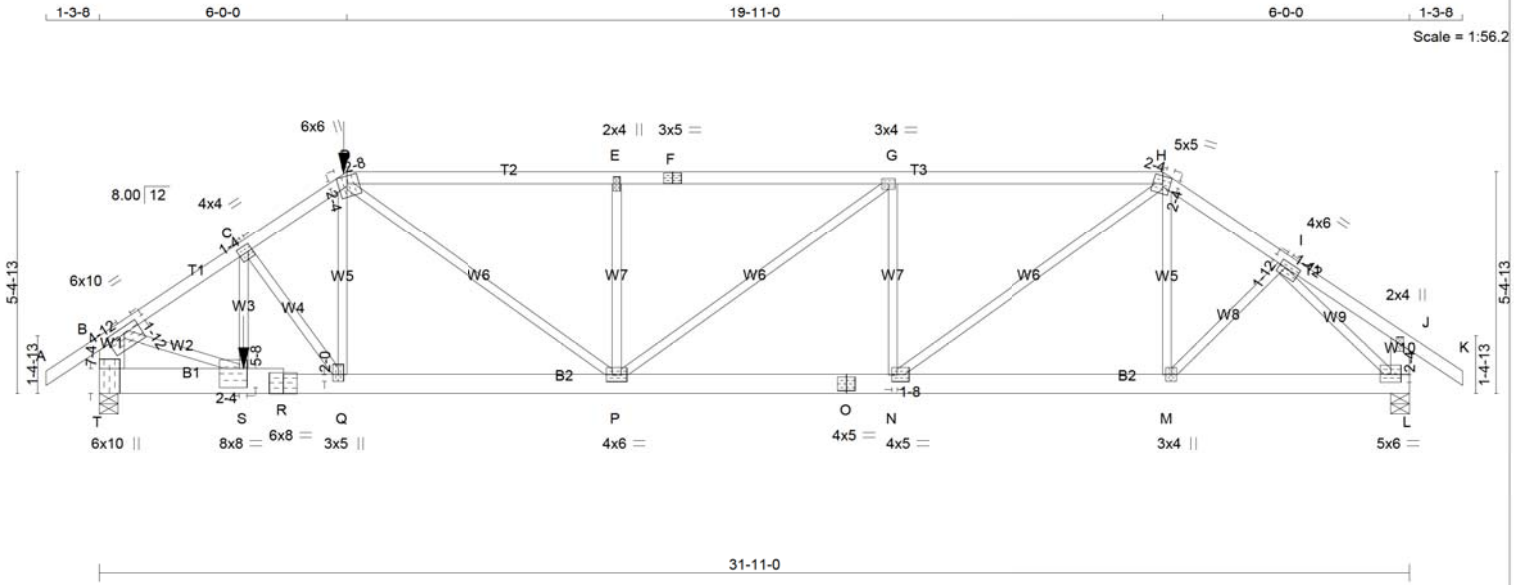

TOTAL WEIGHT = 155 lb
[M]

LUMBER
N. L. G. A. RULES

CHORDS	SIZE		LUMBER	DESCR.
A - D	2x4	DRY	No.2	SPF
D - F	2x4	DRY	2100F 1.8E	SPF
F - H	2x4	DRY	2100F 1.8E	SPF
H - K	2x4	DRY	No.2	SPF
T - B	2x8	DRY	No.2	SPF
L - J	2x6	DRY	No.2	SPF
T - R	2x8	DRY	No.2	SPF
R - O	2x6	DRY	No.2	SPF
O - L	2x6	DRY	No.2	SPF
ALL WEBS EXCEPT	2x3	DRY	No.2	SPF

DRY: SEASONED LUMBER.

PLATES (table is in inches)

JT	TYPE	PLATES	W	LEN	Y	X
B	TMVW-t	MT20	6.0	10.0	1.75	4.75
C	TMWW-t	MT20	4.0	4.0	2.00	1.25
D	TTWW+m	MT20	6.0	6.0	Edge	2.50
E	TMW+w	MT20	2.0	4.0		
F	TS-t	MT20	3.0	5.0		
G	TMWW-t	MT20	3.0	4.0		
H	TTWW-m	MT20	5.0	5.0	2.25	2.25
I	TMWW-t	MT20	4.0	6.0	1.75	1.75
J	TMV+p	MT20	2.0	4.0		
L	BMVW1-t	MT20	5.0	6.0	2.25	3.00
M	BMWW+t	MT20	3.0	4.0		
N	BMWW-t	MT20	4.0	5.0	2.00	1.50
O	BS-t	MT20	4.0	5.0		
P	BMWWW-t	MT20	4.0	6.0		
Q	BMWW+t	MT20	3.0	5.0	2.00	1.50
R	BS-t	MT20	6.0	8.0		
S	BMWW-t	MT20	8.0	8.0	5.50	2.25
T	BMV1+t	MT20	6.0	10.0	7.25	

Edge - INDICATES REFERENCE CORNER OF PLATE TOUCHES EDGE OF CHORD.

LICENSED PROFESSIONAL ENGINEER
I.MATIJEVIC
100528832
PROVINCE OF ONTARIO
October 05, 2021

READ ALL NOTES ON THIS PAGE AND ON THE ENGINEERING NOTE PAGE ENP-1. THE NOTE PAGE IS AN INTEGRAL PART OF THIS DRAWING AS IT CONTAINS SPECIFICATIONS AND CRITERIA USED IN THE DESIGN OF THIS COMPONENT.

DIMENSIONS, SUPPORTS AND LOADINGS SPECIFIED BY FABRICATOR TO BE VERIFIED BY BUILDING DESIGNER

BEARINGS

JT	FACTORED GROSS REACTION VERT	HORZ	MAXIMUM FACTORED GROSS REACTION DOWN	HORZ	UPLIFT	INPUT BRG IN-SX	REQRD BRG IN-SX
T	3986	0	3986	0	0	5-8	5-8
L	2058	0	2058	0	0	5-8	2-4

UNFACTORED REACTIONS

JT	1ST LCASE COMBINED	MAX./MIN. COMPONENT REACTIONS SNOW	LIVE	PERM.LIVE	WIND	DEAD	SOIL
T	2791	1988 / 0	0 / 0	0 / 0	0 / 0	803 / 0	0 / 0
L	1438	1043 / 0	0 / 0	0 / 0	0 / 0	395 / 0	0 / 0

BEARING MATERIAL TO BE SPF NO.2 OR BETTER AT JOINT(S) T, L

BRACING
TOP CHORD TO BE SHEATHED OR MAX. PURLIN SPACING = 2.91 FT.
MAX. UNBRACED BOTTOM CHORD LENGTH = 10.00 FT OR RIGID CEILING DIRECTLY APPLIED.

ALL FITCH BREAKS AND PERIMETER CORNER JOINTS MUST BE LATERALLY RESTRAINED.

LOADING
TOTAL LOAD CASES: (4)

CHORDS

MEMB. FR-TO	MAX. FACTORED FORCE (LBS)	FACTORED VERT. LOAD LC1 (PLF) FROM	TO	MAX CSI (LC)	MAX. UNBRAC LENGTH
A- B	0 / 32	-84.3	-84.3	0.12 (1)	10.00
B- C	-4517 / 0	-84.3	-84.3	0.49 (1)	2.91
C- D	-3892 / 0	-84.3	-84.3	0.27 (1)	3.34
D- E	-3730 / 0	-84.3	-84.3	0.55 (1)	3.97
E- F	-3730 / 0	-84.3	-84.3	0.57 (1)	3.96
F- G	-3730 / 0	-84.3	-84.3	0.57 (1)	3.96
G- H	-3329 / 0	-84.3	-84.3	0.52 (1)	4.17
H- I	-2381 / 0	-84.3	-84.3	0.18 (1)	4.27
I- J	0 / 12	-84.3	-84.3	0.10 (1)	10.00
J- K	0 / 32	-84.3	-84.3	0.12 (1)	10.00
T- B	-3754 / 0	0.0	0.0	0.20 (1)	6.16
L- J	-220 / 0	0.0	0.0	0.02 (1)	7.81
T- S	0 / 0	-34.4	-34.4	0.30 (1)	10.00
S- R	0 / 3757	-34.4	-34.4	0.72 (1)	10.00
R- Q	0 / 3757	-34.4	-34.4	0.72 (1)	10.00
Q- P	0 / 3199	-18.2	-18.2	0.51 (1)	10.00
P- O	0 / 3329	-18.2	-18.2	0.50 (1)	10.00
O- N	0 / 3329	-18.2	-18.2	0.50 (1)	10.00
N- M	0 / 1968	-18.2	-18.2	0.30 (1)	10.00
M- L	0 / 1794	-18.2	-18.2	0.28 (1)	10.00

WEBS

MEMB. FR-TO	MAX. FACTORED FORCE (LBS)	MAX CSI (LC)
S- C	0 / 815	0.20 (1)
C- Q	-929 / 0	0.27 (1)
Q- D	0 / 1064	0.26 (1)
D- P	0 / 666	0.16 (1)
P- E	-605 / 0	0.25 (1)
P- G	0 / 500	0.12 (1)
N- G	-909 / 0	0.38 (1)
N- H	0 / 1709	0.42 (1)
M- H	-49 / 64	0.02 (4)
M- I	0 / 248	0.06 (1)
B- S	0 / 3893	0.96 (1)
I- L	-2538 / 0	0.72 (1)

FACTORED CONCENTRATED LOADS (LBS)

JT	LOC.	LC1	MAX-	MAX+	FACE	DIR.	TYPE	HEEL	CONN.
D	6-0-0	-379	-379	---	FRONT	VERT	TOTAL	---	C1
S	3-6-0	-526	-589	---	FRONT	VERT	DEAD	---	C1
S	3-6-0	-1541	-1541	---	FRONT	VERT	SNOW	---	C1

CONNECTION REQUIREMENTS

1) **C1:** A SUITABLE HANGER/MECHANICAL CONNECTION IS REQUIRED.

DESIGN CRITERIA

*** SPECIAL LOADS ANALYSIS ***
GEOMETRY AND/OR BASIC LOADS CHANGED BY USER.
LOADS WERE DERIVED FROM USER INPUT
NO FURTHER MODIFICATIONS WERE MADE

SPECIFIED LOADS:

TOP	CH.	LL	=	25.6	PSF
		DL	=	3.0	PSF
BOT	CH.	LL	=	0.0	PSF
		DL	=	7.3	PSF
TOTAL	LOAD		=	35.9	PSF

SPACING = 24.0 IN. C/C

LOADING IN FLAT SECTION BASED ON A SLOPE OF 2.00/12 MINIMUM

GIRDER TYPE: CPrimeHip
SIDE SETBACK = 6-0-0
END SETBACK = 6-0-0
END WALL WIDTH = 5-8
CORNER FRAMING TYPE: CONVENTIONAL
END JACK TYPE: CONVENTIONAL
APPLIED TO FRONT SIDE
- ADDT'L LOADS BASED ON 55 % OF GSL.
LOADS APPLIED TO FIRST 6-3-0 OF SPAN MEASURED FROM THE LEFT.

*** NON STANDARD GIRDER ***
ADDT'L USER-DEFINED LOADS APPLIED TO ALL LOAD CASES.

THIS TRUSS IS DESIGNED FOR RESIDENTIAL OR SMALL BUILDING REQUIREMENTS OF PART 9, NBCC 2015

THIS DESIGN COMPLIES WITH:
- PART 9 OF BCBC 2018 , ABC 2019
- PART 9 OF OBC 2012 (2019 AMENDMENT)
- CSA 086-14
- TPIC 2014

(55 % OF 31.3 P.S.F. G.S.L. PLUS 8.4 P.S.F. RAIN LOAD) EQUALS 25.6 P.S.F. SPECIFIED ROOF LIVE LOAD

ALLOWABLE DEFL.(LL)= L/360 (1.06")
CALCULATED VERT. DEFL.(LL) = L/ 999 (0.16")
ALLOWABLE DEFL.(TL)= L/360 (1.06")
CALCULATED VERT. DEFL.(TL) = L/ 999 (0.28")

CSI: TC=0.57/1.00 (E-G:1) , BC=0.72/1.00 (Q-S:1) , WB=0.96/1.00 (B-S:1) , SSI=0.29/1.00 (G-H:1)

DOL LUMBER=1.00 NAIL=1.00 LS BEND=1.00
COMP=1.00 SHEAR=1.00 TENS=1.00

CONTINUED ON PAGE 2

CITY OF RICHMOND HILL
BUILDING DIVISION
09/22/2022
KOTT
RECEIVED
Per: joshua.nabua

JOB NAME	TRUSS NAME	QUANTITY	PLY	JOB DESC.	DRWG NO.
IM1021-016	G02	1	1	TRUSS DESC.	

Version 8.500 S Aug 16 2021 MiTek Industries, Inc. Tue Oct 5 07:26:14 2021 Page 2
ID:rNLItaylTWAmcAy8n3bxlWzd_ly-eanP0xEV168wChZqkLMfUPJhTSg?OtfmSDXjIHyWYOd

COMPANION LIVE LOAD FACTOR = 1.00

TRUSS PLATE MANUFACTURER IS NOT RESPONSIBLE FOR QUALITY CONTROL IN THE TRUSS MANUFACTURING PLANT .

NAIL VALUES

PLATE	GRIP(DRY) (PSI)		SHEAR (PLI)		SECTION (PLI)	
	MAX	MIN	MAX	MIN	MAX	MIN
MT20	650	371	1747	788	1987	1873

PLATE PLACEMENT TOL. = 0.250 inches

PLATE ROTATION TOL. = 5.0 Deg.

JSI GRIP= 0.90 (D) (INPUT = 0.90)
JSI METAL= 0.75 (R) (INPUT = 1.00)

LICENSED PROFESSIONAL ENGINEER
I.MATIJEVIC
100528832
PROVINCE OF ONTARIO

October 05, 2021

READ ALL NOTES ON THIS PAGE AND ON THE ENGINEERING NOTE PAGE ENP-1. THE NOTE PAGE IS AN INTEGRAL PART OF THIS DRAWING AS IT CONTAINS SPECIFICATIONS AND CRITERIA USED IN THE DESIGN OF THIS COMPONENT.

CITY OF RICHMOND HILL
BUILDING DIVISION
09/22/2022
KOTT
RECEIVED
Per:_____joshua.nabua_____

JOB NAME	TRUSS NAME	QUANTITY	PLY	JOB DESC.	DRWG NO.
IM1021-016	GE01	1	1	TRUSS DESC.	

Version 8.500 S Aug 16 2021 MiTek Industries, Inc. Tue Oct 5 07:26:15 2021 Page 1
ID:rNLItaylTWAmcAy8n3bxlWzd ly-6nLnEGE7oQHnqr80I2uu0dsrLs8G7QnvhtHHrkyWYOc

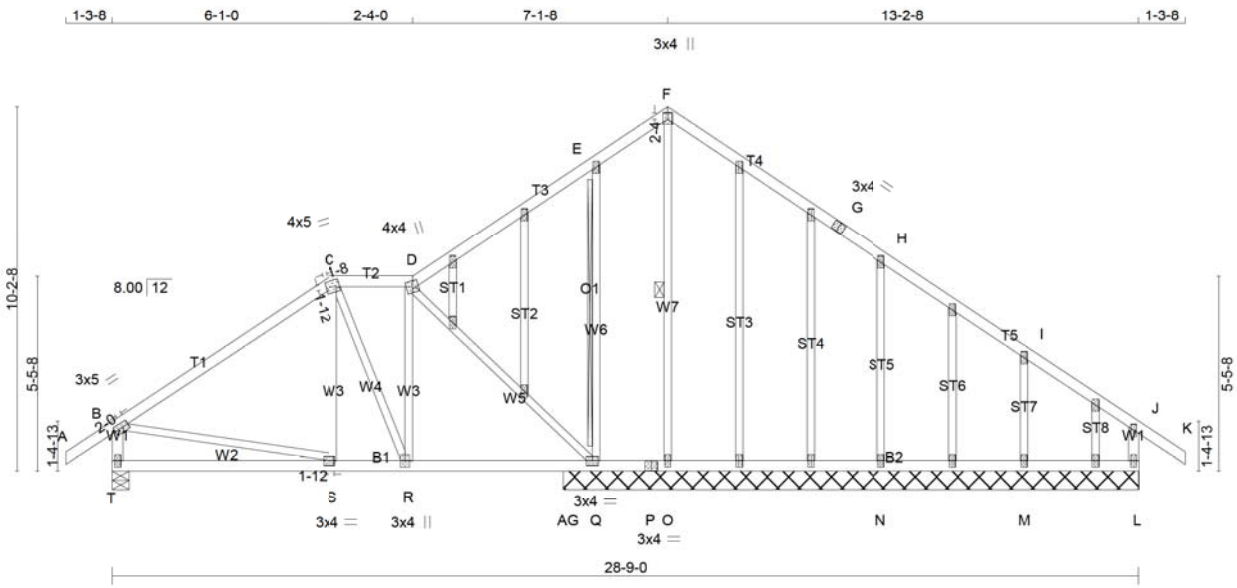

TOTAL WEIGHT = 145 lb
[M]

LUMBER
N. L. G. A. RULES

CHORDS	SIZE		LUMBER	DESCR.
A - C	2x4	DRY	No.2	SPF
C - D	2x4	DRY	No.2	SPF
D - F	2x4	DRY	No.2	SPF
F - G	2x4	DRY	No.2	SPF
G - K	2x4	DRY	No.2	SPF
T - B	2x4	DRY	No.2	SPF
L - J	2x4	DRY	No.2	SPF
T - P	2x4	DRY	No.2	SPF
P - L	2x4	DRY	No.2	SPF
ALL WEBS	2x3	DRY	No.2	SPF
EXCEPT				
ALL GABLE WEBS	2x3	DRY	No.2	SPF

DRY: SEASONED LUMBER.

GABLE STUDS SPACED AT 2-0-0 OC.

PLATES (table is in inches)

JT	TYPE	PLATES	W	LEN	Y	X
B	TMVW-t	MT20	3.0	5.0	1.50	2.00
C	TTWW-m	MT20	4.0	5.0	1.75	1.50
D	TTWW+m	MT20	4.0	4.0		
E, H, I						
E	TMW+w	MT20	2.0	4.0		
F	TTW+p	MT20	3.0	4.0	2.25	1.50
G	TS-t	MT20	3.0	4.0		
J	TMV+p	MT20	2.0	4.0		
L	BMV1+p	MT20	2.0	4.0		
M, N, O						
M	BMW1+w	MT20	2.0	4.0		
P	BS-t	MT20	3.0	4.0		
Q	BMWW1-t	MT20	3.0	4.0		
R	BMWW+t	MT20	3.0	4.0		
S	BMWW-t	MT20	3.0	4.0	1.50	1.75
T	BMV1+p	MT20	2.0	4.0		
U, V, W, X, Y, Z, AA, AB, AC, AD, AE, AF						
U	NP+w	MT20	2.0	4.0		

LICENSED PROFESSIONAL ENGINEER
I.MATIJEVIC
100528832
PROVINCE OF ONTARIO
October 05, 2021

READ ALL NOTES ON THIS PAGE AND ON THE ENGINEERING NOTE PAGE ENP-1. THE NOTE PAGE IS AN INTEGRAL PART OF THIS DRAWING AS IT CONTAINS SPECIFICATIONS AND CRITERIA USED IN THE DESIGN OF THIS COMPONENT.

DIMENSIONS, SUPPORTS AND LOADINGS SPECIFIED BY FABRICATOR TO BE VERIFIED BY BUILDING DESIGNER

BEARINGS

JT	FACTORED GROSS REACTION VERT	HORZ	MAXIMUM FACTORED GROSS REACTION DOWN	HORZ	UPLIFT	INPUT BRG IN-SX	REQRD BRG IN-SX
T	784	0	784	0	0	5-8	1-8
Q	799	0	799	0	0	16-1-8 (13-8-0)	8
O	314	0	314	0	0	16-1-8 (13-8-0)	8
L	252	0	252	0	0	16-1-8 (13-8-0)	8
N	622	0	622	0	0	16-1-8 (13-8-0)	8
M	323	0	323	0	0	16-1-8 (13-8-0)	8
AG	131	0	131	0	0	16-1-8 (13-8-0)	8

VALUE IN PARENTHESIS INDICATES EFFECTIVE BEARING LENGTH

UNFACTORED REACTIONS

JT	1ST LCASE COMBINED	MAX./MIN. COMPONENT REACTIONS SNOW	LIVE	PERM.LIVE	WIND	DEAD	SOIL
T	547	402 / 0	0 / 0	0 / 0	0 / 0	145 / 0	0 / 0
Q	550	449 / 0	0 / 0	0 / 0	0 / 0	101 / 0	0 / 0
O	225	133 / 0	0 / 0	0 / 0	0 / 0	92 / 0	0 / 0
L	174	139 / 0	0 / 0	0 / 0	0 / 0	35 / 0	0 / 0
N	434	318 / 0	0 / 0	0 / 0	0 / 0	115 / 0	0 / 0
M	227	157 / 0	0 / 0	0 / 0	0 / 0	70 / 0	0 / 0
AG	102	14 / 0	0 / 0	0 / 0	0 / 0	89 / 0	0 / 0

BEARING MATERIAL TO BE SPF NO.2 OR BETTER AT JOINT(S) T, Q, O, L, N, M, AG

BRACING

TOP CHORD TO BE SHEATHED OR MAX. PURLIN SPACING = 6.25 FT.
MAX. UNBRACED BOTTOM CHORD LENGTH = 6.25 FT OR RIGID CEILING DIRECTLY APPLIED.

ALL FITCH BREAKS AND PERIMETER CORNER JOINTS MUST BE LATERALLY RESTRAINED.

1 - 1x4 LATERAL BRACE(S) AT 1/ 2 LENGTH OF F-O. DBS = 20-0-0 . CBF = 26 LBS.
2x4 DRY SPF No.2 T-BRACE AT E-Q

DBS = DIAGONAL BRACE SPACING (MAX). CBF = CUMULATIVE BRACING FORCE (PER BRACE). FASTEN LATERAL BRACE(S) USING (0.122"X3") SPIRAL NAILS : 1 NAIL FOR 2x3 BRACE(S), 2 FOR 1x4, 2x4, 2x5, 3 FOR 2x6, 4 FOR 2x8, 5 FOR 2x10, AND 6 FOR 2x12.

FASTEN T AND I-BRACES TO NARROW EDGE OF WEB WITH ONE ROW PER PLY OF 3" COMMON WIRE NAILS @ 6" O.C. WITH 3" MINIMUM END DISTANCE. BRACE MUST COVER 90% OF WEB LENGTH.

END VERTICAL(S) MUST BE SHEATHED OR HAVE BRACES AS INDICATED IN THE MAX. UNBRACED LENGTH COLUMN OF THE TABLE BELOW

LOADING

TOTAL LOAD CASES: (4)

CHORDS

MEMB. FR-TO	MAX. FACTORED FORCE (LBS)	FACTORED VERT. LOAD LC1 (PLF) FROM	TO	MAX CSI (LC)	MAX. UNBRAC LENGTH
A- B	0 / 32	-84.3	-84.3	0.12 (1)	10.00
B- C	-521 / 0	-84.3	-84.3	0.62 (1)	6.25
C- D	-389 / 0	-84.3	-84.3	0.09 (1)	6.25
D- E	0 / 40	-84.3	-102.7	0.34 (1)	10.00
E- F	-43 / 0	-84.3	-84.3	0.34 (1)	6.25
F- G	-10 / 0	-84.3	-84.3	0.43 (1)	10.00
G- H	-10 / 0	-84.3	-84.3	0.43 (1)	10.00
H- I	0 / 39	-84.3	-84.3	0.44 (1)	10.00
I- J	0 / 11	-84.3	-84.3	0.11 (1)	10.00
J- K	0 / 32	-84.3	-84.3	0.12 (1)	10.00
T- B	-737 / 0	0.0	0.0	0.08 (1)	7.81
L- J	-228 / 0	0.0	0.0	0.03 (1)	7.81

WEBS

MEMB. FR-TO	MAX. FACTORED FORCE (LBS)	MAX CSI (LC)
S- C	0 / 102	0.04 (4)
C- R	-114 / 0	0.06 (1)
R- D	0 / 122	0.03 (1)
D- Q	-561 / 0	0.59 (1)
Q- E	-480 / 0	0.28 (1)
O- F	-207 / 0	0.15 (1)
B- S	0 / 440	0.11 (1)
N- H	-524 / 0	0.33 (1)
M- I	-258 / 0	0.06 (1)

DESIGN CRITERIA

*** SPECIAL LOADS ANALYSIS ***
GEOMETRY AND/OR BASIC LOADS CHANGED BY USER.
LOADS WERE DERIVED FROM USER INPUT
NO FURTHER MODIFICATIONS WERE MADE

SPECIFIED LOADS:

TOP CH.	LL	=	25.6	PSF
	DL	=	3.0	PSF
BOT CH.	LL	=	0.0	PSF
	DL	=	7.3	PSF
TOTAL LOAD		=	35.9	PSF

SPACING = 24.0 IN. C/C

LOADING IN ALL FLAT SECTIONS BASED ON A SLOPE OF 2.00/12 MINIMUM

*** NON STANDARD GIRDER ***
ADDT'L USER-DEFINED LOADS APPLIED TO ALL LOAD CASES.

THIS TRUSS IS DESIGNED FOR RESIDENTIAL OR SMALL BUILDING REQUIREMENTS OF PART 9, NBCC 2015

THIS DESIGN COMPLIES WITH:
- PART 9 OF BCBC 2018 , ABC 2019
- PART 9 OF OBC 2012 (2019 AMENDMENT)
- CSA 086-14
- TPIC 2014

(55 % OF 31.3 P.S.F. G.S.L. PLUS 8.4 P.S.F. RAIN LOAD) EQUALS 25.6 P.S.F. SPECIFIED ROOF LIVE LOAD

ALLOWABLE DEFL.(LL)= L/360 (0.42")
CALCULATED VERT. DEFL.(LL) = L/ 999 (0.01")
ALLOWABLE DEFL.(TL)= L/360 (0.42")
CALCULATED VERT. DEFL.(TL) = L/ 999 (0.05")

CSI: TC=0.62/1.00 (B-C:1) , BC=0.20/1.00 (R-S:4) , WB=0.59/1.00 (D-Q:1) , SSI=0.22/1.00 (F-H:1)

DOL LUMBER=1.00 NAIL=1.00 LS BEND=1.00 COMP=1.00 SHEAR=1.00 TENS= 1.00

COMPANION LIVE LOAD FACTOR = 1.00

TRUSS PLATE MANUFACTURER IS NOT RESPONSIBLE FOR QUALITY CONTROL IN THE TRUSS MANUFACTURING PLANT .

CONTINUED ON PAGE 2

CITY OF RICHMOND HILL
BUILDING DIVISION
09/22/2022
KOTT
RECEIVED
Per:_____joshua.nabua_____

JOB NAME	TRUSS NAME	QUANTITY	PLY	JOB DESC.	DRWG NO.
IM1021-016	GE01	1	1	TRUSS DESC.	

Version 8.500 S Aug 16 2021 MiTek Industries, Inc. Tue Oct 5 07:26:15 2021 Page 2
ID:rNLItaylTWAmcAy8n3bxlWzd_ly-6nLnEGE7oQHnqr80I2uu0dsrLs8G7QnvhtHHrkyWYOc

LOADING
TOTAL LOAD CASES: (4)

CHORDS MEMB. FR-TO	MAX. FACTORED FORCE (LBS)	FACTORED VERT. LOAD LC1 (PLF) FROM	TO	MAX CSI (LC)	MAX. UNBRAC LENGTH
T- S	0 / 0	-18.2	-18.2	0.16 (4)	10.00
S- R	0 / 434	-18.2	-18.2	0.20 (4)	10.00
R-AG	0 / 386	-18.2	-18.2	0.14 (1)	10.00
AG- Q	0 / 386	-18.2	-18.2	0.14 (1)	10.00
Q- P	-14 / 0	-18.2	-18.2	0.13 (4)	6.25
P- O	-14 / 0	-18.2	-18.2	0.13 (4)	6.25
O- N	-14 / 0	-18.2	-18.2	0.13 (4)	6.25
N- M	-7 / 0	-18.2	-18.2	0.12 (4)	10.00
M- L	0 / 0	-18.2	-18.2	0.05 (4)	10.00

WEBS MEMB. FR-TO	MAX. FACTORED FORCE (LBS)	MAX CSI (LC)

NAIL VALUES

PLATE	GRIP(DRY) (PSI) MAX	MIN	SHEAR (PLI) MAX	MIN	SECTION (PLI) MAX	MIN
MT20	650	371	1747	788	1987	1873

PLATE PLACEMENT TOL. = 0.250 inches

PLATE ROTATION TOL. = 5.0 Deg.

JSI GRIP= 0.89 (C) (INPUT = 0.90)
JSI METAL= 0.27 (H) (INPUT = 1.00)

LICENSED PROFESSIONAL ENGINEER
I.MATIJEVIC
100528832
PROVINCE OF ONTARIO
October 05, 2021

READ ALL NOTES ON THIS PAGE AND ON THE ENGINEERING NOTE PAGE ENP-1. THE NOTE PAGE IS AN INTEGRAL PART OF THIS DRAWING AS IT CONTAINS SPECIFICATIONS AND CRITERIA USED IN THE DESIGN OF THIS COMPONENT.

CITY OF RICHMOND HILL
BUILDING DIVISION
09/22/2022
RECEIVED
Per:_____joshua.nabua_____

JOB NAME	TRUSS NAME	QUANTITY	PLY	JOB DESC.	DRWG NO.
IM1021-016	GE02	1	1	TRUSS DESC.	

Version 8.500 S Aug 16 2021 MiTek Industries, Inc. Tue Oct 5 07:26:16 2021 Page 1
ID:rNLltaylTWAmcAy8n3bxlWzd_ly-azvARcFlZjPeR_jCsmP8ZqO80GVDs0Y3vX0qNAyWYOb

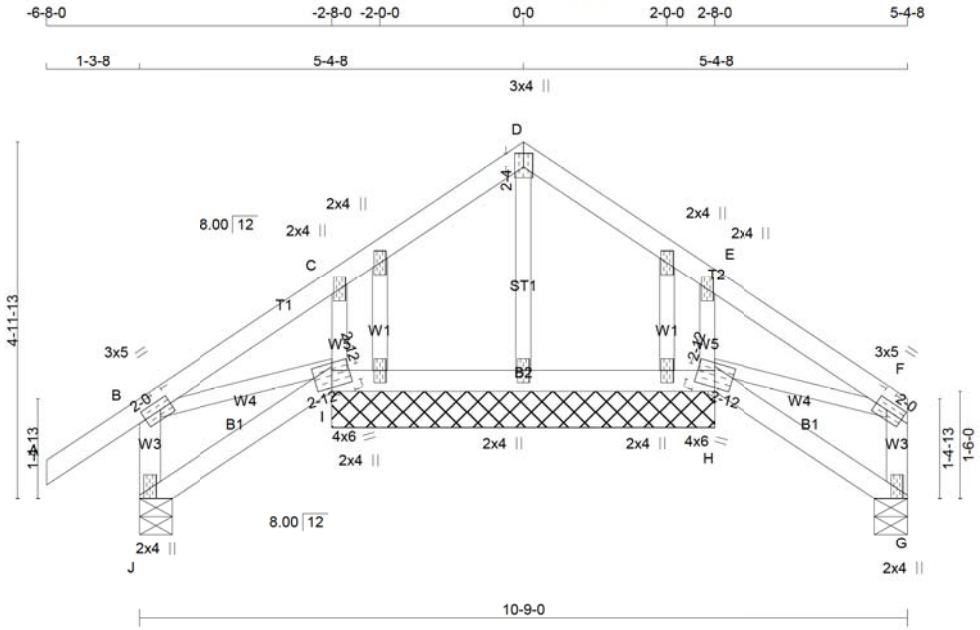

TOTAL WEIGHT = 44 lb
[M]

LUMBER
N. L. G. A. RULES

CHORDS	SIZE		LUMBER	DESCR.
J - B	2x4	DRY	No.2	SPF
A - D	2x4	DRY	No.2	SPF
D - F	2x4	DRY	No.2	SPF
G - F	2x4	DRY	No.2	SPF
J - I	2x4	DRY	No.2	SPF
I - H	2x4	DRY	No.2	SPF
H - G	2x4	DRY	No.2	SPF
ALL WEBS	2x3	DRY	No.2	SPF
ALL GABLE WEBS	2x3	DRY	No.2	SPF

DRY: SEASONED LUMBER.

GABLE STUDS SPACED AT 2-0-0 OC.

PLATES (table is in inches)

JT	TYPE	PLATES	W	LEN	Y	X
B	TMVW-t	MT20	3.0	5.0	1.50	2.00
C	TMW+w	MT20	2.0	4.0		
D	TTW+p	MT20	3.0	4.0	2.25	1.50
E	TMW+w	MT20	2.0	4.0		
F	TMVW-t	MT20	3.0	5.0	1.50	2.00
G	BMV1+p	MT20	2.0	4.0	Edge	
H	BBWW1-m	MT20	4.0	6.0	2.75	2.75
I	BBWW1-m	MT20	4.0	6.0	2.75	2.75
J	BMV1+p	MT20	2.0	4.0	Edge	
K, L, M, N, O						
K	NP+w	MT20	2.0	4.0		

Edge - INDICATES REFERENCE CORNER OF PLATE TOUCHES EDGE OF CHORD.

DIMENSIONS, SUPPORTS AND LOADINGS SPECIFIED BY FABRICATOR TO BE VERIFIED BY BUILDING DESIGNER

BEARINGS

JT	FACTORED GROSS REACTION VERT	HORZ	MAXIMUM FACTORED GROSS REACTION DOWN	HORZ	UPLIFT	INPUT BRG IN-SX	REQRD BRG IN-SX
J	286	0	291	0	0	5-8	1-8
G	170	0	175	0	0	5-8	1-8
I	381	0	382	0	0	5-4-0	1-8
H	381	0	382	0	0	5-4-0	1-8

UNFACTORED REACTIONS

JT	1ST LCASE COMBINED	MAX./MIN. COMPONENT REACTIONS SNOW	LIVE	PERM.LIVE	WIND	DEAD	SOIL
J	197	162 / -3	0 / 0	0 / 0	0 / 0	38 / 0	0 / 0
G	119	92 / -3	0 / 0	0 / 0	0 / 0	30 / 0	0 / 0
I	267	188 / -1	0 / 0	0 / 0	0 / 0	81 / 0	0 / 0
H	267	188 / -1	0 / 0	0 / 0	0 / 0	81 / 0	0 / 0

BEARING MATERIAL TO BE SPF NO.2 OR BETTER AT JOINT(S) J, G, I, H

BRACING
TOP CHORD TO BE SHEATHED OR MAX. PURLIN SPACING = 6.25 FT.
MAX. UNBRACED BOTTOM CHORD LENGTH = 10.00 FT OR RIGID CEILING DIRECTLY APPLIED.

ALL FITCH BREAKS AND PERIMETER CORNER JOINTS MUST BE LATERALLY RESTRAINED.

LOADING
TOTAL LOAD CASES: (10)

CHORDS

MEMB. FR-TO	MAX. FACTORED FORCE (LBS)	FACTORED VERT. LOAD (PLF) FROM	TO	LC1 MAX CSI (LC)	MAX. UNBRAC LENGTH
J- B	-266 / 0	0.0	0.0	0.03 (7)	7.81
A- B	0 / 32	-84.3	-84.3	0.12 (5)	10.00
B- C	-159 / 23	-84.3	-84.3	0.11 (7)	6.25
C- D	-180 / 2	-84.3	-84.3	0.11 (7)	6.25
D- E	-180 / 2	-84.3	-84.3	0.11 (10)	6.25
E- F	-159 / 23	-84.3	-84.3	0.11 (10)	6.25
G- F	-151 / 0	0.0	0.0	0.02 (10)	7.81
J- I	0 / 0	-18.2	-18.2	0.04 (4)	10.00
I- H	-9 / 142	-18.2	-18.2	0.16 (4)	10.00
H- G	0 / 0	-18.3	-18.3	0.04 (4)	10.00

WEBS

MEMB. FR-TO	MAX. FACTORED FORCE (LBS)	MAX CSI (LC)
H- E	-288 / 0	0.04 (10)
H- F	-12 / 142	0.03 (6)
I- C	-289 / 0	0.04 (7)
B- I	-12 / 142	0.03 (6)

PATTERN-LOADING CHECK APPLIED TO THIS TRUSS.

DESIGN CRITERIA

SPECIFIED LOADS:

TOP CH.	LL	=	25.6	PSF
	DL	=	3.0	PSF
BOT CH.	LL	=	0.0	PSF
	DL	=	7.3	PSF
TOTAL LOAD		=	35.9	PSF

SPACING = 24.0 IN. C/C

THIS TRUSS IS DESIGNED FOR RESIDENTIAL OR SMALL BUILDING REQUIREMENTS OF PART 9, NBCC 2015

THIS DESIGN COMPLIES WITH:
- PART 9 OF BCBC 2018 , ABC 2019
- PART 9 OF OBC 2012 (2019 AMENDMENT)
- CSA 086-14
- TPIC 2014

(55 % OF 31.3 P.S.F. G.S.L. PLUS 8.4 P.S.F. RAIN LOAD) EQUALS 25.6 P.S.F. SPECIFIED ROOF LIVE LOAD

ALLOWABLE DEFL.(LL)= L/360 (0.19")
CALCULATED VERT. DEFL.(LL) = L/ 999 (0.00")
ALLOWABLE DEFL.(TL)= L/360 (0.19")
CALCULATED VERT. DEFL.(TL) = L/ 999 (0.04")

CSI: TC=0.12/1.00 (A-B:5) , BC=0.16/1.00 (H-I:4) , WB=0.04/1.00 (C-I:7) , SSI=0.10/1.00 (E-F:8)

DOL LUMBER=1.00 NAIL=1.00 LS BEND=1.10 COMP=1.10 SHEAR=1.10 TENS= 1.10

COMPANION LIVE LOAD FACTOR = 1.00

TRUSS PLATE MANUFACTURER IS NOT RESPONSIBLE FOR QUALITY CONTROL IN THE TRUSS MANUFACTURING PLANT .

NAIL VALUES

PLATE	GRIP(DRY) (PSI) MAX	MIN	SHEAR (PLI) MAX	MIN	SECTION (PLI) MAX	MIN
MT20	650	371	1747	788	1987	1873

PLATE PLACEMENT TOL. = 0.250 inches

PLATE ROTATION TOL. = 5.0 Deg.

JSI GRIP= 0.23 (B) (INPUT = 0.90)
JSI METAL= 0.15 (E) (INPUT = 1.00)

LICENSED PROFESSIONAL ENGINEER
I.MATIJEVIC
100528832
PROVINCE OF ONTARIO
October 05, 2021

READ ALL NOTES ON THIS PAGE AND ON THE ENGINEERING NOTE PAGE ENP-1. THE NOTE PAGE IS AN INTEGRAL PART OF THIS DRAWING AS IT CONTAINS SPECIFICATIONS AND CRITERIA USED IN THE DESIGN OF THIS COMPONENT.

CITY OF RICHMOND HILL
BUILDING DIVISION
09/22/2022
KOTT
RECEIVED
Per:_____joshua.nabua_____

JOB NAME	TRUSS NAME	QUANTITY	PLY	JOB DESC.	DRWG NO.
IM1021-016	J01	11	1	TRUSS DESC.	

Version 8.500 S Aug 16 2021 MiTek Industries, Inc. Tue Oct 5 07:26:17 2021 Page 1
ID:rNLltaylTWAmcAy8n3bxlWzd_ly-29SYeyGNK1XV38IOPTwN62xBUgrmbTRC8BmNvcyWYOa

Scale = 1:31.6

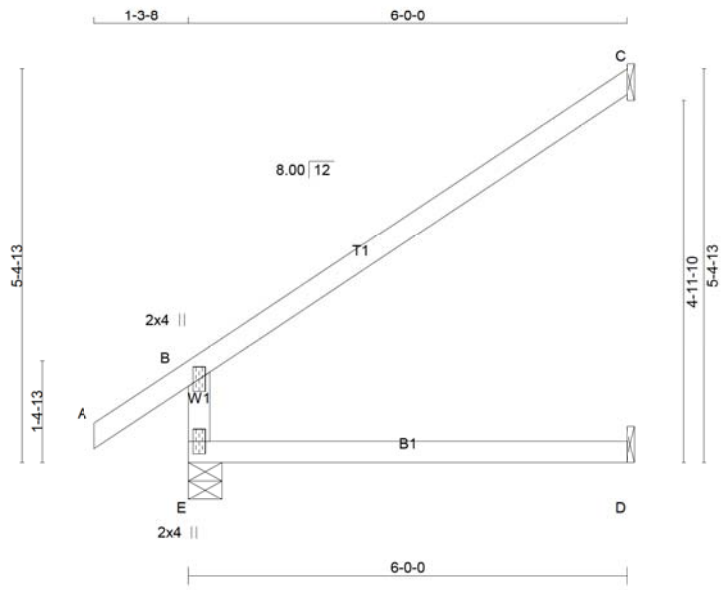

TOTAL WEIGHT = 11 X 18 = 200 lb

LUMBER
N. L. G. A. RULES

CHORDS	SIZE		LUMBER	DESCR.
E - B	2x4	DRY	No.2	SPF
A - C	2x4	DRY	No.2	SPF
E - D	2x4	DRY	No.2	SPF

DRY: SEASONED LUMBER.

PLATES (table is in inches)

JT	TYPE	PLATES	W	LEN	Y	X
B	TMV+p	MT20	2.0	4.0		
E	BMV1+p	MT20	2.0	4.0		

DIMENSIONS, SUPPORTS AND LOADINGS SPECIFIED BY FABRICATOR TO BE VERIFIED BY BUILDING DESIGNER

BEARINGS

JT	FACTORED GROSS REACTION VERT	HORZ	MAXIMUM FACTORED GROSS REACTION DOWN	HORZ	UPLIFT	INPUT BRG IN-SX	REQRD BRG IN-SX
E	495	0	495	0	0	5-8	1-8
C	190	0	190	0	0	1-8	1-8
D	46	0	51	0	0	1-8	1-8

SEE MITEK STANDARD DETAIL MSD2015-H FOR CONNECTION TO JOINT(S) C , D

UNFACTORED REACTIONS

JT	1ST LCASE COMBINED	MAX./MIN. COMPONENT REACTIONS SNOW	LIVE	PERM.LIVE	WIND	DEAD	SOIL
E	344	262 / 0	0 / 0	0 / 0	0 / 0	82 / 0	0 / 0
C	129	115 / 0	0 / 0	0 / 0	0 / 0	14 / 0	0 / 0
D	37	0 / 0	0 / 0	0 / 0	0 / 0	37 / 0	0 / 0

BEARING MATERIAL TO BE SPF NO.2 OR BETTER AT JOINT(S) E

BRACING
TOP CHORD TO BE SHEATHED OR MAX. PURLIN SPACING = 6.25 FT.
MAX. UNBRACED BOTTOM CHORD LENGTH = 10.00 FT OR RIGID CEILING DIRECTLY APPLIED.

ALL PITCH BREAKS AND PERIMETER CORNER JOINTS MUST BE LATERALLY RESTRAINED.

LOADING
TOTAL LOAD CASES: (4)

CHORDS

MEMB. FR-TO	MAX. FACTORED FORCE (LBS)	FACTORED VERT. LOAD LC1 (PLF) FROM	TO	MAX CSI (LC)	MAX. UNBRAC LENGTH
E- B	-432 / 0	0.0	0.0	0.13 (4)	7.81
A- B	0 / 32	-84.3	-84.3	0.11 (1)	10.00
B- C	-35 / 0	-84.3	-84.3	0.52 (1)	6.25
E- D	0 / 0	-18.2	-18.2	0.14 (4)	10.00

WEBS

MEMB. FR-TO	MAX. FACTORED FORCE (LBS)	MAX CSI (LC)

DESIGN CRITERIA

SPECIFIED LOADS:

TOP CH.	LL	=	25.6	PSF
	DL	=	3.0	PSF
BOT CH.	LL	=	0.0	PSF
	DL	=	7.3	PSF
TOTAL LOAD		=	35.9	PSF

SPACING = 24.0 IN. C/C

THIS TRUSS IS DESIGNED FOR RESIDENTIAL OR SMALL BUILDING REQUIREMENTS OF PART 9, NBCC 2015

THIS DESIGN COMPLIES WITH:
- PART 9 OF BCBC 2018 , ABC 2019
- PART 9 OF OBC 2012 (2019 AMENDMENT)
- CSA 086-14
- TPIC 2014

DESIGN ASSUMPTIONS
-OVERHANG NOT TO BE ALTERED OR CUT OFF.

(55 % OF 31.3 P.S.F. G.S.L. PLUS 8.4 P.S.F. RAIN LOAD) EQUALS 25.6 P.S.F. SPECIFIED ROOF LIVE LOAD

ALLOWABLE DEFL.(LL)= L/360 (0.20")
CALCULATED VERT. DEFL.(LL) = L/ 999 (0.00")
ALLOWABLE DEFL.(TL)= L/360 (0.20")
CALCULATED VERT. DEFL.(TL) = L/ 999 (0.04")

CSI: TC=0.52/1.00 (B-C:1) , BC=0.14/1.00 (D-E:4) , WB=0.00/1.00 (n/a:0) , SSI=0.21/1.00 (B-C:1)

DOL LUMBER=1.00 NAIL=1.00 LS BEND=1.10 COMP=1.10 SHEAR=1.10 TENS= 1.10

COMPANION LIVE LOAD FACTOR = 1.00

TRUSS PLATE MANUFACTURER IS NOT RESPONSIBLE FOR QUALITY CONTROL IN THE TRUSS MANUFACTURING PLANT .

NAIL VALUES

PLATE	GRIP(DRY) (PSI) MAX	MIN	SHEAR (PLI) MAX	MIN	SECTION (PLI) MAX	MIN
MT20	650	371	1747	788	1987	1873

PLATE PLACEMENT TOL. = 0.250 inches

PLATE ROTATION TOL. = 5.0 Deg.

JSI GRIP= 0.27 (B) (INPUT = 0.90)
JSI METAL= 0.22 (B) (INPUT = 1.00)

LICENSED PROFESSIONAL ENGINEER
I.MATIJEVIC
100528832
PROVINCE OF ONTARIO
October 05, 2021

READ ALL NOTES ON THIS PAGE AND ON THE ENGINEERING NOTE PAGE ENP-1. THE NOTE PAGE IS AN INTEGRAL PART OF THIS DRAWING AS IT CONTAINS SPECIFICATIONS AND CRITERIA USED IN THE DESIGN OF THIS COMPONENT.

CITY OF RICHMOND HILL
BUILDING DIVISION
09/22/2022
KOTT
RECEIVED
Per:_____joshua.nabua_____

JOB NAME	TRUSS NAME	QUANTITY	PLY	JOB DESC.	DRWG NO.
IM1021-016	J02	2	1	TRUSS DESC.	

Version 8.500 S Aug 16 2021 MiTek Industries, Inc. Tue Oct 5 07:26:17 2021 Page 1
ID:rNLItaylTWAmcAy8n3bxlWzd Iy-29SYeyGNK1XV38IOPTwN62xG9grmbTRC8BmNvcyWYOa

Scale = 1:23.6

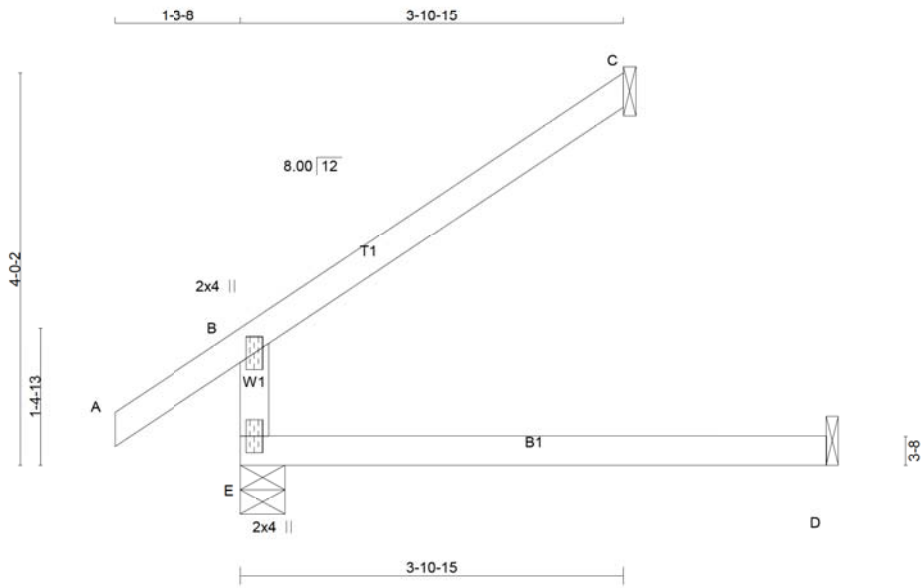

TOTAL WEIGHT = 2 X 15 = 31 lb

LUMBER
N. L. G. A. RULES

CHORDS	SIZE		LUMBER	DESCR.
E - B	2x4	DRY	No.2	SPF
A - C	2x4	DRY	No.2	SPF
E - D	2x4	DRY	No.2	SPF

DRY: SEASONED LUMBER.

PLATES (table is in inches)

JT	TYPE	PLATES	W	LEN	Y	X
B	TMV+p	MT20	2.0	4.0		
E	BMV1+p	MT20	2.0	4.0		

DIMENSIONS, SUPPORTS AND LOADINGS SPECIFIED BY FABRICATOR TO BE VERIFIED BY BUILDING DESIGNER

BEARINGS

JT	FACTORED GROSS REACTION VERT	HORZ	MAXIMUM FACTORED GROSS REACTION DOWN	HORZ	UPLIFT	INPUT BRG IN-SX	REQRD BRG IN-SX
E	385	0	385	0	0	5-8	1-8
C	124	0	124	0	0	1-8	1-8
D	46	0	51	0	0	1-8	1-8

SEE MITEK STANDARD DETAIL MSD2015-H FOR CONNECTION TO JOINT(S) C , D

UNFACTORED REACTIONS

JT	1ST LCASE COMBINED	MAX./MIN. COMPONENT REACTIONS SNOW	LIVE	PERM.LIVE	WIND	DEAD	SOIL
E	269	195 / 0	0 / 0	0 / 0	0 / 0	74 / 0	0 / 0
C	84	75 / 0	0 / 0	0 / 0	0 / 0	9 / 0	0 / 0
D	37	0 / 0	0 / 0	0 / 0	0 / 0	37 / 0	0 / 0

BEARING MATERIAL TO BE SPF NO.2 OR BETTER AT JOINT(S) E, C

BRACING
TOP CHORD TO BE SHEATHED OR MAX. PURLIN SPACING = 6.25 FT.
MAX. UNBRACED BOTTOM CHORD LENGTH = 10.00 FT OR RIGID CEILING DIRECTLY APPLIED.

ALL PITCH BREAKS AND PERIMETER CORNER JOINTS MUST BE LATERALLY RESTRAINED.

LOADING
TOTAL LOAD CASES: (4)

CHORDS

MEMB. FR-TO	MAX. FACTORED FORCE (LBS)	FACTORED VERT. LOAD (PLF) FROM	TO	LC1	MAX CSI (LC)	MAX. UNBRAC LENGTH
E- B	-322 / 0	0.0	0.0	0.13 (4)		7.81
A- B	0 / 32	-84.3	-84.3	0.11 (1)		10.00
B- C	-23 / 0	-84.3	-84.3	0.22 (1)		6.25
E- D	0 / 0	-18.2	-18.2	0.14 (4)		10.00

WEBS

MEMB. FR-TO	MAX. FACTORED FORCE (LBS)	MAX CSI (LC)

DESIGN CRITERIA

SPECIFIED LOADS:

TOP CH.	LL	=	25.6	PSF
	DL	=	3.0	PSF
BOT CH.	LL	=	0.0	PSF
	DL	=	7.3	PSF
TOTAL LOAD		=	35.9	PSF

SPACING = 24.0 IN. C/C

THIS TRUSS IS DESIGNED FOR RESIDENTIAL OR SMALL BUILDING REQUIREMENTS OF PART 9, NBCC 2015

THIS DESIGN COMPLIES WITH:
- PART 9 OF BCBC 2018 , ABC 2019
- PART 9 OF OBC 2012 (2019 AMENDMENT)
- CSA 086-14
- TPIC 2014

DESIGN ASSUMPTIONS
-OVERHANG NOT TO BE ALTERED OR CUT OFF.

(55 % OF 31.3 P.S.F. G.S.L. PLUS 8.4 P.S.F. RAIN LOAD) EQUALS 25.6 P.S.F. SPECIFIED ROOF LIVE LOAD

ALLOWABLE DEFL.(LL)= L/360 (0.20")
CALCULATED VERT. DEFL.(LL) = L/ 999 (0.00")
ALLOWABLE DEFL.(TL)= L/360 (0.20")
CALCULATED VERT. DEFL.(TL) = L/ 999 (0.04")

CSI: TC=0.22/1.00 (B-C:1) , BC=0.14/1.00 (D-E:4) , WB=0.00/1.00 (n/a:0) , SSI=0.13/1.00 (B-C:1)

DOL LUMBER=1.00 NAIL=1.00 LS BEND=1.10 COMP=1.10 SHEAR=1.10 TENS= 1.10

COMPANION LIVE LOAD FACTOR = 1.00

TRUSS PLATE MANUFACTURER IS NOT RESPONSIBLE FOR QUALITY CONTROL IN THE TRUSS MANUFACTURING PLANT .

NAIL VALUES

PLATE	GRIP(DRY) (PSI) MAX	MIN	SHEAR (PLI) MAX	MIN	SECTION (PLI) MAX	MIN
MT20	650	371	1747	788	1987	1873

PLATE PLACEMENT TOL. = 0.250 inches

PLATE ROTATION TOL. = 5.0 Deg.

JSI GRIP= 0.20 (B) (INPUT = 0.90)
JSI METAL= 0.16 (B) (INPUT = 1.00)

LICENSED PROFESSIONAL ENGINEER
I.MATIJEVIC
100528832
PROVINCE OF ONTARIO
October 05, 2021

READ ALL NOTES ON THIS PAGE AND ON THE ENGINEERING NOTE PAGE ENP-1. THE NOTE PAGE IS AN INTEGRAL PART OF THIS DRAWING AS IT CONTAINS SPECIFICATIONS AND CRITERIA USED IN THE DESIGN OF THIS COMPONENT.

CITY OF RICHMOND HILL
BUILDING DIVISION
09/22/2022
KOTT
RECEIVED
Per:_____joshua.nabua_____

JOB NAME	TRUSS NAME	QUANTITY	PLY	JOB DESC.	DRWG NO.
IM1021-016	J03	3	1	TRUSS DESC.	

Version 8.500 S Aug 16 2021 MiTek Industries, Inc. Tue Oct 5 07:26:17 2021 Page 1
ID:rNLItayITWAmcAy8n3bxlWzd_Iy-29SYeyGNK1XV38IOPTwN62xIogrcbTRC8BmNvcyWYOa

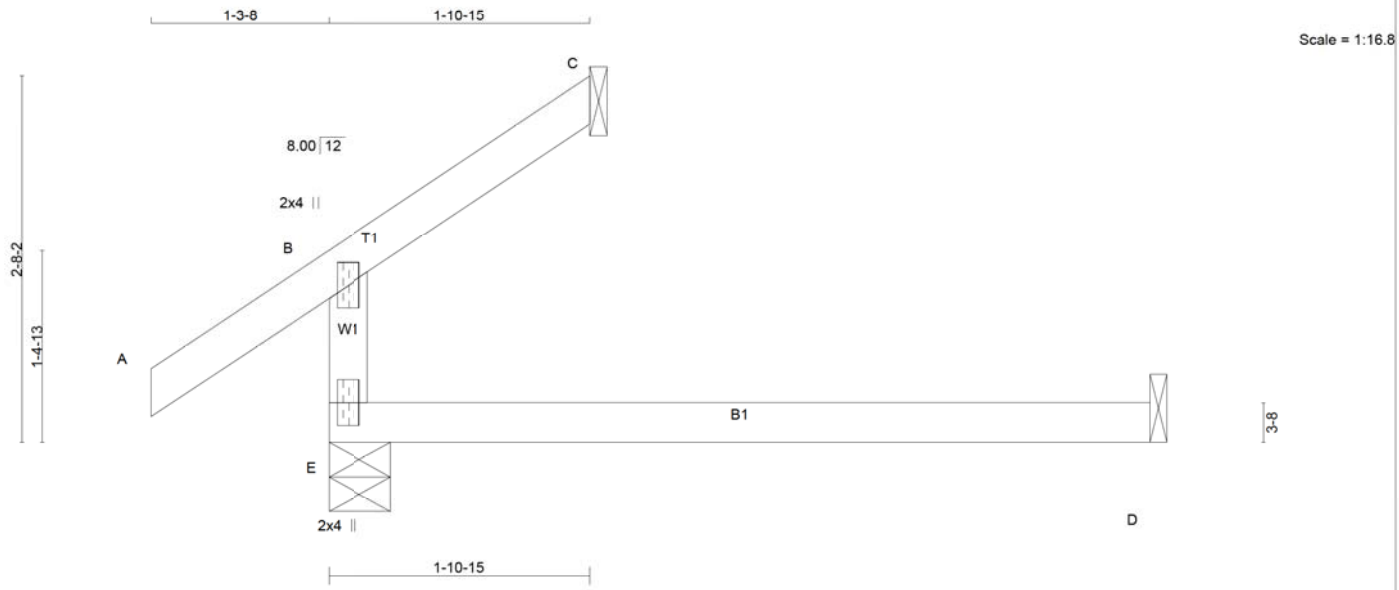

TOTAL WEIGHT = 3 X 13 = 38 lb [M]

LUMBER
N. L. G. A. RULES

CHORDS	SIZE		LUMBER	DESCR.
E - B	2x4	DRY	No.2	SPF
A - C	2x4	DRY	No.2	SPF
E - D	2x4	DRY	No.2	SPF

DRY: SEASONED LUMBER.

PLATES (table is in inches)

JT	TYPE	PLATES	W	LEN	Y	X
B	TMV+p	MT20	2.0	4.0		
E	BMV1+p	MT20	2.0	4.0		

DIMENSIONS, SUPPORTS AND LOADINGS SPECIFIED BY FABRICATOR TO BE VERIFIED BY BUILDING DESIGNER

BEARINGS

JT	FACTORED GROSS REACTION VERT	HORZ	MAXIMUM FACTORED GROSS REACTION DOWN	HORZ	UPLIFT	INPUT BRG IN-SX	REQRD BRG IN-SX
E	274	0	274	0	0	5-8	1-8
C	66	0	66	0	0	1-8	1-8
D	46	0	53	0	0	1-8	1-8

SEE MITEK STANDARD DETAIL MSD2015-H FOR CONNECTION TO JOINT(S) C , D

UNFACTORED REACTIONS

JT	1ST LCASE COMBINED	MAX./MIN. COMPONENT REACTIONS SNOW	LIVE	PERM.LIVE	WIND	DEAD	SOIL
E	191	143 / 0	0 / 0	0 / 0	0 / 0	48 / 0	0 / 0
C	47	26 / 0	0 / 0	0 / 0	0 / 0	21 / 0	0 / 0
D	37	0 / -1	0 / 0	0 / 0	0 / 0	38 / 0	0 / 0

BEARING MATERIAL TO BE SPF NO.2 OR BETTER AT JOINT(S) E, C

BRACING
TOP CHORD TO BE SHEATHED OR MAX. PURLIN SPACING = 10.00 FT.
MAX. UNBRACED BOTTOM CHORD LENGTH = 10.00 FT OR RIGID CEILING DIRECTLY APPLIED.

ALL PITCH BREAKS AND PERIMETER CORNER JOINTS MUST BE LATERALLY RESTRAINED.

LOADING
TOTAL LOAD CASES: (4)

CHORDS MEMB. FR-TO	MAX. FACTORED FORCE (LBS)	FACTORED VERT. LOAD (PLF) FROM	TO	LC1 MAX CSI (LC)	MAX. UNBRAC LENGTH	WEBS MEMB. FR-TO	MAX. FACTORED FORCE (LBS)	MAX CSI (LC)
E- B	-211 / 2	0.0	0.0	0.10 (4)	7.81			
A- B	0 / 32	-84.3	-84.3	0.11 (1)	10.00			
B- C	-8 / 12	-84.3	-84.3	0.09 (4)	10.00			
E- D	0 / 0	-18.2	-18.2	0.15 (4)	10.00			

DESIGN CRITERIA

SPECIFIED LOADS:

TOP CH.	LL	=	25.6	PSF
	DL	=	3.0	PSF
BOT CH.	LL	=	0.0	PSF
	DL	=	7.3	PSF
TOTAL LOAD		=	35.9	PSF

SPACING = 24.0 IN. C/C

THIS TRUSS IS DESIGNED FOR RESIDENTIAL OR SMALL BUILDING REQUIREMENTS OF PART 9, NBCC 2015

THIS DESIGN COMPLIES WITH:
- PART 9 OF BCBC 2018 , ABC 2019
- PART 9 OF OBC 2012 (2019 AMENDMENT)
- CSA 086-14
- TPIC 2014

DESIGN ASSUMPTIONS
-OVERHANG NOT TO BE ALTERED OR CUT OFF.

(55 % OF 31.3 P.S.F. G.S.L. PLUS 8.4 P.S.F. RAIN LOAD) EQUALS 25.6 P.S.F. SPECIFIED ROOF LIVE LOAD

ALLOWABLE DEFL.(LL)= L/360 (0.20")
CALCULATED VERT. DEFL.(LL) = L/ 999 (0.00")
ALLOWABLE DEFL.(TL)= L/360 (0.20")
CALCULATED VERT. DEFL.(TL) = L/ 999 (0.04")

CSI: TC=0.11/1.00 (A-B:1) , BC=0.15/1.00 (D-E:4) , WB=0.00/1.00 (n/a:0) , SSI=0.08/1.00 (D-E:4)

DOL LUMBER=1.00 NAIL=1.00 LS BEND=1.10 COMP=1.10 SHEAR=1.10 TENS= 1.10

COMPANION LIVE LOAD FACTOR = 1.00

TRUSS PLATE MANUFACTURER IS NOT RESPONSIBLE FOR QUALITY CONTROL IN THE TRUSS MANUFACTURING PLANT .

NAIL VALUES

PLATE	GRIP(DRY) (PSI) MAX	MIN	SHEAR (PLI) MAX	MIN	SECTION (PLI) MAX	MIN
MT20	650	371	1747	788	1987	1873

PLATE PLACEMENT TOL. = 0.250 inches

PLATE ROTATION TOL. = 5.0 Deg.

JSI GRIP= 0.13 (B) (INPUT = 0.90)
JSI METAL= 0.11 (B) (INPUT = 1.00)

LICENSED PROFESSIONAL ENGINEER
I.MATIJEVIC
100528832
PROVINCE OF ONTARIO
October 05, 2021

READ ALL NOTES ON THIS PAGE AND ON THE ENGINEERING NOTE PAGE ENP-1. THE NOTE PAGE IS AN INTEGRAL PART OF THIS DRAWING AS IT CONTAINS SPECIFICATIONS AND CRITERIA USED IN THE DESIGN OF THIS COMPONENT.

CITY OF RICHMOND HILL
BUILDING DIVISION
09/22/2022
KOTT
RECEIVED
Per:_____joshua.nabua_____

JOB NAME	TRUSS NAME	QUANTITY	PLY	JOB DESC.	DRWG NO.
IM1021-016	J04	3	1	TRUSS DESC.	

Version 8.500 S Aug 16 2021 MiTek Industries, Inc. Tue Oct 5 07:26:18 2021 Page 1
ID:rNLItaylTWAmcAy8n3bxlWzd ly-XM0wsIH?5LfMhItbzBRceFURu3DrKwhLNrVxR2yWYOZ

Scale: 1/2"=1'

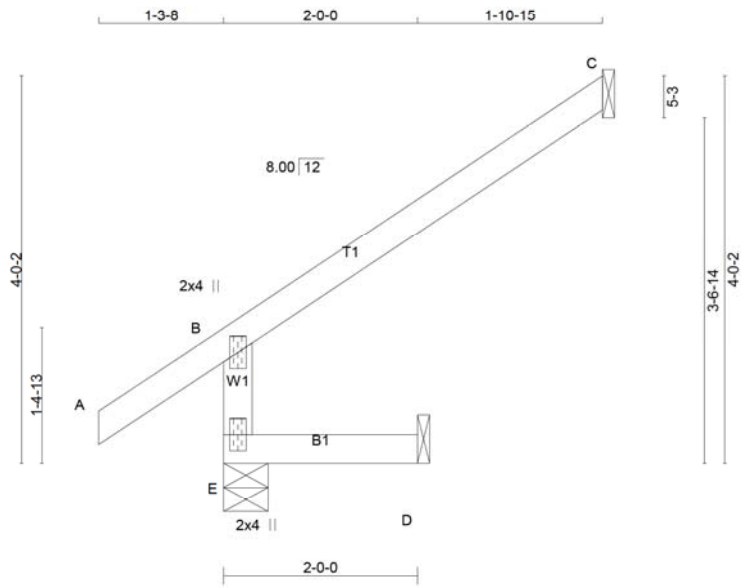

TOTAL WEIGHT = 3 X 11 = 32 lb [M]

LUMBER
N. L. G. A. RULES

CHORDS	SIZE		LUMBER	DESCR.
E - B	2x4	DRY	No.2	SPF
A - C	2x4	DRY	No.2	SPF
E - D	2x4	DRY	No.2	SPF

DRY: SEASONED LUMBER.

PLATES (table is in inches)

JT	TYPE	PLATES	W	LEN	Y	X
B	TMV+p	MT20	2.0	4.0		
E	BMV1+p	MT20	2.0	4.0		

DIMENSIONS, SUPPORTS AND LOADINGS SPECIFIED BY FABRICATOR TO BE VERIFIED BY BUILDING DESIGNER

BEARINGS

JT	FACTORED GROSS REACTION VERT	HORZ	MAXIMUM FACTORED GROSS REACTION DOWN	HORZ	UPLIFT	INPUT BRG IN-SX	REQRD BRG IN-SX
E	341	0	341	0	0	5-8	1-8
C	124	0	124	0	0	1-8	1-8
D	17	0	18	0	0	1-8	1-8

SEE MITEK STANDARD DETAIL MSD2015-H FOR CONNECTION TO JOINT(S) C , D

UNFACTORED REACTIONS

JT	1ST LCASE COMBINED	MAX./MIN. COMPONENT REACTIONS SNOW	LIVE	PERM.LIVE	WIND	DEAD	SOIL
E	234	195 / 0	0 / 0	0 / 0	0 / 0	39 / 0	0 / 0
C	84	75 / 0	0 / 0	0 / 0	0 / 0	9 / 0	0 / 0
D	13	0 / 0	0 / 0	0 / 0	0 / 0	13 / 0	0 / 0

BEARING MATERIAL TO BE SPF NO.2 OR BETTER AT JOINT(S) E

BRACING
TOP CHORD TO BE SHEATHED OR MAX. PURLIN SPACING = 6.25 FT.
MAX. UNBRACED BOTTOM CHORD LENGTH = 10.00 FT OR RIGID CEILING DIRECTLY APPLIED.

ALL PITCH BREAKS AND PERIMETER CORNER JOINTS MUST BE LATERALLY RESTRAINED.

LOADING
TOTAL LOAD CASES: (5)

CHORDS

MEMB. FR-TO	MAX. FACTORED FORCE (LBS)	FACTORED VERT. LOAD (PLF) FROM	TO	LC1	MAX CSI (LC)	MAX. UNBRAC LENGTH
E- B	-322 / 0	0.0	0.0	0.01 (4)		7.81
A- B	0 / 32	-84.3	-84.3	0.11 (1)		10.00
B- C	-23 / 0	-84.3	-84.3	0.22 (1)		6.25
E- D	0 / 0	-18.2	-18.2	0.02 (4)		10.00

WEBS

MEMB. FR-TO	MAX. FACTORED FORCE (LBS)	MAX CSI (LC)

CANTILEVER ANALYSIS HAS BEEN CONSIDERED IN THIS DESIGN

PATTERN-LOADING CHECK APPLIED TO THIS TRUSS.

DESIGN CRITERIA

SPECIFIED LOADS:

TOP CH.	LL	=	25.6	PSF
	DL	=	3.0	PSF
BOT CH.	LL	=	0.0	PSF
	DL	=	7.3	PSF
TOTAL LOAD		=	35.9	PSF

SPACING = 24.0 IN. C/C

THIS TRUSS IS DESIGNED FOR RESIDENTIAL OR SMALL BUILDING REQUIREMENTS OF PART 9, NBCC 2015

THIS DESIGN COMPLIES WITH:
- PART 9 OF BCBC 2018 , ABC 2019
- PART 9 OF OBC 2012 (2019 AMENDMENT)
- CSA 086-14
- TPIC 2014

DESIGN ASSUMPTIONS
-OVERHANG NOT TO BE ALTERED OR CUT OFF.

(55 % OF 31.3 P.S.F. G.S.L. PLUS 8.4 P.S.F. RAIN LOAD) EQUALS 25.6 P.S.F. SPECIFIED ROOF LIVE LOAD

ALLOWABLE DEFL.(LL)= L/360 (0.19")
CALCULATED VERT. DEFL.(LL) = L/ 999 (0.00")
ALLOWABLE DEFL.(TL)= L/360 (0.19")
CALCULATED VERT. DEFL.(TL) = L/ 999 (0.00")

CSI: TC=0.22/1.00 (B-C:1) , BC=0.02/1.00 (D-E:4) , WB=0.00/1.00 (n/a:0) , SSI=0.13/1.00 (B-C:1)

DOL LUMBER=1.00 NAIL=1.00 LS BEND=1.10 COMP=1.10 SHEAR=1.10 TENS= 1.10

COMPANION LIVE LOAD FACTOR = 1.00

TRUSS PLATE MANUFACTURER IS NOT RESPONSIBLE FOR QUALITY CONTROL IN THE TRUSS MANUFACTURING PLANT .

NAIL VALUES

PLATE	GRIP(DRY) (PSI) MAX	MIN	SHEAR (PLI) MAX	MIN	SECTION (PLI) MAX	MIN
MT20	650	371	1747	788	1987	1873

PLATE PLACEMENT TOL. = 0.250 inches

PLATE ROTATION TOL. = 5.0 Deg.

JSI GRIP= 0.20 (B) (INPUT = 0.90)
JSI METAL= 0.16 (B) (INPUT = 1.00)

LICENSED PROFESSIONAL ENGINEER
I.MATIJEVIC
100528832
PROVINCE OF ONTARIO
October 05, 2021

READ ALL NOTES ON THIS PAGE AND ON THE ENGINEERING NOTE PAGE ENP-1. THE NOTE PAGE IS AN INTEGRAL PART OF THIS DRAWING AS IT CONTAINS SPECIFICATIONS AND CRITERIA USED IN THE DESIGN OF THIS COMPONENT.

CITY OF RICHMOND HILL
BUILDING DIVISION
09/22/2022
KOTT
RECEIVED
Per:_____joshua.nabua_____

JOB NAME	TRUSS NAME	QUANTITY	PLY	JOB DESC.	DRWG NO.
IM1021-016	J05	3	1	TRUSS DESC.	

Version 8.500 S Aug 16 2021 MiTek Industries, Inc. Tue Oct 5 07:26:19 2021 Page 1
ID:rNLItayITWAmcAy8n3bxlWzd_Iy-?YaI3eHesenDISSnXuyrBT0eHTYp3NxVbVFU_VyWYOY

Scale = 1:16.8

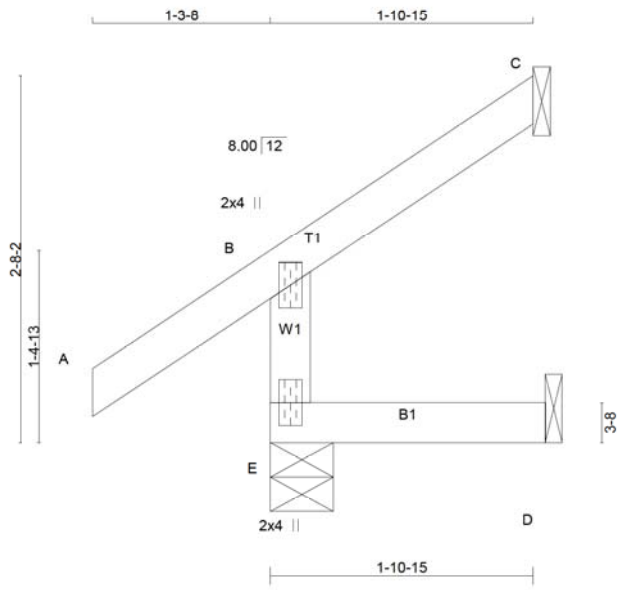

TOTAL WEIGHT = 3 X 8 = 24 lb
[M]

LUMBER
N. L. G. A. RULES

CHORDS	SIZE		LUMBER	DESCR.
E - B	2x4	DRY	No.2	SPF
A - C	2x4	DRY	No.2	SPF
E - D	2x4	DRY	No.2	SPF

DRY: SEASONED LUMBER.

PLATES (table is in inches)

JT	TYPE	PLATES	W	LEN	Y	X
B	TMV+p	MT20	2.0	4.0		
E	BMV1+p	MT20	2.0	4.0		

DIMENSIONS, SUPPORTS AND LOADINGS SPECIFIED BY FABRICATOR TO BE VERIFIED BY BUILDING DESIGNER

BEARINGS

JT	FACTORED GROSS REACTION VERT	HORZ	MAXIMUM FACTORED GROSS REACTION DOWN	HORZ	UPLIFT	INPUT BRG IN-SX	REQRD BRG IN-SX
E	256	0	256	0	0	5-8	1-8
C	47	0	47	0	-23	1-8	1-8
D	11	0	18	0	0	1-8	1-8

SEE MITEK STANDARD DETAIL MSD2015-H FOR CONNECTION TO JOINT(S) C , D

PROVIDE ANCHORAGE AT BEARING JOINT C FOR 150 LBS FACTORED UPLIFT

UNFACTORED REACTIONS

JT	1ST LCASE COMBINED	MAX./MIN. COMPONENT REACTIONS SNOW	LIVE	PERM.LIVE	WIND	DEAD	SOIL
E	176	144 / 0	0 / 0	0 / 0	0 / 0	31 / 0	0 / 0
C	32	28 / -17	0 / 0	0 / 0	0 / 0	4 / 0	0 / 0
D	9	0 / -7	0 / 0	0 / 0	0 / 0	13 / 0	0 / 0

BEARING MATERIAL TO BE SPF NO.2 OR BETTER AT JOINT(S) E, C

BRACING
TOP CHORD TO BE SHEATHED OR MAX. PURLIN SPACING = 6.25 FT.
MAX. UNBRACED BOTTOM CHORD LENGTH = 10.00 FT OR RIGID CEILING DIRECTLY APPLIED.

ALL PITCH BREAKS AND PERIMETER CORNER JOINTS MUST BE LATERALLY RESTRAINED.

LOADING
TOTAL LOAD CASES: (5)

CHORDS

MEMB. FR-TO	MAX. FORCE (LBS)	FACTORED VERT. LOAD (PLF) FROM	TO	MAX CSI (LC)	MAX. UNBRAC LENGTH
E- B	-230 / 0	0.0	0.0	0.03 (5)	7.81
A- B	0 / 32	-84.3	-84.3	0.11 (1)	10.00
B- C	-19 / 0	-84.3	-84.3	0.09 (1)	6.25
E- D	0 / 0	-18.2	-18.2	0.03 (5)	10.00

WEBS

MEMB. FR-TO	MAX. FORCE (LBS)	MAX CSI (LC)

CANTILEVER ANALYSIS HAS BEEN CONSIDERED IN THIS DESIGN

PATTERN-LOADING CHECK APPLIED TO THIS TRUSS.

DESIGN CRITERIA

SPECIFIED LOADS:

TOP CH.	LL	=	25.6	PSF
	DL	=	3.0	PSF
BOT CH.	LL	=	0.0	PSF
	DL	=	7.3	PSF
TOTAL LOAD		=	35.9	PSF

SPACING = 24.0 IN. C/C

THIS TRUSS IS DESIGNED FOR RESIDENTIAL OR SMALL BUILDING REQUIREMENTS OF PART 9, NBCC 2015

THIS DESIGN COMPLIES WITH:
- PART 9 OF BCBC 2018 , ABC 2019
- PART 9 OF OBC 2012 (2019 AMENDMENT)
- CSA 086-14
- TPIC 2014

DESIGN ASSUMPTIONS
-OVERHANG NOT TO BE ALTERED OR CUT OFF.

(55 % OF 31.3 P.S.F. G.S.L. PLUS 8.4 P.S.F. RAIN LOAD) EQUALS 25.6 P.S.F. SPECIFIED ROOF LIVE LOAD

ALLOWABLE DEFL.(LL)= L/360 (0.19")
CALCULATED VERT. DEFL.(LL) = L/ 999 (0.00")
ALLOWABLE DEFL.(TL)= L/360 (0.19")
CALCULATED VERT. DEFL.(TL) = L/ 999 (0.00")

CSI: TC=0.11/1.00 (A-B:1) , BC=0.03/1.00 (D-E:5) , WB=0.00/1.00 (n/a:0) , SSI=0.08/1.00 (A-B:1)

DOL LUMBER=1.00 NAIL=1.00 LS BEND=1.10 COMP=1.10 SHEAR=1.10 TENS= 1.10

COMPANION LIVE LOAD FACTOR = 1.00

TRUSS PLATE MANUFACTURER IS NOT RESPONSIBLE FOR QUALITY CONTROL IN THE TRUSS MANUFACTURING PLANT .

NAIL VALUES

PLATE	GRIP(DRY) (PSI) MAX	MIN	SHEAR (PLI) MAX	MIN	SECTION (PLI) MAX	MIN
MT20	650	371	1747	788	1987	1873

PLATE PLACEMENT TOL. = 0.250 inches

PLATE ROTATION TOL. = 5.0 Deg.

JSI GRIP= 0.14 (B) (INPUT = 0.90)
JSI METAL= 0.12 (B) (INPUT = 1.00)

LICENSED PROFESSIONAL ENGINEER
I.MATIJEVIC
100528832
PROVINCE OF ONTARIO
October 05, 2021

READ ALL NOTES ON THIS PAGE AND ON THE ENGINEERING NOTE PAGE ENP-1. THE NOTE PAGE IS AN INTEGRAL PART OF THIS DRAWING AS IT CONTAINS SPECIFICATIONS AND CRITERIA USED IN THE DESIGN OF THIS COMPONENT.

CITY OF RICHMOND HILL
BUILDING DIVISION
09/22/2022
KOTT
RECEIVED
Per:_____joshua.nabua_____

JOB NAME	TRUSS NAME	QUANTITY	PLY	JOB DESC.	DRWG NO.
IM1021-016	T01	7	1	TRUSS DESC.	

Version 8.500 S Aug 16 2021 MiTek Industries, Inc. Tue Oct 5 07:26:20 2021 Page 1
ID:rNLltaylTWAmcAy8n3bxlWzd_ly-Tk8gH_IGdyv3wc1z5bT4jgZcztocoi1eq9_1WxyWYOX

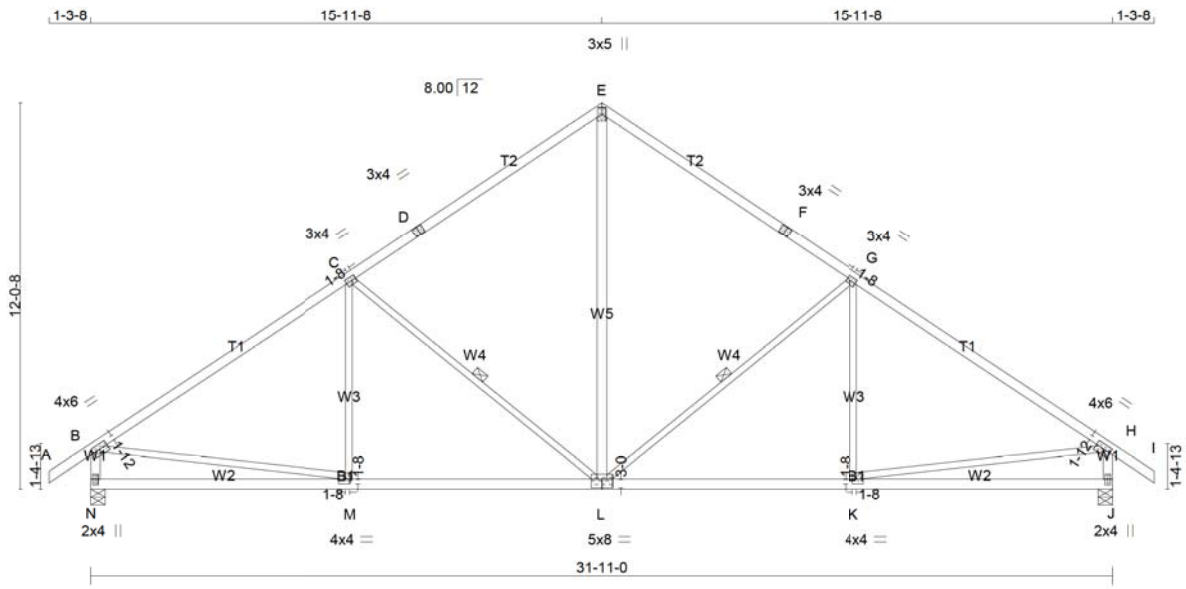

TOTAL WEIGHT = 7 X 138 = 966 lb

LUMBER
N. L. G. A. RULES

CHORDS	SIZE		LUMBER	DESCR.
A - D	2x4	DRY	No.2	SPF
D - E	2x4	DRY	No.2	SPF
E - F	2x4	DRY	No.2	SPF
F - I	2x4	DRY	No.2	SPF
N - B	2x4	DRY	No.2	SPF
J - H	2x4	DRY	No.2	SPF
N - L	2x4	DRY	No.2	SPF
L - J	2x4	DRY	No.2	SPF
ALL WEBS	2x3	DRY	No.2	SPF
EXCEPT				
L - E	2x4	DRY	No.2	SPF

DRY: SEASONED LUMBER.

PLATES (table is in inches)

JT	TYPE	PLATES	W	LEN	Y	X
B	TMVW-t	MT20	4.0	6.0	1.75	3.00
C	TMWW-t	MT20	3.0	4.0	1.50	1.50
D	TS-t	MT20	3.0	4.0		
E	TTW+p	MT20	3.0	5.0		
F	TS-t	MT20	3.0	4.0		
G	TMWW-t	MT20	3.0	4.0	1.50	1.50
H	TMVW-t	MT20	4.0	6.0	1.75	3.00
J	BMV1+p	MT20	2.0	4.0		
K	BMWW-t	MT20	4.0	4.0	1.50	1.50
L	BSWWW-I	MT20	5.0	8.0	3.00	4.00
M	BMWW-t	MT20	4.0	4.0	1.50	1.50
N	BMV1+p	MT20	2.0	4.0		

DIMENSIONS, SUPPORTS AND LOADINGS SPECIFIED BY FABRICATOR TO BE VERIFIED BY BUILDING DESIGNER

BEARINGS

JT	FACTORED GROSS REACTION VERT	HORZ	MAXIMUM FACTORED GROSS REACTION DOWN	HORZ	UPLIFT	INPUT BRG IN-SX	REQRD BRG IN-SX
N	1751	0	1751	0	0	5-8	2-3
J	1751	0	1751	0	0	5-8	2-3

UNFACTORED REACTIONS

JT	1ST LCASE COMBINED	MAX./MIN. COMPONENT REACTIONS SNOW	LIVE	PERM.LIVE	WIND	DEAD	SOIL
N	1224	887 / 0	0 / 0	0 / 0	0 / 0	337 / 0	0 / 0
J	1224	887 / 0	0 / 0	0 / 0	0 / 0	337 / 0	0 / 0

BEARING MATERIAL TO BE SPF NO.2 OR BETTER AT JOINT(S) N, J

BRACING
TOP CHORD TO BE SHEATHED OR MAX. PURLIN SPACING = 3.59 FT.
MAX. UNBRACED BOTTOM CHORD LENGTH = 10.00 FT OR RIGID CEILING DIRECTLY APPLIED.

ALL FITCH BREAKS AND PERIMETER CORNER JOINTS MUST BE LATERALLY RESTRAINED.

1 - 1x4 LATERAL BRACE(S) AT 1/ 2 LENGTH OF G-L, C-L. DBS = 20-0-0 . CBF = 86 LBS.

DBS = DIAGONAL BRACE SPACING (MAX). CBF = CUMULATIVE BRACING FORCE (PER BRACE). FASTEN LATERAL BRACE(S) USING (0.122"X3") SPIRAL NAILS : 1 NAIL FOR 2x3 BRACE(S), 2 FOR 1x4, 2x4, 2x5, 3 FOR 2x6, 4 FOR 2x8, 5 FOR 2x10, AND 6 FOR 2x12.

END VERTICAL(S) MUST BE SHEATHED OR HAVE BRACES AS INDICATED IN THE MAX. UNBRACED LENGTH COLUMN OF THE TABLE BELOW

LOADING
TOTAL LOAD CASES: (4)

CHORDS

MEMB. FR-TO	MAX. FACTORED FORCE (LBS)	FACTORED VERT. LOAD LC1 (PLF) FROM	TO	MAX CSI (LC)	MAX. UNBRAC LENGTH
A- B	0 / 32	-84.3	-84.3	0.11 (1)	10.00
B- C	-1936 / 0	-84.3	-84.3	0.95 (1)	3.59
C- D	-1385 / 0	-84.3	-84.3	0.82 (1)	4.27
D- E	-1385 / 0	-84.3	-84.3	0.82 (1)	4.27
E- F	-1385 / 0	-84.3	-84.3	0.82 (1)	4.27
F- G	-1385 / 0	-84.3	-84.3	0.82 (1)	4.27
G- H	-1936 / 0	-84.3	-84.3	0.95 (1)	3.59
H- I	0 / 32	-84.3	-84.3	0.11 (1)	10.00
N- B	-1694 / 0	0.0	0.0	0.17 (1)	6.39
J- H	-1694 / 0	0.0	0.0	0.17 (1)	6.39
N- M	0 / 0	-18.2	-18.2	0.33 (4)	10.00
M- L	0 / 1648	-18.2	-18.2	0.45 (4)	10.00
L- K	0 / 1648	-18.2	-18.2	0.45 (4)	10.00
K- J	0 / 0	-18.2	-18.2	0.33 (4)	10.00

WEBS

MEMB. FR-TO	MAX. FACTORED FORCE (LBS)	MAX CSI (LC)
L- E	0 / 989	0.16 (1)
K- G	-692 / 0	0.52 (1)
K- G	-42 / 141	0.05 (4)
C- L	-692 / 0	0.52 (1)
M- C	-42 / 141	0.05 (4)
B- M	0 / 1663	0.37 (1)
K- H	0 / 1663	0.37 (1)

DESIGN CRITERIA

SPECIFIED LOADS:

TOP CH.	LL	=	25.6	PSF
	DL	=	3.0	PSF
BOT CH.	LL	=	0.0	PSF
	DL	=	7.3	PSF
TOTAL LOAD		=	35.9	PSF

SPACING = 24.0 IN. C/C

THIS TRUSS IS DESIGNED FOR RESIDENTIAL OR SMALL BUILDING REQUIREMENTS OF PART 9, NBCC 2015

THIS DESIGN COMPLIES WITH:
- PART 9 OF BCBC 2018 , ABC 2019
- PART 9 OF OBC 2012 (2019 AMENDMENT)
- CSA 086-14
- TPIC 2014

(55 % OF 31.3 P.S.F. G.S.L. PLUS 8.4 P.S.F. RAIN LOAD) EQUALS 25.6 P.S.F. SPECIFIED ROOF LIVE LOAD

ALLOWABLE DEFL.(LL)= L/360 (1.06")
CALCULATED VERT. DEFL.(LL) = L/ 999 (0.09")
ALLOWABLE DEFL.(TL)= L/360 (1.06")
CALCULATED VERT. DEFL.(TL) = L/ 999 (0.22")

CSI: TC=0.95/1.00 (B-C:1) , BC=0.45/1.00 (L-M:4) , WB=0.52/1.00 (C-L:1) , SSI=0.27/1.00 (B-C:1)

DOL LUMBER=1.00 NAIL=1.00 LS BEND=1.10 COMP=1.10 SHEAR=1.10 TENS= 1.10

COMPANION LIVE LOAD FACTOR = 1.00

TRUSS PLATE MANUFACTURER IS NOT RESPONSIBLE FOR QUALITY CONTROL IN THE TRUSS MANUFACTURING PLANT .

NAIL VALUES

PLATE	GRIP(DRY) (PSI) MAX	MIN	SHEAR (PLI) MAX	MIN	SECTION (PLI) MAX	MIN
MT20	650	371	1747	788	1987	1873

PLATE PLACEMENT TOL. = 0.250 inches

PLATE ROTATION TOL. = 5.0 Deg.

JSI GRIP= 0.89 (H) (INPUT = 0.90)
JSI METAL= 0.56 (M) (INPUT = 1.00)

LICENSED PROFESSIONAL ENGINEER
I.MATIJEVIC
100528832
PROVINCE OF ONTARIO
October 05, 2021

READ ALL NOTES ON THIS PAGE AND ON THE ENGINEERING NOTE PAGE ENP-1. THE NOTE PAGE IS AN INTEGRAL PART OF THIS DRAWING AS IT CONTAINS SPECIFICATIONS AND CRITERIA USED IN THE DESIGN OF THIS COMPONENT.

CITY OF RICHMOND HILL
BUILDING DIVISION
09/22/2022
KOTT
RECEIVED
Per:_____joshua.nabua_____

JOB NAME	TRUSS NAME	QUANTITY	PLY	JOB DESC.	DRWG NO.
IM1021-016	T02	2	1	TRUSS DESC.	

Version 8.500 S Aug 16 2021 MiTek Industries, Inc. Tue Oct 5 07:26:21 2021 Page 1
ID:rNLltayITWAmcAy8n3bxIWzd Iy-xxi2UKJuOG1wYmcAeJ JGu6rhH8mXCZo3pkb2NyWYOW

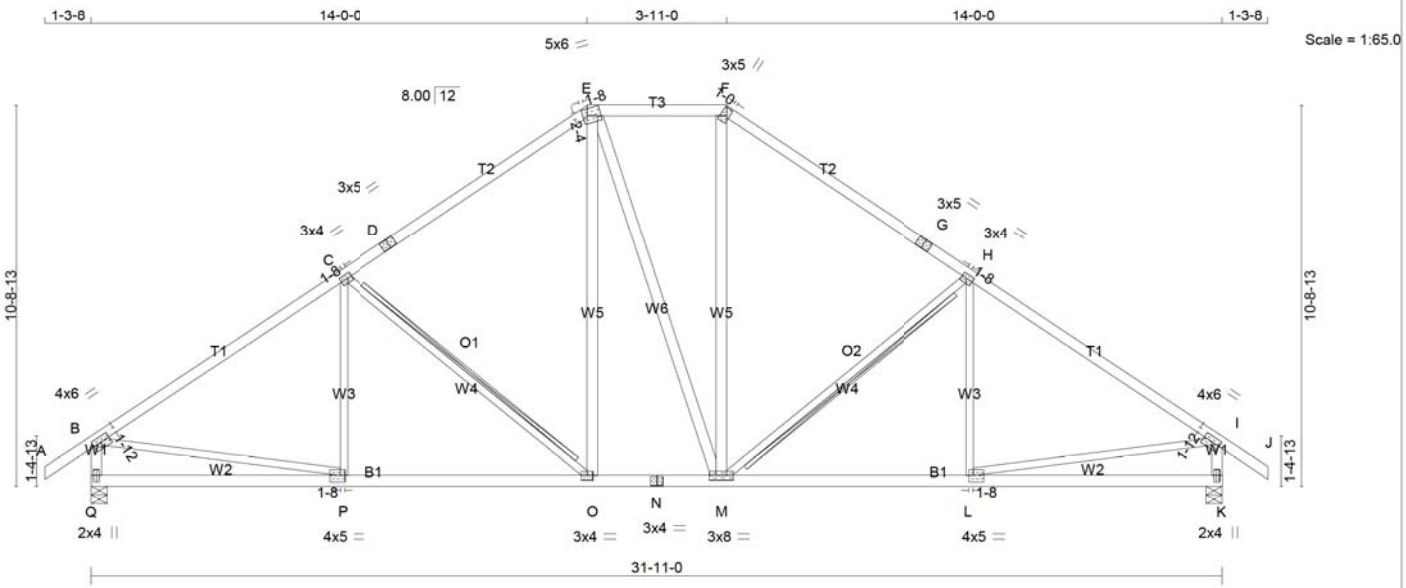

TOTAL WEIGHT = 2 X 155 = 310 lb

[M][F]

LUMBER

N. L. G. A. RULES

CHORDS	SIZE		LUMBER	DESCR.
A - D	2x4	DRY	No.2	SPF
D - E	2x4	DRY	No.2	SPF
E - F	2x4	DRY	No.2	SPF
F - G	2x4	DRY	No.2	SPF
G - J	2x4	DRY	No.2	SPF
Q - B	2x4	DRY	No.2	SPF
K - I	2x4	DRY	No.2	SPF
Q - N	2x4	DRY	No.2	SPF
N - K	2x4	DRY	No.2	SPF
ALL WEBS	2x3	DRY	No.2	SPF
EXCEPT				
O - E	2x4	DRY	No.2	SPF
E - M	2x4	DRY	No.2	SPF
M - F	2x4	DRY	No.2	SPF

DRY: SEASONED LUMBER.

PLATES (table is in inches)

JT	TYPE	PLATES	W	LEN	Y	X
B	TMVW-t	MT20	4.0	6.0	1.75	3.00
C	TMWW-t	MT20	3.0	4.0	1.50	1.50
D	TS-t	MT20	3.0	5.0		
E	TTWW-m	MT20	5.0	6.0	2.25	1.50
F	TTW+h	MT20	3.0	5.0	2.50	1.00
G	TS-t	MT20	3.0	5.0		
H	TMWW-t	MT20	3.0	4.0	1.50	1.50
I	TMVW-t	MT20	4.0	6.0	1.75	3.00
K	BMV1+p	MT20	2.0	4.0		
L	BMWW-t	MT20	4.0	5.0	2.00	1.50
M	BMWWW-t	MT20	3.0	8.0		
N	BS-t	MT20	3.0	4.0		
O	BMWW-t	MT20	3.0	4.0		
P	BMWW-t	MT20	4.0	5.0	2.00	1.50
Q	BMV1+p	MT20	2.0	4.0		

DIMENSIONS, SUPPORTS AND LOADINGS SPECIFIED BY FABRICATOR TO BE VERIFIED BY BUILDING DESIGNER

BEARINGS

JT	FACTORED GROSS REACTION VERT	HORZ	MAXIMUM FACTORED GROSS REACTION DOWN	HORZ	UPLIFT	INPUT BRG IN-SX	REQRD BRG IN-SX
Q	1751	0	1751	0	0	5-8	2-3
K	1751	0	1751	0	0	5-8	2-3

UNFACTORED REACTIONS

JT	1ST LCASE COMBINED	MAX./MIN. COMPONENT REACTIONS SNOW	LIVE	PERM.LIVE	WIND	DEAD	SOIL
Q	1224	887 / 0	0 / 0	0 / 0	0 / 0	337 / 0	0 / 0
K	1224	887 / 0	0 / 0	0 / 0	0 / 0	337 / 0	0 / 0

BEARING MATERIAL TO BE SPF NO.2 OR BETTER AT JOINT(S) Q, K

BRACING

TOP CHORD TO BE SHEATHED OR MAX. PURLIN SPACING = 4.05 FT.
MAX. UNBRACED BOTTOM CHORD LENGTH = 10.00 FT OR RIGID CEILING DIRECTLY APPLIED.

ALL PITCH BREAKS AND PERIMETER CORNER JOINTS MUST BE LATERALLY RESTRAINED.

2x4 DRY SPF No.2 T-BRACE AT C-O, H-M

FASTEN T AND I-BRACES TO NARROW EDGE OF WEB WITH ONE ROW PER PLY OF 3" COMMON WIRE NAILS @ 6" O.C. WITH 3" MINIMUM END DISTANCE. BRACE MUST COVER 90% OF WEB LENGTH.

END VERTICAL(S) MUST BE SHEATHED OR HAVE BRACES AS INDICATED IN THE MAX. UNBRACED LENGTH COLUMN OF THE TABLE BELOW

LOADING

TOTAL LOAD CASES: (4)

CHORDS

MEMB. FR-TO	MAX. FACTORED FORCE (LBS)	FACTORED VERT. LOAD LC1 (PLF) FROM	TO	MAX CSI (LC)	MAX. UNBRAC LENGTH
A- B	0 / 32	-84.3	-84.3	0.11 (1)	10.00
B- C	-1950 / 0	-84.3	-84.3	0.70 (1)	4.05
C- D	-1522 / 0	-84.3	-84.3	0.62 (1)	4.55
D- E	-1522 / 0	-84.3	-84.3	0.62 (1)	4.55
E- F	-1238 / 0	-84.3	-84.3	0.18 (1)	5.58
F- G	-1522 / 0	-84.3	-84.3	0.62 (1)	4.55
G- H	-1522 / 0	-84.3	-84.3	0.62 (1)	4.55
H- I	-1950 / 0	-84.3	-84.3	0.70 (1)	4.05
I- J	0 / 32	-84.3	-84.3	0.11 (1)	10.00
Q- B	-1699 / 0	0.0	0.0	0.18 (1)	6.38
K- I	-1699 / 0	0.0	0.0	0.18 (1)	6.38
Q- P	0 / 0	-18.2	-18.2	0.23 (4)	10.00
P- O	0 / 1655	-18.2	-18.2	0.39 (1)	10.00
O- N	0 / 1237	-18.2	-18.2	0.27 (1)	10.00
N- M	0 / 1237	-18.2	-18.2	0.27 (1)	10.00
M- L	0 / 1655	-18.2	-18.2	0.38 (1)	10.00
L- K	0 / 0	-18.2	-18.2	0.23 (4)	10.00

WEBS

MEMB. FR-TO	MAX. FACTORED FORCE (LBS)	MAX CSI (LC)
P- C	-103 / 99	0.06 (1)
C- O	-550 / 0	0.36 (1)
O- E	0 / 439	0.07 (1)
E- M	0 / 2	0.00 (1)
M- F	0 / 442	0.07 (1)
M- H	-549 / 0	0.36 (1)
L- H	-105 / 98	0.06 (1)
B- P	0 / 1674	0.38 (1)
L- I	0 / 1674	0.38 (1)

DESIGN CRITERIA

SPECIFIED LOADS:

TOP CH.	LL	=	25.6	PSF
	DL	=	3.0	PSF
BOT CH.	LL	=	0.0	PSF
	DL	=	7.3	PSF
TOTAL LOAD		=	35.9	PSF

SPACING = 24.0 IN. C/C

LOADING IN FLAT SECTION BASED ON A SLOPE OF 2.00/12 MINIMUM

THIS TRUSS IS DESIGNED FOR RESIDENTIAL OR SMALL BUILDING REQUIREMENTS OF PART 9, NBCC 2015

THIS DESIGN COMPLIES WITH:
- PART 9 OF BCBC 2018 , ABC 2019
- PART 9 OF OBC 2012 (2019 AMENDMENT)
- CSA 086-14
- TPIC 2014

(55 % OF 31.3 P.S.F. G.S.L. PLUS 8.4 P.S.F. RAIN LOAD) EQUALS 25.6 P.S.F. SPECIFIED ROOF LIVE LOAD

ALLOWABLE DEFL.(LL)= L/360 (1.06")
CALCULATED VERT. DEFL.(LL) = L/ 999 (0.08")
ALLOWABLE DEFL.(TL)= L/360 (1.06")
CALCULATED VERT. DEFL.(TL) = L/ 999 (0.16")

CSI: TC=0.70/1.00 (B-C:1) , BC=0.39/1.00 (O-P:1) , WB=0.38/1.00 (B-P:1) , SSI=0.24/1.00 (B-C:1)

DOL LUMBER=1.00 NAIL=1.00 LS BEND=1.10 COMP=1.10 SHEAR=1.10 TENS= 1.10

COMPANION LIVE LOAD FACTOR = 1.00

TRUSS PLATE MANUFACTURER IS NOT RESPONSIBLE FOR QUALITY CONTROL IN THE TRUSS MANUFACTURING PLANT .

NAIL VALUES

PLATE	GRIP(DRY) (PSI) MAX	MIN	SHEAR (PLI) MAX	MIN	SECTION (PLI) MAX	MIN
MT20	650	371	1747	788	1987	1873

PLATE PLACEMENT TOL. = 0.250 inches

PLATE ROTATION TOL. = 5.0 Deg.

JSI GRIP= 0.90 (B) (INPUT = 0.90)
JSI METAL= 0.52 (B) (INPUT = 1.00)

LICENSED PROFESSIONAL ENGINEER
I.MATIJEVIC
100528832
PROVINCE OF ONTARIO

October 05, 2021

READ ALL NOTES ON THIS PAGE AND ON THE ENGINEERING NOTE PAGE ENP-1. THE NOTE PAGE IS AN INTEGRAL PART OF THIS DRAWING AS IT CONTAINS SPECIFICATIONS AND CRITERIA USED IN THE DESIGN OF THIS COMPONENT.

CITY OF RICHMOND HILL
BUILDING DIVISION
09/22/2022
KOTT
RECEIVED
Per:_____joshua.nabua_____

JOB NAME	TRUSS NAME	QUANTITY	PLY	JOB DESC.	DRWG NO.
IM1021-016	T03	2	1	TRUSS DESC.	

Version 8.500 S Aug 16 2021 MiTek Industries, Inc. Tue Oct 5 07:26:21 2021 Page 1
ID:rNLItaylTWAmcAy8n3bxlWzd ly-xxi2UKJuOG1wYmcAeJ JGu6u?H9tXAEo3pkb2NyWYOW

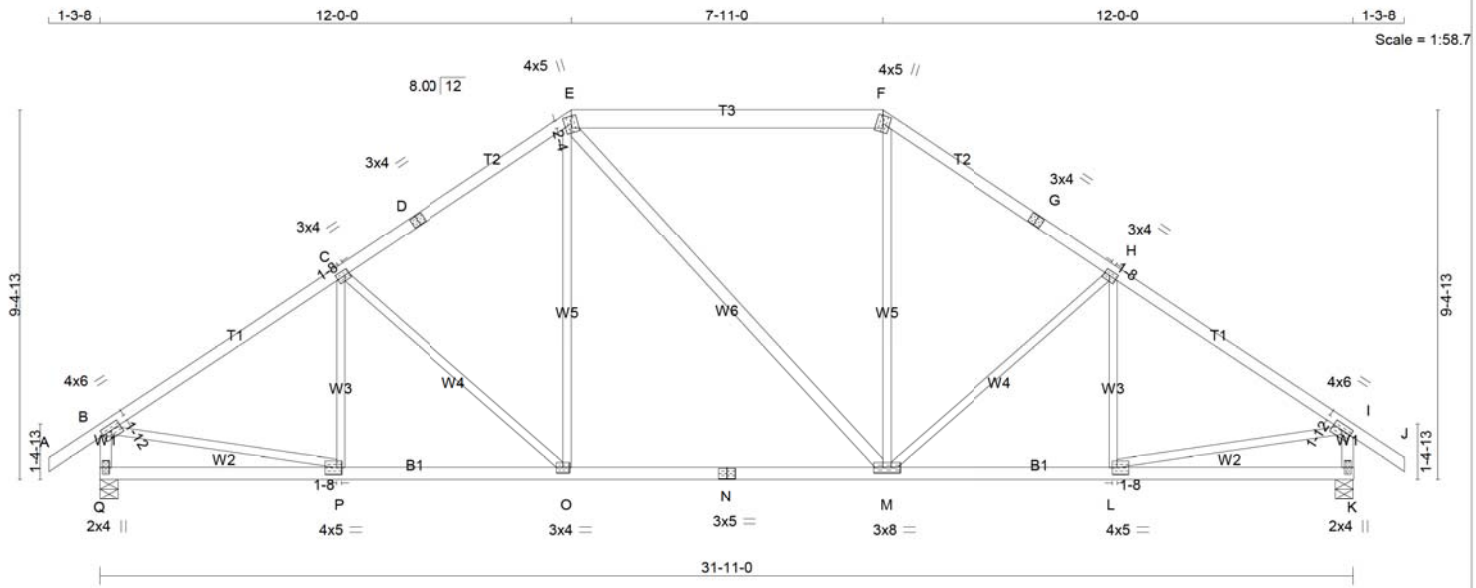

TOTAL WEIGHT = 2 X 147 = 294 lb

[M][F]

LUMBER

N. L. G. A. RULES

CHORDS	SIZE		LUMBER	DESCR.
A - D	2x4	DRY	No.2	SPF
D - E	2x4	DRY	No.2	SPF
E - F	2x6	DRY	No.2	SPF
F - G	2x4	DRY	No.2	SPF
G - J	2x4	DRY	No.2	SPF
Q - B	2x4	DRY	No.2	SPF
K - I	2x4	DRY	No.2	SPF
Q - N	2x4	DRY	No.2	SPF
N - K	2x4	DRY	No.2	SPF
ALL WEBS	2x3	DRY	No.2	SPF
EXCEPT				
E - M	2x4	DRY	No.2	SPF

DRY: SEASONED LUMBER.

PLATES (table is in inches)

JT	TYPE	PLATES	W	LEN	Y	X
B	TMVW-t	MT20	4.0	6.0	1.75	3.00
C	TMWW-t	MT20	3.0	4.0	1.50	1.50
D	TS-t	MT20	3.0	4.0		
E	TTWW+m	MT20	4.0	5.0	2.25	2.00
F	TTW+m	MT20	4.0	5.0		
G	TS-t	MT20	3.0	4.0		
H	TMWW-t	MT20	3.0	4.0	1.50	1.50
I	TMVW-t	MT20	4.0	6.0	1.75	3.00
K	BMV1+p	MT20	2.0	4.0		
L	BMWW-t	MT20	4.0	5.0	2.00	1.50
M	BMWWW-t	MT20	3.0	8.0		
N	BS-t	MT20	3.0	5.0		
O	BMWW-t	MT20	3.0	4.0		
P	BMWW-t	MT20	4.0	5.0	2.00	1.50
Q	BMV1+p	MT20	2.0	4.0		

DIMENSIONS, SUPPORTS AND LOADINGS SPECIFIED BY FABRICATOR TO BE VERIFIED BY BUILDING DESIGNER

BEARINGS

JT	FACTORED GROSS REACTION VERT	HORZ	MAXIMUM FACTORED GROSS REACTION DOWN	HORZ	UPLIFT	INPUT BRG IN-SX	REQRD BRG IN-SX
Q	1751	0	1751	0	0	5-8	2-3
K	1751	0	1751	0	0	5-8	2-3

UNFACTORED REACTIONS

JT	1ST LCASE COMBINED	MAX./MIN. COMPONENT REACTIONS SNOW	LIVE	PERM.LIVE	WIND	DEAD	SOIL
Q	1224	887 / 0	0 / 0	0 / 0	0 / 0	337 / 0	0 / 0
K	1224	887 / 0	0 / 0	0 / 0	0 / 0	337 / 0	0 / 0

BEARING MATERIAL TO BE SPF NO.2 OR BETTER AT JOINT(S) Q, K

BRACING

TOP CHORD TO BE SHEATHED OR MAX. PURLIN SPACING = 4.35 FT.
MAX. UNBRACED BOTTOM CHORD LENGTH = 10.00 FT OR RIGID CEILING DIRECTLY APPLIED.

ALL FITCH BREAKS AND PERIMETER CORNER JOINTS MUST BE LATERALLY RESTRAINED.

LOADING

TOTAL LOAD CASES: (4)

CHORDS

MEMB. FR-TO	MAX. FORCE (LBS)	FACTORED VERT. LOAD LC1 (PLF) FROM	TO	MAX CSI (LC)	MAX. UNBRAC LENGTH
A- B	0 / 32	-84.3	-84.3	0.11 (1)	10.00
B- C	-1947 / 0	-84.3	-84.3	0.48 (1)	4.35
C- D	-1672 / 0	-84.3	-84.3	0.44 (1)	4.66
D- E	-1672 / 0	-84.3	-84.3	0.44 (1)	4.66
E- F	-1362 / 0	-84.3	-84.3	0.34 (1)	6.13
F- G	-1672 / 0	-84.3	-84.3	0.44 (1)	4.66
G- H	-1672 / 0	-84.3	-84.3	0.44 (1)	4.66
H- I	-1946 / 0	-84.3	-84.3	0.48 (1)	4.35
I- J	0 / 32	-84.3	-84.3	0.11 (1)	10.00
Q- B	-1703 / 0	0.0	0.0	0.18 (1)	6.37
K- I	-1703 / 0	0.0	0.0	0.18 (1)	6.37
Q- P	0 / 0	-18.2	-18.2	0.14 (4)	10.00
P- O	0 / 1647	-18.2	-18.2	0.37 (1)	10.00
O- N	0 / 1361	-18.2	-18.2	0.33 (1)	10.00
N- M	0 / 1361	-18.2	-18.2	0.33 (1)	10.00
M- L	0 / 1647	-18.2	-18.2	0.38 (1)	10.00
L- K	0 / 0	-18.2	-18.2	0.14 (4)	10.00

WEBS

MEMB. FR-TO	MAX. FORCE (LBS)	MAX CSI (LC)
P- C	-182 / 46	0.08 (1)
C- O	-376 / 0	0.46 (1)
O- E	0 / 383	0.09 (1)
E- M	0 / 0	0.00 (1)
M- F	0 / 384	0.09 (1)
M- H	-376 / 0	0.46 (1)
L- H	-182 / 45	0.08 (1)
B- P	0 / 1672	0.38 (1)
L- I	0 / 1672	0.38 (1)

DESIGN CRITERIA

SPECIFIED LOADS:

TOP CH.	LL	=	25.6	PSF
	DL	=	3.0	PSF
BOT CH.	LL	=	0.0	PSF
	DL	=	7.3	PSF
TOTAL LOAD		=	35.9	PSF

SPACING = 24.0 IN. C/C

LOADING IN FLAT SECTION BASED ON A SLOPE OF 2.00/12 MINIMUM

THIS TRUSS IS DESIGNED FOR RESIDENTIAL OR SMALL BUILDING REQUIREMENTS OF PART 9, NBCC 2015

THIS DESIGN COMPLIES WITH:
- PART 9 OF BCBC 2018 , ABC 2019
- PART 9 OF OBC 2012 (2019 AMENDMENT)
- CSA 086-14
- TPIC 2014

(55 % OF 31.3 P.S.F. G.S.L. PLUS 8.4 P.S.F. RAIN LOAD) EQUALS 25.6 P.S.F. SPECIFIED ROOF LIVE LOAD

ALLOWABLE DEFL.(LL)= L/360 (1.06")
CALCULATED VERT. DEFL.(LL) = L/ 999 (0.07")
ALLOWABLE DEFL.(TL)= L/360 (1.06")
CALCULATED VERT. DEFL.(TL) = L/ 999 (0.19")

CSI: TC=0.48/1.00 (B-C:1) , BC=0.38/1.00 (L-M:1) , WB=0.46/1.00 (C-O:1) , SSI=0.21/1.00 (B-C:1)

DOL LUMBER=1.00 NAIL=1.00 LS BEND=1.10 COMP=1.10 SHEAR=1.10 TENS= 1.10

COMPANION LIVE LOAD FACTOR = 1.00

TRUSS PLATE MANUFACTURER IS NOT RESPONSIBLE FOR QUALITY CONTROL IN THE TRUSS MANUFACTURING PLANT .

NAIL VALUES

PLATE	GRIP(DRY) (PSI) MAX	MIN	SHEAR (PLI) MAX	MIN	SECTION (PLI) MAX	MIN
MT20	650	371	1747	788	1987	1873

PLATE PLACEMENT TOL. = 0.250 inches

PLATE ROTATION TOL. = 5.0 Deg.

JSI GRIP= 0.90 (B) (INPUT = 0.90)
JSI METAL= 0.56 (N) (INPUT = 1.00)

LICENSED PROFESSIONAL ENGINEER
I.MATIJEVIC
100528832
PROVINCE OF ONTARIO
October 05, 2021

READ ALL NOTES ON THIS PAGE AND ON THE ENGINEERING NOTE PAGE ENP-1. THE NOTE PAGE IS AN INTEGRAL PART OF THIS DRAWING AS IT CONTAINS SPECIFICATIONS AND CRITERIA USED IN THE DESIGN OF THIS COMPONENT.

CITY OF RICHMOND HILL
BUILDING DIVISION
09/22/2022
KOTT
RECEIVED
Per:_____joshua.nabua_____

JOB NAME	TRUSS NAME	QUANTITY	PLY	JOB DESC.	DRWG NO.
IM1021-016	T04	2	1	TRUSS DESC.	

Version 8.500 S Aug 16 2021 MiTek Industries, Inc. Tue Oct 5 07:26:22 2021 Page 1
ID:rNLItayITWAmcAy8n3bxIWzd Iy-P7GRigKW9Z9n9vBMC0WYp5e4chVjGYgxITT8aqyWYOV

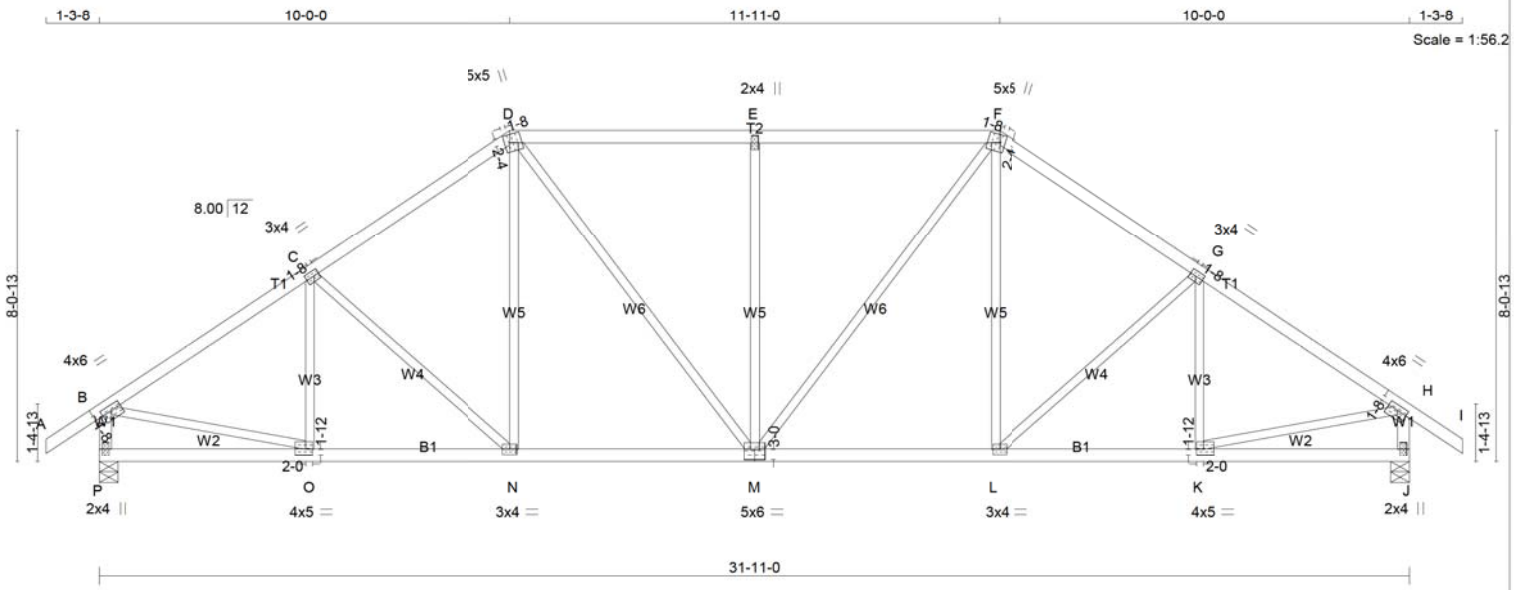

TOTAL WEIGHT = 2 X 142 = 284 lb

[M][F]

LUMBER

N. L. G. A. RULES

CHORDS	SIZE		LUMBER	DESCR.
A - D	2x4	DRY	No.2	SPF
D - F	2x4	DRY	No.2	SPF
F - I	2x4	DRY	No.2	SPF
P - B	2x4	DRY	No.2	SPF
J - H	2x4	DRY	No.2	SPF
P - M	2x4	DRY	No.2	SPF
M - J	2x4	DRY	No.2	SPF
ALL WEBS EXCEPT	2x3	DRY	No.2	SPF

DRY: SEASONED LUMBER.

PLATES (table is in inches)

JT	TYPE	PLATES	W	LEN	Y	X
B	TMVW-t	MT20	4.0	6.0	1.50	3.00
C	TMWW-t	MT20	3.0	4.0	1.50	1.50
D	TTWW+m	MT20	5.0	5.0	2.25	1.50
E	TMW+w	MT20	2.0	4.0		
F	TTWW+m	MT20	5.0	5.0	2.25	1.50
G	TMWW-t	MT20	3.0	4.0	1.50	1.50
H	TMVW-t	MT20	4.0	6.0	1.50	3.00
J	BMV1+p	MT20	2.0	4.0		
K	BMWW-t	MT20	4.0	5.0	1.75	2.00
L	BMWW-t	MT20	3.0	4.0		
M	BSWWW-I	MT20	5.0	6.0	3.00	3.00
N	BMWW-t	MT20	3.0	4.0		
O	BMWW-t	MT20	4.0	5.0	1.75	2.00
P	BMV1+p	MT20	2.0	4.0		

DIMENSIONS, SUPPORTS AND LOADINGS SPECIFIED BY FABRICATOR TO BE VERIFIED BY BUILDING DESIGNER

BEARINGS

JT	FACTORED GROSS REACTION VERT	HORZ	MAXIMUM FACTORED GROSS REACTION DOWN	HORZ	UPLIFT	INPUT BRG IN-SX	REQRD BRG IN-SX
P	1751	0	1751	0	0	5-8	2-3
J	1751	0	1751	0	0	5-8	2-3

UNFACTORED REACTIONS

JT	1ST LCASE COMBINED	MAX./MIN. COMPONENT REACTIONS SNOW	LIVE	PERM.LIVE	WIND	DEAD	SOIL
P	1224	887 / 0	0 / 0	0 / 0	0 / 0	337 / 0	0 / 0
J	1224	887 / 0	0 / 0	0 / 0	0 / 0	337 / 0	0 / 0

BEARING MATERIAL TO BE SPF NO.2 OR BETTER AT JOINT(S) P, J

BRACING

TOP CHORD TO BE SHEATHED OR MAX. PURLIN SPACING = 4.55 FT.
MAX. UNBRACED BOTTOM CHORD LENGTH = 10.00 FT OR RIGID CEILING DIRECTLY APPLIED.

ALL FITCH BREAKS AND PERIMETER CORNER JOINTS MUST BE LATERALLY RESTRAINED.

LOADING

TOTAL LOAD CASES: (4)

CHORDS

MEMB. FR-TO	MAX. FACTORED FORCE (LBS)	FACTORED VERT. LOAD LC1 (PLF) FROM	TO	MAX CSI (LC)	MAX. UNBRAC LENGTH
A- B	0 / 32	-84.3	-84.3	0.11 (1)	10.00
B- C	-1927 / 0	-84.3	-84.3	0.33 (1)	4.55
C- D	-1776 / 0	-84.3	-84.3	0.31 (1)	4.71
D- E	-1725 / 0	-84.3	-84.3	0.43 (1)	4.60
E- F	-1725 / 0	-84.3	-84.3	0.43 (1)	4.60
F- G	-1776 / 0	-84.3	-84.3	0.31 (1)	4.71
G- H	-1927 / 0	-84.3	-84.3	0.33 (1)	4.55
H- I	0 / 32	-84.3	-84.3	0.11 (1)	10.00
P- B	-1710 / 0	0.0	0.0	0.18 (1)	6.36
J- H	-1710 / 0	0.0	0.0	0.18 (1)	6.36
P- O	0 / 0	-18.2	-18.2	0.10 (4)	10.00
O- N	0 / 1626	-18.2	-18.2	0.34 (1)	10.00
N- M	0 / 1456	-18.2	-18.2	0.31 (1)	10.00
M- L	0 / 1456	-18.2	-18.2	0.31 (1)	10.00
L- K	0 / 1626	-18.2	-18.2	0.34 (1)	10.00
K- J	0 / 0	-18.2	-18.2	0.10 (4)	10.00

WEBS

MEMB. FR-TO	MAX. FACTORED FORCE (LBS)	MAX CSI (LC)
O- C	-253 / 11	0.09 (1)
C- N	-234 / 0	0.19 (1)
N- D	0 / 271	0.06 (1)
D- M	0 / 442	0.10 (1)
M- E	-615 / 0	0.77 (1)
M- F	0 / 442	0.10 (1)
L- F	0 / 271	0.06 (1)
L- G	-234 / 0	0.19 (1)
K- G	-253 / 11	0.09 (1)
B- O	0 / 1662	0.37 (1)
K- H	0 / 1662	0.37 (1)

DESIGN CRITERIA

SPECIFIED LOADS:

TOP CH.	LL	=	25.6	PSF
	DL	=	3.0	PSF
BOT CH.	LL	=	0.0	PSF
	DL	=	7.3	PSF
TOTAL LOAD		=	35.9	PSF

SPACING = 24.0 IN. C/C

LOADING IN FLAT SECTION BASED ON A SLOPE OF 2.00/12 MINIMUM

THIS TRUSS IS DESIGNED FOR RESIDENTIAL OR SMALL BUILDING REQUIREMENTS OF PART 9, NBCC 2015

THIS DESIGN COMPLIES WITH:
- PART 9 OF BCBC 2018 , ABC 2019
- PART 9 OF OBC 2012 (2019 AMENDMENT)
- CSA 086-14
- TPIC 2014

(55 % OF 31.3 P.S.F. G.S.L. PLUS 8.4 P.S.F. RAIN LOAD) EQUALS 25.6 P.S.F. SPECIFIED ROOF LIVE LOAD

ALLOWABLE DEFL.(LL)= L/360 (1.06")
CALCULATED VERT. DEFL.(LL) = L/ 999 (0.08")
ALLOWABLE DEFL.(TL)= L/360 (1.06")
CALCULATED VERT. DEFL.(TL) = L/ 999 (0.16")

CSI: TC=0.43/1.00 (E-F:1) , BC=0.34/1.00 (N-O:1) , WB=0.77/1.00 (E-M:1) , SSI=0.24/1.00 (D-E:1)

DOL LUMBER=1.00 NAIL=1.00 LS BEND=1.10 COMP=1.10 SHEAR=1.10 TENS= 1.10

COMPANION LIVE LOAD FACTOR = 1.00

TRUSS PLATE MANUFACTURER IS NOT RESPONSIBLE FOR QUALITY CONTROL IN THE TRUSS MANUFACTURING PLANT .

NAIL VALUES

PLATE	GRIP(DRY) (PSI) MAX	MIN	SHEAR (PLI) MAX	MIN	SECTION (PLI) MAX	MIN
MT20	650	371	1747	788	1987	1873

PLATE PLACEMENT TOL. = 0.250 inches

PLATE ROTATION TOL. = 5.0 Deg.

JSI GRIP= 0.89 (K) (INPUT = 0.90)
JSI METAL= 0.50 (B) (INPUT = 1.00)

LICENSED PROFESSIONAL ENGINEER
I.MATIJEVIC
100528832
PROVINCE OF ONTARIO
October 05, 2021

READ ALL NOTES ON THIS PAGE AND ON THE ENGINEERING NOTE PAGE ENP-1. THE NOTE PAGE IS AN INTEGRAL PART OF THIS DRAWING AS IT CONTAINS SPECIFICATIONS AND CRITERIA USED IN THE DESIGN OF THIS COMPONENT.

CITY OF RICHMOND HILL
BUILDING DIVISION
09/22/2022
KOTT
RECEIVED
Per:_____joshua.nabua_____

JOB NAME	TRUSS NAME	QUANTITY	PLY	JOB DESC.	DRWG NO.
IM1021-016	T05	2	1	TRUSS DESC.	

Version 8.500 S Aug 16 2021 MiTek Industries, Inc. Tue Oct 5 07:26:23 2021 Page 1
ID:rNLItayITWAmcAy8n3bxIWzd_Iy-tJqpv0L8wtHen3mYmk1nLJB9Q4qH?0L4W7Di7GyWYOU

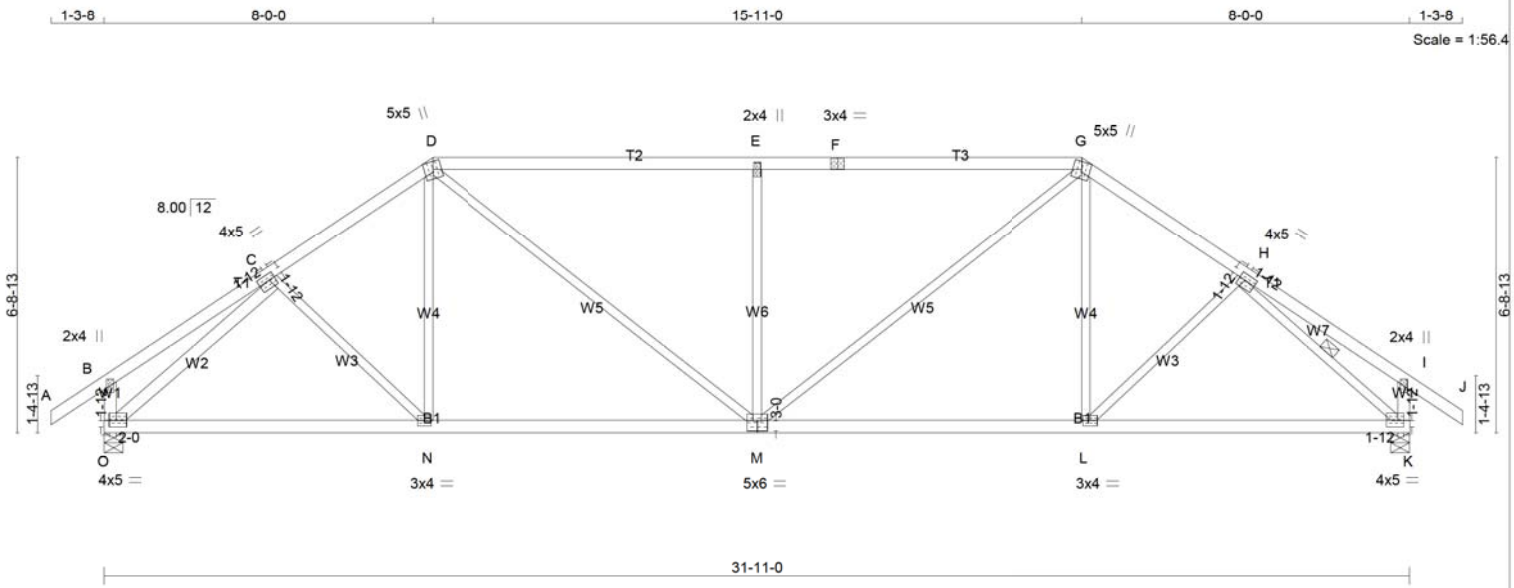

TOTAL WEIGHT = 2 X 132 = 264 lb

[M]

LUMBER

N. L. G. A. RULES

CHORDS	SIZE		LUMBER	DESCR.
A - D	2x4	DRY	No.2	SPF
D - F	2x4	DRY	2100F 1.8E	SPF
F - G	2x4	DRY	No.2	SPF
G - J	2x4	DRY	No.2	SPF
O - B	2x4	DRY	No.2	SPF
K - I	2x4	DRY	No.2	SPF
O - M	2x4	DRY	No.2	SPF
M - K	2x4	DRY	No.2	SPF
ALL WEBS EXCEPT	2x3	DRY	No.2	SPF
O - C	2x4	DRY	No.2	SPF

DRY: SEASONED LUMBER.

PLATES (table is in inches)

JT	TYPE	PLATES	W	LEN	Y	X
B	TMV+p	MT20	2.0	4.0		
C	TMWW-t	MT20	4.0	5.0	1.75	1.75
D	TTWW+m	MT20	5.0	5.0	Edge	
E	TMW+w	MT20	2.0	4.0		
F	TS-t	MT20	3.0	4.0		
G	TTWW+m	MT20	5.0	5.0	Edge	
H	TMWW-t	MT20	4.0	5.0	1.75	1.75
I	TMV+p	MT20	2.0	4.0		
K	BMVW1-t	MT20	4.0	5.0	1.75	1.75
L	BMWW-t	MT20	3.0	4.0		
M	BSWWW-l	MT20	5.0	6.0	3.00	3.00
N	BMWW-t	MT20	3.0	4.0		
O	BMVW1-t	MT20	4.0	5.0	1.75	2.00

Edge - INDICATES REFERENCE CORNER OF PLATE TOUCHES EDGE OF CHORD.

LICENSED PROFESSIONAL ENGINEER
I.MATIJEVIC
100528832
PROVINCE OF ONTARIO

October 05, 2021

READ ALL NOTES ON THIS PAGE AND ON THE ENGINEERING NOTE PAGE ENP-1. THE NOTE PAGE IS AN INTEGRAL PART OF THIS DRAWING AS IT CONTAINS SPECIFICATIONS AND CRITERIA USED IN THE DESIGN OF THIS COMPONENT.

DIMENSIONS, SUPPORTS AND LOADINGS SPECIFIED BY FABRICATOR TO BE VERIFIED BY BUILDING DESIGNER

BEARINGS

JT	FACTORED GROSS REACTION VERT	HORZ	MAXIMUM FACTORED GROSS REACTION DOWN	HORZ	UPLIFT	INPUT BRG IN-SX	REQRD BRG IN-SX
O	1751	0	1751	0	0	5-8	1-14
K	1751	0	1751	0	0	5-8	1-14

UNFACTORED REACTIONS

JT	1ST LCASE COMBINED	MAX./MIN. COMPONENT REACTIONS SNOW	LIVE	PERM.LIVE	WIND	DEAD	SOIL
O	1224	887 / 0	0 / 0	0 / 0	0 / 0	337 / 0	0 / 0
K	1224	887 / 0	0 / 0	0 / 0	0 / 0	337 / 0	0 / 0

BEARING MATERIAL TO BE SPF NO.2 OR BETTER AT JOINT(S) O, K

BRACING

TOP CHORD TO BE SHEATHED OR MAX. PURLIN SPACING = 3.88 FT.
MAX. UNBRACED BOTTOM CHORD LENGTH = 10.00 FT OR RIGID CEILING DIRECTLY APPLIED.

ALL FITCH BREAKS AND PERIMETER CORNER JOINTS MUST BE LATERALLY RESTRAINED.

1 - 1x4 LATERAL BRACE(S) AT 1/ 2 LENGTH OF H-K. DBS = 14-0-0 . CBF = 185 LBS.

DBS = DIAGONAL BRACE SPACING (MAX). CBF = CUMULATIVE BRACING FORCE (PER BRACE). FASTEN LATERAL BRACE(S) USING (0.122"X3") SPIRAL NAILS : 1 NAIL FOR 2x3 BRACE(S), 2 FOR 1x4, 2x4, 2x5, 3 FOR 2x6, 4 FOR 2x8, 5 FOR 2x10, AND 6 FOR 2x12.

END VERTICAL(S) MUST BE SHEATHED OR HAVE BRACES AS INDICATED IN THE MAX. UNBRACED LENGTH COLUMN OF THE TABLE BELOW

LOADING

TOTAL LOAD CASES: (4)

CHORDS

MEMB. FR-TO	MAX. FACTORED FORCE (LBS)	FACTORED VERT. LOAD (PLF) FROM	TO	LC1 MAX CSI (LC)	MAX. UNBRAC LENGTH
A- B	0 / 32	-84.3	-84.3	0.11 (1)	10.00
B- C	0 / 21	-84.3	-84.3	0.21 (1)	10.00
C- D	-1885 / 0	-84.3	-84.3	0.27 (1)	4.64
D- E	-2131 / 0	-84.3	-84.3	0.77 (1)	4.53
E- F	-2131 / 0	-84.3	-84.3	0.81 (1)	3.88
F- G	-2131 / 0	-84.3	-84.3	0.81 (1)	3.88
G- H	-1884 / 0	-84.3	-84.3	0.26 (1)	4.64
H- I	0 / 20	-84.3	-84.3	0.20 (1)	10.00
I- J	0 / 32	-84.3	-84.3	0.11 (1)	10.00
O- B	-247 / 0	0.0	0.0	0.03 (1)	7.81
K- I	-248 / 0	0.0	0.0	0.03 (1)	7.81
O- N	0 / 1547	-18.2	-18.2	0.44 (4)	10.00
N- M	0 / 1546	-18.2	-18.2	0.45 (4)	10.00
M- L	0 / 1545	-18.2	-18.2	0.45 (4)	10.00
L- K	0 / 1546	-18.2	-18.2	0.44 (4)	10.00

WEBS

MEMB. FR-TO	MAX. FACTORED FORCE (LBS)	MAX CSI (LC)
C- N	0 / 60	0.02 (4)
N- D	0 / 179	0.06 (4)
D- M	0 / 752	0.17 (1)
M- E	-833 / 0	0.63 (1)
M- G	0 / 753	0.17 (1)
L- G	0 / 178	0.06 (4)
L- H	0 / 61	0.02 (4)
O- C	-2121 / 0	0.74 (1)
H- K	-2119 / 0	0.48 (1)

DESIGN CRITERIA

SPECIFIED LOADS:

TOP CH.	LL	=	25.6	PSF
	DL	=	3.0	PSF
BOT CH.	LL	=	0.0	PSF
	DL	=	7.3	PSF
TOTAL LOAD		=	35.9	PSF

SPACING = 24.0 IN. C/C

LOADING IN FLAT SECTION BASED ON A SLOPE OF 2.00/12 MINIMUM

THIS TRUSS IS DESIGNED FOR RESIDENTIAL OR SMALL BUILDING REQUIREMENTS OF PART 9, NBCC 2015

THIS DESIGN COMPLIES WITH:
- PART 9 OF BCBC 2018 , ABC 2019
- PART 9 OF OBC 2012 (2019 AMENDMENT)
- CSA 086-14
- TPIC 2014

(55 % OF 31.3 P.S.F. G.S.L. PLUS 8.4 P.S.F. RAIN LOAD) EQUALS 25.6 P.S.F. SPECIFIED ROOF LIVE LOAD

ALLOWABLE DEFL.(LL)= L/360 (1.06")
CALCULATED VERT. DEFL.(LL) = L/ 999 (0.10")
ALLOWABLE DEFL.(TL)= L/360 (1.06")
CALCULATED VERT. DEFL.(TL) = L/ 999 (0.23")

CSI: TC=0.81/1.00 (E-G:1) , BC=0.45/1.00 (M-N:4) , WB=0.74/1.00 (C-O:1) , SSI=0.33/1.00 (D-E:1)

DOL LUMBER=1.00 NAIL=1.00 LS BEND=1.10 COMP=1.10 SHEAR=1.10 TENS= 1.10

COMPANION LIVE LOAD FACTOR = 1.00

AUTOSOLVE HEELS OFF

TRUSS PLATE MANUFACTURER IS NOT RESPONSIBLE FOR QUALITY CONTROL IN THE TRUSS MANUFACTURING PLANT .

NAIL VALUES

PLATE	GRIP(DRY) (PSI) MAX	MIN	SHEAR (PLI) MAX	MIN	SECTION (PLI) MAX	MIN
MT20	650	371	1747	788	1987	1873

PLATE PLACEMENT TOL. = 0.250 inches

PLATE ROTATION TOL. = 5.0 Deg.

JSI GRIP= 0.89 (M) (INPUT = 0.90)
JSI METAL= 0.57 (C) (INPUT = 1.00)

CITY OF RICHMOND HILL
BUILDING DIVISION
09/22/2022
KOTT
RECEIVED
Per:_____joshua.nabua_____

JOB NAME	TRUSS NAME	QUANTITY	PLY	JOB DESC.	DRWG NO.
IM1021-016	T06	1	1	TRUSS DESC.	

Version 8.500 S Aug 16 2021 MiTek Industries, Inc. Tue Oct 5 07:26:24 2021 Page 1
ID:rNLltaylTWAmcAy8n3bxlWzd_ly-LWNB7LLmhBPVPDKlKRY0uWkOeUCZkV3ElnyFfiyWYOT

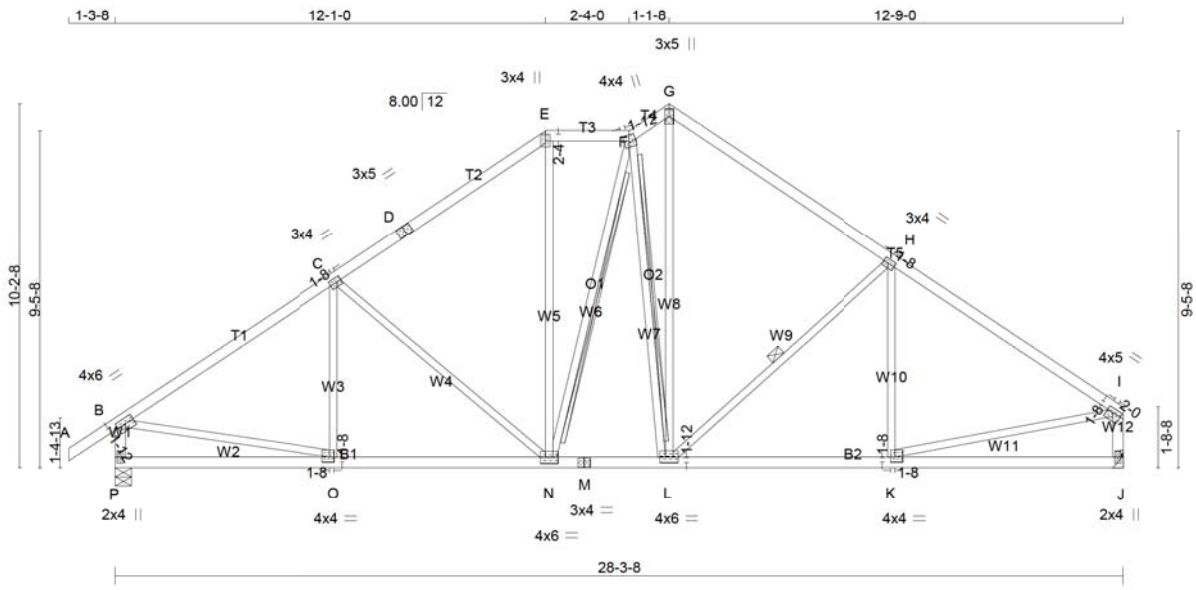

TOTAL WEIGHT = 136 lb

[M][F]

LUMBER

N. L. G. A. RULES

CHORDS	SIZE		LUMBER	DESCR.
A - D	2x4	DRY	No.2	SPF
D - E	2x4	DRY	No.2	SPF
E - F	2x4	DRY	No.2	SPF
F - G	2x4	DRY	No.2	SPF
G - I	2x4	DRY	No.2	SPF
P - B	2x4	DRY	No.2	SPF
J - I	2x4	DRY	No.2	SPF
P - M	2x4	DRY	No.2	SPF
M - J	2x4	DRY	No.2	SPF
ALL WEBS EXCEPT	2x3	DRY	No.2	SPF

DRY: SEASONED LUMBER.

PLATES (table is in inches)

JT	TYPE	PLATES	W	LEN	Y	X
B	TMVW-t	MT20	4.0	6.0	1.75	3.00
C	TMWW-t	MT20	3.0	4.0	1.50	1.50
D	TS-t	MT20	3.0	5.0		
E	TTW+p	MT20	3.0	4.0	2.25	1.50
F	TTWW+m	MT20	4.0	4.0	2.00	1.75
G	TTW+p	MT20	3.0	5.0		
H	TMWW-t	MT20	3.0	4.0	1.50	1.50
I	TMVW-t	MT20	4.0	5.0	1.50	2.00
J	BMV1+p	MT20	2.0	4.0		
K	BMWW-t	MT20	4.0	4.0	1.50	1.50
L	BMWWW-t	MT20	4.0	6.0	1.75	3.00
M	BS-t	MT20	3.0	4.0		
N	BMWWW-t	MT20	4.0	6.0		
O	BMWW-t	MT20	4.0	4.0	1.50	1.50
P	BMV1+p	MT20	2.0	4.0		

DIMENSIONS, SUPPORTS AND LOADINGS SPECIFIED BY FABRICATOR TO BE VERIFIED BY BUILDING DESIGNER

BEARINGS

JT	FACTORED GROSS REACTION VERT	HORZ	MAXIMUM FACTORED GROSS REACTION DOWN	HORZ	UPLIFT	INPUT BRG IN-SX	REQRD BRG IN-SX
P	1566	0	1566	0	0	5-8	1-11
J	1450	0	1450	0	0	MECHANICAL	

A SUITABLE HANGER/MECHANICAL CONNECTION IS REQUIRED AT JOINT J. MININUM BEARING LENGTH AT JOINT J = 1-9.

UNFACTORED REACTIONS

JT	1ST LCASE COMBINED	MAX./MIN. COMPONENT REACTIONS SNOW	LIVE	PERM.LIVE	WIND	DEAD	SOIL
P	1094	794 / 0	0 / 0	0 / 0	0 / 0	300 / 0	0 / 0
J	1015	724 / 0	0 / 0	0 / 0	0 / 0	291 / 0	0 / 0

BEARING MATERIAL TO BE SPF NO.2 OR BETTER AT JOINT(S) P

BRACING

TOP CHORD TO BE SHEATHED OR MAX. PURLIN SPACING = 4.61 FT.
MAX. UNBRACED BOTTOM CHORD LENGTH = 10.00 FT OR RIGID CEILING DIRECTLY APPLIED.

ALL PITCH BREAKS AND PERIMETER CORNER JOINTS MUST BE LATERALLY RESTRAINED.

1 - 1x4 LATERAL BRACE(S) AT 1/ 2 LENGTH OF H-L. DBS = 20-0-0 . CBF = 55 LBS.
2x4 DRY SPF No.2 T-BRACE AT F-N, F-L

DBS = DIAGONAL BRACE SPACING (MAX). CBF = CUMULATIVE BRACING FORCE (PER BRACE). FASTEN LATERAL BRACE(S) USING (0.122"X3") SPIRAL NAILS : 1 NAIL FOR 2x3 BRACE(S), 2 FOR 1x4, 2x4, 2x5, 3 FOR 2x6, 4 FOR 2x8, 5 FOR 2x10, AND 6 FOR 2x12.

FASTEN T AND I-BRACES TO NARROW EDGE OF WEB WITH ONE ROW PER PLY OF 3" COMMON WIRE NAILS @ 6" O.C. WITH 3" MINIMUM END DISTANCE. BRACE MUST COVER 90% OF WEB LENGTH.

END VERTICAL(S) MUST BE SHEATHED OR HAVE BRACES AS INDICATED IN THE MAX. UNBRACED LENGTH COLUMN OF THE TABLE BELOW

LOADING

TOTAL LOAD CASES: (4)

CHORDS

MEMB. FR-TO	MAX. FACTORED FORCE (LBS)	FACTORED VERT. LOAD LC1 (PLF) FROM	TO	MAX CSI (LC)	MAX. UNBRAC LENGTH
A- B	0 / 32	-84.3	-84.3	0.11 (1)	10.00
B- C	-1687 / 0	-84.3	-84.3	0.47 (1)	4.61
C- D	-1354 / 0	-84.3	-84.3	0.44 (1)	5.07
D- E	-1354 / 0	-84.3	-84.3	0.44 (1)	5.07
E- F	-1101 / 0	-84.3	-84.3	0.07 (1)	5.96
F- G	-1232 / 0	-84.3	-84.3	0.03 (1)	5.77
G- H	-1276 / 0	-84.3	-84.3	0.48 (1)	5.11
H- I	-1593 / 0	-84.3	-84.3	0.52 (1)	4.64
P- B	-1520 / 0	0.0	0.0	0.16 (1)	6.67
J- I	-1402 / 0	0.0	0.0	0.15 (1)	6.88
P- O	0 / 0	-18.2	-18.2	0.17 (4)	10.00
O- N	0 / 1432	-18.2	-18.2	0.32 (1)	10.00
N- M	0 / 1122	-18.2	-18.2	0.23 (1)	10.00
M- L	0 / 1122	-18.2	-18.2	0.23 (1)	10.00
L- K	0 / 1355	-18.2	-18.2	0.31 (1)	10.00
K- J	0 / 0	-18.2	-18.2	0.19 (4)	10.00

WEBS

MEMB. FR-TO	MAX. FACTORED FORCE (LBS)	MAX CSI (LC)
C- O	-124 / 75	0.06 (1)
C- N	-442 / 0	0.58 (1)
N- E	0 / 448	0.10 (1)
N- F	-86 / 0	0.06 (1)
F- L	-741 / 0	0.51 (1)
L- G	0 / 1116	0.25 (1)
L- H	-438 / 0	0.21 (1)
K- H	-157 / 71	0.09 (1)
B- O	0 / 1454	0.33 (1)
K- I	0 / 1385	0.31 (1)

DESIGN CRITERIA

SPECIFIED LOADS:

TOP CH.	LL	=	25.6	PSF
	DL	=	3.0	PSF
BOT CH.	LL	=	0.0	PSF
	DL	=	7.3	PSF
TOTAL LOAD		=	35.9	PSF

SPACING = 24.0 IN. C/C

LOADING IN ALL FLAT SECTIONS BASED ON A SLOPE OF 2.00/12 MINIMUM

THIS TRUSS IS DESIGNED FOR RESIDENTIAL OR SMALL BUILDING REQUIREMENTS OF PART 9, NBCC 2015

THIS DESIGN COMPLIES WITH:
- PART 9 OF BCBC 2018 , ABC 2019
- PART 9 OF OBC 2012 (2019 AMENDMENT)
- CSA 086-14
- TPIC 2014

(55 % OF 31.3 P.S.F. G.S.L. PLUS 8.4 P.S.F. RAIN LOAD) EQUALS 25.6 P.S.F. SPECIFIED ROOF LIVE LOAD

ALLOWABLE DEFL.(LL)= L/360 (0.94")
CALCULATED VERT. DEFL.(LL) = L/ 999 (0.07")
ALLOWABLE DEFL.(TL)= L/360 (0.94")
CALCULATED VERT. DEFL.(TL) = L/ 999 (0.13")

CSI: TC=0.52/1.00 (H-I:1) , BC=0.32/1.00 (N-O:1) , WB=0.58/1.00 (C-N:1) , SSI=0.22/1.00 (H-I:1)

DOL LUMBER=1.00 NAIL=1.00 LS BEND=1.10 COMP=1.10 SHEAR=1.10 TENS= 1.10

COMPANION LIVE LOAD FACTOR = 1.00

TRUSS PLATE MANUFACTURER IS NOT RESPONSIBLE FOR QUALITY CONTROL IN THE TRUSS MANUFACTURING PLANT .

NAIL VALUES

PLATE	GRIP(DRY) (PSI) MAX	MIN	SHEAR (PLI) MAX	MIN	SECTION (PLI) MAX	MIN
MT20	650	371	1747	788	1987	1873

PLATE PLACEMENT TOL. = 0.250 inches

PLATE ROTATION TOL. = 5.0 Deg.

JSI GRIP= 0.90 (I) (INPUT = 0.90)
JSI METAL= 0.50 (I) (INPUT = 1.00)

LICENSED PROFESSIONAL ENGINEER
I.MATIJEVIC
100528832
PROVINCE OF ONTARIO
October 05, 2021

READ ALL NOTES ON THIS PAGE AND ON THE ENGINEERING NOTE PAGE ENP-1. THE NOTE PAGE IS AN INTEGRAL PART OF THIS DRAWING AS IT CONTAINS SPECIFICATIONS AND CRITERIA USED IN THE DESIGN OF THIS COMPONENT.

CITY OF RICHMOND HILL
BUILDING DIVISION
09/22/2022
KOTT
RECEIVED
Per:_____joshua.nabua_____

JOB NAME	TRUSS NAME	QUANTITY	PLY	JOB DESC.	DRWG NO.
IM1021-016	T07	1	1	TRUSS DESC.	

Version 8.500 S Aug 16 2021 MiTek Industries, Inc. Tue Oct 5 07:26:25 2021 Page 1
ID:rNLItayITWAmcAy8n3bxlWzd Iy-pixZKhMOSUXM0Nvxt93FQkGZOuXtT?ZN RioB8yWYOS

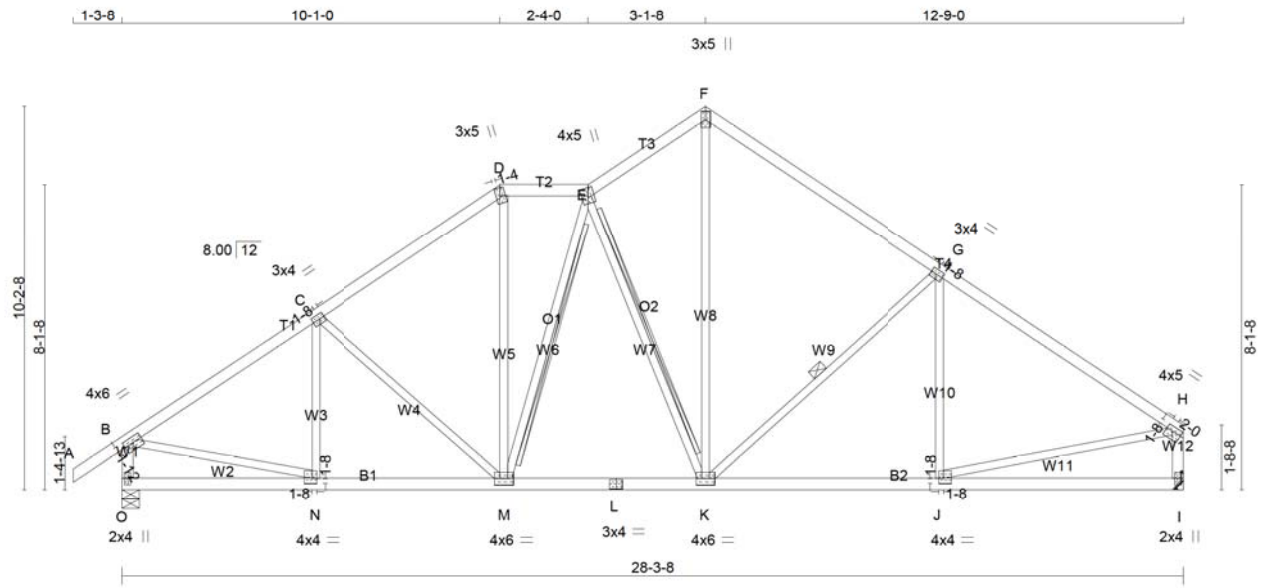

TOTAL WEIGHT = 131 lb
[M][F]

LUMBER
N. L. G. A. RULES

CHORDS	SIZE		LUMBER	DESCR.
A - D	2x4	DRY	No.2	SPF
D - E	2x4	DRY	No.2	SPF
E - F	2x4	DRY	No.2	SPF
F - H	2x4	DRY	No.2	SPF
O - B	2x4	DRY	No.2	SPF
I - H	2x4	DRY	No.2	SPF
O - L	2x4	DRY	No.2	SPF
L - I	2x4	DRY	No.2	SPF
ALL WEBS EXCEPT	2x3	DRY	No.2	SPF

DRY: SEASONED LUMBER.

PLATES (table is in inches)

JT	TYPE	PLATES	W	LEN	Y	X
B	TMVW-t	MT20	4.0	6.0	1.75	3.00
C	TMWW-t	MT20	3.0	4.0	1.50	1.50
D	TTW+m	MT20	3.0	5.0	2.50	1.25
E	TTWW+m	MT20	4.0	5.0		
F	TTW+p	MT20	3.0	5.0		
G	TMWW-t	MT20	3.0	4.0	1.50	1.50
H	TMVW-t	MT20	4.0	5.0	1.50	2.00
I	BMV1+p	MT20	2.0	4.0		
J	BMWW-t	MT20	4.0	4.0	1.50	1.50
K	BMWWW-t	MT20	4.0	6.0		
L	BS-t	MT20	3.0	4.0		
M	BMWWW-t	MT20	4.0	6.0		
N	BMWW-t	MT20	4.0	4.0	1.50	1.50
O	BMV1+p	MT20	2.0	4.0		

DIMENSIONS, SUPPORTS AND LOADINGS SPECIFIED BY FABRICATOR TO BE VERIFIED BY BUILDING DESIGNER

BEARINGS

JT	FACTORED GROSS REACTION VERT	HORZ	MAXIMUM FACTORED GROSS REACTION DOWN	HORZ	UPLIFT	INPUT BRG IN-SX	REQRD BRG IN-SX
O	1566	0	1566	0	0	5-8	1-11
I	1450	0	1450	0	0	MECHANICAL	

A SUITABLE HANGER/MECHANICAL CONNECTION IS REQUIRED AT JOINT I. MINIMUM BEARING LENGTH AT JOINT I = 1-9.

UNFACTORED REACTIONS

JT	1ST LCASE COMBINED	MAX./MIN. COMPONENT REACTIONS SNOW	LIVE	PERM.LIVE	WIND	DEAD	SOIL
O	1094	794 / 0	0 / 0	0 / 0	0 / 0	300 / 0	0 / 0
I	1015	724 / 0	0 / 0	0 / 0	0 / 0	291 / 0	0 / 0

BEARING MATERIAL TO BE SPF NO.2 OR BETTER AT JOINT(S) O

BRACING

TOP CHORD TO BE SHEATHED OR MAX. PURLIN SPACING = 4.64 FT.
MAX. UNBRACED BOTTOM CHORD LENGTH = 10.00 FT OR RIGID CEILING DIRECTLY APPLIED.

ALL PITCH BREAKS AND PERIMETER CORNER JOINTS MUST BE LATERALLY RESTRAINED.

1 - 1x4 LATERAL BRACE(S) AT 1/ 2 LENGTH OF G-K. DBS = 20-0-0 . CBF = 54 LBS.
2x4 DRY SPF No.2 T-BRACE AT E-M, E-K

DBS = DIAGONAL BRACE SPACING (MAX). CBF = CUMULATIVE BRACING FORCE (PER BRACE). FASTEN LATERAL BRACE(S) USING (0.122"X3") SPIRAL NAILS : 1 NAIL FOR 2x3 BRACE(S), 2 FOR 1x4, 2x4, 2x5, 3 FOR 2x6, 4 FOR 2x8, 5 FOR 2x10, AND 6 FOR 2x12.

FASTEN T AND I-BRACES TO NARROW EDGE OF WEB WITH ONE ROW PER PLY OF 3" COMMON WIRE NAILS @ 6" O.C. WITH 3" MINIMUM END DISTANCE. BRACE MUST COVER 90% OF WEB LENGTH.

END VERTICAL(S) MUST BE SHEATHED OR HAVE BRACES AS INDICATED IN THE MAX. UNBRACED LENGTH COLUMN OF THE TABLE BELOW

LOADING

TOTAL LOAD CASES: (4)

CHORDS

MEMB. FR-TO	MAX. FACTORED FORCE (LBS)	FACTORED VERT. LOAD LC1 (PLF) FROM	TO	MAX CSI (LC)	MAX. UNBRAC LENGTH
A- B	0 / 32	-84.3	-84.3	0.11 (1)	10.00
B- C	-1676 / 0	-84.3	-84.3	0.32 (1)	4.82
C- D	-1479 / 0	-84.3	-84.3	0.30 (1)	5.07
D- E	-1212 / 0	-84.3	-84.3	0.07 (1)	5.75
E- F	-1238 / 0	-84.3	-84.3	0.12 (1)	5.65
F- G	-1277 / 0	-84.3	-84.3	0.48 (1)	5.10
G- H	-1592 / 0	-84.3	-84.3	0.52 (1)	4.64
O- B	-1526 / 0	0.0	0.0	0.16 (1)	6.65
I- H	-1401 / 0	0.0	0.0	0.15 (1)	6.88
O- N	0 / 0	-18.2	-18.2	0.11 (4)	10.00
N- M	0 / 1417	-18.2	-18.2	0.28 (1)	10.00
M- L	0 / 1289	-18.2	-18.2	0.27 (1)	10.00
L- K	0 / 1289	-18.2	-18.2	0.27 (1)	10.00
K- J	0 / 1354	-18.2	-18.2	0.31 (1)	10.00
J- I	0 / 0	-18.2	-18.2	0.18 (4)	10.00

WEBS

MEMB. FR-TO	MAX. FACTORED FORCE (LBS)	MAX CSI (LC)
N- C	-197 / 33	0.07 (1)
C- M	-285 / 0	0.24 (1)
M- D	0 / 552	0.12 (1)
M- E	-280 / 0	0.14 (1)
E- K	-693 / 0	0.38 (1)
K- F	0 / 1042	0.23 (1)
K- G	-436 / 0	0.21 (1)
J- G	-159 / 68	0.09 (1)
B- N	0 / 1448	0.33 (1)
J- H	0 / 1385	0.31 (1)

DESIGN CRITERIA

SPECIFIED LOADS:

TOP CH.	LL	=	25.6	PSF
	DL	=	3.0	PSF
BOT CH.	LL	=	0.0	PSF
	DL	=	7.3	PSF
TOTAL LOAD		=	35.9	PSF

SPACING = 24.0 IN. C/C

LOADING IN ALL FLAT SECTIONS BASED ON A SLOPE OF 2.00/12 MINIMUM

THIS TRUSS IS DESIGNED FOR RESIDENTIAL OR SMALL BUILDING REQUIREMENTS OF PART 9, NBCC 2015

THIS DESIGN COMPLIES WITH:
- PART 9 OF BCBC 2018 , ABC 2019
- PART 9 OF OBC 2012 (2019 AMENDMENT)
- CSA 086-14
- TPIC 2014

(55 % OF 31.3 P.S.F. G.S.L. PLUS 8.4 P.S.F. RAIN LOAD) EQUALS 25.6 P.S.F. SPECIFIED ROOF LIVE LOAD

ALLOWABLE DEFL.(LL)= L/360 (0.94")
CALCULATED VERT. DEFL.(LL) = L/ 999 (0.07")
ALLOWABLE DEFL.(TL)= L/360 (0.94")
CALCULATED VERT. DEFL.(TL) = L/ 999 (0.13")

CSI: TC=0.52/1.00 (G-H:1) , BC=0.31/1.00 (J-K:1) , WB=0.38/1.00 (E-K:1) , SSI=0.22/1.00 (G-H:1)

DOL LUMBER=1.00 NAIL=1.00 LS BEND=1.10 COMP=1.10 SHEAR=1.10 TENS= 1.10

COMPANION LIVE LOAD FACTOR = 1.00

TRUSS PLATE MANUFACTURER IS NOT RESPONSIBLE FOR QUALITY CONTROL IN THE TRUSS MANUFACTURING PLANT .

NAIL VALUES

PLATE	GRIP(DRY) (PSI) MAX	MIN	SHEAR (PLI) MAX	MIN	SECTION (PLI) MAX	MIN
MT20	650	371	1747	788	1987	1873

PLATE PLACEMENT TOL. = 0.250 inches

PLATE ROTATION TOL. = 5.0 Deg.

JSI GRIP= 0.90 (H) (INPUT = 0.90)
JSI METAL= 0.50 (H) (INPUT = 1.00)

LICENSED PROFESSIONAL ENGINEER
I.MATIJEVIC
100528832
PROVINCE OF ONTARIO
October 05, 2021

READ ALL NOTES ON THIS PAGE AND ON THE ENGINEERING NOTE PAGE ENP-1. THE NOTE PAGE IS AN INTEGRAL PART OF THIS DRAWING AS IT CONTAINS SPECIFICATIONS AND CRITERIA USED IN THE DESIGN OF THIS COMPONENT.

CITY OF RICHMOND HILL
BUILDING DIVISION
09/22/2022
KOTT
RECEIVED
Per:_____joshua.nabua_____

JOB NAME	TRUSS NAME	QUANTITY	PLY	JOB DESC.	DRWG NO.
IM1021-016	T08	1	1	TRUSS DESC.	

Version 8.500 S Aug 16 2021 MiTek Industries, Inc. Tue Oct 5 07:26:26 2021 Page 1
ID:rNLItayITWAmcAy8n3bxIWzd_Iy-IuVxX1N1CofDeXU7RsaUzxpk7IrsCJKXC5RMjbyWYOR

Scale = 1:61.4

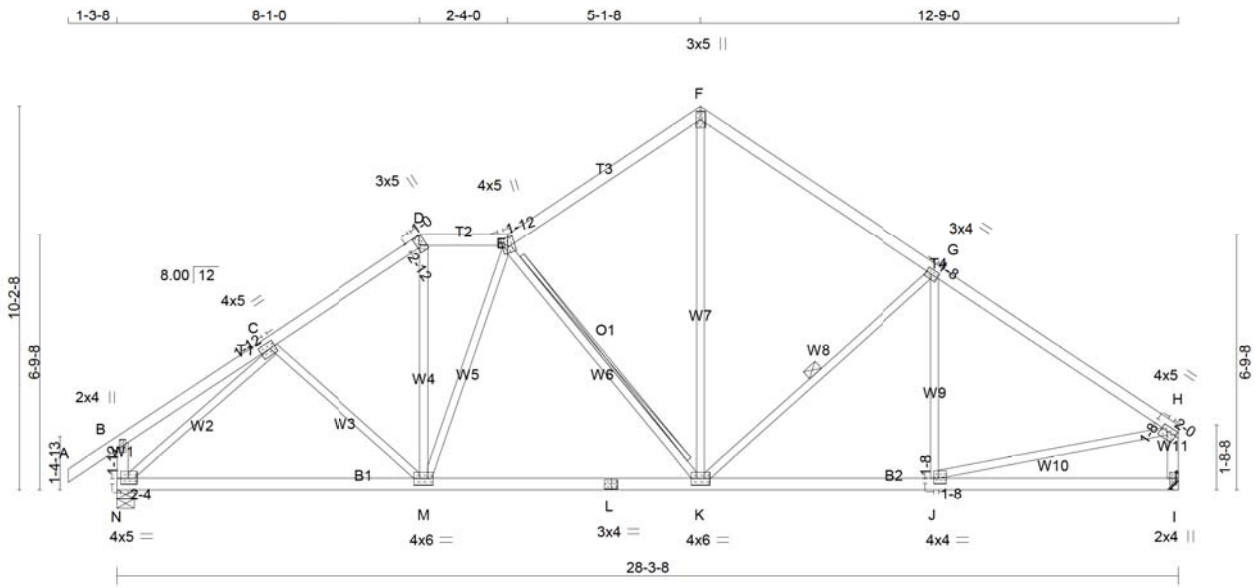

TOTAL WEIGHT = 125 lb

[M][F]

LUMBER

N. L. G. A. RULES

CHORDS	SIZE		LUMBER	DESCR.
A - D	2x4	DRY	No.2	SPF
D - E	2x4	DRY	No.2	SPF
E - F	2x4	DRY	No.2	SPF
F - H	2x4	DRY	No.2	SPF
N - B	2x4	DRY	No.2	SPF
I - H	2x4	DRY	No.2	SPF
N - L	2x4	DRY	No.2	SPF
L - I	2x4	DRY	No.2	SPF
ALL WEBS EXCEPT	2x3	DRY	No.2	SPF

DRY: SEASONED LUMBER.

PLATES (table is in inches)

JT	TYPE	PLATES	W	LEN	Y	X
B	TMV+p	MT20	2.0	4.0		
C	TMWW-t	MT20	4.0	5.0	2.00	1.75
D	TTW+h	MT20	3.0	5.0	2.75	1.00
E	TTWW+m	MT20	4.0	5.0	2.50	1.75
F	TTW+p	MT20	3.0	5.0		
G	TMWW-t	MT20	3.0	4.0	1.50	1.50
H	TMVW-t	MT20	4.0	5.0	1.50	2.00
I	BMV1+p	MT20	2.0	4.0		
J	BMWW-t	MT20	4.0	4.0	1.50	1.50
K	BMWWW-t	MT20	4.0	6.0		
L	BS-t	MT20	3.0	4.0		
M	BMWWW-t	MT20	4.0	6.0		
N	BMVW1-t	MT20	4.0	5.0	1.75	2.25

DIMENSIONS, SUPPORTS AND LOADINGS SPECIFIED BY FABRICATOR TO BE VERIFIED BY BUILDING DESIGNER

BEARINGS

JT	FACTORED GROSS REACTION VERT	HORZ	MAXIMUM FACTORED GROSS REACTION DOWN	HORZ	UPLIFT	INPUT BRG IN-SX	REQRD BRG IN-SX
N	1566	0	1566	0	0	5-8	1-11
I	1450	0	1450	0	0	MECHANICAL	

A SUITABLE HANGER/MECHANICAL CONNECTION IS REQUIRED AT JOINT I. MINIMUM BEARING LENGTH AT JOINT I = 1-9.

UNFACTORED REACTIONS

JT	1ST LCASE COMBINED	MAX./MIN. COMPONENT REACTIONS SNOW	LIVE	PERM.LIVE	WIND	DEAD	SOIL
N	1094	794 / 0	0 / 0	0 / 0	0 / 0	300 / 0	0 / 0
I	1015	724 / 0	0 / 0	0 / 0	0 / 0	291 / 0	0 / 0

BEARING MATERIAL TO BE SPF NO.2 OR BETTER AT JOINT(S) N

BRACING

TOP CHORD TO BE SHEATHED OR MAX. PURLIN SPACING = 4.64 FT.
MAX. UNBRACED BOTTOM CHORD LENGTH = 10.00 FT OR RIGID CEILING DIRECTLY APPLIED.

ALL PITCH BREAKS AND PERIMETER CORNER JOINTS MUST BE LATERALLY RESTRAINED.

1 - 1x4 LATERAL BRACE(S) AT 1/ 2 LENGTH OF G-K. DBS = 20-0-0 . CBF = 54 LBS.
2x4 DRY SPF No.2 T-BRACE AT E-K

DBS = DIAGONAL BRACE SPACING (MAX). CBF = CUMULATIVE BRACING FORCE (PER BRACE). FASTEN LATERAL BRACE(S) USING (0.122"X3") SPIRAL NAILS : 1 NAIL FOR 2x3 BRACE(S), 2 FOR 1x4, 2x4, 2x5, 3 FOR 2x6, 4 FOR 2x8, 5 FOR 2x10, AND 6 FOR 2x12.

FASTEN T AND I-BRACES TO NARROW EDGE OF WEB WITH ONE ROW PER PLY OF 3" COMMON WIRE NAILS @ 6" O.C. WITH 3" MINIMUM END DISTANCE. BRACE MUST COVER 90% OF WEB LENGTH.

END VERTICAL(S) MUST BE SHEATHED OR HAVE BRACES AS INDICATED IN THE MAX. UNBRACED LENGTH COLUMN OF THE TABLE BELOW

LOADING

TOTAL LOAD CASES: (4)

CHORDS

MEMB. FR-TO	MAX. FACTORED FORCE (LBS)	FACTORED VERT. LOAD LC1 (PLF) FROM	TO	MAX CSI (LC)	MAX. UNBRAC LENGTH
A- B	0 / 32	-84.3	-84.3	0.11 (1)	10.00
B- C	0 / 20	-84.3	-84.3	0.21 (1)	10.00
C- D	-1594 / 0	-84.3	-84.3	0.19 (1)	5.06
D- E	-1317 / 0	-84.3	-84.3	0.08 (1)	5.57
E- F	-1240 / 0	-84.3	-84.3	0.31 (1)	5.41
F- G	-1278 / 0	-84.3	-84.3	0.48 (1)	5.10
G- H	-1592 / 0	-84.3	-84.3	0.52 (1)	4.64
N- B	-249 / 0	0.0	0.0	0.03 (1)	7.81
I- H	-1401 / 0	0.0	0.0	0.15 (1)	6.88
N- M	0 / 1344	-18.2	-18.2	0.37 (4)	10.00
M- L	0 / 1471	-18.2	-18.2	0.39 (1)	10.00
L- K	0 / 1471	-18.2	-18.2	0.39 (1)	10.00
K- J	0 / 1354	-18.2	-18.2	0.31 (1)	10.00
J- I	0 / 0	-18.2	-18.2	0.18 (4)	10.00

WEBS

MEMB. FR-TO	MAX. FACTORED FORCE (LBS)	MAX CSI (LC)
M- D	0 / 644	0.14 (1)
M- E	-472 / 0	0.42 (1)
E- K	-706 / 0	0.37 (1)
K- F	0 / 960	0.22 (1)
K- G	-434 / 0	0.21 (1)
J- G	-161 / 66	0.09 (1)
N- C	-1840 / 0	0.92 (1)
J- H	0 / 1385	0.31 (1)

DESIGN CRITERIA

SPECIFIED LOADS:

TOP CH.	LL	=	25.6	PSF
	DL	=	3.0	PSF
BOT CH.	LL	=	0.0	PSF
	DL	=	7.3	PSF
TOTAL LOAD		=	35.9	PSF

SPACING = 24.0 IN. C/C

LOADING IN ALL FLAT SECTIONS BASED ON A SLOPE OF 2.00/12 MINIMUM

THIS TRUSS IS DESIGNED FOR RESIDENTIAL OR SMALL BUILDING REQUIREMENTS OF PART 9, NBCC 2015

THIS DESIGN COMPLIES WITH:
- PART 9 OF BCBC 2018 , ABC 2019
- PART 9 OF OBC 2012 (2019 AMENDMENT)
- CSA 086-14
- TPIC 2014

(55 % OF 31.3 P.S.F. G.S.L. PLUS 8.4 P.S.F. RAIN LOAD) EQUALS 25.6 P.S.F. SPECIFIED ROOF LIVE LOAD

ALLOWABLE DEFL.(LL)= L/360 (0.94")
CALCULATED VERT. DEFL.(LL) = L/ 999 (0.07")
ALLOWABLE DEFL.(TL)= L/360 (0.94")
CALCULATED VERT. DEFL.(TL) = L/ 999 (0.17")

CSI: TC=0.52/1.00 (G-H:1) , BC=0.39/1.00 (K-M:1) , WB=0.92/1.00 (C-N:1) , SSI=0.22/1.00 (G-H:1)

DOL LUMBER=1.00 NAIL=1.00 LS BEND=1.10 COMP=1.10 SHEAR=1.10 TENS= 1.10

COMPANION LIVE LOAD FACTOR = 1.00

TRUSS PLATE MANUFACTURER IS NOT RESPONSIBLE FOR QUALITY CONTROL IN THE TRUSS MANUFACTURING PLANT .

NAIL VALUES

PLATE	GRIP(DRY) (PSI) MAX	MIN	SHEAR (PLI) MAX	MIN	SECTION (PLI) MAX	MIN
MT20	650	371	1747	788	1987	1873

PLATE PLACEMENT TOL. = 0.250 inches

PLATE ROTATION TOL. = 5.0 Deg.

JSI GRIP= 0.90 (H) (INPUT = 0.90)
JSI METAL= 0.50 (L) (INPUT = 1.00)

LICENSED PROFESSIONAL ENGINEER
I.MATIJEVIC
100528832
PROVINCE OF ONTARIO
October 05, 2021

READ ALL NOTES ON THIS PAGE AND ON THE ENGINEERING NOTE PAGE ENP-1. THE NOTE PAGE IS AN INTEGRAL PART OF THIS DRAWING AS IT CONTAINS SPECIFICATIONS AND CRITERIA USED IN THE DESIGN OF THIS COMPONENT.

CITY OF RICHMOND HILL
BUILDING DIVISION
09/22/2022
KOTT
RECEIVED
Per:_____joshua.nabua_____

JOB NAME	TRUSS NAME	QUANTITY	PLY	JOB DESC.	DRWG NO.
IM1021-016	T09	1	1	TRUSS DESC.	

Version 8.500 S Aug 16 2021 MiTek Industries, Inc. Tue Oct 5 07:26:27 2021 Page 1
ID:rNLItayITWAmcAy8n3bxIW/zd_ly-m43KlNOfz6n4Gh3J?Z5jW9Mz5iFuxz6gRIBvG1yWYOQ

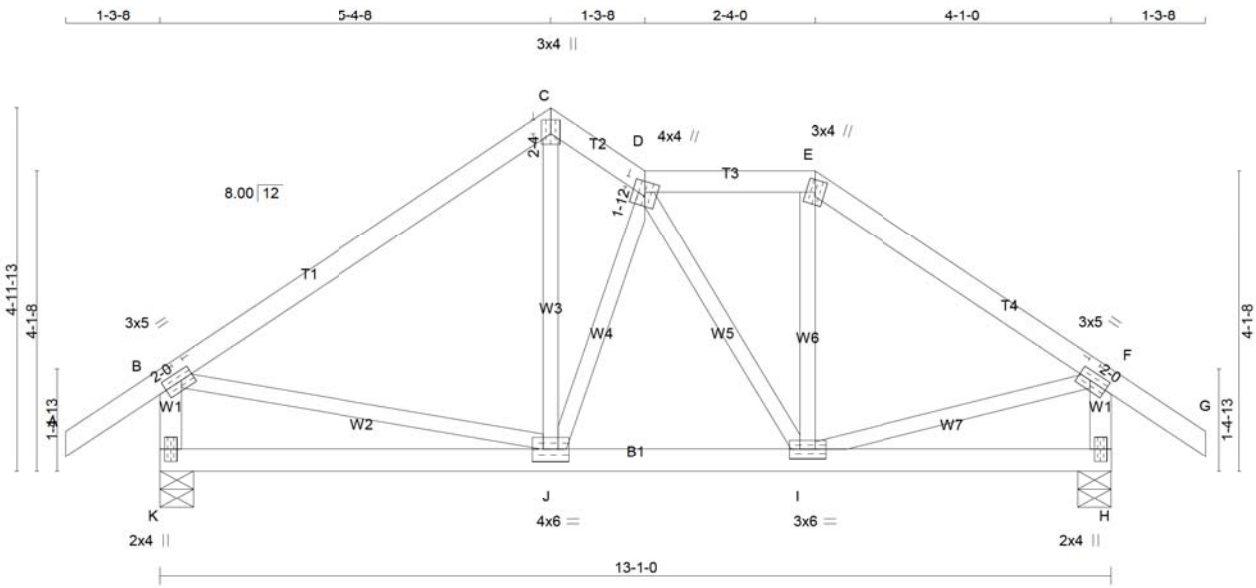

TOTAL WEIGHT = 59 lb

[M][F]

LUMBER

N. L. G. A. RULES

CHORDS	SIZE		LUMBER	DESCR.
A - C	2x4	DRY	No.2	SPF
C - D	2x4	DRY	No.2	SPF
D - E	2x4	DRY	No.2	SPF
E - G	2x4	DRY	No.2	SPF
K - B	2x4	DRY	No.2	SPF
H - F	2x4	DRY	No.2	SPF
K - H	2x4	DRY	No.2	SPF
ALL WEBS EXCEPT	2x3	DRY	No.2	SPF

DRY: SEASONED LUMBER.

PLATES (table is in inches)

JT	TYPE	PLATES	W	LEN	Y	X
B	TMVW-t	MT20	3.0	5.0	1.50	2.00
C	TTW+p	MT20	3.0	4.0	2.25	1.50
D	TTWW+m	MT20	4.0	4.0	1.75	2.00
E	TTW+m	MT20	3.0	4.0		
F	TMVW-t	MT20	3.0	5.0	1.50	2.00
H	BMV1+p	MT20	2.0	4.0		
I	BMWWW-t	MT20	3.0	6.0		
J	BMWWW-t	MT20	4.0	6.0		
K	BMV1+p	MT20	2.0	4.0		

DIMENSIONS, SUPPORTS AND LOADINGS SPECIFIED BY FABRICATOR TO BE VERIFIED BY BUILDING DESIGNER

BEARINGS

JT	FACTORED GROSS REACTION VERT	HORZ	MAXIMUM FACTORED GROSS REACTION DOWN	HORZ	UPLIFT	INPUT BRG IN-SX	REQRD BRG IN-SX
K	786	0	786	0	0	5-8	1-8
H	786	0	786	0	0	5-8	1-8

UNFACTORED REACTIONS

JT	1ST LCASE COMBINED	MAX./MIN. COMPONENT REACTIONS SNOW	LIVE	PERM.LIVE	WIND	DEAD	SOIL
K	548	405 / 0	0 / 0	0 / 0	0 / 0	143 / 0	0 / 0
H	548	405 / 0	0 / 0	0 / 0	0 / 0	143 / 0	0 / 0

BEARING MATERIAL TO BE SPF NO.2 OR BETTER AT JOINT(S) K, H

BRACING

TOP CHORD TO BE SHEATHED OR MAX. PURLIN SPACING = 6.25 FT.
MAX. UNBRACED BOTTOM CHORD LENGTH = 10.00 FT OR RIGID CEILING DIRECTLY APPLIED.

ALL FITCH BREAKS AND PERIMETER CORNER JOINTS MUST BE LATERALLY RESTRAINED.

LOADING

TOTAL LOAD CASES: (4)

CHORDS

MEMB. FR-TO	MAX. FACTORED FORCE (LBS)	FACTORED VERT. LOAD LC1 (PLF) FROM	TO	MAX CSI (LC)	MAX. UNBRAC LENGTH
A- B	0 / 32	-84.3	-84.3	0.11 (1)	10.00
B- C	-558 / 0	-84.3	-84.3	0.32 (1)	6.25
C- D	-560 / 0	-84.3	-84.3	0.02 (1)	6.25
D- E	-502 / 0	-84.3	-84.3	0.06 (1)	6.25
E- F	-602 / 0	-84.3	-84.3	0.18 (1)	6.25
F- G	0 / 32	-84.3	-84.3	0.11 (1)	10.00
K- B	-744 / 0	0.0	0.0	0.08 (1)	7.81
H- F	-752 / 0	0.0	0.0	0.08 (1)	7.81
K- J	0 / 0	-18.2	-18.2	0.11 (4)	10.00
J- I	0 / 576	-18.2	-18.2	0.15 (1)	10.00
I- H	0 / 0	-18.2	-18.2	0.07 (4)	10.00

WEBS

MEMB. FR-TO	MAX. FACTORED FORCE (LBS)	MAX CSI (LC)
J- C	0 / 336	0.08 (1)
J- D	-350 / 0	0.10 (1)
D- I	-147 / 0	0.05 (1)
I- E	0 / 70	0.02 (4)
B- J	0 / 474	0.11 (1)
I- F	0 / 517	0.12 (1)

DESIGN CRITERIA

SPECIFIED LOADS:

TOP CH.	LL	=	25.6	PSF
	DL	=	3.0	PSF
BOT CH.	LL	=	0.0	PSF
	DL	=	7.3	PSF
TOTAL LOAD		=	35.9	PSF

SPACING = 24.0 IN. C/C

LOADING IN ALL FLAT SECTIONS BASED ON A SLOPE OF 2.00/12 MINIMUM

THIS TRUSS IS DESIGNED FOR RESIDENTIAL OR SMALL BUILDING REQUIREMENTS OF PART 9, NBCC 2015

THIS DESIGN COMPLIES WITH:
- PART 9 OF BCBC 2018 , ABC 2019
- PART 9 OF OBC 2012 (2019 AMENDMENT)
- CSA 086-14
- TPIC 2014

(55 % OF 31.3 P.S.F. G.S.L. PLUS 8.4 P.S.F. RAIN LOAD) EQUALS 25.6 P.S.F. SPECIFIED ROOF LIVE LOAD

ALLOWABLE DEFL.(LL)= L/360 (0.44")
CALCULATED VERT. DEFL.(LL) = L/ 999 (0.01")
ALLOWABLE DEFL.(TL)= L/360 (0.44")
CALCULATED VERT. DEFL.(TL) = L/ 999 (0.04")

CSI: TC=0.32/1.00 (B-C:1) , BC=0.15/1.00 (I-J:1) , WB=0.12/1.00 (F-I:1) , SSI=0.15/1.00 (B-C:1)

DOL LUMBER=1.00 NAIL=1.00 LS BEND=1.10 COMP=1.10 SHEAR=1.10 TENS= 1.10

COMPANION LIVE LOAD FACTOR = 1.00

TRUSS PLATE MANUFACTURER IS NOT RESPONSIBLE FOR QUALITY CONTROL IN THE TRUSS MANUFACTURING PLANT .

NAIL VALUES

PLATE	GRIP(DRY) (PSI) MAX	MIN	SHEAR (PLI) MAX	MIN	SECTION (PLI) MAX	MIN
MT20	650	371	1747	788	1987	1873

PLATE PLACEMENT TOL. = 0.250 inches

PLATE ROTATION TOL. = 5.0 Deg.

JSI GRIP= 0.87 (I) (INPUT = 0.90)
JSI METAL= 0.22 (F) (INPUT = 1.00)

LICENSED PROFESSIONAL ENGINEER
I.MATIJEVIC
100528832
PROVINCE OF ONTARIO
October 05, 2021

READ ALL NOTES ON THIS PAGE AND ON THE ENGINEERING NOTE PAGE ENP-1. THE NOTE PAGE IS AN INTEGRAL PART OF THIS DRAWING AS IT CONTAINS SPECIFICATIONS AND CRITERIA USED IN THE DESIGN OF THIS COMPONENT.

CITY OF RICHMOND HILL
BUILDING DIVISION
09/22/2022
KOTT
RECEIVED
Per:_____joshua.nabua_____

JOB NAME	TRUSS NAME	QUANTITY	PLY	JOB DESC.	DRWG NO.
IM1021-016	T10	1	1	TRUSS DESC.	

Version 8.500 S Aug 16 2021 MiTek Industries, Inc. Tue Oct 5 07:26:27 2021 Page 1
ID:rNLltayITWAmcAy8n3bxIWzd Iy-m43KlNOfz6n4Gh3J?Z5jW9M?fiDjxwPgRIBvG1yWYOQ

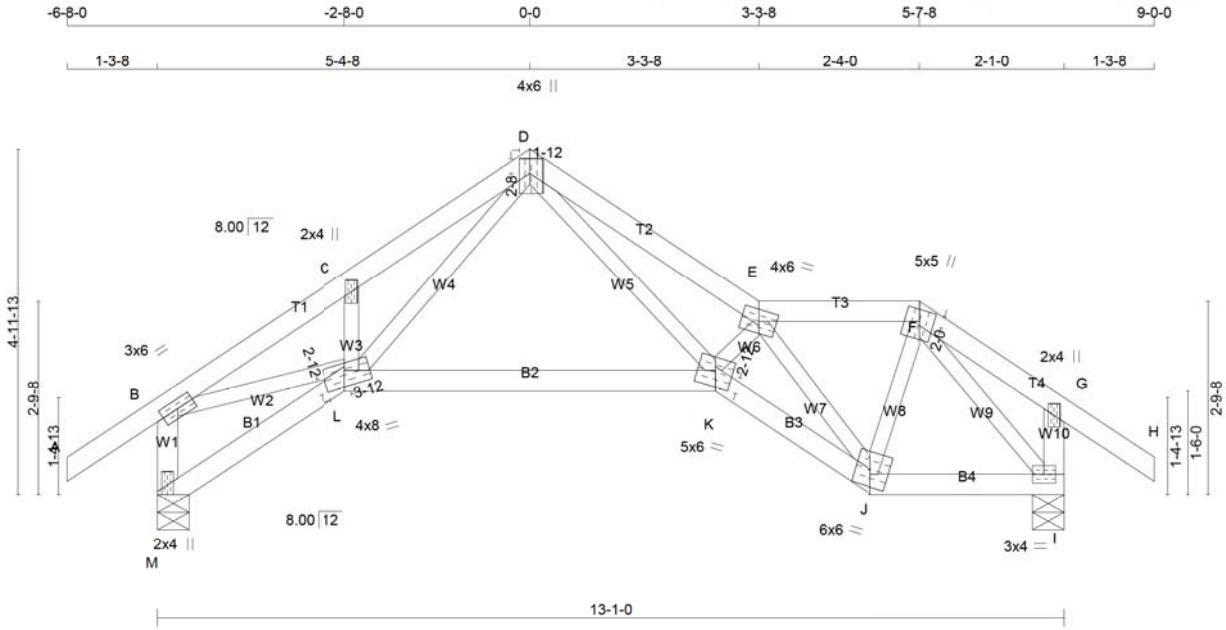

TOTAL WEIGHT = 57 lb
[M][F]

LUMBER
N. L. G. A. RULES

CHORDS	SIZE		LUMBER	DESCR.
M - B	2x4	DRY	No.2	SPF
A - D	2x4	DRY	No.2	SPF
D - E	2x4	DRY	No.2	SPF
E - F	2x4	DRY	No.2	SPF
F - H	2x4	DRY	No.2	SPF
I - G	2x4	DRY	No.2	SPF
M - L	2x4	DRY	No.2	SPF
L - K	2x4	DRY	No.2	SPF
K - J	2x4	DRY	No.2	SPF
J - I	2x4	DRY	No.2	SPF
ALL WEBS EXCEPT	2x3	DRY	No.2	SPF

DRY: SEASONED LUMBER.

PLATES (table is in inches)

JT	TYPE	PLATES	W	LEN	Y	X
B	TMVW-t	MT20	3.0	6.0		
C	TMW+w	MT20	2.0	4.0		
D	TTWW+p	MT20	4.0	6.0	2.50	1.75
E	TTWW-m	MT20	4.0	6.0		
F	TTWW+m	MT20	5.0	5.0	2.00	2.50
G	TMV+p	MT20	2.0	4.0		
I	BMVW1-t	MT20	3.0	4.0		
J	BBWW-m	MT20	6.0	6.0	Edge	
K	BBWW-m	MT20	5.0	6.0	2.75	3.00
L	BBWWW-m	MT20	4.0	8.0	2.75	3.75
M	BMV1+p	MT20	2.0	4.0	Edge	

Edge - INDICATES REFERENCE CORNER OF PLATE TOUCHES EDGE OF CHORD.

DIMENSIONS, SUPPORTS AND LOADINGS SPECIFIED BY FABRICATOR TO BE VERIFIED BY BUILDING DESIGNER

BEARINGS

JT	FACTORED GROSS REACTION VERT	HORZ	MAXIMUM FACTORED GROSS REACTION DOWN	HORZ	UPLIFT	INPUT BRG IN-SX	REQRD BRG IN-SX
M	786	0	786	0	0	5-8	1-8
I	786	0	786	0	0	5-8	1-8

UNFACTORED REACTIONS

JT	1ST LCASE COMBINED	MAX./MIN. COMPONENT REACTIONS SNOW	LIVE	PERM.LIVE	WIND	DEAD	SOIL
M	548	405 / 0	0 / 0	0 / 0	0 / 0	143 / 0	0 / 0
I	548	405 / 0	0 / 0	0 / 0	0 / 0	143 / 0	0 / 0

BEARING MATERIAL TO BE SPF NO.2 OR BETTER AT JOINT(S) M, I

BRACING
TOP CHORD TO BE SHEATHED OR MAX. PURLIN SPACING = 4.93 FT.
MAX. UNBRACED BOTTOM CHORD LENGTH = 10.00 FT OR RIGID CEILING DIRECTLY APPLIED.

ALL FITCH BREAKS AND PERIMETER CORNER JOINTS MUST BE LATERALLY RESTRAINED.

LOADING
TOTAL LOAD CASES: (4)

CHORDS

MEMB. FR-TO	MAX. FACTORED FORCE (LBS)	FACTORED VERT. LOAD LC1 (PLF) FROM	TO	MAX CSI (LC)	MAX. UNBRAC LENGTH
M- B	-761 / 0	0.0	0.0	0.08 (1)	7.81
A- B	0 / 32	-84.3	-84.3	0.11 (1)	10.00
B- C	-1278 / 0	-84.3	-84.3	0.10 (1)	5.62
C- D	-1294 / 0	-84.3	-84.3	0.09 (1)	5.59
D- E	-1742 / 0	-84.3	-84.3	0.15 (1)	4.93
E- F	-577 / 0	-84.3	-84.3	0.06 (1)	6.25
F- G	0 / 0	-84.3	-84.3	0.06 (1)	10.00
G- H	0 / 32	-84.3	-84.3	0.11 (1)	10.00
I- G	-203 / 0	0.0	0.0	0.02 (1)	7.81
M- L	0 / 0	-18.3	-18.3	0.04 (4)	10.00
L- K	0 / 654	-18.2	-18.2	0.19 (1)	10.00
K- J	0 / 1694	-18.2	-18.2	0.29 (1)	10.00
J- I	0 / 470	-18.3	-18.3	0.10 (1)	10.00

WEBS

MEMB. FR-TO	MAX. FACTORED FORCE (LBS)	MAX CSI (LC)
B- L	0 / 1082	0.24 (1)
L- C	-249 / 0	0.04 (1)
L- D	0 / 647	0.15 (1)
D- K	0 / 1235	0.28 (1)
K- E	0 / 79	0.02 (1)
E- J	-1514 / 0	0.29 (1)
J- F	0 / 389	0.09 (1)
F- I	-731 / 0	0.14 (1)

DESIGN CRITERIA

SPECIFIED LOADS:

TOP CH.	LL	=	25.6	PSF
	DL	=	3.0	PSF
BOT CH.	LL	=	0.0	PSF
	DL	=	7.3	PSF
TOTAL LOAD		=	35.9	PSF

SPACING = 24.0 IN. C/C

LOADING IN ALL FLAT SECTIONS BASED ON A SLOPE OF 2.00/12 MINIMUM

THIS TRUSS IS DESIGNED FOR RESIDENTIAL OR SMALL BUILDING REQUIREMENTS OF PART 9, NBCC 2015

THIS DESIGN COMPLIES WITH:
- PART 9 OF BCBC 2018 , ABC 2019
- PART 9 OF OBC 2012 (2019 AMENDMENT)
- CSA 086-14
- TPIC 2014

(55 % OF 31.3 P.S.F. G.S.L. PLUS 8.4 P.S.F. RAIN LOAD) EQUALS 25.6 P.S.F. SPECIFIED ROOF LIVE LOAD

ALLOWABLE DEFL.(LL)= L/360 (0.44")
CALCULATED VERT. DEFL.(LL) = L/ 999 (0.07")
ALLOWABLE DEFL.(TL)= L/360 (0.44")
CALCULATED VERT. DEFL.(TL) = L/ 999 (0.13")

CSI: TC=0.15/1.00 (D-E:1) , BC=0.29/1.00 (J-K:1) , WB=0.29/1.00 (E-J:1) , SSI=0.09/1.00 (D-E:1)

DOL LUMBER=1.00 NAIL=1.00 LS BEND=1.10 COMP=1.10 SHEAR=1.10 TENS= 1.10

COMPANION LIVE LOAD FACTOR = 1.00

AUTOSOLVE LEFT HEEL ONLY

TRUSS PLATE MANUFACTURER IS NOT RESPONSIBLE FOR QUALITY CONTROL IN THE TRUSS MANUFACTURING PLANT .

NAIL VALUES

PLATE	GRIP(DRY) (PSI) MAX	MIN	SHEAR (PLI) MAX	MIN	SECTION (PLI) MAX	MIN
MT20	650	371	1747	788	1987	1873

PLATE PLACEMENT TOL. = 0.250 inches

PLATE ROTATION TOL. = 5.0 Deg.

JSI GRIP= 0.88 (D) (INPUT = 0.90)
JSI METAL= 0.50 (E) (INPUT = 1.00)

LICENSED PROFESSIONAL ENGINEER
I.MATIJEVIC
100528832
PROVINCE OF ONTARIO
October 05, 2021

READ ALL NOTES ON THIS PAGE AND ON THE ENGINEERING NOTE PAGE ENP-1. THE NOTE PAGE IS AN INTEGRAL PART OF THIS DRAWING AS IT CONTAINS SPECIFICATIONS AND CRITERIA USED IN THE DESIGN OF THIS COMPONENT.

CITY OF RICHMOND HILL
BUILDING DIVISION
09/22/2022
KOTT
RECEIVED
Per:_____joshua.nabua_____

JOB NAME	TRUSS NAME	QUANTITY	PLY	JOB DESC.	DRWG NO.
IM1021-016	T11	1	1	TRUSS DESC.	

Version 8.500 S Aug 16 2021 MiTek Industries, Inc. Tue Oct 5 07:26:28 2021 Page 1
ID:rNLltaylTWAmcAy8n3bxlWzd_ly-EHdiyjOHkPvxtqeWZHcy2MuB05begPBqgPwToTyWYOP

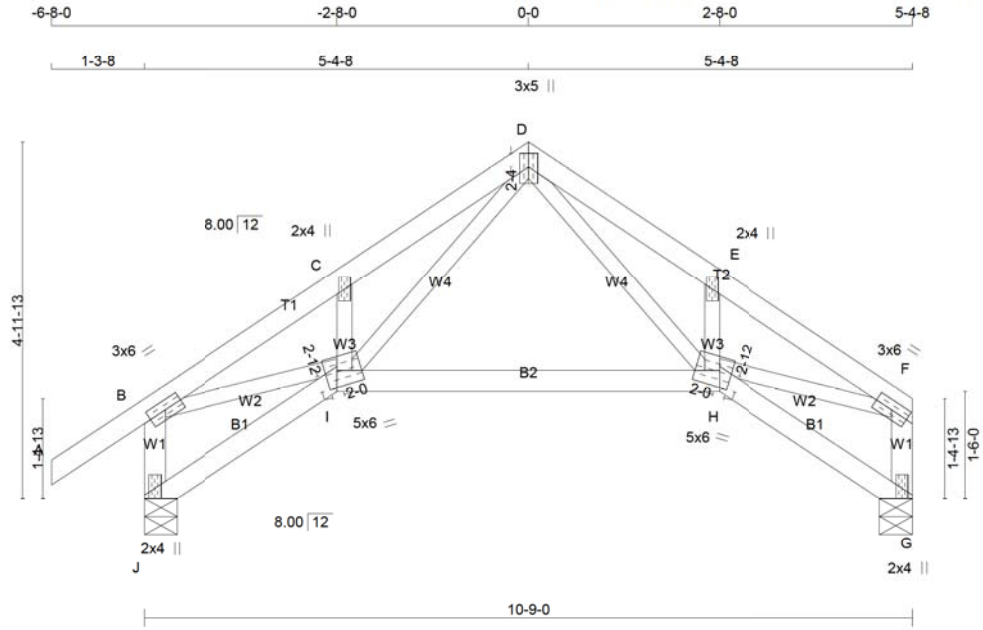

TOTAL WEIGHT = 45 lb

[M][F]

LUMBER

N. L. G. A. RULES

CHORDS	SIZE		LUMBER	DESCR.
J - B	2x4	DRY	No.2	SPF
A - D	2x4	DRY	No.2	SPF
D - F	2x4	DRY	No.2	SPF
G - F	2x4	DRY	No.2	SPF
J - I	2x4	DRY	No.2	SPF
I - H	2x4	DRY	No.2	SPF
H - G	2x4	DRY	No.2	SPF
ALL WEBS	2x3	DRY	No.2	SPF

DRY: SEASONED LUMBER.

PLATES (table is in inches)

JT	TYPE	PLATES	W	LEN	Y	X
B	TMVW-t	MT20	3.0	6.0		
C	TMW+w	MT20	2.0	4.0		
D	TTWW+p	MT20	3.0	5.0	2.25	1.50
E	TMW+w	MT20	2.0	4.0		
F	TMVW-t	MT20	3.0	6.0		
G	BMV1+p	MT20	2.0	4.0	Edge	
H	BBWWW-m	MT20	5.0	6.0	2.75	2.00
I	BBWWW-m	MT20	5.0	6.0	2.75	2.00
J	BMV1+p	MT20	2.0	4.0	Edge	

Edge - INDICATES REFERENCE CORNER OF PLATE TOUCHES EDGE OF CHORD.

DIMENSIONS, SUPPORTS AND LOADINGS SPECIFIED BY FABRICATOR TO BE VERIFIED BY BUILDING DESIGNER

BEARINGS

JT	FACTORED GROSS REACTION VERT	HORZ	MAXIMUM FACTORED GROSS REACTION DOWN	HORZ	UPLIFT	INPUT BRG IN-SX	REQRD BRG IN-SX
J	667	0	667	0	0	5-8	1-8
G	551	0	551	0	0	5-8	1-8

UNFACTORED REACTIONS

JT	1ST LCASE COMBINED	MAX./MIN. COMPONENT REACTIONS SNOW	LIVE	PERM.LIVE	WIND	DEAD	SOIL
J	464	345 / 0	0 / 0	0 / 0	0 / 0	119 / 0	0 / 0
G	386	275 / 0	0 / 0	0 / 0	0 / 0	111 / 0	0 / 0

BEARING MATERIAL TO BE SPF NO.2 OR BETTER AT JOINT(S) J, G

BRACING

TOP CHORD TO BE SHEATHED OR MAX. PURLIN SPACING = 6.13 FT.
MAX. UNBRACED BOTTOM CHORD LENGTH = 10.00 FT OR RIGID CEILING DIRECTLY APPLIED.

ALL FITCH BREAKS AND PERIMETER CORNER JOINTS MUST BE LATERALLY RESTRAINED.

LOADING

TOTAL LOAD CASES: (4)

CHORDS

MEMB. FR-TO	MAX. FACTORED FORCE (LBS)	FACTORED VERT. LOAD (PLF) FROM	TO	LC1 MAX CSI (LC)	MAX. UNBRAC LENGTH
J- B	-642 / 0	0.0	0.0	0.07 (1)	7.81
A- B	0 / 32	-84.3	-84.3	0.11 (1)	10.00
B- C	-1000 / 0	-84.3	-84.3	0.09 (1)	6.16
C- D	-1019 / 0	-84.3	-84.3	0.08 (1)	6.13
D- E	-1019 / 0	-84.3	-84.3	0.08 (1)	6.13
E- F	-1000 / 0	-84.3	-84.3	0.09 (1)	6.16
G- F	-526 / 0	0.0	0.0	0.06 (1)	7.81
J- I	0 / 0	-18.3	-18.3	0.04 (4)	10.00
I- H	0 / 450	-18.2	-18.2	0.18 (4)	10.00
H- G	0 / 0	-18.2	-18.2	0.04 (4)	10.00

WEBS

MEMB. FR-TO	MAX. FACTORED FORCE (LBS)	MAX CSI (LC)
D- H	0 / 607	0.14 (1)
H- E	-255 / 0	0.04 (1)
H- F	0 / 848	0.19 (1)
I- D	0 / 607	0.14 (1)
I- C	-255 / 0	0.04 (1)
B- I	0 / 848	0.19 (1)

DESIGN CRITERIA

SPECIFIED LOADS:

TOP CH.	LL	=	25.6	PSF
	DL	=	3.0	PSF
BOT CH.	LL	=	0.0	PSF
	DL	=	7.3	PSF
TOTAL LOAD		=	35.9	PSF

SPACING = 24.0 IN. C/C

THIS TRUSS IS DESIGNED FOR RESIDENTIAL OR SMALL BUILDING REQUIREMENTS OF PART 9, NBCC 2015

THIS DESIGN COMPLIES WITH:
- PART 9 OF BCBC 2018 , ABC 2019
- PART 9 OF OBC 2012 (2019 AMENDMENT)
- CSA 086-14
- TPIC 2014

(55 % OF 31.3 P.S.F. G.S.L. PLUS 8.4 P.S.F. RAIN LOAD) EQUALS 25.6 P.S.F. SPECIFIED ROOF LIVE LOAD

ALLOWABLE DEFL.(LL)= L/360 (0.36")
CALCULATED VERT. DEFL.(LL) = L/ 999 (0.03")
ALLOWABLE DEFL.(TL)= L/360 (0.36")
CALCULATED VERT. DEFL.(TL) = L/ 999 (0.08")

CSI: TC=0.11/1.00 (A-B:1) , BC=0.18/1.00 (H-I:4) , WB=0.19/1.00 (F-H:1) , SSI=0.08/1.00 (E-F:1)

DOL LUMBER=1.00 NAIL=1.00 LS BEND=1.10 COMP=1.10 SHEAR=1.10 TENS= 1.10

COMPANION LIVE LOAD FACTOR = 1.00

TRUSS PLATE MANUFACTURER IS NOT RESPONSIBLE FOR QUALITY CONTROL IN THE TRUSS MANUFACTURING PLANT .

NAIL VALUES

PLATE	GRIP(DRY) (PSI) MAX	MIN	SHEAR (PLI) MAX	MIN	SECTION (PLI) MAX	MIN
MT20	650	371	1747	788	1987	1873

PLATE PLACEMENT TOL. = 0.250 inches

PLATE ROTATION TOL. = 5.0 Deg.

JSI GRIP= 0.89 (H) (INPUT = 0.90)
JSI METAL= 0.31 (G) (INPUT = 1.00)

LICENSED PROFESSIONAL ENGINEER
I.MATIJEVIC
100528832
PROVINCE OF ONTARIO

October 05, 2021

READ ALL NOTES ON THIS PAGE AND ON THE ENGINEERING NOTE PAGE ENP-1. THE NOTE PAGE IS AN INTEGRAL PART OF THIS DRAWING AS IT CONTAINS SPECIFICATIONS AND CRITERIA USED IN THE DESIGN OF THIS COMPONENT.

CITY OF RICHMOND HILL
BUILDING DIVISION
09/22/2022
RECEIVED
Per:_____joshua.nabua_____

JOB NAME	TRUSS NAME	QUANTITY	PLY	JOB DESC.	DRWG NO.
IM1021-016	T12	1	1	TRUSS DESC.	

Version 8.500 S Aug 16 2021 MiTek Industries, Inc. Tue Oct 5 07:26:29 2021 Page 1
ID:rNLltayITWAmcAy8n3bxIWzd Iy-iTB4A3PvVj1oV Di6 8BbaRHfVzzPuPzv3g0KwyWYOO

Scale = 1:22.8

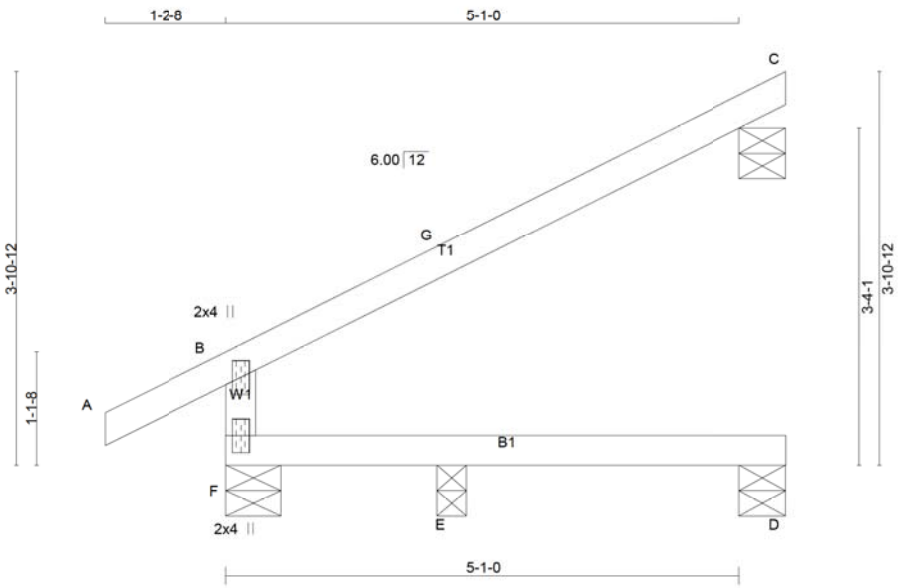

TOTAL WEIGHT = 16 lb
[M]

LUMBER
N. L. G. A. RULES

CHORDS	SIZE		LUMBER	DESCR.
A - C	2x4	DRY	No.2	SPF
F - B	2x4	DRY	No.2	SPF
F - D	2x4	DRY	No.2	SPF

DRY: SEASONED LUMBER.

PLATES (table is in inches)

JT	TYPE	PLATES	W	LEN	Y	X
B	TMV+p	MT20	2.0	4.0		
F	BMV1+p	MT20	2.0	4.0		

DIMENSIONS, SUPPORTS AND LOADINGS SPECIFIED BY FABRICATOR TO BE VERIFIED BY BUILDING DESIGNER

BEARINGS

	FACTORED GROSS REACTION		MAXIMUM FACTORED GROSS REACTION			INPUT BRG	REQRD BRG
JT	VERT	HORZ	DOWN	HORZ	UPLIFT	IN-SX	IN-SX
C	175	0	175	0	0	5-8	5-8
F	411	0	411	0	0	6-8	2-8
D	24	0	27	0	0	5-8	1-8
E	65	0	73	0	0	3-8	1-8

BEVELED PLATE OR SHIM REQUIRED TO PROVIDE FULL BEARING SURFACE WITH TRUSS CHORD AT JT(S): C

UNFACTORED REACTIONS

	1ST LCASE	MAX./MIN. COMPONENT REACTIONS					
JT	COMBINED	SNOW	LIVE	PERM.LIVE	WIND	DEAD	SOIL
C	119	106 / 0	0 / 0	0 / 0	0 / 0	12 / 0	0 / 0
F	280	242 / 0	0 / 0	0 / 0	0 / 0	38 / 0	0 / 0
D	20	0 / 0	0 / 0	0 / 0	0 / 0	20 / 0	0 / 0
E	52	0 / 0	0 / 0	0 / 0	0 / 0	52 / 0	0 / 0

BEARING MATERIAL TO BE SPF NO.2 OR BETTER AT JOINT(S) C, F, D, E

BRACING
TOP CHORD TO BE SHEATHED OR MAX. PURLIN SPACING = 6.25 FT.
MAX. UNBRACED BOTTOM CHORD LENGTH = 10.00 FT OR RIGID CEILING DIRECTLY APPLIED.

ALL PITCH BREAKS AND PERIMETER CORNER JOINTS MUST BE LATERALLY RESTRAINED.

LOADING
TOTAL LOAD CASES: (6)

CHORDS MEMB. FR-TO	MAX. FACTORED FORCE (LBS)	FACTORED VERT. LOAD (PLF) FROM	TO	LC1 MAX CSI (LC)	MAX. UNBRAC LENGTH	WEBS MEMB. FR-TO	MAX. FACTORED FORCE (LBS)	MAX CSI (LC)
A- B	0 / 24	-84.3	-84.3	0.10 (1)	10.00			
B- G	-35 / 7	-84.3	-84.3	0.44 (1)	6.25			
G- C	-35 / 7	-84.3	-84.3	0.44 (1)	6.25			
F- B	-399 / 0	0.0	0.0	0.00 (1)	7.81			
F- E	0 / 0	-18.2	-18.2	0.05 (4)	10.00			
E- D	0 / 0	-18.2	-18.2	0.05 (4)	10.00			

PATTERN-LOADING CHECK APPLIED TO THIS TRUSS.

DESIGN CRITERIA

SPECIFIED LOADS:

TOP CH.	LL	=	25.6	PSF
	DL	=	3.0	PSF
BOT CH.	LL	=	0.0	PSF
	DL	=	7.3	PSF
TOTAL LOAD		=	35.9	PSF

SPACING = 24.0 IN. C/C

THIS TRUSS IS DESIGNED FOR RESIDENTIAL OR SMALL BUILDING REQUIREMENTS OF PART 9, NBCC 2015

THIS DESIGN COMPLIES WITH:
- PART 9 OF BCBC 2018 , ABC 2019
- PART 9 OF OBC 2012 (2019 AMENDMENT)
- CSA 086-14
- TPIC 2014

DESIGN ASSUMPTIONS
-OVERHANG NOT TO BE ALTERED OR CUT OFF.

(55 % OF 31.3 P.S.F. G.S.L. PLUS 8.4 P.S.F. RAIN LOAD) EQUALS 25.6 P.S.F. SPECIFIED ROOF LIVE LOAD

ALLOWABLE DEFL.(LL)= L/360 (0.19")
CALCULATED VERT. DEFL.(LL) = L/ 999 (0.00")
ALLOWABLE DEFL.(TL)= L/360 (0.19")
CALCULATED VERT. DEFL.(TL) = L/ 999 (0.00")

CSI: TC=0.44/1.00 (B-C:1) , BC=0.05/1.00 (D-E:4) , WB=0.00/1.00 (n/a:0) , SSI=0.20/1.00 (B-C:1)

DOL LUMBER=1.00 NAIL=1.00 LS BEND=1.10 COMP=1.10 SHEAR=1.10 TENS= 1.10

COMPANION LIVE LOAD FACTOR = 1.00

TRUSS PLATE MANUFACTURER IS NOT RESPONSIBLE FOR QUALITY CONTROL IN THE TRUSS MANUFACTURING PLANT .

NAIL VALUES

PLATE	GRIP(DRY) (PSI) MAX	MIN	SHEAR (PLI) MAX	MIN	SECTION (PLI) MAX	MIN
MT20	650	371	1747	788	1987	1873

PLATE PLACEMENT TOL. = 0.250 inches

PLATE ROTATION TOL. = 5.0 Deg.

JSI GRIP= 0.22 (B) (INPUT = 0.90)
JSI METAL= 0.17 (B) (INPUT = 1.00)

LICENSED PROFESSIONAL ENGINEER
I.MATIJEVIC
100528832
PROVINCE OF ONTARIO
October 05, 2021

READ ALL NOTES ON THIS PAGE AND ON THE ENGINEERING NOTE PAGE ENP-1. THE NOTE PAGE IS AN INTEGRAL PART OF THIS DRAWING AS IT CONTAINS SPECIFICATIONS AND CRITERIA USED IN THE DESIGN OF THIS COMPONENT.

CITY OF RICHMOND HILL
BUILDING DIVISION
09/22/2022
KOTT
RECEIVED
Per:_____joshua.nabua_____

JOB NAME	TRUSS NAME	QUANTITY	PLY	JOB DESC.	DRWG NO.
IM1021-016	T13	8	1	TRUSS DESC.	

Version 8.500 S Aug 16 2021 MiTek Industries, Inc. Tue Oct 5 07:26:29 2021 Page 1
ID:rNLItaylTWAmcAy8n3bxlWzd Iy-iTB4A3PvVj1oV Di6 8BbaRJwVzGPuPzv3g0KwyWYOO

Scale = 1:20.3

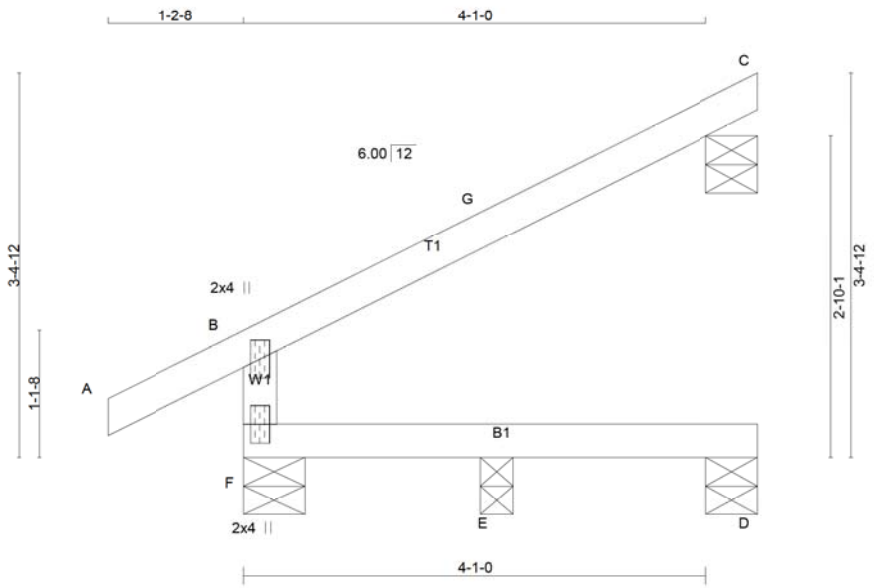

TOTAL WEIGHT = 8 X 13 = 107 lb

[M]

LUMBER
N. L. G. A. RULES

CHORDS	SIZE		LUMBER	DESCR.
A - C	2x4	DRY	No.2	SPF
F - B	2x4	DRY	No.2	SPF
F - D	2x4	DRY	No.2	SPF

DRY: SEASONED LUMBER.

PLATES (table is in inches)

JT	TYPE	PLATES	W	LEN Y	X
B	TMV+p	MT20	2.0	4.0	
F	BMV1+p	MT20	2.0	4.0	

DIMENSIONS, SUPPORTS AND LOADINGS SPECIFIED BY FABRICATOR TO BE VERIFIED BY BUILDING DESIGNER

BEARINGS

JT	FACTORED GROSS REACTION VERT	HORZ	MAXIMUM FACTORED GROSS REACTION DOWN	HORZ	UPLIFT	INPUT BRG IN-SX	REQRD BRG IN-SX
C	144	0	144	0	0	5-8	5-8
F	363	0	363	0	0	6-8	2-8
D	16	0	18	0	0	5-8	1-8
E	50	0	56	0	0	3-8	1-8

BEVELED PLATE OR SHIM REQUIRED TO PROVIDE FULL BEARING SURFACE WITH TRUSS CHORD AT JT(S): C

UNFACTORED REACTIONS

JT	1ST LCASE COMBINED	MAX./MIN. COMPONENT REACTIONS SNOW	LIVE	PERM.LIVE	WIND	DEAD	SOIL
C	97	87 / 0	0 / 0	0 / 0	0 / 0	10 / 0	0 / 0
F	248	210 / 0	0 / 0	0 / 0	0 / 0	38 / 0	0 / 0
D	13	0 / 0	0 / 0	0 / 0	0 / 0	13 / 0	0 / 0
E	40	0 / 0	0 / 0	0 / 0	0 / 0	40 / 0	0 / 0

BEARING MATERIAL TO BE SPF NO.2 OR BETTER AT JOINT(S) C, F, D, E

BRACING
TOP CHORD TO BE SHEATHED OR MAX. PURLIN SPACING = 6.25 FT.
MAX. UNBRACED BOTTOM CHORD LENGTH = 10.00 FT OR RIGID CEILING DIRECTLY APPLIED.

ALL PITCH BREAKS AND PERIMETER CORNER JOINTS MUST BE LATERALLY RESTRAINED.

LOADING
TOTAL LOAD CASES: (6)

CHORDS MEMB. FR-TO	MAX. FACTORED FORCE (LBS)	FACTORED VERT. LOAD (PLF) FROM	TO	LC1 MAX CSI (LC)	MAX. UNBRAC LENGTH FR-TO
A- B	0 / 24	-84.3	-84.3	0.10 (1)	10.00
B- G	-32 / 9	-84.3	-84.3	0.30 (1)	6.25
G- C	-32 / 9	-84.3	-84.3	0.30 (1)	6.25
F- B	-346 / 0	0.0	0.0	0.01 (4)	7.81
F- E	0 / 0	-18.2	-18.2	0.03 (4)	10.00
E- D	0 / 0	-18.2	-18.2	0.03 (4)	10.00

WEBS

MEMB.	MAX. FACTORED FORCE (LBS)	MAX CSI (LC)

PATTERN-LOADING CHECK APPLIED TO THIS TRUSS.

DESIGN CRITERIA

SPECIFIED LOADS:

TOP CH.	LL	=	25.6	PSF
	DL	=	3.0	PSF
BOT CH.	LL	=	0.0	PSF
	DL	=	7.3	PSF
TOTAL LOAD		=	35.9	PSF

SPACING = 24.0 IN. C/C

THIS TRUSS IS DESIGNED FOR RESIDENTIAL OR SMALL BUILDING REQUIREMENTS OF PART 9, NBCC 2015

THIS DESIGN COMPLIES WITH:
- PART 9 OF BCBC 2018 , ABC 2019
- PART 9 OF OBC 2012 (2019 AMENDMENT)
- CSA 086-14
- TPIC 2014

DESIGN ASSUMPTIONS
-OVERHANG NOT TO BE ALTERED OR CUT OFF.

(55 % OF 31.3 P.S.F. G.S.L. PLUS 8.4 P.S.F. RAIN LOAD) EQUALS 25.6 P.S.F. SPECIFIED ROOF LIVE LOAD

ALLOWABLE DEFL.(LL)= L/360 (0.19")
CALCULATED VERT. DEFL.(LL) = L/ 999 (0.00")
ALLOWABLE DEFL.(TL)= L/360 (0.19")
CALCULATED VERT. DEFL.(TL) = L/ 999 (0.00")

CSI: TC=0.30/1.00 (B-C:1) , BC=0.03/1.00 (D-E:4) , WB=0.00/1.00 (n/a:0) , SSI=0.17/1.00 (B-C:1)

DOL LUMBER=1.00 NAIL=1.00 LS BEND=1.10 COMP=1.10 SHEAR=1.10 TENS= 1.10

COMPANION LIVE LOAD FACTOR = 1.00

TRUSS PLATE MANUFACTURER IS NOT RESPONSIBLE FOR QUALITY CONTROL IN THE TRUSS MANUFACTURING PLANT .

NAIL VALUES

PLATE	GRIP(DRY) (PSI) MAX	MIN	SHEAR (PLI) MAX	MIN	SECTION (PLI) MAX	MIN
MT20	650	371	1747	788	1987	1873

PLATE PLACEMENT TOL. = 0.250 inches

PLATE ROTATION TOL. = 5.0 Deg.

JSI GRIP= 0.19 (B) (INPUT = 0.90)
JSI METAL= 0.14 (B) (INPUT = 1.00)

LICENSED PROFESSIONAL ENGINEER
I.MATIJEVIC
100528832
PROVINCE OF ONTARIO
October 05, 2021

READ ALL NOTES ON THIS PAGE AND ON THE ENGINEERING NOTE PAGE ENP-1. THE NOTE PAGE IS AN INTEGRAL PART OF THIS DRAWING AS IT CONTAINS SPECIFICATIONS AND CRITERIA USED IN THE DESIGN OF THIS COMPONENT.

CITY OF RICHMOND HILL
BUILDING DIVISION
09/22/2022
KOTT
RECEIVED
Per:_____joshua.nabua_____

MiTek®

STANDARD DETAIL MSD2015-H

Issued: **SEPTEMBER 22, 2020**
Expiry: **APRIL 30, 2022**

TOE-NAIL CAPACITY DETAILS

LATERAL AND WITHDRAWAL RESISTANCE OF BEARING ANCHORAGE BY TOE-NAILS

NAIL TYPE	Length (in)	Diameter (in)	LATERAL Resistance per nail (Lbs.)		WITHDRAWAL Resistance per nail (Lbs.)	
			SPF	D. FIR	SPF	D. FIR
COMMON WIRE	3.00	0.144	122	139	30	42
	3.25	0.144	127	144	32	45
	3.50	0.160	152	173	38	52
COMMON SPIRAL	3.00	0.122	96	108	26	36
	3.25	0.122	97	108	28	40
	3.50	0.152	142	161	36	50
3.25" Gun nail	3.25	0.120	94	105	28	39

Note: If using truss with D. Fir lumber and SPF bearing plate, use tabulated SPF values in table.

Nail type:	Common wire	Common spiral	Common wire	Common spiral	Gun Nail
Diameter (in.)	0.160	0.152	0.144	0.122	0.120
Length (in.)	3.50	3.50	3.00	3.00	3.25
LUMBER	**MAXIMUM NUMBER OF TOE-NAILS**				
2x4 SPF	2	2	3	3	3
2x6 SPF	4	4	4	5	5
2x4 D. FIR	2	2	2	2	2
2x6 D. FIR	3	3	3	4	4

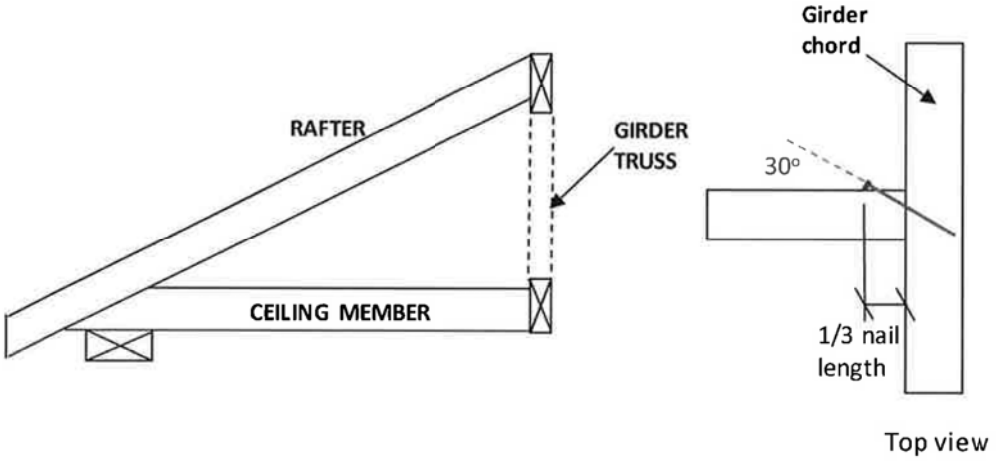

Figure 1: Toe-Nailing Rafter / Ceiling Member to Girder Truss

PEO
Certificate No. 10889485

LICENSED PROFESSIONAL ENGINEER
C. Cordogiannis
90553736
PROVINCE OF ONTARIO

December 21, 2020

CITY OF RICHMOND HILL
BUILDING DIVISION
09/22/2022
RECEIVED
Per: joshua.nabua

©2020 MiTek Canada Inc., 240 Stirling Crescent, Bradford, Ontario, L3Z 4L5 | (800) 268-3434, www.mitek.ca

MiTek®

STANDARD DETAIL MSD2015-H

Issued: **SEPTEMBER 22, 2020**
Expiry: **APRIL 30, 2022**

TOE-NAIL CAPACITY DETAILS

Figure 2: Toe-Nail Anchorage to Bearing Plate for Uplift

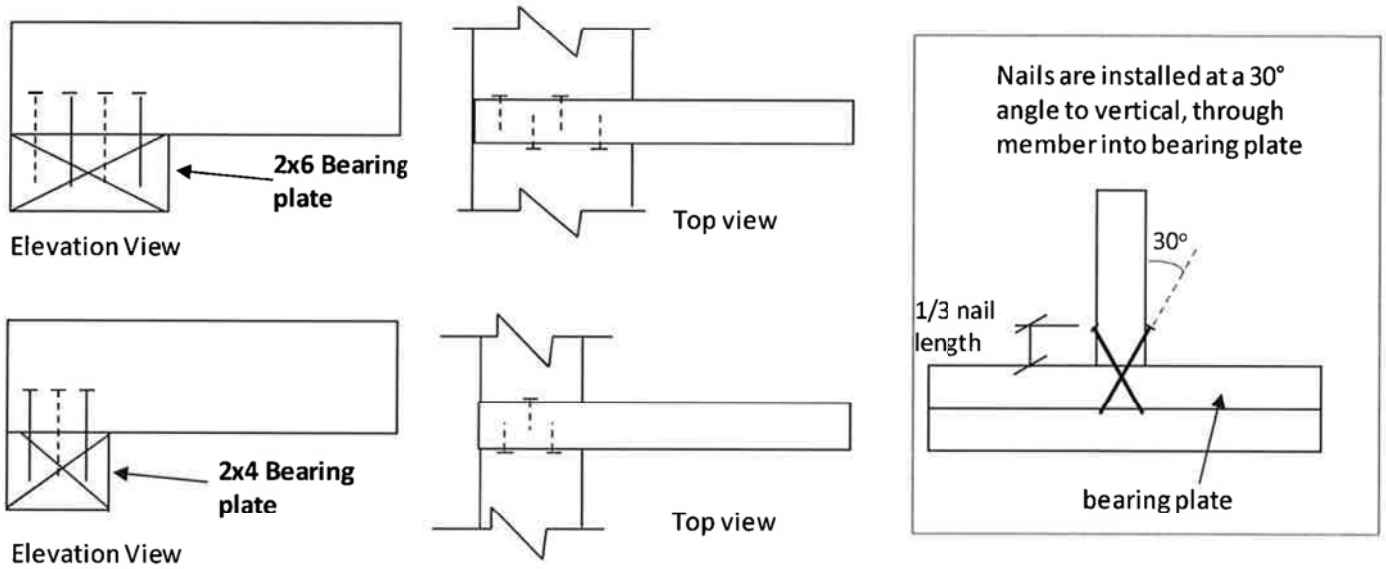

NOTES:

1. Rafter and ceiling members may be connected to top and bottom chords of girder truss by toe-nailing the members into the girder chords (see fig. 1), provided the factored vertical reactions of the supported members do not exceed the lateral resistance of the toe-nails. Mechanical connectors (hangers) are required if factored vertical reactions exceed the toe-nail capacity, or if the connection must resist horizontal loads (loads perpendicular to the face of girder or rafter).

2. Trusses, rafters or ceiling members may be anchored to the bearing plate with toe-nails (see fig. 2), provided that the factored uplift reactions due to **wind or earthquake loads** do not exceed the **withdrawal resistance of the toe-nails.** Mechanical anchors (tie-downs) are required for reactions that exceed the toe-nail withdrawal capacity. Toe-nail anchorage to bearing plates is **NOT** permitted if uplift reactions are generated from gravity loads (snow, floor live, dead).

3. Tabulated toe-nail resistances on page 1 are for **one** toe-nail. Multiply unit values by the number of nails used in the connection. Maximum number of nails in a connection shall not exceed the tabulated limits shown on page 1 for a given lumber size /species.

4. Nail values are based on specific gravity of G = 0.42 (SPF) and G = 0.49 (D. Fir).

5. Toe-nails shall be driven at approximately 1/3 the nail length from the edge of the joist/truss chord and driven at an angle of 30° to the grain of the member.

6. For wind / earthquake loads, tabulated lateral resistances may be multiplied by 1.15 (K_D factor). No increases are permitted for tabulated withdrawal resistances.

7. Lumber must be dry (< 19% moisture content) at the time of nail installation.

8. Nail values in this table comply with CSA O86-19, Clause 12.9.

PEO
Certificate No. 10889485

LICENSED PROFESSIONAL ENGINEER
C. Cordogiannis
90553736
PROVINCE OF ONTARIO

CITY OF RICHMOND HILL
BUILDING DIVISION
09/22/2022
RECEIVED
Per: joshua.nabua

December 21, 2020

©2020 MiTek Canada Inc., 240 Stirling Crescent, Bradford, Ontario, L3Z 4L5 | (800) 268-3434, www.mitek.ca

MiTek®

STANDARD DETAIL MSD2015-J

Issued: **MARCH 17, 2021**
Expiry: **APRIL 30, 2022**

STANDARD HIP END FRAMING

PLAN VIEW

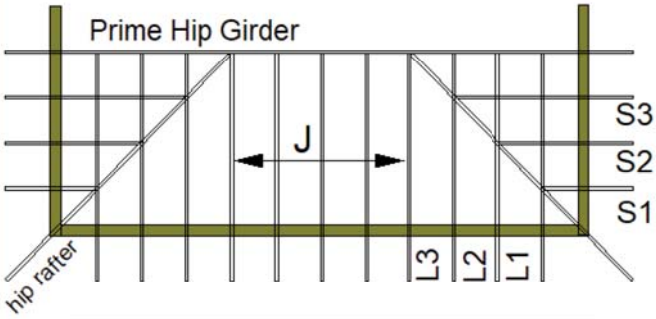

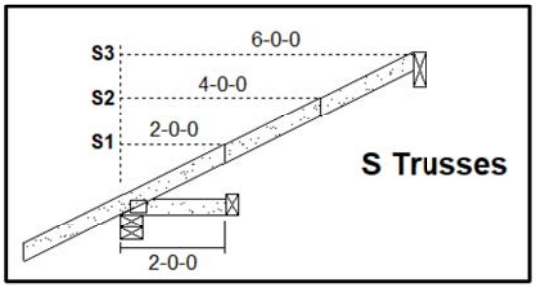

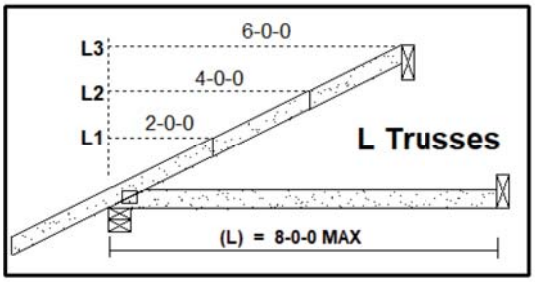

Specified Load Rating:

Top chord Live:	51.0 PSF or less
Top chord Dead:	6.0 PSF or less
Bottom chord Live:	0.0 PSF
Bottom chord Dead:	7.3 PSF or less

HEEL DETAIL 'A'
Standard Heel

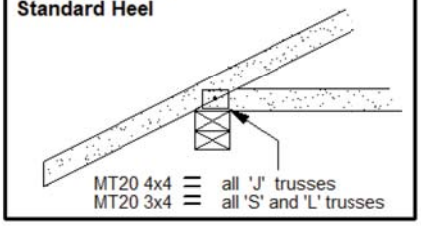

DETAIL "B":
Raised Heel

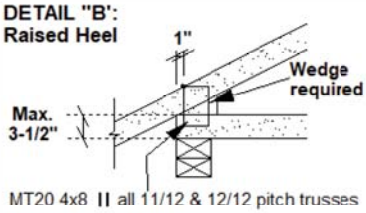

HEEL DETAIL 'C'
Cantilever

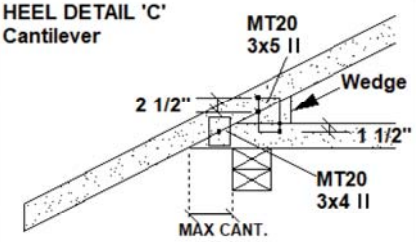

CANTILEVER DETAIL "C"

SLOPE	MAX CANT.	WEDGE PLATE	WEDGE SIZE
3/12	17"	3 X 5	2 X 3
4/12	14"	3 X 5	2 X 3
5/12	12"	3 X 5	2 X 4
6/12	10"	3 X 5	2 X 4
7/12	9"	3 X 5	2 X 6
8/12	8.5"	3 X 5	2 X 6
9/12	8"	3 X 5	2 X 6
10/12	7.5"	3 X 5	2 X 6

J Trusses

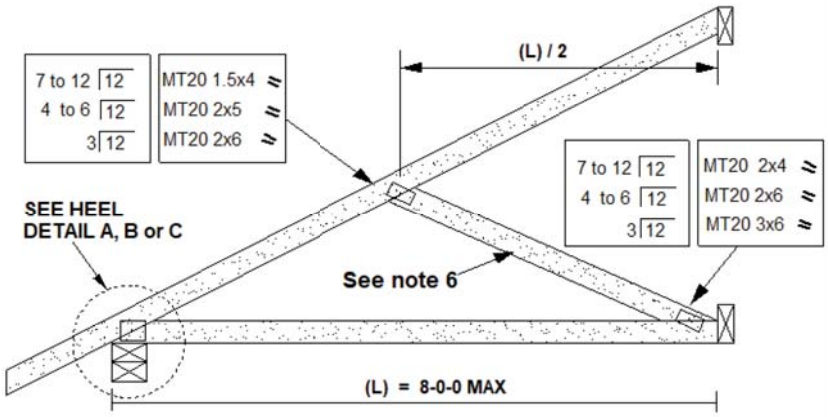

NOTES:

1. This detail is valid only for projects conforming to **PART 9 NBCC 2015** that do not require a wind analysis to be incorporated into the design of the trusses.
2. Overhang length shall not exceed 24 inches.
3. All lumber shall be 2x4 SPF (or D-Fir) DRY No. 2 grade or better.
4. All plates specified are MITEK MT20, pressed into both faces of each truss. Heel plates of all trusses shall conform to heel details 'A', 'B' or 'C'.
5. Diagonal hip rafter design shall conform to section 9.23.14.6 of NBCC 2015.
6. For 6.0 ft. or less span, diagonal web on truss 'J" is optional. Girder design must reflect choice of partial jack ('J' with diagonal web) or open jack ('J' without diagonal web)
7. All truss-to-rafter and truss-to-truss connections shall be specified as per MITEK standard detail *'MSD2015-H: Toe-Nail Capacity Details'*

PEO
Certificate No. 10889485

LICENSED PROFESSIONAL ENGINEER
2021-03-18
C. Cordogiannis
90553736
PROVINCE OF ONTARIO

CITY OF RICHMOND HILL
BUILDING DIVISION
09/22/2022
RECEIVED
Per:____joshua.nabua_____

©2021 MiTek Canada Inc.240 Stirling Cr. Bradford Ontario, L3Z 4L5 (800) 268-3434, www.mitek.ca

MiTek®

STANDARD DETAIL MSD2015-K

Issued: **APRIL 12, 2021**
Expiry: **APRIL 30, 2022**

STANDARD GABLE END DETAIL

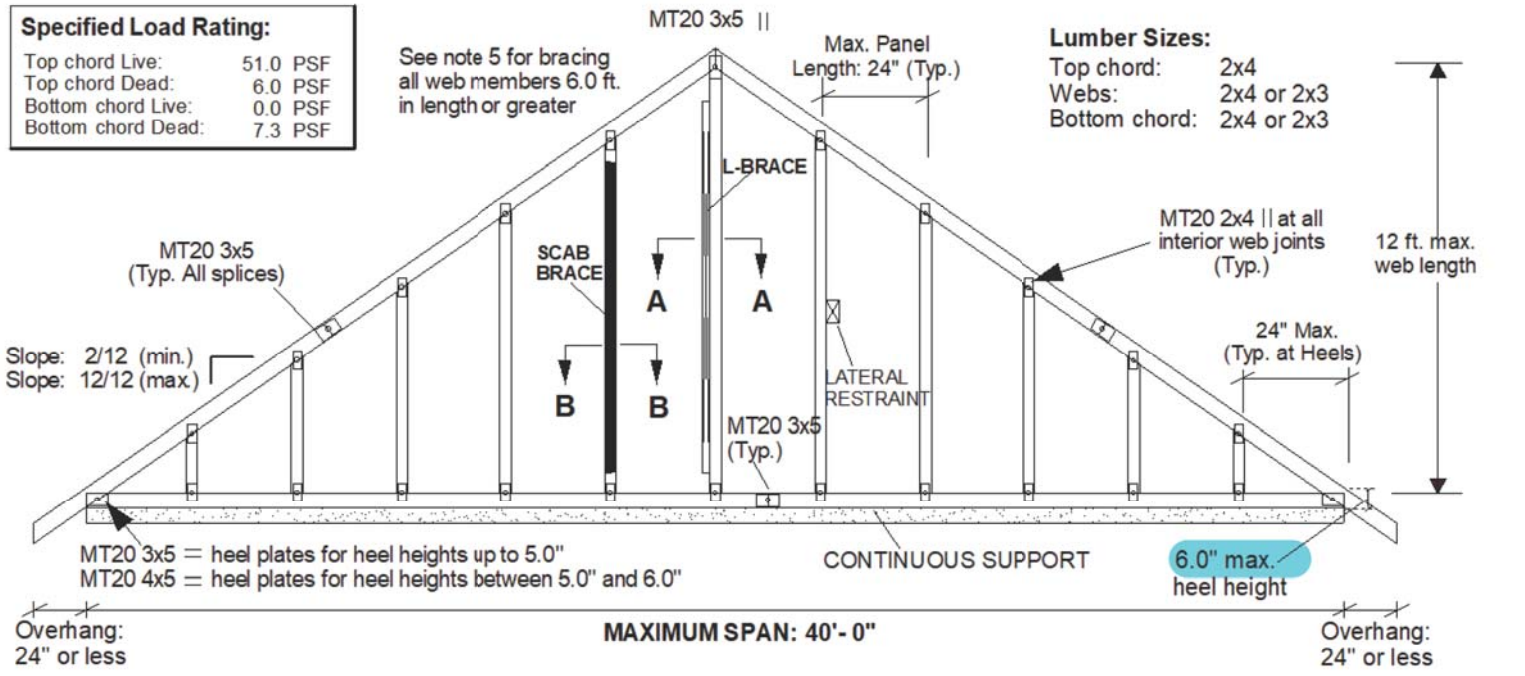

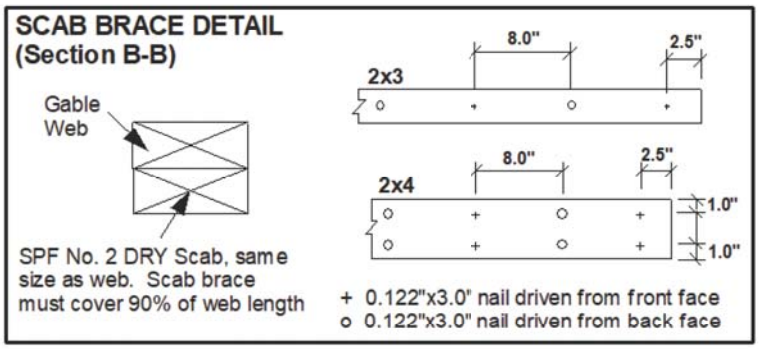

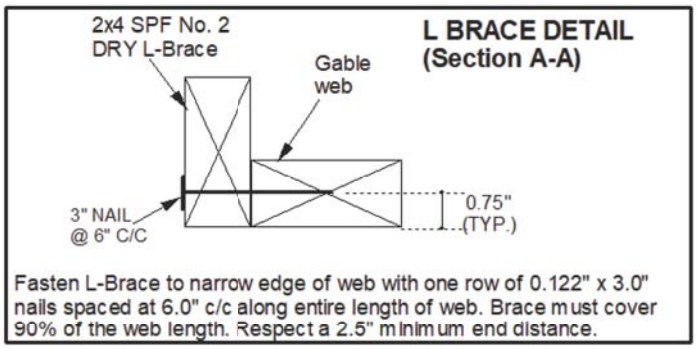

Notes:

1. This detail is only valid for projects conforming to **Part 9, NBCC 2015** that do not require a wind analysis to be incorporated into the design of the truss.
2. This detail is for vertical (gravity) load rating of the truss only. Truss must be continuously supported over the entire length of bottom chord.
3. Maximum web length not to exceed 12.0 ft. Spacing of gable stud webs in the truss not to exceed 24 inches cc.
4. Splice joints shall not be located in the first panel adjacent to the heel joint or peak joint.
5. Lateral restraint required at half-length of all webs over 6.0 ft. long. Alternatively install an L-Brace or scab brace as shown above. Scab braces shall be limited to 10 ft. long webs or less.
6. All plates are MITEK MT20 pressed into both faces of truss.
7. All lumber to be SPF (or D-Fir) DRY and of No.2 grade or better.
8. Additional building bracing is typically installed to brace the face of the end wall assembly. See BCSI Canada *'Building Designer Responsibilities for Gable End Frame Bracing'* for additional information on building bracing for gable-end assemblies.

PEO
Certificate No. 10889485

LICENSED PROFESSIONAL ENGINEER
2021-04-15
C. Cordogiannis
90593736
PROVINCE OF ONTARIO

CITY OF RICHMOND HILL
BUILDING DIVISION
09/22/2023
RECEIVED
Per: joshua.nabua

©2020 MiTek Canada Inc., 240 Stirling Crescent, Bradford, Ontario, L3Z 4L5 | (800) 268-3434, www.mitek.ca