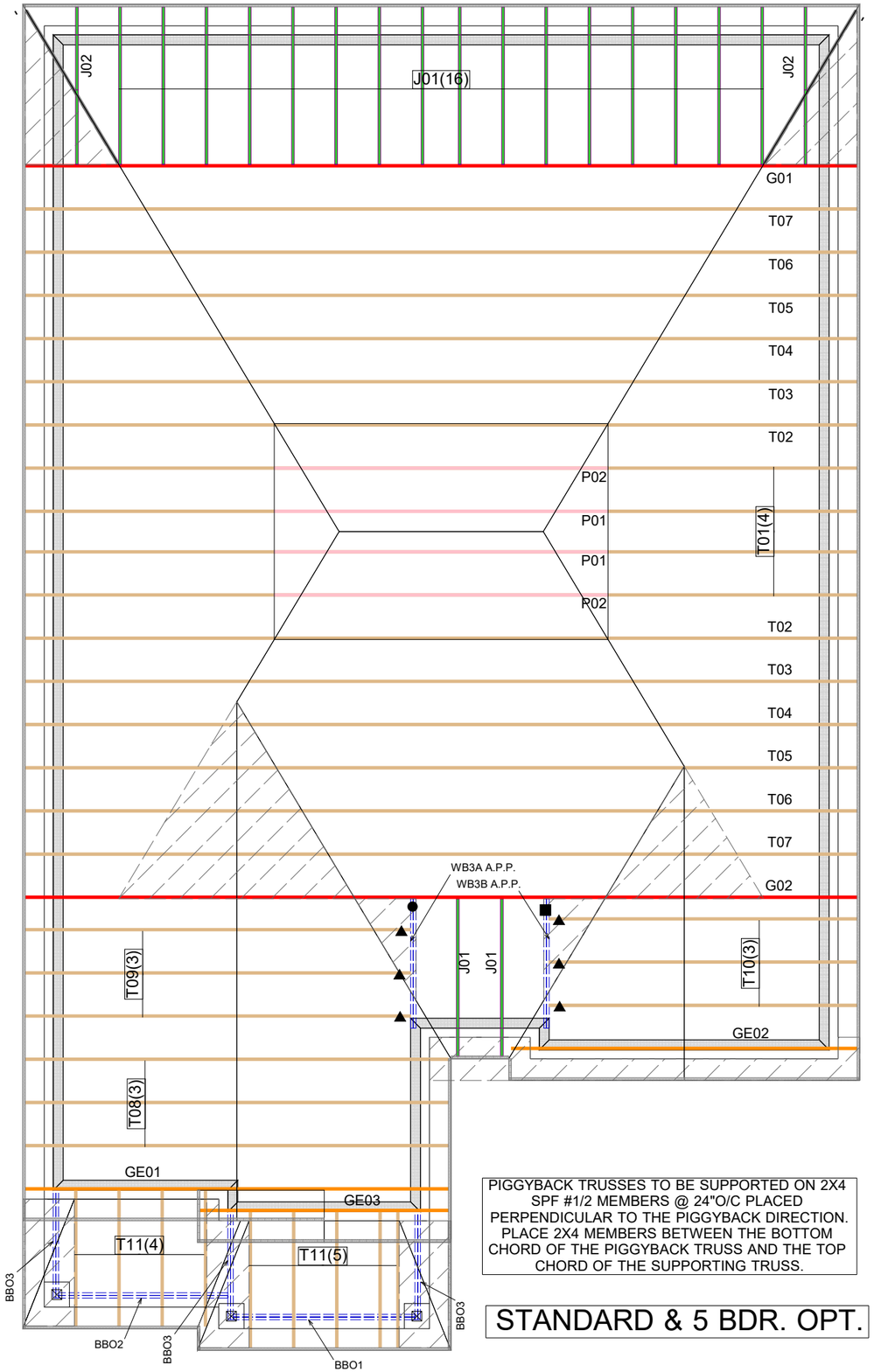

PIGGYBACK TRUSSES TO BE SUPPORTED ON 2X4 SPF #1/2 MEMBERS @ 24"O/C PLACED PERPENDICULAR TO THE PIGGYBACK DIRECTION. PLACE 2X4 MEMBERS BETWEEN THE BOTTOM CHORD OF THE PIGGYBACK TRUSS AND THE TOP CHORD OF THE SUPPORTING TRUSS.

STANDARD & 5 BDR. OPT.

Hanger Name	Symbol	QTY
LUS24	▲	6
LUS26-2	■	1
HGUS26-2	●	1

CONVENTIONAL FRAMING BY OTHERS

ALL CONVENTIONAL FRAMING TO CONFORM WITH PART 9 OF THE OBC. ROOF RAFTERS THAT CROSS OVER TRUSSES TO BE MIN. 2x4 SPF @ 24" C/C WITH A 2x4 VERTICAL POST TO THE TRUSS BELOW. VERTICAL POSTS TO BE LATERALLY BRACED SO THAT UNBRACED LENGTH DOES NOT EXCEED 6'. DESIGN OF CONVENTIONAL FRAMING IS THE RESPONSIBILITY OF THE PROJECT ENGINEER.

JOB INFORMATION

Customer	ROUNDEL HOMES INC
Job #	21-00091R0
Address	TERRACOTTA 2 RICHMOND HILL,ON
Model	45-02 ELEV 1
Sales Rep	RALPH MIRIGELLO
Designer	KR
Date	9/29/2021
Path	C:\MITEK\CA\JOBS\GREENPARK GROUP\ROUNDEL HOMES INC\T-TC45-02-1\

CITY OF RICHMOND HILL
BUILDING DIVISION
09/22/2022
RECEIVED
Per:maddy@alessandro

DESIGN INFORMATION

Code	NBCC 2015
Bldg	Residential - HSB (NBCC Part 9)
TC LL	25.6 lb/ft²
TC DL	3.0 lb/ft²
BC LL	0.0 lb/ft²
BC DL	7.3 lb/ft²
Deflection	LL=L/360 TL=L/360
Spacing	24" O/C unless otherwise noted
Complies With	OBC 2012 (2019 Amendment) CSA O86-14 and TPIC 2014

IMPORTANT INFORMATION

Refer to truss drawings in the Truss Engineering Package for ply-to-ply attachment notes

For site-framed valleys: top chords of all roof trusses must be laterally supported using 2x4 continuous bracing @24 O/C - all bracing must be anchored at ends as per TPIC Installation Guidelines

Read all notes on this page in addition to those shown on the KOTT Truss Engineering package

Field erection, handling and bracing are not the responsibility of KOTT, or KOTT Engineering

Unless noted otherwise, hurricane ties are to be installed at the bearings of all trusses > 40 ft clear span, and any girder or beam supporting trusses with a clear span >40 ft. See hanger legend for type.

Unless noted otherwise, for Part 9 bldgs, all trusses are to be anchored to the top of supporting walls as follows: trusses with a clear span <40 ft use 3-1/4" nails @ each bearing; trusses with a clear span >40 ft use 3-1/4" nails @ each bearing in addition to the appropriate hurricane tie.

KOTT Inc.
14 Anderson Blvd.
Uxbridge, ON
905.642.4400

ENGINEERING NOTE PAGE (ENP-1)
PLEASE READ PRIOR TO INSTALLATION

CITY OF RICHMOND HILL
BUILDING DIVISION
09/22/2022
RECEIVED
Per:maddy.toalsalejandro

RESPONSIBILITIES

THIS DESIGN IS FOR AN INDIVIDUAL BUILDING COMPONENT AND HAS BEEN BASED ON INFORMATION PROVIDED BY KOTT DESIGN. THE UNDERSIGNED ENGINEER DISCLAIMS ANY RESPONSIBILITY FOR DAMAGES AS A RESULT OF FAULTY OR INCORRECT INFORMATION, SPECIFICATION AND/OR DESIGNS FURNISHED TO THE ENGINEER. THE UNDERSIGNED ENGINEER IS ONLY RESPONSIBLE FOR THE STRUCTURAL INTEGRITY OF THIS BUILDING COMPONENT FOR THE CONDITIONS AND LOADS SHOWN ON THIS DRAWING. THE STRUCTURAL INTEGRITY OF THE BUILDING AND THE VERIFICATION OF THE DIMENSIONS AND THE DESIGN LOADS USED ARE THE RESPONSIBILITY OF THE BUILDING DESIGNER.

TRUSSES ARE DESIGNED IN CONFORMANCE WITH THE RELEVANT SECTIONS OF THE NATIONAL BUILDING CODE OF CANADA OR THE CANADIAN CODE FOR FARM BUILDINGS, WHICHEVER APPLIES TO THE BUILDING TYPE INDICATED ON THE DRAWING

IT IS THE RESPONSIBILITY OF KOTT TO ENSURE THAT TRUSSES ARE MANUFACTURED IN CONFORMANCE WITH THESE DESIGNS AND WITH THE SPECIFICATIONS OUTLINED BELOW. THE UNDERSIGNED ENGINEER IS NOT RESPONSIBLE FOR QUALITY CONTROL IN THE TRUSS MANUFACTURING PLANT.

USE AND OCCUPANCY

- The building is of the type indicated on the drawing

LOADING

- The truss loading intensity and distribution as well as load transfer mechanism is that indicated on the drawing
- No buildings, trees, parapets or other projections higher than the roof for which the trusses are used are located within a distance less than ten (10) times the difference in height, or five metres (16 ft) whichever is greater, unless the drawing indicates that the snow drifting has been taken into account

HANDLING, INSTALLATION AND BRACING

- The trusses must be handled and installed by a qualified professional as per the supplied document titled *Information for Truss Installers* and the BCSI-B1 and BCSI-B3 Summary Sheets
- The compression chords are laterally braced by continuous rigid diaphragm sheathing or as specified on the drawing
- Temporary and permanent bracing must be installed as indicated on the truss drawing and according to the BCSI-B1 and BCSI-B3 Summary Sheets. Bracing for the lateral stability of the truss is to be provided by the building designer
- **It is recommended that a Professional Engineer's advice be obtained for the bracing of trusses spanning more than 12.37m (40'-7")**

SUPPORTS

- The trusses are to be supported at the bearing points indicated and anchored to the supports where considered necessary by the designer of the overall structure
- Bearing sizes shown are the minimum required to prevent crushing of the truss members and do not necessarily take into account stability of the overall building structure
- Elevation of bearings must be carefully checked and shimmed to alignment for solid bearings
- Adequate wood truss bearing is the responsibility of the building designer.

DIMENSIONS

- Geometry of the truss and dimensions indicated on the drawing are identical to those of the installed truss.

KOTT

JOB NAME	TRUSS NAME	QUANTITY	PLY	JOB DESC.	DRWG NO.
IM1021-033	G01	1	1	TRUSS DESC.	

Version 8.500 S Aug 16 2021 MiTek Industries, Inc. Wed Oct 6 13:04:50 2021 Page 1
ID:Leed7e129lDTMWGQL9?03mzYSEd-1 zSNqiiGcE91ennHcwzcfAcNKin7FDQl7CfssyW8LB

CITY OF RICHMOND HILL
BUILDING DIVISION
09/22/2022
RECEIVED
Per:maddy.toalaalejandro

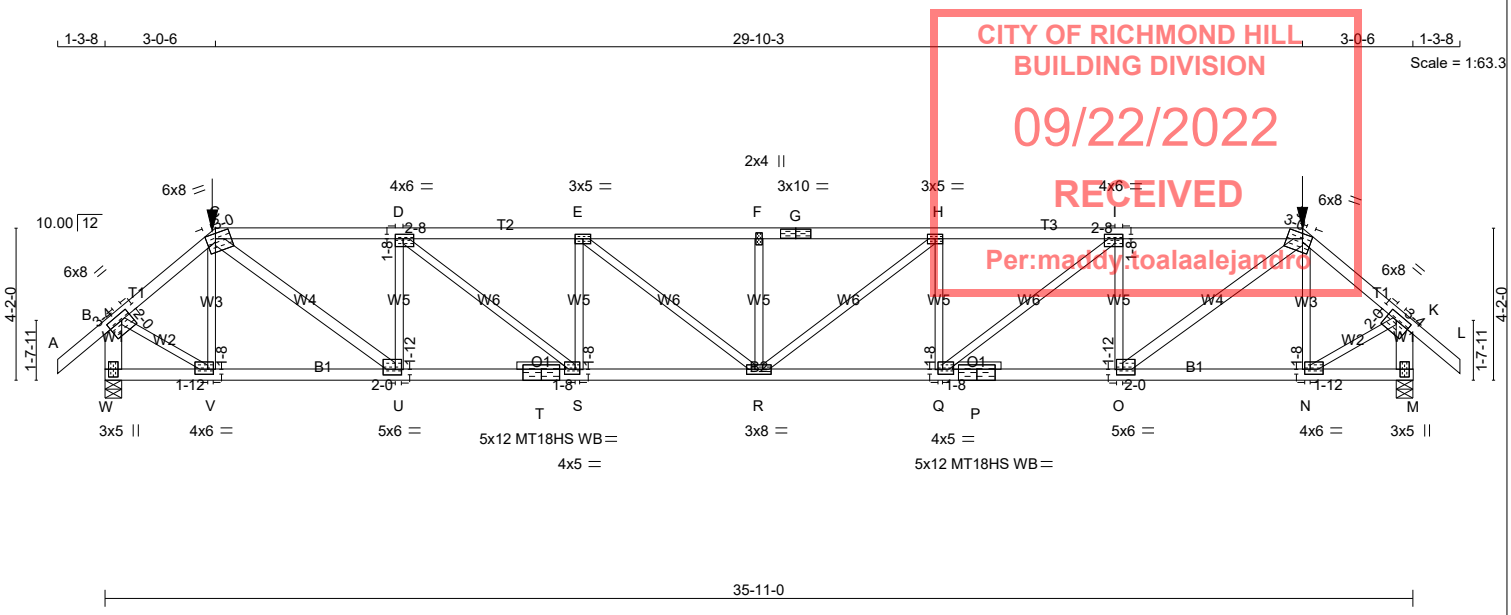

TOTAL WEIGHT = 153 lb [M]

LUMBER

N. L. G. A. RULES

CHORDS	SIZE		LUMBER	DESCR.
A - C	2x4	DRY	No.2	SPF
C - G	2x4	DRY	2100F 1.8E	SPF
G - J	2x4	DRY	2100F 1.8E	SPF
J - L	2x4	DRY	No.2	SPF
W - B	2x6	DRY	No.2	SPF
M - K	2x6	DRY	No.2	SPF
W - T	2x4	DRY	2100F 1.8E	SPF
T - P	2x4	DRY	2100F 1.8E	SPF
P - M	2x4	DRY	2100F 1.8E	SPF
ALL WEBS	2x3	DRY	No.2	SPF
EXCEPT				
C - U	2x4	DRY	No.2	SPF
O - J	2x4	DRY	No.2	SPF

DRY: SEASONED LUMBER.

PLATES (table is in inches)

JT	TYPE	PLATES	W	LEN	Y	X
B	TMVW-t	MT20	6.0	8.0	2.00	3.25
C	TTWW-m	MT20	6.0	8.0	Edge	3.00
D	TMWW-t	MT20	4.0	6.0	1.50	2.50
E	TMWW-t	MT20	3.0	5.0		
F	TMW+w	MT20	2.0	4.0		
G	TS-t	MT20	3.0	10.0		
H	TMWW-t	MT20	3.0	5.0		
I	TMWW-t	MT20	4.0	6.0	1.50	2.50
J	TTWW-m	MT20	6.0	8.0	Edge	3.00
K	TMVW-t	MT20	6.0	8.0	2.00	3.25
M	BMV1+p	MT20	3.0	5.0		
N	BMWW-t	MT20	4.0	6.0	1.50	1.75
O	BMWW-t	MT20	5.0	6.0	1.75	2.00
P	BS-t	MT18HS	5.0	12.0		
Q	BMWW-t	MT20	4.0	5.0	1.50	1.50
R	BMWWW-t	MT20	3.0	8.0		
S	BMWW-t	MT20	4.0	5.0	1.50	1.50
T	BS-t	MT18HS	5.0	12.0		
U	BMWW-t	MT20	5.0	6.0	1.75	2.00
V	BMWW-t	MT20	4.0	6.0	1.50	1.75
W	BMV1+p	MT20	3.0	5.0		

LICENSED PROFESSIONAL ENGINEER
I.MATIJEVIC
100528832
PROVINCE OF ONTARIO
October 06, 2021

READ ALL NOTES ON THIS PAGE AND ON THE ENGINEERING NOTE PAGE ENP-1. THE NOTE PAGE IS AN INTEGRAL PART OF THIS DRAWING AS IT CONTAINS SPECIFICATIONS AND CRITERIA USED IN THE DESIGN OF THIS COMPONENT.

DIMENSIONS, SUPPORTS AND LOADINGS SPECIFIED BY FABRICATOR TO BE VERIFIED BY BUILDING DESIGNER

BEARINGS

JT	FACTORED GROSS REACTION VERT	HORZ	MAXIMUM FACTORED GROSS REACTION DOWN	HORZ	UPLIFT	INPUT BRG IN-SX	REQRD BRG IN-SX
W	3553	0	3553	0	0	5-8	3-15
M	3553	0	3553	0	0	5-8	3-15

UNFACTORED REACTIONS

JT	1ST LCASE COMBINED	MAX./MIN. COMPONENT REACTIONS SNOW	LIVE	PERM.LIVE	WIND	DEAD	SOIL
W	2486	1782 / 0	0 / 0	0 / 0	0 / 0	703 / 0	0 / 0
M	2486	1782 / 0	0 / 0	0 / 0	0 / 0	703 / 0	0 / 0

BEARING MATERIAL TO BE SPF NO.2 OR BETTER AT JOINT(S) W, M

BRACING

TOP CHORD TO BE SHEATHED OR MAX. PURLIN SPACING = 2.51 FT.
MAX. UNBRACED BOTTOM CHORD LENGTH = 10.00 FT OR RIGID CEILING DIRECTLY APPLIED.

ALL PITCH BREAKS AND PERIMETER CORNER JOINTS MUST BE LATERALLY RESTRAINED.

LOADING

TOTAL LOAD CASES: (4)

CHORDS

MEMB. FR-TO	MAX. FACTORED FORCE (LBS)	FACTORED VERT. LOAD (PLF) FROM	TO	LC1 MAX CSI (LC)	MAX. UNBRAC LENGTH
A- B	0 / 37	-84.3	-84.3	0.13 (1)	10.00
B- C	-3333 / 0	-84.3	-84.3	0.32 (1)	3.55
C- D	-5784 / 0	-158.9	-158.9	0.69 (1)	3.06
D- E	-7569 / 0	-158.9	-158.9	0.88 (1)	2.51
E- F	-8186 / 0	-158.9	-158.9	0.82 (1)	2.52
F- G	-8186 / 0	-158.9	-158.9	0.82 (1)	2.52
G- H	-8186 / 0	-158.9	-158.9	0.82 (1)	2.52
H- I	-7569 / 0	-158.9	-158.9	0.88 (1)	2.51
I- J	-5784 / 0	-158.9	-158.9	0.69 (1)	3.06
J- K	-3333 / 0	-84.3	-84.3	0.32 (1)	3.55
K- L	0 / 37	-84.3	-84.3	0.13 (1)	10.00
W- B	-3524 / 0	0.0	0.0	0.27 (1)	5.63
M- K	-3524 / 0	0.0	0.0	0.27 (1)	5.63
W- V	0 / 0	-34.4	-34.4	0.10 (4)	10.00
V- U	0 / 2577	-34.4	-34.4	0.28 (1)	10.00
U- T	0 / 5784	-34.4	-34.4	0.54 (1)	10.00
T- S	0 / 5784	-34.4	-34.4	0.54 (1)	10.00
S- R	0 / 7569	-34.4	-34.4	0.70 (1)	10.00
R- Q	0 / 7569	-34.4	-34.4	0.70 (1)	10.00
Q- P	0 / 5784	-34.4	-34.4	0.54 (1)	10.00
P- O	0 / 5784	-34.4	-34.4	0.54 (1)	10.00
O- N	0 / 2577	-34.4	-34.4	0.28 (1)	10.00
N- M	0 / 0	-34.4	-34.4	0.10 (4)	10.00

WEBS

MEMB. FR-TO	MAX. FACTORED FORCE (LBS)	MAX CSI (LC)
V- C	-973 / 0	0.26 (1)
C- U	0 / 4035	0.71 (1)
U- D	-2272 / 0	0.63 (1)
D- S	0 / 2268	0.56 (1)
S- E	-1235 / 0	0.34 (1)
E- R	0 / 784	0.19 (1)
R- F	-799 / 0	0.22 (1)
R- H	0 / 784	0.19 (1)
Q- H	-1235 / 0	0.34 (1)
Q- I	0 / 2268	0.56 (1)
S- I	-2272 / 0	0.63 (1)
O- J	0 / 4035	0.71 (1)
N- J	-973 / 0	0.26 (1)
B- V	0 / 2792	0.69 (1)
N- K	0 / 2792	0.69 (1)

FACTORED CONCENTRATED LOADS (LBS)

JT	LOC.	LC1	MAX-	MAX+	FACE	DIR.	TYPE	HEEL	CONN.
C	3-0-6	-192	-192	---	FRONT	VERT	TOTAL	---	C1
J	32-10-10	-192	-192	---	FRONT	VERT	TOTAL	---	C1

CONNECTION REQUIREMENTS

1) **C1:** A SUITABLE HANGER/MECHANICAL CONNECTION IS REQUIRED.

DESIGN CRITERIA

SPECIFIED LOADS:

TOP CH.	LL	=	25.6	PSF
	DL	=	3.0	PSF
BOT CH.	LL	=	0.0	PSF
	DL	=	7.3	PSF
TOTAL LOAD		=	35.9	PSF

SPACING = 24.0 IN. C/C

LOADING IN FLAT SECTION BASED ON A SLOPE OF 6.00/12

GIRDER TYPE: CPrimeHip
SIDE SETBACK = 3-0-6
END SETBACK = 6-0-0
END WALL WIDTH = 5-8
CORNER FRAMING TYPE: CONVENTIONAL
END JACK TYPE: CONVENTIONAL
APPLIED TO FRONT SIDE
- ADDT'L LOADS BASED ON 55 % OF GSL.

THIS TRUSS IS DESIGNED FOR RESIDENTIAL OR SMALL BUILDING REQUIREMENTS OF PART 9, NBCC 2015

THIS DESIGN COMPLIES WITH:
- PART 9 OF BCBC 2018 , ABC 2019
- PART 9 OF OBC 2012 (2019 AMENDMENT)
- CSA 086-14
- TPIC 2014

(55 % OF 31.3 P.S.F. G.S.L. PLUS 8.4 P.S.F. RAIN LOAD) EQUALS 25.6 P.S.F. SPECIFIED ROOF LIVE LOAD

ALLOWABLE DEFL.(LL)= L/360 (1.20")
CALCULATED VERT. DEFL.(LL) = L/ 909 (0.47")
ALLOWABLE DEFL.(TL)= L/360 (1.20")
CALCULATED VERT. DEFL.(TL) = L/ 526 (0.82")

CSI: TC=0.88/1.00 (D-E:1) , BC=0.70/1.00 (Q-R:1) , WB=0.71/1.00 (J-O:1) , SSI=0.41/1.00 (C-D:1)

DOL LUMBER=1.00 NAIL=1.00 LS BEND=1.00 COMP=1.00 SHEAR=1.00 TENS= 1.00

COMPANION LIVE LOAD FACTOR = 1.00

TRUSS PLATE MANUFACTURER IS NOT RESPONSIBLE FOR QUALITY CONTROL IN THE TRUSS MANUFACTURING PLANT .

NAIL VALUES

PLATE	GRIP(DRY) (PSI) MAX	MIN	SHEAR (PLI) MAX	MIN	SECTION (PLI) MAX	MIN
MT20	650	371	1747	788	1987	1873

CONTINUED ON PAGE 2

KOTT

JOB NAME	TRUSS NAME	QUANTITY	PLY	JOB DESC.	DRWG NO.
IM1021-033	G01	1	1	TRUSS DESC.	

Version 8.500 S Aug 16 2021 MiTek Industries, Inc. Wed Oct 6 13:04:50 2021 Page 2
ID:Leed7e129lDTMWGQL9?03mzYSEd-1_zSNqiiGcE91ennHcwzcfAcNKin7FDQl7CfssyW8LB

Edge - INDICATES REFERENCE CORNER OF PLATE TOUCHES EDGE OF CHORD.

WB - INDICATES BLOCKING REQUIRED

CITY OF RICHMOND HILL
BUILDING DIVISION
09/22/2022
RECEIVED
Per:maddy.toalaalejandro

MT18HS 586 403 2455 1382 3163 3004
PLATE PLACEMENT TOL. = 0.250 inches
PLATE ROTATION TOL. = 5.0 Deg.

JSI GRIP= 0.90 (O) (INPUT = 0.90)
JSI METAL= 0.80 (T) (INPUT = 1.00)

LICENSED PROFESSIONAL ENGINEER
I.MATIJEVIC
100528832
PROVINCE OF ONTARIO
October 06, 2021

READ ALL NOTES ON THIS PAGE AND ON THE ENGINEERING NOTE PAGE ENP-1. THE NOTE PAGE IS AN INTEGRAL PART OF THIS DRAWING AS IT CONTAINS SPECIFICATIONS AND CRITERIA USED IN THE DESIGN OF THIS COMPONENT.

KOTT

JOB NAME	TRUSS NAME	QUANTITY	PLY	JOB DESC.	DRWG NO.
IM1021-033	G02	1	1	TRUSS DESC.	

Version 8.500 S Aug 16 2021 MiTek Industries, Inc. Wed Oct 6 13:04:51 2021 Page 1
ID:Leed7e129IDTMWGQL9?03mzYSEd-VBXraAjK1vM0eoLzrJRC9simdkzMsfnZ nyDOJyW8LA

CITY OF RICHMOND HILL
BUILDING DIVISION
09/22/2022
RECEIVED
Per:maddy.tolaalejandro

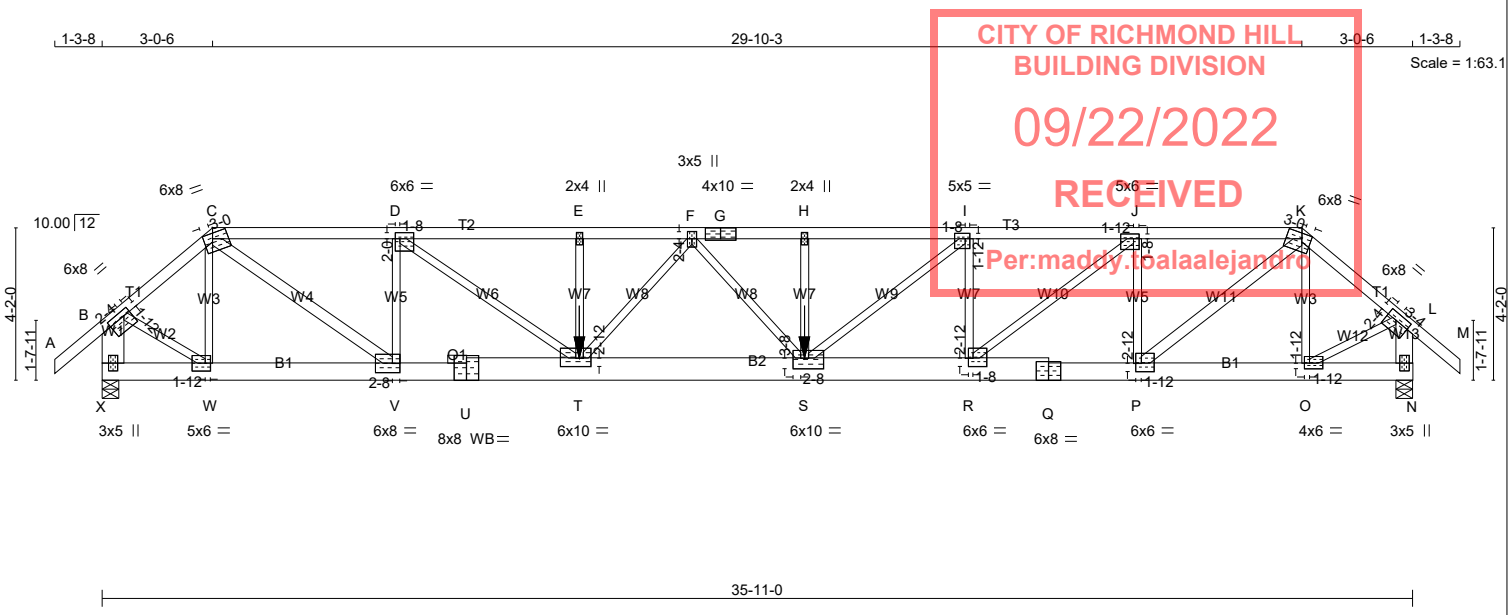

TOTAL WEIGHT = 184 lb [M]

LUMBER
N. L. G. A. RULES

CHORDS	SIZE		LUMBER	DESCR.
A - C	2x4	DRY	No.2	SPF
C - G	2x4	DRY	2100F 1.8E	SPF
G - K	2x4	DRY	2100F 1.8E	SPF
K - M	2x4	DRY	No.2	SPF
X - B	2x8	DRY	No.2	SPF
N - L	2x6	DRY	No.2	SPF
X - U	2x6	DRY	No.2	SPF
U - Q	2x8	DRY	1950F 1.7E	SPF
Q - N	2x6	DRY	No.2	SPF
ALL WEBS	2x3	DRY	No.2	SPF
EXCEPT				
C - V	2x4	DRY	No.2	SPF
P - K	2x4	DRY	No.2	SPF

DRY: SEASONED LUMBER.

PLATES (table is in inches)

JT	TYPE	PLATES	W	LEN	Y	X
B	TMVW-t	MT20	6.0	8.0	1.75	2.25
C	TTWW-m	MT20	6.0	8.0	Edge	3.00
D	TMWW-t	MT20	6.0	6.0	2.00	1.50
E	TMW+w	MT20	2.0	4.0		
F	TMWW+t	MT20	3.0	5.0	2.25	1.50
G	TS-t	MT20	4.0	10.0	Edge	5.00
H	TMW+w	MT20	2.0	4.0		
I	TMWW-t	MT20	5.0	5.0	1.75	1.50
J	TMWW-t	MT20	5.0	6.0	1.50	1.75
K	TTWW-m	MT20	6.0	8.0	Edge	3.00
L	TMVW-t	MT20	6.0	8.0	2.25	3.25
N	BMV1+p	MT20	3.0	5.0		
O	BMWW-t	MT20	4.0	6.0	1.75	1.75
P	BMWW-t	MT20	6.0	6.0	2.75	1.75
Q	BS-t	MT20	6.0	8.0		
R	BMWW-t	MT20	6.0	6.0	2.75	1.50
S	BMWWW-t	MT20	6.0	10.0	3.50	2.50
T	BMWWW-t	MT20	6.0	10.0	2.75	5.00
U	BS-t	MT20	8.0	8.0		
V	BMWW-t	MT20	6.0	8.0	3.00	2.50
W	BMWW-t	MT20	5.0	6.0	2.50	1.75
X	BMV1+p	MT20	3.0	5.0		

October 06, 2021

READ ALL NOTES ON THIS PAGE AND ON THE ENGINEERING NOTE PAGE ENP-1. THE NOTE PAGE IS AN INTEGRAL PART OF THIS DRAWING AS IT CONTAINS SPECIFICATIONS AND CRITERIA USED IN THE DESIGN OF THIS COMPONENT.

DIMENSIONS, SUPPORTS AND LOADINGS SPECIFIED BY FABRICATOR TO BE VERIFIED BY BUILDING DESIGNER

BEARINGS

JT	FACTORED GROSS REACTION VERT	HORZ	MAXIMUM FACTORED GROSS REACTION DOWN	HORZ	UPLIFT	INPUT BRG IN-SX	REQRD BRG IN-SX
X	3509	0	3509	0	0	5-8	4-3
N	3287	0	3287	0	0	5-8	5-3

UNFACTORED REACTIONS

JT	1ST LCASE COMBINED	MAX./MIN. COMPONENT REACTIONS SNOW	LIVE	PERM.LIVE	WIND	DEAD	SOIL
X	2453	1773 / 0	0 / 0	0 / 0	0 / 0	680 / 0	0 / 0
N	2297	1663 / 0	0 / 0	0 / 0	0 / 0	634 / 0	0 / 0

BEARING MATERIAL TO BE SPF NO.2 OR BETTER AT JOINT(S) X, N

BRACING
TOP CHORD TO BE SHEATHED OR MAX. PURLIN SPACING = 2.25 FT.
MAX. UNBRACED BOTTOM CHORD LENGTH = 10.00 FT OR RIGID CEILING DIRECTLY APPLIED.

ALL PITCH BREAKS AND PERIMETER CORNER JOINTS MUST BE LATERALLY RESTRAINED.

LOADING
TOTAL LOAD CASES: (4)

CHORDS

MEMB. FR-TO	MAX. FACTORED FORCE (LBS)	FACTORED VERT. LOAD LC1 FROM (PLF)	TO (PLF)	MAX CSI (LC)	MAX. UNBRAC LENGTH
A- B	0 / 37	-84.3	-84.3	0.13 (1)	10.00
B- C	-3377 / 0	-84.3	-84.3	0.32 (1)	3.53
C- D	-6404 / 0	-84.3	-84.3	0.54 (1)	3.14
D- E	-9484 / 0	-84.3	-84.3	0.91 (1)	2.31
E- F	-9484 / 0	-158.8	-158.8	0.62 (1)	2.45
F- G	-10288 / 0	-158.8	-158.8	0.71 (1)	2.25
G- H	-10288 / 0	-158.8	-158.8	0.71 (1)	2.25
H- I	-10288 / 0	-84.3	-84.3	0.83 (1)	2.25
I- J	-8301 / 0	-84.3	-84.3	0.64 (1)	2.69
J- K	-5589 / 0	-84.3	-84.3	0.38 (1)	3.47
K- L	-3144 / 0	-84.3	-84.3	0.30 (1)	3.67
L- M	0 / 37	-84.3	-84.3	0.13 (1)	10.00
X- B	-3494 / 0	0.0	0.0	0.20 (1)	6.35
N- L	-3270 / 0	0.0	0.0	0.24 (1)	5.81
X- W	0 / 0	-18.2	-18.2	0.04 (4)	10.00
W- V	0 / 2612	-18.2	-18.2	0.38 (1)	10.00
V- U	0 / 6403	-18.2	-18.2	1.00 (1)	10.00
U- T	0 / 6403	-18.3	-18.3	1.00 (1)	10.00
T- S	0 / 10109	-34.4	-34.4	0.60 (1)	10.00
S- R	0 / 8301	-18.2	-18.2	0.48 (1)	10.00
R- Q	0 / 5589	-18.2	-18.2	0.83 (1)	10.00
Q- P	0 / 5589	-18.3	-18.3	0.83 (1)	10.00
P- O	0 / 2432	-18.2	-18.2	0.34 (1)	10.00
O- N	0 / 0	-18.2	-18.2	0.03 (4)	10.00

WEBS

MEMB. FR-TO	MAX. FACTORED FORCE (LBS)	MAX CSI (LC)
W- C	-996 / 0	0.25 (1)
C- V	0 / 4741	0.84 (1)
V- D	-2750 / 0	0.71 (1)
D- T	0 / 3831	0.95 (1)
T- E	-401 / 0	0.10 (1)
T- F	-980 / 0	0.38 (1)
F- S	0 / 280	0.07 (1)
S- H	-395 / 0	0.10 (1)
S- I	0 / 2576	0.64 (1)
R- I	-2027 / 0	0.50 (1)
R- J	0 / 3482	0.86 (1)
P- J	-2590 / 0	0.67 (1)
P- K	0 / 4115	0.73 (1)
O- K	-925 / 0	0.23 (1)
B- W	0 / 2800	0.69 (1)
O- L	0 / 2607	0.65 (1)

FACTORED CONCENTRATED LOADS (LBS)

JT	LOC.	LC1	MAX-	MAX+	FACE	DIR.	TYPE	HEEL	CONN.
S	19-3-0	-313	-350	---	FRONT	VERT	DEAD	---	C1
S	19-3-0	-1040	-1040	---	FRONT	VERT	SNOW	---	C1
T	13-1-0	-244	-273	---	FRONT	VERT	DEAD	---	C1
T	13-1-0	-726	-726	---	FRONT	VERT	SNOW	---	C1

CONNECTION REQUIREMENTS

1) **C1:** A SUITABLE HANGER/MECHANICAL CONNECTION IS REQUIRED.

DESIGN CRITERIA

*** SPECIAL LOADS ANALYSIS ***
GEOMETRY AND/OR BASIC LOADS CHANGED BY USER.
LOADS WERE DERIVED FROM USER INPUT
NO FURTHER MODIFICATIONS WERE MADE

SPECIFIED LOADS:

TOP	CH.	LL	=	25.6	PSF
		DL	=	3.0	PSF
BOT	CH.	LL	=	0.0	PSF
		DL	=	7.3	PSF
TOTAL	LOAD		=	35.9	PSF

SPACING = 24.0 IN. C/C

LOADING IN FLAT SECTION BASED ON A SLOPE OF 6.00/12

*** NON STANDARD GIRDER ***
ADDT'L USER-DEFINED LOADS APPLIED TO ALL LOAD CASES.

THIS TRUSS IS DESIGNED FOR RESIDENTIAL OR SMALL BUILDING REQUIREMENTS OF PART 9, NBCC 2015

THIS DESIGN COMPLIES WITH:
- PART 9 OF BCBC 2018 , ABC 2019
- PART 9 OF OBC 2012 (2019 AMENDMENT)
- CSA 086-14
- TPIC 2014

(55 % OF 31.3 P.S.F. G.S.L. PLUS 8.4 P.S.F. RAIN LOAD) EQUALS 25.6 P.S.F. SPECIFIED ROOF LIVE LOAD

ALLOWABLE DEFL.(LL)= L/360 (1.20")
CALCULATED VERT. DEFL.(LL) = L/ 827 (0.52")
ALLOWABLE DEFL.(TL)= L/360 (1.20")
CALCULATED VERT. DEFL.(TL) = L/ 478 (0.90")

CSI: TC=0.91/1.00 (D-E:1) , BC=1.00/1.00 (T-V:1) , WB=0.95/1.00 (D-T:1) , SSI=0.23/1.00 (F-H:1)

DOL LUMBER=1.00 NAIL=1.00 LS BEND=1.00 COMP=1.00 SHEAR=1.00 TENS= 1.00

COMPANION LIVE LOAD FACTOR = 1.00

TRUSS PLATE MANUFACTURER IS NOT RESPONSIBLE FOR QUALITY CONTROL IN THE TRUSS MANUFACTURING PLANT .

CONTINUED ON PAGE 2

KOTT

JOB NAME	TRUSS NAME	QUANTITY	PLY	JOB DESC.	DRWG NO.
IM1021-033	G02	1	1	TRUSS DESC.	

Version 8.500 S Aug 16 2021 MiTek Industries, Inc. Wed Oct 6 13:04:51 2021 Page 2
ID:Leed7e129lDTMWGQL9?03mzYSEd-VBXraAjK1vM0eoLzrJRC9simdkzMsfnZ_nyDOJyW8LA

Edge - INDICATES REFERENCE CORNER OF PLATE TOUCHES EDGE OF CHORD.

WB - INDICATES BLOCKING REQUIRED

CITY OF RICHMOND HILL
BUILDING DIVISION
09/22/2022
RECEIVED
Per:maddy.toalaalejandro

NAIL VALUES

PLATE	GRIP(DRY) (PSI)		SHEAR (PLI)		SECTION (PLI)	
	MAX	MIN	MAX	MIN	MAX	MIN
MT20	650	371	1747	788	1987	1873

PLATE PLACEMENT TOL. = 0.250 inches

PLATE ROTATION TOL. = 5.0 Deg.

JSI GRIP= 0.90 (D) (INPUT = 0.90)
JSI METAL= 0.94 (U) (INPUT = 1.00)

LICENSED PROFESSIONAL ENGINEER
I.MATIJEVIC
100528832
PROVINCE OF ONTARIO

October 06, 2021

READ ALL NOTES ON THIS PAGE AND ON THE ENGINEERING NOTE PAGE ENP-1. THE NOTE PAGE IS AN INTEGRAL PART OF THIS DRAWING AS IT CONTAINS SPECIFICATIONS AND CRITERIA USED IN THE DESIGN OF THIS COMPONENT.

KOTT

JOB NAME	TRUSS NAME	QUANTITY	PLY	JOB DESC.	DRWG NO.
IM1021-033	GE01	1	1	TRUSS DESC.	

Version 8.500 S Aug 16 2021 MiTek Industries, Inc. Wed Oct 6 13:04:52 2021 Page 1
ID:Leed7e129lDTMWGQL9?03mzYSEd-zN5DnWkyoDUtGywAP1yRh4F4T7XWbGPjDRhmwlyW8L9

CITY OF RICHMOND HILL
BUILDING DIVISION
09/22/2022
RECEIVED
Per:maddy.toalaalejandro

Scale = 1:54.4

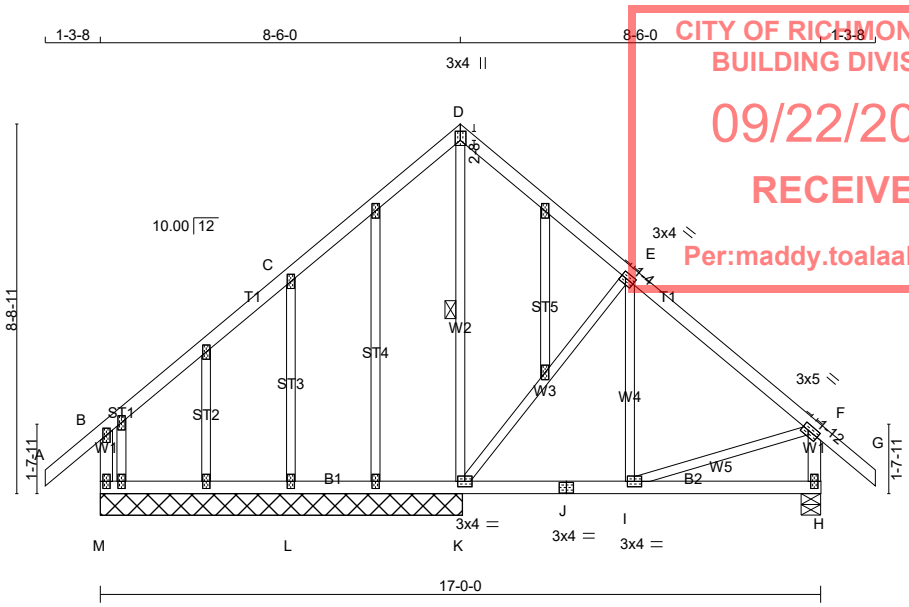

TOTAL WEIGHT = 87 lb

LUMBER
N. L. G. A. RULES

CHORDS	SIZE		LUMBER	DESCR.
A - D	2x4	DRY	No.2	SPF
D - G	2x4	DRY	No.2	SPF
M - B	2x4	DRY	No.2	SPF
H - F	2x4	DRY	No.2	SPF
M - J	2x4	DRY	No.2	SPF
J - H	2x4	DRY	No.2	SPF
ALL WEBS	2x3	DRY	No.2	SPF

EXCEPT

ALL GABLE WEBS
2x3 DRY No.2 SPF
DRY: SEASONED LUMBER.

GABLE STUDS SPACED AT 2-0-0 OC.

PLATES (table is in inches)

JT	TYPE	PLATES	W	LEN	Y	X
B	TMV+p	MT20	2.0	4.0		
C	TMW+w	MT20	2.0	4.0		
D	TTW+p	MT20	3.0	4.0	2.50	1.50
E	TMWW-t	MT20	3.0	4.0	1.50	1.25
F	TMVW-t	MT20	3.0	5.0	1.50	1.75
H	BMV1+p	MT20	2.0	4.0		
I	BMWW-t	MT20	3.0	4.0		
J	BS-t	MT20	3.0	4.0		
K	BMWW1-t	MT20	3.0	4.0		
L	BMW1+w	MT20	2.0	4.0		
M	BMV1+p	MT20	2.0	4.0		
N, O, P, Q, R, S, T, U						
N	NP+w	MT20	2.0	4.0		

LICENSED PROFESSIONAL ENGINEER
I.MATIJEVIC
100528832
PROVINCE OF ONTARIO
October 06, 2021

READ ALL NOTES ON THIS PAGE AND ON THE ENGINEERING NOTE PAGE ENP-1. THE NOTE PAGE IS AN INTEGRAL PART OF THIS DRAWING AS IT CONTAINS SPECIFICATIONS AND CRITERIA USED IN THE DESIGN OF THIS COMPONENT.

DIMENSIONS, SUPPORTS AND LOADINGS SPECIFIED BY FABRICATOR TO BE VERIFIED BY BUILDING DESIGNER

BEARINGS

JT	FACTORED GROSS REACTION VERT	HORZ	MAXIMUM FACTORED GROSS REACTION DOWN	HORZ	UPLIFT	INPUT BRG IN-SX	REQRD BRG IN-SX
M	300	0	300	0	0	8-6-8	1-8
K	671	0	671	0	0	8-6-8	1-8
H	546	0	546	0	0	5-8	1-8
L	586	0	586	0	0	8-6-8	1-8

UNFACTORED REACTIONS

JT	1ST LCASE COMBINED	MAX./MIN. COMPONENT REACTIONS SNOW	LIVE	PERM.LIVE	WIND	DEAD	SOIL
M	208	158 / 0	0 / 0	0 / 0	0 / 0	51 / 0	0 / 0
K	476	304 / 0	0 / 0	0 / 0	0 / 0	172 / 0	0 / 0
H	380	283 / 0	0 / 0	0 / 0	0 / 0	97 / 0	0 / 0
L	415	267 / 0	0 / 0	0 / 0	0 / 0	148 / 0	0 / 0

BEARING MATERIAL TO BE SPF NO.2 OR BETTER AT JOINT(S) M, K, H, L

BRACING
TOP CHORD TO BE SHEATHED OR MAX. PURLIN SPACING = 6.25 FT.
MAX. UNBRACED BOTTOM CHORD LENGTH = 10.00 FT OR RIGID CEILING DIRECTLY APPLIED.

ALL PITCH BREAKS AND PERIMETER CORNER JOINTS MUST BE LATERALLY RESTRAINED.

1 - 1x4 LATERAL BRACE(S) AT 1/ 2 LENGTH OF D-K. DBS = 20-0-0 . CBF = 39 LBS.

DBS = DIAGONAL BRACE SPACING (MAX). CBF = CUMULATIVE BRACING FORCE (PER BRACE). FASTEN LATERAL BRACE(S) USING (0.122"X3") SPIRAL NAILS : 1 NAIL FOR 2x3 BRACE(S), 2 FOR 1x4, 2x4, 2x5, 3 FOR 2x6, 4 FOR 2x8, 5 FOR 2x10, AND 6 FOR 2x12.

END VERTICAL(S) MUST BE SHEATHED OR HAVE BRACES AS INDICATED IN THE MAX. UNBRACED LENGTH COLUMN OF THE TABLE BELOW

LOADING
TOTAL LOAD CASES: (4)

CHORDS

MEMB. FR-TO	MAX. FACTORED FORCE (LBS)	FACTORED VERT. LOAD (PLF) FROM	TO	LC1 MAX CSI (LC)	MAX. UNBRAC LENGTH
A- B	0 / 37	-84.3	-84.3	0.13 (1)	10.00
B- C	0 / 33	-87.6	-95.2	0.33 (1)	10.00
C- D	-20 / 0	-95.2	-102.3	0.32 (1)	6.25
D- E	-16 / 2	-102.3	-84.4	0.30 (1)	6.25
E- F	-261 / 0	-84.3	-84.3	0.30 (1)	6.25
F- G	0 / 37	-84.3	-84.3	0.13 (1)	10.00
M- B	-267 / 0	0.0	0.0	0.03 (1)	7.81
H- F	-512 / 0	0.0	0.0	0.06 (1)	7.81
M- L	0 / 0	-18.2	-18.2	0.10 (4)	10.00
L- K	-9 / 0	-18.2	-18.2	0.10 (4)	10.00
K- J	0 / 223	-18.2	-18.2	0.11 (4)	10.00
J- I	0 / 223	-18.2	-18.2	0.11 (4)	10.00
I- H	0 / 0	-18.2	-18.2	0.09 (4)	10.00

WEBS

MEMB. FR-TO	MAX. FACTORED FORCE (LBS)	MAX CSI (LC)
K- D	-311 / 0	0.15 (1)
K- E	-374 / 0	0.28 (1)
I- E	0 / 81	0.03 (4)
I- F	0 / 232	0.06 (1)
L- C	-497 / 0	0.22 (1)

DESIGN CRITERIA

*** SPECIAL LOADS ANALYSIS ***
GEOMETRY AND/OR BASIC LOADS CHANGED BY USER.
LOADS WERE DERIVED FROM USER INPUT
NO FURTHER MODIFICATIONS WERE MADE

SPECIFIED LOADS:

TOP CH.	LL	=	25.6	PSF
	DL	=	3.0	PSF
BOT CH.	LL	=	0.0	PSF
	DL	=	7.3	PSF
TOTAL LOAD		=	35.9	PSF

SPACING = 24.0 IN. C/C

*** NON STANDARD GIRDER ***
ADDT'L USER-DEFINED LOADS APPLIED TO ALL LOAD CASES.

THIS TRUSS IS DESIGNED FOR RESIDENTIAL OR SMALL BUILDING REQUIREMENTS OF PART 9, NBCC 2015

THIS DESIGN COMPLIES WITH:
- PART 9 OF BCBC 2018 , ABC 2019
- PART 9 OF OBC 2012 (2019 AMENDMENT)
- CSA 086-14
- TPIC 2014

(55 % OF 31.3 P.S.F. G.S.L. PLUS 8.4 P.S.F. RAIN LOAD) EQUALS 25.6 P.S.F. SPECIFIED ROOF LIVE LOAD

ALLOWABLE DEFL.(LL)= L/360 (0.28")
CALCULATED VERT. DEFL.(LL) = L/ 999 (0.00")
ALLOWABLE DEFL.(TL)= L/360 (0.28")
CALCULATED VERT. DEFL.(TL) = L/ 999 (0.01")

CSI: TC=0.33/1.00 (B-C:1) , BC=0.11/1.00 (I-K:4) , WB=0.28/1.00 (E-K:1) , SSI=0.17/1.00 (B-C:1)

DOL LUMBER=1.00 NAIL=1.00 LS BEND=1.00 COMP=1.00 SHEAR=1.00 TENS= 1.00

COMPANION LIVE LOAD FACTOR = 1.00

TRUSS PLATE MANUFACTURER IS NOT RESPONSIBLE FOR QUALITY CONTROL IN THE TRUSS MANUFACTURING PLANT .

NAIL VALUES

PLATE	GRIP(DRY) (PSI) MAX	MIN	SHEAR (PLI) MAX	MIN	SECTION (PLI) MAX	MIN
MT20	650	371	1747	788	1987	1873

CONTINUED ON PAGE 2

KOTT

JOB NAME	TRUSS NAME	QUANTITY	PLY	JOB DESC.	DRWG NO.
IM1021-033	GE01	1	1	TRUSS DESC.	

Version 8.500 S Aug 16 2021 MiTek Industries, Inc. Wed Oct 6 13:04:52 2021 Page 2
ID:Leed7e129lDTMWGQL9?03mzYSEd-zN5DnWkyoDUtGywAP1yRh4F4T7XWbGPjDRhmwlyW8L9

CITY OF RICHMOND HILL
BUILDING DIVISION
09/22/2022
RECEIVED
Per:maddy.toalaalejandro

PLATE PLACEMENT TOL. = 0.250 inches

PLATE ROTATION TOL. = 5.0 Deg.

JSI GRIP= 0.84 (F) (INPUT = 0.90)
JSI METAL= 0.26 (C) (INPUT = 1.00)

LICENSED PROFESSIONAL ENGINEER
I.MATIJEVIC
100528832
PROVINCE OF ONTARIO

October 06, 2021

READ ALL NOTES ON THIS PAGE AND ON THE ENGINEERING NOTE PAGE ENP-1. THE NOTE PAGE IS AN INTEGRAL PART OF THIS DRAWING AS IT CONTAINS SPECIFICATIONS AND CRITERIA USED IN THE DESIGN OF THIS COMPONENT.

KOTT

JOB NAME	TRUSS NAME	QUANTITY	PLY	JOB DESC.	DRWG NO.
IM1021-033	GE02	1	1	TRUSS DESC.	

Version 8.500 S Aug 16 2021 MiTek Industries, Inc. Wed Oct 6 13:04:53 2021 Page 1
ID:Leed7e129lDTMWGQL9?03mzYSEd-SZfb?skaZXdku6VMzkTgEHoJVXuCKlGsS5RKTByW8L8

CITY OF RICHMOND HILL
BUILDING DIVISION
09/22/2022
RECEIVED
Per:maddy.toalaalejandro

Scale = 1:40.5

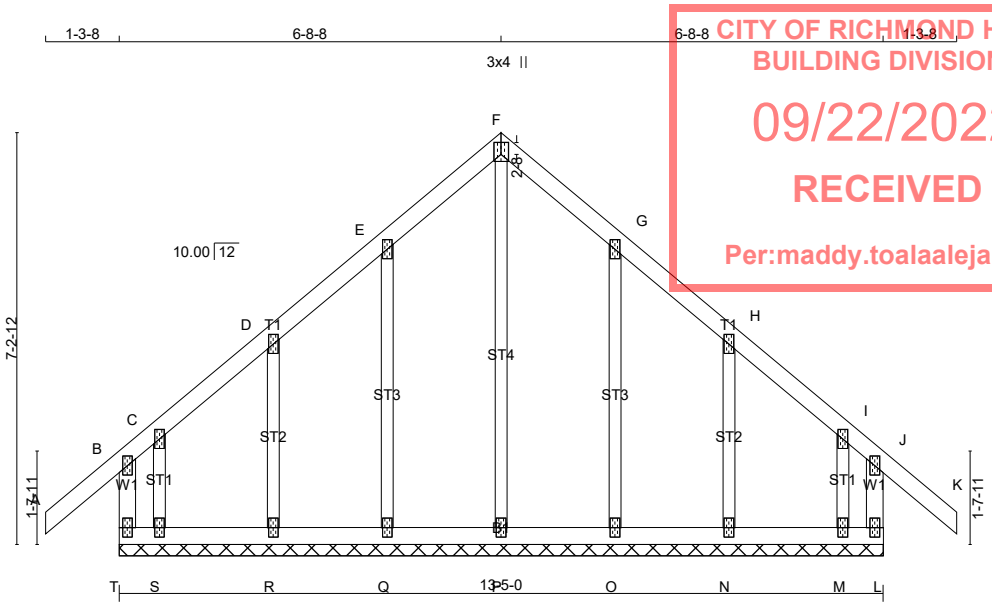

TOTAL WEIGHT = 64 lb

LUMBER
N. L. G. A. RULES

CHORDS	SIZE		LUMBER	DESCR.
T - B	2x4	DRY	No.2	SPF
A - F	2x4	DRY	No.2	SPF
F - K	2x4	DRY	No.2	SPF
L - J	2x4	DRY	No.2	SPF
T - L	2x4	DRY	No.2	SPF
ALL WEBS	2x3	DRY	No.2	SPF
ALL GABLE WEBS	2x3	DRY	No.2	SPF

DRY: SEASONED LUMBER.

GABLE STUDS SPACED AT 2-0-0 OC.

PLATES (table is in inches)

JT	TYPE	PLATES	W	LEN	Y	X
B	TMV+p	MT20	2.0	4.0		
C, D, E, G, H, I						
C	TMW+w	MT20	2.0	4.0		
F	TTW+p	MT20	3.0	4.0	2.50	1.50
J	TMV+p	MT20	2.0	4.0		
L	BMV1+p	MT20	2.0	4.0		
M, N, O, P, Q, R, S						
M	BMW1+w	MT20	2.0	4.0		
T	BMV1+p	MT20	2.0	4.0		

DIMENSIONS, SUPPORTS AND LOADINGS SPECIFIED BY FABRICATOR TO BE VERIFIED BY BUILDING DESIGNER

BEARINGS

THIS TRUSS DESIGNED FOR CONTINUOUS BEARINGS.

THIS TRUSS REQUIRES RIGID SHEATHING ON EXPOSED FACE.

BEARING MATERIAL TO BE SPF NO.2 OR BETTER AT JOINT(S)

BRACING
TOP CHORD TO BE SHEATHED OR MAX. PURLIN SPACING = 6.25 FT.
MAX. UNBRACED BOTTOM CHORD LENGTH = 6.25 FT OR RIGID CEILING DIRECTLY APPLIED.

ALL PITCH BREAKS AND PERIMETER CORNER JOINTS MUST BE LATERALLY RESTRAINED.

LOADING
TOTAL LOAD CASES: (4)

CHORDS

MEMB. FR-TO	MAX. FORCE (LBS)	FACTORED VERT. LOAD (PLF) FROM	TO	LC1 MAX CSI (LC)	MAX. UNBRAC LENGTH
T- B	-206 / 0	0.0	0.0	0.03 (1)	7.81
A- B	0 / 37	-84.3	-84.3	0.12 (1)	10.00
B- C	-34 / 0	-84.3	-84.3	0.08 (1)	6.25
C- D	0 / 18	-84.3	-84.3	0.04 (1)	10.00
D- E	0 / 20	-84.3	-84.3	0.04 (1)	10.00
E- F	0 / 23	-84.3	-84.3	0.05 (1)	10.00
F- G	0 / 23	-84.3	-84.3	0.05 (1)	10.00
G- H	0 / 20	-84.3	-84.3	0.04 (1)	10.00
H- I	0 / 18	-84.3	-84.3	0.04 (1)	10.00
I- J	-34 / 0	-84.3	-84.3	0.08 (1)	6.25
J- K	0 / 37	-84.3	-84.3	0.12 (1)	10.00
L- J	-206 / 0	0.0	0.0	0.03 (1)	7.81
T- S	-9 / 0	-18.2	-18.2	0.01 (4)	10.00
S- R	-11 / 0	-18.2	-18.2	0.02 (4)	6.25
R- Q	-15 / 0	-18.2	-18.2	0.02 (4)	6.25
Q- P	-18 / 0	-18.2	-18.2	0.01 (4)	6.25
P- O	-18 / 0	-18.2	-18.2	0.01 (4)	6.25
O- N	-15 / 0	-18.2	-18.2	0.02 (4)	6.25
N- M	-11 / 0	-18.2	-18.2	0.02 (4)	6.25
M- L	-9 / 0	-18.2	-18.2	0.01 (4)	10.00

WEBS

MEMB. FR-TO	MAX. FORCE (LBS)	MAX CSI (LC)
P- F	-205 / 0	0.18 (1)
Q- E	-172 / 0	0.08 (1)
R- D	-170 / 0	0.04 (1)
S- C	-32 / 0	0.00 (1)
O- G	-172 / 0	0.08 (1)
N- H	-170 / 0	0.04 (1)
M- I	-32 / 0	0.00 (1)

DESIGN CRITERIA

SPECIFIED LOADS:

TOP CH.	LL	=	25.6	PSF	
	DL	=	3.0	PSF	
BOT CH.	LL	=	0.0	PSF	
	DL	=	7.3	PSF	
TOTAL LOAD		=	35.9	PSF	

SPACING = 24.0 IN. C/C

THIS TRUSS IS DESIGNED FOR RESIDENTIAL OR SMALL BUILDING REQUIREMENTS OF PART 9, NBCC 2015

THIS DESIGN COMPLIES WITH:
- PART 9 OF BCBC 2018 , ABC 2019
- PART 9 OF OBC 2012 (2019 AMENDMENT)
- CSA 086-14
- TPIC 2014

DESIGN ASSUMPTIONS
-OVERHANG NOT TO BE ALTERED OR CUT OFF.

(55 % OF 31.3 P.S.F. G.S.L. PLUS 8.4 P.S.F. RAIN LOAD) EQUALS 25.6 P.S.F. SPECIFIED ROOF LIVE LOAD

CSI: TC=0.12/1.00 (A-B:1) , BC=0.02/1.00 (N-O:4) , WB=0.18/1.00 (F-P:1) , SSI=0.07/1.00 (A-B:1)

DOL LUMBER=1.00 NAIL=1.00 LS BEND=1.10 COMP=1.10 SHEAR=1.10 TENS= 1.10

COMPANION LIVE LOAD FACTOR = 1.00

TRUSS PLATE MANUFACTURER IS NOT RESPONSIBLE FOR QUALITY CONTROL IN THE TRUSS MANUFACTURING PLANT .

NAIL VALUES

PLATE	GRIP(DRY) (PSI) MAX	MIN	SHEAR (PLI) MAX	MIN	SECTION (PLI) MAX	MIN
MT20	650	371	1747	788	1987	1873

PLATE PLACEMENT TOL. = 0.250 inches

PLATE ROTATION TOL. = 5.0 Deg.

JSI GRIP= 0.26 (F) (INPUT = 0.90)
JSI METAL= 0.10 (B) (INPUT = 1.00)

LICENSED PROFESSIONAL ENGINEER
I.MATIJEVIC
100528832
PROVINCE OF ONTARIO
October 06, 2021

READ ALL NOTES ON THIS PAGE AND ON THE ENGINEERING NOTE PAGE ENP-1. THE NOTE PAGE IS AN INTEGRAL PART OF THIS DRAWING AS IT CONTAINS SPECIFICATIONS AND CRITERIA USED IN THE DESIGN OF THIS COMPONENT.

KOTT

JOB NAME	TRUSS NAME	QUANTITY	PLY	JOB DESC.	DRWG NO.
IM1021-033	GE03	1	1	TRUSS DESC.	

Version 8.500 S Aug 16 2021 MiTek Industries, Inc. Wed Oct 6 13:04:53 2021 Page 1
ID:Leed7e129lDTMWGQL9?03mzYSEd-SZfb?skaZXdku6VMzkTqEHoJVXuCKmnsS5RKTByW8L8

CITY OF RICHMOND HILL
BUILDING DIVISION
09/22/2022
RECEIVED
Per:maddy.toalaalejandro

Scale = 1:33.2

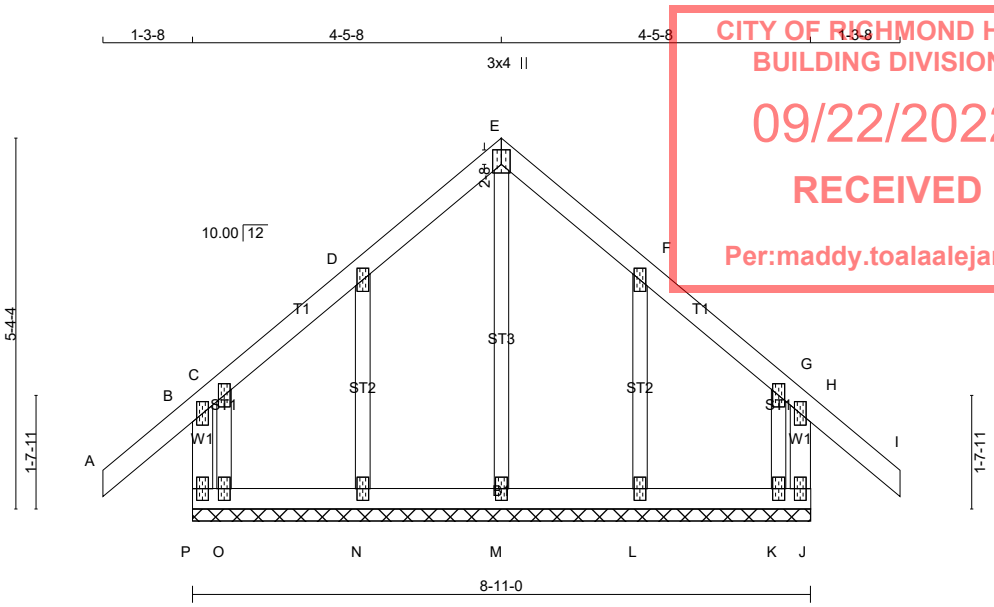

TOTAL WEIGHT = 42 lb

LUMBER
N. L. G. A. RULES

CHORDS	SIZE		LUMBER	DESCR.
P - B	2x4	DRY	No.2	SPF
A - E	2x4	DRY	No.2	SPF
E - I	2x4	DRY	No.2	SPF
J - H	2x4	DRY	No.2	SPF
P - J	2x4	DRY	No.2	SPF
ALL WEBS	2x3	DRY	No.2	SPF
ALL GABLE WEBS	2x3	DRY	No.2	SPF

DRY: SEASONED LUMBER.

GABLE STUDS SPACED AT 2-0-0 OC.

PLATES (table is in inches)

JT	TYPE	PLATES	W	LEN	Y	X
B	TMV+p	MT20	2.0	4.0		
C, D, F, G						
C	TMW+w	MT20	2.0	4.0		
E	TTW+p	MT20	3.0	4.0	2.50	1.50
H	TMV+p	MT20	2.0	4.0		
J	BMV1+p	MT20	2.0	4.0		
K, L, M, N, O						
K	BMW1+w	MT20	2.0	4.0		
P	BMV1+p	MT20	2.0	4.0		

DIMENSIONS, SUPPORTS AND LOADINGS SPECIFIED BY FABRICATOR TO BE VERIFIED BY BUILDING DESIGNER

BEARINGS

THIS TRUSS DESIGNED FOR CONTINUOUS BEARINGS.

THIS TRUSS REQUIRES RIGID SHEATHING ON EXPOSED FACE.

BEARING MATERIAL TO BE SPF NO.2 OR BETTER AT JOINT(S)

BRACING
TOP CHORD TO BE SHEATHED OR MAX. PURLIN SPACING = 6.25 FT.
MAX. UNBRACED BOTTOM CHORD LENGTH = 6.25 FT OR RIGID CEILING DIRECTLY APPLIED.

ALL PITCH BREAKS AND PERIMETER CORNER JOINTS MUST BE LATERALLY RESTRAINED.

LOADING
TOTAL LOAD CASES: (4)

CHORDS

MEMB. FR-TO	MAX. FORCE (LBS)	FACTORED VERT. LOAD (PLF) FROM	TO	LC1 CSI (LC)	MAX UNBRAC LENGTH
P- B	-218 / 0	0.0	0.0	0.03 (1)	7.81
A- B	0 / 37	-84.3	-84.3	0.12 (1)	10.00
B- C	-45 / 0	-84.3	-84.3	0.08 (1)	6.25
C- D	0 / 19	-84.3	-84.3	0.04 (1)	10.00
D- E	0 / 23	-84.3	-84.3	0.05 (1)	10.00
E- F	0 / 23	-84.3	-84.3	0.05 (1)	10.00
F- G	0 / 19	-84.3	-84.3	0.04 (1)	10.00
G- H	-45 / 0	-84.3	-84.3	0.08 (1)	6.25
H- I	0 / 37	-84.3	-84.3	0.12 (1)	10.00
J- H	-218 / 0	0.0	0.0	0.03 (1)	7.81
P- O	-13 / 0	-18.2	-18.2	0.01 (4)	6.25
O- N	-13 / 0	-18.2	-18.2	0.02 (4)	6.25
N- M	-18 / 0	-18.2	-18.2	0.02 (4)	6.25
M- L	-18 / 0	-18.2	-18.2	0.02 (4)	6.25
L- K	-13 / 0	-18.2	-18.2	0.02 (4)	6.25
K- J	-13 / 0	-18.2	-18.2	0.01 (4)	6.25

WEBS

MEMB. FR-TO	MAX. FORCE (LBS)	MAX CSI (LC)
M- E	-205 / 0	0.08 (1)
N- D	-172 / 0	0.04 (1)
O- C	0 / 0	0.00 (1)
L- F	-172 / 0	0.04 (1)
K- G	0 / 0	0.00 (1)

DESIGN CRITERIA

SPECIFIED LOADS:

TOP CH.	LL	=	25.6	PSF	
	DL	=	3.0	PSF	
BOT CH.	LL	=	0.0	PSF	
	DL	=	7.3	PSF	
TOTAL LOAD		=	35.9	PSF	

SPACING = 24.0 IN. C/C

THIS TRUSS IS DESIGNED FOR RESIDENTIAL OR SMALL BUILDING REQUIREMENTS OF PART 9, NBCC 2015

THIS DESIGN COMPLIES WITH:
- PART 9 OF BCBC 2018 , ABC 2019
- PART 9 OF OBC 2012 (2019 AMENDMENT)
- CSA 086-14
- TPIC 2014

DESIGN ASSUMPTIONS
-OVERHANG NOT TO BE ALTERED OR CUT OFF.

(55 % OF 31.3 P.S.F. G.S.L. PLUS 8.4 P.S.F. RAIN LOAD) EQUALS 25.6 P.S.F. SPECIFIED ROOF LIVE LOAD

CSI: TC=0.12/1.00 (H-I:1) , BC=0.02/1.00 (M-N:4) , WB=0.08/1.00 (E-M:1) , SSI=0.07/1.00 (H-I:1)

DOL LUMBER=1.00 NAIL=1.00 LS BEND=1.10 COMP=1.10 SHEAR=1.10 TENS= 1.10

COMPANION LIVE LOAD FACTOR = 1.00

TRUSS PLATE MANUFACTURER IS NOT RESPONSIBLE FOR QUALITY CONTROL IN THE TRUSS MANUFACTURING PLANT .

NAIL VALUES

PLATE	GRIP(DRY) (PSI) MAX	MIN	SHEAR (PLI) MAX	MIN	SECTION (PLI) MAX	MIN
MT20	650	371	1747	788	1987	1873

PLATE PLACEMENT TOL. = 0.250 inches

PLATE ROTATION TOL. = 5.0 Deg.

JSI GRIP= 0.26 (E) (INPUT = 0.90)
JSI METAL= 0.11 (B) (INPUT = 1.00)

LICENSED PROFESSIONAL ENGINEER
I.MATIJEVIC
100528832
PROVINCE OF ONTARIO
October 06, 2021

READ ALL NOTES ON THIS PAGE AND ON THE ENGINEERING NOTE PAGE ENP-1. THE NOTE PAGE IS AN INTEGRAL PART OF THIS DRAWING AS IT CONTAINS SPECIFICATIONS AND CRITERIA USED IN THE DESIGN OF THIS COMPONENT.

KOTT

JOB NAME	TRUSS NAME	QUANTITY	PLY	JOB DESC.	DRWG NO.
IM1021-033	J01	18	1	TRUSS DESC.	

Version 8.500 S Aug 16 2021 MiTek Industries, Inc. Wed Oct 6 13:04:54 2021 Page 1
ID:Leed7e129lDTMWGQL9?03mzYSEd-wmDzCClCKqlbVG4YWS?vnVKN_xCa3DL0glAt?dyW8L7

CITY OF RICHMOND HILL
BUILDING DIVISION
09/22/2022
RECEIVED
Per:maddy.toalaalejandro

Scale: 1/2"=1'

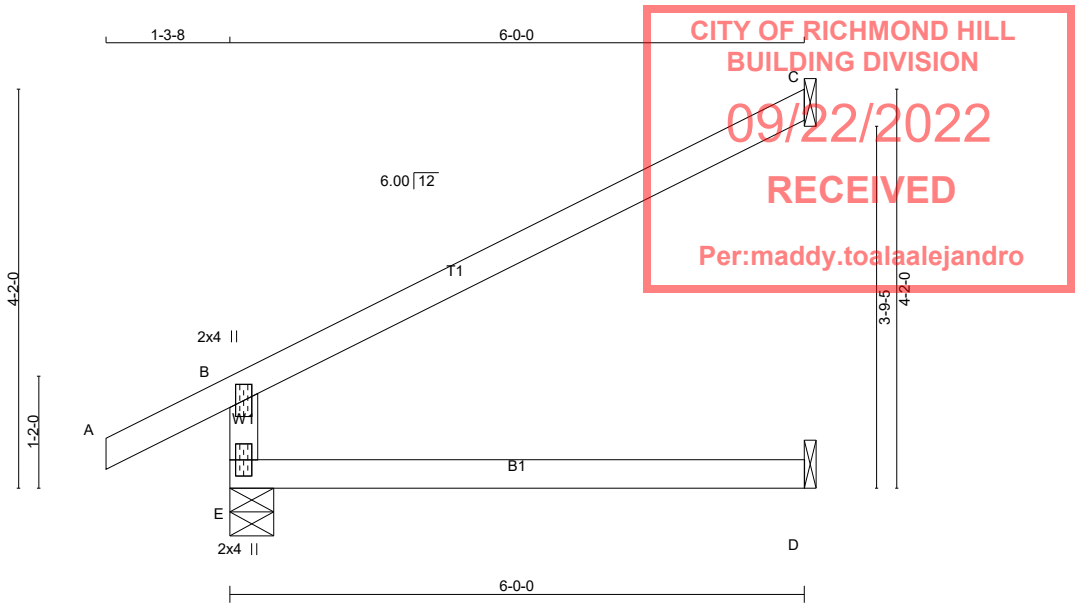

TOTAL WEIGHT = 18 X 17 = 308 lb

[M]

LUMBER
N. L. G. A. RULES

CHORDS	SIZE		LUMBER	DESCR.
E - B	2x4	DRY	No.2	SPF
A - C	2x4	DRY	No.2	SPF
E - D	2x4	DRY	No.2	SPF

DRY: SEASONED LUMBER.

PLATES (table is in inches)

JT	TYPE	PLATES	W	LEN	Y	X
B	TMV+p	MT20	2.0	4.0		
E	BMV1+p	MT20	2.0	4.0		

DIMENSIONS, SUPPORTS AND LOADINGS SPECIFIED BY FABRICATOR TO BE VERIFIED BY BUILDING DESIGNER

BEARINGS

JT	FACTORED GROSS REACTION VERT	HORZ	MAXIMUM FACTORED GROSS REACTION DOWN	HORZ	UPLIFT	INPUT BRG IN-SX	REQRD BRG IN-SX
E	495	0	495	0	0	5-8	1-8
C	190	0	190	0	0	1-8	1-8
D	45	0	51	0	0	1-8	1-8

SEE MITEK STANDARD DETAIL MSD2015-H FOR CONNECTION TO JOINT(S) C , D

UNFACTORED REACTIONS

JT	1ST LCASE COMBINED	MAX./MIN. COMPONENT REACTIONS SNOW	LIVE	PERM.LIVE	WIND	DEAD	SOIL
E	343	261 / 0	0 / 0	0 / 0	0 / 0	82 / 0	0 / 0
C	129	115 / 0	0 / 0	0 / 0	0 / 0	14 / 0	0 / 0
D	36	0 / 0	0 / 0	0 / 0	0 / 0	36 / 0	0 / 0

BEARING MATERIAL TO BE SPF NO.2 OR BETTER AT JOINT(S) E

BRACING
TOP CHORD TO BE SHEATHED OR MAX. PURLIN SPACING = 6.25 FT.
MAX. UNBRACED BOTTOM CHORD LENGTH = 10.00 FT OR RIGID CEILING DIRECTLY APPLIED.

ALL PITCH BREAKS AND PERIMETER CORNER JOINTS MUST BE LATERALLY RESTRAINED.

LOADING
TOTAL LOAD CASES: (4)

CHORDS MEMB. FR-TO	MAX. FACTORED FORCE (LBS)	FACTORED VERT. LOAD (PLF) FROM	TO	LC1 MAX CSI (LC)	MAX. UNBRAC LENGTH	WEBS MEMB. FR-TO	MAX. FACTORED FORCE (LBS)	MAX CSI (LC)
E- B	-430 / 0	0.0	0.0	0.13 (4)	7.81			
A- B	0 / 26	-84.3	-84.3	0.11 (1)	10.00			
B- C	-28 / 0	-84.3	-84.3	0.52 (1)	6.25			
E- D	0 / 0	-18.2	-18.2	0.13 (4)	10.00			

DESIGN CRITERIA

SPECIFIED LOADS:

TOP CH.	LL	=	25.6	PSF
	DL	=	3.0	PSF
BOT CH.	LL	=	0.0	PSF
	DL	=	7.3	PSF
TOTAL LOAD		=	35.9	PSF

SPACING = 24.0 IN. C/C

THIS TRUSS IS DESIGNED FOR RESIDENTIAL OR SMALL BUILDING REQUIREMENTS OF PART 9, NBCC 2015

THIS DESIGN COMPLIES WITH:
- PART 9 OF BCBC 2018 , ABC 2019
- PART 9 OF OBC 2012 (2019 AMENDMENT)
- CSA 086-14
- TPIC 2014

DESIGN ASSUMPTIONS
-OVERHANG NOT TO BE ALTERED OR CUT OFF.

(55 % OF 31.3 P.S.F. G.S.L. PLUS 8.4 P.S.F. RAIN LOAD) EQUALS 25.6 P.S.F. SPECIFIED ROOF LIVE LOAD

ALLOWABLE DEFL.(LL)= L/360 (0.20")
CALCULATED VERT. DEFL.(LL) = L/ 999 (0.00")
ALLOWABLE DEFL.(TL)= L/360 (0.20")
CALCULATED VERT. DEFL.(TL) = L/ 999 (0.03")

CSI: TC=0.52/1.00 (B-C:1) , BC=0.13/1.00 (D-E:4) , WB=0.00/1.00 (n/a:0) , SSI=0.22/1.00 (B-C:1)

DOL LUMBER=1.00 NAIL=1.00 LS BEND=1.10 COMP=1.10 SHEAR=1.10 TENS= 1.10

COMPANION LIVE LOAD FACTOR = 1.00

TRUSS PLATE MANUFACTURER IS NOT RESPONSIBLE FOR QUALITY CONTROL IN THE TRUSS MANUFACTURING PLANT .

NAIL VALUES

PLATE	GRIP(DRY) (PSI) MAX	MIN	SHEAR (PLI) MAX	MIN	SECTION (PLI) MAX	MIN
MT20	650	371	1747	788	1987	1873

PLATE PLACEMENT TOL. = 0.250 inches

PLATE ROTATION TOL. = 5.0 Deg.

JSI GRIP= 0.24 (B) (INPUT = 0.90)
JSI METAL= 0.18 (B) (INPUT = 1.00)

LICENSED PROFESSIONAL ENGINEER
I.MATIJEVIC
100528832
PROVINCE OF ONTARIO
October 06, 2021

READ ALL NOTES ON THIS PAGE AND ON THE ENGINEERING NOTE PAGE ENP-1. THE NOTE PAGE IS AN INTEGRAL PART OF THIS DRAWING AS IT CONTAINS SPECIFICATIONS AND CRITERIA USED IN THE DESIGN OF THIS COMPONENT.

KOTT

JOB NAME	TRUSS NAME	QUANTITY	PLY	JOB DESC.	DRWG NO.
IM1021-033	P01	2	1	TRUSS DESC.	

Version 8.500 S Aug 16 2021 MiTek Industries, Inc. Wed Oct 6 13:04:55 2021 Page 1
ID:Leed7e129lDTMWGQL9?03mzYSEd-OynLQYmq58tS7Qfl49W8JitfGLaOog_9vPwQX4yW8L6

CITY OF RICHMOND HILL
BUILDING DIVISION
09/22/2022
RECEIVED
Per:maddy.toalad@jandro

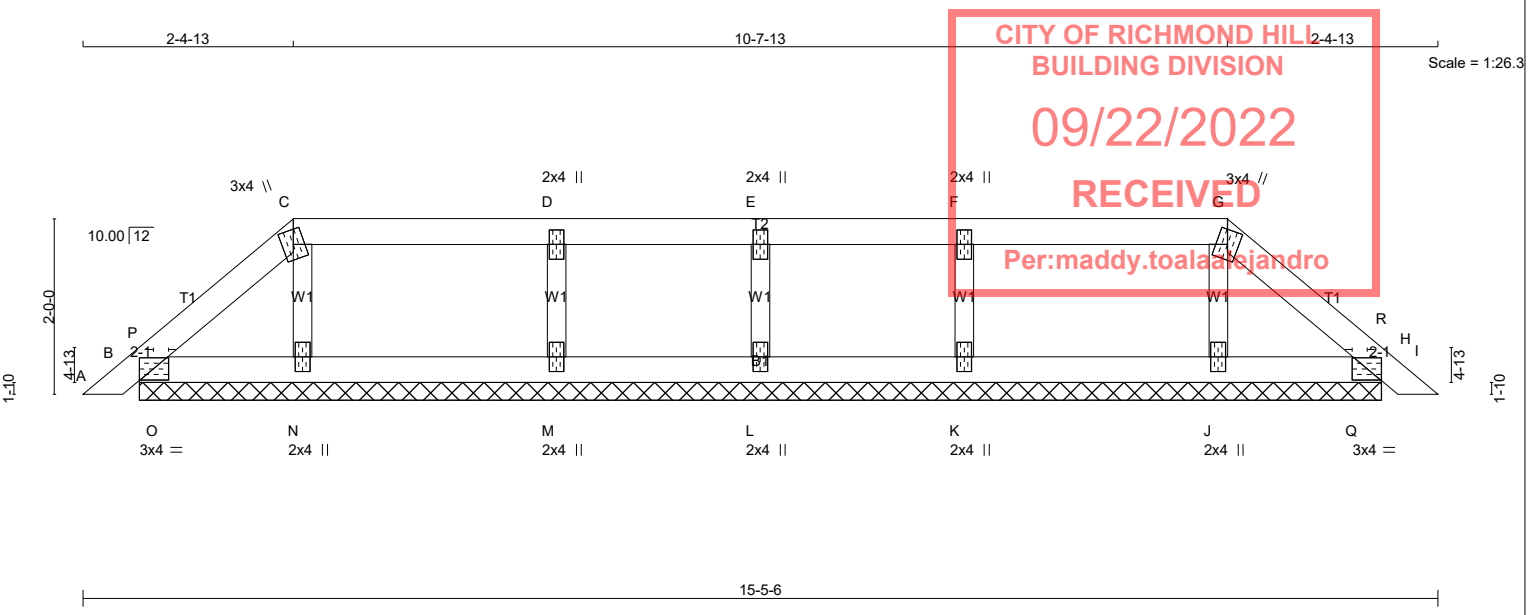

TOTAL WEIGHT = 2 X 41 = 81 lb

LUMBER
N. L. G. A. RULES

CHORDS	SIZE		LUMBER	DESCR.
A - C	2x4	DRY	No.2	SPF
C - G	2x4	DRY	No.2	SPF
G - I	2x4	DRY	No.2	SPF
B - H	2x4	DRY	No.2	SPF
ALL WEBS	2x3	DRY	No.2	SPF

DRY: SEASONED LUMBER.

PLATES (table is in inches)

JT	TYPE	PLATES	W	LEN	Y	X
B	TMB1-I	MT20	3.0	4.0	1.50	2.00
C	TTW+m	MT20	3.0	4.0		
D, E, F						
D	TMW+w	MT20	2.0	4.0		
G	TTW+m	MT20	3.0	4.0		
H	TMB1-I	MT20	3.0	4.0	1.50	2.00
J, K, L, M, N						
J	BMW1+w	MT20	2.0	4.0		

DIMENSIONS, SUPPORTS AND LOADINGS SPECIFIED BY FABRICATOR TO BE VERIFIED BY BUILDING DESIGNER

BEARINGS

JT	FACTORED GROSS REACTION VERT	HORZ	MAXIMUM FACTORED GROSS REACTION DOWN	HORZ	UPLIFT	INPUT BRG IN-SX	REQRD BRG IN-SX
B	153	0	153	0	0	14-1-15	1-8
H	153	0	153	0	0	14-1-15	1-8
N	206	0	206	0	0	14-1-15	1-8
J	206	0	206	0	0	14-1-15	1-8
M	317	0	317	0	0	14-1-15	1-8
K	317	0	317	0	0	14-1-15	1-8
L	192	0	192	0	0	14-1-15	1-8

UNFACTORED REACTIONS

JT	1ST LCASE COMBINED	MAX./MIN. COMPONENT REACTIONS SNOW	LIVE	PERM.LIVE	WIND	DEAD	SOIL
B	105	86 / 0	0 / 0	0 / 0	0 / 0	19 / 0	0 / 0
H	105	86 / 0	0 / 0	0 / 0	0 / 0	19 / 0	0 / 0
N	146	95 / 0	0 / 0	0 / 0	0 / 0	50 / 0	0 / 0
J	146	95 / 0	0 / 0	0 / 0	0 / 0	50 / 0	0 / 0
M	221	162 / 0	0 / 0	0 / 0	0 / 0	59 / 0	0 / 0
K	221	162 / 0	0 / 0	0 / 0	0 / 0	59 / 0	0 / 0
L	135	94 / 0	0 / 0	0 / 0	0 / 0	41 / 0	0 / 0

BEARING MATERIAL TO BE SPF NO.2 OR BETTER AT JOINT(S) B, H, N, J, M, K, L

BRACING
TOP CHORD TO BE SHEATHED OR MAX. PURLIN SPACING = 6.25 FT.
MAX. UNBRACED BOTTOM CHORD LENGTH = 10.00 FT OR RIGID CEILING DIRECTLY APPLIED.

ALL PITCH BREAKS AND PERIMETER CORNER JOINTS MUST BE LATERALLY RESTRAINED.

LOADING
TOTAL LOAD CASES: (4)

CHORDS

MEMB. FR-TO	MAX. FACTORED FORCE (LBS)	FACTORED VERT. LOAD LC1 (PLF) FROM	TO	MAX CSI (LC)	MAX. UNBRAC LENGTH
A- B	0 / 13	-84.3	-84.3	0.02 (1)	10.00
B- P	-24 / 0	-84.3	-84.3	0.01 (1)	6.25
P- C	-38 / 0	-84.3	-84.3	0.03 (1)	6.25
C- D	-18 / 0	-84.3	-84.3	0.10 (1)	6.25
D- E	-18 / 0	-84.3	-84.3	0.10 (1)	6.25
E- F	-18 / 0	-84.3	-84.3	0.10 (1)	6.25
F- G	-18 / 0	-84.3	-84.3	0.10 (1)	6.25
G- R	-38 / 0	-84.3	-84.3	0.03 (1)	6.25
R- H	-24 / 0	-84.3	-84.3	0.01 (1)	6.25
H- I	0 / 13	-84.3	-84.3	0.02 (1)	10.00
B- O	0 / 27	-18.2	-18.2	0.03 (1)	10.00
O- N	0 / 27	-18.2	-18.2	0.03 (1)	10.00
N- M	0 / 18	-18.2	-18.2	0.03 (4)	10.00
M- L	0 / 18	-18.2	-18.2	0.03 (4)	10.00
L- K	0 / 18	-18.2	-18.2	0.03 (4)	10.00
K- J	0 / 18	-18.2	-18.2	0.03 (4)	10.00
J- Q	0 / 27	-18.2	-18.2	0.03 (1)	10.00
Q- H	0 / 27	-18.2	-18.2	0.03 (1)	10.00

WEBS

MEMB. FR-TO	MAX. FACTORED FORCE (LBS)	MAX CSI (LC)
N- C	-140 / 0	0.02 (1)
J- G	-140 / 0	0.02 (1)
M- D	-270 / 0	0.04 (1)
K- F	-270 / 0	0.04 (1)
L- E	-152 / 0	0.02 (1)
O- P	-93 / 0	0.00 (1)
Q- R	-93 / 0	0.00 (1)

DESIGN CRITERIA

SPECIFIED LOADS:

TOP CH.	LL	=	25.6	PSF
	DL	=	3.0	PSF
BOT CH.	LL	=	0.0	PSF
	DL	=	7.3	PSF
TOTAL LOAD		=	35.9	PSF

SPACING = 24.0 IN. C/C

LOADING IN FLAT SECTION BASED ON A SLOPE OF 2.00/12 MINIMUM

THIS TRUSS IS DESIGNED FOR RESIDENTIAL OR SMALL BUILDING REQUIREMENTS OF PART 9, NBCC 2015

THIS DESIGN COMPLIES WITH:
- PART 9 OF BCBC 2018 , ABC 2019
- PART 9 OF OBC 2012 (2019 AMENDMENT)
- CSA 086-14
- TPIC 2014

(55 % OF 31.3 P.S.F. G.S.L. PLUS 8.4 P.S.F. RAIN LOAD) EQUALS 25.6 P.S.F. SPECIFIED ROOF LIVE LOAD

CSI: TC=0.10/1.00 (C-D:1) , BC=0.03/1.00 (J-Q:1) , WB=0.04/1.00 (D-M:1) , SSI=0.12/1.00 (C-D:1)

DOL LUMBER=1.00 NAIL=1.00 LS BEND=1.10 COMP=1.10 SHEAR=1.10 TENS= 1.10

COMPANION LIVE LOAD FACTOR = 1.00

TRUSS PLATE MANUFACTURER IS NOT RESPONSIBLE FOR QUALITY CONTROL IN THE TRUSS MANUFACTURING PLANT .

NAIL VALUES

PLATE	GRIP(DRY) (PSI) MAX	MIN	SHEAR (PLI) MAX	MIN	SECTION (PLI) MAX	MIN
MT20	650	371	1747	788	1987	1873

PLATE PLACEMENT TOL. = 0.250 inches

PLATE ROTATION TOL. = 5.0 Deg.

JSI GRIP= 0.20 (C) (INPUT = 0.90)
JSI METAL= 0.06 (D) (INPUT = 1.00)

LICENSED PROFESSIONAL ENGINEER
I.MATIJEVIC
100528832
PROVINCE OF ONTARIO
October 06, 2021

READ ALL NOTES ON THIS PAGE AND ON THE ENGINEERING NOTE PAGE ENP-1. THE NOTE PAGE IS AN INTEGRAL PART OF THIS DRAWING AS IT CONTAINS SPECIFICATIONS AND CRITERIA USED IN THE DESIGN OF THIS COMPONENT.

KOTT

JOB NAME	TRUSS NAME	QUANTITY	PLY	JOB DESC.	DRWG NO.
IM1021-033	P02	2	1	TRUSS DESC.	

Version 8.500 S Aug 16 2021 MiTek Industries, Inc. Wed Oct 6 13:04:57 2021 Page 1
ID:Leed7e129lDTMWGQL9?03mzYSEd-KLu6rEo5dl7AMjp7CaYcO7y?V8FqGaRSMjPXcyyW8L4

CITY OF RICHMOND HILL
BUILDING DIVISION
09/22/2022
RECEIVED
Per:maddy.toalaalejandro

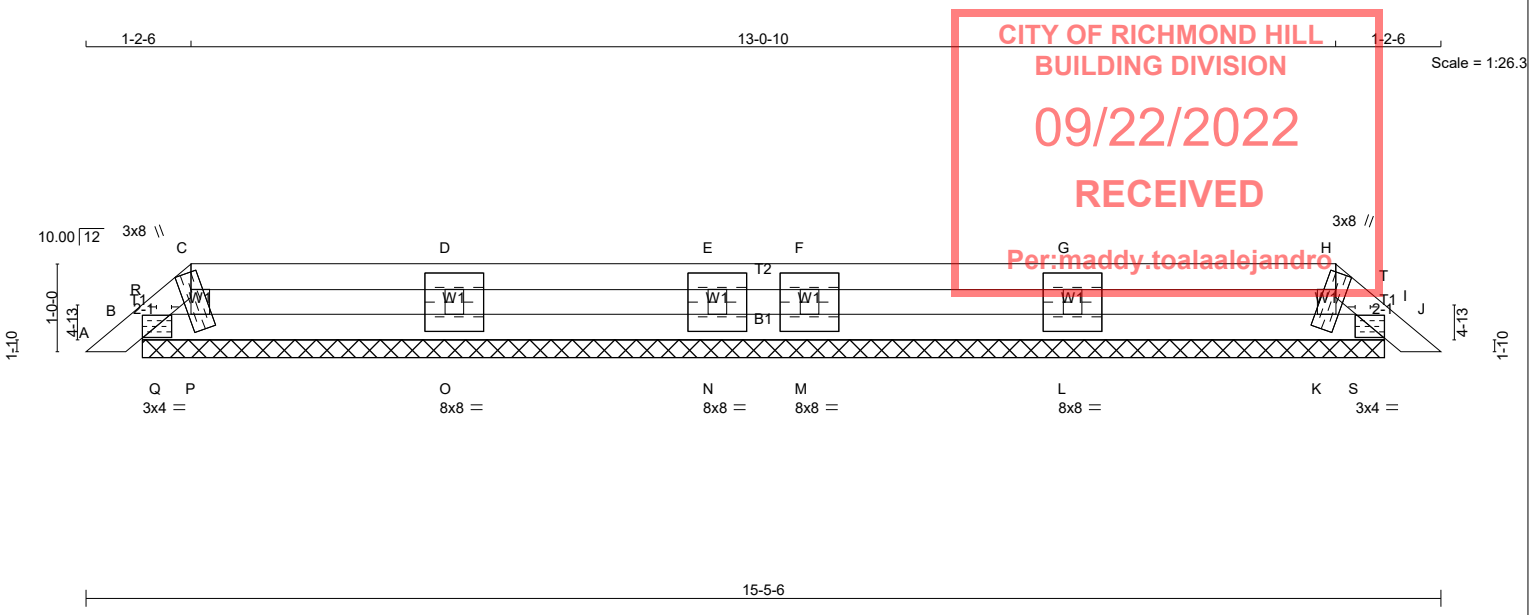

TOTAL WEIGHT = 2 X 36 = 72 lb

[M]

LUMBER

N. L. G. A. RULES

CHORDS	SIZE		LUMBER	DESCR.
A - C	2x4	DRY	No.2	SPF
C - H	2x4	DRY	No.2	SPF
H - J	2x4	DRY	No.2	SPF
B - I	2x4	DRY	No.2	SPF
ALL WEBS	2x3	DRY	No.2	SPF

DRY: SEASONED LUMBER.

PLATES (table is in inches)

JT	TYPE	PLATES	W	LEN	Y	X
B	TMB1-I	MT20	3.0	4.0	1.50	2.00
C, D, E, F, G, H, K, L, M, N, O, P						
C						
C	TTBW1*+m	MT20	3.0	8.0	Edge	
H	TTBW1*+m	MT20	3.0	8.0	Edge	
I	TMB1-I	MT20	3.0	4.0	1.50	2.00
L, M, N, O						
L	TMBMW1-I	MT20	8.0	8.0		

Edge - INDICATES REFERENCE CORNER OF PLATE TOUCHES EDGE OF CHORD.

DIMENSIONS, SUPPORTS AND LOADINGS SPECIFIED BY FABRICATOR TO BE VERIFIED BY BUILDING DESIGNER

BEARINGS

JT	FACTORED GROSS REACTION VERT	HORZ	MAXIMUM FACTORED GROSS REACTION DOWN	HORZ	UPLIFT	INPUT BRG IN-SX	REQRD BRG IN-SX
B	100	0	100	0	0	14-1-15	1-8
I	100	0	100	0	0	14-1-15	1-8
P	128	0	128	0	0	14-1-15	1-8
O	355	0	355	0	0	14-1-15	1-8
N	190	0	190	0	0	14-1-15	1-8
M	190	0	190	0	0	14-1-15	1-8
L	355	0	355	0	0	14-1-15	1-8
K	128	0	128	0	0	14-1-15	1-8

UNFACTORED REACTIONS

JT	1ST LCASE COMBINED	MAX./MIN. COMPONENT REACTIONS SNOW	LIVE	PERM.LIVE	WIND	DEAD	SOIL
B	66	66 / 0	0 / 0	0 / 0	0 / 0	0 / 0	0 / 0
I	66	66 / 0	0 / 0	0 / 0	0 / 0	0 / 0	0 / 0
P	93	50 / 0	0 / 0	0 / 0	0 / 0	42 / 0	0 / 0
O	248	180 / 0	0 / 0	0 / 0	0 / 0	67 / 0	0 / 0
N	133	94 / 0	0 / 0	0 / 0	0 / 0	39 / 0	0 / 0
M	133	94 / 0	0 / 0	0 / 0	0 / 0	39 / 0	0 / 0
L	248	180 / 0	0 / 0	0 / 0	0 / 0	67 / 0	0 / 0
K	93	50 / 0	0 / 0	0 / 0	0 / 0	42 / 0	0 / 0

BEARING MATERIAL TO BE SPF NO.2 OR BETTER AT JOINT(S) B, I, P, O, N, M, L, K

BRACING

TOP CHORD TO BE SHEATHED OR MAX. PURLIN SPACING = 6.25 FT.
MAX. UNBRACED BOTTOM CHORD LENGTH = 10.00 FT OR RIGID CEILING DIRECTLY APPLIED.

ALL PITCH BREAKS AND PERIMETER CORNER JOINTS MUST BE LATERALLY RESTRAINED.

LOADING

TOTAL LOAD CASES: (4)

CHORDS MEMB. FR-TO	MAX. FACTORED FORCE (LBS)	FACTORED VERT. LOAD (PLF) FROM	TO	LC1 MAX CSI (LC)	MAX. UNBRAC LENGTH	WEBS MEMB.	MAX. FACTORED FORCE (LBS)	MAX CSI (LC)
A- B	0 / 13	-84.3	-84.3	0.02 (1)	10.00	P- C	-79 / 0	0.01 (1)
B- R	-42 / 3	-84.3	-84.3	0.02 (1)	6.25	O- D	-297 / 0	0.04 (1)
R- C	-34 / 0	-84.3	-84.3	0.01 (1)	6.25	N- E	-155 / 0	0.02 (1)
C- D	0 / 0	-84.3	-84.3	0.12 (1)	10.00	M- F	-155 / 0	0.02 (1)
D- E	0 / 0	-84.3	-84.3	0.12 (1)	10.00	L- G	-297 / 0	0.04 (1)
E- F	0 / 0	-84.3	-84.3	0.05 (1)	10.00	K- H	-79 / 0	0.01 (1)
F- G	0 / 0	-84.3	-84.3	0.12 (1)	10.00	Q- R	-16 / 0	0.00 (1)
G- H	0 / 0	-84.3	-84.3	0.12 (1)	10.00	S- T	-16 / 0	0.00 (1)
H- T	-34 / 0	-84.3	-84.3	0.01 (1)	6.25			
T- I	-42 / 3	-84.3	-84.3	0.02 (1)	6.25			
I- J	0 / 13	-84.3	-84.3	0.02 (1)	10.00			
B- Q	0 / 15	-18.2	-18.2	0.00 (1)	10.00			
Q- P	0 / 15	-18.2	-18.2	0.02 (4)	10.00			
P- O	0 / 0	-18.2	-18.2	0.04 (4)	10.00			
O- N	0 / 0	-18.2	-18.2	0.04 (4)	10.00			
N- M	0 / 0	-18.2	-18.2	0.02 (4)	10.00			
M- L	0 / 0	-18.2	-18.2	0.04 (4)	10.00			
L- K	0 / 0	-18.2	-18.2	0.04 (4)	10.00			
K- S	0 / 15	-18.2	-18.2	0.02 (4)	10.00			
S- I	0 / 15	-18.2	-18.2	0.00 (1)	10.00			

DESIGN CRITERIA

SPECIFIED LOADS:

TOP CH.	LL	=	25.6	PSF
	DL	=	3.0	PSF
BOT CH.	LL	=	0.0	PSF
	DL	=	7.3	PSF
TOTAL LOAD		=	35.9	PSF

SPACING = 24.0 IN. C/C

LOADING IN FLAT SECTION BASED ON A SLOPE OF 2.00/12 MINIMUM

THIS TRUSS IS DESIGNED FOR RESIDENTIAL OR SMALL BUILDING REQUIREMENTS OF PART 9, NBCC 2015

THIS DESIGN COMPLIES WITH:
- PART 9 OF BCBC 2018 , ABC 2019
- PART 9 OF OBC 2012 (2019 AMENDMENT)
- CSA 086-14
- TPIC 2014

DESIGN ASSUMPTIONS
-OVERHANG NOT TO BE ALTERED OR CUT OFF.

(55 % OF 31.3 P.S.F. G.S.L. PLUS 8.4 P.S.F. RAIN LOAD) EQUALS 25.6 P.S.F. SPECIFIED ROOF LIVE LOAD

CSI: TC=0.12/1.00 (C-D:1) , BC=0.04/1.00 (L-M:4) , WB=0.04/1.00 (D-O:1) , SSI=0.12/1.00 (C-D:1)

DOL LUMBER=1.00 NAIL=1.00 LS BEND=1.10 COMP=1.10 SHEAR=1.10 TENS= 1.10

COMPANION LIVE LOAD FACTOR = 1.00

TRUSS PLATE MANUFACTURER IS NOT RESPONSIBLE FOR QUALITY CONTROL IN THE TRUSS MANUFACTURING PLANT .

NAIL VALUES

PLATE	GRIP(DRY) (PSI) MAX	MIN	SHEAR (PLI) MAX	MIN	SECTION (PLI) MAX	MIN
MT20	650	371	1747	788	1987	1873

PLATE PLACEMENT TOL. = 0.250 inches

PLATE ROTATION TOL. = 5.0 Deg.

JSI GRIP= 0.19 (H) (INPUT = 0.90)
JSI METAL= 0.02 (O) (INPUT = 1.00)

LICENSED PROFESSIONAL ENGINEER
I.MATIJEVIC
100528832
PROVINCE OF ONTARIO
October 06, 2021

READ ALL NOTES ON THIS PAGE AND ON THE ENGINEERING NOTE PAGE ENP-1. THE NOTE PAGE IS AN INTEGRAL PART OF THIS DRAWING AS IT CONTAINS SPECIFICATIONS AND CRITERIA USED IN THE DESIGN OF THIS COMPONENT.

KOTT

JOB NAME	TRUSS NAME	QUANTITY	PLY	JOB DESC.	DRWG NO.
IM1021-033	T01	4	1	TRUSS DESC.	

Version 8.500 S Aug 16 2021 MiTek Industries, Inc. Wed Oct 6 13:04:58 2021 Page 1
ID:Leed7e129lDTMWGQL9?03mzYSEd-oXSU2ZojO3F1 tOKIH3rxLV?NYW1?ugbbN858PyW8L3

CITY OF RICHMOND HILL
BUILDING DIVISION
09/22/2022
RECEIVED
Per:maddy.toalaalejandro

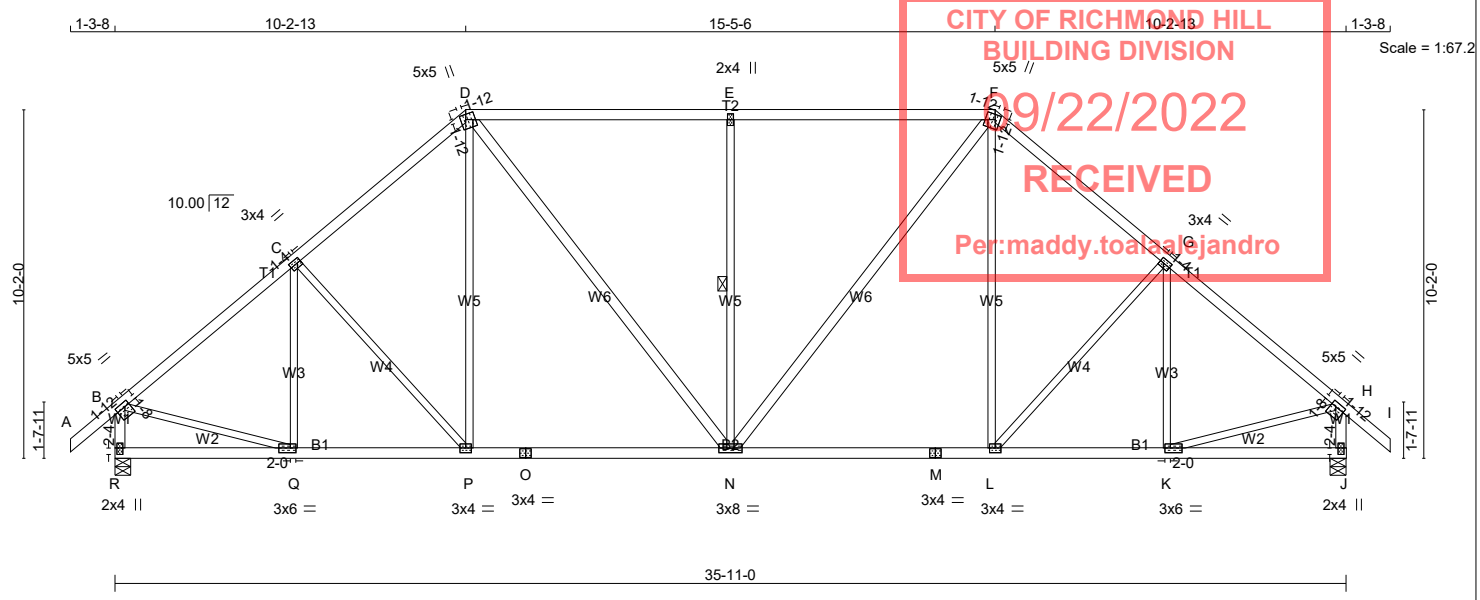

TOTAL WEIGHT = 4 X 176 = 704 lb

LUMBER
N. L. G. A. RULES

CHORDS	SIZE		LUMBER	DESCR.
A - D	2x4	DRY	No.2	SPF
D - F	2x4	DRY	No.2	SPF
F - I	2x4	DRY	No.2	SPF
R - B	2x4	DRY	No.2	SPF
J - H	2x4	DRY	No.2	SPF
R - O	2x4	DRY	No.2	SPF
O - M	2x4	DRY	No.2	SPF
M - J	2x4	DRY	No.2	SPF
ALL WEBS EXCEPT	2x3	DRY	No.2	SPF
D - N	2x4	DRY	No.2	SPF
N - F	2x4	DRY	No.2	SPF

DRY: SEASONED LUMBER.

PLATES (table is in inches)

JT	TYPE	PLATES	W	LEN	Y	X
B	TMVW-t	MT20	5.0	5.0	1.50	1.75
C	TMWW-t	MT20	3.0	4.0	1.50	1.25
D	TTWW+m	MT20	5.0	5.0	1.75	1.75
E	TMW+w	MT20	2.0	4.0		
F	TTWW+m	MT20	5.0	5.0	1.75	1.75
G	TMWW-t	MT20	3.0	4.0	1.50	1.25
H	TMVW-t	MT20	5.0	5.0	1.50	1.75
J	BMV1+p	MT20	2.0	4.0	2.25	1.00
K	BMWW-t	MT20	3.0	6.0	1.50	2.00
L	BMWW-t	MT20	3.0	4.0		
M	BS-t	MT20	3.0	4.0		
N	BMWWW-t	MT20	3.0	8.0		
O	BS-t	MT20	3.0	4.0		
P	BMWW-t	MT20	3.0	4.0		
Q	BMWW-t	MT20	3.0	6.0	1.50	2.00
R	BMV1+p	MT20	2.0	4.0	2.25	1.00

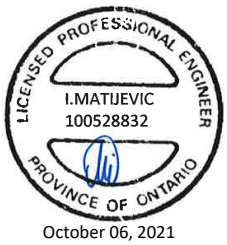

October 06, 2021

READ ALL NOTES ON THIS PAGE AND ON THE ENGINEERING NOTE PAGE ENP-1. THE NOTE PAGE IS AN INTEGRAL PART OF THIS DRAWING AS IT CONTAINS SPECIFICATIONS AND CRITERIA USED IN THE DESIGN OF THIS COMPONENT.

DIMENSIONS, SUPPORTS AND LOADINGS SPECIFIED BY FABRICATOR TO BE VERIFIED BY BUILDING DESIGNER

BEARINGS

JT	FACTORED GROSS REACTION VERT	HORZ	MAXIMUM FACTORED GROSS REACTION DOWN	HORZ	UPLIFT	INPUT BRG IN-SX	REQRD BRG IN-SX
R	2015	0	2015	0	0	5-8	3-1
J	2015	0	2015	0	0	5-8	3-1

UNFACTORED REACTIONS

JT	1ST LCASE COMBINED	MAX./MIN. COMPONENT REACTIONS SNOW	LIVE	PERM.LIVE	WIND	DEAD	SOIL
R	1414	990 / 0	0 / 0	0 / 0	0 / 0	425 / 0	0 / 0
J	1414	990 / 0	0 / 0	0 / 0	0 / 0	425 / 0	0 / 0

BEARING MATERIAL TO BE SPF NO.2 OR BETTER AT JOINT(S) R, J

BRACING
FOR SECTION D-F, MAX. PURLIN SPACING = 2.00 FT.
FOR OTHER SECTIONS, TOP CHORD TO BE SHEATHED OR MAX. PURLIN SPACING = 4.46 FT.
MAX. UNBRACED BOTTOM CHORD LENGTH = 10.00 FT OR RIGID CEILING DIRECTLY APPLIED.

ALL PITCH BREAKS AND PERIMETER CORNER JOINTS MUST BE LATERALLY RESTRAINED.

1 - 1x4 LATERAL BRACE(S) AT 1/ 2 LENGTH OF E-N. DBS = 20-0-0 . CBF = 109 LBS.

DBS = DIAGONAL BRACE SPACING (MAX). CBF = CUMULATIVE BRACING FORCE (PER BRACE). FASTEN LATERAL BRACE(S) USING (0.122"X3") SPIRAL NAILS : 1 NAIL FOR 2x3 BRACE(S), 2 FOR 1x4, 2x4, 2x5, 3 FOR 2x6, 4 FOR 2x8, 5 FOR 2x10, AND 6 FOR 2x12.

END VERTICAL(S) MUST BE SHEATHED OR HAVE BRACES AS INDICATED IN THE MAX. UNBRACED LENGTH COLUMN OF THE TABLE BELOW

LOADING
TOTAL LOAD CASES: (4)

CHORDS

MEMB. FR-TO	MAX. FACTORED FORCE (LBS)	FACTORED VERT. LOAD (PLF) FROM	TO	LC1 MAX CSI (LC)	MAX. UNBRAC LENGTH
A- B	0 / 37	-84.3	-84.3	0.12 (1)	10.00
B- C	-1996 / 0	-84.3	-84.3	0.37 (1)	4.46
C- D	-1902 / 0	-84.3	-84.3	0.35 (1)	4.56
D- E	-1834 / 0	-91.8	-91.8	0.81 (1)	2.00
E- F	-1834 / 0	-91.8	-91.8	0.81 (1)	2.00
F- G	-1902 / 0	-84.3	-84.3	0.35 (1)	4.56
G- H	-1996 / 0	-84.3	-84.3	0.37 (1)	4.46
H- I	0 / 37	-84.3	-84.3	0.12 (1)	10.00
R- B	-1974 / 0	0.0	0.0	0.21 (1)	6.00
J- H	-1974 / 0	0.0	0.0	0.21 (1)	6.00
R- Q	0 / 0	-18.2	-18.2	0.10 (4)	10.00
Q- P	0 / 1558	-18.2	-18.2	0.34 (1)	10.00
P- O	0 / 1435	-18.2	-18.2	0.36 (1)	10.00
O- N	0 / 1435	-18.2	-18.2	0.36 (1)	10.00
N- M	0 / 1435	-18.2	-18.2	0.36 (1)	10.00
M- L	0 / 1435	-18.2	-18.2	0.36 (1)	10.00
L- K	0 / 1558	-18.2	-18.2	0.34 (1)	10.00
K- J	0 / 0	-18.2	-18.2	0.10 (4)	10.00

WEBS

MEMB. FR-TO	MAX. FACTORED FORCE (LBS)	MAX CSI (LC)
Q- C	-296 / 0	0.16 (1)
C- P	-188 / 0	0.22 (1)
P- D	0 / 259	0.06 (1)
D- N	0 / 647	0.10 (1)
N- E	-872 / 0	0.62 (1)
N- F	0 / 647	0.10 (1)
L- F	0 / 259	0.06 (1)
L- G	-188 / 0	0.22 (1)
K- G	-296 / 0	0.16 (1)
B- Q	0 / 1606	0.36 (1)
K- H	0 / 1606	0.36 (1)

[M][F]

DESIGN CRITERIA

SPECIFIED LOADS:

TOP CH.	LL	=	25.6	PSF
	DL	=	3.0	PSF
BOT CH.	LL	=	0.0	PSF
	DL	=	7.3	PSF
TOTAL LOAD		=	35.9	PSF

SPACING = 24.0 IN. C/C

LOADING IN FLAT SECTION BASED ON PIGGYBACK TRUSS WITH SLOPES OF 10.00/12 AND -10.00/12 AND RESPECTIVE HEEL HEIGHTS OF 0-0 AND 0-0 AND AN ADDITIONAL DEAD LOAD OF 3.0 P.S.F.

THIS TRUSS IS DESIGNED FOR RESIDENTIAL OR SMALL BUILDING REQUIREMENTS OF PART 9, NBCC 2015

THIS DESIGN COMPLIES WITH:
- PART 9 OF BCBC 2018 , ABC 2019
- PART 9 OF OBC 2012 (2019 AMENDMENT)
- CSA 086-14
- TPIC 2014

(55 % OF 31.3 P.S.F. G.S.L. PLUS 8.4 P.S.F. RAIN LOAD) EQUALS 25.6 P.S.F. SPECIFIED ROOF LIVE LOAD

ALLOWABLE DEFL.(LL)= L/360 (1.20")
CALCULATED VERT. DEFL.(LL) = L/ 999 (0.08")
ALLOWABLE DEFL.(TL)= L/360 (1.20")
CALCULATED VERT. DEFL.(TL) = L/ 999 (0.18")

CSI: TC=0.81/1.00 (D-E:1) , BC=0.36/1.00 (N-P:1) , WB=0.62/1.00 (E-N:1) , SSI=0.34/1.00 (D-E:1)

DOL LUMBER=1.00 NAIL=1.00 LS BEND=1.10 COMP=1.10 SHEAR=1.10 TENS= 1.10

COMPANION LIVE LOAD FACTOR = 1.00

TRUSS PLATE MANUFACTURER IS NOT RESPONSIBLE FOR QUALITY CONTROL IN THE TRUSS MANUFACTURING PLANT .

NAIL VALUES

PLATE	GRIP(DRY) (PSI) MAX	MIN	SHEAR (PLI) MAX	MIN	SECTION (PLI) MAX	MIN
MT20	650	371	1747	788	1987	1873

PLATE PLACEMENT TOL. = 0.250 inches

PLATE ROTATION TOL. = 5.0 Deg.

CONTINUED ON PAGE 2

KOTT

JOB NAME	TRUSS NAME	QUANTITY	PLY	JOB DESC.	DRWG NO.
IM1021-033	T01	4	1	TRUSS DESC.	

Version 8.500 S Aug 16 2021 MiTek Industries, Inc. Wed Oct 6 13:04:58 2021 Page 2
ID:Leed7e129lDTMWGQL9?03mzYSEd-oXSU2ZojO3F1_tOKlH3rxLV?NYW1?ugbbN858PyW8L3

JSI GRIP= 0.89 (D) (INPUT = 0.90)
JSI METAL= 0.63 (H) (INPUT = 1.00)

CITY OF RICHMOND HILL
BUILDING DIVISION
09/22/2022
RECEIVED
Per:maddy.toalaalejandro

LICENSED PROFESSIONAL ENGINEER
I.MATIJEVIC
100528832
PROVINCE OF ONTARIO
October 06, 2021

READ ALL NOTES ON THIS PAGE AND ON THE ENGINEERING NOTE PAGE ENP-1. THE NOTE PAGE IS AN INTEGRAL PART OF THIS DRAWING AS IT CONTAINS SPECIFICATIONS AND CRITERIA USED IN THE DESIGN OF THIS COMPONENT.

KOTT

JOB NAME	TRUSS NAME	QUANTITY	PLY	JOB DESC.	DRWG NO.
IM1021-033	T02	2	1	TRUSS DESC.	

Version 8.500 S Aug 16 2021 MiTek Industries, Inc. Wed Oct 6 13:04:59 2021 Page 1
ID:Leed7e129lDTMWGQL9?03mzYSEd-Gj0sFvpL9NNuc1zWJ?a4TY2AAysPkMjlq1uegryW8L2

CITY OF RICHMOND HILL
BUILDING DIVISION
09/22/2022
RECEIVED
Per:maddy.toalaalejandro

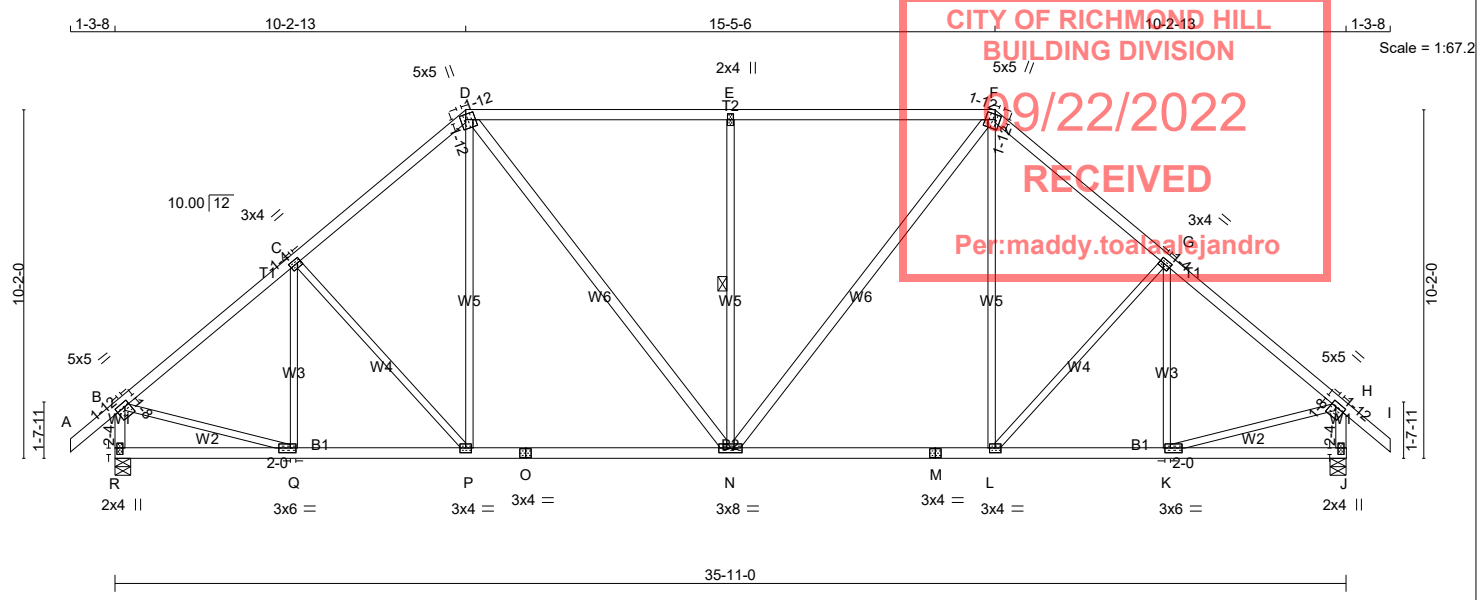

TOTAL WEIGHT = 2 X 176 = 352 lb

[M][F]

LUMBER

N. L. G. A. RULES

CHORDS	SIZE		LUMBER	DESCR.
A - D	2x4	DRY	No.2	SPF
D - F	2x4	DRY	No.2	SPF
F - I	2x4	DRY	No.2	SPF
R - B	2x4	DRY	No.2	SPF
J - H	2x4	DRY	No.2	SPF
R - O	2x4	DRY	No.2	SPF
O - M	2x4	DRY	No.2	SPF
M - J	2x4	DRY	No.2	SPF
ALL WEBS	2x3	DRY	No.2	SPF
EXCEPT				
D - N	2x4	DRY	No.2	SPF
N - F	2x4	DRY	No.2	SPF

DRY: SEASONED LUMBER.

PLATES (table is in inches)

JT	TYPE	PLATES	W	LEN	Y	X
B	TMVW-t	MT20	5.0	5.0	1.50	1.75
C	TMWW-t	MT20	3.0	4.0	1.50	1.25
D	TTWW+m	MT20	5.0	5.0	1.75	1.75
E	TMW+w	MT20	2.0	4.0		
F	TTWW+m	MT20	5.0	5.0	1.75	1.75
G	TMWW-t	MT20	3.0	4.0	1.50	1.25
H	TMVW-t	MT20	5.0	5.0	1.50	1.75
J	BMV1+p	MT20	2.0	4.0	2.25	1.00
K	BMWW-t	MT20	3.0	6.0	1.50	2.00
L	BMWW-t	MT20	3.0	4.0		
M	BS-t	MT20	3.0	4.0		
N	BMWWW-t	MT20	3.0	8.0		
O	BS-t	MT20	3.0	4.0		
P	BMWW-t	MT20	3.0	4.0		
Q	BMWW-t	MT20	3.0	6.0	1.50	2.00
R	BMV1+p	MT20	2.0	4.0	2.25	1.00

October 06, 2021

READ ALL NOTES ON THIS PAGE AND ON THE ENGINEERING NOTE PAGE ENP-1. THE NOTE PAGE IS AN INTEGRAL PART OF THIS DRAWING AS IT CONTAINS SPECIFICATIONS AND CRITERIA USED IN THE DESIGN OF THIS COMPONENT.

DIMENSIONS, SUPPORTS AND LOADINGS SPECIFIED BY FABRICATOR TO BE VERIFIED BY BUILDING DESIGNER

BEARINGS

JT	FACTORED GROSS REACTION VERT	HORZ	MAXIMUM FACTORED GROSS REACTION DOWN	HORZ	UPLIFT	INPUT BRG IN-SX	REQRD BRG IN-SX
R	1957	0	1957	0	0	5-8	2-14
J	1957	0	1957	0	0	5-8	2-14

UNFACTORED REACTIONS

JT	1ST LCASE COMBINED	MAX./MIN. COMPONENT REACTIONS SNOW	LIVE	PERM.LIVE	WIND	DEAD	SOIL
R	1368	990 / 0	0 / 0	0 / 0	0 / 0	378 / 0	0 / 0
J	1368	990 / 0	0 / 0	0 / 0	0 / 0	378 / 0	0 / 0

BEARING MATERIAL TO BE SPF NO.2 OR BETTER AT JOINT(S) R, J

BRACING

TOP CHORD TO BE SHEATHED OR MAX. PURLIN SPACING = 4.02 FT.
MAX. UNBRACED BOTTOM CHORD LENGTH = 10.00 FT OR RIGID CEILING DIRECTLY APPLIED.

ALL PITCH BREAKS AND PERIMETER CORNER JOINTS MUST BE LATERALLY RESTRAINED.

1 - 1x4 LATERAL BRACE(S) AT 1/ 2 LENGTH OF E-N. DBS = 20-0-0 . CBF = 100 LBS.

DBS = DIAGONAL BRACE SPACING (MAX). CBF = CUMULATIVE BRACING FORCE (PER BRACE). FASTEN LATERAL BRACE(S) USING (0.122"X3") SPIRAL NAILS : 1 NAIL FOR 2x3 BRACE(S), 2 FOR 1x4, 2x4, 2x5, 3 FOR 2x6, 4 FOR 2x8, 5 FOR 2x10, AND 6 FOR 2x12.

END VERTICAL(S) MUST BE SHEATHED OR HAVE BRACES AS INDICATED IN THE MAX. UNBRACED LENGTH COLUMN OF THE TABLE BELOW

LOADING

TOTAL LOAD CASES: (4)

CHORDS

MEMB. FR-TO	MAX. FACTORED FORCE (LBS)	FACTORED VERT. LOAD LC1 (PLF) FROM	TO	MAX CSI (LC)	MAX. UNBRAC LENGTH
A- B	0 / 37	-84.3	-84.3	0.12 (1)	10.00
B- C	-1926 / 0	-84.3	-84.3	0.36 (1)	4.53
C- D	-1823 / 0	-84.3	-84.3	0.34 (1)	4.64
D- E	-1746 / 0	-84.3	-84.3	0.74 (1)	4.02
E- F	-1746 / 0	-84.3	-84.3	0.74 (1)	4.02
F- G	-1823 / 0	-84.3	-84.3	0.34 (1)	4.64
G- H	-1926 / 0	-84.3	-84.3	0.36 (1)	4.53
H- I	0 / 37	-84.3	-84.3	0.12 (1)	10.00
R- B	-1916 / 0	0.0	0.0	0.20 (1)	6.07
J- H	-1916 / 0	0.0	0.0	0.20 (1)	6.07
R- Q	0 / 0	-18.2	-18.2	0.10 (4)	10.00
Q- P	0 / 1505	-18.2	-18.2	0.33 (1)	10.00
P- O	0 / 1374	-18.2	-18.2	0.35 (1)	10.00
O- N	0 / 1374	-18.2	-18.2	0.35 (1)	10.00
N- M	0 / 1374	-18.2	-18.2	0.35 (1)	10.00
M- L	0 / 1374	-18.2	-18.2	0.35 (1)	10.00
L- K	0 / 1505	-18.2	-18.2	0.33 (1)	10.00
K- J	0 / 0	-18.2	-18.2	0.10 (4)	10.00

WEBS

MEMB. FR-TO	MAX. FACTORED FORCE (LBS)	MAX CSI (LC)
Q- C	-282 / 4	0.16 (1)
C- P	-198 / 0	0.23 (1)
P- D	0 / 266	0.06 (1)
D- N	0 / 602	0.10 (1)
N- E	-801 / 0	0.57 (1)
N- F	0 / 602	0.10 (1)
L- F	0 / 266	0.06 (1)
L- G	-198 / 0	0.23 (1)
K- G	-282 / 4	0.16 (1)
B- Q	0 / 1551	0.35 (1)
K- H	0 / 1551	0.35 (1)

DESIGN CRITERIA

SPECIFIED LOADS:

TOP CH.	LL	=	25.6	PSF
	DL	=	3.0	PSF
BOT CH.	LL	=	0.0	PSF
	DL	=	7.3	PSF
TOTAL LOAD		=	35.9	PSF

SPACING = 24.0 IN. C/C

LOADING IN FLAT SECTION BASED ON A SLOPE OF 6.00/12

THIS TRUSS IS DESIGNED FOR RESIDENTIAL OR SMALL BUILDING REQUIREMENTS OF PART 9, NBCC 2015

THIS DESIGN COMPLIES WITH:
- PART 9 OF BCBC 2018 , ABC 2019
- PART 9 OF OBC 2012 (2019 AMENDMENT)
- CSA 086-14
- TPIC 2014

(55 % OF 31.3 P.S.F. G.S.L. PLUS 8.4 P.S.F. RAIN LOAD) EQUALS 25.6 P.S.F. SPECIFIED ROOF LIVE LOAD

ALLOWABLE DEFL.(LL)= L/360 (1.20")
CALCULATED VERT. DEFL.(LL) = L/ 999 (0.08")
ALLOWABLE DEFL.(TL)= L/360 (1.20")
CALCULATED VERT. DEFL.(TL) = L/ 999 (0.17")

CSI: TC=0.74/1.00 (D-E:1) , BC=0.35/1.00 (L-N:1) , WB=0.57/1.00 (E-N:1) , SSI=0.32/1.00 (D-E:1)

DOL LUMBER=1.00 NAIL=1.00 LS BEND=1.10 COMP=1.10 SHEAR=1.10 TENS= 1.10

COMPANION LIVE LOAD FACTOR = 1.00

TRUSS PLATE MANUFACTURER IS NOT RESPONSIBLE FOR QUALITY CONTROL IN THE TRUSS MANUFACTURING PLANT .

NAIL VALUES

PLATE	GRIP(DRY) (PSI) MAX	MIN	SHEAR (PLI) MAX	MIN	SECTION (PLI) MAX	MIN
MT20	650	371	1747	788	1987	1873

PLATE PLACEMENT TOL. = 0.250 inches

PLATE ROTATION TOL. = 5.0 Deg.

JSI GRIP= 0.86 (B) (INPUT = 0.90)
JSI METAL= 0.61 (H) (INPUT = 1.00)

KOTT

JOB NAME	TRUSS NAME	QUANTITY	PLY	JOB DESC.	DRWG NO.
IM1021-033	T03	2	1	TRUSS DESC.	

Version 8.500 S Aug 16 2021 MiTek Industries, Inc. Wed Oct 6 13:05:00 2021 Page 1
ID:Leed7e129lDTMWGQL9?03mzYSEd-kwaETFqzvgVlDBXiti5J0maNzMAoTlBu3hdBCHyW8L1

CITY OF RICHMOND HILL
BUILDING DIVISION
09/22/2022
RECEIVED
Per:maddy.toalaalejandro

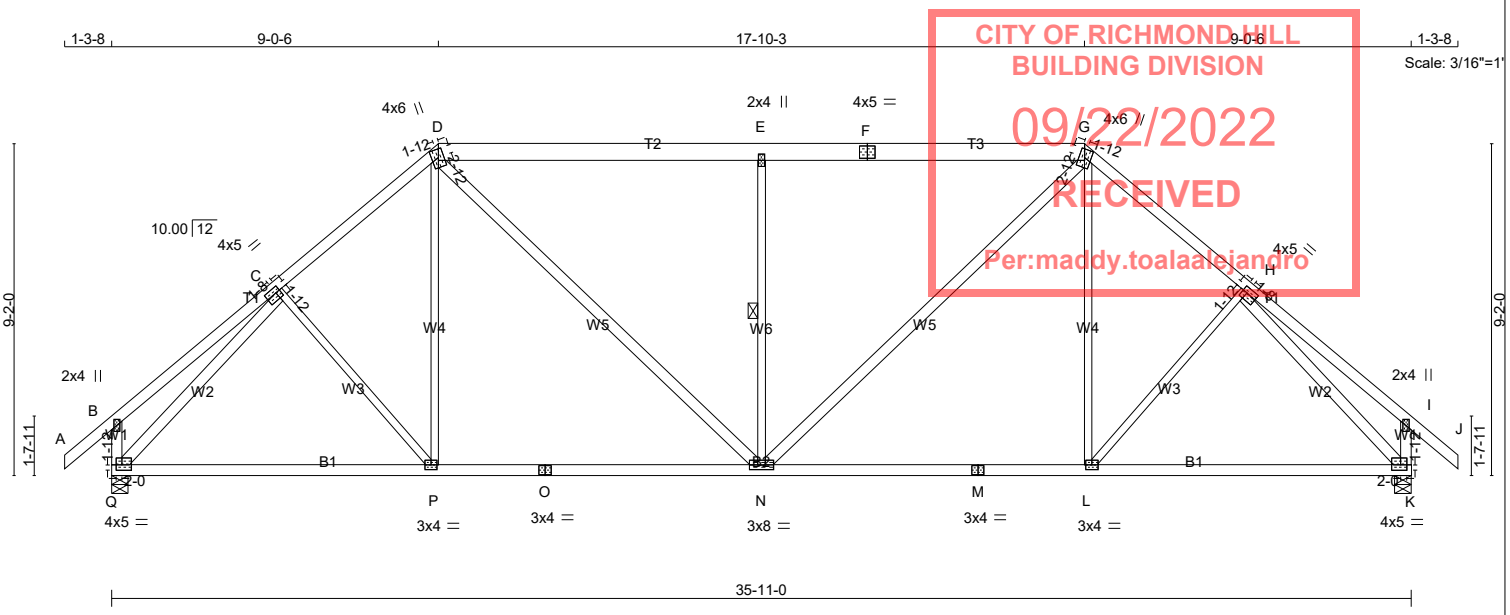

TOTAL WEIGHT = 2 X 180 = 361 lb

LUMBER
N. L. G. A. RULES

CHORDS	SIZE		LUMBER	DESCR.
A - D	2x4	DRY	No.2	SPF
D - F	2x6	DRY	No.2	SPF
F - G	2x6	DRY	No.2	SPF
G - J	2x4	DRY	No.2	SPF
Q - B	2x4	DRY	No.2	SPF
K - I	2x4	DRY	No.2	SPF
Q - O	2x4	DRY	No.2	SPF
O - M	2x4	DRY	No.2	SPF
M - K	2x4	DRY	No.2	SPF
ALL WEBS	2x3	DRY	No.2	SPF
EXCEPT				
D - N	2x4	DRY	No.2	SPF
N - G	2x4	DRY	No.2	SPF
Q - C	2x4	DRY	2100F 1.8E	SPF
H - K	2x4	DRY	2100F 1.8E	SPF

DRY: SEASONED LUMBER.

PLATES (table is in inches)

JT	TYPE	PLATES	W	LEN	Y	X
B	TMV+p	MT20	2.0	4.0		
C	TMWW-t	MT20	4.0	5.0	1.75	1.50
D	TTWW+m	MT20	4.0	6.0	2.75	1.75
E	TMW+w	MT20	2.0	4.0		
F	TS-t	MT20	4.0	5.0		
G	TTWW+m	MT20	4.0	6.0	2.75	1.75
H	TMWW-t	MT20	4.0	5.0	1.75	1.50
I	TMV+p	MT20	2.0	4.0		
K	BMVW1-t	MT20	4.0	5.0	1.75	2.00
L	BMWW-t	MT20	3.0	4.0		
M	BS-t	MT20	3.0	4.0		
N	BMWWW-t	MT20	3.0	8.0		
O	BS-t	MT20	3.0	4.0		
P	BMWW-t	MT20	3.0	4.0		
Q	BMVW1-t	MT20	4.0	5.0	1.75	2.00

LICENSED PROFESSIONAL ENGINEER
I.MATIJEVIC
100528832
PROVINCE OF ONTARIO
October 06, 2021

READ ALL NOTES ON THIS PAGE AND ON THE ENGINEERING NOTE PAGE ENP-1. THE NOTE PAGE IS AN INTEGRAL PART OF THIS DRAWING AS IT CONTAINS SPECIFICATIONS AND CRITERIA USED IN THE DESIGN OF THIS COMPONENT.

DIMENSIONS, SUPPORTS AND LOADINGS SPECIFIED BY FABRICATOR TO BE VERIFIED BY BUILDING DESIGNER

BEARINGS

JT	FACTORED GROSS REACTION VERT	HORZ	MAXIMUM FACTORED GROSS REACTION DOWN	HORZ	UPLIFT	INPUT BRG IN-SX	REQRD BRG IN-SX
Q	1957	0	1957	0	0	5-8	2-2
K	1957	0	1957	0	0	5-8	2-2

UNFACTORED REACTIONS

JT	1ST LCASE COMBINED	MAX./MIN. COMPONENT REACTIONS SNOW	LIVE	PERM.LIVE	WIND	DEAD	SOIL
Q	1368	990 / 0	0 / 0	0 / 0	0 / 0	378 / 0	0 / 0
K	1368	990 / 0	0 / 0	0 / 0	0 / 0	378 / 0	0 / 0

BEARING MATERIAL TO BE SPF NO.2 OR BETTER AT JOINT(S) Q, K

BRACING
TOP CHORD TO BE SHEATHED OR MAX. PURLIN SPACING = 4.53 FT.
MAX. UNBRACED BOTTOM CHORD LENGTH = 10.00 FT OR RIGID CEILING DIRECTLY APPLIED.

ALL PITCH BREAKS AND PERIMETER CORNER JOINTS MUST BE LATERALLY RESTRAINED.

1 - 1x4 LATERAL BRACE(S) AT 1/ 2 LENGTH OF E-N. DBS = 20-0-0 . CBF = 118 LBS.

DBS = DIAGONAL BRACE SPACING (MAX). CBF = CUMULATIVE BRACING FORCE (PER BRACE). FASTEN LATERAL BRACE(S) USING (0.122"X3") SPIRAL NAILS : 1 NAIL FOR 2x3 BRACE(S), 2 FOR 1x4, 2x4, 2x5, 3 FOR 2x6, 4 FOR 2x8, 5 FOR 2x10, AND 6 FOR 2x12.

END VERTICAL(S) MUST BE SHEATHED OR HAVE BRACES AS INDICATED IN THE MAX. UNBRACED LENGTH COLUMN OF THE TABLE BELOW

LOADING
TOTAL LOAD CASES: (4)

CHORDS

MEMB. FR-TO	MAX. FACTORED FORCE (LBS)	FACTORED VERT. LOAD LC1 (PLF) FROM	TO	MAX CSI (LC)	MAX. UNBRAC LENGTH
A- B	0 / 37	-84.3	-84.3	0.12 (1)	10.00
B- C	0 / 29	-84.3	-84.3	0.28 (1)	10.00
C- D	-1887 / 0	-84.3	-84.3	0.37 (1)	4.53
D- E	-1984 / 0	-84.3	-84.3	0.61 (1)	4.88
E- F	-1983 / 0	-84.3	-84.3	0.61 (1)	4.88
F- G	-1983 / 0	-84.3	-84.3	0.61 (1)	4.88
G- H	-1887 / 0	-84.3	-84.3	0.37 (1)	4.53
H- I	0 / 29	-84.3	-84.3	0.28 (1)	10.00
I- J	0 / 37	-84.3	-84.3	0.12 (1)	10.00
Q- B	-261 / 0	0.0	0.0	0.03 (1)	7.81
K- I	-261 / 0	0.0	0.0	0.03 (1)	7.81
Q- P	0 / 1452	-18.2	-18.2	0.46 (4)	10.00
P- O	0 / 1429	-18.2	-18.2	0.47 (4)	10.00
O- N	0 / 1429	-18.2	-18.2	0.47 (4)	10.00
N- M	0 / 1429	-18.2	-18.2	0.47 (4)	10.00
M- L	0 / 1429	-18.2	-18.2	0.47 (4)	10.00
L- K	0 / 1452	-18.2	-18.2	0.46 (4)	10.00

WEBS

MEMB. FR-TO	MAX. FACTORED FORCE (LBS)	MAX CSI (LC)
C- P	-31 / 52	0.03 (1)
D- P	0 / 210	0.06 (4)
D- N	0 / 780	0.13 (1)
N- E	-941 / 0	0.49 (1)
N- G	0 / 780	0.13 (1)
L- G	0 / 210	0.06 (4)
L- H	-31 / 52	0.03 (1)
Q- C	-2184 / 0	0.81 (1)
H- K	-2184 / 0	0.81 (1)

[M]

DESIGN CRITERIA

SPECIFIED LOADS:

TOP CH.	LL	=	25.6	PSF
	DL	=	3.0	PSF
BOT CH.	LL	=	0.0	PSF
	DL	=	7.3	PSF
TOTAL LOAD		=	35.9	PSF

SPACING = 24.0 IN. C/C

LOADING IN FLAT SECTION BASED ON A SLOPE OF 6.00/12

THIS TRUSS IS DESIGNED FOR RESIDENTIAL OR SMALL BUILDING REQUIREMENTS OF PART 9, NBCC 2015

THIS DESIGN COMPLIES WITH:
- PART 9 OF BCBC 2018 , ABC 2019
- PART 9 OF OBC 2012 (2019 AMENDMENT)
- CSA 086-14
- TPIC 2014

(55 % OF 31.3 P.S.F. G.S.L. PLUS 8.4 P.S.F. RAIN LOAD) EQUALS 25.6 P.S.F. SPECIFIED ROOF LIVE LOAD

ALLOWABLE DEFL.(LL)= L/360 (1.20")
CALCULATED VERT. DEFL.(LL) = L/ 999 (0.08")
ALLOWABLE DEFL.(TL)= L/360 (1.20")
CALCULATED VERT. DEFL.(TL) = L/ 999 (0.19")

CSI: TC=0.61/1.00 (D-E:1) , BC=0.47/1.00 (L-N:4) , WB=0.81/1.00 (C-Q:1) , SSI=0.28/1.00 (E-G:1)

DOL LUMBER=1.00 NAIL=1.00 LS BEND=1.10 COMP=1.10 SHEAR=1.10 TENS= 1.10

COMPANION LIVE LOAD FACTOR = 1.00

AUTOSOLVE HEELS OFF

TRUSS PLATE MANUFACTURER IS NOT RESPONSIBLE FOR QUALITY CONTROL IN THE TRUSS MANUFACTURING PLANT .

NAIL VALUES

PLATE	GRIP(DRY) (PSI) MAX	MIN	SHEAR (PLI) MAX	MIN	SECTION (PLI) MAX	MIN
MT20	650	371	1747	788	1987	1873

PLATE PLACEMENT TOL. = 0.250 inches

PLATE ROTATION TOL. = 5.0 Deg.

JSI GRIP= 0.90 (H) (INPUT = 0.90)
JSI METAL= 0.59 (C) (INPUT = 1.00)

KOTT

JOB NAME	TRUSS NAME	QUANTITY	PLY	JOB DESC.	DRWG NO.
IM1021-033	T04	2	1	TRUSS DESC.	

Version 8.500 S Aug 16 2021 MiTek Industries, Inc. Wed Oct 6 13:05:01 2021 Page 1
ID:Leed7e129IDTMWGQL9?03mzYSEd-D68dgbrbg_dcrL6uRQdYZz7YxmXwCCV2HLNIlkyW8L0

CITY OF RICHMOND HILL
BUILDING DIVISION
09/22/2022
RECEIVED
Per:maddy.toalaalejandra

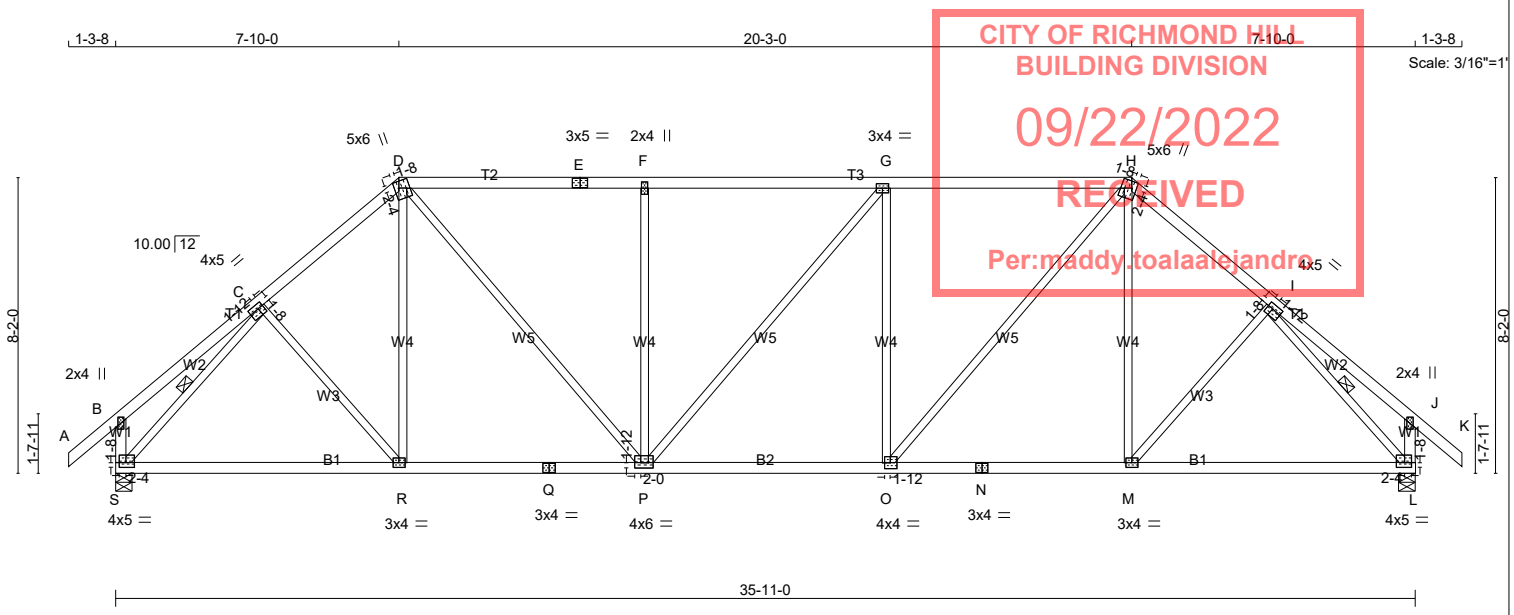

TOTAL WEIGHT = 2 X 162 = 324 lb

LUMBER
N. L. G. A. RULES

CHORDS	SIZE		LUMBER	DESCR.
A - D	2x4	DRY	No.2	SPF
D - E	2x4	DRY	No.2	SPF
E - H	2x4	DRY	2100F 1.8E	SPF
H - K	2x4	DRY	No.2	SPF
S - B	2x4	DRY	No.2	SPF
L - J	2x4	DRY	No.2	SPF
S - Q	2x4	DRY	No.2	SPF
Q - N	2x4	DRY	No.2	SPF
N - L	2x4	DRY	No.2	SPF
ALL WEBS EXCEPT	2x3	DRY	No.2	SPF

DRY: SEASONED LUMBER.

PLATES (table is in inches)

JT	TYPE	PLATES	W	LEN	Y	X
B	TMV+p	MT20	2.0	4.0		
C	TMWW-t	MT20	4.0	5.0	1.50	1.75
D	TTWW+m	MT20	5.0	6.0	2.25	1.50
E	TS-t	MT20	3.0	5.0		
F	TMW+w	MT20	2.0	4.0		
G	TMWW-t	MT20	3.0	4.0		
H	TTWW+m	MT20	5.0	6.0	2.25	1.50
I	TMWW-t	MT20	4.0	5.0	1.50	1.75
J	TMV+p	MT20	2.0	4.0		
L	BMVW1-t	MT20	4.0	5.0	1.50	2.25
M	BMWW-t	MT20	3.0	4.0		
N	BS-t	MT20	3.0	4.0		
O	BMWW-t	MT20	4.0	4.0	2.00	1.75
P	BMWWW-t	MT20	4.0	6.0	1.75	2.00
Q	BS-t	MT20	3.0	4.0		
R	BMWW-t	MT20	3.0	4.0		
S	BMVW1-t	MT20	4.0	5.0	1.50	2.25

LICENSED PROFESSIONAL ENGINEER
I.MATIJEVIC
100528832
PROVINCE OF ONTARIO
October 06, 2021

READ ALL NOTES ON THIS PAGE AND ON THE ENGINEERING NOTE PAGE ENP-1. THE NOTE PAGE IS AN INTEGRAL PART OF THIS DRAWING AS IT CONTAINS SPECIFICATIONS AND CRITERIA USED IN THE DESIGN OF THIS COMPONENT.

DIMENSIONS, SUPPORTS AND LOADINGS SPECIFIED BY FABRICATOR TO BE VERIFIED BY BUILDING DESIGNER

BEARINGS

JT	FACTORED GROSS REACTION VERT	HORZ	MAXIMUM FACTORED GROSS REACTION DOWN	HORZ	UPLIFT	INPUT BRG IN-SX	REQRD BRG IN-SX
S	1957	0	1957	0	0	5-8	2-2
L	1957	0	1957	0	0	5-8	2-2

UNFACTORED REACTIONS

JT	1ST LCASE COMBINED	MAX./MIN. COMPONENT REACTIONS SNOW	LIVE	PERM.LIVE	WIND	DEAD	SOIL
S	1368	990 / 0	0 / 0	0 / 0	0 / 0	378 / 0	0 / 0
L	1368	990 / 0	0 / 0	0 / 0	0 / 0	378 / 0	0 / 0

BEARING MATERIAL TO BE SPF NO.2 OR BETTER AT JOINT(S) S, L

BRACING
TOP CHORD TO BE SHEATHED OR MAX. PURLIN SPACING = 4.11 FT.
MAX. UNBRACED BOTTOM CHORD LENGTH = 10.00 FT OR RIGID CEILING DIRECTLY APPLIED.

ALL PITCH BREAKS AND PERIMETER CORNER JOINTS MUST BE LATERALLY RESTRAINED.

1 - 1x4 LATERAL BRACE(S) AT 1/ 2 LENGTH OF C-S, I-L. DBS = 14-0-0 . CBF = 190 LBS.

DBS = DIAGONAL BRACE SPACING (MAX). CBF = CUMULATIVE BRACING FORCE (PER BRACE). FASTEN LATERAL BRACE(S) USING (0.122"X3") SPIRAL NAILS : 1 NAIL FOR 2x3 BRACE(S), 2 FOR 1x4, 2x4, 2x5, 3 FOR 2x6, 4 FOR 2x8, 5 FOR 2x10, AND 6 FOR 2x12.

END VERTICAL(S) MUST BE SHEATHED OR HAVE BRACES AS INDICATED IN THE MAX. UNBRACED LENGTH COLUMN OF THE TABLE BELOW

LOADING
TOTAL LOAD CASES: (4)

CHORDS

MEMB. FR-TO	MAX. FACTORED FORCE (LBS)	FACTORED VERT. LOAD (PLF) FROM	TO	LC1 CSI (LC)	MAX UNBRAC LENGTH
A- B	0 / 37	-84.3	-84.3	0.12 (1)	10.00
B- C	0 / 23	-84.3	-84.3	0.19 (1)	10.00
C- D	-1914 / 0	-84.3	-84.3	0.26 (1)	4.62
D- E	-2083 / 0	-84.3	-84.3	0.60 (1)	4.11
E- F	-2083 / 0	-84.3	-84.3	0.60 (1)	4.11
F- G	-2083 / 0	-84.3	-84.3	0.43 (1)	5.13
G- H	-2080 / 0	-84.3	-84.3	0.41 (1)	5.17
H- I	-1913 / 0	-84.3	-84.3	0.26 (1)	4.62
I- J	0 / 23	-84.3	-84.3	0.19 (1)	10.00
J- K	0 / 37	-84.3	-84.3	0.12 (1)	10.00
S- B	-244 / 0	0.0	0.0	0.03 (1)	7.81
L- J	-244 / 0	0.0	0.0	0.03 (1)	7.81
S- R	0 / 1415	-18.2	-18.2	0.37 (1)	10.00
R- Q	0 / 1450	-18.2	-18.2	0.38 (1)	10.00
Q- P	0 / 1450	-18.2	-18.2	0.38 (1)	10.00
P- O	0 / 2080	-18.2	-18.2	0.41 (1)	10.00
O- N	0 / 1450	-18.2	-18.2	0.38 (1)	10.00
N- M	0 / 1450	-18.2	-18.2	0.38 (1)	10.00
M- L	0 / 1415	-18.2	-18.2	0.37 (1)	10.00

WEBS

MEMB. FR-TO	MAX. FACTORED FORCE (LBS)	MAX CSI (LC)
C- R	0 / 66	0.02 (4)
R- D	0 / 124	0.04 (4)
D- P	0 / 967	0.22 (1)
P- F	-622 / 0	0.81 (1)
P- G	0 / 4	0.00 (1)
O- G	-614 / 0	0.80 (1)
O- H	0 / 964	0.22 (1)
M- H	0 / 124	0.04 (4)
M- I	0 / 66	0.02 (4)
S- C	-2177 / 0	0.55 (1)
I- L	-2177 / 0	0.55 (1)

DESIGN CRITERIA

SPECIFIED LOADS:

TOP CH.	LL	=	25.6	PSF
	DL	=	3.0	PSF
BOT CH.	LL	=	0.0	PSF
	DL	=	7.3	PSF
TOTAL LOAD		=	35.9	PSF

SPACING = 24.0 IN. C/C

LOADING IN FLAT SECTION BASED ON A SLOPE OF 6.00/12

THIS TRUSS IS DESIGNED FOR RESIDENTIAL OR SMALL BUILDING REQUIREMENTS OF PART 9, NBCC 2015

THIS DESIGN COMPLIES WITH:
- PART 9 OF BCBC 2018 , ABC 2019
- PART 9 OF OBC 2012 (2019 AMENDMENT)
- CSA 086-14
- TPIC 2014

(55 % OF 31.3 P.S.F. G.S.L. PLUS 8.4 P.S.F. RAIN LOAD) EQUALS 25.6 P.S.F. SPECIFIED ROOF LIVE LOAD

ALLOWABLE DEFL.(LL)= L/360 (1.20")
CALCULATED VERT. DEFL.(LL) = L/ 999 (0.10")
ALLOWABLE DEFL.(TL)= L/360 (1.20")
CALCULATED VERT. DEFL.(TL) = L/ 999 (0.21")

CSI: TC=0.60/1.00 (D-F:1) , BC=0.41/1.00 (O-P:1) , WB=0.81/1.00 (F-P:1) , SSI=0.27/1.00 (G-H:1)

DOL LUMBER=1.00 NAIL=1.00 LS BEND=1.10 COMP=1.10 SHEAR=1.10 TENS= 1.10

COMPANION LIVE LOAD FACTOR = 1.00

TRUSS PLATE MANUFACTURER IS NOT RESPONSIBLE FOR QUALITY CONTROL IN THE TRUSS MANUFACTURING PLANT .

NAIL VALUES

PLATE	GRIP(DRY) (PSI) MAX	MIN	SHEAR (PLI) MAX	MIN	SECTION (PLI) MAX	MIN
MT20	650	371	1747	788	1987	1873

PLATE PLACEMENT TOL. = 0.250 inches

PLATE ROTATION TOL. = 5.0 Deg.

JSI GRIP= 0.89 (S) (INPUT = 0.90)
JSI METAL= 0.61 (C) (INPUT = 1.00)

KOTT

JOB NAME	TRUSS NAME	QUANTITY	PLY	JOB DESC.	DRWG NO.
IM1021-033	T05	2	1	TRUSS DESC.	

Version 8.500 S Aug 16 2021 MiTek Industries, Inc. Wed Oct 6 13:05:02 2021 Page 1
ID:Leed7e129lDTMWGQL9?03mzYSEd-hIi?uxrDRIlSTUh5_78n5BgkQ9sBxdUBW?6IHAyW8L?

CITY OF RICHMOND HILL
BUILDING DIVISION
09/22/2022
RECEIVED
Per:maddy.toalaalejandro

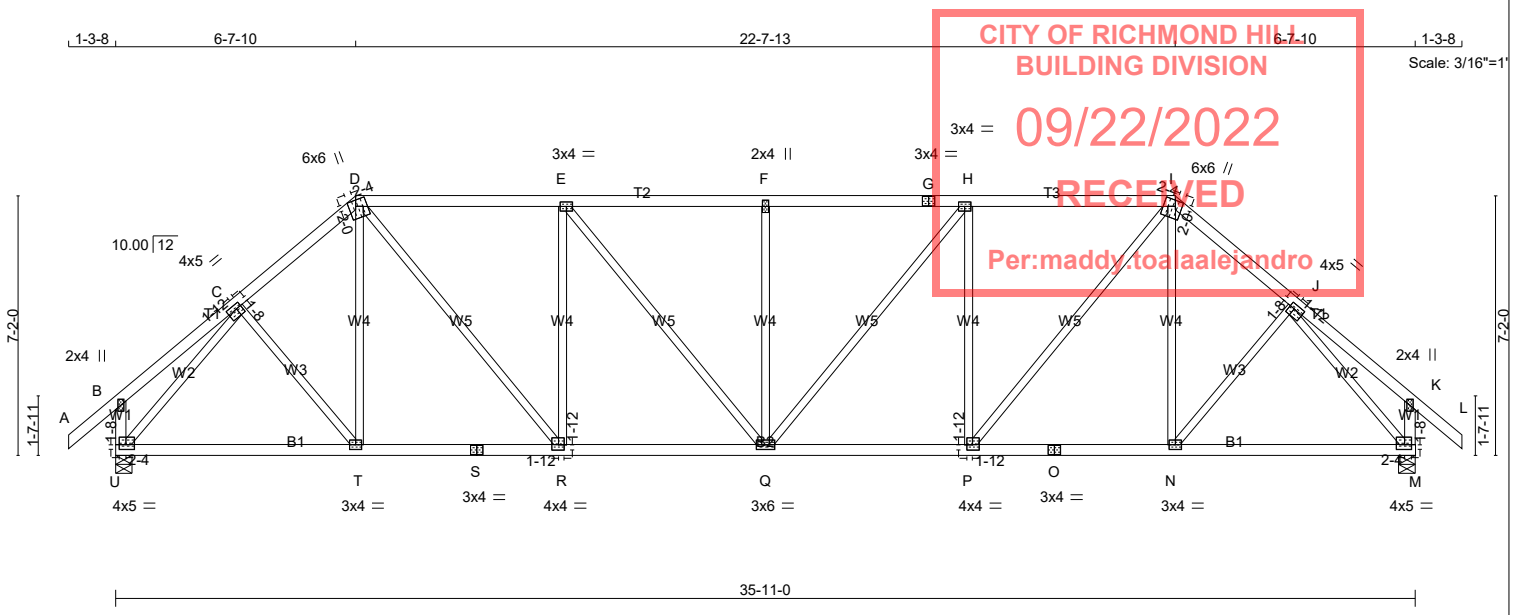

TOTAL WEIGHT = 2 X 164 = 328 lb

[M]

LUMBER

N. L. G. A. RULES

CHORDS	SIZE		LUMBER	DESCR.
A - D	2x4	DRY	No.2	SPF
D - G	2x4	DRY	No.2	SPF
G - I	2x4	DRY	No.2	SPF
I - L	2x4	DRY	No.2	SPF
U - B	2x4	DRY	No.2	SPF
M - K	2x4	DRY	No.2	SPF
U - S	2x4	DRY	No.2	SPF
S - O	2x4	DRY	No.2	SPF
O - M	2x4	DRY	No.2	SPF
ALL WEBS EXCEPT	2x3	DRY	No.2	SPF

DRY: SEASONED LUMBER.

PLATES (table is in inches)

JT	TYPE	PLATES	W	LEN	Y	X
B	TMV+p	MT20	2.0	4.0		
C	TMWW-t	MT20	4.0	5.0	1.50	1.75
D	TTWW+m	MT20	6.0	6.0	2.00	2.25
E	TMWW-t	MT20	3.0	4.0		
F	TMW+w	MT20	2.0	4.0		
G	TS-t	MT20	3.0	4.0		
H	TMWW-t	MT20	3.0	4.0		
I	TTWW+m	MT20	6.0	6.0	2.00	2.25
J	TMWW-t	MT20	4.0	5.0	1.50	1.75
K	TMV+p	MT20	2.0	4.0		
M	BMVW1-t	MT20	4.0	5.0	1.50	2.25
N	BMWW-t	MT20	3.0	4.0		
O	BS-t	MT20	3.0	4.0		
P	BMWW-t	MT20	4.0	4.0	1.75	1.75
Q	BMWWW-t	MT20	3.0	6.0		
R	BMWW-t	MT20	4.0	4.0	1.75	1.75
S	BS-t	MT20	3.0	4.0		
T	BMWW-t	MT20	3.0	4.0		
U	BMVW1-t	MT20	4.0	5.0	1.50	2.25

DIMENSIONS, SUPPORTS AND LOADINGS SPECIFIED BY FABRICATOR TO BE VERIFIED BY BUILDING DESIGNER

BEARINGS

JT	FACTORED GROSS REACTION VERT	HORZ	MAXIMUM FACTORED GROSS REACTION DOWN	HORZ	UPLIFT	INPUT BRG IN-SX	REQRD BRG IN-SX
U	1957	0	1957	0	0	5-8	2-2
M	1957	0	1957	0	0	5-8	2-2

UNFACTORED REACTIONS

JT	1ST LCASE COMBINED	MAX./MIN. COMPONENT REACTIONS SNOW	LIVE	PERM.LIVE	WIND	DEAD	SOIL
U	1368	990 / 0	0 / 0	0 / 0	0 / 0	378 / 0	0 / 0
M	1368	990 / 0	0 / 0	0 / 0	0 / 0	378 / 0	0 / 0

BEARING MATERIAL TO BE SPF NO.2 OR BETTER AT JOINT(S) U, M

BRACING

TOP CHORD TO BE SHEATHED OR MAX. PURLIN SPACING = 3.86 FT.
MAX. UNBRACED BOTTOM CHORD LENGTH = 10.00 FT OR RIGID CEILING DIRECTLY APPLIED.

ALL PITCH BREAKS AND PERIMETER CORNER JOINTS MUST BE LATERALLY RESTRAINED.

LOADING

TOTAL LOAD CASES: (4)

CHORDS MEMB. FR-TO	MAX. FACTORED FORCE (LBS)	FACTORED VERT. LOAD LC1 (PLF) FROM	TO	MAX CSI (LC)	MAX. UNBRAC LENGTH	WEBS MEMB. FR-TO	MAX. FACTORED FORCE (LBS)	MAX CSI (LC)
A- B	0 / 37	-84.3	-84.3	0.12 (1)	10.00	C- T	0 / 151	0.03 (1)
B- C	0 / 18	-84.3	-84.3	0.13 (1)	10.00	T- D	0 / 82	0.03 (4)
C- D	-1930 / 0	-84.3	-84.3	0.18 (1)	4.69	D- R	0 / 1173	0.26 (1)
D- E	-2215 / 0	-84.3	-84.3	0.53 (1)	4.04	R- E	-806 / 0	0.72 (1)
E- F	-2435 / 0	-84.3	-84.3	0.55 (1)	3.86	E- Q	0 / 348	0.08 (1)
F- G	-2435 / 0	-84.3	-84.3	0.55 (1)	3.86	Q- F	-435 / 0	0.39 (1)
G- H	-2435 / 0	-84.3	-84.3	0.55 (1)	3.86	Q- H	0 / 348	0.08 (1)
H- I	-2215 / 0	-84.3	-84.3	0.53 (1)	4.04	P- H	-806 / 0	0.72 (1)
I- J	-1930 / 0	-84.3	-84.3	0.18 (1)	4.69	P- I	0 / 1173	0.26 (1)
J- K	0 / 18	-84.3	-84.3	0.13 (1)	10.00	N- I	0 / 82	0.03 (4)
K- L	0 / 37	-84.3	-84.3	0.12 (1)	10.00	N- J	0 / 151	0.03 (1)
U- B	-227 / 0	0.0	0.0	0.02 (1)	7.81	U- C	-2165 / 0	0.95 (1)
M- K	-227 / 0	0.0	0.0	0.02 (1)	7.81	J- M	-2165 / 0	0.95 (1)
U- T	0 / 1366	-18.2	-18.2	0.32 (1)	10.00			
T- S	0 / 1465	-18.2	-18.2	0.34 (1)	10.00			
S- R	0 / 1465	-18.2	-18.2	0.34 (1)	10.00			
R- Q	0 / 2216	-18.2	-18.2	0.41 (1)	10.00			
Q- P	0 / 2216	-18.2	-18.2	0.41 (1)	10.00			
P- O	0 / 1465	-18.2	-18.2	0.34 (1)	10.00			
O- N	0 / 1465	-18.2	-18.2	0.34 (1)	10.00			
N- M	0 / 1366	-18.2	-18.2	0.32 (1)	10.00			

DESIGN CRITERIA

SPECIFIED LOADS:

TOP CH.	LL	=	25.6	PSF
	DL	=	3.0	PSF
BOT CH.	LL	=	0.0	PSF
	DL	=	7.3	PSF
TOTAL LOAD		=	35.9	PSF

SPACING = 24.0 IN. C/C

LOADING IN FLAT SECTION BASED ON A SLOPE OF 6.00/12

THIS TRUSS IS DESIGNED FOR RESIDENTIAL OR SMALL BUILDING REQUIREMENTS OF PART 9, NBCC 2015

THIS DESIGN COMPLIES WITH:
- PART 9 OF BCBC 2018 , ABC 2019
- PART 9 OF OBC 2012 (2019 AMENDMENT)
- CSA 086-14
- TPIC 2014

(55 % OF 31.3 P.S.F. G.S.L. PLUS 8.4 P.S.F. RAIN LOAD) EQUALS 25.6 P.S.F. SPECIFIED ROOF LIVE LOAD

ALLOWABLE DEFL.(LL)= L/360 (1.20")
CALCULATED VERT. DEFL.(LL) = L/ 999 (0.13")
ALLOWABLE DEFL.(TL)= L/360 (1.20")
CALCULATED VERT. DEFL.(TL) = L/ 999 (0.23")

CSI: TC=0.55/1.00 (F-H:1) , BC=0.41/1.00 (Q-R:1) , WB=0.95/1.00 (C-U:1) , SSI=0.23/1.00 (H-I:1)

DOL LUMBER=1.00 NAIL=1.00 LS BEND=1.10 COMP=1.10 SHEAR=1.10 TENS= 1.10

COMPANION LIVE LOAD FACTOR = 1.00

TRUSS PLATE MANUFACTURER IS NOT RESPONSIBLE FOR QUALITY CONTROL IN THE TRUSS MANUFACTURING PLANT .

NAIL VALUES

PLATE	GRIP(DRY) (PSI) MAX	MIN	SHEAR (PLI) MAX	MIN	SECTION (PLI) MAX	MIN
MT20	650	371	1747	788	1987	1873

PLATE PLACEMENT TOL. = 0.250 inches

PLATE ROTATION TOL. = 5.0 Deg.

JSI GRIP= 0.89 (Q) (INPUT = 0.90)
JSI METAL= 0.61 (J) (INPUT = 1.00)

LICENSED PROFESSIONAL ENGINEER
I.MATIJEVIC
100528832
PROVINCE OF ONTARIO
October 06, 2021

READ ALL NOTES ON THIS PAGE AND ON THE ENGINEERING NOTE PAGE ENP-1. THE NOTE PAGE IS AN INTEGRAL PART OF THIS DRAWING AS IT CONTAINS SPECIFICATIONS AND CRITERIA USED IN THE DESIGN OF THIS COMPONENT.

KOTT

JOB NAME	TRUSS NAME	QUANTITY	PLY	JOB DESC.	DRWG NO.
IM1021-033	T06	2	1	TRUSS DESC.	

Version 8.500 S Aug 16 2021 MiTek Industries, Inc. Wed Oct 6 13:05:03 2021 Page 1
ID:Leed7e129lDTMWGQL9?03mzYSEd-9UGN5HssCbtJ5eGHYrf0eOCszZBNgADKlfsspcyW8L_

CITY OF RICHMOND HILL
BUILDING DIVISION
09/22/2022
RECEIVED
Per:maddy.toalaalejandro

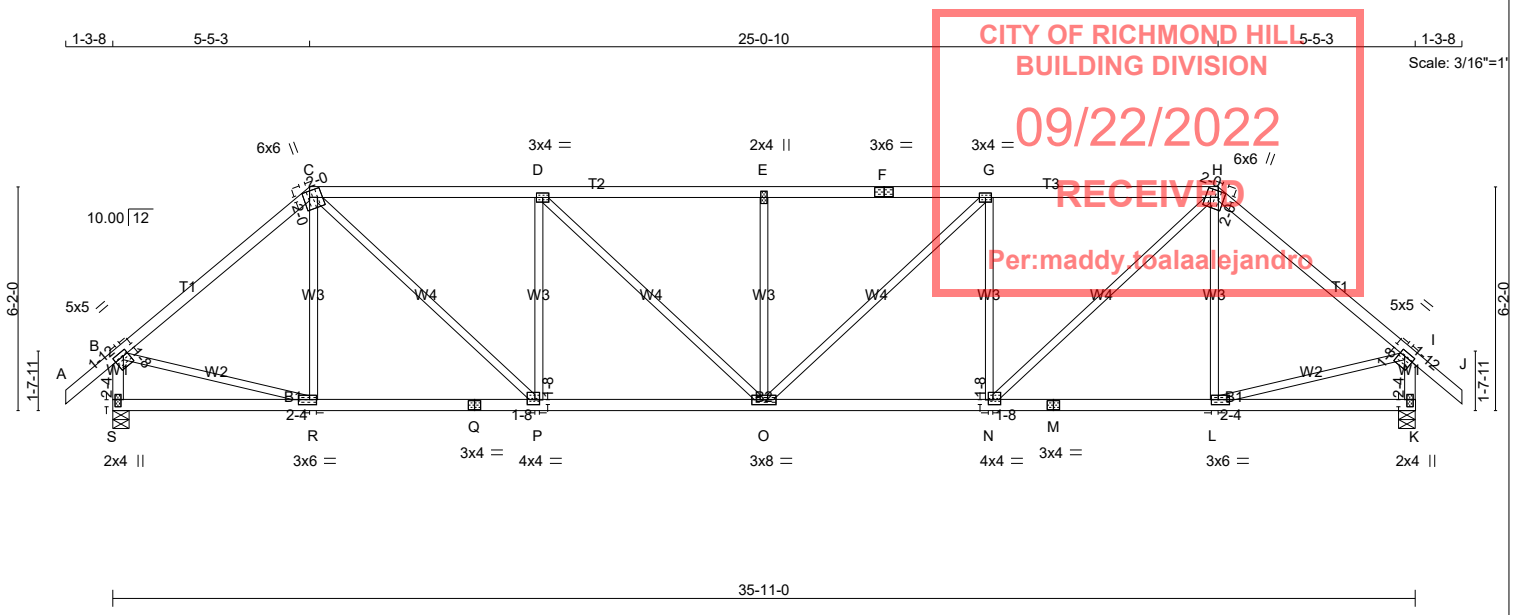

TOTAL WEIGHT = 2 X 151 = 302 lb

[M]

LUMBER

N. L. G. A. RULES

CHORDS	SIZE		LUMBER	DESCR.
A - C	2x4	DRY	No.2	SPF
C - F	2x4	DRY	No.2	SPF
F - H	2x4	DRY	No.2	SPF
H - J	2x4	DRY	No.2	SPF
S - B	2x4	DRY	No.2	SPF
K - I	2x4	DRY	No.2	SPF
S - Q	2x4	DRY	No.2	SPF
Q - M	2x4	DRY	No.2	SPF
M - K	2x4	DRY	No.2	SPF
ALL WEBS EXCEPT	2x3	DRY	No.2	SPF

DRY: SEASONED LUMBER.

PLATES (table is in inches)

JT	TYPE	PLATES	W	LEN	Y	X
B	TMVW-t	MT20	5.0	5.0	1.50	1.75
C	TTWW+m	MT20	6.0	6.0	2.00	2.00
D	TMWW-t	MT20	3.0	4.0		
E	TMW+w	MT20	2.0	4.0		
F	TS-t	MT20	3.0	6.0		
G	TMWW-t	MT20	3.0	4.0		
H	TTWW+m	MT20	6.0	6.0	2.00	2.00
I	TMVW-t	MT20	5.0	5.0	1.50	1.75
K	BMV1+p	MT20	2.0	4.0	2.25	1.00
L	BMWW-t	MT20	3.0	6.0	1.50	2.25
M	BS-t	MT20	3.0	4.0		
N	BMWW-t	MT20	4.0	4.0	1.50	1.50
O	BMWWW-t	MT20	3.0	8.0		
P	BMWW-t	MT20	4.0	4.0	1.50	1.50
Q	BS-t	MT20	3.0	4.0		
R	BMWW-t	MT20	3.0	6.0	1.50	2.25
S	BMV1+p	MT20	2.0	4.0	2.25	1.00

October 06, 2021

READ ALL NOTES ON THIS PAGE AND ON THE ENGINEERING NOTE PAGE ENP-1. THE NOTE PAGE IS AN INTEGRAL PART OF THIS DRAWING AS IT CONTAINS SPECIFICATIONS AND CRITERIA USED IN THE DESIGN OF THIS COMPONENT.

DIMENSIONS, SUPPORTS AND LOADINGS SPECIFIED BY FABRICATOR TO BE VERIFIED BY BUILDING DESIGNER

BEARINGS

JT	FACTORED GROSS REACTION VERT	HORZ	MAXIMUM FACTORED GROSS REACTION DOWN	HORZ	UPLIFT	INPUT BRG IN-SX	REQRD BRG IN-SX
S	1957	0	1957	0	0	5-8	2-14
K	1957	0	1957	0	0	5-8	2-14

UNFACTORED REACTIONS

JT	1ST LCASE COMBINED	MAX./MIN. COMPONENT REACTIONS SNOW	LIVE	PERM.LIVE	WIND	DEAD	SOIL
S	1368	990 / 0	0 / 0	0 / 0	0 / 0	378 / 0	0 / 0
K	1368	990 / 0	0 / 0	0 / 0	0 / 0	378 / 0	0 / 0

BEARING MATERIAL TO BE SPF NO.2 OR BETTER AT JOINT(S) S, K

BRACING

TOP CHORD TO BE SHEATHED OR MAX. PURLIN SPACING = 3.40 FT.
MAX. UNBRACED BOTTOM CHORD LENGTH = 10.00 FT OR RIGID CEILING DIRECTLY APPLIED.

ALL PITCH BREAKS AND PERIMETER CORNER JOINTS MUST BE LATERALLY RESTRAINED.

LOADING

TOTAL LOAD CASES: (4)

CHORDS MEMB. FR-TO	MAX. FACTORED FORCE (LBS)	FACTORED VERT. LOAD LC1 (PLF) FROM	TO	MAX CSI (LC)	MAX. UNBRAC LENGTH	WEBS MEMB. FR-TO	MAX. FACTORED FORCE (LBS)	MAX CSI (LC)
A- B	0 / 37	-84.3	-84.3	0.12 (1)	10.00	R- C	-224 / 35	0.13 (1)
B- C	-1912 / 0	-84.3	-84.3	0.60 (1)	4.25	C- P	0 / 1475	0.33 (1)
C- D	-2544 / 0	-84.3	-84.3	0.71 (1)	3.62	P- D	-891 / 0	0.54 (1)
D- E	-2858 / 0	-84.3	-84.3	0.76 (1)	3.40	D- O	0 / 433	0.10 (1)
E- F	-2858 / 0	-84.3	-84.3	0.76 (1)	3.40	O- E	-482 / 0	0.29 (1)
F- G	-2858 / 0	-84.3	-84.3	0.76 (1)	3.40	O- G	0 / 433	0.10 (1)
G- H	-2544 / 0	-84.3	-84.3	0.71 (1)	3.62	N- G	-891 / 0	0.54 (1)
H- I	-1912 / 0	-84.3	-84.3	0.60 (1)	4.25	N- H	0 / 1475	0.33 (1)
I- J	0 / 37	-84.3	-84.3	0.12 (1)	10.00	L- H	-224 / 35	0.13 (1)
S- B	-1918 / 0	0.0	0.0	0.20 (1)	6.07	B- R	0 / 1506	0.34 (1)
K- I	-1918 / 0	0.0	0.0	0.20 (1)	6.07	L- I	0 / 1506	0.34 (1)
S- R	0 / 0	-18.2	-18.2	0.15 (4)	10.00			
R- Q	0 / 1462	-18.2	-18.2	0.32 (1)	10.00			
Q- P	0 / 1462	-18.2	-18.2	0.32 (1)	10.00			
P- O	0 / 2544	-18.2	-18.2	0.47 (1)	10.00			
O- N	0 / 2544	-18.2	-18.2	0.47 (1)	10.00			
N- M	0 / 1462	-18.2	-18.2	0.32 (1)	10.00			
M- L	0 / 1462	-18.2	-18.2	0.32 (1)	10.00			
L- K	0 / 0	-18.2	-18.2	0.15 (4)	10.00			

DESIGN CRITERIA

SPECIFIED LOADS:

TOP CH.	LL	=	25.6	PSF
	DL	=	3.0	PSF
BOT CH.	LL	=	0.0	PSF
	DL	=	7.3	PSF
TOTAL LOAD		=	35.9	PSF

SPACING = 24.0 IN. C/C

LOADING IN FLAT SECTION BASED ON A SLOPE OF 6.00/12

THIS TRUSS IS DESIGNED FOR RESIDENTIAL OR SMALL BUILDING REQUIREMENTS OF PART 9, NBCC 2015

THIS DESIGN COMPLIES WITH:
- PART 9 OF BCBC 2018 , ABC 2019
- PART 9 OF OBC 2012 (2019 AMENDMENT)
- CSA 086-14
- TPIC 2014

(55 % OF 31.3 P.S.F. G.S.L. PLUS 8.4 P.S.F. RAIN LOAD) EQUALS 25.6 P.S.F. SPECIFIED ROOF LIVE LOAD

ALLOWABLE DEFL.(LL)= L/360 (1.20")
CALCULATED VERT. DEFL.(LL) = L/ 999 (0.17")
ALLOWABLE DEFL.(TL)= L/360 (1.20")
CALCULATED VERT. DEFL.(TL) = L/ 999 (0.29")

CSI: TC=0.76/1.00 (E-G:1) , BC=0.47/1.00 (N-O:1) , WB=0.54/1.00 (G-N:1) , SSI=0.25/1.00 (C-D:1)

DOL LUMBER=1.00 NAIL=1.00 LS BEND=1.10 COMP=1.10 SHEAR=1.10 TENS= 1.10

COMPANION LIVE LOAD FACTOR = 1.00

TRUSS PLATE MANUFACTURER IS NOT RESPONSIBLE FOR QUALITY CONTROL IN THE TRUSS MANUFACTURING PLANT .

NAIL VALUES

PLATE	GRIP(DRY) (PSI) MAX	MIN	SHEAR (PLI) MAX	MIN	SECTION (PLI) MAX	MIN
MT20	650	371	1747	788	1987	1873

PLATE PLACEMENT TOL. = 0.250 inches

PLATE ROTATION TOL. = 5.0 Deg.

JSI GRIP= 0.89 (L) (INPUT = 0.90)
JSI METAL= 0.61 (I) (INPUT = 1.00)

KOTT

JOB NAME	TRUSS NAME	QUANTITY	PLY	JOB DESC.	DRWG NO.
IM1021-033	T07	2	1	TRUSS DESC.	

Version 8.500 S Aug 16 2021 MiTek Industries, Inc. Wed Oct 6 13:05:04 2021 Page 1
ID:Leed7e129lDTMWGQL9?03mzYSEd-dhplJdtUzv?AiorT6YAFAcl4tzWEPf4UzJbPK2yW8Kz

CITY OF RICHMOND HILL
BUILDING DIVISION
09/22/2022
RECEIVED
Per:maddy.toalpalejandro

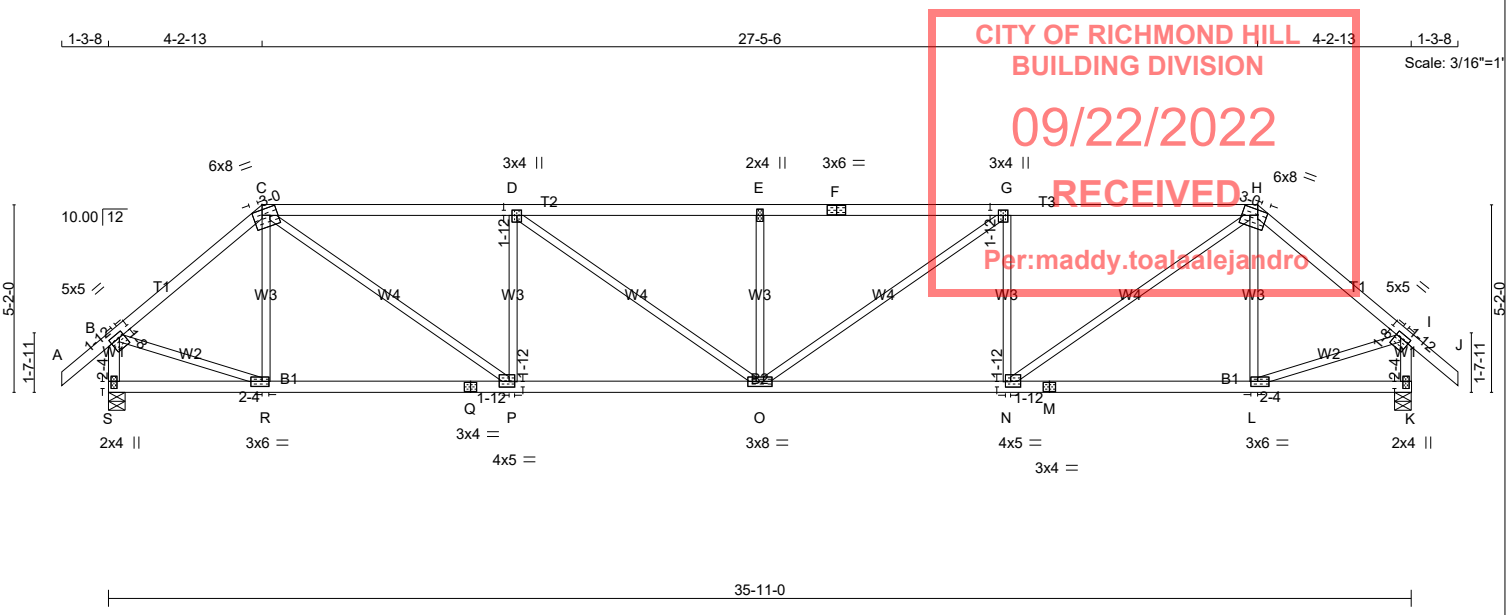

TOTAL WEIGHT = 2 X 144 = 287 lb

LUMBER
N. L. G. A. RULES

CHORDS	SIZE		LUMBER	DESCR.
A - C	2x4	DRY	No.2	SPF
C - F	2x4	DRY	2100F 1.8E	SPF
F - H	2x4	DRY	2100F 1.8E	SPF
H - J	2x4	DRY	No.2	SPF
S - B	2x4	DRY	No.2	SPF
K - I	2x4	DRY	No.2	SPF
S - Q	2x4	DRY	No.2	SPF
Q - M	2x4	DRY	No.2	SPF
M - K	2x4	DRY	No.2	SPF
ALL WEBS EXCEPT	2x3	DRY	No.2	SPF

DRY: SEASONED LUMBER.

PLATES (table is in inches)

JT	TYPE	PLATES	W	LEN	Y	X
B	TMVW-t	MT20	5.0	5.0	1.50	1.75
C	TTWW-m	MT20	6.0	8.0	Edge	3.00
D	TMWW+t	MT20	3.0	4.0	1.75	1.50
E	TMW+w	MT20	2.0	4.0		
F	TS-t	MT20	3.0	6.0		
G	TMWW+t	MT20	3.0	4.0	1.75	1.50
H	TTWW-m	MT20	6.0	8.0	Edge	3.00
I	TMVW-t	MT20	5.0	5.0	1.50	1.75
K	BMV1+p	MT20	2.0	4.0	2.25	1.00
L	BMWW-t	MT20	3.0	6.0	1.50	2.25
M	BS-t	MT20	3.0	4.0		
N	BMWW-t	MT20	4.0	5.0	1.75	1.75
O	BMWWW-t	MT20	3.0	8.0		
P	BMWW-t	MT20	4.0	5.0	1.75	1.75
Q	BS-t	MT20	3.0	4.0		
R	BMWW-t	MT20	3.0	6.0	1.50	2.25
S	BMV1+p	MT20	2.0	4.0	2.25	1.00

Edge - INDICATES REFERENCE CORNER OF PLATE TOUCHES EDGE OF CHORD.

LICENSED PROFESSIONAL ENGINEER
I.MATIJEVIC
100528832
PROVINCE OF ONTARIO
October 06, 2021

READ ALL NOTES ON THIS PAGE AND ON THE ENGINEERING NOTE PAGE ENP-1. THE NOTE PAGE IS AN INTEGRAL PART OF THIS DRAWING AS IT CONTAINS SPECIFICATIONS AND CRITERIA USED IN THE DESIGN OF THIS COMPONENT.

DIMENSIONS, SUPPORTS AND LOADINGS SPECIFIED BY FABRICATOR TO BE VERIFIED BY BUILDING DESIGNER

BEARINGS

JT	FACTORED GROSS REACTION VERT	HORZ	MAXIMUM FACTORED GROSS REACTION DOWN	HORZ	UPLIFT	INPUT BRG IN-SX	REQRD BRG IN-SX
S	1957	0	1957	0	0	5-8	2-14
K	1957	0	1957	0	0	5-8	2-14

UNFACTORED REACTIONS

JT	1ST LCASE COMBINED	MAX./MIN. COMPONENT REACTIONS SNOW	LIVE	PERM.LIVE	WIND	DEAD	SOIL
S	1368	990 / 0	0 / 0	0 / 0	0 / 0	378 / 0	0 / 0
K	1368	990 / 0	0 / 0	0 / 0	0 / 0	378 / 0	0 / 0

BEARING MATERIAL TO BE SPF NO.2 OR BETTER AT JOINT(S) S, K

BRACING
TOP CHORD TO BE SHEATHED OR MAX. PURLIN SPACING = 4.13 FT.
MAX. UNBRACED BOTTOM CHORD LENGTH = 10.00 FT OR RIGID CEILING DIRECTLY APPLIED.

ALL PITCH BREAKS AND PERIMETER CORNER JOINTS MUST BE LATERALLY RESTRAINED.

LOADING
TOTAL LOAD CASES: (4)

CHORDS MEMB. FR-TO	MAX. FACTORED FORCE (LBS)	FACTORED VERT. LOAD LC1 (PLF) FROM	TO	MAX CSI (LC)	MAX. UNBRAC LENGTH	WEBS MEMB. FR-TO	MAX. FACTORED FORCE (LBS)	MAX CSI (LC)
A- B	0 / 37	-84.3	-84.3	0.12 (1)	10.00	R- C	-316 / 3	0.12 (1)
B- C	-1876 / 0	-84.3	-84.3	0.34 (1)	4.57	C- P	0 / 1916	0.43 (1)
C- D	-2998 / 0	-84.3	-84.3	0.52 (1)	4.39	P- D	-976 / 0	0.39 (1)
D- E	-3456 / 0	-84.3	-84.3	0.55 (1)	4.13	D- O	0 / 562	0.13 (1)
E- F	-3456 / 0	-84.3	-84.3	0.55 (1)	4.13	O- E	-531 / 0	0.21 (1)
F- G	-3456 / 0	-84.3	-84.3	0.55 (1)	4.13	O- G	0 / 562	0.13 (1)
G- H	-2998 / 0	-84.3	-84.3	0.52 (1)	4.39	N- G	-976 / 0	0.39 (1)
H- I	-1876 / 0	-84.3	-84.3	0.34 (1)	4.57	N- H	0 / 1916	0.43 (1)
I- J	0 / 37	-84.3	-84.3	0.12 (1)	10.00	L- H	-316 / 3	0.12 (1)
S- B	-1932 / 0	0.0	0.0	0.21 (1)	6.05	B- R	0 / 1501	0.34 (1)
K- I	-1932 / 0	0.0	0.0	0.21 (1)	6.05	L- I	0 / 1501	0.34 (1)
S- R	0 / 0	-18.2	-18.2	0.14 (4)	10.00			
R- Q	0 / 1431	-18.2	-18.2	0.31 (1)	10.00			
Q- P	0 / 1431	-18.2	-18.2	0.31 (1)	10.00			
P- O	0 / 2999	-18.2	-18.2	0.56 (1)	10.00			
O- N	0 / 2999	-18.2	-18.2	0.56 (1)	10.00			
N- M	0 / 1431	-18.2	-18.2	0.31 (1)	10.00			
M- L	0 / 1431	-18.2	-18.2	0.31 (1)	10.00			
L- K	0 / 0	-18.2	-18.2	0.14 (4)	10.00			

[M]

DESIGN CRITERIA

SPECIFIED LOADS:

TOP CH.	LL	=	25.6	PSF
	DL	=	3.0	PSF
BOT CH.	LL	=	0.0	PSF
	DL	=	7.3	PSF
TOTAL LOAD		=	35.9	PSF

SPACING = 24.0 IN. C/C

LOADING IN FLAT SECTION BASED ON A SLOPE OF 6.00/12

THIS TRUSS IS DESIGNED FOR RESIDENTIAL OR SMALL BUILDING REQUIREMENTS OF PART 9, NBCC 2015

THIS DESIGN COMPLIES WITH:
- PART 9 OF BCBC 2018 , ABC 2019
- PART 9 OF OBC 2012 (2019 AMENDMENT)
- CSA 086-14
- TPIC 2014

(55 % OF 31.3 P.S.F. G.S.L. PLUS 8.4 P.S.F. RAIN LOAD) EQUALS 25.6 P.S.F. SPECIFIED ROOF LIVE LOAD

ALLOWABLE DEFL.(LL)= L/360 (1.20")
CALCULATED VERT. DEFL.(LL) = L/ 999 (0.20")
ALLOWABLE DEFL.(TL)= L/360 (1.20")
CALCULATED VERT. DEFL.(TL) = L/ 999 (0.35")

CSI: TC=0.55/1.00 (E-G:1) , BC=0.56/1.00 (N-O:1) , WB=0.43/1.00 (C-P:1) , SSI=0.27/1.00 (G-H:1)

DOL LUMBER=1.00 NAIL=1.00 LS BEND=1.10 COMP=1.10 SHEAR=1.10 TENS= 1.10

COMPANION LIVE LOAD FACTOR = 1.00

TRUSS PLATE MANUFACTURER IS NOT RESPONSIBLE FOR QUALITY CONTROL IN THE TRUSS MANUFACTURING PLANT .

NAIL VALUES

PLATE	GRIP(DRY) (PSI) MAX	MIN	SHEAR (PLI) MAX	MIN	SECTION (PLI) MAX	MIN
MT20	650	371	1747	788	1987	1873

PLATE PLACEMENT TOL. = 0.250 inches

PLATE ROTATION TOL. = 5.0 Deg.

JSI GRIP= 0.88 (L) (INPUT = 0.90)
JSI METAL= 0.59 (B) (INPUT = 1.00)

KOTT

JOB NAME	TRUSS NAME	QUANTITY	PLY	JOB DESC.	DRWG NO.
IM1021-033	T08	3	1	TRUSS DESC.	

Version 8.500 S Aug 16 2021 MiTek Industries, Inc. Wed Oct 6 13:05:05 2021 Page 1
ID:Leed7e129lDTMWGQL9?03mzYSEd-5tN7Wzu6kD71KyQggFhUjpIKPNuk82xdCyLytVyW8Ky

CITY OF RICHMOND HILL
BUILDING DIVISION
09/22/2022
RECEIVED
Per:maddy.toalaalejandro

Scale = 1:52.9

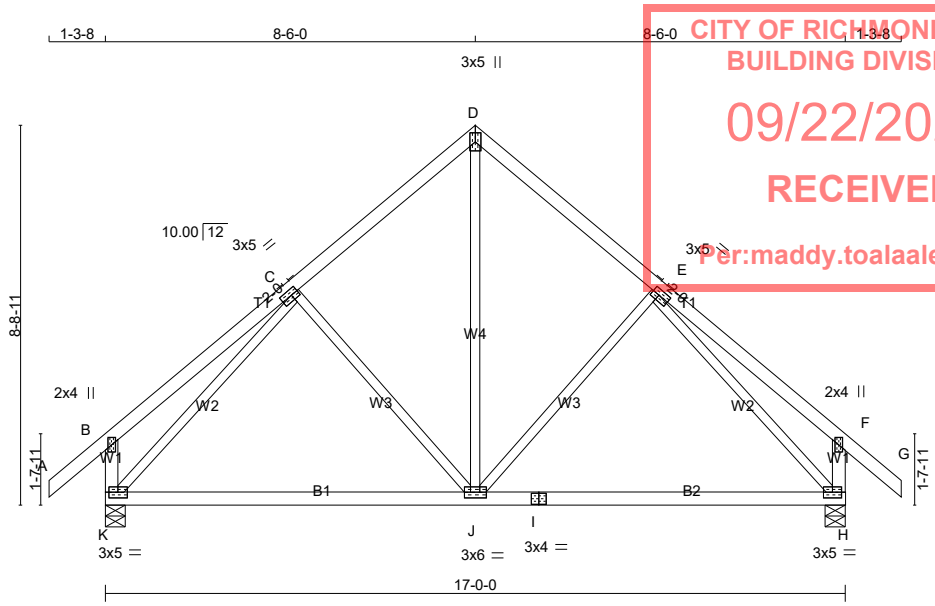

TOTAL WEIGHT = 3 X 78 = 234 lb

LUMBER
N. L. G. A. RULES

CHORDS	SIZE		LUMBER	DESCR.
A - D	2x4	DRY	No.2	SPF
D - G	2x4	DRY	No.2	SPF
K - B	2x4	DRY	No.2	SPF
H - F	2x4	DRY	No.2	SPF
K - I	2x4	DRY	No.2	SPF
I - H	2x4	DRY	No.2	SPF
ALL WEBS EXCEPT	2x3	DRY	No.2	SPF

DRY: SEASONED LUMBER.

PLATES (table is in inches)

JT	TYPE	PLATES	W	LEN	Y	X
B	TMV+p	MT20	2.0	4.0		
C	TMWW-t	MT20	3.0	5.0	1.50	2.00
D	TTW+p	MT20	3.0	5.0		
E	TMWW-t	MT20	3.0	5.0	1.50	2.00
F	TMV+p	MT20	2.0	4.0		
H	BMVW1-t	MT20	3.0	5.0		
I	BS-t	MT20	3.0	4.0		
J	BMWWW-t	MT20	3.0	6.0		
K	BMVW1-t	MT20	3.0	5.0		

DIMENSIONS, SUPPORTS AND LOADINGS SPECIFIED BY FABRICATOR TO BE VERIFIED BY BUILDING DESIGNER

BEARINGS

JT	FACTORED GROSS REACTION VERT	HORZ	MAXIMUM FACTORED GROSS REACTION DOWN	HORZ	UPLIFT	INPUT BRG IN-SX	REQRD BRG IN-SX
K	988	0	988	0	0	5-8	1-8
H	988	0	988	0	0	5-8	1-8

UNFACTORED REACTIONS

JT	1ST LCASE COMBINED	MAX./MIN. COMPONENT REACTIONS SNOW	LIVE	PERM.LIVE	WIND	DEAD	SOIL
K	689	506 / 0	0 / 0	0 / 0	0 / 0	183 / 0	0 / 0
H	689	506 / 0	0 / 0	0 / 0	0 / 0	183 / 0	0 / 0

BEARING MATERIAL TO BE SPF NO.2 OR BETTER AT JOINT(S) K, H

BRACING
TOP CHORD TO BE SHEATHED OR MAX. PURLIN SPACING = 6.25 FT.
MAX. UNBRACED BOTTOM CHORD LENGTH = 10.00 FT OR RIGID CEILING DIRECTLY APPLIED.

ALL PITCH BREAKS AND PERIMETER CORNER JOINTS MUST BE LATERALLY RESTRAINED.

LOADING
TOTAL LOAD CASES: (4)

CHORDS MEMB. FR-TO	MAX. FORCE (LBS)	FACTORED VERT. LOAD (PLF) FROM	TO	MAX CSI (LC)	MAX. UNBRAC LENGTH	WEBS MEMB. FR-TO	MAX. FORCE (LBS)	MAX CSI (LC)
A- B	0 / 37	-84.3	-84.3	0.12 (1)	10.00	J- D	0 / 490	0.11 (1)
B- C	0 / 27	-84.3	-84.3	0.25 (1)	10.00	J- E	-199 / 1	0.15 (1)
C- D	-626 / 0	-84.3	-84.3	0.19 (1)	6.25	C- J	-199 / 1	0.15 (1)
D- E	-626 / 0	-84.3	-84.3	0.19 (1)	6.25	K- C	-900 / 0	0.65 (1)
E- F	0 / 27	-84.3	-84.3	0.25 (1)	10.00	E- H	-900 / 0	0.65 (1)
F- G	0 / 37	-84.3	-84.3	0.12 (1)	10.00			
K- B	-252 / 0	0.0	0.0	0.03 (1)	7.81			
H- F	-252 / 0	0.0	0.0	0.03 (1)	7.81			
K- J	0 / 593	-18.2	-18.2	0.42 (4)	10.00			
J- I	0 / 593	-18.2	-18.2	0.42 (4)	10.00			
I- H	0 / 593	-18.2	-18.2	0.42 (4)	10.00			

[M][F]

DESIGN CRITERIA

SPECIFIED LOADS:

TOP CH.	LL	=	25.6	PSF
	DL	=	3.0	PSF
BOT CH.	LL	=	0.0	PSF
	DL	=	7.3	PSF
TOTAL LOAD		=	35.9	PSF

SPACING = 24.0 IN. C/C

THIS TRUSS IS DESIGNED FOR RESIDENTIAL OR SMALL BUILDING REQUIREMENTS OF PART 9, NBCC 2015

THIS DESIGN COMPLIES WITH:
- PART 9 OF BCBC 2018 , ABC 2019
- PART 9 OF OBC 2012 (2019 AMENDMENT)
- CSA 086-14
- TPIC 2014

(55 % OF 31.3 P.S.F. G.S.L. PLUS 8.4 P.S.F. RAIN LOAD) EQUALS 25.6 P.S.F. SPECIFIED ROOF LIVE LOAD

ALLOWABLE DEFL.(LL)= L/360 (0.57")
CALCULATED VERT. DEFL.(LL) = L/ 999 (0.02")
ALLOWABLE DEFL.(TL)= L/360 (0.57")
CALCULATED VERT. DEFL.(TL) = L/ 999 (0.12")

CSI: TC=0.25/1.00 (E-F:1) , BC=0.42/1.00 (J-K:4) , WB=0.65/1.00 (E-H:1) , SSI=0.13/1.00 (D-E:1)

DOL LUMBER=1.00 NAIL=1.00 LS BEND=1.10 COMP=1.10 SHEAR=1.10 TENS= 1.10

COMPANION LIVE LOAD FACTOR = 1.00

TRUSS PLATE MANUFACTURER IS NOT RESPONSIBLE FOR QUALITY CONTROL IN THE TRUSS MANUFACTURING PLANT .

NAIL VALUES

PLATE	GRIP(DRY) (PSI) MAX	MIN	SHEAR (PLI) MAX	MIN	SECTION (PLI) MAX	MIN
MT20	650	371	1747	788	1987	1873

PLATE PLACEMENT TOL. = 0.250 inches

PLATE ROTATION TOL. = 5.0 Deg.

JSI GRIP= 0.90 (J) (INPUT = 0.90)
JSI METAL= 0.26 (I) (INPUT = 1.00)

LICENSED PROFESSIONAL ENGINEER
I.MATIJEVIC
100528832
PROVINCE OF ONTARIO
October 06, 2021

READ ALL NOTES ON THIS PAGE AND ON THE ENGINEERING NOTE PAGE ENP-1. THE NOTE PAGE IS AN INTEGRAL PART OF THIS DRAWING AS IT CONTAINS SPECIFICATIONS AND CRITERIA USED IN THE DESIGN OF THIS COMPONENT.

KOTT

JOB NAME	TRUSS NAME	QUANTITY	PLY	JOB DESC.	DRWG NO.
IM1021-033	T09	3	1	TRUSS DESC.	

Version 8.500 S Aug 16 2021 MiTek Industries, Inc. Wed Oct 6 13:05:06 2021 Page 1
ID:Leed7e129lDTMWGQL9?03mzYSEd-Z3xVjJvkVWFuy6?sDzCjG1qV8nEItWZnRc4WPxyW8Kx

CITY OF RICHMOND HILL
BUILDING DIVISION
09/22/2022
RECEIVED
Per:maddy.toalaalejandro

Scale = 1:52.9

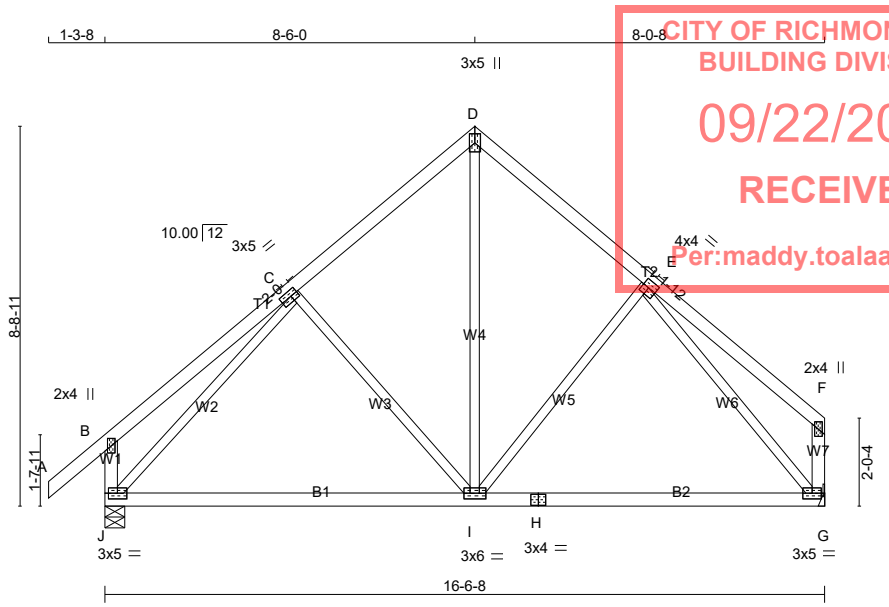

TOTAL WEIGHT = 3 X 75 = 226 lb

LUMBER
N. L. G. A. RULES

CHORDS	SIZE		LUMBER	DESCR.
A - D	2x4	DRY	No.2	SPF
D - F	2x4	DRY	No.2	SPF
J - B	2x4	DRY	No.2	SPF
G - F	2x4	DRY	No.2	SPF
J - H	2x4	DRY	No.2	SPF
H - G	2x4	DRY	No.2	SPF
ALL WEBS EXCEPT	2x3	DRY	No.2	SPF

DRY: SEASONED LUMBER.

PLATES (table is in inches)

JT	TYPE	PLATES	W	LEN	Y	X
B	TMV+p	MT20	2.0	4.0		
C	TMWW-t	MT20	3.0	5.0	1.50	2.00
D	TTW+p	MT20	3.0	5.0		
E	TMWW-t	MT20	4.0	4.0	2.00	1.75
F	TMV+p	MT20	2.0	4.0		
G	BMVW1-t	MT20	3.0	5.0		
H	BS-t	MT20	3.0	4.0		
I	BMWWW-t	MT20	3.0	6.0		
J	BMVW1-t	MT20	3.0	5.0		

DIMENSIONS, SUPPORTS AND LOADINGS SPECIFIED BY FABRICATOR TO BE VERIFIED BY BUILDING DESIGNER

BEARINGS

JT	FACTORED GROSS REACTION VERT	HORZ	MAXIMUM FACTORED GROSS REACTION DOWN	HORZ	UPLIFT	INPUT BRG IN-SX	REQRD BRG IN-SX
J	964	0	964	0	0	5-8	1-8
G	848	0	848	0	0	MECHANICAL	

A SUITABLE HANGER/MECHANICAL CONNECTION IS REQUIRED AT JOINT G. MINIMUM BEARING LENGTH AT JOINT G = 1-8.

UNFACTORED REACTIONS

JT	1ST LCASE COMBINED	MAX./MIN. COMPONENT REACTIONS SNOW	LIVE	PERM.LIVE	WIND	DEAD	SOIL
J	673	494 / 0	0 / 0	0 / 0	0 / 0	179 / 0	0 / 0
G	594	423 / 0	0 / 0	0 / 0	0 / 0	170 / 0	0 / 0

BEARING MATERIAL TO BE SPF NO.2 OR BETTER AT JOINT(S) J

BRACING
TOP CHORD TO BE SHEATHED OR MAX. PURLIN SPACING = 6.25 FT.
MAX. UNBRACED BOTTOM CHORD LENGTH = 10.00 FT OR RIGID CEILING DIRECTLY APPLIED.

ALL PITCH BREAKS AND PERIMETER CORNER JOINTS MUST BE LATERALLY RESTRAINED.

LOADING
TOTAL LOAD CASES: (4)

CHORDS

MEMB. FR-TO	MAX. FACTORED FORCE (LBS)	FACTORED VERT. LOAD LC1 (PLF) FROM	TO	MAX CSI (LC)	MAX. UNBRAC LENGTH
A- B	0 / 37	-84.3	-84.3	0.12 (1)	10.00
B- C	0 / 27	-84.3	-84.3	0.25 (1)	10.00
C- D	-594 / 0	-84.3	-84.3	0.19 (1)	6.25
D- E	-592 / 0	-84.3	-84.3	0.17 (1)	6.25
E- F	0 / 26	-84.3	-84.3	0.22 (1)	10.00
J- B	-252 / 0	0.0	0.0	0.03 (1)	7.81
G- F	-128 / 0	0.0	0.0	0.01 (1)	7.81
J- I	0 / 571	-18.2	-18.2	0.40 (4)	10.00
I- H	0 / 529	-18.2	-18.2	0.39 (4)	10.00
H- G	0 / 529	-18.2	-18.2	0.39 (4)	10.00

WEBS

MEMB. FR-TO	MAX. FACTORED FORCE (LBS)	MAX CSI (LC)
C- I	-205 / 0	0.15 (1)
I- D	0 / 456	0.10 (1)
I- E	-149 / 11	0.11 (1)
J- C	-867 / 0	0.62 (1)
E- G	-850 / 0	0.61 (1)

[M][F]

DESIGN CRITERIA

SPECIFIED LOADS:

TOP CH.	LL	=	25.6	PSF
	DL	=	3.0	PSF
BOT CH.	LL	=	0.0	PSF
	DL	=	7.3	PSF
TOTAL LOAD		=	35.9	PSF

SPACING = 24.0 IN. C/C

THIS TRUSS IS DESIGNED FOR RESIDENTIAL OR SMALL BUILDING REQUIREMENTS OF PART 9, NBCC 2015

THIS DESIGN COMPLIES WITH:
- PART 9 OF BCBC 2018 , ABC 2019
- PART 9 OF OBC 2012 (2019 AMENDMENT)
- CSA 086-14
- TPIC 2014

(55 % OF 31.3 P.S.F. G.S.L. PLUS 8.4 P.S.F. RAIN LOAD) EQUALS 25.6 P.S.F. SPECIFIED ROOF LIVE LOAD

ALLOWABLE DEFL.(LL)= L/360 (0.55")
CALCULATED VERT. DEFL.(LL) = L/ 999 (0.02")
ALLOWABLE DEFL.(TL)= L/360 (0.55")
CALCULATED VERT. DEFL.(TL) = L/ 999 (0.12")

CSI: TC=0.25/1.00 (B-C:1) , BC=0.40/1.00 (I-J:4) , WB=0.62/1.00 (C-J:1) , SSI=0.13/1.00 (C-D:1)

DOL LUMBER=1.00 NAIL=1.00 LS BEND=1.10 COMP=1.10 SHEAR=1.10 TENS= 1.10

COMPANION LIVE LOAD FACTOR = 1.00

TRUSS PLATE MANUFACTURER IS NOT RESPONSIBLE FOR QUALITY CONTROL IN THE TRUSS MANUFACTURING PLANT .

NAIL VALUES

PLATE	GRIP(DRY) (PSI) MAX	MIN	SHEAR (PLI) MAX	MIN	SECTION (PLI) MAX	MIN
MT20	650	371	1747	788	1987	1873

PLATE PLACEMENT TOL. = 0.250 inches

PLATE ROTATION TOL. = 5.0 Deg.

JSI GRIP= 0.90 (I) (INPUT = 0.90)
JSI METAL= 0.28 (E) (INPUT = 1.00)

LICENSED PROFESSIONAL ENGINEER
I.MATIJEVIC
100528832
PROVINCE OF ONTARIO
October 06, 2021

READ ALL NOTES ON THIS PAGE AND ON THE ENGINEERING NOTE PAGE ENP-1. THE NOTE PAGE IS AN INTEGRAL PART OF THIS DRAWING AS IT CONTAINS SPECIFICATIONS AND CRITERIA USED IN THE DESIGN OF THIS COMPONENT.

KOTT

JOB NAME	TRUSS NAME	QUANTITY	PLY	JOB DESC.	DRWG NO.
IM1021-033	T10	3	1	TRUSS DESC.	

Version 8.500 S Aug 16 2021 MiTek Industries, Inc. Wed Oct 6 13:05:06 2021 Page 1
ID:Leed7e129lDTMWGQL9?03mzYSEd-Z3xVjJvkVWFuy6?sDzCjG1qWgnHetbjnRc4WPxyW8Kx

CITY OF RICHMOND HILL
BUILDING DIVISION
09/22/2022
RECEIVED
Per:maddy.toalaalejandro

Scale = 1:44.3

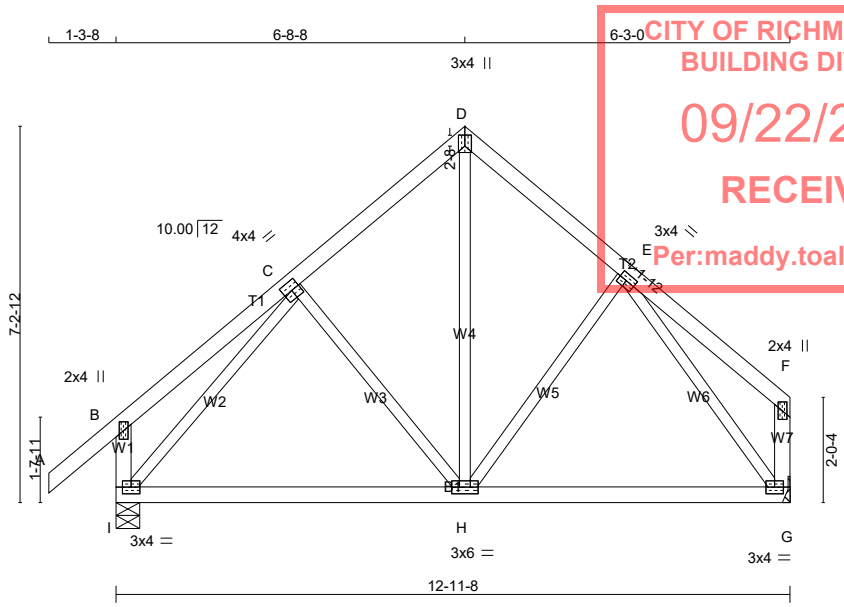

TOTAL WEIGHT = 3 X 61 = 183 lb

LUMBER
N. L. G. A. RULES

CHORDS	SIZE		LUMBER	DESCR.
A - D	2x4	DRY	No.2	SPF
D - F	2x4	DRY	No.2	SPF
I - B	2x4	DRY	No.2	SPF
G - F	2x4	DRY	No.2	SPF
I - G	2x4	DRY	No.2	SPF
ALL WEBS EXCEPT	2x3	DRY	No.2	SPF

DRY: SEASONED LUMBER.

PLATES (table is in inches)

JT	TYPE	PLATES	W	LEN	Y	X
B	TMV+p	MT20	2.0	4.0		
C	TMWW-t	MT20	4.0	4.0		
D	TTW+p	MT20	3.0	4.0	2.50	1.50
E	TMWW-t	MT20	3.0	4.0	1.50	1.75
F	TMV+p	MT20	2.0	4.0		
G	BMVW1-t	MT20	3.0	4.0		
H	BMWWW-t	MT20	3.0	6.0		
I	BMVW1-t	MT20	3.0	4.0		

DIMENSIONS, SUPPORTS AND LOADINGS SPECIFIED BY FABRICATOR TO BE VERIFIED BY BUILDING DESIGNER

BEARINGS

JT	FACTORED GROSS REACTION VERT	HORZ	MAXIMUM FACTORED GROSS REACTION DOWN	HORZ	UPLIFT	INPUT BRG IN-SX	REQRD BRG IN-SX
I	781	0	781	0	0	5-8	1-8
G	664	0	664	0	0	MECHANICAL	

A SUITABLE HANGER/MECHANICAL CONNECTION IS REQUIRED AT JOINT G. MINIMUM BEARING LENGTH AT JOINT G = 1-8.

UNFACTORED REACTIONS

JT	1ST LCASE COMBINED	MAX./MIN. COMPONENT REACTIONS SNOW	LIVE	PERM.LIVE	WIND	DEAD	SOIL
I	544	402 / 0	0 / 0	0 / 0	0 / 0	142 / 0	0 / 0
G	465	332 / 0	0 / 0	0 / 0	0 / 0	133 / 0	0 / 0

BEARING MATERIAL TO BE SPF NO.2 OR BETTER AT JOINT(S) I

BRACING
TOP CHORD TO BE SHEATHED OR MAX. PURLIN SPACING = 6.25 FT.
MAX. UNBRACED BOTTOM CHORD LENGTH = 10.00 FT OR RIGID CEILING DIRECTLY APPLIED.

ALL PITCH BREAKS AND PERIMETER CORNER JOINTS MUST BE LATERALLY RESTRAINED.

LOADING
TOTAL LOAD CASES: (4)

CHORDS

MEMB. FR-TO	MAX. FACTORED FORCE (LBS)	FACTORED VERT. LOAD LC1 (PLF) FROM	TO	MAX CSI (LC)	MAX. UNBRAC LENGTH
A- B	0 / 37	-84.3	-84.3	0.12 (1)	10.00
B- C	0 / 21	-84.3	-84.3	0.15 (1)	10.00
C- D	-443 / 0	-84.3	-84.3	0.12 (1)	6.25
D- E	-442 / 0	-84.3	-84.3	0.10 (1)	6.25
E- F	0 / 19	-84.3	-84.3	0.13 (1)	10.00
I- B	-224 / 0	0.0	0.0	0.02 (1)	7.81
G- F	-103 / 0	0.0	0.0	0.01 (1)	7.81
I- H	0 / 415	-18.2	-18.2	0.25 (4)	10.00
H- G	0 / 379	-18.2	-18.2	0.24 (4)	10.00

WEBS

MEMB. FR-TO	MAX. FACTORED FORCE (LBS)	MAX CSI (LC)
C- H	-142 / 4	0.07 (1)
H- D	0 / 330	0.07 (1)
H- E	-92 / 15	0.04 (1)
I- C	-657 / 0	0.29 (1)
E- G	-642 / 0	0.29 (1)

DESIGN CRITERIA

SPECIFIED LOADS:

TOP CH.	LL	=	25.6	PSF
	DL	=	3.0	PSF
BOT CH.	LL	=	0.0	PSF
	DL	=	7.3	PSF
TOTAL LOAD		=	35.9	PSF

SPACING = 24.0 IN. C/C

THIS TRUSS IS DESIGNED FOR RESIDENTIAL OR SMALL BUILDING REQUIREMENTS OF PART 9, NBCC 2015

THIS DESIGN COMPLIES WITH:
- PART 9 OF BCBC 2018 , ABC 2019
- PART 9 OF OBC 2012 (2019 AMENDMENT)
- CSA 086-14
- TPIC 2014

(55 % OF 31.3 P.S.F. G.S.L. PLUS 8.4 P.S.F. RAIN LOAD) EQUALS 25.6 P.S.F. SPECIFIED ROOF LIVE LOAD

ALLOWABLE DEFL.(LL)= L/360 (0.43")
CALCULATED VERT. DEFL.(LL) = L/ 999 (0.01")
ALLOWABLE DEFL.(TL)= L/360 (0.43")
CALCULATED VERT. DEFL.(TL) = L/ 999 (0.05")

CSI: TC=0.15/1.00 (B-C:1) , BC=0.25/1.00 (H-I:4) , WB=0.29/1.00 (C-I:1) , SSI=0.10/1.00 (C-D:1)

DOL LUMBER=1.00 NAIL=1.00 LS BEND=1.10 COMP=1.10 SHEAR=1.10 TENS= 1.10

COMPANION LIVE LOAD FACTOR = 1.00

TRUSS PLATE MANUFACTURER IS NOT RESPONSIBLE FOR QUALITY CONTROL IN THE TRUSS MANUFACTURING PLANT .

NAIL VALUES

PLATE	GRIP(DRY) (PSI) MAX	MIN	SHEAR (PLI) MAX	MIN	SECTION (PLI) MAX	MIN
MT20	650	371	1747	788	1987	1873

PLATE PLACEMENT TOL. = 0.250 inches

PLATE ROTATION TOL. = 5.0 Deg.

JSI GRIP= 0.83 (D) (INPUT = 0.90)
JSI METAL= 0.22 (C) (INPUT = 1.00)

LICENSED PROFESSIONAL ENGINEER
I.MATIJEVIC
100528832
PROVINCE OF ONTARIO
October 06, 2021

READ ALL NOTES ON THIS PAGE AND ON THE ENGINEERING NOTE PAGE ENP-1. THE NOTE PAGE IS AN INTEGRAL PART OF THIS DRAWING AS IT CONTAINS SPECIFICATIONS AND CRITERIA USED IN THE DESIGN OF THIS COMPONENT.

KOTT

JOB NAME	TRUSS NAME	QUANTITY	PLY	JOB DESC.	DRWG NO.
IM1021-033	T11	9	1	TRUSS DESC.	

Version 8.500 S Aug 16 2021 MiTek Industries, Inc. Wed Oct 6 13:05:07 2021 Page 1
ID:Leed7e129lDTMWGQL9?03mzYSEd-1GVuxevMGqNlZGa2ngjyoENdHAdvc6ZwgGq3xNyW8Kw

CITY OF RICHMOND HILL
BUILDING DIVISION
09/22/2022
RECEIVED
Per:maddy.toalaalejandro

Scale = 1:16.8

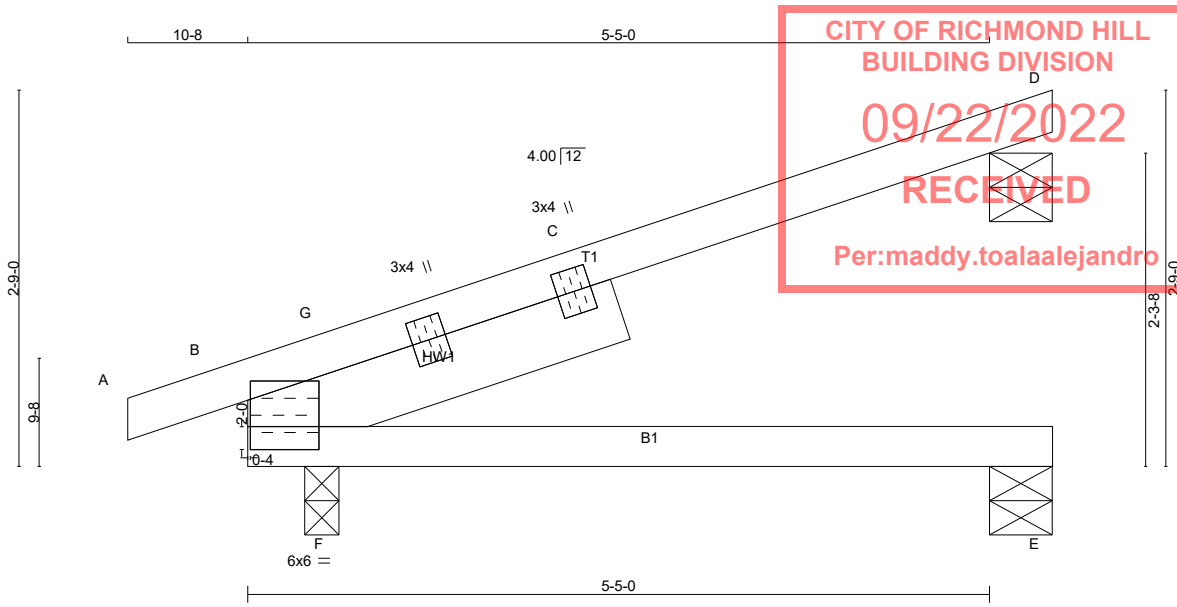

TOTAL WEIGHT = 9 X 20 = 180 lb

LUMBER
N. L. G. A. RULES

CHORDS	SIZE		LUMBER	DESCR.
A - D	2x4	DRY	No.2	SPF
B - E	2x4	DRY	No.2	SPF
REINFORCING MEMBERS				
HW1	2x6	DRY	No.2	SPF

DRY: SEASONED LUMBER.

PLATES (table is in inches)

JT	TYPE	PLATES	W	LEN	Y	X
B	TMBMR1-I	MT20	6.0	6.0	2.00	0.25
B	RT+t	MT20	3.0	4.0		
B	RT+t	MT20	3.0	4.0		

DIMENSIONS, SUPPORTS AND LOADINGS SPECIFIED BY FABRICATOR TO BE VERIFIED BY BUILDING DESIGNER

BEARINGS

JT	FACTORED GROSS REACTION VERT	HORZ	MAXIMUM FACTORED GROSS REACTION DOWN	HORZ	UPLIFT	INPUT BRG IN-SX	REQRD BRG IN-SX
D	223	0	223	0	0	5-8	5-8
B	379	0	379	0	0	3-0	1-8
E	78	0	78	0	0	5-8	1-8

BEVELED PLATE OR SHIM REQUIRED TO PROVIDE FULL BEARING SURFACE WITH TRUSS CHORD AT JT(S): D

UNFACTORED REACTIONS

JT	1ST LCASE COMBINED	MAX./MIN. COMPONENT REACTIONS SNOW	LIVE	PERM.LIVE	WIND	DEAD	SOIL
D	153	128 / 0	0 / 0	0 / 0	0 / 0	24 / 0	0 / 0
B	263	197 / 0	0 / 0	0 / 0	0 / 0	66 / 0	0 / 0
E	58	22 / 0	0 / 0	0 / 0	0 / 0	36 / 0	0 / 0

BEARING MATERIAL TO BE SPF NO.2 OR BETTER AT JOINT(S) D, B, E

BRACING
TOP CHORD TO BE SHEATHED OR MAX. PURLIN SPACING = 6.25 FT.
MAX. UNBRACED BOTTOM CHORD LENGTH = 10.00 FT OR RIGID CEILING DIRECTLY APPLIED.

ALL PITCH BREAKS AND PERIMETER CORNER JOINTS MUST BE LATERALLY RESTRAINED.

LOADING
TOTAL LOAD CASES: (4)

CHORDS MEMB. FR-TO	MAX. FACTORED FORCE (LBS)	FACTORED VERT. LOAD (PLF) FROM	TO	LC1	MAX CSI (LC)	MAX. UNBRAC LENGTH	WEBS MEMB. FR-TO	MAX. FACTORED FORCE (LBS)	MAX CSI (LC)
A- B	-8 / 0	-84.3	-84.3	0.04 (1)	10.00		F- G	-341 / 1	0.00 (1)
B- G	-146 / 0	-84.3	-84.3	0.11 (1)	6.25		F- C	0 / 201	0.03 (4)
G- C	-95 / 0	-84.3	-84.3	0.42 (1)	6.25				
C- D	-95 / 0	-84.3	-84.3	0.42 (1)	6.25				
B- F	0 / 163	-18.2	-18.2	0.24 (1)	10.00				
F- E	0 / 0	-18.2	-18.2	0.23 (1)	10.00				

[M][F]

DESIGN CRITERIA

SPECIFIED LOADS:

TOP CH.	LL	=	25.6	PSF
	DL	=	3.0	PSF
BOT CH.	LL	=	0.0	PSF
	DL	=	7.3	PSF
TOTAL LOAD		=	35.9	PSF

SPACING = 24.0 IN. C/C

THIS TRUSS IS DESIGNED FOR RESIDENTIAL OR SMALL BUILDING REQUIREMENTS OF PART 9, NBCC 2015

THIS DESIGN COMPLIES WITH:
- PART 9 OF BCBC 2018 , ABC 2019
- PART 9 OF OBC 2012 (2019 AMENDMENT)
- CSA 086-14
- TPIC 2014

(55 % OF 31.3 P.S.F. G.S.L. PLUS 8.4 P.S.F. RAIN LOAD) EQUALS 25.6 P.S.F. SPECIFIED ROOF LIVE LOAD

ALLOWABLE DEFL.(LL)= L/360 (0.20")
CALCULATED VERT. DEFL.(LL) = L/ 999 (0.07")
ALLOWABLE DEFL.(TL)= L/360 (0.20")
CALCULATED VERT. DEFL.(TL) = L/ 587 (0.12")

CSI: TC=0.42/1.00 (D-G:1) , BC=0.24/1.00 (B-F:1) , WB=0.03/1.00 (C-F:4) , SSI=0.21/1.00 (D-G:1)

DOL LUMBER=1.00 NAIL=1.00 LS BEND=1.10 COMP=1.10 SHEAR=1.10 TENS= 1.10

COMPANION LIVE LOAD FACTOR = 1.00

TRUSS PLATE MANUFACTURER IS NOT RESPONSIBLE FOR QUALITY CONTROL IN THE TRUSS MANUFACTURING PLANT .

NAIL VALUES

PLATE	GRIP(DRY) (PSI) MAX	MIN	SHEAR (PLI) MAX	MIN	SECTION (PLI) MAX	MIN
MT20	650	371	1747	788	1987	1873

PLATE PLACEMENT TOL. = 0.250 inches

PLATE ROTATION TOL. = 5.0 Deg.

JSI GRIP= 0.11 (B) (INPUT = 0.90)
JSI METAL= 0.05 (B) (INPUT = 1.00)

LICENSED PROFESSIONAL ENGINEER
I.MATIJEVIC
100528832
PROVINCE OF ONTARIO
October 06, 2021

READ ALL NOTES ON THIS PAGE AND ON THE ENGINEERING NOTE PAGE ENP-1. THE NOTE PAGE IS AN INTEGRAL PART OF THIS DRAWING AS IT CONTAINS SPECIFICATIONS AND CRITERIA USED IN THE DESIGN OF THIS COMPONENT.

KOTT

MiTek®

STANDARD DETAIL MSD2015-H

Issued: SEPTEMBER 22, 2020
Expiry: APRIL 30, 2022

CITY OF RICHMOND HILL
BUILDING DIVISION
09/22/2022
RECEIVED
Per:maddy.toalaalejandro

TOE-NAIL CAPACITY DETAILS

LATERAL AND WITHDRAWAL RESISTANCE OF BEARING ANCHORAGE BY TOE-NAILS

NAIL TYPE	Length (in)	Diameter (in)	LATERAL Resistance per nail (Lbs.)		WITHDRAWAL Resistance per nail (Lbs.)	
			SPF	D. FIR	SPF	D. FIR
COMMON WIRE	3.00	0.144	122	139	30	42
	3.25	0.144	127	144	32	45
	3.50	0.160	152	173	38	52
COMMON SPIRAL	3.00	0.122	96	108	26	36
	3.25	0.122	97	108	28	40
	3.50	0.152	142	161	36	50
3.25" Gun nail	3.25	0.120	94	105	28	39

Note: If using truss with D. Fir lumber and SPF bearing plate, use tabulated SPF values in table.

Nail type:	Common wire	Common spiral	Common wire	Common spiral	Gun Nail
Diameter (in.)	0.160	0.152	0.144	0.122	0.120
Length (in.)	3.50	3.50	3.00	3.00	3.25
LUMBER	**MAXIMUM NUMBER OF TOE-NAILS**				
2x4 SPF	2	2	3	3	3
2x6 SPF	4	4	4	5	5
2x4 D. FIR	2	2	2	2	2
2x6 D. FIR	3	3	3	4	4

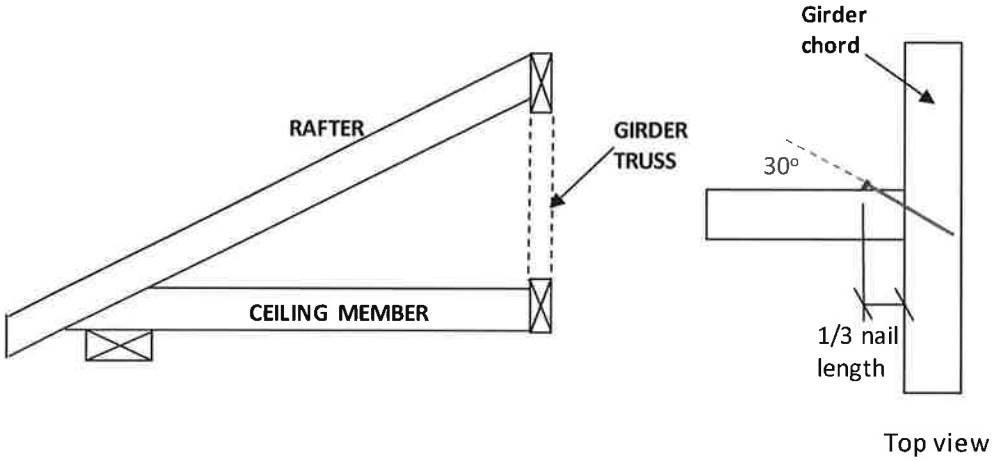

Figure 1: Toe-Nailing Rafter / Ceiling Member to Girder Truss

PEO
Certificate No. 10889485

LICENSED PROFESSIONAL ENGINEER
C. Cordogiannis
90553736
PROVINCE OF ONTARIO

December 21, 2020

©2020 MiTek Canada Inc., 240 Stirling Crescent, Bradford, Ontario, L3Z 4L5 | (800) 268-3434, www.mitek.ca

MiTek®

STANDARD DETAIL MSD2015-H

Issued: **SEPTEMBER 22, 2020**
Expiry: **APRIL 30, 2022**

CITY OF RICHMOND HILL
BUILDING DIVISION
09/22/2022
RECEIVED
Per:maddy.toalaalejandro

TOE-NAIL CAPACITY DETAILS

Figure 2: Toe-Nail Anchorage to Bearing Plate for Uplift

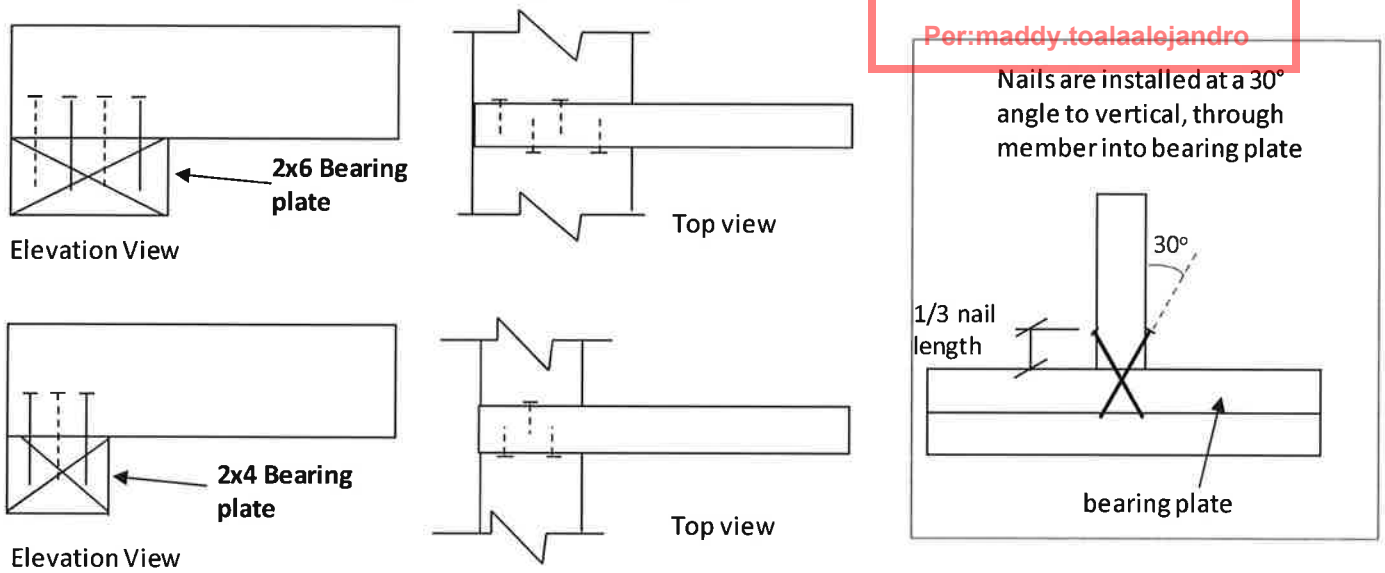

NOTES:

1. Rafter and ceiling members may be connected to top and bottom chords of girder truss by toe-nailing the members into the girder chords (see fig. 1), provided the factored vertical reactions of the supported members do not exceed the lateral resistance of the toe-nails. Mechanical connectors (hangers) are required if factored vertical reactions exceed the toe-nail capacity, or if the connection must resist horizontal loads (loads perpendicular to the face of girder or rafter).

2. Trusses, rafters or ceiling members may be anchored to the bearing plate with toe-nails (see fig. 2), provided that the factored uplift reactions due to **wind or earthquake loads** do not exceed the **withdrawal resistance of the toe-nails.** Mechanical anchors (tie-downs) are required for reactions that exceed the toe-nail withdrawal capacity. Toe-nail anchorage to bearing plates is **NOT** permitted if uplift reactions are generated from gravity loads (snow, floor live, dead).

3. Tabulated toe-nail resistances on page 1 are for **one** toe-nail. Multiply unit values by the number of nails used in the connection. Maximum number of nails in a connection shall not exceed the tabulated limits shown on page 1 for a given lumber size /species.

4. Nail values are based on specific gravity of G = 0.42 (SPF) and G = 0.49 (D. Fir).

5. Toe-nails shall be driven at approximately 1/3 the nail length from the edge of the joist/truss chord and driven at an angle of 30° to the grain of the member.

6. For wind / earthquake loads, tabulated lateral resistances may be multiplied by 1.15 (K_D factor). No increases are permitted for tabulated withdrawal resistances.

7. Lumber must be dry (< 19% moisture content) at the time of nail installation.

8. Nail values in this table comply with CSA O86-19, Clause 12.9.

PEO
Certificate No. 10889485

December 21, 2020

©2020 MiTek Canada Inc., 240 Stirling Crescent, Bradford, Ontario, L3Z 4L5 | (800) 268-3434, www.mitek.ca

MiTek®

STANDARD DETAIL MSD2015-I

Issued: **MARCH 9, 2021**
Expiry: **APRIL 30, 2022**

CITY OF RICHMOND HILL
BUILDING DIVISION
09/22/2022
RECEIVED
Per:maddy.toalaalejandro

STANDARD PIGGYBACK TRUSS

COMMON-SHAPED PIGGYBACK TRUSS

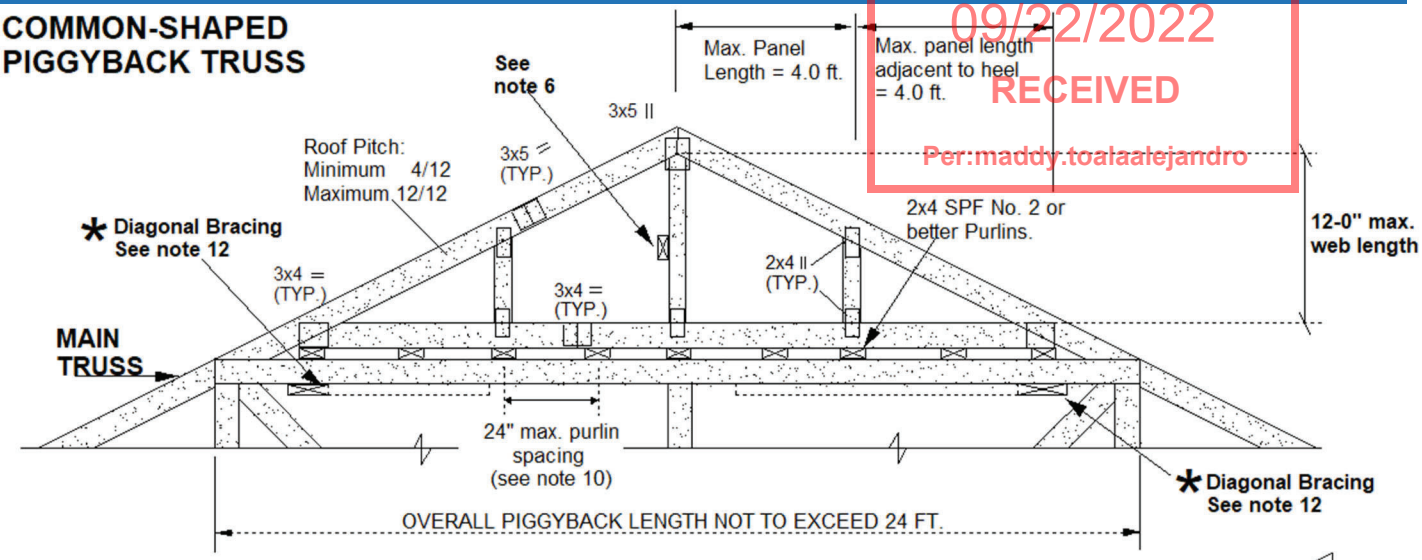

Specified Load Rating:

Top chord live:	60.0 PSF
Top chord dead:	6.0 PSF
Bottom chord live:	0.0 PSF
Bottom chord dead:	7.3 PSF

Truss spacing not to exceed 24 inches cc

The design requirements and limits shown on this page are applicable to both common shaped and mono-shaped piggybacks. Diagrams are for illustration purposes only.

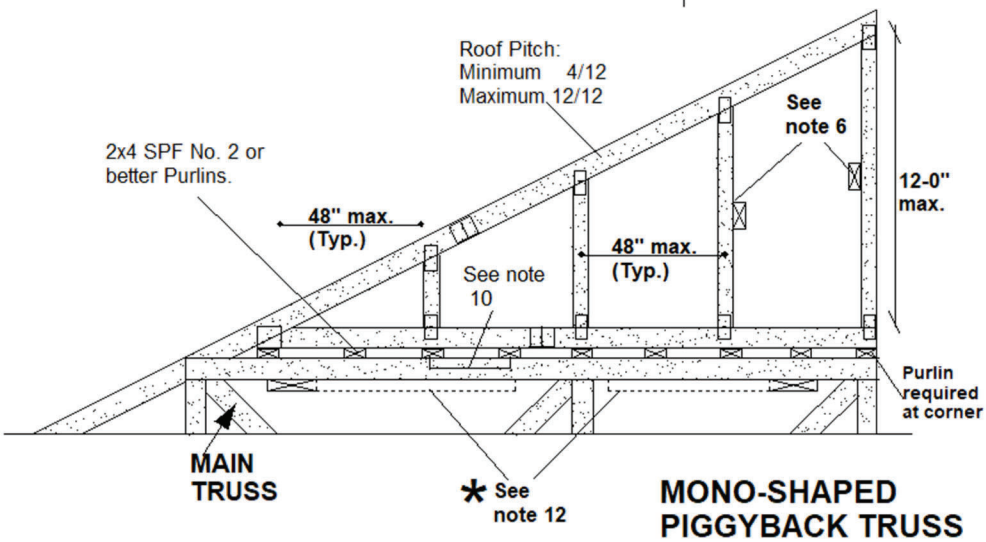

MONO-SHAPED PIGGYBACK TRUSS

NOTES:

1. This detail is applicable only to projects conforming to **PART 9 NBCC2015** that do not require a wind analysis to be incorporated into the truss design. Piggyback length not to exceed 24 ft.
2. All piggyback truss lumber to be SPF or D. Fir species and No. 2 DRY (or better) grade.
3. Piggyback top chord size shall be 2x4. Vertical webs and bottom chord sizes shall be 2x3 or 2x4.
4. Splice joints shall not be located in the first panel adjacent to the heel joint or peak joint. Splices shall be located at 1/4 length of any permissible panel.
5. Maximum web length not to exceed 12.0 ft. Maximum panel lengths not to exceed 48 inches.
6. One continuous lateral brace required at ½ length of all vertical members longer than 6.0 ft. Scab brace or L-brace substitutions are permitted. Scab braces shall be limited to 10 ft. long webs or less. Scab and L-braces shall cover 90% of web length and connected as per MITEK detail MSD2015-K.
7. Piggyback truss must be installed directly on top of each main truss.
8. All plates shall be MiTek MT20, centered at each joint and pressed into both faces of truss.
9. **DO NOT** cantilever mono-shaped piggyback truss over the end of main truss. Piggyback length must match the length of the flat chord of the main truss.
10. Purlin spacing to be equal to main truss maximum unbraced top chord length (as shown on main truss engineering drawing), but not to exceed 24 inches c/c.
11. Purlin design and overall roof system bracing shall be specified by the building designer.
12. Diagonal bracing required. See ***'BCSI CANADA -B2C: FIELD ASSEMBLY & OTHER SPECIAL CONDITIONS'***

PEO
Certificate No. 10889485

©2021 MiTek Canada Inc., 240 Stirling Crescent, Bradford, Ontario, L3Z 4L5 | (800) 268-3434, www.mitek.ca

MiTek®

STANDARD DETAIL MSD2015-J

Issued: **MARCH 17, 2021**
Expiry: **APRIL 30, 2022**

CITY OF RICHMOND HILL
BUILDING DIVISION
09/22/2022
RECEIVED
Per:maddy.toalaalejandro

STANDARD HIP END FRAMING

PLAN VIEW

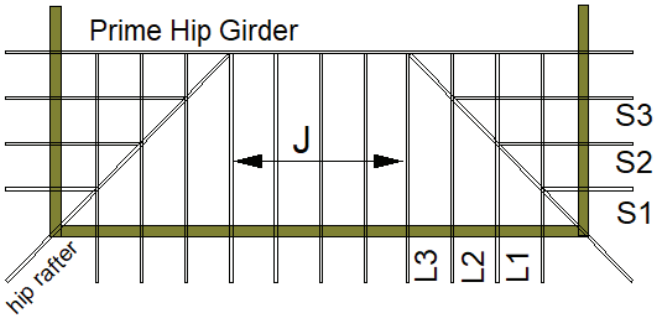

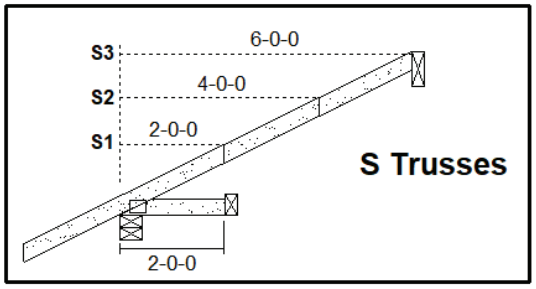

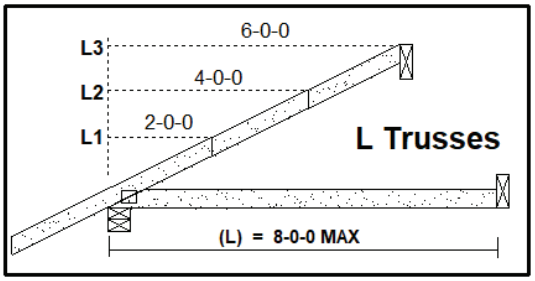

Specified Load Rating:

Top chord Live:	51.0 PSF or less
Top chord Dead:	6.0 PSF or less
Bottom chord Live:	0.0 PSF
Bottom chord Dead:	7.3 PSF or less

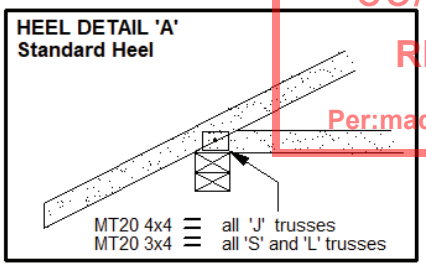

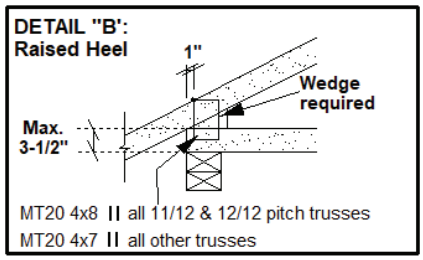

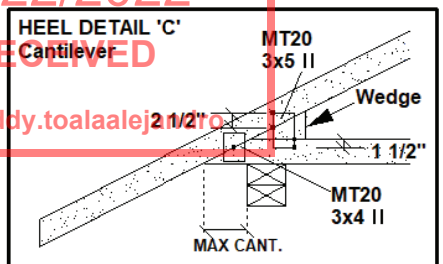

CANTILEVER DETAIL "C"

SLOPE	MAX CANT.	WEDGE PLATE	WEDGE SIZE
3/12	17"	3 X 5	2 X 3
4/12	14"	3 X 5	2 X 3
5/12	12"	3 X 5	2 X 4
6/12	10"	3 X 5	2 X 4
7/12	9"	3 X 5	2 X 6
8/12	8.5"	3 X 5	2 X 6
9/12	8"	3 X 5	2 X 6
10/12	7.5"	3 X 5	2 X 6

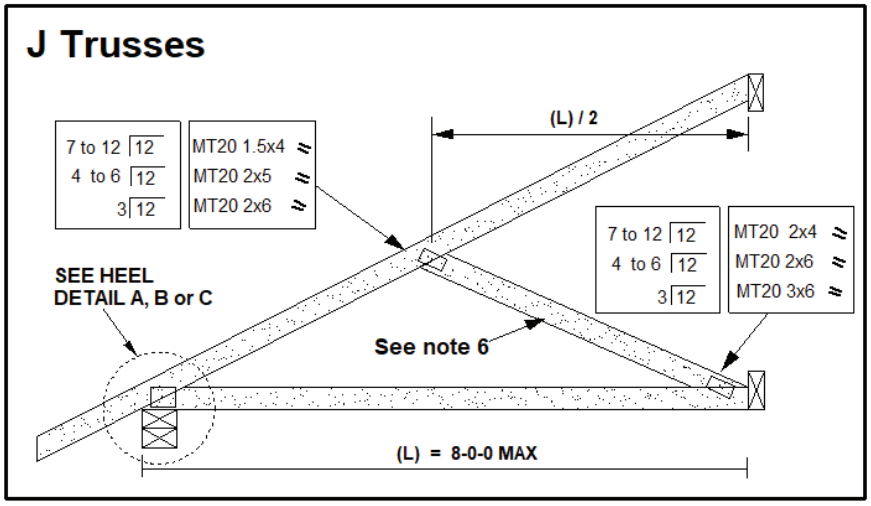

NOTES:

1. This detail is valid only for projects conforming to **PART 9 NBCC 2015** that do not require a wind analysis to be incorporated into the design of the trusses.
2. Overhang length shall not exceed 24 inches.
3. All lumber shall be 2x4 SPF (or D-Fir) DRY No. 2 grade or better.
4. All plates specified are MITEK MT20, pressed into both faces of each truss. Heel plates of all trusses shall conform to heel details 'A', 'B' or 'C'.
5. Diagonal hip rafter design shall conform to section 9.23.14.6 of NBCC 2015.
6. For 6.0 ft. or less span, diagonal web on truss 'J" is optional. Girder design must reflect choice of partial jack ('J' with diagonal web) or open jack ('J' without diagonal web)
7. All truss-to-rafter and truss-to-truss connections shall be specified as per MITEK standard detail *'MSD2015-H: Toe-Nail Capacity Details'*

PEO
Certificate No. 10889485

©2021 MiTek Canada Inc.240 Stirling Cr. Bradford Ontario, L3Z 4L5 (800) 268-3434, www.mitek.ca

MiTek®

STANDARD DETAIL MSD2015-K

Issued: **APRIL 12, 2021**
Expiry: **APRIL 30, 2022**

CITY OF RICHMOND HILL
BUILDING DIVISION
09/22/2022
RECEIVED
Per: Maddy.Koalaarajah

STANDARD GABLE END DETAIL

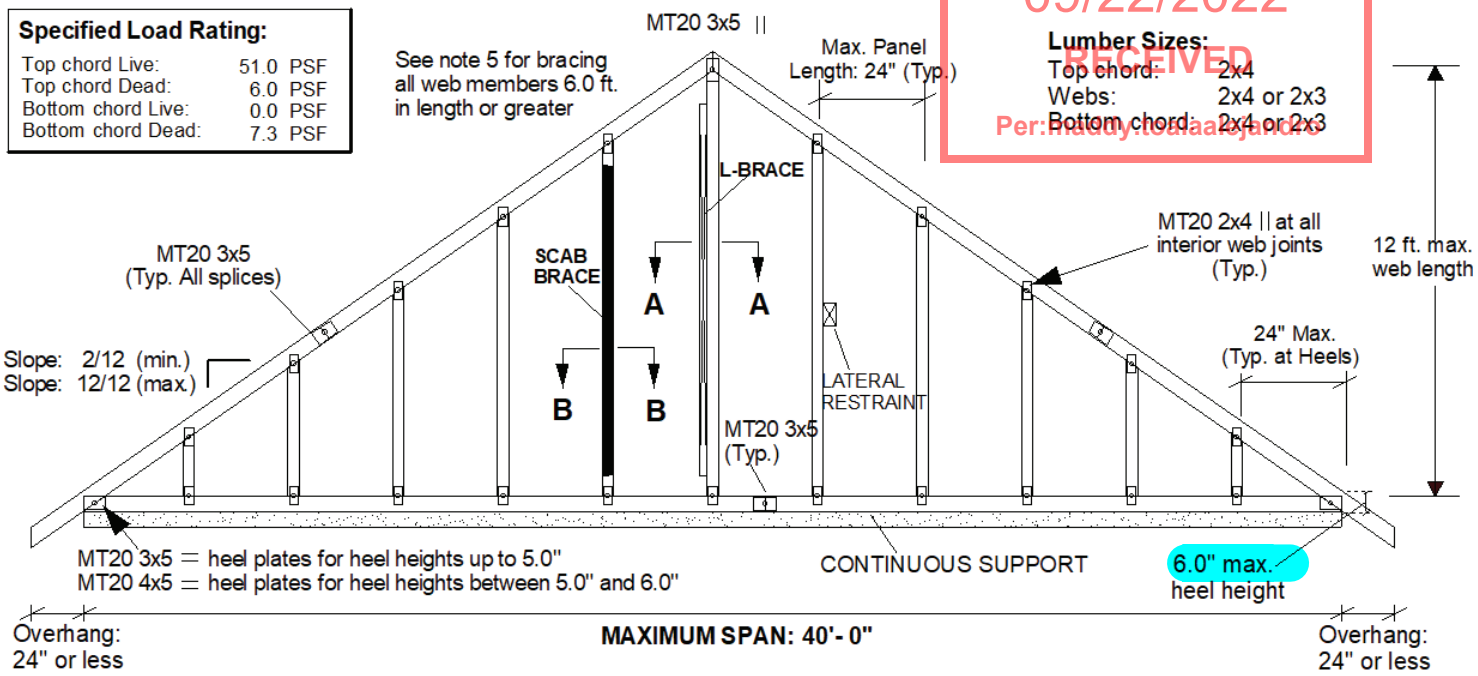

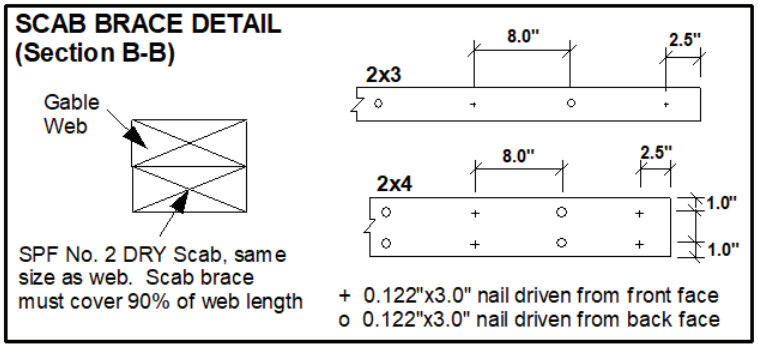

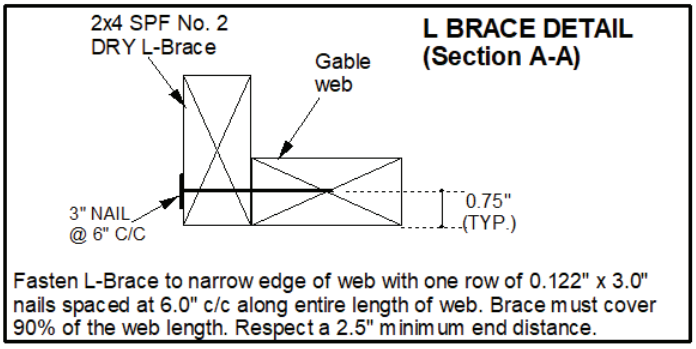

Notes:

1. This detail is only valid for projects conforming to **Part 9, NBCC 2015** that do not require a wind analysis to be incorporated into the design of the truss.
2. This detail is for vertical (gravity) load rating of the truss only. Truss must be continuously supported over the entire length of bottom chord.
3. Maximum web length not to exceed 12.0 ft. Spacing of gable stud webs in the truss not to exceed 24 inches cc.
4. Splice joints shall not be located in the first panel adjacent to the heel joint or peak joint.
5. Lateral restraint required at half-length of all webs over 6.0 ft. long. Alternatively install an L-Brace or scab brace as shown above. Scab braces shall be limited to 10 ft. long webs or less.
6. All plates are MITEK MT20 pressed into both faces of truss.
7. All lumber to be SPF (or D-Fir) DRY and of No.2 grade or better.
8. Additional building bracing is typically installed to brace the face of the end wall assembly. See BCSI Canada '*Building Designer Responsibilities for Gable End Frame Bracing*' for additional information on building bracing for gable-end assemblies.

PEO
Certificate No. 10889485

©2020 MiTek Canada Inc., 240 Stirling Crescent, Bradford, Ontario, L3Z 4L5 | (800) 268-3434, www.mitek.ca