2012
PACKAGE 'A1'

CONSTRUCTION NOTES (UNLESS OTHERWISE NOTED)

ALL CONSTRUCTION TO ADHERE TO THESE PLANS AND SPEC'S AND TO CONFORM TO THE ONTARIO BUILDING CODE AND ALL OTHER APPLICABE CODES AND AUTHORITIES HAVING JURISDICTION. THESE REQUIREMENTS ARE TO BE TAKEN AS MINIMUM SPECIFICATIONS. ONT. REG. 332/12 – 2012 OBC.

1 ROOF CONSTRUCTION (*SEE OBC 9.19.)

NO. 210 (10.25kg/m2) ASHPHALT SHINGLES. 10mm (3/8") PLYWOOD SHEATHING WITH "H" CLIPS. APPROVED WOOD TRUSSES @600mm 24" o.c. MAX. APPROVED EAVE PROTECTION TO EXTEND 900mm (3'–0") FROM EDGE OF ROOF AND MIN. 300mm (12") BEYOND INNER FACE OF EXTERIOR WALL, 38x89 (2"x4") TRUSS BRACING @ 1830mm (6'–0") o.c. AT BOTTOM CHORD. PREFIN. ALUM. EAVESTROUGH, FASCIA, RWL & VENTED SOFFIT. PROVIDE ICE & WATER SHIELD TO ALL ROOF / WALL SURFACES SUSCEPTIBLE TO DAMMING. ROOF SHEATHING TO BE FASTENED 150 (6") c.c. ALONG EDGES & INTERMEDIATE SUPPORTS WHEN TRUSSES SPACED GREATER THAN 406 (16"). ATTIC VENTILATION 1:300 OF INSULATED CEILING AREA WITH 50% AT EAVES.

2 FRAME WALL CONSTRUCTION (2"X6")

SIDING, HARDIE BOARD, STUCCATO BOARD OR EQUAL AS PER ELEVATION, 19X64 (1"x3") VERTICAL WOOD FURRING, APPROVED SHEATHING PAPER, 7/16" O.S.B. EXTERIOR SHEATHING. 38X140 (2"X6") STUDS @ 400MM (16") O.C. W/APPROVED DIAGONAL WALL BRACING, RSI 3.87 (R22) INSULATION AND APPROVED VAPOUR BARRIER AND APPROVED CONT. AIR BARRIER, 13mm (1/2") INT. DRYWALL FINISH.

3 BRICK VENEER CONSTRUCTION (2"X6")

90mm (4") FACE BRICK 25mm (1") AIR SPACE, 22x180x0.76mm (7/8"x7"x0.03") GALV. METAL TIES @ 400mm (16") o.c. HORIZONTAL 600mm (24") o.c. VERTICAL. APPROVED SHEATHING PAPER, 7/16" O.S.B. EXTERIOR SHEATHING. 38x140 (2"x6") STUDS @ 400mm (16") o.c. W/APPROVED DIAGONAL WALL BRACING, RSI 3.87 (R22) INSUL. APPROVED VAPOUR BARRIER AND APPROVED CONT. AIR BARRIER, 13mm (1/2") INT. DRYWALL FINISH. PROVIDE WEEP HOLES @ 800mm (32") o.c. BOTTOM COURSE AND OVER OPENINGS. PROVIDE BASE FLASHING UP MIN. 150mm (6") BEHIND BUILDING PAPER.

3A STUCCO WALL CONSTRUCTION (2"X6")

STUCCO CLADDING SYSTEM CONFIRMING TO OBC9.27.1.1.(2) & 9.28 THAT EMPLOY A MINIMUM 6mm (1/4") DRAINAGE CAVITY BEHIND THE CLADDING WITH POSITIVE DRAINAGE TO THE EXTERIOR AND APPLIED AS PER MANUFACTURERS SPECIFICATION ON 25mm (1") MINIMUM EXTRUDED OR EXPANDED RIGID INSULATION, APPROVED SHEATHING PAPER, 7/16" O.S.B. EXTERIOR SHEATHING. 38x140 (2"x6") STUDS @ 400mm (16") o.c. W/APPROVED DIAGONAL WALL BRACING, RSI 3.87 (R22) INSUL. APPROVED VAPOUR BARRIER AND APPROVED CONT. AIR BARRIER, 13mm (1/2") INT. DRYWALL FINISH. STUCCO TO BE MIN.200mm (8") ABOVE FINISH GRADE.

4 INTERIOR STUD PARTITIONS

(*SEE OBC 9.23.10.&9.23.11.)

BEARING PARTITION 38x89 (2"x4") @ 400mm (16") o.c. FOR 2 STOREYS AND 300mm (12") o.c. FOR 3 STOREYS. NON–BEARING PARTITIONS 38x89 (2"x4") @ 600mm (24") o.c.. PROVIDE 38x89 (2"x4") BOTTOM PLATE AND 2/38x89 (2–2"x4") TOP PLATE. 13mm (1/2") INTERIOR DRYWALL BOTH SIDES OF STUD, PROVIDE 38x140 (2"x6") STUDS/PLATES WHERE NOTED.

NON–LOADBEARING WALLS PARALLEL TO FLOOR JOISTS SHALL BE SUPPORTED BY JOIST BENEATH OR ON BLOCKING BETWEEN THE JOISTS, AS PER 9.23.9.8

5 FOUNDATION WALL/FOOTINGS:

(*SEE OBC 9.15.3 & 9.15.4.)

MIN. 200mm (8") POURED CONC. FDTN. WALL 15MPa (2200psi) WITH BITUMENOUS DAMPROOFING AND DRAINAGE LAYER. MIN. 480x155 (19"x6") CONTIN. KEYED CONC. FTG. BRACE FOUNDATION WALL PRIOR TO BACKFILLING. ALL FOOTINGS SHALL REST ON NATURAL UNDISTURBED SOIL WITH MINIMUM BEARING CAPACITY OF 120kPa (17.4 psi) OR GREATER.

REFER TO ARCHITECTURAL DRAWINGS OR BLOCK PLANS FOR FOUNDATION AND FOOTING SIZES

6 WEEPING TILE (* SEE OBC 9.14.3.)

100mm (4") DIA. WEEPING TILE 150mm (6") CRUSHED STONE OVER AND AROUND WEEPING TILES.

7 BASEMENT SLAB (*SEE OBC 9.16.-)

80mm (3") MIN. 25MPa (3600psi) CONC. SLAB ON 100mm (4") COARSE GRANULAR FILL, OR 15MPa (2200psi) CONC. WITH DAMPROOFING BELOW SLAB.

8 WOOD SUBFLOORS (*SEE OBC 9.23.14. & 9.30.2.)

19mm (3/4") T&G SUBFLOOR UNDER GROUND FLOOR FINISH FLOOR.
16mm (5/8") T&G SUBFLOOR UNDER SECOND FLOOR FINISH FLOOR.
16mm (5/8") PANEL–TYPE UNDERLAY FOR CERAMIC TILE APPLICATION.
6mm (1/4") PANEL–TYPE UNDERLAY UNDER RESILIENT & PARQUET FLOORING.

9 ROOF INSULATION (*SEE SB12 - 2.1.1.2.A & 2.1.1.7)

RSI 10.57 (R60) ROOF INSULATION AND APPROVED VAPOUR BARRIER, 16mm (5/8") INT. DRYWALL FINISH OR APPROVED EQUAL.

10 ALL STAIRS/EXTERIOR STAIRS (*SEE OBC 9.8.-)

MAX. RISE	=200	(7–7/8")
MIN. RUN	=255	(10")
MAX. RUN	=355	(1'–2")
MAX. NOSING	=25	(1")
MIN. HEADROOM	=1950	(6'–5")
RAIL @ LANDING	=900	~~(2'–11")~~ 3'-0" TO ~~965 (3'–2")~~ 1070 (3'-6)
RAIL @ STAIR	=865	(2'–10")
MIN. STAIR WIDTH	=860	(2'–10")

3 REV.

FOR CURVED STAIRS

MIN. AVG. RUN	= 200	(8")
MIN. RUN	= 150	(6")

11 RAILING (*SEE OBC 9.8.8.)

FINISHED RAILING ON PICKETS SPACED MAXIMUM 100mm (4") BETWEEN PICKETS.

INTERIOR GUARDS:	= 900mm	~~(2'–11")~~ 3'-0" MIN.
EXTERIOR GUARDS:	= 1070mm	(3'–6") MIN.

12 SILL PLATE (*SEE OBC 9.23.6 & 9.23.7.)

38x89 (2"x4") SILL PLATE WITH 13mm (1/2") DIA. ANCHOR BOLTS 200mm (8") LONG, EMBEDDED MIN. 100mm (4") INTO CONC. @ 2400mm (7'–10") o.c. CAULKING OR 25 (1") MIN. MINERAL WOOL BETWEEN PLATE AND TOP OF FDTN. WALL. USE MORTAR TO LEVEL SILL PLATE WHEN REQUIRED.

13 BASEMENT INSULATION (*SEE OBC 12.3.)

FOUNDATION WALLS ENCLOSING HEATED SPACE SHALL BE INSULATED FROM THE UNDERSIDE OF THE SUBFLOOR TO NOT MORE THAN 152mm (6") ABOVE THE FINISHED FLOOR OF THE BASEMENT AND NOT LESS THAN 50mm (2") TO THE SLAB.
FOUNDATION WALL INSULATION SHALL BE MINIMUM RSI. 3.52 (R20) BLANKET INSULATION, APPROVED VAPOUR BARRIER, DAMPROOFING W/BLDG. PAPER BETWEEN THE FDTN. AND INSUL.

14 BASEMENT BEARING STUD PARTITION

(*SEE OBC 9.23.10.)

38x89 (2"x4") STUDS @400mm (16") o.c. 38x89 (2"x4") SILL PLATE ON DAMPROOFING MATERIAL, 13mm (1/2") DIA. ANCHOR BOLTS 200mm (8") LONG, EMBEDDED MIN. 100mm (4") INTO CONC. @ 2400mm (7'–10") o.c. (4") HIGH CONC. CURB ON 305x155 (12"x6") CONC. FOOTING. ADD HORIZ. BLOCKING AT MID–HEIGHT IF WALL IS UNFINISHED.

REFER TO ARCHITECTURAL DRAWINGS OR BLOCK PLANS FOR FOOTING SIZES

15 STEEL BASEMENT COLUMN (* SEE OBC 9.17.3.)

90mm (3–1/2") DIA. x 4.78mm (.188) STL. COL. WITH 150x150x9.5mm (6"x6"x3/8") STL. TOP & BOTTOM PLATE.

15A STEEL COLUMN (* SEE OBC 9.17.3.)

90mm (3–1/2") DIA. x 4.78mm (.188) STL. COLUMN WITH 100x100x6.4mm (4"x4"x1/4") STEEL TOP & BOTTOM PLATE. FIELD WELD BOTTOM PLATE TO 250x100x12.5mm (10"x4"x1/2") BASE PLATE C/W 2–13mm (1/2") DIA. x 300mm (12") LONG x 50mm (2") HOOK ANCHORS. REFER TO ARCHITECTURAL DRAWINGS OR BLOCK PLANS FOR FOOTING SIZES

16 NIB WALLS (* SEE OBC 9.23.8.)

BEAM POCKET OR 200x200 (8"x8") POURED CONCRETE NIB WALLS. MINIMUM BEARING 90mm (3–1/2")

17 STEEL BEAM STRAPPING (* SEE OBC 9.23.4.3.(3)(c))

19x38 (1"x2") CONTINUOUS WOOD STRAPPING BOTH SIDES OF STEEL BEAM.

18 GARAGE SLAB (*SEE OBC 9.16.-)

100mm (4") 32MPa (4640psi) CONC. SLAB WITH 5–8% AIR ENTRAINMENT ON OPT. 100 (4") COARSE GRANULAR FILL WITH COMPACTED SUB–BASE OR COMPACTED NATIVE FILL. SLOPE TO FRONT 1% MIN.

19 INTERIOR GARAGE WALLS & CEILING (*SEE OBC 9.10.9.16.)

13mm (1/2") GYPSUM BOARD ON WALL AND CEILING BETWEEN HOUSE AND GARAGE, RSI 3.87 (R22) IN WALLS, RSI 5.46 (R31) IN CEILING. TAPE AND SEAL ALL JOINTS GAS TIGHT.

20 GARAGE DOOR GASPROOFING

(*See OBC 9.10.13.15.)

DOOR AND FRAME GASPROOFING. DOOR EQUIPPED WITH SELF CLOSING DEVICE AND WEATHER STRIPPING.

21 EXTERIOR STEP

(*SEE OBC 9.8.9.2, 9.8.9.3 & 9.8.10.)

PRECAST CONCRETE STEP OR WD. STEP WHERE NOT EXPOSED TO WEATHER MAX. RISE 200mm (7–7/8"); MINIMUM TREAD ~~250~~ 255mm (~~9–1/2"~~)10"

22 DRYER VENT (*SEE OBC 6.2.3.8.(7)

CAPPED DRYER EXHAUST VENTED TO EXTERIOR. USE 1000mm (4") DIA. SMOOTH WALL VENT PIPE.

23 ATTIC ACCESS (*SEE OBC 9.19.2.)

ATTIC ACCESS HATCH 545x700 (22"x28") WITH WEATHERSTRIPPING. RSI 5.46 (R31) RIGID INSULATION BACKING.

24 FIREPLACE CHIMNEYS (*OBC 9.21.-)

TOP OF FIREPLACE CHIMNEY SHALL BE 915mm (3–0") ABOVE THE HIGHEST POINT AT WHICH IT COMES IN CONTACT WITH THE ROOF AND 610mm (2'–0") ABOVE THE ROOF SURFACE WITHIN A HORIZ. DISTANCE OF 3050mm (10'–0") FROM THE CHIMNEY.

25 LINEN CLOSET

4 SHELVES MIN. 350mm (14") DEEP.

26 MECHANICAL EXHAUST

(*SEE OBC 9.32.3.5, 9.32.3.10.)

MECHANICAL EXHAUST FAN VENTED TO EXTERIOR.

27 STEEL BEARING PLATE FOR MASONRY WALLS

280x280x16 (11"x11"x5/8") STL. PLATE FOR STL BEAMS AND 280x280x12 (11"x11"x1/2") STL. PLATE FOR WOOD BEAMS BEARING ON CONC. BLOCK PARTYWALL, ANCHORED W/ 2–19mm (3/4") x200mm (8") LONG GALV. ANCHORS WITHIN SOLID BLOCK COURSE. LEVEL WITH NON–SHRINK GROUT.

28 CLASS "B" VENT

U.L.C. RATED CLASS "B" VENT 610mm (2'–0") ABOVE THE POINT IN CONTACT WITH THE ROOF FOR SLOPES UP TO 9/12, REFER TO THE ONTARIO GAS UTILIZATION CODE.

29 WOOD BASEMENT POST (*OBC 9.17.4.)

3–38x140 (3–2"x6") BUILT–UP POST ON METAL BASE SHOE ANCHORED TO CONC. WITH 12.7 (1/2") DIA. BOLT ON 406x406x203 (16"x16"x8") CONC. FOOTING.

30 STEP FOOTINGS (*OBC 9.15.3.9.)

MIN. HORIZ. STEP = 610mm (24"). MAX. VERT. STEP = 610mm (24")

31 SLAB ON GRADE (*SEE OBC 9.16.-)

100mm (4") 32MPa (4640psi) CONC. SLAB WITH 5–8% AIR ENTRAINMENT ON OPT. 100 (4") COARSE GRANULAR FILL WITH COMPACTED SUB–BASE OR COMPACTED NATIVE FILL. REINFORCED W/ 6x6–W2.9xW2.9 MESH PLACED NEAR MID–DEPTH OF SLAB.

32 DIRECT VENT FURNACE ●

DIRECT VENT FURNACE TERMINAL MIN. 900mm (36") FROM A GAS REGULATOR. MIN 300mm (12") ABOVE FIN. GRADE, FROM ALL OPENINGS, EXHAUST & INTAKE VENTS. HRV INTAKE TO BE A MIN. OF 1830mm (6'–0") FROM ALL EXHAUST TERMINALS. REFER TO GAS UTILIZATION CODE. ALL AIR INTAKES SHALL BE LOCATED SO THAT THEY ARE SEPARATED FROM KITCHEN EXHAUST BY 3.0m IN COMPLIANCE WITH O.B.C. DIV.–B TABLE 6.2.3.12..

33 DIRECT VENT GAS FIREPLACE

DIRECT VENT GAS FIREPLACE. VENT TO BE A MINIMUM 300mm (12") FROM ANY OPENING AND ABOVE FIN. GRADE. REFER TO GAS UTILIZATION CODE

34 JOIST STRAPPING & BRIDGING (*SEE OBC 23.9.4.)

ALL FLOOR JOISTS TO BE BRIDGED WITH 38x38 (2"x2") CROSS BRACING OR SOLID BLOCKING @2100mm (6'–11") o.c. MAX. 19x64 (1"x3") @2100mm (6'–11") o.c. UNLESS A PANEL TYPE CEILING FINISH IS APPLIED.

35 EXPOSED BUILDING FACE (* SEE OBC 9.10.15.)

EXTERIOR WALLS TO HAVE A FIRE RESISTANCE RATING OF NOT LESS THAN 45min. WHERE LIMITING DISTANCE IS LESS THAN 1.2M (3'–11") WHERE THE LIMITING DISTANCE IS LESS THAN 600mm (1'–11") THE EXPOSING FACE SHALL BE CLAD IN NON–COMBUSTABLE MATERIAL.

36 COLD CELLAR PORCH SLAB (* SEE OBC 9.40.)

FOR MAX. 2500mm (8'–2") PORCH DEPTH, 125mm (5") 32Mpa (4640 psi) CONC. SLAB WITH 5–8% AIR ENTRAINMENT. REINF. WITH 10M BARS @200mm (8") o.c. EACH WAY IN BOTTOM THIRD OF SLAB, ANCHORED IN PERIMETER FDTN. WALLS W/ 610x610 (24"x24") 10M @600mm (24") o.c. DOWELS. SLOPE SLAB MIN. 1.0% FROM DOOR. SLAB TO HAVE A MIN. 75mm (3") BEARING ON FDTN. WALLS. PROVIDE (WL1) LINTELS OVER CELLAR DOOR.

37 FDTN. WALL REDUCTION IN THICKNESS

(~~*SEE OBC 9.15.4.7.~~)

FDTN. WALL SHALL NOT BE REDUCED TO LESS THAN 90mm (3–1/2") THICK TO A MAX. DEPTH OF 660mm (26") FOR 8" FDTN. WALL. 10" FDTN. WALL WHEN REDUCTION IN THICNESS IS GREATER THAN 26". FDTN. WALL SHALL BE TIED TO THE FACING MATERIAL WITH METAL TIES SPACED 200mm (8")o.c. VERTICALLY AND 900mm (36")o.c. HORIZONTALLY. FILL SPACE BETWEEN WALL AND FACING SOLID WITH MORTAR.

NOTED REQUIREMENTS ARE PART 4 DESIGN BY ENGINEER.

38 CONVENTIONAL ROOF FRAMING

(*SEE OBC 9.23.4.2.(1))

FOR MAX. 2240mm (7'–4") SPAN, 38x89 (2"x4") RAFTERS @400mm (16") o.c.. FOR MAX. 3530mm (11'–7") SPAN, 38x140 (2"x6") RAFTERS @400mm (16") o.c.. RIDGE BOARD TO BE 51mm (2") DEEPER. 38x39 (2"x4") COLLAR TIES AT MIDSPANS. CEILING JOISTS TO BE 38x89 (2"x4") @400mm (16") o.c. FOR MAX. 2830mm (9'–3") SPAN & 38x140 (2"x6") @ 400 (16") o.c. FOR MAX. 4450mm (14'–7") SPAN. RAFTERS FOR BUILT–UP ROOF TO BE 38x89 (2"x4") @600mm (24") o.c. WITH A 38x89 (2"x4") CENTER POST TO THE TRUSS BELOW, LATERALLY BRACED @1800mm (6'–0") o.c. VERTICALLY.

39 TWO STOREY VOLUME SPACES

FOR A MAXIMUM 5490mm (18'–0") HEIGHT, PROVIDE 2–38x140 (2–2"x6") CONTINUOUS STUDS @300mm (12") o.c. FOR BRICK AND 400mm (16") o.c. FOR SIDING. PROVIDE SOLID WOOD BLOCKING BETWEEN STUDS @1220mm (4'–0") o.c. VERT. 7/16" EXT. PLYWOOD.

40 EXPOSED FLOOR TO EXTERIOR (*SB12 - 2.1.1.2.A)

PROVIDE RSI 5.46 (R31) INSULATION, APPROVED VAPOUR BARRIER AND CONTINUOUS AIR BARRIER, FINISHED SOFFIT.

41 PARTYWALLS

TYPICAL 1 HOUR RATED PARTYWALL. REFER TO DETAILS FOR TYPE AND SPECIFICATIONS.

42 EXTERIOR WALLS FOR WALK-OUT CONDITION

THE EXTERIOR BASEMENT STUD WALL TO BE 38x140mm (2"x6") STUDS @400mm (16") o.c. MATCH FLOOR JOIST SPACING WHEN PARALEL WITH FLOOR JOISTS.

43 SMOKE ALARM ● (*OBC 9.10.19)

PROVIDE 1 PER FLOOR, NEAR THE STAIRS CONNECTING THE FLOOR LEVEL AND ALSO 1 IN EACH BEDROOM NEAR HALL DOOR. ALARMS TO BE CONNECTED TO AN ELECTRICAL CIRCUIT AND INTERCONNECTED TO ACTIVATE ALL ALARMS IF ONE SOUNDS. BATTERY BACK–UP REQUIRED. SMOKE ALARMS TO INCORPORATE VISUAL SIGNALLING COMPONENT. (9.10.19.3.(3)).

44 CARBON MONOXIDE ALARM ● (*OBC 9.33.4.)

WHERE A FUEL–BURNING APPLIANCE IS INSTALLED IN A DWELLING UNIT, A BARBON MONOXIDE DETECTOR CONFORMING TO CAN./CGA–6.19, CSA 6.19 OR UL2034 SHALL BE INSTALLED ADJACENT TO EACH SLEEPING AREA. CARBON MONOXIDE DETECTOR(S) SHALL BE PERMANENTLY WIRED SO THAT IT IS ACTIVATION WILL ACTIVATE ALL CARBON MONOXIDE DETECTORS AND BE EQUIPPED WITH AN ALARM THAT IS AUDIBLE WITHIN BEDROOMS WHEN THE INTERVENING DOORS ARE CLOSED

45 SOIL GAS CONTROL (*OBC 9.13.4.)

PROVIDE CONSTRUCTION TO PREVENT LEAKAGE OF SOIL GAS INTO THE BUILDING AS REQUIRED.

STRUDET INC.

REGISTERED PROFESSIONAL ENGINEER
B. MARINKOVIC
PROVINCE OF ONTARIO
SEPT. 6/2022

FOR STRUCTURE ONLY

2012 CODE

THE CONTRACTOR SHALL CHECK AND VERIFY ALL DIMENSIONS AND CONDITIONS ON SITE BEFORE PROCEEDING WITH CONSTRUCTION. ANY DISCREPANCIES SHALL BE REPORTED TO JARDIN DESIGN GROUP INC. PRIOR TO COMMENCEMENT OF WORK.

JARDIN DESIGN GROUP INC. IS NOT RESPONSIBLE FOR THE ACCURACY OF SURVEY, STRUCTURAL OR ENGINEERING INFORMATION SHOWN ON THESE DRAWINGS OR FOR CONSTRUCTION STARTED PRIOR TO THE ISSUANCE OF A BUILDING PERMIT. REFER TO THE APPROPRIATE ENGINEERING DRAWINGS BEFORE PROCEEDING WITH WORK.

AS CONSTRUCTED INVERTS MUST BE VERIFIED PRIOR TO POURING FOOTINGS.

JARDIN DESIGN GROUP INC. HAS NOT BEEN RETAINED TO CARRY OUT GENERAL REVIEW OF THE WORK AND ASSUMES NO RESPONSIBILITY FOR THE FAILURE OF THE CONTRACTOR OR SUB CONTRACTOR TO CARRY OUT THE WORK IN ACCORDANCE WITH THE CONTRACT DOCUMENTS.

THIS DRAWING IS AN INSTRUMENT OF SERVICE, IS PROVIDED BY AND IS THE PROPERTY OF JARDIN DESIGN GROUP INC. THIS DRAWING IS NOT TO BE SCALED.

No:	DATE:	WORK DESCRIPTION:
7		
6		
5		
4		
3	AUG. 31, 2022	ADDED TO JOB; ISSUED FOR PERMIT
2	MAR.14, 2022	O.B.C UPDATE FOR STAIRS (JAN.1/2022)
1	AUG. 17, 2018	PREPARED TO PACKAGE "A1" ISSUED TO CLIENT

NOT THE GRANTING OF A PERMIT NOR REVIEWING OF SPECS & DRAWINGS NOR INSPECTIONS MADE DURING INSTALLATION BY THE OFFICIAL HAVING JURISDICTION SHALL RELIEVE THE OWNER FROM REQUIREMENTS OF THE ONTARIO BUILDING CODE AND ANY OTHER REFERENCED REQUIREMENTS.

Willow 2
Block 122
Units 49 to 54

The undersigned has reviewed and takes responsibility for this design and has the qualifications and meets the requirements set out in the Ontario Building Code to be a designer

QUALIFICATION INFORMATION
Required unless design is exempt under Division C, Subsection 3.2.5 of the building code

NAME	SIGNATURE	BCIN
Walter Botter		21031

REGISTRATION INFORMATION
Required unless design is exempt under Division C, Subsection 3.2.4 of the building code

FIRM NAME	BCIN
jardin design group inc.	27763

jardin
DESIGN GROUP INC
64 JARDIN DR. SUITE 3A
VAUGHAN ONT. L4K 3P3
TEL: 905 660-3377 FAX: 905 660-3713
EMAIL: info@jardindesign.ca

GENERAL NOTES

BARLASSINA CONSTRUCTION
CITY OF CAMBRIDGE

BILD

MODEL NAME	T ----
SCALE:	N.T.S.
PROJ. No.	21-35
DWG. No.	1

DRAWN BY:
DRAWING NAME: GENERAL NOTES

2012
PACKAGE 'A1'

WINDOWS - CANADA ZONE C

(1) MINIMUM BEDROOM WINDOW (*OBC 9.9.10.1.)

AT LEAST ONE BEDROOM WINDOW ON A GIVEN FLOOR IS TO HAVE MIN. 0.35m2 (3.8 SQ.FT.) UNOBSTRUCTED GLAZED OPENABLE AREA WITH MIN. CLEAR WIDTH OF 380mm (1'-3")

GLASS AREA NOT MORE THAN 17% OF GROSS PERIPHERAL WALL AREA. MAXIMUM U-VALUE 0.28

(2) WINDOW GUARDS (*OBC 9.8.8.1(6)

A GUARD IS REQUIRED WHERE THE TOP OF THE WINDOW SILL IS LOCATED LESS THAN 480mm (1'-6") ABOVE FIN. FLOOR AND THE DISTANCE FROM THE FIN. FLOOR TO THE ADJACENT GRADE IS GREATER THAN 1800mm (5'-11") PROTECTION OF WINDOWS ONLY REQUIRED AT STAIR/LANDINGS PER 9.8.8.1.(8). REMAINDER OF UNIT EXEMPT PER 9.8.8.1.(6)(a)

GENERAL:

(1) MECHANICAL VENTILATION

MECHANICAL VENTILATION IS REQUIRED TO PROVIDE 0.3 AIR CHANGES PER HOUR AVERAGED OVER 24 HOURS.
SEE MECHANICAL DRAWINGS.

(2) OUTDOOR AIR INTAKE ●

ALL OUTDOOR AIR INTAKES SHALL BE LOCATED SO THAT THEY ARE SEPARATED FROM SOURCES OF CONTAMINATION (EXHAUST VENTS) IN COMPLIANCE WITH O.B.C. DIV.-B 6.2.3.12. AND TABLE 6.2.3.12.

(3) RAINFORCEMENT FOR GRAB BARS (*OBC 9.5.2.3.) ●

RAINFORCEMENT OF STUD WALLS SHALL BE INSTALLED ADJACENT TO WATER CLOSETS AND SHOWER OR BATHTUB IN MAIN BATHROOM. REFER TO O.B.C. 9.5.2.3, 3.8.3.8.(3)(a), 3.8.3.8.(3)(c), 3.8.3.13.(2)(g) & 3.8.3.13.(4)(e).
SEE DETAIL ON PAGE 11.

LUMBER:

1.) ALL LUMBER SHALL BE SPRUCE-PINE-FIR No.1&2 GRADE, UNLESS NOTED OTHERWISE.

2.) LUMBER EXPOSED TO THE EXTERIOR TO BE SPRUCE-PINE-FIR No.1&2 GRADE PRESSURE TREATED OR CEDAR, UNLESS NOTED OTHERWISE.

3.) ALL BEAMS, GIRDER TRUSSES, AND METAL HANGER CONNECTIONS SUPPORTING ROOF FRAMING TO BE DESIGNED & CERTIFIED BY TRUSS MANUFACTURER.

4.) LVL BEAMS SHALL BE 2.0E (Fb=2800psi MIN.). NAIL EACH PLY OF LVL WITH 89mm (3-1/2") LONG COMMON WIRE NAILS @300mm (12") o.c. STAGGERED IN 2 ROWS FOR 184, 240, & 300mm (7-1/4",9-1/2",11-7/8") DEPTHS AND STAGGERED IN 3 ROWS FOR GREATER DEPTHS AND FOR 4 PLY MEMBERS ADD 1/2" (13mm) DIA. GALVANIZED BOLTS BOLTED AT MID-DEPTH OF BEAM @ 915mm (3'-0")o.c.

5.) PROVIDE TOP MOUNT BEAM HANGERS FOR ALL LVL BEAM TO BEAM CONNECTIONS UNLESS NOTED OTHERWISE.

6.) PROVIDE METAL JOIST HANGERS FOR ALL JOISTS AND BULIT-UP WOOD MEMBERS INTERSECTING FLUSH BUILT-UP WOOD MEMBERS.

7.) WOOD FRAMING NOT TREATED WITH A WOOD PRESERVATIVE, IN CONTACT WITH CONCRETE, SHALL BE SEPARATED FROM THE CONC. BY AT LEAST 2mil. POLYETHYLENE FILM, No.50 (45lbs) ROLL ROOFING OR OTHER DAMPROOFING MATERIAL, EXCEPT WHERE THE WOOD MEMBER IS AT LEAST 150mm (6") ABOVE THE GROUND.

STEEL:

STRUCTURAL STEEL AND HOLLOW STRUCTURAL SECTIONS SHALL CONFORM TO CAN/CSA-G40-21 GRADE 350W.

REINFORCING STEEL SHALL CONFORM TO CSA-G30-18M GRADE 400R.

REVISION:

● ONT. REG. 332/12-2012 OBC AMENDMENT O. REG. 88/19 JAN. 01, 2020

STABILITY OF NARROW (20'-25') & TALL (±30') HOUSES

BUILDER TO PROVIDE SUFFICIENT TEMPORARY BRACING TO RESIST WIND LOADING WHEN UNDER CONSTRUCTION. FURTHER RECOMMENDATIONS:

1.) REDUCE THE FOUNDATION WALL SILL PLATE ANCHOR BOLT SPACING FROM 2400mm o.c. (7'-10") TO 1220mm o.c. (4'-0") FOR STANDARD CONDITIONS.

2.) USE 9.5mm (3/8") THICK PLYWOOD OR WAFERBOARD FOR THE EXTERIOR WALL SHEATHING.

3.) TO STIFFEN THE STRUCTURE IN TRANSVERSE DIRECTION USE 9.5mm (3/8") THICK PLYWOOD NAILED TO THE INTERIOR PARTITIONS ON EACH FLOOR FOR A MINIMUM 2 INTERIOR PARTITION WALLS ON BOTH SIDES AND PERPENDICULAR TO THE LONG WALLS.

BRICK VENEER LINTELS

WL1 = 3-1/2"x3-1/2"x1/4"L (90x90x6.0L) + 2-2"x8" SPR. No.2
WL2 = 4"x3-1/2"x5/16"L (100x90x8.0L) + 2-2"x8" SPR. No.2
WL3 = 5"x3-1/2"x5/16"L (125x90x8.0L) + 2-2"x10" SPR. No.2
WL4 = 6"x3-1/2"x3/8"L (150x90x10.0L) + 2-2"x12" SPR. No.2
WL5 = 6"x4"x3/8"L (150x100x10.0L) + 2-2"x12" SPR. No.2
WL6 = 5"x3-1/2"x5/16"L (125x90x8.0L) + 2-2"x12" SPR. No.2
WL7 = 5"x3-1/2"x5/16"L (125x90x8.0L) + 3-2"x10" SPR. No.2
WL8 = 5"x3-1/2"x5/16"L (125x90x8.0L) + 3-2"x12" SPR. No.2
WL9 = 6"x4"x3/8"L (150x100x10.0L) + 3-2"x12" SPR. No.2

WOOD LINTELS AND BEAMS

WB1 = 2-2"x8" SPR. No.2 (2-38x184 SPR. No.2)
WB2 = 3-2"x8" SPR. No.2 (3-38x184 SPR. No.2)
WB3 = 2-2"x10" SPR. No.2 (2-38x235 SPR. No.2)
WB4 = 3-2"x10" SPR. No.2 (3-38x235 SPR. No.2)
WB5 = 2-2"x12" SPR. No.2 (2-38x286 SPR. No.2)
WB6 = 3-2"x12" SPR. No.2 (3-38x286 SPR. No.2)
WB7 = 5-2"x12" SPR. No.2 (5-38x286 SPR. No.2)
WB11 = 4-2"x10" SPR. No.2 (4-38x235 SPR. No.2)
WB12= 4-2"x12" SPR. No.2 (4-38x286 SPR. No.2)

LOOSE STEEL LINTELS

L1 = 3-1/2"x3-1/2"x1/4"L (90x90x6.0L)
L2 = 4"x3-1/2"x5/16"L (100x90x8.0L)
L3 = 5"x3-1/2"x5/16"L (125x90x8.0L)
L4 = 6"x3-1/2"x3/8"L (150x90x10.0L)
L5 = 6"x4"x3/8"L (150x100x10.0L)
L6 = 7"x4"x3/8"L (175x100x10.0L)

LAMINATED VENEER LUMBER (LVL) BEAMS

LVL1A = 1-1 3/4" x 7 1/4" (1-45x184)
LVL1 = 2-1 3/4" x 7 1/4" (2-45x184)
LVL2 = 3-1 3/4" x 7 1/4" (3-45x184)
LVL3 = 4-1 3/4" x 7 1/4" (4-45x184)
LVL4A = 1-1 3/4" x 9 1/2" (1-45x240)
LVL4 = 2-1 3/4" x 9 1/2" (2-45x240)
LVL5 = 3-1 3/4" x 9 1/2" (3-45x240)
LVL5A = 4-1 3/4" x 9 1/2" (4-45x240)
LVL6A = 1-1 3/4" x 11 7/8" (1-45x300)
LVL6 = 2-1 3/4" x 11 7/8" (2-45x300)
LVL7 = 3-1 3/4" x 11 7/8" (3-45x300)
LVL7A = 4-1 3/4" x 11 7/8" (4-45x300)
LVL8 = 2-1 3/4" x 14" (2-45x356)
LVL9 = 3-1 3/4" x 14" (3-45x356)
LVL10 = 2-1 3/4" x 18" (2-45x456)

LEGEND

DJ	DOUBLE JOIST
TJ	TRIPLE JOIST
GT	GIRDER TRUSS
PL	POINT LOAD
SB	SOLID WOOD BEARING. SOLID BEARING TO BE WIDE AT LEAST AS SUPPORTED MEMBER. MIN. 3 PIECES.
	LOAD-BEARING WALL
	TWO-STOREY WALL. SEE NOTE 39
	RAISED WOOD PLATE
	FLAT ARCH
F.D.	FLOOR DRAIN
SA	SMOKE ALARM. SEE NOTE 43
SA CMA	SMOKE ALARM & CARBON MONOXIDE ALARM. SEE NOTE 44

EXTERIOR LIGHTING OUTLET WITH A FIXTURE CONTROLLED BY A WALL SWITCH LOCATED WITHIN THE BUILDING SHALL BE PROVIDED AT EVERY ENTRANCE TO THE BUILDING OF RESIDENTIAL OCCUPANCY AS PER 9.34.2.1.(1)

Door Schedule

NO.	WIDTH	HEIGHT 8' TO 9' CEILINGS		HEIGHT 10' OR MORE CEILINGS		TYPE
1	2'-10"	6'-8"	(865x2033)	8'-0"	(865x2439)	INSULATED ENTRANCE DOOR
1a	2'-8"	6'-8"	(815x2033)	8'-0"	(815x2439)	INSULATED FRONT DOORS
2	2'-8"	6'-8"	(815x2033)	8'-0"	(815x2439)	WOOD & GLASS DOOR
3	2'-8"	6'-8 x 1-3/4"	(815x2033x45)	8'-0" x 1-3/4"	(815x2439x45)	EXTERIOR SLAB DOOR
4	2'-8"	6'-8" x 1-3/8"	(815x2033x35)	8'-0" x 1-3/8"	(815x2439x35)	INTERIOR SLAB DOOR
5	2'-6"	6'-8" x 1-3/8"	(760x2033x35)	8'-0" x 1-3/8"	(760x2439x35)	INTERIOR SLAB DOOR
6	2'-2"	6'-8" x 1-3/8"	(660x2033x35)	8'-0" x 1-3/8"	(660x2439x35)	INTERIOR SLAB DOOR
7	1'-6"	6'-8" x 1-3/8"	(460x2033x35)	8'-0" x 1-3/8"	(460x2439x35)	INTERIOR SLAB DOOR
8	3'-0"	6'-8" x 1-3/8"	(915x2033x35)	8'-0" x 1-3/8"	(915x2439x35)	INTERIOR SLAB DOOR

STRUDET INC.
REGISTERED PROFESSIONAL ENGINEER
B. MARINKOVIC
SEPT. 6/2022
PROVINCE OF ONTARIO
FOR STRUCTURE ONLY

NOT THE GRANTING OF A PERMIT NOR REVIEWING OF SPECS & DRAWINGS NOR INSPECTIONS MADE DURING INSTALLATION BY THE OFFICIAL HAVING JURISDICTION SHALL RELIEVE THE OWNER FROM REQUIREMENTS OF THE ONTARIO BUILDING CODE AND ANY OTHER REFERENCED REQUIREMENTS.

2012 CODE

THE CONTRACTOR SHALL CHECK AND VERIFY ALL DIMENSIONS AND CONDITIONS ON SITE BEFORE PROCEEDING WITH CONSTRUCTION. ANY DISCREPANCIES SHALL BE REPORTED TO JARDIN DESIGN GROUP INC. PRIOR TO COMMENCEMENT OF WORK.

JARDIN DESIGN GROUP INC. IS NOT RESPONSIBLE FOR THE ACCURACY OF SURVEY, STRUCTURAL OR ENGINEERING INFORMATION SHOWN ON THESE DRAWINGS OR FOR CONSTRUCTION STARTED PRIOR TO THE ISSUANCE OF A BUILDING PERMIT. REFER TO THE APPROPRIATE ENGINEERING DRAWINGS BEFORE PROCEEDING WITH WORK.

AS CONSTRUCTED INVERTS MUST BE VERIFIED PRIOR TO POURING FOOTINGS.

JARDIN DESIGN GROUP INC. HAS NOT BEEN RETAINED TO CARRY OUT GENERAL REVIEW OF THE WORK AND ASSUMES NO RESPONSIBILITY FOR THE FAILURE OF THE CONTRACTOR OR SUB CONTRACTOR TO CARRY OUT THE WORK IN ACCORDANCE WITH THE CONTRACT DOCUMENTS.

THIS DRAWING IS AN INSTRUMENT OF SERVICE, IS PROVIDED BY AND IS THE PROPERTY OF JARDIN DESIGN GROUP INC. THIS DRAWING IS NOT TO BE SCALED.

No:	DATE:	WORK DESCRIPTION:
7		
6		
5		
4		
3		
2	AUG. 31, 2022	ADDED TO JOB; ISSUED FOR PERMIT
1	AUG. 17, 2018	PREPARED TO PACKAGE 'A1' ISSUED TO CLIENT

The undersigned has reviewed and takes responsibility for this design and has the qualifications and meets the requirements set out in the Ontario Building Code to be a designer

QUALIFICATION INFORMATION
Required unless design is exempt under Division C, Subsection 3.2.5 of the building code

NAME	SIGNATURE	BCIN
Walter Botter		21031

REGISTRATION INFORMATION
Required unless design is exempt under Division C, Subsection 3.2.4 of the building code

FIRM NAME	BCIN
jardin design group inc.	27763

jardin DESIGN GROUP INC
64 JARDIN DR. SUITE 3A
VAUGHAN ONT. L4K 3P3
TEL: 905 660-3377 FAX: 905 660-3713
EMAIL: info@jardindesign.ca

GENERAL NOTES

BARLASSINA CONSTRUCTION
CITY OF CAMBRIDGE

BILD

MODEL NAME: T ----
SCALE: N.T.S.
PROJ. No.: 21-35
DWG. No.: 1A

DRAWN BY:
DRAWING NAME: GENERAL NOTES

2012
PACKAGE 'A1'

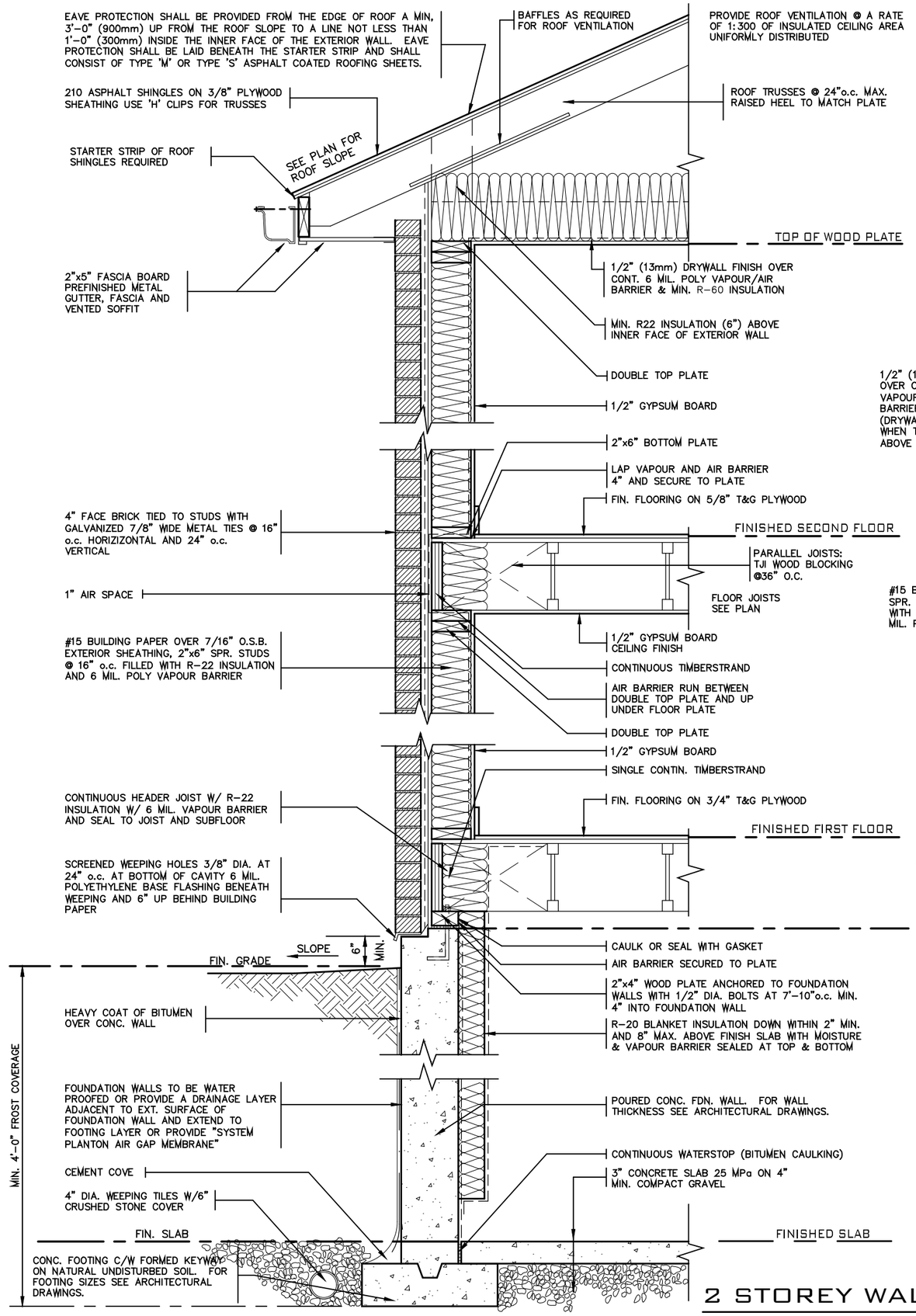

2 STOREY WALL SECTION

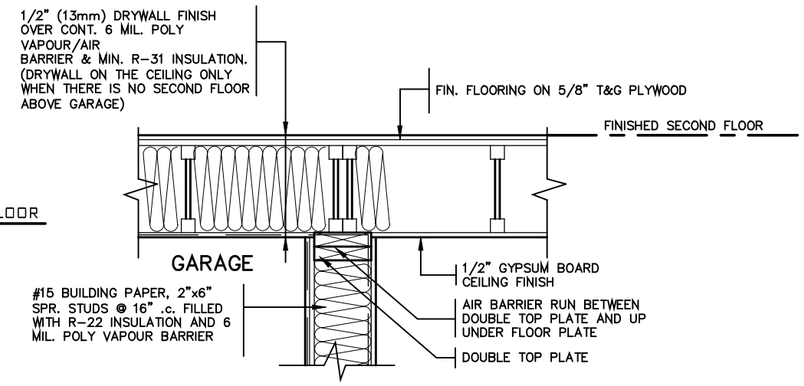

DETAIL FOR INTERIOR GARAGE WALLS & CEILINGS

STRUDET INC.

REGISTERED PROFESSIONAL ENGINEER
B. MARINKOVIC
PROVINCE OF ONTARIO
SEPT. 6/2022

FOR STRUCTURE ONLY

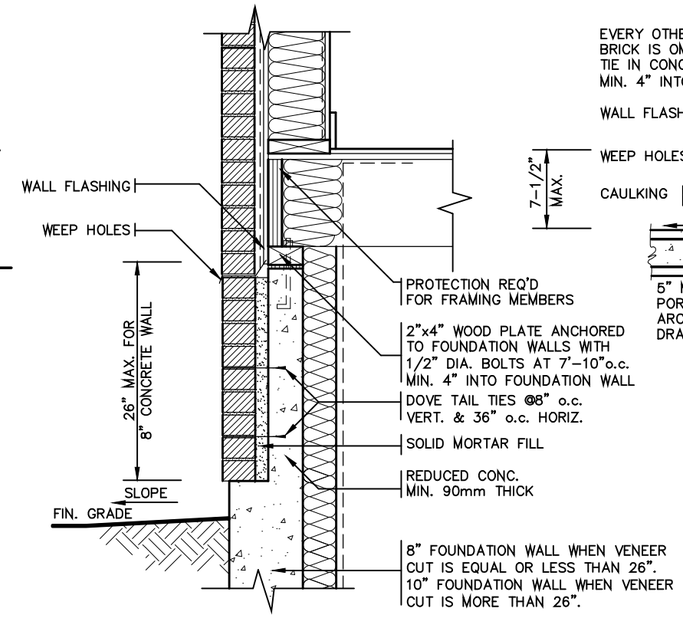

DETAIL FOR CONCRETE VENEER DROPPED GRADE

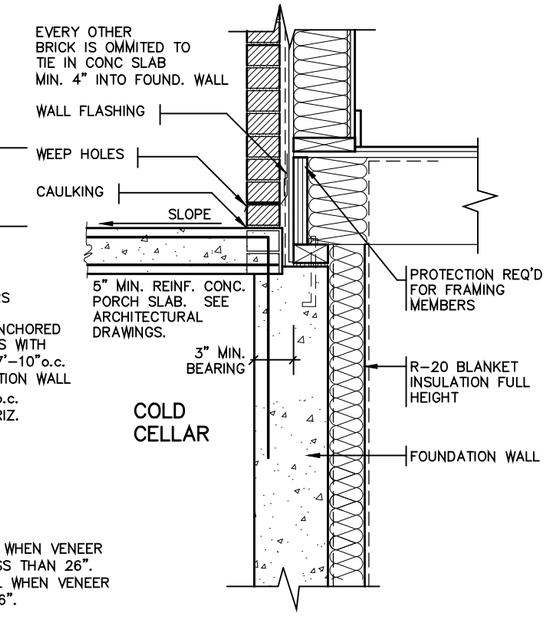

DETAIL FOR COLD CELLAR PORCH SLAB

2012 CODE

THE CONTRACTOR SHALL CHECK AND VERIFY ALL DIMENSIONS AND CONDITIONS ON SITE BEFORE PROCEEDING WITH CONSTRUCTION. ANY DISCREPANCIES SHALL BE REPORTED TO JARDIN DESIGN GROUP INC. PRIOR TO COMMENCEMENT OF WORK.

JARDIN DESIGN GROUP INC. IS NOT RESPONSIBLE FOR THE ACCURACY OF SURVEY, STRUCTURAL OR ENGINEERING INFORMATION SHOWN ON THESE DRAWINGS OR FOR CONSTRUCTION STARTED PRIOR TO THE ISSUANCE OF A BUILDING PERMIT. REFER TO THE APPROPRIATE ENGINEERING DRAWINGS BEFORE PROCEEDING WITH WORK.

AS CONSTRUCTED INVERTS MUST BE VERIFIED PRIOR TO POURING FOOTINGS.

JARDIN DESIGN GROUP INC. HAS NOT BEEN RETAINED TO CARRY OUT GENERAL REVIEW OF THE WORK AND ASSUMES NO RESPONSIBILITY FOR THE FAILURE OF THE CONTRACTOR OR SUB CONTRACTOR TO CARRY OUT THE WORK IN ACCORDANCE WITH THE CONTRACT DOCUMENTS.

THIS DRAWING IS AN INSTRUMENT OF SERVICE, IS PROVIDED BY AND IS THE PROPERTY OF JARDIN DESIGN GROUP INC. THIS DRAWING IS NOT TO BE SCALED.

No:	DATE:	WORK DESCRIPTION:
7		
6		
5		
4		
3		
2	AUG. 31, 2022	ADDED TO JOB; ISSUED FOR PERMIT
1	AUG. 17, 2018	PREPARED TO PACKAGE 'A1' ISSUED TO CLIENT

NOT THE GRANTING OF A PERMIT NOR REVIEWING OF SPECS & DRAWINGS NOR INSPECTIONS MADE DURING INSTALLATION BY THE OFFICIAL HAVING JURISDICTION SHALL RELIEVE THE OWNER FROM REQUIREMENTS OF THE ONTARIO BUILDING CODE AND ANY OTHER REFERENCED REQUIREMENTS.

The undersigned has reviewed and takes responsibility for this design and has the qualifications and meets the requirements set out in the Ontario Building Code to be a designer

QUALIFICATION INFORMATION
Required unless design is exempt under Division C, Subsection 3.2.5 of the building code

NAME	SIGNATURE	BCIN
Walter Botter		21031

REGISTRATION INFORMATION
Required unless design is exempt under Division C, Subsection 3.2.4 of the building code

FIRM NAME	BCIN
jardin design group inc.	27763

jardin DESIGN GROUP INC
64 JARDIN DR. SUITE 3A
VAUGHAN ONT. L4K 3P3
TEL: 905 660-3377 FAX: 905 660-3713
EMAIL: info@jardindesign.ca

2 STOREY WALL SECTION
2"x6" BRICK VENEER

BARLASSINA CONSTRUCTION
CITY OF CAMBRIDGE

BILD

MODEL NAME: T ----
SCALE: AS NOTED
PROJ. No.: 21-35
DWG. No.: 2

DRAWN BY:
DRAWING NAME: GENERAL NOTES

2012
PACKAGE 'A1'

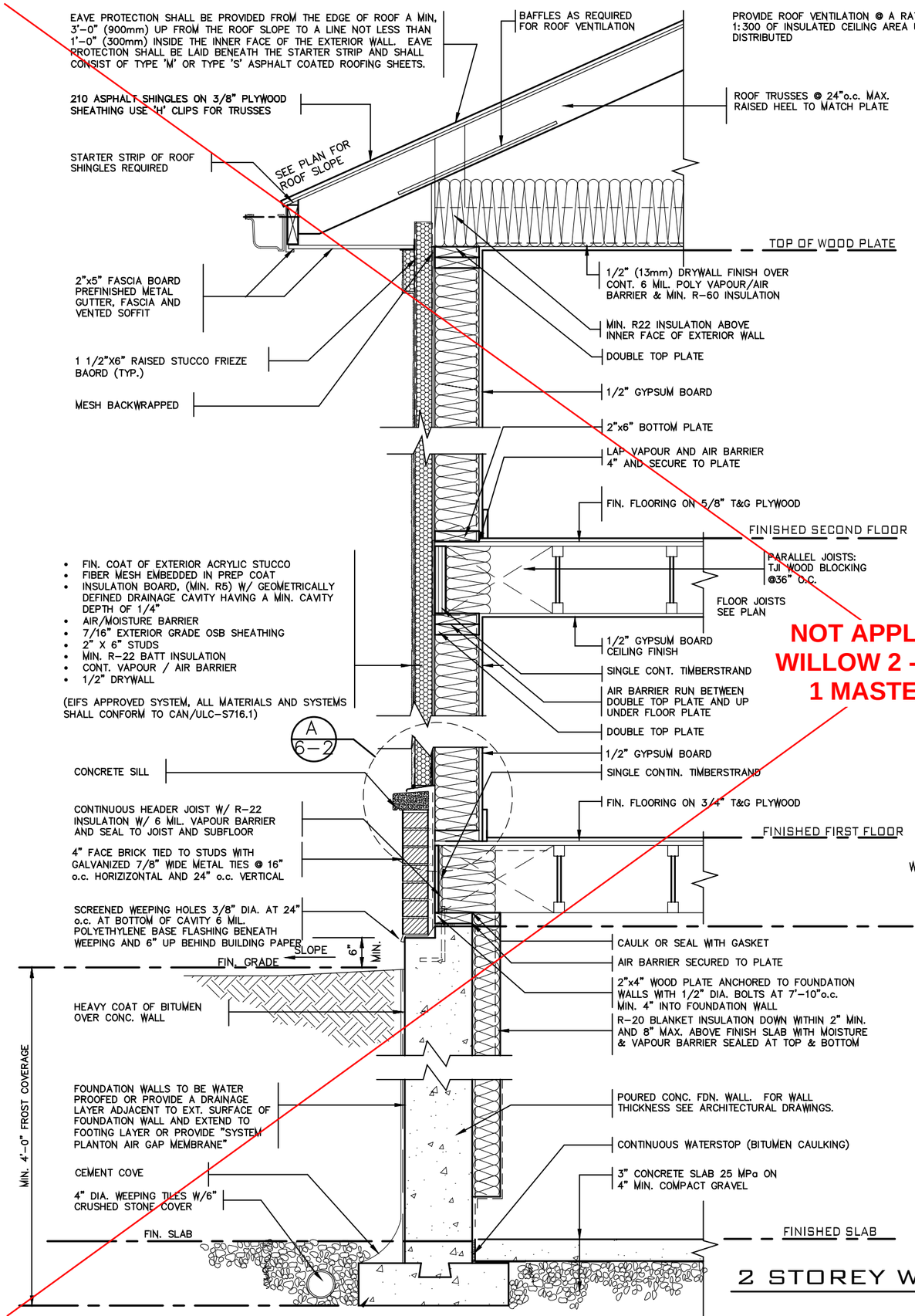

2 STOREY WALL SECTION

NOT APPLICABLE TO WILLOW 2 - ELEVATION 1 MASTER MODEL

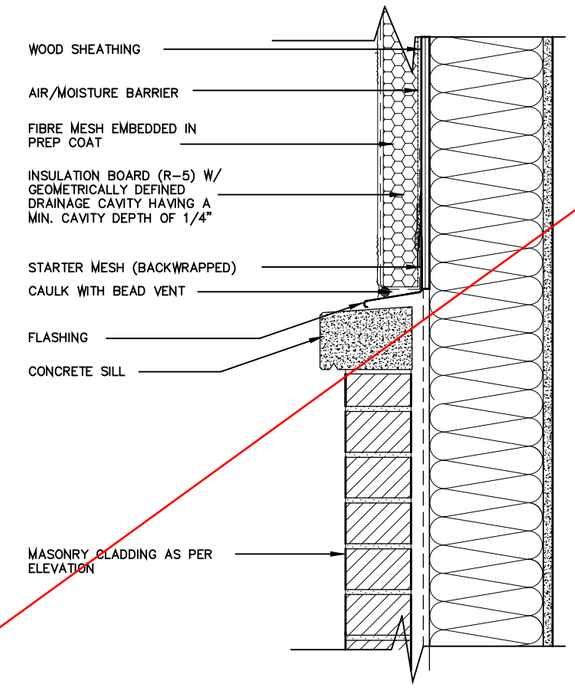

A. TERMINATION AT MASONRY CLADDING WITH SEALANT

1 1/2"=1'0"

STRUDET INC.

REGISTERED PROFESSIONAL ENGINEER
B. MARINKOVIC
PROVINCE OF ONTARIO
SEPT. 6/2022

FOR STRUCTURE ONLY

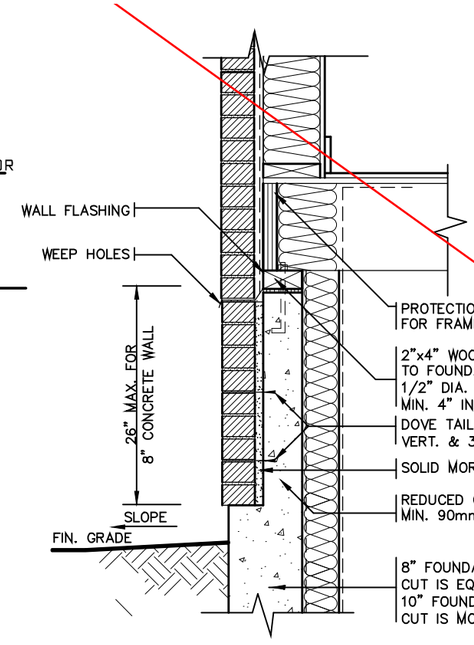

DETAIL FOR CONCRETE VENEER DROPPED GRADE

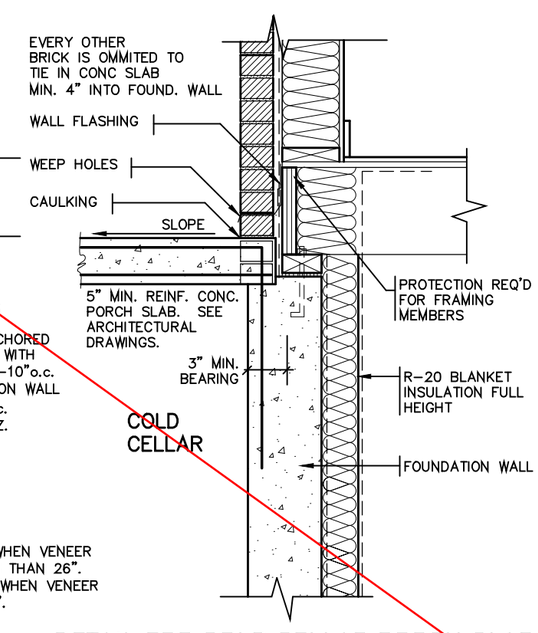

DETAIL FOR COLD CELLAR PORCH SLAB

2012 CODE

THE CONTRACTOR SHALL CHECK AND VERIFY ALL DIMENSIONS AND CONDITIONS ON SITE BEFORE PROCEEDING WITH CONSTRUCTION. ANY DISCREPANCIES SHALL BE REPORTED TO JARDIN DESIGN GROUP INC. PRIOR TO COMMENCEMENT OF WORK.

JARDIN DESIGN GROUP INC. IS NOT RESPONSIBLE FOR THE ACCURACY OF SURVEY, STRUCTURAL OR ENGINEERING INFORMATION SHOWN ON THESE DRAWINGS OR FOR CONSTRUCTION STARTED PRIOR TO THE ISSUANCE OF A BUILDING PERMIT. REFER TO THE APPROPRIATE ENGINEERING DRAWINGS BEFORE PROCEEDING WITH WORK.

AS CONSTRUCTED INVERTS MUST BE VERIFIED PRIOR TO POURING FOOTINGS.

JARDIN DESIGN GROUP INC. HAS NOT BEEN RETAINED TO CARRY OUT GENERAL REVIEW OF THE WORK AND ASSUMES NO RESPONSIBILITY FOR THE FAILURE OF THE CONTRACTOR OR SUB CONTRACTOR TO CARRY OUT THE WORK IN ACCORDANCE WITH THE CONTRACT DOCUMENTS.

THIS DRAWING IS AN INSTRUMENT OF SERVICE, IS PROVIDED BY AND IS THE PROPERTY OF JARDIN DESIGN GROUP INC. THIS DRAWING IS NOT TO BE SCALED.

No:	DATE:	WORK DESCRIPTION:
7		
6		
5		
4		
3		
2	AUG. 31, 2022	ADDED TO JOB; ISSUED FOR PERMIT
1	AUG. 17, 2018	PREPARED TO PACKAGE 'A1' ISSUED TO CLIENT

The undersigned has reviewed and takes responsibility for this design and has the qualifications and meets the requirements set out in the Ontario Building Code to be a designer

QUALIFICATION INFORMATION
Required unless design is exempt under Division C, Subsection 3.2.5 of the building code

NAME	SIGNATURE	BCIN
Walter Botter		21031

REGISTRATION INFORMATION
Required unless design is exempt under Division C, Subsection 3.2.4 of the building code

FIRM NAME	BCIN
jardin design group inc.	27763

jardin DESIGN GROUP INC
64 JARDIN DR. SUITE 3A
VAUGHAN ONT. L4K 3P3
TEL: 905 660-3377 FAX: 905 660-3713
EMAIL: info@jardindesign.ca

2 STOREY WALL SECTION
2"x6" STUCCO WALL

BARLASSINA CONSTRUCTION
CITY OF CAMBRIDGE

BILD

MODEL NAME: T ----
SCALE: AS NOTED
PROJ. No.: 21-35
DWG. No.: 3

DRAWN BY:
DRAWING NAME: GENERAL NOTES

2012
PACKAGE 'A1'

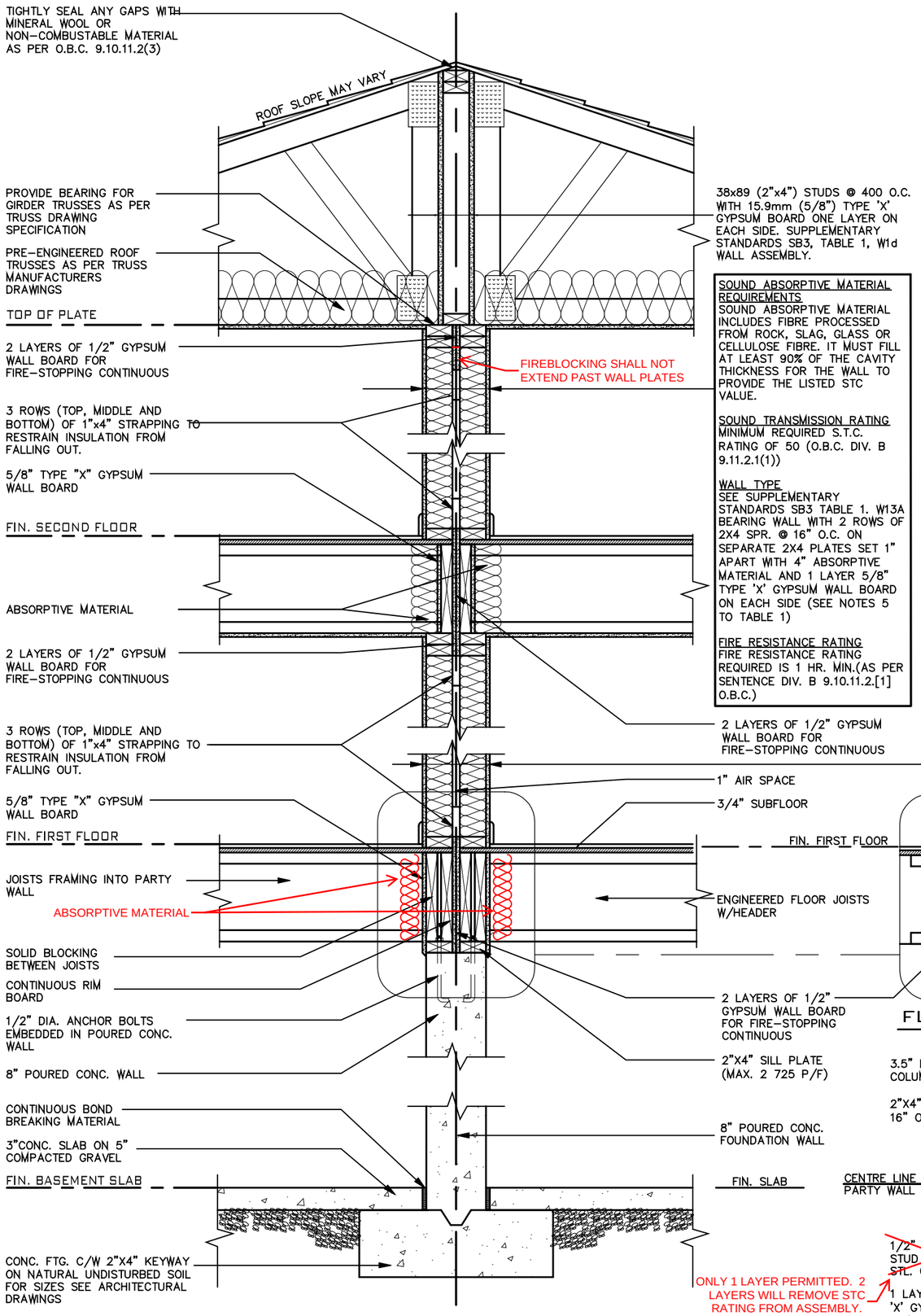

SOUND ABSORPTIVE MATERIAL REQUIREMENTS
SOUND ABSORPTIVE MATERIAL INCLUDES FIBRE PROCESSED FROM ROCK, SLAG, GLASS OR CELLULOSE FIBRE. IT MUST FILL AT LEAST 90% OF THE CAVITY THICKNESS FOR THE WALL TO PROVIDE THE LISTED STC VALUE.

SOUND TRANSMISSION RATING
MINIMUM REQUIRED S.T.C. RATING OF 50 (O.B.C. DIV. B 9.11.2.1(1))

WALL TYPE
SEE SUPPLEMENTARY STANDARDS SB3 TABLE 1. W13A BEARING WALL WITH 2 ROWS OF 2X4 SPR. @ 16" O.C. ON SEPARATE 2X4 PLATES SET 1" APART WITH 4" ABSORPTIVE MATERIAL AND 1 LAYER 5/8" TYPE 'X' GYPSUM WALL BOARD ON EACH SIDE (SEE NOTES 5 TO TABLE 1)

FIRE RESISTANCE RATING
FIRE RESISTANCE RATING REQUIRED IS 1 HR. MIN.(AS PER SENTENCE DIV. B 9.10.11.2.[1] O.B.C.)

WOOD FRAME PARTY WALL
TRUSSES PERPENDICULAR TO PARTY WALL

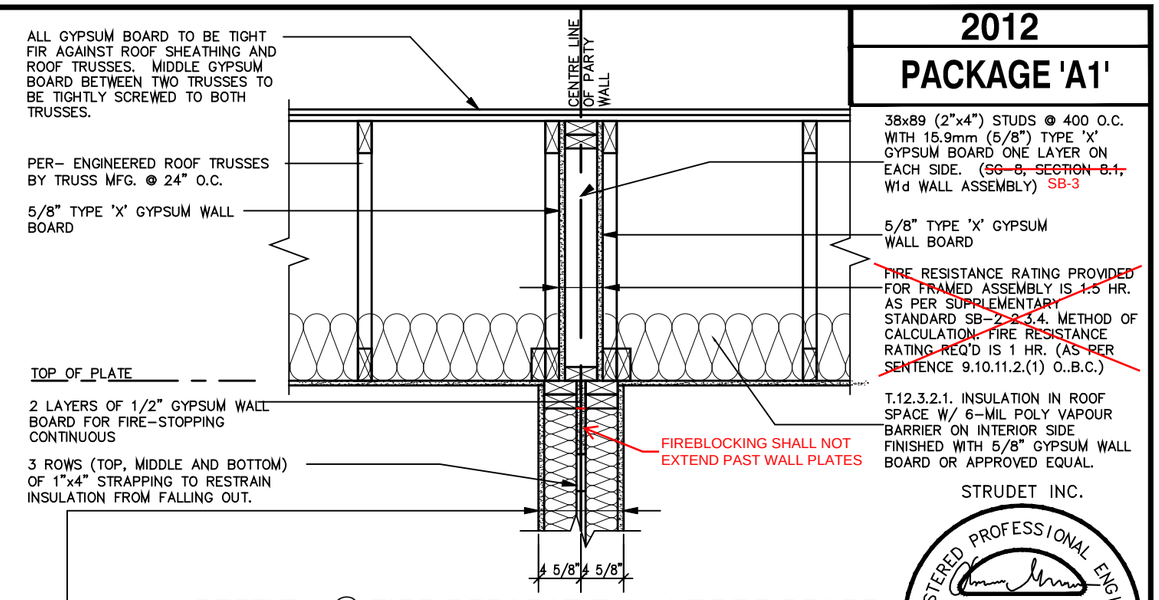

SECTION @ FIRE SEPARATION IN ROOF SPACE
TRUSSES PARALLEL TO PARTY WALL

STRUDET INC.

REGISTERED PROFESSIONAL ENGINEER
B. MARINKOVIC
PROVINCE OF ONTARIO
SEPT. 6/2022
FOR STRUCTURE ONLY

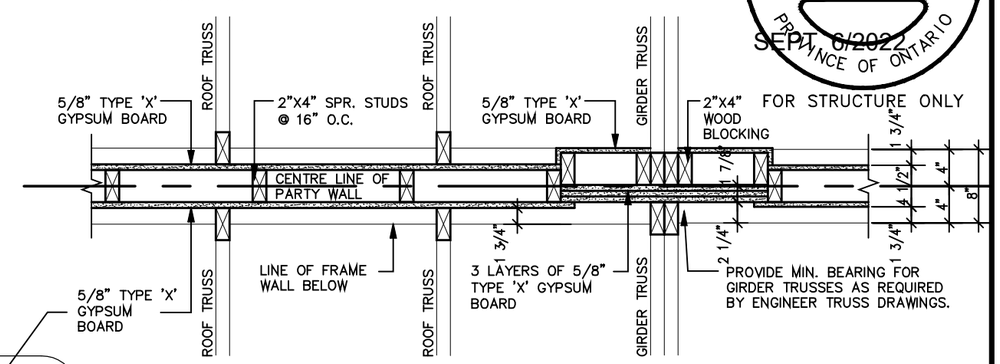

PLAN OF FIRE SEPARATION IN ROOF SPACE
TRUSSES PERPENDICULAR TO PARTY WALL

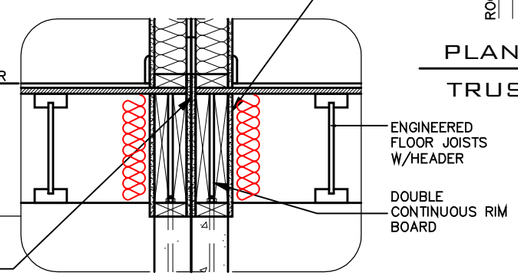

FLOOR JOISTS PARALLEL

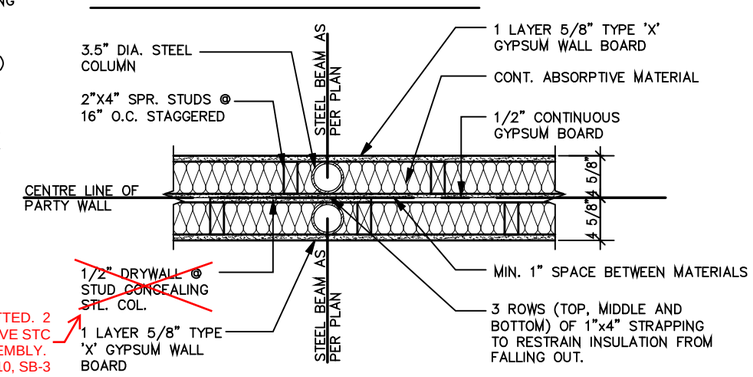

ONLY 1 LAYER PERMITTED. 2 LAYERS WILL REMOVE STC RATING FROM ASSEMBLY. SEE TABLE 1 NOTE 10, SB-3

PLAN OF PARTY WALL IN GARAGE

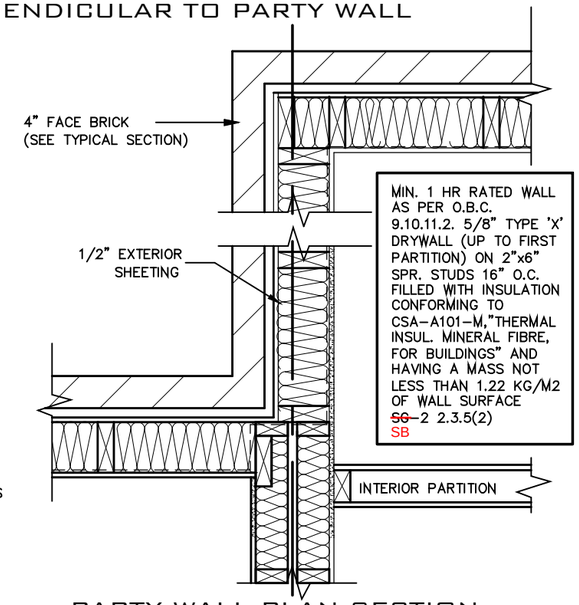

MIN. 1 HR RATED WALL AS PER O.B.C. 9.10.11.2. 5/8" TYPE 'X' DRYWALL (UP TO FIRST PARTITION) ON 2"x6" SPR. STUDS 16" O.C. FILLED WITH INSULATION CONFORMING TO CSA-A101-M,"THERMAL INSUL. MINERAL FIBRE, FOR BUILDINGS" AND HAVING A MASS NOT LESS THAN 1.22 KG/M2 OF WALL SURFACE ~~SG~~-2 2.3.5(2) SB

PARTY WALL PLAN SECTION

2012 CODE

THE CONTRACTOR SHALL CHECK AND VERIFY ALL DIMENSIONS AND CONDITIONS ON SITE BEFORE PROCEEDING WITH CONSTRUCTION. ANY DISCREPANCIES SHALL BE REPORTED TO JARDIN DESIGN GROUP INC. PRIOR TO COMMENCEMENT OF WORK.

JARDIN DESIGN GROUP INC. IS NOT RESPONSIBLE FOR THE ACCURACY OF SURVEY, STRUCTURAL OR ENGINEERING INFORMATION SHOWN ON THESE DRAWINGS OR FOR CONSTRUCTION STARTED PRIOR TO THE ISSUANCE OF A BUILDING PERMIT. REFER TO THE APPROPRIATE ENGINEERING DRAWINGS BEFORE PROCEEDING WITH WORK.

AS CONSTRUCTED INVERTS MUST BE VERIFIED PRIOR TO POURING FOOTINGS.

JARDIN DESIGN GROUP INC. HAS NOT BEEN RETAINED TO CARRY OUT GENERAL REVIEW OF THE WORK AND ASSUMES NO RESPONSIBILITY FOR THE FAILURE OF THE CONTRACTOR OR SUB CONTRACTOR TO CARRY OUT THE WORK IN ACCORDANCE WITH THE CONTRACT DOCUMENTS.

THIS DRAWING IS AN INSTRUMENT OF SERVICE, IS PROVIDED BY AND IS THE PROPERTY OF JARDIN DESIGN GROUP INC. THIS DRAWING IS NOT TO BE SCALED.

No:	DATE:	WORK DESCRIPTION:
7		
6		
5		
4		
3		
2	AUG. 31, 2022	ADDED TO JOB; ISSUED FOR PERMIT
1	AUG. 17, 2018	PREPARED TO PACKAGE 'A1' ISSUED TO CLIENT

NOT THE GRANTING OF A PERMIT NOR REVIEWING OF SPECS & DRAWINGS NOR INSPECTIONS MADE DURING INSTALLATION BY THE OFFICIAL HAVING JURISDICTION SHALL RELIEVE THE OWNER FROM REQUIREMENTS OF THE ONTARIO BUILDING CODE AND ANY OTHER REFERENCED REQUIREMENTS.

The undersigned has reviewed and takes responsibility for this design and has the qualifications and meets the requirements set out in the Ontario Building Code to be a designer

QUALIFICATION INFORMATION
Required unless design is exempt under Division C, Subsection 3.2.5 of the building code

NAME	SIGNATURE	BCIN
Walter Botter		21031

REGISTRATION INFORMATION
Required unless design is exempt under Division C, Subsection 3.2.4 of the building code

FIRM NAME	BCIN
jardin design group inc.	27763

jardin DESIGN GROUP INC
64 JARDIN DR. SUITE 3A
VAUGHAN ONT. L4K 3P3
TEL: 905 660-3377 FAX: 905 660-3713
EMAIL: info@jardindesign.ca

WOOD PARTY WALL

BARLASSINA CONSTRUCTION
CITY OF CAMBRIDGE

BILD

MODEL NAME: T ----
SCALE: 3/4"=1'-0"
PROJ. No.: 21-35
DWG. No.: 4

DRAWN BY:
DRAWING NAME: GENERAL NOTES

2012
PACKAGE 'A1'

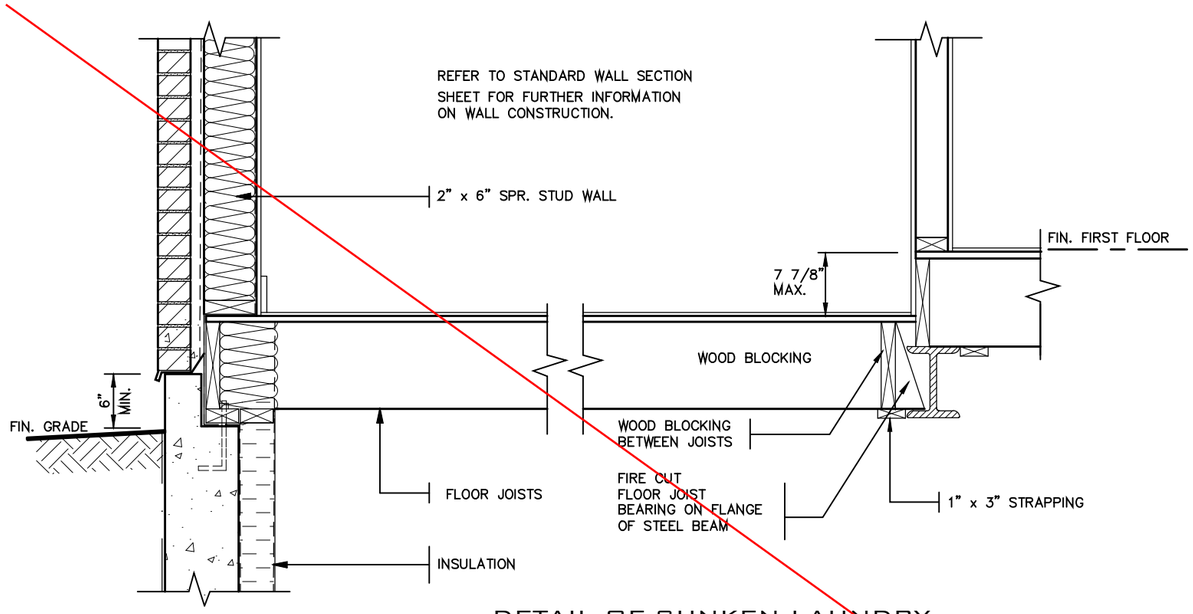

DETAIL OF SUNKEN LAUNDRY
(ONE RISER)

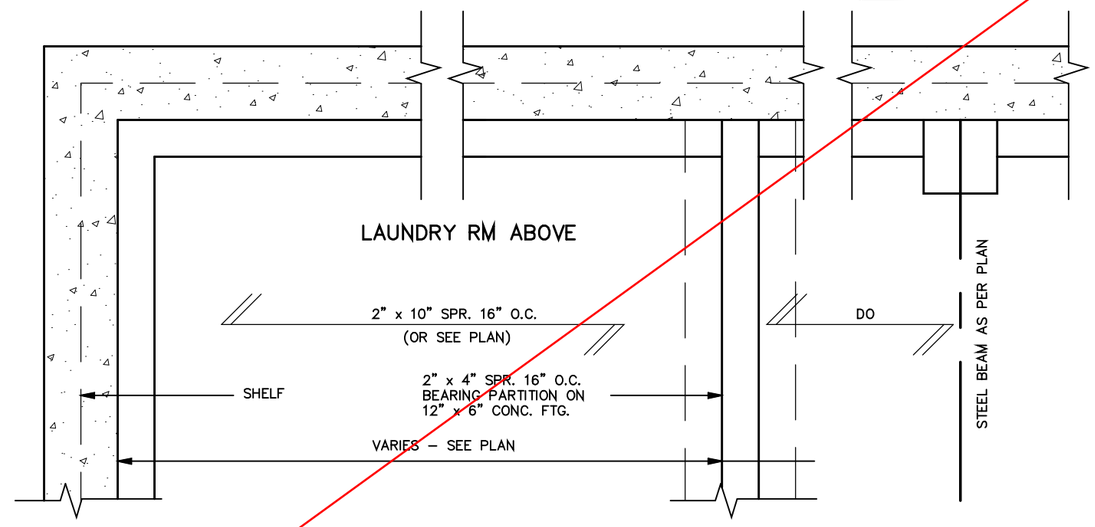

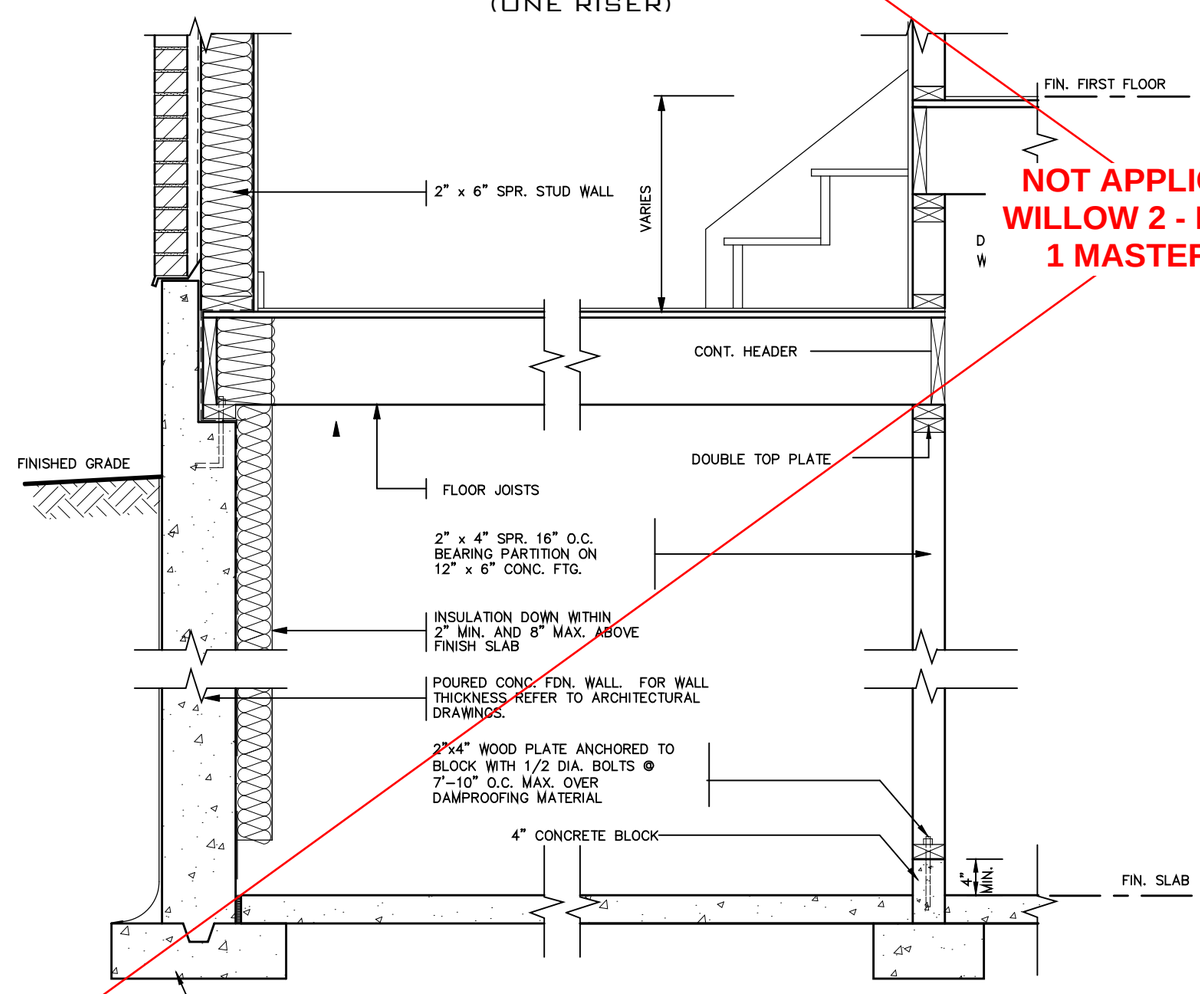

DETAIL OF SUNKEN LAUNDRY
(MORE THAN ONE RISER)

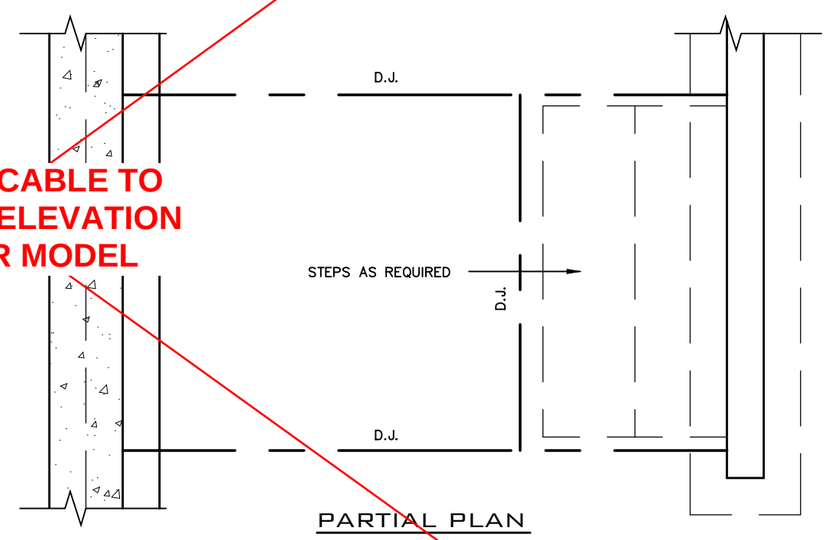

PARTIAL PLAN

NOT APPLICABLE TO WILLOW 2 - ELEVATION 1 MASTER MODEL

STRUDET INC.
REGISTERED PROFESSIONAL ENGINEER
B. MARINKOVIC
SEPT 6/2022
PROVINCE OF ONTARIO
FOR STRUCTURE ONLY

2012 CODE

THE CONTRACTOR SHALL CHECK AND VERIFY ALL DIMENSIONS AND CONDITIONS ON SITE BEFORE PROCEEDING WITH CONSTRUCTION. ANY DISCREPANCIES SHALL BE REPORTED TO JARDIN DESIGN GROUP INC. PRIOR TO COMMENCEMENT OF WORK.

JARDIN DESIGN GROUP INC. IS NOT RESPONSIBLE FOR THE ACCURACY OF SURVEY, STRUCTURAL OR ENGINEERING INFORMATION SHOWN ON THESE DRAWINGS OR FOR CONSTRUCTION STARTED PRIOR TO THE ISSUANCE OF A BUILDING PERMIT. REFER TO THE APPROPRIATE ENGINEERING DRAWINGS BEFORE PROCEEDING WITH WORK.

AS CONSTRUCTED INVERTS MUST BE VERIFIED PRIOR TO POURING FOOTINGS.

JARDIN DESIGN GROUP INC. HAS NOT BEEN RETAINED TO CARRY OUT GENERAL REVIEW OF THE WORK AND ASSUMES NO RESPONSIBILITY FOR THE FAILURE OF THE CONTRACTOR OR SUB CONTRACTOR TO CARRY OUT THE WORK IN ACCORDANCE WITH THE CONTRACT DOCUMENTS.

THIS DRAWING IS AN INSTRUMENT OF SERVICE, IS PROVIDED BY AND IS THE PROPERTY OF JARDIN DESIGN GROUP INC. THIS DRAWING IS NOT TO BE SCALED.

No:	DATE:	WORK DESCRIPTION:
7		
6		
5		
4		
3		
2	AUG. 31, 2022	ADDED TO JOB; ISSUED FOR PERMIT
1	AUG. 17, 2018	PREPARED TO PACKAGE 'A1' ISSUED TO CLIENT

The undersigned has reviewed and takes responsibility for this design and has the qualifications and meets the requirements set out in the Ontario Building Code to be a designer

QUALIFICATION INFORMATION
Required unless design is exempt under Division C, Subsection 3.2.5 of the building code

NAME	SIGNATURE	BCIN
Walter Botter		21031

REGISTRATION INFORMATION
Required unless design is exempt under Division C, Subsection 3.2.4 of the building code

FIRM NAME	BCIN
jardin design group inc.	27763

jardin
DESIGN GROUP INC
64 JARDIN DR. SUITE 3A
VAUGHAN ONT. L4K 3P3
TEL: 905 660-3377 FAX: 905 660-3713
EMAIL: info@jardindesign.ca

SUNKEN LAUNDRY

BARLASSINA CONSTRUCTION
CITY OF CAMBRIDGE

BILD

MODEL NAME: T ----
SCALE: 3/4"=1'-0"
PROJ. No.: 21-35
DWG. No.: 5

DRAWN BY:
DRAWING NAME: GENERAL NOTES

2012
PACKAGE 'A1'

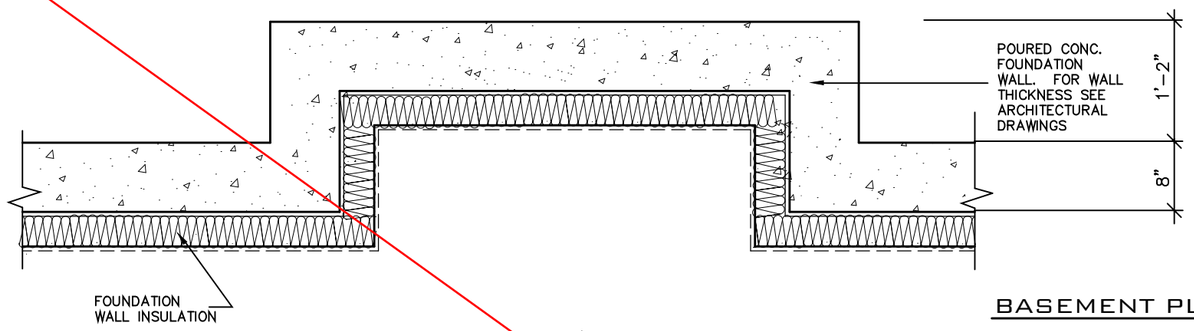

BASEMENT PLAN

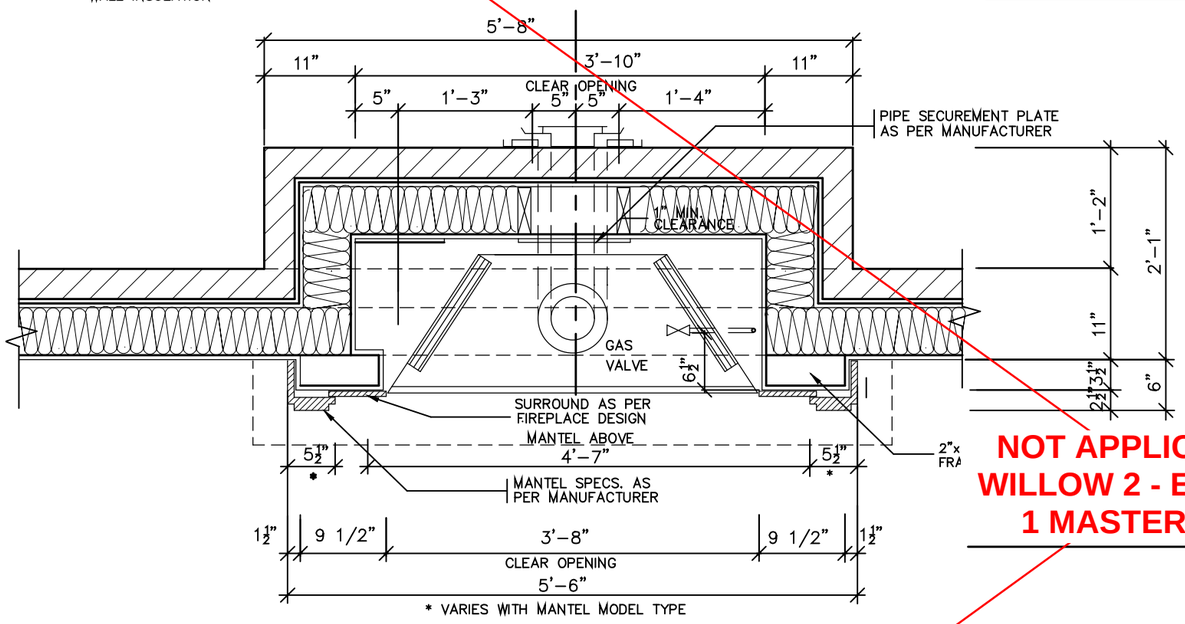

NOT APPLICABLE TO WILLOW 2 - ELEVATION 1 MASTER MODEL

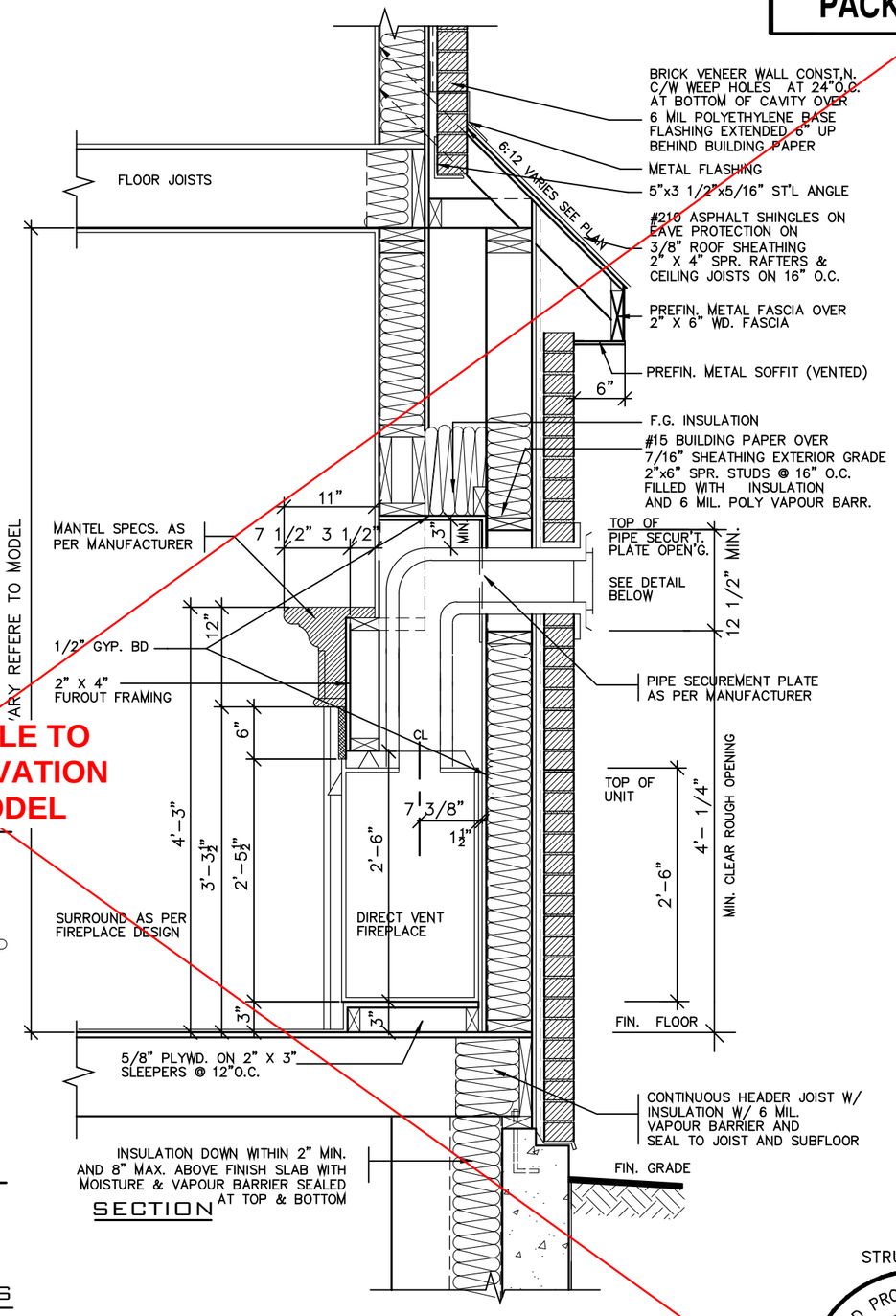

SECTION

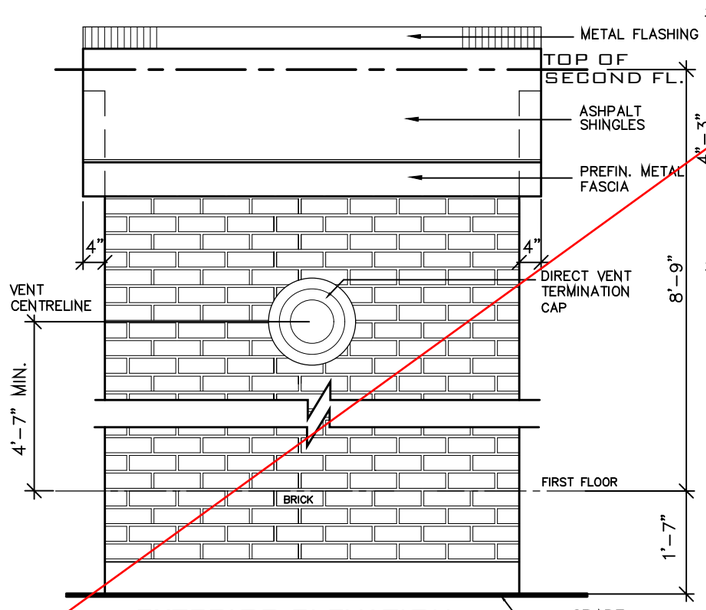

EXTERIOR ELEVATION

NOT TO SCALE

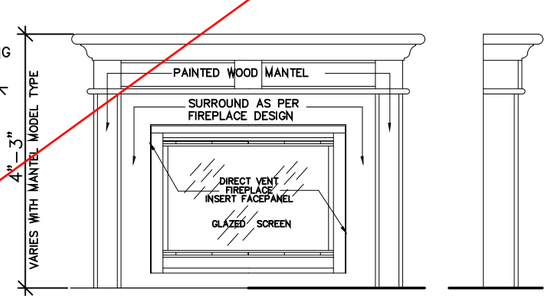

FRONT/SIDE ELEVATION

NOT TO SCALE

GENERAL INSTALLATION NOTES

1.0 UNIT INSTALLATION TO STRICTLY CONFORM TO MANUFACTURERS INSTALLATION MANUAL AND ALL APPLICABLE CODES OF LOCAL AUTHORTIES HAVING JURISDICTION INCLUDING CAN/OGA-B149.1 & 2.
2.0 INSTALL WITH THE FOLLOWING MINIMUM CLEARANCES TO COMBUSTIBLES:
- FROM TOP OF UNIT 0"
- FROM BACK OF UNIT 1/2"
- FROM SIDES OF UNIT 1/2"
- FROM TOP OF HORIZ.VENT 3"
- FROM SIDES TO VENT 1"

3.0 THE DIRECT VENT UNIT ILLUSTRATED IS THE GC150 MODEL AS MANUFACTURED BY HEATILATOR.
4.0 THE MANTEL ILLUSTRATED IS THE S-2 GB AS SUPPLIED BY GREATER TORONTO FIREPLACE.

STRUDET INC.

REGISTERED PROFESSIONAL ENGINEER
B. MARINKOVIC
PROVINCE OF ONTARIO
SEPT. 6/2022

FOR STRUCTURE ONLY

2012 CODE

THE CONTRACTOR SHALL CHECK AND VERIFY ALL DIMENSIONS AND CONDITIONS ON SITE BEFORE PROCEEDING WITH CONSTRUCTION. ANY DISCREPANCIES SHALL BE REPORTED TO JARDIN DESIGN GROUP INC. PRIOR TO COMMENCEMENT OF WORK.

JARDIN DESIGN GROUP INC. IS NOT RESPONSIBLE FOR THE ACCURACY OF SURVEY, STRUCTURAL OR ENGINEERING INFORMATION SHOWN ON THESE DRAWINGS OR FOR CONSTRUCTION STARTED PRIOR TO THE ISSUANCE OF A BUILDING PERMIT. REFER TO THE APPROPRIATE ENGINEERING DRAWINGS BEFORE PROCEEDING WITH WORK.

AS CONSTRUCTED INVERTS MUST BE VERIFIED PRIOR TO POURING FOOTINGS.

JARDIN DESIGN GROUP INC. HAS NOT BEEN RETAINED TO CARRY OUT GENERAL REVIEW OF THE WORK AND ASSUMES NO RESPONSIBILITY FOR THE FAILURE OF THE CONTRACTOR OR SUB CONTRACTOR TO CARRY OUT THE WORK IN ACCORDANCE WITH THE CONTRACT DOCUMENTS.

THIS DRAWING IS AN INSTRUMENT OF SERVICE, IS PROVIDED BY AND IS THE PROPERTY OF JARDIN DESIGN GROUP INC. THIS DRAWING IS NOT TO BE SCALED.

No:	DATE:	WORK DESCRIPTION:
7		
6		
5		
4		
3		
2	AUG. 31, 2022	ADDED TO JOB; ISSUED FOR PERMIT
1	AUG. 17, 2018	PREPARED TO PACKAGE 'A1' ISSUED TO CLIENT

The undersigned has reviewed and takes responsibility for this design and has the qualifications and meets the requirements set out in the Ontario Building Code to be a designer

QUALIFICATION INFORMATION
Required unless design is exempt under Division C, Subsection 3.2.5 of the building code

NAME	SIGNATURE	BCIN
Walter Botter		21031

REGISTRATION INFORMATION
Required unless design is exempt under Division C, Subsection 3.2.4 of the building code

FIRM NAME	BCIN
jardin design group inc.	27763

jardin DESIGN GROUP INC
64 JARDIN DR. SUITE 3A
VAUGHAN ONT. L4K 3P3
TEL: 905 660-3377 FAX: 905 660-3713
EMAIL: info@jardindesign.ca

DIRECT VENT FIREPLACE

BARLASSINA CONSTRUCTION
CITY OF CAMBRIDGE

BILD

MODEL NAME: T ----
SCALE: 3/4"=1'-0"
PROJ. No.: 21-35
DWG. No.: 6

DRAWN BY:
DRAWING NAME: GENERAL NOTES

2012
PACKAGE 'A1'

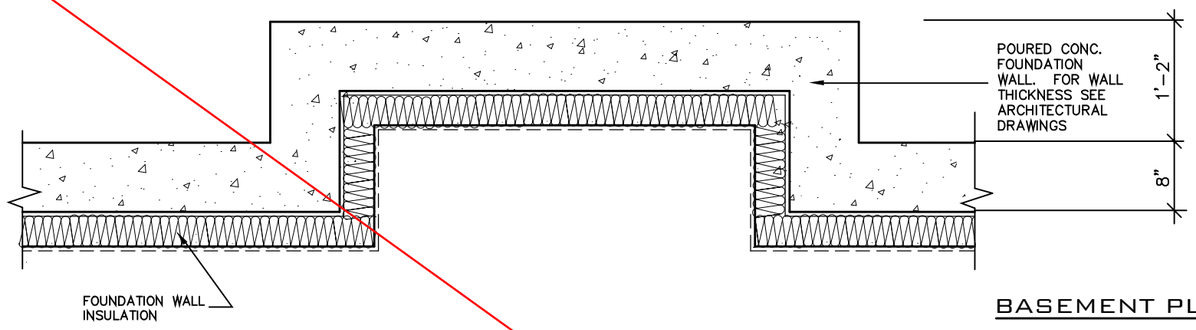

BASEMENT PLAN

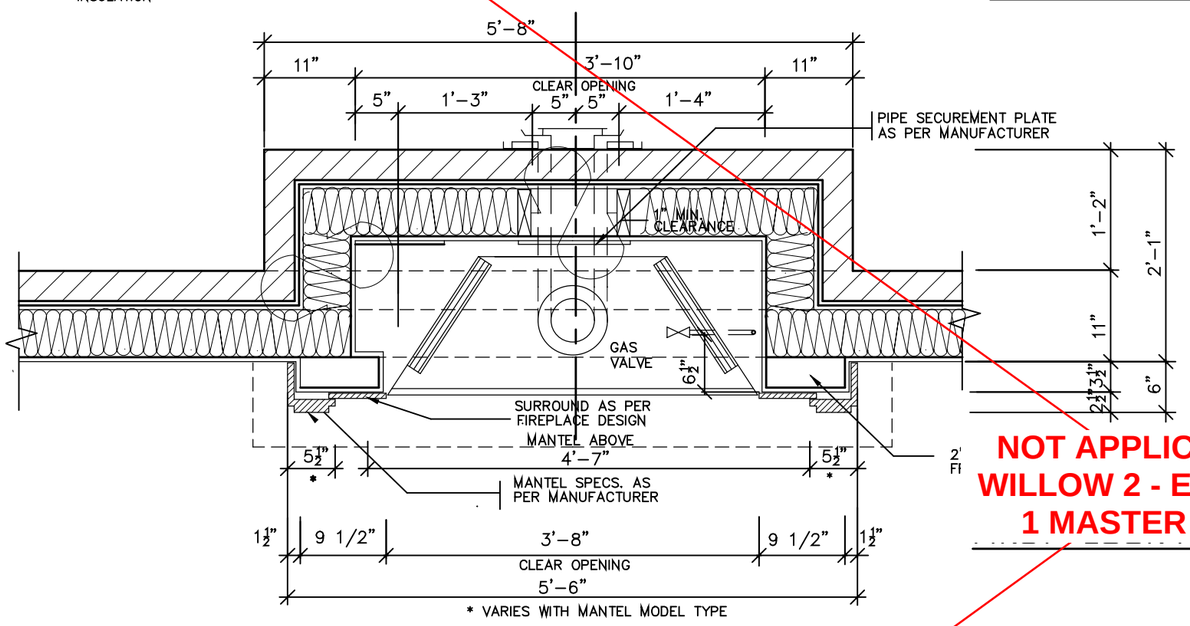

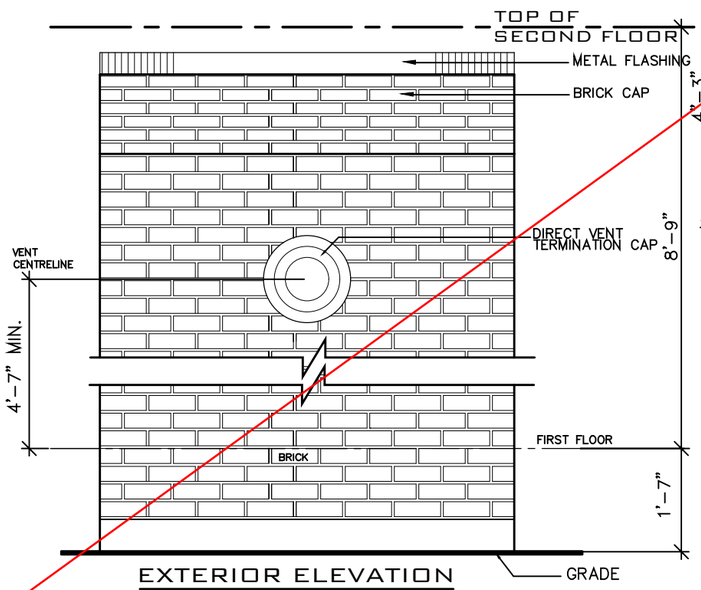

EXTERIOR ELEVATION

NOT TO SCALE

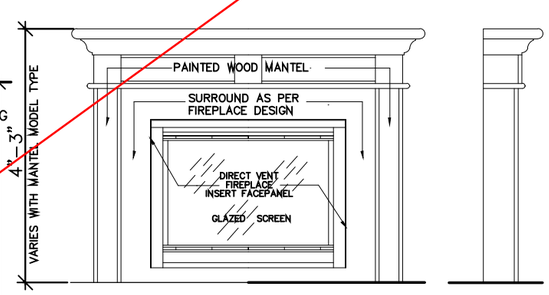

FRONT/SIDE ELEVATION

NOT TO SCALE

GENERAL INSTALLATION NOTES

1.0 UNIT INSTALLATION TO STRICTLY CONFORM TO MANUFACTURERS INSTALLATION MANUAL AND ALL APPLICABLE CODES OF LOCAL AUTHORITIES HAVING JURISDICTION INCLUDING CAN/OGA-B149.1 & 2.
2.0 INSTALL WITH THE FOLLOWING MINIMUM CLEARANCES TO COMBUSTIBLES:
- FROM TOP OF UNIT 0"
- FROM BACK OF UNIT 1/2"
- FROM SIDES OF UNIT 1/2"
- FROM TOP OF HORIZ.VENT 3"
- FROM SIDES TO VENT 1"

3.0 THE DIRECT VENT UNIT ILLUSTRATED IS THE GC150 MODEL AS MANUFACTURED BY HEATILATOR.
4.0 THE MANTEL ILLUSTRATED IS THE S-2 GB AS SUPPLIED BY GREATER TORONTO FIREPLACE.

NOT APPLICABLE TO WILLOW 2 - ELEVATION 1 MASTER MODEL

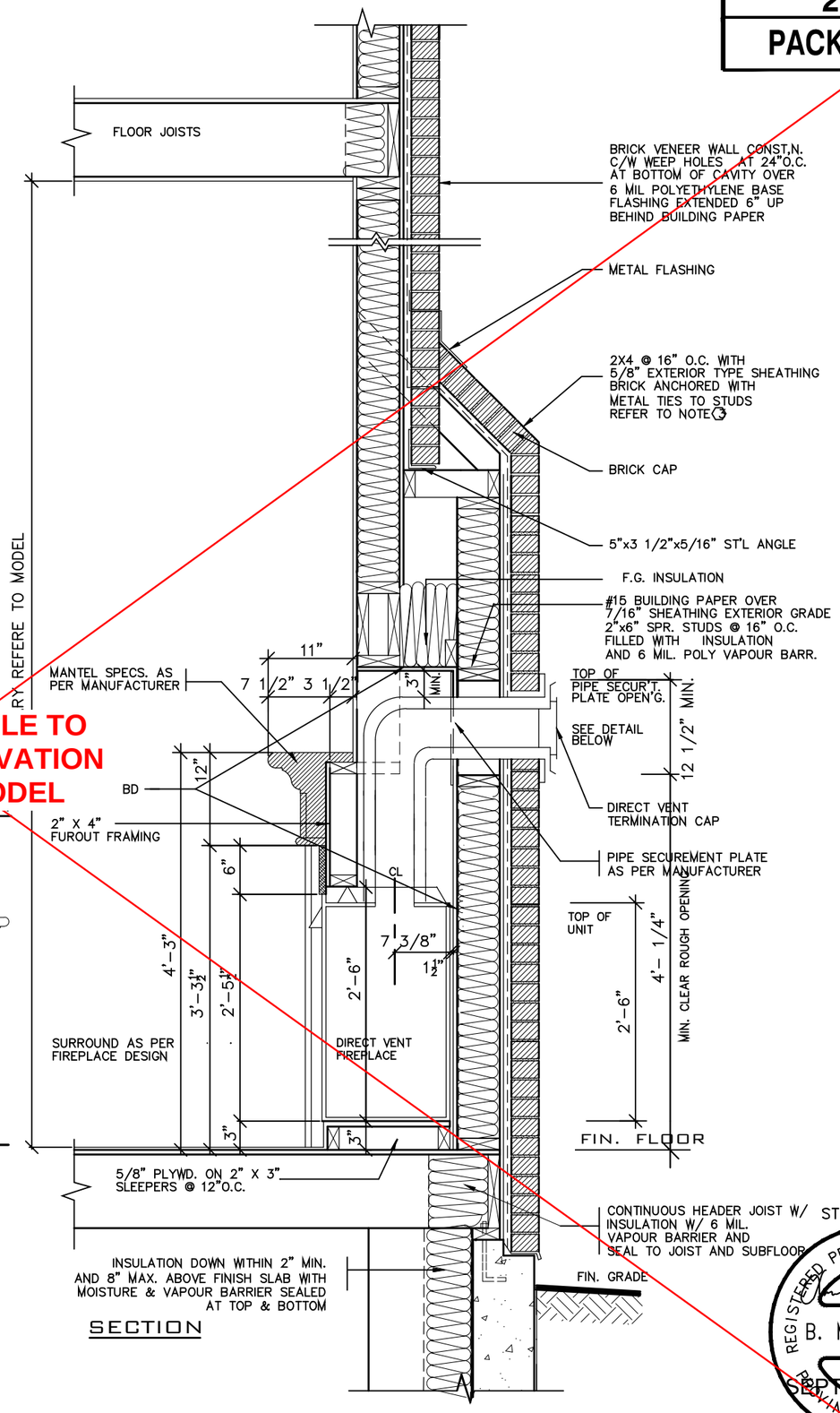

SECTION

REGISTERED PROFESSIONAL ENGINEER
B. MARINKOVIC
SEPT. 6/2022
PROVINCE OF ONTARIO

FOR STRUCTURE ONLY

2012 CODE

THE CONTRACTOR SHALL CHECK AND VERIFY ALL DIMENSIONS AND CONDITIONS ON SITE BEFORE PROCEEDING WITH CONSTRUCTION. ANY DISCREPANCIES SHALL BE REPORTED TO JARDIN DESIGN GROUP INC. PRIOR TO COMMENCEMENT OF WORK.

JARDIN DESIGN GROUP INC. IS NOT RESPONSIBLE FOR THE ACCURACY OF SURVEY, STRUCTURAL OR ENGINEERING INFORMATION SHOWN ON THESE DRAWINGS OR FOR CONSTRUCTION STARTED PRIOR TO THE ISSUANCE OF A BUILDING PERMIT. REFER TO THE APPROPRIATE ENGINEERING DRAWINGS BEFORE PROCEEDING WITH WORK.

AS CONSTRUCTED INVERTS MUST BE VERIFIED PRIOR TO POURING FOOTINGS.

JARDIN DESIGN GROUP INC. HAS NOT BEEN RETAINED TO CARRY OUT GENERAL REVIEW OF THE WORK AND ASSUMES NO RESPONSIBILITY FOR THE FAILURE OF THE CONTRACTOR OR SUB CONTRACTOR TO CARRY OUT THE WORK IN ACCORDANCE WITH THE CONTRACT DOCUMENTS.

THIS DRAWING IS AN INSTRUMENT OF SERVICE, IS PROVIDED BY AND IS THE PROPERTY OF JARDIN DESIGN GROUP INC. THIS DRAWING IS NOT TO BE SCALED.

No:	DATE:	WORK DESCRIPTION:
7		
6		
5		
4		
3		
2	AUG. 31, 2022	ADDED TO JOB; ISSUED FOR PERMIT
1	AUG. 17, 2018	PREPARED TO PACKAGE 'A1' ISSUED TO CLIENT

The undersigned has reviewed and takes responsibility for this design and has the qualifications and meets the requirements set out in the Ontario Building Code to be a designer

QUALIFICATION INFORMATION
Required unless design is exempt under Division C, Subsection 3.2.5 of the building code

NAME	SIGNATURE	BCIN
Walter Botter		21031

REGISTRATION INFORMATION
Required unless design is exempt under Division C, Subsection 3.2.4 of the building code

FIRM NAME	BCIN
jardin design group inc.	27763

jardin DESIGN GROUP INC
64 JARDIN DR. SUITE 3A
VAUGHAN ONT. L4K 3P3
TEL: 905 660-3377 FAX: 905 660-3713
EMAIL: info@jardindesign.ca

DIRECT VENT FIREPLACE WITH BRICK CAP

BARLASSINA CONSTRUCTION
CITY OF CAMBRIDGE

BILD

MODEL NAME: T ----
SCALE: 3/4"=1'-0"
PROJ. No.: 21-35
DWG. No.: 6-1

DRAWN BY:
DRAWING NAME: GENERAL NOTES

2012
PACKAGE 'A1'

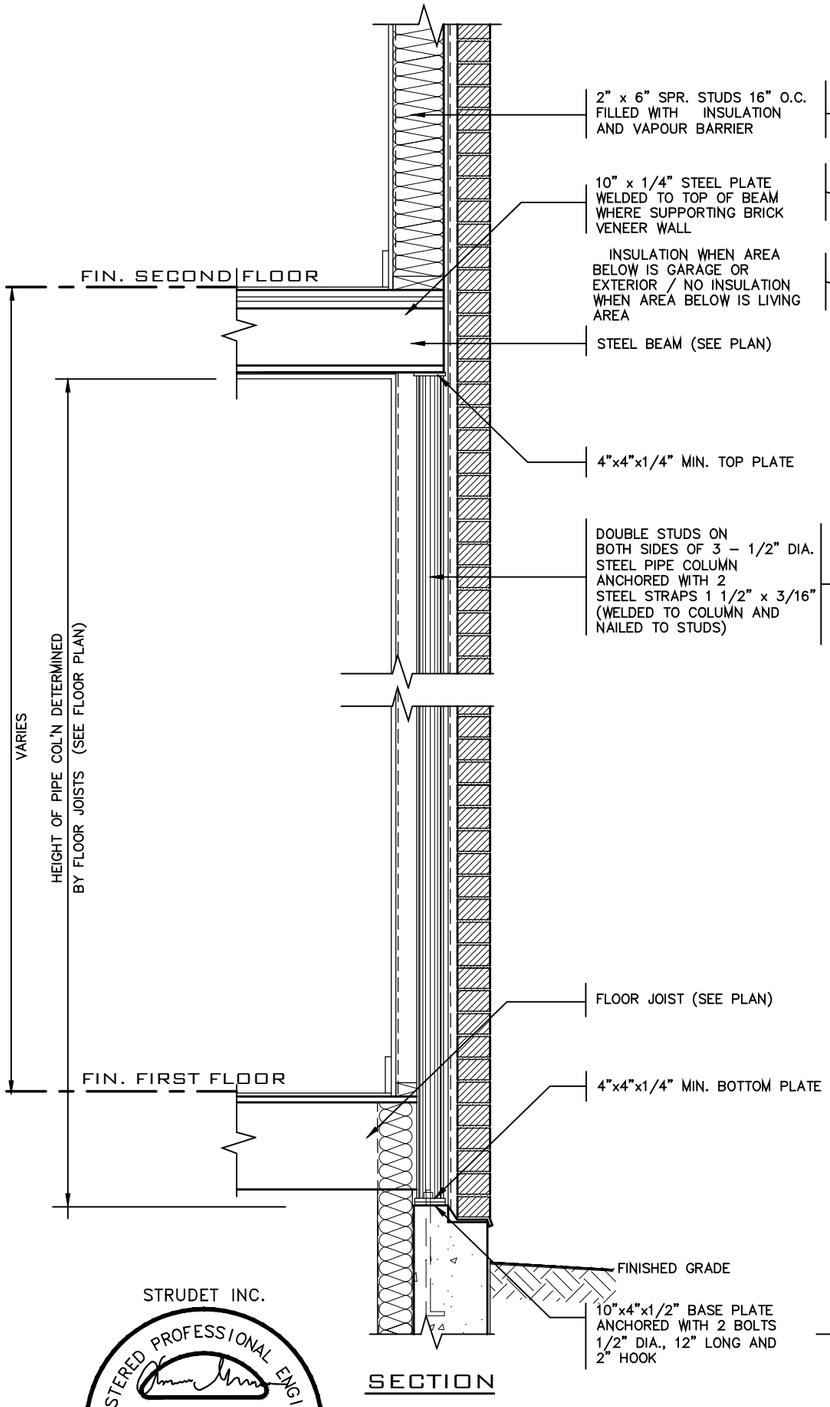

SECTION

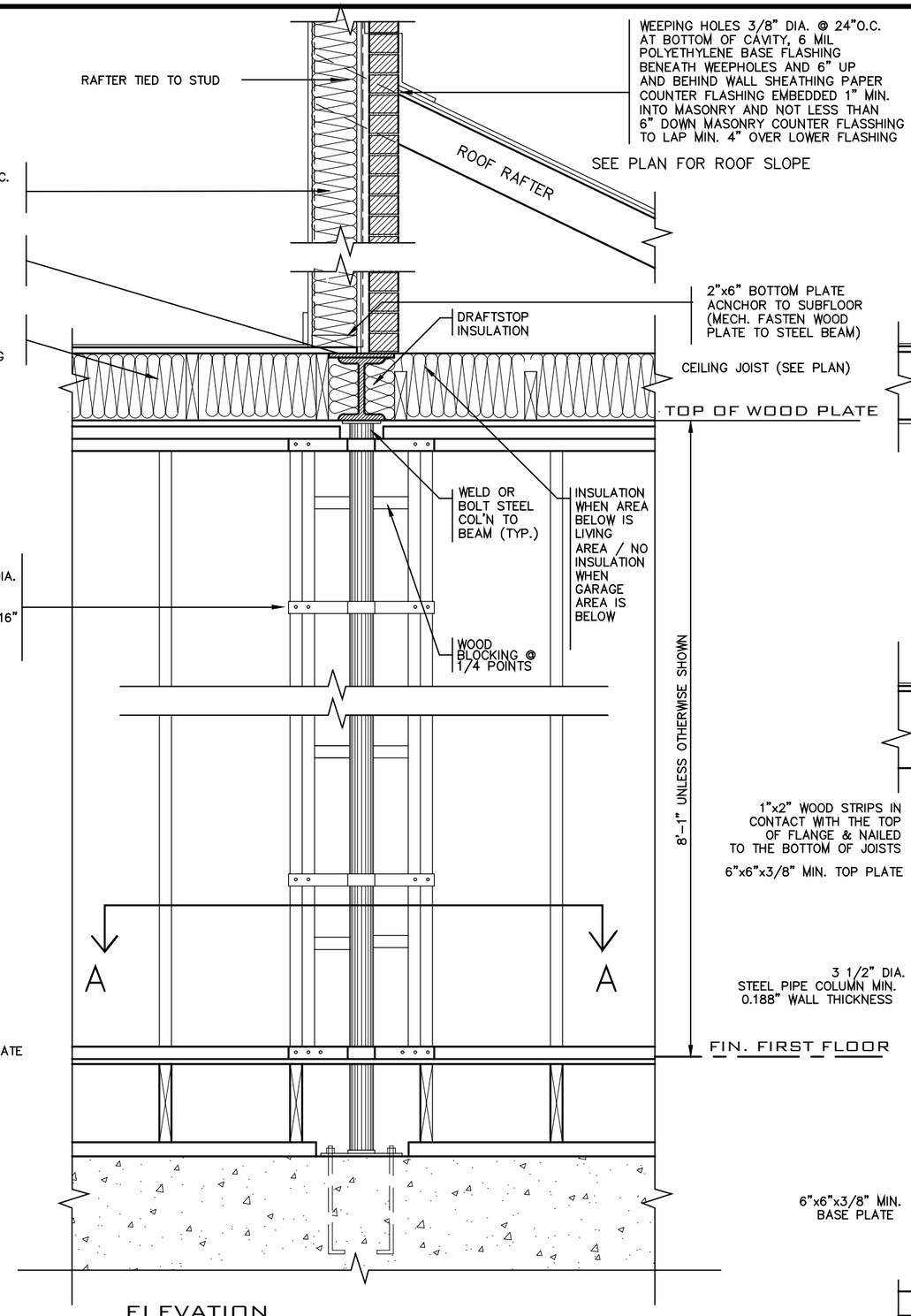

ELEVATION

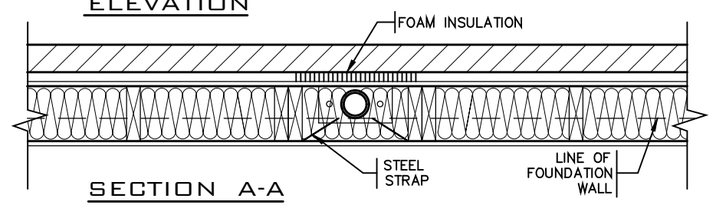

SECTION A-A

SECTION THROUGH STEEL BEAM SUPPORTING MASONRY & BEARING STUD PARTITION

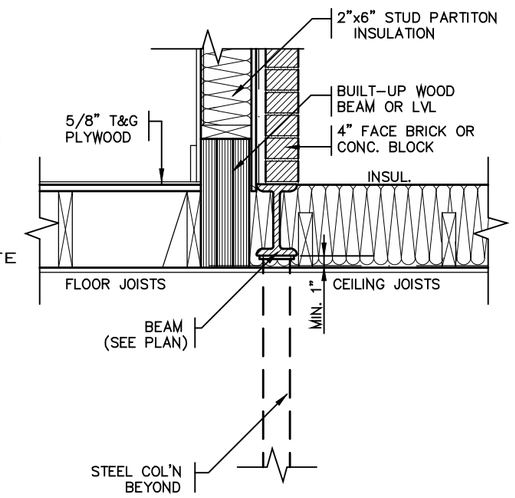

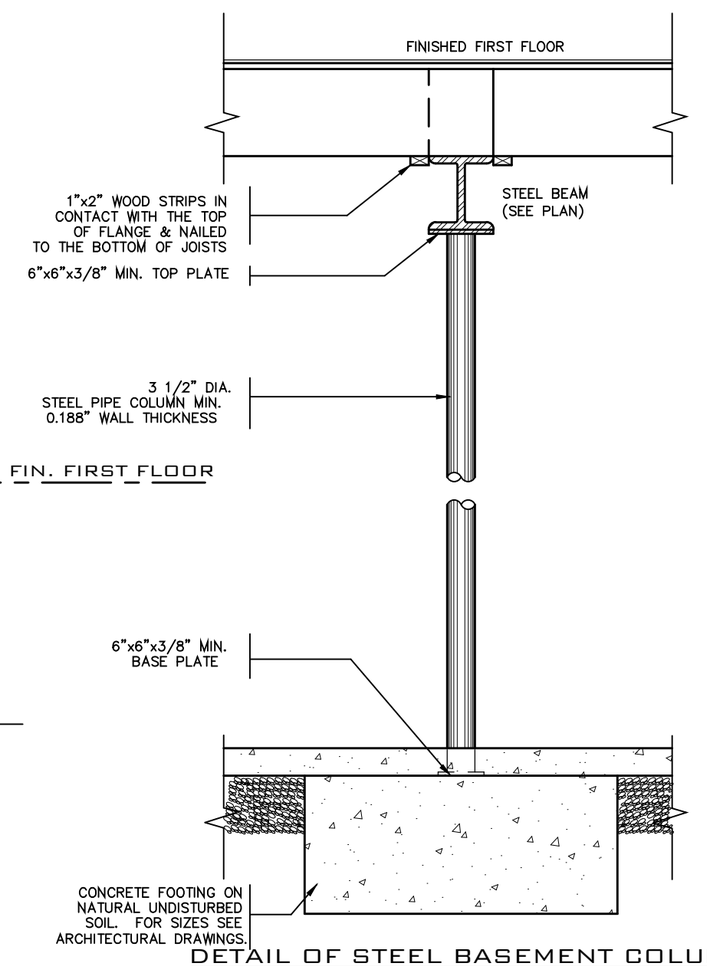

DETAIL OF STEEL BASEMENT COLUMN

STRUDET INC.

REGISTERED PROFESSIONAL ENGINEER
B. MARINKOVIC
SEPT. 6/2022
PROVINCE OF ONTARIO

FOR STRUCTURE ONLY

THE CONTRACTOR SHALL CHECK AND VERIFY ALL DIMENSIONS AND CONDITIONS ON SITE BEFORE PROCEEDING WITH CONSTRUCTION. ANY DISCREPANCIES SHALL BE REPORTED TO JARDIN DESIGN GROUP INC. PRIOR TO COMMENCEMENT OF WORK.

JARDIN DESIGN GROUP INC. IS NOT RESPONSIBLE FOR THE ACCURACY OF SURVEY, STRUCTURAL OR ENGINEERING INFORMATION SHOWN ON THESE DRAWINGS OR FOR CONSTRUCTION STARTED PRIOR TO THE ISSUANCE OF A BUILDING PERMIT. REFER TO THE APPROPRIATE ENGINEERING DRAWINGS BEFORE PROCEEDING WITH WORK.

AS CONSTRUCTED INVERTS MUST BE VERIFIED PRIOR TO POURING FOOTINGS.

JARDIN DESIGN GROUP INC. HAS NOT BEEN RETAINED TO CARRY OUT GENERAL REVIEW OF THE WORK AND ASSUMES NO RESPONSIBILITY FOR THE FAILURE OF THE CONTRACTOR OR SUB CONTRACTOR TO CARRY OUT THE WORK IN ACCORDANCE WITH THE CONTRACT DOCUMENTS.

THIS DRAWING IS AN INSTRUMENT OF SERVICE, IS PROVIDED BY AND IS THE PROPERTY OF JARDIN DESIGN GROUP INC. THIS DRAWING IS NOT TO BE SCALED.

No:	DATE:	WORK DESCRIPTION:
7		
6		
5		
4		
3		
2	AUG. 31, 2022	ADDED TO JOB; ISSUED FOR PERMIT
1	AUG. 17, 2018	PREPARED TO PACKAGE 'A1' ISSUED TO CLIENT

NOT THE GRANTING OF A PERMIT NOR REVIEWING OF SPECS & DRAWINGS NOR INSPECTIONS MADE DURING INSTALLATION BY THE OFFICIAL HAVING JURISDICTION SHALL RELIEVE THE OWNER FROM REQUIREMENTS OF THE ONTARIO BUILDING CODE AND ANY OTHER REFERENCED REQUIREMENTS.

The undersigned has reviewed and takes responsibility for this design and has the qualifications and meets the requirements set out in the Ontario Building Code to be a designer

QUALIFICATION INFORMATION
Required unless design is exempt under Division C, Subsection 3.2.5 of the building code

NAME	SIGNATURE	BCIN
Walter Botter		21031

REGISTRATION INFORMATION
Required unless design is exempt under Division C, Subsection 3.2.4 of the building code

FIRM NAME	BCIN
jardin design group inc.	27763

jardin DESIGN GROUP INC
64 JARDIN DR. SUITE 3A
VAUGHAN ONT. L4K 3P3
TEL: 905 660-3377 FAX: 905 660-3713
EMAIL: info@jardindesign.ca

ST. COLUMN DETAILS

BARLASSINA CONSTRUCTION
CITY OF CAMBRIDGE

BILD

MODEL NAME: T ----
SCALE: 3/4"=1'-0"
PROJ. No.: 21-35
DWG. No.: 7

DRAWN BY:
DRAWING NAME: GENERAL NOTES

2012
PACKAGE 'A1'

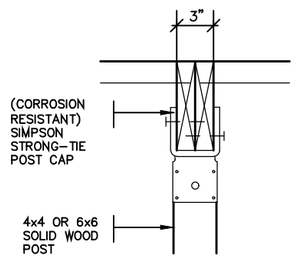

DETAIL 2 - BEAM-TO-POST
SCALE: 1" = 1'-0"

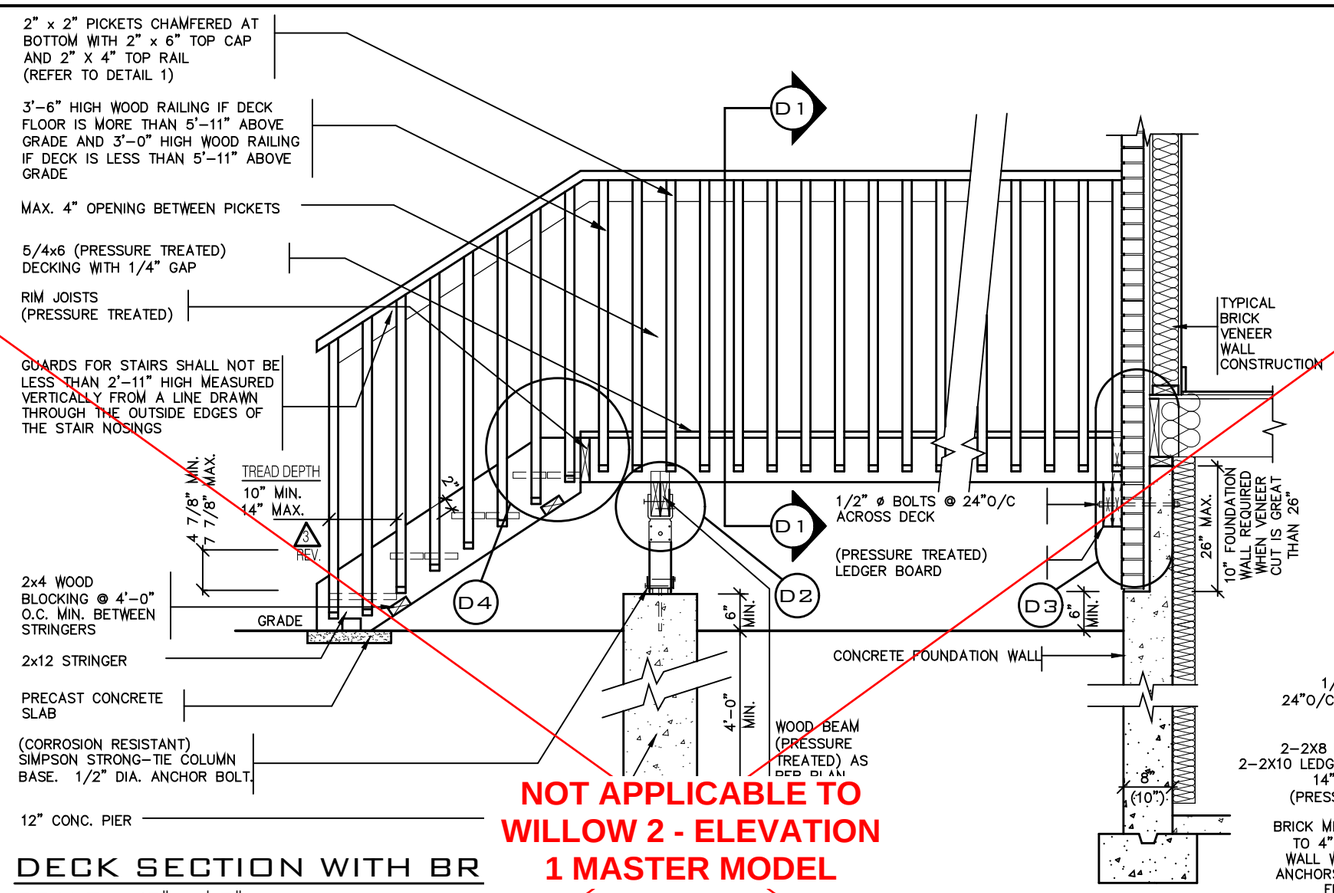

DECK SECTION WITH BR
SCALE: 1/2"=1'-0"

NOT APPLICABLE TO WILLOW 2 - ELEVATION 1 MASTER MODEL

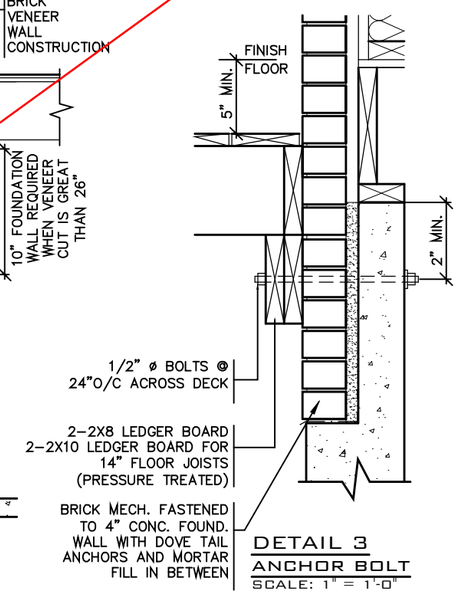

DETAIL 3
ANCHOR BOLT
SCALE: 1" = 1'-0"

DETAIL 1
CANTILEVERED PICKET SCREWED TO RIM JOIST AND DECK

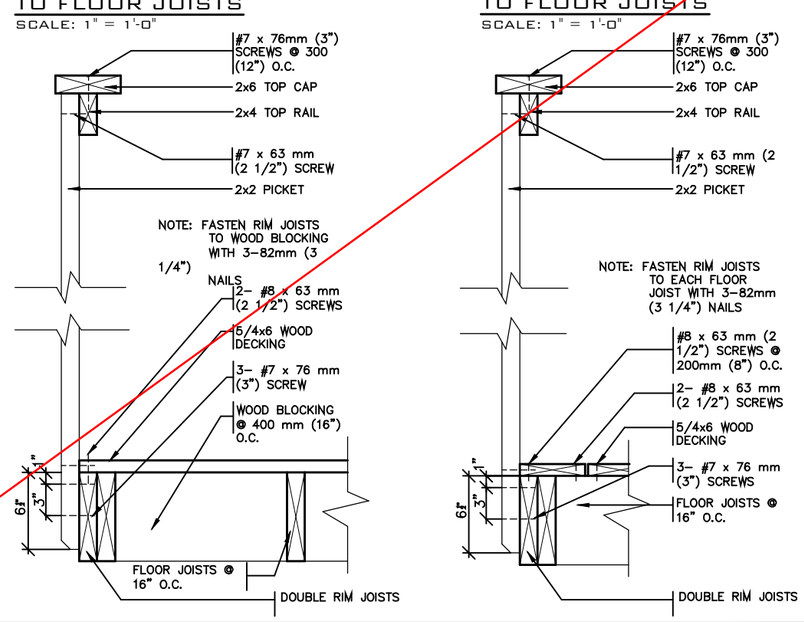

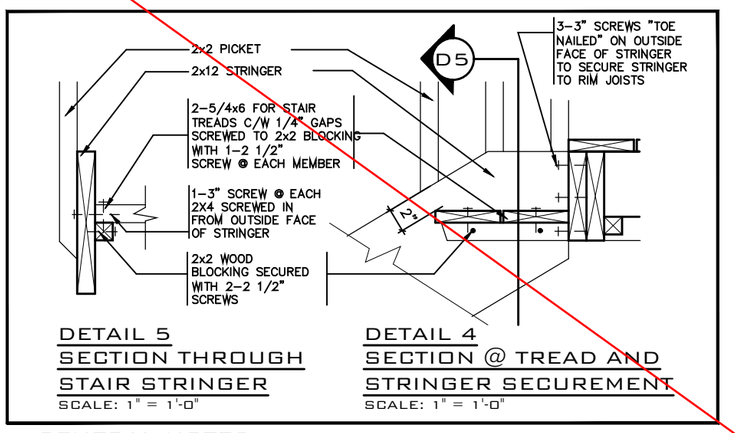

DETAIL 5
SECTION THROUGH STAIR STRINGER
SCALE: 1" = 1'-0"

DETAIL 4
SECTION @ TREAD AND STRINGER SECUREMENT
SCALE: 1" = 1'-0"

GENERAL NOTES

1. BRICK TO BE COMPRESSIVE STRENGTH OF 15mPa (2200 p.s.i.) MIN. UNITS TO BE LAID WITH FULL HEAD AND BED JOINTS.
2. MORTAR TO BE TYPE S WITH JOINT THICKNESS OF 10mm (3 /8") MIN. AND 20mm (3 /4") MAX.
3. ALL NAILS AND SCREWS TO BE GALVANIZED.
4. WOOD FOR CANTILEVERED PICKETS PICKETS SHALL BE DOUGLAS FIR-LARCH, SPRUCE-PINE-FIR, OR HEM-FIR SPECIES.
5. THE DECK HAS BEEN DESIGNED TO SAFELY SUPPORT A SUPERIMPOSED LOAD OF 1.9kPa [40psf].
6. CONCRETE SHALL HAVE COMPRESSIVE STRENGTH OF 20MPa AT 28 DAYS AND 5-8% AIR ENTRAINED.
7. FOOTING TO BE PLACED ON UNDISTURBED SOIL WITH MIN. BEARING PRESSURE OF 150kPa [3130psf].

STRUDET INC.
REGISTERED PROFESSIONAL ENGINEER
B. MARINKOVIC
SEPT. 6/2022
PROVINCE OF ONTARIO
FOR STRUCTURE ONLY

2012 CODE

THE CONTRACTOR SHALL CHECK AND VERIFY ALL DIMENSIONS AND CONDITIONS ON SITE BEFORE PROCEEDING WITH CONSTRUCTION. ANY DISCREPANCIES SHALL BE REPORTED TO JARDIN DESIGN GROUP INC. PRIOR TO COMMENCEMENT OF WORK.

JARDIN DESIGN GROUP INC. IS NOT RESPONSIBLE FOR THE ACCURACY OF SURVEY, STRUCTURAL OR ENGINEERING INFORMATION SHOWN ON THESE DRAWINGS OR FOR CONSTRUCTION STARTED PRIOR TO THE ISSUANCE OF A BUILDING PERMIT. REFER TO THE APPROPRIATE ENGINEERING DRAWINGS BEFORE PROCEEDING WITH WORK.

AS CONSTRUCTED INVERTS MUST BE VERIFIED PRIOR TO POURING FOOTINGS.

JARDIN DESIGN GROUP INC. HAS NOT BEEN RETAINED TO CARRY OUT GENERAL REVIEW OF THE WORK AND ASSUMES NO RESPONSIBILITY FOR THE FAILURE OF THE CONTRACTOR OR SUB CONTRACTOR TO CARRY OUT THE WORK IN ACCORDANCE WITH THE CONTRACT DOCUMENTS.

THIS DRAWING IS AN INSTRUMENT OF SERVICE, IS PROVIDED BY AND IS THE PROPERTY OF JARDIN DESIGN GROUP INC. THIS DRAWING IS NOT TO BE SCALED.

No:	DATE:	WORK DESCRIPTION:
7		
6		
5		
4		
3	AUG. 31, 2022	ADDED TO JOB; ISSUED FOR PERMIT
2	MAR.14, 2022	O.B.C UPDATE FOR STAIRS (JAN.1/2022)
1	AUG. 17, 2018	PREPARED TO PACKAGE 'A1' ISSUED TO CLIENT

NOT THE GRANTING OF A PERMIT NOR REVIEWING OF SPECS & DRAWINGS NOR INSPECTIONS MADE DURING INSTALLATION BY THE OFFICIAL HAVING JURISDICTION SHALL RELIEVE THE OWNER FROM REQUIREMENTS OF THE ONTARIO BUILDING CODE AND ANY OTHER REFERENCED REQUIREMENTS.

The undersigned has reviewed and takes responsibility for this design and has the qualifications and meets the requirements set out in the Ontario Building Code to be a designer

QUALIFICATION INFORMATION
Required unless design is exempt under Division C, Subsection 3.2.5 of the building code

NAME	SIGNATURE	BCIN
Walter Botter		21031

REGISTRATION INFORMATION
Required unless design is exempt under Division C, Subsection 3.2.4 of the building code

FIRM NAME	BCIN
jardin design group inc.	27763

jardin DESIGN GROUP INC
64 JARDIN DR. SUITE 3A
VAUGHAN ONT. L4K 3P3
TEL: 905 660-3377 FAX: 905 660-3713
EMAIL: info@jardindesign.ca

WOOD DECK DETAIL

BARLASSINA CONSTRUCTION
CITY OF CAMBRIDGE

BILD

MODEL NAME: T ----
SCALE: AS SHOWN
PROJ. No.: 21-35
DWG. No.: 8

DRAWN BY:
DRAWING NAME: GENERAL NOTES

2012
PACKAGE 'A1'

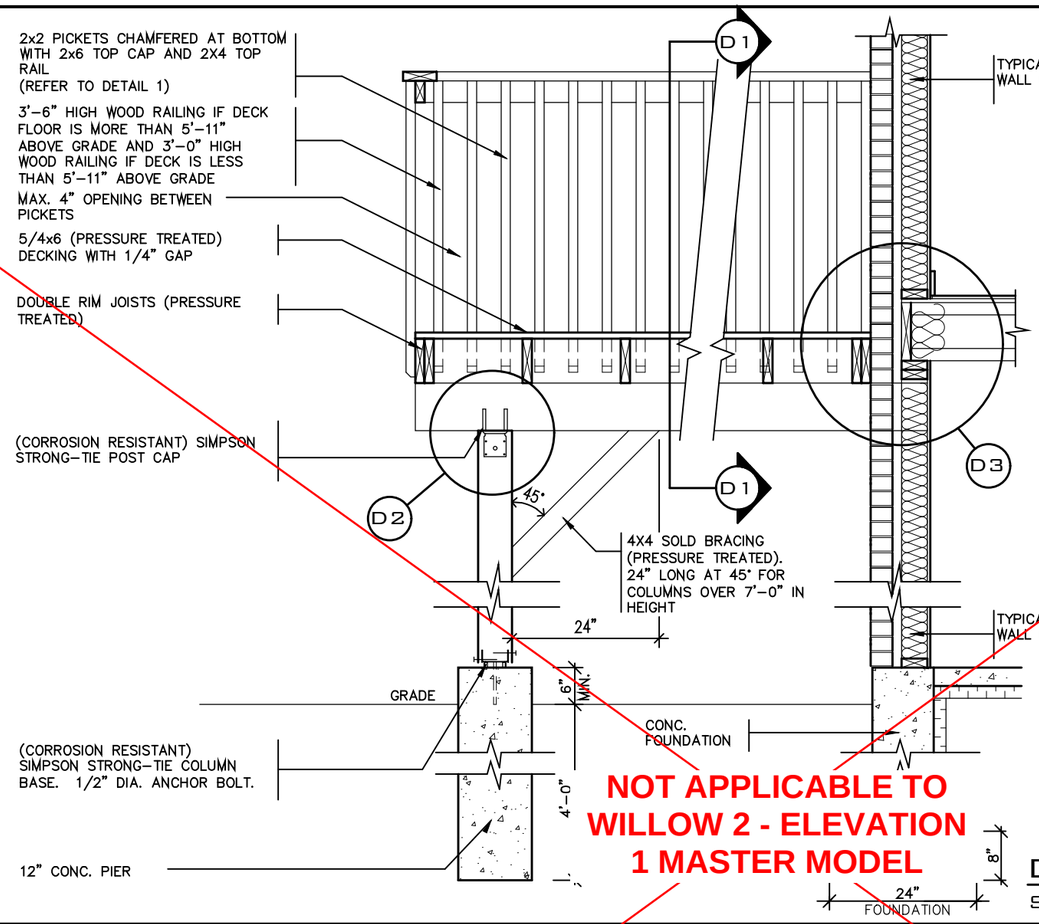

NOT APPLICABLE TO WILLOW 2 - ELEVATION 1 MASTER MODEL

DECK SECTION WITH BRICK VENEER
SCALE: 1/2"=1'-0"

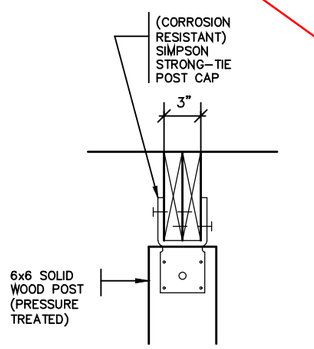

DETAIL 2 - BEAM-TO-POST
SCALE: 1" = 1'-0"

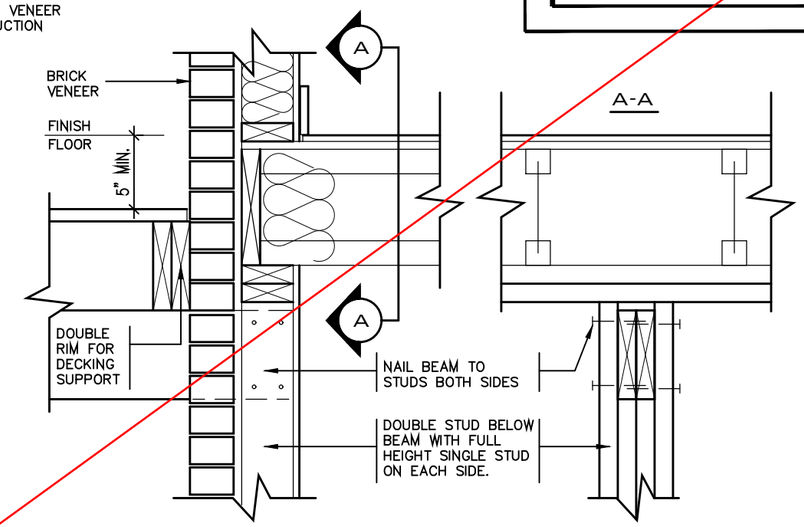

DETAIL 3
BEAM-TO-STUD WALL
SCALE: 1" = 1'-0"

DETAIL 1
CANTILEVERED PICKET SCREWED TO RIM JOIST AND DECK

GUARD PARALLEL TO FLOOR JOISTS
SCALE: 1" = 1'-0"

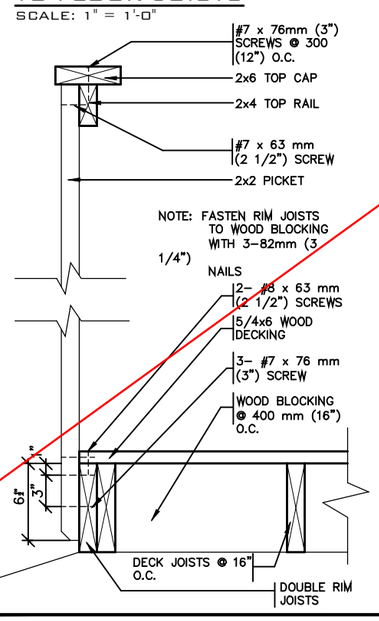

GUARD PERPENDICULAR TO FLOOR JOISTS
SCALE: 1" = 1'-0"

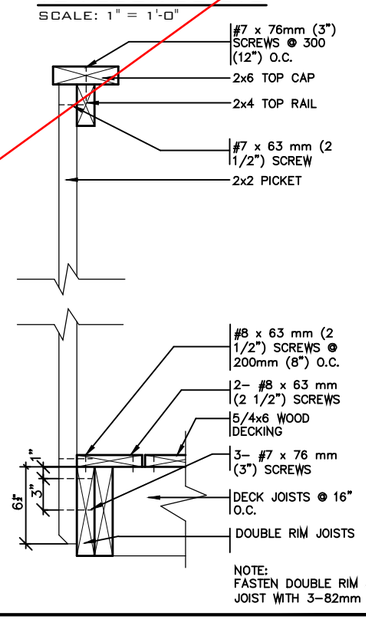

GENERAL NOTES

1. THE DECK HAS BEEN DESIGNED TO SAFELY SUPPORT A SUPERIMPOSED LOAD OF 1.9kPa [40psf].
2. ALL NAILS AND SCREWS TO BE GALVANIZED.
3. WOOD FOR CANTILEVERED PICKETS PICKETS SHALL BE DOUGLAS FIR-LARCH, SPRUCE-PINE-FIR, OR HEM-FIR SPECIES.
4. CONCRETE SHALL HAVE COMPRESSIVE STRENGTH OF 20MPa AT 28 DAYS AND 5-8%%% AIR ENTRAINED.
5. FOOTING TO BE PLACED ON UNDISTURBED SOIL WITH MIN. BEARING PRESSURE OF 150kPa [3130psf].

STRUDET INC.
REGISTERED PROFESSIONAL ENGINEER
B. MARINKOVIC
SEPT 6/2022
PROVINCE OF ONTARIO
FOR STRUCTURE ONLY

2012 CODE

THE CONTRACTOR SHALL CHECK AND VERIFY ALL DIMENSIONS AND CONDITIONS ON SITE BEFORE PROCEEDING WITH CONSTRUCTION. ANY DISCREPANCIES SHALL BE REPORTED TO JARDIN DESIGN GROUP INC. PRIOR TO COMMENCEMENT OF WORK.

JARDIN DESIGN GROUP INC. IS NOT RESPONSIBLE FOR THE ACCURACY OF SURVEY, STRUCTURAL OR ENGINEERING INFORMATION SHOWN ON THESE DRAWINGS OR FOR CONSTRUCTION STARTED PRIOR TO THE ISSUANCE OF A BUILDING PERMIT. REFER TO THE APPROPRIATE ENGINEERING DRAWINGS BEFORE PROCEEDING WITH WORK.

AS CONSTRUCTED INVERTS MUST BE VERIFIED PRIOR TO POURING FOOTINGS.

JARDIN DESIGN GROUP INC. HAS NOT BEEN RETAINED TO CARRY OUT GENERAL REVIEW OF THE WORK AND ASSUMES NO RESPONSIBILITY FOR THE FAILURE OF THE CONTRACTOR OR SUB CONTRACTOR TO CARRY OUT THE WORK IN ACCORDANCE WITH THE CONTRACT DOCUMENTS.

THIS DRAWING IS AN INSTRUMENT OF SERVICE, IS PROVIDED BY AND IS THE PROPERTY OF JARDIN DESIGN GROUP INC. THIS DRAWING IS NOT TO BE SCALED.

No:	DATE:	WORK DESCRIPTION:
7		
6		
5		
4		
3		
2	AUG. 31, 2022	ADDED TO JOB; ISSUED FOR PERMIT
1	AUG. 17, 2018	PREPARED TO PACKAGE 'A1' ISSUED TO CLIENT

DRAWN BY:

DRAWING NAME: GENERAL NOTES

NOT THE GRANTING OF A PERMIT NOR REVIEWING OF SPECS & DRAWINGS NOR INSPECTIONS MADE DURING INSTALLATION BY THE OFFICIAL HAVING JURISDICTION SHALL RELIEVE THE OWNER FROM REQUIREMENTS OF THE ONTARIO BUILDING CODE AND ANY OTHER REFERENCED REQUIREMENTS.

The undersigned has reviewed and takes responsibility for this design and has the qualifications and meets the requirements set out in the Ontario Building Code to be a designer

QUALIFICATION INFORMATION
Required unless design is exempt under Division C, Subsection 3.2.5 of the building code

NAME	SIGNATURE	BCIN
Walter Botter		21031

REGISTRATION INFORMATION
Required unless design is exempt under Division C, Subsection 3.2.4 of the building code

FIRM NAME	BCIN
jardin design group inc.	27763

jardin DESIGN GROUP INC
64 JARDIN DR. SUITE 3A
VAUGHAN ONT. L4K 3P3
TEL: 905 660-3377 FAX: 905 660-3713
EMAIL: info@jardindesign.ca

WALK-OUT DECK DETAIL

BARLASSINA CONSTRUCTION
CITY OF CAMBRIDGE

BILD

MODEL NAME: T ----
SCALE: AS SHOWN
PROJ. No.: 21-35
DWG. No.: 8-1

2012
PACKAGE 'A1'

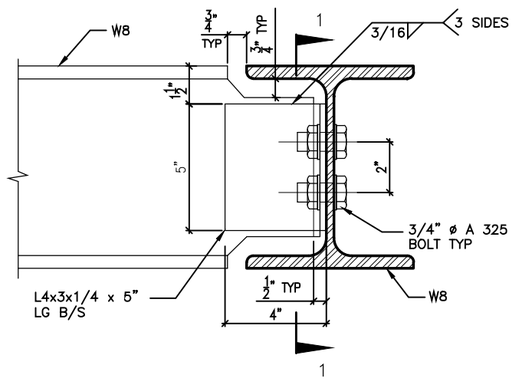

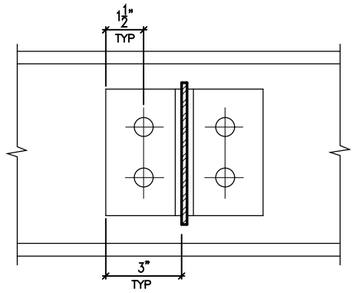

DETAIL 1.

W8 TO W8 CONNECTION

SECTION 1–1

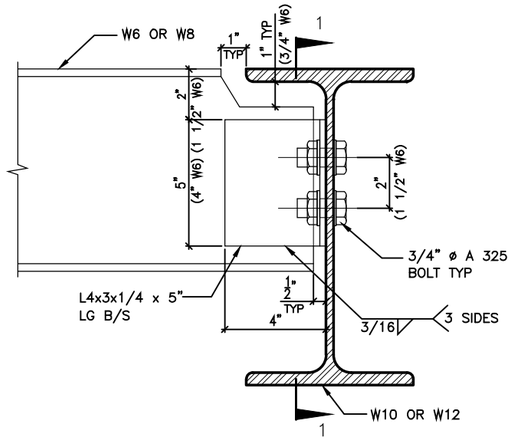

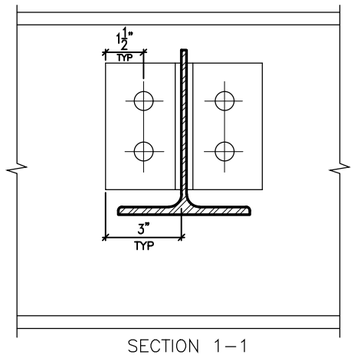

DETAIL 2.

W6(W8) TO W10(W12) CONNECTION

SECTION 1–1

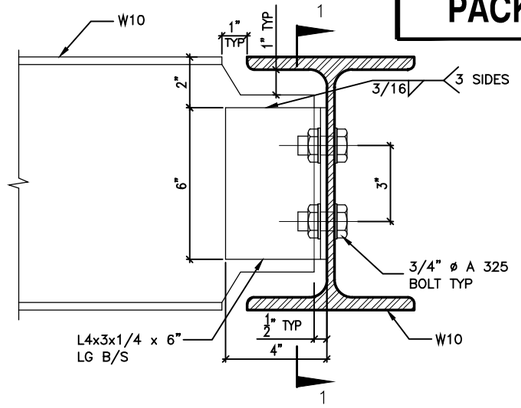

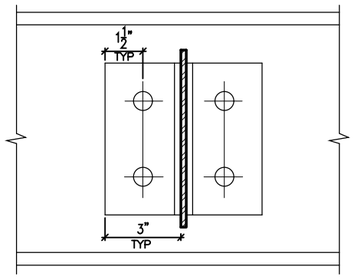

DETAIL 3.

W10 TO W10 CONNECTION

SECTION 1–1

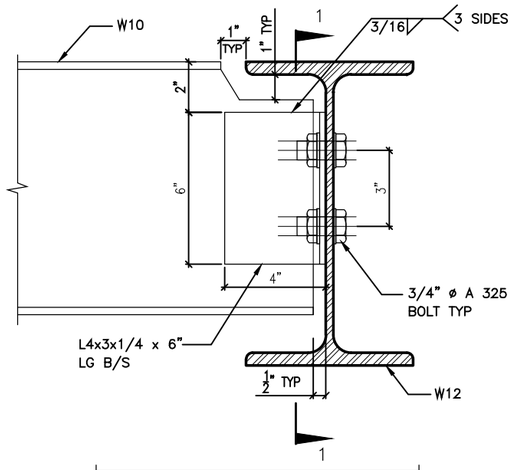

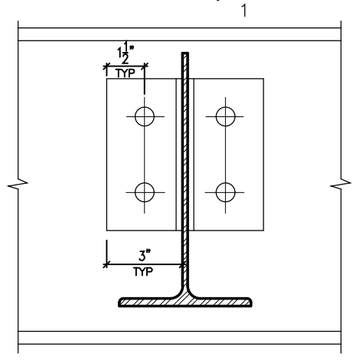

DETAIL 4.

W10 TO W12 CONNECTION

SECTION 1–1

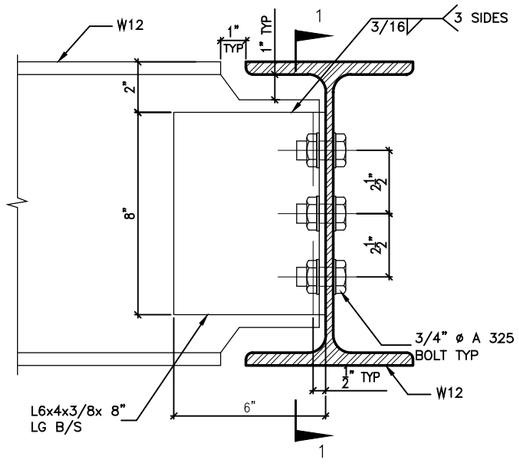

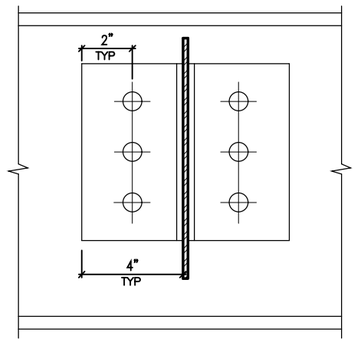

DETAIL 5.

W12 TO W12 CONNECTION

SECTION 1–1

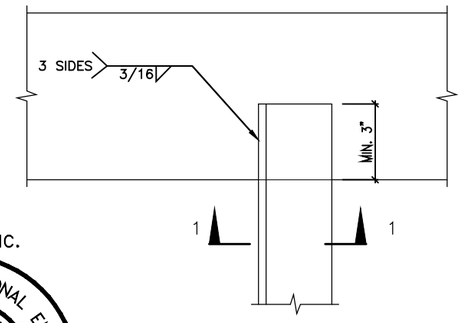

PLAN VIEW

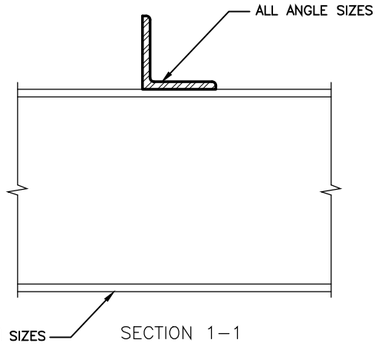

SECTION 1–1

STRUDET INC.

REGISTERED PROFESSIONAL ENGINEER
B. MARINKOVIC
SEPT. 6/2022
PROVINCE OF ONTARIO

FOR STRUCTURE ONLY

DETAIL 6.

ANGLE TO BEAM CONNECTION

2012 CODE

THE CONTRACTOR SHALL CHECK AND VERIFY ALL DIMENSIONS AND CONDITIONS ON SITE BEFORE PROCEEDING WITH CONSTRUCTION. ANY DISCREPANCIES SHALL BE REPORTED TO JARDIN DESIGN GROUP INC. PRIOR TO COMMENCEMENT OF WORK.

JARDIN DESIGN GROUP INC. IS NOT RESPONSIBLE FOR THE ACCURACY OF SURVEY, STRUCTURAL OR ENGINEERING INFORMATION SHOWN ON THESE DRAWINGS OR FOR CONSTRUCTION STARTED PRIOR TO THE ISSUANCE OF A BUILDING PERMIT. REFER TO THE APPROPRIATE ENGINEERING DRAWINGS BEFORE PROCEEDING WITH WORK.

AS CONSTRUCTED INVERTS MUST BE VERIFIED PRIOR TO POURING FOOTINGS.

JARDIN DESIGN GROUP INC. HAS NOT BEEN RETAINED TO CARRY OUT GENERAL REVIEW OF THE WORK AND ASSUMES NO RESPONSIBILITY FOR THE FAILURE OF THE CONTRACTOR OR SUB CONTRACTOR TO CARRY OUT THE WORK IN ACCORDANCE WITH THE CONTRACT DOCUMENTS.

THIS DRAWING IS AN INSTRUMENT OF SERVICE, IS PROVIDED BY AND IS THE PROPERTY OF JARDIN DESIGN GROUP INC. THIS DRAWING IS NOT TO BE SCALED.

No:	DATE:	WORK DESCRIPTION:
7		
6		
5		
4		
3		
2	AUG. 31, 2022	ADDED TO JOB; ISSUED FOR PERMIT
1	AUG. 17, 2018	PREPARED TO PACKAGE 'A1' ISSUED TO CLIENT

NOT THE GRANTING OF A PERMIT NOR REVIEWING OF SPECS & DRAWINGS NOR INSPECTIONS MADE DURING INSTALLATION BY THE OFFICIAL HAVING JURISDICTION SHALL RELIEVE THE OWNER FROM REQUIREMENTS OF THE ONTARIO BUILDING CODE AND ANY OTHER REFERENCED REQUIREMENTS.

The undersigned has reviewed and takes responsibility for this design and has the qualifications and meets the requirements set out in the Ontario Building Code to be a designer

QUALIFICATION INFORMATION
Required unless design is exempt under Division C, Subsection 3.2.5 of the building code

NAME	SIGNATURE	BCIN
Walter Botter		21031

REGISTRATION INFORMATION
Required unless design is exempt under Division C, Subsection 3.2.4 of the building code

FIRM NAME	BCIN
jardin design group inc.	27763

jardin DESIGN GROUP INC
64 JARDIN DR. SUITE 3A
VAUGHAN ONT. L4K 3P3
TEL: 905 660-3377 FAX: 905 660-3713
EMAIL: info@jardindesign.ca

STEEL BEAM DETAILS

BARLASSINA CONSTRUCTION
CITY OF CAMBRIDGE

BILD

MODEL NAME: T ----
SCALE: N.T.S.
PROJ. No.: 21-35
DWG. No.: 9

DRAWN BY:
DRAWING NAME: GENERAL NOTES

2012
PACKAGE 'A1'

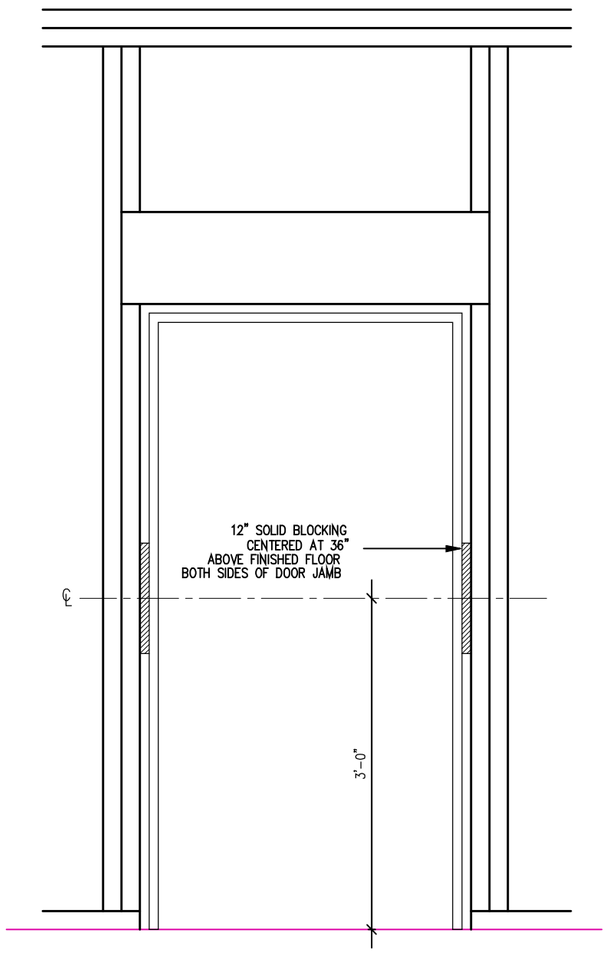

RESISTANCE TO FORCED ENTRY (OBC 9.6.8.)

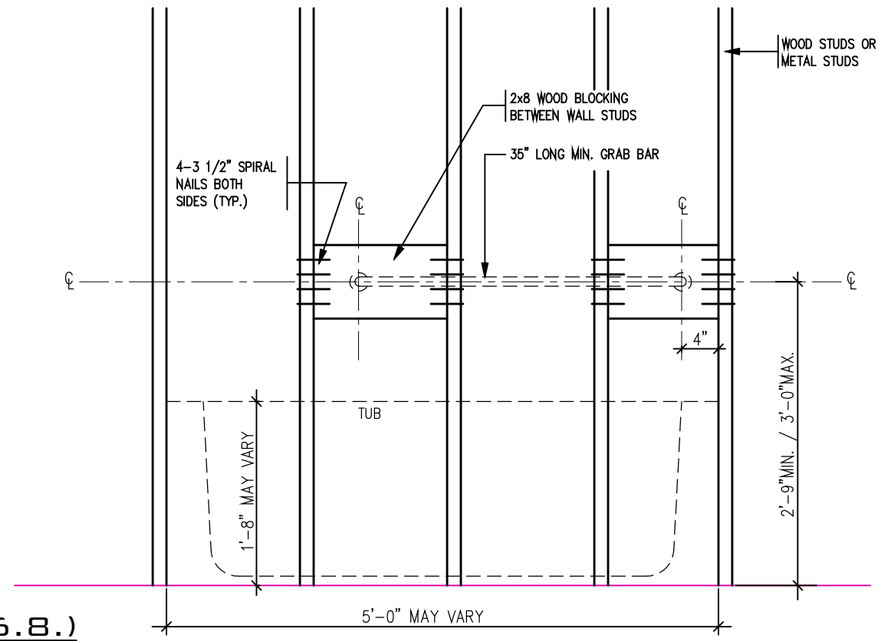

BATH TUB FRONT ELEVATION

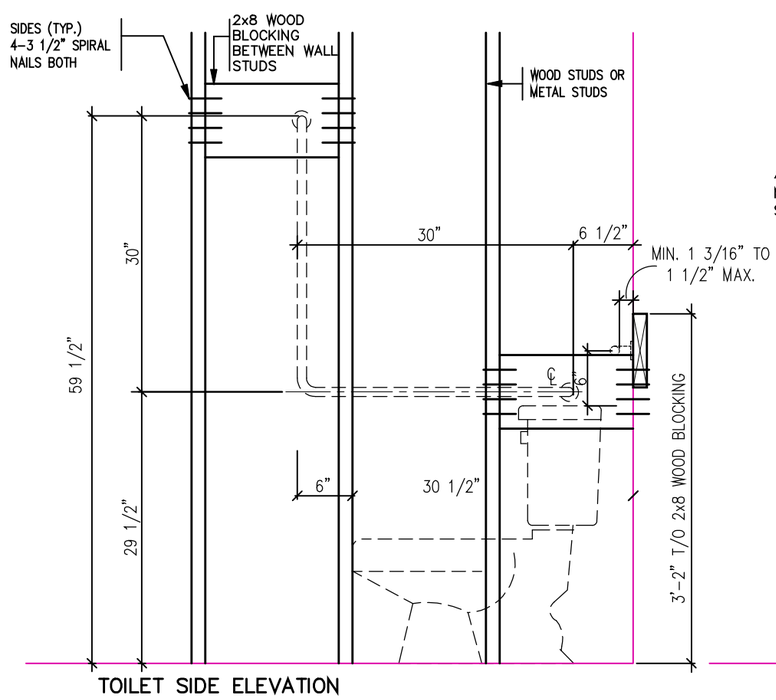

TOILET SIDE ELEVATION

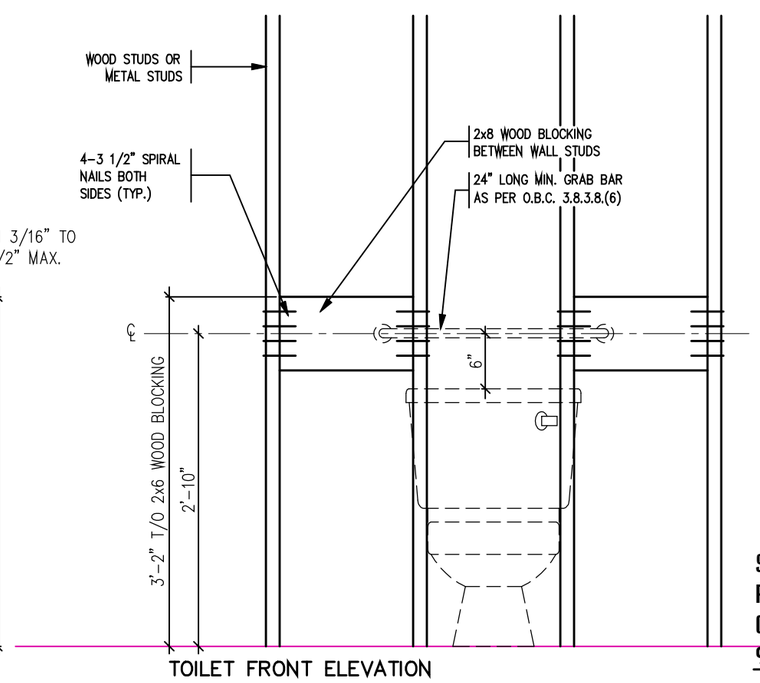

TOILET FRONT ELEVATION

STRUDET INC.

REGISTERED PROFESSIONAL ENGINEER
B. MARINKOVIC
SEPT 6/2022
PROVINCE OF ONTARIO

FOR STRUCTURE ONLY

STRUCTURAL REINFORCEMENT FOR GRAB BAR (OBC 9.5.2.3.)

2012 CODE

THE CONTRACTOR SHALL CHECK AND VERIFY ALL DIMENSIONS AND CONDITIONS ON SITE BEFORE PROCEEDING WITH CONSTRUCTION. ANY DISCREPANCIES SHALL BE REPORTED TO JARDIN DESIGN GROUP INC. PRIOR TO COMMENCEMENT OF WORK.

JARDIN DESIGN GROUP INC. IS NOT RESPONSIBLE FOR THE ACCURACY OF SURVEY, STRUCTURAL OR ENGINEERING INFORMATION SHOWN ON THESE DRAWINGS OR FOR CONSTRUCTION STARTED PRIOR TO THE ISSUANCE OF A BUILDING PERMIT. REFER TO THE APPROPRIATE ENGINEERING DRAWINGS BEFORE PROCEEDING WITH WORK.

AS CONSTRUCTED INVERTS MUST BE VERIFIED PRIOR TO POURING FOOTINGS.

JARDIN DESIGN GROUP INC. HAS NOT BEEN RETAINED TO CARRY OUT GENERAL REVIEW OF THE WORK AND ASSUMES NO RESPONSIBILITY FOR THE FAILURE OF THE CONTRACTOR OR SUB CONTRACTOR TO CARRY OUT THE WORK IN ACCORDANCE WITH THE CONTRACT DOCUMENTS.

THIS DRAWING IS AN INSTRUMENT OF SERVICE, IS PROVIDED BY AND IS THE PROPERTY OF JARDIN DESIGN GROUP INC. THIS DRAWING IS NOT TO BE SCALED.

No:	DATE:	WORK DESCRIPTION:
7		
6		
5		
4		
3		
2	AUG. 31, 2022	ADDED TO JOB; ISSUED FOR PERMIT
1	AUG. 17, 2018	PREPARED TO PACKAGE 'A1' ISSUED TO CLIENT

NOT THE GRANTING OF A PERMIT NOR REVIEWING OF SPECS & DRAWINGS NOR INSPECTIONS MADE DURING INSTALLATION BY THE OFFICIAL HAVING JURISDICTION SHALL RELIEVE THE OWNER FROM REQUIREMENTS OF THE ONTARIO BUILDING CODE AND ANY OTHER REFERENCED REQUIREMENTS.

The undersigned has reviewed and takes responsibility for this design and has the qualifications and meets the requirements set out in the Ontario Building Code to be a designer

QUALIFICATION INFORMATION
Required unless design is exempt under Division C, Subsection 3.2.5 of the building code

NAME	SIGNATURE	BCIN
Walter Botter		21031

REGISTRATION INFORMATION
Required unless design is exempt under Division C, Subsection 3.2.4 of the building code

FIRM NAME	BCIN
jardin design group inc.	27763

jardin
DESIGN GROUP INC
64 JARDIN DR. SUITE 3A
VAUGHAN ONT. L4K 3P3
TEL: 905 660-3377 FAX: 905 660-3713
EMAIL: info@jardindesign.ca

BLOCKING
FORCED ENTRY & GRAB BAR

BARLASSINA CONSTRUCTION
CITY OF CAMBRIDGE

BILD

MODEL NAME: T ----
SCALE: 3/4"=1'-0"
PROJ. No.: 21-35
DWG. No.: 10

DRAWN BY:
DRAWING NAME: GENERAL NOTES

2012
PACKAGE 'A1'

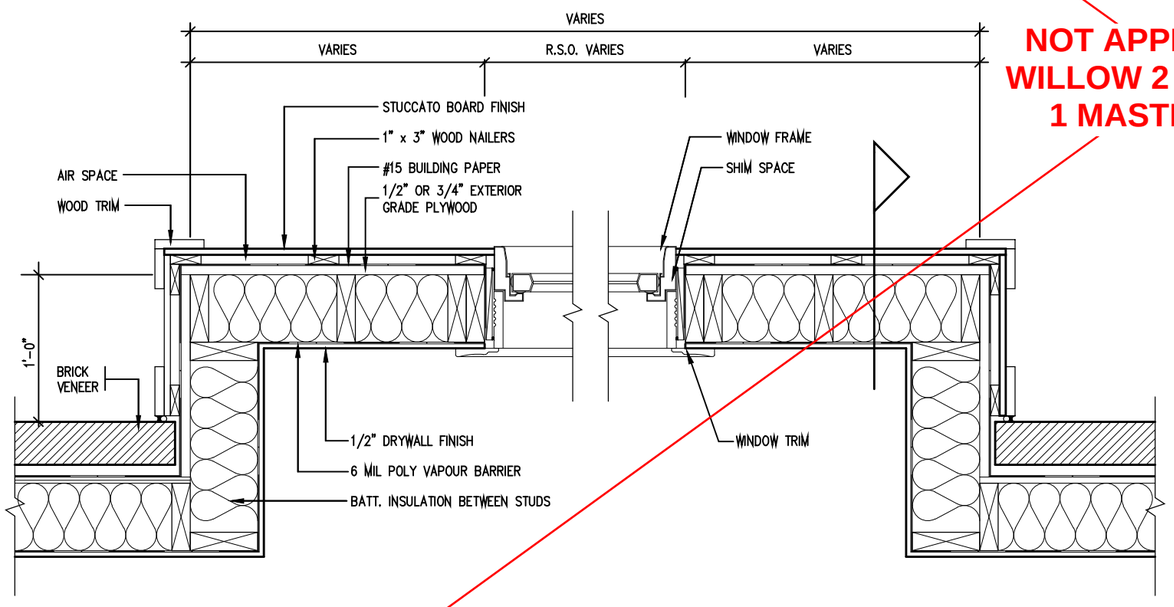

PLAN VIEW

STUCCATO BOARD FINISH CLADDING (OBC 9.27.)

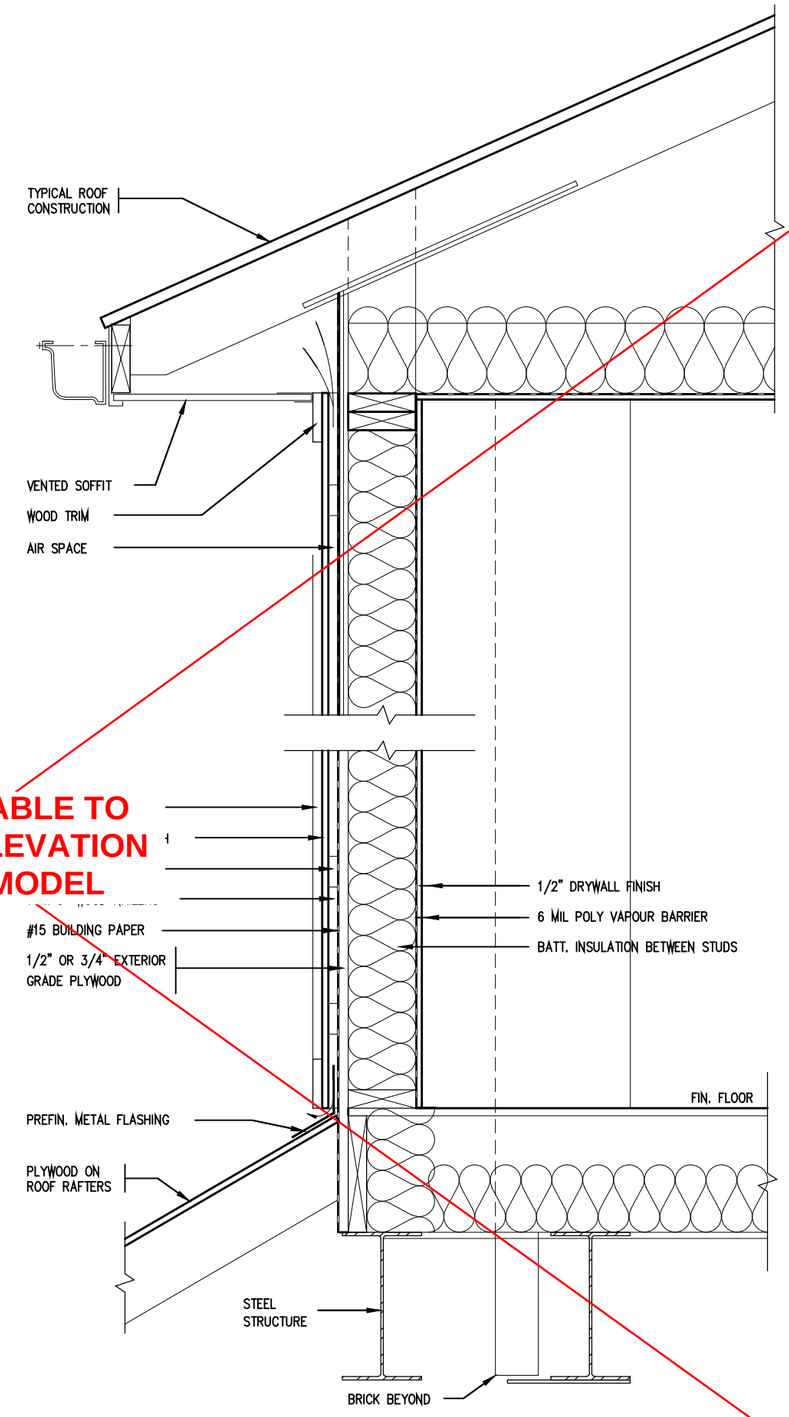

CROSS SECTION

NOT APPLICABLE TO WILLOW 2 - ELEVATION 1 MASTER MODEL

STRUDET INC.
REGISTERED PROFESSIONAL ENGINEER
B. MARINKOVIC
SEPT. 6/2022
PROVINCE OF ONTARIO
FOR STRUCTURE ONLY

2012 CODE

THE CONTRACTOR SHALL CHECK AND VERIFY ALL DIMENSIONS AND CONDITIONS ON SITE BEFORE PROCEEDING WITH CONSTRUCTION. ANY DISCREPANCIES SHALL BE REPORTED TO JARDIN DESIGN GROUP INC. PRIOR TO COMMENCEMENT OF WORK.

JARDIN DESIGN GROUP INC. IS NOT RESPONSIBLE FOR THE ACCURACY OF SURVEY, STRUCTURAL OR ENGINEERING INFORMATION SHOWN ON THESE DRAWINGS OR FOR CONSTRUCTION STARTED PRIOR TO THE ISSUANCE OF A BUILDING PERMIT. REFER TO THE APPROPRIATE ENGINEERING DRAWINGS BEFORE PROCEEDING WITH WORK.

AS CONSTRUCTED INVERTS MUST BE VERIFIED PRIOR TO POURING FOOTINGS.

JARDIN DESIGN GROUP INC. HAS NOT BEEN RETAINED TO CARRY OUT GENERAL REVIEW OF THE WORK AND ASSUMES NO RESPONSIBILITY FOR THE FAILURE OF THE CONTRACTOR OR SUB CONTRACTOR TO CARRY OUT THE WORK IN ACCORDANCE WITH THE CONTRACT DOCUMENTS.

THIS DRAWING IS AN INSTRUMENT OF SERVICE, IS PROVIDED BY AND IS THE PROPERTY OF JARDIN DESIGN GROUP INC. THIS DRAWING IS NOT TO BE SCALED.

No:	DATE:	WORK DESCRIPTION:
7		
6		
5		
4		
3		
2	AUG. 31, 2022	ADDED TO JOB; ISSUED FOR PERMIT
1	AUG. 17, 2018	PREPARED TO PACKAGE 'A1' ISSUED TO CLIENT

The undersigned has reviewed and takes responsibility for this design and has the qualifications and meets the requirements set out in the Ontario Building Code to be a designer

QUALIFICATION INFORMATION
Required unless design is exempt under Division C, Subsection 3.2.5 of the building code

NAME	SIGNATURE	BCIN
Walter Botter		21031

REGISTRATION INFORMATION
Required unless design is exempt under Division C, Subsection 3.2.4 of the building code

FIRM NAME	BCIN
jardin design group inc.	27763

jardin DESIGN GROUP INC
64 JARDIN DR. SUITE 3A
VAUGHAN ONT. L4K 3P3
TEL: 905 660-3377 FAX: 905 660-3713
EMAIL: info@jardindesign.ca

STUCCATO BOARD FINISH CLADDING

BARLASSINA CONSTRUCTION
CITY OF CAMBRIDGE

BILD

MODEL NAME: T ----
SCALE: 1"=1'-0"
PROJ. No.: 21-35
DWG. No.: 11

DRAWN BY:
DRAWING NAME: GENERAL NOTES

2012
PACKAGE 'A1'

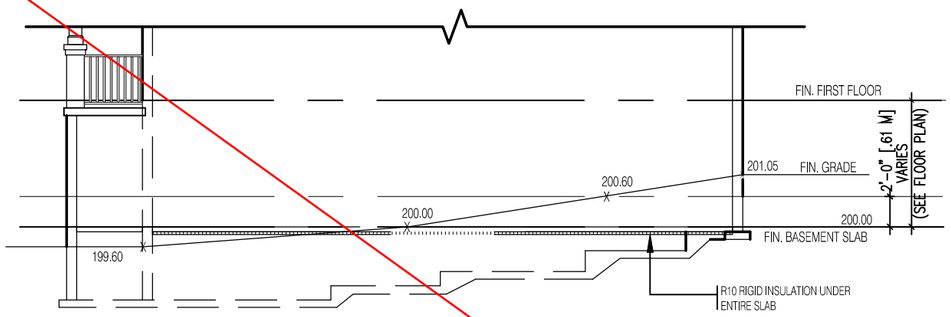

TYPICAL RIGHT SIDE ELEVATION

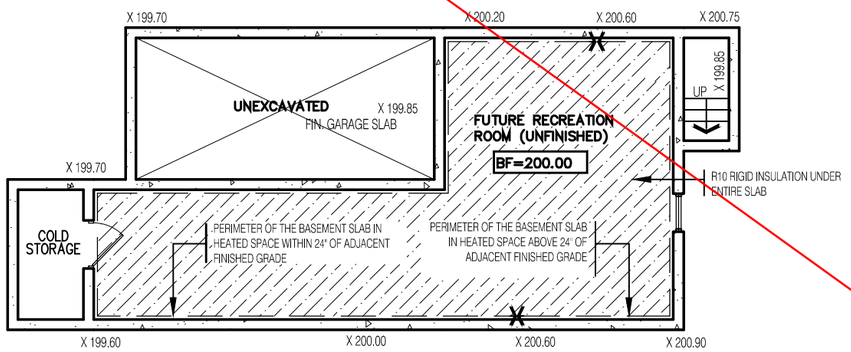

TYPICAL BASEMENT PLAN

NOTES:
1. LEVELS SHOWN ON THE PLANS ARE FOR ILLUSTRATION PURPOSE ONLY, SEE FINAL GRADING PLAN FOR ACTUAL LEVELS
2. ALL LEVELS ARE SHOWN IN METRIC

SLAB ON GRADE CONDITION

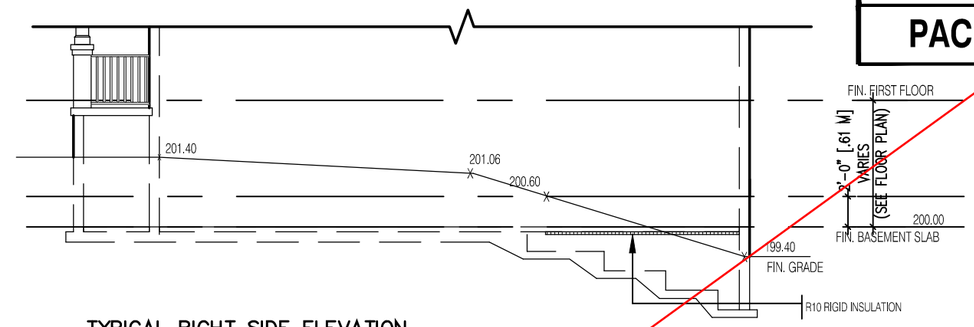

TYPICAL RIGHT SIDE ELEVATION

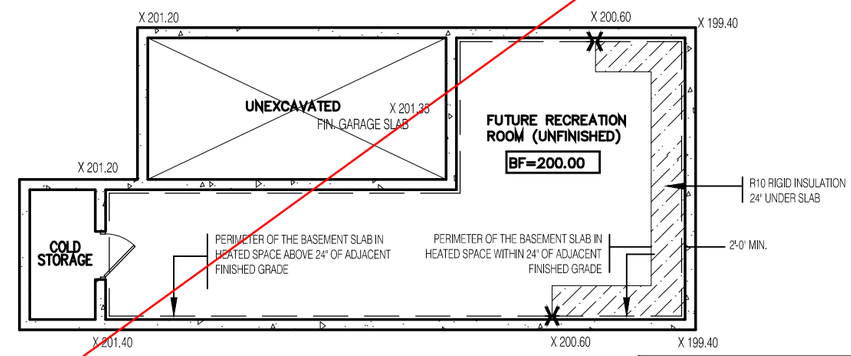

TYPICAL BASEMENT PLAN

NOTES:
1. LEVELS SHOWN ON THE PLANS ARE FOR ILLUSTRATION PURPOSE ONLY, SEE FINAL GRADING PLAN FOR ACTUAL LEVELS
2. ALL LEVELS ARE SHOWN IN METRIC

WALK OUT BASEMENT CONDITION

NOT APPLICABLE TO WILLOW 2 - ELEVATION 1 MASTER MODEL

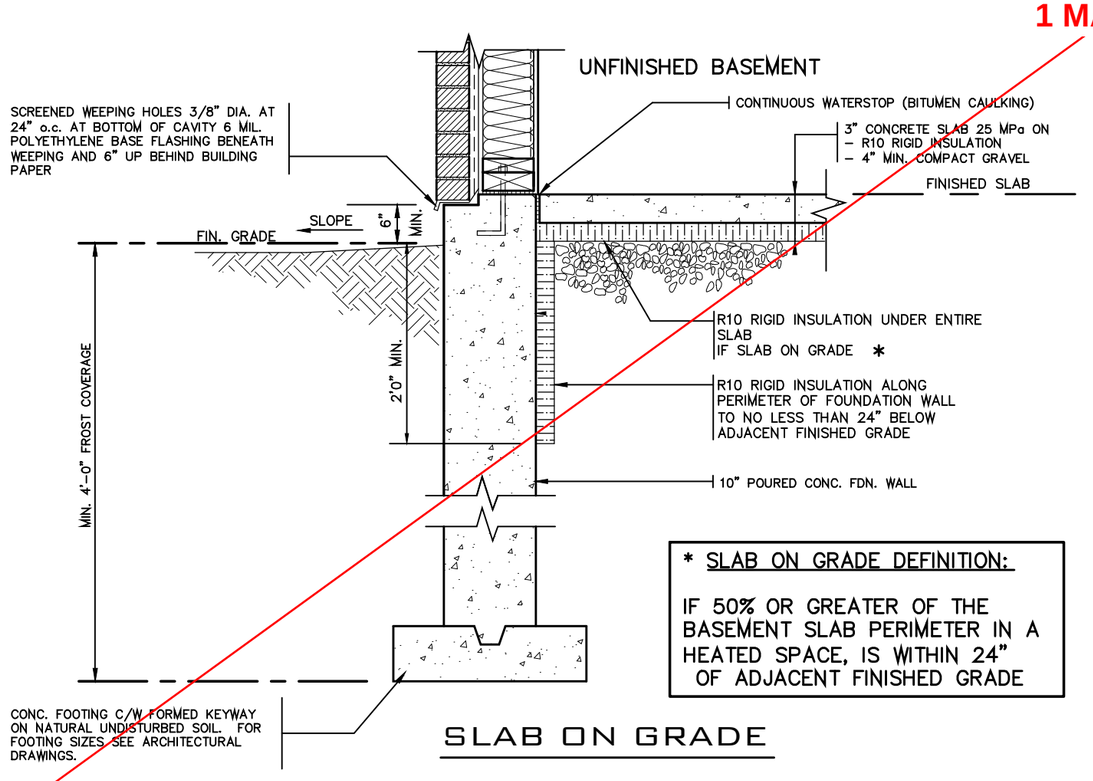

* SLAB ON GRADE DEFINITION:

IF 50% OR GREATER OF THE BASEMENT SLAB PERIMETER IN A HEATED SPACE, IS WITHIN 24" OF ADJACENT FINISHED GRADE

SLAB ON GRADE

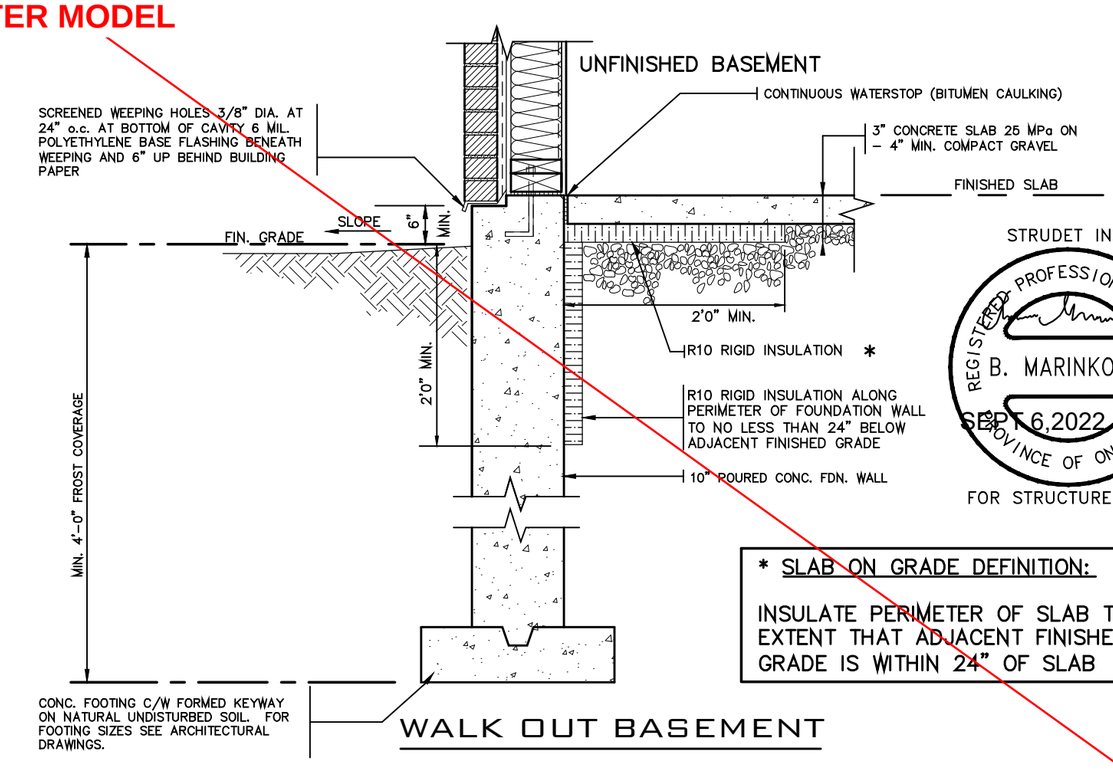

* SLAB ON GRADE DEFINITION:

INSULATE PERIMETER OF SLAB TO EXTENT THAT ADJACENT FINISHED GRADE IS WITHIN 24" OF SLAB

WALK OUT BASEMENT

STRUDET INC.

REGISTERED PROFESSIONAL ENGINEER
B. MARINKOVIC
SEPT 6,2022
PROVINCE OF ONTARIO

FOR STRUCTURE ONLY

2012 CODE

THE CONTRACTOR SHALL CHECK AND VERIFY ALL DIMENSIONS AND CONDITIONS ON SITE BEFORE PROCEEDING WITH CONSTRUCTION. ANY DISCREPANCIES SHALL BE REPORTED TO JARDIN DESIGN GROUP INC. PRIOR TO COMMENCEMENT OF WORK.

JARDIN DESIGN GROUP INC. IS NOT RESPONSIBLE FOR THE ACCURACY OF SURVEY, STRUCTURAL OR ENGINEERING INFORMATION SHOWN ON THESE DRAWINGS OR FOR CONSTRUCTION STARTED PRIOR TO THE ISSUANCE OF A BUILDING PERMIT. REFER TO THE APPROPRIATE ENGINEERING DRAWINGS BEFORE PROCEEDING WITH WORK.

AS CONSTRUCTED INVERTS MUST BE VERIFIED PRIOR TO POURING FOOTINGS.

JARDIN DESIGN GROUP INC. HAS NOT BEEN RETAINED TO CARRY OUT GENERAL REVIEW OF THE WORK AND ASSUMES NO RESPONSIBILITY FOR THE FAILURE OF THE CONTRACTOR OR SUB CONTRACTOR TO CARRY OUT THE WORK IN ACCORDANCE WITH THE CONTRACT DOCUMENTS.

THIS DRAWING IS AN INSTRUMENT OF SERVICE, IS PROVIDED BY AND IS THE PROPERTY OF JARDIN DESIGN GROUP INC. THIS DRAWING IS NOT TO BE SCALED.

No:	DATE:	WORK DESCRIPTION:
7		
6		
5		
4		
3		
2	AUG. 31, 2022	ADDED TO JOB; ISSUED FOR PERMIT
1	AUG. 17, 2018	PREPARED TO PACKAGE 'A1' ISSUED TO CLIENT

NOT THE GRANTING OF A PERMIT NOR REVIEWING OF SPECS & DRAWINGS NOR INSPECTIONS MADE DURING INSTALLATION BY THE OFFICIAL HAVING JURISDICTION SHALL RELIEVE THE OWNER FROM REQUIREMENTS OF THE ONTARIO BUILDING CODE AND ANY OTHER REFERENCED REQUIREMENTS.

The undersigned has reviewed and takes responsibility for this design and has the qualifications and meets the requirements set out in the Ontario Building Code to be a designer

QUALIFICATION INFORMATION
Required unless design is exempt under Division C, Subsection 3.2.5 of the building code

NAME	SIGNATURE	BCIN
Walter Botter		21031

REGISTRATION INFORMATION
Required unless design is exempt under Division C, Subsection 3.2.4 of the building code

FIRM NAME	BCIN
jardin design group inc.	27763

jardin DESIGN GROUP INC
64 JARDIN DR. SUITE 3A
VAUGHAN ONT. L4K 3P3
TEL: 905 660-3377 FAX: 905 660-3713
EMAIL: info@jardindesign.ca

SLAB ON GRADE
WALKOUT BASEMENT

BARLASSINA CONSTRUCTION
CITY OF CAMBRIDGE

BILD

MODEL NAME: T ----
SCALE: N.T.S.
PROJ. No.: 21-35
DWG. No.: 12

DRAWN BY:
DRAWING NAME: GENERAL NOTES

2012
PACKAGE 'A1'

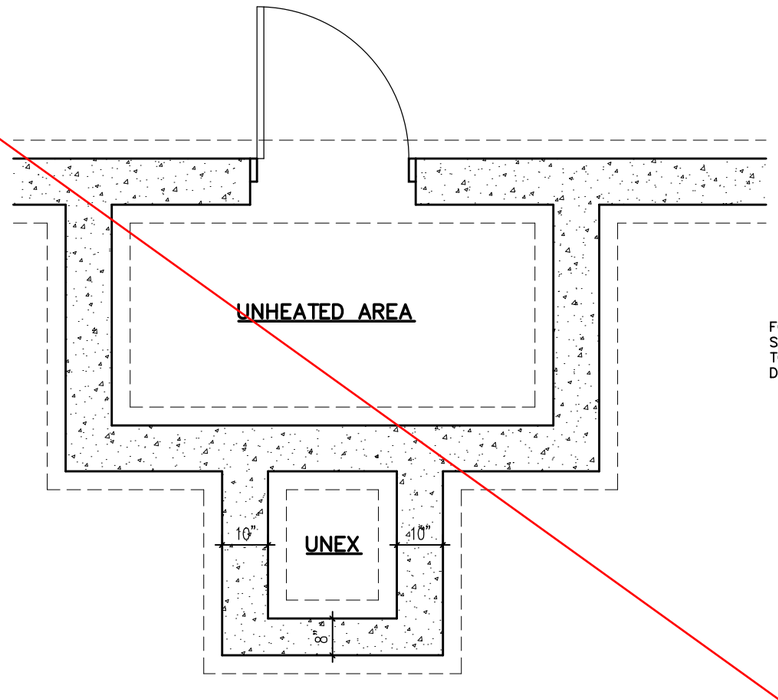

FOUNDATION PLAN

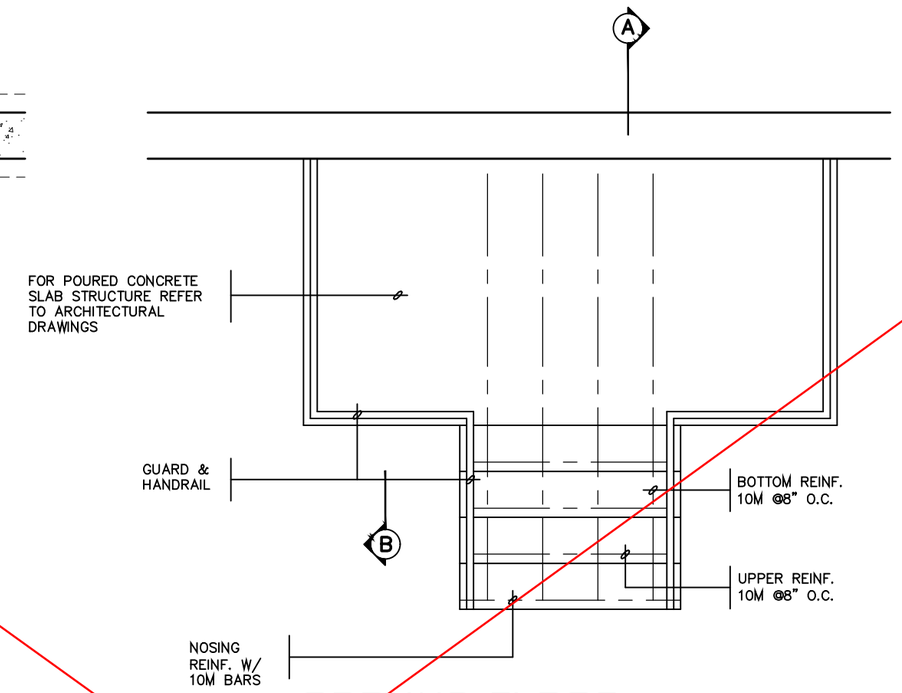

GROUND FLOOR PLAN

NOT APPLICABLE TO WILLOW 2 - ELEVATION 1 MASTER MODEL

GENERAL NOTES

1. EXTERIOR STAIRS

   7 7/8" RISE MAXIMUM
   10" RUN MINIMUM
   1'-2" RUN MAXIMUM

   3 REV.

2. MASONRY TIES

   WHEN BRICK FACING IS USED ABOVE GROUND LEVEL, PROVIDE 3/16" DIA. CORROSION RESISTANT METAL TIES @ 36" HORIZONTAL & 8" VERTICAL

3. GUARDS

   ARE REQUIRED AROUND CONCRETE SLAB IF MORE THAN 2'-0" ABOVE GRADE & ON BOTH SIDES OF STAIRS CONTAINING MORE THAN 6 RISERS. MINIMUM 31" HIGH FOR STAIRS MINIMUM 35" HIGH FOR PORCHES UP TO 5'-11" ABOVE GRADE. MINIMUM 42" HIGH FOR GREATER HTS.

4. HANDRAIL

   ARE REQUIRED WHERE STEPS HAVE MORE THAN 3 RISERS . HANDRAIL HEIGHT 31" – 38".

5. FOUNDATION WALLS

   THICKNESS OF FOUNDATION WALLS IS DEPENDANT UPON VENEER CUT 8" FOR UP TO 26" VENEER CUT HEIGHT 10" FOR VENEER CUT OVER 26" HIGH

6. CONCRETE

   MINIMUM CONCRETE STRENGTH SHALL BE 4650 PSI [32MPa] W/ 5%–8% AIR ENTRAINMENT MINIMUM CONCRETE SLAB THICKNESS 5"

7. CONCRETE COVER

   PROVIDE MINIMUM 3/4" CLEAR CONCRETE COVER TO REINFORCING BARS

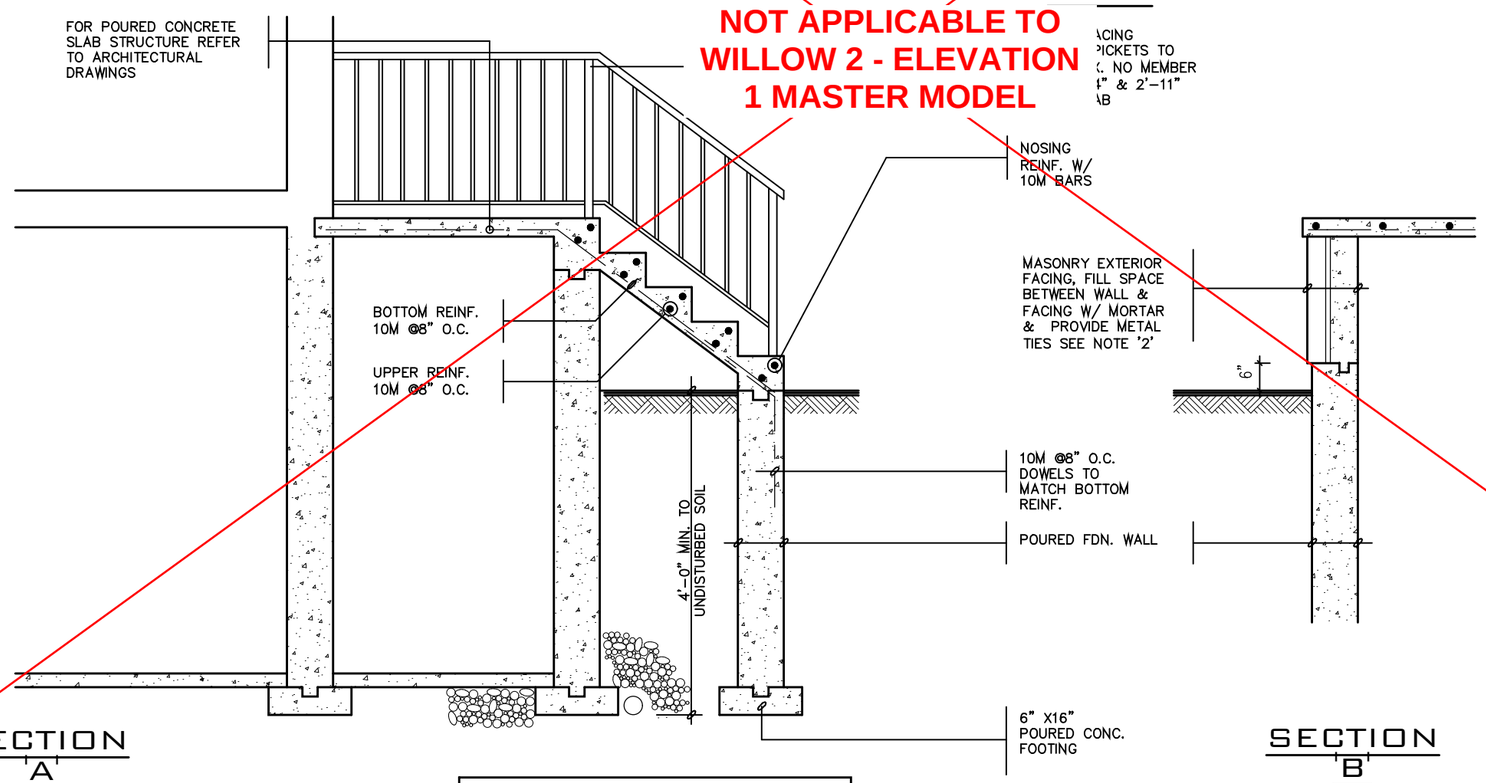

SECTION 'A'

SECTION 'B'

NOTE: FOR MORE THAN 8 RISERS

STRUDET INC.
REGISTERED PROFESSIONAL ENGINEER
B. MARINKOVIC
SEPT. 6/2022
PROVINCE OF ONTARIO
FOR STRUCTURE ONLY

2012 CODE

THE CONTRACTOR SHALL CHECK AND VERIFY ALL DIMENSIONS AND CONDITIONS ON SITE BEFORE PROCEEDING WITH CONSTRUCTION. ANY DISCREPANCIES SHALL BE REPORTED TO JARDIN DESIGN GROUP INC. PRIOR TO COMMENCEMENT OF WORK.

JARDIN DESIGN GROUP INC. IS NOT RESPONSIBLE FOR THE ACCURACY OF SURVEY, STRUCTURAL OR ENGINEERING INFORMATION SHOWN ON THESE DRAWINGS OR FOR CONSTRUCTION STARTED PRIOR TO THE ISSUANCE OF A BUILDING PERMIT. REFER TO THE APPROPRIATE ENGINEERING DRAWINGS BEFORE PROCEEDING WITH WORK.

AS CONSTRUCTED INVERTS MUST BE VERIFIED PRIOR TO POURING FOOTINGS.

JARDIN DESIGN GROUP INC. HAS NOT BEEN RETAINED TO CARRY OUT GENERAL REVIEW OF THE WORK AND ASSUMES NO RESPONSIBILITY FOR THE FAILURE OF THE CONTRACTOR OR SUB CONTRACTOR TO CARRY OUT THE WORK IN ACCORDANCE WITH THE CONTRACT DOCUMENTS.

THIS DRAWING IS AN INSTRUMENT OF SERVICE, IS PROVIDED BY AND IS THE PROPERTY OF JARDIN DESIGN GROUP INC. THIS DRAWING IS NOT TO BE SCALED.

No:	DATE:	WORK DESCRIPTION:
7		
6		
5		
4		
3	AUG. 31, 2022	ADDED TO JOB; ISSUED FOR PERMIT
2	MAR.14, 2022	O.B.C UPDATE FOR STAIRS (JAN.1/2022)
1	AUG. 17, 2018	PREPARED TO PACKAGE 'A1' ISSUED TO CLIENT

The undersigned has reviewed and takes responsibility for this design and has the qualifications and meets the requirements set out in the Ontario Building Code to be a designer

QUALIFICATION INFORMATION
Required unless design is exempt under Division C, Subsection 3.2.5 of the building code

NAME	SIGNATURE	BCIN
Walter Botter		21031

REGISTRATION INFORMATION
Required unless design is exempt under Division C, Subsection 3.2.4 of the building code

FIRM NAME	BCIN
jardin design group inc.	27763

jardin DESIGN GROUP INC
64 JARDIN DR. SUITE 3A
VAUGHAN ONT. L4K 3P3
TEL: 905 660-3377 FAX: 905 660-3713
EMAIL: info@jardindesign.ca

POURED CONCRETE STAIRS

BARLASSINA CONSTRUCTION
CITY OF CAMBRIDGE

BILD

MODEL NAME: T ----
SCALE: 3/8"=1'-0"
PROJ. No.: 21-35
DWG. No.: 13

DRAWN BY:
DRAWING NAME: GENERAL NOTES