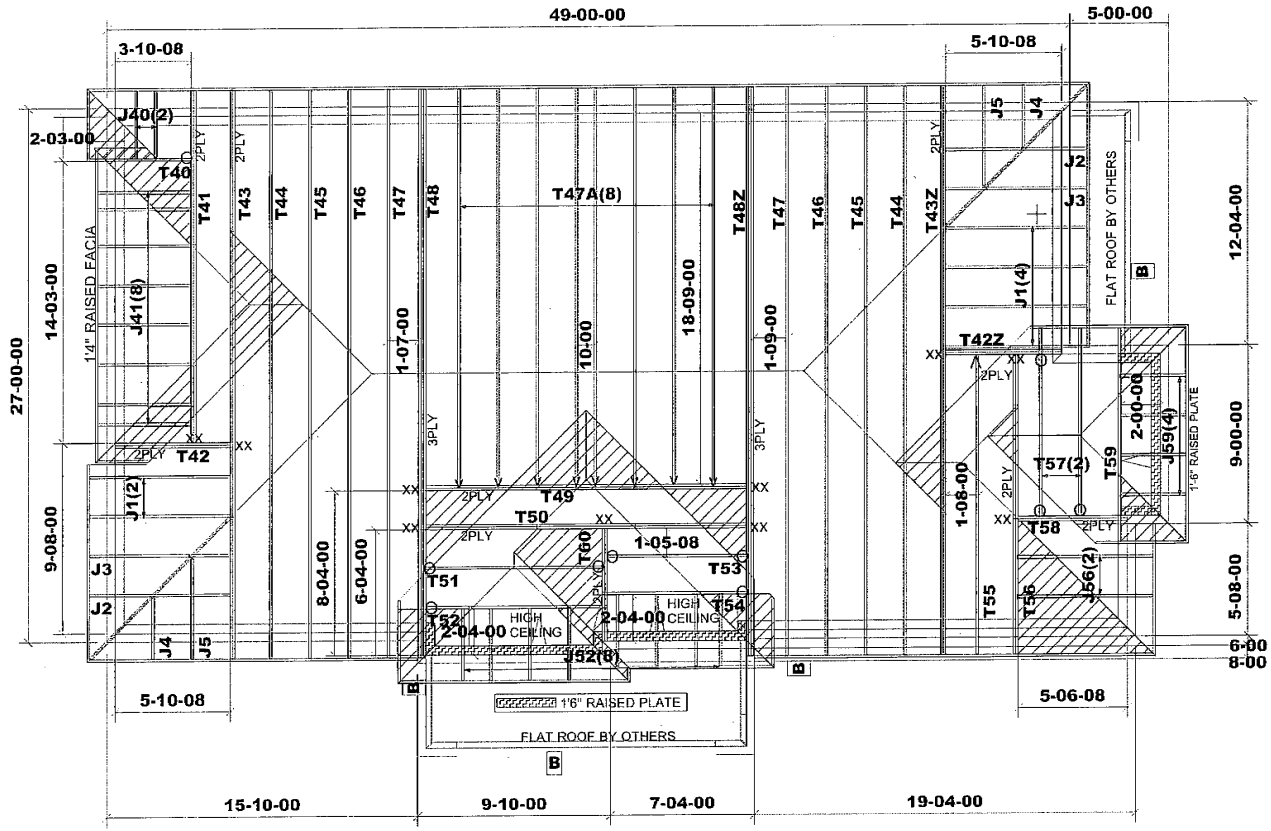

FINISH O.H: 12"
Heel: R.T.M.C
CLADDING ALLOWANCE: 5"
2X6 EXTERIOR WALLS
ASPHALT SHINGLES
2X6 FASCIA BOARD

ALL CONVENTIONAL ROOF FRAMING TO CONFORM TO PART9 OF THE OBC.LATEST EDITION
ROOF RAFTERS THAT MEET OR CROSS OVER TRUSSES ARE TO BE 2"X4"SPF@24"o.c. WITH A 2"X4" SPF VERTICAL POST TO THE TRUSS UNDER AT EACH CROSS POINT.POSTS LONGER THAN 6' TO BE LATERALLY BRACED SO THAT THE DISTANCE BETWEEN END POINTS AND BETWEEN ROWS OF BRACING DOES NOT EXCEED 6'.

TRUSSES DESIGNED CONFORM TO THE RELEVANT SECTION OF THE LATEST EDITION OF THE ONTARIO BUILDING CODE (RESIDENTIAL PART 9)

DESIGN CONFORMS WITH OBC 2012(2019 AMENDMENT)
OCCUPANCY: RESIDENTIAL | PART: 9
Ss = 33.4 psf | Sr = 8.4 psf

DESIGN LOADS:
TCSL = 26.7 psf
TCDL = 6.0 psf
BCLL = 0.0 psf
BCDL = 7.4 psf

HARDWARE
LUS24(O)
LJS26DS(V)
LUS26-2(VV)
HGUS26-2(XX)

ALL ROOF PITCHES ARE 6/12 UNLESS OTHERWISE NOTED

DENOTES:
CONVENTIONAL FRAMING

DWG# TR22080260 TO TR22080264
DWG# TR22080322 TO TR22080351

LICENSED PROFESSIONAL ENGINEER
8/02/22
C. M. HEYENS
100505065
PROVINCE OF ONTARIO

STRUCTURAL COMPONENTS ONLY
DWG# TR22080354

TRUSS PLACEMENT PLAN.

This is a truss placement plan only, NOT a final roof framing plan. These trusses are designed as individual building components to be incorporated into the building design at the specification of the building designer. See individual truss drawings for each component identified on this placement plan.
Please verify that all dimensions match the dimensions found on the job. The Building designer is responsible for the temporary/ permanent bracing of the roof and floor system and its integration into the bracing of the overall structure. The design of the truss support structure including headers, beams, walls, and columns is the responsability of the building designer unless otherwise noted in this plan. Building designer to review and aprove this plan to acertain comformity to his overall structural plan.

M15041

TAMARACK ROOF TRUSSES INC.

Job Track: 52956	Builder / Location: GREEN PARK HOMES / CAMBRIDGE	Model / Elevation: GARDEN 12 / 3	Mitek ver 8.5.3.233
Layout ID: 427679	Project: BARLASSINA		
Plan Log: 206413	Date: 8/02/22 Designer: AT		

THESE DRAWINGS CONSTITUTE THE PROPERTY OF TAMARACK ROOF TRUSSES INC., SHALL NOT BE REPRODUCED, PUBLISHED, OR REDISTRIBUTED IN ANY MANNER OR UTILIZED FOR ANY PURPOSE OTHER THAN THE MANUFACTURE OF TRUSSES BY TAMARACK ROOF TRUSSES INC AND WILL BE RETRACTED BY TAMARACK ROOF TRUSSES INC IF UTLILZED FOR ANY OTHER PURPOSE.

DELIVERY SHIPLIST

TAMARACK ROOF TRUSSES INC.
ALPA LUMBER GROUP

Lumber Yard:	TAMARACK LUMBER	Job Track:	52956
Builder:	GREEN PARK HOMES	PlanLog:	206413
Project:	BARLASSINA	Layout ID:	427633
Location:	CAMBRIDGE	Ref #	
Model:	GARDEN 12	Page:	1 of 3
Lot #:		Date:	08-03-2022
Elevation:	1	Designer:	
		Sales Rep:	Rick DiCiano

Roof Trusses

PROFILE	QTY PLY	MARK TYPE	PITCH	SPAN	HEIGHT	LUMBER	OVERHANG LEFT RIGHT	HEEL HEIGHT LEFT RIGHT	LBS. BFT.	BUNDLE # STACK #	LOAD BY REMARKS
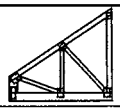	1 2-ply	T1 Jack-Open Girder	8 /12	**5-10-08**	5-03-13	2 x 4 2 x 6		1-04-13 5-03-13	65.64 41.33		
	2	T2 Common	8 /12	**15-08-00**	6-07-08	2 x 4	1-03-08 1-03-08	1-04-13 1-04-13	133.53 84.00		
	1 2-ply	T3 Hip Girder	8 /12	**26-02-00**	5-03-13	2 x 4 2 x 6	1-03-08 1-03-08	1-04-13 1-04-13	271.95 171.00		
	1	T4 Hip	8 /12	**26-02-00**	6-07-13	2 x 4	1-03-08 1-03-08	1-04-13 1-04-13	116.89 75.17		
	1	T5 Hip	8 /12	**26-02-00**	7-11-13	2 x 4	1-03-08 1-03-08	1-04-13 1-04-13	124.11 77.67		
	1	T6 Hip	8 /12	**26-02-00**	9-03-13	2 x 4	1-03-08 1-03-08	1-04-13 1-04-13	122.3 76.50		
	4	T7 Common	8 /12	**26-02-00**	10-01-08	2 x 4	1-03-08 1-03-08	1-04-13 1-04-13	446.89 281.33		
	8	T7A Common	8 /12	**20-01-00**	10-01-08	2 x 4	1-03-08	1-04-13 5-05-08	789.27 496.00		
	1 2-ply	T8 Common Girder	8 /12	**26-02-00**	10-01-08	2 x 4 2 x 6	1-03-08 1-03-08	1-04-13 1-04-13	305.43 193.33		
	1 2-ply	T8Z Common Girder	8 /12	**26-02-00**	10-01-08	2 x 4 2 x 6	1-03-08 1-03-08	1-04-13 1-04-13	305.43 193.33		
	1	T9 Hip	8 /12	**26-02-00**	9-01-13	2 x 4	1-03-08 1-03-08	1-04-13 1-04-13	121.3 75.17		
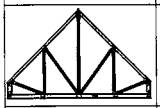	1 2-ply	T10 Common Girder	12 /12	**16-04-00**	10-00-08	2 x 4 2 x 6		1-10-08 1-10-08	189.19 118.00		
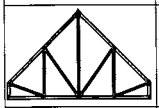	2	T11 Common	12 /12	**16-04-00**	10-00-08	2 x 4		1-10-08 1-10-08	165.87 106.00		
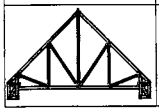	2	T11S Roof Special	12 /12	**16-04-00**	10-00-08	2 x 4		1-10-08 1-10-08	178.36 115.67		

DELIVERY SHIPLIST

TAMARACK ROOF TRUSSES INC.
ALPA LUMBER GROUP

Lumber Yard:	TAMARACK LUMBER	Job Track:	52956
Builder:	GREEN PARK HOMES	PlanLog:	206413
Project:	BARLASSINA	Layout ID:	427633
Location:	CAMBRIDGE	Ref #	
Model:	GARDEN 12	Page:	2 of 3
Lot #:		Date:	08-03-2022
Elevation:	1	Designer:	
		Sales Rep:	Rick DiCiano

Roof Trusses

PROFILE	QTY PLY	MARK TYPE	PITCH	SPAN	HEIGHT	LUMBER	OVERHANG LEFT RIGHT	HEEL HEIGHT LEFT RIGHT	LBS. BFT.	BUNDLE # STACK #	LOAD BY REMARKS
	1	T12 Roof Special	12 /12	**9-00-00**	6-04-08	2 x 4	1-05-00 1-05-00	1-10-08 1-10-08	52.66 36.17		
	1 2-ply	T13 Hip Girder	8 /12	**26-02-00**	7-09-13	2 x 4 2 x 6	1-03-08 1-03-08	1-04-13 1-04-13	294.22 186.67		
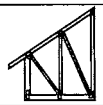	1 2-ply	T14 Jack-Open Girder	8 /12	**5-10-08**	7-09-13	2 x 4 2 x 6	1-03-08	3-10-13 7-09-13	93.96 59.67		
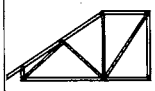	1	T15 Half Hip	8 /12	**12-01-00**	6-05-13	2 x 4	1-03-08	1-04-13 6-05-13	57.78 36.50		
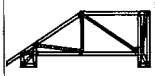	1	T16 Half Hip	8 /12	**12-01-00**	5-01-13	2 x 4	1-03-08	1-04-13 5-01-13	62.14 41.50		
	1	T17 Half Hip	8 /12	**12-01-00**	3-10-13	2 x 4	1-03-08	1-04-13 3-10-13	58.12 40.83		
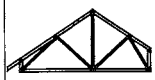	1	T18 Common	8 /12	**13-10-00**	6-06-10	2 x 4	1-03-08	1-04-13 2-05-13	60.51 38.83		
	1	T19 Hip	8 /12	**13-10-00**	5-11-11	2 x 4	1-03-08	1-04-13 2-05-13	64.93 41.67		
	1 2-ply	T20 Hip Girder	8 /12	**13-10-00**	4-03-11	2 x 4 2 x 6	1-03-08	1-04-13 2-05-13	131.25 81.67		
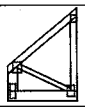	1 2-ply	T21 Jack-Open Girder	10 /12	**3-02-08**	4-03-11	2 x 4 2 x 6		1-07-10 4-03-11	38.16 27.00		
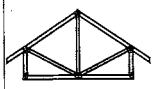	2	T22 Common	8 /12	**8-06-00**	5-03-13	2 x 4	1-03-08 1-03-08	2-05-13 2-05-13	81.76 53.67		
	1	T24 Half Hip Girder	12 /12	**11-11-00**	2-03-11	2 x 4	1-03-08 10-08	1-00-11 1-07-15	45.4 31.00		
	1	G2 GABLE	8 /12	**15-08-00**	6-07-08	2 x 4	1-03-08 1-03-08	1-04-13 1-04-13	69.71 45.00		
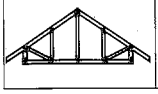	1	G23 GABLE	8 /12	**8-06-00**	4-02-13	2 x 4	1-03-08 1-03-08	1-04-13 1-04-13	37.61 24.67		

DELIVERY SHIPLIST

TAMARACK ROOF TRUSSES INC.
ALPA LUMBER GROUP

Lumber Yard:	TAMARACK LUMBER	Job Track:	52956
Builder:	GREEN PARK HOMES	PlanLog:	206413
Project:	BARLASSINA	Layout ID:	427633
Location:	CAMBRIDGE	Ref #	
Model:	GARDEN 12	Page:	3 of 3
Lot #:		Date:	08-03-2022
Elevation:	1	Designer:	
		Sales Rep:	Rick DiCiano

Roof Trusses

PROFILE	QTY / PLY	MARK / TYPE	PITCH	SPAN	HEIGHT	LUMBER	OVERHANG LEFT / RIGHT	HEEL HEIGHT LEFT / RIGHT	LBS. / BFT.	BUNDLE # / STACK #	LOAD BY / REMARKS
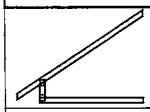	3	J1 Jack-Open	8 /12	**5-10-08**	5-03-13	2 x 4	1-03-08	1-04-13 5-03-13	53.49 32.00		
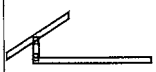	1	J2 Jack-Open	8 /12	**1-09-07**	2-07-02	2 x 4	1-03-08 4-01-01	1-04-13 2-07-02	12.23 7.33		
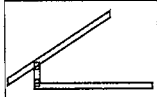	1	J3 Jack-Open	8 /12	**3-09-07**	3-11-02	2 x 4	1-03-08 2-01-01	1-04-13 3-11-02	14.97 9.33		
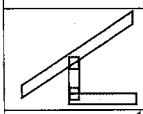	1	J4 Jack-Open	8 /12	**1-09-07**	2-07-02	2 x 4	1-03-08 1-01	1-04-13 2-07-02	7.67 4.67		
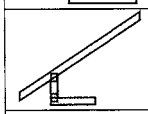	1	J5 Jack-Open	8 /12	**1-10-08**	3-11-02	2 x 4	1-03-08 1-10-15	1-04-13 2-07-13	10.41 6.67		
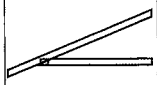	5	J7 Jack-Open	5 /12	**5-01-08**	2-11-14	2 x 4	1-03-08	4-01 2-05-11	69.55 46.67		
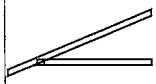	4	J8 Jack-Open	5 /12	**5-09-08**	3-03-03	2 x 4	1-03-08	4-01 2-09-00	61.97 37.33		
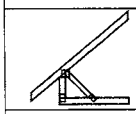	3	J9 Half Hip	10 /12	**3-02-08**	4-03-11	2 x 4	1-03-08	1-07-10 4-03-11	40.4 29.00		
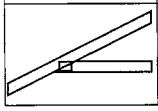	6	J70 Jack-Open	6 /12	**2-07-08**	2-03-07	2 x 4	1-03-08	4-03 1-07-15	48.92 32.00		

TOTAL # TRUSS= **76** TOTAL BFT OF ALL TRUSSES= **3054.35** BFT. TOTAL WEIGHT OF ALL TRSSES **4803.98** LBS

HARDWARE

QTY	TYPE	MODEL	LENGTH
18	Hardware	LJS26DS	
4	Hardware	HGUS26-2	
4	Hardware	LUS24	
1	Hardware	LUS26-2	

TOTAL NUMBER OF ITEMS= **27**

DELIVERY SHIPLIST

TAMARACK ROOF TRUSSES INC.
ALPA LUMBER GROUP

Lumber Yard:	TAMARACK LUMBER	Job Track:	52956
Builder:	GREEN PARK HOMES	PlanLog:	206413
Project:	BARLASSINA	Layout ID:	427659
Location:	CAMBRIDGE	Ref #	
Model:	GARDEN 12	Page:	1 of 3
Lot #:		Date:	08-03-2022
Elevation:	2	Designer:	
		Sales Rep:	Rick DiCiano

Roof Trusses

PROFILE	QTY PLY	MARK TYPE	PITCH	SPAN	HEIGHT	LUMBER	OVERHANG LEFT RIGHT	HEEL HEIGHT LEFT RIGHT	LBS. BFT.	BUNDLE # STACK #	LOAD BY REMARKS
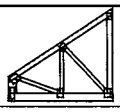	1 2-ply	T1Z Jack-Open Girder	8 /12	**5-10-08**	5-03-13	2 x 4 2 x 6		1-04-13 5-03-13	65.64 41.33		
	1	T2 Common	8 /12	**15-08-00**	6-07-08	2 x 4	1-03-08 1-03-08	1-04-13 1-04-13	66.77 42.00		
	1 2-ply	T3Z2 Hip Girder	8 /12	**26-02-00**	5-03-13	2 x 4 2 x 6	1-03-08 1-03-08	1-04-13 1-04-13	271.95 171.00		
	1 2-ply	T3Z3 Hip Girder	8 /12	**26-02-00**	5-03-13	2 x 4 2 x 6	1-03-08 1-03-08	1-04-13 1-04-13	271.95 171.00		
	2	T4 Hip	8 /12	**26-02-00**	6-07-13	2 x 4	1-03-08 1-03-08	1-04-13 1-04-13	233.78 150.33		
	2	T5 Hip	8 /12	**26-02-00**	7-11-13	2 x 4	1-03-08 1-03-08	1-04-13 1-04-13	248.23 155.33		
	2	T6 Hip	8 /12	**26-02-00**	9-03-13	2 x 4	1-03-08 1-03-08	1-04-13 1-04-13	244.59 153.00		
	2	T7 Common	8 /12	**26-02-00**	10-01-08	2 x 4	1-03-08 1-03-08	1-04-13 1-04-13	223.45 140.67		
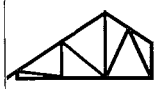	8	T7A Common	8 /12	**20-01-00**	10-01-08	2 x 4	1-03-08	1-04-13 5-05-08	789.27 496.00		
	1 2-ply	T8Z2 Common Girder	8 /12	**26-02-00**	10-01-08	2 x 4 2 x 6	1-03-08 1-03-08	1-04-13 1-04-13	305.43 193.33		
	1 2-ply	T8Z3 Common Girder	8 /12	**26-02-00**	10-01-08	2 x 4 2 x 6	1-03-08 1-03-08	1-04-13 1-04-13	305.43 193.33		
	1	T24 Half Hip Girder	12 /12	**11-11-00**	2-03-11	2 x 4	1-03-08 10-08	1-00-11 1-07-15	45.4 31.00		
	1	T25 Hip Girder	8 /12	**15-08-00**	5-03-00	2 x 4	1-03-08 1-03-08	1-04-13 1-04-13	66.05 41.33		
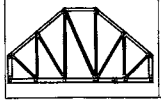	1 2-ply	T26 Hip Girder	10 /12	**16-04-00**	8-04-15	2 x 4 2 x 6		3-01-10 3-01-10	211.7 132.33		

DELIVERY SHIPLIST

TAMARACK ROOF TRUSSES INC.
ALPA LUMBER GROUP

Lumber Yard:	TAMARACK LUMBER	Job Track:	52956
Builder:	GREEN PARK HOMES	PlanLog:	206413
Project:	BARLASSINA	Layout ID:	427659
Location:	CAMBRIDGE	Ref #	
Model:	GARDEN 12	Page:	2 of 3
Lot #:		Date:	08-03-2022
Elevation:	2	Designer:	
		Sales Rep:	Rick DiCiano

Roof Trusses

PROFILE	QTY PLY	MARK TYPE	PITCH	SPAN	HEIGHT	LUMBER	OVERHANG LEFT RIGHT	HEEL HEIGHT LEFT RIGHT	LBS. BFT.	BUNDLE # STACK #	LOAD BY REMARKS
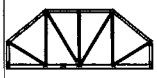	1 2-ply	T27 Hip Girder	10 /12	**16-04-00**	6-08-15	2 x 4 2 x 6		3-01-10 3-01-10	181.96 110.67		
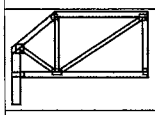	1	T28 Half Hip Girder	10 /12	**7-04-00**	5-00-15	2 x 4		1-07-10 3-06-15	35.05 22.67		
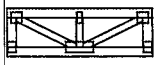	1 2-ply	T29 Flat Girder	0 /12	**4-05-08**	1-06-00	2 x 4		1-06-00 1-06-00	32.69 23.00		
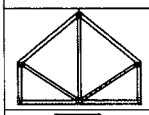	1	T30 Common	10 /12	**9-00-00**	6-10-10	2 x 4		3-01-10 3-01-10	43.42 27.83		
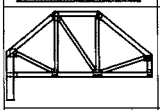	1	T31 Hip Girder	10 /12	**9-03-00**	5-08-08	2 x 4		3-01-10 1-05-02	44.57 29.33		
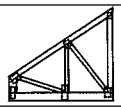	1 2-ply	T32 Jack-Open Girder	8 /12	**5-10-08**	5-03-13	2 x 4 2 x 6		1-04-13 5-03-13	66.29 41.33		
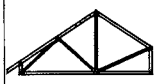	1	T33 Common	8 /12	**13-10-00**	6-09-02	2 x 4	1-03-08	1-04-13 2-10-13	59.04 37.83		
	1 2-ply	T34 Hip Girder	8 /12	**13-10-00**	5-08-13	2 x 4 2 x 6	1-03-08	1-04-13 2-10-13	145.21 90.67		
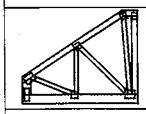	1 2-ply	T35 Half Hip Girder	8 /12	**5-10-08**	4-09-08	2 x 4 2 x 6		1-04-13 4-09-08	70.02 46.33		
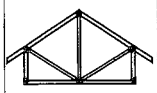	3	T36 Common	8 /12	**8-06-00**	5-08-13	2 x 4	1-03-08 1-03-08	2-10-13 2-10-13	127.53 82.00		
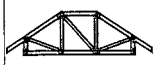	1	T39 Hip Girder	8 /12	**8-06-00**	3-03-10	2 x 4	1-03-08 1-03-08	1-04-13 1-04-13	38.68 25.33		
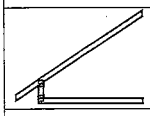	7	J1 Jack-Open	8 /12	**5-10-08**	5-03-13	2 x 4	1-03-08	1-04-13 5-03-13	124.81 74.67		
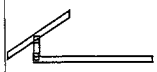	2	J2 Jack-Open	8 /12	**1-09-07**	2-07-02	2 x 4	1-03-08 4-01-01	1-04-13 2-07-02	24.45 14.67		
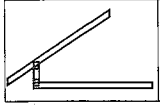	2	J3 Jack-Open	8 /12	**3-09-07**	3-11-02	2 x 4	1-03-08 2-01-01	1-04-13 3-11-02	29.94 18.67		

DELIVERY SHIPLIST

TAMARACK ROOF TRUSSES INC.
ALPA LUMBER GROUP

Lumber Yard:	TAMARACK LUMBER	Job Track:	52956
Builder:	GREEN PARK HOMES	PlanLog:	206413
Project:	BARLASSINA	Layout ID:	427659
Location:	CAMBRIDGE	Ref #	
Model:	GARDEN 12	Page:	3 of 3
Lot #:		Date:	08-03-2022
Elevation:	2	Designer:	
		Sales Rep:	Rick DiCiano

Roof Trusses

PROFILE	QTY / PLY	MARK / TYPE	PITCH	SPAN	HEIGHT	LUMBER	OVERHANG LEFT / RIGHT	HEEL HEIGHT LEFT / RIGHT	LBS. / BFT.	BUNDLE # / STACK #	LOAD BY / REMARKS
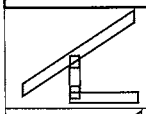	2	J4 Jack-Open	8 /12	**1-09-07**	2-07-02	2 x 4	1-03-08 1-01	1-04-13 2-07-02	15.33 9.33		
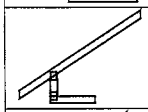	2	J5 Jack-Open	8 /12	**1-10-08**	3-11-02	2 x 4	1-03-08 1-10-15	1-04-13 2-07-13	20.81 13.33		
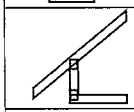	4	J10 Half Hip	10 /12	**2-00-00**	3-03-10	2 x 4	1-03-08	1-07-10 3-03-10	35.28 24.00		
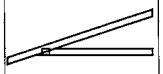	5	J12 Monopitch	4 /12	**5-01-08**	2-05-06	2 x 4	1-03-08	3-15 2-00-07	68.34 43.33		
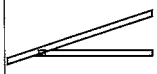	4	J13 Monopitch	4 /12	**5-09-08**	2-08-00	2 x 4	1-03-08	3-15 2-03-02	60.92 37.33		
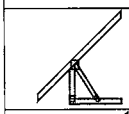	7	J25 Jack-Open	12 /12	**2-10-08**	5-03-00	2 x 4	1-09-08	2-04-08 5-03-00	107.25 66.50		
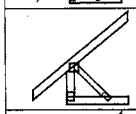	4	J28 Jack-Open	10 /12	**2-04-00**	3-06-15	2 x 4	1-03-08	1-07-10 3-06-15	44.68 30.67		
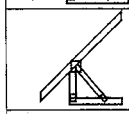	4	J31 Jack-Open	12 /12	**2-04-00**	4-02-08	2 x 4	1-03-08	1-10-08 4-02-08	48.52 33.33		
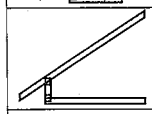	3	J35 Jack-Open	8 /12	**5-01-00**	4-09-08	2 x 4	1-03-08	1-04-13 4-09-08	47.53 30.00		
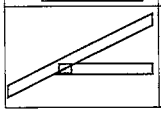	6	J70 Jack-Open	6 /12	**2-07-08**	2-03-07	2 x 4	1-03-08	4-03 1-07-15	48.92 32.00		

TOTAL # TRUSS= **101** TOTAL BFT OF ALL TRUSSES= **3076.8** BFT. TOTAL WEIGHT OF ALL TRSSES **4870.86** LBS

HARDWARE

QTY	TYPE	MODEL	LENGTH
9	Hardware	HGUS26-2	
10	Hardware	LJS26DS	
9	Hardware	LUS24	

TOTAL NUMBER OF ITEMS= **28**

DELIVERY SHIPLIST

TAMARACK ROOF TRUSSES INC.
ALPA LUMBER GROUP

Lumber Yard:	TAMARACK LUMBER	Job Track:	52956
Builder:	GREEN PARK HOMES	PlanLog:	206413
Project:	BARLASSINA	Layout ID:	427679
Location:	CAMBRIDGE	Ref #	
Model:	GARDEN 12	Page:	1 of 3
Lot #:		Date:	08-03-2022
Elevation:	3	Designer:	
		Sales Rep:	Rick DiCiano

Roof Trusses

PROFILE	QTY PLY	MARK TYPE	PITCH	SPAN	HEIGHT	LUMBER	OVERHANG LEFT RIGHT	HEEL HEIGHT LEFT RIGHT	LBS. BFT.	BUNDLE # STACK #	LOAD BY REMARKS
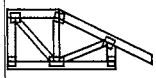	1	T40 Roof Special Girder	-6 /12	**3-10-08**	2-02-00	2 x 4	1-03-08	2-02-00 1-02-00	18.02 12.17		
	1 2-ply	T41 Hip Girder	6 /12	**16-06-00**	4-05-04	2 x 4	1-03-08	1-02-00 2-06-00	133.66 87.00		
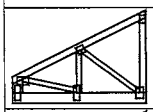	1 2-ply	T42 Jack-Open Girder	6 /12	**5-10-08**	4-01-04	2 x 4 2 x 6		1-02-00 4-01-04	58.39 37.67		
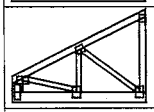	1 2-ply	T42Z Jack-Open Girder	6 /12	**5-10-08**	4-01-04	2 x 4 2 x 6		1-02-00 4-01-04	58.39 37.67		
	1 2-ply	T43 Hip Girder	6 /12	**26-02-00**	4-01-04	2 x 4 2 x 6	1-03-08 1-03-08	1-02-00 1-02-00	248.23 160.00		
	1 2-ply	T43Z Hip Girder	6 /12	**26-02-00**	4-01-04	2 x 4 2 x 6	1-03-08 1-03-08	1-02-00 1-02-00	248.23 160.00		
	2	T44 Hip	6 /12	**26-02-00**	5-01-04	2 x 4	1-03-08 1-03-08	1-02-00 1-02-00	213.8 135.00		
	2	T45 Hip	6 /12	**26-02-00**	6-01-04	2 x 4	1-03-08 1-03-08	1-02-00 1-02-00	217.46 136.67		
	2	T46 Hip	6 /12	**26-02-00**	7-01-04	2 x 4	1-03-08 1-03-08	1-02-00 1-02-00	220.93 137.67		
	2	T47 Common	6 /12	**26-02-00**	7-08-08	2 x 4	1-03-08 1-03-08	1-02-00 1-02-00	215.22 135.33		
	8	T47A Common	6 /12	**18-09-00**	7-08-08	2 x 4	1-03-08	1-02-00 4-10-08	647.88 404.00		
	1 3-ply	T48 Common Girder	6 /12	**26-02-00**	7-08-08	2 x 4 2 x 6	1-03-08 1-03-08	1-02-00 1-02-00	389.32 247.50		
	1 3-ply	T48Z Common Girder	6 /12	**26-02-00**	7-08-08	2 x 4 2 x 6	1-03-08 1-03-08	1-02-00 1-02-00	389.32 247.50		
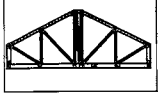	1 2-ply	T49 Hip Girder	6 /12	**16-04-00**	6-06-00	2 x 4 2 x 6		2-08-00 2-08-00	186.9 117.33		

DELIVERY SHIPLIST

TAMARACK ROOF TRUSSES INC.
ALPA LUMBER GROUP

Lumber Yard:	TAMARACK LUMBER	Job Track:	52956
Builder:	GREEN PARK HOMES	PlanLog:	206413
Project:	BARLASSINA	Layout ID:	427679
Location:	CAMBRIDGE	Ref #	
Model:	GARDEN 12	Page:	2 of 3
Lot #:		Date:	08-03-2022
Elevation:	3	Designer:	
		Sales Rep:	Rick DiCiano

Roof Trusses

PROFILE	QTY PLY	MARK TYPE	PITCH	SPAN	HEIGHT	LUMBER	OVERHANG LEFT RIGHT	HEEL HEIGHT LEFT RIGHT	LBS. BFT.	BUNDLE # STACK #	LOAD BY REMARKS
	1 2-ply	T50 Hip Girder	6 /12	**16-04-00**	5-06-00	2 x 4 2 x 6		2-08-00 2-08-00	162.73 104.33		
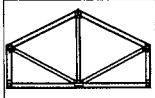	1	T51 Common	6 /12	**9-00-00**	4-11-00	2 x 4		2-08-00 2-08-00	38.16 25.50		
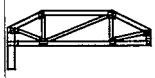	1	T52 Hip Girder	6 /12	**9-03-00**	3-09-04	2 x 4		2-08-00 1-00-08	36.58 24.00		
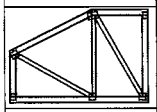	1	T53 Half Hip	6 /12	**7-01-00**	4-09-04	2 x 4		2-08-00 4-09-04	35.15 23.50		
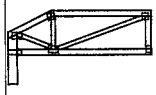	1	T54 Half Hip Girder	6 /12	**7-04-00**	3-09-04	2 x 4		1-02-00 2-03-04	30.14 19.50		
	1	T55 Hip	6 /12	**13-10-00**	4-11-04	2 x 4	1-03-08	1-02-00 2-08-00	60.29 39.67		
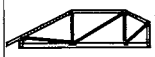	1 2-ply	T56 Hip Girder	6 /12	**13-10-00**	3-11-04	2 x 4 2 x 6	1-03-08	1-02-00 2-08-00	127.85 81.67		
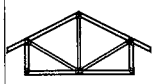	2	T57 Common	6 /12	**8-02-00**	4-08-08	2 x 4	1-03-08 1-03-08	2-08-00 2-08-00	77.36 53.67		
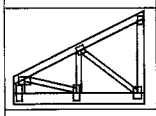	1 2-ply	T58 Jack-Open Girder	6 /12	**5-06-08**	3-11-04	2 x 4 2 x 6		1-02-00 3-11-04	55.27 36.67		
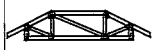	1	T59 Hip Girder	6 /12	**8-02-00**	2-02-00	2 x 4	1-03-08 1-03-08	1-02-00 1-02-00	33.27 22.50		
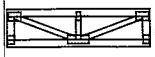	1 2-ply	T60 Flat Girder	0 /12	**5-08-00**	1-06-00	2 x 4		1-06-00 1-06-00	40.01 25.67		
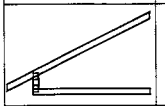	6	J1 Jack-Open	6 /12	**5-10-08**	4-01-04	2 x 4	1-03-08	1-02-00 4-01-04	100.77 64.00		
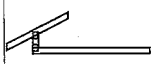	2	J2 Jack-Open	6 /12	**1-09-07**	2-00-12	2 x 4	1-03-08 4-01-01	1-02-00 2-00-12	23.16 14.67		
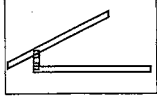	2	J3 Jack-Open	6 /12	**3-09-07**	3-00-12	2 x 4	1-03-08 2-01-01	1-02-00 3-00-12	28.26 17.33		

DELIVERY SHIPLIST

TAMARACK ROOF TRUSSES INC.
ALPA LUMBER GROUP

Lumber Yard:	TAMARACK LUMBER	Job Track:	52956
Builder:	GREEN PARK HOMES	PlanLog:	206413
Project:	BARLASSINA	Layout ID:	427679
Location:	CAMBRIDGE	Ref #	
Model:	GARDEN 12	Page:	3 of 3
Lot #:		Date:	08-03-2022
Elevation:	3	Designer:	
		Sales Rep:	Rick DiCiano

Roof Trusses

PROFILE	QTY / PLY	MARK / TYPE	PITCH	SPAN	HEIGHT	LUMBER	OVERHANG LEFT / RIGHT	HEEL HEIGHT LEFT / RIGHT	LBS. / BFT.	BUNDLE # / STACK #	LOAD BY / REMARKS
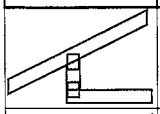	2	J4 Jack-Open	6 /12	**1-09-07**	2-00-12	2 x 4	1-03-08 1-01	1-02-00 2-00-12	14.04 9.33		
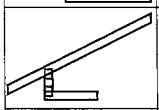	2	J5 Jack-Open	6 /12	**1-10-08**	3-00-12	2 x 4	1-03-08 1-10-15	1-02-00 2-01-04	19.14 12.00		
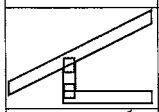	2	J40 Jack-Open	6 /12	**2-01-08**	2-02-12	2 x 4	1-03-08	1-02-00 2-02-12	15.48 10.67		
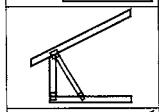	8	J41 Jack-Open	6 /12	**3-10-08**	4-05-04	2 x 4	10-08	2-06-00 4-05-04	119.41 81.33		
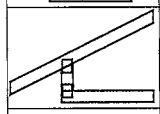	8	J52 Jack-Open	6 /12	**2-04-00**	2-04-00	2 x 4	1-03-08	1-02-00 2-04-00	65.93 48.00		
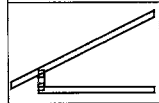	2	J56 Jack-Open	6 /12	**5-06-08**	3-11-04	2 x 4	1-03-08	1-02-00 3-11-04	31.98 20.00		
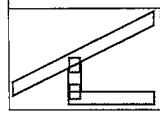	4	J59 Jack-Open	6 /12	**2-00-00**	2-02-00	2 x 4	1-03-08	1-02-00 2-02-00	29.74 18.67		

TOTAL # TRUSS= **89** TOTAL BFT OF ALL TRUSSES= **2808.19** BFT. TOTAL WEIGHT OF ALL TRSSES **4390.48** LBS

HARDWARE

QTY	TYPE	MODEL	LENGTH
10	Hardware	HGUS26-2	
9	Hardware	LJS26DS	
8	Hardware	LUS24	

TOTAL NUMBER OF ITEMS= **27**

JOB NAME	TRUSS NAME	QUANTITY	PLY	JOB DESC.	DRWG NO.
427633	T1	1	2	GREEN PARK HOMES TRUSS DESC.	

Tamarack Roof Truss, Burlington

Version 8.530 S Feb 23 2022 MiTek Industries, Inc. Tue Aug 2 14:59:00 2022 Page 1
ID:5jddhdQ2aVEKS8ltDc496Sz15V3-NtV50CSsKkuv94HVWe 2MojpWWn 9OeI2wtYbayrss9

Scale = 1:32.7

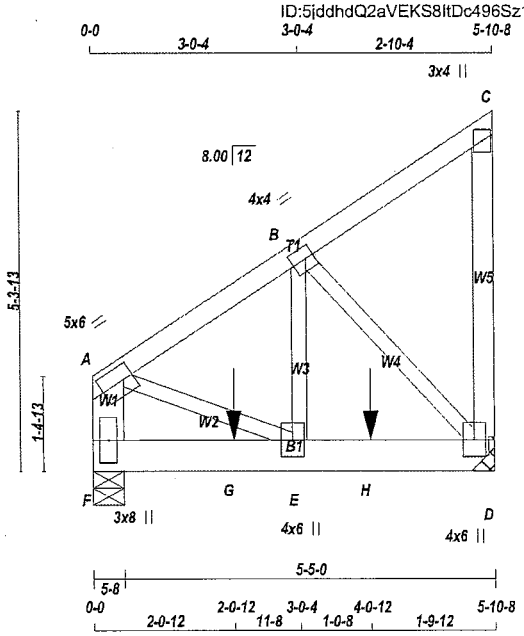

TOTAL WEIGHT = 2 X 33 = 66 lb

[M]

LUMBER

N. L. G. A. RULES

CHORDS	SIZE		LUMBER	DESCR.
A - C	2x4	DRY	No.2	SPF
D - C	2x4	DRY	No.2	SPF
F - A	2x6	DRY	No.2	SPF
F - D	2x6	DRY	No.2	SPF
ALL WEBS	2x3	DRY	No.2	SPF

DRY: SEASONED LUMBER.

DESIGN CONSISTS OF 2 TRUSSES BUILT SEPARATELY THEN FASTENED TOGETHER AS FOLLOWS:

CHORDS	#ROWS	SURFACE SPACING (IN)	LOAD(PLF)
TOP CHORDS : (0.122"X3") SPIRAL NAILS			
A- C	1	12	TOP
C- D	1	12	TOP
F- A	2	12	TOP
BOTTOM CHORDS : (0.122"X3") SPIRAL NAILS			
F- D	2	12	SIDE(0.0)
WEBS : (0.122"X3") SPIRAL NAILS			
2x3	1	6	

NAILS TO BE DRIVEN FROM ONE SIDE ONLY.

GIRDER NAILING ASSUMES NAILED HANGERS ARE FASTENED WITH MIN. 3-0 INCH NAILS.

TOP - COMPONENTS ARE LOADED FROM THE TOP AND MUST BE PLACED ON TOP EDGE OF ALL PLIES FOR THE LOAD TO BE TRANSFERRED TO EACH PLY.

SIDE - PLF SHOWN IS THE EQUIVALENT UDL APPLIED TO ONE SIDE THAT THE CORRESPONDING NAILING PATTERN SHALL BE CAPABLE OF TRANSFERING. REMAINING PLF MUST BE APPLIED ON THE OPPOSITE SIDE OR ON THE TOP.

PLATES (table is in inches)

JT	TYPE	PLATES	W	LEN	Y	X
A	TMVW-t	MT20	5.0	6.0	2.50	1.75
B	TMWW-t	MT20	4.0	4.0	2.00	1.50
C	TMV+p	MT20	3.0	4.0		

LICENSED PROFESSIONAL ENGINEER
8/02/22
C. M. HEYENS
100505065
PROVINCE OF ONTARIO

STRUCTURAL COMPONENT ONLY
DWG # TR22080278 PG 1/2

DIMENSIONS, SUPPORTS AND LOADINGS SPECIFIED BY FABRICATOR TO BE VERIFIED BY BUILDING DESIGNER

BEARINGS

JT	FACTORED GROSS REACTION VERT	HORZ	MAXIMUM FACTORED GROSS REACTION DOWN	HORZ	UPLIFT	INPUT BRG IN-SX	REQRD BRG IN-SX
D	1379	0	1379	0	0	MECHANICAL	
F	1294	0	1294	0	0	5-8	5-8

A SUITABLE HANGER/MECHANICAL CONNECTION IS REQUIRED AT JOINT D. MINIMUM BEARING LENGTH AT JOINT D = 4-0.

UNFACTORED REACTIONS

JT	1ST LCASE COMBINED	MAX./MIN. COMPONENT REACTIONS SNOW	LIVE	PERM.LIVE	WIND	DEAD	SOIL
D	969	670 / 0	0 / 0	0 / 0	0 / 0	299 / 0	0 / 0
F	910	628 / 0	0 / 0	0 / 0	0 / 0	281 / 0	0 / 0

BEARING MATERIAL TO BE SPF NO.2 OR BETTER AT JOINT(S) F

BRACING

TOP CHORD TO BE SHEATHED OR MAX. PURLIN SPACING = 6.25 FT.
MAX. UNBRACED BOTTOM CHORD LENGTH = 10.00 FT OR RIGID CEILING DIRECTLY APPLIED.

ALL PITCH BREAKS AND PERIMETER CORNER JOINTS MUST BE LATERALLY RESTRAINED.

LOADING

TOTAL LOAD CASES: (4)

CHORDS

MEMB. FR-TO	MAX. FACTORED FORCE (LBS)	FACTORED VERT. LOAD (PLF) FROM	TO	LC1	MAX CSI (LC)	MAX. UNBRAC LENGTH
A- B	-1151 / 0	-95.2	-95.2	0.07 (1)	6.25	
B- C	-16 / 0	-95.2	-95.2	0.06 (1)	6.25	
D- C	-106 / 0	0.0	0.0	0.02 (1)	7.81	
F- A	-1084 / 0	0.0	0.0	0.04 (1)	7.81	
F- G	0 / 0	-18.5	-18.5	0.15 (1)	10.00	
G- E	0 / 0	-18.5	-18.5	0.15 (1)	10.00	
E- H	0 / 971	-18.5	-18.5	0.22 (1)	10.00	
H- D	0 / 971	-18.5	-18.5	0.22 (1)	10.00	

WEBS

MEMB. FR-TO	MAX. FACTORED FORCE (LBS)	MAX CSI (LC)
B- D	-1411 / 0	0.20 (1)
E- B	0 / 1334	0.17 (1)
A- E	0 / 1022	0.13 (1)

SPECIFIED CONCENTRATED LOADS (LBS)

JT	LOC.	LC1	MAX-	MAX+	FACE	DIR.	TYPE	HEEL	CONN.
G	2-0-12	-704	-704	---	BACK	VERT	TOTAL	---	C1
H	4-0-12	-704	-704	---	BACK	VERT	TOTAL	---	C1

CONNECTION REQUIREMENTS

1) **C1:** A SUITABLE HANGER/MECHANICAL CONNECTION IS REQUIRED.

DESIGN CRITERIA

SPECIFIED LOADS:

TOP CH.	LL	=	26.7	PSF
	DL	=	6.0	PSF
BOT CH.	LL	=	0.0	PSF
	DL	=	7.4	PSF
TOTAL LOAD		=	40.1	PSF

SPACING = 24.0 IN. C/C

THIS TRUSS IS DESIGNED FOR RESIDENTIAL OR SMALL BUILDING REQUIREMENTS OF PART 9, NBCC 2015

THIS DESIGN COMPLIES WITH:
- PART 9 OF BCBC 2018 , ABC 2019
- PART 9 OF OBC 2012 (2019 AMENDMENT)
- CSA 086-14
- TPIC 2014

(55 % OF 33.4 P.S.F. G.S.L. PLUS 8.4 P.S.F. RAIN LOAD) EQUALS 26.7 P.S.F. SPECIFIED ROOF LIVE LOAD

ALLOWABLE DEFL.(LL)= L/360 (0.20")
CALCULATED VERT. DEFL.(LL) = L/ 999 (0.01")
ALLOWABLE DEFL.(TL)= L/360 (0.20")
CALCULATED VERT. DEFL.(TL) = L/ 999 (0.01")

CSI: TC=0.07/1.00 (A-B:1) , BC=0.22/1.00 (D-E:1) , WB=0.20/1.00 (B-D:1) , SSI=0.28/1.00 (E-F:1)

DOL LUMBER=1.00 NAIL=1.00 LS BEND=1.00 COMP=1.00 SHEAR=1.00 TENS= 1.00

COMPANION LIVE LOAD FACTOR = 1.00

AUTOSOLVE RIGHT HEEL ONLY

TRUSS PLATE MANUFACTURER IS NOT RESPONSIBLE FOR QUALITY CONTROL IN THE TRUSS MANUFACTURING PLANT .

NAIL VALUES

PLATE	GRIP(DRY) (PSI) MAX	MIN	SHEAR (PLI) MAX	MIN	SECTION (PLI) MAX	MIN
MT20	650	371	1747	788	1987	1873

PLATE PLACEMENT TOL. = 0.250 inches

PLATE ROTATION TOL. = 5.0 Deg.

JSI GRIP= 0.79 (B) (INPUT = 0.90)
JSI METAL= 0.22 (D) (INPUT = 1.00)

CONTINUED ON PAGE 2

PLATES (table is in inches)

JT	TYPE	PLATES	W	LEN	Y	X
D	BMVW1+p	MT20	4.0	6.0		
E	BMWW+t	MT20	4.0	6.0		
F	BMV1+p	MT20	3.0	8.0		

NOTES- (1)
1) Lateral braces to be a minimum of 2X4 SPF #2.

LICENSED PROFESSIONAL ENGINEER
8/02/22
C. M. HEYENS
100505065
PROVINCE OF ONTARIO

STRUCTURAL COMPONENT ONLY
DWG # TR22080278 PG 2/2

JOB NAME	TRUSS NAME	QUANTITY	PLY	JOB DESC.	DRWG NO.
427659	T1Z	1	2	GREEN PARK HOMES TRUSS DESC.	

Tamarack Roof Truss, Burlington

Version 8.530 S Feb 23 2022 MiTek Industries, Inc. Tue Aug 2 14:35:41 2022 Page 1
ID:5jddhdQ2aVEKS8ItDc496Sz15V3-qkTDPqWJouePp5qd3KN 9nHjaaH8tq4NLmU1?AyrtC0

Scale = 1:32.7

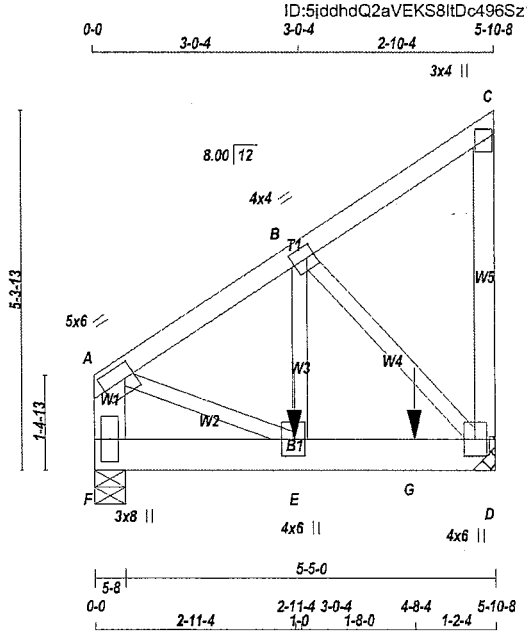

TOTAL WEIGHT = 2 X 33 = 66 lb

[M]

LUMBER

N. L. G. A. RULES

CHORDS	SIZE		LUMBER	DESCR.
A - C	2x4	DRY	No.2	SPF
D - C	2x4	DRY	No.2	SPF
F - A	2x6	DRY	No.2	SPF
F - D	2x6	DRY	No.2	SPF
ALL WEBS	2x3	DRY	No.2	SPF

DRY: SEASONED LUMBER.

DESIGN CONSISTS OF 2 TRUSSES BUILT SEPARATELY THEN FASTENED TOGETHER AS FOLLOWS:

CHORDS	#ROWS	SURFACE SPACING (IN)	LOAD(PLF)
TOP CHORDS : (0.122"X3") SPIRAL NAILS			
A- C	1	12	TOP
C- D	1	12	TOP
F- A	2	12	TOP
BOTTOM CHORDS : (0.122"X3") SPIRAL NAILS			
F- D	2	12	SIDE(183.1)
WEBS : (0.122"X3") SPIRAL NAILS			
B- E	1	6	SIDE(149.2)
2x3	1	6	

NAILS TO BE DRIVEN FROM ONE SIDE ONLY.

GIRDER NAILING ASSUMES NAILED HANGERS ARE FASTENED WITH MIN. 3-0 INCH NAILS.

TOP - COMPONENTS ARE LOADED FROM THE TOP AND MUST BE PLACED ON TOP EDGE OF ALL PLIES FOR THE LOAD TO BE TRANSFERRED TO EACH PLY.

SIDE - PLF SHOWN IS THE EQUIVALENT UDL APPLIED TO ONE SIDE THAT THE CORRESPONDING NAILING PATTERN SHALL BE CAPABLE OF TRANSFERING. REMAINING PLF MUST BE APPLIED ON THE OPPOSITE SIDE OR ON THE TOP.

PLATES (table is in inches)

JT	TYPE	PLATES	W	LEN	Y	X
A	TMVW-t	MT20	5.0	6.0	2.50	1.75
B	TMWW-t	MT20	4.0	4.0	2.00	1.50

LICENSED PROFESSIONAL ENGINEER
8/02/22
C. M. HEYENS
100505065
PROVINCE OF ONTARIO

STRUCTURAL COMPONENT ONLY
DWG # TR22080304 PG 1/2

DIMENSIONS, SUPPORTS AND LOADINGS SPECIFIED BY FABRICATOR TO BE VERIFIED BY BUILDING DESIGNER

BEARINGS

JT	FACTORED GROSS REACTION VERT	HORZ	MAXIMUM FACTORED GROSS REACTION DOWN	HORZ	UPLIFT	INPUT BRG IN-SX	REQRD BRG IN-SX
D	1789	0	1789	0	0	MECHANICAL	
F	1155	0	1155	0	0	5-8	5-8

A SUITABLE HANGER/MECHANICAL CONNECTION IS REQUIRED AT JOINT D. MINIMUM BEARING LENGTH AT JOINT D = 4-0.

UNFACTORED REACTIONS

JT	1ST LCASE COMBINED	MAX./MIN. COMPONENT REACTIONS SNOW	LIVE	PERM.LIVE	WIND	DEAD	SOIL
D	1257	871 / 0	0 / 0	0 / 0	0 / 0	386 / 0	0 / 0
F	812	560 / 0	0 / 0	0 / 0	0 / 0	252 / 0	0 / 0

BEARING MATERIAL TO BE SPF NO.2 OR BETTER AT JOINT(S) F

BRACING

TOP CHORD TO BE SHEATHED OR MAX. PURLIN SPACING = 6.25 FT.
MAX. UNBRACED BOTTOM CHORD LENGTH = 10.00 FT OR RIGID CEILING DIRECTLY APPLIED.

ALL PITCH BREAKS AND PERIMETER CORNER JOINTS MUST BE LATERALLY RESTRAINED.

LOADING

TOTAL LOAD CASES: (4)

CHORDS

MEMB. FR-TO	MAX. FACTORED FORCE (LBS)	FACTORED VERT. LOAD (PLF) FROM	TO	LC1 CSI (LC)	MAX UNBRAC LENGTH
A- B	-1239 / 0	-95.2	-95.2	0.07 (1)	6.25
B- C	-16 / 0	-95.2	-95.2	0.06 (1)	6.25
D- C	-107 / 0	0.0	0.0	0.02 (1)	7.81
F- A	-1157 / 0	0.0	0.0	0.04 (1)	7.81
F- E	0 / 0	-18.5	-18.5	0.03 (1)	10.00
E- G	0 / 1044	-18.5	-18.5	0.32 (1)	10.00
G- D	0 / 1044	-18.5	-18.5	0.32 (1)	10.00

WEBS

MEMB. FR-TO	MAX. FACTORED FORCE (LBS)	MAX CSI (LC)
B- D	-1517 / 0	0.21 (1)
E- B	0 / 1461	0.18 (1)
A- E	0 / 1099	0.14 (1)

SPECIFIED CONCENTRATED LOADS (LBS)

JT	LOC.	LC1	MAX-	MAX+	FACE	DIR.	TYPE	HEEL	CONN.
E	2-11-4	-894	-894	---	BACK	VERT	TOTAL	---	C1
G	4-8-4	-704	-704	---	BACK	VERT	TOTAL	---	C1

CONNECTION REQUIREMENTS

1) **C1:** A SUITABLE HANGER/MECHANICAL CONNECTION IS REQUIRED.

DESIGN CRITERIA

SPECIFIED LOADS:

TOP CH.	LL	=	26.7	PSF
	DL	=	6.0	PSF
BOT CH.	LL	=	0.0	PSF
	DL	=	7.4	PSF
TOTAL LOAD		=	40.1	PSF

SPACING = 24.0 IN. C/C

THIS TRUSS IS DESIGNED FOR RESIDENTIAL OR SMALL BUILDING REQUIREMENTS OF PART 9, NBCC 2015

THIS DESIGN COMPLIES WITH:
- PART 9 OF BCBC 2018 , ABC 2019
- PART 9 OF OBC 2012 (2019 AMENDMENT)
- CSA 086-14
- TPIC 2014

(55 % OF 33.4 P.S.F. G.S.L. PLUS 8.4 P.S.F. RAIN LOAD) EQUALS 26.7 P.S.F. SPECIFIED ROOF LIVE LOAD

ALLOWABLE DEFL.(LL)= L/360 (0.20")
CALCULATED VERT. DEFL.(LL) = L/ 999 (0.01")
ALLOWABLE DEFL.(TL)= L/360 (0.20")
CALCULATED VERT. DEFL.(TL) = L/ 999 (0.02")

CSI: TC=0.07/1.00 (A-B:1) , BC=0.32/1.00 (D-E:1) , WB=0.21/1.00 (B-D:1) , SSI=0.19/1.00 (D-E:1)

DOL LUMBER=1.00 NAIL=1.00 LS BEND=1.00 COMP=1.00 SHEAR=1.00 TENS= 1.00

COMPANION LIVE LOAD FACTOR = 1.00

AUTOSOLVE RIGHT HEEL ONLY

TRUSS PLATE MANUFACTURER IS NOT RESPONSIBLE FOR QUALITY CONTROL IN THE TRUSS MANUFACTURING PLANT .

NAIL VALUES

PLATE	GRIP(DRY) (PSI) MAX	MIN	SHEAR (PLI) MAX	MIN	SECTION (PLI) MAX	MIN
MT20	650	371	1747	788	1987	1873

PLATE PLACEMENT TOL. = 0.250 inches

PLATE ROTATION TOL. = 5.0 Deg.

JSI GRIP= 0.87 (B) (INPUT = 0.90)
JSI METAL= 0.24 (D) (INPUT = 1.00)

CONTINUED ON PAGE 2

PLATES (table is in inches)

JT	TYPE	PLATES	W	LEN	Y	X
C	TMV+p	MT20	3.0	4.0		
D	BMVW1+p	MT20	4.0	6.0		
E	BMWW+t	MT20	4.0	6.0		
F	BMV1+p	MT20	3.0	8.0		

NOTES- (1)
1) Lateral braces to be a minimum of 2X4 SPF #2.

LICENSED PROFESSIONAL ENGINEER
8/02/22
C. M. HEYENS
100505065
PROVINCE OF ONTARIO

STRUCTURAL COMPONENT ONLY
DWG # TR22080304

JOB NAME	TRUSS NAME	QUANTITY	PLY	JOB DESC.	DRWG NO.
427633	T2	2	1	GREEN PARK HOMES TRUSS DESC.	

Tamarack Roof Truss, Burlington

Version 8.530 S Feb 23 2022 MiTek Industries, Inc. Tue Aug 2 14:13:52 2022 Page 1
ID:5jddhdQ2aVEKS8ltDo496Sz15V3-fvtMgEgD4ij8GwF1tvO0ckZ?MvWvgaziLcuGYYyrtWT

Scale = 1:41.5

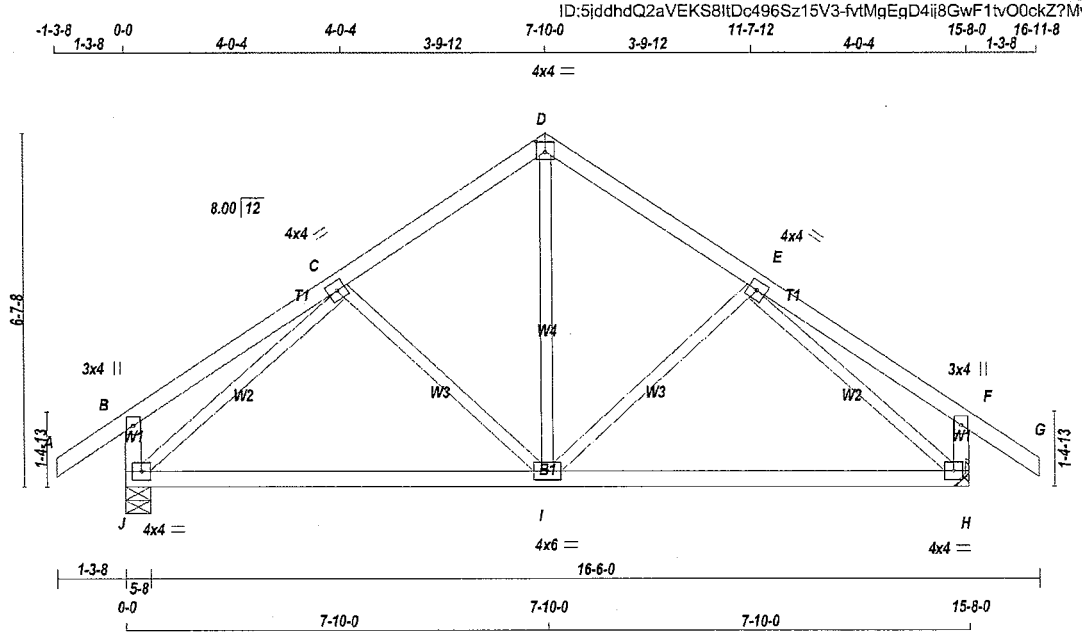

TOTAL WEIGHT = 2 X 67 = 134 lb

[M][F]

LUMBER
N. L. G. A. RULES

CHORDS	SIZE		LUMBER	DESCR.
A - D	2x4	DRY	No.2	SPF
D - G	2x4	DRY	No.2	SPF
J - B	2x4	DRY	No.2	SPF
H - F	2x4	DRY	No.2	SPF
J - H	2x4	DRY	No.2	SPF
ALL WEBS EXCEPT	2x3	DRY	No.2	SPF

DRY: SEASONED LUMBER.

PLATES (table is in inches)

JT	TYPE	PLATES	W	LEN	Y	X
B	TMV+p	MT20	3.0	4.0		
C	TMWW-t	MT20	4.0	4.0		
D	TTW-p	MT20	4.0	4.0	2.25	2.00
E	TMWW-t	MT20	4.0	4.0		
F	TMV+p	MT20	3.0	4.0		
H	BMVW1-t	MT20	4.0	4.0		
I	BMWWW-t	MT20	4.0	6.0		
J	BMVW1-t	MT20	4.0	4.0		

NOTES- (1)
1) Lateral braces to be a minimum of 2X4 SPF #2.

DIMENSIONS, SUPPORTS AND LOADINGS SPECIFIED BY FABRICATOR TO BE VERIFIED BY BUILDING DESIGNER

BEARINGS

JT	FACTORED GROSS REACTION VERT	HORZ	MAXIMUM GROSS REACTION DOWN	HORZ	FACTORED UPLIFT	INPUT BRG IN-SX	REQRD BRG IN-SX
J	1021	0	1021	0	0	5-8	5-8
H	1021	0	1021	0	0	MECHANICAL	

A SUITABLE HANGER/MECHANICAL CONNECTION IS REQUIRED AT JOINT H. MINIMUM BEARING LENGTH AT JOINT H = 3-8.

UNFACTORED REACTIONS

JT	1ST LCASE COMBINED	MAX./MIN. COMPONENT REACTIONS SNOW	LIVE	PERM.LIVE	WIND	DEAD	SOIL
J	719	492 / 0	0 / 0	0 / 0	0 / 0	226 / 0	0 / 0
H	719	492 / 0	0 / 0	0 / 0	0 / 0	226 / 0	0 / 0

BEARING MATERIAL TO BE SPF NO.2 OR BETTER AT JOINT(S) J

BRACING
TOP CHORD TO BE SHEATHED OR MAX. PURLIN SPACING = 6.25 FT.
MAX. UNBRACED BOTTOM CHORD LENGTH = 10.00 FT OR RIGID CEILING DIRECTLY APPLIED.

ALL PITCH BREAKS AND PERIMETER CORNER JOINTS MUST BE LATERALLY RESTRAINED.

LOADING
TOTAL LOAD CASES: (4)

CHORDS

MEMB. FR-TO	MAX. FACTORED FORCE (LBS)	FACTORED VERT. LOAD LC1 (PLF) FROM	TO	MAX CSI (LC)	MAX. UNBRAC LENGTH
A- B	0 / 36	-95.2	-95.2	0.13 (1)	10.00
B- C	0 / 24	-95.2	-95.2	0.23 (1)	10.00
C- D	-714 / 0	-95.2	-95.2	0.18 (1)	6.25
D- E	-714 / 0	-95.2	-95.2	0.18 (1)	6.25
E- F	0 / 24	-95.2	-95.2	0.23 (1)	10.00
F- G	0 / 36	-95.2	-95.2	0.13 (1)	10.00
J- B	-274 / 0	0.0	0.0	0.03 (1)	7.81
H- F	-274 / 0	0.0	0.0	0.03 (1)	7.81
J- I	0 / 734	-18.5	-18.5	0.38 (4)	10.00
I- H	0 / 734	-18.5	-18.5	0.38 (4)	10.00

WEBS

MEMB. FR-TO	MAX. FACTORED FORCE (LBS)	MAX CSI (LC)
I- D	0 / 478	0.11 (1)
I- E	-218 / 0	0.11 (1)
C- I	-218 / 0	0.11 (1)
J- C	-1009 / 0	0.47 (1)
E- H	-1009 / 0	0.47 (1)

DESIGN CRITERIA

SPECIFIED LOADS:

TOP CH.	LL	=	26.7	PSF
	DL	=	6.0	PSF
BOT CH.	LL	=	0.0	PSF
	DL	=	7.4	PSF
TOTAL LOAD		=	40.1	PSF

SPACING = 24.0 IN. C/C

THIS TRUSS IS DESIGNED FOR RESIDENTIAL OR SMALL BUILDING REQUIREMENTS OF PART 9, NBCC 2015

THIS DESIGN COMPLIES WITH:
- PART 9 OF BCBC 2018 , ABC 2019
- PART 9 OF OBC 2012 (2019 AMENDMENT)
- CSA 086-14
- TPIC 2014

(55 % OF 33.4 P.S.F. G.S.L. PLUS 8.4 P.S.F. RAIN LOAD) EQUALS 26.7 P.S.F. SPECIFIED ROOF LIVE LOAD

ALLOWABLE DEFL.(LL)= L/360 (0.52")
CALCULATED VERT. DEFL.(LL) = L/ 999 (0.02")
ALLOWABLE DEFL.(TL)= L/360 (0.52")
CALCULATED VERT. DEFL.(TL) = L/ 999 (0.09")

CSI: TC=0.23/1.00 (B-C:1) , BC=0.38/1.00 (H-I:4) , WB=0.47/1.00 (C-J:1) , SSI=0.15/1.00 (C-D:1)

DOL LUMBER=1.00 NAIL=1.00 LS BEND=1.10 COMP=1.10 SHEAR=1.10 TENS= 1.10

COMPANION LIVE LOAD FACTOR = 1.00

TRUSS PLATE MANUFACTURER IS NOT RESPONSIBLE FOR QUALITY CONTROL IN THE TRUSS MANUFACTURING PLANT .

NAIL VALUES

PLATE	GRIP(DRY) (PSI) MAX	MIN	SHEAR (PLI) MAX	MIN	SECTION (PLI) MAX	MIN
MT20	650	371	1747	788	1987	1873

PLATE PLACEMENT TOL. = 0.250 inches

PLATE ROTATION TOL. = 5.0 Deg.

JSI GRIP= 0.81 (H) (INPUT = 0.90)
JSI METAL= 0.32 (C) (INPUT = 1.00)

LICENSED PROFESSIONAL ENGINEER
8/02/22
C. M. HEYENS
100505065
PROVINCE OF ONTARIO

STRUCTURAL COMPONENT ONLY
DWG # TR22080266

JOB NAME	TRUSS NAME	QUANTITY	PLY	JOB DESC.	DRWG NO.
427633	T3	1	2	GREEN PARK HOMES TRUSS DESC.	

Tamarack Roof Truss, Burlington

Version 8.530 S Feb 23 2022 MiTek Industries, Inc. Tue Aug 2 14:59:01 2022 Page 1

ID:5jddhdQ2aVEKS8ItDc496Sz15V3-r43TEYTU510mnErh4LVHv0Gwcw5VumWRHad681yrss8

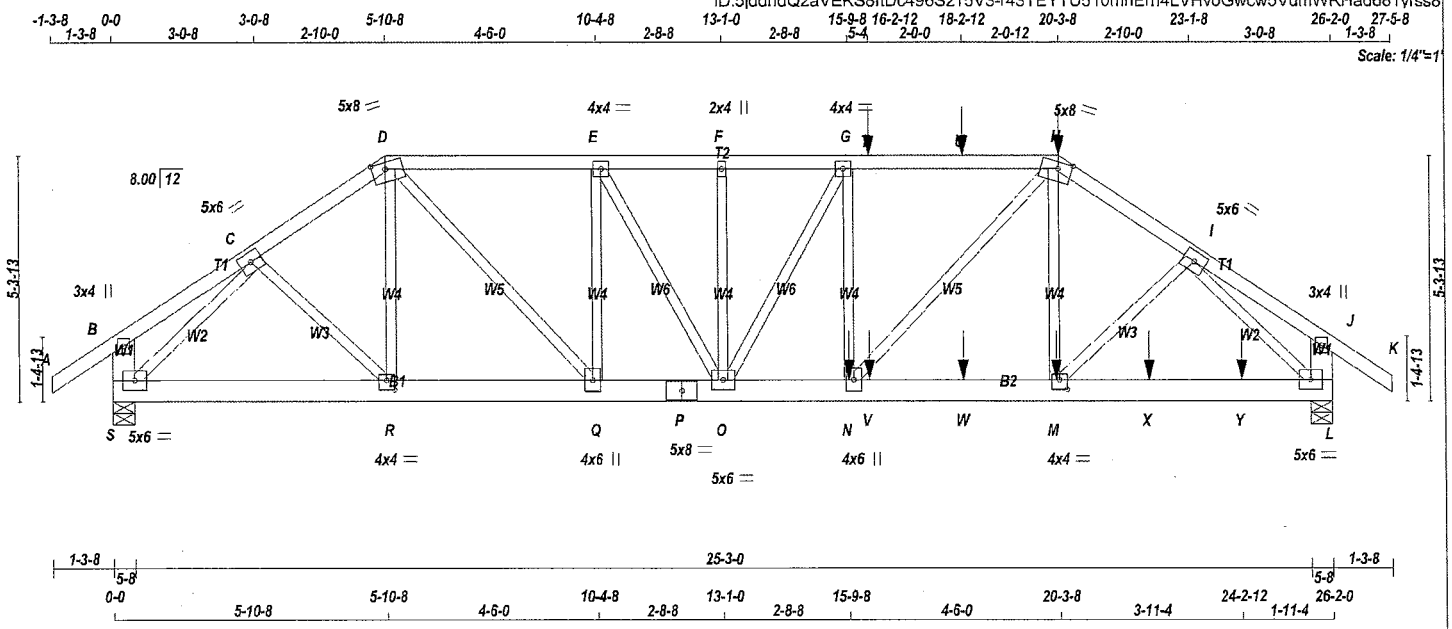

TOTAL WEIGHT = 2 X 136 = 272 lb

[M]

LUMBER

N. L. G. A. RULES

CHORDS	SIZE		LUMBER	DESCR.
A - D	2x4	DRY	No.2	SPF
D - H	2x4	DRY	No.2	SPF
H - K	2x4	DRY	No.2	SPF
S - B	2x6	DRY	No.2	SPF
L - J	2x6	DRY	No.2	SPF
S - P	2x6	DRY	No.2	SPF
P - L	2x6	DRY	No.2	SPF
ALL WEBS EXCEPT	2x3	DRY	No.2	SPF

DRY: SEASONED LUMBER.

DESIGN CONSISTS OF 2 TRUSSES BUILT SEPARATELY THEN FASTENED TOGETHER AS FOLLOWS:

CHORDS	#ROWS	SURFACE SPACING (IN)	LOAD(PLF)
TOP CHORDS : (0.122"X3") SPIRAL NAILS			
A- D	1	12	TOP
D- H	1	12	SIDE(61.0)
H- K	1	12	SIDE(61.0)
S- B	2	12	TOP
L- J	2	12	TOP
BOTTOM CHORDS : (0.122"X3") SPIRAL NAILS			
S- P	2	12	TOP
P- L	2	12	SIDE(183.1)
WEBS : (0.122"X3") SPIRAL NAILS			
M- H	1	6	SIDE(18.5)
G- N	1	6	SIDE(172.0)
2x3	1	6	

NAILS TO BE DRIVEN FROM ONE SIDE ONLY.

GIRDER NAILING ASSUMES NAILED HANGERS ARE FASTENED WITH MIN. 3-0 INCH NAILS.

TOP - COMPONENTS ARE LOADED FROM THE TOP AND MUST BE PLACED ON TOP EDGE OF ALL PLIES FOR THE LOAD TO BE TRANSFERRED TO EACH PLY.

LICENSED PROFESSIONAL ENGINEER
8/02/22
C. M. HEYENS
100505065
PROVINCE OF ONTARIO

STRUCTURAL COMPONENT ONLY
DWG # TR22080279 PG 1/2

DIMENSIONS, SUPPORTS AND LOADINGS SPECIFIED BY FABRICATOR TO BE VERIFIED BY BUILDING DESIGNER

BEARINGS

JT	FACTORED GROSS REACTION VERT	HORZ	MAXIMUM FACTORED GROSS REACTION DOWN	HORZ	UPLIFT	INPUT BRG IN-SX	REQRD BRG IN-SX
S	2388	0	2388	0	0	5-8	5-8
L	3111	0	3111	0	0	5-8	5-8

UNFACTORED REACTIONS

JT	1ST LCASE COMBINED	SNOW	LIVE	PERM.LIVE	WIND	DEAD	SOIL
	MAX./MIN. COMPONENT REACTIONS						
S	1680	1149 / 0	0 / 0	0 / 0	0 / 0	531 / 0	0 / 0
L	2191	1492 / 0	0 / 0	0 / 0	0 / 0	699 / 0	0 / 0

BEARING MATERIAL TO BE SPF NO.2 OR BETTER AT JOINT(S) S, L

BRACING

TOP CHORD TO BE SHEATHED OR MAX. PURLIN SPACING = 4.29 FT.
MAX. UNBRACED BOTTOM CHORD LENGTH = 10.00 FT OR RIGID CEILING DIRECTLY APPLIED.

ALL PITCH BREAKS AND PERIMETER CORNER JOINTS MUST BE LATERALLY RESTRAINED.

LOADING

TOTAL LOAD CASES: (4)

CHORDS MEMB. FR-TO	MAX. FACTORED FORCE (LBS)	FACTORED VERT. LOAD (PLF) FROM	TO	LC1 MAX CSI (LC)	MAX. UNBRAC LENGTH	WEBS MEMB. FR-TO	MAX. FACTORED FORCE (LBS)	MAX CSI (LC)
A- B	0 / 36	-95.2	-95.2	0.07 (1)	10.00	C- R	0 / 315	0.04 (1)
B- C	0 / 13	-95.2	-95.2	0.05 (1)	10.00	R- D	-107 / 35	0.02 (1)
C- D	-2788 / 0	-95.2	-95.2	0.08 (1)	5.42	D- Q	0 / 1825	0.23 (1)
D- E	-3532 / 0	-95.2	-95.2	0.18 (1)	4.83	Q- E	-1266 / 0	0.26 (1)
E- F	-3984 / 0	-95.2	-95.2	0.18 (1)	4.59	N- G	0 / 85	0.02 (4)
F- G	-3984 / 0	-95.2	-95.2	0.23 (1)	4.52	N- H	0 / 1815	0.22 (1)
G- T	-4367 / 0	-95.2	-95.2	0.30 (1)	4.29	M- H	-136 / 97	0.03 (1)
T- U	-4367 / 0	-95.2	-95.2	0.30 (1)	4.29	M- I	0 / 519	0.06 (1)
U- H	-4367 / 0	-95.2	-95.2	0.30 (1)	4.29	S- C	-2948 / 0	0.41 (1)
H- I	-3801 / 0	-95.2	-95.2	0.11 (1)	4.77	I- L	-3935 / 0	0.54 (1)
I- J	0 / 11	-95.2	-95.2	0.06 (1)	10.00	E- O	0 / 940	0.12 (1)
J- K	0 / 36	-95.2	-95.2	0.07 (1)	10.00	O- F	-84 / 0	0.02 (1)
S- B	-247 / 0	0.0	0.0	0.01 (1)	7.81	O- G	-798 / 0	0.21 (1)
L- J	-251 / 0	0.0	0.0	0.01 (1)	7.81			
S- R	0 / 2077	-18.5	-18.5	0.16 (1)	10.00			
R- Q	0 / 2302	-18.5	-18.5	0.16 (1)	10.00			
Q- P	0 / 3532	-18.5	-18.5	0.26 (1)	10.00			
P- O	0 / 3532	-18.5	-18.5	0.26 (1)	10.00			
O- N	0 / 4367	-18.5	-18.5	0.33 (1)	10.00			
N- V	0 / 3143	-18.5	-18.5	0.25 (1)	10.00			
V- W	0 / 3143	-18.5	-18.5	0.25 (1)	10.00			
W- M	0 / 3143	-18.5	-18.5	0.25 (1)	10.00			
M- X	0 / 2773	-18.5	-18.5	0.22 (1)	10.00			
X- Y	0 / 2773	-18.5	-18.5	0.22 (1)	10.00			
Y- L	0 / 2773	-18.5	-18.5	0.22 (1)	10.00			

SPECIFIED CONCENTRATED LOADS (LBS)

JT	LOC.	LC1	MAX-	MAX+	FACE	DIR.	TYPE	HEEL	CONN.
H	20-3-8	-371	-371	---	FRONT	VERT	TOTAL	---	C1
M	20-2-12	-22	-22	---	FRONT	VERT	TOTAL	---	C1
N	15-9-8	-955	-955	---	FRONT	VERT	TOTAL	---	C1
T	16-2-12	-79	-79	---	FRONT	VERT	TOTAL	---	C1
U	18-2-12	-79	-79	---	FRONT	VERT	TOTAL	---	C1
V	16-2-12	-22	-22	---	FRONT	VERT	TOTAL	---	C1
W	18-2-12	-22	-22	---	FRONT	VERT	TOTAL	---	C1
X	22-2-12	-22	-22	---	FRONT	VERT	TOTAL	---	C1
Y	24-2-12	-21	-21	---	FRONT	VERT	TOTAL	---	C1

DESIGN CRITERIA

SPECIFIED LOADS:

TOP CH.	LL	=	26.7	PSF
	DL	=	6.0	PSF
BOT CH.	LL	=	0.0	PSF
	DL	=	7.4	PSF
TOTAL LOAD		=	40.1	PSF

SPACING = 24.0 IN. C/C

LOADING IN FLAT SECTION BASED ON A SLOPE OF 6.00/12

THIS TRUSS IS DESIGNED FOR RESIDENTIAL OR SMALL BUILDING REQUIREMENTS OF PART 9, NBCC 2015

THIS DESIGN COMPLIES WITH:
- PART 9 OF BCBC 2018 , ABC 2019
- PART 9 OF OBC 2012 (2019 AMENDMENT)
- CSA 086-14
- TPIC 2014

(55 % OF 33.4 P.S.F. G.S.L. PLUS 8.4 P.S.F. RAIN LOAD) EQUALS 26.7 P.S.F. SPECIFIED ROOF LIVE LOAD

ALLOWABLE DEFL.(LL)= L/360 (0.87")
CALCULATED VERT. DEFL.(LL) = L/ 999 (0.07")
ALLOWABLE DEFL.(TL)= L/360 (0.87")
CALCULATED VERT. DEFL.(TL) = L/ 999 (0.13")

CSI: TC=0.30/1.00 (G-H:1) , BC=0.33/1.00 (N-O:1) , WB=0.54/1.00 (I-L:1) , SSI=0.18/1.00 (G-H:1)

DOL LUMBER=1.00 NAIL=1.00 LS BEND=1.00 COMP=1.00 SHEAR=1.00 TENS= 1.00

COMPANION LIVE LOAD FACTOR = 1.00

AUTOSOLVE HEELS OFF

TRUSS PLATE MANUFACTURER IS NOT RESPONSIBLE FOR QUALITY CONTROL IN THE TRUSS MANUFACTURING PLANT.

NAIL VALUES

PLATE	GRIP(DRY) (PSI) MAX	MIN	SHEAR (PLI) MAX	MIN	SECTION (PLI) MAX	MIN
MT20	650	371	1747	788	1987	1873

PLATE PLACEMENT TOL. = 0.250 inches

PLATE ROTATION TOL. = 5.0 Deg.

JSI GRIP= 0.77 (I) (INPUT = 0.90)
JSI METAL= 0.45 (I) (INPUT = 1.00)

CONTINUED ON PAGE 2

JOB NAME	TRUSS NAME	QUANTITY	PLY	JOB DESC. GREEN PARK HOMES	DRWG NO.
427633	T3	1	2	TRUSS DESC.	

PLATES (table is in inches)

JT	TYPE	PLATES	W	LEN	Y	X
B	TMV+p	MT20	3.0	4.0		
C	TMWW-t	MT20	5.0	6.0		
D	TTWW-m	MT20	5.0	8.0	1.75	3.50
E	TMWW-t	MT20	4.0	4.0		
F	TMW+w	MT20	2.0	4.0		
G	TMWW-t	MT20	4.0	4.0		
H	TTWW-m	MT20	5.0	8.0	1.75	3.50
I	TMWW-t	MT20	5.0	6.0		
J	TMV+p	MT20	3.0	4.0		
L	BMVW1-t	MT20	5.0	6.0		
M	BMWW-t	MT20	4.0	4.0	2.50	2.00
N	BMWW+t	MT20	4.0	6.0		
O	BMWWW-t	MT20	5.0	6.0		
P	BS-t	MT20	5.0	8.0		
Q	BMWW+t	MT20	4.0	6.0		
R	BMWW-t	MT20	4.0	4.0	2.50	2.00
S	BMVW1-t	MT20	5.0	6.0		

NOTES- (1)
1) Lateral braces to be a minimum of 2X4 SPF #2.

CONNECTION REQUIREMENTS

1) **C1:** A SUITABLE HANGER/MECHANICAL CONNECTION IS REQUIRED.

LICENSED PROFESSIONAL ENGINEER
8/02/22
C. M. HEYENS
100505065
PROVINCE OF ONTARIO

STRUCTURAL COMPONENT ONLY
DWG # TR22080279 PG 2/2

JOB NAME	TRUSS NAME	QUANTITY	PLY	JOB DESC.	DRWG NO.
427659	T3Z2	1	2	GREEN PARK HOMES TRUSS DESC.	

Tamarack Roof Truss, Burlington

Version 8.530 S Feb 23 2022 MiTek Industries, Inc. Tue Aug 2 14:35:42 2022 Page 1

ID:5jddhdQ2aVEKS8ItDc496Sz15V3-Jw1bcAXxZCmGREPpd1vDi qqJzcWc1QWaQEaXcyrtC?

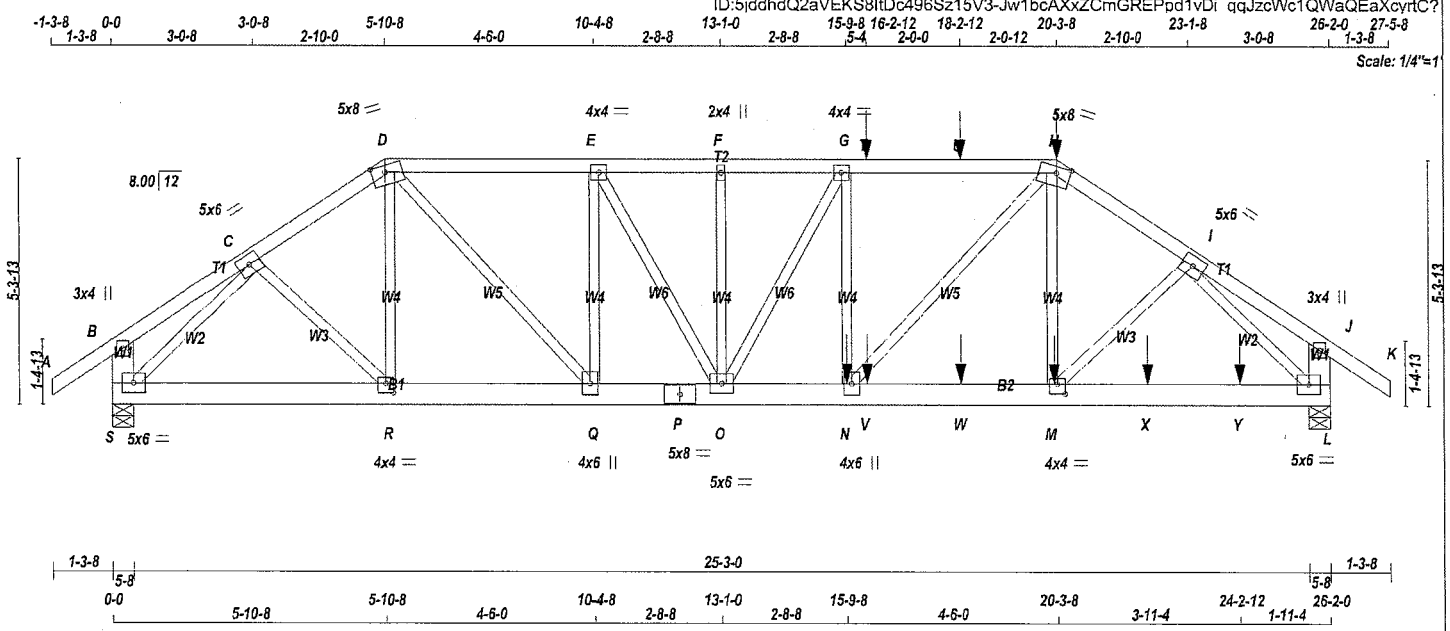

TOTAL WEIGHT = 2 X 136 = 272 lb

[M]

LUMBER

N. L. G. A. RULES

CHORDS	SIZE		LUMBER	DESCR.
A - D	2x4	DRY	No.2	SPF
D - H	2x4	DRY	No.2	SPF
H - K	2x4	DRY	No.2	SPF
S - B	2x6	DRY	No.2	SPF
L - J	2x6	DRY	No.2	SPF
S - P	2x6	DRY	No.2	SPF
P - L	2x6	DRY	No.2	SPF
ALL WEBS EXCEPT	2x3	DRY	No.2	SPF

DRY: SEASONED LUMBER.

DESIGN CONSISTS OF 2 TRUSSES BUILT SEPARATELY THEN FASTENED TOGETHER AS FOLLOWS:

CHORDS	#ROWS	SURFACE SPACING (IN)	LOAD(PLF)
TOP CHORDS : (0.122"X3") SPIRAL NAILS			
A- D	1	12	TOP
D- H	1	12	SIDE(61.0)
H- K	1	12	SIDE(61.0)
S- B	2	12	TOP
L- J	2	12	TOP
BOTTOM CHORDS : (0.122"X3") SPIRAL NAILS			
S- P	2	12	TOP
P- L	2	12	SIDE(183.1)
WEBS : (0.122"X3") SPIRAL NAILS			
M- H	1	6	SIDE(18.5)
G- N	1	6	SIDE(278.8)
2x3	1	6	

NAILS TO BE DRIVEN FROM ONE SIDE ONLY.

GIRDER NAILING ASSUMES NAILED HANGERS ARE FASTENED WITH MIN. 3-0 INCH NAILS.

TOP - COMPONENTS ARE LOADED FROM THE TOP AND MUST BE PLACED ON TOP EDGE OF ALL PLIES FOR THE LOAD TO BE TRANSFERRED TO EACH PLY.

LICENSED PROFESSIONAL ENGINEER
8/02/22
C. M. HEYENS
100505065
PROVINCE OF ONTARIO

STRUCTURAL COMPONENT ONLY
DWG # TR22080305 PG 1/2

DIMENSIONS, SUPPORTS AND LOADINGS SPECIFIED BY FABRICATOR TO BE VERIFIED BY BUILDING DESIGNER

BEARINGS

JT	FACTORED GROSS REACTION VERT	HORZ	MAXIMUM FACTORED GROSS REACTION DOWN	HORZ	UPLIFT	INPUT BRG IN-SX	REQRD BRG IN-SX
S	2550	0	2550	0	0	5-8	5-8
L	3359	0	3359	0	0	5-8	5-8

UNFACTORED REACTIONS

JT	1ST LCASE COMBINED	MAX./MIN. COMPONENT REACTIONS SNOW	LIVE	PERM.LIVE	WIND	DEAD	SOIL
S	1794	1229 / 0	0 / 0	0 / 0	0 / 0	565 / 0	0 / 0
L	2364	1613 / 0	0 / 0	0 / 0	0 / 0	751 / 0	0 / 0

BEARING MATERIAL TO BE SPF NO.2 OR BETTER AT JOINT(S) S, L

BRACING

TOP CHORD TO BE SHEATHED OR MAX. PURLIN SPACING = 4.07 FT.
MAX. UNBRACED BOTTOM CHORD LENGTH = 10.00 FT OR RIGID CEILING DIRECTLY APPLIED.

ALL PITCH BREAKS AND PERIMETER CORNER JOINTS MUST BE LATERALLY RESTRAINED.

LOADING

TOTAL LOAD CASES: (4)

CHORDS

MEMB. FR-TO	MAX. FORCE (LBS)	FACTORED VERT. LOAD (PLF) FROM	TO	LC1	MAX CSI (LC)	MAX. UNBRAC LENGTH
A- B	0 / 36	-95.2	-95.2	0.07 (1)	10.00	
B- C	0 / 12	-95.2	-95.2	0.05 (1)	10.00	
C- D	-3022 / 0	-95.2	-95.2	0.09 (1)	5.24	
D- E	-3873 / 0	-95.2	-95.2	0.19 (1)	4.64	
E- F	-4414 / 0	-95.2	-95.2	0.19 (1)	4.39	
F- G	-4414 / 0	-95.2	-95.2	0.24 (1)	4.32	
G- T	-4879 / 0	-95.2	-95.2	0.33 (1)	4.07	
T- U	-4879 / 0	-95.2	-95.2	0.33 (1)	4.07	
U- H	-4879 / 0	-95.2	-95.2	0.33 (1)	4.07	
H- I	-4158 / 0	-95.2	-95.2	0.12 (1)	4.58	
I- J	0 / 10	-95.2	-95.2	0.06 (1)	10.00	
J- K	0 / 36	-95.2	-95.2	0.07 (1)	10.00	
S- B	-248 / 0	0.0	0.0	0.01 (1)	7.81	
L- J	-252 / 0	0.0	0.0	0.01 (1)	7.81	
S- R	0 / 2238	-18.5	-18.5	0.17 (1)	10.00	
R- Q	0 / 2495	-18.5	-18.5	0.18 (1)	10.00	
Q- P	0 / 3873	-18.5	-18.5	0.28 (1)	10.00	
P- O	0 / 3873	-18.5	-18.5	0.28 (1)	10.00	
O- N	0 / 4879	-18.5	-18.5	0.37 (1)	10.00	
N- V	0 / 3439	-18.5	-18.5	0.28 (1)	10.00	
V- W	0 / 3439	-18.5	-18.5	0.28 (1)	10.00	
W- M	0 / 3439	-18.5	-18.5	0.28 (1)	10.00	
M- X	0 / 3018	-18.5	-18.5	0.23 (1)	10.00	
X- Y	0 / 3018	-18.5	-18.5	0.23 (1)	10.00	
Y- L	0 / 3018	-18.5	-18.5	0.23 (1)	10.00	

WEBS

MEMB. FR-TO	MAX. FORCE (LBS)	MAX CSI (LC)
C- R	0 / 362	0.04 (1)
R- D	-139 / 25	0.03 (1)
D- Q	0 / 2043	0.25 (1)
Q- E	-1427 / 0	0.29 (1)
N- G	0 / 216	0.03 (1)
N- H	0 / 2135	0.26 (1)
M- H	-177 / 85	0.04 (1)
M- I	0 / 591	0.07 (1)
S- C	-3176 / 0	0.44 (1)
I- L	-4283 / 0	0.59 (1)
E- O	0 / 1126	0.14 (1)
O- F	-87 / 0	0.02 (1)
O- G	-968 / 0	0.26 (1)

SPECIFIED CONCENTRATED LOADS (LBS)

JT	LOC.	LC1	MAX-	MAX+	FACE	DIR.	TYPE	HEEL	CONN.
H	20-3-8	-371	-371	---	FRONT	VERT	TOTAL	---	C1
M	20-2-12	-22	-22	---	FRONT	VERT	TOTAL	---	C1
N	15-9-8	-1242	-1242	---	FRONT	VERT	TOTAL	---	C1
T	16-2-12	-79	-79	---	FRONT	VERT	TOTAL	---	C1
U	18-2-12	-79	-79	---	FRONT	VERT	TOTAL	---	C1
V	16-2-12	-22	-22	---	FRONT	VERT	TOTAL	---	C1
W	18-2-12	-22	-22	---	FRONT	VERT	TOTAL	---	C1
X	22-2-12	-22	-22	---	FRONT	VERT	TOTAL	---	C1
Y	24-2-12	-21	-21	---	FRONT	VERT	TOTAL	---	C1

DESIGN CRITERIA

SPECIFIED LOADS:

TOP CH.	LL	=	26.7	PSF
	DL	=	6.0	PSF
BOT CH.	LL	=	0.0	PSF
	DL	=	7.4	PSF
TOTAL LOAD		=	40.1	PSF

SPACING = 24.0 IN. C/C

LOADING IN FLAT SECTION BASED ON A SLOPE OF 6.00/12

THIS TRUSS IS DESIGNED FOR RESIDENTIAL OR SMALL BUILDING REQUIREMENTS OF PART 9, NBCC 2015

THIS DESIGN COMPLIES WITH:
- PART 9 OF BCBC 2018 , ABC 2019
- PART 9 OF OBC 2012 (2019 AMENDMENT)
- CSA 086-14
- TPIC 2014

(55 % OF 33.4 P.S.F. G.S.L. PLUS 8.4 P.S.F. RAIN LOAD) EQUALS 26.7 P.S.F. SPECIFIED ROOF LIVE LOAD

ALLOWABLE DEFL.(LL)= L/360 (0.87")
CALCULATED VERT. DEFL.(LL) = L/ 999 (0.08")
ALLOWABLE DEFL.(TL)= L/360 (0.87")
CALCULATED VERT. DEFL.(TL) = L/ 999 (0.14")

CSI: TC=0.33/1.00 (G-H:1) , BC=0.37/1.00 (N-O:1) , WB=0.59/1.00 (I-L:1) , SSI=0.18/1.00 (G-H:1)

DOL LUMBER=1.00 NAIL=1.00 LS BEND=1.00 COMP=1.00 SHEAR=1.00 TENS= 1.00

COMPANION LIVE LOAD FACTOR = 1.00

AUTOSOLVE HEELS OFF

TRUSS PLATE MANUFACTURER IS NOT RESPONSIBLE FOR QUALITY CONTROL IN THE TRUSS MANUFACTURING PLANT .

NAIL VALUES

PLATE	GRIP(DRY) (PSI) MAX	MIN	SHEAR (PLI) MAX	MIN	SECTION (PLI) MAX	MIN
MT20	650	371	1747	788	1987	1873

PLATE PLACEMENT TOL. = 0.250 inches

PLATE ROTATION TOL. = 5.0 Deg.

JSI GRIP= 0.84 (I) (INPUT = 0.90)
JSI METAL= 0.49 (I) (INPUT = 1.00)

CONTINUED ON PAGE 2

JOB NAME	TRUSS NAME	QUANTITY	PLY	JOB DESC. GREEN PARK HOMES	DRWG NO.
427659	T3Z2	1	2	TRUSS DESC.	

PLATES (table is in inches)

JT	TYPE	PLATES	W	LEN	Y	X
B	TMV+p	MT20	3.0	4.0		
C	TMWW-t	MT20	5.0	6.0		
D	TTWW-m	MT20	5.0	8.0	1.75	3.50
E	TMWW-t	MT20	4.0	4.0		
F	TMV+w	MT20	2.0	4.0		
G	TMWW-t	MT20	4.0	4.0		
H	TTWW-m	MT20	5.0	8.0	1.75	3.50
I	TMWW-t	MT20	5.0	6.0		
J	TMV+p	MT20	3.0	4.0		
L	BMVW1-t	MT20	5.0	6.0		
M	BMWW-t	MT20	4.0	4.0	2.50	2.00
N	BMWW+t	MT20	4.0	6.0		
O	BMWWW-t	MT20	5.0	6.0		
P	BS-t	MT20	5.0	8.0		
Q	BMWW+t	MT20	4.0	6.0		
R	BMWW-t	MT20	4.0	4.0	2.50	2.00
S	BMVW1-t	MT20	5.0	6.0		

NOTES- (1)
1) Lateral braces to be a minimum of 2X4 SPF #2.

CONNECTION REQUIREMENTS

1) **C1:** A SUITABLE HANGER/MECHANICAL CONNECTION IS REQUIRED.

LICENSED PROFESSIONAL ENGINEER
8/02/22
C. M. HEYENS
100505065
PROVINCE OF ONTARIO

STRUCTURAL COMPONENT ONLY
DWG # TR22080305 PG 2/2

JOB NAME	TRUSS NAME	QUANTITY	PLY	JOB DESC.	DRWG NO.
427659	T3Z3	1	2	GREEN PARK HOMES TRUSS DESC.	

Tamarack Roof Truss, Burlington

Version 8.530 S Feb 23 2022 MiTek Industries, Inc. Tue Aug 2 14:35:43 2022 Page 1

ID:5jddhdQ2aVEKS8ltDc496Sz15V3-n7bzqWYZKVu72Oz?BlQSFCM?yNs2LUlqp4z843yrtC

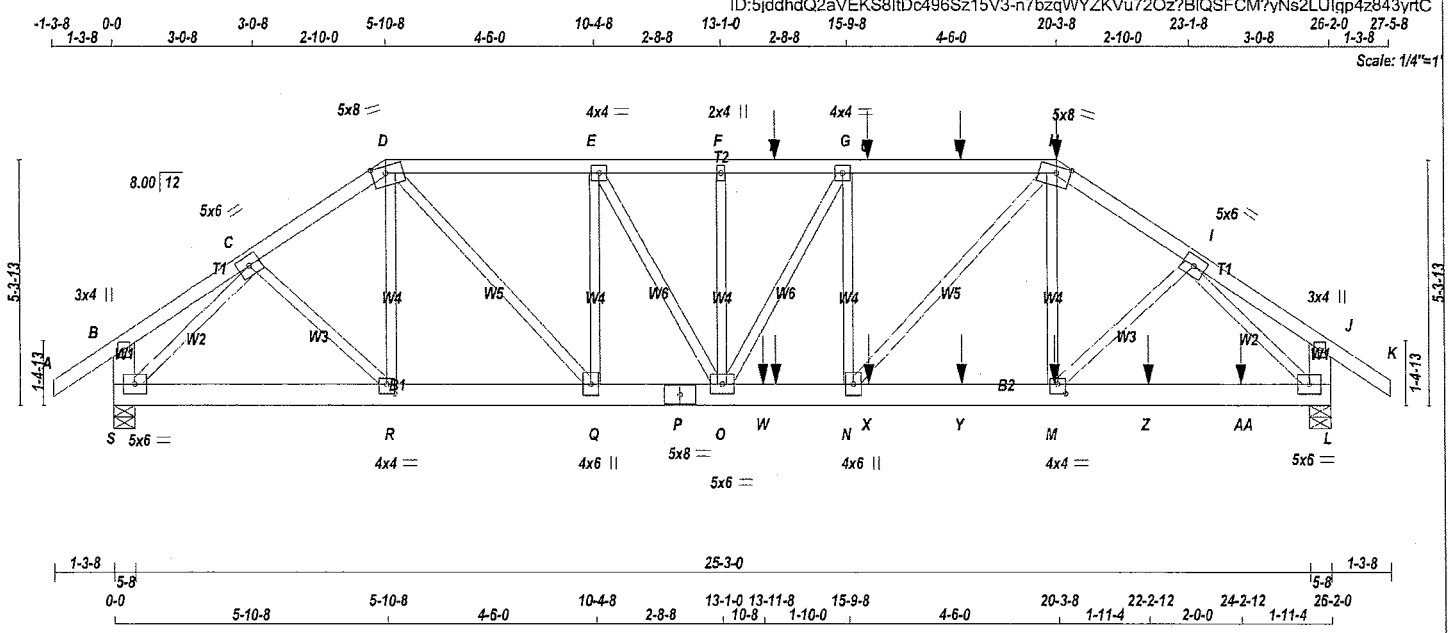

TOTAL WEIGHT = 2 X 136 = 272 lb

LUMBER

N. L. G. A. RULES

CHORDS	SIZE		LUMBER	DESCR.
A - D	2x4	DRY	No.2	SPF
D - H	2x4	DRY	No.2	SPF
H - K	2x4	DRY	No.2	SPF
S - B	2x6	DRY	No.2	SPF
L - J	2x6	DRY	No.2	SPF
S - P	2x6	DRY	No.2	SPF
P - L	2x6	DRY	No.2	SPF
ALL WEBS EXCEPT	2x3	DRY	No.2	SPF

DRY: SEASONED LUMBER.

DESIGN CONSISTS OF 2 TRUSSES BUILT SEPARATELY THEN FASTENED TOGETHER AS FOLLOWS:

CHORDS	#ROWS	SURFACE SPACING (IN)	LOAD(PLF)
TOP CHORDS : (0.122"X3") SPIRAL NAILS			
A- D	1	12	TOP
D- H	1	12	SIDE(61.0)
H- K	1	12	SIDE(61.0)
S- B	2	12	TOP
L- J	2	12	TOP
BOTTOM CHORDS : (0.122"X3") SPIRAL NAILS			
S- P	2	12	TOP
P- L	2	12	SIDE(183.1)
WEBS : (0.122"X3") SPIRAL NAILS			
M- H	1	6	SIDE(18.5)
2x3	1	6	

NAILS TO BE DRIVEN FROM ONE SIDE ONLY.

GIRDER NAILING ASSUMES NAILED HANGERS ARE FASTENED WITH MIN. 3-0 INCH NAILS.

TOP - COMPONENTS ARE LOADED FROM THE TOP AND MUST BE PLACED ON TOP EDGE OF ALL PLIES FOR THE LOAD TO BE TRANSFERRED TO EACH PLY.

LICENSED PROFESSIONAL ENGINEER
8/02/22
C. M. HEYENS
100505065
PROVINCE OF ONTARIO

STRUCTURAL COMPONENT ONLY
DWG # TR22080306 PG 1/2

DIMENSIONS, SUPPORTS AND LOADINGS SPECIFIED BY FABRICATOR TO BE VERIFIED BY BUILDING DESIGNER

BEARINGS

JT	FACTORED GROSS REACTION VERT	HORZ	MAXIMUM FACTORED GROSS REACTION DOWN	HORZ	UPLIFT	INPUT BRG IN-SX	REQRD BRG IN-SX
S	2900	0	2900	0	0	5-8	5-8
L	3495	0	3495	0	0	5-8	5-8

UNFACTORED REACTIONS

JT	1ST LCASE COMBINED	SNOW	MAX./MIN. COMPONENT REACTIONS LIVE	PERM.LIVE	WIND	DEAD	SOIL
S	2041	1397 / 0	0 / 0	0 / 0	0 / 0	643 / 0	0 / 0
L	2461	1676 / 0	0 / 0	0 / 0	0 / 0	785 / 0	0 / 0

BEARING MATERIAL TO BE SPF NO.2 OR BETTER AT JOINT(S) S, L

BRACING

TOP CHORD TO BE SHEATHED OR MAX. PURLIN SPACING = 3.90 FT.
MAX. UNBRACED BOTTOM CHORD LENGTH = 10.00 FT OR RIGID CEILING DIRECTLY APPLIED.

ALL PITCH BREAKS AND PERIMETER CORNER JOINTS MUST BE LATERALLY RESTRAINED.

LOADING

TOTAL LOAD CASES: (4)

CHORDS

MEMB. FR-TO	MAX. FACTORED FORCE (LBS)	FACTORED VERT. LOAD (PLF) FROM	TO	LC1	MAX CSI (LC)	MAX. UNBRAC LENGTH
A- B	0 / 36	-95.2	-95.2	0.07 (1)	10.00	
B- C	0 / 11	-95.2	-95.2	0.06 (1)	10.00	
C- D	-3527 / 0	-95.2	-95.2	0.10 (1)	4.92	
D- E	-4597 / 0	-95.2	-95.2	0.22 (1)	4.30	
E- F	-5397 / 0	-95.2	-95.2	0.22 (1)	3.99	
F- T	-5397 / 0	-95.2	-95.2	0.29 (1)	3.90	
T- G	-5397 / 0	-95.2	-95.2	0.29 (1)	3.90	
G- U	-5243 / 0	-95.2	-95.2	0.33 (1)	3.94	
U- V	-5243 / 0	-95.2	-95.2	0.33 (1)	3.94	
V- H	-5243 / 0	-95.2	-95.2	0.33 (1)	3.94	
H- I	-4338 / 0	-95.2	-95.2	0.13 (1)	4.50	
I- J	0 / 10	-95.2	-95.2	0.06 (1)	10.00	
J- K	0 / 36	-95.2	-95.2	0.07 (1)	10.00	
S- B	-249 / 0	0.0	0.0	0.01 (1)	7.81	
L- J	-252 / 0	0.0	0.0	0.01 (1)	7.81	
S- R	0 / 2585	-18.5	-18.5	0.19 (1)	10.00	
R- Q	0 / 2915	-18.5	-18.5	0.21 (1)	10.00	
Q- P	0 / 4597	-18.5	-18.5	0.38 (1)	10.00	
P- O	0 / 4597	-18.5	-18.5	0.38 (1)	10.00	
O- W	0 / 5243	-18.5	-18.5	0.74 (1)	10.00	
W- N	0 / 5243	-18.5	-18.5	0.74 (1)	10.00	
N- X	0 / 3586	-18.5	-18.5	0.31 (1)	10.00	
X- Y	0 / 3586	-18.5	-18.5	0.31 (1)	10.00	
Y- M	0 / 3586	-18.5	-18.5	0.31 (1)	10.00	
M- Z	0 / 3142	-18.5	-18.5	0.25 (1)	10.00	
Z-AA	0 / 3142	-18.5	-18.5	0.25 (1)	10.00	
AA- L	0 / 3142	-18.5	-18.5	0.25 (1)	10.00	

WEBS

MEMB. FR-TO	MAX. FACTORED FORCE (LBS)	MAX CSI (LC)
C- R	0 / 464	0.06 (1)
R- D	-196 / 7	0.04 (1)
D- Q	0 / 2496	0.31 (1)
Q- E	-1897 / 0	0.39 (1)
N- G	-977 / 0	0.20 (1)
N- H	0 / 2457	0.30 (1)
M- H	-310 / 43	0.06 (1)
M- I	0 / 627	0.08 (1)
S- C	-3669 / 0	0.51 (1)
I- L	-4459 / 0	0.61 (1)
E- O	0 / 1663	0.21 (1)
O- F	-141 / 0	0.03 (1)
O- G	0 / 320	0.04 (1)

SPECIFIED CONCENTRATED LOADS (LBS)

JT	LOC.	LC1	MAX-	MAX+	FACE	DIR.	TYPE	HEEL	CONN.
H	20-3-8	-371	-371	---	FRONT	VERT	TOTAL	---	C1
M	20-2-12	-22	-22	---	FRONT	VERT	TOTAL	---	C1
T	14-2-12	-79	-79	---	FRONT	VERT	TOTAL	---	C1
U	16-2-12	-79	-79	---	FRONT	VERT	TOTAL	---	C1
V	18-2-12	-79	-79	---	FRONT	VERT	TOTAL	---	C1
W	13-11-8	-1485	-1485	---	FRONT	VERT	TOTAL	---	C1
W	14-2-12	-22	-22	---	FRONT	VERT	TOTAL	---	C1
X	16-2-12	-22	-22	---	FRONT	VERT	TOTAL	---	C1

[M]

DESIGN CRITERIA

SPECIFIED LOADS:

TOP CH.	LL	=	26.7	PSF
	DL	=	6.0	PSF
BOT CH.	LL	=	0.0	PSF
	DL	=	7.4	PSF
TOTAL LOAD		=	40.1	PSF

SPACING = 24.0 IN. C/C

LOADING IN FLAT SECTION BASED ON A SLOPE OF 6.00/12

THIS TRUSS IS DESIGNED FOR RESIDENTIAL OR SMALL BUILDING REQUIREMENTS OF PART 9, NBCC 2015

THIS DESIGN COMPLIES WITH:
- PART 9 OF BCBC 2018 , ABC 2019
- PART 9 OF OBC 2012 (2019 AMENDMENT)
- CSA 086-14
- TPIC 2014

(55 % OF 33.4 P.S.F. G.S.L. PLUS 8.4 P.S.F. RAIN LOAD) EQUALS 26.7 P.S.F. SPECIFIED ROOF LIVE LOAD

ALLOWABLE DEFL.(LL)= L/360 (0.87")
CALCULATED VERT. DEFL.(LL) = L/ 999 (0.10")
ALLOWABLE DEFL.(TL)= L/360 (0.87")
CALCULATED VERT. DEFL.(TL) = L/ 999 (0.17")

CSI: TC=0.33/1.00 (G-H:1) , BC=0.74/1.00 (N-O:1) , WB=0.61/1.00 (I-L:1) , SSI=0.49/1.00 (N-O:1)

DOL LUMBER=1.00 NAIL=1.00 LS BEND=1.00 COMP=1.00 SHEAR=1.00 TENS= 1.00

COMPANION LIVE LOAD FACTOR = 1.00

AUTOSOLVE HEELS OFF

TRUSS PLATE MANUFACTURER IS NOT RESPONSIBLE FOR QUALITY CONTROL IN THE TRUSS MANUFACTURING PLANT .

NAIL VALUES

PLATE	GRIP(DRY) (PSI) MAX	MIN	SHEAR (PLI) MAX	MIN	SECTION (PLI) MAX	MIN
MT20	650	371	1747	788	1987	1873

PLATE PLACEMENT TOL. = 0.250 inches

PLATE ROTATION TOL. = 5.0 Deg.

JSI GRIP= 0.89 (E) (INPUT = 0.90)
JSI METAL= 0.95 (P) (INPUT = 1.00)

CONTINUED ON PAGE 2

JOB NAME	TRUSS NAME	QUANTITY	PLY	JOB DESC.	DRWG NO.
427659	T3Z3	1	2	GREEN PARK HOMES TRUSS DESC.	

PLATES (table is in inches)

JT	TYPE	PLATES	W	LEN	Y	X
B	TMV+p	MT20	3.0	4.0		
C	TMWW-t	MT20	5.0	6.0		
D	TTWW-m	MT20	5.0	8.0	1.75	3.50
E	TMWW-t	MT20	4.0	4.0		
F	TMW+w	MT20	2.0	4.0		
G	TMWW-t	MT20	4.0	4.0		
H	TTWW-m	MT20	5.0	8.0	1.75	3.50
I	TMWW-t	MT20	5.0	6.0		
J	TMV+p	MT20	3.0	4.0		
L	BMVW1-t	MT20	5.0	6.0		
M	BMWW-t	MT20	4.0	4.0	2.50	2.00
N	BMWW+t	MT20	4.0	6.0		
O	BMWWW-t	MT20	5.0	6.0		
P	BS-t	MT20	5.0	8.0		
Q	BMWW+t	MT20	4.0	6.0		
R	BMWW-t	MT20	4.0	4.0	2.50	2.00
S	BMVW1-t	MT20	5.0	6.0		

NOTES- (1)
1) Lateral braces to be a minimum of 2X4 SPF #2.

SPECIFIED CONCENTRATED LOADS (LBS)

JT	LOC.	LC1	MAX-	MAX+	FACE	DIR.	TYPE	HEEL	CONN.
Y	18-2-12	-22	-22	---	FRONT	VERT	TOTAL	---	C1
Z	22-2-12	-22	-22	---	FRONT	VERT	TOTAL	---	C1
AA	24-2-12	-21	-21	---	FRONT	VERT	TOTAL	---	C1

CONNECTION REQUIREMENTS

1) **C1:** A SUITABLE HANGER/MECHANICAL CONNECTION IS REQUIRED.

LICENSED PROFESSIONAL ENGINEER
8/02/22
C. M. HEYENS
100505065
PROVINCE OF ONTARIO

STRUCTURAL COMPONENT ONLY
DWG # TR22080306 PG 2/2

JOB NAME	TRUSS NAME	QUANTITY	PLY	JOB DESC.	DRWG NO.
427633	T4	1	1	GREEN PARK HOMES TRUSS DESC.	

Tamarack Roof Truss, Burlington

Version 8.530 S Feb 23 2022 MiTek Industries, Inc. Tue Aug 2 14:13:52 2022 Page 1

ID:5jddhdQ2aVEKS8ltDc496Sz15V3-fvtMgEqD4ij8GwF1tvO0ckZzNvW6qYQiLcuGYYyrtWT

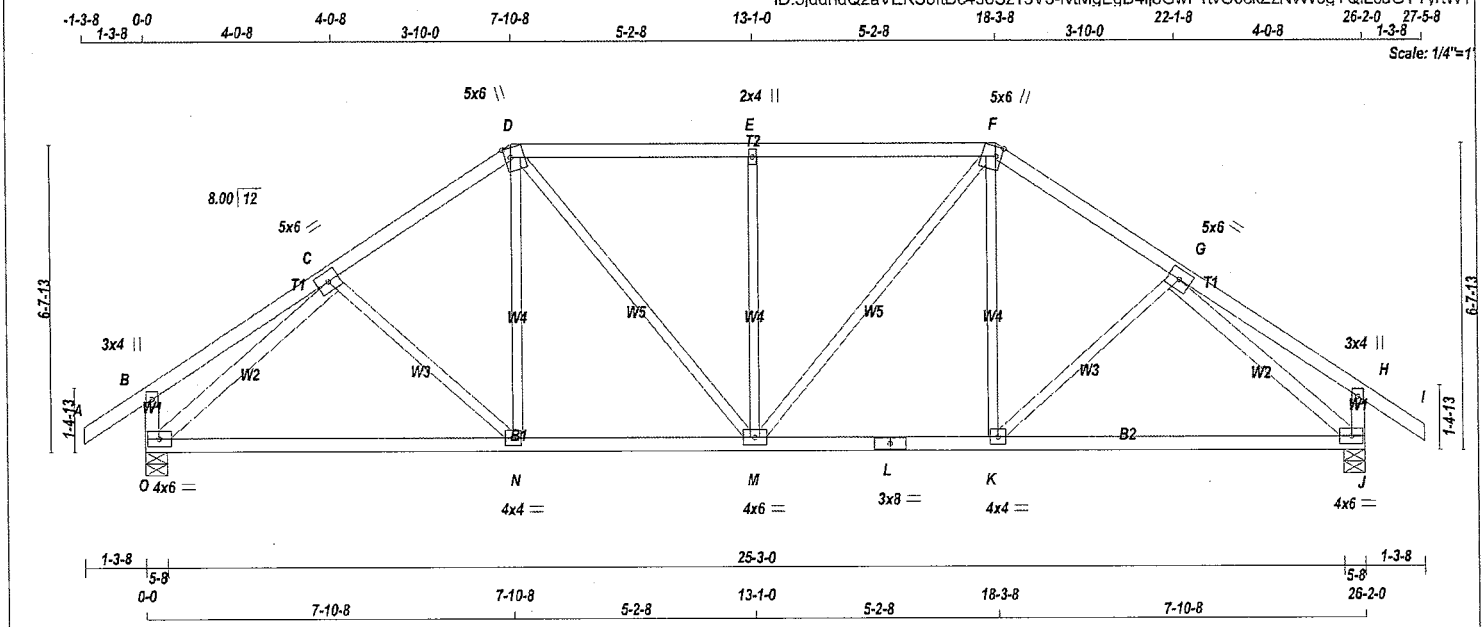

TOTAL WEIGHT = 117 lb

[M][F]

LUMBER

N. L. G. A. RULES

CHORDS	SIZE		LUMBER	DESCR.
A - D	2x4	DRY	No.2	SPF
D - F	2x4	DRY	No.2	SPF
F - I	2x4	DRY	No.2	SPF
O - B	2x4	DRY	No.2	SPF
J - H	2x4	DRY	No.2	SPF
O - L	2x4	DRY	No.2	SPF
L - J	2x4	DRY	No.2	SPF
ALL WEBS	2x3	DRY	No.2	SPF
EXCEPT				
O - C	2x4	DRY	No.2	SPF
G - J	2x4	DRY	No.2	SPF

DRY: SEASONED LUMBER.

PLATES (table is in inches)

JT	TYPE	PLATES	W	LEN	Y	X
B	TMV+p	MT20	3.0	4.0		
C	TMWW-t	MT20	5.0	6.0		
D	TTWW+m	MT20	5.0	6.0	2.50	1.50
E	TMW+w	MT20	2.0	4.0		
F	TTWW+m	MT20	5.0	6.0	2.50	1.50
G	TMWW-t	MT20	5.0	6.0		
H	TMV+p	MT20	3.0	4.0		
J	BMVW1-t	MT20	4.0	6.0		
K	BMWW-t	MT20	4.0	4.0		
L	BS-t	MT20	3.0	8.0		
M	BMWWW-t	MT20	4.0	6.0		
N	BMWW-t	MT20	4.0	4.0		
O	BMVW1-t	MT20	4.0	6.0		

NOTES- (1)

1) Lateral braces to be a minimum of 2X4 SPF #2.

LICENSED PROFESSIONAL ENGINEER
8/02/22
C. M. HEYENS
100505065
PROVINCE OF ONTARIO

STRUCTURAL COMPONENT ONLY
DWG # TR22080267

DIMENSIONS, SUPPORTS AND LOADINGS SPECIFIED BY FABRICATOR TO BE VERIFIED BY BUILDING DESIGNER

BEARINGS

JT	FACTORED GROSS REACTION VERT	HORZ	MAXIMUM FACTORED GROSS REACTION DOWN	HORZ	UPLIFT	INPUT BRG IN-SX	REQRD BRG IN-SX
O	1618	0	1618	0	0	5-8	5-8
J	1618	0	1618	0	0	5-8	5-8

UNFACTORED REACTIONS

JT	1ST LCASE COMBINED	MAX./MIN. COMPONENT REACTIONS SNOW	LIVE	PERM.LIVE	WIND	DEAD	SOIL
O	1140	773 / 0	0 / 0	0 / 0	0 / 0	367 / 0	0 / 0
J	1140	773 / 0	0 / 0	0 / 0	0 / 0	367 / 0	0 / 0

BEARING MATERIAL TO BE SPF NO.2 OR BETTER AT JOINT(S) O, J

BRACING

TOP CHORD TO BE SHEATHED OR MAX. PURLIN SPACING = 4.86 FT.
MAX. UNBRACED BOTTOM CHORD LENGTH = 10.00 FT OR RIGID CEILING DIRECTLY APPLIED.

ALL PITCH BREAKS AND PERIMETER CORNER JOINTS MUST BE LATERALLY RESTRAINED.

LOADING

TOTAL LOAD CASES: (4)

CHORDS

MEMB. FR-TO	MAX. FACTORED FORCE (LBS)	FACTORED VERT. LOAD LC1 (PLF) FROM	TO	MAX CSI (LC)	MAX. UNBRAC LENGTH
A- B	0 / 36	-95.2	-95.2	0.13 (1)	10.00
B- C	0 / 23	-95.2	-95.2	0.23 (1)	10.00
C- D	-1595 / 0	-95.2	-95.2	0.21 (1)	5.04
D- E	-1578 / 0	-95.2	-95.2	0.36 (1)	4.86
E- F	-1578 / 0	-95.2	-95.2	0.36 (1)	4.86
F- G	-1595 / 0	-95.2	-95.2	0.21 (1)	5.04
G- H	0 / 23	-95.2	-95.2	0.23 (1)	10.00
H- I	0 / 36	-95.2	-95.2	0.13 (1)	10.00
O- B	-275 / 0	0.0	0.0	0.03 (1)	7.81
J- H	-275 / 0	0.0	0.0	0.03 (1)	7.81
O- N	0 / 1362	-18.5	-18.5	0.36 (1)	10.00
N- M	0 / 1308	-18.5	-18.5	0.37 (4)	10.00
M- L	0 / 1308	-18.5	-18.5	0.37 (4)	10.00
L- K	0 / 1308	-18.5	-18.5	0.37 (4)	10.00
K- J	0 / 1362	-18.5	-18.5	0.36 (1)	10.00

WEBS

MEMB. FR-TO	MAX. FACTORED FORCE (LBS)	MAX CSI (LC)
C- N	-77 / 30	0.04 (1)
N- D	0 / 207	0.05 (4)
K- F	0 / 207	0.05 (4)
K- G	-77 / 30	0.04 (1)
O- C	-1870 / 0	0.64 (1)
G- J	-1870 / 0	0.64 (1)
M- E	-605 / 0	0.44 (1)
M- F	0 / 426	0.10 (1)
D- M	0 / 426	0.10 (1)

DESIGN CRITERIA

SPECIFIED LOADS:

TOP CH.	LL	=	26.7	PSF
	DL	=	6.0	PSF
BOT CH.	LL	=	0.0	PSF
	DL	=	7.4	PSF
TOTAL LOAD		=	40.1	PSF

SPACING = 24.0 IN. C/C

LOADING IN FLAT SECTION BASED ON A SLOPE OF 6.00/12

THIS TRUSS IS DESIGNED FOR RESIDENTIAL OR SMALL BUILDING REQUIREMENTS OF PART 9, NBCC 2015

THIS DESIGN COMPLIES WITH:
- PART 9 OF BCBC 2018 , ABC 2019
- PART 9 OF OBC 2012 (2019 AMENDMENT)
- CSA 086-14
- TPIC 2014

(55 % OF 33.4 P.S.F. G.S.L. PLUS 8.4 P.S.F. RAIN LOAD) EQUALS 26.7 P.S.F. SPECIFIED ROOF LIVE LOAD

ALLOWABLE DEFL.(LL)= L/360 (0.87")
CALCULATED VERT. DEFL.(LL) = L/ 999 (0.05")
ALLOWABLE DEFL.(TL)= L/360 (0.87")
CALCULATED VERT. DEFL.(TL) = L/ 999 (0.15")

CSI: TC=0.36/1.00 (D-E:1) , BC=0.37/1.00 (M-N:4) , WB=0.64/1.00 (G-J:1) , SSI=0.24/1.00 (D-E:1)

DOL LUMBER=1.00 NAIL=1.00 LS BEND=1.10 COMP=1.10 SHEAR=1.10 TENS= 1.10

COMPANION LIVE LOAD FACTOR = 1.00

AUTOSOLVE HEELS OFF

TRUSS PLATE MANUFACTURER IS NOT RESPONSIBLE FOR QUALITY CONTROL IN THE TRUSS MANUFACTURING PLANT .

NAIL VALUES

PLATE	GRIP(DRY) (PSI) MAX	MIN	SHEAR (PLI) MAX	MIN	SECTION (PLI) MAX	MIN
MT20	650	371	1747	788	1987	1873

PLATE PLACEMENT TOL. = 0.250 inches

PLATE ROTATION TOL. = 5.0 Deg.

JSI GRIP= 0.87 (O) (INPUT = 0.90)
JSI METAL= 0.42 (C) (INPUT = 1.00)

JOB NAME	TRUSS NAME	QUANTITY	PLY	JOB DESC.	DRWG NO.
427633	T5	1	1	GREEN PARK HOMES TRUSS DESC.	

Tamarack Roof Truss, Burlington

Version 8.530 S Feb 23 2022 MiTek Industries, Inc. Tue Aug 2 14:13:53 2022 Page 1
ID:5jddhdQ2aVEKS8ltDc496Sz15V3-75RktahsrT?u4qERdwF9y67vJoqP GraGep4 yrtWS

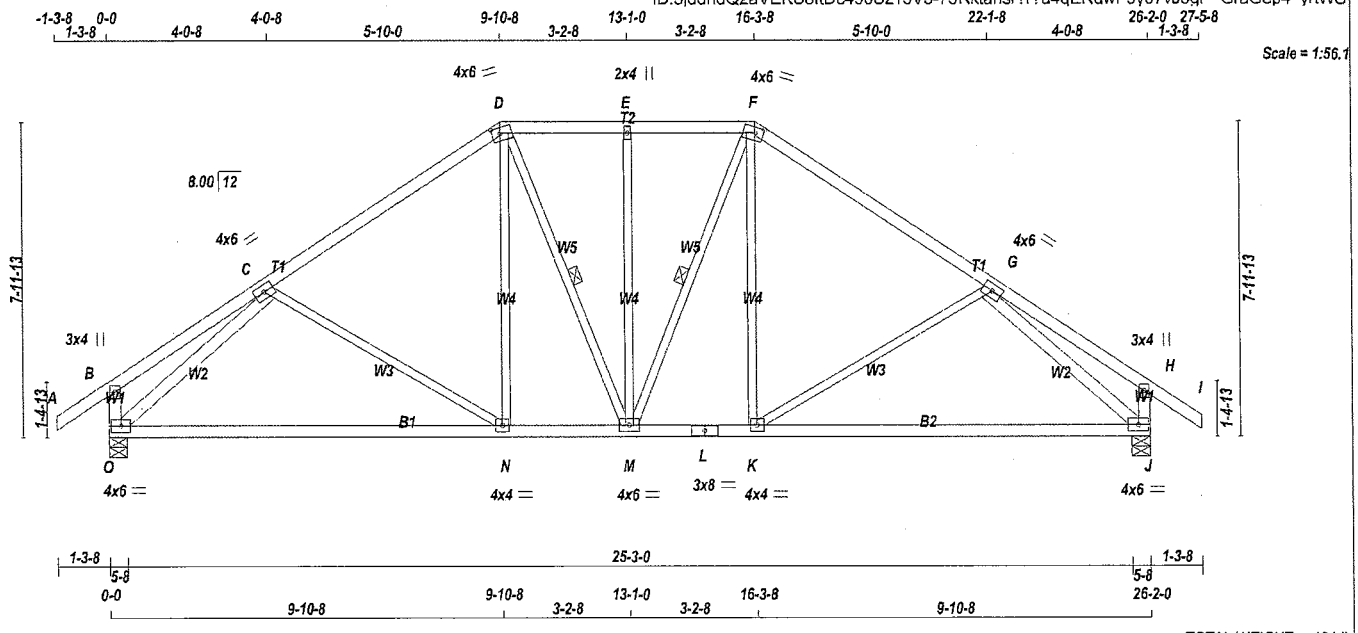

TOTAL WEIGHT = 124 lb

LUMBER
N. L. G. A. RULES

CHORDS	SIZE		LUMBER	DESCR.
A - D	2x4	DRY	No.2	SPF
D - F	2x4	DRY	No.2	SPF
F - I	2x4	DRY	No.2	SPF
O - B	2x4	DRY	No.2	SPF
J - H	2x4	DRY	No.2	SPF
O - L	2x4	DRY	No.2	SPF
L - J	2x4	DRY	No.2	SPF
ALL WEBS EXCEPT	2x3	DRY	No.2	SPF
O - C	2x4	DRY	No.2	SPF
G - J	2x4	DRY	No.2	SPF

DRY: SEASONED LUMBER.

PLATES (table is in inches)

JT	TYPE	PLATES	W	LEN	Y	X
B	TMV+p	MT20	3.0	4.0		
C	TMWW-t	MT20	4.0	6.0		
D	TTWW-m	MT20	4.0	6.0	1.75	2.50
E	TMW+w	MT20	2.0	4.0		
F	TTWW-m	MT20	4.0	6.0	1.75	2.50
G	TMWW-t	MT20	4.0	6.0		
H	TMV+p	MT20	3.0	4.0		
J	BMVW1-t	MT20	4.0	6.0		
K	BMWW-t	MT20	4.0	4.0		
L	BS-t	MT20	3.0	8.0		
M	BMWWW-t	MT20	4.0	6.0		
N	BMWW-t	MT20	4.0	4.0		
O	BMVW1-t	MT20	4.0	6.0		

NOTES- (1)
1) Lateral braces to be a minimum of 2X4 SPF #2.

LICENSED PROFESSIONAL ENGINEER
8/02/22
C. M. HEYENS
100505065
PROVINCE OF ONTARIO

STRUCTURAL COMPONENT ONLY
DWG # TR22080268

DIMENSIONS, SUPPORTS AND LOADINGS SPECIFIED BY FABRICATOR TO BE VERIFIED BY BUILDING DESIGNER

BEARINGS

JT	FACTORED GROSS REACTION VERT	HORZ	MAXIMUM FACTORED GROSS REACTION DOWN	HORZ	UPLIFT	INPUT BRG IN-SX	REQRD BRG IN-SX
O	1618	0	1618	0	0	5-8	5-8
J	1618	0	1618	0	0	5-8	5-8

UNFACTORED REACTIONS

JT	1ST LCASE COMBINED	MAX./MIN. COMPONENT REACTIONS SNOW	LIVE	PERM.LIVE	WIND	DEAD	SOIL
O	1140	773 / 0	0 / 0	0 / 0	0 / 0	367 / 0	0 / 0
J	1140	773 / 0	0 / 0	0 / 0	0 / 0	367 / 0	0 / 0

BEARING MATERIAL TO BE SPF NO.2 OR BETTER AT JOINT(S) O, J

BRACING
TOP CHORD TO BE SHEATHED OR MAX. PURLIN SPACING = 4.88 FT.
MAX. UNBRACED BOTTOM CHORD LENGTH = 10.00 FT OR RIGID CEILING DIRECTLY APPLIED.

ALL PITCH BREAKS AND PERIMETER CORNER JOINTS MUST BE LATERALLY RESTRAINED.

1 LATERAL BRACE(S) AT 1/ 2 LENGTH OF F-M, D-M.

END VERTICAL(S) MUST BE SHEATHED OR HAVE BRACES AS INDICATED IN THE MAX. UNBRACED LENGTH COLUMN OF THE TABLE BELOW

LOADING
TOTAL LOAD CASES: (4)

CHORDS

MEMB. FR-TO	MAX. FACTORED FORCE (LBS)	FACTORED VERT. LOAD (PLF) FROM	TO	LC1 CSI (LC)	MAX UNBRAC LENGTH
A- B	0 / 36	-95.2	-95.2	0.13 (1)	10.00
B- C	0 / 43	-95.2	-95.2	0.43 (1)	10.00
C- D	-1487 / 0	-95.2	-95.2	0.44 (1)	4.88
D- E	-1270 / 0	-95.2	-95.2	0.13 (1)	5.59
E- F	-1270 / 0	-95.2	-95.2	0.13 (1)	5.59
F- G	-1487 / 0	-95.2	-95.2	0.44 (1)	4.88
G- H	0 / 43	-95.2	-95.2	0.43 (1)	10.00
H- I	0 / 36	-95.2	-95.2	0.13 (1)	10.00
O- B	-241 / 0	0.0	0.0	0.02 (1)	7.81
J- H	-241 / 0	0.0	0.0	0.02 (1)	7.81
O- N	0 / 1386	-18.5	-18.5	0.53 (4)	10.00
N- M	0 / 1216	-18.5	-18.5	0.54 (4)	10.00
M- L	0 / 1216	-18.5	-18.5	0.54 (4)	10.00
L- K	0 / 1216	-18.5	-18.5	0.54 (4)	10.00
K- J	0 / 1386	-18.5	-18.5	0.53 (4)	10.00

WEBS

MEMB. FR-TO	MAX. FACTORED FORCE (LBS)	MAX CSI (LC)
C- N	-205 / 6	0.20 (1)
N- D	0 / 326	0.08 (4)
K- F	0 / 326	0.08 (4)
K- G	-205 / 6	0.20 (1)
O- C	-1903 / 0	0.66 (1)
G- J	-1903 / 0	0.66 (1)
M- E	-361 / 0	0.44 (1)
M- F	-29 / 141	0.03 (1)
D- M	-29 / 141	0.03 (1)

[M][F]

DESIGN CRITERIA

SPECIFIED LOADS:

TOP CH.	LL	=	26.7	PSF
	DL	=	6.0	PSF
BOT CH.	LL	=	0.0	PSF
	DL	=	7.4	PSF
TOTAL LOAD		=	40.1	PSF

SPACING = 24.0 IN. C/C

LOADING IN FLAT SECTION BASED ON A SLOPE OF 6.00/12

THIS TRUSS IS DESIGNED FOR RESIDENTIAL OR SMALL BUILDING REQUIREMENTS OF PART 9, NBCC 2015

THIS DESIGN COMPLIES WITH:
- PART 9 OF BCBC 2018 , ABC 2019
- PART 9 OF OBC 2012 (2019 AMENDMENT)
- CSA 086-14
- TPIC 2014

(55 % OF 33.4 P.S.F. G.S.L. PLUS 8.4 P.S.F. RAIN LOAD) EQUALS 26.7 P.S.F. SPECIFIED ROOF LIVE LOAD

ALLOWABLE DEFL.(LL)= L/360 (0.87")
CALCULATED VERT. DEFL.(LL) = L/ 999 (0.05")
ALLOWABLE DEFL.(TL)= L/360 (0.87")
CALCULATED VERT. DEFL.(TL) = L/ 999 (0.28")

CSI: TC=0.44/1.00 (C-D:1) , BC=0.54/1.00 (K-M:4) , WB=0.66/1.00 (G-J:1) , SSI=0.22/1.00 (C-D:1)

DOL LUMBER=1.00 NAIL=1.00 LS BEND=1.10 COMP=1.10 SHEAR=1.10 TENS= 1.10

COMPANION LIVE LOAD FACTOR = 1.00

AUTOSOLVE HEELS OFF

TRUSS PLATE MANUFACTURER IS NOT RESPONSIBLE FOR QUALITY CONTROL IN THE TRUSS MANUFACTURING PLANT .

NAIL VALUES

PLATE	GRIP(DRY) (PSI) MAX	MIN	SHEAR (PLI) MAX	MIN	SECTION (PLI) MAX	MIN
MT20	650	371	1747	788	1987	1873

PLATE PLACEMENT TOL. = 0.250 inches

PLATE ROTATION TOL. = 5.0 Deg.

JSI GRIP= 0.89 (J) (INPUT = 0.90)
JSI METAL= 0.51 (L) (INPUT = 1.00)

JOB NAME	TRUSS NAME	QUANTITY	PLY	JOB DESC.	DRWG NO.
427633	T6	1	1	GREEN PARK HOMES TRUSS DESC.	

Tamarack Roof Truss, Burlington

Version 8.530 S Feb 23 2022 MiTek Industries, Inc. Tue Aug 2 14:13:54 2022 Page 1
ID:5jddhdQ2aVEKS8ltDc496Sz15V3-cl?65wiUbJzrWEPQ?KRUh9fHajCM8S3?owNMdQyrtWR

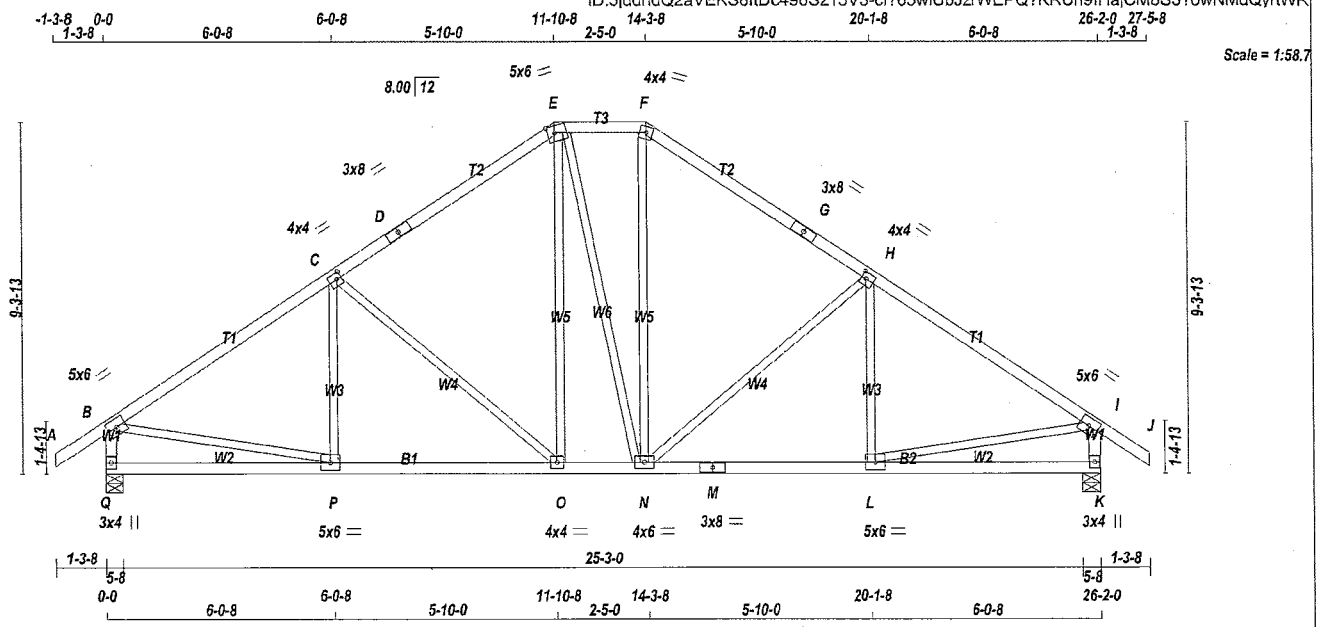

TOTAL WEIGHT = 122 lb

[M][F]

LUMBER

N. L. G. A. RULES

CHORDS	SIZE		LUMBER	DESCR.
A - D	2x4	DRY	No.2	SPF
D - E	2x4	DRY	No.2	SPF
E - F	2x4	DRY	No.2	SPF
F - G	2x4	DRY	No.2	SPF
G - J	2x4	DRY	No.2	SPF
Q - B	2x4	DRY	No.2	SPF
K - I	2x4	DRY	No.2	SPF
Q - M	2x4	DRY	No.2	SPF
M - K	2x4	DRY	No.2	SPF
ALL WEBS EXCEPT	2x3	DRY	No.2	SPF

DRY: SEASONED LUMBER.

PLATES (table is in inches)

JT	TYPE	PLATES	W	LEN	Y	X
B	TMVW-t	MT20	5.0	6.0		
C	TMWW-t	MT20	4.0	4.0	2.00	1.50
D	TS-t	MT20	3.0	8.0		
E	TTWW-m	MT20	5.0	6.0	2.25	2.25
F	TTW-m	MT20	4.0	4.0		
G	TS-t	MT20	3.0	8.0		
H	TMWW-t	MT20	4.0	4.0	2.00	1.50
I	TMVW-t	MT20	5.0	6.0		
K	BMV1+p	MT20	3.0	4.0		
L	BMWW-t	MT20	5.0	6.0		
M	BS-t	MT20	3.0	8.0		
N	BMWWW-t	MT20	4.0	6.0		
O	BMWW-t	MT20	4.0	4.0		
P	BMWW-t	MT20	5.0	6.0		
Q	BMV1+p	MT20	3.0	4.0		

NOTES- (1)
1) Lateral braces to be a minimum of 2X4 SPF #2.

LICENSED PROFESSIONAL ENGINEER
8/02/22
C. M. HEYENS
100505065
PROVINCE OF ONTARIO

STRUCTURAL COMPONENT ONLY
DWG # TR22080269

DIMENSIONS, SUPPORTS AND LOADINGS SPECIFIED BY FABRICATOR TO BE VERIFIED BY BUILDING DESIGNER

BEARINGS

JT	FACTORED GROSS REACTION VERT	HORZ	MAXIMUM FACTORED GROSS REACTION DOWN	HORZ	UPLIFT	INPUT BRG IN-SX	REQRD BRG IN-SX
Q	1618	0	1618	0	0	5-8	5-8
K	1618	0	1618	0	0	5-8	5-8

UNFACTORED REACTIONS

JT	1ST LCASE COMBINED	MAX./MIN. COMPONENT REACTIONS SNOW	LIVE	PERM.LIVE	WIND	DEAD	SOIL
Q	1140	773 / 0	0 / 0	0 / 0	0 / 0	367 / 0	0 / 0
K	1140	773 / 0	0 / 0	0 / 0	0 / 0	367 / 0	0 / 0

BEARING MATERIAL TO BE SPF NO.2 OR BETTER AT JOINT(S) Q, K

BRACING

TOP CHORD TO BE SHEATHED OR MAX. PURLIN SPACING = 4.53 FT.
MAX. UNBRACED BOTTOM CHORD LENGTH = 10.00 FT OR RIGID CEILING DIRECTLY APPLIED.

ALL PITCH BREAKS AND PERIMETER CORNER JOINTS MUST BE LATERALLY RESTRAINED.

LOADING

TOTAL LOAD CASES: (4)

CHORDS

MEMB. FR-TO	MAX. FACTORED FORCE (LBS)	FACTORED VERT. LOAD LC1 (PLF) FROM	TO	MAX CSI (LC)	MAX. UNBRAC LENGTH
A- B	0 / 36	-95.2	-95.2	0.13 (1)	10.00
B- C	-1700 / 0	-95.2	-95.2	0.51 (1)	4.53
C- D	-1325 / 0	-95.2	-95.2	0.47 (1)	5.05
D- E	-1325 / 0	-95.2	-95.2	0.47 (1)	5.05
E- F	-1075 / 0	-95.2	-95.2	0.08 (1)	6.01
F- G	-1327 / 0	-95.2	-95.2	0.47 (1)	5.04
G- H	-1327 / 0	-95.2	-95.2	0.47 (1)	5.04
H- I	-1699 / 0	-95.2	-95.2	0.51 (1)	4.54
I- J	0 / 36	-95.2	-95.2	0.13 (1)	10.00
Q- B	-1573 / 0	0.0	0.0	0.16 (1)	6.58
K- I	-1572 / 0	0.0	0.0	0.16 (1)	6.58
Q- P	0 / 0	-18.5	-18.5	0.17 (4)	10.00
P- O	0 / 1445	-18.5	-18.5	0.32 (1)	10.00
O- N	0 / 1074	-18.5	-18.5	0.23 (1)	10.00
N- M	0 / 1445	-18.5	-18.5	0.31 (1)	10.00
M- L	0 / 1445	-18.5	-18.5	0.31 (1)	10.00
L- K	0 / 0	-18.5	-18.5	0.16 (4)	10.00

WEBS

MEMB. FR-TO	MAX. FACTORED FORCE (LBS)	MAX CSI (LC)
P- C	-131 / 60	0.06 (1)
C- O	-496 / 0	0.63 (1)
O- E	0 / 386	0.09 (1)
E- N	0 / 7	0.00 (1)
N- F	0 / 394	0.09 (1)
N- H	-493 / 0	0.62 (1)
L- H	-135 / 59	0.06 (1)
B- P	0 / 1468	0.33 (1)
L- I	0 / 1468	0.33 (1)

DESIGN CRITERIA

SPECIFIED LOADS:

TOP CH.	LL	=	26.7	PSF
	DL	=	6.0	PSF
BOT CH.	LL	=	0.0	PSF
	DL	=	7.4	PSF
TOTAL LOAD		=	40.1	PSF

SPACING = 24.0 IN. C/C

LOADING IN FLAT SECTION BASED ON A SLOPE OF 6.00/12

THIS TRUSS IS DESIGNED FOR RESIDENTIAL OR SMALL BUILDING REQUIREMENTS OF PART 9, NBCC 2015

THIS DESIGN COMPLIES WITH:
- PART 9 OF BCBC 2018 , ABC 2019
- PART 9 OF OBC 2012 (2019 AMENDMENT)
- CSA 086-14
- TPIC 2014

(55 % OF 33.4 P.S.F. G.S.L. PLUS 8.4 P.S.F. RAIN LOAD) EQUALS 26.7 P.S.F. SPECIFIED ROOF LIVE LOAD

ALLOWABLE DEFL.(LL)= L/360 (0.87")
CALCULATED VERT. DEFL.(LL) = L/ 999 (0.05")
ALLOWABLE DEFL.(TL)= L/360 (0.87")
CALCULATED VERT. DEFL.(TL) = L/ 999 (0.11")

CSI: TC=0.51/1.00 (B-C:1) , BC=0.32/1.00 (O-P:1) , WB=0.63/1.00 (C-O:1) , SSI=0.23/1.00 (B-C:1)

DOL LUMBER=1.00 NAIL=1.00 LS BEND=1.10 COMP=1.10 SHEAR=1.10 TENS= 1.10

COMPANION LIVE LOAD FACTOR = 1.00

TRUSS PLATE MANUFACTURER IS NOT RESPONSIBLE FOR QUALITY CONTROL IN THE TRUSS MANUFACTURING PLANT .

NAIL VALUES

PLATE	GRIP(DRY) (PSI) MAX	MIN	SHEAR (PLI) MAX	MIN	SECTION (PLI) MAX	MIN
MT20	650	371	1747	788	1987	1873

PLATE PLACEMENT TOL. = 0.250 inches

PLATE ROTATION TOL. = 5.0 Deg.

JSI GRIP= 0.76 (B) (INPUT = 0.90)
JSI METAL= 0.47 (M) (INPUT = 1.00)

JOB NAME	TRUSS NAME	QUANTITY	PLY	JOB DESC.	DRWG NO.
427633	T7	4	1	GREEN PARK HOMES TRUSS DESC.	

Tamarack Roof Truss, Burlington

Version 8.530 S Feb 23 2022 MiTek Industries, Inc. Tue Aug 2 14:13:55 2022 Page 1

ID:5jddhdQ2aVEKS8ltDc496Sz15V3-4UZVIGj6Md5i7O cZ2yjENBQT6XQtzy81a7w9tyrtWQ

Scale = 1:62.6

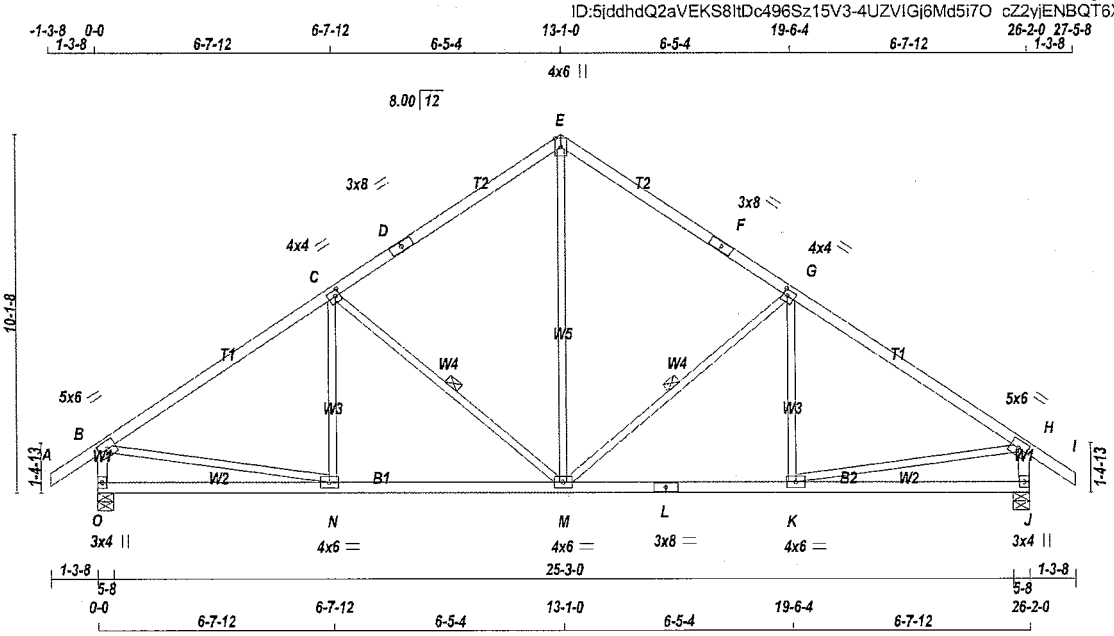

TOTAL WEIGHT = 4 X 112 = 447 lb

[M][F]

LUMBER

N. L. G. A. RULES

CHORDS	SIZE		LUMBER	DESCR.
A - D	2x4	DRY	No.2	SPF
D - E	2x4	DRY	No.2	SPF
E - F	2x4	DRY	No.2	SPF
F - I	2x4	DRY	No.2	SPF
O - B	2x4	DRY	No.2	SPF
J - H	2x4	DRY	No.2	SPF
O - L	2x4	DRY	No.2	SPF
L - J	2x4	DRY	No.2	SPF
ALL WEBS EXCEPT	2x3	DRY	No.2	SPF

DRY: SEASONED LUMBER.

PLATES (table is in inches)

JT	TYPE	PLATES	W	LEN	Y	X
B	TMVW-t	MT20	5.0	6.0		
C	TMWW-t	MT20	4.0	4.0	2.00	1.50
D	TS-t	MT20	3.0	8.0		
E	TTW+p	MT20	4.0	6.0	Edge	
F	TS-t	MT20	3.0	8.0		
G	TMWW-t	MT20	4.0	4.0	2.00	1.50
H	TMVW-t	MT20	5.0	6.0		
J	BMV1+p	MT20	3.0	4.0		
K	BMWW-t	MT20	4.0	6.0		
L	BS-t	MT20	3.0	8.0		
M	BMWWW-t	MT20	4.0	6.0		
N	BMWW-t	MT20	4.0	6.0		
O	BMV1+p	MT20	3.0	4.0		

Edge - INDICATES REFERENCE CORNER OF PLATE TOUCHES EDGE OF CHORD.

NOTES- (1)

1) Lateral braces to be a minimum of 2X4 SPF #2.

LICENSED PROFESSIONAL ENGINEER
8/02/22
C. M. HEYENS
100505065
PROVINCE OF ONTARIO

STRUCTURAL COMPONENT ONLY
DWG # TR22080270

DIMENSIONS, SUPPORTS AND LOADINGS SPECIFIED BY FABRICATOR TO BE VERIFIED BY BUILDING DESIGNER

BEARINGS

JT	FACTORED GROSS REACTION VERT	HORZ	MAXIMUM FACTORED GROSS REACTION DOWN	HORZ	UPLIFT	INPUT BRG IN-SX	REQRD BRG IN-SX
O	1618	0	1618	0	0	5-8	5-8
J	1618	0	1618	0	0	5-8	5-8

UNFACTORED REACTIONS

JT	1ST LCASE COMBINED	MAX./MIN. COMPONENT REACTIONS SNOW	LIVE	PERM.LIVE	WIND	DEAD	SOIL
O	1140	773 / 0	0 / 0	0 / 0	0 / 0	367 / 0	0 / 0
J	1140	773 / 0	0 / 0	0 / 0	0 / 0	367 / 0	0 / 0

BEARING MATERIAL TO BE SPF NO.2 OR BETTER AT JOINT(S) O, J

BRACING

TOP CHORD TO BE SHEATHED OR MAX. PURLIN SPACING = 4.36 FT.
MAX. UNBRACED BOTTOM CHORD LENGTH = 10.00 FT OR RIGID CEILING DIRECTLY APPLIED.

ALL PITCH BREAKS AND PERIMETER CORNER JOINTS MUST BE LATERALLY RESTRAINED.

1 LATERAL BRACE(S) AT 1/ 2 LENGTH OF G-M, C-M.

END VERTICAL(S) MUST BE SHEATHED OR HAVE BRACES AS INDICATED IN THE MAX. UNBRACED LENGTH COLUMN OF THE TABLE BELOW

LOADING

TOTAL LOAD CASES: (4)

CHORDS

MEMB. FR-TO	MAX. FACTORED FORCE (LBS)	FACTORED VERT. LOAD (PLF) FROM	TO	LC1 MAX CSI (LC)	MAX. UNBRAC LENGTH
A- B	0 / 36	-95.2	-95.2	0.13 (1)	10.00
B- C	-1691 / 0	-95.2	-95.2	0.63 (1)	4.36
C- D	-1243 / 0	-95.2	-95.2	0.57 (1)	4.99
D- E	-1243 / 0	-95.2	-95.2	0.57 (1)	4.99
E- F	-1243 / 0	-95.2	-95.2	0.57 (1)	4.99
F- G	-1243 / 0	-95.2	-95.2	0.57 (1)	4.99
G- H	-1691 / 0	-95.2	-95.2	0.63 (1)	4.36
H- I	0 / 36	-95.2	-95.2	0.13 (1)	10.00
O- B	-1567 / 0	0.0	0.0	0.16 (1)	6.58
J- H	-1567 / 0	0.0	0.0	0.16 (1)	6.58
O- N	0 / 0	-18.5	-18.5	0.19 (4)	10.00
N- M	0 / 1441	-18.5	-18.5	0.33 (1)	10.00
M- L	0 / 1441	-18.5	-18.5	0.33 (1)	10.00
L- K	0 / 1441	-18.5	-18.5	0.33 (1)	10.00
K- J	0 / 0	-18.5	-18.5	0.19 (4)	10.00

WEBS

MEMB. FR-TO	MAX. FACTORED FORCE (LBS)	MAX CSI (LC)
M- E	0 / 872	0.20 (1)
M- G	-583 / 0	0.29 (1)
K- G	-100 / 77	0.05 (1)
C- M	-583 / 0	0.29 (1)
N- C	-100 / 77	0.05 (1)
B- N	0 / 1460	0.33 (1)
K- H	0 / 1460	0.33 (1)

DESIGN CRITERIA

SPECIFIED LOADS:

TOP CH.	LL	=	26.7	PSF
	DL	=	6.0	PSF
BOT CH.	LL	=	0.0	PSF
	DL	=	7.4	PSF
TOTAL LOAD		=	40.1	PSF

SPACING = 24.0 IN. C/C

THIS TRUSS IS DESIGNED FOR RESIDENTIAL OR SMALL BUILDING REQUIREMENTS OF PART 9, NBCC 2015

THIS DESIGN COMPLIES WITH:
- PART 9 OF BCBC 2018 , ABC 2019
- PART 9 OF OBC 2012 (2019 AMENDMENT)
- CSA 086-14
- TPIC 2014

(55 % OF 33.4 P.S.F. G.S.L. PLUS 8.4 P.S.F. RAIN LOAD) EQUALS 26.7 P.S.F. SPECIFIED ROOF LIVE LOAD

ALLOWABLE DEFL.(LL)= L/360 (0.87")
CALCULATED VERT. DEFL.(LL) = L/ 999 (0.06")
ALLOWABLE DEFL.(TL)= L/360 (0.87")
CALCULATED VERT. DEFL.(TL) = L/ 999 (0.12")

CSI: TC=0.63/1.00 (G-H:1) , BC=0.33/1.00 (K-M:1) , WB=0.33/1.00 (H-K:1) , SSI=0.25/1.00 (G-H:1)

DOL LUMBER=1.00 NAIL=1.00 LS BEND=1.10 COMP=1.10 SHEAR=1.10 TENS= 1.10

COMPANION LIVE LOAD FACTOR = 1.00

TRUSS PLATE MANUFACTURER IS NOT RESPONSIBLE FOR QUALITY CONTROL IN THE TRUSS MANUFACTURING PLANT .

NAIL VALUES

PLATE	GRIP(DRY) (PSI) MAX	MIN	SHEAR (PLI) MAX	MIN	SECTION (PLI) MAX	MIN
MT20	550	371	1747	788	1987	1873

PLATE PLACEMENT TOL. = 0.250 inches

PLATE ROTATION TOL. = 5.0 Deg.

JSI GRIP= 0.88 (N) (INPUT = 0.90)
JSI METAL= 0.49 (L) (INPUT = 1.00)

JOB NAME	TRUSS NAME	QUANTITY	PLY	JOB DESC.	DRWG NO.
427633	T7A	8	1	GREEN PARK HOMES TRUSS DESC.	

Tamarack Roof Truss, Burlington

Version 8.530 S Feb 23 2022 MiTek Industries, Inc. Tue Aug 2 14:13:56 2022 Page 1
ID:5jddhdQ2aVEKS8ltDc496Sz15V3-Yg6tWckk7wDZlXZp6lTymakasWuKcQ IGEsThJyrtWP

Scale = 1:65.8

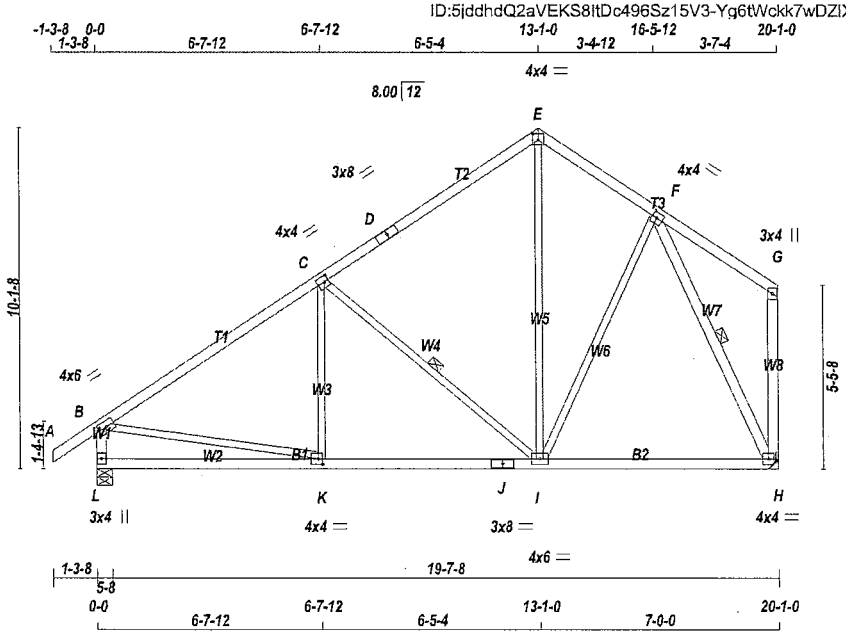

TOTAL WEIGHT = 8 X 99 = 789 lb

[M][F]

LUMBER

N. L. G. A. RULES

CHORDS	SIZE		LUMBER	DESCR.
A - D	2x4	DRY	No.2	SPF
D - E	2x4	DRY	No.2	SPF
E - G	2x4	DRY	No.2	SPF
L - B	2x4	DRY	No.2	SPF
H - G	2x4	DRY	No.2	SPF
L - J	2x4	DRY	No.2	SPF
J - H	2x4	DRY	No.2	SPF
ALL WEBS EXCEPT	2x3	DRY	No.2	SPF
F - H	2x4	DRY	No.2	SPF

DRY: SEASONED LUMBER.

PLATES (table is in inches)

JT	TYPE	PLATES	W	LEN	Y	X
B	TMVW-t	MT20	4.0	6.0		
C	TMWW-t	MT20	4.0	4.0	2.00	1.50
D	TS-t	MT20	3.0	8.0		
E	TTW-p	MT20	4.0	4.0	2.25	2.00
F	TMWW-t	MT20	4.0	4.0	2.00	1.75
G	TMV+p	MT20	3.0	4.0		
H	BMVW1-t	MT20	4.0	4.0		
I	BMWWW-t	MT20	4.0	6.0		
J	BS-t	MT20	3.0	8.0		
K	BMWW-t	MT20	4.0	4.0	2.00	1.50
L	BMV1+p	MT20	3.0	4.0		

NOTES- (1)
1) Lateral braces to be a minimum of 2X4 SPF #2.

LICENSED PROFESSIONAL ENGINEER
8/02/22
C. M. HEYENS
100505065
PROVINCE OF ONTARIO

STRUCTURAL COMPONENT ONLY
DWG # TR22080271

DIMENSIONS, SUPPORTS AND LOADINGS SPECIFIED BY FABRICATOR TO BE VERIFIED BY BUILDING DESIGNER

BEARINGS

JT	FACTORED GROSS REACTION VERT	HORZ	MAXIMUM FACTORED GROSS REACTION DOWN	HORZ	UPLIFT	INPUT BRG IN-SX	REQRD BRG IN-SX
L	1272	0	1272	0	0	5-8	5-8
H	1142	0	1142	0	0	MECHANICAL	

A SUITABLE HANGER/MECHANICAL CONNECTION IS REQUIRED AT JOINT H. MINIMUM BEARING LENGTH AT JOINT H = 3-8.

UNFACTORED REACTIONS

JT	1ST LCASE COMBINED	MAX./MIN. COMPONENT REACTIONS SNOW	LIVE	PERM.LIVE	WIND	DEAD	SOIL
L	896	610 / 0	0 / 0	0 / 0	0 / 0	286 / 0	0 / 0
H	806	537 / 0	0 / 0	0 / 0	0 / 0	269 / 0	0 / 0

BEARING MATERIAL TQ BE SPF NO.2 OR BETTER AT JOINT(S) L

BRACING

TOP CHORD TO BE SHEATHED OR MAX. PURLIN SPACING = 5.05 FT.
MAX. UNBRACED BOTTOM CHORD LENGTH = 10.00 FT OR RIGID CEILING DIRECTLY APPLIED.

ALL PITCH BREAKS AND PERIMETER CORNER JOINTS MUST BE LATERALLY RESTRAINED.

1 LATERAL BRACE(S) AT 1/ 2 LENGTH OF C-I, F-H.

END VERTICAL(S) MUST BE SHEATHED OR HAVE BRACES AS INDICATED IN THE MAX. UNBRACED LENGTH COLUMN OF THE TABLE BELOW

LOADING

TOTAL LOAD CASES: (4)

CHORDS

MEMB. FR-TO	MAX. FACTORED FORCE (LBS)	FACTORED VERT. LOAD LC1 (PLF) FROM	TO	MAX CSI (LC)	MAX. UNBRAC LENGTH
A- B	0 / 36	-95.2	-95.2	0.13 (1)	10.00
B- C	-1189 / 0	-95.2	-95.2	0.58 (1)	5.05
C- D	-692 / 0	-95.2	-95.2	0.54 (1)	6.25
D- E	-692 / 0	-95.2	-95.2	0.54 (1)	6.25
E- F	-671 / 0	-95.2	-95.2	0.15 (1)	6.25
F- G	0 / 21	-95.2	-95.2	0.19 (1)	10.00
L- B	-1221 / 0	0.0	0.0	0.13 (1)	7.25
H- G	-130 / 0	0.0	0.0	0.07 (1)	7.81
L- K	0 / 0	-18.5	-18.5	0.17 (4)	10.00
K- J	0 / 1024	-18.5	-18.5	0.28 (4)	10.00
J- I	0 / 1024	-18.5	-18.5	0.28 (4)	10.00
I- H	0 / 453	-18.5	-18.5	0.24 (4)	10.00

WEBS

MEMB. FR-TO	MAX. FACTORED FORCE (LBS)	MAX CSI (LC)
K- C	-38 / 92	0.03 (4)
C- I	-637 / 0	0.31 (1)
I- E	0 / 366	0.08 (1)
I- F	0 / 207	0.05 (1)
B- K	0 / 1038	0.23 (1)
F- H	-1060 / 0	0.34 (1)

DESIGN CRITERIA

SPECIFIED LOADS:

TOP CH.	LL	=	26.7	PSF
	DL	=	6.0	PSF
BOT CH.	LL	=	0.0	PSF
	DL	=	7.4	PSF
TOTAL LOAD		=	40.1	PSF

SPACING = 24.0 IN. C/C

THIS TRUSS IS DESIGNED FOR RESIDENTIAL OR SMALL BUILDING REQUIREMENTS OF PART 9, NBCC 2015

THIS DESIGN COMPLIES WITH:
- PART 9 OF BCBC 2018 , ABC 2019
- PART 9 OF OBC 2012 (2019 AMENDMENT)
- CSA 086-14
- TPIC 2014

(55 % OF 33.4 P.S.F. G.S.L. PLUS 8.4 P.S.F. RAIN LOAD) EQUALS 26.7 P.S.F. SPECIFIED ROOF LIVE LOAD

ALLOWABLE DEFL.(LL)= L/360 (0.67")
CALCULATED VERT. DEFL.(LL) = L/ 999 (0.03")
ALLOWABLE DEFL.(TL)= L/360 (0.67")
CALCULATED VERT. DEFL.(TL) = L/ 999 (0.08")

CSI: TC=0.58/1.00 (B-C:1) , BC=0.28/1.00 (I-K:4) , WB=0.34/1.00 (F-H:1) , SSI=0.25/1.00 (B-C:1)

DOL LUMBER=1.00 NAIL=1.00 LS BEND=1.10 COMP=1.10 SHEAR=1.10 TENS= 1.10

COMPANION LIVE LOAD FACTOR = 1.00

AUTOSOLVE LEFT HEEL ONLY

TRUSS PLATE MANUFACTURER IS NOT RESPONSIBLE FOR QUALITY CONTROL IN THE TRUSS MANUFACTURING PLANT .

NAIL VALUES

PLATE	GRIP(DRY) (PSI) MAX	MIN	SHEAR (PLI) MAX	MIN	SECTION (PLI) MAX	MIN
MT20	650	371	1747	788	1987	1873

PLATE PLACEMENT TOL. = 0.250 inches

PLATE ROTATION TOL. = 5.0 Deg.

JSI GRIP= 0.81 (F) (INPUT = 0.90)
JSI METAL= 0.36 (J) (INPUT = 1.00)

JOB NAME	TRUSS NAME	QUANTITY	PLY	JOB DESC.	DRWG NO.
427633	T8	1	2	GREEN PARK HOMES TRUSS DESC.	

Tamarack Roof Truss, Burlington

Version 8.530 S Feb 23 2022 MiTek Industries, Inc. Tue Aug 2 14:59:02 2022 Page 1

ID:5jddhdQ2aVEKS8ltDc496Sz15V3-JGdsRuT6sL8dOOQte30WRDp2mKKyd8GbVEMfqTyrss7

Scale = 1:66.2

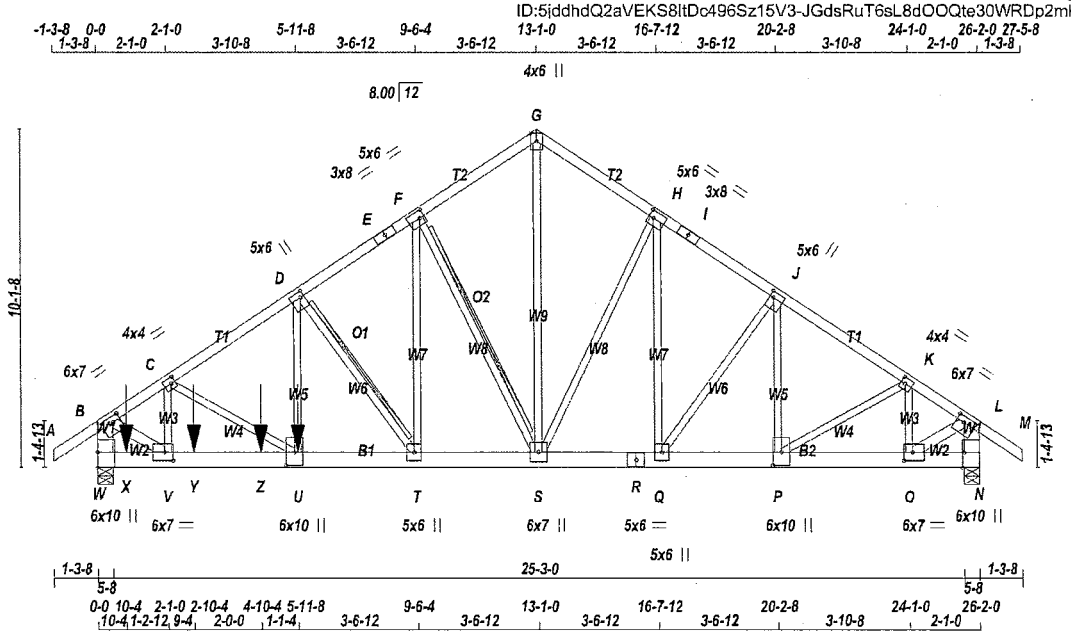

TOTAL WEIGHT = 2 X 153 = 305 lb

[M]

LUMBER

N. L. G. A. RULES

CHORDS	SIZE		LUMBER	DESCR.
A - E	2x4	DRY	No.2	SPF
E - G	2x4	DRY	No.2	SPF
G - I	2x4	DRY	No.2	SPF
I - M	2x4	DRY	No.2	SPF
W - B	2x6	DRY	No.2	SPF
N - L	2x6	DRY	No.2	SPF
W - R	2x6	DRY	No.2	SPF
R - N	2x6	DRY	No.2	SPF
ALL WEBS	2x3	DRY	No.2	SPF
EXCEPT				
B - V	2x4	DRY	No.2	SPF
O - L	2x4	DRY	No.2	SPF

DRY: SEASONED LUMBER.

DESIGN CONSISTS OF 2 TRUSSES BUILT SEPARATELY THEN FASTENED TOGETHER AS FOLLOWS:

CHORDS	#ROWS	SURFACE SPACING (IN)	LOAD(PLF)
TOP CHORDS : (0.122"X3") SPIRAL NAILS			
E- A	1	12	TOP
E- G	1	12	TOP
G- I	1	12	TOP
I- M	1	12	TOP
W- B	2	12	TOP
N- L	2	12	TOP
BOTTOM CHORDS : (0.122"X3") SPIRAL NAILS			
W- R	2	12	SIDE(183.1)
R- N	2	12	TOP
WEBS : (0.122"X3") SPIRAL NAILS			
D- U	1	2	SIDE(1226.4)
2x3	1	6	
J- P	1	2	
2x4	1	6	

NAILS TO BE DRIVEN FROM ONE SIDE ONLY.

GIRDER NAILING ASSUMES NAILED HANGERS ARE FASTENED WITH MIN. 3-0 INCH NAILS.

LICENSED PROFESSIONAL ENGINEER
8/02/22
C. M. HEYENS
100505065
PROVINCE OF ONTARIO

STRUCTURAL COMPONENT ONLY
DWG # TR22080280 PG 1/2

DIMENSIONS, SUPPORTS AND LOADINGS SPECIFIED BY FABRICATOR TO BE VERIFIED BY BUILDING DESIGNER

BEARINGS

JT	FACTORED GROSS REACTION VERT	HORZ	MAXIMUM FACTORED GROSS REACTION DOWN	HORZ	UPLIFT	INPUT BRG IN-SX	REORD BRG IN-SX
W	8470	0	8470	0	0	5-8	5-8
N	3155	0	3155	0	0	5-8	5-8

UNFACTORED REACTIONS

JT	1ST LCASE COMBINED	MAX./MIN. COMPONENT REACTIONS SNOW	LIVE	PERM.LIVE	WIND	DEAD	SOIL
W	5989	3936 / 0	0 / 0	0 / 0	0 / 0	2053 / 0	0 / 0
N	2223	1504 / 0	0 / 0	0 / 0	0 / 0	719 / 0	0 / 0

BEARING MATERIAL TO BE SPF NO.2 OR BETTER AT JOINT(S) W, N

BRACING

TOP CHORD TO BE SHEATHED OR MAX. PURLIN SPACING = 2.96 FT.
MAX. UNBRACED BOTTOM CHORD LENGTH = 10.00 FT OR RIGID CEILING DIRECTLY APPLIED.

ALL PITCH BREAKS AND PERIMETER CORNER JOINTS MUST BE LATERALLY RESTRAINED.

2x6 DRY SPF No.2 T-BRACE AT F-S
2x4 DRY SPF No.2 T-BRACE AT D-T

FASTEN T AND I-BRACES TO NARROW EDGE OF WEB WITH ONE ROW PER PLY OF 3" COMMON WIRE NAILS @ 6" O.C. WITH 3" MINIMUM END DISTANCE. BRACE MUST COVER 90% OF WEB LENGTH.

END VERTICAL(S) MUST BE SHEATHED OR HAVE BRACES AS INDICATED IN THE MAX. UNBRACED LENGTH COLUMN OF THE TABLE BELOW

LOADING

TOTAL LOAD CASES: (4)

CHORDS

MEMB. FR-TO	MAX. FACTORED FORCE (LBS)	FACTORED VERT. LOAD LC1 (PLF) FROM	TO	MAX CSI (LC)	MAX. UNBRAC LENGTH
A- B	0 / 36	-95.2	-95.2	0.07 (1)	10.00
B- C	-8173 / 0	-95.2	-95.2	0.25 (1)	3.28
C- D	-9150 / 0	-95.2	-95.2	0.47 (1)	2.96
D- E	-5645 / 0	-95.2	-95.2	0.21 (1)	3.96
E- F	-5645 / 0	-95.2	-95.2	0.21 (1)	3.96
F- G	-3732 / 0	-95.2	-95.2	0.14 (1)	4.78
G- H	-3728 / 0	-95.2	-95.2	0.15 (1)	4.77
H- I	-3873 / 0	-95.2	-95.2	0.15 (1)	4.70
I- J	-3873 / 0	-95.2	-95.2	0.15 (1)	4.70
J- K	-3888 / 0	-95.2	-95.2	0.15 (1)	4.69
K- L	-3043 / 0	-95.2	-95.2	0.09 (1)	5.23
L- M	0 / 36	-95.2	-95.2	0.07 (1)	10.00
W- B	-8013 / 0	0.0	0.0	0.29 (1)	5.31
N- L	-3112 / 0	0.0	0.0	0.11 (1)	7.81
W- X	0 / 0	-18.5	-18.5	0.19 (1)	10.00
X- V	0 / 0	-18.5	-18.5	0.19 (1)	10.00
V- Y	0 / 6804	-18.5	-18.5	0.76 (1)	10.00
Y- Z	0 / 6804	-18.5	-18.5	0.76 (1)	10.00
Z- U	0 / 6804	-18.5	-18.5	0.76 (1)	10.00
U- T	0 / 7618	-18.5	-18.5	0.55 (1)	10.00
T- S	0 / 4703	-18.5	-18.5	0.39 (1)	10.00
S- R	0 / 3218	-18.5	-18.5	0.29 (1)	10.00
R- Q	0 / 3218	-18.5	-18.5	0.29 (1)	10.00
Q- P	0 / 3239	-18.5	-18.5	0.24 (1)	10.00
P- O	0 / 2549	-18.5	-18.5	0.19 (1)	10.00
O- N	0 / 0	-18.5	-18.5	0.02 (1)	10.00

WEBS

MEMB. FR-TO	MAX. FACTORED FORCE (LBS)	MAX CSI (LC)
S- G	0 / 3833	0.47 (1)
S- H	-289 / 0	0.20 (1)
Q- H	-7 / 51	0.01 (4)
Q- J	-36 / 0	0.01 (1)
P- J	-329 / 0	0.07 (1)
P- K	0 / 810	0.10 (1)
O- K	-1196 / 0	0.11 (1)
F- S	-3691 / 0	0.78 (1)
T- F	0 / 4014	0.50 (1)
D- T	-5002 / 0	0.89 (1)
U- D	0 / 5657	0.70 (1)
C- U	0 / 956	0.12 (1)
V- C	-1324 / 0	0.12 (1)
B- V	0 / 7542	0.67 (1)
O- L	0 / 2825	0.25 (1)

DESIGN CRITERIA

SPECIFIED LOADS:

TOP CH.	LL	=	26.7	PSF
	DL	=	6.0	PSF
BOT CH.	LL	=	0.0	PSF
	DL	=	7.4	PSF
TOTAL LOAD		=	40.1	PSF

SPACING = 24.0 IN. C/C

THIS TRUSS IS DESIGNED FOR RESIDENTIAL OR SMALL BUILDING REQUIREMENTS OF PART 9, NBCC 2015

THIS DESIGN COMPLIES WITH:
- PART 9 OF BCBC 2018 , ABC 2019
- PART 9 OF OBC 2012 (2019 AMENDMENT)
- CSA 086-14
- TPIC 2014

(55 % OF 33.4 P.S.F. G.S.L. PLUS 8.4 P.S.F. RAIN LOAD) EQUALS 26.7 P.S.F. SPECIFIED ROOF LIVE LOAD

ALLOWABLE DEFL.(LL)= L/360 (0.87")
CALCULATED VERT. DEFL.(LL) = L/ 999 (0.12")
ALLOWABLE DEFL.(TL)= L/360 (0.87")
CALCULATED VERT. DEFL.(TL) = L/ 999 (0.21")

CSI: TC=0.47/1.00 (C-D:1) , BC=0.76/1.00 (U-V:1) , WB=0.89/1.00 (D-T:1) , SSI=0.39/1.00 (U-V:1)

DOL LUMBER=1.00 NAIL=1.00 LS BEND=1.00 COMP=1.00 SHEAR=1.00 TENS= 1.00

COMPANION LIVE LOAD FACTOR = 1.00

AUTOSOLVE HEELS OFF

TRUSS PLATE MANUFACTURER IS NOT RESPONSIBLE FOR QUALITY CONTROL IN THE TRUSS MANUFACTURING PLANT .

NAIL VALUES

PLATE	GRIP(DRY) (PSI) MAX	MIN	SHEAR (PLI) MAX	MIN	SECTION (PLI) MAX	MIN
MT20	650	371	1747	788	1987	1873

PLATE PLACEMENT TOL. = 0.250 inches

PLATE ROTATION TOL. = 5.0 Deg.

JSI GRIP= 0.90 (T) (INPUT = 0.90)
JSI METAL= 0.85 (B) (INPUT = 1.00)

CONTINUED ON PAGE 2

PLATES (table is in inches)

JT	TYPE	PLATES	W	LEN	Y	X
B	TMVW-t	MT20	6.0	7.0	2.00	2.75
C	TMWW-t	MT20	4.0	4.0	2.00	1.50
D	TMWW+t	MT20	5.0	6.0	2.00	1.25
E	TS-t	MT20	3.0	8.0		
F	TMWW-t	MT20	5.0	6.0	2.50	1.75
G	TTW+p	MT20	4.0	6.0	Edge	
H	TMWW-t	MT20	5.0	6.0	2.50	1.75
I	TS-t	MT20	3.0	8.0		
J	TMWW+t	MT20	5.0	6.0	2.00	1.25
K	TMWW-t	MT20	4.0	4.0	2.00	1.50
L	TMVW-t	MT20	6.0	7.0	2.00	2.75
N	BMV1+t	MT20	6.0	10.0	Edge	0.50
O	BMWW-t	MT20	6.0	7.0	3.00	3.00
P	BMWW+t	MT20	6.0	10.0	4.75	3.00
Q	BMWW+t	MT20	5.0	6.0		
R	BS-t	MT20	5.0	6.0		
S	BMWWW+t	MT20	6.0	7.0		
T	BMWW+t	MT20	5.0	6.0		
U	BMWW+t	MT20	6.0	10.0	4.75	3.00
V	BMWW-t	MT20	6.0	7.0	3.00	3.00
W	BMV1+t	MT20	6.0	10.0	5.50	

Edge - INDICATES REFERENCE CORNER OF PLATE TOUCHES EDGE OF CHORD.

NOTES- (1)
1) Lateral braces to be a minimum of 2X4 SPF #2.

SPECIFIED CONCENTRATED LOADS (LBS)

JT	LOC.	LC1	MAX-	MAX+	FACE	DIR.	TYPE	HEEL	CONN.
U	5-11-8	-3806	-3806	—	FRONT	VERT	TOTAL	—	C1
X	10-4	-845	-845	—	FRONT	VERT	TOTAL	—	C1
Y	2-10-4	-641	-641	—	FRONT	VERT	TOTAL	—	C1
Z	4-10-4	-641	-641	—	FRONT	VERT	TOTAL	—	C1

CONNECTION REQUIREMENTS

1) **C1:** A SUITABLE HANGER/MECHANICAL CONNECTION IS REQUIRED.

LICENSED PROFESSIONAL ENGINEER
8/02/22
C. M. HEYENS
100505065
PROVINCE OF ONTARIO

STRUCTURAL COMPONENT ONLY
DWG # TR22080280

JOB NAME	TRUSS NAME	QUANTITY	PLY	JOB DESC.	DRWG NO.
427633	T8Z	1	2	GREEN PARK HOMES TRUSS DESC.	

Tamarack Roof Truss, Burlington

Version 8.530 S Feb 23 2022 MiTek Industries, Inc. Tue Aug 2 14:59:04 2022 Page 1

ID:5jddhdQ2aVEKS8ItDc496Sz15V3-FflcsZVMOyPKeiaGlU2_XeuOE70M52kuzYrmkMyrss5

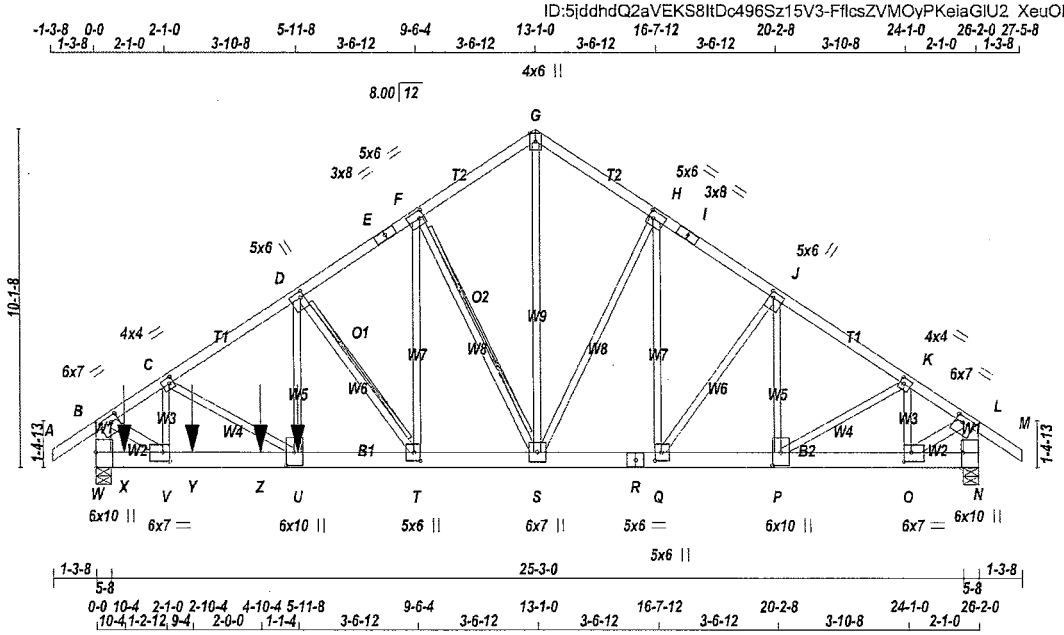

TOTAL WEIGHT = 2 X 153 = 305 lb

[M]

LUMBER

N. L. G. A. RULES

CHORDS	SIZE		LUMBER	DESCR.
A - E	2x4	DRY	No.2	SPF
E - G	2x4	DRY	No.2	SPF
G - I	2x4	DRY	No.2	SPF
I - M	2x4	DRY	No.2	SPF
W - B	2x6	DRY	No.2	SPF
N - L	2x6	DRY	No.2	SPF
W - R	2x6	DRY	No.2	SPF
R - N	2x6	DRY	No.2	SPF
ALL WEBS EXCEPT	2x3	DRY	No.2	SPF
B - V	2x4	DRY	No.2	SPF
O - L	2x4	DRY	No.2	SPF

DRY: SEASONED LUMBER.

DESIGN CONSISTS OF 2 TRUSSES BUILT SEPARATELY THEN FASTENED TOGETHER AS FOLLOWS:

CHORDS	#ROWS	SURFACE SPACING (IN)	LOAD(PLF)
TOP CHORDS : (0.122"X3") SPIRAL NAILS			
E- A	1	12	TOP
E- G	1	12	TOP
G- I	1	12	TOP
I- M	1	12	TOP
W- B	2	12	TOP
N- L	2	12	TOP
BOTTOM CHORDS : (0.122"X3") SPIRAL NAILS			
W- R	2	12	SIDE(183.1)
R- N	2	12	TOP
WEBS : (0.122"X3") SPIRAL NAILS			
D- U	1	2	SIDE(1226.4)
2x3	1	6	
J- P	1	2	
2x4	1	6	

NAILS TO BE DRIVEN FROM ONE SIDE ONLY.

GIRDER NAILING ASSUMES NAILED HANGERS ARE FASTENED WITH MIN. 3-0 INCH NAILS.

LICENSED PROFESSIONAL ENGINEER
8/02/22
C. M. HEYENS
100505065
PROVINCE OF ONTARIO

STRUCTURAL COMPONENT ONLY
DWG # TR22080281 PG 1/2

DIMENSIONS, SUPPORTS AND LOADINGS SPECIFIED BY FABRICATOR TO BE VERIFIED BY BUILDING DESIGNER

BEARINGS

JT	FACTORED GROSS REACTION VERT	HORZ	MAXIMUM FACTORED GROSS REACTION DOWN	HORZ	UPLIFT	INPUT BRG IN-SX	REQRD BRG IN-SX
W	8639	0	8639	0	0	5-8	5-8
N	3160	0	3160	0	0	5-8	5-8

UNFACTORED REACTIONS

JT	1ST LCASE COMBINED	MAX./MIN. COMPONENT REACTIONS SNOW	LIVE	PERM.LIVE	WIND	DEAD	SOIL
W	6124	3936 / 0	0 / 0	0 / 0	0 / 0	2189 / 0	0 / 0
N	2227	1504 / 0	0 / 0	0 / 0	0 / 0	723 / 0	0 / 0

BEARING MATERIAL TO BE SPF NO.2 OR BETTER AT JOINT(S) W, N

BRACING

TOP CHORD TO BE SHEATHED OR MAX. PURLIN SPACING = 2.95 FT.
MAX. UNBRACED BOTTOM CHORD LENGTH = 10.00 FT OR RIGID CEILING DIRECTLY APPLIED.

ALL PITCH BREAKS AND PERIMETER CORNER JOINTS MUST BE LATERALLY RESTRAINED.

2x6 DRY SPF No.2 T-BRACE AT F-S
2x4 DRY SPF No.2 T-BRACE AT D-T

FASTEN T AND I-BRACES TO NARROW EDGE OF WEB WITH ONE ROW PER PLY OF 3" COMMON WIRE NAILS @ 6" O.C. WITH 3" MINIMUM END DISTANCE. BRACE MUST COVER 90% OF WEB LENGTH.

END VERTICAL(S) MUST BE SHEATHED OR HAVE BRACES AS INDICATED IN THE MAX. UNBRACED LENGTH COLUMN OF THE TABLE BELOW

LOADING

TOTAL LOAD CASES: (4)

CHORDS

MEMB. FR-TO	MAX. FACTORED FORCE (LBS)	FACTORED VERT. LOAD LC1 (PLF) FROM	TO	MAX CSI (LC)	MAX. UNBRAC LENGTH
A- B	0 / 36	-95.2	-95.2	0.07 (1)	10.00
B- C	-8250 / 0	-95.2	-95.2	0.26 (1)	3.27
C- D	-9176 / 0	-95.2	-95.2	0.47 (1)	2.95
D- E	-5661 / 0	-95.2	-95.2	0.21 (1)	3.96
E- F	-5661 / 0	-95.2	-95.2	0.21 (1)	3.96
F- G	-3741 / 0	-95.2	-95.2	0.14 (1)	4.77
G- H	-3737 / 0	-95.2	-95.2	0.15 (1)	4.77
H- I	-3882 / 0	-95.2	-95.2	0.15 (1)	4.69
I- J	-3882 / 0	-95.2	-95.2	0.15 (1)	4.69
J- K	-3896 / 0	-95.2	-95.2	0.15 (1)	4.69
K- L	-3049 / 0	-95.2	-95.2	0.09 (1)	5.22
L- M	0 / 36	-95.2	-95.2	0.07 (1)	10.00
W- B	-8087 / 0	0.0	0.0	0.29 (1)	5.29
N- L	-3118 / 0	0.0	0.0	0.11 (1)	7.81
W- X	0 / 0	-18.5	-18.5	0.20 (1)	10.00
X- V	0 / 0	-18.5	-18.5	0.20 (1)	10.00
V- Y	0 / 6867	-18.5	-18.5	0.77 (1)	10.00
Y- Z	0 / 6867	-18.5	-18.5	0.77 (1)	10.00
Z- U	0 / 6867	-18.5	-18.5	0.77 (1)	10.00
U- T	0 / 7640	-18.5	-18.5	0.55 (1)	10.00
T- S	0 / 4716	-18.5	-18.5	0.39 (1)	10.00
S- R	0 / 3225	-18.5	-18.5	0.29 (1)	10.00
R- Q	0 / 3225	-18.5	-18.5	0.29 (1)	10.00
Q- P	0 / 3246	-18.5	-18.5	0.24 (1)	10.00
P- O	0 / 2554	-18.5	-18.5	0.19 (1)	10.00
O- N	0 / 0	-18.5	-18.5	0.02 (1)	10.00

WEBS

MEMB. FR-TO	MAX. FACTORED FORCE (LBS)	MAX CSI (LC)
S- G	0 / 3843	0.48 (1)
S- H	-288 / 0	0.20 (1)
Q- H	-8 / 50	0.01 (4)
Q- J	-35 / 0	0.01 (1)
P- J	-330 / 0	0.07 (1)
P- K	0 / 813	0.10 (1)
O- K	-1198 / 0	0.11 (1)
F- S	-3703 / 0	0.78 (1)
T- F	0 / 4029	0.50 (1)
D- T	-5018 / 0	0.90 (1)
U- D	0 / 5676	0.70 (1)
C- U	0 / 907	0.11 (1)
V- C	-1270 / 0	0.11 (1)
B- V	0 / 7613	0.67 (1)
O- L	0 / 2831	0.25 (1)

DESIGN CRITERIA

SPECIFIED LOADS:

TOP CH.	LL	=	26.7	PSF
	DL	=	6.0	PSF
BOT CH.	LL	=	0.0	PSF
	DL	=	7.4	PSF
TOTAL LOAD		=	40.1	PSF

SPACING = 24.0 IN. C/C

THIS TRUSS IS DESIGNED FOR RESIDENTIAL OR SMALL BUILDING REQUIREMENTS OF PART 9, NBCC 2015

THIS DESIGN COMPLIES WITH:
- PART 9 OF BCBC 2018 , ABC 2019
- PART 9 OF OBC 2012 (2019 AMENDMENT)
- CSA 086-14
- TPIC 2014

(55 % OF 33.4 P.S.F. G.S.L. PLUS 8.4 P.S.F. RAIN LOAD) EQUALS 26.7 P.S.F. SPECIFIED ROOF LIVE LOAD

ALLOWABLE DEFL.(LL)= L/360 (0.87")
CALCULATED VERT. DEFL.(LL) = L/ 999 (0.12")
ALLOWABLE DEFL.(TL)= L/360 (0.87")
CALCULATED VERT. DEFL.(TL) = L/ 999 (0.21")

CSI: TC=0.47/1.00 (C-D:1) , BC=0.77/1.00 (U-V:1) , WB=0.90/1.00 (D-T:1) , SSI=0.39/1.00 (U-V:1)

DOL LUMBER=1.00 NAIL=1.00 LS BEND=1.00 COMP=1.00 SHEAR=1.00 TENS= 1.00

COMPANION LIVE LOAD FACTOR = 1.00

AUTOSOLVE HEELS OFF

TRUSS PLATE MANUFACTURER IS NOT RESPONSIBLE FOR QUALITY CONTROL IN THE TRUSS MANUFACTURING PLANT .

NAIL VALUES

PLATE	GRIP(DRY) (PSI) MAX	MIN	SHEAR (PLI) MAX	MIN	SECTION (PLI) MAX	MIN
MT20	650	371	1747	788	1987	1873

PLATE PLACEMENT TOL. = 0.250 inches

PLATE ROTATION TOL. = 5.0 Deg.

JSI GRIP= 0.90 (J) (INPUT = 0.90)
JSI METAL= 0.85 (B) (INPUT = 1.00)

CONTINUED ON PAGE 2

PLATES (table is in inches)

JT	TYPE	PLATES	W	LEN	Y	X
B	TMVW-t	MT20	6.0	7.0	2.00	2.75
C	TMWW-t	MT20	4.0	4.0	2.00	1.50
D	TMWW+t	MT20	5.0	6.0	2.00	1.25
E	TS-t	MT20	3.0	8.0		
F	TMWW-t	MT20	5.0	6.0	2.50	1.75
G	TTW+p	MT20	4.0	6.0	Edge	
H	TMWW-t	MT20	5.0	6.0	2.50	1.75
I	TS-t	MT20	3.0	8.0		
J	TMWW+t	MT20	5.0	6.0	2.00	1.25
K	TMWW-t	MT20	4.0	4.0	2.00	1.50
L	TMVW-t	MT20	6.0	7.0	2.00	2.75
N	BMV1+t	MT20	6.0	10.0	Edge	0.50
O	BMWW-t	MT20	6.0	7.0	3.25	2.50
P	BMWW+t	MT20	6.0	10.0	4.75	3.00
Q	BMWW+t	MT20	5.0	6.0	3.00	2.25
R	BS-t	MT20	5.0	6.0		
S	BMWWW+t	MT20	6.0	7.0		
T	BMWW+t	MT20	5.0	6.0	3.00	2.25
U	BMWW+t	MT20	6.0	10.0	4.75	3.00
V	BMWW-t	MT20	6.0	7.0	3.25	2.50
W	BMV1+t	MT20	6.0	10.0	5.50	

Edge - INDICATES REFERENCE CORNER OF PLATE TOUCHES EDGE OF CHORD.

NOTES- (1)
1) Lateral braces to be a minimum of 2X4 SPF #2.

SPECIFIED CONCENTRATED LOADS (LBS)

JT	LOC.	LC1	MAX-	MAX+	FACE	DIR.	TYPE	HEEL	CONN.
U	5-11-8	-3805	-3805	—	BACK	VERT	TOTAL	—	C1
X	10-4	-985	-985	—	BACK	VERT	TOTAL	—	C1
Y	2-10-4	-641	-641	—	BACK	VERT	TOTAL	—	C1
Z	4-10-4	-641	-641	—	BACK	VERT	TOTAL	—	C1

CONNECTION REQUIREMENTS

1) **C1:** A SUITABLE HANGER/MECHANICAL CONNECTION IS REQUIRED.

LICENSED PROFESSIONAL ENGINEER
8/02/22
C. M. HEYENS
100505065
PROVINCE OF ONTARIO

STRUCTURAL COMPONENT ONLY
DWG # TR22080281 PG 2/2

JOB NAME	TRUSS NAME	QUANTITY	PLY	JOB DESC.	DRWG NO.
427659	T8Z2	1	2	GREEN PARK HOMES TRUSS DESC.	

Tamarack Roof Truss, Burlington

Version 8.530 S Feb 23 2022 MiTek Industries, Inc. Tue Aug 2 14:35:44 2022 Page 1

ID:5jddhdQ2aVEKS8ltDc496Sz15V3-FJ9L1sZC5p0_gYYBkSxhnPv8fn9l4sEp1kjhbVyrtBz

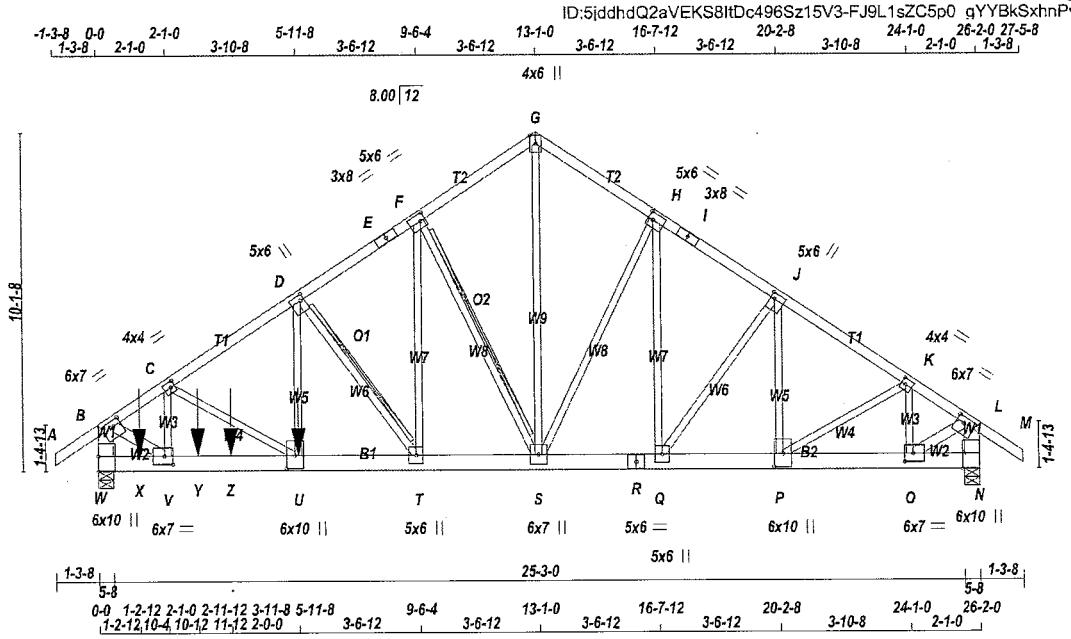

TOTAL WEIGHT = 2 X 153 = 305 lb

[M]

LUMBER

N. L. G. A. RULES

CHORDS	SIZE		LUMBER	DESCR.
A - E	2x4	DRY	No.2	SPF
E - G	2x4	DRY	No.2	SPF
G - I	2x4	DRY	No.2	SPF
I - M	2x4	DRY	No.2	SPF
W - B	2x6	DRY	No.2	SPF
N - L	2x6	DRY	No.2	SPF
W - R	2x6	DRY	No.2	SPF
R - N	2x6	DRY	No.2	SPF
ALL WEBS EXCEPT	2x3	DRY	No.2	SPF
B - V	2x4	DRY	No.2	SPF
O - L	2x4	DRY	No.2	SPF

DRY: SEASONED LUMBER.

DESIGN CONSISTS OF 2 TRUSSES BUILT SEPARATELY THEN FASTENED TOGETHER AS FOLLOWS:

CHORDS	#ROWS	SURFACE SPACING (IN)	LOAD(PLF)
TOP CHORDS : (0.122"X3") SPIRAL NAILS			
E- A	1	12	TOP
E- G	1	12	TOP
G- I	1	12	TOP
I- M	1	12	TOP
W- B	2	12	TOP
N- L	2	12	TOP
BOTTOM CHORDS : (0.122"X3") SPIRAL NAILS			
W- R	2	12	SIDE(183.1)
R- N	2	12	TOP
WEBS : (0.122"X3") SPIRAL NAILS			
D- U	1	2	SIDE(1226.4)
2x3	1	6	
J- P	1	2	
2x4	1	6	

NAILS TO BE DRIVEN FROM ONE SIDE ONLY.

GIRDER NAILING ASSUMES NAILED HANGERS ARE FASTENED WITH MIN. 3-0 INCH NAILS.

LICENSED PROFESSIONAL ENGINEER
8/02/22
C. M. HEYENS
100505065
PROVINCE OF ONTARIO

STRUCTURAL COMPONENT ONLY
DWG # TR22080307 PG 1/2

DIMENSIONS, SUPPORTS AND LOADINGS SPECIFIED BY FABRICATOR TO BE VERIFIED BY BUILDING DESIGNER

BEARINGS

JT	FACTORED GROSS REACTION VERT	HORZ	MAXIMUM FACTORED GROSS REACTION DOWN	HORZ	UPLIFT	INPUT BRG IN-SX	REQRD BRG IN-SX
W	7958	0	7958	0	0	5-8	5-8
N	3138	0	3138	0	0	5-8	5-8

UNFACTORED REACTIONS

JT	1ST LCASE COMBINED	MAX./MIN. COMPONENT REACTIONS SNOW	LIVE	PERM.LIVE	WIND	DEAD	SOIL
W	5603	3819 / 0	0 / 0	0 / 0	0 / 0	1784 / 0	0 / 0
N	2210	1501 / 0	0 / 0	0 / 0	0 / 0	709 / 0	0 / 0

BEARING MATERIAL TO BE SPF NO.2 OR BETTER AT JOINT(S) W, N

BRACING

TOP CHORD TO BE SHEATHED OR MAX. PURLIN SPACING = 2.97 FT.
MAX. UNBRACED BOTTOM CHORD LENGTH = 10.00 FT OR RIGID CEILING DIRECTLY APPLIED.

ALL PITCH BREAKS AND PERIMETER CORNER JOINTS MUST BE LATERALLY RESTRAINED.

2x6 DRY SPF No.2 T-BRACE AT F-S
2x4 DRY SPF No.2 T-BRACE AT D-T

FASTEN T AND I-BRACES TO NARROW EDGE OF WEB WITH ONE ROW PER PLY OF 3" COMMON WIRE NAILS @ 6" O.C. WITH 3" MINIMUM END DISTANCE. BRACE MUST COVER 90% OF WEB LENGTH.

END VERTICAL(S) MUST BE SHEATHED OR HAVE BRACES AS INDICATED IN THE MAX. UNBRACED LENGTH COLUMN OF THE TABLE BELOW

LOADING

TOTAL LOAD CASES: (4)

CHORDS

MEMB. FR-TO	MAX. FACTORED FORCE (LBS)	FACTORED VERT. LOAD (PLF) FROM	TO	LC1 MAX CSI (LC)	MAX. UNBRAC LENGTH
A- B	0 / 36	-95.2	-95.2	0.07 (1)	10.00
B- C	-8155 / 0	-95.2	-95.2	0.25 (1)	3.29
C- D	-9092 / 0	-95.2	-95.2	0.46 (1)	2.97
D- E	-5596 / 0	-95.2	-95.2	0.20 (1)	3.98
E- F	-5596 / 0	-95.2	-95.2	0.20 (1)	3.98
F- G	-3706 / 0	-95.2	-95.2	0.14 (1)	4.79
G- H	-3701 / 0	-95.2	-95.2	0.14 (1)	4.79
H- I	-3847 / 0	-95.2	-95.2	0.14 (1)	4.71
I- J	-3847 / 0	-95.2	-95.2	0.14 (1)	4.71
J- K	-3864 / 0	-95.2	-95.2	0.15 (1)	4.71
K- L	-3026 / 0	-95.2	-95.2	0.09 (1)	5.24
L- M	0 / 36	-95.2	-95.2	0.07 (1)	10.00
W- B	-7996 / 0	0.0	0.0	0.29 (1)	5.32
N- L	-3096 / 0	0.0	0.0	0.11 (1)	7.81
W- X	0 / 0	-18.5	-18.5	0.24 (1)	10.00
X- V	0 / 0	-18.5	-18.5	0.24 (1)	10.00
V- Y	0 / 6789	-18.5	-18.5	0.90 (1)	10.00
Y- Z	0 / 6789	-18.5	-18.5	0.90 (1)	10.00
Z- U	0 / 6789	-18.5	-18.5	0.90 (1)	10.00
U- T	0 / 7570	-18.5	-18.5	0.55 (1)	10.00
T- S	0 / 4663	-18.5	-18.5	0.38 (1)	10.00
S- R	0 / 3196	-18.5	-18.5	0.29 (1)	10.00
R- Q	0 / 3196	-18.5	-18.5	0.29 (1)	10.00
Q- P	0 / 3219	-18.5	-18.5	0.24 (1)	10.00
P- O	0 / 2535	-18.5	-18.5	0.19 (1)	10.00
O- N	0 / 0	-18.5	-18.5	0.02 (1)	10.00

WEBS

MEMB. FR-TO	MAX. FACTORED FORCE (LBS)	MAX CSI (LC)
S- G	0 / 3804	0.47 (1)
S- H	-290 / 0	0.20 (1)
Q- H	-6 / 53	0.01 (4)
Q- J	-39 / 0	0.01 (1)
P- J	-325 / 0	0.07 (1)
P- K	0 / 804	0.10 (1)
O- K	-1189 / 0	0.10 (1)
F- S	-3649 / 0	0.77 (1)
T- F	0 / 3964	0.49 (1)
D- T	-4989 / 0	0.89 (1)
U- D	0 / 5641	0.70 (1)
C- U	0 / 917	0.11 (1)
V- C	-1281 / 0	0.11 (1)
B- V	0 / 7525	0.67 (1)
O- L	0 / 2810	0.25 (1)

DESIGN CRITERIA

SPECIFIED LOADS:

TOP CH.	LL	=	26.7	PSF
	DL	=	6.0	PSF
BOT CH.	LL	=	0.0	PSF
	DL	=	7.4	PSF
TOTAL LOAD		=	40.1	PSF

SPACING = 24.0 IN. C/C

THIS TRUSS IS DESIGNED FOR RESIDENTIAL OR SMALL BUILDING REQUIREMENTS OF PART 9, NBCC 2015

THIS DESIGN COMPLIES WITH:
- PART 9 OF BCBC 2018 , ABC 2019
- PART 9 OF OBC 2012 (2019 AMENDMENT)
- CSA 086-14
- TPIC 2014

(55 % OF 33.4 P.S.F. G.S.L. PLUS 8.4 P.S.F. RAIN LOAD) EQUALS 26.7 P.S.F. SPECIFIED ROOF LIVE LOAD

ALLOWABLE DEFL.(LL)= L/360 (0.87")
CALCULATED VERT. DEFL.(LL) = L/ 999 (0.12")
ALLOWABLE DEFL.(TL)= L/360 (0.87")
CALCULATED VERT. DEFL.(TL) = L/ 999 (0.21")

CSI: TC=0.46/1.00 (C-D:1) , BC=0.90/1.00 (U-V:1) , WB=0.89/1.00 (D-T:1) , SSI=0.42/1.00 (U-V:1)

DOL LUMBER=1.00 NAIL=1.00 LS BEND=1.00 COMP=1.00 SHEAR=1.00 TENS= 1.00

COMPANION LIVE LOAD FACTOR = 1.00

AUTOSOLVE HEELS OFF

TRUSS PLATE MANUFACTURER IS NOT RESPONSIBLE FOR QUALITY CONTROL IN THE TRUSS MANUFACTURING PLANT .

NAIL VALUES

PLATE	GRIP(DRY) (PSI) MAX	MIN	SHEAR (PLI) MAX	MIN	SECTION (PLI) MAX	MIN
MT20	650	371	1747	788	1987	1873

PLATE PLACEMENT TOL. = 0.250 inches

PLATE ROTATION TOL. = 5.0 Deg.

JSI GRIP= 0.90 (T) (INPUT = 0.90)
JSI METAL= 0.84 (B) (INPUT = 1.00)

CONTINUED ON PAGE 2

PLATES (table is in inches)

JT	TYPE	PLATES	W	LEN	Y	X
B	TMVW-t	MT20	6.0	7.0	2.00	2.75
C	TMWW-t	MT20	4.0	4.0	2.00	1.50
D	TMWW+t	MT20	5.0	6.0	2.00	1.25
E	TS-t	MT20	3.0	8.0		
F	TMWW-t	MT20	5.0	6.0	2.50	1.75
G	TTW+p	MT20	4.0	6.0	Edge	
H	TMWW-t	MT20	5.0	6.0	2.50	1.75
I	TS-t	MT20	3.0	8.0		
J	TMWW+t	MT20	5.0	6.0	2.00	1.25
K	TMWW-t	MT20	4.0	4.0	2.00	1.50
L	TMVW-t	MT20	6.0	7.0	2.00	2.75
N	BMV1+t	MT20	6.0	10.0	Edge	0.50
O	BMWW-t	MT20	6.0	7.0	3.00	3.00
P	BMWW+t	MT20	6.0	10.0	4.75	3.00
Q	BMWW+t	MT20	5.0	6.0		
R	BS-t	MT20	5.0	6.0		
S	BMWWW+t	MT20	6.0	7.0		
T	BMWW+t	MT20	5.0	6.0		
U	BMWW+t	MT20	6.0	10.0	4.75	3.00
V	BMWW-t	MT20	6.0	7.0	3.00	3.00
W	BMV1+t	MT20	6.0	10.0	5.50	

Edge - INDICATES REFERENCE CORNER OF PLATE TOUCHES EDGE OF CHORD.

NOTES- (1)
1) Lateral braces to be a minimum of 2X4 SPF #2.

SPECIFIED CONCENTRATED LOADS (LBS)

JT	LOC.	LC1	MAX-	MAX+	FACE	DIR.	TYPE	HEEL	CONN.
U	5-11-8	-3806	-3806	---	FRONT	VERT	TOTAL	---	C1
X	1-2-12	-428	-428	---	FRONT	VERT	TOTAL	---	C1
Y	2-11-12	-346	-346	---	FRONT	VERT	TOTAL	---	C1
Z	3-11-8	-953	-953	---	FRONT	VERT	TOTAL	---	C1

CONNECTION REQUIREMENTS

1) **C1:** A SUITABLE HANGER/MECHANICAL CONNECTION IS REQUIRED.

LICENSED PROFESSIONAL ENGINEER
8/02/22
C. M. HEYENS
100505065
PROVINCE OF ONTARIO

STRUCTURAL COMPONENT ONLY
DWG # TR22080307 PG 2/2

JOB NAME	TRUSS NAME	QUANTITY	PLY	JOB DESC.	DRWG NO.
427659	T8Z3	1	2	GREEN PARK HOMES TRUSS DESC.	

Tamarack Roof Truss, Burlington

Version 8.530 S Feb 23 2022 MiTek Industries, Inc. Tue Aug 2 14:35:45 2022 Page 1
ID:5jddhdQ2aVEKS8ltDc496Sz15V3-jVjkECZqs78qli7OlASwKdSKrBWopJ4zGOSF7xyrtBy

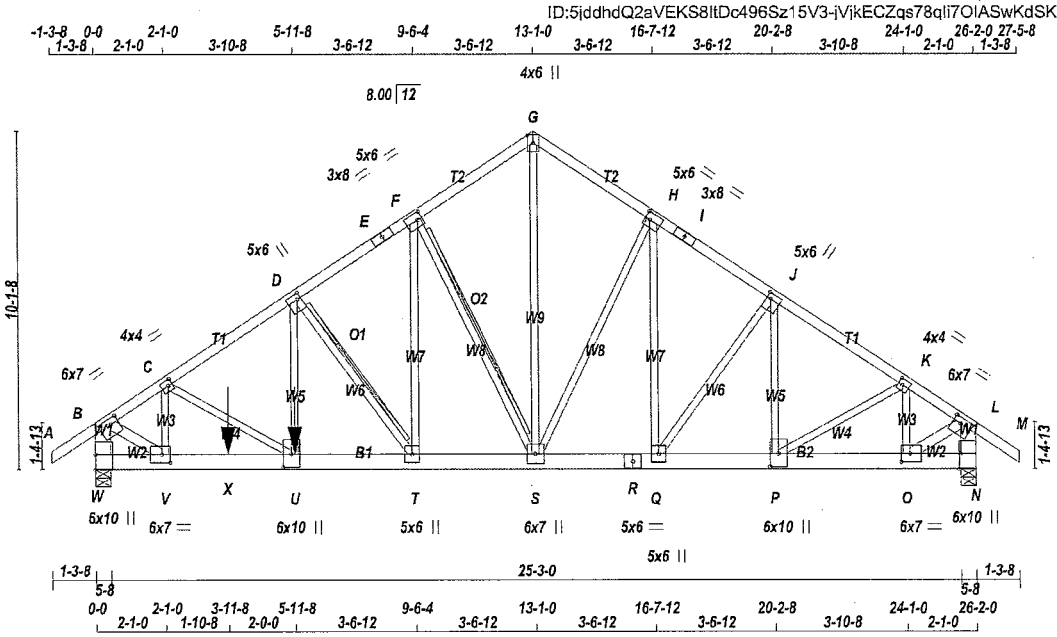

TOTAL WEIGHT = 2 X 153 = 305 lb

[M]

LUMBER

N. L. G. A. RULES

CHORDS	SIZE		LUMBER	DESCR.
A - E	2x4	DRY	No.2	SPF
E - G	2x4	DRY	No.2	SPF
G - I	2x4	DRY	No.2	SPF
I - M	2x4	DRY	No.2	SPF
W - B	2x6	DRY	No.2	SPF
N - L	2x6	DRY	No.2	SPF
W - R	2x6	DRY	No.2	SPF
R - N	2x6	DRY	No.2	SPF
ALL WEBS EXCEPT	2x3	DRY	No.2	SPF
B - V	2x4	DRY	No.2	SPF
O - L	2x4	DRY	No.2	SPF

DRY: SEASONED LUMBER.

DESIGN CONSISTS OF 2 TRUSSES BUILT SEPARATELY THEN FASTENED TOGETHER AS FOLLOWS:

CHORDS	#ROWS	SURFACE SPACING (IN)	LOAD(PLF)
TOP CHORDS : (0.122"X3") SPIRAL NAILS			
E- A	1	12	TOP
E- G	1	12	TOP
G- I	1	12	TOP
I- M	1	12	TOP
W- B	2	12	TOP
N- L	2	12	TOP
BOTTOM CHORDS : (0.122"X3") SPIRAL NAILS			
W- R	2	12	SIDE(183.1)
R- N	2	12	TOP
WEBS : (0.122"X3") SPIRAL NAILS			
D- U	1	2	SIDE(1226.4)
2x3	1	6	
J- P	1	2	
2x4	1	6	

NAILS TO BE DRIVEN FROM ONE SIDE ONLY.

GIRDER NAILING ASSUMES NAILED HANGERS ARE FASTENED WITH MIN. 3-0 INCH NAILS.

LICENSED PROFESSIONAL ENGINEER
8/02/22
C. M. HEYENS
100505065
PROVINCE OF ONTARIO

STRUCTURAL COMPONENT ONLY
DWG # TR22080308 PG 1/2

DIMENSIONS, SUPPORTS AND LOADINGS SPECIFIED BY FABRICATOR TO BE VERIFIED BY BUILDING DESIGNER

BEARINGS

JT	FACTORED GROSS REACTION VERT	HORZ	MAXIMUM FACTORED GROSS REACTION DOWN	HORZ	UPLIFT	INPUT BRG IN-SX	REQRD BRG IN-SX
W	7040	0	7040	0	0	5-8	5-8
N	3071	0	3071	0	0	5-8	5-8

UNFACTORED REACTIONS

JT	1ST LCASE COMBINED	MAX./MIN. COMPONENT REACTIONS SNOW	LIVE	PERM.LIVE	WIND	DEAD	SOIL
W	4958	3368 / 0	0 / 0	0 / 0	0 / 0	1590 / 0	0 / 0
N	2163	1468 / 0	0 / 0	0 / 0	0 / 0	695 / 0	0 / 0

BEARING MATERIAL TO BE SPF NO.2 OR BETTER AT JOINT(S) W, N

BRACING

TOP CHORD TO BE SHEATHED OR MAX. PURLIN SPACING = 3.06 FT.
MAX. UNBRACED BOTTOM CHORD LENGTH = 10.00 FT OR RIGID CEILING DIRECTLY APPLIED.

ALL PITCH BREAKS AND PERIMETER CORNER JOINTS MUST BE LATERALLY RESTRAINED.

2x6 DRY SPF No.2 T-BRACE AT F-S
2x4 DRY SPF No.2 T-BRACE AT D-T

FASTEN T AND I-BRACES TO NARROW EDGE OF WEB WITH ONE ROW PER PLY OF 3" COMMON WIRE NAILS @ 6" O.C. WITH 3" MINIMUM END DISTANCE. BRACE MUST COVER 90% OF WEB LENGTH.

END VERTICAL(S) MUST BE SHEATHED OR HAVE BRACES AS INDICATED IN THE MAX. UNBRACED LENGTH COLUMN OF THE TABLE BELOW

LOADING

TOTAL LOAD CASES: (4)

CHORDS

MEMB. FR-TO	MAX. FACTORED FORCE (LBS)	FACTORED VERT. LOAD LC1 (PLF) FROM	TO	MAX CSI (LC)	MAX. UNBRAC LENGTH
A- B	0 / 36	-95.2	-95.2	0.07 (1)	10.00
B- C	-7380 / 0	-95.2	-95.2	0.21 (1)	3.49
C- D	-8761 / 0	-95.2	-95.2	0.43 (1)	3.06
D- E	-5416 / 0	-95.2	-95.2	0.20 (1)	4.04
E- F	-5416 / 0	-95.2	-95.2	0.20 (1)	4.04
F- G	-3596 / 0	-95.2	-95.2	0.13 (1)	4.86
G- H	-3592 / 0	-95.2	-95.2	0.14 (1)	4.85
H- I	-3743 / 0	-95.2	-95.2	0.14 (1)	4.77
I- J	-3743 / 0	-95.2	-95.2	0.14 (1)	4.77
J- K	-3768 / 0	-95.2	-95.2	0.15 (1)	4.75
K- L	-2956 / 0	-95.2	-95.2	0.09 (1)	5.29
L- M	0 / 36	-95.2	-95.2	0.07 (1)	10.00
W- B	-7255 / 0	0.0	0.0	0.26 (1)	5.55
N- L	-3029 / 0	0.0	0.0	0.11 (1)	7.81
W- V	0 / 0	-18.5	-18.5	0.18 (1)	10.00
V- X	0 / 6146	-18.5	-18.5	0.85 (1)	10.00
X- U	0 / 6146	-18.5	-18.5	0.85 (1)	10.00
U- T	0 / 7293	-18.5	-18.5	0.53 (1)	10.00
T- S	0 / 4512	-18.5	-18.5	0.37 (1)	10.00
S- R	0 / 3110	-18.5	-18.5	0.28 (1)	10.00
R- Q	0 / 3110	-18.5	-18.5	0.28 (1)	10.00
Q- P	0 / 3139	-18.5	-18.5	0.24 (1)	10.00
P- O	0 / 2477	-18.5	-18.5	0.19 (1)	10.00
O- N	0 / 0	-18.5	-18.5	0.02 (1)	10.00

WEBS

MEMB. FR-TO	MAX. FACTORED FORCE (LBS)	MAX CSI (LC)
S- G	0 / 3684	0.46 (1)
S- H	-301 / 0	0.21 (1)
Q- H	0 / 56	0.01 (4)
Q- J	-49 / 0	0.02 (1)
P- J	-312 / 0	0.07 (1)
P- K	0 / 778	0.10 (1)
O- K	-1161 / 0	0.10 (1)
F- S	-3514 / 0	0.74 (1)
T- F	0 / 3801	0.47 (1)
D- T	-4772 / 0	0.85 (1)
U- D	0 / 5385	0.67 (1)
C- U	0 / 1347	0.17 (1)
V- C	-1759 / 0	0.16 (1)
B- V	0 / 6813	0.60 (1)
O- L	0 / 2746	0.24 (1)

DESIGN CRITERIA

SPECIFIED LOADS:

TOP CH.	LL	=	26.7	PSF
	DL	=	6.0	PSF
BOT CH.	LL	=	0.0	PSF
	DL	=	7.4	PSF
TOTAL LOAD		=	40.1	PSF

SPACING = 24.0 IN. C/C

THIS TRUSS IS DESIGNED FOR RESIDENTIAL OR SMALL BUILDING REQUIREMENTS OF PART 9, NBCC 2015

THIS DESIGN COMPLIES WITH:
- PART 9 OF BCBC 2018 , ABC 2019
- PART 9 OF OBC 2012 (2019 AMENDMENT)
- CSA 086-14
- TPIC 2014

(55 % OF 33.4 P.S.F. G.S.L. PLUS 8.4 P.S.F. RAIN LOAD) EQUALS 26.7 P.S.F. SPECIFIED ROOF LIVE LOAD

ALLOWABLE DEFL.(LL)= L/360 (0.87")
CALCULATED VERT. DEFL.(LL) = L/ 999 (0.11")
ALLOWABLE DEFL.(TL)= L/360 (0.87")
CALCULATED VERT. DEFL.(TL) = L/ 999 (0.20")

CSI: TC=0.43/1.00 (C-D:1) , BC=0.85/1.00 (U-V:1) , WB=0.85/1.00 (D-T:1) , SSI=0.31/1.00 (U-V:1)

DOL LUMBER=1.00 NAIL=1.00 LS BEND=1.00 COMP=1.00 SHEAR=1.00 TENS= 1.00

COMPANION LIVE LOAD FACTOR = 1.00

AUTOSOLVE HEELS OFF

TRUSS PLATE MANUFACTURER IS NOT RESPONSIBLE FOR QUALITY CONTROL IN THE TRUSS MANUFACTURING PLANT .

NAIL VALUES

PLATE	GRIP(DRY) (PSI) MAX	MIN	SHEAR (PLI) MAX	MIN	SECTION (PLI) MAX	MIN
MT20	650	371	1747	788	1987	1873

PLATE PLACEMENT TOL. = 0.250 inches

PLATE ROTATION TOL. = 5.0 Deg.

JSI GRIP= 0.87 (P) (INPUT = 0.90)
JSI METAL= 0.77 (B) (INPUT = 1.00)

CONTINUED ON PAGE 2

PLATES (table is in inches)

JT	TYPE	PLATES	W	LEN	Y	X
B	TMVW-t	MT20	6.0	7.0	2.00	2.75
C	TMWW-t	MT20	4.0	4.0	2.00	1.50
D	TMWW+t	MT20	5.0	6.0	2.00	1.25
E	TS-t	MT20	3.0	8.0		
F	TMWW-t	MT20	5.0	6.0	2.50	1.75
G	TTW+p	MT20	4.0	6.0	Edge	
H	TMWW-t	MT20	5.0	6.0	2.50	1.75
I	TS-t	MT20	3.0	8.0		
J	TMWW+t	MT20	5.0	6.0	2.00	1.25
K	TMWW-t	MT20	4.0	4.0	2.00	1.50
L	TMVW-t	MT20	6.0	7.0	2.00	2.75
N	BMV1+t	MT20	6.0	10.0	Edge	0.50
O	BMWW-t	MT20	6.0	7.0	3.00	3.00
P	BMWW+t	MT20	6.0	10.0	4.75	3.00
Q	BMWW+t	MT20	5.0	6.0		
R	BS-t	MT20	5.0	6.0		
S	BMWWW+t	MT20	6.0	7.0		
T	BMWW+t	MT20	5.0	6.0		
U	BMWW+t	MT20	6.0	10.0	4.75	3.00
V	BMWW-t	MT20	6.0	7.0	3.00	3.00
W	BMV1+t	MT20	6.0	10.0	5.50	

Edge - INDICATES REFERENCE CORNER OF PLATE TOUCHES EDGE OF CHORD.

NOTES- (1)
1) Lateral braces to be a minimum of 2X4 SPF #2.

SPECIFIED CONCENTRATED LOADS (LBS)

JT	LOC.	LC1	MAX-	MAX+	FACE	DIR.	TYPE	HEEL	CONN.
U	5-11-8	-3806	-3806	---	BACK	VERT	TOTAL	---	C1
X	3-11-8	-1036	-1036	---	BACK	VERT	TOTAL	---	C1

CONNECTION REQUIREMENTS

1) **C1:** A SUITABLE HANGER/MECHANICAL CONNECTION IS REQUIRED.

LICENSED PROFESSIONAL ENGINEER
8/02/22
C. M. HEYENS
100505065
PROVINCE OF ONTARIO

STRUCTURAL COMPONENT ONLY
DWG # TR22080308 PG 2/2

JOB NAME	TRUSS NAME	QUANTITY	PLY	JOB DESC.	DRWG NO.
427633	T9	1	1	GREEN PARK HOMES TRUSS DESC.	

Tamarack Roof Truss, Burlington

Version 8.530 S Feb 23 2022 MiTek Industries, Inc. Tue Aug 2 14:59:05 2022 Page 1

ID:5jddhdQ2aVEKS8ltDc496Sz15V3-jrl 3vW?9GXBFs9SJBaD3rRZpXThqa51CCbJHoyrss4

Scale = 1:57.5

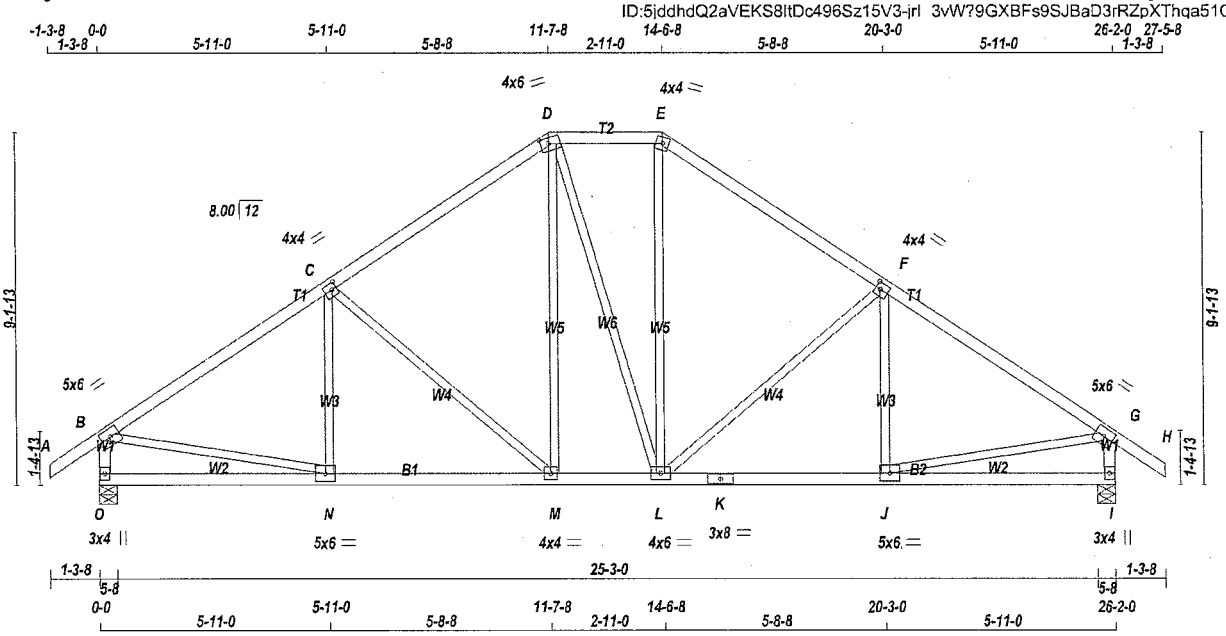

TOTAL WEIGHT = 121 lb

[M][F]

LUMBER

N. L. G. A. RULES

CHORDS	SIZE		LUMBER	DESCR.
A - D	2x4	DRY	No.2	SPF
D - E	2x4	DRY	No.2	SPF
E - H	2x4	DRY	No.2	SPF
O - B	2x4	DRY	No.2	SPF
I - G	2x4	DRY	No.2	SPF
O - K	2x4	DRY	No.2	SPF
K - I	2x4	DRY	No.2	SPF
ALL WEBS EXCEPT	2x3	DRY	No.2	SPF

DRY: SEASONED LUMBER.

PLATES (table is in inches)

JT	TYPE	PLATES	W	LEN	Y	X
B	TMVW-t	MT20	5.0	6.0		
C	TMWW-t	MT20	4.0	4.0	2.00	1.50
D	TTWW-m	MT20	4.0	6.0	1.75	2.50
E	TTW-m	MT20	4.0	4.0		
F	TMWW-t	MT20	4.0	4.0	2.00	1.50
G	TMVW-t	MT20	5.0	6.0		
I	BMV1+p	MT20	3.0	4.0		
J	BMWW-t	MT20	5.0	6.0		
K	BS-t	MT20	3.0	8.0		
L	BMWWW-t	MT20	4.0	6.0		
M	BMWW-t	MT20	4.0	4.0		
N	BMWW-t	MT20	5.0	6.0		
O	BMV1+p	MT20	3.0	4.0		

NOTES- (1)

1) Lateral braces to be a minimum of 2X4 SPF #2.

LICENSED PROFESSIONAL ENGINEER
8/02/22
C. M. HEYENS
100505065
PROVINCE OF ONTARIO

STRUCTURAL COMPONENT ONLY
DWG # TR22080282

DIMENSIONS, SUPPORTS AND LOADINGS SPECIFIED BY FABRICATOR TO BE VERIFIED BY BUILDING DESIGNER

BEARINGS

JT	FACTORED GROSS REACTION VERT	HORZ	MAXIMUM FACTORED GROSS REACTION DOWN	HORZ	UPLIFT	INPUT BRG IN-SX	REQRD BRG IN-SX
O	1618	0	1618	0	0	5-8	5-8
I	1618	0	1618	0	0	5-8	5-8

UNFACTORED REACTIONS

JT	1ST LCASE COMBINED	MAX./MIN. COMPONENT REACTIONS SNOW	LIVE	PERM.LIVE	WIND	DEAD	SOIL
O	1140	773 / 0	0 / 0	0 / 0	0 / 0	367 / 0	0 / 0
I	1140	773 / 0	0 / 0	0 / 0	0 / 0	367 / 0	0 / 0

BEARING MATERIAL TO BE SPF NO.2 OR BETTER AT JOINT(S) O, I

BRACING

TOP CHORD TO BE SHEATHED OR MAX. PURLIN SPACING = 4.57 FT.
MAX. UNBRACED BOTTOM CHORD LENGTH = 10.00 FT OR RIGID CEILING DIRECTLY APPLIED.

ALL PITCH BREAKS AND PERIMETER CORNER JOINTS MUST BE LATERALLY RESTRAINED.

LOADING

TOTAL LOAD CASES: (4)

CHORDS

MEMB. FR-TO	MAX. FACTORED FORCE (LBS)	FACTORED VERT. LOAD LC1 (PLF) FROM	TO	MAX CSI (LC)	MAX. UNBRAC LENGTH
A- B	0 / 36	-95.2	-95.2	0.13 (1)	10.00
B- C	-1700 / 0	-95.2	-95.2	0.48 (1)	4.57
C- D	-1344 / 0	-95.2	-95.2	0.45 (1)	5.05
D- E	-1091 / 0	-95.2	-95.2	0.12 (1)	5.93
E- F	-1345 / 0	-95.2	-95.2	0.45 (1)	5.05
F- G	-1699 / 0	-95.2	-95.2	0.48 (1)	4.57
G- H	0 / 36	-95.2	-95.2	0.13 (1)	10.00
O- B	-1573 / 0	0.0	0.0	0.16 (1)	6.58
I- G	-1573 / 0	0.0	0.0	0.16 (1)	6.58
O- N	0 / 0	-18.5	-18.5	0.16 (4)	10.00
N- M	0 / 1445	-18.5	-18.5	0.31 (1)	10.00
M- L	0 / 1090	-18.5	-18.5	0.23 (1)	10.00
L- K	0 / 1444	-18.5	-18.5	0.31 (1)	10.00
K- J	0 / 1444	-18.5	-18.5	0.31 (1)	10.00
J- I	0 / 0	-18.5	-18.5	0.16 (4)	10.00

WEBS

MEMB. FR-TO	MAX. FACTORED FORCE (LBS)	MAX CSI (LC)
N- C	-140 / 55	0.06 (1)
C- M	-475 / 0	0.57 (1)
M- D	0 / 380	0.09 (1)
D- L	0 / 4	0.00 (1)
L- E	0 / 385	0.09 (1)
L- F	-473 / 0	0.57 (1)
J- F	-143 / 54	0.06 (1)
B- N	0 / 1468	0.33 (1)
J- G	0 / 1468	0.33 (1)

DESIGN CRITERIA

SPECIFIED LOADS:

TOP CH.	LL	=	26.7	PSF
	DL	=	6.0	PSF
BOT CH.	LL	=	0.0	PSF
	DL	=	7.4	PSF
TOTAL LOAD		=	40.1	PSF

SPACING = 24.0 IN. C/C

LOADING IN FLAT SECTION BASED ON A SLOPE OF 6.00/12

THIS TRUSS IS DESIGNED FOR RESIDENTIAL OR SMALL BUILDING REQUIREMENTS OF PART 9, NBCC 2015

THIS DESIGN COMPLIES WITH:
- PART 9 OF BCBC 2018 , ABC 2019
- PART 9 OF OBC 2012 (2019 AMENDMENT)
- CSA 086-14
- TPIC 2014

(55 % OF 33.4 P.S.F. G.S.L. PLUS 8.4 P.S.F. RAIN LOAD) EQUALS 26.7 P.S.F. SPECIFIED ROOF LIVE LOAD

ALLOWABLE DEFL.(LL)= L/360 (0.87")
CALCULATED VERT. DEFL.(LL) = L/ 999 (0.05")
ALLOWABLE DEFL.(TL)= L/360 (0.87")
CALCULATED VERT. DEFL.(TL) = L/ 999 (0.11")

CSI: TC=0.48/1.00 (B-C:1) , BC=0.31/1.00 (M-N:1) , WB=0.57/1.00 (C-M:1) , SSI=0.23/1.00 (B-C:1)

DOL LUMBER=1.00 NAIL=1.00 LS BEND=1.10 COMP=1.10 SHEAR=1.10 TENS= 1.10

COMPANION LIVE LOAD FACTOR = 1.00

TRUSS PLATE MANUFACTURER IS NOT RESPONSIBLE FOR QUALITY CONTROL IN THE TRUSS MANUFACTURING PLANT .

NAIL VALUES

PLATE	GRIP(DRY) (PSI) MAX	MIN	SHEAR (PLI) MAX	MIN	SECTION (PLI) MAX	MIN
MT20	650	371	1747	788	1987	1873

PLATE PLACEMENT TOL. = 0.250 inches

PLATE ROTATION TOL. = 5.0 Deg.

JSI GRIP= 0.76 (B) (INPUT = 0.90)
JSI METAL= 0.46 (K) (INPUT = 1.00)

JOB NAME	TRUSS NAME	QUANTITY	PLY	JOB DESC.	DRWG NO.
427633	T10	1	2	GREEN PARK HOMES TRUSS DESC.	

Tamarack Roof Truss, Burlington

Version 8.530 S Feb 23 2022 MiTek Industries, Inc. Tue Aug 2 14:59:06 2022 Page 1
ID:5jddhdQ2aVEKS8ltDc496Sz15V3-C1sMHFWdwaf2t?ketv5Sc3zoCxlnZ0KAQsKtpEyrss3

Scale: 3/16"=1

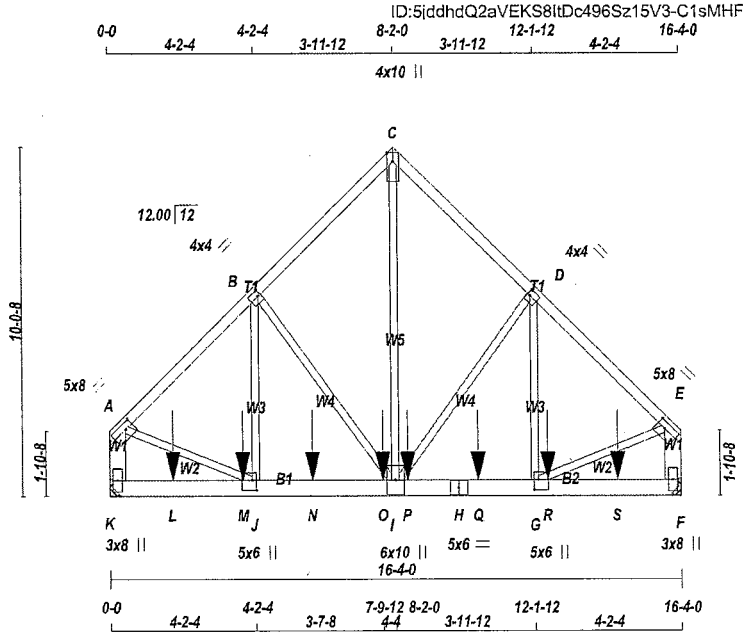

TOTAL WEIGHT = 2 X 95 = 189 lb

[M]

LUMBER

N. L. G. A. RULES

CHORDS	SIZE		LUMBER	DESCR.
A - C	2x4	DRY	No.2	SPF
C - E	2x4	DRY	No.2	SPF
K - A	2x6	DRY	No.2	SPF
F - E	2x6	DRY	No.2	SPF
K - H	2x6	DRY	No.2	SPF
H - F	2x6	DRY	No.2	SPF
ALL WEBS EXCEPT	2x3	DRY	No.2	SPF

DRY: SEASONED LUMBER.

DESIGN CONSISTS OF 2 TRUSSES BUILT SEPARATELY THEN FASTENED TOGETHER AS FOLLOWS:

CHORDS	#ROWS	SURFACE SPACING (IN)	LOAD(PLF)
TOP CHORDS : (0.122"X3") SPIRAL NAILS			
A- C	1	12	TOP
C- E	1	12	TOP
K- A	2	12	TOP
F- E	2	12	TOP
BOTTOM CHORDS : (0.122"X3") SPIRAL NAILS			
K- H	2	12	SIDE(0.0)
H- F	2	12	SIDE(0.0)
WEBS : (0.122"X3") SPIRAL NAILS			
2x3	1	6	

NAILS TO BE DRIVEN FROM ONE SIDE ONLY.

GIRDER NAILING ASSUMES NAILED HANGERS ARE FASTENED WITH MIN. 3-0 INCH NAILS.

TOP - COMPONENTS ARE LOADED FROM THE TOP AND MUST BE PLACED ON TOP EDGE OF ALL PLIES FOR THE LOAD TO BE TRANSFERRED TO EACH PLY.

SIDE - PLF SHOWN IS THE EQUIVALENT UDL APPLIED TO ONE SIDE THAT THE CORRESPONDING NAILING PATTERN SHALL BE CAPABLE OF TRANSFERING. REMAINING PLF MUST BE APPLIED ON THE OPPOSITE SIDE OR ON THE TOP.

LICENSED PROFESSIONAL ENGINEER
8/02/22
C. M. HEYENS
100505065
PROVINCE OF ONTARIO

STRUCTURAL COMPONENT ONLY
DWG # TR22080283 PG 1/2

DIMENSIONS, SUPPORTS AND LOADINGS SPECIFIED BY FABRICATOR TO BE VERIFIED BY BUILDING DESIGNER

BEARINGS

JT	FACTORED GROSS REACTION VERT	HORZ	MAXIMUM FACTORED GROSS REACTION DOWN	HORZ	UPLIFT	INPUT BRG IN-SX	REQRD BRG IN-SX
K	5422	0	5422	0	0	MECHANICAL	
F	5421	0	5421	0	0	MECHANICAL	

A SUITABLE HANGER/MECHANICAL CONNECTION IS REQUIRED AT JOINT K, F. MINIMUM BEARING LENGTH AT JOINT K = 4-0, JOINT F = 4-0.

UNFACTORED REACTIONS

JT	1ST LCASE COMBINED	MAX./MIN. COMPONENT REACTIONS SNOW	LIVE	PERM.LIVE	WIND	DEAD	SOIL
K	3820	2584 / 0	0 / 0	0 / 0	0 / 0	1236 / 0	0 / 0
F	3820	2584 / 0	0 / 0	0 / 0	0 / 0	1236 / 0	0 / 0

BRACING

TOP CHORD TO BE SHEATHED OR MAX. PURLIN SPACING = 4.21 FT.
MAX. UNBRACED BOTTOM CHORD LENGTH = 10.00 FT OR RIGID CEILING DIRECTLY APPLIED.

ALL PITCH BREAKS AND PERIMETER CORNER JOINTS MUST BE LATERALLY RESTRAINED.

LOADING

TOTAL LOAD CASES: (4)

CHORDS

MEMB. FR-TO	MAX. FACTORED FORCE (LBS)	FACTORED VERT. LOAD (PLF) FROM	TO	LC1	MAX CSI (LC)	MAX. UNBRAC LENGTH
A- B	-4886 / 0	-95.2	-95.2	0.25 (1)	4.21	
B- C	-3860 / 0	-95.2	-95.2	0.19 (1)	4.68	
C- D	-3860 / 0	-95.2	-95.2	0.19 (1)	4.68	
D- E	-4886 / 0	-95.2	-95.2	0.25 (1)	4.21	
K- A	-4831 / 0	0.0	0.0	0.19 (1)	6.59	
F- E	-4831 / 0	0.0	0.0	0.19 (1)	6.59	
K- L	0 / 0	-18.5	-18.5	0.38 (1)	10.00	
L- M	0 / 0	-18.5	-18.5	0.38 (1)	10.00	
M- J	0 / 0	-18.5	-18.5	0.38 (1)	10.00	
J- N	0 / 3471	-18.5	-18.5	0.51 (1)	10.00	
N- O	0 / 3471	-18.5	-18.5	0.51 (1)	10.00	
O- I	0 / 3471	-18.5	-18.5	0.51 (1)	10.00	
I- P	0 / 3471	-18.5	-18.5	0.51 (1)	10.00	
P- H	0 / 3471	-18.5	-18.5	0.51 (1)	10.00	
H- Q	0 / 3471	-18.5	-18.5	0.51 (1)	10.00	
Q- G	0 / 3471	-18.5	-18.5	0.51 (1)	10.00	
G- R	0 / 0	-18.5	-18.5	0.38 (1)	10.00	
R- S	0 / 0	-18.5	-18.5	0.38 (1)	10.00	
S- F	0 / 0	-18.5	-18.5	0.38 (1)	10.00	

WEBS

MEMB. FR-TO	MAX. FACTORED FORCE (LBS)	MAX CSI (LC)
I- C	0 / 5116	0.63 (1)
I- D	-1315 / 0	0.58 (1)
G- D	0 / 1376	0.17 (1)
B- I	-1315 / 0	0.58 (1)
J- B	0 / 1376	0.17 (1)
A- J	0 / 3671	0.45 (1)
G- E	0 / 3671	0.45 (1)

SPECIFIED CONCENTRATED LOADS (LBS)

JT	LOC.	LC1	MAX-	MAX+	FACE	DIR.	TYPE	HEEL	CONN.
L	1-9-12	-791	-791	---	BACK	VERT	TOTAL	---	C1
M	3-9-12	-791	-791	---	BACK	VERT	TOTAL	---	C1
N	5-9-12	-791	-791	---	BACK	VERT	TOTAL	---	C1
O	7-9-12	-791	-791	---	BACK	VERT	TOTAL	---	C1
P	8-6-4	-791	-791	---	BACK	VERT	TOTAL	---	C1
Q	10-6-4	-791	-791	---	BACK	VERT	TOTAL	---	C1
R	12-6-4	-791	-791	---	BACK	VERT	TOTAL	---	C1
S	14-6-4	-791	-791	---	BACK	VERT	TOTAL	---	C1

CONNECTION REQUIREMENTS

1) C1: A SUITABLE HANGER/MECHANICAL CONNECTION IS REQUIRED.

DESIGN CRITERIA

SPECIFIED LOADS:

TOP CH.	LL	=	26.7	PSF
	DL	=	6.0	PSF
BOT CH.	LL	=	0.0	PSF
	DL	=	7.4	PSF
TOTAL LOAD		=	40.1	PSF

SPACING = 24.0 IN. C/C

THIS TRUSS IS DESIGNED FOR RESIDENTIAL OR SMALL BUILDING REQUIREMENTS OF PART 9, NBCC 2015

THIS DESIGN COMPLIES WITH:
- PART 9 OF BCBC 2018 , ABC 2019
- PART 9 OF OBC 2012 (2019 AMENDMENT)
- CSA 086-14
- TPIC 2014

(55 % OF 33.4 P.S.F. G.S.L. PLUS 8.4 P.S.F. RAIN LOAD) EQUALS 26.7 P.S.F. SPECIFIED ROOF LIVE LOAD

ALLOWABLE DEFL.(LL)= L/360 (0.54")
CALCULATED VERT. DEFL.(LL) = L/ 999 (0.06")
ALLOWABLE DEFL.(TL)= L/360 (0.54")
CALCULATED VERT. DEFL.(TL) = L/ 999 (0.10")

CSI: TC=0.25/1.00 (A-B:1) , BC=0.51/1.00 (I-J:1) , WB=0.63/1.00 (C-I:1) , SSI=0.57/1.00 (F-G:1)

DOL LUMBER=1.00 NAIL=1.00 LS BEND=1.00 COMP=1.00 SHEAR=1.00 TENS= 1.00

COMPANION LIVE LOAD FACTOR = 1.00

AUTOSOLVE HEELS OFF

TRUSS PLATE MANUFACTURER IS NOT RESPONSIBLE FOR QUALITY CONTROL IN THE TRUSS MANUFACTURING PLANT .

NAIL VALUES

PLATE	GRIP(DRY) (PSI) MAX	MIN	SHEAR (PLI) MAX	MIN	SECTION (PLI) MAX	MIN
MT20	650	371	1747	788	1987	1873

PLATE PLACEMENT TOL. = 0.250 inches

PLATE ROTATION TOL. = 5.0 Deg.

JSI GRIP= 0.84 (J) (INPUT = 0.90)
JSI METAL= 0.63 (J) (INPUT = 1.00)

CONTINUED ON PAGE 2

PLATES (table is in inches)

JT	TYPE	PLATES	W	LEN	Y	X
A	TMVW-t	MT20	5.0	8.0	2.00	3.00
B	TMWW-t	MT20	4.0	4.0	2.00	1.00
C	TTW+p	MT20	4.0	10.0	Edge	
D	TMWW-t	MT20	4.0	4.0	2.00	1.00
E	TMVW-t	MT20	5.0	8.0	2.00	3.00
F	BMV1+p	MT20	3.0	8.0		
G	BMWW+t	MT20	5.0	6.0	3.50	1.50
H	BS-t	MT20	5.0	6.0		
I	BMWWW+t	MT20	6.0	10.0		
J	BMWW+t	MT20	5.0	6.0	3.50	1.50
K	BMV1+p	MT20	3.0	8.0		

Edge - INDICATES REFERENCE CORNER OF PLATE TOUCHES EDGE OF CHORD.

NOTES- (1)
1) Lateral braces to be a minimum of 2X4 SPF #2.

CONNECTION REQUIREMENTS

1) **C1:** A SUITABLE HANGER/MECHANICAL CONNECTION IS REQUIRED.

LICENSED PROFESSIONAL ENGINEER
8/02/22
C. M. HEYENS
100505065
PROVINCE OF ONTARIO

STRUCTURAL COMPONENT ONLY
DWG # TR22080283 PG 2/2

JOB NAME	TRUSS NAME	QUANTITY	PLY	JOB DESC.	DRWG NO.
427633	T11	2	1	GREEN PARK HOMES TRUSS DESC.	

Tamarack Roof Truss, Burlington

Version 8.530 S Feb 23 2022 MiTek Industries, Inc. Tue Aug 2 14:59:06 2022 Page 1
ID:NUp5P5ms8UNEiFhG2dHqtsywVBs-C1sMHFWdwaf2t?ketv5Sc3zopxssZ6QAQsKtpEyrss3

Scale = 1:63.2

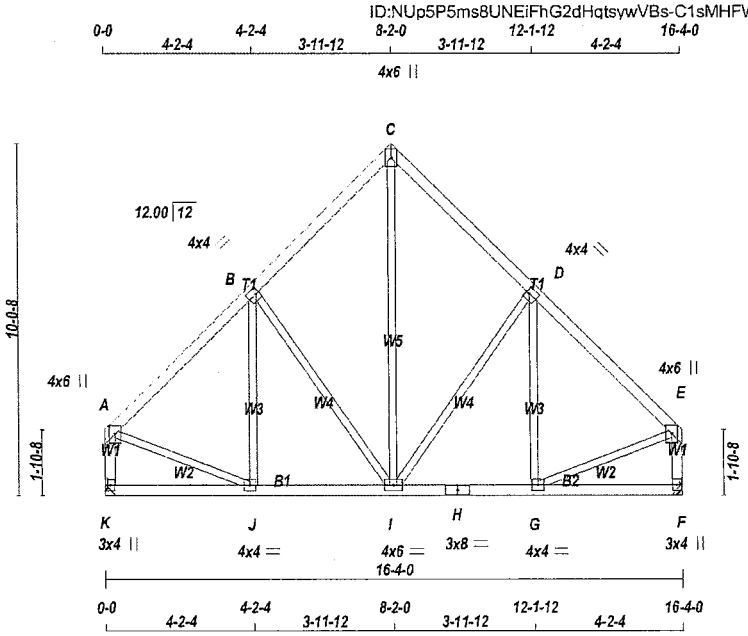

TOTAL WEIGHT = 2 X 83 = 166 lb

LUMBER
N. L. G. A. RULES

CHORDS	SIZE		LUMBER	DESCR.
A - C	2x4	DRY	No.2	SPF
C - E	2x4	DRY	No.2	SPF
K - A	2x4	DRY	No.2	SPF
F - E	2x4	DRY	No.2	SPF
K - H	2x4	DRY	No.2	SPF
H - F	2x4	DRY	No.2	SPF
ALL WEBS EXCEPT	2x3	DRY	No.2	SPF

DRY: SEASONED LUMBER.

PLATES (table is in inches)

JT	TYPE	PLATES	W	LEN	Y	X
A	TMVW+p	MT20	4.0	6.0	2.75	2.00
B	TMWW-t	MT20	4.0	4.0	2.00	1.00
C	TTW+p	MT20	4.0	6.0		
D	TMWW-t	MT20	4.0	4.0	2.00	1.00
E	TMVW+p	MT20	4.0	6.0	2.75	2.00
F	BMV1+p	MT20	3.0	4.0		
G	BMWW-t	MT20	4.0	4.0		
H	BS-t	MT20	3.0	8.0		
I	BMWWW-t	MT20	4.0	6.0		
J	BMWW-t	MT20	4.0	4.0		
K	BMV1+p	MT20	3.0	4.0		

NOTES- (1)
1) Lateral braces to be a minimum of 2X4 SPF #2.

DIMENSIONS, SUPPORTS AND LOADINGS SPECIFIED BY FABRICATOR TO BE VERIFIED BY BUILDING DESIGNER

BEARINGS

JT	FACTORED GROSS REACTION VERT	HORZ	MAXIMUM FACTORED GROSS REACTION DOWN	HORZ	UPLIFT	INPUT BRG IN-SX	REQRD BRG IN-SX
K	929	0	929	0	0	MECHANICAL	
F	929	0	929	0	0	MECHANICAL	

A SUITABLE HANGER/MECHANICAL CONNECTION IS REQUIRED AT JOINT K, F. MINIMUM BEARING LENGTH AT JOINT K = 3-8, JOINT F = 3-8.

UNFACTORED REACTIONS

JT	1ST LCASE COMBINED	MAX./MIN. COMPONENT REACTIONS SNOW	LIVE	PERM.LIVE	WIND	DEAD	SOIL
K	656	437 / 0	0 / 0	0 / 0	0 / 0	219 / 0	0 / 0
F	656	437 / 0	0 / 0	0 / 0	0 / 0	219 / 0	0 / 0

BRACING
TOP CHORD TO BE SHEATHED OR MAX. PURLIN SPACING = 6.25 FT.
MAX. UNBRACED BOTTOM CHORD LENGTH = 10.00 FT OR RIGID CEILING DIRECTLY APPLIED.

ALL PITCH BREAKS AND PERIMETER CORNER JOINTS MUST BE LATERALLY RESTRAINED.

LOADING
TOTAL LOAD CASES: (4)

CHORDS

MEMB. FR-TO	MAX. FACTORED FORCE (LBS)	FACTORED VERT. LOAD (PLF) FROM	TO	LC1	MAX CSI (LC)	MAX. UNBRAC LENGTH
A- B	-738 / 0	-95.2	-95.2	0.21 (1)	6.25	
B- C	-590 / 0	-95.2	-95.2	0.20 (1)	6.25	
C- D	-590 / 0	-95.2	-95.2	0.20 (1)	6.25	
D- E	-738 / 0	-95.2	-95.2	0.21 (1)	6.25	
K- A	-896 / 0	0.0	0.0	0.10 (1)	7.81	
F- E	-896 / 0	0.0	0.0	0.10 (1)	7.81	
K- J	0 / 0	-18.5	-18.5	0.07 (4)	10.00	
J- I	0 / 544	-18.5	-18.5	0.12 (1)	10.00	
I- H	0 / 544	-18.5	-18.5	0.12 (1)	10.00	
H- G	0 / 544	-18.5	-18.5	0.12 (1)	10.00	
G- F	0 / 0	-18.5	-18.5	0.07 (4)	10.00	

WEBS

MEMB. FR-TO	MAX. FACTORED FORCE (LBS)	MAX CSI (LC)
I- C	0 / 503	0.11 (1)
I- D	-264 / 0	0.24 (1)
G- D	-114 / 31	0.07 (1)
B- I	-264 / 0	0.24 (1)
J- B	-114 / 31	0.07 (1)
A- J	0 / 579	0.13 (1)
G- E	0 / 579	0.13 (1)

DESIGN CRITERIA

SPECIFIED LOADS:

TOP CH.	LL	=	26.7	PSF
	DL	=	6.0	PSF
BOT CH.	LL	=	0.0	PSF
	DL	=	7.4	PSF
TOTAL LOAD		=	40.1	PSF

SPACING = 24.0 IN. C/C

THIS TRUSS IS DESIGNED FOR RESIDENTIAL OR SMALL BUILDING REQUIREMENTS OF PART 9, NBCC 2015

THIS DESIGN COMPLIES WITH:
- PART 9 OF BCBC 2018 , ABC 2019
- PART 9 OF OBC 2012 (2019 AMENDMENT)
- CSA 086-14
- TPIC 2014

(55 % OF 33.4 P.S.F. G.S.L. PLUS 8.4 P.S.F. RAIN LOAD) EQUALS 26.7 P.S.F. SPECIFIED ROOF LIVE LOAD

ALLOWABLE DEFL.(LL)= L/360 (0.54")
CALCULATED VERT. DEFL.(LL) = L/ 999 (0.02")
ALLOWABLE DEFL.(TL)= L/360 (0.54")
CALCULATED VERT. DEFL.(TL) = L/ 999 (0.03")

CSI: TC=0.21/1.00 (D-E:1) , BC=0.12/1.00 (I-J:1) , WB=0.24/1.00 (B-I:1) , SSI=0.14/1.00 (A-B:1)

DOL LUMBER=1.00 NAIL=1.00 LS BEND=1.10 COMP=1.10 SHEAR=1.10 TENS= 1.10

COMPANION LIVE LOAD FACTOR = 1.00

TRUSS PLATE MANUFACTURER IS NOT RESPONSIBLE FOR QUALITY CONTROL IN THE TRUSS MANUFACTURING PLANT .

NAIL VALUES

PLATE	GRIP(DRY) (PSI) MAX	MIN	SHEAR (PLI) MAX	MIN	SECTION (PLI) MAX	MIN
MT20	650	371	1747	788	1987	1873

PLATE PLACEMENT TOL. = 0.250 inches

PLATE ROTATION TOL. = 5.0 Deg.

JSI GRIP= 0.65 (J) (INPUT = 0.90)
JSI METAL= 0.33 (A) (INPUT = 1.00)

LICENSED PROFESSIONAL ENGINEER
8/02/22
C. M. HEYENS
100505065
PROVINCE OF ONTARIO

STRUCTURAL COMPONENT ONLY
DWG # TR22080284

JOB NAME	TRUSS NAME	QUANTITY	PLY	JOB DESC.	DRWG NO.
427633	T11S	2	1	GREEN PARK HOMES TRUSS DESC.	

Tamarack Roof Truss, Burlington

Version 8.530 S Feb 23 2022 MiTek Industries, Inc. Tue Aug 2 14:59:07 2022 Page 1
ID:NUp5P5ms8UNEiFhG2dHqtsywVBs-qDQlUbXFhtnvV9JrRcch8GWzGL7WIXnKfW4QLqyrss2

Scale = 1:66.4

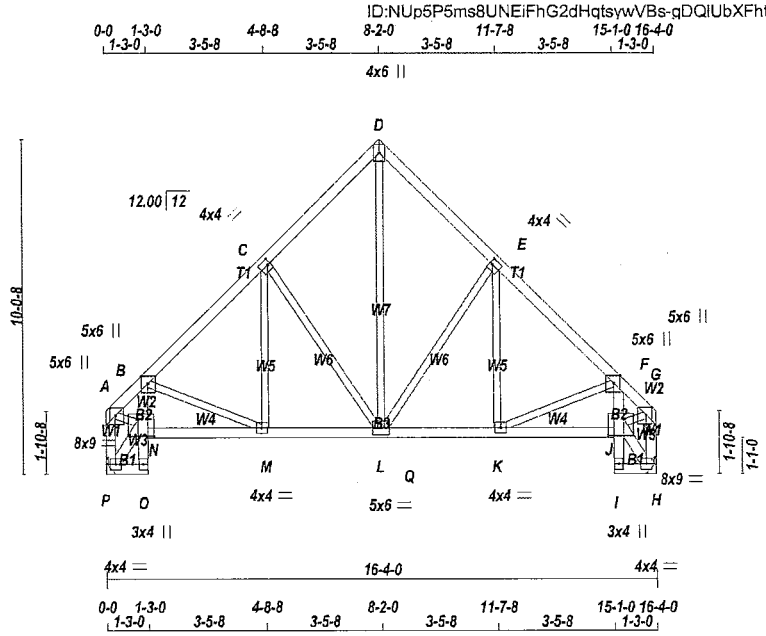

TOTAL WEIGHT = 2 X 89 = 178 lb

[M]

LUMBER
N. L. G. A. RULES

CHORDS	SIZE		LUMBER	DESCR.
A - D	2x4	DRY	No.2	SPF
D - G	2x4	DRY	No.2	SPF
P - A	2x4	DRY	No.2	SPF
H - G	2x4	DRY	No.2	SPF
P - O	2x4	DRY	No.2	SPF
O - B	2x4	DRY	No.2	SPF
N - J	2x4	DRY	No.2	SPF
I - F	2x4	DRY	No.2	SPF
I - H	2x4	DRY	No.2	SPF
ALL WEBS EXCEPT	2x3	DRY	No.2	SPF
P - N	2x4	DRY	No.2	SPF
J - H	2x4	DRY	No.2	SPF

DRY: SEASONED LUMBER.

PLATES (table is in inches)

JT	TYPE	PLATES	W	LEN	Y	X
A	TMVW+p	MT20	5.0	6.0	2.75	2.00
B	TMVW+p	MT20	5.0	6.0	Edge	2.25
C	TMWW-t	MT20	4.0	4.0	2.00	1.00
D	TTW+p	MT20	4.0	6.0		
E	TMWW-t	MT20	4.0	4.0	2.00	1.00
F	TMVW+p	MT20	5.0	6.0	Edge	2.25
G	TMVW+p	MT20	5.0	6.0	2.75	2.00
H	BMVW1-t	MT20	4.0	4.0		
I	BMV+p	MT20	3.0	4.0		
J	BVMWW-l	MT20	8.0	9.0	6.00	5.50
K	BMWW-t	MT20	4.0	4.0		
L	BMWWW-t	MT20	5.0	6.0		
M	BMWW-t	MT20	4.0	4.0		
N	BVMWW-l	MT20	8.0	9.0	6.00	5.50
O	BMV+p	MT20	3.0	4.0		
P	BMVW1-t	MT20	4.0	4.0		

Edge - INDICATES REFERENCE CORNER OF PLATE TOUCHES EDGE OF CHORD.

NOTES- (1)
1)

LICENSED PROFESSIONAL ENGINEER
8/02/22
C. M. HEYENS
100505065
PROVINCE OF ONTARIO

STRUCTURAL COMPONENT ONLY
DWG # TR22080285

DIMENSIONS, SUPPORTS AND LOADINGS SPECIFIED BY FABRICATOR TO BE VERIFIED BY BUILDING DESIGNER

BEARINGS

JT	FACTORED GROSS REACTION VERT	HORZ	MAXIMUM FACTORED GROSS REACTION DOWN	HORZ	UPLIFT	INPUT BRG IN-SX	REQRD BRG IN-SX
P	1182	0	1182	0	0	MECHANICAL	
H	1357	0	1357	0	0	MECHANICAL	

A SUITABLE HANGER/MECHANICAL CONNECTION IS REQUIRED AT JOINT P, H. MINIMUM BEARING LENGTH AT JOINT P = 3-8, JOINT H = 3-8.

UNFACTORED REACTIONS

JT	1ST LCASE COMBINED	MAX./MIN. COMPONENT REACTIONS SNOW	LIVE	PERM.LIVE	WIND	DEAD	SOIL
P	858	437 / 0	0 / 0	0 / 0	0 / 0	422 / 0	0 / 0
H	998	437 / 0	0 / 0	0 / 0	0 / 0	562 / 0	0 / 0

BRACING
TOP CHORD TO BE SHEATHED OR MAX. PURLIN SPACING = 5.31 FT.
MAX. UNBRACED BOTTOM CHORD LENGTH = 7.81 FT OR RIGID CEILING DIRECTLY APPLIED.

ALL PITCH BREAKS AND PERIMETER CORNER JOINTS MUST BE LATERALLY RESTRAINED.

LOADING
TOTAL LOAD CASES: (4)

CHORDS

MEMB. FR-TO	MAX. FACTORED FORCE (LBS)	FACTORED VERT. LOAD LC1 (PLF) FROM	TO	MAX CSI (LC)	MAX. UNBRAC LENGTH
A- B	-1121 / 0	-95.2	-95.2	0.11 (1)	5.83
B- C	-1212 / 0	-95.2	-95.2	0.22 (1)	5.54
C- D	-970 / 0	-95.2	-95.2	0.21 (1)	6.03
D- E	-970 / 0	-95.2	-95.2	0.21 (1)	6.03
E- F	-1343 / 0	-95.2	-95.2	0.23 (1)	5.31
F- G	-1276 / 0	-95.2	-95.2	0.11 (1)	5.55
P- A	-1144 / 0	0.0	0.0	0.14 (1)	7.39
H- G	-1299 / 0	0.0	0.0	0.16 (1)	7.03
P- O	0 / 28	-18.5	-18.5	0.01 (4)	10.00
O- N	0 / 11	0.0	0.0	0.05 (1)	10.00
N- B	-318 / 0	0.0	0.0	0.05 (1)	7.81
N- M	0 / 840	-18.5	-18.5	0.20 (4)	10.00
M- L	0 / 865	-23.8	-111.0	0.38 (4)	10.00
L- Q	0 / 958	-111.0	-111.0	0.42 (4)	10.00
Q- K	0 / 958	-121.0	-88.9	0.42 (4)	10.00
K- J	0 / 951	-88.9	-44.7	0.41 (4)	10.00
I- J	0 / 33	0.0	0.0	0.06 (1)	10.00
J- F	-292 / 0	0.0	0.0	0.06 (1)	7.81
I- H	0 / 33	-58.5	-42.2	0.02 (4)	10.00

WEBS

MEMB. FR-TO	MAX. FACTORED FORCE (LBS)	MAX CSI (LC)
L- D	0 / 1077	0.29 (4)
L- E	-519 / 0	0.36 (1)
K- E	0 / 365	0.14 (4)
K- F	0 / 40	0.02 (4)
C- L	-352 / 0	0.25 (1)
M- C	0 / 105	0.04 (4)
B- M	0 / 62	0.02 (4)
P- N	-40 / 0	0.00 (1)
A- N	0 / 883	0.23 (1)
J- H	-46 / 0	0.01 (1)
J- G	0 / 999	0.26 (1)

LATERAL BRACES TO BE A MINIMUM OF 2X4 SPF #2

DESIGN CRITERIA

*** SPECIAL LOADS ANALYSIS ***
GEOMETRY AND/OR BASIC LOADS CHANGED BY USER.
LOADS WERE DERIVED FROM USER INPUT
NO FURTHER MODIFICATIONS WERE MADE

SPECIFIED LOADS:

TOP CH.	LL	=	26.7	PSF
	DL	=	6.0	PSF
BOT CH.	LL	=	0.0	PSF
	DL	=	7.4	PSF
TOTAL LOAD		=	40.1	PSF

SPACING = 24.0 IN. C/C

*** NON STANDARD GIRDER ***
ADDT'L USER-DEFINED LOADS APPLIED TO ALL LOAD CASES.

THIS TRUSS IS DESIGNED FOR RESIDENTIAL OR SMALL BUILDING REQUIREMENTS OF PART 9, NBCC 2015

THIS DESIGN COMPLIES WITH:
- PART 9 OF BCBC 2018 , ABC 2019
- PART 9 OF OBC 2012 (2019 AMENDMENT)
- CSA 086-14
- TPIC 2014

(55 % OF 33.4 P.S.F. G.S.L. PLUS 8.4 P.S.F. RAIN LOAD) EQUALS 26.7 P.S.F. SPECIFIED ROOF LIVE LOAD

ALLOWABLE DEFL.(LL)= L/360 (0.54")
CALCULATED VERT. DEFL.(LL) = L/ 999 (0.02")
ALLOWABLE DEFL.(TL)= L/360 (0.54")
CALCULATED VERT. DEFL.(TL) = L/ 999 (0.06")

CSI: TC=0.23/1.00 (E-F:1) , BC=0.42/1.00 (K-L:4) , WB=0.36/1.00 (E-L:1) , SSI=0.28/1.00 (K-L:4)

DOL LUMBER=0.97 NAIL=0.97 LS BEND=1.00 COMP=1.00 SHEAR=1.00 TENS= 1.00

COMPANION LIVE LOAD FACTOR = 1.00

TRUSS PLATE MANUFACTURER IS NOT RESPONSIBLE FOR QUALITY CONTROL IN THE TRUSS MANUFACTURING PLANT .

NAIL VALUES

PLATE	GRIP(DRY) (PSI) MAX	MIN	SHEAR (PLI) MAX	MIN	SECTION (PLI) MAX	MIN
MT20	650	371	1747	788	1987	1873

PLATE PLACEMENT TOL. = 0.250 inches

PLATE ROTATION TOL. = 5.0 Deg.

JSI GRIP= 0.90 (A) (INPUT = 0.90)
JSI METAL= 0.36 (G) (INPUT = 1.00)

JOB NAME	TRUSS NAME	QUANTITY	PLY	JOB DESC.	DRWG NO.
427633	T12	1	1	GREEN PARK HOMES TRUSS DESC.	

Tamarack Roof Truss, Burlington

Version 8.530 S Feb 23 2022 MiTek Industries, Inc. Tue Aug 2 14:59:08 2022 Page 1
ID:NUp5P5ms8UNEiFhG2dHqtsywVBs-8Q 7ixYtSBvm6Ju1 J7whU396lXx12cTuApzu7yrss1

Scale = 1:44.7

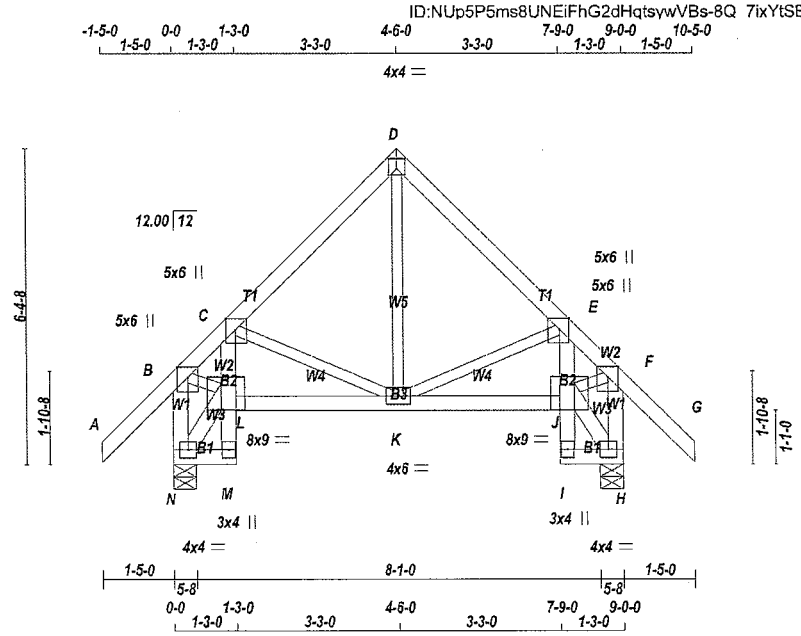

TOTAL WEIGHT = 53 lb

LUMBER
N. L. G. A. RULES

CHORDS	SIZE		LUMBER	DESCR.
A - D	2x4	DRY	No.2	SPF
D - G	2x4	DRY	No.2	SPF
N - B	2x4	DRY	No.2	SPF
H - F	2x4	DRY	No.2	SPF
N - M	2x4	DRY	No.2	SPF
M - C	2x4	DRY	No.2	SPF
L - J	2x4	DRY	No.2	SPF
I - E	2x4	DRY	No.2	SPF
I - H	2x4	DRY	No.2	SPF
ALL WEBS EXCEPT	2x3	DRY	No.2	SPF
N - L	2x4	DRY	No.2	SPF
J - H	2x4	DRY	No.2	SPF

DRY: SEASONED LUMBER.

PLATES (table is in inches)

JT	TYPE	PLATES	W	LEN	Y	X
B	TMVW+p	MT20	5.0	6.0	Edge	2.50
C	TMVW+p	MT20	5.0	6.0	Edge	2.25
D	TTW-p	MT20	4.0	4.0	1.50	2.00
E	TMVW+p	MT20	5.0	6.0	Edge	2.25
F	TMVW+p	MT20	5.0	6.0	Edge	2.50
H	BMVW1-t	MT20	4.0	4.0		
I	BMV+p	MT20	3.0	4.0		
J	BVMWWm	MT20	8.0	9.0	6.50	5.75
K	BMWWW-t	MT20	4.0	6.0		
L	BVMWWm	MT20	8.0	9.0	6.50	5.75
M	BMV+p	MT20	3.0	4.0		
N	BMVW1-t	MT20	4.0	4.0		

Edge - INDICATES REFERENCE CORNER OF PLATE TOUCHES EDGE OF CHORD.

NOTES- (1)
1) Lateral braces to be a minimum of 2X4 SPF #2.

LICENSED PROFESSIONAL ENGINEER
8/02/22
C. M. HEYENS
100505065
PROVINCE OF ONTARIO

STRUCTURAL COMPONENT ONLY
DWG # TR22080286

DIMENSIONS, SUPPORTS AND LOADINGS SPECIFIED BY FABRICATOR TO BE VERIFIED BY BUILDING DESIGNER

BEARINGS

JT	FACTORED GROSS REACTION VERT	HORZ	MAXIMUM FACTORED GROSS REACTION DQWN	HORZ	UPLIFT	INPUT BRG IN-SX	REQRD BRG IN-SX
N	656	0	656	0	0	5-8	5-8
H	656	0	656	0	0	5-8	5-8

UNFACTORED REACTIONS

JT	1ST LCASE COMBINED	MAX./MIN. COMPONENT REACTIONS SNOW	LIVE	PERM.LIVE	WIND	DEAD	SOIL
N	461	322 / 0	0 / 0	0 / 0	0 / 0	139 / 0	0 / 0
H	461	322 / 0	0 / 0	0 / 0	0 / 0	139 / 0	0 / 0

BEARING MATERIAL TO BE SPF NO.2 OR BETTER AT JOINT(S) N, H

BRACING
TOP CHORD TO BE SHEATHED OR MAX. PURLIN SPACING = 6.25 FT.
MAX. UNBRACED BOTTOM CHORD LENGTH = 7.81 FT OR RIGID CEILING DIRECTLY APPLIED.

ALL PITCH BREAKS AND PERIMETER CORNER JOINTS MUST BE LATERALLY RESTRAINED.

LOADING
TOTAL LOAD CASES: (4)

CHORDS

MEMB. FR-TO	MAX. FACTORED FORCE (LBS)	FACTORED VERT. LOAD LC1 (PLF) FROM	TO	MAX CSI (LC)	MAX. UNBRAC LENGTH
A- B	0 / 51	-95.2	-95.2	0.16 (1)	10.00
B- C	-435 / 0	-95.2	-95.2	0.12 (1)	6.25
C- D	-323 / 0	-95.2	-95.2	0.13 (1)	6.25
D- E	-323 / 0	-95.2	-95.2	0.13 (1)	6.25
E- F	-435 / 0	-95.2	-95.2	0.12 (1)	6.25
F- G	0 / 51	-95.2	-95.2	0.16 (1)	10.00
N- B	-634 / 0	0.0	0.0	0.07 (1)	7.81
H- F	-634 / 0	0.0	0.0	0.07 (1)	7.81
N- M	0 / 13	-18.5	-18.5	0.01 (4)	10.00
M- L	0 / 11	0.0	0.0	0.02 (1)	10.00
L- C	-96 / 0	0.0	0.0	0.01 (1)	7.81
L- K	0 / 306	-18.5	-18.5	0.08 (4)	10.00
K- J	0 / 306	-18.5	-18.5	0.08 (4)	10.00
I- J	0 / 11	0.0	0.0	0.02 (1)	10.00
J- E	-96 / 0	0.0	0.0	0.01 (1)	7.81
I- H	0 / 13	-18.5	-18.5	0.01 (4)	10.00

WEBS

MEMB. FR-TO	MAX. FACTORED FORCE (LBS)	MAX CSI (LC)
K- D	0 / 158	0.04 (4)
K- E	-99 / 0	0.02 (1)
C- K	-99 / 0	0.02 (1)
N- L	-18 / 0	0.00 (1)
B- L	0 / 319	0.07 (1)
J- H	-18 / 0	0.00 (1)
J- F	0 / 319	0.07 (1)

[M][F]

DESIGN CRITERIA

SPECIFIED LOADS:

TOP CH.	LL	=	26.7	PSF
	DL	=	6.0	PSF
BOT CH.	LL	=	0.0	PSF
	DL	=	7.4	PSF
TOTAL LOAD		=	40.1	PSF

SPACING = 24.0 IN. C/C

THIS TRUSS IS DESIGNED FOR RESIDENTIAL OR SMALL BUILDING REQUIREMENTS OF PART 9, NBCC 2015

THIS DESIGN COMPLIES WITH:
- PART 9 OF BCBC 2018 , ABC 2019
- PART 9 OF OBC 2012 (2019 AMENDMENT)
- CSA 086-14
- TPIC 2014

DESIGN ASSUMPTIONS
-OVERHANG NOT TO BE ALTERED OR CUT OFF.

(55 % OF 33.4 P.S.F. G.S.L. PLUS 8.4 P.S.F. RAIN LOAD) EQUALS 26.7 P.S.F. SPECIFIED ROOF LIVE LOAD

ALLOWABLE DEFL.(LL)= L/360 (0.30")
CALCULATED VERT. DEFL.(LL) = L/ 999 (0.00")
ALLOWABLE DEFL.(TL)= L/360 (0.30")
CALCULATED VERT. DEFL.(TL) = L/ 999 (0.01")

CSI: TC=0.16/1.00 (F-G:1) , BC=0.08/1.00 (K-L:4) , WB=0.07/1.00 (B-L:1) , SSI=0.10/1.00 (C-D:1)

DOL LUMBER=1.00 NAIL=1.00 LS BEND=1.10 COMP=1.10 SHEAR=1.10 TENS= 1.10

COMPANION LIVE LOAD FACTOR = 1.00

TRUSS PLATE MANUFACTURER IS NOT RESPONSIBLE FOR QUALITY CONTROL IN THE TRUSS MANUFACTURING PLANT .

NAIL VALUES

PLATE	GRIP(DRY) (PSI) MAX	MIN	SHEAR (PLI) MAX	MIN	SECTION (PLI) MAX	MIN
MT20	650	371	1747	788	1987	1873

PLATE PLACEMENT TOL. = 0.250 inches

PLATE ROTATION TOL. = 5.0 Deg.

JSI GRIP= 0.63 (D) (INPUT = 0.90)
JSI METAL= 0.17 (F) (INPUT = 1.00)

JOB NAME	TRUSS NAME	QUANTITY	PLY	JOB DESC.	DRWG NO.
427633	T13	1	2	GREEN PARK HOMES TRUSS DESC.	

Tamarack Roof Truss, Burlington

Version 8.530 S Feb 23 2022 MiTek Industries, Inc. Tue Aug 2 14:59:09 2022 Page 1
ID:5jddhdQ2aVEKS8ltDc496Sz15V3-ccYVvHZVDV1dkTTDY1e9EhbJL8q6mOyd6qZXQZyrss0

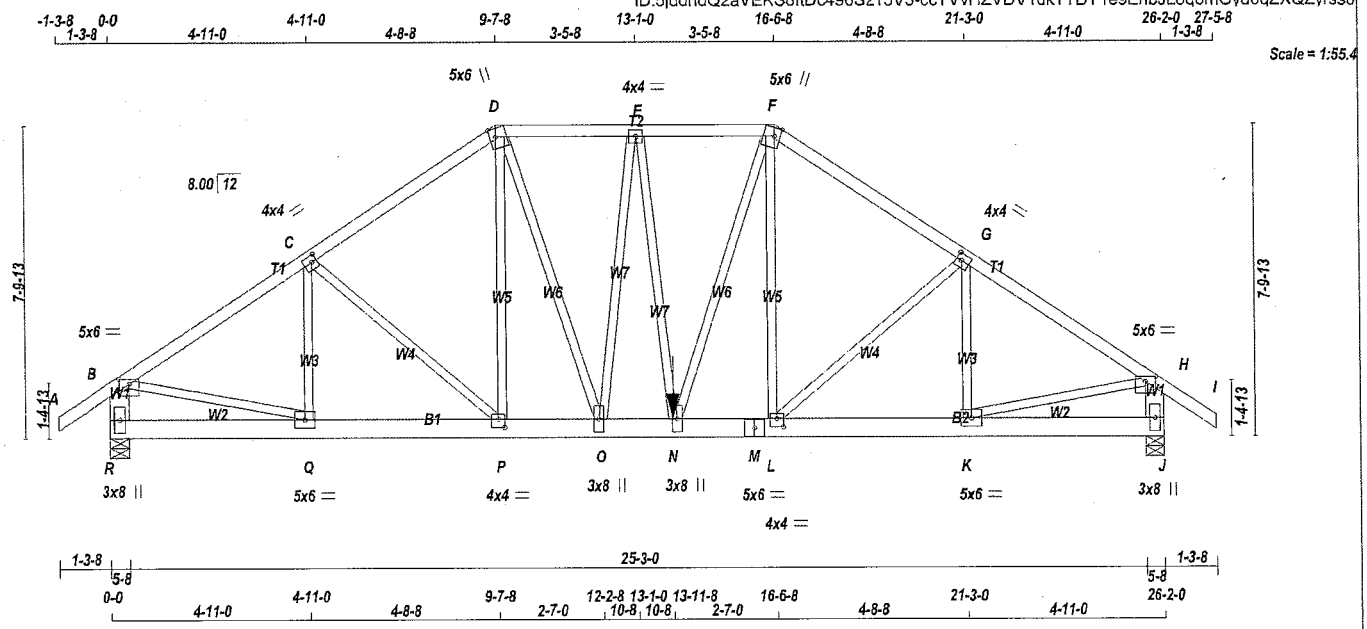

LUMBER
N. L. G. A. RULES

CHORDS	SIZE		LUMBER	DESCR.
A - D	2x4	DRY	No.2	SPF
D - F	2x4	DRY	No.2	SPF
F - I	2x4	DRY	No.2	SPF
R - B	2x6	DRY	No.2	SPF
J - H	2x6	DRY	No.2	SPF
R - M	2x6	DRY	No.2	SPF
M - J	2x6	DRY	No.2	SPF
ALL WEBS EXCEPT	2x3	DRY	No.2	SPF

DRY: SEASONED LUMBER.

DESIGN CONSISTS OF 2 TRUSSES BUILT SEPARATELY THEN FASTENED TOGETHER AS FOLLOWS:

CHORDS	#ROWS	SURFACE SPACING (IN)	LOAD(PLF)
TOP CHORDS : (0.122"X3") SPIRAL NAILS			
A- D	1	12	TOP
D- F	1	12	TOP
F- I	1	12	TOP
R- B	2	12	TOP
J- H	2	12	TOP
BOTTOM CHORDS : (0.122"X3") SPIRAL NAILS			
R- M	2	12	SIDE(183.1)
M- J	2	12	TOP
WEBS : (0.122"X3") SPIRAL NAILS			
E- N	1	6	SIDE(273.3)
2x3	1	6	

NAILS TO BE DRIVEN FROM ONE SIDE ONLY.

GIRDER NAILING ASSUMES NAILED HANGERS ARE FASTENED WITH MIN. 3-0 INCH NAILS.

TOP - COMPONENTS ARE LOADED FROM THE TOP AND MUST BE PLACED ON TOP EDGE OF ALL PLIES FOR THE LOAD TO BE TRANSFERRED TO EACH PLY.

LICENSED PROFESSIONAL ENGINEER
8/02/22
C. M. HEYENS
100505065
PROVINCE OF ONTARIO

STRUCTURAL COMPONENT ONLY
DWG # TR22080287 PG 1/2

DIMENSIONS, SUPPORTS AND LOADINGS SPECIFIED BY FABRICATOR TO BE VERIFIED BY BUILDING DESIGNER

BEARINGS

JT	FACTORED GROSS REACTION VERT	HORZ	MAXIMUM FACTORED GROSS REACTION DOWN	HORZ	UPLIFT	INPUT BRG IN-SX	REQRD BRG IN-SX
R	2433	0	2433	0	0	5-8	5-8
J	2553	0	2553	0	0	5-8	5-8

UNFACTORED REACTIONS

JT	1ST LCASE COMBINED	MAX./MIN. COMPONENT REACTIONS SNOW	LIVE	PERM.LIVE	WIND	DEAD	SOIL
R	1713	1168 / 0	0 / 0	0 / 0	0 / 0	545 / 0	0 / 0
J	1797	1226 / 0	0 / 0	0 / 0	0 / 0	571 / 0	0 / 0

BEARING MATERIAL TO BE SPF NO.2 OR BETTER AT JOINT(S) R, J

BRACING
TOP CHORD TO BE SHEATHED OR MAX. PURLIN SPACING = 5.08 FT.
MAX. UNBRACED BOTTOM CHORD LENGTH = 10.00 FT OR RIGID CEILING DIRECTLY APPLIED.

ALL PITCH BREAKS AND PERIMETER CORNER JOINTS MUST BE LATERALLY RESTRAINED.

LOADING
TOTAL LOAD CASES: (4)

CHORDS

MEMB. FR-TO	MAX. FACTORED FORCE (LBS)	FACTORED VERT. LOAD LC1 FROM (PLF)	TO	MAX CSI (LC)	MAX. UNBRAC LENGTH
A- B	0 / 36	-95.2	-95.2	0.07 (1)	10.00
B- C	-2826 / 0	-95.2	-95.2	0.25 (1)	5.20
C- D	-2773 / 0	-95.2	-95.2	0.24 (1)	5.24
D- E	-2641 / 0	-95.2	-95.2	0.11 (1)	5.50
E- F	-2794 / 0	-95.2	-95.2	0.11 (1)	5.38
F- G	-2969 / 0	-95.2	-95.2	0.25 (1)	5.10
G- H	-2988 / 0	-95.2	-95.2	0.25 (1)	5.08
H- I	0 / 36	-95.2	-95.2	0.07 (1)	10.00
R- B	-2378 / 0	0.0	0.0	0.09 (1)	7.81
J- H	-2495 / 0	0.0	0.0	0.09 (1)	7.81
R- Q	0 / 0	-18.5	-18.5	0.03 (1)	10.00
Q- P	0 / 2376	-18.5	-18.5	0.18 (1)	10.00
P- O	0 / 2281	-18.5	-18.5	0.18 (1)	10.00
O- N	0 / 2747	-18.5	-18.5	0.28 (1)	10.00
N- M	0 / 2446	-18.5	-18.5	0.26 (1)	10.00
M- L	0 / 2446	-18.5	-18.5	0.26 (1)	10.00
L- K	0 / 2510	-18.5	-18.5	0.20 (1)	10.00
K- J	0 / 0	-18.5	-18.5	0.03 (1)	10.00

WEBS

MEMB. FR-TO	MAX. FACTORED FORCE (LBS)	MAX CSI (LC)
Q- C	-421 / 0	0.07 (1)
C- P	-129 / 0	0.05 (1)
P- D	0 / 163	0.02 (4)
L- F	0 / 317	0.04 (1)
L- G	-91 / 0	0.03 (1)
K- G	-466 / 0	0.07 (1)
B- Q	0 / 2424	0.30 (1)
K- H	0 / 2561	0.32 (1)
O- E	-804 / 0	0.45 (1)
E- N	0 / 430	0.05 (1)
D- O	0 / 1105	0.14 (1)
N- F	0 / 1066	0.13 (1)

SPECIFIED CONCENTRATED LOADS (LBS)

JT	LOC.	LC1	MAX-	MAX+	FACE	DIR.	TYPE	HEEL	CONN.
N	13-11-8	-1230	-1230	---	FRONT	VERT	TOTAL	---	C1

CONNECTION REQUIREMENTS

1) **C1:** A SUITABLE HANGER/MECHANICAL CONNECTION IS REQUIRED.

[M]

DESIGN CRITERIA

SPECIFIED LOADS:

TOP CH.	LL	=	26.7	PSF
	DL	=	6.0	PSF
BOT CH.	LL	=	0.0	PSF
	DL	=	7.4	PSF
TOTAL LOAD		=	40.1	PSF

SPACING = 24.0 IN. C/C

LOADING IN FLAT SECTION BASED ON A SLOPE OF 6.00/12

THIS TRUSS IS DESIGNED FOR RESIDENTIAL OR SMALL BUILDING REQUIREMENTS OF PART 9, NBCC 2015

THIS DESIGN COMPLIES WITH:
- PART 9 OF BCBC 2018 , ABC 2019
- PART 9 OF OBC 2012 (2019 AMENDMENT)
- CSA 086-14
- TPIC 2014

(55 % OF 33.4 P.S.F. G.S.L. PLUS 8.4 P.S.F. RAIN LOAD) EQUALS 26.7 P.S.F. SPECIFIED ROOF LIVE LOAD

ALLOWABLE DEFL.(LL)= L/360 (0.87")
CALCULATED VERT. DEFL.(LL) = L/ 999 (0.05")
ALLOWABLE DEFL.(TL)= L/360 (0.87")
CALCULATED VERT. DEFL.(TL) = L/ 999 (0.09")

CSI: TC=0.25/1.00 (G-H:1) , BC=0.28/1.00 (N-O:1) , WB=0.45/1.00 (E-O:1) , SSI=0.10/1.00 (B-C:1)

DOL LUMBER=1.00 NAIL=1.00 LS BEND=1.00 COMP=1.00 SHEAR=1.00 TENS= 1.00

COMPANION LIVE LOAD FACTOR = 1.00

AUTOSOLVE HEELS OFF

TRUSS PLATE MANUFACTURER IS NOT RESPONSIBLE FOR QUALITY CONTROL IN THE TRUSS MANUFACTURING PLANT .

NAIL VALUES

PLATE	GRIP(DRY) (PSI) MAX	MIN	SHEAR (PLI) MAX	MIN	SECTION (PLI) MAX	MIN
MT20	650	371	1747	788	1987	1873

PLATE PLACEMENT TOL. = 0.250 inches

PLATE ROTATION TOL. = 5.0 Deg.

JSI GRIP= 0.75 (L) (INPUT = 0.90)
JSI METAL= 0.29 (Q) (INPUT = 1.00)

CONTINUED ON PAGE 2

PLATES (table is in inches)

JT	TYPE	PLATES	W	LEN	Y	X
B	TMVW-p	MT20	5.0	6.0	1.50	3.00
C	TMWW-t	MT20	4.0	4.0	2.00	1.50
D	TTWW+m	MT20	5.0	6.0	Edge	1.75
E	TMWW-t	MT20	4.0	4.0		
F	TTWW+m	MT20	5.0	6.0	Edge	1.75
G	TMWW-t	MT20	4.0	4.0	2.00	1.50
H	TMVW-p	MT20	5.0	6.0	1.50	3.00
J	BMV1+p	MT20	3.0	8.0		
K	BMWW-t	MT20	5.0	6.0		
L	BMWW-t	MT20	4.0	4.0	2.50	2.00
M	BS-t	MT20	5.0	6.0		
N	BMWW+t	MT20	3.0	8.0		
O	BMWW+t	MT20	3.0	8.0		
P	BMWW-t	MT20	4.0	4.0	2.50	2.00
Q	BMWW-t	MT20	5.0	6.0		
R	BMV1+p	MT20	3.0	8.0		

Edge - INDICATES REFERENCE CORNER OF PLATE TOUCHES EDGE OF CHORD.

NOTES- (1)
1) Lateral braces to be a minimum of 2X4 SPF #2.

LICENSED PROFESSIONAL ENGINEER
8/02/22
C. M. HEYENS
100505065
PROVINCE OF ONTARIO

STRUCTURAL COMPONENT ONLY
DWG # TR22080287 PG 2/2

JOB NAME	TRUSS NAME	QUANTITY	PLY	JOB DESC.	DRWG NO.
427633	T14	1	2	GREEN PARK HOMES TRUSS DESC.	

Tamarack Roof Truss, Burlington

Version 8.530 S Feb 23 2022 MiTek Industries, Inc. Tue Aug 2 14:59:10 2022 Page 1
ID:5jddhdQ2aVEKS8ltDc496Sz15V3-4o6t7da7 o9UMd1Q6k9Omv8W6YAaVqAmLUI4y?yrss?

Scale = 1:47.5

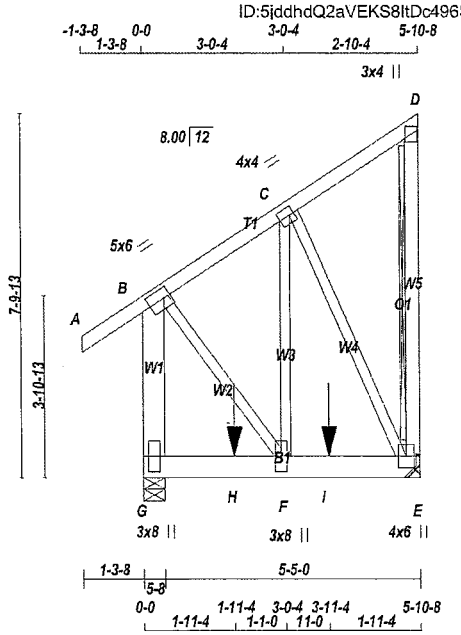

TOTAL WEIGHT = 2 X 47 = 94 lb

[M]

LUMBER

N. L. G. A. RULES

CHORDS	SIZE		LUMBER	DESCR.
A - D	2x4	DRY	No.2	SPF
E - D	2x4	DRY	No.2	SPF
G - B	2x6	DRY	No.2	SPF
G - E	2x6	DRY	No.2	SPF
ALL WEBS EXCEPT	2x3	DRY	No.2	SPF

DRY: SEASONED LUMBER.

DESIGN CONSISTS OF 2 TRUSSES BUILT SEPARATELY THEN FASTENED TOGETHER AS FOLLOWS:

CHORDS #ROWS	SURFACE SPACING (IN)	LOAD(PLF)
TOP CHORDS : (0.122"X3") SPIRAL NAILS		
A- D 1	12	TOP
D- E 1	12	TOP
G- B 2	12	TOP
BOTTOM CHORDS : (0.122"X3") SPIRAL NAILS		
G- E 2	12	SIDE(0.0)
WEBS : (0.122"X3") SPIRAL NAILS		
2x3 1	6	

NAILS TO BE DRIVEN FROM ONE SIDE ONLY.

GIRDER NAILING ASSUMES NAILED HANGERS ARE FASTENED WITH MIN. 3-0 INCH NAILS.

TOP - COMPONENTS ARE LOADED FROM THE TOP AND MUST BE PLACED ON TOP EDGE OF ALL PLIES FOR THE LOAD TO BE TRANSFERRED TO EACH PLY.

SIDE - PLF SHOWN IS THE EQUIVALENT UDL APPLIED TO ONE SIDE THAT THE CORRESPONDING NAILING PATTERN SHALL BE CAPABLE OF TRANSFERING. REMAINING PLF MUST BE APPLIED ON THE OPPOSITE SIDE OR ON THE TOP.

PLATES (table is in inches)

JT	TYPE	PLATES	W	LEN	Y	X
B	TMVW-t	MT20	5.0	6.0	2.50	1.75

LICENSED PROFESSIONAL ENGINEER
8/02/22
C. M. HEYENS
100505065
PROVINCE OF ONTARIO

STRUCTURAL COMPONENT ONLY
DWG # TR22080288 PG 1/2

DIMENSIONS, SUPPORTS AND LOADINGS SPECIFIED BY FABRICATOR TO BE VERIFIED BY BUILDING DESIGNER

BEARINGS

JT	FACTORED GROSS REACTION VERT	HORZ	MAXIMUM FACTORED GROSS REACTION DOWN	HORZ	UPLIFT	INPUT BRG IN-SX	REQRD BRG IN-SX
E	1768	0	1768	0	0	MECHANICAL	
G	1896	0	1896	0	0	5-8	5-8

A SUITABLE HANGER/MECHANICAL CONNECTION IS REQUIRED AT JOINT E. MINIMUM BEARING LENGTH AT JOINT E = 4-0.

UNFACTORED REACTIONS

JT	1ST LCASE COMBINED	MAX./MIN. COMPONENT REACTIONS SNOW	LIVE	PERM.LIVE	WIND	DEAD	SOIL
E	1245	849 / 0	0 / 0	0 / 0	0 / 0	396 / 0	0 / 0
G	1333	920 / 0	0 / 0	0 / 0	0 / 0	412 / 0	0 / 0

BEARING MATERIAL TO BE SPF NO.2 OR BETTER AT JOINT(S) G

BRACING

TOP CHORD TO BE SHEATHED OR MAX. PURLIN SPACING = 6.25 FT.
MAX. UNBRACED BOTTOM CHORD LENGTH = 10.00 FT OR RIGID CEILING DIRECTLY APPLIED.

ALL PITCH BREAKS AND PERIMETER CORNER JOINTS MUST BE LATERALLY RESTRAINED.

2x4 DRY SPF No.2 T-BRACE AT D-E

FASTEN T AND I-BRACES TO NARROW EDGE OF WEB WITH ONE ROW PER PLY OF 3" COMMON WIRE NAILS @ 6" O.C. WITH 3" MINIMUM END DISTANCE. BRACE MUST COVER 90% OF WEB LENGTH.

END VERTICAL(S) MUST BE SHEATHED OR HAVE BRACES AS INDICATED IN THE MAX. UNBRACED LENGTH COLUMN OF THE TABLE BELOW

LOADING

TOTAL LOAD CASES: (4)

CHORDS

MEMB. FR-TO	MAX. FACTORED FORCE (LBS)	FACTORED VERT. LOAD (PLF) FROM	TO	LC1	MAX CSI (LC)	MAX. UNBRAC LENGTH
A- B	0 / 36	-95.2	-95.2	0.07 (1)	10.00	
B- C	-845 / 0	-95.2	-95.2	0.07 (1)	6.25	
C- D	-17 / 0	-95.2	-95.2	0.07 (1)	6.25	
E- D	-105 / 0	0.0	0.0	0.02 (1)	7.81	
G- B	-1553 / 0	0.0	0.0	0.13 (1)	7.81	
G- H	0 / 0	-18.5	-18.5	0.23 (1)	10.00	
H- F	0 / 0	-18.5	-18.5	0.23 (1)	10.00	
F- I	0 / 717	-18.5	-18.5	0.27 (1)	10.00	
I- E	0 / 717	-18.5	-18.5	0.27 (1)	10.00	

WEBS

MEMB. FR-TO	MAX. FACTORED FORCE (LBS)	MAX CSI (LC)
F- C	0 / 1522	0.19 (1)
C- E	-1558 / 0	0.51 (1)
B- F	0 / 1096	0.14 (1)

SPECIFIED CONCENTRATED LOADS (LBS)

JT	LOC.	LC1	MAX-	MAX+	FACE	DIR.	TYPE	HEEL	CONN.
H	1-11-4	-540	-540	---	BACK	VERT	TOTAL	---	C1
H	1-11-4	-465	-465	---	FRONT	VERT	TOTAL	---	C1
I	3-11-4	-540	-540	---	BACK	VERT	TOTAL	---	C1
I	3-11-4	-470	-470	---	FRONT	VERT	TOTAL	---	C1

CONNECTION REQUIREMENTS

1) **C1:** A SUITABLE HANGER/MECHANICAL CONNECTION IS REQUIRED.

DESIGN CRITERIA

SPECIFIED LOADS:

TOP CH.	LL	=	26.7	PSF
	DL	=	6.0	PSF
BOT CH.	LL	=	0.0	PSF
	DL	=	7.4	PSF
TOTAL LOAD		=	40.1	PSF

SPACING = 24.0 IN. C/C

THIS TRUSS IS DESIGNED FOR RESIDENTIAL OR SMALL BUILDING REQUIREMENTS OF PART 9, NBCC 2015

THIS DESIGN COMPLIES WITH:
- PART 9 OF BCBC 2018 , ABC 2019
- PART 9 OF OBC 2012 (2019 AMENDMENT)
- CSA 086-14
- TPIC 2014

(55 % OF 33.4 P.S.F. G.S.L. PLUS 8.4 P.S.F. RAIN LOAD) EQUALS 26.7 P.S.F. SPECIFIED ROOF LIVE LOAD

ALLOWABLE DEFL.(LL)= L/360 (0.20")
CALCULATED VERT. DEFL.(LL) = L/ 999 (0.01")
ALLOWABLE DEFL.(TL)= L/360 (0.20")
CALCULATED VERT. DEFL.(TL) = L/ 999 (0.02")

CSI: TC=0.13/1.00 (B-G:1) , BC=0.27/1.00 (E-F:1) , WB=0.51/1.00 (C-E:1) , SSI=0.40/1.00 (E-F:1)

DOL LUMBER=1.00 NAIL=1.00 LS BEND=1.00 COMP=1.00 SHEAR=1.00 TENS= 1.00

COMPANION LIVE LOAD FACTOR = 1.00

AUTOSOLVE RIGHT HEEL ONLY

TRUSS PLATE MANUFACTURER IS NOT RESPONSIBLE FOR QUALITY CONTROL IN THE TRUSS MANUFACTURING PLANT .

NAIL VALUES

PLATE	GRIP(DRY) (PSI) MAX	MIN	SHEAR (PLI) MAX	MIN	SECTION (PLI) MAX	MIN
MT20	650	371	1747	788	1987	1873

PLATE PLACEMENT TOL. = 0.250 inches

PLATE ROTATION TOL. = 5.0 Deg.

JSI GRIP= 0.75 (C) (INPUT = 0.90)
JSI METAL= 0.33 (F) (INPUT = 1.00)

CONTINUED ON PAGE 2

PLATES (table is in inches)

JT	TYPE	PLATES	W	LEN	Y	X
C	TMWW-t	MT20	4.0	4.0	2.00	1.25
D	TMV+p	MT20	3.0	4.0		
E	BMVW1+p	MT20	4.0	6.0		
F	BMWW+t	MT20	3.0	8.0		
G	BMV1+p	MT20	3.0	8.0		

NOTES- (1)
1) Lateral braces to be a minimum of 2X4 SPF #2.

LICENSED PROFESSIONAL ENGINEER
8/02/22
C. M. HEYENS
100505065
PROVINCE OF ONTARIO

STRUCTURAL COMPONENT ONLY
DWG # TR22080288

JOB NAME	TRUSS NAME	QUANTITY	PLY	JOB DESC.	DRWG NO.
427633	T15	1	1	GREEN PARK HOMES TRUSS DESC.	

Tamarack Roof Truss, Burlington

Version 8.530 S Feb 23 2022 MiTek Industries, Inc. Tue Aug 2 14:59:10 2022 Page 1
ID:5jddhdQ2aVEKS8ltDc496Sz15V3-4o6t7da7 o9UMd1Q6k9Omv8P5YARVuGmLUI4y?yrss?

Scale = 1:39.7

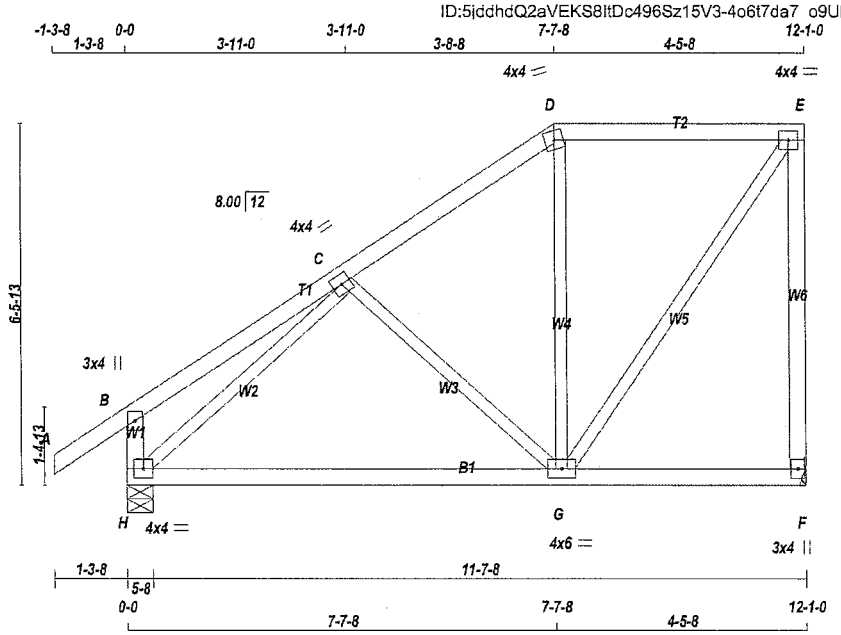

TOTAL WEIGHT = 58 lb

LUMBER
N. L. G. A. RULES

CHORDS	SIZE		LUMBER	DESCR.
A - D	2x4	DRY	No.2	SPF
D - E	2x4	DRY	No.2	SPF
F - E	2x4	DRY	No.2	SPF
H - B	2x4	DRY	No.2	SPF
H - F	2x4	DRY	No.2	SPF
ALL WEBS EXCEPT	2x3	DRY	No.2	SPF

DRY: SEASONED LUMBER.

PLATES (table is in inches)

JT	TYPE	PLATES	W	LEN	Y	X
B	TMV+p	MT20	3.0	4.0		
C	TMWW-t	MT20	4.0	4.0		
D	TTW-m	MT20	4.0	4.0		
E	TMVW-t	MT20	4.0	4.0		
F	BMV1+p	MT20	3.0	4.0		
G	BMWWW-t	MT20	4.0	6.0		
H	BMVW1-t	MT20	4.0	4.0		

NOTES- (1)
1) Lateral braces to be a minimum of 2X4 SPF #2.

DIMENSIONS, SUPPORTS AND LOADINGS SPECIFIED BY FABRICATOR TO BE VERIFIED BY BUILDING DESIGNER

BEARINGS

JT	FACTORED GROSS REACTION VERT	HORZ	MAXIMUM FACTORED GROSS REACTION DOWN	HORZ	UPLIFT	INPUT BRG IN-SX	REQRD BRG IN-SX
F	687	0	687	0	0	MECHANICAL	
H	818	0	818	0	0	5-8	5-8

A SUITABLE HANGER/MECHANICAL CONNECTION IS REQUIRED AT JOINT F. MINIMUM BEARING LENGTH AT JOINT F = 1-8.

UNFACTORED REACTIONS

JT	1ST LCASE COMBINED	MAX./MIN. COMPONENT REACTIONS SNOW	LIVE	PERM.LIVE	WIND	DEAD	SOIL
F	485	323 / 0	0 / 0	0 / 0	0 / 0	162 / 0	0 / 0
H	575	396 / 0	0 / 0	0 / 0	0 / 0	178 / 0	0 / 0

BEARING MATERIAL TO BE SPF NO.2 OR BETTER AT JOINT(S) H

BRACING
TOP CHORD TO BE SHEATHED OR MAX. PURLIN SPACING = 6.25 FT.
MAX. UNBRACED BOTTOM CHORD LENGTH = 10.00 FT OR RIGID CEILING DIRECTLY APPLIED.

ALL PITCH BREAKS AND PERIMETER CORNER JOINTS MUST BE LATERALLY RESTRAINED.

LOADING
TOTAL LOAD CASES: (4)

CHORDS

MEMB. FR-TO	MAX. FACTORED FORCE (LBS)	FACTORED VERT. LOAD (PLF) FROM	TO	LC1 MAX CSI (LC)	MAX. UNBRAC LENGTH
A- B	0 / 36	-95.2	-95.2	0.13 (1)	10.00
B- C	0 / 24	-95.2	-95.2	0.23 (1)	10.00
C- D	-414 / 0	-95.2	-95.2	0.17 (1)	6.25
D- E	-322 / 0	-95.2	-95.2	0.24 (1)	6.25
F- E	-669 / 0	0.0	0.0	0.57 (1)	7.81
H- B	-269 / 0	0.0	0.0	0.03 (1)	7.81
H- G	0 / 516	-18.5	-18.5	0.27 (4)	10.00
G- F	0 / 0	-18.5	-18.5	0.24 (4)	10.00

WEBS

MEMB. FR-TO	MAX. FACTORED FORCE (LBS)	MAX CSI (LC)
C- G	-260 / 0	0.12 (1)
G- D	-135 / 18	0.09 (1)
G- E	0 / 559	0.13 (1)
H- C	-711 / 0	0.32 (1)

DESIGN CRITERIA

SPECIFIED LOADS:

TOP CH.	LL	=	26.7	PSF
	DL	=	6.0	PSF
BOT CH.	LL	=	0.0	PSF
	DL	=	7.4	PSF
TOTAL LOAD		=	40.1	PSF

SPACING = 24.0 IN. C/C

LOADING IN FLAT SECTION BASED ON A SLOPE OF 6.00/12

THIS TRUSS IS DESIGNED FOR RESIDENTIAL OR SMALL BUILDING REQUIREMENTS OF PART 9, NBCC 2015

THIS DESIGN COMPLIES WITH:
- PART 9 OF BCBC 2018 , ABC 2019
- PART 9 OF OBC 2012 (2019 AMENDMENT)
- CSA 086-14
- TPIC 2014

(55 % OF 33.4 P.S.F. G.S.L. PLUS 8.4 P.S.F. RAIN LOAD) EQUALS 26.7 P.S.F. SPECIFIED ROOF LIVE LOAD

ALLOWABLE DEFL.(LL)= L/360 (0.40")
CALCULATED VERT. DEFL.(LL) = L/ 999 (0.01")
ALLOWABLE DEFL.(TL)= L/360 (0.40")
CALCULATED VERT. DEFL.(TL) = L/ 999 (0.10")

CSI: TC=0.57/1.00 (E-F:1) , BC=0.27/1.00 (G-H:4) , WB=0.32/1.00 (C-H:1) , SSI=0.17/1.00 (D-E:1)

DOL LUMBER=1.00 NAIL=1.00 LS BEND=1.10 COMP=1.10 SHEAR=1.10 TENS= 1.10

COMPANION LIVE LOAD FACTOR = 1.00

TRUSS PLATE MANUFACTURER IS NOT RESPONSIBLE FOR QUALITY CONTROL IN THE TRUSS MANUFACTURING PLANT .

NAIL VALUES

PLATE	GRIP(DRY) (PSI) MAX	MIN	SHEAR (PLI) MAX	MIN	SECTION (PLI) MAX	MIN
MT20	650	371	1747	788	1987	1873

PLATE PLACEMENT TOL. = 0.250 inches

PLATE ROTATION TOL. = 5.0 Deg.

JSI GRIP= 0.68 (G) (INPUT = 0.90)
JSI METAL= 0.22 (C) (INPUT = 1.00)

LICENSED PROFESSIONAL ENGINEER
8/02/22
C. M. HEYENS
100505065
PROVINCE OF ONTARIO

STRUCTURAL COMPONENT ONLY
DWG # TR22080289

JOB NAME	TRUSS NAME	QUANTITY	PLY	JOB DESC.	DRWG NO.
427633	T16	1	1	GREEN PARK HOMES TRUSS DESC.	

Tamarack Roof Truss, Burlington

Version 8.530 S Feb 23 2022 MiTek Industries, Inc. Tue Aug 2 14:59:11 2022 Page 1
ID:5jddhdQ2aVEKS8ItDc496Sz15V3-Y?gFKzaII6HLzncqSgdJ6gcmyWxELswa82eUSyrss

Scale = 1:35.2

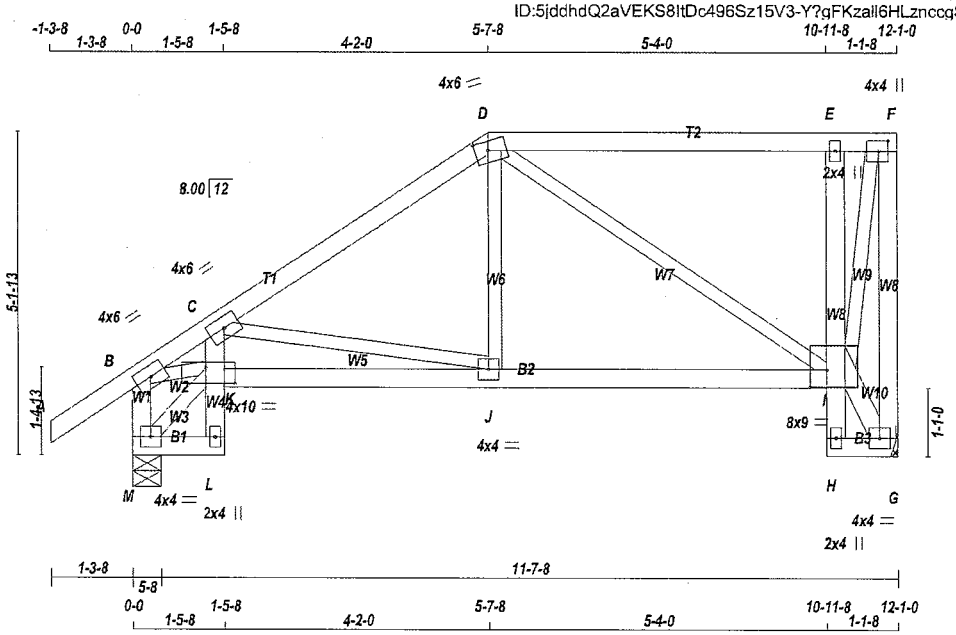

TOTAL WEIGHT = 62 lb

LUMBER
N. L. G. A. RULES

CHORDS	SIZE		LUMBER	DESCR.
A - D	2x4	DRY	No.2	SPF
D - F	2x4	DRY	No.2	SPF
G - F	2x4	DRY	No.2	SPF
M - B	2x4	DRY	No.2	SPF
M - L	2x4	DRY	No.2	SPF
K - I	2x4	DRY	No.2	SPF
H - G	2x4	DRY	No.2	SPF
ALL WEBS	2x4	DRY	No.2	SPF
EXCEPT				
C - J	2x3	DRY	No.2	SPF
J - D	2x3	DRY	No.2	SPF
D - I	2x3	DRY	No.2	SPF
I - F	2x3	DRY	No.2	SPF
M - K	2x3	DRY	No.2	SPF
B - K	2x3	DRY	No.2	SPF

DRY: SEASONED LUMBER.

PLATES (table is in inches)

JT	TYPE	PLATES	W	LEN	Y	X
B	TMVW-t	MT20	4.0	6.0		
C	TMWW-t	MT20	4.0	6.0		
D	TTWW-m	MT20	4.0	6.0	1.75	2.50
E	TMW+w	MT20	2.0	4.0		
F	TMVW+p	MT20	4.0	4.0	2.00	1.75
G	BMVW1-t	MT20	4.0	4.0		
H	BMW+w	MT20	2.0	4.0		
I	BWMWWW*m	MT20	8.0	9.0	3.25	3.00
J	BMWW-t	MT20	4.0	4.0		
K	BWMWW*-l	MT20	4.0	10.0	3.00	5.50
L	BMW+w	MT20	2.0	4.0		
M	BMVW1-t	MT20	4.0	4.0		

NOTES- (1)
1) Lateral braces to be a minimum of 2X4 SPF #2.

LICENSED PROFESSIONAL ENGINEER
8/02/22
C. M. HEYENS
100505065
PROVINCE OF ONTARIO

STRUCTURAL COMPONENT ONLY
DWG # TR22080290

DIMENSIONS, SUPPORTS AND LOADINGS SPECIFIED BY FABRICATOR TO BE VERIFIED BY BUILDING DESIGNER

BEARINGS

JT	FACTORED GROSS REACTION VERT	HORZ	MAXIMUM FACTORED GROSS REACTION DOWN	HORZ	UPLIFT	INPUT BRG IN-SX	REQRD BRG IN-SX
G	679	0	679	0	0	MECHANICAL	
M	825	0	825	0	0	5-8	5-8

A SUITABLE HANGER/MECHANICAL CONNECTION IS REQUIRED AT JOINT G. MINIMUM BEARING LENGTH AT JOINT G = 1-8.

UNFACTORED REACTIONS

JT	1ST LCASE COMBINED	MAX./MIN. COMPONENT REACTIONS SNOW	LIVE	PERM.LIVE	WIND	DEAD	SOIL
G	480	319 / 0	0 / 0	0 / 0	0 / 0	161 / 0	0 / 0
M	580	401 / 0	0 / 0	0 / 0	0 / 0	179 / 0	0 / 0

BEARING MATERIAL TO BE SPF NO.2 OR BETTER AT JOINT(S) M

BRACING
TOP CHORD TO BE SHEATHED OR MAX. PURLIN SPACING = 5.53 FT.
MAX. UNBRACED BOTTOM CHORD LENGTH = 10.00 FT OR RIGID CEILING DIRECTLY APPLIED.

MAX. UNBRACED INTERIOR CHORD LENGTH = 7.81 FT

ALL PITCH BREAKS AND PERIMETER CORNER JOINTS MUST BE LATERALLY RESTRAINED.

LOADING
TOTAL LOAD CASES: (4)

CHORDS

MEMB. FR-TO	MAX. FACTORED FORCE (LBS)	FACTORED VERT. LOAD LC1 (PLF) FROM	TO	MAX CSI (LC)	MAX. UNBRAC LENGTH
A- B	0 / 36	-95.2	-95.2	0.13 (1)	10.00
B- C	-1272 / 0	-95.2	-95.2	0.16 (1)	5.53
C- D	-671 / 0	-95.2	-95.2	0.25 (1)	6.25
D- E	-236 / 0	-95.2	-95.2	0.39 (1)	6.25
E- F	-228 / 0	-95.2	-95.2	0.38 (1)	6.25
G- F	-634 / 0	0.0	0.0	0.29 (1)	7.81
M- B	-758 / 0	0.0	0.0	0.08 (1)	7.81
M- L	0 / 58	-18.5	-18.5	0.01 (1)	10.00
K- J	0 / 1165	-18.5	-18.5	0.26 (1)	10.00
J- I	0 / 552	-18.5	-18.5	0.18 (4)	10.00
H- G	0 / 33	-18.5	-18.5	0.01 (1)	10.00

WEBS

MEMB. FR-TO	MAX. FACTORED FORCE (LBS)	MAX CSI (LC)
L- K	0 / 14	0.10 (1)
K- C	0 / 162	0.12 (1)
H- I	0 / 10	0.05 (1)
I- E	-644 / 0	0.07 (1)
C- J	-630 / 0	0.21 (1)
J- D	0 / 192	0.05 (4)
D- I	-383 / 0	0.29 (1)
I- G	-49 / 0	0.01 (1)
I- F	0 / 903	0.20 (1)
M- K	-80 / 0	0.01 (1)
B- K	0 / 1071	0.24 (1)

[M]

DESIGN CRITERIA

SPECIFIED LOADS:

TOP CH.	LL	=	26.7	PSF
	DL	=	6.0	PSF
BOT CH.	LL	=	0.0	PSF
	DL	=	7.4	PSF
TOTAL LOAD		=	40.1	PSF

SPACING = 24.0 IN. C/C

LOADING IN FLAT SECTION BASED ON A SLOPE OF 6.00/12

THIS TRUSS IS DESIGNED FOR RESIDENTIAL OR SMALL BUILDING REQUIREMENTS OF PART 9, NBCC 2015

THIS DESIGN COMPLIES WITH:
- PART 9 OF BCBC 2018 , ABC 2019
- PART 9 OF OBC 2012 (2019 AMENDMENT)
- CSA 086-14
- TPIC 2014

DESIGN ASSUMPTIONS
-OVERHANG NOT TO BE ALTERED OR CUT OFF.

(55 % OF 33.4 P.S.F. G.S.L. PLUS 8.4 P.S.F. RAIN LOAD) EQUALS 26.7 P.S.F. SPECIFIED ROOF LIVE LOAD

ALLOWABLE DEFL.(LL)= L/360 (0.40")
CALCULATED VERT. DEFL.(LL) = L/ 999 (0.02")
ALLOWABLE DEFL.(TL)= L/360 (0.40")
CALCULATED VERT. DEFL.(TL) = L/ 999 (0.04")

CSI: TC=0.39/1.00 (D-E:1) , BC=0.26/1.00 (J-K:1) , WB=0.29/1.00 (D-I:1) , SSI=0.26/1.00 (E-F:1)

DOL LUMBER=1.00 NAIL=1.00 LS BEND=1.10 COMP=1.10 SHEAR=1.10 TENS= 1.10

COMPANION LIVE LOAD FACTOR = 1.00

AUTOSOLVE RIGHT HEEL ONLY

TRUSS PLATE MANUFACTURER IS NOT RESPONSIBLE FOR QUALITY CONTROL IN THE TRUSS MANUFACTURING PLANT .

NAIL VALUES

PLATE	GRIP(DRY) (PSI) MAX	MIN	SHEAR (PLI) MAX	MIN	SECTION (PLI) MAX	MIN
MT20	650	371	1747	788	1987	1873

PLATE PLACEMENT TOL. = 0.250 inches

PLATE ROTATION TOL. = 5.0 Deg.

JSI GRIP= 0.77 (F) (INPUT = 0.90)
JSI METAL= 0.31 (B) (INPUT = 1.00)

JOB NAME	TRUSS NAME	QUANTITY	PLY	JOB DESC.	DRWG NO.
427633	T17	1	1	GREEN PARK HOMES TRUSS DESC.	

Tamarack Roof Truss, Burlington

Version 8.530 S Feb 23 2022 MiTek Industries, Inc. Tue Aug 2 14:59:12 2022 Page 1
ID:5jddhdQ2aVEKS8ItDc496Sz15V3-0BEeYIbOWQPCbwBoD9CsrKDrfMuLzpU3ponB0uyrsrz

Scale = 1:27.5

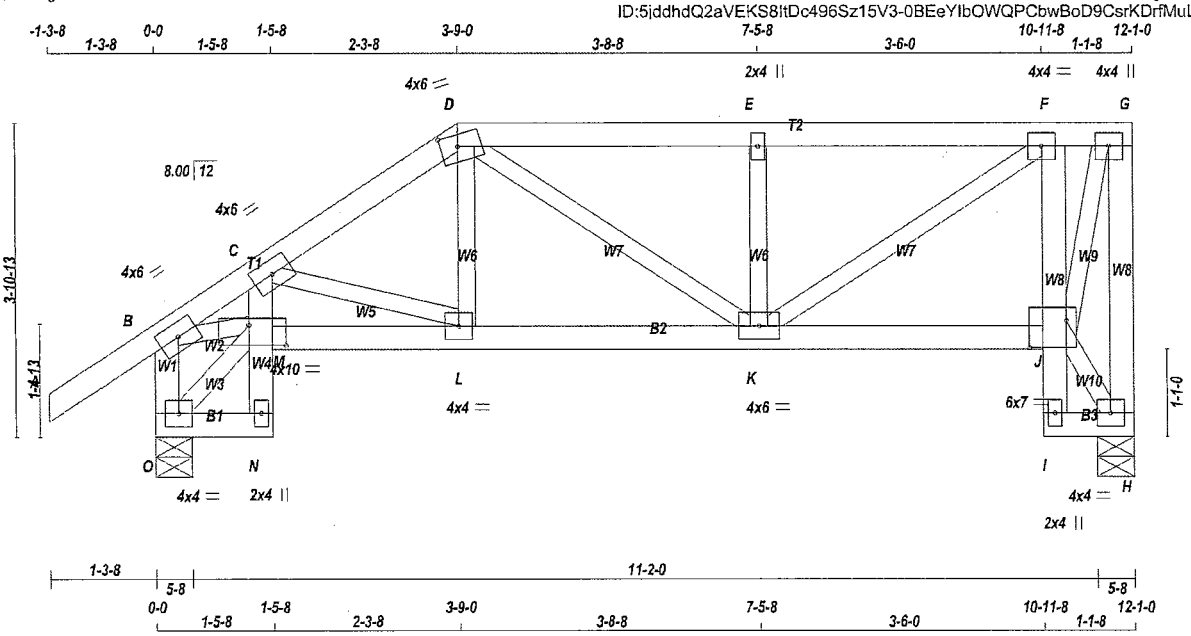

TOTAL WEIGHT = 58 lb

[M]

LUMBER
N. L. G. A. RULES

CHORDS	SIZE		LUMBER	DESCR.
A - D	2x4	DRY	No.2	SPF
D - G	2x4	DRY	No.2	SPF
H - G	2x4	DRY	No.2	SPF
O - B	2x4	DRY	No.2	SPF
O - N	2x4	DRY	No.2	SPF
M - J	2x4	DRY	No.2	SPF
I - H	2x4	DRY	No.2	SPF
ALL WEBS	2x3	DRY	No.2	SPF
EXCEPT				
N - C	2x4	DRY	No.2	SPF
I - F	2x4	DRY	No.2	SPF

DRY: SEASONED LUMBER.

PLATES (table is in inches)

JT	TYPE	PLATES	W	LEN	Y	X
B	TMVW-t	MT20	4.0	6.0		
C	TMWW-t	MT20	4.0	6.0		
D	TTWW-m	MT20	4.0	6.0	1.75	2.50
E	TMW+w	MT20	2.0	4.0		
F	TMWW-t	MT20	4.0	4.0		
G	TMVW+p	MT20	4.0	4.0		
H	BMVW1-t	MT20	4.0	4.0		
I	BMW+w	MT20	2.0	4.0		
J	BWMWW*-l	MT20	6.0	7.0	4.00	5.50
K	BMWWW-t	MT20	4.0	6.0		
L	BMWW-t	MT20	4.0	4.0		
M	BWMWW*-l	MT20	4.0	10.0	3.00	5.50
N	BMW+w	MT20	2.0	4.0		
O	BMVW1-t	MT20	4.0	4.0		

NOTES- (1)
1) Lateral braces to be a minimum of 2X4 SPF #2.

LICENSED PROFESSIONAL ENGINEER
8/02/22
C. M. HEYENS
100505065
PROVINCE OF ONTARIO

STRUCTURAL COMPONENT ONLY
DWG # TR22080291

DIMENSIONS, SUPPORTS AND LOADINGS SPECIFIED BY FABRICATOR TO BE VERIFIED BY BUILDING DESIGNER

BEARINGS

JT	FACTORED GROSS REACTION VERT	HORZ	MAXIMUM FACTORED GROSS REACTION DOWN	HORZ	UPLIFT	INPUT BRG IN-SX	REQRD BRG IN-SX
H	680	0	680	0	0	5-8	5-8
O	825	0	825	0	0	5-8	5-8

UNFACTORED REACTIONS

JT	1ST LCASE COMBINED	MAX./MIN. COMPONENT REACTIONS SNOW	LIVE	PERM.LIVE	WIND	DEAD	SOIL
H	480	319 / 0	0 / 0	0 / 0	0 / 0	161 / 0	0 / 0
O	580	401 / 0	0 / 0	0 / 0	0 / 0	179 / 0	0 / 0

BEARING MATERIAL TO BE SPF NO.2 OR BETTER AT JOINT(S) H, O

BRACING
TOP CHORD TO BE SHEATHED OR MAX. PURLIN SPACING = 5.80 FT.
MAX. UNBRACED BOTTOM CHORD LENGTH = 10.00 FT OR RIGID CEILING DIRECTLY APPLIED.

MAX. UNBRACED INTERIOR CHORD LENGTH = 7.81 FT

ALL PITCH BREAKS AND PERIMETER CORNER JOINTS MUST BE LATERALLY RESTRAINED.

LOADING
TOTAL LOAD CASES: (4)

CHORDS

MEMB. FR-TO	MAX. FACTORED FORCE (LBS)	FACTORED VERT. LOAD LC1 (PLF) FROM	TO	MAX CSI (LC)	MAX. UNBRAC LENGTH
A- B	0 / 36	-95.2	-95.2	0.13 (1)	10.00
B- C	-1136 / 0	-95.2	-95.2	0.14 (1)	5.80
C- D	-824 / 0	-95.2	-95.2	0.11 (1)	6.25
D- E	-818 / 0	-95.2	-95.2	0.19 (1)	6.25
E- F	-818 / 0	-95.2	-95.2	0.19 (1)	6.25
F- G	-279 / 0	-95.2	-95.2	0.09 (1)	6.25
H- G	-640 / 0	0.0	0.0	0.15 (1)	7.81
O- B	-764 / 0	0.0	0.0	0.08 (1)	7.81
O- N	0 / 52	-18.5	-18.5	0.01 (1)	10.00
M- L	0 / 1001	-18.5	-18.5	0.18 (1)	10.00
L- K	0 / 691	-18.5	-18.5	0.13 (1)	10.00
K- J	0 / 292	-18.5	-18.5	0.08 (1)	10.00
I- H	0 / 23	-18.5	-18.5	0.01 (4)	10.00

WEBS

MEMB. FR-TO	MAX. FACTORED FORCE (LBS)	MAX CSI (LC)
N- M	0 / 14	0.09 (1)
M- C	0 / 157	0.11 (1)
I- J	0 / 10	0.04 (1)
J- F	-634 / 0	0.05 (1)
C- L	-331 / 0	0.06 (1)
L- D	0 / 109	0.03 (4)
J- H	-39 / 0	0.01 (1)
J- G	0 / 716	0.16 (1)
O- M	-71 / 0	0.01 (1)
B- M	0 / 916	0.21 (1)
K- F	0 / 641	0.14 (1)
K- E	-399 / 0	0.07 (1)
D- K	0 / 154	0.03 (1)

DESIGN CRITERIA

SPECIFIED LOADS:

TOP CH.	LL	=	26.7	PSF
	DL	=	6.0	PSF
BOT CH.	LL	=	0.0	PSF
	DL	=	7.4	PSF
TOTAL LOAD		=	40.1	PSF

SPACING = 24.0 IN. C/C

LOADING IN FLAT SECTION BASED ON A SLOPE OF 6.00/12

THIS TRUSS IS DESIGNED FOR RESIDENTIAL OR SMALL BUILDING REQUIREMENTS OF PART 9, NBCC 2015

THIS DESIGN COMPLIES WITH:
- PART 9 OF BCBC 2018 , ABC 2019
- PART 9 OF OBC 2012 (2019 AMENDMENT)
- CSA 086-14
- TPIC 2014

DESIGN ASSUMPTIONS
-OVERHANG NOT TO BE ALTERED OR CUT OFF.

(55 % OF 33.4 P.S.F. G.S.L. PLUS 8.4 P.S.F. RAIN LOAD) EQUALS 26.7 P.S.F. SPECIFIED ROOF LIVE LOAD

ALLOWABLE DEFL.(LL)= L/360 (0.40")
CALCULATED VERT. DEFL.(LL) = L/ 999 (0.02")
ALLOWABLE DEFL.(TL)= L/360 (0.40")
CALCULATED VERT. DEFL.(TL) = L/ 999 (0.04")

CSI: TC=0.19/1.00 (D-E:1) , BC=0.18/1.00 (L-M:1) , WB=0.21/1.00 (B-M:1) , SSI=0.16/1.00 (D-E:1)

DOL LUMBER=1.00 NAIL=1.00 LS BEND=1.10 COMP=1.10 SHEAR=1.10 TENS= 1.10

COMPANION LIVE LOAD FACTOR = 1.00

AUTOSOLVE RIGHT HEEL ONLY

TRUSS PLATE MANUFACTURER IS NOT RESPONSIBLE FOR QUALITY CONTROL IN THE TRUSS MANUFACTURING PLANT .

NAIL VALUES

PLATE	GRIP(DRY) (PSI) MAX	MIN	SHEAR (PLI) MAX	MIN	SECTION (PLI) MAX	MIN
MT20	650	371	1747	788	1987	1873

PLATE PLACEMENT TOL. = 0.250 inches

PLATE ROTATION TOL. = 5.0 Deg.

JSI GRIP= 0.77 (G) (INPUT = 0.90)
JSI METAL= 0.28 (B) (INPUT = 1.00)

JOB NAME	TRUSS NAME	QUANTITY	PLY	JOB DESC.	DRWG NO.
427633	T18	1	1	GREEN PARK HOMES TRUSS DESC.	

Tamarack Roof Truss, Burlington

Version 8.530 S Feb 23 2022 MiTek Industries, Inc. Tue Aug 2 14:59:13 2022 Page 1
ID:5jddhdQ2aVEKS8ItDc496Sz15V3-UNn0lec0GjX3D4m?ntj5OXm?kmCbiDuC1SXkYKyrsry

Scale = 1:41.0

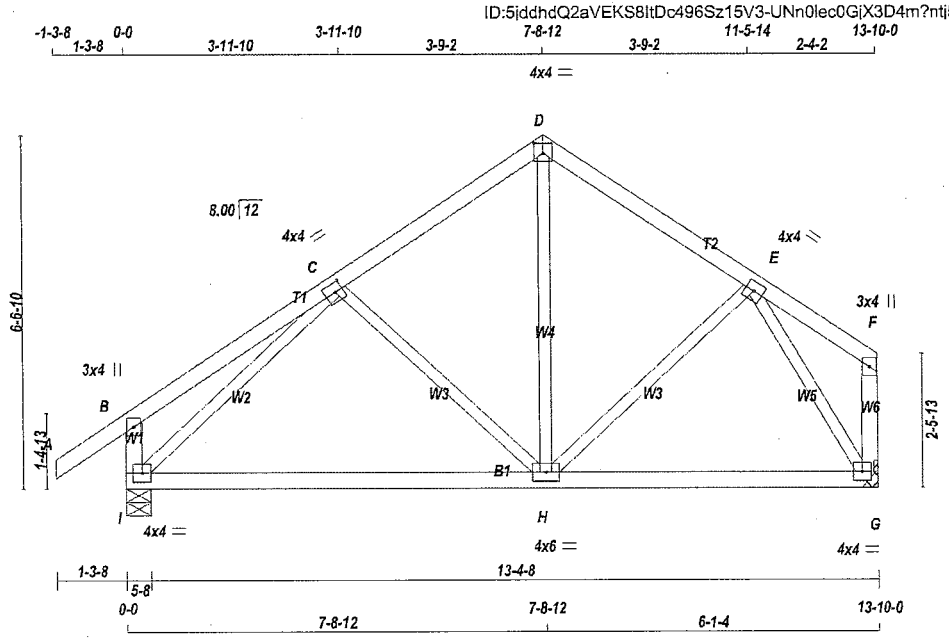

TOTAL WEIGHT = 61 lb

[M][F]

LUMBER

N. L. G. A. RULES

CHORDS	SIZE		LUMBER	DESCR.
A - D	2x4	DRY	No.2	SPF
D - F	2x4	DRY	No.2	SPF
I - B	2x4	DRY	No.2	SPF
G - F	2x4	DRY	No.2	SPF
I - G	2x4	DRY	No.2	SPF
ALL WEBS EXCEPT	2x3	DRY	No.2	SPF

DRY: SEASONED LUMBER.

PLATES (table is in inches)

JT	TYPE	PLATES	W	LEN	Y	X
B	TMV+p	MT20	3.0	4.0		
C	TMWW-t	MT20	4.0	4.0	2.00	1.75
D	TTW-p	MT20	4.0	4.0	2.25	2.00
E	TMWW-t	MT20	4.0	4.0		
F	TMV+p	MT20	3.0	4.0		
G	BMVW1-t	MT20	4.0	4.0		
H	BMWWW-t	MT20	4.0	6.0		
I	BMVW1-t	MT20	4.0	4.0		

NOTES- (1)
1) Lateral braces to be a minimum of 2X4 SPF #2.

DIMENSIONS, SUPPORTS AND LOADINGS SPECIFIED BY FABRICATOR TO BE VERIFIED BY BUILDING DESIGNER

BEARINGS

JT	FACTORED GROSS REACTION VERT	HORZ	MAXIMUM GROSS REACTION DOWN	HORZ	FACTORED UPLIFT	INPUT BRG IN-SX	REQRD BRG IN-SX
I	917	0	917	0	0	5-8	5-8
G	786	0	786	0	0	MECHANICAL	

A SUITABLE HANGER/MECHANICAL CONNECTION IS REQUIRED AT JOINT G. MINIMUM BEARING LENGTH AT JOINT G = 3-8.

UNFACTORED REACTIONS

JT	1ST LCASE COMBINED	MAX./MIN. COMPONENT REACTIONS SNOW	LIVE	PERM.LIVE	WIND	DEAD	SOIL
I	645	443 / 0	0 / 0	0 / 0	0 / 0	202 / 0	0 / 0
G	555	370 / 0	0 / 0	0 / 0	0 / 0	185 / 0	0 / 0

BEARING MATERIAL TO BE SPF NO.2 OR BETTER AT JOINT(S) I

BRACING

TOP CHORD TO BE SHEATHED OR MAX. PURLIN SPACING = 6.25 FT.
MAX. UNBRACED BOTTOM CHORD LENGTH = 10.00 FT OR RIGID CEILING DIRECTLY APPLIED.

ALL PITCH BREAKS AND PERIMETER CORNER JOINTS MUST BE LATERALLY RESTRAINED.

LOADING

TOTAL LOAD CASES: (4)

CHORDS

MEMB. FR-TO	MAX. FACTORED FORCE (LBS)	FACTORED VERT. LOAD LC1 (PLF) FROM	TO	MAX CSI (LC)	MAX. UNBRAC LENGTH
A- B	0 / 36	-95.2	-95.2	0.13 (1)	10.00
B- C	0 / 24	-95.2	-95.2	0.23 (1)	10.00
C- D	-562 / 0	-95.2	-95.2	0.18 (1)	6.25
D- E	-556 / 0	-95.2	-95.2	0.16 (1)	6.25
E- F	0 / 30	-95.2	-95.2	0.17 (1)	10.00
I- B	-271 / 0	0.0	0.0	0.03 (1)	7.81
G- F	-52 / 0	0.0	0.0	0.01 (1)	7.81
I- H	0 / 621	-18.5	-18.5	0.31 (4)	10.00
H- G	0 / 426	-18.5	-18.5	0.30 (4)	10.00

WEBS

MEMB. FR-TO	MAX. FACTORED FORCE (LBS)	MAX CSI (LC)
C- H	-239 / 0	0.11 (1)
H- D	0 / 303	0.07 (1)
H- E	0 / 49	0.02 (4)
I- C	-856 / 0	0.39 (1)
E- G	-816 / 0	0.24 (1)

DESIGN CRITERIA

SPECIFIED LOADS:

TOP CH.	LL	=	26.7	PSF
	DL	=	6.0	PSF
BOT CH.	LL	=	0.0	PSF
	DL	=	7.4	PSF
TOTAL LOAD		=	40.1	PSF

SPACING = 24.0 IN. C/C

THIS TRUSS IS DESIGNED FOR RESIDENTIAL OR SMALL BUILDING REQUIREMENTS OF PART 9, NBCC 2015

THIS DESIGN COMPLIES WITH:
- PART 9 OF BCBC 2018 , ABC 2019
- PART 9 OF OBC 2012 (2019 AMENDMENT)
- CSA 086-14
- TPIC 2014

(55 % OF 33.4 P.S.F. G.S.L. PLUS 8.4 P.S.F. RAIN LOAD) EQUALS 26.7 P.S.F. SPECIFIED ROOF LIVE LOAD

ALLOWABLE DEFL.(LL)= L/360 (0.46")
CALCULATED VERT. DEFL.(LL) = L/ 999 (0.01")
ALLOWABLE DEFL.(TL)= L/360 (0.46")
CALCULATED VERT. DEFL.(TL) = L/ 999 (0.10")

CSI: TC=0.23/1.00 (B-C:1) , BC=0.31/1.00 (H-I:4) , WB=0.39/1.00 (C-I:1) , SSI=0.15/1.00 (C-D:1)

DOL LUMBER=1.00 NAIL=1.00 LS BEND=1.10 COMP=1.10 SHEAR=1.10 TENS= 1.10

COMPANION LIVE LOAD FACTOR = 1.00

TRUSS PLATE MANUFACTURER IS NOT RESPONSIBLE FOR QUALITY CONTROL IN THE TRUSS MANUFACTURING PLANT .

NAIL VALUES

PLATE	GRIP(DRY) (PSI) MAX	MIN	SHEAR (PLI) MAX	MIN	SECTION (PLI) MAX	MIN
MT20	650	371	1747	788	1987	1873

PLATE PLACEMENT TOL. = 0.250 inches

PLATE ROTATION TOL. = 5.0 Deg.

JSI GRIP= 0.84 (C) (INPUT = 0.90)
JSI METAL= 0.27 (C) (INPUT = 1.00)

LICENSED PROFESSIONAL ENGINEER
8/02/22
C. M. HEYENS
100505065
PROVINCE OF ONTARIO

STRUCTURAL COMPONENT ONLY
DWG # TR22080292

JOB NAME	TRUSS NAME	QUANTITY	PLY	JOB DESC.	DRWG NO.
427633	T19	1	1	GREEN PARK HOMES TRUSS DESC.	

Tamarack Roof Truss, Burlington

Version 8.530 S Feb 23 2022 MiTek Industries, Inc. Tue Aug 2 14:59:13 2022 Page 1

ID:5jddhdQ2aVEKS8ltDc496Sz15V3-UNn0lec0GjX3D4m?ntj5OXmz0mDZiF0C1SXkYKyrsry

Scale = 1:36.7

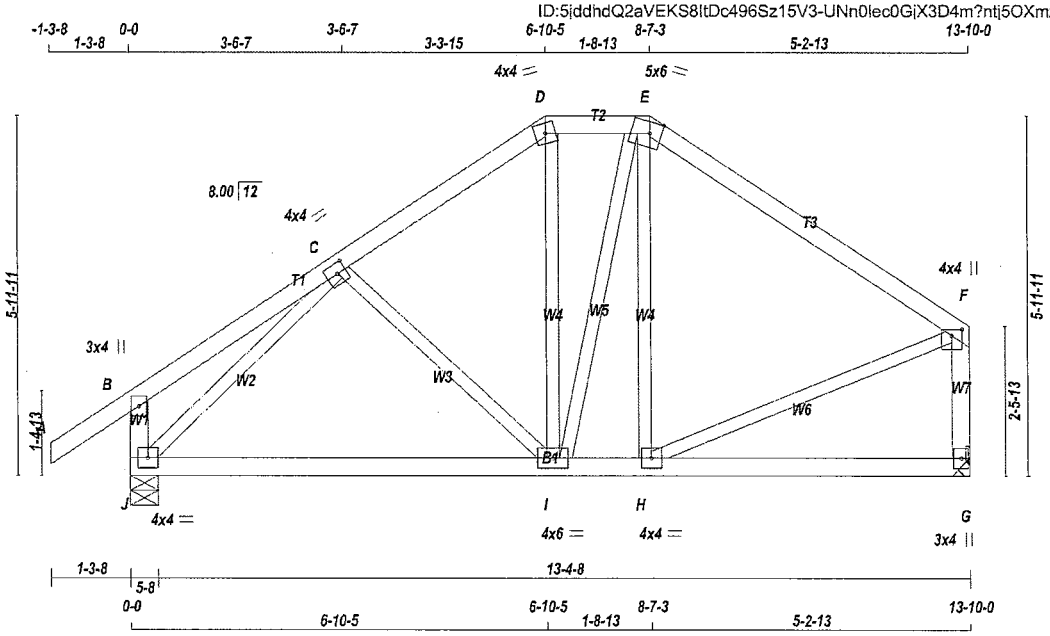

TOTAL WEIGHT = 65 lb

[M][F]

LUMBER

N. L. G. A. RULES

CHORDS	SIZE		LUMBER	DESCR.
A - D	2x4	DRY	No.2	SPF
D - E	2x4	DRY	No.2	SPF
E - F	2x4	DRY	No.2	SPF
J - B	2x4	DRY	No.2	SPF
G - F	2x4	DRY	No.2	SPF
J - G	2x4	DRY	No.2	SPF
ALL WEBS EXCEPT	2x3	DRY	No.2	SPF

DRY: SEASONED LUMBER.

PLATES (table is in inches)

JT	TYPE	PLATES	W	LEN	Y	X
B	TMV+p	MT20	3.0	4.0		
C	TMWW-t	MT20	4.0	4.0	2.00	1.75
D	TTW-m	MT20	4.0	4.0		
E	TTWW-m	MT20	5.0	6.0	2.25	2.25
F	TMVW+p	MT20	4.0	4.0	1.25	2.00
G	BMV1+p	MT20	3.0	4.0		
H	BMWW-t	MT20	4.0	4.0		
I	BMWWW-t	MT20	4.0	6.0		
J	BMVW1-t	MT20	4.0	4.0		

NOTES- (1)

1) Lateral braces to be a minimum of 2X4 SPF #2.

DIMENSIONS, SUPPORTS AND LOADINGS SPECIFIED BY FABRICATOR TO BE VERIFIED BY BUILDING DESIGNER

BEARINGS

JT	FACTORED GROSS REACTION VERT	HORZ	MAXIMUM FACTORED GROSS REACTION DOWN	HORZ	UPLIFT	INPUT BRG IN-SX	REQRD BRG IN-SX
G	786	0	786	0	0	MECHANICAL	
J	917	0	917	0	0	5-8	5-8

A SUITABLE HANGER/MECHANICAL CONNECTION IS REQUIRED AT JOINT G. MINIMUM BEARING LENGTH AT JOINT G = 3-8.

UNFACTORED REACTIONS

JT	1ST LCASE COMBINED	MAX./MIN. COMPONENT REACTIONS SNOW	LIVE	PERM.LIVE	WIND	DEAD	SOIL
G	555	370 / 0	0 / 0	0 / 0	0 / 0	185 / 0	0 / 0
J	645	443 / 0	0 / 0	0 / 0	0 / 0	202 / 0	0 / 0

BEARING MATERIAL TO BE SPF NO.2 OR BETTER AT JOINT(S) J

BRACING

TOP CHORD TO BE SHEATHED OR MAX. PURLIN SPACING = 6.25 FT.
MAX. UNBRACED BOTTOM CHORD LENGTH = 10.00 FT OR RIGID CEILING DIRECTLY APPLIED.

ALL PITCH BREAKS AND PERIMETER CORNER JOINTS MUST BE LATERALLY RESTRAINED.

LOADING

TOTAL LOAD CASES: (4)

CHORDS

MEMB. FR-TO	MAX. FACTORED FORCE (LBS)	FACTORED VERT. LOAD LC1 (PLF) FROM	TO	MAX CSI (LC)	MAX. UNBRAC LENGTH
A- B	0 / 36	-95.2	-95.2	0.13 (1)	10.00
B- C	0 / 21	-95.2	-95.2	0.18 (1)	10.00
C- D	-611 / 0	-95.2	-95.2	0.14 (1)	6.25
D- E	-492 / 0	-95.2	-95.2	0.04 (1)	6.25
E- F	-555 / 0	-95.2	-95.2	0.34 (1)	6.25
J- B	-256 / 0	0.0	0.0	0.03 (1)	7.81
G- F	-745 / 0	0.0	0.0	0.10 (1)	7.81
J- I	0 / 619	-18.5	-18.5	0.25 (4)	10.00
I- H	0 / 459	-18.5	-18.5	0.24 (4)	10.00
H- G	0 / 0	-18.5	-18.5	0.11 (4)	10.00

WEBS

MEMB. FR-TO	MAX. FACTORED FORCE (LBS)	MAX CSI (LC)
C- I	-178 / 0	0.07 (1)
I- D	0 / 120	0.03 (4)
I- E	0 / 121	0.03 (1)
H- E	-139 / 0	0.08 (1)
J- C	-867 / 0	0.32 (1)
H- F	0 / 498	0.11 (1)

DESIGN CRITERIA

SPECIFIED LOADS:

TOP CH.	LL	=	26.7	PSF
	DL	=	6.0	PSF
BOT CH.	LL	=	0.0	PSF
	DL	=	7.4	PSF
TOTAL LOAD		=	40.1	PSF

SPACING = 24.0 IN. C/C

LOADING IN FLAT SECTION BASED ON A SLOPE OF 6.00/12

THIS TRUSS IS DESIGNED FOR RESIDENTIAL OR SMALL BUILDING REQUIREMENTS OF PART 9, NBCC 2015

THIS DESIGN COMPLIES WITH:
- PART 9 OF BCBC 2018 , ABC 2019
- PART 9 OF OBC 2012 (2019 AMENDMENT)
- CSA 086-14
- TPIC 2014

(55 % OF 33.4 P.S.F. G.S.L. PLUS 8.4 P.S.F. RAIN LOAD) EQUALS 26.7 P.S.F. SPECIFIED ROOF LIVE LOAD

ALLOWABLE DEFL.(LL)= L/360 (0.46")
CALCULATED VERT. DEFL.(LL) = L/ 999 (0.01")
ALLOWABLE DEFL.(TL)= L/360 (0.46")
CALCULATED VERT. DEFL.(TL) = L/ 999 (0.07")

CSI: TC=0.34/1.00 (E-F:1) , BC=0.25/1.00 (I-J:4) , WB=0.32/1.00 (C-J:1) , SSI=0.16/1.00 (E-F:1)

DOL LUMBER=1.00 NAIL=1.00 LS BEND=1.10 COMP=1.10 SHEAR=1.10 TENS= 1.10

COMPANION LIVE LOAD FACTOR = 1.00

TRUSS PLATE MANUFACTURER IS NOT RESPONSIBLE FOR QUALITY CONTROL IN THE TRUSS MANUFACTURING PLANT .

NAIL VALUES

PLATE	GRIP(DRY) (PSI) MAX	MIN	SHEAR (PLI) MAX	MIN	SECTION (PLI) MAX	MIN
MT20	650	371	1747	788	1987	1873

PLATE PLACEMENT TOL. = 0.250 inches

PLATE ROTATION TOL. = 5.0 Deg.

JSI GRIP= 0.84 (C) (INPUT = 0.90)
JSI METAL= 0.28 (C) (INPUT = 1.00)

LICENSED PROFESSIONAL ENGINEER
8/02/22
C. M. HEYENS
100505065
PROVINCE OF ONTARIO

STRUCTURAL COMPONENT ONLY
DWG # TR22080293

JOB NAME	TRUSS NAME	QUANTITY	PLY	JOB DESC.	DRWG NO.
427633	T20	1	2	GREEN PARK HOMES TRUSS DESC.	

Tamarack Roof Truss, Burlington

Version 8.530 S Feb 23 2022 MiTek Industries, Inc. Tue Aug 2 14:59:14 2022 Page 1
ID:DpDBlv06BmjjVhH3K8UGrlyvYdd-zaLOy de11fwqELBLaEKxll7T9YDRf2MG6Gl4myrsrx

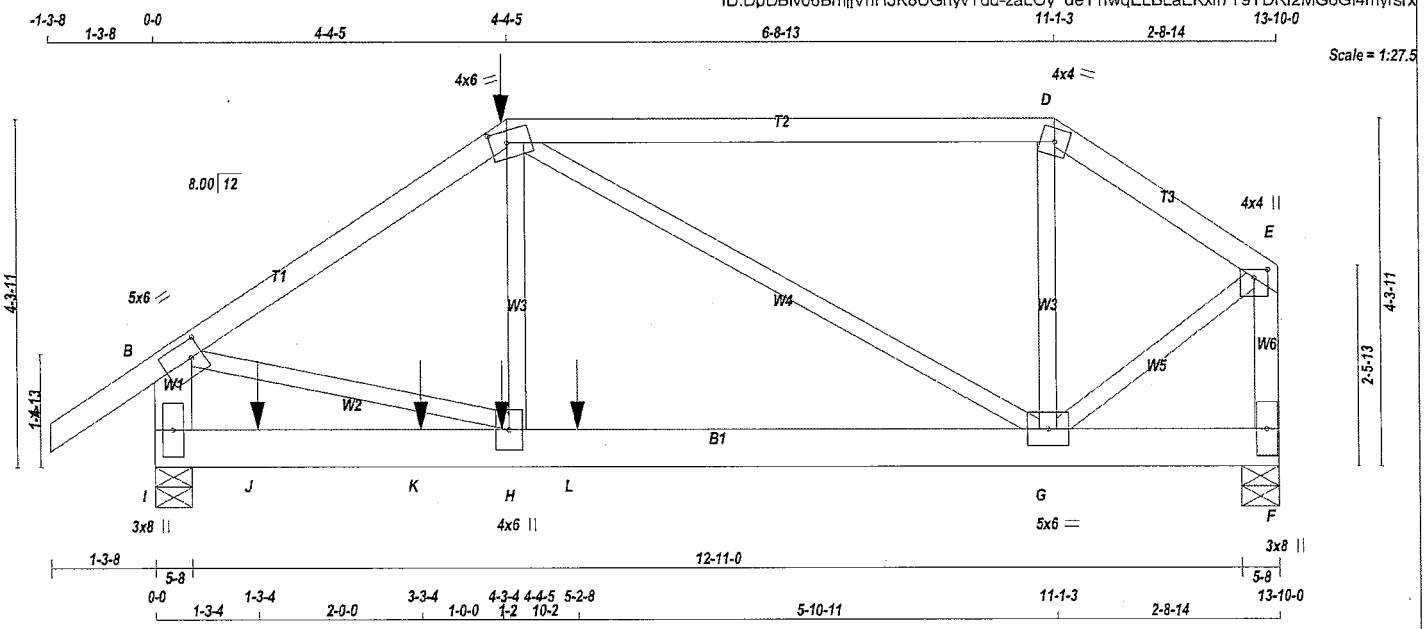

TOTAL WEIGHT = 2 X 66 = 131 lb

LUMBER

N. L. G. A. RULES

CHORDS	SIZE		LUMBER	DESCR.
A - C	2x4	DRY	No.2	SPF
C - D	2x4	DRY	No.2	SPF
D - E	2x4	DRY	No.2	SPF
I - B	2x6	DRY	No.2	SPF
F - E	2x4	DRY	No.2	SPF
I - F	2x6	DRY	No.2	SPF
ALL WEBS EXCEPT	2x3	DRY	No.2	SPF

DRY: SEASONED LUMBER.

DESIGN CONSISTS OF 2 TRUSSES BUILT SEPARATELY THEN FASTENED TOGETHER AS FOLLOWS:

CHORDS	#ROWS	SURFACE SPACING (IN)	LOAD(PLF)
TOP CHORDS : (0.122"X3") SPIRAL NAILS			
A- C	1	12	SIDE(61.0)
C- D	1	12	SIDE(61.0)
D- E	1	12	TOP
F- E	1	12	TOP
I- B	2	12	TOP
BOTTOM CHORDS : (0.122"X3") SPIRAL NAILS			
I- F	2	12	SIDE(183.1)
WEBS : (0.122"X3") SPIRAL NAILS			
2x3	1	6	

NAILS TO BE DRIVEN FROM ONE SIDE ONLY.

GIRDER NAILING ASSUMES NAILED HANGERS ARE FASTENED WITH MIN. 3-0 INCH NAILS.

TOP - COMPONENTS ARE LOADED FROM THE TOP AND MUST BE PLACED ON TOP EDGE OF ALL PLIES FOR THE LOAD TO BE TRANSFERRED TO EACH PLY.

SIDE - PLF SHOWN IS THE EQUIVALENT UDL APPLIED TO ONE SIDE THAT THE CORRESPONDING NAILING PATTERN SHALL BE CAPABLE OF TRANSFERING. REMAINING PLF MUST BE APPLIED ON THE OPPOSITE SIDE OR ON THE TOP.

LICENSED PROFESSIONAL ENGINEER
8/02/22
C. M. HEYENS
100505065
PROVINCE OF ONTARIO

STRUCTURAL COMPONENT ONLY
DWG # TR22080294 PG 1/2

DIMENSIONS, SUPPORTS AND LOADINGS SPECIFIED BY FABRICATOR TO BE VERIFIED BY BUILDING DESIGNER

BEARINGS

JT	FACTORED GROSS REACTION VERT	HORZ	MAXIMUM FACTORED GROSS REACTION DOWN	HORZ	UPLIFT	INPUT BRG IN-SX	REQRD BRG IN-SX
I	1617	0	1617	0	0	5-8	5-8
F	1179	0	1179	0	0	5-8	5-8

UNFACTORED REACTIONS

JT	1ST LCASE COMBINED	MAX./MIN. COMPONENT REACTIONS SNOW	LIVE	PERM.LIVE	WIND	DEAD	SOIL
I	1136	789 / 0	0 / 0	0 / 0	0 / 0	346 / 0	0 / 0
F	830	567 / 0	0 / 0	0 / 0	0 / 0	263 / 0	0 / 0

BEARING MATERIAL TO BE SPF NO.2 OR BETTER AT JOINT(S) I, F

BRACING

TOP CHORD TO BE SHEATHED OR MAX. PURLIN SPACING = 6.25 FT.
MAX. UNBRACED BOTTOM CHORD LENGTH = 10.00 FT OR RIGID CEILING DIRECTLY APPLIED.

ALL PITCH BREAKS AND PERIMETER CORNER JOINTS MUST BE LATERALLY RESTRAINED.

LOADING

TOTAL LOAD CASES: (4)

CHORDS

MEMB. FR-TO	MAX. FACTORED FORCE (LBS)	FACTORED VERT. LOAD (PLF) FROM	TO	LC1	MAX CSI (LC)	MAX. UNBRAC LENGTH
A- B	0 / 36	-95.2	-95.2	0.07 (1)		10.00
B- C	-1731 / 0	-95.2	-95.2	0.19 (1)		6.25
C- D	-776 / 0	-95.2	-95.2	0.42 (1)		6.25
D- E	-933 / 0	-95.2	-95.2	0.07 (1)		6.25
I- B	-1623 / 0	0.0	0.0	0.06 (1)		7.81
F- E	-1218 / 0	0.0	0.0	0.08 (1)		7.81
I- J	0 / 0	-18.5	-18.5	0.10 (1)		10.00
J- K	0 / 0	-18.5	-18.5	0.10 (1)		10.00
K- H	0 / 0	-18.5	-18.5	0.10 (1)		10.00
H- L	0 / 1454	-18.5	-18.5	0.22 (1)		10.00
L- G	0 / 1454	-18.5	-18.5	0.22 (1)		10.00
G- F	0 / 0	-18.5	-18.5	0.07 (1)		10.00

WEBS

MEMB. FR-TO	MAX. FACTORED FORCE (LBS)	MAX CSI (LC)
H- C	0 / 619	0.08 (1)
C- G	-787 / 0	0.46 (1)
G- D	0 / 87	0.02 (4)
B- H	0 / 1473	0.18 (1)
G- E	0 / 960	0.12 (1)

SPECIFIED CONCENTRATED LOADS (LBS)

JT	LOC.	LC1	MAX-	MAX+	FACE	DIR.	TYPE	HEEL	CONN.
C	4-4-6	-19	-19	---	FRONT	VERT	DEAD	---	C1
C	4-4-5	-45	-45	---	FRONT	VERT	TOTAL	---	C1
C	4-4-6	-86	-86	---	FRONT	VERT	SNOW	---	C1
H	4-3-4	-9	-9	---	FRONT	VERT	TOTAL	---	C1
J	1-3-4	-9	-9	---	FRONT	VERT	TOTAL	---	C1
K	3-3-4	-9	-9	---	FRONT	VERT	TOTAL	---	C1
L	5-2-8	-588	-588	---	FRONT	VERT	TOTAL	---	C1

CONNECTION REQUIREMENTS

1) **C1:** A SUITABLE HANGER/MECHANICAL CONNECTION IS REQUIRED.

[M]

DESIGN CRITERIA

*** SPECIAL LOADS ANALYSIS ***
GEOMETRY AND/OR BASIC LOADS CHANGED BY USER.
LOADS WERE DERIVED FROM USER INPUT
NO FURTHER MODIFICATIONS WERE MADE

SPECIFIED LOADS:

TOP CH.	LL	=	26.7	PSF
	DL	=	6.0	PSF
BOT CH.	LL	=	0.0	PSF
	DL	=	7.4	PSF
TOTAL LOAD		=	40.1	PSF

SPACING = 24.0 IN. C/C

LOADING IN FLAT SECTION BASED ON A SLOPE OF 6.00/12

*** NON STANDARD GIRDER ***
ADDT'L USER-DEFINED LOADS APPLIED TO ALL LOAD CASES.

THIS TRUSS IS DESIGNED FOR RESIDENTIAL OR SMALL BUILDING REQUIREMENTS OF PART 9, NBCC 2015

THIS DESIGN COMPLIES WITH:
- PART 9 OF BCBC 2018 , ABC 2019
- PART 9 OF OBC 2012 (2019 AMENDMENT)
- CSA 086-14
- TPIC 2014

(55 % OF 33.4 P.S.F. G.S.L. PLUS 8.4 P.S.F. RAIN LOAD) EQUALS 26.7 P.S.F. SPECIFIED ROOF LIVE LOAD

ALLOWABLE DEFL.(LL)= L/360 (0.46")
CALCULATED VERT. DEFL.(LL) = L/ 999 (0.02")
ALLOWABLE DEFL.(TL)= L/360 (0.46")
CALCULATED VERT. DEFL.(TL) = L/ 999 (0.04")

CSI: TC=0.42/1.00 (C-D:1) , BC=0.22/1.00 (G-H:1) , WB=0.46/1.00 (C-G:1) , SSI=0.27/1.00 (G-H:1)

DOL LUMBER=1.00 NAIL=1.00 LS BEND=1.00 COMP=1.00 SHEAR=1.00 TENS= 1.00

COMPANION LIVE LOAD FACTOR = 1.00

AUTOSOLVE RIGHT HEEL ONLY

TRUSS PLATE MANUFACTURER IS NOT RESPONSIBLE FOR QUALITY CONTROL IN THE TRUSS MANUFACTURING PLANT .

NAIL VALUES

PLATE	GRIP(DRY) (PSI) MAX	MIN	SHEAR (PLI) MAX	MIN	SECTION (PLI) MAX	MIN
MT20	650	371	1747	788	1987	1873

PLATE PLACEMENT TOL. = 0.250 inches

PLATE ROTATION TOL. = 5.0 Deg.

CONTINUED ON PAGE 2

JOB NAME	TRUSS NAME	QUANTITY	PLY	JOB DESC. GREEN PARK HOMES	DRWG NO.
427633	T20	1	2	TRUSS DESC.	

PLATES (table is in inches)

JT	TYPE	PLATES	W	LEN	Y	X
B	TMVW-t	MT20	5.0	6.0	2.50	1.75
C	TTWW-m	MT20	4.0	6.0	1.75	2.50
D	TTW-m	MT20	4.0	4.0		
E	TMVW+p	MT20	4.0	4.0	1.25	2.00
F	BMV1+p	MT20	3.0	8.0		
G	BMWWW-t	MT20	5.0	6.0		
H	BMWW+t	MT20	4.0	6.0		
I	BMV1+p	MT20	3.0	8.0		

NOTES- (1)
1) Lateral braces to be a minimum of 2X4 SPF #2.

JSI GRIP= 0.68 (C) (INPUT = 0.90)
JSI METAL= 0.33 (H) (INPUT = 1.00)

LICENSED PROFESSIONAL ENGINEER
8/02/22
C. M. HEYENS
100505065
PROVINCE OF ONTARIO

STRUCTURAL COMPONENT ONLY
DWG # TR22080294

JOB NAME	TRUSS NAME	QUANTITY	PLY	JOB DESC.	DRWG NO.
427633	T21	1	2	GREEN PARK HOMES TRUSS DESC.	

Tamarack Roof Truss, Burlington

Version 8.530 S Feb 23 2022 MiTek Industries, Inc. Tue Aug 2 14:59:15 2022 Page 1
ID:5jddhdQ2aVEKS8ltDo496Sz15V3-RmvmAKdGoLnmSOwNvlIZTyrNNZvNADRVVl0rcDyrsrw

Scale = 1:25.3

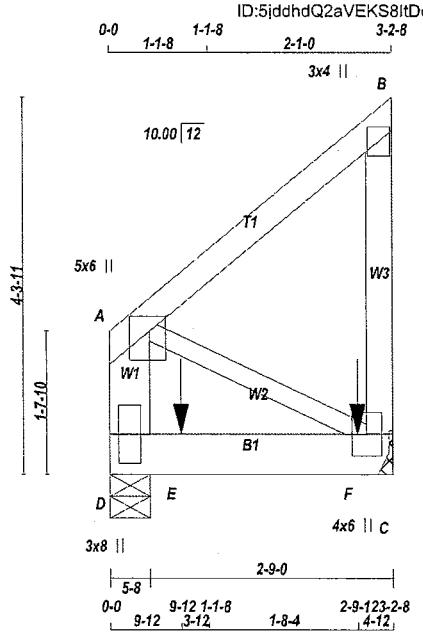

TOTAL WEIGHT = 2 X 19 = 38 lb

[M]

LUMBER

N. L. G. A. RULES

CHORDS	SIZE		LUMBER	DESCR.
A - B	2x4	DRY	No.2	SPF
C - B	2x4	DRY	No.2	SPF
D - A	2x6	DRY	No.2	SPF
D - C	2x6	DRY	No.2	SPF
ALL WEBS EXCEPT	2x3	DRY	No.2	SPF

DRY: SEASONED LUMBER.

DESIGN CONSISTS OF 2 TRUSSES BUILT SEPARATELY THEN FASTENED TOGETHER AS FOLLOWS:

CHORDS	#ROWS	SURFACE SPACING (IN)	LOAD(PLF)
TOP CHORDS : (0.122"X3") SPIRAL NAILS			
A- B	1	12	TOP
C- B	1	12	SIDE(34.7)
D- A	2	12	TOP
BOTTOM CHORDS : (0.122"X3") SPIRAL NAILS			
D- C	2	12	SIDE(122.0)
WEBS : (0.122"X3") SPIRAL NAILS			
2x3	1	6	

NAILS TO BE DRIVEN FROM ONE SIDE ONLY.

GIRDER NAILING ASSUMES NAILED HANGERS ARE FASTENED WITH MIN. 3-0 INCH NAILS.

TOP - COMPONENTS ARE LOADED FROM THE TOP AND MUST BE PLACED ON TOP EDGE OF ALL PLIES FOR THE LOAD TO BE TRANSFERRED TO EACH PLY.

SIDE - PLF SHOWN IS THE EQUIVALENT UDL APPLIED TO ONE SIDE THAT THE CORRESPONDING NAILING PATTERN SHALL BE CAPABLE OF TRANSFERING. REMAINING PLF MUST BE APPLIED ON THE OPPOSITE SIDE OR ON THE TOP.

PLATES (table is in inches)

JT	TYPE	PLATES	W	LEN	Y	X
A	TMVW+p	MT20	5.0	6.0	2.00	2.25

LICENSED PROFESSIONAL ENGINEER
8/02/22
C. M. HEYENS
100505065
PROVINCE OF ONTARIO

STRUCTURAL COMPONENT ONLY
DWG # TR22080295

PG 1/2

DIMENSIONS, SUPPORTS AND LOADINGS SPECIFIED BY FABRICATOR TO BE VERIFIED BY BUILDING DESIGNER

BEARINGS

JT	FACTORED GROSS REACTION VERT	HORZ	MAXIMUM FACTORED GROSS REACTION DOWN	HORZ	UPLIFT	INPUT BRG IN-SX	REQRD BRG IN-SX
C	860	0	860	0	0	MECHANICAL	
D	702	0	702	0	0	5-8	5-8

A SUITABLE HANGER/MECHANICAL CONNECTION IS REQUIRED AT JOINT C. MINIMUM BEARING LENGTH AT JOINT C = 2-0.

UNFACTORED REACTIONS

JT	1ST LCASE COMBINED	MAX./MIN. COMPONENT REACTIONS SNOW	LIVE	PERM.LIVE	WIND	DEAD	SOIL
C	603	425 / 0	0 / 0	0 / 0	0 / 0	178 / 0	0 / 0
D	492	347 / 0	0 / 0	0 / 0	0 / 0	145 / 0	0 / 0

BEARING MATERIAL TO BE SPF NO.2 OR BETTER AT JOINT(S) D

BRACING

TOP CHORD TO BE SHEATHED OR MAX. PURLIN SPACING = 10.00 FT.
MAX. UNBRACED BOTTOM CHORD LENGTH = 10.00 FT OR RIGID CEILING DIRECTLY APPLIED.

ALL PITCH BREAKS AND PERIMETER CORNER JOINTS MUST BE LATERALLY RESTRAINED.

LOADING

TOTAL LOAD CASES: (4)

CHORDS

MEMB. FR-TO	MAX. FACTORED FORCE (LBS)	FACTORED VERT. LOAD (PLF) FROM	TO	LC1 CSI (LC)	MAX UNBRAC LENGTH
A- B	0 / 0	-95.2	-95.2	0.09 (1)	10.00
C- B	-153 / 0	0.0	0.0	0.02 (1)	7.81
D- A	-153 / 0	0.0	0.0	0.01 (1)	7.81
D- E	0 / 0	-18.5	-18.5	0.16 (1)	10.00
E- F	0 / 0	-18.5	-18.5	0.16 (1)	10.00
F- C	0 / 0	-18.5	-18.5	0.16 (1)	10.00

WEBS

MEMB. FR-TO	MAX. FACTORED FORCE (LBS)	MAX CSI (LC)
A- C	0 / 0	0.00 (1)

SPECIFIED CONCENTRATED LOADS (LBS)

JT	LOC.	LC1	MAX-	MAX+	FACE	DIR.	TYPE	HEEL	CONN.
E	9-12	-418	-418	---	FRONT	VERT	TOTAL	---	C1
F	2-9-12	-421	-421	---	FRONT	VERT	TOTAL	---	C1

CONNECTION REQUIREMENTS

1) **C1:** A SUITABLE HANGER/MECHANICAL CONNECTION IS REQUIRED.

DESIGN CRITERIA

SPECIFIED LOADS:

TOP CH.	LL	=	26.7	PSF
	DL	=	6.0	PSF
BOT CH.	LL	=	0.0	PSF
	DL	=	7.4	PSF
TOTAL LOAD		=	40.1	PSF

SPACING = 24.0 IN. C/C

THIS TRUSS IS DESIGNED FOR RESIDENTIAL OR SMALL BUILDING REQUIREMENTS OF PART 9, NBCC 2015

THIS DESIGN COMPLIES WITH:
- PART 9 OF BCBC 2018 , ABC 2019
- PART 9 OF OBC 2012 (2019 AMENDMENT)
- CSA 086-14
- TPIC 2014

(55 % OF 33.4 P.S.F. G.S.L. PLUS 8.4 P.S.F. RAIN LOAD) EQUALS 26.7 P.S.F. SPECIFIED ROOF LIVE LOAD

ALLOWABLE DEFL.(LL)= L/360 (0.19")
CALCULATED VERT. DEFL.(LL) = L/ 999 (0.01")
ALLOWABLE DEFL.(TL)= L/360 (0.19")
CALCULATED VERT. DEFL.(TL) = L/ 999 (0.01")

CSI: TC=0.09/1.00 (A-B:1) , BC=0.16/1.00 (C-D:1) , WB=0.00/1.00 (A-C:1) , SSI=0.23/1.00 (C-D:1)

DOL LUMBER=1.00 NAIL=1.00 LS BEND=1.00 COMP=1.00 SHEAR=1.00 TENS= 1.00

COMPANION LIVE LOAD FACTOR = 1.00

AUTOSOLVE RIGHT HEEL ONLY

TRUSS PLATE MANUFACTURER IS NOT RESPONSIBLE FOR QUALITY CONTROL IN THE TRUSS MANUFACTURING PLANT .

NAIL VALUES

PLATE	GRIP(DRY) (PSI) MAX	MIN	SHEAR (PLI) MAX	MIN	SECTION (PLI) MAX	MIN
MT20	650	371	1747	788	1987	1873

PLATE PLACEMENT TOL. = 0.250 inches

PLATE ROTATION TOL. = 5.0 Deg.

JSI GRIP= 0.03 (B) (INPUT = 0.90)
JSI METAL= 0.03 (B) (INPUT = 1.00)

CONTINUED ON PAGE 2

PLATES (table is in inches)

JT	TYPE	PLATES	W	LEN	Y	X
B	TMV+p	MT20	3.0	4.0		
C	BMVW1+p	MT20	4.0	6.0		
D	BMV1+p	MT20	3.0	8.0		

NOTES- (1)
1) Lateral braces to be a minimum of 2X4 SPF #2.

LICENSED PROFESSIONAL ENGINEER
8/02/22
C. M. HEYENS
100505065
PROVINCE OF ONTARIO

STRUCTURAL COMPONENT ONLY
DWG # TR22080295 PG 2/2

JOB NAME	TRUSS NAME	QUANTITY	PLY	JOB DESC.	DRWG NO.
427633	T22	2	1	GREEN PARK HOMES TRUSS DESC.	

Tamarack Roof Truss, Burlington

Version 8.530 S Feb 23 2022 MiTek Industries, Inc. Tue Aug 2 14:59:16 2022 Page 1
ID:5jddhdQ2aVEKS8ltDc496Sz15V3-vyT8NqeuZevd4YVZS?Go0AOW6zGfvgsfjPlO9fyrsrv

Scale = 1:35.0

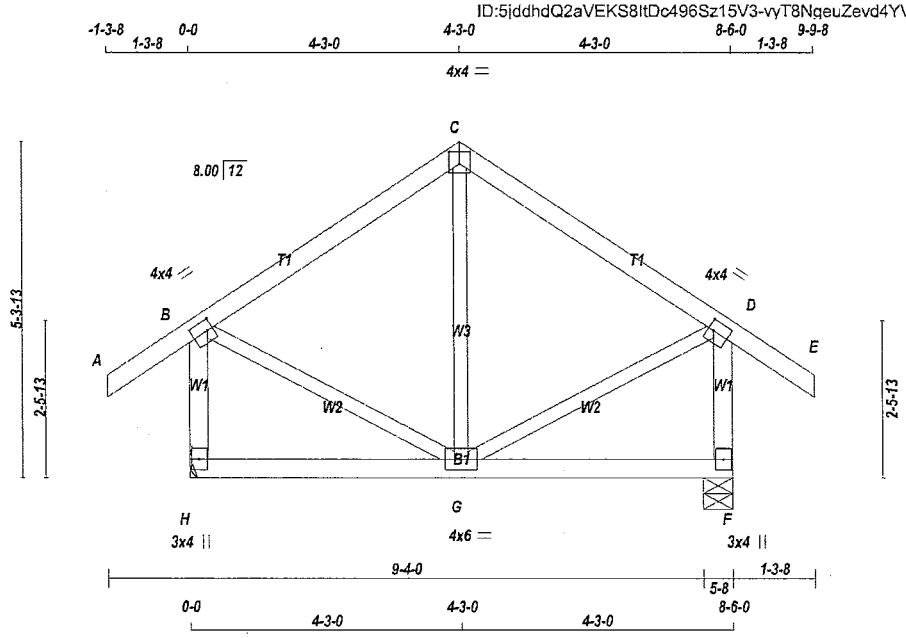

TOTAL WEIGHT = 2 X 41 = 82 lb

LUMBER
N. L. G. A. RULES

CHORDS	SIZE		LUMBER	DESCR.
A - C	2x4	DRY	No.2	SPF
C - E	2x4	DRY	No.2	SPF
H - B	2x4	DRY	No.2	SPF
F - D	2x4	DRY	No.2	SPF
H - F	2x4	DRY	No.2	SPF
ALL WEBS EXCEPT	2x3	DRY	No.2	SPF

DRY: SEASONED LUMBER.

PLATES (table is in inches)

JT	TYPE	PLATES	W	LEN	Y	X
B	TMVW-t	MT20	4.0	4.0	2.00	1.00
C	TTW-p	MT20	4.0	4.0	2.25	2.00
D	TMVW-t	MT20	4.0	4.0	2.00	1.00
F	BMV1+p	MT20	3.0	4.0		
G	BMWWW-t	MT20	4.0	6.0		
H	BMV1+p	MT20	3.0	4.0		

NOTES- (1)
1) Lateral braces to be a minimum of 2X4 SPF #2.

DIMENSIONS, SUPPORTS AND LOADINGS SPECIFIED BY FABRICATOR TO BE VERIFIED BY BUILDING DESIGNER

BEARINGS

JT	FACTORED GROSS REACTION VERT	HORZ	MAXIMUM FACTORED GROSS REACTION DOWN	HORZ	UPLIFT	INPUT BRG IN-SX	REQRD BRG IN-SX
H	614	0	614	0	0	MECHANICAL	
F	614	0	614	0	0	5-8	5-8

A SUITABLE HANGER/MECHANICAL CONNECTION IS REQUIRED AT JOINT H. MINIMUM BEARING LENGTH AT JOINT H = 1-8.

UNFACTORED REACTIONS

JT	1ST LCASE COMBINED	SNOW	MAX./MIN. COMPONENT REACTIONS LIVE	PERM.LIVE	WIND	DEAD	SOIL
H	431	301 / 0	0 / 0	0 / 0	0 / 0	130 / 0	0 / 0
F	431	301 / 0	0 / 0	0 / 0	0 / 0	130 / 0	0 / 0

BEARING MATERIAL TO BE SPF NO.2 OR BETTER AT JOINT(S) F

BRACING
TOP CHORD TO BE SHEATHED OR MAX. PURLIN SPACING = 6.25 FT.
MAX. UNBRACED BOTTOM CHORD LENGTH = 10.00 FT OR RIGID CEILING DIRECTLY APPLIED.

ALL PITCH BREAKS AND PERIMETER CORNER JOINTS MUST BE LATERALLY RESTRAINED.

LOADING
TOTAL LOAD CASES: (4)

CHORDS

MEMB. FR-TO	MAX. FACTORED FORCE (LBS)	FACTORED VERT. LOAD LC1 (PLF) FROM	TO	MAX CSI (LC)	MAX. UNBRAC LENGTH
A- B	0 / 36	-95.2	-95.2	0.13 (1)	10.00
B- C	-256 / 0	-95.2	-95.2	0.22 (1)	6.25
C- D	-256 / 0	-95.2	-95.2	0.22 (1)	6.25
D- E	0 / 36	-95.2	-95.2	0.13 (1)	10.00
H- B	-583 / 0	0.0	0.0	0.08 (1)	7.81
F- D	-583 / 0	0.0	0.0	0.08 (1)	7.81
H- G	0 / 0	-18.5	-18.5	0.09 (4)	10.00
G- F	0 / 0	-18.5	-18.5	0.09 (4)	10.00

WEBS

MEMB. FR-TO	MAX. FACTORED FORCE (LBS)	MAX CSI (LC)
G- C	-121 / 31	0.05 (1)
B- G	0 / 239	0.05 (1)
G- D	0 / 239	0.05 (1)

[M][F]

DESIGN CRITERIA

SPECIFIED LOADS:

TOP CH.	LL	=	26.7	PSF
	DL	=	6.0	PSF
BOT CH.	LL	=	0.0	PSF
	DL	=	7.4	PSF
TOTAL LOAD		=	40.1	PSF

SPACING = 24.0 IN. C/C

THIS TRUSS IS DESIGNED FOR RESIDENTIAL OR SMALL BUILDING REQUIREMENTS OF PART 9, NBCC 2015

THIS DESIGN COMPLIES WITH:
- PART 9 OF BCBC 2018 , ABC 2019
- PART 9 OF OBC 2012 (2019 AMENDMENT)
- CSA 086-14
- TPIC 2014

(55 % OF 33.4 P.S.F. G.S.L. PLUS 8.4 P.S.F. RAIN LOAD) EQUALS 26.7 P.S.F. SPECIFIED ROOF LIVE LOAD

ALLOWABLE DEFL.(LL)= L/360 (0.28")
CALCULATED VERT. DEFL.(LL) = L/ 999 (0.00")
ALLOWABLE DEFL.(TL)= L/360 (0.28")
CALCULATED VERT. DEFL.(TL) = L/ 999 (0.01")

CSI: TC=0.22/1.00 (B-C:1) , BC=0.09/1.00 (F-G:4) , WB=0.05/1.00 (B-G:1) , SSI=0.13/1.00 (B-C:1)

DOL LUMBER=1.00 NAIL=1.00 LS BEND=1.10 COMP=1.10 SHEAR=1.10 TENS= 1.10

COMPANION LIVE LOAD FACTOR = 1.00

TRUSS PLATE MANUFACTURER IS NOT RESPONSIBLE FOR QUALITY CONTROL IN THE TRUSS MANUFACTURING PLANT .

NAIL VALUES

PLATE	GRIP(DRY) (PSI) MAX	MIN	SHEAR (PLI) MAX	MIN	SECTION (PLI) MAX	MIN
MT20	650	371	1747	788	1987	1873

PLATE PLACEMENT TOL. = 0.250 inches

PLATE ROTATION TOL. = 5.0 Deg.

JSI GRIP= 0.41 (B) (INPUT = 0.90)
JSI METAL= 0.15 (D) (INPUT = 1.00)

LICENSED PROFESSIONAL ENGINEER
8/02/22
C. M. HEYENS
100505065
PROVINCE OF ONTARIO

STRUCTURAL COMPONENT ONLY
DWG # TR22080296

JOB NAME	TRUSS NAME	QUANTITY	PLY	JOB DESC.	DRWG NO.
427633	T24	1	1	GREEN PARK HOMES TRUSS DESC.	

Tamarack Roof Truss, Burlington

Version 8.530 S Feb 23 2022 MiTek Industries, Inc. Tue Aug 2 14:13:56 2022 Page 1
ID:NUp5P5ms8UNEiFhG2dHqtsywVBs-Yg6tWckk7wDZlXZp6lTymakfWWnocNpIGEsThJyrtWP

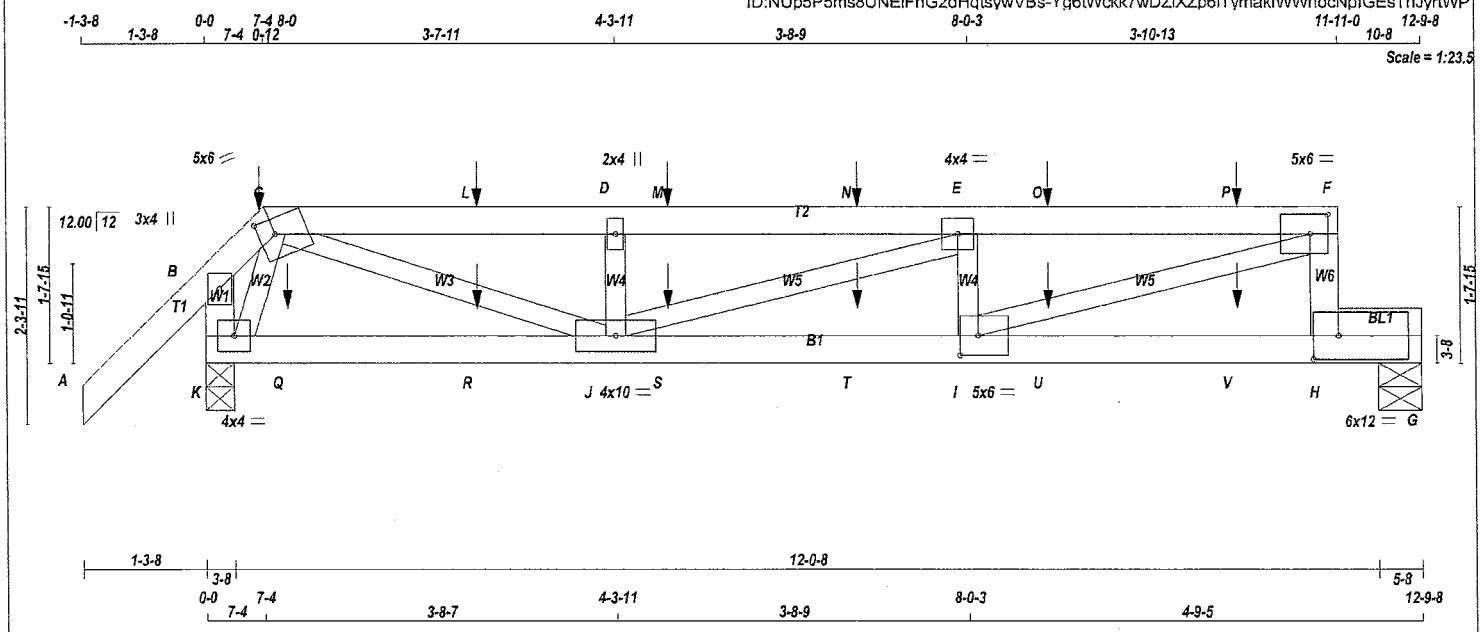

TOTAL WEIGHT = 45 lb

LUMBER
N. L. G. A. RULES

CHORDS	SIZE		LUMBER	DESCR.
A - C	2x4	DRY	No.2	SPF
C - F	2x4	DRY	No.2	SPF
H - F	2x4	DRY	No.2	SPF
K - B	2x4	DRY	No.2	SPF
K - G	2x4	DRY	2100F 1.8E	SPF
BEARING BLOCKS				
BL1	2x4	DRY	No.2	SPF
ALL WEBS EXCEPT	2x3	DRY	No.2	SPF

DRY: SEASONED LUMBER.

PLATES (table is in inches)

JT	TYPE	PLATES	W	LEN	Y	X
B	TMV+p	MT20	3.0	4.0		
C	TTWW-m	MT20	5.0	6.0	2.00	2.00
D	TMW+w	MT20	2.0	4.0		
E	TMWW-t	MT20	4.0	4.0		
F	TMVW-t	MT20	5.0	6.0	2.50	2.25
H	BMVK-t	MT20	6.0	12.0	3.00	3.25
I	BMWW-t	MT20	5.0	6.0	2.50	2.25
J	BMWWW-t	MT20	4.0	10.0		
K	BMVW1-t	MT20	4.0	4.0		

NOTES- (1)
1) Lateral braces to be a minimum of 2X4 SPF #2.

LICENSED PROFESSIONAL ENGINEER
8/02/22
C. M. HEYENS
100505065
PROVINCE OF ONTARIO

STRUCTURAL COMPONENT ONLY
DWG # TR22080272 PG 1/2

DIMENSIONS, SUPPORTS AND LOADINGS SPECIFIED BY FABRICATOR TO BE VERIFIED BY BUILDING DESIGNER

BEARINGS

JT	FACTORED GROSS REACTION VERT	HORZ	MAXIMUM FACTORED GROSS REACTION DOWN	HORZ	UPLIFT	INPUT BRG IN-SX	REQRD BRG IN-SX
K	1008	0	1008	0	0	3-8	3-8
G	818	0	818	0	0	5-8	5-8

UNFACTORED REACTIONS

JT	1ST LCASE COMBINED	MAX./MIN. COMPONENT REACTIONS SNOW	LIVE	PERM.LIVE	WIND	DEAD	SOIL
K	707	496 / 0	0 / 0	0 / 0	0 / 0	211 / 0	0 / 0
G	576	392 / 0	0 / 0	0 / 0	0 / 0	184 / 0	0 / 0

BEARING MATERIAL TO BE SPF NO.2 OR BETTER AT JOINT(S) K, G

BRACING
TOP CHORD TO BE SHEATHED OR MAX. PURLIN SPACING = 4.47 FT.
MAX. UNBRACED BOTTOM CHORD LENGTH = 6.25 FT OR RIGID CEILING DIRECTLY APPLIED.

ALL PITCH BREAKS AND PERIMETER CORNER JOINTS MUST BE LATERALLY RESTRAINED.

LOADING
TOTAL LOAD CASES: (4)

CHORDS

MEMB. FR-TO	MAX. FACTORED FORCE (LBS)	FACTORED VERT. LOAD LC1 (PLF) FROM	TO	MAX CSI (LC)	MAX. UNBRAC LENGTH
A- B	0 / 47	-95.2	-95.2	0.15 (1)	10.00
B- C	-99 / 0	-95.2	-95.2	0.14 (1)	6.25
C- L	-1680 / 0	-95.2	-95.2	0.22 (1)	4.86
L- D	-1680 / 0	-95.2	-95.2	0.22 (1)	4.86
D- M	-1730 / 0	-95.2	-95.2	0.20 (1)	4.83
M- N	-1730 / 0	-95.2	-95.2	0.20 (1)	4.83
N- E	-1730 / 0	-95.2	-95.2	0.20 (1)	4.83
E- O	-1984 / 0	-95.2	-95.2	0.29 (1)	4.47
O- P	-1984 / 0	-95.2	-95.2	0.29 (1)	4.47
P- F	-1984 / 0	-95.2	-95.2	0.29 (1)	4.47
H- F	-906 / 0	0.0	0.0	0.10 (1)	7.81
K- B	-304 / 0	0.0	0.0	0.03 (1)	7.81
K- Q	0 / 310	-18.5	-18.5	0.10 (1)	10.00
Q- R	0 / 310	-18.5	-18.5	0.10 (1)	10.00
R- J	0 / 310	-18.5	-18.5	0.10 (1)	10.00
J- S	0 / 1984	-18.5	-18.5	0.33 (1)	10.00
S- T	0 / 1984	-18.5	-18.5	0.33 (1)	10.00
T- I	0 / 1984	-18.5	-18.5	0.33 (1)	10.00
I- U	-96 / 0	-18.5	-18.5	0.77 (1)	6.25
U- V	-96 / 0	-18.5	-18.5	0.77 (1)	6.25
V- H	-96 / 0	-18.5	-18.5	0.77 (1)	6.25
H- G	0 / 0	-113.7	-113.7	0.32 (1)	10.00

WEBS

MEMB. FR-TO	MAX. FACTORED FORCE (LBS)	MAX CSI (LC)
J- D	-403 / 0	0.06 (1)
J- E	-269 / 0	0.08 (1)
I- E	-320 / 0	0.05 (1)
I- F	0 / 2204	0.55 (1)
K- C	-709 / 0	0.11 (1)
C- J	0 / 1473	0.36 (1)

SPECIFIED CONCENTRATED LOADS (LBS)

JT	LOC.	LC1	MAX-	MAX+	FACE	DIR.	TYPE	HEEL	CONN.
C	8-0	-4	-4	---	FRONT	VERT	DEAD	---	C1
C	8-0	-17	-17	---	BACK	VERT	TOTAL	---	C1
C	8-0	-18	-18	---	FRONT	VERT	SNOW	---	C1
L	2-10-4	-8	-8	---	BACK	VERT	TOTAL	---	C1
M	4-10-4	-8	-8	---	BACK	VERT	TOTAL	---	C1
N	6-10-4	-8	-8	---	BACK	VERT	TOTAL	---	C1
O	8-10-4	-8	-8	---	BACK	VERT	TOTAL	---	C1
P	10-10-4	-8	-8	---	BACK	VERT	TOTAL	---	C1
Q	10-4	-12	-12	---	BACK	VERT	TOTAL	---	C1
R	2-10-4	-12	-12	---	BACK	VERT	TOTAL	---	C1
S	4-10-4	-12	-12	---	BACK	VERT	TOTAL	---	C1
T	6-10-4	-12	-12	---	BACK	VERT	TOTAL	---	C1
U	8-10-4	-12	-12	---	BACK	VERT	TOTAL	---	C1

[M]

DESIGN CRITERIA

*** SPECIAL LOADS ANALYSIS ***
GEOMETRY AND/OR BASIC LOADS CHANGED BY USER.
LOADS WERE DERIVED FROM USER INPUT
NO FURTHER MODIFICATIONS WERE MADE

SPECIFIED LOADS:

TOP CH.	LL	=	26.7	PSF
	DL	=	6.0	PSF
BOT CH.	LL	=	0.0	PSF
	DL	=	7.4	PSF
TOTAL LOAD		=	40.1	PSF

SPACING = 24.0 IN. C/C

LOADING IN FLAT SECTION BASED ON A SLOPE OF 6.00/12

*** NON STANDARD GIRDER ***
ADDT'L USER-DEFINED LOADS APPLIED TO ALL LOAD CASES.

THIS TRUSS IS DESIGNED FOR RESIDENTIAL OR SMALL BUILDING REQUIREMENTS OF PART 9, NBCC 2015

THIS DESIGN COMPLIES WITH:
- PART 9 OF BCBC 2018 , ABC 2019
- PART 9 OF OBC 2012 (2019 AMENDMENT)
- CSA 086-14
- TPIC 2014

DESIGN ASSUMPTIONS
-OVERHANG NOT TO BE ALTERED OR CUT OFF.

(55 % OF 33.4 P.S.F. G.S.L. PLUS 8.4 P.S.F. RAIN LOAD) EQUALS 26.7 P.S.F. SPECIFIED ROOF LIVE LOAD

ALLOWABLE DEFL.(LL)= L/360 (0.43")
CALCULATED VERT. DEFL.(LL) = L/ 970 (0.16")
ALLOWABLE DEFL.(TL)= L/360 (0.43")
CALCULATED VERT. DEFL.(TL) = L/ 530 (0.29")

CSI: TC=0.29/1.00 (E-F:1) , BC=0.77/1.00 (H-I:1) , WB=0.55/1.00 (F-I:1) , SSI=0.35/1.00 (G-H:1)

DOL LUMBER=1.00 NAIL=1.00 LS BEND=1.00 COMP=1.00 SHEAR=1.00 TENS= 1.00

COMPANION LIVE LOAD FACTOR = 1.00

AUTOSOLVE HEELS OFF

TRUSS PLATE MANUFACTURER IS NOT RESPONSIBLE FOR QUALITY CONTROL IN THE TRUSS MANUFACTURING PLANT .

NAIL VALUES

PLATE	GRIP(DRY) (PSI) MAX	MIN	SHEAR (PLI) MAX	MIN	SECTION (PLI) MAX	MIN
MT20	650	371	1747	788	1987	1873

CONTINUED ON PAGE 2

SPECIFIED CONCENTRATED LOADS (LBS)

JT	LOC.	LC1	MAX-	MAX+	FACE	DIR.	TYPE	HEEL	CONN.
V	10-10-4	-12	-12	—	BACK	VERT	TOTAL	—	C1

CONNECTION REQUIREMENTS

1) **C1:** A SUITABLE HANGER/MECHANICAL CONNECTION IS REQUIRED.

PLATE PLACEMENT TOL. = 0.250 inches

PLATE ROTATION TOL. = 5.0 Deg.

JSI GRIP= 0.87 (C) (INPUT = 0.90)
JSI METAL= 0.47 (I) (INPUT = 1.00)

LICENSED PROFESSIONAL ENGINEER
8/02/22
C. M. HEYENS
100505065
PROVINCE OF ONTARIO

STRUCTURAL COMPONENT ONLY
DWG # TR22080272

JOB NAME	TRUSS NAME	QUANTITY	PLY	JOB DESC.	DRWG NO.
427659	T25	1	1	GREEN PARK HOMES TRUSS DESC.	

Tamarack Roof Truss, Burlington

Version 8.530 S Feb 23 2022 MiTek Industries, Inc. Tue Aug 2 14:35:46 2022 Page 1

ID:X?b5302Mr04RJ9RlAuGw6Vz?TlO-BiG6SYaSdQGhwsiastz9sq_RUb?GYwo6V2CofNyrtBx

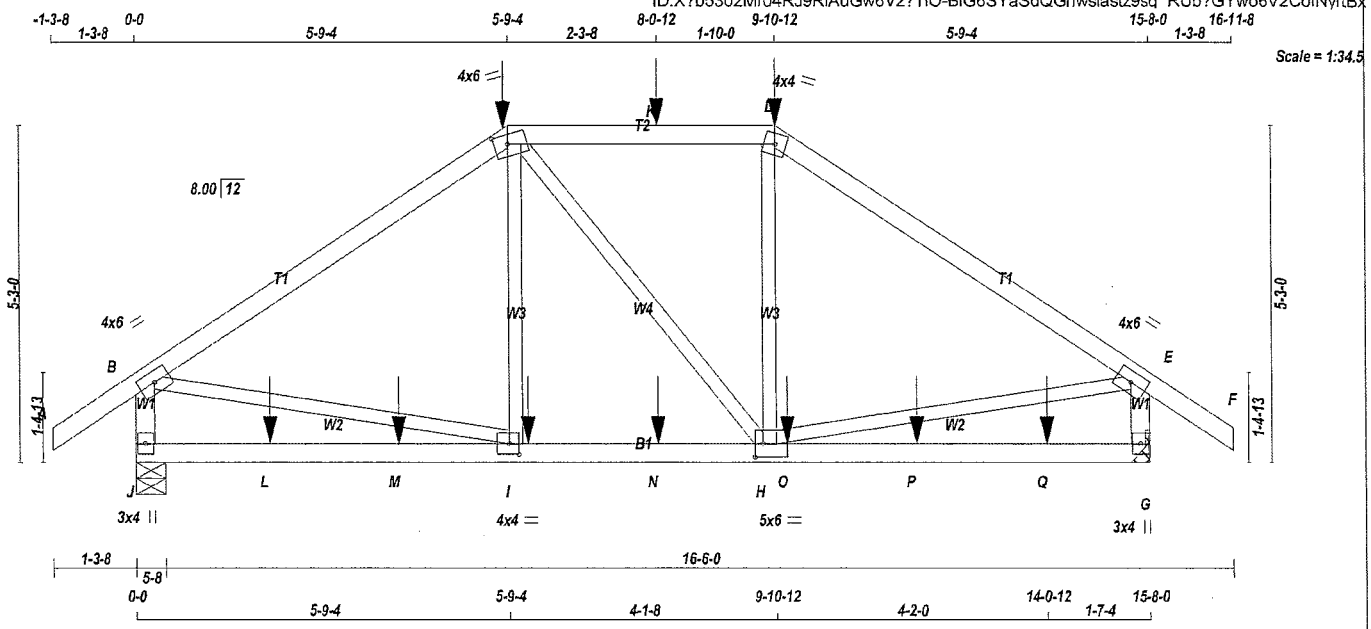

TOTAL WEIGHT = 66 lb

[M]

LUMBER

N. L. G. A. RULES

CHORDS	SIZE		LUMBER	DESCR.
A - C	2x4	DRY	No.2	SPF
C - D	2x4	DRY	No.2	SPF
D - F	2x4	DRY	No.2	SPF
J - B	2x4	DRY	No.2	SPF
G - E	2x4	DRY	No.2	SPF
J - G	2x4	DRY	No.2	SPF
ALL WEBS EXCEPT	2x3	DRY	No.2	SPF

DRY: SEASONED LUMBER.

PLATES (table is in inches)

JT	TYPE	PLATES	W	LEN	Y	X
B	TMVW-t	MT20	4.0	6.0		
C	TTWW-m	MT20	4.0	6.0	1.75	2.50
D	TTW-m	MT20	4.0	4.0		
E	TMVW-t	MT20	4.0	6.0		
G	BMV1+p	MT20	3.0	4.0		
H	BMWWW-t	MT20	5.0	6.0	2.50	1.50
I	BMWW-t	MT20	4.0	4.0	2.00	1.75
J	BMV1+p	MT20	3.0	4.0		

NOTES- (1)

1) Lateral braces to be a minimum of 2X4 SPF #2.

LICENSED PROFESSIONAL ENGINEER
8/02/22
C. M. HEYENS
100505065
PROVINCE OF ONTARIO

STRUCTURAL COMPONENT ONLY
DWG # TR22080309 PG 1/2

DIMENSIONS, SUPPORTS AND LOADINGS SPECIFIED BY FABRICATOR TO BE VERIFIED BY BUILDING DESIGNER

BEARINGS

JT	FACTORED GROSS REACTION VERT	HORZ	MAXIMUM FACTORED GROSS REACTION DOWN	HORZ	UPLIFT	INPUT BRG IN-SX	REQRD BRG IN-SX
J	1289	0	1289	0	0	5-8	5-8
G	1292	0	1292	0	0	MECHANICAL	

A SUITABLE HANGER/MECHANICAL CONNECTION IS REQUIRED AT JOINT G. MINIMUM BEARING LENGTH AT JOINT G = 3-8.

UNFACTORED REACTIONS

JT	1ST LCASE COMBINED	MAX./MIN. COMPONENT REACTIONS SNOW	LIVE	PERM.LIVE	WIND	DEAD	SOIL
J	907	624 / 0	0 / 0	0 / 0	0 / 0	283 / 0	0 / 0
G	909	625 / 0	0 / 0	0 / 0	0 / 0	284 / 0	0 / 0

BEARING MATERIAL TO BE SPF NO.2 OR BETTER AT JOINT(S) J

BRACING

TOP CHORD TO BE SHEATHED OR MAX. PURLIN SPACING = 4.78 FT.
MAX. UNBRACED BOTTOM CHORD LENGTH = 10.00 FT OR RIGID CEILING DIRECTLY APPLIED.

ALL PITCH BREAKS AND PERIMETER CORNER JOINTS MUST BE LATERALLY RESTRAINED.

LOADING

TOTAL LOAD CASES: (4)

CHORDS

MEMB. FR-TO	MAX. FACTORED FORCE (LBS)	FACTORED VERT. LOAD LC1 (PLF) FROM	TO	MAX CSI (LC)	MAX. UNBRAC LENGTH
A- B	0 / 36	-95.2	-95.2	0.14 (1)	10.00
B- C	-1172 / 0	-95.2	-95.2	0.70 (1)	4.79
C- K	-975 / 0	-95.2	-95.2	0.39 (1)	5.71
K- D	-975 / 0	-95.2	-95.2	0.39 (1)	5.71
D- E	-1176 / 0	-95.2	-95.2	0.70 (1)	4.78
E- F	0 / 36	-95.2	-95.2	0.14 (1)	10.00
J- B	-1236 / 0	0.0	0.0	0.14 (1)	7.19
G- E	-1237 / 0	0.0	0.0	0.14 (1)	7.19
J- L	0 / 0	-18.5	-18.5	0.18 (4)	10.00
L- M	0 / 0	-18.5	-18.5	0.18 (4)	10.00
M- I	0 / 0	-18.5	-18.5	0.18 (4)	10.00
I- N	0 / 973	-18.5	-18.5	0.26 (1)	10.00
N- H	0 / 973	-18.5	-18.5	0.26 (1)	10.00
H- O	0 / 0	-18.5	-18.5	0.18 (4)	10.00
O- P	0 / 0	-18.5	-18.5	0.18 (4)	10.00
P- Q	0 / 0	-18.5	-18.5	0.18 (4)	10.00
Q- G	0 / 0	-18.5	-18.5	0.18 (4)	10.00

WEBS

MEMB. FR-TO	MAX. FACTORED FORCE (LBS)	MAX CSI (LC)
I- C	-61 / 76	0.03 (4)
C- H	0 / 4	0.00 (4)
H- D	-61 / 77	0.03 (4)
B- I	0 / 990	0.25 (1)
H- E	0 / 994	0.25 (1)

SPECIFIED CONCENTRATED LOADS (LBS)

JT	LOC.	LC1	MAX-	MAX+	FACE	DIR.	TYPE	HEEL	CONN.
C	5-9-4	-22	-22	---	FRONT	VERT	DEAD	---	C1
C	5-9-4	-33	-33	---	FRONT	VERT	TOTAL	---	C1
C	5-9-4	-97	-97	---	FRONT	VERT	SNOW	---	C1
D	9-10-12	-22	-22	---	FRONT	VERT	DEAD	---	C1
D	9-10-12	-34	-34	---	FRONT	VERT	TOTAL	---	C1
D	9-10-12	-97	-97	---	FRONT	VERT	SNOW	---	C1
I	6-0-12	-6	-6	---	FRONT	VERT	TOTAL	---	C1
K	8-0-12	-29	-29	---	FRONT	VERT	TOTAL	---	C1
L	2-0-12	-6	-6	---	FRONT	VERT	TOTAL	---	C1
M	4-0-12	-6	-6	---	FRONT	VERT	TOTAL	---	C1
N	8-0-12	-6	-6	---	FRONT	VERT	TOTAL	---	C1
O	10-0-12	-6	-6	---	FRONT	VERT	TOTAL	---	C1
P	12-0-12	-6	-6	---	FRONT	VERT	TOTAL	---	C1
Q	14-0-12	-6	-6	---	FRONT	VERT	TOTAL	---	C1

DESIGN CRITERIA

*** SPECIAL LOADS ANALYSIS ***
GEOMETRY AND/OR BASIC LOADS CHANGED BY USER.
LOADS WERE DERIVED FROM USER INPUT
NO FURTHER MODIFICATIONS WERE MADE

SPECIFIED LOADS:

TOP CH.	LL	=	26.7	PSF
	DL	=	6.0	PSF
BOT CH.	LL	=	0.0	PSF
	DL	=	7.4	PSF
TOTAL LOAD		=	40.1	PSF

SPACING = 24.0 IN. C/C

LOADING IN FLAT SECTION BASED ON A SLOPE OF 6.00/12

*** NON STANDARD GIRDER ***
ADDT'L USER-DEFINED LOADS APPLIED TO ALL LOAD CASES.

THIS TRUSS IS DESIGNED FOR RESIDENTIAL OR SMALL BUILDING REQUIREMENTS OF PART 9, NBCC 2015

THIS DESIGN COMPLIES WITH:
- PART 9 OF BCBC 2018 , ABC 2019
- PART 9 OF OBC 2012 (2019 AMENDMENT)
- CSA 086-14
- TPIC 2014

(55 % OF 33.4 P.S.F. G.S.L. PLUS 8.4 P.S.F. RAIN LOAD) EQUALS 26.7 P.S.F. SPECIFIED ROOF LIVE LOAD

ALLOWABLE DEFL.(LL)= L/360 (0.52")
CALCULATED VERT. DEFL.(LL) = L/ 999 (0.02")
ALLOWABLE DEFL.(TL)= L/360 (0.52")
CALCULATED VERT. DEFL.(TL) = L/ 999 (0.07")

CSI: TC=0.70/1.00 (D-E:1) , BC=0.26/1.00 (H-I:1) , WB=0.25/1.00 (E-H:1) , SSI=0.20/1.00 (B-C:1)

DOL LUMBER=1.00 NAIL=1.00 LS BEND=1.00 COMP=1.00 SHEAR=1.00 TENS= 1.00

COMPANION LIVE LOAD FACTOR = 1.00

TRUSS PLATE MANUFACTURER IS NOT RESPONSIBLE FOR QUALITY CONTROL IN THE TRUSS MANUFACTURING PLANT .

NAIL VALUES

PLATE	GRIP(DRY) (PSI) MAX	MIN	SHEAR (PLI) MAX	MIN	SECTION (PLI) MAX	MIN
MT20	650	371	1747	788	1987	1873

PLATE PLACEMENT TOL. = 0.250 inches

PLATE ROTATION TOL. = 5.0 Deg.

JSI GRIP= 0.88 (I) (INPUT = 0.90)
JSI METAL= 0.33 (I) (INPUT = 1.00)

CONTINUED ON PAGE 2

CONNECTION REQUIREMENTS

1) **C1:** A SUITABLE HANGER/MECHANICAL CONNECTION IS REQUIRED.

LICENSED PROFESSIONAL ENGINEER
8/02/22
C. M. HEYENS
100505065
PROVINCE OF ONTARIO

STRUCTURAL COMPONENT ONLY
DWG # TR22080309 PG 2/2

JOB NAME	TRUSS NAME	QUANTITY	PLY	JOB DESC.	DRWG NO.
427659	T26	1	2	GREEN PARK HOMES TRUSS DESC.	

Tamarack Roof Truss, Burlington

Version 8.530 S Feb 23 2022 MiTek Industries, Inc. Tue Aug 2 14:35:47 2022 Page 1
ID:X?b5302Mr04RJ9RlAuGw6Vz?TlO-fuqUfub4OkOYX0HmQaUOP2Xic HVHJTGjixLCqyrtBw

Scale = 1:49.8

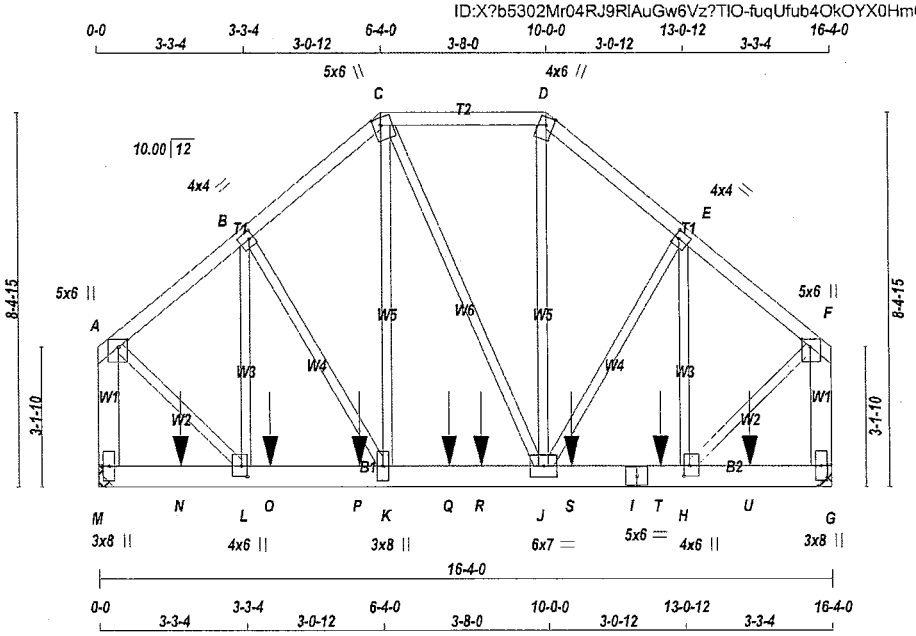

TOTAL WEIGHT = 2 X 106 = 212 lb

LUMBER

N. L. G. A. RULES

CHORDS	SIZE		LUMBER	DESCR.
A - C	2x4	DRY	No.2	SPF
C - D	2x4	DRY	No.2	SPF
D - F	2x4	DRY	No.2	SPF
M - A	2x6	DRY	No.2	SPF
G - F	2x6	DRY	No.2	SPF
M - I	2x6	DRY	No.2	SPF
I - G	2x6	DRY	No.2	SPF
ALL WEBS EXCEPT	2x3	DRY	No.2	SPF

DRY: SEASONED LUMBER.

DESIGN CONSISTS OF 2 TRUSSES BUILT SEPARATELY THEN FASTENED TOGETHER AS FOLLOWS:

CHORDS	#ROWS	SURFACE SPACING (IN)	LOAD(PLF)
TOP CHORDS : (0.122"X3") SPIRAL NAILS			
A- C	1	12	TOP
C- D	1	12	TOP
D- F	1	12	TOP
M- A	2	12	TOP
G- F	2	12	TOP
BOTTOM CHORDS : (0.122"X3") SPIRAL NAILS			
M- I	2	12	SIDE(0.0)
I- G	2	12	SIDE(0.0)
WEBS : (0.122"X3") SPIRAL NAILS			
2x3	1	6	

NAILS TO BE DRIVEN FROM ONE SIDE ONLY.

GIRDER NAILING ASSUMES NAILED HANGERS ARE FASTENED WITH MIN. 3-0 INCH NAILS.

TOP - COMPONENTS ARE LOADED FROM THE TOP AND MUST BE PLACED ON TOP EDGE OF ALL PLIES FOR THE LOAD TO BE TRANSFERRED TO EACH PLY.

LICENSED PROFESSIONAL ENGINEER
8/02/22
C. M. HEYENS
100505065
PROVINCE OF ONTARIO

STRUCTURAL COMPONENT ONLY
DWG # TR22080310 PG 1/2

DIMENSIONS, SUPPORTS AND LOADINGS SPECIFIED BY FABRICATOR TO BE VERIFIED BY BUILDING DESIGNER

BEARINGS

JT	FACTORED GROSS REACTION VERT	HORZ	MAXIMUM FACTORED GROSS REACTION DOWN	HORZ	UPLIFT	INPUT BRG IN-SX	REQRD BRG IN-SX
M	5422	0	5422	0	0	MECHANICAL	
G	5421	0	5421	0	0	MECHANICAL	

A SUITABLE HANGER/MECHANICAL CONNECTION IS REQUIRED AT JOINT M, G. MINIMUM BEARING LENGTH AT JOINT M = 4-0, JOINT G = 4-0.

UNFACTORED REACTIONS

JT	1ST LCASE COMBINED	SNOW	MAX./MIN. COMPONENT REACTIONS LIVE	PERM.LIVE	WIND	DEAD	SOIL
M	3820	2584 / 0	0 / 0	0 / 0	0 / 0	1236 / 0	0 / 0
G	3820	2584 / 0	0 / 0	0 / 0	0 / 0	1236 / 0	0 / 0

BRACING

TOP CHORD TO BE SHEATHED OR MAX. PURLIN SPACING = 4.68 FT.
MAX. UNBRACED BOTTOM CHORD LENGTH = 10.00 FT OR RIGID CEILING DIRECTLY APPLIED.

ALL PITCH BREAKS AND PERIMETER CORNER JOINTS MUST BE LATERALLY RESTRAINED.

LOADING

TOTAL LOAD CASES: (4)

CHORDS

MEMB. FR-TO	MAX. FACTORED FORCE (LBS)	FACTORED VERT. LOAD (PLF) FROM	TO	LC1	MAX CSI (LC)	MAX. UNBRAC LENGTH
A- B	-3823 / 0	-95.2	-95.2	0.13 (1)		4.74
B- C	-3938 / 0	-95.2	-95.2	0.12 (1)		4.69
C- D	-3060 / 0	-95.2	-95.2	0.16 (1)		5.13
D- E	-3974 / 0	-95.2	-95.2	0.12 (1)		4.68
E- F	-3811 / 0	-95.2	-95.2	0.13 (1)		4.75
M- A	-5038 / 0	0.0	0.0	0.29 (1)		6.48
G- F	-5023 / 0	0.0	0.0	0.29 (1)		6.49
M- N	0 / 0	-18.5	-18.5	0.24 (1)		10.00
N- L	0 / 0	-18.5	-18.5	0.24 (1)		10.00
L- O	0 / 2948	-18.5	-18.5	0.42 (1)		10.00
O- P	0 / 2948	-18.5	-18.5	0.42 (1)		10.00
P- K	0 / 2948	-18.5	-18.5	0.42 (1)		10.00
K- Q	0 / 3031	-18.5	-18.5	0.51 (1)		10.00
Q- R	0 / 3031	-18.5	-18.5	0.51 (1)		10.00
R- J	0 / 3031	-18.5	-18.5	0.51 (1)		10.00
J- S	0 / 2939	-18.5	-18.5	0.50 (1)		10.00
S- I	0 / 2939	-18.5	-18.5	0.50 (1)		10.00
I- T	0 / 2939	-18.5	-18.5	0.50 (1)		10.00
T- H	0 / 2939	-18.5	-18.5	0.50 (1)		10.00
H- U	0 / 0	-18.5	-18.5	0.25 (1)		10.00
U- G	0 / 0	-18.5	-18.5	0.25 (1)		10.00

WEBS

MEMB. FR-TO	MAX. FACTORED FORCE (LBS)	MAX CSI (LC)
L- B	-511 / 0	0.13 (1)
K- C	0 / 2163	0.27 (1)
C- J	0 / 71	0.01 (1)
J- D	0 / 2251	0.28 (1)
J- E	0 / 184	0.02 (1)
H- E	-604 / 0	0.15 (1)
A- L	0 / 3831	0.47 (1)
H- F	0 / 3820	0.47 (1)

SPECIFIED CONCENTRATED LOADS (LBS)

JT	LOC.	LC1	MAX-	MAX+	FACE	DIR.	TYPE	HEEL	CONN.
N	1-9-12	-791	-791	---	BACK	VERT	TOTAL	---	C1
O	3-9-12	-791	-791	---	BACK	VERT	TOTAL	---	C1
P	5-9-12	-791	-791	---	BACK	VERT	TOTAL	---	C1
Q	7-9-12	-791	-791	---	BACK	VERT	TOTAL	---	C1
R	8-6-4	-791	-791	---	BACK	VERT	TOTAL	---	C1
S	10-6-4	-791	-791	---	BACK	VERT	TOTAL	---	C1
T	12-6-4	-791	-791	---	BACK	VERT	TOTAL	---	C1
U	14-6-4	-791	-791	---	BACK	VERT	TOTAL	---	C1

CONNECTION REQUIREMENTS

1) C1: A SUITABLE HANGER/MECHANICAL CONNECTION IS REQUIRED.

[M]

DESIGN CRITERIA

SPECIFIED LOADS:

TOP CH.	LL	=	26.7	PSF
	DL	=	6.0	PSF
BOT CH.	LL	=	0.0	PSF
	DL	=	7.4	PSF
TOTAL LOAD		=	40.1	PSF

SPACING = 24.0 IN. C/C

LOADING IN FLAT SECTION BASED ON A SLOPE OF 6.00/12

THIS TRUSS IS DESIGNED FOR RESIDENTIAL OR SMALL BUILDING REQUIREMENTS OF PART 9, NBCC 2015

THIS DESIGN COMPLIES WITH:
- PART 9 OF BCBC 2018 , ABC 2019
- PART 9 OF OBC 2012 (2019 AMENDMENT)
- CSA 086-14
- TPIC 2014

(55 % OF 33.4 P.S.F. G.S.L. PLUS 8.4 P.S.F. RAIN LOAD) EQUALS 26.7 P.S.F. SPECIFIED ROOF LIVE LOAD

ALLOWABLE DEFL.(LL)= L/360 (0.54")
CALCULATED VERT. DEFL.(LL) = L/ 999 (0.04")
ALLOWABLE DEFL.(TL)= L/360 (0.54")
CALCULATED VERT. DEFL.(TL) = L/ 999 (0.08")

CSI: TC=0.29/1.00 (A-M:1) , BC=0.51/1.00 (J-K:1) , WB=0.47/1.00 (A-L:1) , SSI=0.42/1.00 (H-J:1)

DOL LUMBER=1.00 NAIL=1.00 LS BEND=1.00 COMP=1.00 SHEAR=1.00 TENS= 1.00

COMPANION LIVE LOAD FACTOR = 1.00

AUTOSOLVE HEELS OFF

TRUSS PLATE MANUFACTURER IS NOT RESPONSIBLE FOR QUALITY CONTROL IN THE TRUSS MANUFACTURING PLANT .

NAIL VALUES

PLATE	GRIP(DRY) (PSI) MAX	MIN	SHEAR (PLI) MAX	MIN	SECTION (PLI) MAX	MIN
MT20	650	371	1747	788	1987	1873

PLATE PLACEMENT TOL. = 0.250 inches

PLATE ROTATION TOL. = 5.0 Deg.

JSI GRIP= 0.89 (A) (INPUT = 0.90)
JSI METAL= 0.66 (L) (INPUT = 1.00)

CONTINUED ON PAGE 2

JOB NAME	TRUSS NAME	QUANTITY	PLY	JOB DESC.	DRWG NO.
427659	T26	1	2	GREEN PARK HOMES TRUSS DESC.	

PLATES (table is in inches)

JT	TYPE	PLATES	W	LEN	Y	X
A	TMVW+p	MT20	5.0	6.0	2.00	2.25
B	TMWW-t	MT20	4.0	4.0	2.00	1.25
C	TTWW+m	MT20	5.0	6.0	2.00	2.00
D	TTW+m	MT20	4.0	6.0	Edge	
E	TMWW-t	MT20	4.0	4.0	2.00	1.25
F	TMVW+p	MT20	5.0	6.0	2.00	2.25
G	BMV1+p	MT20	3.0	8.0		
H	BMWW+t	MT20	4.0	6.0	2.75	1.50
I	BS-t	MT20	5.0	6.0		
J	BMWWW-t	MT20	6.0	7.0		
K	BMWW+t	MT20	3.0	8.0		
L	BMWW+t	MT20	4.0	6.0	2.75	1.50
M	BMV1+p	MT20	3.0	8.0		

Edge - INDICATES REFERENCE CORNER OF PLATE TOUCHES EDGE OF CHORD.

NOTES- (1)
1) Lateral braces to be a minimum of 2X4 SPF #2.

CONNECTION REQUIREMENTS

1) **C1:** A SUITABLE HANGER/MECHANICAL CONNECTION IS REQUIRED.

LICENSED PROFESSIONAL ENGINEER
8/02/22
C. M. HEYENS
100505065
PROVINCE OF ONTARIO

STRUCTURAL COMPONENT ONLY
DWG # TR22080310

JOB NAME	TRUSS NAME	QUANTITY	PLY	JOB DESC.	DRWG NO.
427659	T27	1	2	GREEN PARK HOMES TRUSS DESC.	

Tamarack Roof Truss, Burlington

Version 8.530 S Feb 23 2022 MiTek Industries, Inc. Tue Aug 2 14:35:48 2022 Page 1
ID:X?b5302Mr04RJ9RlAuGw6Vz?TlO-74OstEci91WP99szzI?dyF4v4OhI0rZPyMhvkGyrtBv

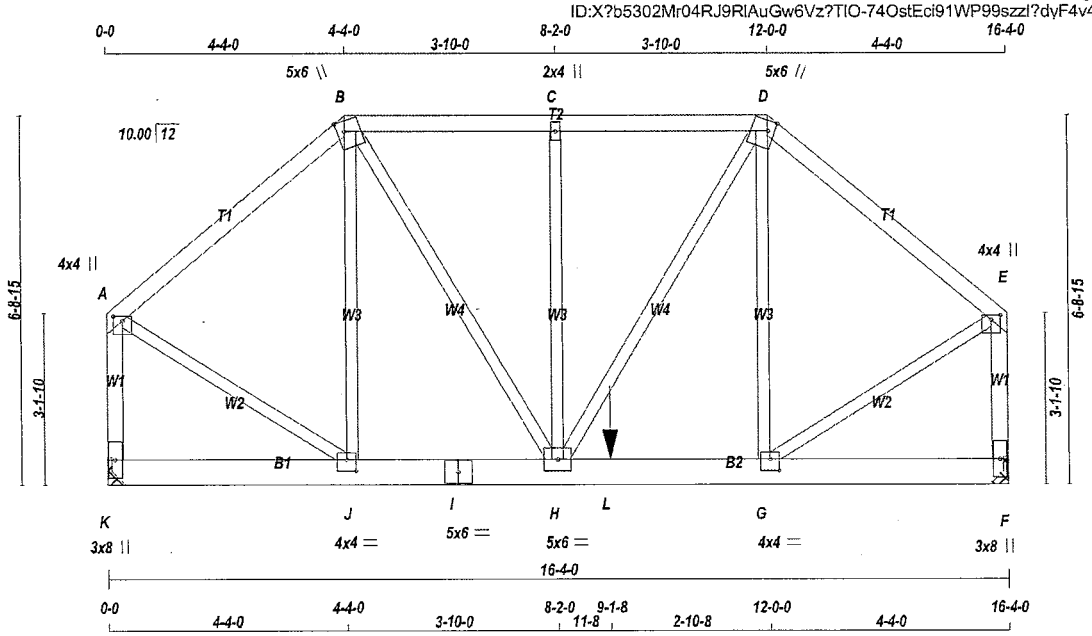

TOTAL WEIGHT = 2 X 91 = 182 lb

[M]

LUMBER

N. L. G. A. RULES

CHORDS	SIZE		LUMBER	DESCR.
A - B	2x4	DRY	No.2	SPF
B - D	2x4	DRY	No.2	SPF
D - E	2x4	DRY	No.2	SPF
K - A	2x4	DRY	No.2	SPF
F - E	2x4	DRY	No.2	SPF
K - I	2x6	DRY	No.2	SPF
I - F	2x6	DRY	No.2	SPF
ALL WEBS EXCEPT	2x3	DRY	No.2	SPF

DRY: SEASONED LUMBER.

DESIGN CONSISTS OF 2 TRUSSES BUILT SEPARATELY THEN FASTENED TOGETHER AS FOLLOWS:

CHORDS	#ROWS	SURFACE SPACING (IN)	LOAD(PLF)
TOP CHORDS : (0.122"X3") SPIRAL NAILS			
A- B	1	12	TOP
B- D	1	12	TOP
D- E	1	12	TOP
K- A	1	12	TOP
F- E	1	12	TOP
BOTTOM CHORDS : (0.122"X3") SPIRAL NAILS			
K- I	2	12	TOP
I- F	2	12	SIDE(0.0)
WEBS : (0.122"X3") SPIRAL NAILS			
2x3	1	6	

NAILS TO BE DRIVEN FROM ONE SIDE ONLY.

GIRDER NAILING ASSUMES NAILED HANGERS ARE FASTENED WITH MIN. 3-0 INCH NAILS.

TOP - COMPONENTS ARE LOADED FROM THE TOP AND MUST BE PLACED ON TOP EDGE OF ALL PLIES FOR THE LOAD TO BE TRANSFERRED TO EACH PLY.

LICENSED PROFESSIONAL ENGINEER
8/02/22
C. M. HEYENS
100505065
PROVINCE OF ONTARIO

STRUCTURAL COMPONENT ONLY
DWG # TR22080311 PG 1/2

DIMENSIONS, SUPPORTS AND LOADINGS SPECIFIED BY FABRICATOR TO BE VERIFIED BY BUILDING DESIGNER

BEARINGS

JT	FACTORED GROSS REACTION VERT	HORZ	MAXIMUM FACTORED GROSS REACTION DOWN	HORZ	UPLIFT	INPUT BRG IN-SX	REQRD BRG IN-SX
K	1372	0	1372	0	0	MECHANICAL	
F	1490	0	1490	0	0	MECHANICAL	

A SUITABLE HANGER/MECHANICAL CONNECTION IS REQUIRED AT JOINT K, F. MINIMUM BEARING LENGTH AT JOINT K = 4-0, JOINT F = 4-0.

UNFACTORED REACTIONS

JT	1ST LCASE COMBINED	MAX./MIN. COMPONENT REACTIONS SNOW	LIVE	PERM.LIVE	WIND	DEAD	SOIL
K	968	650 / 0	0 / 0	0 / 0	0 / 0	318 / 0	0 / 0
F	1051	706 / 0	0 / 0	0 / 0	0 / 0	344 / 0	0 / 0

BRACING

TOP CHORD TO BE SHEATHED OR MAX. PURLIN SPACING = 6.25 FT.
MAX. UNBRACED BOTTOM CHORD LENGTH = 10.00 FT OR RIGID CEILING DIRECTLY APPLIED.

ALL PITCH BREAKS AND PERIMETER CORNER JOINTS MUST BE LATERALLY RESTRAINED.

LOADING

TOTAL LOAD CASES: (4)

CHORDS

MEMB. FR-TO	MAX. FACTORED FORCE (LBS)	FACTORED VERT. LOAD (PLF) FROM	TO	LC1 CSI (LC)	MAX	MAX. UNBRAC LENGTH
A- B	-1012 / 0	-95.2	-95.2	0.18 (1)		6.25
B- C	-1220 / 0	-95.2	-95.2	0.12 (1)		6.25
C- D	-1220 / 0	-95.2	-95.2	0.12 (1)		6.25
D- E	-1155 / 0	-95.2	-95.2	0.18 (1)		6.25
K- A	-1331 / 0	0.0	0.0	0.11 (1)		7.81
F- E	-1490 / 0	0.0	0.0	0.13 (1)		7.81
K- J	0 / 0	-18.5	-18.5	0.02 (4)		10.00
J- I	0 / 768	-18.5	-18.5	0.13 (1)		10.00
I- H	0 / 768	-18.5	-18.5	0.13 (1)		10.00
H- L	0 / 882	-18.5	-18.5	0.25 (1)		10.00
L- G	0 / 882	-18.5	-18.5	0.25 (1)		10.00
G- F	0 / 0	-18.5	-18.5	0.07 (1)		10.00

WEBS

MEMB. FR-TO	MAX. FACTORED FORCE (LBS)	MAX CSI (LC)
J- B	-455 / 0	0.16 (1)
B- H	0 / 875	0.11 (1)
H- C	-430 / 0	0.16 (1)
H- D	0 / 654	0.08 (1)
G- D	-173 / 8	0.06 (1)
A- J	0 / 909	0.11 (1)
G- E	0 / 1038	0.13 (1)

SPECIFIED CONCENTRATED LOADS (LBS)

JT	LOC.	LC1	MAX-	MAX+	FACE	DIR.	TYPE	HEEL	CONN.
L	9-1-8	-707	-707	---	FRONT	VERT	TOTAL	---	C1

CONNECTION REQUIREMENTS

1) **C1:** A SUITABLE HANGER/MECHANICAL CONNECTION IS REQUIRED.

DESIGN CRITERIA

SPECIFIED LOADS:

TOP CH.	LL	=	26.7	PSF
	DL	=	6.0	PSF
BOT CH.	LL	=	0.0	PSF
	DL	=	7.4	PSF
TOTAL LOAD		=	40.1	PSF

SPACING = 24.0 IN. C/C

LOADING IN FLAT SECTION BASED ON A SLOPE OF 6.00/12

THIS TRUSS IS DESIGNED FOR RESIDENTIAL OR SMALL BUILDING REQUIREMENTS OF PART 9, NBCC 2015

THIS DESIGN COMPLIES WITH:
- PART 9 OF BCBC 2018 , ABC 2019
- PART 9 OF OBC 2012 (2019 AMENDMENT)
- CSA 086-14
- TPIC 2014

(55 % OF 33.4 P.S.F. G.S.L. PLUS 8.4 P.S.F. RAIN LOAD) EQUALS 26.7 P.S.F. SPECIFIED ROOF LIVE LOAD

ALLOWABLE DEFL.(LL)= L/360 (0.54")
CALCULATED VERT. DEFL.(LL) = L/ 999 (0.02")
ALLOWABLE DEFL.(TL)= L/360 (0.54")
CALCULATED VERT. DEFL.(TL) = L/ 999 (0.03")

CSI: TC=0.18/1.00 (D-E:1) , BC=0.25/1.00 (G-H:1) , WB=0.16/1.00 (B-J:1) , SSI=0.26/1.00 (G-H:1)

DOL LUMBER=1.00 NAIL=1.00 LS BEND=1.00 COMP=1.00 SHEAR=1.00 TENS= 1.00

COMPANION LIVE LOAD FACTOR = 1.00

TRUSS PLATE MANUFACTURER IS NOT RESPONSIBLE FOR QUALITY CONTROL IN THE TRUSS MANUFACTURING PLANT .

NAIL VALUES

PLATE	GRIP(DRY) (PSI) MAX	MIN	SHEAR (PLI) MAX	MIN	SECTION (PLI) MAX	MIN
MT20	650	371	1747	788	1987	1873

PLATE PLACEMENT TOL. = 0.250 inches

PLATE ROTATION TOL. = 5.0 Deg.

JSI GRIP= 0.76 (G) (INPUT = 0.90)
JSI METAL= 0.23 (I) (INPUT = 1.00)

CONTINUED ON PAGE 2

JOB NAME	TRUSS NAME	QUANTITY	PLY	JOB DESC.	DRWG NO.
427659	T27	1	2	GREEN PARK HOMES TRUSS DESC.	

Tamarack Roof Truss, Burlington

Version 8.530 S Feb 23 2022 MiTek Industries, Inc. Tue Aug 2 14:35:48 2022 Page 2
ID:X?b5302Mr04RJ9RlAuGw6Vz?TlO-74OstEci91WP99szzI?dyF4v4OhI0rZPyMhvkGyrtBv

PLATES (table is in inches)

JT	TYPE	PLATES	W	LEN	Y	X
A	TMVW+p	MT20	4.0	4.0	1.00	2.00
B	TTWW+m	MT20	5.0	6.0	2.25	1.50
C	TMW+w	MT20	2.0	4.0		
D	TTWW+m	MT20	5.0	6.0	2.25	1.50
E	TMVW+p	MT20	4.0	4.0	1.00	2.00
F	BMV1+p	MT20	3.0	8.0		
G	BMWW-t	MT20	4.0	4.0	2.50	2.00
H	BMWWW-t	MT20	5.0	6.0		
I	BS-t	MT20	5.0	6.0		
J	BMWW-t	MT20	4.0	4.0	2.50	2.00
K	BMV1+p	MT20	3.0	8.0		

NOTES- (1)
1) Lateral braces to be a minimum of 2X4 SPF #2.

LICENSED PROFESSIONAL ENGINEER
8/02/22
C. M. HEYENS
100505065
PROVINCE OF ONTARIO

STRUCTURAL COMPONENT ONLY
DWG # TR22080311

JOB NAME	TRUSS NAME	QUANTITY	PLY	JOB DESC.	DRWG NO.
427659	T28	1	1	GREEN PARK HOMES TRUSS DESC.	

Tamarack Roof Truss, Burlington

Version 8.530 S Feb 23 2022 MiTek Industries, Inc. Tue Aug 2 14:35:49 2022 Page 1
ID:X?b5302Mr04RJ9RlAuGw6Vz?TlO-bHyE4ZcKwLeGnJR9X?XsUTc bo3ClJBYB0QSGiyrtBu

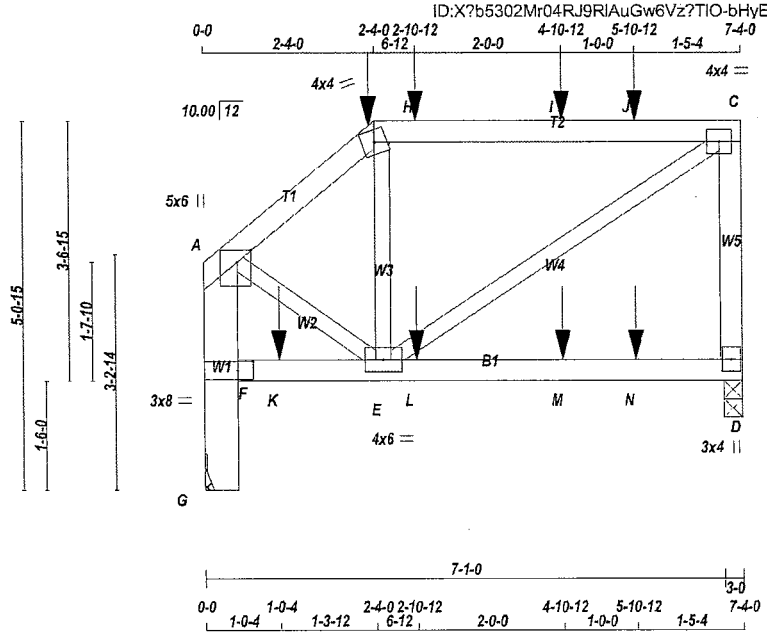

TOTAL WEIGHT = 35 lb

LUMBER
N. L. G. A. RULES

CHORDS	SIZE		LUMBER	DESCR.
A - B	2x4	DRY	No.2	SPF
B - C	2x4	DRY	No.2	SPF
D - C	2x4	DRY	No.2	SPF
G - A	2x6	DRY	No.2	SPF
F - D	2x4	DRY	No.2	SPF
ALL WEBS EXCEPT	2x3	DRY	No.2	SPF

DRY: SEASONED LUMBER.

PLATES (table is in inches)

JT	TYPE	PLATES	W	LEN	Y	X
A	TMVW+p	MT20	5.0	6.0	2.00	2.25
B	TTW-m	MT20	4.0	4.0		
C	TMVW-t	MT20	4.0	4.0		
D	BMV1+p	MT20	3.0	4.0		
E	BMWWW-t	MT20	4.0	6.0		
F	BVM-I	MT20	3.0	8.0	1.50	2.50

NOTES- (1)
1) Lateral braces to be a minimum of 2X4 SPF #2.

LICENSED PROFESSIONAL ENGINEER
8/02/22
C. M. HEYENS
100505065
PROVINCE OF ONTARIO

STRUCTURAL COMPONENT ONLY
DWG # TR22080312 PG 1/2

DIMENSIONS, SUPPORTS AND LOADINGS SPECIFIED BY FABRICATOR TO BE VERIFIED BY BUILDING DESIGNER

BEARINGS

JT	FACTORED GROSS REACTION VERT	HORZ	MAXIMUM FACTORED GROSS REACTION DOWN	HORZ	UPLIFT	INPUT BRG IN-SX	REQRD BRG IN-SX
D	475	0	475	0	0	3-0	3-0
G	483	0	483	0	0	MECHANICAL	

A SUITABLE HANGER/MECHANICAL CONNECTION IS REQUIRED AT JOINT G. MINIMUM BEARING LENGTH AT JOINT G = 1-8.

UNFACTORED REACTIONS

JT	1ST LCASE COMBINED	MAX./MIN. COMPONENT REACTIONS SNOW	LIVE	PERM.LIVE	WIND	DEAD	SOIL
D	335	225 / 0	0 / 0	0 / 0	0 / 0	110 / 0	0 / 0
G	341	230 / 0	0 / 0	0 / 0	0 / 0	111 / 0	0 / 0

BEARING MATERIAL TO BE SPF NO.2 OR BETTER AT JOINT(S) D

BRACING
TOP CHORD TO BE SHEATHED OR MAX. PURLIN SPACING = 6.25 FT.
MAX. UNBRACED BOTTOM CHORD LENGTH = 10.00 FT OR RIGID CEILING DIRECTLY APPLIED.

ALL PITCH BREAKS AND PERIMETER CORNER JOINTS MUST BE LATERALLY RESTRAINED.

LOADING
TOTAL LOAD CASES: (4)

CHORDS

MEMB. FR-TO	MAX. FACTORED FORCE (LBS)	FACTORED VERT. LOAD (PLF) FROM	TO	LC1	MAX CSI (LC)	MAX. UNBRAC LENGTH
A- B	-346 / 0	-95.2	-95.2	0.10 (1)	6.25	
B- H	-258 / 0	-95.2	-95.2	0.51 (1)	6.25	
H- I	-258 / 0	-95.2	-95.2	0.51 (1)	6.25	
I- J	-258 / 0	-95.2	-95.2	0.51 (1)	6.25	
J- C	-258 / 0	-95.2	-95.2	0.51 (1)	6.25	
D- C	-433 / 0	0.0	0.0	0.09 (1)	7.81	
G- F	-483 / 0	0.0	0.0	0.04 (1)	7.81	
F- A	-475 / 0	0.0	0.0	0.04 (1)	7.81	
F- K	0 / 0	-18.5	-18.5	0.11 (4)	10.00	
K- E	0 / 0	-18.5	-18.5	0.11 (4)	10.00	
E- L	0 / 0	-18.5	-18.5	0.11 (4)	10.00	
L- M	0 / 0	-18.5	-18.5	0.11 (4)	10.00	
M- N	0 / 0	-18.5	-18.5	0.11 (4)	10.00	
N- D	0 / 0	-18.5	-18.5	0.11 (4)	10.00	

WEBS

MEMB. FR-TO	MAX. FACTORED FORCE (LBS)	MAX CSI (LC)
E- B	-216 / 0	0.05 (1)
E- C	0 / 310	0.08 (1)
A- E	0 / 300	0.07 (1)

SPECIFIED CONCENTRATED LOADS (LBS)

JT	LOC.	LC1	MAX-	MAX+	FACE	DIR.	TYPE	HEEL	CONN.
B	2-4-0	-6	-6	---	FRONT	VERT	DEAD	---	C1
B	2-4-0	-24	-24	---	FRONT	VERT	SNOW	---	C1
H	2-10-12	-25	-25	---	BACK	VERT	TOTAL	---	C1
I	4-10-12	-11	-11	---	BACK	VERT	TOTAL	---	C1
J	5-10-12	-11	-11	---	BACK	VERT	TOTAL	---	C1
K	1-0-4	-2	-2	---	BACK	VERT	TOTAL	---	C1
L	2-10-12	-2	-2	---	BACK	VERT	TOTAL	---	C1
M	4-10-12	-2	-2	---	BACK	VERT	TOTAL	---	C1
N	5-10-12	-2	-2	---	BACK	VERT	TOTAL	---	C1

CONNECTION REQUIREMENTS

1) **C1:** A SUITABLE HANGER/MECHANICAL CONNECTION IS REQUIRED.

[M]

DESIGN CRITERIA

*** SPECIAL LOADS ANALYSIS ***
GEOMETRY AND/OR BASIC LOADS CHANGED BY USER.
LOADS WERE DERIVED FROM USER INPUT
NO FURTHER MODIFICATIONS WERE MADE

SPECIFIED LOADS:

TOP CH.	LL	=	26.7	PSF
	DL	=	6.0	PSF
BOT CH.	LL	=	0.0	PSF
	DL	=	7.4	PSF
TOTAL LOAD		=	40.1	PSF

SPACING = 24.0 IN. C/C

LOADING IN FLAT SECTION BASED ON A SLOPE OF 6.00/12

*** NON STANDARD GIRDER ***
ADDT'L USER-DEFINED LOADS APPLIED TO ALL LOAD CASES.

THIS TRUSS IS DESIGNED FOR RESIDENTIAL OR SMALL BUILDING REQUIREMENTS OF PART 9, NBCC 2015

THIS DESIGN COMPLIES WITH:
- PART 9 OF BCBC 2018 , ABC 2019
- PART 9 OF OBC 2012 (2019 AMENDMENT)
- CSA 086-14
- TPIC 2014

(55 % OF 33.4 P.S.F. G.S.L. PLUS 8.4 P.S.F. RAIN LOAD) EQUALS 26.7 P.S.F. SPECIFIED ROOF LIVE LOAD

ALLOWABLE DEFL.(LL)= L/360 (0.24")
CALCULATED VERT. DEFL.(LL) = L/ 999 (0.00")
ALLOWABLE DEFL.(TL)= L/360 (0.24")
CALCULATED VERT. DEFL.(TL) = L/ 999 (0.02")

CSI: TC=0.51/1.00 (B-C:1) , BC=0.11/1.00 (D-E:4) , WB=0.08/1.00 (C-E:1) , SSI=0.24/1.00 (B-C:1)

DOL LUMBER=1.00 NAIL=1.00 LS BEND=1.00 COMP=1.00 SHEAR=1.00 TENS= 1.00

COMPANION LIVE LOAD FACTOR = 1.00

AUTOSOLVE RIGHT HEEL ONLY

TRUSS PLATE MANUFACTURER IS NOT RESPONSIBLE FOR QUALITY CONTROL IN THE TRUSS MANUFACTURING PLANT .

NAIL VALUES

PLATE	GRIP(DRY) (PSI) MAX	MIN	SHEAR (PLI) MAX	MIN	SECTION (PLI) MAX	MIN
MT20	650	371	1747	788	1987	1873

PLATE PLACEMENT TOL. = 0.250 inches

PLATE ROTATION TOL. = 5.0 Deg.

CONTINUED ON PAGE 2

JOB NAME	TRUSS NAME	QUANTITY	PLY	JOB DESC. GREEN PARK HOMES	DRWG NO.
427659	T28	1	1	TRUSS DESC.	

JSI GRIP= 0.37 (E) (INPUT = 0.90)
JSI METAL= 0.09 (E) (INPUT = 1.00)

LICENSED PROFESSIONAL ENGINEER
8/02/22
C. M. HEYENS
100505065
PROVINCE OF ONTARIO

STRUCTURAL COMPONENT ONLY
DWG # TR22080312 PG 2/2

JOB NAME	TRUSS NAME	QUANTITY	PLY	JOB DESC.	DRWG NO.
427659	T29	1	2	GREEN PARK HOMES TRUSS DESC.	

Tamarack Roof Truss, Burlington

Version 8.530 S Feb 23 2022 MiTek Industries, Inc. Tue Aug 2 16:27:38 2022 Page 1
ID:X?b5302Mr04RJ9RIAuGw6Vz?TlO-fzrW9cpfxhvL9Lqa3WO8uF bEEoSAaV3wI5yFLyrrZ3

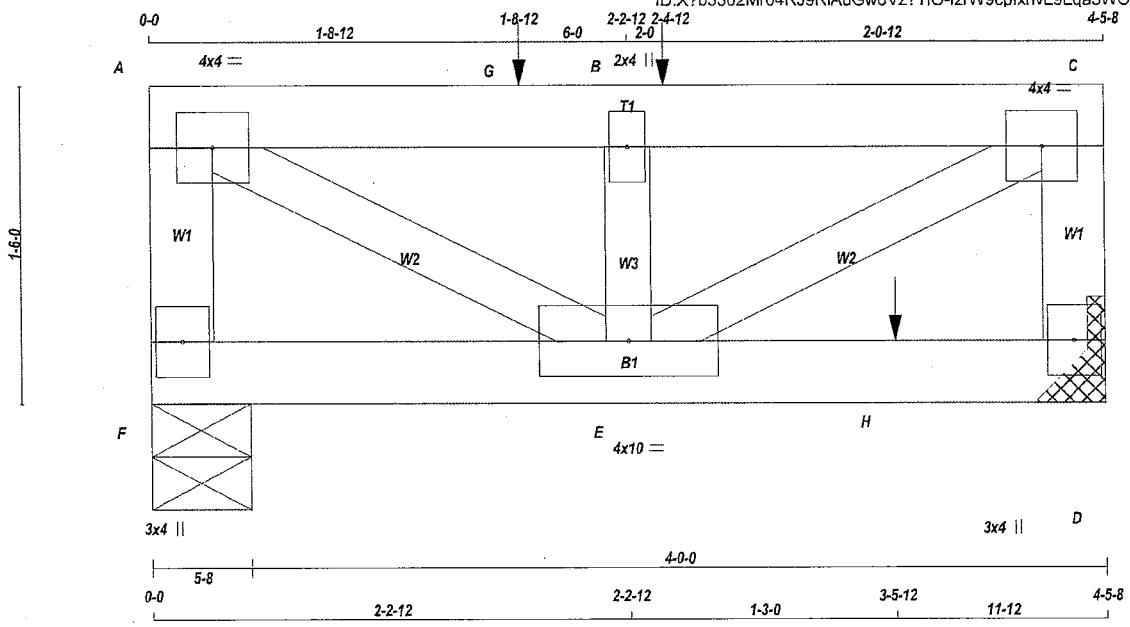

TOTAL WEIGHT = 2 X 16 = 33 lb

[M]

LUMBER
N. L. G. A. RULES

CHORDS	SIZE		LUMBER	DESCR.
F - A	2x4	DRY	No.2	SPF
A - C	2x4	DRY	No.2	SPF
D - C	2x4	DRY	No.2	SPF
F - D	2x4	DRY	No.2	SPF
ALL WEBS	2x3	DRY	No.2	SPF

DRY: SEASONED LUMBER.

DESIGN CONSISTS OF 2 TRUSSES BUILT SEPARATELY THEN FASTENED TOGETHER AS FOLLOWS:

CHORDS	#ROWS	SURFACE SPACING (IN)	LOAD(PLF)
TOP CHORDS : (0.122"X3") SPIRAL NAILS			
F- A	1	12	TOP
A- C	1	12	TOP
C- D	1	12	TOP
BOTTOM CHORDS : (0.122"X3") SPIRAL NAILS			
F- D	1	12	SIDE(0.0)
WEBS : (0.122"X3") SPIRAL NAILS			
2x3	1	6	

NAILS TO BE DRIVEN FROM ONE SIDE ONLY.

GIRDER NAILING ASSUMES NAILED HANGERS ARE FASTENED WITH MIN. 3-0 INCH NAILS.

TOP - COMPONENTS ARE LOADED FROM THE TOP AND MUST BE PLACED ON TOP EDGE OF ALL PLIES FOR THE LOAD TO BE TRANSFERRED TO EACH PLY.

SIDE - PLF SHOWN IS THE EQUIVALENT UDL APPLIED TO ONE SIDE THAT THE CORRESPONDING NAILING PATTERN SHALL BE CAPABLE OF TRANSFERING. REMAINING PLF MUST BE APPLIED ON THE OPPOSITE SIDE OR ON THE TOP.

PLATES (table is in inches)

JT	TYPE	PLATES	W	LEN	Y	X
A	TMVW-t	MT20	4.0	4.0		
B	TMW+w	MT20	2.0	4.0		
C	TMVW-t	MT20	4.0	4.0		

LICENSED PROFESSIONAL ENGINEER
8/02/22
C. M. HEYENS
100505065
PROVINCE OF ONTARIO

STRUCTURAL COMPONENT ONLY
DWG # TR22080313 PG 1/2

DIMENSIONS, SUPPORTS AND LOADINGS SPECIFIED BY FABRICATOR TO BE VERIFIED BY BUILDING DESIGNER

BEARINGS

JT	FACTORED GROSS REACTION VERT	HORZ	MAXIMUM FACTORED GROSS REACTION DOWN	HORZ	UPLIFT	INPUT BRG IN-SX	REQRD BRG IN-SX
F	875	0	875	0	0	5-8	5-8
D	1033	0	1033	0	0	MECHANICAL	

A SUITABLE HANGER/MECHANICAL CONNECTION IS REQUIRED AT JOINT D. MINIMUM BEARING LENGTH AT JOINT D = 4-0.

UNFACTORED REACTIONS

JT	1ST LCASE COMBINED	MAX./MIN. COMPONENT REACTIONS SNOW	LIVE	PERM.LIVE	WIND	DEAD	SOIL
F	618	407 / 0	0 / 0	0 / 0	0 / 0	211 / 0	0 / 0
D	729	487 / 0	0 / 0	0 / 0	0 / 0	241 / 0	0 / 0

BEARING MATERIAL TO BE SPF NO.2 OR BETTER AT JOINT(S) F

BRACING
TOP CHORD TO BE SHEATHED OR MAX. PURLIN SPACING = 6.25 FT.
MAX. UNBRACED BOTTOM CHORD LENGTH = 10.00 FT OR RIGID CEILING DIRECTLY APPLIED.

ALL PITCH BREAKS AND PERIMETER CORNER JOINTS MUST BE LATERALLY RESTRAINED.

LOADING
TOTAL LOAD CASES: (4)

CHORDS

MEMB. FR-TO	MAX. FACTORED FORCE (LBS)	FACTORED VERT. LOAD (PLF) FROM	TO	LC1 CSI (LC)	MAX UNBRAC LENGTH
F- A	-871 / 0	0.0	0.0	0.05 (1)	7.81
A- G	-1254 / 0	-95.2	-95.2	0.15 (1)	6.25
G- B	-1254 / 0	-95.2	-95.2	0.15 (1)	6.25
B- C	-1254 / 0	-95.2	-95.2	0.06 (1)	6.25
D- C	-752 / 0	0.0	0.0	0.04 (1)	7.81
F- E	0 / 0	-18.5	-18.5	0.03 (1)	10.00
E- H	0 / 0	-18.5	-18.5	0.20 (1)	10.00
H- D	0 / 0	-18.5	-18.5	0.20 (1)	10.00

WEBS

MEMB. FR-TO	MAX. FACTORED FORCE (LBS)	MAX CSI (LC)
E- B	-1068 / 0	0.08 (1)
E- A	0 / 1426	0.18 (1)
E- C	0 / 1426	0.18 (1)

SPECIFIED CONCENTRATED LOADS (LBS)

JT	LOC.	LC1	MAX-	MAX+	FACE	DIR.	TYPE	HEEL	CONN.
B	2-4-12	-269	-269	---	TOP	VERT	TOTAL	---	C1
G	1-8-12	-373	-373	---	TOP	VERT	TOTAL	---	C1
H	3-5-12	-347	-347	---	BACK	VERT	TOTAL	---	C1

CONNECTION REQUIREMENTS

1) **C1:** A SUITABLE HANGER/MECHANICAL CONNECTION IS REQUIRED.

DESIGN CRITERIA

SPECIFIED LOADS:

TOP CH.	LL	=	26.7	PSF
	DL	=	6.0	PSF
BOT CH.	LL	=	0.0	PSF
	DL	=	7.4	PSF
TOTAL LOAD		=	40.1	PSF

SPACING = 24.0 IN. C/C

LOADING IN FLAT SECTION BASED ON A SLOPE OF 6.00/12

THIS TRUSS IS DESIGNED FOR RESIDENTIAL OR SMALL BUILDING REQUIREMENTS OF PART 9, NBCC 2015

THIS DESIGN COMPLIES WITH:
- PART 9 OF BCBC 2018 , ABC 2019
- PART 9 OF OBC 2012 (2019 AMENDMENT)
- CSA 086-14
- TPIC 2014

(55 % OF 33.4 P.S.F. G.S.L. PLUS 8.4 P.S.F. RAIN LOAD) EQUALS 26.7 P.S.F. SPECIFIED ROOF LIVE LOAD

ALLOWABLE DEFL.(LL)= L/360 (0.19")
CALCULATED VERT. DEFL.(LL) = L/ 999 (0.01")
ALLOWABLE DEFL.(TL)= L/360 (0.19")
CALCULATED VERT. DEFL.(TL) = L/ 999 (0.02")

CSI: TC=0.15/1.00 (A-B:1) , BC=0.20/1.00 (D-E:1) , WB=0.18/1.00 (A-E:1) , SSI=0.24/1.00 (A-B:1)

DOL LUMBER=1.00 NAIL=1.00 LS BEND=1.00 COMP=1.00 SHEAR=1.00 TENS= 1.00

COMPANION LIVE LOAD FACTOR = 1.00

TRUSS PLATE MANUFACTURER IS NOT RESPONSIBLE FOR QUALITY CONTROL IN THE TRUSS MANUFACTURING PLANT .

NAIL VALUES

PLATE	GRIP(DRY) (PSI) MAX	MIN	SHEAR (PLI) MAX	MIN	SECTION (PLI) MAX	MIN
MT20	650	371	1747	788	1987	1873

PLATE PLACEMENT TOL. = 0.250 inches

PLATE ROTATION TOL. = 5.0 Deg.

JSI GRIP= 0.72 (A) (INPUT = 0.90)
JSI METAL= 0.21 (A) (INPUT = 1.00)

CONTINUED ON PAGE 2

PLATES (table is in inches)

JT	TYPE	PLATES	W	LEN	Y	X
D	BMV1+p	MT20	3.0	4.0		
E	BMWWW-t	MT20	4.0	10.0		
F	BMV1+p	MT20	3.0	4.0		

NOTES- (1)
1) Lateral braces to be a minimum of 2X4 SPF #2.

LICENSED PROFESSIONAL ENGINEER
8/02/22
C. M. HEYENS
100505065
PROVINCE OF ONTARIO

STRUCTURAL COMPONENT ONLY
DWG # TR22080313 PG 2/2

JOB NAME	TRUSS NAME	QUANTITY	PLY	JOB DESC.	DRWG NO.
427659	T30	1	1	GREEN PARK HOMES TRUSS DESC.	

Tamarack Roof Truss, Burlington

Version 8.530 S Feb 23 2022 MiTek Industries, Inc. Tue Aug 2 14:35:50 2022 Page 1
ID:X?b5302Mr04RJ9RlAuGw6Vz?TlO-4TWdlvdyhfm7OT0L5j251g9EXCPXUm7iQgA0o9yrtB

Scale = 1:45.3

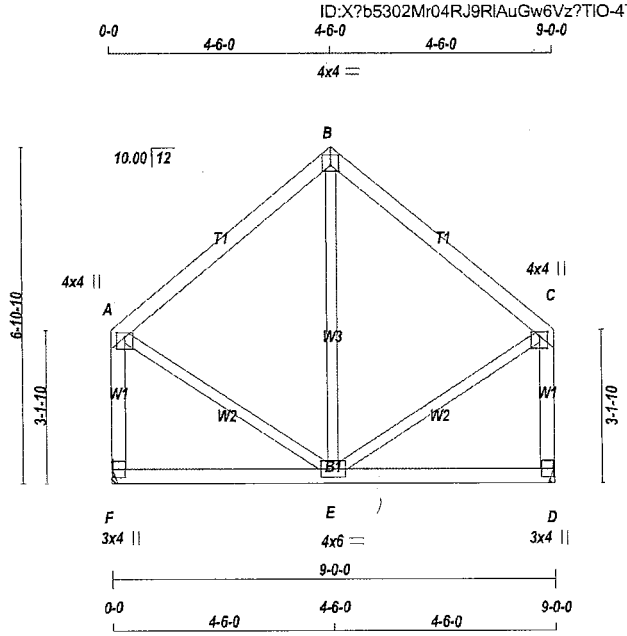

TOTAL WEIGHT = 43 lb

LUMBER
N. L. G. A. RULES

CHORDS	SIZE		LUMBER	DESCR.
A - B	2x4	DRY	No.2	SPF
B - C	2x4	DRY	No.2	SPF
F - A	2x4	DRY	No.2	SPF
D - C	2x4	DRY	No.2	SPF
F - D	2x4	DRY	No.2	SPF
ALL WEBS EXCEPT	2x3	DRY	No.2	SPF

DRY: SEASONED LUMBER.

PLATES (table is in inches)

JT	TYPE	PLATES	W	LEN	Y	X
A	TMVW+p	MT20	4.0	4.0	1.00	2.00
B	TTW-p	MT20	4.0	4.0	1.50	2.00
C	TMVW+p	MT20	4.0	4.0	1.00	2.00
D	BMV1+p	MT20	3.0	4.0		
E	BMWWW-t	MT20	4.0	6.0		
F	BMV1+p	MT20	3.0	4.0		

NOTES- (1)
1) Lateral braces to be a minimum of 2X4 SPF #2.

DIMENSIONS, SUPPORTS AND LOADINGS SPECIFIED BY FABRICATOR TO BE VERIFIED BY BUILDING DESIGNER

BEARINGS

JT	FACTORED GROSS REACTION VERT	HORZ	MAXIMUM FACTORED GROSS REACTION DOWN	HORZ	UPLIFT	INPUT BRG IN-SX	REQRD BRG IN-SX
F	512	0	512	0	0	MECHANICAL	
D	512	0	512	0	0	MECHANICAL	

A SUITABLE HANGER/MECHANICAL CONNECTION IS REQUIRED AT JOINT F, D. MINIMUM BEARING LENGTH AT JOINT F = 1-8, JOINT D = 1-8.

UNFACTORED REACTIONS

JT	1ST LCASE COMBINED	MAX./MIN. COMPONENT REACTIONS SNOW	LIVE	PERM.LIVE	WIND	DEAD	SOIL
F	361	241 / 0	0 / 0	0 / 0	0 / 0	121 / 0	0 / 0
D	361	241 / 0	0 / 0	0 / 0	0 / 0	121 / 0	0 / 0

BRACING
TOP CHORD TO BE SHEATHED OR MAX. PURLIN SPACING = 6.25 FT.
MAX. UNBRACED BOTTOM CHORD LENGTH = 10.00 FT OR RIGID CEILING DIRECTLY APPLIED.

ALL PITCH BREAKS AND PERIMETER CORNER JOINTS MUST BE LATERALLY RESTRAINED.

LOADING
TOTAL LOAD CASES: (4)

CHORDS

MEMB. FR-TO	MAX. FACTORED FORCE (LBS)	FACTORED VERT. LOAD (PLF) FROM	TO	LC1 MAX CSI (LC)	MAX. UNBRAC LENGTH
A- B	-237 / 0	-95.2	-95.2	0.25 (1)	6.25
B- C	-237 / 0	-95.2	-95.2	0.25 (1)	6.25
F- A	-480 / 0	0.0	0.0	0.08 (1)	7.81
D- C	-480 / 0	0.0	0.0	0.08 (1)	7.81
F- E	0 / 0	-18.5	-18.5	0.11 (4)	10.00
E- D	0 / 0	-18.5	-18.5	0.11 (4)	10.00

WEBS

MEMB. FR-TO	MAX. FACTORED FORCE (LBS)	MAX CSI (LC)
E- B	-124 / 34	0.10 (1)
A- E	0 / 215	0.05 (1)
E- C	0 / 215	0.05 (1)

DESIGN CRITERIA

SPECIFIED LOADS:

TOP CH.	LL	=	26.7	PSF
	DL	=	6.0	PSF
BOT CH.	LL	=	0.0	PSF
	DL	=	7.4	PSF
TOTAL LOAD		=	40.1	PSF

SPACING = 24.0 IN. C/C

THIS TRUSS IS DESIGNED FOR RESIDENTIAL OR SMALL BUILDING REQUIREMENTS OF PART 9, NBCC 2015

THIS DESIGN COMPLIES WITH:
- PART 9 OF BCBC 2018 , ABC 2019
- PART 9 OF OBC 2012 (2019 AMENDMENT)
- CSA 086-14
- TPIC 2014

(55 % OF 33.4 P.S.F. G.S.L. PLUS 8.4 P.S.F. RAIN LOAD) EQUALS 26.7 P.S.F. SPECIFIED ROOF LIVE LOAD

ALLOWABLE DEFL.(LL)= L/360 (0.30")
CALCULATED VERT. DEFL.(LL) = L/ 999 (0.00")
ALLOWABLE DEFL.(TL)= L/360 (0.30")
CALCULATED VERT. DEFL.(TL) = L/ 999 (0.01")

CSI: TC=0.25/1.00 (B-C:1) , BC=0.11/1.00 (E-F:4) , WB=0.10/1.00 (B-E:1) , SSI=0.13/1.00 (A-B:1)

DOL LUMBER=1.00 NAIL=1.00 LS BEND=1.10 COMP=1.10 SHEAR=1.10 TENS= 1.10

COMPANION LIVE LOAD FACTOR = 1.00

TRUSS PLATE MANUFACTURER IS NOT RESPONSIBLE FOR QUALITY CONTROL IN THE TRUSS MANUFACTURING PLANT .

NAIL VALUES

PLATE	GRIP(DRY) (PSI) MAX	MIN	SHEAR (PLI) MAX	MIN	SECTION (PLI) MAX	MIN
MT20	650	371	1747	788	1987	1873

PLATE PLACEMENT TOL. = 0.250 inches

PLATE ROTATION TOL. = 5.0 Deg.

JSI GRIP= 0.35 (A) (INPUT = 0.90)
JSI METAL= 0.10 (C) (INPUT = 1.00)

LICENSED PROFESSIONAL ENGINEER
8/02/22
C. M. HEYENS
100505065
PROVINCE OF ONTARIO

STRUCTURAL COMPONENT ONLY
DWG # TR22080314

JOB NAME	TRUSS NAME	QUANTITY	PLY	JOB DESC.	DRWG NO.
427659	T31	1	1	GREEN PARK HOMES TRUSS DESC.	

Tamarack Roof Truss, Burlington

Version 8.530 S Feb 23 2022 MiTek Industries, Inc. Tue Aug 2 14:35:51 2022 Page 1
ID:X?b5302Mr04RJ9RlAuGw6Vz?TlO-Yf4?VFebSyu 0dbYfQZKZuiPwcl4DDMreKvZLbyrtBs

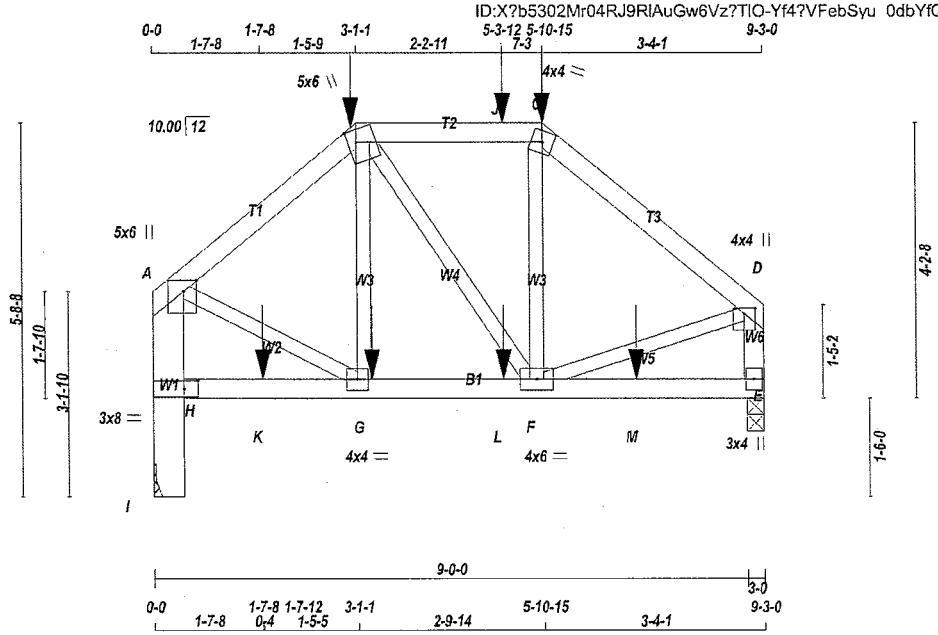

TOTAL WEIGHT = 45 lb

LUMBER
N. L. G. A. RULES

CHORDS	SIZE		LUMBER	DESCR.
A - B	2x4	DRY	No.2	SPF
B - C	2x4	DRY	No.2	SPF
C - D	2x4	DRY	No.2	SPF
I - A	2x6	DRY	No.2	SPF
E - D	2x4	DRY	No.2	SPF
H - E	2x4	DRY	No.2	SPF
ALL WEBS EXCEPT	2x3	DRY	No.2	SPF

DRY: SEASONED LUMBER.

PLATES (table is in inches)

JT	TYPE	PLATES	W	LEN	Y	X
A	TMVW+p	MT20	5.0	6.0	2.00	2.25
B	TTWW+m	MT20	5.0	6.0	2.25	1.50
C	TTW-m	MT20	4.0	4.0		
D	TMVW+p	MT20	4.0	4.0	1.00	2.00
E	BMV1+p	MT20	3.0	4.0		
F	BMWWW-t	MT20	4.0	6.0		
G	BMWW-t	MT20	4.0	4.0		
H	BVM-!	MT20	3.0	8.0	1.50	2.50

NOTES- (1)
1) Lateral braces to be a minimum of 2X4 SPF #2.

LICENSED PROFESSIONAL ENGINEER
8/02/22
C. M. HEYENS
100505065
PROVINCE OF ONTARIO

STRUCTURAL COMPONENT ONLY
DWG # TR22080315 PG 1/2

DIMENSIONS, SUPPORTS AND LOADINGS SPECIFIED BY FABRICATOR TO BE VERIFIED BY BUILDING DESIGNER

BEARINGS

JT	FACTORED GROSS REACTION VERT	HORZ	MAXIMUM FACTORED GROSS REACTION DOWN	HORZ	UPLIFT	INPUT BRG IN-SX	REQRD BRG IN-SX
E	623	0	623	0	0	3-0	3-0
I	629	0	629	0	0	MECHANICAL	

A SUITABLE HANGER/MECHANICAL CONNECTION IS REQUIRED AT JOINT I. MINIMUM BEARING LENGTH AT JOINT I = 1-8.

UNFACTORED REACTIONS

JT	1ST LCASE COMBINED	MAX./MIN. COMPONENT REACTIONS SNOW	LIVE	PERM.LIVE	WIND	DEAD	SOIL
E	439	298 / 0	0 / 0	0 / 0	0 / 0	141 / 0	0 / 0
I	443	300 / 0	0 / 0	0 / 0	0 / 0	144 / 0	0 / 0

BEARING MATERIAL TO BE SPF NO.2 OR BETTER AT JOINT(S) E

BRACING
TOP CHORD TO BE SHEATHED OR MAX. PURLIN SPACING = 6.25 FT.
MAX. UNBRACED BOTTOM CHORD LENGTH = 10.00 FT OR RIGID CEILING DIRECTLY APPLIED.

ALL PITCH BREAKS AND PERIMETER CORNER JOINTS MUST BE LATERALLY RESTRAINED.

LOADING
TOTAL LOAD CASES: (4)

CHORDS

MEMB. FR-TO	MAX. FACTORED FORCE (LBS)	FACTORED VERT. LOAD LC1 (PLF) FROM	TO	MAX CSI (LC)	MAX. UNBRAC LENGTH
A- B	-477 / 0	-95.2	-95.2	0.18 (1)	6.25
B- J	-374 / 0	-95.2	-95.2	0.16 (1)	6.25
J- C	-374 / 0	-95.2	-95.2	0.16 (1)	6.25
C- D	-491 / 0	-95.2	-95.2	0.21 (1)	6.25
I- H	-629 / 0	0.0	0.0	0.05 (1)	7.81
H- A	-602 / 0	0.0	0.0	0.05 (1)	7.81
E- D	-594 / 0	0.0	0.0	0.07 (1)	7.81
H- K	0 / 0	-18.5	-18.5	0.05 (4)	10.00
K- G	0 / 0	-18.5	-18.5	0.05 (4)	10.00
G- L	0 / 363	-18.5	-18.5	0.09 (1)	10.00
L- F	0 / 363	-18.5	-18.5	0.09 (1)	10.00
F- M	0 / 0	-18.5	-18.5	0.05 (4)	10.00
M- E	0 / 0	-18.5	-18.5	0.05 (4)	10.00

WEBS

MEMB. FR-TO	MAX. FACTORED FORCE (LBS)	MAX CSI (LC)
A- G	0 / 394	0.10 (1)
G- B	-86 / 22	0.02 (1)
B- F	0 / 20	0.00 (1)
F- C	-71 / 33	0.02 (1)
F- D	0 / 394	0.10 (1)

SPECIFIED CONCENTRATED LOADS (LBS)

JT	LOC.	LC1	MAX-	MAX+	FACE	DIR.	TYPE	HEEL	CONN.
B	3-1-1	-8	-8	---	FRONT	VERT	DEAD	---	C1
B	3-1-1	-16	-16	---	FRONT	VERT	TOTAL	---	C1
B	3-1-1	-37	-37	---	FRONT	VERT	SNOW	---	C1
C	5-10-15	-8	-8	---	FRONT	VERT	DEAD	---	C1
C	5-10-15	-37	-37	---	FRONT	VERT	SNOW	---	C1
G	3-3-12	-2	-2	---	FRONT	VERT	TOTAL	---	C1
J	5-3-12	-24	-24	---	FRONT	VERT	TOTAL	---	C1
K	1-7-12	-2	-2	---	FRONT	VERT	TOTAL	---	C1
L	5-3-12	-2	-2	---	FRONT	VERT	TOTAL	---	C1
M	7-3-12	-2	-2	---	FRONT	VERT	TOTAL	---	C1

CONNECTION REQUIREMENTS

1) **C1:** A SUITABLE HANGER/MECHANICAL CONNECTION IS REQUIRED.

[M]

DESIGN CRITERIA

*** SPECIAL LOADS ANALYSIS ***
GEOMETRY AND/OR BASIC LOADS CHANGED BY USER.
LOADS WERE DERIVED FROM USER INPUT
NO FURTHER MODIFICATIONS WERE MADE

SPECIFIED LOADS:

TOP CH.	LL	=	26.7	PSF
	DL	=	6.0	PSF
BOT CH.	LL	=	0.0	PSF
	DL	=	7.4	PSF
TOTAL LOAD		=	40.1	PSF

SPACING = 24.0 IN. C/C

LOADING IN FLAT SECTION BASED ON A SLOPE OF 6.00/12

*** NON STANDARD GIRDER ***
ADDT'L USER-DEFINED LOADS APPLIED TO ALL LOAD CASES.

THIS TRUSS IS DESIGNED FOR RESIDENTIAL OR SMALL BUILDING REQUIREMENTS OF PART 9, NBCC 2015

THIS DESIGN COMPLIES WITH:
- PART 9 OF BCBC 2018 , ABC 2019
- PART 9 OF OBC 2012 (2019 AMENDMENT)
- CSA 086-14
- TPIC 2014

(55 % OF 33.4 P.S.F. G.S.L. PLUS 8.4 P.S.F. RAIN LOAD) EQUALS 26.7 P.S.F. SPECIFIED ROOF LIVE LOAD

ALLOWABLE DEFL.(LL)= L/360 (0.31")
CALCULATED VERT. DEFL.(LL) = L/ 999 (0.00")
ALLOWABLE DEFL.(TL)= L/360 (0.31")
CALCULATED VERT. DEFL.(TL) = L/ 999 (0.01")

CSI: TC=0.21/1.00 (C-D:1) , BC=0.09/1.00 (F-G:1) , WB=0.10/1.00 (D-F:1) , SSI=0.14/1.00 (B-C:1)

DOL LUMBER=1.00 NAIL=1.00 LS BEND=1.00 COMP=1.00 SHEAR=1.00 TENS= 1.00

COMPANION LIVE LOAD FACTOR = 1.00

AUTOSOLVE RIGHT HEEL ONLY

TRUSS PLATE MANUFACTURER IS NOT RESPONSIBLE FOR QUALITY CONTROL IN THE TRUSS MANUFACTURING PLANT .

NAIL VALUES

PLATE	GRIP(DRY) (PSI) MAX	MIN	SHEAR (PLI) MAX	MIN	SECTION (PLI) MAX	MIN
MT20	650	371	1747	788	1987	1873

PLATE PLACEMENT TOL. = 0.250 inches

PLATE ROTATION TOL. = 5.0 Deg.

CONTINUED ON PAGE 2

JOB NAME	TRUSS NAME	QUANTITY	PLY	JOB DESC. GREEN PARK HOMES	DRWG NO.
427659	T31	1	1	TRUSS DESC.	

JSI GRIP= 0.61 (F) (INPUT = 0.90)
JSI METAL= 0.15 (D) (INPUT = 1.00)

LICENSED PROFESSIONAL ENGINEER
8/02/22
C. M. HEYENS
100505065
PROVINCE OF ONTARIO

STRUCTURAL COMPONENT ONLY
DWG # TR22080315 PG 2/2

JOB NAME	TRUSS NAME	QUANTITY	PLY	JOB DESC.	DRWG NO.
427659	T32	1	2	GREEN PARK HOMES TRUSS DESC.	

Tamarack Roof Truss, Burlington

Version 8.530 S Feb 23 2022 MiTek Industries, Inc. Tue Aug 2 14:35:52 2022 Page 1
ID:X?b5302Mr04RJ9RlAuGw6Vz?TIO-0reNibfDCG0renAkC84Z65Ece?2Lydk?t f6t1yrtBr

Scale = 1:32.7

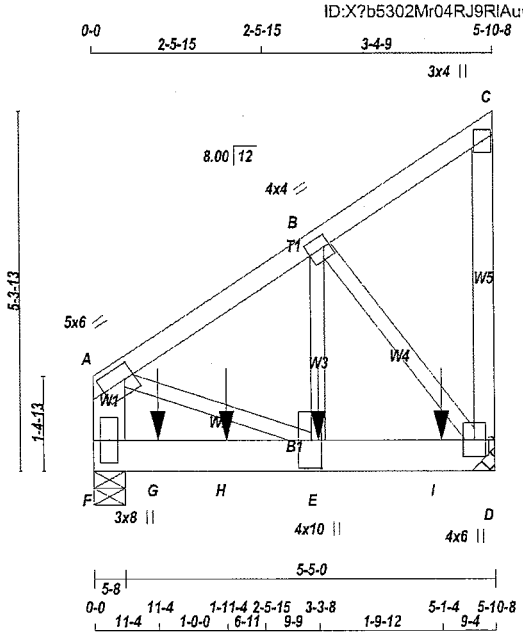

TOTAL WEIGHT = 2 X 33 = 66 lb [M]

LUMBER

N. L. G. A. RULES

CHORDS	SIZE		LUMBER	DESCR.
A - C	2x4	DRY	No.2	SPF
D - C	2x4	DRY	No.2	SPF
F - A	2x6	DRY	No.2	SPF
F - D	2x6	DRY	No.2	SPF
ALL WEBS EXCEPT	2x3	DRY	No.2	SPF

DRY: SEASONED LUMBER.

DESIGN CONSISTS OF 2 TRUSSES BUILT SEPARATELY THEN FASTENED TOGETHER AS FOLLOWS:

CHORDS	#ROWS	SURFACE SPACING (IN)	LOAD(PLF)
TOP CHORDS : (0.122"X3") SPIRAL NAILS			
A- C	1	12	TOP
D- C	1	12	TOP
F- A	2	12	TOP
BOTTOM CHORDS : (0.122"X3") SPIRAL NAILS			
F- D	2	12	SIDE(183.1)
WEBS : (0.122"X3") SPIRAL NAILS			
E- B	1	6	SIDE(208.0)
2x3	1	6	

NAILS TO BE DRIVEN FROM ONE SIDE ONLY.

GIRDER NAILING ASSUMES NAILED HANGERS ARE FASTENED WITH MIN. 3-0 INCH NAILS.

TOP - COMPONENTS ARE LOADED FROM THE TOP AND MUST BE PLACED ON TOP EDGE OF ALL PLIES FOR THE LOAD TO BE TRANSFERRED TO EACH PLY.

SIDE - PLF SHOWN IS THE EQUIVALENT UDL APPLIED TO ONE SIDE THAT THE CORRESPONDING NAILING PATTERN SHALL BE CAPABLE OF TRANSFERING. REMAINING PLF MUST BE APPLIED ON THE OPPOSITE SIDE OR ON THE TOP.

LICENSED PROFESSIONAL ENGINEER
8/02/22
C. M. HEYENS
100505065
PROVINCE OF ONTARIO

STRUCTURAL COMPONENT ONLY
DWG # TR22080316 PG 1/2

DIMENSIONS, SUPPORTS AND LOADINGS SPECIFIED BY FABRICATOR TO BE VERIFIED BY BUILDING DESIGNER

BEARINGS

JT	FACTORED GROSS REACTION VERT	HORZ	MAXIMUM FACTORED GROSS REACTION DOWN	HORZ	UPLIFT	INPUT BRG IN-SX	REQRD BRG IN-SX
D	2134	0	2134	0	0	MECHANICAL	
F	1994	0	1994	0	0	5-8	5-8

A SUITABLE HANGER/MECHANICAL CONNECTION IS REQUIRED AT JOINT D. MINIMUM BEARING LENGTH AT JOINT D = 4-0.

UNFACTORED REACTIONS

JT	1ST LCASE COMBINED	MAX./MIN. COMPONENT REACTIONS SNOW	LIVE	PERM.LIVE	WIND	DEAD	SOIL
D	1500	1038 / 0	0 / 0	0 / 0	0 / 0	462 / 0	0 / 0
F	1399	984 / 0	0 / 0	0 / 0	0 / 0	415 / 0	0 / 0

BEARING MATERIAL TO BE SPF NO.2 OR BETTER AT JOINT(S) F

BRACING

TOP CHORD TO BE SHEATHED OR MAX. PURLIN SPACING = 6.25 FT.
MAX. UNBRACED BOTTOM CHORD LENGTH = 10.00 FT OR RIGID CEILING DIRECTLY APPLIED.

ALL PITCH BREAKS AND PERIMETER CORNER JOINTS MUST BE LATERALLY RESTRAINED.

LOADING

TOTAL LOAD CASES: (4)

CHORDS

MEMB. FR-TO	MAX. FACTORED FORCE (LBS)	FACTORED VERT. LOAD (PLF) FROM	TO	LC1	MAX CSI (LC)	MAX. UNBRAC LENGTH
A- B	-1523 / 0	-95.2	-95.2	0.08 (1)	6.25	
B- C	-17 / 0	-95.2	-95.2	0.06 (1)	6.25	
D- C	-92 / 0	0.0	0.0	0.02 (1)	7.81	
F- A	-1372 / 0	0.0	0.0	0.05 (1)	7.81	
F- G	0 / 0	-18.5	-18.5	0.21 (1)	10.00	
G- H	0 / 0	-18.5	-18.5	0.21 (1)	10.00	
H- E	0 / 0	-18.5	-18.5	0.21 (1)	10.00	
E- I	0 / 1278	-18.5	-18.5	0.21 (1)	10.00	
I- D	0 / 1278	-18.5	-18.5	0.21 (1)	10.00	

WEBS

MEMB. FR-TO	MAX. FACTORED FORCE (LBS)	MAX CSI (LC)
E- B	0 / 2096	0.26 (1)
B- D	-2032 / 0	0.28 (1)
A- E	0 / 1336	0.17 (1)

SPECIFIED CONCENTRATED LOADS (LBS)

JT	LOC.	LC1	MAX-	MAX+	FACE	DIR.	TYPE	HEEL	CONN.
E	3-3-8	-1052	-1052	---	BACK	VERT	TOTAL	---	C1
G	11-4	-417	-417	---	TOP	VERT	TOTAL	---	C1
H	1-11-4	-416	-416	---	TOP	VERT	TOTAL	---	C1
I	5-1-4	-542	-542	---	BACK	VERT	TOTAL	---	C1

CONNECTION REQUIREMENTS

1) **C1:** A SUITABLE HANGER/MECHANICAL CONNECTION IS REQUIRED.

DESIGN CRITERIA

SPECIFIED LOADS:

TOP CH.	LL	=	26.7	PSF
	DL	=	6.0	PSF
BOT CH.	LL	=	0.0	PSF
	DL	=	7.4	PSF
TOTAL LOAD		=	40.1	PSF

SPACING = 24.0 IN. C/C

THIS TRUSS IS DESIGNED FOR RESIDENTIAL OR SMALL BUILDING REQUIREMENTS OF PART 9, NBCC 2015

THIS DESIGN COMPLIES WITH:
- PART 9 OF BCBC 2018 , ABC 2019
- PART 9 OF OBC 2012 (2019 AMENDMENT)
- CSA 086-14
- TPIC 2014

(55 % OF 33.4 P.S.F. G.S.L. PLUS 8.4 P.S.F. RAIN LOAD) EQUALS 26.7 P.S.F. SPECIFIED ROOF LIVE LOAD

ALLOWABLE DEFL.(LL)= L/360 (0.20")
CALCULATED VERT. DEFL.(LL) = L/ 999 (0.01")
ALLOWABLE DEFL.(TL)= L/360 (0.20")
CALCULATED VERT. DEFL.(TL) = L/ 999 (0.03")

CSI: TC=0.08/1.00 (A-B:1) , BC=0.21/1.00 (E-F:1) , WB=0.28/1.00 (B-D:1) , SSI=0.21/1.00 (E-F:1)

DOL LUMBER=1.00 NAIL=1.00 LS BEND=1.00 COMP=1.00 SHEAR=1.00 TENS= 1.00

COMPANION LIVE LOAD FACTOR = 1.00

AUTOSOLVE RIGHT HEEL ONLY

TRUSS PLATE MANUFACTURER IS NOT RESPONSIBLE FOR QUALITY CONTROL IN THE TRUSS MANUFACTURING PLANT .

NAIL VALUES

PLATE	GRIP(DRY) (PSI) MAX	MIN	SHEAR (PLI) MAX	MIN	SECTION (PLI) MAX	MIN
MT20	650	371	1747	788	1987	1873

PLATE PLACEMENT TOL. = 0.250 inches

PLATE ROTATION TOL. = 5.0 Deg.

JSI GRIP= 0.89 (B) (INPUT = 0.90)
JSI METAL= 0.32 (E) (INPUT = 1.00)

CONTINUED ON PAGE 2

JOB NAME	TRUSS NAME	QUANTITY	PLY	JOB DESC. GREEN PARK HOMES	DRWG NO.
427659	T32	1	2	TRUSS DESC.	

PLATES (table is in inches)

JT	TYPE	PLATES	W	LEN	Y	X
A	TMVW-t	MT20	5.0	6.0	2.50	1.75
B	TMWW-t	MT20	4.0	4.0	2.00	1.00
C	TMV+p	MT20	3.0	4.0		
D	BMVW1+p	MT20	4.0	6.0		
E	BMWW+t	MT20	4.0	10.0	5.00	1.75
F	BMV1+p	MT20	3.0	8.0		

NOTES- (1)
1) Lateral braces to be a minimum of 2X4 SPF #2.

LICENSED PROFESSIONAL ENGINEER
8/02/22
C. M. HEYENS
100505065
PROVINCE OF ONTARIO

STRUCTURAL COMPONENT ONLY
DWG # TR22080316 PG 2/2

JOB NAME	TRUSS NAME	QUANTITY	PLY	JOB DESC.	DRWG NO.
427659	T33	1	1	GREEN PARK HOMES TRUSS DESC.	

Tamarack Roof Truss, Burlington

Version 8.530 S Feb 23 2022 MiTek Industries, Inc. Tue Aug 2 14:35:53 2022 Page 1
ID:X?b5302Mr04RJ9RlAuGw6Vz?TlO-U2BlwxgrzaiFxkwmrbofJni9PNwh2s86eOgPTyrtBc

Scale = 1:42.3

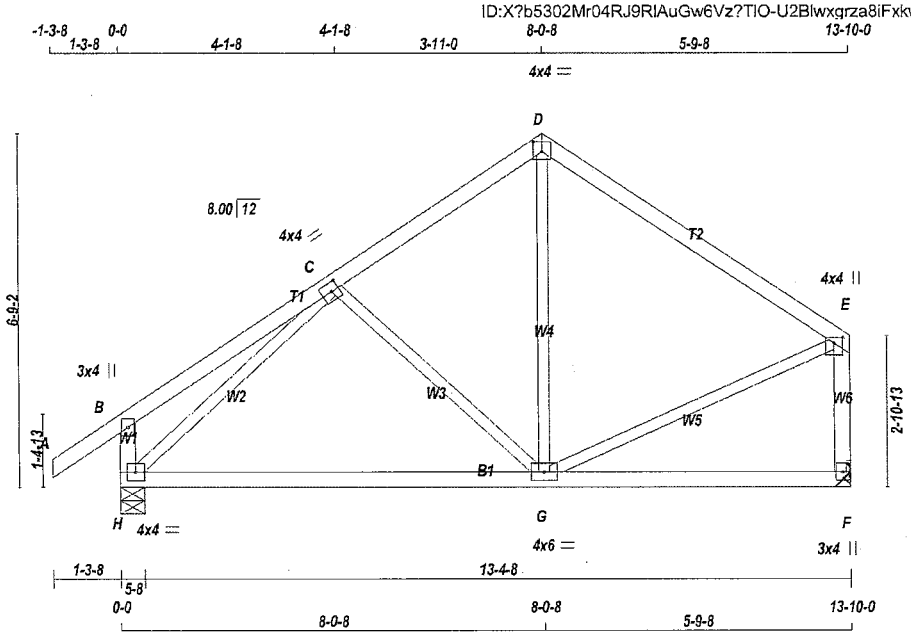

TOTAL WEIGHT = 59 lb

LUMBER
N. L. G. A. RULES

CHORDS	SIZE		LUMBER	DESCR.
A - D	2x4	DRY	No.2	SPF
D - E	2x4	DRY	No.2	SPF
H - B	2x4	DRY	No.2	SPF
F - E	2x4	DRY	No.2	SPF
H - F	2x4	DRY	No.2	SPF
ALL WEBS EXCEPT	2x3	DRY	No.2	SPF

DRY: SEASONED LUMBER.

PLATES (table is in inches)

JT	TYPE	PLATES	W	LEN	Y	X
B	TMV+p	MT20	3.0	4.0		
C	TMWW-t	MT20	4.0	4.0	2.00	1.75
D	TTW-p	MT20	4.0	4.0	2.25	2.00
E	TMVW+p	MT20	4.0	4.0	1.25	2.00
F	BMV1+p	MT20	3.0	4.0		
G	BMWWW-t	MT20	4.0	6.0		
H	BMVW1-t	MT20	4.0	4.0		

NOTES- (1)
1) Lateral braces to be a minimum of 2X4 SPF #2.

DIMENSIONS, SUPPORTS AND LOADINGS SPECIFIED BY FABRICATOR TO BE VERIFIED BY BUILDING DESIGNER

BEARINGS

JT	FACTORED GROSS REACTION VERT	HORZ	MAXIMUM FACTORED GROSS REACTION DOWN	HORZ	UPLIFT	INPUT BRG IN-SX	REQRD BRG IN-SX
F	786	0	786	0	0	MECHANICAL	
H	917	0	917	0	0	5-8	5-8

A SUITABLE HANGER/MECHANICAL CONNECTION IS REQUIRED AT JOINT F. MINIMUM BEARING LENGTH AT JOINT F = 3-8.

UNFACTORED REACTIONS

JT	1ST LCASE COMBINED	MAX./MIN. COMPONENT REACTIONS SNOW	LIVE	PERM.LIVE	WIND	DEAD	SOIL
F	555	370 / 0	0 / 0	0 / 0	0 / 0	185 / 0	0 / 0
H	645	443 / 0	0 / 0	0 / 0	0 / 0	202 / 0	0 / 0

BEARING MATERIAL TO BE SPF NO.2 OR BETTER AT JOINT(S) H

BRACING
TOP CHORD TO BE SHEATHED OR MAX. PURLIN SPACING = 6.25 FT.
MAX. UNBRACED BOTTOM CHORD LENGTH = 10.00 FT OR RIGID CEILING DIRECTLY APPLIED.

ALL PITCH BREAKS AND PERIMETER CORNER JOINTS MUST BE LATERALLY RESTRAINED.

LOADING
TOTAL LOAD CASES: (4)

CHORDS

MEMB. FR-TO	MAX. FACTORED FORCE (LBS)	FACTORED VERT. LOAD LC1 (PLF) FROM	TO	MAX CSI (LC)	MAX. UNBRAC LENGTH
A- B	0 / 36	-95.2	-95.2	0.13 (1)	10.00
B- C	0 / 25	-95.2	-95.2	0.25 (1)	10.00
C- D	-540 / 0	-95.2	-95.2	0.19 (1)	6.25
D- E	-515 / 0	-95.2	-95.2	0.41 (1)	6.25
H- B	-277 / 0	0.0	0.0	0.03 (1)	7.81
F- E	-752 / 0	0.0	0.0	0.12 (1)	7.81
H- G	0 / 620	-18.5	-18.5	0.32 (4)	10.00
G- F	0 / 0	-18.5	-18.5	0.27 (4)	10.00

WEBS

MEMB. FR-TO	MAX. FACTORED FORCE (LBS)	MAX CSI (LC)
C- G	-262 / 0	0.13 (1)
G- D	0 / 149	0.05 (4)
H- C	-849 / 0	0.42 (1)
G- E	0 / 469	0.11 (1)

DESIGN CRITERIA

SPECIFIED LOADS:

TOP CH.	LL	=	26.7	PSF
	DL	=	6.0	PSF
BOT CH.	LL	=	0.0	PSF
	DL	=	7.4	PSF
TOTAL LOAD		=	40.1	PSF

SPACING = 24.0 IN. C/C

THIS TRUSS IS DESIGNED FOR RESIDENTIAL OR SMALL BUILDING REQUIREMENTS OF PART 9, NBCC 2015

THIS DESIGN COMPLIES WITH:
- PART 9 OF BCBC 2018 , ABC 2019
- PART 9 OF OBC 2012 (2019 AMENDMENT)
- CSA 086-14
- TPIC 2014

(55 % OF 33.4 P.S.F. G.S.L. PLUS 8.4 P.S.F. RAIN LOAD) EQUALS 26.7 P.S.F. SPECIFIED ROOF LIVE LOAD

ALLOWABLE DEFL.(LL)= L/360 (0.46")
CALCULATED VERT. DEFL.(LL) = L/ 999 (0.01")
ALLOWABLE DEFL.(TL)= L/360 (0.46")
CALCULATED VERT. DEFL.(TL) = L/ 999 (0.11")

CSI: TC=0.41/1.00 (D-E:1) , BC=0.32/1.00 (G-H:4) , WB=0.42/1.00 (C-H:1) , SSI=0.18/1.00 (D-E:1)

DOL LUMBER=1.00 NAIL=1.00 LS BEND=1.10 COMP=1.10 SHEAR=1.10 TENS= 1.10

COMPANION LIVE LOAD FACTOR = 1.00

TRUSS PLATE MANUFACTURER IS NOT RESPONSIBLE FOR QUALITY CONTROL IN THE TRUSS MANUFACTURING PLANT .

NAIL VALUES

PLATE	GRIP(DRY) (PSI) MAX	MIN	SHEAR (PLI) MAX	MIN	SECTION (PLI) MAX	MIN
MT20	650	371	1747	788	1987	1873

PLATE PLACEMENT TOL. = 0.250 inches

PLATE ROTATION TOL. = 5.0 Deg.

JSI GRIP= 0.83 (C) (INPUT = 0.90)
JSI METAL= 0.27 (C) (INPUT = 1.00)

LICENSED PROFESSIONAL ENGINEER
8/02/22
C. M. HEYENS
100505065
PROVINCE OF ONTARIO

STRUCTURAL COMPONENT ONLY
DWG # TR22080317

JOB NAME	TRUSS NAME	QUANTITY	PLY	JOB DESC.	DRWG NO.
427659	T34	1	2	GREEN PARK HOMES TRUSS DESC.	

Tamarack Roof Truss, Burlington

Version 8.530 S Feb 23 2022 MiTek Industries, Inc. Tue Aug 2 14:35:53 2022 Page 1
ID:X?b5302Mr04RJ9RlAuGw6Vz?TlO-U2BlwxgrzaiFxkwmrbofJnmxPInh3q86eOgPTyrtBc

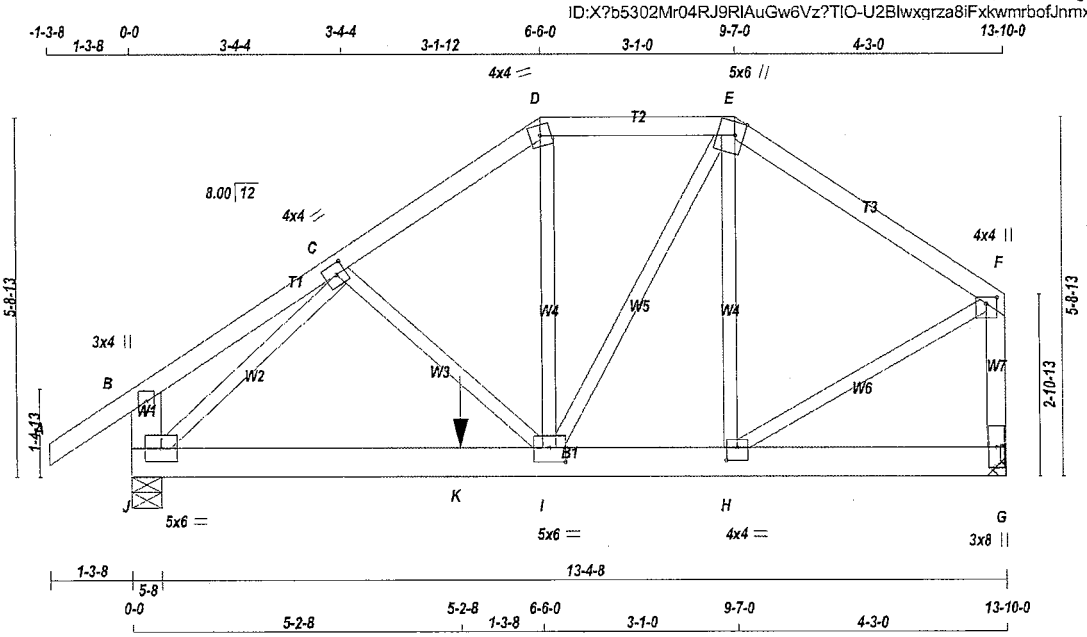

TOTAL WEIGHT = 2 X 73 = 145 lb

LUMBER
N. L. G. A. RULES

CHORDS	SIZE		LUMBER	DESCR.
A - D	2x4	DRY	No.2	SPF
D - E	2x4	DRY	No.2	SPF
E - F	2x4	DRY	No.2	SPF
J - B	2x6	DRY	No.2	SPF
G - F	2x4	DRY	No.2	SPF
J - G	2x6	DRY	No.2	SPF
ALL WEBS EXCEPT	2x3	DRY	No.2	SPF

DRY: SEASONED LUMBER.

DESIGN CONSISTS OF 2 TRUSSES BUILT SEPARATELY THEN FASTENED TOGETHER AS FOLLOWS:

CHORDS	#ROWS	SURFACE SPACING (IN)	LOAD(PLF)
TOP CHORDS : (0.122"X3") SPIRAL NAILS			
A- D	1	12	TOP
D- E	1	12	TOP
E- F	1	12	TOP
G- F	1	12	TOP
J- B	2	12	TOP
BOTTOM CHORDS : (0.122"X3") SPIRAL NAILS			
J- G	2	12	SIDE(0.0)
WEBS : (0.122"X3") SPIRAL NAILS			
2x3	1	6	

NAILS TO BE DRIVEN FROM ONE SIDE ONLY.

GIRDER NAILING ASSUMES NAILED HANGERS ARE FASTENED WITH MIN. 3-0 INCH NAILS.

TOP - COMPONENTS ARE LOADED FROM THE TOP AND MUST BE PLACED ON TOP EDGE OF ALL PLIES FOR THE LOAD TO BE TRANSFERRED TO EACH PLY.

SIDE - PLF SHOWN IS THE EQUIVALENT UDL APPLIED TO ONE SIDE THAT THE CORRESPONDING NAILING PATTERN SHALL BE CAPABLE OF TRANSFERING. REMAINING PLF MUST BE APPLIED ON THE OPPOSITE SIDE OR ON THE TOP.

LICENSED PROFESSIONAL ENGINEER
8/02/22
C. M. HEYENS
100505065
PROVINCE OF ONTARIO

STRUCTURAL COMPONENT ONLY
DWG # TR22080318 PG 1/2

DIMENSIONS, SUPPORTS AND LOADINGS SPECIFIED BY FABRICATOR TO BE VERIFIED BY BUILDING DESIGNER

BEARINGS

JT	FACTORED GROSS REACTION VERT	HORZ	MAXIMUM FACTORED GROSS REACTION DOWN	HORZ	UPLIFT	INPUT BRG IN-SX	REQRD BRG IN-SX
G	1519	0	1519	0	0	MECHANICAL	
J	2130	0	2130	0	0	5-8	5-8

A SUITABLE HANGER/MECHANICAL CONNECTION IS REQUIRED AT JOINT G. MINIMUM BEARING LENGTH AT JOINT G = 4-0.

UNFACTORED REACTIONS

JT	1ST LCASE COMBINED	SNOW	MAX./MIN. COMPONENT REACTIONS LIVE	PERM.LIVE	WIND	DEAD	SOIL
G	1068	737 / 0	0 / 0	0 / 0	0 / 0	331 / 0	0 / 0
J	1494	1051 / 0	0 / 0	0 / 0	0 / 0	443 / 0	0 / 0

BEARING MATERIAL TO BE SPF NO.2 OR BETTER AT JOINT(S) J

BRACING

TOP CHORD TO BE SHEATHED OR MAX. PURLIN SPACING = 6.04 FT.
MAX. UNBRACED BOTTOM CHORD LENGTH = 10.00 FT OR RIGID CEILING DIRECTLY APPLIED.

ALL PITCH BREAKS AND PERIMETER CORNER JOINTS MUST BE LATERALLY RESTRAINED.

LOADING

TOTAL LOAD CASES: (4)

CHORDS

MEMB. FR-TO	MAX. FACTORED FORCE (LBS)	FACTORED VERT. LOAD (PLF) FROM	TO	LC1 MAX CSI (LC)	MAX. UNBRAC LENGTH
A- B	0 / 36	-95.2	-95.2	0.07 (1)	10.00
B- C	0 / 16	-95.2	-95.2	0.07 (1)	10.00
C- D	-2089 / 0	-95.2	-95.2	0.09 (1)	6.04
D- E	-1739 / 0	-95.2	-95.2	0.10 (1)	6.25
E- F	-1198 / 0	-95.2	-95.2	0.17 (1)	6.25
J- B	-256 / 0	0.0	0.0	0.01 (1)	7.81
G- F	-1440 / 0	0.0	0.0	0.11 (1)	7.81
J- K	0 / 1641	-18.5	-18.5	0.58 (1)	10.00
K- I	0 / 1641	-18.5	-18.5	0.58 (1)	10.00
I- H	0 / 975	-18.5	-18.5	0.54 (1)	10.00
H- G	0 / 0	-18.5	-18.5	0.06 (1)	10.00

WEBS

MEMB. FR-TO	MAX. FACTORED FORCE (LBS)	MAX CSI (LC)
C- I	0 / 111	0.01 (1)
I- D	0 / 883	0.11 (1)
I- E	0 / 1569	0.19 (1)
H- E	-1053 / 0	0.25 (1)
J- C	-2291 / 0	0.36 (1)
H- F	0 / 1147	0.14 (1)

SPECIFIED CONCENTRATED LOADS (LBS)

JT	LOC.	LC1	MAX-	MAX+	FACE	DIR.	TYPE	HEEL	CONN.
K	5-2-8	-1362	-1362	—	FRONT	VERT	TOTAL	—	C1

CONNECTION REQUIREMENTS

1) **C1:** A SUITABLE HANGER/MECHANICAL CONNECTION IS REQUIRED.

[M]

DESIGN CRITERIA

SPECIFIED LOADS:

TOP CH.	LL	=	26.7	PSF
	DL	=	6.0	PSF
BOT CH.	LL	=	0.0	PSF
	DL	=	7.4	PSF
TOTAL LOAD		=	40.1	PSF

SPACING = 24.0 IN. C/C

LOADING IN FLAT SECTION BASED ON A SLOPE OF 6.00/12

THIS TRUSS IS DESIGNED FOR RESIDENTIAL OR SMALL BUILDING REQUIREMENTS OF PART 9, NBCC 2015

THIS DESIGN COMPLIES WITH:
- PART 9 OF BCBC 2018 , ABC 2019
- PART 9 OF OBC 2012 (2019 AMENDMENT)
- CSA 086-14
- TPIC 2014

(55 % OF 33.4 P.S.F. G.S.L. PLUS 8.4 P.S.F. RAIN LOAD) EQUALS 26.7 P.S.F. SPECIFIED ROOF LIVE LOAD

ALLOWABLE DEFL.(LL)= L/360 (0.46")
CALCULATED VERT. DEFL.(LL) = L/ 999 (0.07")
ALLOWABLE DEFL.(TL)= L/360 (0.46")
CALCULATED VERT. DEFL.(TL) = L/ 999 (0.12")

CSI: TC=0.17/1.00 (E-F:1) , BC=0.58/1.00 (I-J:1) , WB=0.36/1.00 (C-J:1) , SSI=0.59/1.00 (I-J:1)

DOL LUMBER=1.00 NAIL=1.00 LS BEND=1.00 COMP=1.00 SHEAR=1.00 TENS= 1.00

COMPANION LIVE LOAD FACTOR = 1.00

AUTOSOLVE RIGHT HEEL ONLY

TRUSS PLATE MANUFACTURER IS NOT RESPONSIBLE FOR QUALITY CONTROL IN THE TRUSS MANUFACTURING PLANT .

NAIL VALUES

PLATE	GRIP(DRY) (PSI) MAX	MIN	SHEAR (PLI) MAX	MIN	SECTION (PLI) MAX	MIN
MT20	650	371	1747	788	1987	1873

PLATE PLACEMENT TOL. = 0.250 inches

PLATE ROTATION TOL. = 5.0 Deg.

JSI GRIP= 0.86 (E) (INPUT = 0.90)
JSI METAL= 0.39 (C) (INPUT = 1.00)

CONTINUED ON PAGE 2

JOB NAME	TRUSS NAME	QUANTITY	PLY	JOB DESC. GREEN PARK HOMES	DRWG NO.
427659	T34	1	2	TRUSS DESC.	

PLATES (table is in inches)

JT	TYPE	PLATES	W	LEN	Y	X
B	TMV+p	MT20	3.0	4.0		
C	TMWW-t	MT20	4.0	4.0	2.00	1.75
D	TTW-m	MT20	4.0	4.0		
E	TTWW+m	MT20	5.0	6.0	Edge	1.75
F	TMVW+p	MT20	4.0	4.0	1.25	2.00
G	BMV1+p	MT20	3.0	8.0		
H	BMWW-t	MT20	4.0	4.0	2.50	2.00
I	BMWWW-t	MT20	5.0	6.0	2.75	3.00
J	BMVW1-t	MT20	5.0	6.0		

Edge - INDICATES REFERENCE CORNER OF PLATE TOUCHES EDGE OF CHORD.

NOTES- (1)
1) Lateral braces to be a minimum of 2X4 SPF #2.

LICENSED PROFESSIONAL ENGINEER
8/02/22
C. M. HEYENS
100505065
PROVINCE OF ONTARIO

STRUCTURAL COMPONENT ONLY
DWG # TR22080318

JOB NAME	TRUSS NAME	QUANTITY	PLY	JOB DESC.	DRWG NO.
427659	T35	1	2	GREEN PARK HOMES TRUSS DESC.	

Tamarack Roof Truss, Burlington

Version 8.530 S Feb 23 2022 MiTek Industries, Inc. Tue Aug 2 14:35:54 2022 Page 1
ID:X?b5302Mr04RJ9RIAuGw6Vz?TIO-yEI77HgTktHZt4J6KZ61BWJzZpkIQZRIKI8DxwyrtBp

Scale = 1:30.7

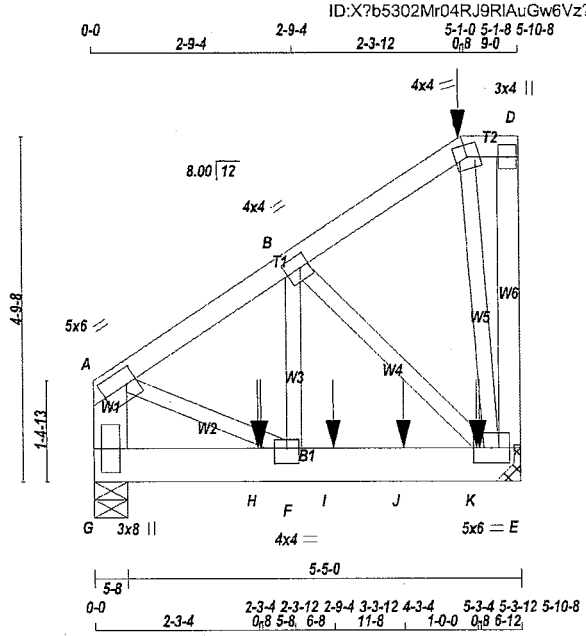

TOTAL WEIGHT = 2 X 35 = 70 lb

LUMBER

N. L. G. A. RULES

CHORDS	SIZE		LUMBER	DESCR.
A - C	2x4	DRY	No.2	SPF
C - D	2x4	DRY	No.2	SPF
E - D	2x4	DRY	No.2	SPF
G - A	2x6	DRY	No.2	SPF
G - E	2x6	DRY	No.2	SPF
ALL WEBS EXCEPT	2x3	DRY	No.2	SPF

DRY: SEASONED LUMBER.

DESIGN CONSISTS OF 2 TRUSSES BUILT SEPARATELY THEN FASTENED TOGETHER AS FOLLOWS:

CHORDS	#ROWS	SURFACE SPACING (IN)	LOAD(PLF)
TOP CHORDS : (0.122"X3") SPIRAL NAILS			
A- C	1	12	SIDE(61.0)
C- D	1	12	SIDE(61.0)
D- E	1	12	TOP
G- A	2	12	TOP
BOTTOM CHORDS : (0.122"X3") SPIRAL NAILS			
G- E	2	12	SIDE(183.1)
WEBS : (0.122"X3") SPIRAL NAILS			
2x3	1	6	

NAILS TO BE DRIVEN FROM ONE SIDE ONLY.

GIRDER NAILING ASSUMES NAILED HANGERS ARE FASTENED WITH MIN. 3-0 INCH NAILS.

TOP - COMPONENTS ARE LOADED FROM THE TOP AND MUST BE PLACED ON TOP EDGE OF ALL PLIES FOR THE LOAD TO BE TRANSFERRED TO EACH PLY.

SIDE - PLF SHOWN IS THE EQUIVALENT UDL APPLIED TO ONE SIDE THAT THE CORRESPONDING NAILING PATTERN SHALL BE CAPABLE OF TRANSFERING. REMAINING PLF MUST BE APPLIED ON THE OPPOSITE SIDE OR ON THE TOP.

LICENSED PROFESSIONAL ENGINEER
8/02/22
C. M. HEYENS
100505065
PROVINCE OF ONTARIO

STRUCTURAL COMPONENT ONLY
DWG # TR22080319 PG 1/2

DIMENSIONS, SUPPORTS AND LOADINGS SPECIFIED BY FABRICATOR TO BE VERIFIED BY BUILDING DESIGNER

BEARINGS

JT	FACTORED GROSS REACTION VERT	HORZ	MAXIMUM FACTORED GROSS REACTION DOWN	HORZ	UPLIFT	INPUT BRG IN-SX	REQRD BRG IN-SX
E	1964	0	1964	0	0	MECHANICAL	
G	1005	0	1005	0	0	5-8	5-8

A SUITABLE HANGER/MECHANICAL CONNECTION IS REQUIRED AT JOINT E. MINIMUM BEARING LENGTH AT JOINT E = 4-0.

UNFACTORED REACTIONS

JT	1ST LCASE COMBINED	MAX./MIN. COMPONENT REACTIONS SNOW	LIVE	PERM.LIVE	WIND	DEAD	SOIL
E	1376	976 / 0	0 / 0	0 / 0	0 / 0	401 / 0	0 / 0
G	707	486 / 0	0 / 0	0 / 0	0 / 0	221 / 0	0 / 0

BEARING MATERIAL TO BE SPF NO.2 OR BETTER AT JOINT(S) G

BRACING

TOP CHORD TO BE SHEATHED OR MAX. PURLIN SPACING = 6.25 FT.
MAX. UNBRACED BOTTOM CHORD LENGTH = 10.00 FT OR RIGID CEILING DIRECTLY APPLIED.

ALL PITCH BREAKS AND PERIMETER CORNER JOINTS MUST BE LATERALLY RESTRAINED.

LOADING

TOTAL LOAD CASES: (4)

CHORDS

MEMB. FR-TO	MAX. FACTORED FORCE (LBS)	FACTORED VERT. LOAD (PLF) FROM	TO	LC1 MAX CSI (LC)	MAX. UNBRAC LENGTH
A- B	-1001 / 0	-95.2	-95.2	0.05 (1)	6.25
B- C	-118 / 0	-95.2	-95.2	0.05 (1)	6.25
C- D	0 / 0	-95.2	-95.2	0.00 (1)	10.00
E- D	-36 / 0	0.0	0.0	0.01 (1)	7.81
G- A	-974 / 0	0.0	0.0	0.03 (1)	7.81
G- H	0 / 0	-18.5	-18.5	0.11 (1)	10.00
H- F	0 / 0	-18.5	-18.5	0.11 (1)	10.00
F- I	0 / 843	-18.5	-18.5	0.25 (1)	10.00
I- J	0 / 843	-18.5	-18.5	0.25 (1)	10.00
J- K	0 / 843	-18.5	-18.5	0.25 (1)	10.00
K- E	0 / 843	-18.5	-18.5	0.25 (1)	10.00

WEBS

MEMB. FR-TO	MAX. FACTORED FORCE (LBS)	MAX CSI (LC)
C- E	-514 / 0	0.09 (1)
B- E	-1027 / 0	0.14 (1)
F- B	0 / 905	0.11 (1)
A- F	0 / 896	0.11 (1)

SPECIFIED CONCENTRATED LOADS (LBS)

JT	LOC.	LC1	MAX-	MAX+	FACE	DIR.	TYPE	HEEL	CONN.
C	5-1-8	-42	-42	---	FRONT	VERT	DEAD	---	C1
C	5-1-8	-79	-79	---	BACK	VERT	TOTAL	---	C1
C	5-1-8	-185	-185	---	FRONT	VERT	SNOW	---	C1
H	2-3-4	-416	-416	---	FRONT	VERT	TOTAL	---	C1
H	2-3-12	-17	-17	---	BACK	VERT	TOTAL	---	C1
I	3-3-12	-17	-17	---	BACK	VERT	TOTAL	---	C1
J	4-3-4	-416	-416	---	FRONT	VERT	TOTAL	---	C1
K	5-3-4	-419	-419	---	FRONT	VERT	TOTAL	---	C1
K	5-3-12	-20	-20	---	BACK	VERT	TOTAL	---	C1

CONNECTION REQUIREMENTS

1) **C1:** A SUITABLE HANGER/MECHANICAL CONNECTION IS REQUIRED.

[M]

DESIGN CRITERIA

*** SPECIAL LOADS ANALYSIS ***
GEOMETRY AND/OR BASIC LOADS CHANGED BY USER.
LOADS WERE DERIVED FROM USER INPUT
NO FURTHER MODIFICATIONS WERE MADE

SPECIFIED LOADS:

TOP CH.	LL	=	26.7	PSF
	DL	=	6.0	PSF
BOT CH.	LL	=	0.0	PSF
	DL	=	7.4	PSF
TOTAL LOAD		=	40.1	PSF

SPACING = 24.0 IN. C/C

LOADING IN FLAT SECTION BASED ON A SLOPE OF 6.00/12

*** NON STANDARD GIRDER ***
ADDT'L USER-DEFINED LOADS APPLIED TO ALL LOAD CASES.

THIS TRUSS IS DESIGNED FOR RESIDENTIAL OR SMALL BUILDING REQUIREMENTS OF PART 9, NBCC 2015

THIS DESIGN COMPLIES WITH:
- PART 9 OF BCBC 2018 , ABC 2019
- PART 9 OF OBC 2012 (2019 AMENDMENT)
- CSA 086-14
- TPIC 2014

(55 % OF 33.4 P.S.F. G.S.L. PLUS 8.4 P.S.F. RAIN LOAD) EQUALS 26.7 P.S.F. SPECIFIED ROOF LIVE LOAD

ALLOWABLE DEFL.(LL)= L/360 (0.20")
CALCULATED VERT. DEFL.(LL) = L/ 999 (0.01")
ALLOWABLE DEFL.(TL)= L/360 (0.20")
CALCULATED VERT. DEFL.(TL) = L/ 999 (0.02")

CSI: TC=0.05/1.00 (A-B:1) , BC=0.25/1.00 (E-F:1) , WB=0.14/1.00 (B-E:1) , SSI=0.24/1.00 (E-F:1)

DOL LUMBER=1.00 NAIL=1.00 LS BEND=1.00 COMP=1.00 SHEAR=1.00 TENS= 1.00

COMPANION LIVE LOAD FACTOR = 1.00

AUTOSOLVE RIGHT HEEL ONLY

TRUSS PLATE MANUFACTURER IS NOT RESPONSIBLE FOR QUALITY CONTROL IN THE TRUSS MANUFACTURING PLANT .

NAIL VALUES

PLATE	GRIP(DRY) (PSI) MAX	MIN	SHEAR (PLI) MAX	MIN	SECTION (PLI) MAX	MIN
MT20	650	371	1747	788	1987	1873

PLATE PLACEMENT TOL. = 0.250 inches

PLATE ROTATION TOL. = 5.0 Deg.

CONTINUED ON PAGE 2

JOB NAME	TRUSS NAME	QUANTITY	PLY	JOB DESC. GREEN PARK HOMES	DRWG NO.
427659	T35	1	2	TRUSS DESC.	

PLATES (table is in inches)

JT	TYPE	PLATES	W	LEN	Y	X
A	TMVW-t	MT20	5.0	6.0	2.50	1.75
B	TMWW-t	MT20	4.0	4.0	2.00	1.50
C	TTW-m	MT20	4.0	4.0		
D	TMV+p	MT20	3.0	4.0		
E	BMVWW1-t	MT20	5.0	6.0		
F	BMWW-t	MT20	4.0	4.0	2.50	2.00
G	BMV1+p	MT20	3.0	8.0		

NOTES- (1)
1) Lateral braces to be a minimum of 2X4 SPF #2.

JSI GRIP= 0.86 (F) (INPUT = 0.90)
JSI METAL= 0.15 (F) (INPUT = 1.00)

LICENSED PROFESSIONAL ENGINEER
8/02/22
C. M. HEYENS
100505065
PROVINCE OF ONTARIO

STRUCTURAL COMPONENT ONLY
DWG # TR22080319 PG 2/2

JOB NAME	TRUSS NAME	QUANTITY	PLY	JOB DESC.	DRWG NO.
427659	T36	3	1	GREEN PARK HOMES TRUSS DESC.	

Tamarack Roof Truss, Burlington

Version 8.530 S Feb 23 2022 MiTek Industries, Inc. Tue Aug 2 14:35:55 2022 Page 1
ID:Y3QGVfRlMzMpCsm1nITfuBywDb9-QQJWLdh5VBPQVEuJuGdGkks5qD6u91nRZxtmUMyrtBo

Scale = 1:37.6

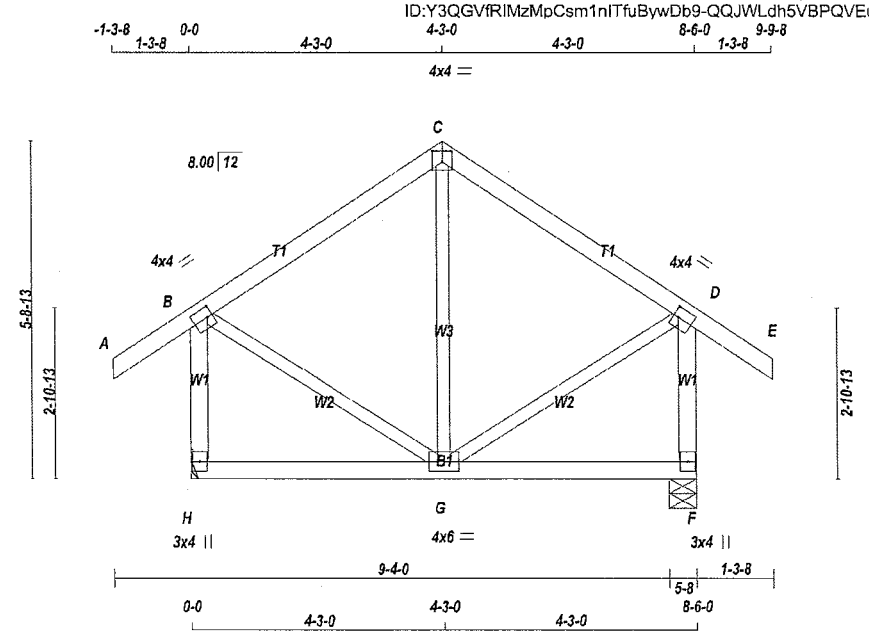

TOTAL WEIGHT = 3 X 43 = 128 lb

LUMBER
N. L. G. A. RULES

CHORDS	SIZE		LUMBER	DESCR.
A - C	2x4	DRY	No.2	SPF
C - E	2x4	DRY	No.2	SPF
H - B	2x4	DRY	No.2	SPF
F - D	2x4	DRY	No.2	SPF
H - F	2x4	DRY	No.2	SPF
ALL WEBS EXCEPT	2x3	DRY	No.2	SPF

DRY: SEASONED LUMBER.

PLATES (table is in inches)

JT	TYPE	PLATES	W	LEN	Y	X
B	TMVW-t	MT20	4.0	4.0	2.00	1.00
C	TTW-p	MT20	4.0	4.0	2.25	2.00
D	TMVW-t	MT20	4.0	4.0	2.00	1.00
F	BMV1+p	MT20	3.0	4.0		
G	BMWWW-t	MT20	4.0	6.0		
H	BMV1+p	MT20	3.0	4.0		

NOTES- (1)
1) Lateral braces to be a minimum of 2X4 SPF #2.

LICENSED PROFESSIONAL ENGINEER
8/02/22
C. M. HEYENS
100505065
PROVINCE OF ONTARIO

STRUCTURAL COMPONENT ONLY
DWG # TR22080320

DIMENSIONS, SUPPORTS AND LOADINGS SPECIFIED BY FABRICATOR TO BE VERIFIED BY BUILDING DESIGNER

BEARINGS

JT	FACTORED GROSS REACTION VERT	HORZ	MAXIMUM FACTORED GROSS REACTION DOWN	HORZ	UPLIFT	INPUT BRG IN-SX	REQRD BRG IN-SX
H	614	0	614	0	0	MECHANICAL	
F	614	0	614	0	0	5-8	5-8

A SUITABLE HANGER/MECHANICAL CONNECTION IS REQUIRED AT JOINT H. MINIMUM BEARING LENGTH AT JOINT H = 1-8.

UNFACTORED REACTIONS

JT	1ST LCASE COMBINED	MAX./MIN. COMPONENT REACTIONS SNOW	LIVE	PERM.LIVE	WIND	DEAD	SOIL
H	431	301 / 0	0 / 0	0 / 0	0 / 0	130 / 0	0 / 0
F	431	301 / 0	0 / 0	0 / 0	0 / 0	130 / 0	0 / 0

BEARING MATERIAL TO BE SPF NO.2 OR BETTER AT JOINT(S) F

BRACING
TOP CHORD TO BE SHEATHED OR MAX. PURLIN SPACING = 6.25 FT.
MAX. UNBRACED BOTTOM CHORD LENGTH = 10.00 FT OR RIGID CEILING DIRECTLY APPLIED.

ALL PITCH BREAKS AND PERIMETER CORNER JOINTS MUST BE LATERALLY RESTRAINED.

LOADING
TOTAL LOAD CASES: (4)

CHORDS

MEMB. FR-TO	MAX. FACTORED FORCE (LBS)	FACTORED VERT. LOAD (PLF) FROM	TO	LC1 CSI (LC)	MAX MAX. UNBRAC LENGTH
A- B	0 / 36	-95.2	-95.2	0.13 (1)	10.00
B- C	-236 / 0	-95.2	-95.2	0.22 (1)	6.25
C- D	-236 / 0	-95.2	-95.2	0.22 (1)	6.25
D- E	0 / 36	-95.2	-95.2	0.13 (1)	10.00
H- B	-583 / 0	0.0	0.0	0.09 (1)	7.81
F- D	-583 / 0	0.0	0.0	0.09 (1)	7.81
H- G	0 / 0	-18.5	-18.5	0.09 (4)	10.00
G- F	0 / 0	-18.5	-18.5	0.09 (4)	10.00

WEBS

MEMB. FR-TO	MAX. FACTORED FORCE (LBS)	MAX CSI (LC)
G- C	-142 / 23	0.07 (1)
B- G	0 / 230	0.05 (1)
G- D	0 / 230	0.05 (1)

[M][F]

DESIGN CRITERIA

SPECIFIED LOADS:

TOP CH.	LL	=	26.7	PSF
	DL	=	6.0	PSF
BOT CH.	LL	=	0.0	PSF
	DL	=	7.4	PSF
TOTAL LOAD		=	40.1	PSF

SPACING = 24.0 IN. C/C

THIS TRUSS IS DESIGNED FOR RESIDENTIAL OR SMALL BUILDING REQUIREMENTS OF PART 9, NBCC 2015

THIS DESIGN COMPLIES WITH:
- PART 9 OF BCBC 2018 , ABC 2019
- PART 9 OF OBC 2012 (2019 AMENDMENT)
- CSA 086-14
- TPIC 2014

(55 % OF 33.4 P.S.F. G.S.L. PLUS 8.4 P.S.F. RAIN LOAD) EQUALS 26.7 P.S.F. SPECIFIED ROOF LIVE LOAD

ALLOWABLE DEFL.(LL)= L/360 (0.28")
CALCULATED VERT. DEFL.(LL) = L/ 999 (0.00")
ALLOWABLE DEFL.(TL)= L/360 (0.28")
CALCULATED VERT. DEFL.(TL) = L/ 999 (0.01")

CSI: TC=0.22/1.00 (B-C:1) , BC=0.09/1.00 (G-H:4) , WB=0.07/1.00 (C-G:1) , SSI=0.13/1.00 (C-D:1)

DOL LUMBER=1.00 NAIL=1.00 LS BEND=1.10 COMP=1.10 SHEAR=1.10 TENS= 1.10

COMPANION LIVE LOAD FACTOR = 1.00

TRUSS PLATE MANUFACTURER IS NOT RESPONSIBLE FOR QUALITY CONTROL IN THE TRUSS MANUFACTURING PLANT .

NAIL VALUES

PLATE	GRIP(DRY) (PSI) MAX	MIN	SHEAR (PLI) MAX	MIN	SECTION (PLI) MAX	MIN
MT20	650	371	1747	788	1987	1873

PLATE PLACEMENT TOL. = 0.250 inches

PLATE ROTATION TOL. = 5.0 Deg.

JSI GRIP= 0.38 (B) (INPUT = 0.90)
JSI METAL= 0.14 (B) (INPUT = 1.00)

JOB NAME	TRUSS NAME	QUANTITY	PLY	JOB DESC.	DRWG NO.
427659	T39	1	1	GREEN PARK HOMES TRUSS DESC.	

Tamarack Roof Truss, Burlington

Version 8.530 S Feb 23 2022 MiTek Industries, Inc. Tue Aug 2 14:35:56 2022 Page 1
ID:X?b5302Mr04RJ9RlAuGw6Vz?TlO-udtuYzijGVXH6OTVRz9VGxPHYdSOuUeaobdK0oyrtBn

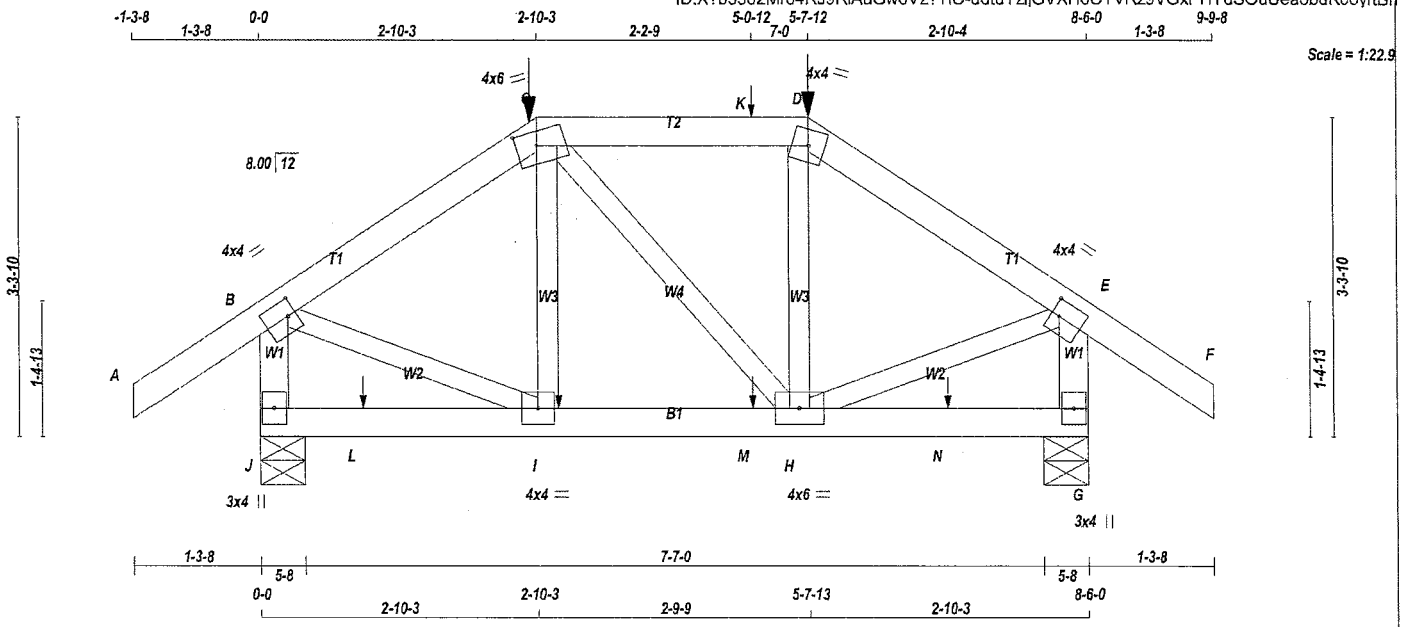

TOTAL WEIGHT = 39 lb

LUMBER
N. L. G. A. RULES

CHORDS	SIZE		LUMBER	DESCR.
A - C	2x4	DRY	No.2	SPF
C - D	2x4	DRY	No.2	SPF
D - F	2x4	DRY	No.2	SPF
J - B	2x4	DRY	No.2	SPF
G - E	2x4	DRY	No.2	SPF
J - G	2x4	DRY	No.2	SPF
ALL WEBS EXCEPT	2x3	DRY	No.2	SPF

DRY: SEASONED LUMBER.

PLATES (table is in inches)

JT	TYPE	PLATES	W	LEN	Y	X
B	TMVW-t	MT20	4.0	4.0	2.00	1.00
C	TTWW-m	MT20	4.0	6.0	1.75	2.50
D	TTW-m	MT20	4.0	4.0		
E	TMVW-t	MT20	4.0	4.0	2.00	1.00
G	BMV1+p	MT20	3.0	4.0		
H	BMWWW-t	MT20	4.0	6.0		
I	BMWW-t	MT20	4.0	4.0		
J	BMV1+p	MT20	3.0	4.0		

NOTES- (1)
1) Lateral braces to be a minimum of 2X4 SPF #2.

LICENSED PROFESSIONAL ENGINEER
8/02/22
C. M. HEYENS
100505065
PROVINCE OF ONTARIO

STRUCTURAL COMPONENT ONLY
DWG # TR22080321

DIMENSIONS, SUPPORTS AND LOADINGS SPECIFIED BY FABRICATOR TO BE VERIFIED BY BUILDING DESIGNER

BEARINGS

JT	FACTORED GROSS REACTION VERT	HORZ	MAXIMUM FACTORED GROSS REACTION DOWN	HORZ	UPLIFT	INPUT BRG IN-SX	REQRD BRG IN-SX
J	662	0	662	0	0	5-8	5-8
G	661	0	661	0	0	5-8	5-8

UNFACTORED REACTIONS

JT	1ST LCASE COMBINED	MAX./MIN. COMPONENT REACTIONS SNOW	LIVE	PERM.LIVE	WIND	DEAD	SOIL
J	464	327 / 0	0 / 0	0 / 0	0 / 0	138 / 0	0 / 0
G	464	327 / 0	0 / 0	0 / 0	0 / 0	137 / 0	0 / 0

BEARING MATERIAL TO BE SPF NO.2 OR BETTER AT JOINT(S) J, G

BRACING
TOP CHORD TO BE SHEATHED OR MAX. PURLIN SPACING = 6.25 FT.
MAX. UNBRACED BOTTOM CHORD LENGTH = 10.00 FT OR RIGID CEILING DIRECTLY APPLIED.

ALL PITCH BREAKS AND PERIMETER CORNER JOINTS MUST BE LATERALLY RESTRAINED.

LOADING
TOTAL LOAD CASES: (4)

CHORDS

MEMB. FR-TO	MAX. FACTORED FORCE (LBS)	FACTORED VERT. LOAD LC1 (PLF) FROM	TO	MAX CSI (LC)	MAX. UNBRAC LENGTH
A- B	0 / 36	-95.2	-95.2	0.14 (1)	10.00
B- C	-432 / 0	-95.2	-95.2	0.15 (1)	6.25
C- K	-355 / 0	-95.2	-95.2	0.14 (1)	6.25
K- D	-355 / 0	-95.2	-95.2	0.14 (1)	6.25
D- E	-430 / 0	-95.2	-95.2	0.15 (1)	6.25
E- F	0 / 36	-95.2	-95.2	0.14 (1)	10.00
J- B	-638 / 0	0.0	0.0	0.07 (1)	7.81
G- E	-637 / 0	0.0	0.0	0.07 (1)	7.81
J- L	0 / 0	-18.5	-18.5	0.04 (4)	10.00
L- I	0 / 0	-18.5	-18.5	0.04 (4)	10.00
I- M	0 / 356	-18.5	-18.5	0.08 (1)	10.00
M- H	0 / 356	-18.5	-18.5	0.08 (1)	10.00
H- N	0 / 0	-18.5	-18.5	0.04 (4)	10.00
N- G	0 / 0	-18.5	-18.5	0.04 (4)	10.00

WEBS

MEMB. FR-TO	MAX. FACTORED FORCE (LBS)	MAX CSI (LC)
I- C	-76 / 20	0.02 (1)
C- H	-2 / 0	0.00 (1)
H- D	-75 / 21	0.02 (1)
B- I	0 / 381	0.09 (1)
H- E	0 / 380	0.09 (1)

SPECIFIED CONCENTRATED LOADS (LBS)

JT	LOC.	LC1	MAX-	MAX+	FACE	DIR.	TYPE	HEEL	CONN.
C	2-10-4	-6	-6	---	FRONT	VERT	DEAD	---	C1
C	2-10-3	-2	-2	---	FRONT	VERT	TOTAL	---	C1
C	2-10-4	-26	-26	---	FRONT	VERT	SNOW	---	C1
D	5-7-12	-6	-6	---	FRONT	VERT	DEAD	---	C1
D	5-7-12	-26	-26	---	FRONT	VERT	SNOW	---	C1
I	3-0-12	1	1	---	FRONT	VERT	TOTAL	---	C1
K	5-0-12	1	1	---	FRONT	VERT	TOTAL	---	C1
L	1-0-12	1	1	---	FRONT	VERT	TOTAL	---	C1
M	5-0-12	1	1	---	FRONT	VERT	TOTAL	---	C1
N	7-0-12	1	1	---	FRONT	VERT	TOTAL	---	C1

CONNECTION REQUIREMENTS

1) **C1:** A SUITABLE HANGER/MECHANICAL CONNECTION IS REQUIRED.

[M]

DESIGN CRITERIA

*** SPECIAL LOADS ANALYSIS ***
GEOMETRY AND/OR BASIC LOADS CHANGED BY USER.
LOADS WERE DERIVED FROM USER INPUT
NO FURTHER MODIFICATIONS WERE MADE

SPECIFIED LOADS:

TOP CH.	LL	=	26.7	PSF
	DL	=	6.0	PSF
BOT CH.	LL	=	0.0	PSF
	DL	=	7.4	PSF
TOTAL LOAD		=	40.1	PSF

SPACING = 24.0 IN. C/C

LOADING IN FLAT SECTION BASED ON A SLOPE OF 6.00/12

*** NON STANDARD GIRDER ***
ADDT'L USER-DEFINED LOADS APPLIED TO ALL LOAD CASES.

THIS TRUSS IS DESIGNED FOR RESIDENTIAL OR SMALL BUILDING REQUIREMENTS OF PART 9, NBCC 2015

THIS DESIGN COMPLIES WITH:
- PART 9 OF BCBC 2018 , ABC 2019
- PART 9 OF OBC 2012 (2019 AMENDMENT)
- CSA 086-14
- TPIC 2014

(55 % OF 33.4 P.S.F. G.S.L. PLUS 8.4 P.S.F. RAIN LOAD) EQUALS 26.7 P.S.F. SPECIFIED ROOF LIVE LOAD

ALLOWABLE DEFL.(LL)= L/360 (0.28")
CALCULATED VERT. DEFL.(LL) = L/ 999 (0.00")
ALLOWABLE DEFL.(TL)= L/360 (0.28")
CALCULATED VERT. DEFL.(TL) = L/ 999 (0.01")

CSI: TC=0.15/1.00 (B-C:1) , BC=0.08/1.00 (H-I:1) , WB=0.09/1.00 (B-I:1) , SSI=0.11/1.00 (C-D:1)

DOL LUMBER=1.00 NAIL=1.00 LS BEND=1.00 COMP=1.00 SHEAR=1.00 TENS= 1.00

COMPANION LIVE LOAD FACTOR = 1.00

TRUSS PLATE MANUFACTURER IS NOT RESPONSIBLE FOR QUALITY CONTROL IN THE TRUSS MANUFACTURING PLANT .

NAIL VALUES

PLATE	GRIP(DRY) (PSI) MAX	MIN	SHEAR (PLI) MAX	MIN	SECTION (PLI) MAX	MIN
MT20	650	371	1747	788	1987	1873

PLATE PLACEMENT TOL. = 0.250 inches

PLATE ROTATION TOL. = 5.0 Deg.

JSI GRIP= 0.69 (B) (INPUT = 0.90)
JSI METAL= 0.20 (B) (INPUT = 1.00)

JOB NAME	TRUSS NAME	QUANTITY	PLY	JOB DESC.	DRWG NO.
427679	T40	1	1	GREEN PARK HOMES TRUSS DESC.	

Tamarack Roof Truss, Burlington

Version 8.530 S Feb 23 2022 MiTek Industries, Inc. Tue Aug 2 14:52:28 2022 Page 1
ID:bP zphucbY03T7QZqjQJ9Vz?62X-rTpvl9izfHVW7rJ9ZJy7T7UooV1OJ8 bvxwprJyrsyH

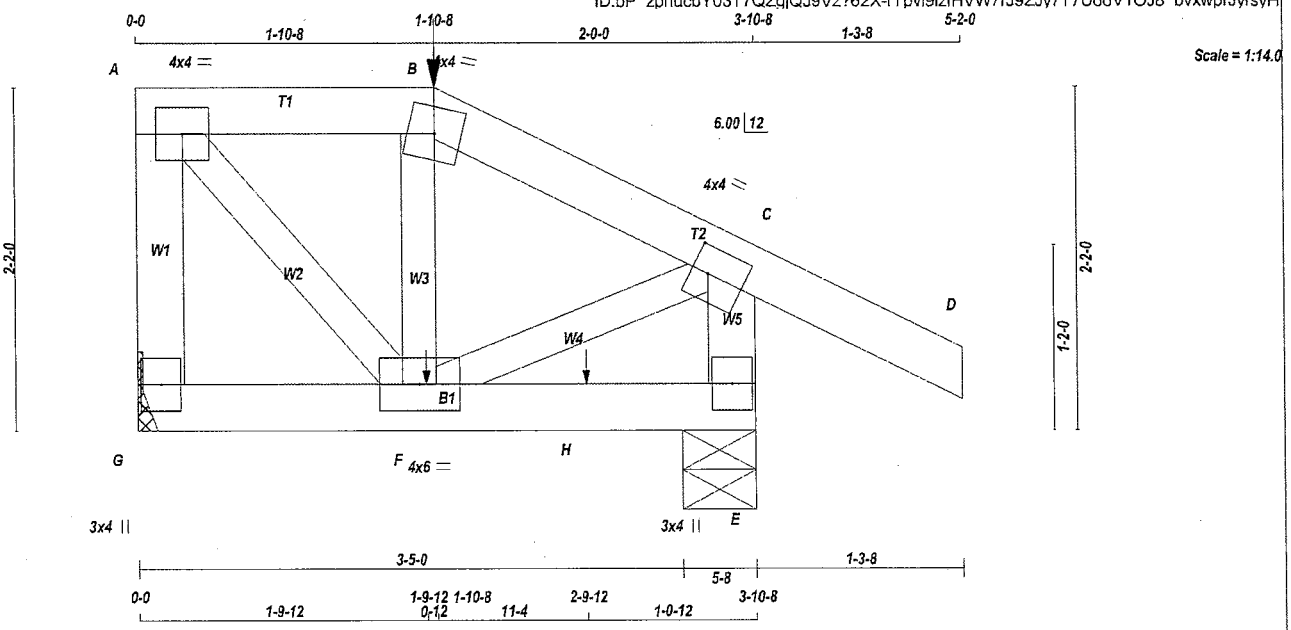

TOTAL WEIGHT = 18 lb

LUMBER
N. L. G. A. RULES

CHORDS	SIZE		LUMBER	DESCR.
G - A	2x4	DRY	No.2	SPF
A - B	2x4	DRY	No.2	SPF
B - D	2x4	DRY	No.2	SPF
E - C	2x4	DRY	No.2	SPF
G - E	2x4	DRY	No.2	SPF
ALL WEBS EXCEPT	2x3	DRY	No.2	SPF

DRY: SEASONED LUMBER.

PLATES (table is in inches)

JT	TYPE	PLATES	W	LEN	Y	X
A	TMVW-t	MT20	4.0	4.0		
B	TTW-m	MT20	4.0	4.0		
C	TMVW-t	MT20	4.0	4.0	2.00	1.25
E	BMV1+p	MT20	3.0	4.0		
F	BMWWW-t	MT20	4.0	6.0		
G	BMV1+p	MT20	3.0	4.0		

NOTES- (1)
1) Lateral braces to be a minimum of 2X4 SPF #2.

DIMENSIONS, SUPPORTS AND LOADINGS SPECIFIED BY FABRICATOR TO BE VERIFIED BY BUILDING DESIGNER

BEARINGS

JT	FACTORED GROSS REACTION VERT	HORZ	MAXIMUM FACTORED GROSS REACTION DOWN	HORZ	UPLIFT	INPUT BRG IN-SX	REQRD BRG IN-SX
G	239	0	239	0	0	MECHANICAL	
E	367	0	367	0	0	5-8	5-8

A SUITABLE HANGER/MECHANICAL CONNECTION IS REQUIRED AT JOINT G. MINIMUM BEARING LENGTH AT JOINT G = 1-8.

UNFACTORED REACTIONS

JT	1ST LCASE COMBINED	MAX./MIN. COMPONENT REACTIONS SNOW	LIVE	PERM.LIVE	WIND	DEAD	SOIL
G	169	113 / 0	0 / 0	0 / 0	0 / 0	56 / 0	0 / 0
E	257	185 / 0	0 / 0	0 / 0	0 / 0	72 / 0	0 / 0

BEARING MATERIAL TO BE SPF NO.2 OR BETTER AT JOINT(S) E

BRACING
TOP CHORD TO BE SHEATHED OR MAX. PURLIN SPACING = 6.25 FT.
MAX. UNBRACED BOTTOM CHORD LENGTH = 10.00 FT OR RIGID CEILING DIRECTLY APPLIED.

ALL PITCH BREAKS AND PERIMETER CORNER JOINTS MUST BE LATERALLY RESTRAINED.

LOADING
TOTAL LOAD CASES: (5)

CHORDS

MEMB. FR-TO	MAX. FACTORED FORCE (LBS)	FACTORED VERT. LOAD (PLF) FROM	TO	LC1 MAX CSI (LC)	MAX. UNBRAC LENGTH
G- A	-223 / 0	0.0	0.0	0.03 (1)	7.81
A- B	-127 / 0	-95.2	-95.2	0.06 (1)	6.25
B- C	-152 / 0	-95.2	-95.2	0.07 (1)	6.25
C- D	0 / 29	-95.2	-95.2	0.17 (5)	10.00
E- C	-348 / 0	0.0	0.0	0.04 (1)	7.81
G- F	0 / 0	-18.5	-18.5	0.02 (4)	10.00
F- H	0 / 0	-18.5	-18.5	0.02 (4)	10.00
H- E	0 / 0	-18.5	-18.5	0.02 (4)	10.00

WEBS

MEMB. FR-TO	MAX. FACTORED FORCE (LBS)	MAX CSI (LC)
A- F	0 / 185	0.05 (1)
F- B	-153 / 0	0.03 (1)
F- C	0 / 146	0.04 (1)

SPECIFIED CONCENTRATED LOADS (LBS)

JT	LOC.	LC1	MAX-	MAX+	FACE	DIR.	TYPE	HEEL	CONN.
B	1-10-8	-4	-4	---	FRONT	VERT	DEAD	---	C1
B	1-10-8	-3	-3	---	FRONT	VERT	TOTAL	---	C1
B	1-10-8	-18	-18	---	FRONT	VERT	SNOW	---	C1
F	1-9-12	1	1	---	FRONT	VERT	TOTAL	---	C1
H	2-9-12	1	1	---	FRONT	VERT	TOTAL	---	C1

CONNECTION REQUIREMENTS

1) C1: A SUITABLE HANGER/MECHANICAL CONNECTION IS REQUIRED.

CANTILEVER ANALYSIS HAS BEEN CONSIDERED IN THIS DESIGN

DESIGN CRITERIA

*** SPECIAL LOADS ANALYSIS ***
GEOMETRY AND/OR BASIC LOADS CHANGED BY USER.
LOADS WERE DERIVED FROM USER INPUT
NO FURTHER MODIFICATIONS WERE MADE

SPECIFIED LOADS:

TOP CH.	LL	=	26.7	PSF
	DL	=	6.0	PSF
BOT CH.	LL	=	0.0	PSF
	DL	=	7.4	PSF
TOTAL LOAD		=	40.1	PSF

SPACING = 24.0 IN. C/C

LOADING IN FLAT SECTION BASED ON A SLOPE OF 6.00/12

*** NON STANDARD GIRDER ***
ADDT'L USER-DEFINED LOADS APPLIED TO ALL LOAD CASES.

THIS TRUSS IS DESIGNED FOR RESIDENTIAL OR SMALL BUILDING REQUIREMENTS OF PART 9, NBCC 2015

THIS DESIGN COMPLIES WITH:
- PART 9 OF BCBC 2018 , ABC 2019
- PART 9 OF OBC 2012 (2019 AMENDMENT)
- CSA 086-14
- TPIC 2014

(55 % OF 33.4 P.S.F. G.S.L. PLUS 8.4 P.S.F. RAIN LOAD) EQUALS 26.7 P.S.F. SPECIFIED ROOF LIVE LOAD

ALLOWABLE DEFL.(LL)= L/360 (0.19")
CALCULATED VERT. DEFL.(LL) = L/ 999 (0.00")
ALLOWABLE DEFL.(TL)= L/360 (0.19")
CALCULATED VERT. DEFL.(TL) = L/ 999 (0.00")

CSI: TC=0.17/1.00 (C-D:5) , BC=0.02/1.00 (E-F:4) , WB=0.05/1.00 (A-F:1) , SSI=0.13/1.00 (C-D:5)

DOL LUMBER=1.00 NAIL=1.00 LS BEND=1.00 COMP=1.00 SHEAR=1.00 TENS= 1.00

COMPANION LIVE LOAD FACTOR = 1.00

TRUSS PLATE MANUFACTURER IS NOT RESPONSIBLE FOR QUALITY CONTROL IN THE TRUSS MANUFACTURING PLANT .

NAIL VALUES

PLATE	GRIP(DRY) (PSI) MAX	MIN	SHEAR (PLI) MAX	MIN	SECTION (PLI) MAX	MIN
MT20	650	371	1747	788	1987	1873

PLATE PLACEMENT TOL. = 0.250 inches

PLATE ROTATION TOL. = 5.0 Deg.

JSI GRIP= 0.22 (F) (INPUT = 0.90)
JSI METAL= 0.09 (C) (INPUT = 1.00)

LICENSED PROFESSIONAL ENGINEER
8/02/22
C. M. HEYENS
100505065
PROVINCE OF ONTARIO

STRUCTURAL COMPONENT ONLY
DWG # TR22080327

JOB NAME	TRUSS NAME	QUANTITY	PLY	JOB DESC.	DRWG NO.
427679	T41	1	2	GREEN PARK HOMES TRUSS DESC.	

Tamarack Roof Truss, Burlington

Version 8.530 S Feb 23 2022 MiTek Industries, Inc. Tue Aug 2 14:52:29 2022 Page 1

ID:bP zphucbY03T7QZgjQJ9Vz?62X-JfNHyVibQbeNI?tL60TM0L1uOvKo2Yal8bfMNlyrsyG

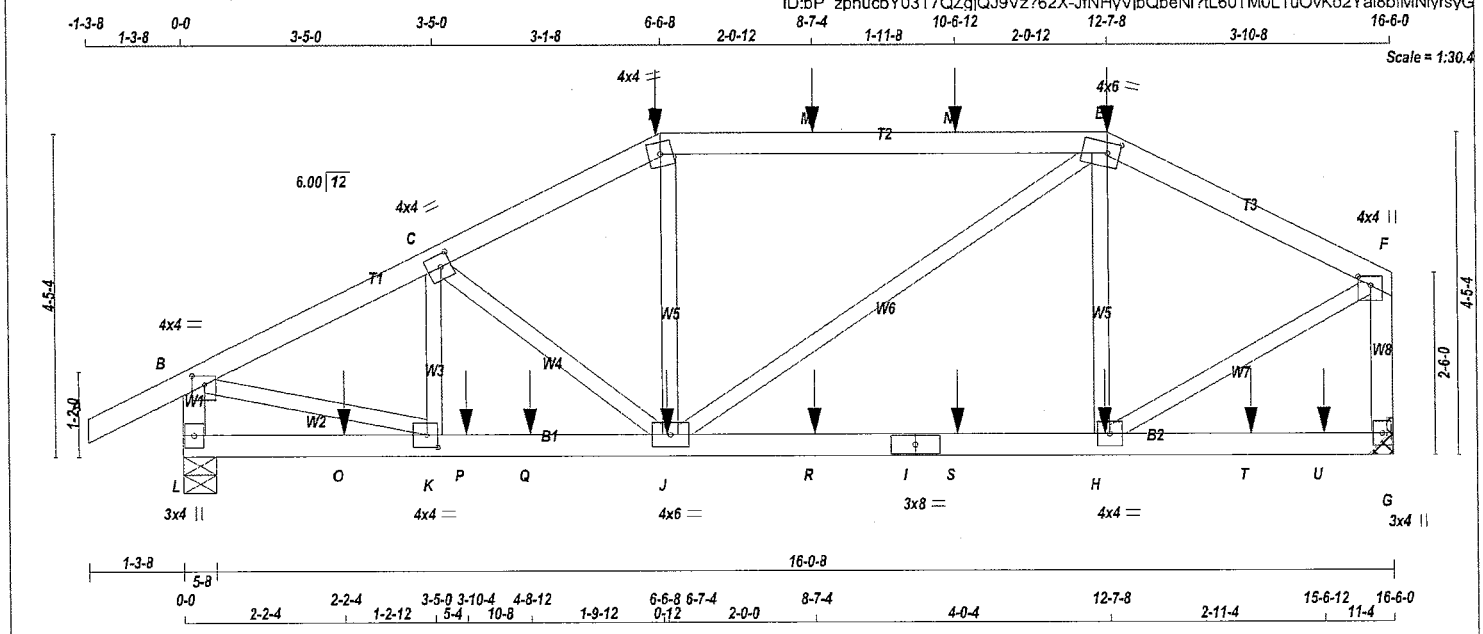

LUMBER

N. L. G. A. RULES

CHORDS	SIZE		LUMBER	DESCR.
A - D	2x4	DRY	No.2	SPF
D - E	2x4	DRY	No.2	SPF
E - F	2x4	DRY	No.2	SPF
L - B	2x4	DRY	No.2	SPF
G - F	2x4	DRY	No.2	SPF
L - I	2x4	DRY	No.2	SPF
I - G	2x4	DRY	No.2	SPF
ALL WEBS EXCEPT	2x3	DRY	No.2	SPF

DRY: SEASONED LUMBER.

DESIGN CONSISTS OF 2 TRUSSES BUILT SEPARATELY THEN FASTENED TOGETHER AS FOLLOWS:

CHORDS	#ROWS	SURFACE SPACING (IN)	LOAD(PLF)
TOP CHORDS : (0.122"X3") SPIRAL NAILS			
A- D	1	12	SIDE(61.0)
D- E	1	12	SIDE(61.0)
E- F	1	12	SIDE(61.0)
L- B	1	12	TOP
G- F	1	12	TOP
BOTTOM CHORDS : (0.122"X3") SPIRAL NAILS			
L- I	1	12	SIDE(61.0)
I- G	1	12	SIDE(61.0)
WEBS : (0.122"X3") SPIRAL NAILS			
2x3	1	6	

NAILS TO BE DRIVEN FROM ONE SIDE ONLY.

GIRDER NAILING ASSUMES NAILED HANGERS ARE FASTENED WITH MIN. 3-0 INCH NAILS.

TOP - COMPONENTS ARE LOADED FROM THE TOP AND MUST BE PLACED ON TOP EDGE OF ALL PLIES FOR THE LOAD TO BE TRANSFERRED TO EACH PLY.

LICENSED PROFESSIONAL ENGINEER
8/02/22
C. M. HEYENS
100505065
PROVINCE OF ONTARIO

STRUCTURAL COMPONENT ONLY
DWG # TR22080328 PG 1/2

DIMENSIONS, SUPPORTS AND LOADINGS SPECIFIED BY FABRICATOR TO BE VERIFIED BY BUILDING DESIGNER

BEARINGS

JT	FACTORED GROSS REACTION VERT	HORZ	MAXIMUM FACTORED GROSS REACTION DOWN	HORZ	UPLIFT	INPUT BRG IN-SX	REQRD BRG IN-SX
L	1619	0	1619	0	0	5-8	5-8
G	1469	0	1469	0	0	MECHANICAL	

A SUITABLE HANGER/MECHANICAL CONNECTION IS REQUIRED AT JOINT G. MINIMUM BEARING LENGTH AT JOINT G = 4-0.

UNFACTORED REACTIONS

1ST LCASE MAX./MIN. COMPONENT REACTIONS

JT	COMBINED	SNOW	LIVE	PERM.LIVE	WIND	DEAD	SOIL
L	1140	779 / 0	0 / 0	0 / 0	0 / 0	361 / 0	0 / 0
G	1037	688 / 0	0 / 0	0 / 0	0 / 0	350 / 0	0 / 0

BEARING MATERIAL TO BE SPF NO.2 OR BETTER AT JOINT(S) L

BRACING

TOP CHORD TO BE SHEATHED OR MAX. PURLIN SPACING = 6.05 FT.
MAX. UNBRACED BOTTOM CHORD LENGTH = 10.00 FT OR RIGID CEILING DIRECTLY APPLIED.

ALL PITCH BREAKS AND PERIMETER CORNER JOINTS MUST BE LATERALLY RESTRAINED.

LOADING

TOTAL LOAD CASES: (4)

CHORDS

MEMB. FR-TO	MAX. FACTORED FORCE (LBS)	FACTORED VERT. LOAD (PLF) FROM	TO	LC1 MAX CSI (LC)	MAX. UNBRAC LENGTH
A- B	0 / 29	-95.2	-95.2	0.07 (1)	10.00
B- C	-1871 / 0	-95.2	-95.2	0.09 (1)	6.25
C- D	-1719 / 0	-95.2	-95.2	0.09 (1)	6.25
D- M	-1523 / 0	-95.2	-95.2	0.50 (1)	6.05
M- N	-1523 / 0	-95.2	-95.2	0.50 (1)	6.05
N- E	-1523 / 0	-95.2	-95.2	0.50 (1)	6.05
E- F	-1321 / 0	-95.2	-95.2	0.14 (1)	6.25
L- B	-1528 / 0	0.0	0.0	0.08 (1)	7.81
G- F	-1427 / 0	0.0	0.0	0.10 (1)	7.81
L- O	0 / 0	-18.5	-18.5	0.12 (1)	10.00
O- K	0 / 0	-18.5	-18.5	0.12 (1)	10.00
K- P	0 / 1686	-18.5	-18.5	0.20 (1)	10.00
P- Q	0 / 1686	-18.5	-18.5	0.20 (1)	10.00
Q- J	0 / 1686	-18.5	-18.5	0.20 (1)	10.00
J- R	0 / 1168	-18.5	-18.5	0.16 (1)	10.00
R- I	0 / 1168	-18.5	-18.5	0.16 (1)	10.00
I- S	0 / 1168	-18.5	-18.5	0.16 (1)	10.00
S- H	0 / 1168	-18.5	-18.5	0.16 (1)	10.00
H- T	0 / 0	-18.5	-18.5	0.09 (4)	10.00
T- U	0 / 0	-18.5	-18.5	0.09 (4)	10.00
U- G	0 / 0	-18.5	-18.5	0.09 (4)	10.00

WEBS

MEMB. FR-TO	MAX. FACTORED FORCE (LBS)	MAX CSI (LC)
J- D	-2 / 108	0.02 (4)
J- E	0 / 432	0.05 (1)
H- E	-489 / 0	0.07 (1)
H- F	0 / 1347	0.17 (1)
C- J	-208 / 0	0.03 (1)
K- C	-167 / 0	0.02 (1)
B- K	0 / 1738	0.22 (1)

SPECIFIED CONCENTRATED LOADS (LBS)

JT	LOC.	LC1	MAX-	MAX+	FACE	DIR.	TYPE	HEEL	CONN.
D	6-6-8	-22	-22	---	FRONT	VERT	DEAD	---	C1
D	6-6-8	-67	-67	---	FRONT	VERT	TOTAL	---	C1
D	6-6-8	-99	-99	---	FRONT	VERT	SNOW	---	C1
E	12-7-8	-22	-22	---	FRONT	VERT	DEAD	---	C1
E	12-7-8	-67	-67	---	FRONT	VERT	TOTAL	---	C1
E	12-7-8	-99	-99	---	FRONT	VERT	SNOW	---	C1
H	12-6-12	-14	-14	---	FRONT	VERT	TOTAL	---	C1
J	6-7-4	-14	-14	---	FRONT	VERT	TOTAL	---	C1
M	8-7-4	-61	-61	---	FRONT	VERT	TOTAL	---	C1
N	10-6-12	-61	-61	---	FRONT	VERT	TOTAL	---	C1

[M]

DESIGN CRITERIA

*** SPECIAL LOADS ANALYSIS ***
GEOMETRY AND/OR BASIC LOADS CHANGED BY USER.
LOADS WERE DERIVED FROM USER INPUT
NO FURTHER MODIFICATIONS WERE MADE

SPECIFIED LOADS:

TOP CH.	LL	=	26.7	PSF
	DL	=	6.0	PSF
BOT CH.	LL	=	0.0	PSF
	DL	=	7.4	PSF
TOTAL LOAD		=	40.1	PSF

SPACING = 24.0 IN. C/C

LOADING IN FLAT SECTION BASED ON A SLOPE OF 6.00/12

*** NON STANDARD GIRDER ***
ADDT'L USER-DEFINED LOADS APPLIED TO ALL LOAD CASES.

THIS TRUSS IS DESIGNED FOR RESIDENTIAL OR SMALL BUILDING REQUIREMENTS OF PART 9, NBCC 2015

THIS DESIGN COMPLIES WITH:
- PART 9 OF BCBC 2018 , ABC 2019
- PART 9 OF OBC 2012 (2019 AMENDMENT)
- CSA 086-14
- TPIC 2014

(55 % OF 33.4 P.S.F. G.S.L. PLUS 8.4 P.S.F. RAIN LOAD) EQUALS 26.7 P.S.F. SPECIFIED ROOF LIVE LOAD

ALLOWABLE DEFL.(LL)= L/360 (0.55")
CALCULATED VERT. DEFL.(LL) = L/ 999 (0.02")
ALLOWABLE DEFL.(TL)= L/360 (0.55")
CALCULATED VERT. DEFL.(TL) = L/ 999 (0.04")

CSI: TC=0.50/1.00 (D-E:1) , BC=0.20/1.00 (J-K:1) , WB=0.22/1.00 (B-K:1) , SSI=0.16/1.00 (D-E:1)

DOL LUMBER=1.00 NAIL=1.00 LS BEND=1.00 COMP=1.00 SHEAR=1.00 TENS= 1.00

COMPANION LIVE LOAD FACTOR = 1.00

AUTOSOLVE RIGHT HEEL ONLY

TRUSS PLATE MANUFACTURER IS NOT RESPONSIBLE FOR QUALITY CONTROL IN THE TRUSS MANUFACTURING PLANT .

NAIL VALUES

PLATE	GRIP(DRY) (PSI) MAX	MIN	SHEAR (PLI) MAX	MIN	SECTION (PLI) MAX	MIN
MT20	650	371	1747	788	1987	1873

PLATE PLACEMENT TOL. = 0.250 inches

PLATE ROTATION TOL. = 5.0 Deg.

CONTINUED ON PAGE 2

JOB NAME	TRUSS NAME	QUANTITY	PLY	JOB DESC.	DRWG NO.
427679	T41	1	2	GREEN PARK HOMES TRUSS DESC.	

PLATES (table is in inches)

JT	TYPE	PLATES	W	LEN	Y	X
B	TMVW-p	MT20	4.0	4.0	1.50	2.00
C	TMWW-t	MT20	4.0	4.0	2.00	1.75
D	TTW-m	MT20	4.0	4.0		
E	TTWW-m	MT20	4.0	6.0	1.75	2.00
F	TMVW+p	MT20	4.0	4.0	1.50	2.00
G	BMV1+p	MT20	3.0	4.0		
H	BMWW-t	MT20	4.0	4.0		
I	BS-t	MT20	3.0	8.0		
J	BMWWW-t	MT20	4.0	6.0		
K	BMWW-t	MT20	4.0	4.0	2.00	1.75
L	BMV1+p	MT20	3.0	4.0		

NOTES- (1)
1) Lateral braces to be a minimum of 2X4 SPF #2.

SPECIFIED CONCENTRATED LOADS (LBS)

JT	LOC.	LC1	MAX-	MAX+	FACE	DIR.	TYPE	HEEL	CONN.
O	2-2-4	-154	-154	---	FRONT	VERT	TOTAL	---	C1
P	3-10-4	-14	-14	---	FRONT	VERT	TOTAL	---	C1
Q	4-8-12	-14	-14	---	FRONT	VERT	TOTAL	---	C1
R	8-7-4	-14	-14	---	FRONT	VERT	TOTAL	---	C1
S	10-6-12	-14	-14	---	FRONT	VERT	TOTAL	---	C1
T	14-6-12	-14	-14	---	FRONT	VERT	TOTAL	---	C1
U	15-6-12	-14	-14	---	FRONT	VERT	TOTAL	---	C1

CONNECTION REQUIREMENTS

1) **C1:** A SUITABLE HANGER/MECHANICAL CONNECTION IS REQUIRED.

JSI GRIP= 0.90 (E) (INPUT = 0.90)
JSI METAL= 0.29 (K) (INPUT = 1.00)

LICENSED PROFESSIONAL ENGINEER
8/02/22
C. M. HEYENS
100505065
PROVINCE OF ONTARIO

STRUCTURAL COMPONENT ONLY
DWG # TR22080328 PG 2/2

JOB NAME	TRUSS NAME	QUANTITY	PLY	JOB DESC. GREEN PARK HOMES	DRWG NO.
427679	T42	1	2	TRUSS DESC.	

Tamarack Roof Truss, Burlington

Version 8.530 S Feb 23 2022 MiTek Industries, Inc. Tue Aug 2 14:52:30 2022 Page 1

ID:bP zphucbY03T7QZqjQJ9Vz?62X-orxfArkDBvmEM9SYgk bZYa9?JeQn0uuMFPvvByrsyF

Scale = 1:26.1

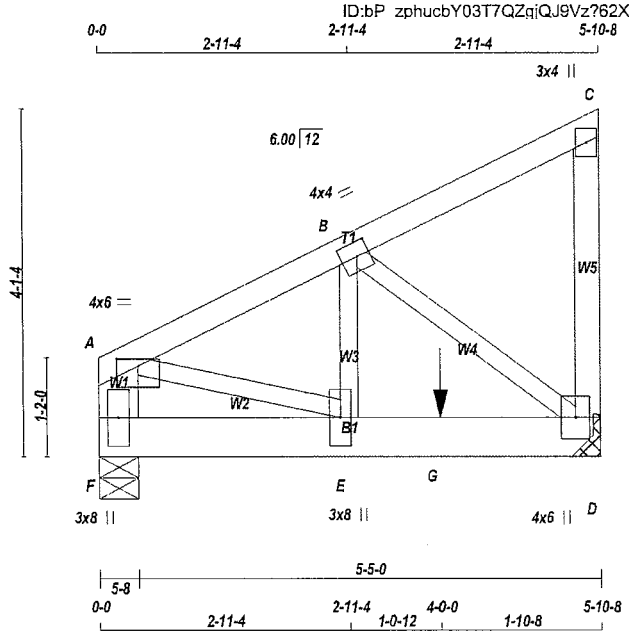

TOTAL WEIGHT = 2 X 29 = 58 lb

[M]

LUMBER

N. L. G. A. RULES

CHORDS	SIZE		LUMBER	DESCR.
A - C	2x4	DRY	No.2	SPF
D - C	2x4	DRY	No.2	SPF
F - A	2x6	DRY	No.2	SPF
F - D	2x6	DRY	No.2	SPF
ALL WEBS EXCEPT	2x3	DRY	No.2	SPF

DRY: SEASONED LUMBER.

DESIGN CONSISTS OF 2 TRUSSES BUILT SEPARATELY THEN FASTENED TOGETHER AS FOLLOWS:

CHORDS	#ROWS	SURFACE SPACING (IN)	LOAD(PLF)
TOP CHORDS : (0.122"X3") SPIRAL NAILS			
A- C	1	12	TOP
C- D	1	12	TOP
F- A	2	12	TOP
BOTTOM CHORDS : (0.122"X3") SPIRAL NAILS			
F- D	2	12	SIDE(0.0)
WEBS : (0.122"X3") SPIRAL NAILS			
2x3	1	6	

NAILS TO BE DRIVEN FROM ONE SIDE ONLY.

GIRDER NAILING ASSUMES NAILED HANGERS ARE FASTENED WITH MIN. 3-0 INCH NAILS.

TOP - COMPONENTS ARE LOADED FROM THE TOP AND MUST BE PLACED ON TOP EDGE OF ALL PLIES FOR THE LOAD TO BE TRANSFERRED TO EACH PLY.

SIDE - PLF SHOWN IS THE EQUIVALENT UDL APPLIED TO ONE SIDE THAT THE CORRESPONDING NAILING PATTERN SHALL BE CAPABLE OF TRANSFERING. REMAINING PLF MUST BE APPLIED ON THE OPPOSITE SIDE OR ON THE TOP.

PLATES (table is in inches)

JT	TYPE	PLATES	W	LEN	Y	X
A	TMVW-p	MT20	4.0	6.0	1.00	3.00

LICENSED PROFESSIONAL ENGINEER
8/02/22
C. M. HEYENS
100505065
PROVINCE OF ONTARIO

STRUCTURAL COMPONENT ONLY
DWG # TR22080329 PG 1/2

DIMENSIONS, SUPPORTS AND LOADINGS SPECIFIED BY FABRICATOR TO BE VERIFIED BY BUILDING DESIGNER

BEARINGS

JT	FACTORED GROSS REACTION VERT	HORZ	MAXIMUM FACTORED GROSS REACTION DOWN	HORZ	UPLIFT	INPUT BRG IN-SX	REQRD BRG IN-SX
D	1321	0	1321	0	0	MECHANICAL	
F	797	0	797	0	0	5-8	5-8

A SUITABLE HANGER/MECHANICAL CONNECTION IS REQUIRED AT JOINT D. MINIMUM BEARING LENGTH AT JOINT D = 4-0.

UNFACTORED REACTIONS

JT	1ST LCASE COMBINED	MAX./MIN. COMPONENT REACTIONS SNOW	LIVE	PERM.LIVE	WIND	DEAD	SOIL
D	932	625 / 0	0 / 0	0 / 0	0 / 0	307 / 0	0 / 0
F	562	376 / 0	0 / 0	0 / 0	0 / 0	186 / 0	0 / 0

BEARING MATERIAL TO BE SPF NO.2 OR BETTER AT JOINT(S) F

BRACING

TOP CHORD TO BE SHEATHED OR MAX. PURLIN SPACING = 6.25 FT.
MAX. UNBRACED BOTTOM CHORD LENGTH = 10.00 FT OR RIGID CEILING DIRECTLY APPLIED.

ALL PITCH BREAKS AND PERIMETER CORNER JOINTS MUST BE LATERALLY RESTRAINED.

LOADING

TOTAL LOAD CASES: (4)

CHORDS

MEMB. FR-TO	MAX. FACTORED FORCE (LBS)	FACTORED VERT. LOAD (PLF) FROM	TO	LC1	MAX CSI (LC)	MAX. UNBRAC LENGTH
A- B	-1091 / 0	-95.2	-95.2	0.06 (1)	6.25	
B- C	-12 / 0	-95.2	-95.2	0.06 (1)	6.25	
D- C	-113 / 0	0.0	0.0	0.01 (1)	7.81	
F- A	-866 / 0	0.0	0.0	0.03 (1)	7.81	
F- E	0 / 0	-18.5	-18.5	0.10 (1)	10.00	
E- G	0 / 986	-18.5	-18.5	0.37 (1)	10.00	
G- D	0 / 986	-18.5	-18.5	0.37 (1)	10.00	

WEBS

MEMB. FR-TO	MAX. FACTORED FORCE (LBS)	MAX CSI (LC)
E- B	0 / 913	0.11 (1)
B- D	-1241 / 0	0.15 (1)
A- E	0 / 1020	0.13 (1)

SPECIFIED CONCENTRATED LOADS (LBS)

JT	LOC.	LC1	MAX-	MAX+	FACE	DIR.	TYPE	HEEL	CONN.
G	4-0-0	-1023	-1023	---	BACK	VERT	TOTAL	---	C1

CONNECTION REQUIREMENTS

1) **C1:** A SUITABLE HANGER/MECHANICAL CONNECTION IS REQUIRED.

DESIGN CRITERIA

SPECIFIED LOADS:

TOP CH.	LL	=	26.7	PSF
	DL	=	6.0	PSF
BOT CH.	LL	=	0.0	PSF
	DL	=	7.4	PSF
TOTAL LOAD		=	40.1	PSF

SPACING = 24.0 IN. C/C

THIS TRUSS IS DESIGNED FOR RESIDENTIAL OR SMALL BUILDING REQUIREMENTS OF PART 9, NBCC 2015

THIS DESIGN COMPLIES WITH:
- PART 9 OF BCBC 2018 , ABC 2019
- PART 9 OF OBC 2012 (2019 AMENDMENT)
- CSA 086-14
- TPIC 2014

(55 % OF 33.4 P.S.F. G.S.L. PLUS 8.4 P.S.F. RAIN LOAD) EQUALS 26.7 P.S.F. SPECIFIED ROOF LIVE LOAD

ALLOWABLE DEFL.(LL)= L/360 (0.20")
CALCULATED VERT. DEFL.(LL) = L/ 999 (0.01")
ALLOWABLE DEFL.(TL)= L/360 (0.20")
CALCULATED VERT. DEFL.(TL) = L/ 999 (0.02")

CSI: TC=0.06/1.00 (A-B:1) , BC=0.37/1.00 (D-E:1) , WB=0.15/1.00 (B-D:1) , SSI=0.35/1.00 (D-E:1)

DOL LUMBER=1.00 NAIL=1.00 LS BEND=1.00 COMP=1.00 SHEAR=1.00 TENS= 1.00

COMPANION LIVE LOAD FACTOR = 1.00

AUTOSOLVE RIGHT HEEL ONLY

TRUSS PLATE MANUFACTURER IS NOT RESPONSIBLE FOR QUALITY CONTROL IN THE TRUSS MANUFACTURING PLANT .

NAIL VALUES

PLATE	GRIP(DRY) (PSI) MAX	MIN	SHEAR (PLI) MAX	MIN	SECTION (PLI) MAX	MIN
MT20	650	371	1747	788	1987	1873

PLATE PLACEMENT TOL. = 0.250 inches

PLATE ROTATION TOL. = 5.0 Deg.

JSI GRIP= 0.68 (E) (INPUT = 0.90)
JSI METAL= 0.30 (E) (INPUT = 1.00)

CONTINUED ON PAGE 2

JOB NAME	TRUSS NAME	QUANTITY	PLY	JOB DESC.	DRWG NO.
427679	T42	1	2	GREEN PARK HOMES TRUSS DESC.	

PLATES (table is in inches)

JT	TYPE	PLATES	W	LEN	Y	X
B	TMWW-t	MT20	4.0	4.0	2.00	1.75
C	TMV+p	MT20	3.0	4.0		
D	BMVW1+p	MT20	4.0	6.0		
E	BMWW+t	MT20	3.0	8.0		
F	BMV1+p	MT20	3.0	8.0		

NOTES- (1)
1) Lateral braces to be a minimum of 2X4 SPF #2.

LICENSED PROFESSIONAL ENGINEER
8/02/22
C. M. HEYENS
100505065
PROVINCE OF ONTARIO

STRUCTURAL COMPONENT ONLY
DWG # TR22080329

JOB NAME	TRUSS NAME	QUANTITY	PLY	JOB DESC.	DRWG NO.
427679	T42Z	1	2	GREEN PARK HOMES TRUSS DESC.	

Tamarack Roof Truss, Burlington

Version 8.530 S Feb 23 2022 MiTek Industries, Inc. Tue Aug 2 14:52:31 2022 Page 1
ID:bP zphucbY03T7QZgjQJ9Vz?62X-G2V1NBlsxCu5 l1kERVq5m6Kki?JWSo1bv8TSdyrsyE

Scale = 1:26.1

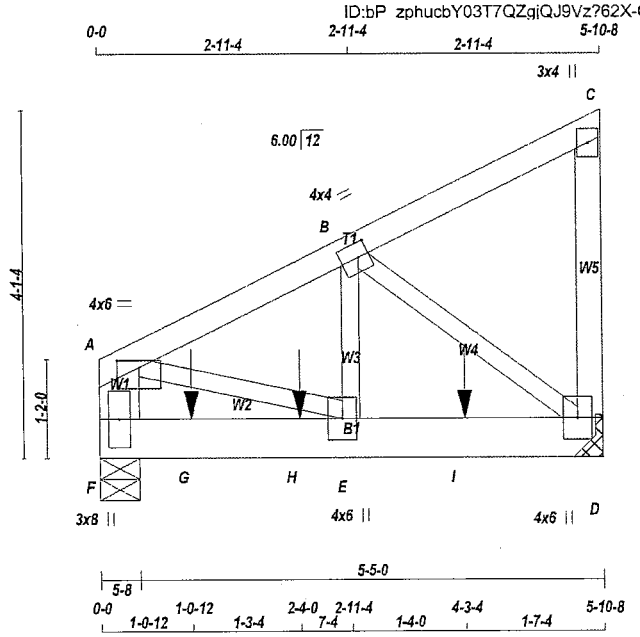

TOTAL WEIGHT = 2 X 29 = 58 lb [M]

LUMBER

N. L. G. A. RULES

CHORDS	SIZE		LUMBER	DESCR.
A - C	2x4	DRY	No.2	SPF
D - C	2x4	DRY	No.2	SPF
F - A	2x6	DRY	No.2	SPF
F - D	2x6	DRY	No.2	SPF
ALL WEBS EXCEPT	2x3	DRY	No.2	SPF

DRY: SEASONED LUMBER.

DESIGN CONSISTS OF 2 TRUSSES BUILT SEPARATELY THEN FASTENED TOGETHER AS FOLLOWS:

CHORDS	#ROWS	SURFACE SPACING (IN)	LOAD(PLF)
TOP CHORDS : (0.122"X3") SPIRAL NAILS			
A- C	1	12	TOP
C- D	1	12	TOP
F- A	2	12	TOP
BOTTOM CHORDS : (0.122"X3") SPIRAL NAILS			
F- D	2	12	SIDE(0.0)
WEBS : (0.122"X3") SPIRAL NAILS			
2x3	1	6	

NAILS TO BE DRIVEN FROM ONE SIDE ONLY.

GIRDER NAILING ASSUMES NAILED HANGERS ARE FASTENED WITH MIN. 3-0 INCH NAILS.

TOP - COMPONENTS ARE LOADED FROM THE TOP AND MUST BE PLACED ON TOP EDGE OF ALL PLIES FOR THE LOAD TO BE TRANSFERRED TO EACH PLY.

SIDE - PLF SHOWN IS THE EQUIVALENT UDL APPLIED TO ONE SIDE THAT THE CORRESPONDING NAILING PATTERN SHALL BE CAPABLE OF TRANSFERING. REMAINING PLF MUST BE APPLIED ON THE OPPOSITE SIDE OR ON THE TOP.

PLATES (table is in inches)

JT	TYPE	PLATES	W	LEN	Y	X
A	TMVW-p	MT20	4.0	6.0	1.00	3.00

LICENSED PROFESSIONAL ENGINEER
8/02/22
C. M. HEYENS
100505065
PROVINCE OF ONTARIO

STRUCTURAL COMPONENT ONLY
DWG # TR22080330 PG 1/2

DIMENSIONS, SUPPORTS AND LOADINGS SPECIFIED BY FABRICATOR TO BE VERIFIED BY BUILDING DESIGNER

BEARINGS

JT	FACTORED GROSS REACTION VERT	HORZ	MAXIMUM FACTORED GROSS REACTION DOWN	HORZ	UPLIFT	INPUT BRG IN-SX	REQRD BRG IN-SX
D	1534	0	1534	0	0	MECHANICAL	
F	1831	0	1831	0	0	5-8	5-8

A SUITABLE HANGER/MECHANICAL CONNECTION IS REQUIRED AT JOINT D. MINIMUM BEARING LENGTH AT JOINT D = 4-0.

UNFACTORED REACTIONS

JT	1ST LCASE COMBINED	MAX./MIN. COMPONENT REACTIONS SNOW	LIVE	PERM.LIVE	WIND	DEAD	SOIL
D	1078	744 / 0	0 / 0	0 / 0	0 / 0	334 / 0	0 / 0
F	1285	900 / 0	0 / 0	0 / 0	0 / 0	385 / 0	0 / 0

BEARING MATERIAL TO BE SPF NO.2 OR BETTER AT JOINT(S) F

BRACING

TOP CHORD TO BE SHEATHED OR MAX. PURLIN SPACING = 6.25 FT.
MAX. UNBRACED BOTTOM CHORD LENGTH = 10.00 FT OR RIGID CEILING DIRECTLY APPLIED.

ALL PITCH BREAKS AND PERIMETER CORNER JOINTS MUST BE LATERALLY RESTRAINED.

LOADING

TOTAL LOAD CASES: (4)

CHORDS

MEMB. FR-TO	MAX. FORCE (LBS)	FACTORED VERT. LOAD (PLF) FROM	TO	LC1 MAX CSI (LC)	MAX. UNBRAC LENGTH
A- B	-1730 / 0	-95.2	-95.2	0.07 (1)	6.25
B- C	-10 / 0	-95.2	-95.2	0.05 (1)	6.25
D- C	-117 / 0	0.0	0.0	0.01 (1)	7.81
F- A	-1306 / 0	0.0	0.0	0.05 (1)	7.81
F- G	0 / 0	-18.5	-18.5	0.20 (1)	10.00
G- H	0 / 0	-18.5	-18.5	0.20 (1)	10.00
H- E	0 / 0	-18.5	-18.5	0.20 (1)	10.00
E- I	0 / 1556	-18.5	-18.5	0.26 (1)	10.00
I- D	0 / 1556	-18.5	-18.5	0.26 (1)	10.00

WEBS

MEMB. FR-TO	MAX. FORCE (LBS)	MAX CSI (LC)
E- B	0 / 1642	0.20 (1)
B- D	-1958 / 0	0.23 (1)
A- E	0 / 1610	0.20 (1)

SPECIFIED CONCENTRATED LOADS (LBS)

JT	LOC.	LC1	MAX-	MAX+	FACE	DIR.	TYPE	HEEL	CONN.
G	1-0-12	-402	-402	---	BACK	VERT	TOTAL	---	C1
H	2-4-0	-949	-949	---	BACK	VERT	TOTAL	---	C1
I	4-3-4	-540	-540	---	BACK	VERT	TOTAL	---	C1

CONNECTION REQUIREMENTS

1) **C1:** A SUITABLE HANGER/MECHANICAL CONNECTION IS REQUIRED.

DESIGN CRITERIA

SPECIFIED LOADS:

TOP	CH.	LL =	26.7	PSF
		DL =	6.0	PSF
BOT	CH.	LL =	0.0	PSF
		DL =	7.4	PSF
TOTAL	LOAD	=	40.1	PSF

SPACING = 24.0 IN. C/C

THIS TRUSS IS DESIGNED FOR RESIDENTIAL OR SMALL BUILDING REQUIREMENTS OF PART 9, NBCC 2015

THIS DESIGN COMPLIES WITH:
- PART 9 OF BCBC 2018 , ABC 2019
- PART 9 OF OBC 2012 (2019 AMENDMENT)
- CSA 086-14
- TPIC 2014

(55 % OF 33.4 P.S.F. G.S.L. PLUS 8.4 P.S.F. RAIN LOAD) EQUALS 26.7 P.S.F. SPECIFIED ROOF LIVE LOAD

ALLOWABLE DEFL.(LL)= L/360 (0.20")
CALCULATED VERT. DEFL.(LL) = L/ 999 (0.01")
ALLOWABLE DEFL.(TL)= L/360 (0.20")
CALCULATED VERT. DEFL.(TL) = L/ 999 (0.02")

CSI: TC=0.07/1.00 (A-B:1) , BC=0.26/1.00 (D-E:1) , WB=0.23/1.00 (B-D:1) , SSI=0.48/1.00 (E-F:1)

DOL LUMBER=1.00 NAIL=1.00 LS BEND=1.00 COMP=1.00 SHEAR=1.00 TENS= 1.00

COMPANION LIVE LOAD FACTOR = 1.00

AUTOSOLVE RIGHT HEEL ONLY

TRUSS PLATE MANUFACTURER IS NOT RESPONSIBLE FOR QUALITY CONTROL IN THE TRUSS MANUFACTURING PLANT .

NAIL VALUES

PLATE	GRIP(DRY) (PSI) MAX	MIN	SHEAR (PLI) MAX	MIN	SECTION (PLI) MAX	MIN
MT20	650	371	1747	788	1987	1873

PLATE PLACEMENT TOL. = 0.250 inches

PLATE ROTATION TOL. = 5.0 Deg.

JSI GRIP= 0.88 (B) (INPUT = 0.90)
JSI METAL= 0.35 (D) (INPUT = 1.00)

CONTINUED ON PAGE 2

JOB NAME	TRUSS NAME	QUANTITY	PLY	JOB DESC. GREEN PARK HOMES	DRWG NO.
427679	T42Z	1	2	TRUSS DESC.	

PLATES (table is in inches)

JT	TYPE	PLATES	W	LEN	Y	X
B	TMWW-t	MT20	4.0	4.0	2.00	1.50
C	TMV+p	MT20	3.0	4.0		
D	BMVW1+p	MT20	4.0	6.0		
E	BMWW+t	MT20	4.0	6.0		
F	BMV1+p	MT20	3.0	8.0		

NOTES- (1)
1) Lateral braces to be a minimum of 2X4 SPF #2.

LICENSED PROFESSIONAL ENGINEER
8/02/22
C. M. HEYENS
100505065
PROVINCE OF ONTARIO

STRUCTURAL COMPONENT ONLY
DWG # TR22080330 PG 2/2

JOB NAME	TRUSS NAME	QUANTITY	PLY	JOB DESC.	DRWG NO.
427679	T43	1	2	GREEN PARK HOMES TRUSS DESC.	

Tamarack Roof Truss, Burlington

Version 8.530 S Feb 23 2022 MiTek Industries, Inc. Tue Aug 2 14:52:32 2022 Page 1

ID:bP zphucbY03T7QZqjQJ9Vz?62X-kE3QbXlUiW0ycScwo903ezfPq6JMFrrBqZu0 4yrsyD

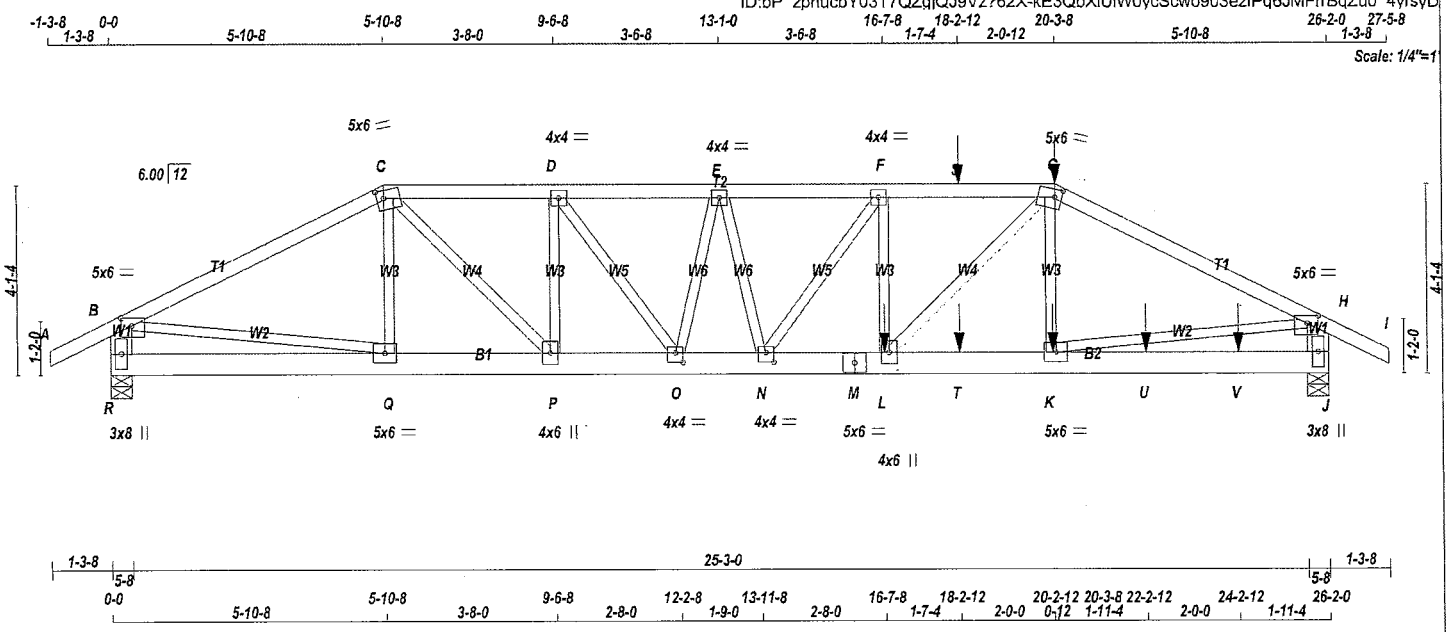

TOTAL WEIGHT = 2 X 124 = 248 lb

[M]

LUMBER

N. L. G. A. RULES

CHORDS	SIZE		LUMBER	DESCR.
A - C	2x4	DRY	No.2	SPF
C - G	2x4	DRY	No.2	SPF
G - I	2x4	DRY	No.2	SPF
R - B	2x6	DRY	No.2	SPF
J - H	2x6	DRY	No.2	SPF
R - M	2x6	DRY	No.2	SPF
M - J	2x6	DRY	No.2	SPF
ALL WEBS EXCEPT	2x3	DRY	No.2	SPF

DRY: SEASONED LUMBER.

DESIGN CONSISTS OF 2 TRUSSES BUILT SEPARATELY THEN FASTENED TOGETHER AS FOLLOWS:

CHORDS	#ROWS	SURFACE SPACING (IN)	LOAD(PLF)
TOP CHORDS : (0.122"X3") SPIRAL NAILS			
A- C	1	12	TOP
C- G	1	12	SIDE(61.0)
G- I	1	12	SIDE(61.0)
R- B	2	12	TOP
J- H	2	12	TOP
BOTTOM CHORDS : (0.122"X3") SPIRAL NAILS			
R- M	2	12	SIDE(0.1)
M- J	2	12	SIDE(183.1)
WEBS : (0.122"X3") SPIRAL NAILS			
K- G	1	6	SIDE(18.0)
F- L	1	6	SIDE(156.9)
2x3	1	6	

NAILS TO BE DRIVEN FROM ONE SIDE ONLY.

GIRDER NAILING ASSUMES NAILED HANGERS ARE FASTENED WITH MIN. 3-0 INCH NAILS.

TOP - COMPONENTS ARE LOADED FROM THE TOP AND MUST BE PLACED ON TOP EDGE OF ALL PLIES FOR THE LOAD TO BE TRANSFERRED TO EACH PLY.

LICENSED PROFESSIONAL ENGINEER
8/02/22
C. M. HEYENS
100505065
PROVINCE OF ONTARIO

STRUCTURAL COMPONENT ONLY
DWG # TR22080331 PG 1/2

DIMENSIONS, SUPPORTS AND LOADINGS SPECIFIED BY FABRICATOR TO BE VERIFIED BY BUILDING DESIGNER

BEARINGS

JT	FACTORED GROSS REACTION VERT	HORZ	MAXIMUM FACTORED GROSS REACTION DOWN	HORZ	UPLIFT	INPUT BRG IN-SX	REQRD BRG IN-SX
R	2267	0	2267	0	0	5-8	5-8
J	3025	0	3025	0	0	5-8	5-8

UNFACTORED REACTIONS

JT	1ST LCASE COMBINED	MAX./MIN. COMPONENT REACTIONS SNOW	LIVE	PERM.LIVE	WIND	DEAD	SOIL
R	1596	1086 / 0	0 / 0	0 / 0	0 / 0	510 / 0	0 / 0
J	2131	1443 / 0	0 / 0	0 / 0	0 / 0	688 / 0	0 / 0

BEARING MATERIAL TO BE SPF NO.2 OR BETTER AT JOINT(S) R, J

BRACING

TOP CHORD TO BE SHEATHED OR MAX. PURLIN SPACING = 4.00 FT.
MAX. UNBRACED BOTTOM CHORD LENGTH = 10.00 FT OR RIGID CEILING DIRECTLY APPLIED.

ALL PITCH BREAKS AND PERIMETER CORNER JOINTS MUST BE LATERALLY RESTRAINED.

LOADING

TOTAL LOAD CASES: (4)

CHORDS MEMB. FR-TO	MAX. FACTORED FORCE (LBS)	FACTORED VERT. LOAD (PLF) FROM	TO	LC1	MAX CSI (LC)	MAX. UNBRAC LENGTH
A- B	0 / 29	-95.2	-95.2	0.07 (1)	10.00	
B- C	-3194 / 0	-95.2	-95.2	0.41 (1)	4.77	
C- D	-4102 / 0	-95.2	-95.2	0.15 (1)	4.58	
D- E	-4682 / 0	-95.2	-95.2	0.16 (1)	4.32	
E- F	-5009 / 0	-95.2	-95.2	0.19 (1)	4.17	
F- S	-5313 / 0	-95.2	-95.2	0.25 (1)	4.00	
S- G	-5313 / 0	-95.2	-95.2	0.25 (1)	4.00	
G- H	-4495 / 0	-95.2	-95.2	0.49 (1)	4.09	
H- I	0 / 29	-95.2	-95.2	0.07 (1)	10.00	
R- B	-2210 / 0	0.0	0.0	0.08 (1)	7.81	
J- H	-2944 / 0	0.0	0.0	0.10 (1)	7.81	
R- Q	0 / 0	-18.5	-18.5	0.04 (4)	10.00	
Q- P	0 / 2847	-18.5	-18.5	0.20 (1)	10.00	
P- O	0 / 4102	-18.5	-18.5	0.30 (1)	10.00	
O- N	0 / 4883	-18.5	-18.5	0.35 (1)	10.00	
N- M	0 / 5313	-18.5	-18.5	0.40 (1)	10.00	
M- L	0 / 5313	-18.5	-18.5	0.40 (1)	10.00	
L- T	0 / 4009	-18.5	-18.5	0.32 (1)	10.00	
T- K	0 / 4009	-18.5	-18.5	0.32 (1)	10.00	
K- U	0 / 0	-18.5	-18.5	0.07 (4)	10.00	
U- V	0 / 0	-18.5	-18.5	0.07 (4)	10.00	
V- J	0 / 0	-18.5	-18.5	0.07 (4)	10.00	

WEBS MEMB. FR-TO	MAX. FACTORED FORCE (LBS)	MAX CSI (LC)
Q- C	-275 / 0	0.03 (1)
C- P	0 / 1787	0.22 (1)
P- D	-1206 / 0	0.15 (1)
L- F	-20 / 42	0.01 (4)
L- G	0 / 1858	0.23 (1)
K- G	-325 / 51	0.04 (1)
B- Q	0 / 2879	0.36 (1)
K- H	0 / 4051	0.50 (1)
O- E	-833 / 0	0.11 (1)
E- N	0 / 523	0.06 (1)
N- F	-529 / 0	0.09 (1)
D- O	0 / 1011	0.13 (1)

SPECIFIED CONCENTRATED LOADS (LBS)

JT	LOC.	LC1	MAX-	MAX+	FACE	DIR.	TYPE	HEEL	CONN.
G	20-3-8	-370	-370	---	FRONT	VERT	TOTAL	---	C1
K	20-2-12	-21	-21	---	FRONT	VERT	TOTAL	---	C1
L	16-7-8	-917	-917	---	FRONT	VERT	TOTAL	---	C1
S	18-2-12	-79	-79	---	FRONT	VERT	TOTAL	---	C1
T	18-2-12	-21	-21	---	FRONT	VERT	TOTAL	---	C1
U	22-2-12	-21	-21	---	FRONT	VERT	TOTAL	---	C1
V	24-2-12	-20	-20	---	FRONT	VERT	TOTAL	---	C1

CONNECTION REQUIREMENTS

1) **C1:** A SUITABLE HANGER/MECHANICAL CONNECTION IS REQUIRED.

DESIGN CRITERIA

SPECIFIED LOADS:

TOP CH.	LL	=	26.7	PSF
	DL	=	6.0	PSF
BOT CH.	LL	=	0.0	PSF
	DL	=	7.4	PSF
TOTAL LOAD		=	40.1	PSF

SPACING = 24.0 IN. C/C

LOADING IN FLAT SECTION BASED ON A SLOPE OF 6.00/12

THIS TRUSS IS DESIGNED FOR RESIDENTIAL OR SMALL BUILDING REQUIREMENTS OF PART 9, NBCC 2015

THIS DESIGN COMPLIES WITH:
- PART 9 OF BCBC 2018 , ABC 2019
- PART 9 OF OBC 2012 (2019 AMENDMENT)
- CSA 086-14
- TPIC 2014

(55 % OF 33.4 P.S.F. G.S.L. PLUS 8.4 P.S.F. RAIN LOAD) EQUALS 26.7 P.S.F. SPECIFIED ROOF LIVE LOAD

ALLOWABLE DEFL.(LL)= L/360 (0.87")
CALCULATED VERT. DEFL.(LL) = L/ 999 (0.10")
ALLOWABLE DEFL.(TL)= L/360 (0.87")
CALCULATED VERT. DEFL.(TL) = L/ 999 (0.19")

CSI: TC=0.49/1.00 (G-H:1) , BC=0.40/1.00 (L-N:1) , WB=0.50/1.00 (H-K:1) , SSI=0.12/1.00 (F-G:1)

DOL LUMBER=1.00 NAIL=1.00 LS BEND=1.00 COMP=1.00 SHEAR=1.00 TENS= 1.00

COMPANION LIVE LOAD FACTOR = 1.00

AUTOSOLVE HEELS OFF

TRUSS PLATE MANUFACTURER IS NOT RESPONSIBLE FOR QUALITY CONTROL IN THE TRUSS MANUFACTURING PLANT .

NAIL VALUES

PLATE	GRIP(DRY) (PSI) MAX	MIN	SHEAR (PLI) MAX	MIN	SECTION (PLI) MAX	MIN
MT20	650	371	1747	788	1987	1873

PLATE PLACEMENT TOL. = 0.250 inches

PLATE ROTATION TOL. = 5.0 Deg.

JSI GRIP= 0.89 (G) (INPUT = 0.90)
JSI METAL= 0.51 (M) (INPUT = 1.00)

CONTINUED ON PAGE 2

PLATES (table is in inches)

JT	TYPE	PLATES	W	LEN	Y	X
B	TMVW-p	MT20	5.0	6.0	2.00	2.75
C	TTWW-m	MT20	5.0	6.0	2.00	1.75
D, E, F						
D	TMWW-t	MT20	4.0	4.0		
G	TTWW-m	MT20	5.0	6.0	2.00	1.75
H	TMVW-p	MT20	5.0	6.0	2.00	2.75
J	BMV1+p	MT20	3.0	8.0		
K	BMWW-t	MT20	5.0	6.0		
L	BMWW+t	MT20	4.0	6.0		
M	BS-t	MT20	5.0	6.0		
N	BMWW-t	MT20	4.0	4.0	2.50	2.00
O	BMWW-t	MT20	4.0	4.0	2.50	2.00
P	BMWW+t	MT20	4.0	6.0		
Q	BMWW-t	MT20	5.0	6.0		
R	BMV1+p	MT20	3.0	8.0		

NOTES- (1)
1) Lateral braces to be a minimum of 2X4 SPF #2.

CONNECTION REQUIREMENTS

1) **C1:** A SUITABLE HANGER/MECHANICAL CONNECTION IS REQUIRED.

LICENSED PROFESSIONAL ENGINEER
8/02/22
C. M. HEYENS
100505065
PROVINCE OF ONTARIO

STRUCTURAL COMPONENT ONLY
DWG # TR22080331 PG 2/2

JOB NAME	TRUSS NAME	QUANTITY	PLY	JOB DESC.	DRWG NO.
427679	T43Z	1	2	GREEN PARK HOMES TRUSS DESC.	

Tamarack Roof Truss, Burlington

Version 8.530 S Feb 23 2022 MiTek Industries, Inc. Tue Aug 2 14:52:33 2022 Page 1

ID:bP zphucbY03T7QZgjQJ9Vz?62X-CQdootm6Tq8pDcB6LsXIABCaOWd7 HoK3DdaWWyrsyC

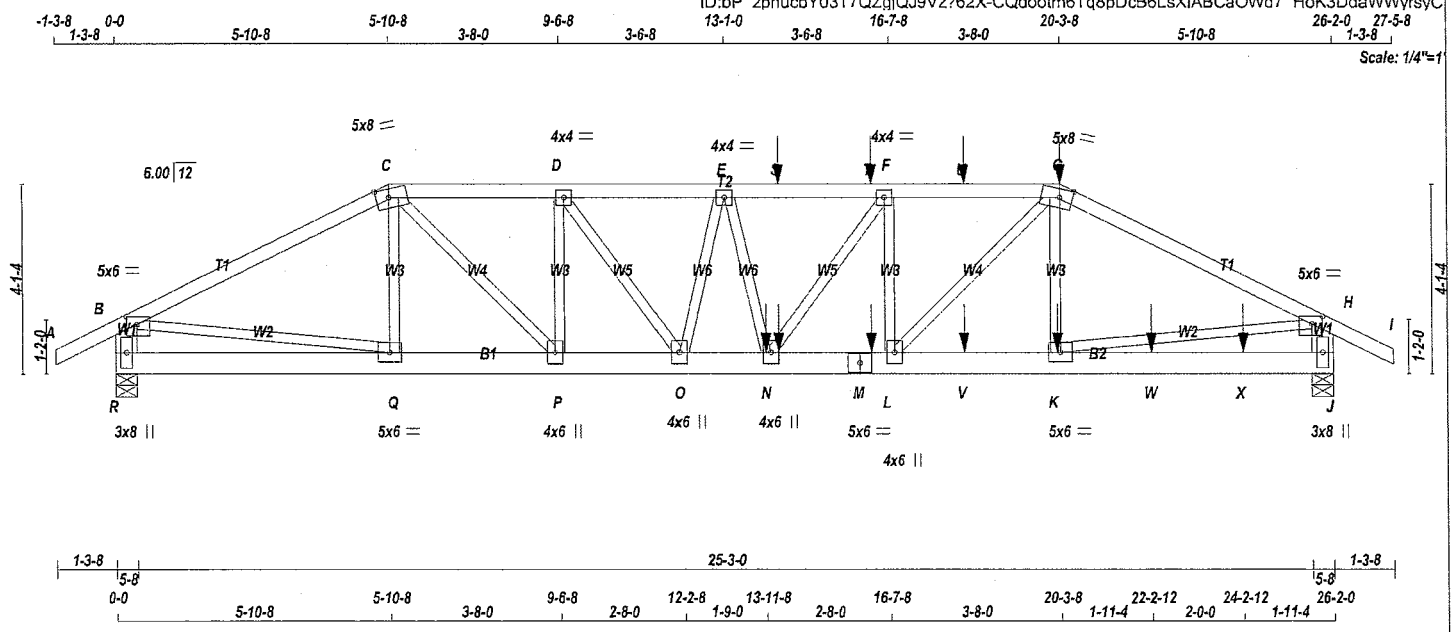

TOTAL WEIGHT = 2 X 124 = 248 lb

[M]

LUMBER

N. L. G. A. RULES

CHORDS	SIZE		LUMBER	DESCR.
A - C	2x4	DRY	No.2	SPF
C - G	2x4	DRY	No.2	SPF
G - I	2x4	DRY	No.2	SPF
R - B	2x6	DRY	No.2	SPF
J - H	2x6	DRY	No.2	SPF
R - M	2x6	DRY	No.2	SPF
M - J	2x6	DRY	No.2	SPF
ALL WEBS EXCEPT	2x3	DRY	No.2	SPF

DRY: SEASONED LUMBER.

DESIGN CONSISTS OF 2 TRUSSES BUILT SEPARATELY THEN FASTENED TOGETHER AS FOLLOWS:

CHORDS	#ROWS	SURFACE SPACING (IN)	LOAD(PLF)
TOP CHORDS : (0.122"X3") SPIRAL NAILS			
A- C	1	12	TOP
C- G	1	12	SIDE(61.0)
G- I	1	12	SIDE(61.0)
R- B	2	12	TOP
J- H	2	12	TOP
BOTTOM CHORDS : (0.122"X3") SPIRAL NAILS			
R- M	2	12	SIDE(0.0)
M- J	2	12	SIDE(183.1)
WEBS : (0.122"X3") SPIRAL NAILS			
K- G	1	6	SIDE(2.0)
2x3	1	6	

NAILS TO BE DRIVEN FROM ONE SIDE ONLY.

GIRDER NAILING ASSUMES NAILED HANGERS ARE FASTENED WITH MIN. 3-0 INCH NAILS.

TOP - COMPONENTS ARE LOADED FROM THE TOP AND MUST BE PLACED ON TOP EDGE OF ALL PLIES FOR THE LOAD TO BE TRANSFERRED TO EACH PLY.

LICENSED PROFESSIONAL ENGINEER
8/02/22
C. M. HEYENS
100505065
PROVINCE OF ONTARIO

STRUCTURAL COMPONENT ONLY
DWG # TR22080332 PG 1/2

DIMENSIONS, SUPPORTS AND LOADINGS SPECIFIED BY FABRICATOR TO BE VERIFIED BY BUILDING DESIGNER

BEARINGS

JT	FACTORED GROSS REACTION VERT	HORZ	MAXIMUM FACTORED GROSS REACTION DOWN	HORZ	UPLIFT	INPUT BRG IN-SX	REQRD BRG IN-SX
R	2599	0	2599	0	0	5-8	5-8
J	3123	0	3123	0	0	5-8	5-8

UNFACTORED REACTIONS

JT	1ST LCASE COMBINED	MAX./MIN. COMPONENT REACTIONS SNOW	LIVE	PERM.LIVE	WIND	DEAD	SOIL
R	1829	1249 / 0	0 / 0	0 / 0	0 / 0	580 / 0	0 / 0
J	2200	1490 / 0	0 / 0	0 / 0	0 / 0	710 / 0	0 / 0

BEARING MATERIAL TO BE SPF NO.2 OR BETTER AT JOINT(S) R, J

BRACING

TOP CHORD TO BE SHEATHED OR MAX. PURLIN SPACING = 3.72 FT.
MAX. UNBRACED BOTTOM CHORD LENGTH = 10.00 FT OR RIGID CEILING DIRECTLY APPLIED.

ALL PITCH BREAKS AND PERIMETER CORNER JOINTS MUST BE LATERALLY RESTRAINED.

LOADING

TOTAL LOAD CASES: (4)

CHORDS

MEMB. FR-TO	MAX. FORCE (LBS)	FACTORED VERT. LOAD (PLF) FROM	TO	LC1	MAX CSI (LC)	MAX. UNBRAC LENGTH
A- B	0 / 29	-95.2	-95.2	0.07 (1)	10.00	
B- C	-3780 / 0	-95.2	-95.2	0.44 (1)	4.43	
C- D	-4946 / 0	-95.2	-95.2	0.18 (1)	4.21	
D- E	-5770 / 0	-95.2	-95.2	0.19 (1)	3.92	
E- S	-6186 / 0	-95.2	-95.2	0.27 (1)	3.72	
S- T	-6186 / 0	-95.2	-95.2	0.27 (1)	3.72	
T- F	-6186 / 0	-95.2	-95.2	0.27 (1)	3.72	
F- U	-5669 / 0	-95.2	-95.2	0.25 (1)	3.89	
U- G	-5669 / 0	-95.2	-95.2	0.25 (1)	3.89	
G- H	-4662 / 0	-95.2	-95.2	0.50 (1)	4.02	
H- I	0 / 29	-95.2	-95.2	0.07 (1)	10.00	
R- B	-2541 / 0	0.0	0.0	0.09 (1)	7.81	
J- H	-3038 / 0	0.0	0.0	0.11 (1)	7.81	
R- Q	0 / 0	-18.5	-18.5	0.04 (4)	10.00	
Q- P	0 / 3369	-18.5	-18.5	0.24 (1)	10.00	
P- O	0 / 4946	-18.5	-18.5	0.35 (1)	10.00	
O- N	0 / 6027	-18.5	-18.5	0.49 (1)	10.00	
N- M	0 / 5669	-18.5	-18.5	0.47 (1)	10.00	
M- L	0 / 5669	-18.5	-18.5	0.47 (1)	10.00	
L- V	0 / 4157	-18.5	-18.5	0.30 (1)	10.00	
V- K	0 / 4157	-18.5	-18.5	0.30 (1)	10.00	
K- W	0 / 0	-18.5	-18.5	0.07 (4)	10.00	
W- X	0 / 0	-18.5	-18.5	0.07 (4)	10.00	
X- J	0 / 0	-18.5	-18.5	0.07 (4)	10.00	

WEBS

MEMB. FR-TO	MAX. FACTORED FORCE (LBS)	MAX CSI (LC)
Q- C	-345 / 0	0.04 (1)
C- P	0 / 2247	0.28 (1)
P- D	-1539 / 0	0.20 (1)
L- F	-1345 / 0	0.17 (1)
L- G	0 / 2155	0.27 (1)
K- G	-390 / 30	0.05 (1)
B- Q	0 / 3407	0.42 (1)
K- H	0 / 4202	0.52 (1)
O- E	-1066 / 0	0.14 (1)
E- N	0 / 658	0.08 (1)
N- F	0 / 901	0.11 (1)
D- O	0 / 1435	0.18 (1)

SPECIFIED CONCENTRATED LOADS (LBS)

JT	LOC.	LC1	MAX-	MAX+	FACE	DIR.	TYPE	HEEL	CONN.
G	20-3-8	-328	-328	---	FRONT	VERT	TOTAL	---	C1
K	20-2-12	-21	-21	---	FRONT	VERT	TOTAL	---	C1
M	16-2-12	-21	-21	---	FRONT	VERT	TOTAL	---	C1
N	13-11-8	-1061	-1061	---	FRONT	VERT	TOTAL	---	C1
N	14-2-12	-21	-21	---	FRONT	VERT	TOTAL	---	C1
S	14-2-12	-79	-79	---	FRONT	VERT	TOTAL	---	C1
T	16-2-12	-79	-79	---	FRONT	VERT	TOTAL	---	C1
U	18-2-12	-79	-79	---	FRONT	VERT	TOTAL	---	C1
V	18-2-12	-21	-21	---	FRONT	VERT	TOTAL	---	C1
W	22-2-12	-21	-21	---	FRONT	VERT	TOTAL	---	C1
X	24-2-12	-20	-20	---	FRONT	VERT	TOTAL	---	C1

DESIGN CRITERIA

SPECIFIED LOADS:

TOP CH.	LL	=	26.7	PSF
	DL	=	6.0	PSF
BOT CH.	LL	=	0.0	PSF
	DL	=	7.4	PSF
TOTAL LOAD		=	40.1	PSF

SPACING = 24.0 IN. C/C

LOADING IN FLAT SECTION BASED ON A SLOPE OF 6.00/12

THIS TRUSS IS DESIGNED FOR RESIDENTIAL OR SMALL BUILDING REQUIREMENTS OF PART 9, NBCC 2015

THIS DESIGN COMPLIES WITH:
- PART 9 OF BCBC 2018 , ABC 2019
- PART 9 OF OBC 2012 (2019 AMENDMENT)
- CSA 086-14
- TPIC 2014

(55 % OF 33.4 P.S.F. G.S.L. PLUS 8.4 P.S.F. RAIN LOAD) EQUALS 26.7 P.S.F. SPECIFIED ROOF LIVE LOAD

ALLOWABLE DEFL.(LL)= L/360 (0.87")
CALCULATED VERT. DEFL.(LL) = L/ 999 (0.12")
ALLOWABLE DEFL.(TL)= L/360 (0.87")
CALCULATED VERT. DEFL.(TL) = L/ 999 (0.22")

CSI: TC=0.50/1.00 (G-H:1) , BC=0.49/1.00 (N-O:1) , WB=0.52/1.00 (H-K:1) , SSI=0.14/1.00 (E-F:1)

DOL LUMBER=1.00 NAIL=1.00 LS BEND=1.00 COMP=1.00 SHEAR=1.00 TENS= 1.00

COMPANION LIVE LOAD FACTOR = 1.00

AUTOSOLVE HEELS OFF

TRUSS PLATE MANUFACTURER IS NOT RESPONSIBLE FOR QUALITY CONTROL IN THE TRUSS MANUFACTURING PLANT .

NAIL VALUES

PLATE	GRIP(DRY) (PSI) MAX	MIN	SHEAR (PLI) MAX	MIN	SECTION (PLI) MAX	MIN
MT20	650	371	1747	788	1987	1873

PLATE PLACEMENT TOL. = 0.250 inches

PLATE ROTATION TOL. = 5.0 Deg.

JSI GRIP= 0.90 (C) (INPUT = 0.90)
JSI METAL= 0.53 (M) (INPUT = 1.00)

CONTINUED ON PAGE 2

PLATES (table is in inches)

JT	TYPE	PLATES	W	LEN	Y	X
B	TMVW-p	MT20	5.0	6.0	2.00	2.75
C	TTWW-m	MT20	5.0	8.0	2.25	3.25
D, E, F						
D	TMWW-t	MT20	4.0	4.0		
G	TTWW-m	MT20	5.0	8.0	2.25	3.25
H	TMVW-p	MT20	5.0	6.0	2.00	2.75
J	BMV1+p	MT20	3.0	8.0		
K	BMWW-t	MT20	5.0	6.0		
L, N, O, P						
L	BMWW+t	MT20	4.0	6.0		
M	BS-t	MT20	5.0	6.0		
Q	BMWW-t	MT20	5.0	6.0		
R	BMV1+p	MT20	3.0	8.0		

NOTES- (1)
1) Lateral braces to be a minimum of 2X4 SPF #2.

CONNECTION REQUIREMENTS

1) **C1:** A SUITABLE HANGER/MECHANICAL CONNECTION IS REQUIRED.

LICENSED PROFESSIONAL ENGINEER
8/02/22
C. M. HEYENS
100505065
PROVINCE OF ONTARIO

STRUCTURAL COMPONENT ONLY
DWG # TR22080332

JOB NAME	TRUSS NAME	QUANTITY	PLY	JOB DESC.	DRWG NO.
427679	T44	2	1	GREEN PARK HOMES TRUSS DESC.	

Tamarack Roof Truss, Burlington

Version 8.530 S Feb 23 2022 MiTek Industries, Inc. Tue Aug 2 14:52:34 2022 Page 1

ID:bP zphucbY03T7QZqjQJ9Vz?62X-gdAA0DnkE7GqrmmJva3XjOkn1w RjieUHtN72yyrsyB

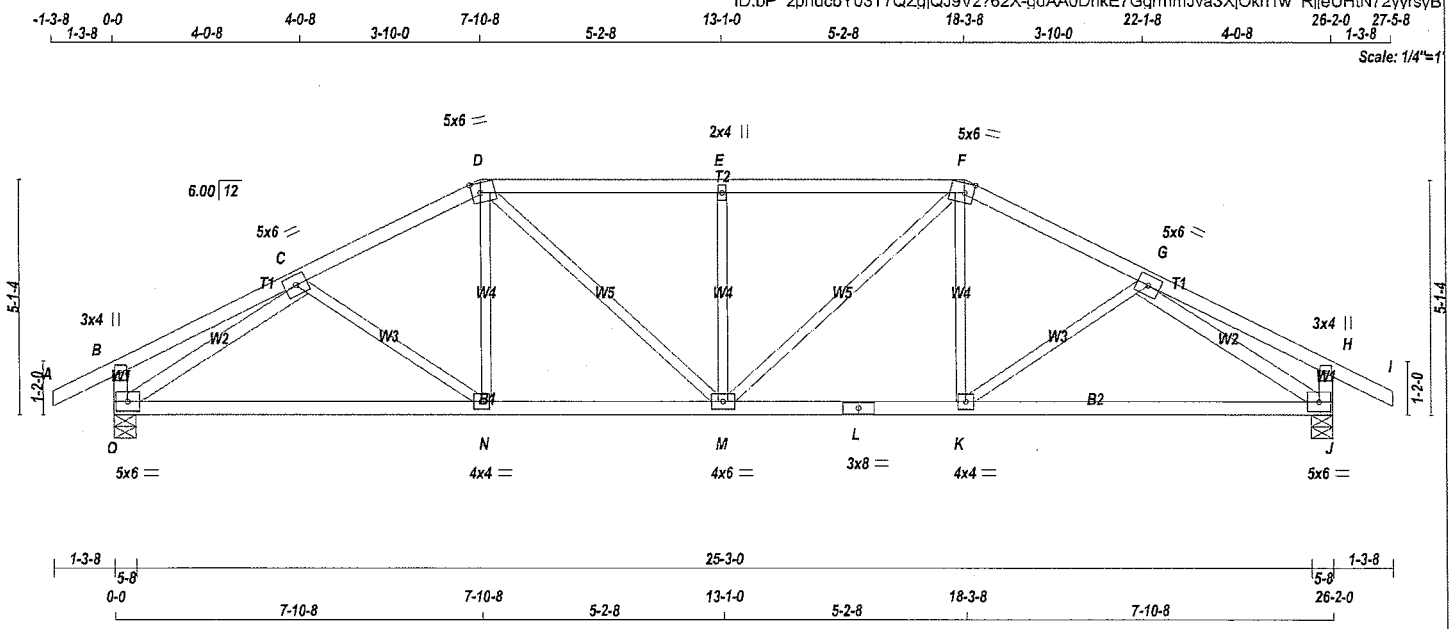

TOTAL WEIGHT = 2 X 107 = 214 lb

[M][F]

LUMBER

N. L. G. A. RULES

CHORDS	SIZE		LUMBER	DESCR.
A - D	2x4	DRY	No.2	SPF
D - F	2x4	DRY	No.2	SPF
F - I	2x4	DRY	No.2	SPF
O - B	2x4	DRY	No.2	SPF
J - H	2x4	DRY	No.2	SPF
O - L	2x4	DRY	No.2	SPF
L - J	2x4	DRY	No.2	SPF
ALL WEBS	2x3	DRY	No.2	SPF
EXCEPT				
O - C	2x4	DRY	No.2	SPF
G - J	2x4	DRY	No.2	SPF

DRY: SEASONED LUMBER.

PLATES (table is in inches)

JT	TYPE	PLATES	W	LEN	Y	X
B	TMV+p	MT20	3.0	4.0		
C	TMWW-t	MT20	5.0	6.0		
D	TTWW-m	MT20	5.0	6.0	2.50	2.25
E	TMW+w	MT20	2.0	4.0		
F	TTWW-m	MT20	5.0	6.0	2.50	2.25
G	TMWW-t	MT20	5.0	6.0		
H	TMV+p	MT20	3.0	4.0		
J	BMVW1-t	MT20	5.0	6.0		
K	BMWW-t	MT20	4.0	4.0		
L	BS-t	MT20	3.0	8.0		
M	BMWWW-t	MT20	4.0	6.0		
N	BMWW-t	MT20	4.0	4.0		
O	BMVW1-t	MT20	5.0	6.0		

NOTES- (1)

1) Lateral braces to be a minimum of 2X4 SPF #2.

LICENSED PROFESSIONAL ENGINEER
8/02/22
C. M. HEYENS
100505065
PROVINCE OF ONTARIO

STRUCTURAL COMPONENT ONLY
DWG # TR22080333

DIMENSIONS, SUPPORTS AND LOADINGS SPECIFIED BY FABRICATOR TO BE VERIFIED BY BUILDING DESIGNER

BEARINGS

JT	FACTORED GROSS REACTION VERT	HORZ	MAXIMUM FACTORED GROSS REACTION DOWN	HORZ	UPLIFT	INPUT BRG IN-SX	REQRD BRG IN-SX
O	1617	0	1617	0	0	5-8	5-8
J	1617	0	1617	0	0	5-8	5-8

UNFACTORED REACTIONS

JT	1ST LCASE COMBINED	MAX./MIN. COMPONENT REACTIONS SNOW	LIVE	PERM.LIVE	WIND	DEAD	SOIL
O	1139	772 / 0	0 / 0	0 / 0	0 / 0	367 / 0	0 / 0
J	1139	772 / 0	0 / 0	0 / 0	0 / 0	367 / 0	0 / 0

BEARING MATERIAL TO BE SPF NO.2 OR BETTER AT JOINT(S) O, J

BRACING

TOP CHORD TO BE SHEATHED OR MAX. PURLIN SPACING = 4.32 FT.
MAX. UNBRACED BOTTOM CHORD LENGTH = 10.00 FT OR RIGID CEILING DIRECTLY APPLIED.

ALL PITCH BREAKS AND PERIMETER CORNER JOINTS MUST BE LATERALLY RESTRAINED.

LOADING

TOTAL LOAD CASES: (4)

CHORDS

MEMB. FR-TO	MAX. FACTORED FORCE (LBS)	FACTORED VERT. LOAD (PLF) FROM	TO	LC1	MAX CSI (LC)	MAX. UNBRAC LENGTH
A- B	0 / 29	-95.2	-95.2	0.12 (1)	10.00	
B- C	0 / 18	-95.2	-95.2	0.22 (1)	10.00	
C- D	-1946 / 0	-95.2	-95.2	0.21 (1)	4.65	
D- E	-2084 / 0	-95.2	-95.2	0.38 (1)	4.32	
E- F	-2084 / 0	-95.2	-95.2	0.38 (1)	4.32	
F- G	-1946 / 0	-95.2	-95.2	0.21 (1)	4.65	
G- H	0 / 18	-95.2	-95.2	0.22 (1)	10.00	
H- I	0 / 29	-95.2	-95.2	0.12 (1)	10.00	
O- B	-278 / 0	0.0	0.0	0.03 (1)	7.81	
J- H	-278 / 0	0.0	0.0	0.03 (1)	7.81	
O- N	0 / 1783	-18.5	-18.5	0.43 (1)	10.00	
N- M	0 / 1727	-18.5	-18.5	0.42 (1)	10.00	
M- L	0 / 1727	-18.5	-18.5	0.42 (1)	10.00	
L- K	0 / 1727	-18.5	-18.5	0.42 (1)	10.00	
K- J	0 / 1783	-18.5	-18.5	0.43 (1)	10.00	

WEBS

MEMB. FR-TO	MAX. FACTORED FORCE (LBS)	MAX CSI (LC)
C- N	-74 / 41	0.03 (1)
N- D	0 / 197	0.05 (4)
D- M	0 / 486	0.11 (1)
M- E	-606 / 0	0.23 (1)
M- F	0 / 486	0.11 (1)
K- F	0 / 197	0.05 (4)
K- G	-74 / 41	0.03 (1)
O- C	-2194 / 0	0.61 (1)
G- J	-2194 / 0	0.61 (1)

DESIGN CRITERIA

SPECIFIED LOADS:

TOP CH.	LL	=	26.7	PSF
	DL	=	6.0	PSF
BOT CH.	LL	=	0.0	PSF
	DL	=	7.4	PSF
TOTAL LOAD		=	40.1	PSF

SPACING = 24.0 IN. C/C

LOADING IN FLAT SECTION BASED ON A SLOPE OF 6.00/12

THIS TRUSS IS DESIGNED FOR RESIDENTIAL OR SMALL BUILDING REQUIREMENTS OF PART 9, NBCC 2015

THIS DESIGN COMPLIES WITH:
- PART 9 OF BCBC 2018 , ABC 2019
- PART 9 OF OBC 2012 (2019 AMENDMENT)
- CSA 086-14
- TPIC 2014

(55 % OF 33.4 P.S.F. G.S.L. PLUS 8.4 P.S.F. RAIN LOAD) EQUALS 26.7 P.S.F. SPECIFIED ROOF LIVE LOAD

ALLOWABLE DEFL.(LL)= L/360 (0.87")
CALCULATED VERT. DEFL.(LL) = L/ 999 (0.08")
ALLOWABLE DEFL.(TL)= L/360 (0.87")
CALCULATED VERT. DEFL.(TL) = L/ 999 (0.17")

CSI: TC=0.38/1.00 (D-E:1) , BC=0.43/1.00 (N-O:1) , WB=0.61/1.00 (G-J:1) , SSI=0.24/1.00 (D-E:1)

DOL LUMBER=1.00 NAIL=1.00 LS BEND=1.10 COMP=1.10 SHEAR=1.10 TENS= 1.10

COMPANION LIVE LOAD FACTOR = 1.00

AUTOSOLVE HEELS OFF

TRUSS PLATE MANUFACTURER IS NOT RESPONSIBLE FOR QUALITY CONTROL IN THE TRUSS MANUFACTURING PLANT .

NAIL VALUES

PLATE	GRIP(DRY) (PSI) MAX	MIN	SHEAR (PLI) MAX	MIN	SECTION (PLI) MAX	MIN
MT20	650	371	1747	788	1987	1873

PLATE PLACEMENT TOL. = 0.250 inches

PLATE ROTATION TOL. = 5.0 Deg.

JSI GRIP= 0.85 (D) (INPUT = 0.90)
JSI METAL= 0.49 (L) (INPUT = 1.00)

JOB NAME	TRUSS NAME	QUANTITY	PLY	JOB DESC.	DRWG NO.
427679	T45	2	1	GREEN PARK HOMES TRUSS DESC.	

Tamarack Roof Truss, Burlington

Version 8.530 S Feb 23 2022 MiTek Industries, Inc. Tue Aug 2 14:52:35 2022 Page 1

ID:bP zphucbY03T7QZqjQJ9Vz?62X-8pkYDZoM?ROXTwLVTHamGcHy?KICS6xdWX6gbPyrsyA

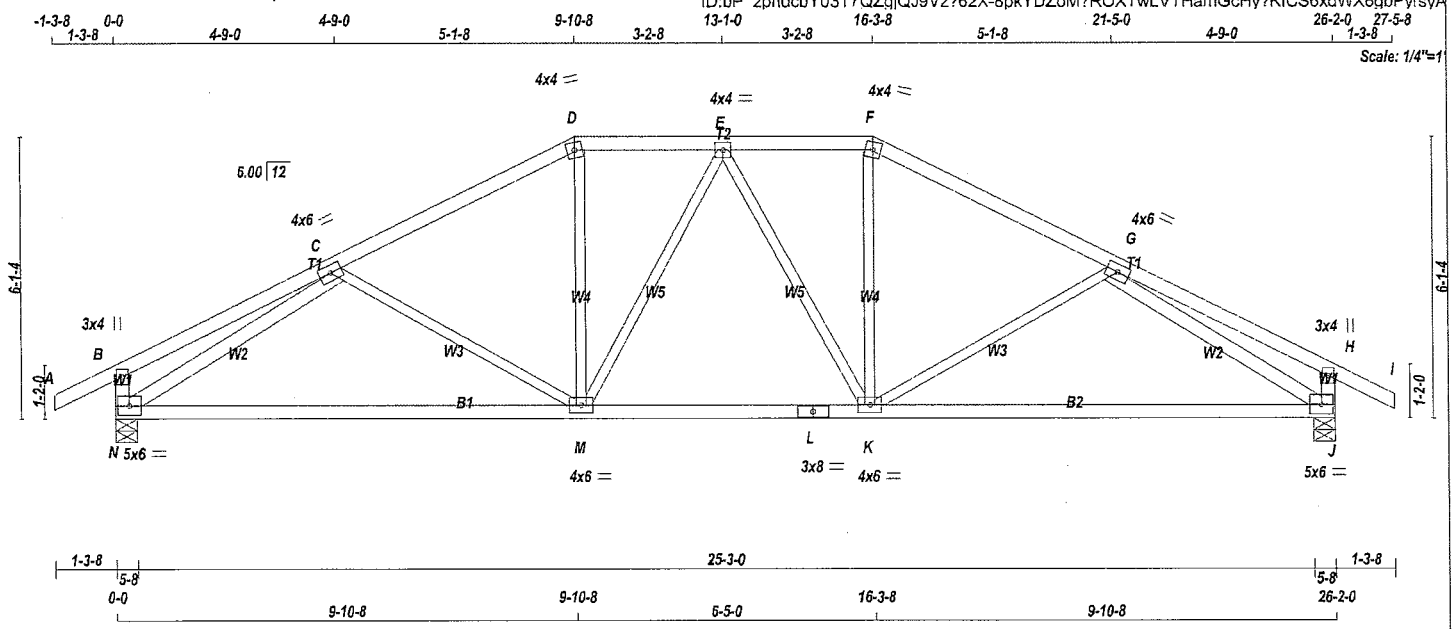

TOTAL WEIGHT = 2 X 109 = 217 lb

LUMBER

N. L. G. A. RULES

CHORDS	SIZE		LUMBER	DESCR.
A - D	2x4	DRY	No.2	SPF
D - F	2x4	DRY	No.2	SPF
F - I	2x4	DRY	No.2	SPF
N - B	2x4	DRY	No.2	SPF
J - H	2x4	DRY	No.2	SPF
N - L	2x4	DRY	No.2	SPF
L - J	2x4	DRY	No.2	SPF
ALL WEBS	2x3	DRY	No.2	SPF
EXCEPT				
N - C	2x4	DRY	No.2	SPF
G - J	2x4	DRY	No.2	SPF

DRY: SEASONED LUMBER.

PLATES (table is in inches)

JT	TYPE	PLATES	W	LEN	Y	X
B	TMV+p	MT20	3.0	4.0		
C	TMWW-t	MT20	4.0	6.0		
D	TTW-m	MT20	4.0	4.0		
E	TMWW-t	MT20	4.0	4.0		
F	TTW-m	MT20	4.0	4.0		
G	TMWW-t	MT20	4.0	6.0		
H	TMV+p	MT20	3.0	4.0		
J	BMVW1-t	MT20	5.0	6.0		
K	BMWWW-t	MT20	4.0	6.0		
L	BS-t	MT20	3.0	8.0		
M	BMWWW-t	MT20	4.0	6.0		
N	BMVW1-t	MT20	5.0	6.0		

NOTES- (1)

1) Lateral braces to be a minimum of 2X4 SPF #2.

LICENSED PROFESSIONAL ENGINEER
8/02/22
C. M. HEYENS
100505065
PROVINCE OF ONTARIO

STRUCTURAL COMPONENT ONLY
DWG # TR22080334

DIMENSIONS, SUPPORTS AND LOADINGS SPECIFIED BY FABRICATOR TO BE VERIFIED BY BUILDING DESIGNER

BEARINGS

JT	FACTORED GROSS REACTION VERT	HORZ	MAXIMUM FACTORED GROSS REACTION DOWN	HORZ	UPLIFT	INPUT BRG IN-SX	REQRD BRG IN-SX
N	1617	0	1617	0	0	5-8	5-8
J	1617	0	1617	0	0	5-8	5-8

UNFACTORED REACTIONS

JT	1ST LCASE COMBINED	MAX./MIN. COMPONENT REACTIONS SNOW	LIVE	PERM.LIVE	WIND	DEAD	SOIL
N	1139	772 / 0	0 / 0	0 / 0	0 / 0	367 / 0	0 / 0
J	1139	772 / 0	0 / 0	0 / 0	0 / 0	367 / 0	0 / 0

BEARING MATERIAL TO BE SPF NO.2 OR BETTER AT JOINT(S) N, J

BRACING

TOP CHORD TO BE SHEATHED OR MAX. PURLIN SPACING = 4.64 FT.
MAX. UNBRACED BOTTOM CHORD LENGTH = 10.00 FT OR RIGID CEILING DIRECTLY APPLIED.

ALL PITCH BREAKS AND PERIMETER CORNER JOINTS MUST BE LATERALLY RESTRAINED.

LOADING

TOTAL LOAD CASES: (4)

CHORDS MEMB. FR-TO	MAX. FACTORED FORCE (LBS)	FACTORED VERT. LOAD (PLF) FROM	TO	LC1	MAX CSI (LC)	MAX. UNBRAC LENGTH	WEBS MEMB. FR-TO	MAX. FACTORED FORCE (LBS)	MAX CSI (LC)
A- B	0 / 29	-95.2	-95.2	0.12 (1)	10.00		C- M	-262 / 0	0.18 (1)
B- C	0 / 26	-95.2	-95.2	0.37 (1)	10.00		M- D	0 / 480	0.11 (1)
C- D	-1808 / 0	-95.2	-95.2	0.35 (1)	4.64		M- E	-205 / 0	0.16 (1)
D- E	-1604 / 0	-95.2	-95.2	0.14 (1)	5.10		E- K	-205 / 0	0.16 (1)
E- F	-1604 / 0	-95.2	-95.2	0.14 (1)	5.10		K- F	0 / 480	0.11 (1)
F- G	-1808 / 0	-95.2	-95.2	0.35 (1)	4.64		K- G	-262 / 0	0.18 (1)
G- H	0 / 26	-95.2	-95.2	0.37 (1)	10.00		N- C	-2204 / 0	0.86 (1)
H- I	0 / 29	-95.2	-95.2	0.12 (1)	10.00		G- J	-2204 / 0	0.86 (1)
N- B	-295 / 0	0.0	0.0	0.03 (1)	7.81				
J- H	-295 / 0	0.0	0.0	0.03 (1)	7.81				
N- M	0 / 1820	-18.5	-18.5	0.52 (1)	10.00				
M- L	0 / 1700	-18.5	-18.5	0.48 (4)	10.00				
L- K	0 / 1700	-18.5	-18.5	0.48 (4)	10.00				
K- J	0 / 1820	-18.5	-18.5	0.52 (1)	10.00				

[M][F]

DESIGN CRITERIA

SPECIFIED LOADS:

TOP CH.	LL	=	26.7	PSF
	DL	=	6.0	PSF
BOT CH.	LL	=	0.0	PSF
	DL	=	7.4	PSF
TOTAL LOAD		=	40.1	PSF

SPACING = 24.0 IN. C/C

LOADING IN FLAT SECTION BASED ON A SLOPE OF 6.00/12

THIS TRUSS IS DESIGNED FOR RESIDENTIAL OR SMALL BUILDING REQUIREMENTS OF PART 9, NBCC 2015

THIS DESIGN COMPLIES WITH:
- PART 9 OF BCBC 2018 , ABC 2019
- PART 9 OF OBC 2012 (2019 AMENDMENT)
- CSA 086-14
- TPIC 2014

(55 % OF 33.4 P.S.F. G.S.L. PLUS 8.4 P.S.F. RAIN LOAD) EQUALS 26.7 P.S.F. SPECIFIED ROOF LIVE LOAD

ALLOWABLE DEFL.(LL)= L/360 (0.87")
CALCULATED VERT. DEFL.(LL) = L/ 999 (0.08")
ALLOWABLE DEFL.(TL)= L/360 (0.87")
CALCULATED VERT. DEFL.(TL) = L/ 894 (0.35")

CSI: TC=0.37/1.00 (B-C:1) , BC=0.52/1.00 (M-N:1) , WB=0.86/1.00 (G-J:1) , SSI=0.21/1.00 (F-G:1)

DOL LUMBER=1.00 NAIL=1.00 LS BEND=1.10 COMP=1.10 SHEAR=1.10 TENS= 1.10

COMPANION LIVE LOAD FACTOR = 1.00

AUTOSOLVE HEELS OFF

TRUSS PLATE MANUFACTURER IS NOT RESPONSIBLE FOR QUALITY CONTROL IN THE TRUSS MANUFACTURING PLANT .

NAIL VALUES

PLATE	GRIP(DRY) (PSI) MAX	MIN	SHEAR (PLI) MAX	MIN	SECTION (PLI) MAX	MIN
MT20	650	371	1747	788	1987	1873

PLATE PLACEMENT TOL. = 0.250 inches

PLATE ROTATION TOL. = 5.0 Deg.

JSI GRIP= 0.84 (C) (INPUT = 0.90)
JSI METAL= 0.69 (L) (INPUT = 1.00)

JOB NAME	TRUSS NAME	QUANTITY	PLY	JOB DESC.	DRWG NO.
427679	T46	2	1	GREEN PARK HOMES TRUSS DESC.	

Tamarack Roof Truss, Burlington

Version 8.530 S Feb 23 2022 MiTek Industries, Inc. Tue Aug 2 14:52:35 2022 Page 1

ID:bP zphucbY03T7QZqjQJ9Vz?62X-8pkYDZoM?ROXTwLVTHamGcHvhKLRSBmdWX6qbPyrsyA

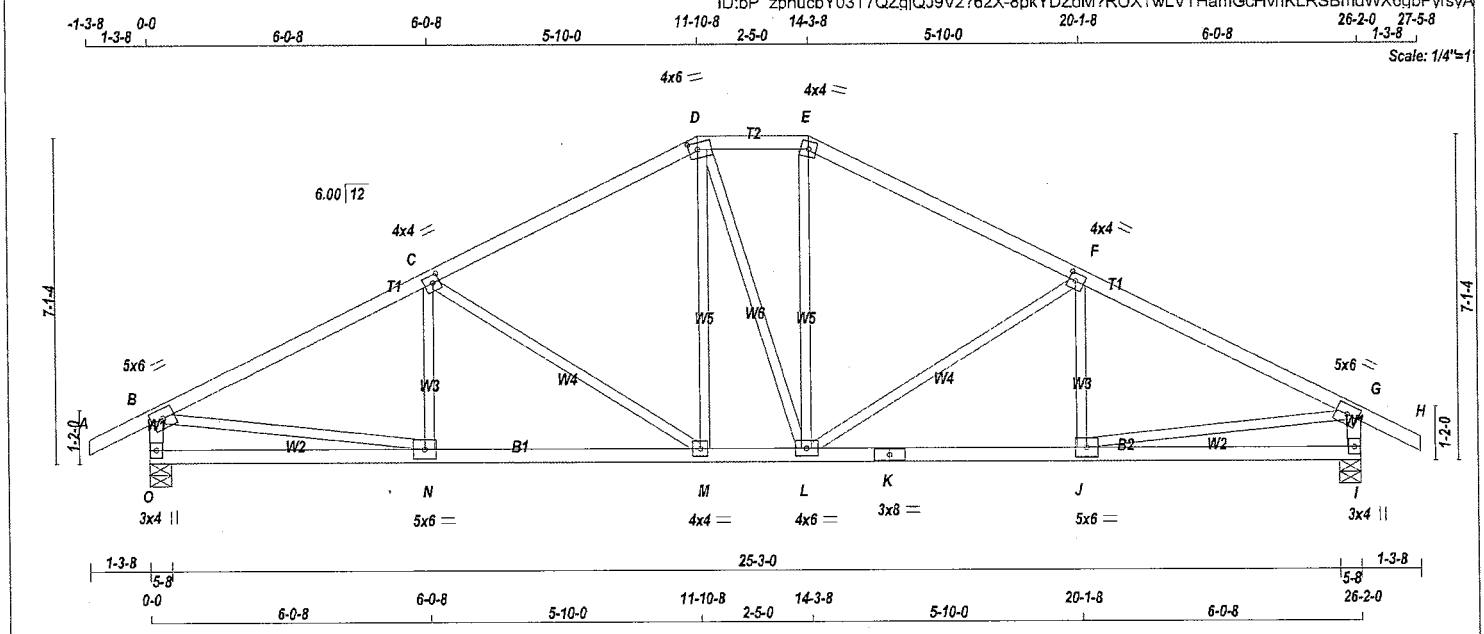

TOTAL WEIGHT = 2 X 110 = 221 lb

[M][F]

LUMBER

N. L. G. A. RULES

CHORDS	SIZE		LUMBER	DESCR.
A - D	2x4	DRY	No.2	SPF
D - E	2x4	DRY	No.2	SPF
E - H	2x4	DRY	No.2	SPF
O - B	2x4	DRY	No.2	SPF
I - G	2x4	DRY	No.2	SPF
O - K	2x4	DRY	No.2	SPF
K - I	2x4	DRY	No.2	SPF
ALL WEBS EXCEPT	2x3	DRY	No.2	SPF

DRY: SEASONED LUMBER.

PLATES (table is in inches)

JT	TYPE	PLATES	W	LEN	Y	X
B	TMVW-t	MT20	5.0	6.0		
C	TMWW-t	MT20	4.0	4.0	2.00	1.75
D	TTWW-m	MT20	4.0	6.0	1.75	2.25
E	TTW-m	MT20	4.0	4.0		
F	TMWW-t	MT20	4.0	4.0	2.00	1.75
G	TMVW-t	MT20	5.0	6.0		
I	BMV1+p	MT20	3.0	4.0		
J	BMWW-t	MT20	5.0	6.0		
K	BS-t	MT20	3.0	8.0		
L	BMWWW-t	MT20	4.0	6.0		
M	BMWW-t	MT20	4.0	4.0		
N	BMWW-t	MT20	5.0	6.0		
O	BMV1+p	MT20	3.0	4.0		

NOTES- (1)

1) Lateral braces to be a minimum of 2X4 SPF #2.

DIMENSIONS, SUPPORTS AND LOADINGS SPECIFIED BY FABRICATOR TO BE VERIFIED BY BUILDING DESIGNER

BEARINGS

JT	FACTORED GROSS REACTION VERT	HORZ	MAXIMUM FACTORED GROSS REACTION DOWN	HORZ	UPLIFT	INPUT BRG IN-SX	REQRD BRG IN-SX
O	1617	0	1617	0	0	5-8	5-8
I	1617	0	1617	0	0	5-8	5-8

UNFACTORED REACTIONS

JT	1ST LCASE COMBINED	MAX./MIN. COMPONENT REACTIONS SNOW	LIVE	PERM.LIVE	WIND	DEAD	SOIL
O	1139	772 / 0	0 / 0	0 / 0	0 / 0	367 / 0	0 / 0
I	1139	772 / 0	0 / 0	0 / 0	0 / 0	367 / 0	0 / 0

BEARING MATERIAL TO BE SPF NO.2 OR BETTER AT JOINT(S) O, I

BRACING

TOP CHORD TO BE SHEATHED OR MAX. PURLIN SPACING = 4.16 FT.
MAX. UNBRACED BOTTOM CHORD LENGTH = 10.00 FT OR RIGID CEILING DIRECTLY APPLIED.

ALL PITCH BREAKS AND PERIMETER CORNER JOINTS MUST BE LATERALLY RESTRAINED.

LOADING

TOTAL LOAD CASES: (4)

CHORDS MEMB. FR-TO	MAX. FACTORED FORCE (LBS)	FACTORED VERT. LOAD LC1 (PLF) FROM	TO	MAX CSI (LC)	MAX. UNBRAC LENGTH	WEBS MEMB. FR-TO	MAX. FACTORED FORCE (LBS)	MAX CSI (LC)
A- B	0 / 29	-95.2	-95.2	0.12 (1)	10.00	N- C	-146 / 55	0.04 (1)
B- C	-2093 / 0	-95.2	-95.2	0.52 (1)	4.16	C- M	-575 / 0	0.55 (1)
C- D	-1616 / 0	-95.2	-95.2	0.47 (1)	4.67	M- D	0 / 381	0.09 (1)
D- E	-1424 / 0	-95.2	-95.2	0.09 (1)	5.39	D- L	0 / 5	0.00 (1)
E- F	-1617 / 0	-95.2	-95.2	0.47 (1)	4.66	L- E	0 / 387	0.09 (1)
F- G	-2092 / 0	-95.2	-95.2	0.52 (1)	4.16	L- F	-573 / 0	0.55 (1)
G- H	0 / 29	-95.2	-95.2	0.12 (1)	10.00	J- F	-149 / 54	0.04 (1)
O- B	-1570 / 0	0.0	0.0	0.16 (1)	6.58	B- N	0 / 1917	0.43 (1)
I- G	-1569 / 0	0.0	0.0	0.16 (1)	6.58	J- G	0 / 1917	0.43 (1)
O- N	0 / 0	-18.5	-18.5	0.16 (4)	10.00			
N- M	0 / 1898	-18.5	-18.5	0.38 (1)	10.00			
M- L	0 / 1423	-18.5	-18.5	0.28 (1)	10.00			
L- K	0 / 1898	-18.5	-18.5	0.37 (1)	10.00			
K- J	0 / 1898	-18.5	-18.5	0.37 (1)	10.00			
J- I	0 / 0	-18.5	-18.5	0.16 (4)	10.00			

DESIGN CRITERIA

SPECIFIED LOADS:

TOP CH.	LL	=	26.7	PSF
	DL	=	6.0	PSF
BOT CH.	LL	=	0.0	PSF
	DL	=	7.4	PSF
TOTAL LOAD		=	40.1	PSF

SPACING = 24.0 IN. C/C

LOADING IN FLAT SECTION BASED ON A SLOPE OF 6.00/12

THIS TRUSS IS DESIGNED FOR RESIDENTIAL OR SMALL BUILDING REQUIREMENTS OF PART 9, NBCC 2015

THIS DESIGN COMPLIES WITH:
- PART 9 OF BCBC 2018 , ABC 2019
- PART 9 OF OBC 2012 (2019 AMENDMENT)
- CSA 086-14
- TPIC 2014

(55 % OF 33.4 P.S.F. G.S.L. PLUS 8.4 P.S.F. RAIN LOAD) EQUALS 26.7 P.S.F. SPECIFIED ROOF LIVE LOAD

ALLOWABLE DEFL.(LL)= L/360 (0.87")
CALCULATED VERT. DEFL.(LL) = L/ 999 (0.08")
ALLOWABLE DEFL.(TL)= L/360 (0.87")
CALCULATED VERT. DEFL.(TL) = L/ 999 (0.16")

CSI: TC=0.52/1.00 (B-C:1) , BC=0.38/1.00 (M-N:1) , WB=0.55/1.00 (C-M:1) , SSI=0.25/1.00 (F-G:1)

DOL LUMBER=1.00 NAIL=1.00 LS BEND=1.10 COMP=1.10 SHEAR=1.10 TENS= 1.10

COMPANION LIVE LOAD FACTOR = 1.00

TRUSS PLATE MANUFACTURER IS NOT RESPONSIBLE FOR QUALITY CONTROL IN THE TRUSS MANUFACTURING PLANT .

NAIL VALUES

PLATE	GRIP(DRY) (PSI) MAX	MIN	SHEAR (PLI) MAX	MIN	SECTION (PLI) MAX	MIN
MT20	650	371	1747	788	1987	1873

PLATE PLACEMENT TOL. = 0.250 inches

PLATE ROTATION TOL. = 5.0 Deg.

JSI GRIP= 0.82 (B) (INPUT = 0.90)
JSI METAL= 0.60 (K) (INPUT = 1.00)

LICENSED PROFESSIONAL ENGINEER
8/02/22
C. M. HEYENS
100505065
PROVINCE OF ONTARIO

STRUCTURAL COMPONENT ONLY
DWG # TR22080335

JOB NAME	TRUSS NAME	QUANTITY	PLY	JOB DESC.	DRWG NO.
427679	T47	2	1	GREEN PARK HOMES TRUSS DESC.	

Tamarack Roof Truss, Burlington

Version 8.530 S Feb 23 2022 MiTek Industries, Inc. Tue Aug 2 14:52:36 2022 Page 1

ID:bP zphucbY03T7QZqjQJ9Vz?62X-c?IwQuo mIWO44wh1?5?opp3VjqRBdYnlBsE7ryrsy9

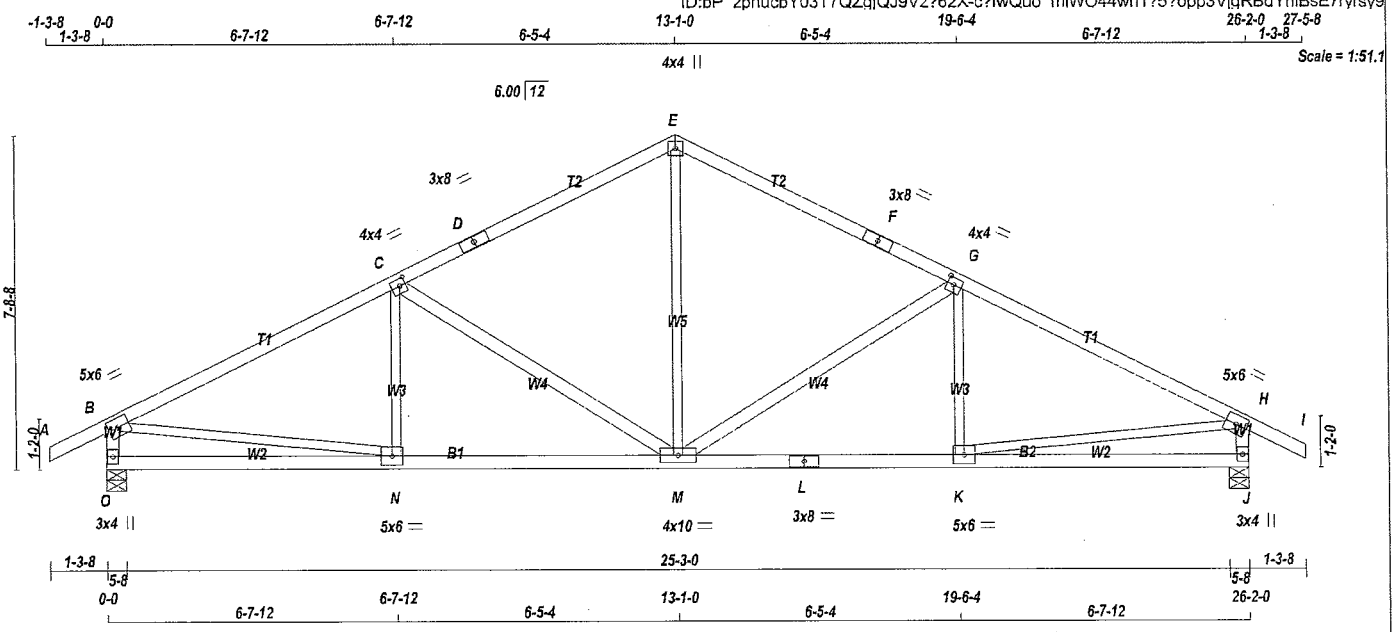

TOTAL WEIGHT = 2 X 108 = 215 lb

[M][F]

LUMBER

N. L. G. A. RULES

CHORDS	SIZE		LUMBER	DESCR.
A - D	2x4	DRY	No.2	SPF
D - E	2x4	DRY	No.2	SPF
E - F	2x4	DRY	No.2	SPF
F - I	2x4	DRY	No.2	SPF
O - B	2x4	DRY	No.2	SPF
J - H	2x4	DRY	No.2	SPF
O - L	2x4	DRY	No.2	SPF
L - J	2x4	DRY	No.2	SPF
ALL WEBS EXCEPT	2x3	DRY	No.2	SPF
M - G	2x4	DRY	No.2	SPF
C - M	2x4	DRY	No.2	SPF

DRY: SEASONED LUMBER.

PLATES (table is in inches)

JT	TYPE	PLATES	W	LEN	Y	X
B	TMVW-t	MT20	5.0	6.0		
C	TMWW-t	MT20	4.0	4.0	2.00	1.75
D	TS-t	MT20	3.0	8.0		
E	TTW+p	MT20	4.0	4.0		
F	TS-t	MT20	3.0	8.0		
G	TMWW-t	MT20	4.0	4.0	2.00	1.75
H	TMVW-t	MT20	5.0	6.0		
J	BMV1+p	MT20	3.0	4.0		
K	BMWW-t	MT20	5.0	6.0		
L	BS-t	MT20	3.0	8.0		
M	BMWWW-t	MT20	4.0	10.0		
N	BMWW-t	MT20	5.0	6.0		
O	BMV1+p	MT20	3.0	4.0		

NOTES- (1)

1) Lateral braces to be a minimum of 2X4 SPF #2.

LICENSED PROFESSIONAL ENGINEER
8/02/22
C. M. HEYENS
100505065
PROVINCE OF ONTARIO

STRUCTURAL COMPONENT ONLY
DWG # TR22080336

DIMENSIONS, SUPPORTS AND LOADINGS SPECIFIED BY FABRICATOR TO BE VERIFIED BY BUILDING DESIGNER

BEARINGS

JT	FACTORED GROSS REACTION VERT	HORZ	MAXIMUM FACTORED DOWN	HORZ	UPLIFT	INPUT BRG IN-SX	REQRD BRG IN-SX
O	1617	0	1617	0	0	5-8	5-8
J	1617	0	1617	0	0	5-8	5-8

UNFACTORED REACTIONS

JT	1ST LCASE COMBINED	MAX./MIN. COMPONENT REACTIONS SNOW	LIVE	PERM.LIVE	WIND	DEAD	SOIL
O	1139	772 / 0	0 / 0	0 / 0	0 / 0	367 / 0	0 / 0
J	1139	772 / 0	0 / 0	0 / 0	0 / 0	367 / 0	0 / 0

BEARING MATERIAL TO BE SPF NO.2 OR BETTER AT JOINT(S) O, J

BRACING

TOP CHORD TO BE SHEATHED OR MAX. PURLIN SPACING = 3.98 FT.
MAX. UNBRACED BOTTOM CHORD LENGTH = 10.00 FT OR RIGID CEILING DIRECTLY APPLIED.

ALL PITCH BREAKS AND PERIMETER CORNER JOINTS MUST BE LATERALLY RESTRAINED.

LOADING

TOTAL LOAD CASES: (4)

CHORDS

MEMB. FR-TO	MAX. FACTORED FORCE (LBS)	FACTORED VERT. LOAD (PLF) FROM	TO	LC1 MAX CSI (LC)	MAX. UNBRAC LENGTH
A- B	0 / 29	-95.2	-95.2	0.12 (1)	10.00
B- C	-2087 / 0	-95.2	-95.2	0.64 (1)	3.98
C- D	-1513 / 0	-95.2	-95.2	0.57 (1)	4.63
D- E	-1513 / 0	-95.2	-95.2	0.57 (1)	4.63
E- F	-1513 / 0	-95.2	-95.2	0.57 (1)	4.63
F- G	-1513 / 0	-95.2	-95.2	0.57 (1)	4.63
G- H	-2087 / 0	-95.2	-95.2	0.64 (1)	3.98
H- I	0 / 29	-95.2	-95.2	0.12 (1)	10.00
O- B	-1565 / 0	0.0	0.0	0.16 (1)	6.59
J- H	-1565 / 0	0.0	0.0	0.16 (1)	6.59
O- N	0 / 0	-18.5	-18.5	0.19 (4)	10.00
N- M	0 / 1896	-18.5	-18.5	0.39 (1)	10.00
M- L	0 / 1896	-18.5	-18.5	0.39 (1)	10.00
L- K	0 / 1896	-18.5	-18.5	0.39 (1)	10.00
K- J	0 / 0	-18.5	-18.5	0.19 (4)	10.00

WEBS

MEMB. FR-TO	MAX. FACTORED FORCE (LBS)	MAX CSI (LC)
M- E	0 / 862	0.19 (1)
M- G	-684 / 0	0.58 (1)
K- G	-114 / 73	0.03 (1)
C- M	-684 / 0	0.58 (1)
N- C	-114 / 73	0.03 (1)
B- N	0 / 1912	0.43 (1)
K- H	0 / 1912	0.43 (1)

DESIGN CRITERIA

SPECIFIED LOADS:

TOP CH.	LL	=	26.7	PSF
	DL	=	6.0	PSF
BOT CH.	LL	=	0.0	PSF
	DL	=	7.4	PSF
TOTAL LOAD		=	40.1	PSF

SPACING = 24.0 IN. C/C

THIS TRUSS IS DESIGNED FOR RESIDENTIAL OR SMALL BUILDING REQUIREMENTS OF PART 9, NBCC 2015

THIS DESIGN COMPLIES WITH:
- PART 9 OF BCBC 2018 , ABC 2019
- PART 9 OF OBC 2012 (2019 AMENDMENT)
- CSA 086-14
- TPIC 2014

(55 % OF 33.4 P.S.F. G.S.L. PLUS 8.4 P.S.F. RAIN LOAD) EQUALS 26.7 P.S.F. SPECIFIED ROOF LIVE LOAD

ALLOWABLE DEFL.(LL)= L/360 (0.87")
CALCULATED VERT. DEFL.(LL) = L/ 999 (0.08")
ALLOWABLE DEFL.(TL)= L/360 (0.87")
CALCULATED VERT. DEFL.(TL) = L/ 999 (0.16")

CSI: TC=0.64/1.00 (B-C:1) , BC=0.39/1.00 (M-N:1) , WB=0.58/1.00 (C-M:1) , SSI=0.27/1.00 (B-C:1)

DOL LUMBER=1.00 NAIL=1.00 LS BEND=1.10 COMP=1.10 SHEAR=1.10 TENS= 1.10

COMPANION LIVE LOAD FACTOR = 1.00

TRUSS PLATE MANUFACTURER IS NOT RESPONSIBLE FOR QUALITY CONTROL IN THE TRUSS MANUFACTURING PLANT .

NAIL VALUES

PLATE	GRIP(DRY) (PSI) MAX	MIN	SHEAR (PLI) MAX	MIN	SECTION (PLI) MAX	MIN
MT20	650	371	1747	788	1987	1873

PLATE PLACEMENT TOL. = 0.250 inches

PLATE ROTATION TOL. = 5.0 Deg.

JSI GRIP= 0.82 (B) (INPUT = 0.90)
JSI METAL= 0.62 (L) (INPUT = 1.00)

JOB NAME	TRUSS NAME	QUANTITY	PLY	JOB DESC.	DRWG NO.
427679	T47A	8	1	GREEN PARK HOMES TRUSS DESC.	

Tamarack Roof Truss, Burlington

Version 8.530 S Feb 23 2022 MiTek Industries, Inc. Tue Aug 2 14:52:37 2022 Page 1
ID:bP zphucbY03T7QZqjQJ9Vz?62X-4CsJeEpcX2eFiDVuaicEL1MFQ72Bw2jwzrbnfHyrsy8

Scale = 1:49.0

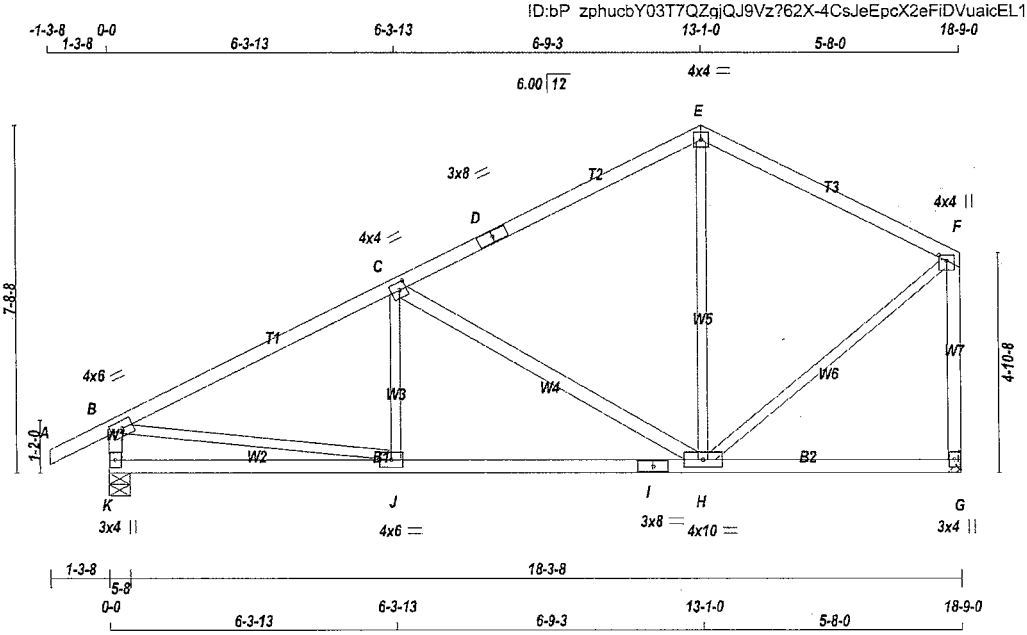

TOTAL WEIGHT = 8 X 81 = 648 lb

[M][F]

LUMBER

N. L. G. A. RULES

CHORDS	SIZE		LUMBER	DESCR.
A - D	2x4	DRY	No.2	SPF
D - E	2x4	DRY	No.2	SPF
E - F	2x4	DRY	No.2	SPF
K - B	2x4	DRY	No.2	SPF
G - F	2x4	DRY	No.2	SPF
K - I	2x4	DRY	No.2	SPF
I - G	2x4	DRY	No.2	SPF
ALL WEBS EXCEPT	2x3	DRY	No.2	SPF
C - H	2x4	DRY	No.2	SPF

DRY: SEASONED LUMBER.

PLATES (table is in inches)

JT	TYPE	PLATES	W	LEN	Y	X
B	TMVW-t	MT20	4.0	6.0		
C	TMWW-t	MT20	4.0	4.0	2.00	1.75
D	TS-t	MT20	3.0	8.0		
E	TTW-p	MT20	4.0	4.0		
F	TMVW+p	MT20	4.0	4.0	1.50	2.00
G	BMV1+p	MT20	3.0	4.0		
H	BMWWW-t	MT20	4.0	10.0		
I	BS-t	MT20	3.0	8.0		
J	BMWW-t	MT20	4.0	6.0		
K	BMV1+p	MT20	3.0	4.0		

NOTES- (1)
1) Lateral braces to be a minimum of 2X4 SPF #2.

DIMENSIONS, SUPPORTS AND LOADINGS SPECIFIED BY FABRICATOR TO BE VERIFIED BY BUILDING DESIGNER

BEARINGS

JT	FACTORED GROSS REACTION VERT	HORZ	MAXIMUM FACTORED GROSS REACTION DOWN	HORZ	UPLIFT	INPUT BRG IN-SX	REQRD BRG IN-SX
K	1195	0	1195	0	0	5-8	5-8
G	1066	0	1066	0	0	MECHANICAL	

A SUITABLE HANGER/MECHANICAL CONNECTION IS REQUIRED AT JOINT G. MINIMUM BEARING LENGTH AT JOINT G = 3-8.

UNFACTORED REACTIONS

JT	1ST LCASE COMBINED	MAX./MIN. COMPONENT REACTIONS SNOW	LIVE	PERM.LIVE	WIND	DEAD	SOIL
K	841	574 / 0	0 / 0	0 / 0	0 / 0	268 / 0	0 / 0
G	753	501 / 0	0 / 0	0 / 0	0 / 0	251 / 0	0 / 0

BEARING MATERIAL TO BE SPF NO.2 OR BETTER AT JOINT(S) K

BRACING

TOP CHORD TO BE SHEATHED OR MAX. PURLIN SPACING = 4.81 FT.
MAX. UNBRACED BOTTOM CHORD LENGTH = 10.00 FT OR RIGID CEILING DIRECTLY APPLIED.

ALL PITCH BREAKS AND PERIMETER CORNER JOINTS MUST BE LATERALLY RESTRAINED.

LOADING

TOTAL LOAD CASES: (4)

CHORDS

MEMB. FR-TO	MAX. FACTORED FORCE (LBS)	FACTORED VERT. LOAD (PLF) FROM	TO	LC1 MAX CSI (LC)	MAX. UNBRAC LENGTH
A- B	0 / 29	-95.2	-95.2	0.12 (1)	10.00
B- C	-1364 / 0	-95.2	-95.2	0.56 (1)	4.81
C- D	-680 / 0	-95.2	-95.2	0.55 (1)	6.25
D- E	-680 / 0	-95.2	-95.2	0.55 (1)	6.25
E- F	-647 / 0	-95.2	-95.2	0.40 (1)	6.25
K- B	-1147 / 0	0.0	0.0	0.12 (1)	7.43
G- F	-1026 / 0	0.0	0.0	0.43 (1)	7.74
K- J	0 / 0	-18.5	-18.5	0.18 (4)	10.00
J- I	0 / 1252	-18.5	-18.5	0.29 (1)	10.00
I- H	0 / 1252	-18.5	-18.5	0.29 (1)	10.00
H- G	0 / 0	-18.5	-18.5	0.16 (4)	10.00

WEBS

MEMB. FR-TO	MAX. FACTORED FORCE (LBS)	MAX CSI (LC)
J- C	-39 / 95	0.03 (4)
C- H	-783 / 0	0.72 (1)
H- E	0 / 107	0.04 (4)
B- J	0 / 1263	0.28 (1)
H- F	0 / 743	0.17 (1)

DESIGN CRITERIA

SPECIFIED LOADS:

TOP CH.	LL	=	26.7	PSF
	DL	=	6.0	PSF
BOT CH.	LL	=	0.0	PSF
	DL	=	7.4	PSF
TOTAL LOAD		=	40.1	PSF

SPACING = 24.0 IN. C/C

THIS TRUSS IS DESIGNED FOR RESIDENTIAL OR SMALL BUILDING REQUIREMENTS OF PART 9, NBCC 2015

THIS DESIGN COMPLIES WITH:
- PART 9 OF BCBC 2018 , ABC 2019
- PART 9 OF OBC 2012 (2019 AMENDMENT)
- CSA 086-14
- TPIC 2014

(55 % OF 33.4 P.S.F. G.S.L. PLUS 8.4 P.S.F. RAIN LOAD) EQUALS 26.7 P.S.F. SPECIFIED ROOF LIVE LOAD

ALLOWABLE DEFL.(LL)= L/360 (0.63")
CALCULATED VERT. DEFL.(LL) = L/ 999 (0.04")
ALLOWABLE DEFL.(TL)= L/360 (0.63")
CALCULATED VERT. DEFL.(TL) = L/ 999 (0.08")

CSI: TC=0.56/1.00 (B-C:1) , BC=0.29/1.00 (H-J:1) , WB=0.72/1.00 (C-H:1) , SSI=0.28/1.00 (C-E:1)

DOL LUMBER=1.00 NAIL=1.00 LS BEND=1.10 COMP=1.10 SHEAR=1.10 TENS= 1.10

COMPANION LIVE LOAD FACTOR = 1.00

TRUSS PLATE MANUFACTURER IS NOT RESPONSIBLE FOR QUALITY CONTROL IN THE TRUSS MANUFACTURING PLANT .

NAIL VALUES

PLATE	GRIP(DRY) (PSI) MAX	MIN	SHEAR (PLI) MAX	MIN	SECTION (PLI) MAX	MIN
MT20	650	371	1747	788	1987	1873

PLATE PLACEMENT TOL. = 0.250 inches

PLATE ROTATION TOL. = 5.0 Deg.

JSI GRIP= 0.73 (J) (INPUT = 0.90)
JSI METAL= 0.38 (I) (INPUT = 1.00)

LICENSED PROFESSIONAL ENGINEER
8/02/22
C. M. HEYENS
100505065
PROVINCE OF ONTARIO

STRUCTURAL COMPONENT ONLY
DWG # TR22080337

JOB NAME	TRUSS NAME	QUANTITY	PLY	JOB DESC.	DRWG NO.
427679	T48	1	3	GREEN PARK HOMES TRUSS DESC.	

Tamarack Roof Truss, Burlington

Version 8.530 S Feb 23 2022 MiTek Industries, Inc. Tue Aug 2 14:52:38 2022 Page 1

ID:bP zphucbY03T7QZqjQJ9Vz?62X-ZOQhraqFIMm6KN448P7TtEvUfXJAfVr3CULKBiyrsy7

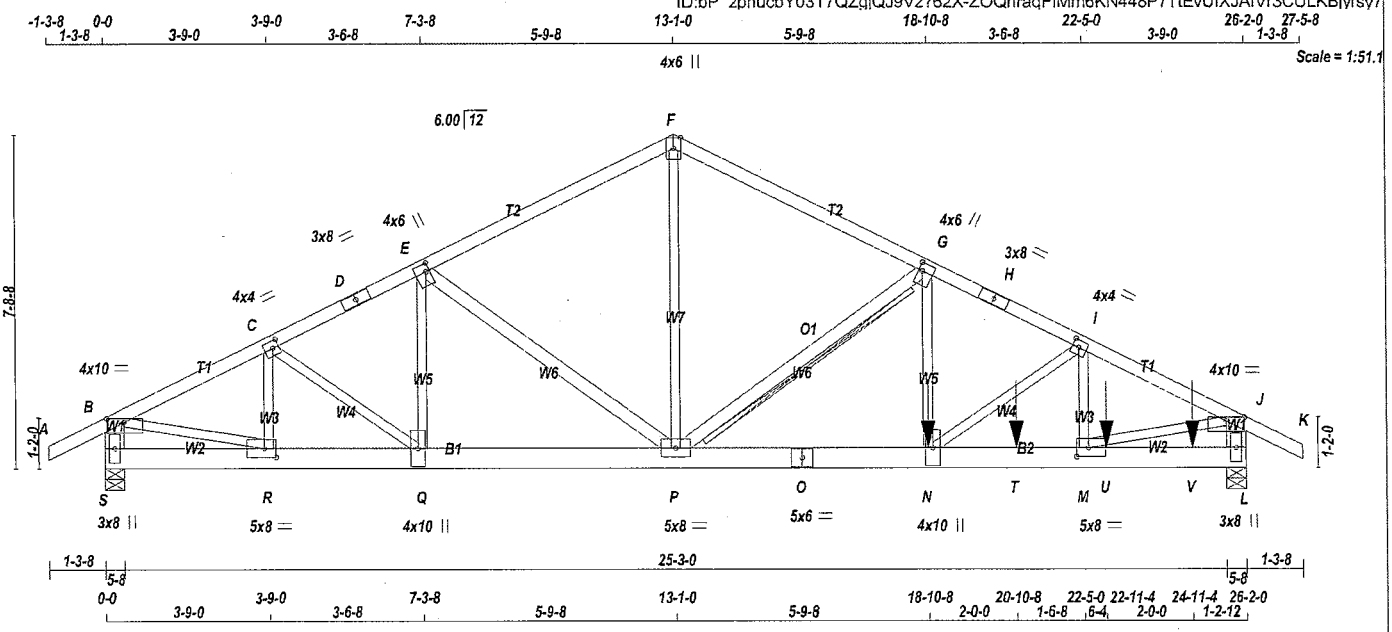

TOTAL WEIGHT = 3 X 130 = 389 lb

LUMBER

N. L. G. A. RULES

CHORDS	SIZE		LUMBER	DESCR.
A - D	2x4	DRY	No.2	SPF
D - F	2x4	DRY	No.2	SPF
F - H	2x4	DRY	No.2	SPF
H - K	2x4	DRY	No.2	SPF
S - B	2x6	DRY	No.2	SPF
L - J	2x6	DRY	No.2	SPF
S - O	2x6	DRY	No.2	SPF
O - L	2x6	DRY	No.2	SPF
ALL WEBS EXCEPT	2x3	DRY	No.2	SPF
P - G	2x4	DRY	No.2	SPF
E - P	2x4	DRY	No.2	SPF

DRY: SEASONED LUMBER.

DESIGN CONSISTS OF 3 TRUSSES BUILT SEPARATELY THEN FASTENED TOGETHER AS FOLLOWS:

CHORDS	#ROWS	SURFACE SPACING (IN)	LOAD(PLF)
TOP CHORDS : (0.122"X3") SPIRAL NAILS			
A- O	1	12	TOP
D- F	1	12	TOP
F- H	1	12	TOP
H- K	1	12	TOP
S- B	2	12	TOP
L- J	2	12	TOP
BOTTOM CHORDS : (0.122"X3") SPIRAL NAILS			
S- O	2	4	TOP
O- L	2	4	SIDE(1007.1)
WEBS : (0.122"X3") SPIRAL NAILS			
G- N	1	5	SIDE(431.0)
2x3	1	6	
E- Q	1	5	
2x4	1	6	

STAGGER NAILS BY HALF THE SURFACE SPACING IN ADJACENT PLIES.

GIRDER NAILING ASSUMES NAILED HANGERS ARE FASTENED WITH MIN. 3-0 INCH NAILS.

LICENSED PROFESSIONAL ENGINEER
8/02/22
C. M. HEYENS
100505065
PROVINCE OF ONTARIO

STRUCTURAL COMPONENT ONLY
DWG # TR22080338 PG 1/2

DIMENSIONS, SUPPORTS AND LOADINGS SPECIFIED BY FABRICATOR TO BE VERIFIED BY BUILDING DESIGNER

BEARINGS

JT	FACTORED GROSS REACTION VERT	HORZ	MAXIMUM FACTORED GROSS REACTION DOWN	HORZ	UPLIFT	INPUT BRG IN-SX	REQRD BRG IN-SX
S	3417	0	3417	0	0	5-8	5-8
L	7413	0	7413	0	0	5-8	5-8

UNFACTORED REACTIONS

JT	1ST LCASE COMBINED	MAX./MIN. COMPONENT REACTIONS SNOW	LIVE	PERM.LIVE	WIND	DEAD	SOIL
S	2406	1635 / 0	0 / 0	0 / 0	0 / 0	771 / 0	0 / 0
L	5218	3562 / 0	0 / 0	0 / 0	0 / 0	1656 / 0	0 / 0

BEARING MATERIAL TO BE SPF NO.2 OR BETTER AT JOINT(S) S, L

BRACING

TOP CHORD TO BE SHEATHED OR MAX. PURLIN SPACING = 3.55 FT.
MAX. UNBRACED BOTTOM CHORD LENGTH = 10.00 FT OR RIGID CEILING DIRECTLY APPLIED.

ALL PITCH BREAKS AND PERIMETER CORNER JOINTS MUST BE LATERALLY RESTRAINED.

2x6 DRY SPF No.2 T-BRACE AT G-P

FASTEN T AND I-BRACES TO NARROW EDGE OF WEB WITH ONE ROW PER PLY OF 3" COMMON WIRE NAILS @ 6" O.C. WITH 3" MINIMUM END DISTANCE. BRACE MUST COVER 90% OF WEB LENGTH.

END VERTICAL(S) MUST BE SHEATHED OR HAVE BRACES AS INDICATED IN THE MAX. UNBRACED LENGTH COLUMN OF THE TABLE BELOW

LOADING

TOTAL LOAD CASES: (4)

CHORDS

MEMB. FR-TO	MAX. FACTORED FORCE (LBS)	FACTORED VERT. LOAD LC1 (PLF) FROM	TO	MAX CSI (LC)	MAX. UNBRAC LENGTH
A- B	0 / 29	-95.2	-95.2	0.04 (1)	10.00
B- C	-4808 / 0	-95.2	-95.2	0.10 (1)	5.14
C- D	-5328 / 0	-95.2	-95.2	0.16 (1)	4.87
D- E	-5328 / 0	-95.2	-95.2	0.16 (1)	4.87
E- F	-5119 / 0	-95.2	-95.2	0.20 (1)	4.94
F- G	-5118 / 0	-95.2	-95.2	0.21 (1)	4.93
G- H	-10587 / 0	-95.2	-95.2	0.28 (1)	3.55
H- I	-10587 / 0	-95.2	-95.2	0.28 (1)	3.55
I- J	-10574 / 0	-95.2	-95.2	0.25 (1)	3.58
J- K	0 / 29	-95.2	-95.2	0.04 (1)	10.00
S- B	-3337 / 0	0.0	0.0	0.07 (1)	7.81
L- J	-7000 / 0	0.0	0.0	0.15 (1)	6.73
S- R	0 / 0	-18.5	-18.5	0.04 (1)	10.00
R- Q	0 / 4305	-18.5	-18.5	0.21 (1)	10.00
Q- P	0 / 4789	-18.5	-18.5	0.21 (1)	10.00
P- O	0 / 9503	-18.5	-18.5	0.39 (1)	10.00
O- N	0 / 9503	-18.5	-18.5	0.39 (1)	10.00
N- T	0 / 9453	-18.5	-18.5	0.63 (1)	10.00
T- M	0 / 9453	-18.5	-18.5	0.63 (1)	10.00
M- U	0 / 0	-18.5	-18.5	0.11 (1)	10.00
U- V	0 / 0	-18.5	-18.5	0.11 (1)	10.00
V- L	0 / 0	-18.5	-18.5	0.11 (1)	10.00

WEBS

MEMB. FR-TO	MAX. FACTORED FORCE (LBS)	MAX CSI (LC)
P- F	0 / 4097	0.31 (1)
N- G	0 / 5671	0.43 (1)
N- I	0 / 63	0.00 (1)
M- I	-311 / 0	0.02 (1)
E- P	-288 / 0	0.07 (1)
Q- E	-260 / 0	0.03 (1)
C- Q	0 / 605	0.05 (1)
R- C	-904 / 0	0.05 (1)
B- R	0 / 4396	0.33 (1)
M- J	0 / 9652	0.72 (1)

SPECIFIED CONCENTRATED LOADS (LBS)

JT	LOC.	LC1	MAX-	MAX+	FACE	DIR.	TYPE	HEEL	CONN.
N	18-10-8	-3592	-3592	---	BACK	VERT	TOTAL	---	C1
T	20-10-8	-1015	-1015	---	BACK	VERT	TOTAL	---	C1
U	22-11-4	-346	-346	---	BACK	VERT	TOTAL	---	C1
V	24-11-4	-393	-393	---	BACK	VERT	TOTAL	---	C1

[M]

DESIGN CRITERIA

SPECIFIED LOADS:

TOP CH.	LL	=	26.7	PSF
	DL	=	6.0	PSF
BOT CH.	LL	=	0.0	PSF
	DL	=	7.4	PSF
TOTAL LOAD		=	40.1	PSF

SPACING = 24.0 IN. C/C

THIS TRUSS IS DESIGNED FOR RESIDENTIAL OR SMALL BUILDING REQUIREMENTS OF PART 9, NBCC 2015

THIS DESIGN COMPLIES WITH:
- PART 9 OF BCBC 2018 , ABC 2019
- PART 9 OF OBC 2012 (2019 AMENDMENT)
- CSA 086-14
- TPIC 2014

(55 % OF 33.4 P.S.F. G.S.L. PLUS 8.4 P.S.F. RAIN LOAD) EQUALS 26.7 P.S.F. SPECIFIED ROOF LIVE LOAD

ALLOWABLE DEFL.(LL)= L/360 (0.87")
CALCULATED VERT. DEFL.(LL) = L/ 999 (0.11")
ALLOWABLE DEFL.(TL)= L/360 (0.87")
CALCULATED VERT. DEFL.(TL) = L/ 999 (0.19")

CSI: TC=0.28/1.00 (G-I:1) , BC=0.63/1.00 (M-N:1) , WB=0.72/1.00 (J-M:1) , SSI=0.19/1.00 (M-N:1)

DOL LUMBER=1.00 NAIL=1.00 LS BEND=1.10 COMP=1.10 SHEAR=1.10 TENS= 1.10

COMPANION LIVE LOAD FACTOR = 1.00

AUTOSOLVE HEELS OFF

TRUSS PLATE MANUFACTURER IS NOT RESPONSIBLE FOR QUALITY CONTROL IN THE TRUSS MANUFACTURING PLANT .

NAIL VALUES

PLATE	GRIP(DRY) (PSI) MAX	MIN	SHEAR (PLI) MAX	MIN	SECTION (PLI) MAX	MIN
MT20	650	371	1747	788	1987	1873

PLATE PLACEMENT TOL. = 0.250 inches

PLATE ROTATION TOL. = 5.0 Deg.

JSI GRIP= 0.88 (R) (INPUT = 0.90)
JSI METAL= 0.77 (G) (INPUT = 1.00)

CONTINUED ON PAGE 2

PLATES (table is in inches)

JT	TYPE	PLATES	W	LEN	Y	X
B	TMVW-p	MT20	4.0	10.0	1.00	5.00
C	TMWW-t	MT20	4.0	4.0	2.00	1.75
D	TS-t	MT20	3.0	8.0		
E	TMWW+t	MT20	4.0	6.0	2.25	1.00
F	TTW+p	MT20	4.0	6.0	Edge	
G	TMWW+t	MT20	4.0	6.0	2.25	1.00
H	TS-t	MT20	3.0	8.0		
I	TMWW-t	MT20	4.0	4.0	2.00	1.75
J	TMVW-p	MT20	4.0	10.0	1.00	5.00
L	BMV1+p	MT20	3.0	8.0		
M	BMWW-t	MT20	5.0	8.0	2.50	3.25
N	BMWW+t	MT20	4.0	10.0		
O	BS-t	MT20	5.0	6.0		
P	BMWWW-t	MT20	5.0	8.0		
Q	BMWW+t	MT20	4.0	10.0		
R	BMWW-t	MT20	5.0	8.0	2.50	3.25
S	BMV1+p	MT20	3.0	8.0		

Edge - INDICATES REFERENCE CORNER OF PLATE TOUCHES EDGE OF CHORD.

NOTES- (1)
1) Lateral braces to be a minimum of 2X4 SPF #2.

CONNECTION REQUIREMENTS

1) **C1:** A SUITABLE HANGER/MECHANICAL CONNECTION IS REQUIRED.

LICENSED PROFESSIONAL ENGINEER
8/02/22
C. M. HEYENS
100505065
PROVINCE OF ONTARIO

STRUCTURAL COMPONENT ONLY
DWG # TR22080338

JOB NAME	TRUSS NAME	QUANTITY	PLY	JOB DESC.	DRWG NO.
427679	T48Z	1	3	GREEN PARK HOMES TRUSS DESC.	

Tamarack Roof Truss, Burlington

Version 8.530 S Feb 23 2022 MiTek Industries, Inc. Tue Aug 2 14:52:39 2022 Page 1

ID:bP zphucbY03T7QZqjQJ9Vz?62X-1a 33wrt3guyxXeGi7eiQSReQxdnOyKDR84ukAyrsy6

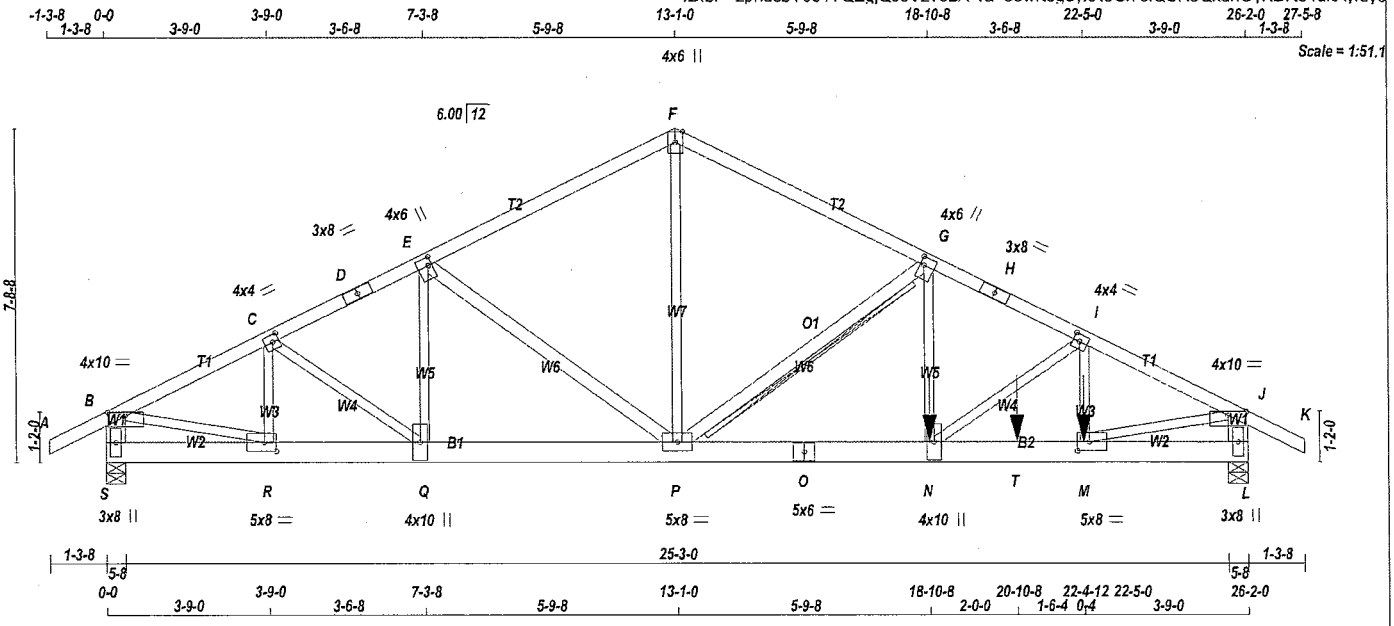

TOTAL WEIGHT = 3 X 130 = 389 lb

[M]

LUMBER

N. L. G. A. RULES

CHORDS	SIZE		LUMBER	DESCR.
A - D	2x4	DRY	No.2	SPF
D - F	2x4	DRY	No.2	SPF
F - H	2x4	DRY	No.2	SPF
H - K	2x4	DRY	No.2	SPF
S - B	2x6	DRY	No.2	SPF
L - J	2x6	DRY	No.2	SPF
S - O	2x6	DRY	No.2	SPF
O - L	2x6	DRY	No.2	SPF
ALL WEBS EXCEPT	2x3	DRY	No.2	SPF
P - G	2x4	DRY	No.2	SPF
E - P	2x4	DRY	No.2	SPF

DRY: SEASONED LUMBER.

DESIGN CONSISTS OF 3 TRUSSES BUILT SEPARATELY THEN FASTENED TOGETHER AS FOLLOWS:

CHORDS	#ROWS	SURFACE SPACING (IN)	LOAD(PLF)
TOP CHORDS : (0.122"X3") SPIRAL NAILS			
A- D	1	12	TOP
D- F	1	12	TOP
F- H	1	12	TOP
H- K	1	12	TOP
S- B	2	12	TOP
L- J	2	12	TOP
BOTTOM CHORDS : (0.122"X3") SPIRAL NAILS			
S- O	2	4	TOP
O- L	2	4	SIDE(1007.1)
WEBS : (0.122"X3") SPIRAL NAILS			
G- N	1	5	SIDE(431.0)
2x3	1	6	
E- Q	1	5	
2x4	1	6	

STAGGER NAILS BY HALF THE SURFACE SPACING IN ADJACENT PLIES.

GIRDER NAILING ASSUMES NAILED HANGERS ARE FASTENED WITH MIN. 3-0 INCH NAILS.

LICENSED PROFESSIONAL ENGINEER
8/02/22
C. M. HEYENS
100505065
PROVINCE OF ONTARIO

STRUCTURAL COMPONENT ONLY
DWG # TR22080339 PG 1/2

DIMENSIONS, SUPPORTS AND LOADINGS SPECIFIED BY FABRICATOR TO BE VERIFIED BY BUILDING DESIGNER

BEARINGS

JT	FACTORED GROSS REACTION VERT	HORZ	MAXIMUM FACTORED GROSS REACTION DOWN	HORZ	UPLIFT	INPUT BRG IN-SX	REQRD BRG IN-SX
S	3413	0	3413	0	0	5-8	5-8
L	6888	0	6888	0	0	5-8	5-8

UNFACTORED REACTIONS

JT	1ST LCASE COMBINED	MAX./MIN. COMPONENT REACTIONS SNOW	LIVE	PERM.LIVE	WIND	DEAD	SOIL
S	2404	1634 / 0	0 / 0	0 / 0	0 / 0	770 / 0	0 / 0
L	4849	3304 / 0	0 / 0	0 / 0	0 / 0	1546 / 0	0 / 0

BEARING MATERIAL TO BE SPF NO.2 OR BETTER AT JOINT(S) S, L

BRACING

TOP CHORD TO BE SHEATHED OR MAX. PURLIN SPACING = 3.55 FT.
MAX. UNBRACED BOTTOM CHORD LENGTH = 10.00 FT OR RIGID CEILING DIRECTLY APPLIED.

ALL PITCH BREAKS AND PERIMETER CORNER JOINTS MUST BE LATERALLY RESTRAINED.

2x6 DRY SPF No.2 T-BRACE AT G-P

FASTEN T AND I-BRACES TO NARROW EDGE OF WEB WITH ONE ROW PER PLY OF 3" COMMON WIRE NAILS @ 6" O.C. WITH 3" MINIMUM END DISTANCE. BRACE MUST COVER 90% OF WEB LENGTH.

END VERTICAL(S) MUST BE SHEATHED OR HAVE BRACES AS INDICATED IN THE MAX. UNBRACED LENGTH COLUMN OF THE TABLE BELOW

LOADING

TOTAL LOAD CASES: (4)

CHORDS

MEMB. FR-TO	MAX. FACTORED FORCE (LBS)	FACTORED VERT. LOAD LC1 (PLF) FROM	TO	MAX CSI (LC)	MAX. UNBRAC LENGTH
A- B	0 / 29	-95.2	-95.2	0.04 (1)	10.00
B- C	-4802 / 0	-95.2	-95.2	0.10 (1)	5.15
C- D	-5323 / 0	-95.2	-95.2	0.16 (1)	4.87
D- E	-5323 / 0	-95.2	-95.2	0.16 (1)	4.87
E- F	-5109 / 0	-95.2	-95.2	0.20 (1)	4.94
F- G	-5108 / 0	-95.2	-95.2	0.21 (1)	4.94
G- H	-10589 / 0	-95.2	-95.2	0.28 (1)	3.55
H- I	-10589 / 0	-95.2	-95.2	0.28 (1)	3.55
I- J	-10361 / 0	-95.2	-95.2	0.25 (1)	3.63
J- K	0 / 29	-95.2	-95.2	0.04 (1)	10.00
S- B	-3333 / 0	0.0	0.0	0.07 (1)	7.81
L- J	-6864 / 0	0.0	0.0	0.15 (1)	6.77
S- R	0 / 0	-18.5	-18.5	0.04 (1)	10.00
R- Q	0 / 4299	-18.5	-18.5	0.21 (1)	10.00
Q- P	0 / 4785	-18.5	-18.5	0.20 (1)	10.00
P- O	0 / 9504	-18.5	-18.5	0.39 (1)	10.00
O- N	0 / 9504	-18.5	-18.5	0.39 (1)	10.00
N- T	0 / 9262	-18.5	-18.5	0.67 (1)	10.00
T- M	0 / 9262	-18.5	-18.5	0.67 (1)	10.00
M- L	0 / 0	-18.5	-18.5	0.01 (4)	10.00

WEBS

MEMB. FR-TO	MAX. FACTORED FORCE (LBS)	MAX CSI (LC)
P- F	0 / 4088	0.31 (1)
P- G	-6231 / 0	0.42 (1)
N- G	0 / 5685	0.43 (1)
N- I	0 / 303	0.02 (1)
M- I	-553 / 0	0.03 (1)
E- P	-294 / 0	0.07 (1)
Q- E	-254 / 0	0.03 (1)
C- Q	0 / 606	0.05 (1)
R- C	-905 / 0	0.05 (1)
B- R	0 / 4390	0.33 (1)
M- J	0 / 9458	0.71 (1)

SPECIFIED CONCENTRATED LOADS (LBS)

JT	LOC.	LC1	MAX-	MAX+	FACE	DIR.	TYPE	HEEL	CONN.
M	22-4-12	-269	-269	---	FRONT	VERT	TOTAL	---	C1
N	18-10-8	-3592	-3592	---	FRONT	VERT	TOTAL	---	C1
T	20-10-8	-1114	-1114	---	FRONT	VERT	TOTAL	---	C1

DESIGN CRITERIA

SPECIFIED LOADS:

TOP CH.	LL	=	26.7	PSF
	DL	=	6.0	PSF
BOT CH.	LL	=	0.0	PSF
	DL	=	7.4	PSF
TOTAL LOAD		=	40.1	PSF

SPACING = 24.0 IN. C/C

THIS TRUSS IS DESIGNED FOR RESIDENTIAL OR SMALL BUILDING REQUIREMENTS OF PART 9, NBCC 2015

THIS DESIGN COMPLIES WITH:
- PART 9 OF BCBC 2018 , ABC 2019
- PART 9 OF OBC 2012 (2019 AMENDMENT)
- CSA 086-14
- TPIC 2014

(55 % OF 33.4 P.S.F. G.S.L. PLUS 8.4 P.S.F. RAIN LOAD) EQUALS 26.7 P.S.F. SPECIFIED ROOF LIVE LOAD

ALLOWABLE DEFL.(LL)= L/360 (0.87")
CALCULATED VERT. DEFL.(LL) = L/ 999 (0.11")
ALLOWABLE DEFL.(TL)= L/360 (0.87")
CALCULATED VERT. DEFL.(TL) = L/ 999 (0.19")

CSI: TC=0.28/1.00 (G-I:1) , BC=0.67/1.00 (M-N:1) , WB=0.71/1.00 (J-M:1) , SSI=0.19/1.00 (M-N:1)

DOL LUMBER=1.00 NAIL=1.00 LS BEND=1.10 COMP=1.10 SHEAR=1.10 TENS= 1.10

COMPANION LIVE LOAD FACTOR = 1.00

AUTOSOLVE HEELS OFF

TRUSS PLATE MANUFACTURER IS NOT RESPONSIBLE FOR QUALITY CONTROL IN THE TRUSS MANUFACTURING PLANT .

NAIL VALUES

PLATE	GRIP(DRY) (PSI) MAX	MIN	SHEAR (PLI) MAX	MIN	SECTION (PLI) MAX	MIN
MT20	650	371	1747	788	1987	1873

PLATE PLACEMENT TOL. = 0.250 inches

PLATE ROTATION TOL. = 5.0 Deg.

JSI GRIP= 0.86 (R) (INPUT = 0.90)
JSI METAL= 0.77 (G) (INPUT = 1.00)

CONTINUED ON PAGE 2

PLATES (table is in inches)

JT	TYPE	PLATES	W	LEN	Y	X
B	TMVW-p	MT20	4.0	10.0	1.00	5.00
C	TMWW-t	MT20	4.0	4.0	2.00	1.75
D	TS-t	MT20	3.0	8.0		
E	TMWW+t	MT20	4.0	6.0	2.25	1.00
F	TTW+p	MT20	4.0	6.0	Edge	
G	TMWW+t	MT20	4.0	6.0	2.25	1.00
H	TS-t	MT20	3.0	8.0		
I	TMWW-t	MT20	4.0	4.0	2.00	1.75
J	TMVW-p	MT20	4.0	10.0	1.00	5.00
L	BMV1+p	MT20	3.0	8.0		
M	BMWW-t	MT20	5.0	8.0	2.50	3.25
N	BMWW+t	MT20	4.0	10.0		
O	BS-t	MT20	5.0	6.0		
P	BMWWW-t	MT20	5.0	8.0		
Q	BMWW+t	MT20	4.0	10.0		
R	BMWW-t	MT20	5.0	8.0	2.50	3.25
S	BMV1+p	MT20	3.0	8.0		

Edge - INDICATES REFERENCE CORNER OF PLATE TOUCHES EDGE OF CHORD.

NOTES- (1)
1) Lateral braces to be a minimum of 2X4 SPF #2.

CONNECTION REQUIREMENTS

1) **C1:** A SUITABLE HANGER/MECHANICAL CONNECTION IS REQUIRED.

LICENSED PROFESSIONAL ENGINEER
8/02/22
C. M. HEYENS
100505065
PROVINCE OF ONTARIO

STRUCTURAL COMPONENT ONLY
DWG # TR22080339 PG 2/2

JOB NAME	TRUSS NAME	QUANTITY	PLY	JOB DESC.	DRWG NO.
427679	T49	1	2	GREEN PARK HOMES TRUSS DESC.	

Tamarack Roof Truss, Burlington

Version 8.530 S Feb 23 2022 MiTek Industries, Inc. Tue Aug 2 14:52:40 2022 Page 1

ID:bP zphucbY03T7QZqjQJ9Vz?62X-VnYRGGsVqz0pZhDTGq9xzf qAL?Q7RPMqoqRGcyrsy5

Scale = 1:41.7

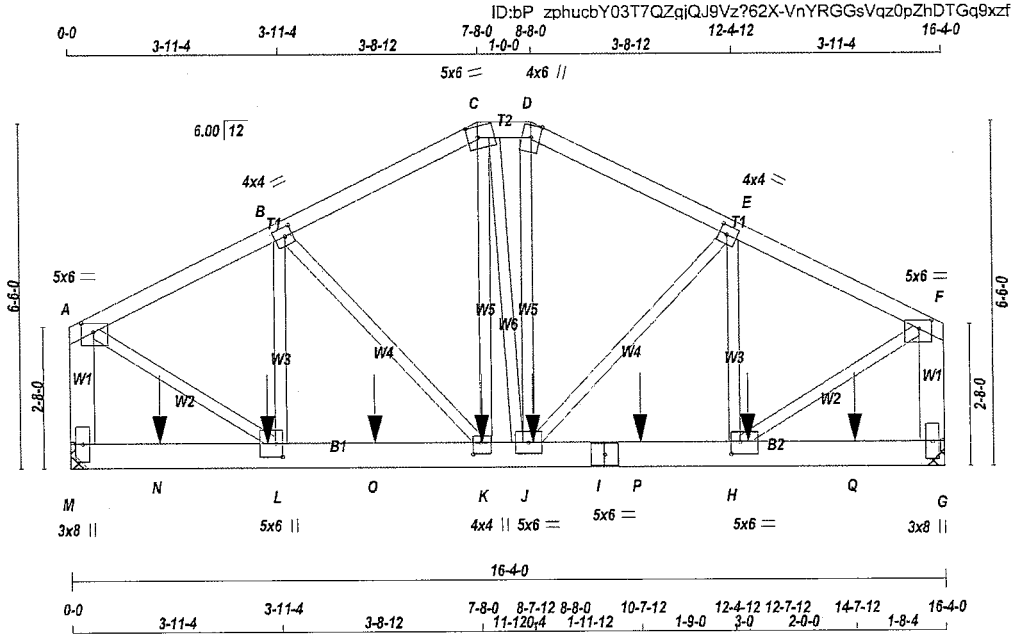

TOTAL WEIGHT = 2 X 93 = 187 lb

[M]

LUMBER

N. L. G. A. RULES

CHORDS	SIZE		LUMBER	DESCR.
A - C	2x4	DRY	No.2	SPF
C - D	2x4	DRY	No.2	SPF
D - F	2x4	DRY	No.2	SPF
M - A	2x6	DRY	No.2	SPF
G - F	2x6	DRY	No.2	SPF
M - I	2x6	DRY	No.2	SPF
I - G	2x6	DRY	No.2	SPF
ALL WEBS EXCEPT	2x3	DRY	No.2	SPF

DRY: SEASONED LUMBER.

DESIGN CONSISTS OF 2 TRUSSES BUILT SEPARATELY THEN FASTENED TOGETHER AS FOLLOWS:

CHORDS	#ROWS	SURFACE SPACING (IN)	LOAD(PLF)
TOP CHORDS : (0.122"X3") SPIRAL NAILS			
A- C	1	12	TOP
C- D	1	12	TOP
D- F	1	12	TOP
M- A	2	12	TOP
G- F	2	12	TOP
BOTTOM CHORDS : (0.122"X3") SPIRAL NAILS			
M- I	2	12	SIDE(183.1)
I- G	2	12	SIDE(183.1)
WEBS : (0.122"X3") SPIRAL NAILS			
B- L	1	6	SIDE(90.2)
K- C	1	6	SIDE(45.1)
J- C	1	6	SIDE(45.1)
J- D	1	6	SIDE(45.1)
E- H	1	6	SIDE(90.2)
2x3	1	6	

NAILS TO BE DRIVEN FROM ONE SIDE ONLY.

GIRDER NAILING ASSUMES NAILED HANGERS ARE FASTENED WITH MIN. 3-0 INCH NAILS.

TOP - COMPONENTS ARE LOADED FROM THE TOP AND MUST BE PLACED ON TOP EDGE OF ALL PLIES FOR THE LOAD TO BE TRANSFERRED TO EACH PLY.

LICENSED PROFESSIONAL ENGINEER
8/02/22
C. M. HEYENS
100505065
PROVINCE OF ONTARIO

STRUCTURAL COMPONENT ONLY
DWG # TR22080340

PG 1/2

DIMENSIONS, SUPPORTS AND LOADINGS SPECIFIED BY FABRICATOR TO BE VERIFIED BY BUILDING DESIGNER

BEARINGS

JT	FACTORED GROSS REACTION VERT	HORZ	MAXIMUM FACTORED GROSS REACTION DOWN	HORZ	UPLIFT	INPUT BRG IN-SX	REQRD BRG IN-SX
M	5118	0	5118	0	0	MECHANICAL	
G	5118	0	5118	0	0	MECHANICAL	

A SUITABLE HANGER/MECHANICAL CONNECTION IS REQUIRED AT JOINT M, G. MINIMUM BEARING LENGTH AT JOINT M = 4-0, JOINT G = 4-0.

UNFACTORED REACTIONS

1ST LCASE MAX./MIN. COMPONENT REACTIONS

JT	COMBINED	SNOW	LIVE	PERM.LIVE	WIND	DEAD	SOIL
M	3606	2442 / 0	0 / 0	0 / 0	0 / 0	1165 / 0	0 / 0
G	3606	2442 / 0	0 / 0	0 / 0	0 / 0	1165 / 0	0 / 0

BRACING

TOP CHORD TO BE SHEATHED OR MAX. PURLIN SPACING = 4.33 FT.
MAX. UNBRACED BOTTOM CHORD LENGTH = 10.00 FT OR RIGID CEILING DIRECTLY APPLIED.

ALL PITCH BREAKS AND PERIMETER CORNER JOINTS MUST BE LATERALLY RESTRAINED.

LOADING

TOTAL LOAD CASES: (4)

CHORDS

MEMB. FR-TO	MAX. FACTORED FORCE (LBS)	FACTORED VERT. LOAD (PLF) FROM	TO	LC1 CSI (LC)	MAX UNBRAC LENGTH
A- B	-4620 / 0	-95.2	-95.2	0.18 (1)	4.33
B- C	-4355 / 0	-95.2	-95.2	0.17 (1)	4.45
C- D	-3967 / 0	-95.2	-95.2	0.06 (1)	4.74
D- E	-4420 / 0	-95.2	-95.2	0.17 (1)	4.43
E- F	-4598 / 0	-95.2	-95.2	0.18 (1)	4.34
M- A	-4622 / 0	0.0	0.0	0.21 (1)	6.71
G- F	-4601 / 0	0.0	0.0	0.21 (1)	6.73
M- N	0 / 0	-18.5	-18.5	0.30 (1)	10.00
N- L	0 / 0	-18.5	-18.5	0.30 (1)	10.00
L- O	0 / 4145	-18.5	-18.5	0.52 (1)	10.00
O- K	0 / 4145	-18.5	-18.5	0.52 (1)	10.00
K- J	0 / 3900	-18.5	-18.5	0.44 (1)	10.00
J- I	0 / 4125	-18.5	-18.5	0.47 (1)	10.00
I- P	0 / 4125	-18.5	-18.5	0.47 (1)	10.00
P- H	0 / 4125	-18.5	-18.5	0.47 (1)	10.00
H- Q	0 / 0	-18.5	-18.5	0.31 (1)	10.00
Q- G	0 / 0	-18.5	-18.5	0.31 (1)	10.00

WEBS

MEMB. FR-TO	MAX. FACTORED FORCE (LBS)	MAX CSI (LC)
L- B	-10 / 59	0.01 (4)
B- K	-399 / 0	0.11 (1)
K- C	0 / 1297	0.16 (1)
C- J	0 / 465	0.06 (1)
J- D	0 / 1786	0.22 (1)
J- E	-281 / 0	0.08 (1)
H- E	-136 / 17	0.02 (1)
A- L	0 / 4787	0.59 (1)
H- F	0 / 4764	0.59 (1)

SPECIFIED CONCENTRATED LOADS (LBS)

JT	LOC.	LC1	MAX-	MAX+	FACE	DIR.	TYPE	HEEL	CONN.
H	12-7-12	-738	-738	---	BACK	VERT	TOTAL	---	C1
J	8-7-12	-738	-738	---	BACK	VERT	TOTAL	---	C1
K	7-8-4	-738	-738	---	BACK	VERT	TOTAL	---	C1
L	3-8-4	-738	-738	---	BACK	VERT	TOTAL	---	C1
N	1-8-4	-738	-738	---	BACK	VERT	TOTAL	---	C1
O	5-8-4	-738	-738	---	BACK	VERT	TOTAL	---	C1
P	10-7-12	-738	-738	---	BACK	VERT	TOTAL	---	C1
Q	14-7-12	-738	-738	---	BACK	VERT	TOTAL	---	C1

CONNECTION REQUIREMENTS

1) **C1:** A SUITABLE HANGER/MECHANICAL CONNECTION IS REQUIRED.

DESIGN CRITERIA

SPECIFIED LOADS:

TOP CH.	LL	=	26.7	PSF
	DL	=	6.0	PSF
BOT CH.	LL	=	0.0	PSF
	DL	=	7.4	PSF
TOTAL LOAD		=	40.1	PSF

SPACING = 24.0 IN. C/C

LOADING IN FLAT SECTION BASED ON A SLOPE OF 6.00/12

THIS TRUSS IS DESIGNED FOR RESIDENTIAL OR SMALL BUILDING REQUIREMENTS OF PART 9, NBCC 2015

THIS DESIGN COMPLIES WITH:
- PART 9 OF BCBC 2018 , ABC 2019
- PART 9 OF OBC 2012 (2019 AMENDMENT)
- CSA 086-14
- TPIC 2014

(55 % OF 33.4 P.S.F. G.S.L. PLUS 8.4 P.S.F. RAIN LOAD) EQUALS 26.7 P.S.F. SPECIFIED ROOF LIVE LOAD

ALLOWABLE DEFL.(LL)= L/360 (0.54")
CALCULATED VERT. DEFL.(LL) = L/ 999 (0.05")
ALLOWABLE DEFL.(TL)= L/360 (0.54")
CALCULATED VERT. DEFL.(TL) = L/ 999 (0.09")

CSI: TC=0.21/1.00 (A-M:1) , BC=0.52/1.00 (K-L:1) , WB=0.59/1.00 (A-L:1) , SSI=0.24/1.00 (K-L:1)

DOL LUMBER=1.00 NAIL=1.00 LS BEND=1.00 COMP=1.00 SHEAR=1.00 TENS= 1.00

COMPANION LIVE LOAD FACTOR = 1.00

AUTOSOLVE HEELS OFF

TRUSS PLATE MANUFACTURER IS NOT RESPONSIBLE FOR QUALITY CONTROL IN THE TRUSS MANUFACTURING PLANT .

NAIL VALUES

PLATE	GRIP(DRY) (PSI) MAX	MIN	SHEAR (PLI) MAX	MIN	SECTION (PLI) MAX	MIN
MT20	650	371	1747	788	1987	1873

PLATE PLACEMENT TOL. = 0.250 inches

PLATE ROTATION TOL. = 5.0 Deg.

JSI GRIP= 0.90 (H) (INPUT = 0.90)
JSI METAL= 0.75 (L) (INPUT = 1.00)

CONTINUED ON PAGE 2

JOB NAME	TRUSS NAME	QUANTITY	PLY	JOB DESC. GREEN PARK HOMES	DRWG NO.
427679	T49	1	2	TRUSS DESC.	

PLATES (table is in inches)

JT	TYPE	PLATES	W	LEN	Y	X
A	TMVW-p	MT20	5.0	6.0	2.00	2.75
B	TMWW-t	MT20	4.0	4.0	2.00	1.75
C	TTWW-m	MT20	5.0	6.0	2.50	2.25
D	TTW+m	MT20	4.0	6.0	Edge	
E	TMWW-t	MT20	4.0	4.0	2.00	1.75
F	TMVW-p	MT20	5.0	6.0	2.00	2.75
G	BMV1+p	MT20	3.0	8.0		
H	BMWW-t	MT20	5.0	6.0	2.75	2.00
I	BS-t	MT20	5.0	6.0		
J	BMWWW-t	MT20	5.0	6.0		
K	BMWW+t	MT20	4.0	4.0	2.50	1.75
L	BMWW+t	MT20	5.0	6.0	3.00	1.50
M	BMV1+p	MT20	3.0	8.0		

Edge - INDICATES REFERENCE CORNER OF PLATE TOUCHES EDGE OF CHORD.

NOTES- (1)
1) Lateral braces to be a minimum of 2X4 SPF #2.

LICENSED PROFESSIONAL ENGINEER
8/02/22
C. M. HEYENS
100505065
PROVINCE OF ONTARIO

STRUCTURAL COMPONENT ONLY
DWG # TR22080340 PG 2/2

JOB NAME	TRUSS NAME	QUANTITY	PLY	JOB DESC.	DRWG NO.
427679	T50	1	2	GREEN PARK HOMES TRUSS DESC.	

Tamarack Roof Truss, Burlington

Version 8.530 S Feb 23 2022 MiTek Industries, Inc. Tue Aug 2 14:52:41 2022 Page 1
ID:bP zphucbY03T7QZgjQJ9Vz?62X-zz6pUcs7bH8gBrofpYhAVtX?YkN7symWuSZ?o2yrsy4

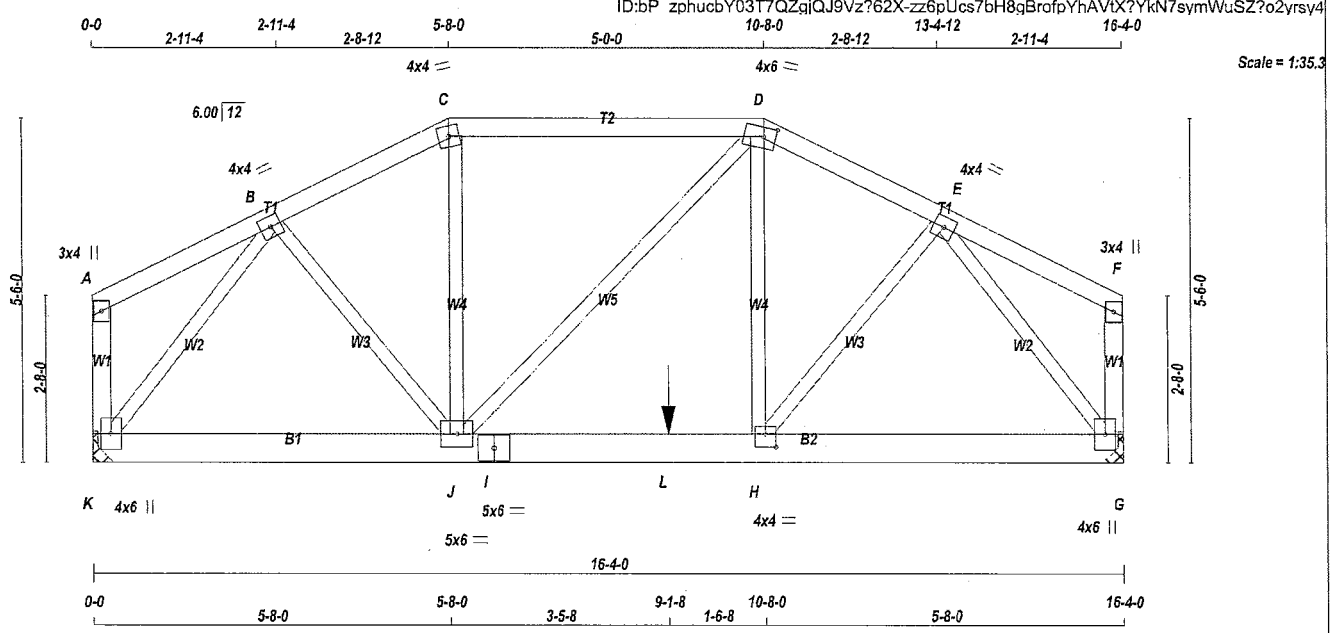

TOTAL WEIGHT = 2 X 81 = 163 lb

LUMBER

N. L. G. A. RULES

CHORDS	SIZE		LUMBER	DESCR.
A - C	2x4	DRY	No.2	SPF
C - D	2x4	DRY	No.2	SPF
D - F	2x4	DRY	No.2	SPF
K - A	2x4	DRY	No.2	SPF
G - F	2x4	DRY	No.2	SPF
K - I	2x6	DRY	No.2	SPF
I - G	2x6	DRY	No.2	SPF
ALL WEBS EXCEPT	2x3	DRY	No.2	SPF

DRY: SEASONED LUMBER.

DESIGN CONSISTS OF 2 TRUSSES BUILT SEPARATELY THEN FASTENED TOGETHER AS FOLLOWS:

CHORDS	#ROWS	SURFACE SPACING (IN)	LOAD(PLF)
TOP CHORDS : (0.122"X3") SPIRAL NAILS			
A- C	1	12	TOP
C- D	1	12	TOP
D- F	1	12	TOP
K- A	1	12	TOP
G- F	1	12	TOP
BOTTOM CHORDS : (0.122"X3") SPIRAL NAILS			
K- I	2	12	TOP
I- G	2	12	SIDE(0.0)
WEBS : (0.122"X3") SPIRAL NAILS			
2x3	1	6	

NAILS TO BE DRIVEN FROM ONE SIDE ONLY.

GIRDER NAILING ASSUMES NAILED HANGERS ARE FASTENED WITH MIN. 3-0 INCH NAILS.

TOP - COMPONENTS ARE LOADED FROM THE TOP AND MUST BE PLACED ON TOP EDGE OF ALL PLIES FOR THE LOAD TO BE TRANSFERRED TO EACH PLY.

LICENSED PROFESSIONAL ENGINEER
8/02/22
C. M. HEYENS
100505065
PROVINCE OF ONTARIO

STRUCTURAL COMPONENT ONLY
DWG # TR22080341 PG 1/2

DIMENSIONS, SUPPORTS AND LOADINGS SPECIFIED BY FABRICATOR TO BE VERIFIED BY BUILDING DESIGNER

BEARINGS

JT	FACTORED GROSS REACTION VERT	HORZ	MAXIMUM FACTORED GROSS REACTION DOWN	HORZ	UPLIFT	INPUT BRG IN-SX	REQRD BRG IN-SX
K	1459	0	1459	0	0	MECHANICAL	
G	1601	0	1601	0	0	MECHANICAL	

A SUITABLE HANGER/MECHANICAL CONNECTION IS REQUIRED AT JOINT K, G. MINIMUM BEARING LENGTH AT JOINT K = 4-0, JOINT G = 4-0.

UNFACTORED REACTIONS

JT	1ST LCASE COMBINED	MAX./MIN. COMPONENT REACTIONS SNOW	LIVE	PERM.LIVE	WIND	DEAD	SOIL
K	1029	693 / 0	0 / 0	0 / 0	0 / 0	336 / 0	0 / 0
G	1128	762 / 0	0 / 0	0 / 0	0 / 0	367 / 0	0 / 0

BRACING

TOP CHORD TO BE SHEATHED OR MAX. PURLIN SPACING = 6.25 FT.
MAX. UNBRACED BOTTOM CHORD LENGTH = 10.00 FT OR RIGID CEILING DIRECTLY APPLIED.

ALL PITCH BREAKS AND PERIMETER CORNER JOINTS MUST BE LATERALLY RESTRAINED.

LOADING

TOTAL LOAD CASES: (4)

CHORDS

MEMB. FR-TO	MAX. FACTORED FORCE (LBS)	FACTORED VERT. LOAD (PLF) FROM	TO	LC1	MAX CSI (LC)	MAX. UNBRAC LENGTH
A- B	0 / 12	-95.2	-95.2	0.06 (1)	10.00	
B- C	-1493 / 0	-95.2	-95.2	0.06 (1)	6.25	
C- D	-1330 / 0	-95.2	-95.2	0.24 (1)	6.25	
D- E	-1692 / 0	-95.2	-95.2	0.06 (1)	6.25	
E- F	0 / 11	-95.2	-95.2	0.05 (1)	10.00	
K- A	-109 / 0	0.0	0.0	0.01 (1)	7.81	
G- F	-110 / 0	0.0	0.0	0.01 (1)	7.81	
K- J	0 / 1038	-18.5	-18.5	0.18 (1)	10.00	
J- I	0 / 1514	-18.5	-18.5	0.42 (1)	10.00	
I- L	0 / 1514	-18.5	-18.5	0.42 (1)	10.00	
L- H	0 / 1514	-18.5	-18.5	0.42 (1)	10.00	
H- G	0 / 1159	-18.5	-18.5	0.22 (1)	10.00	

WEBS

MEMB. FR-TO	MAX. FACTORED FORCE (LBS)	MAX CSI (LC)
B- J	0 / 460	0.06 (1)
J- C	0 / 320	0.04 (1)
J- D	-266 / 0	0.12 (1)
H- D	0 / 600	0.07 (1)
H- E	0 / 551	0.07 (1)
K- B	-1702 / 0	0.29 (1)
E- G	-1901 / 0	0.33 (1)

SPECIFIED CONCENTRATED LOADS (LBS)

JT	LOC.	LC1	MAX-	MAX+	FACE	DIR.	TYPE	HEEL	CONN.
L	9-1-8	-846	-846	---	FRONT	VERT	TOTAL	---	C1

CONNECTION REQUIREMENTS

1) **C1:** A SUITABLE HANGER/MECHANICAL CONNECTION IS REQUIRED.

[M]

DESIGN CRITERIA

SPECIFIED LOADS:

TOP CH.	LL	=	26.7	PSF
	DL	=	6.0	PSF
BOT CH.	LL	=	0.0	PSF
	DL	=	7.4	PSF
TOTAL LOAD		=	40.1	PSF

SPACING = 24.0 IN. C/C

LOADING IN FLAT SECTION BASED ON A SLOPE OF 6.00/12

THIS TRUSS IS DESIGNED FOR RESIDENTIAL OR SMALL BUILDING REQUIREMENTS OF PART 9, NBCC 2015

THIS DESIGN COMPLIES WITH:
- PART 9 OF BCBC 2018 , ABC 2019
- PART 9 OF OBC 2012 (2019 AMENDMENT)
- CSA 086-14
- TPIC 2014

(55 % OF 33.4 P.S.F. G.S.L. PLUS 8.4 P.S.F. RAIN LOAD) EQUALS 26.7 P.S.F. SPECIFIED ROOF LIVE LOAD

ALLOWABLE DEFL.(LL)= L/360 (0.54")
CALCULATED VERT. DEFL.(LL) = L/ 999 (0.03")
ALLOWABLE DEFL.(TL)= L/360 (0.54")
CALCULATED VERT. DEFL.(TL) = L/ 999 (0.06")

CSI: TC=0.24/1.00 (C-D:1) , BC=0.42/1.00 (H-J:1) , WB=0.33/1.00 (E-G:1) , SSI=0.30/1.00 (H-J:1)

DOL LUMBER=1.00 NAIL=1.00 LS BEND=1.00 COMP=1.00 SHEAR=1.00 TENS= 1.00

COMPANION LIVE LOAD FACTOR = 1.00

TRUSS PLATE MANUFACTURER IS NOT RESPONSIBLE FOR QUALITY CONTROL IN THE TRUSS MANUFACTURING PLANT .

NAIL VALUES

PLATE	GRIP(DRY) (PSI) MAX	MIN	SHEAR (PLI) MAX	MIN	SECTION (PLI) MAX	MIN
MT20	650	371	1747	788	1987	1873

PLATE PLACEMENT TOL. = 0.250 inches

PLATE ROTATION TOL. = 5.0 Deg.

JSI GRIP= 0.82 (E) (INPUT = 0.90)
JSI METAL= 0.31 (E) (INPUT = 1.00)

CONTINUED ON PAGE 2

JOB NAME	TRUSS NAME	QUANTITY	PLY	JOB DESC. GREEN PARK HOMES	DRWG NO.
427679	T50	1	2	TRUSS DESC.	

PLATES (table is in inches)

JT	TYPE	PLATES	W	LEN	Y	X
A	TMV+p	MT20	3.0	4.0		
B	TMWW-t	MT20	4.0	4.0		
C	TTW-m	MT20	4.0	4.0		
D	TTWW-m	MT20	4.0	6.0	1.75	2.25
E	TMWW-t	MT20	4.0	4.0		
F	TMV+p	MT20	3.0	4.0		
G	BMVW1+p	MT20	4.0	6.0		
H	BMWW-t	MT20	4.0	4.0	2.50	2.00
I	BS-t	MT20	5.0	6.0		
J	BMWWW-t	MT20	5.0	6.0		
K	BMVW1+p	MT20	4.0	6.0		

NOTES- (1)
1) Lateral braces to be a minimum of 2X4 SPF #2.

LICENSED PROFESSIONAL ENGINEER
8/02/22
C. M. HEYENS
100505065
PROVINCE OF ONTARIO

STRUCTURAL COMPONENT ONLY
DWG # TR22080341 PG 2/2

JOB NAME	TRUSS NAME	QUANTITY	PLY	JOB DESC. GREEN PARK HOMES	DRWG NO.
427679	T51	1	1	TRUSS DESC.	

Tamarack Roof Truss, Burlington

Version 8.530 S Feb 23 2022 MiTek Industries, Inc. Tue Aug 2 14:52:41 2022 Page 1

ID:bP zphucbY03T7QZgjQJ9Vz?62X-zz6pUcs7bH8gBrofpYhAVtX?NkS4s0uWuSZ?o2yrsy4

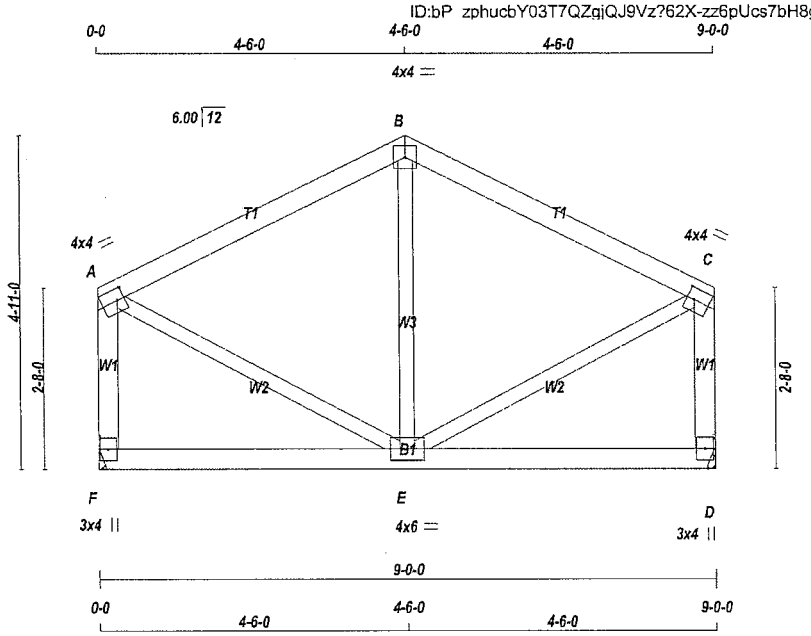

TOTAL WEIGHT = 38 lb

[M][F]

LUMBER

N. L. G. A. RULES

CHORDS	SIZE		LUMBER	DESCR.
A - B	2x4	DRY	No.2	SPF
B - C	2x4	DRY	No.2	SPF
F - A	2x4	DRY	No.2	SPF
D - C	2x4	DRY	No.2	SPF
F - D	2x4	DRY	No.2	SPF
ALL WEBS EXCEPT	2x3	DRY	No.2	SPF

DRY: SEASONED LUMBER.

PLATES (table is in inches)

JT	TYPE	PLATES	W	LEN	Y	X
A	TMVW-t	MT20	4.0	4.0	2.00	1.25
B	TTW-p	MT20	4.0	4.0		
C	TMVW-t	MT20	4.0	4.0	2.00	1.25
D	BMV1+p	MT20	3.0	4.0		
E	BMWWW-t	MT20	4.0	6.0		
F	BMV1+p	MT20	3.0	4.0		

NOTES- (1)

1) Lateral braces to be a minimum of 2X4 SPF #2.

DIMENSIONS, SUPPORTS AND LOADINGS SPECIFIED BY FABRICATOR TO BE VERIFIED BY BUILDING DESIGNER

BEARINGS

JT	FACTORED GROSS REACTION VERT	HORZ	MAXIMUM FACTORED GROSS REACTION DOWN	HORZ	UPLIFT	INPUT BRG IN-SX	REQRD BRG IN-SX
F	512	0	512	0	0	MECHANICAL	
D	512	0	512	0	0	MECHANICAL	

A SUITABLE HANGER/MECHANICAL CONNECTION IS REQUIRED AT JOINT F, D. MINIMUM BEARING LENGTH AT JOINT F = 1-8, JOINT D = 1-8.

UNFACTORED REACTIONS

JT	1ST LCASE COMBINED	MAX./MIN. COMPONENT REACTIONS SNOW	LIVE	PERM.LIVE	WIND	DEAD	SOIL
F	361	241 / 0	0 / 0	0 / 0	0 / 0	121 / 0	0 / 0
D	361	241 / 0	0 / 0	0 / 0	0 / 0	121 / 0	0 / 0

BRACING

TOP CHORD TO BE SHEATHED OR MAX. PURLIN SPACING = 6.25 FT.
MAX. UNBRACED BOTTOM CHORD LENGTH = 10.00 FT OR RIGID CEILING DIRECTLY APPLIED.

ALL PITCH BREAKS AND PERIMETER CORNER JOINTS MUST BE LATERALLY RESTRAINED.

LOADING

TOTAL LOAD CASES: (4)

CHORDS

MEMB. FR-TO	MAX. FACTORED FORCE (LBS)	FACTORED VERT. LOAD LC1 (PLF) FROM	TO	MAX CSI (LC)	MAX. UNBRAC LENGTH
A- B	-290 / 0	-95.2	-95.2	0.25 (1)	6.25
B- C	-290 / 0	-95.2	-95.2	0.25 (1)	6.25
F- A	-479 / 0	0.0	0.0	0.07 (1)	7.81
D- C	-479 / 0	0.0	0.0	0.07 (1)	7.81
F- E	0 / 0	-18.5	-18.5	0.11 (4)	10.00
E- D	0 / 0	-18.5	-18.5	0.11 (4)	10.00

WEBS

MEMB. FR-TO	MAX. FACTORED FORCE (LBS)	MAX CSI (LC)
E- B	-169 / 18	0.06 (1)
A- E	0 / 292	0.07 (1)
E- C	0 / 292	0.07 (1)

DESIGN CRITERIA

SPECIFIED LOADS:

TOP CH.	LL	=	26.7	PSF
	DL	=	6.0	PSF
BOT CH.	LL	=	0.0	PSF
	DL	=	7.4	PSF
TOTAL LOAD		=	40.1	PSF

SPACING = 24.0 IN. C/C

THIS TRUSS IS DESIGNED FOR RESIDENTIAL OR SMALL BUILDING REQUIREMENTS OF PART 9, NBCC 2015

THIS DESIGN COMPLIES WITH:
- PART 9 OF BCBC 2018 , ABC 2019
- PART 9 OF OBC 2012 (2019 AMENDMENT)
- CSA 086-14
- TPIC 2014

(55 % OF 33.4 P.S.F. G.S.L. PLUS 8.4 P.S.F. RAIN LOAD) EQUALS 26.7 P.S.F. SPECIFIED ROOF LIVE LOAD

ALLOWABLE DEFL.(LL)= L/360 (0.30")
CALCULATED VERT. DEFL.(LL) = L/ 999 (0.00")
ALLOWABLE DEFL.(TL)= L/360 (0.30")
CALCULATED VERT. DEFL.(TL) = L/ 999 (0.01")

CSI: TC=0.25/1.00 (A-B:1) , BC=0.11/1.00 (E-F:4) , WB=0.07/1.00 (C-E:1) , SSI=0.15/1.00 (A-B:1)

DOL LUMBER=1.00 NAIL=1.00 LS BEND=1.10 COMP=1.10 SHEAR=1.10 TENS= 1.10

COMPANION LIVE LOAD FACTOR = 1.00

TRUSS PLATE MANUFACTURER IS NOT RESPONSIBLE FOR QUALITY CONTROL IN THE TRUSS MANUFACTURING PLANT .

NAIL VALUES

PLATE	GRIP(DRY) (PSI) MAX	MIN	SHEAR (PLI) MAX	MIN	SECTION (PLI) MAX	MIN
MT20	650	371	1747	788	1987	1873

PLATE PLACEMENT TOL. = 0.250 inches

PLATE ROTATION TOL. = 5.0 Deg.

JSI GRIP= 0.42 (C) (INPUT = 0.90)
JSI METAL= 0.13 (A) (INPUT = 1.00)

LICENSED PROFESSIONAL ENGINEER
8/02/22
C. M. HEYENS
100505065
PROVINCE OF ONTARIO

STRUCTURAL COMPONENT ONLY
DWG # TR22080342

JOB NAME	TRUSS NAME	QUANTITY	PLY	JOB DESC.	DRWG NO.
427679	T52	1	1	GREEN PARK HOMES TRUSS DESC.	

Tamarack Roof Truss, Burlington

Version 8.530 S Feb 23 2022 MiTek Industries, Inc. Tue Aug 2 14:52:42 2022 Page 1

ID:bP zphucbY03T7QZqjQJ9Vz?62X-R9fChytlMbGXo?NrNFCP2437y8nvbS f76JYKVyrsy3

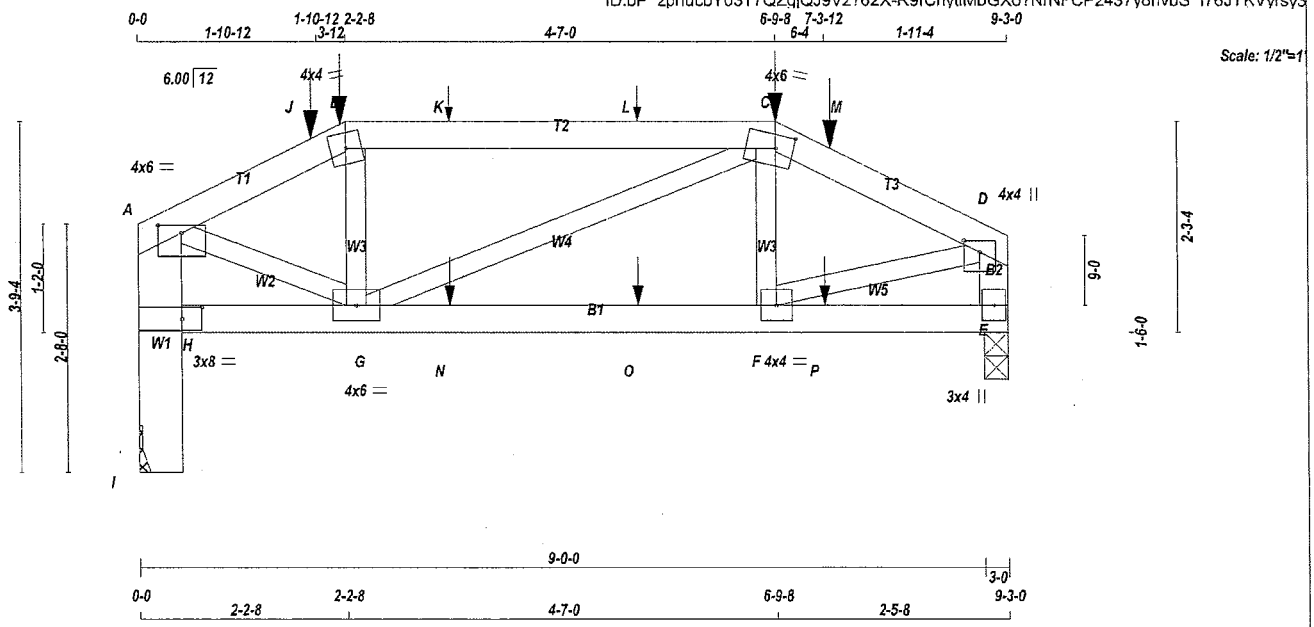

TOTAL WEIGHT = 37 lb

[M]

LUMBER

N. L. G. A. RULES

CHORDS	SIZE		LUMBER	DESCR.
A - B	2x4	DRY	No.2	SPF
B - C	2x4	DRY	No.2	SPF
C - D	2x4	DRY	No.2	SPF
I - A	2x6	DRY	No.2	SPF
H - E	2x4	DRY	No.2	SPF
E - D	2x4	DRY	No.2	SPF
ALL WEBS EXCEPT	2x3	DRY	No.2	SPF

DRY: SEASONED LUMBER.

PLATES (table is in inches)

JT	TYPE	PLATES	W	LEN	Y	X
A	TMVW-p	MT20	4.0	6.0	1.00	3.00
B	TTW-m	MT20	4.0	4.0		
C	TTWW-m	MT20	4.0	6.0	1.75	2.25
D	TMVW+p	MT20	4.0	4.0	1.50	2.00
E	BMV1+p	MT20	3.0	4.0		
F	BMWW-t	MT20	4.0	4.0		
G	BMWWW-t	MT20	4.0	6.0		
H	BVM-l	MT20	3.0	8.0	1.50	2.50

NOTES- (1)

1) Lateral braces to be a minimum of 2X4 SPF #2.

DIMENSIONS, SUPPORTS AND LOADINGS SPECIFIED BY FABRICATOR TO BE VERIFIED BY BUILDING DESIGNER

BEARINGS

JT	FACTORED GROSS REACTION VERT	HORZ	MAXIMUM FACTORED GROSS REACTION DOWN	HORZ	UPLIFT	INPUT BRG IN-SX	REQRD BRG IN-SX
E	573	0	573	0	0	3-0	3-0
I	580	0	580	0	0	MECHANICAL	

A SUITABLE HANGER/MECHANICAL CONNECTION IS REQUIRED AT JOINT I. MINIMUM BEARING LENGTH AT JOINT I = 1-8.

UNFACTORED REACTIONS

JT	1ST LCASE COMBINED	MAX./MIN. COMPONENT REACTIONS SNOW	LIVE	PERM.LIVE	WIND	DEAD	SOIL
E	404	274 / 0	0 / 0	0 / 0	0 / 0	130 / 0	0 / 0
I	408	277 / 0	0 / 0	0 / 0	0 / 0	131 / 0	0 / 0

BEARING MATERIAL TO BE SPF NO.2 OR BETTER AT JOINT(S) E

BRACING

TOP CHORD TO BE SHEATHED OR MAX. PURLIN SPACING = 6.25 FT.
MAX. UNBRACED BOTTOM CHORD LENGTH = 10.00 FT OR RIGID CEILING DIRECTLY APPLIED.

ALL PITCH BREAKS AND PERIMETER CORNER JOINTS MUST BE LATERALLY RESTRAINED.

LOADING

TOTAL LOAD CASES: (4)

CHORDS

MEMB. FR-TO	MAX. FACTORED FORCE (LBS)	FACTORED VERT. LOAD (PLF) FROM	TO	LC1 MAX CSI (LC)	MAX. UNBRAC LENGTH
A- J	-594 / 0	-95.2	-95.2	0.10 (1)	6.25
J- B	-594 / 0	-95.2	-95.2	0.10 (1)	6.25
B- K	-520 / 0	-95.2	-95.2	0.39 (1)	6.25
K- L	-520 / 0	-95.2	-95.2	0.39 (1)	6.25
L- C	-520 / 0	-95.2	-95.2	0.39 (1)	6.25
C- M	-594 / 0	-95.2	-95.2	0.10 (1)	6.25
M- D	-594 / 0	-95.2	-95.2	0.10 (1)	6.25
I- H	-580 / 0	0.0	0.0	0.05 (1)	7.81
H- A	-564 / 0	0.0	0.0	0.04 (1)	7.81
H- G	0 / 0	-18.5	-18.5	0.06 (4)	10.00
G- N	0 / 526	-18.5	-18.5	0.13 (1)	10.00
N- O	0 / 526	-18.5	-18.5	0.13 (1)	10.00
O- F	0 / 526	-18.5	-18.5	0.13 (1)	10.00
F- P	0 / 0	-18.5	-18.5	0.06 (4)	10.00
P- E	0 / 0	-18.5	-18.5	0.06 (4)	10.00
E- D	-558 / 0	0.0	0.0	0.06 (1)	7.81

WEBS

MEMB. FR-TO	MAX. FACTORED FORCE (LBS)	MAX CSI (LC)
F- C	-108 / 21	0.02 (1)
G- B	-115 / 19	0.02 (1)
A- G	0 / 565	0.14 (1)
F- D	0 / 561	0.14 (1)
G- C	-7 / 0	0.00 (1)

SPECIFIED CONCENTRATED LOADS (LBS)

JT	LOC.	LC1	MAX-	MAX+	FACE	DIR.	TYPE	HEEL	CONN.
B	2-2-8	-6	-6	---	FRONT	VERT	DEAD	---	C1
B	2-2-8	-23	-23	---	FRONT	VERT	SNOW	---	C1
C	6-9-8	-6	-6	---	FRONT	VERT	DEAD	---	C1
C	6-9-8	-23	-23	---	FRONT	VERT	SNOW	---	C1
J	1-10-12	-15	-15	---	FRONT	VERT	TOTAL	---	C1
K	3-3-12	1	1	---	FRONT	VERT	TOTAL	---	C1
L	5-3-12	1	1	---	FRONT	VERT	TOTAL	---	C1
M	7-3-12	-8	-8	---	FRONT	VERT	TOTAL	---	C1
N	3-3-12	-0	-0	---	FRONT	VERT	TOTAL	---	C1
O	5-3-12	-0	-0	---	FRONT	VERT	TOTAL	---	C1
P	7-3-12	-0	-0	---	FRONT	VERT	TOTAL	---	C1

CONNECTION REQUIREMENTS

1) **C1:** A SUITABLE HANGER/MECHANICAL CONNECTION IS REQUIRED.

DESIGN CRITERIA

*** SPECIAL LOADS ANALYSIS ***
GEOMETRY AND/OR BASIC LOADS CHANGED BY USER.
LOADS WERE DERIVED FROM USER INPUT
NO FURTHER MODIFICATIONS WERE MADE

SPECIFIED LOADS:

TOP CH.	LL	=	26.7	PSF
	DL	=	6.0	PSF
BOT CH.	LL	=	0.0	PSF
	DL	=	7.4	PSF
TOTAL LOAD		=	40.1	PSF

SPACING = 24.0 IN. C/C

LOADING IN FLAT SECTION BASED ON A SLOPE OF 6.00/12

*** NON STANDARD GIRDER ***
ADDT'L USER-DEFINED LOADS APPLIED TO ALL LOAD CASES.

THIS TRUSS IS DESIGNED FOR RESIDENTIAL OR SMALL BUILDING REQUIREMENTS OF PART 9, NBCC 2015

THIS DESIGN COMPLIES WITH:
- PART 9 OF BCBC 2018 , ABC 2019
- PART 9 OF OBC 2012 (2019 AMENDMENT)
- CSA 086-14
- TPIC 2014

(55 % OF 33.4 P.S.F. G.S.L. PLUS 8.4 P.S.F. RAIN LOAD) EQUALS 26.7 P.S.F. SPECIFIED ROOF LIVE LOAD

ALLOWABLE DEFL.(LL)= L/360 (0.30")
CALCULATED VERT. DEFL.(LL) = L/ 999 (0.01")
ALLOWABLE DEFL.(TL)= L/360 (0.30")
CALCULATED VERT. DEFL.(TL) = L/ 999 (0.02")

CSI: TC=0.39/1.00 (B-C:1) , BC=0.13/1.00 (F-G:1) , WB=0.14/1.00 (A-G:1) , SSI=0.19/1.00 (B-C:1)

DOL LUMBER=1.00 NAIL=1.00 LS BEND=1.00 COMP=1.00 SHEAR=1.00 TENS= 1.00

COMPANION LIVE LOAD FACTOR = 1.00

AUTOSOLVE HEELS OFF

TRUSS PLATE MANUFACTURER IS NOT RESPONSIBLE FOR QUALITY CONTROL IN THE TRUSS MANUFACTURING PLANT .

NAIL VALUES

PLATE	GRIP(DRY) (PSI) MAX	MIN	SHEAR (PLI) MAX	MIN	SECTION (PLI) MAX	MIN
MT20	650	371	1747	788	1987	1873

PLATE PLACEMENT TOL. = 0.250 inches

PLATE ROTATION TOL. = 5.0 Deg.

LICENSED PROFESSIONAL ENGINEER
8/02/22
C. M. HEYENS
100505065
PROVINCE OF ONTARIO

STRUCTURAL COMPONENT ONLY
DWG # TR22080343 PG 1/2

CONTINUED ON PAGE 2

CONNECTION REQUIREMENTS

1) **C1:** A SUITABLE HANGER/MECHANICAL CONNECTION IS REQUIRED.

JSI GRIP= 0.89 (G) (INPUT = 0.90)
JSI METAL= 0.18 (F) (INPUT = 1.00)

LICENSED PROFESSIONAL ENGINEER
8/02/22
C. M. HEYENS
100505065
PROVINCE OF ONTARIO

STRUCTURAL COMPONENT ONLY
DWG # TR22080343 PG 2/2

JOB NAME	TRUSS NAME	QUANTITY	PLY	JOB DESC.	DRWG NO.
427679	T53	1	1	GREEN PARK HOMES TRUSS DESC.	

Tamarack Roof Truss, Burlington

Version 8.530 S Feb 23 2022 MiTek Industries, Inc. Tue Aug 2 14:52:43 2022 Page 1

ID:bP zphucbY03T7QZqjQJ9Vz?62X-vLDauluN7uOOQ8y1xzjeaIcLMY8qKvOpMm25txyrsy2

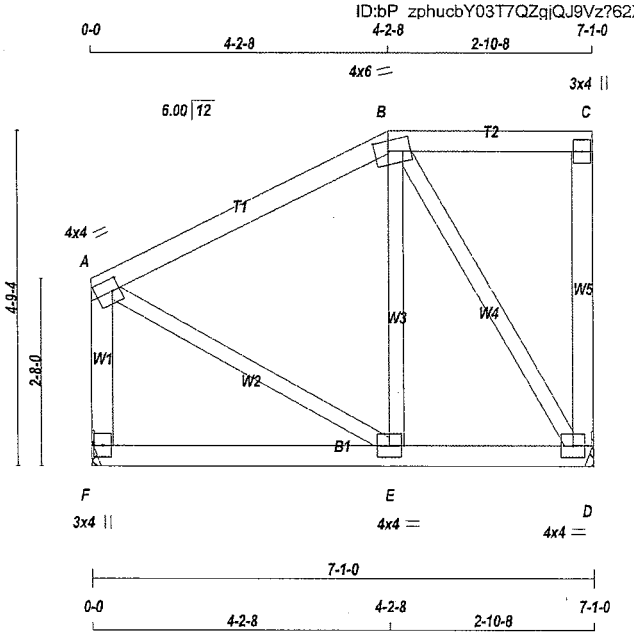

Scale = 1:31.5

TOTAL WEIGHT = 35 lb

LUMBER

N. L. G. A. RULES

CHORDS	SIZE		LUMBER	DESCR.
A - B	2x4	DRY	No.2	SPF
B - C	2x4	DRY	No.2	SPF
D - C	2x4	DRY	No.2	SPF
F - A	2x4	DRY	No.2	SPF
F - D	2x4	DRY	No.2	SPF
ALL WEBS EXCEPT	2x3	DRY	No.2	SPF

DRY: SEASONED LUMBER.

PLATES (table is in inches)

JT	TYPE	PLATES	W	LEN	Y	X
A	TMVW-t	MT20	4.0	4.0	2.00	1.25
B	TTWW-m	MT20	4.0	6.0	1.75	2.25
C	TMV+p	MT20	3.0	4.0		
D	BMVW1-t	MT20	4.0	4.0		
E	BMWW-t	MT20	4.0	4.0		
F	BMV1+p	MT20	3.0	4.0		

NOTES- (1)

1) Lateral braces to be a minimum of 2X4 SPF #2.

DIMENSIONS, SUPPORTS AND LOADINGS SPECIFIED BY FABRICATOR TO BE VERIFIED BY BUILDING DESIGNER

BEARINGS

JT	FACTORED GROSS REACTION VERT	HORZ	MAXIMUM FACTORED GROSS REACTION DOWN	HORZ	UPLIFT	INPUT BRG IN-SX	REQRD BRG IN-SX
D	403	0	403	0	0	MECHANICAL	
F	403	0	403	0	0	MECHANICAL	

A SUITABLE HANGER/MECHANICAL CONNECTION IS REQUIRED AT JOINT D, F. MINIMUM BEARING LENGTH AT JOINT D = 1-8, JOINT F = 1-8.

UNFACTORED REACTIONS

JT	1ST LCASE COMBINED	MAX./MIN. COMPONENT REACTIONS SNOW	LIVE	PERM.LIVE	WIND	DEAD	SOIL
D	284	189 / 0	0 / 0	0 / 0	0 / 0	95 / 0	0 / 0
F	284	189 / 0	0 / 0	0 / 0	0 / 0	95 / 0	0 / 0

BRACING

TOP CHORD TO BE SHEATHED OR MAX. PURLIN SPACING = 6.25 FT.
MAX. UNBRACED BOTTOM CHORD LENGTH = 10.00 FT OR RIGID CEILING DIRECTLY APPLIED.

ALL PITCH BREAKS AND PERIMETER CORNER JOINTS MUST BE LATERALLY RESTRAINED.

LOADING

TOTAL LOAD CASES: (4)

CHORDS

MEMB. FR-TO	MAX. FACTORED FORCE (LBS)	FACTORED VERT. LOAD (PLF) FROM	TO	LC1 CSI (LC)	MAX UNBRAC LENGTH
A- B	-180 / 0	-95.2	-95.2	0.22 (1)	6.25
B- C	0 / 0	-95.2	-95.2	0.13 (1)	10.00
D- C	-137 / 0	0.0	0.0	0.05 (1)	7.81
F- A	-369 / 0	0.0	0.0	0.05 (1)	7.81
F- E	0 / 0	-18.5	-18.5	0.07 (4)	10.00
E- D	0 / 161	-18.5	-18.5	0.09 (4)	10.00

WEBS

MEMB. FR-TO	MAX. FACTORED FORCE (LBS)	MAX CSI (LC)
E- B	-6 / 62	0.02 (4)
B- D	-298 / 0	0.13 (1)
A- E	0 / 184	0.04 (1)

DESIGN CRITERIA

SPECIFIED LOADS:

TOP CH.	LL	=	26.7	PSF
	DL	=	6.0	PSF
BOT CH.	LL	=	0.0	PSF
	DL	=	7.4	PSF
TOTAL LOAD		=	40.1	PSF

SPACING = 24.0 IN. C/C

LOADING IN FLAT SECTION BASED ON A SLOPE OF 6.00/12

THIS TRUSS IS DESIGNED FOR RESIDENTIAL OR SMALL BUILDING REQUIREMENTS OF PART 9, NBCC 2015

THIS DESIGN COMPLIES WITH:
- PART 9 OF BCBC 2018 , ABC 2019
- PART 9 OF OBC 2012 (2019 AMENDMENT)
- CSA 086-14
- TPIC 2014

(55 % OF 33.4 P.S.F. G.S.L. PLUS 8.4 P.S.F. RAIN LOAD) EQUALS 26.7 P.S.F. SPECIFIED ROOF LIVE LOAD

ALLOWABLE DEFL.(LL)= L/360 (0.24")
CALCULATED VERT. DEFL.(LL) = L/ 999 (0.00")
ALLOWABLE DEFL.(TL)= L/360 (0.24")
CALCULATED VERT. DEFL.(TL) = L/ 999 (0.01")

CSI: TC=0.22/1.00 (A-B:1) , BC=0.09/1.00 (D-E:4) , WB=0.13/1.00 (B-D:1) , SSI=0.14/1.00 (A-B:1)

DOL LUMBER=1.00 NAIL=1.00 LS BEND=1.10 COMP=1.10 SHEAR=1.10 TENS= 1.10

COMPANION LIVE LOAD FACTOR = 1.00

TRUSS PLATE MANUFACTURER IS NOT RESPONSIBLE FOR QUALITY CONTROL IN THE TRUSS MANUFACTURING PLANT .

NAIL VALUES

PLATE	GRIP(DRY) (PSI) MAX	MIN	SHEAR (PLI) MAX	MIN	SECTION (PLI) MAX	MIN
MT20	650	371	1747	788	1987	1873

PLATE PLACEMENT TOL. = 0.250 inches

PLATE ROTATION TOL. = 5.0 Deg.

JSI GRIP= 0.35 (B) (INPUT = 0.90)
JSI METAL= 0.09 (A) (INPUT = 1.00)

LICENSED PROFESSIONAL ENGINEER
8/02/22
C. M. HEYENS
100505065
PROVINCE OF ONTARIO

STRUCTURAL COMPONENT ONLY
DWG # TR22080344

JOB NAME	TRUSS NAME	QUANTITY	PLY	JOB DESC.	DRWG NO.
427679	T54	1	1	GREEN PARK HOMES TRUSS DESC.	

Tamarack Roof Truss, Burlington

Version 8.530 S Feb 23 2022 MiTek Industries, Inc. Tue Aug 2 14:52:44 2022 Page 1
ID:bP zphucbY03T7QZgjQJ9Vz?62X-NYny6dv?uCWF2IXEVqEt7V9SxyUs3N6yaQofPNyrsy1

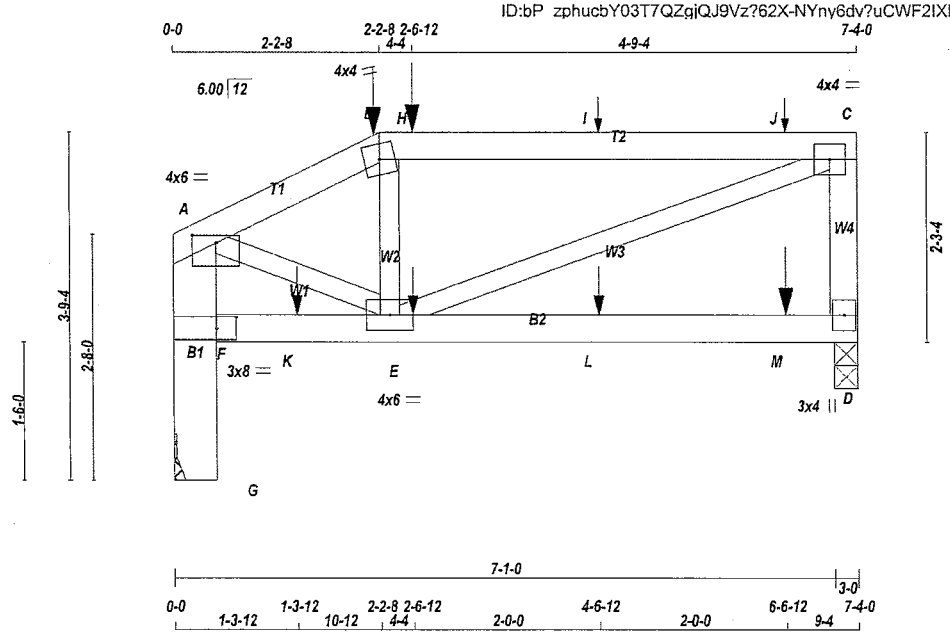

TOTAL WEIGHT = 30 lb

LUMBER
N. L. G. A. RULES

CHORDS	SIZE		LUMBER	DESCR.
A - B	2x4	DRY	No.2	SPF
B - C	2x4	DRY	No.2	SPF
D - C	2x4	DRY	No.2	SPF
F - D	2x4	DRY	No.2	SPF
G - A	2x6	DRY	No.2	SPF
ALL WEBS EXCEPT	2x3	DRY	No.2	SPF

DRY: SEASONED LUMBER.

PLATES (table is in inches)

JT	TYPE	PLATES	W	LEN	Y	X
A	TMVW-p	MT20	4.0	6.0	1.00	3.00
B	TTW-m	MT20	4.0	4.0		
C	TMVW-t	MT20	4.0	4.0		
D	BMV1+p	MT20	3.0	4.0		
E	BMWWW-t	MT20	4.0	6.0		
F	BVM-I	MT20	3.0	8.0	1.50	2.50

NOTES- (1)
1) Lateral braces to be a minimum of 2X4 SPF #2.

DIMENSIONS, SUPPORTS AND LOADINGS SPECIFIED BY FABRICATOR TO BE VERIFIED BY BUILDING DESIGNER

BEARINGS

JT	FACTORED GROSS REACTION VERT	HORZ	MAXIMUM FACTORED GROSS REACTION DOWN	HORZ	UPLIFT	INPUT BRG IN-SX	REQRD BRG IN-SX
D	425	0	425	0	0	3-0	3-0
G	448	0	448	0	0	MECHANICAL	

A SUITABLE HANGER/MECHANICAL CONNECTION IS REQUIRED AT JOINT G. MINIMUM BEARING LENGTH AT JOINT G = 1-8.

UNFACTORED REACTIONS

JT	1ST LCASE COMBINED	MAX./MIN. COMPONENT REACTIONS SNOW	LIVE	PERM.LIVE	WIND	DEAD	SOIL
D	300	200 / 0	0 / 0	0 / 0	0 / 0	100 / 0	0 / 0
G	316	214 / 0	0 / 0	0 / 0	0 / 0	102 / 0	0 / 0

BEARING MATERIAL TO BE SPF NO.2 OR BETTER AT JOINT(S) D

BRACING
TOP CHORD TO BE SHEATHED OR MAX. PURLIN SPACING = 6.25 FT.
MAX. UNBRACED BOTTOM CHORD LENGTH = 7.81 FT OR RIGID CEILING DIRECTLY APPLIED.

ALL PITCH BREAKS AND PERIMETER CORNER JOINTS MUST BE LATERALLY RESTRAINED.

LOADING
TOTAL LOAD CASES: (4)

CHORDS

MEMB. FR-TO	MAX. FACTORED FORCE (LBS)	FACTORED VERT. LOAD (PLF) FROM	TO	LC1	MAX CSI (LC)	MAX. UNBRAC LENGTH
A- B	-414 / 0	-95.2	-95.2	0.07 (1)	6.25	
B- H	-342 / 0	-95.2	-95.2	0.48 (1)	6.25	
H- I	-342 / 0	-95.2	-95.2	0.48 (1)	6.25	
I- J	-342 / 0	-95.2	-95.2	0.48 (1)	6.25	
J- C	-342 / 0	-95.2	-95.2	0.48 (1)	6.25	
D- C	-384 / 0	0.0	0.0	0.05 (1)	7.81	
F- K	0 / 0	-18.5	-18.5	0.10 (4)	10.00	
K- E	0 / 0	-18.5	-18.5	0.10 (4)	10.00	
E- L	0 / 0	-18.5	-18.5	0.10 (4)	10.00	
L- M	0 / 0	-18.5	-18.5	0.10 (4)	10.00	
M- D	0 / 0	-18.5	-18.5	0.10 (4)	10.00	
G- F	-448 / 0	0.0	0.0	0.03 (1)	7.81	
F- A	-441 / 0	0.0	0.0	0.03 (1)	7.81	

WEBS

MEMB. FR-TO	MAX. FACTORED FORCE (LBS)	MAX CSI (LC)
E- B	-214 / 0	0.04 (1)
E- C	0 / 369	0.09 (1)
A- E	0 / 403	0.10 (1)

SPECIFIED CONCENTRATED LOADS (LBS)

JT	LOC.	LC1	MAX-	MAX+	FACE	DIR.	TYPE	HEEL	CONN.
B	2-2-8	-6	-6	---	FRONT	VERT	DEAD	---	C1
B	2-2-8	-23	-23	---	FRONT	VERT	SNOW	---	C1
E	2-6-12	-0	-0	---	BACK	VERT	TOTAL	---	C1
H	2-6-12	-13	-13	---	BACK	VERT	TOTAL	---	C1
I	4-6-12	1	1	---	BACK	VERT	TOTAL	---	C1
J	6-6-12	1	1	---	BACK	VERT	TOTAL	---	C1
K	1-3-12	-0	-0	---	BACK	VERT	TOTAL	---	C1
L	4-6-12	-0	-0	---	BACK	VERT	TOTAL	---	C1
M	6-6-12	-2	-2	---	BACK	VERT	TOTAL	---	C1

CONNECTION REQUIREMENTS

1) **C1:** A SUITABLE HANGER/MECHANICAL CONNECTION IS REQUIRED.

DESIGN CRITERIA

*** SPECIAL LOADS ANALYSIS ***
GEOMETRY AND/OR BASIC LOADS CHANGED BY USER.
LOADS WERE DERIVED FROM USER INPUT
NO FURTHER MODIFICATIONS WERE MADE

SPECIFIED LOADS:

TOP CH.	LL	=	26.7	PSF
	DL	=	6.0	PSF
BOT CH.	LL	=	0.0	PSF
	DL	=	7.4	PSF
TOTAL LOAD		=	40.1	PSF

SPACING = 24.0 IN. C/C

LOADING IN FLAT SECTION BASED ON A SLOPE OF 6.00/12

*** NON STANDARD GIRDER ***
ADDT'L USER-DEFINED LOADS APPLIED TO ALL LOAD CASES.

THIS TRUSS IS DESIGNED FOR RESIDENTIAL OR SMALL BUILDING REQUIREMENTS OF PART 9, NBCC 2015

THIS DESIGN COMPLIES WITH:
- PART 9 OF BCBC 2018 , ABC 2019
- PART 9 OF OBC 2012 (2019 AMENDMENT)
- CSA 086-14
- TPIC 2014

(55 % OF 33.4 P.S.F. G.S.L. PLUS 8.4 P.S.F. RAIN LOAD) EQUALS 26.7 P.S.F. SPECIFIED ROOF LIVE LOAD

ALLOWABLE DEFL.(LL)= L/360 (0.24")
CALCULATED VERT. DEFL.(LL) = L/ 999 (0.00")
ALLOWABLE DEFL.(TL)= L/360 (0.24")
CALCULATED VERT. DEFL.(TL) = L/ 999 (0.02")

CSI: TC=0.48/1.00 (B-C:1) , BC=0.10/1.00 (D-E:4) , WB=0.10/1.00 (A-E:1) , SSI=0.22/1.00 (B-C:1)

DOL LUMBER=1.00 NAIL=1.00 LS BEND=1.00 COMP=1.00 SHEAR=1.00 TENS= 1.00

COMPANION LIVE LOAD FACTOR = 1.00

AUTOSOLVE RIGHT HEEL ONLY

TRUSS PLATE MANUFACTURER IS NOT RESPONSIBLE FOR QUALITY CONTROL IN THE TRUSS MANUFACTURING PLANT .

NAIL VALUES

PLATE	GRIP(DRY) (PSI) MAX	MIN	SHEAR (PLI) MAX	MIN	SECTION (PLI) MAX	MIN
MT20	650	371	1747	788	1987	1873

PLATE PLACEMENT TOL. = 0.250 inches

PLATE ROTATION TOL. = 5.0 Deg.

LICENSED PROFESSIONAL ENGINEER
8/02/22
C. M. HEYENS
100505065
PROVINCE OF ONTARIO

STRUCTURAL COMPONENT ONLY
DWG # TR22080345 PG 1/2

CONTINUED ON PAGE 2

JOB NAME	TRUSS NAME	QUANTITY	PLY	JOB DESC. GREEN PARK HOMES	DRWG NO.
427679	T54	1	1	TRUSS DESC.	

JSI GRIP= 0.63 (E) (INPUT = 0.90)
JSI METAL= 0.12 (C) (INPUT = 1.00)

LICENSED PROFESSIONAL ENGINEER
8/02/22
C. M. HEYENS
100505065
PROVINCE OF ONTARIO

STRUCTURAL COMPONENT ONLY
DWG # TR22080345 PG 2/2

JOB NAME	TRUSS NAME	QUANTITY	PLY	JOB DESC.	DRWG NO.
427679	T55	1	1	GREEN PARK HOMES TRUSS DESC.	

Tamarack Roof Truss, Burlington

Version 8.530 S Feb 23 2022 MiTek Industries, Inc. Tue Aug 2 14:52:44 2022 Page 1

ID:bP zphucbY03T7QZqjQJ9Vz?62X-NYny6dv?uCWF2IXEVgEt7V9WUyRb3JCyaQofPNyrsy1

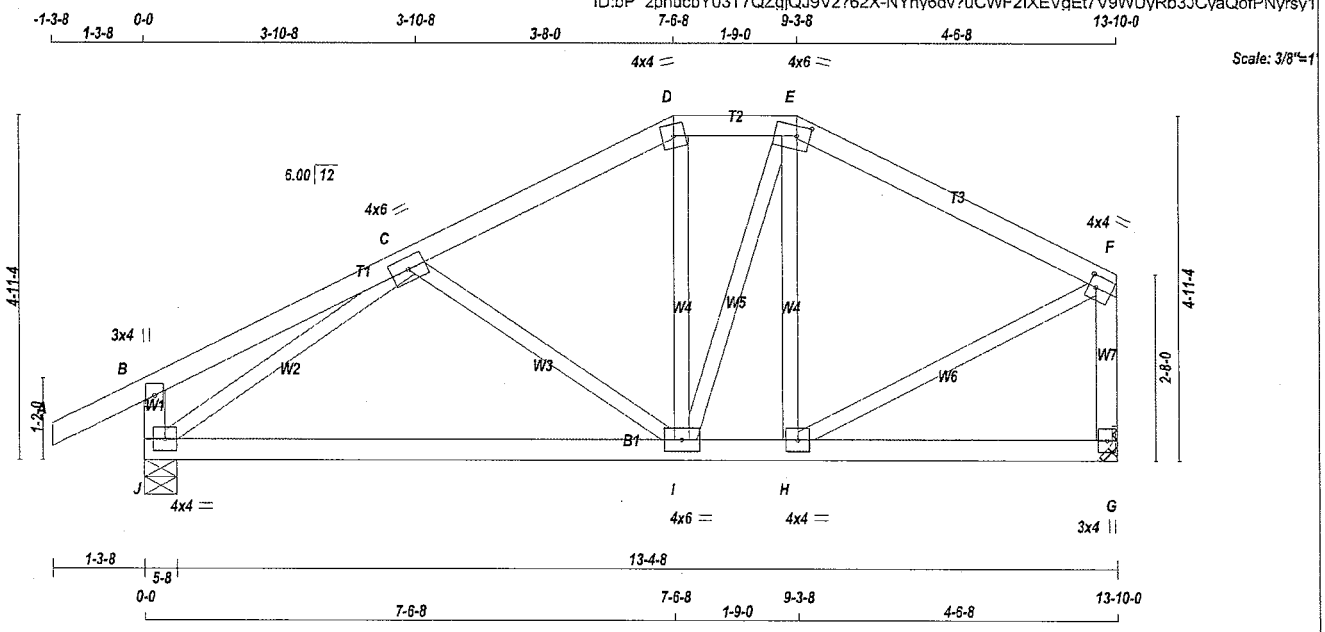

TOTAL WEIGHT = 60 lb

LUMBER

N. L. G. A. RULES

CHORDS	SIZE		LUMBER	DESCR.
A - D	2x4	DRY	No.2	SPF
D - E	2x4	DRY	No.2	SPF
E - F	2x4	DRY	No.2	SPF
J - B	2x4	DRY	No.2	SPF
G - F	2x4	DRY	No.2	SPF
J - G	2x4	DRY	No.2	SPF
ALL WEBS EXCEPT	2x3	DRY	No.2	SPF

DRY: SEASONED LUMBER.

PLATES (table is in inches)

JT	TYPE	PLATES	W	LEN	Y	X
B	TMV+p	MT20	3.0	4.0		
C	TMWW-t	MT20	4.0	6.0		
D	TTW-m	MT20	4.0	4.0		
E	TTWW-m	MT20	4.0	6.0	1.75	2.25
F	TMVW-t	MT20	4.0	4.0	2.00	1.25
G	BMV1+p	MT20	3.0	4.0		
H	BMWW-t	MT20	4.0	4.0		
I	BMWWW-t	MT20	4.0	6.0		
J	BMVW1-t	MT20	4.0	4.0		

NOTES- (1)

1) Lateral braces to be a minimum of 2X4 SPF #2.

LICENSED PROFESSIONAL ENGINEER
8/02/22
C. M. HEYENS
100505065
PROVINCE OF ONTARIO

STRUCTURAL COMPONENT ONLY
DWG # TR22080346

DIMENSIONS, SUPPORTS AND LOADINGS SPECIFIED BY FABRICATOR TO BE VERIFIED BY BUILDING DESIGNER

BEARINGS

JT	FACTORED GROSS REACTION VERT	HORZ	MAXIMUM FACTORED GROSS REACTION DOWN	HORZ	UPLIFT	INPUT BRG IN-SX	REQRD BRG IN-SX
G	786	0	786	0	0	MECHANICAL	
J	916	0	916	0	0	5-8	5-8

A SUITABLE HANGER/MECHANICAL CONNECTION IS REQUIRED AT JOINT G. MINIMUM BEARING LENGTH AT JOINT G = 3-8.

UNFACTORED REACTIONS

JT	1ST LCASE COMBINED	MAX./MIN. COMPONENT REACTIONS SNOW	LIVE	PERM.LIVE	WIND	DEAD	SOIL
G	555	370 / 0	0 / 0	0 / 0	0 / 0	185 / 0	0 / 0
J	644	442 / 0	0 / 0	0 / 0	0 / 0	202 / 0	0 / 0

BEARING MATERIAL TO BE SPF NO.2 OR BETTER AT JOINT(S) J

BRACING

TOP CHORD TO BE SHEATHED OR MAX. PURLIN SPACING = 6.25 FT.
MAX. UNBRACED BOTTOM CHORD LENGTH = 10.00 FT OR RIGID CEILING DIRECTLY APPLIED.

ALL PITCH BREAKS AND PERIMETER CORNER JOINTS MUST BE LATERALLY RESTRAINED.

LOADING

TOTAL LOAD CASES: (4)

CHORDS

MEMB. FR-TO	MAX. FACTORED FORCE (LBS)	FACTORED VERT. LOAD LC1 (PLF) FROM	TO	MAX CSI (LC)	MAX. UNBRAC LENGTH
A- B	0 / 29	-95.2	-95.2	0.12 (1)	10.00
B- C	0 / 18	-95.2	-95.2	0.21 (1)	10.00
C- D	-687 / 0	-95.2	-95.2	0.17 (1)	6.25
D- E	-599 / 0	-95.2	-95.2	0.04 (1)	6.25
E- F	-591 / 0	-95.2	-95.2	0.26 (1)	6.25
J- B	-266 / 0	0.0	0.0	0.03 (1)	7.81
G- F	-749 / 0	0.0	0.0	0.10 (1)	7.81
J- I	0 / 811	-18.5	-18.5	0.31 (4)	10.00
I- H	0 / 522	-18.5	-18.5	0.29 (4)	10.00
H- G	0 / 0	-18.5	-18.5	0.09 (4)	10.00

WEBS

MEMB. FR-TO	MAX. FACTORED FORCE (LBS)	MAX CSI (LC)
C- I	-260 / 0	0.10 (1)
I- D	0 / 76	0.02 (4)
I- E	0 / 230	0.05 (1)
H- E	-252 / 0	0.09 (1)
J- C	-1004 / 0	0.35 (1)
H- F	0 / 592	0.13 (1)

[M][F]

DESIGN CRITERIA

SPECIFIED LOADS:

TOP CH.	LL	=	26.7	PSF
	DL	=	6.0	PSF
BOT CH.	LL	=	0.0	PSF
	DL	=	7.4	PSF
TOTAL LOAD		=	40.1	PSF

SPACING = 24.0 IN. C/C

LOADING IN FLAT SECTION BASED ON A SLOPE OF 6.00/12

THIS TRUSS IS DESIGNED FOR RESIDENTIAL OR SMALL BUILDING REQUIREMENTS OF PART 9, NBCC 2015

THIS DESIGN COMPLIES WITH:
- PART 9 OF BCBC 2018 , ABC 2019
- PART 9 OF OBC 2012 (2019 AMENDMENT)
- CSA 086-14
- TPIC 2014

(55 % OF 33.4 P.S.F. G.S.L. PLUS 8.4 P.S.F. RAIN LOAD) EQUALS 26.7 P.S.F. SPECIFIED ROOF LIVE LOAD

ALLOWABLE DEFL.(LL)= L/360 (0.46")
CALCULATED VERT. DEFL.(LL) = L/ 999 (0.02")
ALLOWABLE DEFL.(TL)= L/360 (0.46")
CALCULATED VERT. DEFL.(TL) = L/ 999 (0.10")

CSI: TC=0.26/1.00 (E-F:1) , BC=0.31/1.00 (I-J:4) , WB=0.35/1.00 (C-J:1) , SSI=0.15/1.00 (C-D:1)

DOL LUMBER=1.00 NAIL=1.00 LS BEND=1.10 COMP=1.10 SHEAR=1.10 TENS= 1.10

COMPANION LIVE LOAD FACTOR = 1.00

TRUSS PLATE MANUFACTURER IS NOT RESPONSIBLE FOR QUALITY CONTROL IN THE TRUSS MANUFACTURING PLANT .

NAIL VALUES

PLATE	GRIP(DRY) (PSI) MAX	MIN	SHEAR (PLI) MAX	MIN	SECTION (PLI) MAX	MIN
MT20	650	371	1747	788	1987	1873

PLATE PLACEMENT TOL. = 0.250 inches

PLATE ROTATION TOL. = 5.0 Deg.

JSI GRIP= 0.86 (F) (INPUT = 0.90)
JSI METAL= 0.28 (J) (INPUT = 1.00)

JOB NAME	TRUSS NAME	QUANTITY	PLY	JOB DESC.	DRWG NO.
427679	T56	1	2	GREEN PARK HOMES TRUSS DESC.	

Tamarack Roof Truss, Burlington

Version 8.530 S Feb 23 2022 MiTek Industries, Inc. Tue Aug 2 14:52:45 2022 Page 1
ID:bP zphucbY03T7QZgjQJ9Vz?62X-skLKJzveeWf6gS6Q2Nl6gjhf?MqLoov5p4XCxpyrsy0

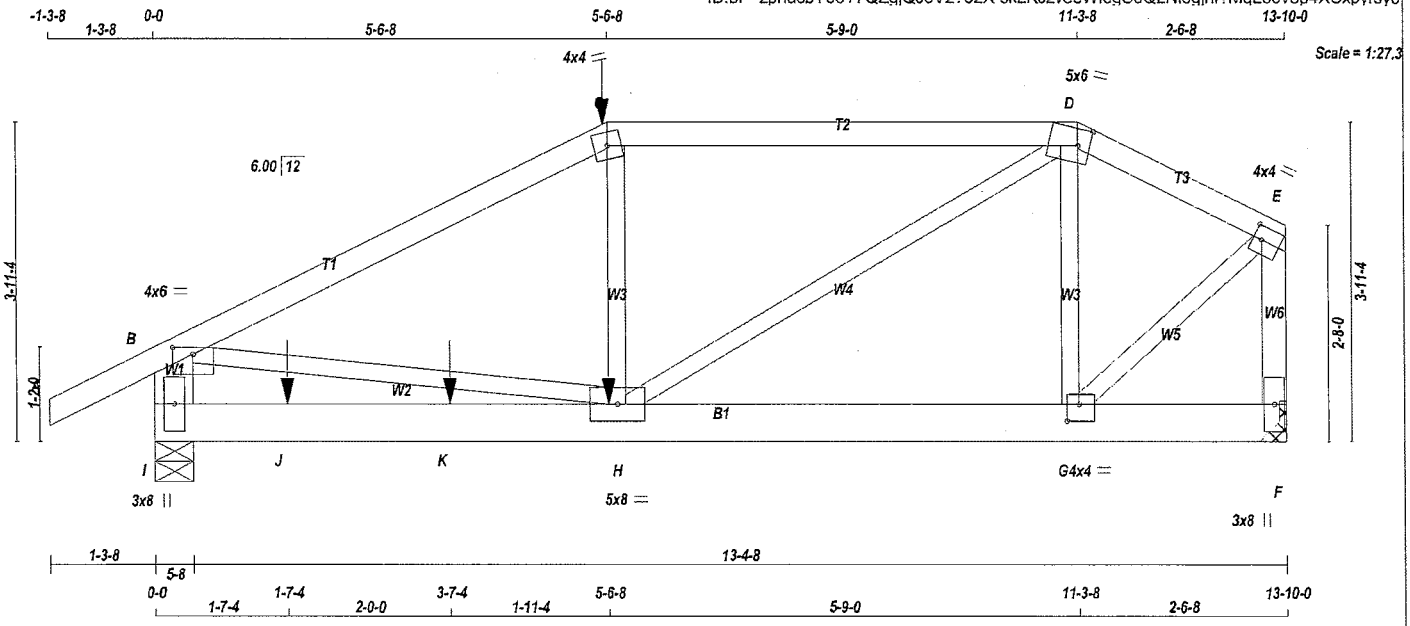

TOTAL WEIGHT = 2 X 64 = 128 lb

LUMBER
N. L. G. A. RULES

CHORDS	SIZE		LUMBER	DESCR.
A - C	2x4	DRY	No.2	SPF
C - D	2x4	DRY	No.2	SPF
D - E	2x4	DRY	No.2	SPF
I - B	2x6	DRY	No.2	SPF
F - E	2x4	DRY	No.2	SPF
I - F	2x6	DRY	No.2	SPF
ALL WEBS EXCEPT	2x3	DRY	No.2	SPF

DRY: SEASONED LUMBER.

DESIGN CONSISTS OF 2 TRUSSES BUILT SEPARATELY THEN FASTENED TOGETHER AS FOLLOWS:

CHORDS	#ROWS	SURFACE SPACING (IN)	LOAD(PLF)
TOP CHORDS : (0.122"X3") SPIRAL NAILS			
A- C	1	12	SIDE(61.0)
C- D	1	12	SIDE(61.0)
D- E	1	12	TOP
F- E	1	12	TOP
I- B	2	12	TOP
BOTTOM CHORDS : (0.122"X3") SPIRAL NAILS			
I- F	2	12	SIDE(183.1)
WEBS : (0.122"X3") SPIRAL NAILS			
H- C	1	6	SIDE(78.1)
2x3	1	6	

NAILS TO BE DRIVEN FROM ONE SIDE ONLY.

GIRDER NAILING ASSUMES NAILED HANGERS ARE FASTENED WITH MIN. 3-0 INCH NAILS.

TOP - COMPONENTS ARE LOADED FROM THE TOP AND MUST BE PLACED ON TOP EDGE OF ALL PLIES FOR THE LOAD TO BE TRANSFERRED TO EACH PLY.

SIDE - PLF SHOWN IS THE EQUIVALENT UDL APPLIED TO ONE SIDE THAT THE CORRESPONDING NAILING PATTERN SHALL BE CAPABLE OF TRANSFERING. REMAINING PLF MUST BE APPLIED ON THE OPPOSITE SIDE OR ON THE TOP.

LICENSED PROFESSIONAL ENGINEER
8/02/22
C. M. HEYENS
100505065
PROVINCE OF ONTARIO

STRUCTURAL COMPONENT ONLY
DWG # TR22080347 PG 1/2

DIMENSIONS, SUPPORTS AND LOADINGS SPECIFIED BY FABRICATOR TO BE VERIFIED BY BUILDING DESIGNER

BEARINGS

JT	FACTORED GROSS REACTION VERT	HORZ	MAXIMUM FACTORED GROSS REACTION DOWN	HORZ	UPLIFT	INPUT BRG IN-SX	REQRD BRG IN-SX
I	1780	0	1780	0	0	5-8	5-8
F	1372	0	1372	0	0	MECHANICAL	

A SUITABLE HANGER/MECHANICAL CONNECTION IS REQUIRED AT JOINT F. MINIMUM BEARING LENGTH AT JOINT F = 4-0.

UNFACTORED REACTIONS

JT	1ST LCASE COMBINED	MAX./MIN. COMPONENT REACTIONS SNOW	LIVE	PERM.LIVE	WIND	DEAD	SOIL
I	1250	872 / 0	0 / 0	0 / 0	0 / 0	378 / 0	0 / 0
F	964	670 / 0	0 / 0	0 / 0	0 / 0	294 / 0	0 / 0

BEARING MATERIAL TO BE SPF NO.2 OR BETTER AT JOINT(S) I

BRACING
TOP CHORD TO BE SHEATHED OR MAX. PURLIN SPACING = 5.53 FT.
MAX. UNBRACED BOTTOM CHORD LENGTH = 10.00 FT OR RIGID CEILING DIRECTLY APPLIED.

ALL PITCH BREAKS AND PERIMETER CORNER JOINTS MUST BE LATERALLY RESTRAINED.

LOADING
TOTAL LOAD CASES: (4)

CHORDS

MEMB. FR-TO	MAX. FACTORED FORCE (LBS)	FACTORED VERT. LOAD (PLF) FROM	TO	LC1	MAX CSI (LC)	MAX. UNBRAC LENGTH
A- B	0 / 29	-95.2	-95.2	0.07 (1)	10.00	
B- C	-2284 / 0	-95.2	-95.2	0.33 (1)	5.53	
C- D	-2047 / 0	-95.2	-95.2	0.33 (1)	5.73	
D- E	-1029 / 0	-95.2	-95.2	0.06 (1)	6.25	
I- B	-1692 / 0	0.0	0.0	0.06 (1)	7.81	
F- E	-1374 / 0	0.0	0.0	0.10 (1)	7.81	
I- J	0 / 0	-18.5	-18.5	0.06 (4)	10.00	
J- K	0 / 0	-18.5	-18.5	0.06 (4)	10.00	
K- H	0 / 0	-18.5	-18.5	0.06 (4)	10.00	
H- G	0 / 900	-18.5	-18.5	0.08 (1)	10.00	
G- F	0 / 0	-18.5	-18.5	0.03 (1)	10.00	

WEBS

MEMB. FR-TO	MAX. FACTORED FORCE (LBS)	MAX CSI (LC)
H- C	0 / 134	0.03 (4)
H- D	0 / 1362	0.17 (1)
G- D	-667 / 0	0.08 (1)
B- H	0 / 2060	0.26 (1)
G- E	0 / 1212	0.15 (1)

SPECIFIED CONCENTRATED LOADS (LBS)

JT	LOC.	LC1	MAX-	MAX+	FACE	DIR.	TYPE	HEEL	CONN.
C	5-6-8	-51	-51	---	FRONT	VERT	DEAD	---	C1
C	5-6-8	-225	-225	---	FRONT	VERT	SNOW	---	C1
H	5-6-8	-700	-700	---	FRONT	VERT	TOTAL	---	C1
J	1-7-4	-19	-19	---	FRONT	VERT	TOTAL	---	C1
K	3-7-4	-19	-19	---	FRONT	VERT	TOTAL	---	C1

CONNECTION REQUIREMENTS

1) **C1:** A SUITABLE HANGER/MECHANICAL CONNECTION IS REQUIRED.

[M]

DESIGN CRITERIA

*** SPECIAL LOADS ANALYSIS ***
GEOMETRY AND/OR BASIC LOADS CHANGED BY USER.
LOADS WERE DERIVED FROM USER INPUT
NO FURTHER MODIFICATIONS WERE MADE

SPECIFIED LOADS:

TOP CH.	LL	=	26.7	PSF
	DL	=	6.0	PSF
BOT CH.	LL	=	0.0	PSF
	DL	=	7.4	PSF
TOTAL LOAD		=	40.1	PSF

SPACING = 24.0 IN. C/C

LOADING IN FLAT SECTION BASED ON A SLOPE OF 6.00/12

*** NON STANDARD GIRDER ***
ADDT'L USER-DEFINED LOADS APPLIED TO ALL LOAD CASES.

THIS TRUSS IS DESIGNED FOR RESIDENTIAL OR SMALL BUILDING REQUIREMENTS OF PART 9, NBCC 2015

THIS DESIGN COMPLIES WITH:
- PART 9 OF BCBC 2018 , ABC 2019
- PART 9 OF OBC 2012 (2019 AMENDMENT)
- CSA 086-14
- TPIC 2014

(55 % OF 33.4 P.S.F. G.S.L. PLUS 8.4 P.S.F. RAIN LOAD) EQUALS 26.7 P.S.F. SPECIFIED ROOF LIVE LOAD

ALLOWABLE DEFL.(LL)= L/360 (0.46")
CALCULATED VERT. DEFL.(LL) = L/ 999 (0.02")
ALLOWABLE DEFL.(TL)= L/360 (0.46")
CALCULATED VERT. DEFL.(TL) = L/ 999 (0.04")

CSI: TC=0.33/1.00 (C-D:1) , BC=0.08/1.00 (G-H:1) , WB=0.26/1.00 (B-H:1) , SSI=0.12/1.00 (C-D:1)

DOL LUMBER=1.00 NAIL=1.00 LS BEND=1.00 COMP=1.00 SHEAR=1.00 TENS= 1.00

COMPANION LIVE LOAD FACTOR = 1.00

AUTOSOLVE RIGHT HEEL ONLY

TRUSS PLATE MANUFACTURER IS NOT RESPONSIBLE FOR QUALITY CONTROL IN THE TRUSS MANUFACTURING PLANT .

NAIL VALUES

PLATE	GRIP(DRY) (PSI) MAX	MIN	SHEAR (PLI) MAX	MIN	SECTION (PLI) MAX	MIN
MT20	650	371	1747	788	1987	1873

PLATE PLACEMENT TOL. = 0.250 inches

PLATE ROTATION TOL. = 5.0 Deg.

CONTINUED ON PAGE 2

JOB NAME	TRUSS NAME	QUANTITY	PLY	JOB DESC. GREEN PARK HOMES	DRWG NO.
427679	T56	1	2	TRUSS DESC.	

PLATES (table is in inches)

JT	TYPE	PLATES	W	LEN	Y	X
B	TMVW-p	MT20	4.0	6.0	1.00	3.00
C	TTW-m	MT20	4.0	4.0		
D	TTWW-m	MT20	5.0	6.0	2.50	1.75
E	TMVW-t	MT20	4.0	4.0	2.00	1.25
F	BMV1+p	MT20	3.0	8.0		
G	BMWW-t	MT20	4.0	4.0	2.50	1.75
H	BMWWW-t	MT20	5.0	8.0		
I	BMV1+p	MT20	3.0	8.0		

NOTES- (1)
1) Lateral braces to be a minimum of 2X4 SPF #2.

JSI GRIP= 0.84 (E) (INPUT = 0.90)
JSI METAL= 0.26 (B) (INPUT = 1.00)

LICENSED PROFESSIONAL ENGINEER
8/02/22
C. M. HEYENS
100505065
PROVINCE OF ONTARIO

STRUCTURAL COMPONENT ONLY
DWG # TR22080347 PG 2/2

JOB NAME	TRUSS NAME	QUANTITY	PLY	JOB DESC.	DRWG NO.
427679	T57	2	1	GREEN PARK HOMES TRUSS DESC.	

Tamarack Roof Truss, Burlington

Version 8.530 S Feb 23 2022 MiTek Industries, Inc. Tue Aug 2 14:52:46 2022 Page 1

ID:bP zphucbY03T7QZgjQJ9Vz?62X-KwviXJwGPpnzHchcc5GLCwEsoI9YXHFF2kHmTGyrsy?

Scale = 1:31.4

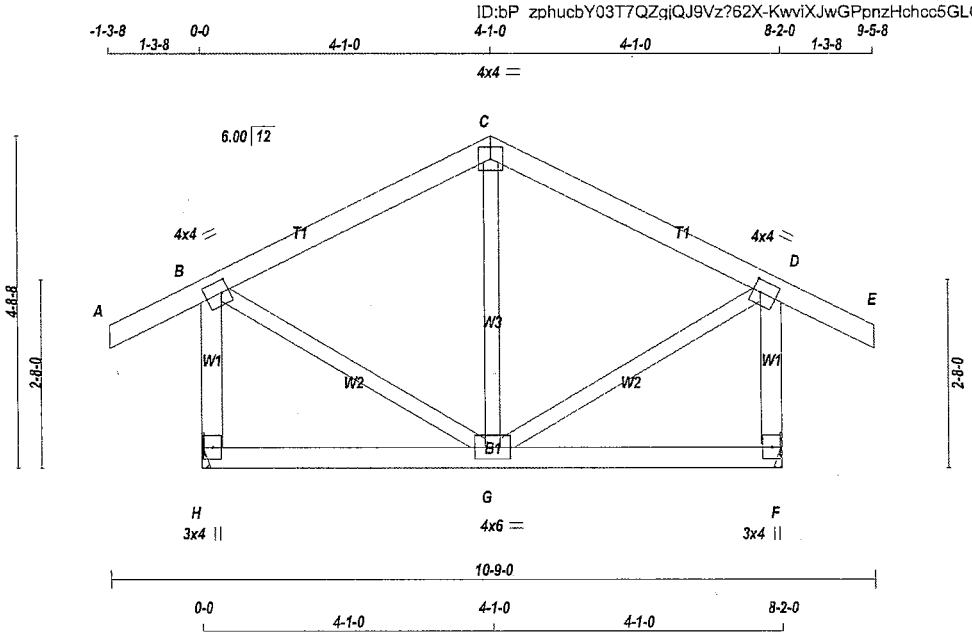

TOTAL WEIGHT = 2 X 39 = 77 lb

[M][F]

LUMBER

N. L. G. A. RULES

CHORDS	SIZE		LUMBER	DESCR.
A - C	2x4	DRY	No.2	SPF
C - E	2x4	DRY	No.2	SPF
H - B	2x4	DRY	No.2	SPF
F - D	2x4	DRY	No.2	SPF
H - F	2x4	DRY	No.2	SPF
ALL WEBS EXCEPT	2x3	DRY	No.2	SPF

DRY: SEASONED LUMBER.

PLATES (table is in inches)

JT	TYPE	PLATES	W	LEN	Y	X
B	TMVW-t	MT20	4.0	4.0	2.00	1.25
C	TTW-p	MT20	4.0	4.0		
D	TMVW-t	MT20	4.0	4.0	2.00	1.25
F	BMV1+p	MT20	3.0	4.0		
G	BMWWW-t	MT20	4.0	6.0		
H	BMV1+p	MT20	3.0	4.0		

NOTES- (1)

1) Lateral braces to be a minimum of 2X4 SPF #2.

DIMENSIONS, SUPPORTS AND LOADINGS SPECIFIED BY FABRICATOR TO BE VERIFIED BY BUILDING DESIGNER

BEARINGS

JT	FACTORED GROSS REACTION VERT	HORZ	MAXIMUM FACTORED GROSS REACTION DOWN	HORZ	UPLIFT	INPUT BRG IN-SX	REQRD BRG IN-SX
H	593	0	593	0	0	MECHANICAL	
F	593	0	593	0	0	MECHANICAL	

A SUITABLE HANGER/MECHANICAL CONNECTION IS REQUIRED AT JOINT H, F. MINIMUM BEARING LENGTH AT JOINT H = 1-8, JOINT F = 1-8.

UNFACTORED REACTIONS

JT	1ST LCASE COMBINED	MAX./MIN. COMPONENT REACTIONS SNOW	LIVE	PERM.LIVE	WIND	DEAD	SOIL
H	417	291 / 0	0 / 0	0 / 0	0 / 0	126 / 0	0 / 0
F	417	291 / 0	0 / 0	0 / 0	0 / 0	126 / 0	0 / 0

BRACING

TOP CHORD TO BE SHEATHED OR MAX. PURLIN SPACING = 6.25 FT.
MAX. UNBRACED BOTTOM CHORD LENGTH = 10.00 FT OR RIGID CEILING DIRECTLY APPLIED.

ALL PITCH BREAKS AND PERIMETER CORNER JOINTS MUST BE LATERALLY RESTRAINED.

LOADING

TOTAL LOAD CASES: (4)

CHORDS

MEMB. FR-TO	MAX. FACTORED FORCE (LBS)	FACTORED VERT. LOAD (PLF) FROM	TO	LC1	MAX CSI (LC)	MAX. UNBRAC LENGTH
A- B	0 / 29	-95.2	-95.2	0.12 (1)	10.00	
B- C	-249 / 0	-95.2	-95.2	0.20 (1)	6.25	
C- D	-249 / 0	-95.2	-95.2	0.20 (1)	6.25	
D- E	0 / 29	-95.2	-95.2	0.12 (1)	10.00	
H- B	-564 / 0	0.0	0.0	0.08 (1)	7.81	
F- D	-564 / 0	0.0	0.0	0.08 (1)	7.81	
H- G	0 / 0	-18.5	-18.5	0.09 (4)	10.00	
G- F	0 / 0	-18.5	-18.5	0.09 (4)	10.00	

WEBS

MEMB. FR-TO	MAX. FACTORED FORCE (LBS)	MAX CSI (LC)
G- C	-166 / 12	0.05 (1)
B- G	0 / 258	0.06 (1)
G- D	0 / 258	0.06 (1)

DESIGN CRITERIA

SPECIFIED LOADS:

TOP CH.	LL	=	26.7	PSF
	DL	=	6.0	PSF
BOT CH.	LL	=	0.0	PSF
	DL	=	7.4	PSF
TOTAL LOAD		=	40.1	PSF

SPACING = 24.0 IN. C/C

THIS TRUSS IS DESIGNED FOR RESIDENTIAL OR SMALL BUILDING REQUIREMENTS OF PART 9, NBCC 2015

THIS DESIGN COMPLIES WITH:
- PART 9 OF BCBC 2018 , ABC 2019
- PART 9 OF OBC 2012 (2019 AMENDMENT)
- CSA 086-14
- TPIC 2014

(55 % OF 33.4 P.S.F. G.S.L. PLUS 8.4 P.S.F. RAIN LOAD) EQUALS 26.7 P.S.F. SPECIFIED ROOF LIVE LOAD

ALLOWABLE DEFL.(LL)= L/360 (0.27")
CALCULATED VERT. DEFL.(LL) = L/ 999 (0.00")
ALLOWABLE DEFL.(TL)= L/360 (0.27")
CALCULATED VERT. DEFL.(TL) = L/ 999 (0.01")

CSI: TC=0.20/1.00 (C-D:1) , BC=0.09/1.00 (G-H:4) , WB=0.06/1.00 (B-G:1) , SSI=0.14/1.00 (C-D:1)

DOL LUMBER=1.00 NAIL=1.00 LS BEND=1.10 COMP=1.10 SHEAR=1.10 TENS= 1.10

COMPANION LIVE LOAD FACTOR = 1.00

TRUSS PLATE MANUFACTURER IS NOT RESPONSIBLE FOR QUALITY CONTROL IN THE TRUSS MANUFACTURING PLANT .

NAIL VALUES

PLATE	GRIP(DRY) (PSI) MAX	MIN	SHEAR (PLI) MAX	MIN	SECTION (PLI) MAX	MIN
MT20	650	371	1747	788	1987	1873

PLATE PLACEMENT TOL. = 0.250 inches

PLATE ROTATION TOL. = 5.0 Deg.

JSI GRIP= 0.37 (D) (INPUT = 0.90)
JSI METAL= 0.13 (D) (INPUT = 1.00)

LICENSED PROFESSIONAL ENGINEER
8/02/22
C. M. HEYENS
100505065
PROVINCE OF ONTARIO

STRUCTURAL COMPONENT ONLY
DWG # TR22080348

JOB NAME	TRUSS NAME	QUANTITY	PLY	JOB DESC.	DRWG NO.
427679	T58	1	2	GREEN PARK HOMES TRUSS DESC.	

Tamarack Roof Truss, Burlington

Version 8.530 S Feb 23 2022 MiTek Industries, Inc. Tue Aug 2 14:52:46 2022 Page 1

ID:bP zphucbY03T7QZgjQJ9Vz?62X-KwviXJwGPpnzHchcc5GLCwEv5I86XGRF2kHmTGyrsy?

Scale = 1:25.1

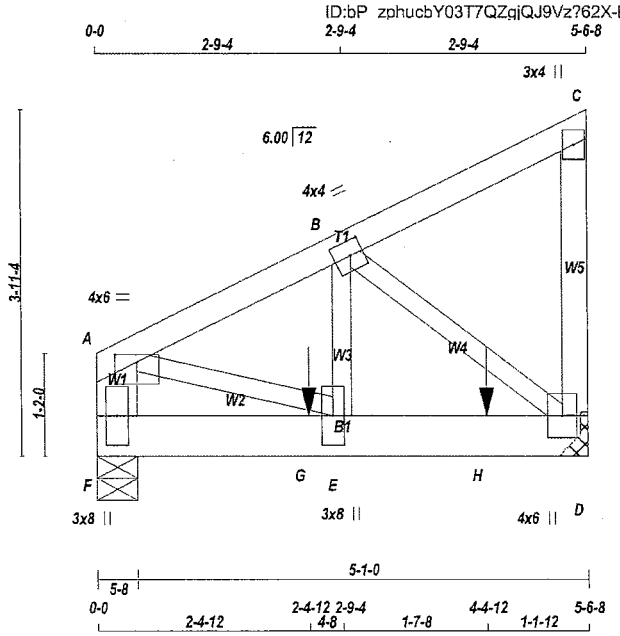

TOTAL WEIGHT = 2 X 28 = 55 lb

LUMBER

N. L. G. A. RULES

CHORDS	SIZE		LUMBER	DESCR.
A - C	2x4	DRY	No.2	SPF
D - C	2x4	DRY	No.2	SPF
F - A	2x6	DRY	No.2	SPF
F - D	2x6	DRY	No.2	SPF
ALL WEBS	2x3	DRY	No.2	SPF

DRY: SEASONED LUMBER.

DESIGN CONSISTS OF 2 TRUSSES BUILT SEPARATELY THEN FASTENED TOGETHER AS FOLLOWS:

CHORDS	#ROWS	SURFACE SPACING (IN)	LOAD(PLF)
TOP CHORDS : (0.122"X3") SPIRAL NAILS			
A- C	1	12	TOP
C- D	1	12	TOP
F- A	2	12	TOP
BOTTOM CHORDS : (0.122"X3") SPIRAL NAILS			
F- D	2	12	SIDE(0.0)
WEBS : (0.122"X3") SPIRAL NAILS			
2x3	1	6	

NAILS TO BE DRIVEN FROM ONE SIDE ONLY.

GIRDER NAILING ASSUMES NAILED HANGERS ARE FASTENED WITH MIN. 3-0 INCH NAILS.

TOP - COMPONENTS ARE LOADED FROM THE TOP AND MUST BE PLACED ON TOP EDGE OF ALL PLIES FOR THE LOAD TO BE TRANSFERRED TO EACH PLY.

SIDE - PLF SHOWN IS THE EQUIVALENT UDL APPLIED TO ONE SIDE THAT THE CORRESPONDING NAILING PATTERN SHALL BE CAPABLE OF TRANSFERING. REMAINING PLF MUST BE APPLIED ON THE OPPOSITE SIDE OR ON THE TOP.

PLATES (table is in inches)

JT	TYPE	PLATES	W	LEN	Y	X
A	TMVW-p	MT20	4.0	6.0	1.00	3.00
B	TMWW-t	MT20	4.0	4.0	2.00	1.75
C	TMV+p	MT20	3.0	4.0		

LICENSED PROFESSIONAL ENGINEER
8/02/22
C. M. HEYENS
100505065
PROVINCE OF ONTARIO

STRUCTURAL COMPONENT ONLY
DWG # TR22080349 PG 1/2

DIMENSIONS, SUPPORTS AND LOADINGS SPECIFIED BY FABRICATOR TO BE VERIFIED BY BUILDING DESIGNER

BEARINGS

JT	FACTORED GROSS REACTION VERT	HORZ	MAXIMUM FACTORED GROSS REACTION DOWN	HORZ	UPLIFT	INPUT BRG IN-SX	REQRD BRG IN-SX
D	1020	0	1020	0	0	MECHANICAL	
F	760	0	760	0	0	5-8	5-8

A SUITABLE HANGER/MECHANICAL CONNECTION IS REQUIRED AT JOINT D. MINIMUM BEARING LENGTH AT JOINT D = 4-0.

UNFACTORED REACTIONS

JT	1ST LCASE COMBINED	MAX./MIN. COMPONENT REACTIONS SNOW	LIVE	PERM.LIVE	WIND	DEAD	SOIL
D	715	505 / 0	0 / 0	0 / 0	0 / 0	210 / 0	0 / 0
F	534	373 / 0	0 / 0	0 / 0	0 / 0	160 / 0	0 / 0

BEARING MATERIAL TO BE SPF NO.2 OR BETTER AT JOINT(S) F

BRACING

TOP CHORD TO BE SHEATHED OR MAX. PURLIN SPACING = 6.25 FT.
MAX. UNBRACED BOTTOM CHORD LENGTH = 10.00 FT OR RIGID CEILING DIRECTLY APPLIED.

ALL PITCH BREAKS AND PERIMETER CORNER JOINTS MUST BE LATERALLY RESTRAINED.

LOADING

TOTAL LOAD CASES: (4)

CHORDS MEMB. FR-TO	MAX. FACTORED FORCE (LBS)	FACTORED VERT. LOAD (PLF) FROM	TO	LC1 MAX CSI (LC)	MAX. UNBRAC LENGTH	WEBS MEMB. FR-TO	MAX. FACTORED FORCE (LBS)	MAX CSI (LC)
A- B	-845 / 0	-95.2	-95.2	0.06 (1)	6.25	B- D	-971 / 0	0.11 (1)
B- C	-12 / 0	-95.2	-95.2	0.05 (1)	6.25	E- B	0 / 664	0.08 (1)
D- C	-106 / 0	0.0	0.0	0.01 (1)	7.81	A- E	0 / 795	0.10 (1)
F- A	-703 / 0	0.0	0.0	0.02 (1)	7.81			
F- G	0 / 0	-18.5	-18.5	0.05 (1)	10.00			
G- E	0 / 0	-18.5	-18.5	0.05 (1)	10.00			
E- H	0 / 766	-18.5	-18.5	0.18 (1)	10.00			
H- D	0 / 766	-18.5	-18.5	0.18 (1)	10.00			

SPECIFIED CONCENTRATED LOADS (LBS)

JT	LOC.	LC1	MAX-	MAX+	FACE	DIR.	TYPE	HEEL	CONN.
G	2-4-12	-402	-402	---	FRONT	VERT	TOTAL	---	C1
H	4-4-12	-402	-402	---	FRONT	VERT	TOTAL	---	C1

CONNECTION REQUIREMENTS

1) **C1:** A SUITABLE HANGER/MECHANICAL CONNECTION IS REQUIRED.

[M]

DESIGN CRITERIA

SPECIFIED LOADS:

TOP CH.	LL	=	26.7	PSF
	DL	=	6.0	PSF
BOT CH.	LL	=	0.0	PSF
	DL	=	7.4	PSF
TOTAL LOAD		=	40.1	PSF

SPACING = 24.0 IN. C/C

THIS TRUSS IS DESIGNED FOR RESIDENTIAL OR SMALL BUILDING REQUIREMENTS OF PART 9, NBCC 2015

THIS DESIGN COMPLIES WITH:
- PART 9 OF BCBC 2018 , ABC 2019
- PART 9 OF OBC 2012 (2019 AMENDMENT)
- CSA 086-14
- TPIC 2014

(55 % OF 33.4 P.S.F. G.S.L. PLUS 8.4 P.S.F. RAIN LOAD) EQUALS 26.7 P.S.F. SPECIFIED ROOF LIVE LOAD

ALLOWABLE DEFL.(LL)= L/360 (0.19")
CALCULATED VERT. DEFL.(LL) = L/ 999 (0.01")
ALLOWABLE DEFL.(TL)= L/360 (0.19")
CALCULATED VERT. DEFL.(TL) = L/ 999 (0.01")

CSI: TC=0.06/1.00 (A-B:1) , BC=0.18/1.00 (D-E:1) , WB=0.11/1.00 (B-D:1) , SSI=0.19/1.00 (E-F:1)

DOL LUMBER=1.00 NAIL=1.00 LS BEND=1.00 COMP=1.00 SHEAR=1.00 TENS= 1.00

COMPANION LIVE LOAD FACTOR = 1.00

AUTOSOLVE RIGHT HEEL ONLY

TRUSS PLATE MANUFACTURER IS NOT RESPONSIBLE FOR QUALITY CONTROL IN THE TRUSS MANUFACTURING PLANT .

NAIL VALUES

PLATE	GRIP(DRY) (PSI) MAX	MIN	SHEAR (PLI) MAX	MIN	SECTION (PLI) MAX	MIN
MT20	650	371	1747	788	1987	1873

PLATE PLACEMENT TOL. = 0.250 inches

PLATE ROTATION TOL. = 5.0 Deg.

JSI GRIP= 0.52 (E) (INPUT = 0.90)
JSI METAL= 0.23 (E) (INPUT = 1.00)

CONTINUED ON PAGE 2

PLATES (table is in inches)

JT	TYPE	PLATES	W	LEN	Y	X
D	BMVW1+p	MT20	4.0	6.0		
E	BMWW+t	MT20	3.0	8.0		
F	BMV1+p	MT20	3.0	8.0		

NOTES- (1)
1) Lateral braces to be a minimum of 2X4 SPF #2.

LICENSED PROFESSIONAL ENGINEER
8/02/22
C. M. HEYENS
100505065
PROVINCE OF ONTARIO

STRUCTURAL COMPONENT ONLY
DWG # TR22080349 PG 2/2

JOB NAME	TRUSS NAME	QUANTITY	PLY	JOB DESC.	DRWG NO.
427679	T59	1	1	GREEN PARK HOMES TRUSS DESC.	

Tamarack Roof Truss, Burlington

Version 8.530 S Feb 23 2022 MiTek Industries, Inc. Tue Aug 2 14:52:47 2022 Page 1

ID:bP zphucbY03T7QZqjQJ9Vz?62X-o7T5kfxuA7vqvmGpAonal8n0o9VSGjdOHO0J0iyrsy

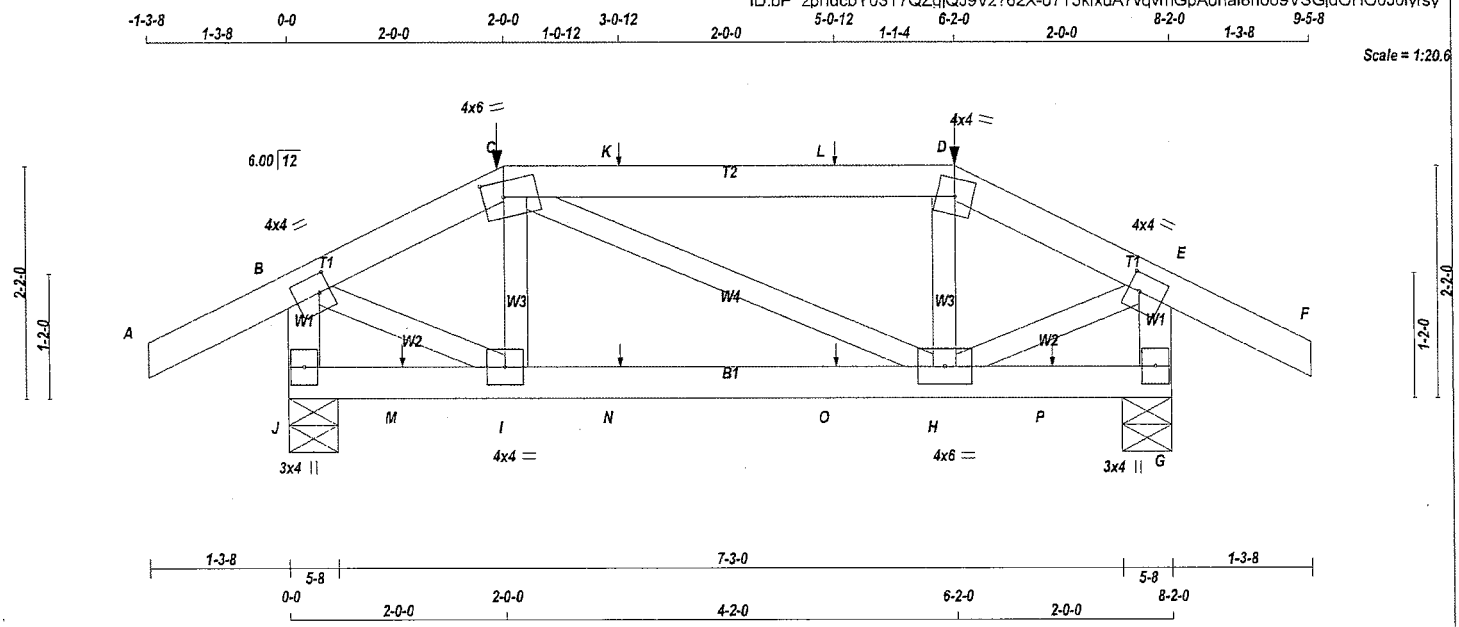

TOTAL WEIGHT = 33 lb

[M]

LUMBER

N. L. G. A. RULES

CHORDS	SIZE		LUMBER	DESCR.
A - C	2x4	DRY	No.2	SPF
C - D	2x4	DRY	No.2	SPF
D - F	2x4	DRY	No.2	SPF
J - B	2x4	DRY	No.2	SPF
G - E	2x4	DRY	No.2	SPF
J - G	2x4	DRY	No.2	SPF
ALL WEBS EXCEPT	2x3	DRY	No.2	SPF

DRY: SEASONED LUMBER.

PLATES (table is in inches)

JT	TYPE	PLATES	W	LEN	Y	X
B	TMVW-t	MT20	4.0	4.0	2.00	1.25
C	TTWW-m	MT20	4.0	6.0	1.75	2.25
D	TTW-m	MT20	4.0	4.0		
E	TMVW-t	MT20	4.0	4.0	2.00	1.25
G	BMV1+p	MT20	3.0	4.0		
H	BMWWW-t	MT20	4.0	6.0		
I	BMWW-t	MT20	4.0	4.0		
J	BMV1+p	MT20	3.0	4.0		

NOTES- (1)

1) Lateral braces to be a minimum of 2X4 SPF #2.

LICENSED PROFESSIONAL ENGINEER
8/02/22
C. M. HEYENS
100505065
PROVINCE OF ONTARIO

STRUCTURAL COMPONENT ONLY
DWG # TR22080350

DIMENSIONS, SUPPORTS AND LOADINGS SPECIFIED BY FABRICATOR TO BE VERIFIED BY BUILDING DESIGNER

BEARINGS

JT	FACTORED GROSS REACTION VERT	HORZ	MAXIMUM FACTORED GROSS REACTION DOWN	HORZ	UPLIFT	INPUT BRG IN-SX	REQRD BRG IN-SX
J	625	0	625	0	0	5-8	5-8
G	625	0	625	0	0	5-8	5-8

UNFACTORED REACTIONS

JT	1ST LCASE COMBINED	MAX./MIN. COMPONENT REACTIONS SNOW	LIVE	PERM.LIVE	WIND	DEAD	SOIL
J	439	309 / 0	0 / 0	0 / 0	0 / 0	130 / 0	0 / 0
G	439	309 / 0	0 / 0	0 / 0	0 / 0	130 / 0	0 / 0

BEARING MATERIAL TO BE SPF NO.2 OR BETTER AT JOINT(S) J, G

BRACING

TOP CHORD TO BE SHEATHED OR MAX. PURLIN SPACING = 6.25 FT.
MAX. UNBRACED BOTTOM CHORD LENGTH = 10.00 FT OR RIGID CEILING DIRECTLY APPLIED.

ALL PITCH BREAKS AND PERIMETER CORNER JOINTS MUST BE LATERALLY RESTRAINED.

LOADING

TOTAL LOAD CASES: (4)

CHORDS

MEMB. FR-TO	MAX. FACTORED FORCE (LBS)	FACTORED VERT. LOAD (PLF) FROM	TO	LC1 MAX CSI (LC)	MAX. UNBRAC LENGTH
A- B	0 / 29	-95.2	-95.2	0.14 (1)	10.00
B- C	-477 / 0	-95.2	-95.2	0.07 (1)	6.25
C- K	-419 / 0	-95.2	-95.2	0.32 (1)	6.25
K- L	-419 / 0	-95.2	-95.2	0.32 (1)	6.25
L- D	-419 / 0	-95.2	-95.2	0.32 (1)	6.25
D- E	-477 / 0	-95.2	-95.2	0.07 (1)	6.25
E- F	0 / 29	-95.2	-95.2	0.14 (1)	10.00
J- B	-613 / 0	0.0	0.0	0.07 (1)	7.81
G- E	-612 / 0	0.0	0.0	0.07 (1)	7.81
J- M	0 / 0	-18.5	-18.5	0.05 (4)	10.00
M- I	0 / 0	-18.5	-18.5	0.05 (4)	10.00
I- N	0 / 420	-18.5	-18.5	0.11 (1)	10.00
N- O	0 / 420	-18.5	-18.5	0.11 (1)	10.00
O- H	0 / 420	-18.5	-18.5	0.11 (1)	10.00
H- P	0 / 0	-18.5	-18.5	0.05 (4)	10.00
P- G	0 / 0	-18.5	-18.5	0.05 (4)	10.00

WEBS

MEMB. FR-TO	MAX. FACTORED FORCE (LBS)	MAX CSI (LC)
I- C	-111 / 14	0.02 (1)
C- H	0 / 0	0.00 (1)
H- D	-111 / 15	0.02 (1)
B- I	0 / 460	0.11 (1)
H- E	0 / 459	0.11 (1)

SPECIFIED CONCENTRATED LOADS (LBS)

JT	LOC.	LC1	MAX-	MAX+	FACE	DIR.	TYPE	HEEL	CONN.
C	2-0-0	-4	-4	---	FRONT	VERT	DEAD	---	C1
C	2-0-0	-18	-18	---	FRONT	VERT	SNOW	---	C1
D	6-2-0	-4	-4	---	FRONT	VERT	DEAD	---	C1
D	6-2-0	-18	-18	---	FRONT	VERT	SNOW	---	C1
K	3-0-12	1	1	---	FRONT	VERT	TOTAL	---	C1
L	5-0-12	1	1	---	FRONT	VERT	TOTAL	---	C1
M	1-0-12	1	1	---	FRONT	VERT	TOTAL	---	C1
N	3-0-12	1	1	---	FRONT	VERT	TOTAL	---	C1
O	5-0-12	1	1	---	FRONT	VERT	TOTAL	---	C1
P	7-0-12	1	1	---	FRONT	VERT	TOTAL	---	C1

CONNECTION REQUIREMENTS

1) **C1:** A SUITABLE HANGER/MECHANICAL CONNECTION IS REQUIRED.

DESIGN CRITERIA

*** SPECIAL LOADS ANALYSIS ***
GEOMETRY AND/OR BASIC LOADS CHANGED BY USER.
LOADS WERE DERIVED FROM USER INPUT
NO FURTHER MODIFICATIONS WERE MADE

SPECIFIED LOADS:

TOP CH.	LL	=	26.7	PSF
	DL	=	6.0	PSF
BOT CH.	LL	=	0.0	PSF
	DL	=	7.4	PSF
TOTAL LOAD		=	40.1	PSF

SPACING = 24.0 IN. C/C

LOADING IN FLAT SECTION BASED ON A SLOPE OF 6.00/12

*** NON STANDARD GIRDER ***
ADDT'L USER-DEFINED LOADS APPLIED TO ALL LOAD CASES.

THIS TRUSS IS DESIGNED FOR RESIDENTIAL OR SMALL BUILDING REQUIREMENTS OF PART 9, NBCC 2015

THIS DESIGN COMPLIES WITH:
- PART 9 OF BCBC 2018 , ABC 2019
- PART 9 OF OBC 2012 (2019 AMENDMENT)
- CSA 086-14
- TPIC 2014

(55 % OF 33.4 P.S.F. G.S.L. PLUS 8.4 P.S.F. RAIN LOAD) EQUALS 26.7 P.S.F. SPECIFIED ROOF LIVE LOAD

ALLOWABLE DEFL.(LL)= L/360 (0.27")
CALCULATED VERT. DEFL.(LL) = L/ 999 (0.01")
ALLOWABLE DEFL.(TL)= L/360 (0.27")
CALCULATED VERT. DEFL.(TL) = L/ 999 (0.01")

CSI: TC=0.32/1.00 (C-D:1) , BC=0.11/1.00 (H-I:1) , WB=0.11/1.00 (B-I:1) , SSI=0.17/1.00 (C-D:1)

DOL LUMBER=1.00 NAIL=1.00 LS BEND=1.00 COMP=1.00 SHEAR=1.00 TENS= 1.00

COMPANION LIVE LOAD FACTOR = 1.00

TRUSS PLATE MANUFACTURER IS NOT RESPONSIBLE FOR QUALITY CONTROL IN THE TRUSS MANUFACTURING PLANT .

NAIL VALUES

PLATE	GRIP(DRY) (PSI) MAX	MIN	SHEAR (PLI) MAX	MIN	SECTION (PLI) MAX	MIN
MT20	650	371	1747	788	1987	1873

PLATE PLACEMENT TOL. = 0.250 inches

PLATE ROTATION TOL. = 5.0 Deg.

JSI GRIP= 0.69 (B) (INPUT = 0.90)
JSI METAL= 0.20 (B) (INPUT = 1.00)

JOB NAME	TRUSS NAME	QUANTITY	PLY	JOB DESC.	DRWG NO.
427679	T60	1	2	GREEN PARK HOMES TRUSS DESC.	

Tamarack Roof Truss, Burlington

Version 8.530 S Feb 23 2022 MiTek Industries, Inc. Tue Aug 2 14:52:48 2022 Page 1
ID:bP zphucbY03T7QZgjQJ9Vz?62X-GJ1Ty?yWxR1hXwq?kWJpHLJBfZnG?7aYV2msX8yrsxz

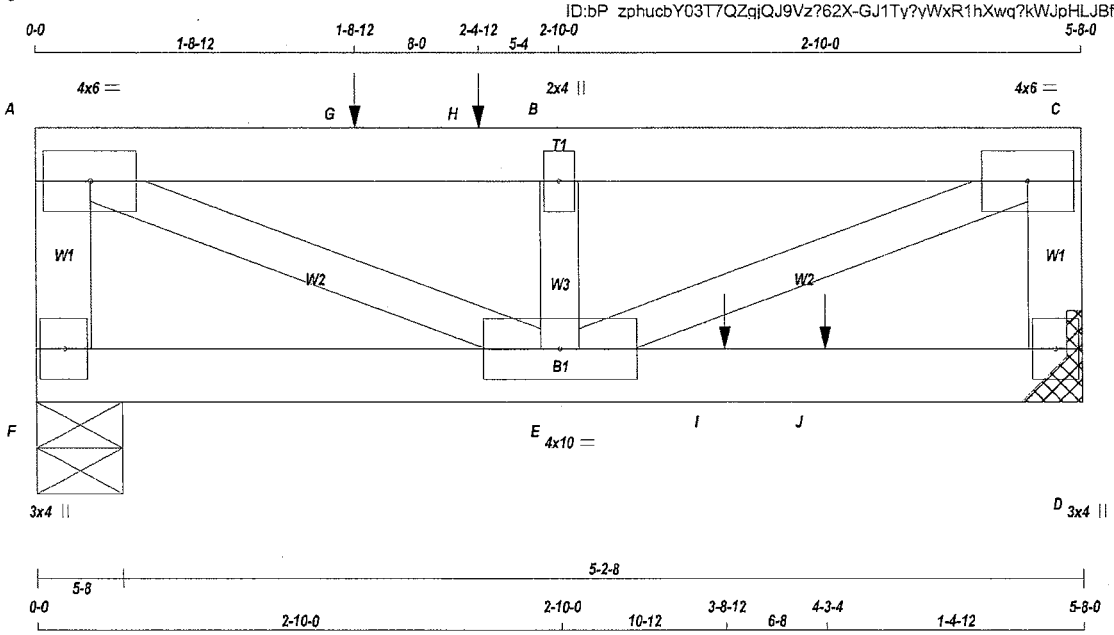

TOTAL WEIGHT = 2 X 20 = 40 lb

[M]

LUMBER
N. L. G. A. RULES

CHORDS	SIZE		LUMBER	DESCR.
F - A	2x4	DRY	No.2	SPF
A - C	2x4	DRY	No.2	SPF
D - C	2x4	DRY	No.2	SPF
F - D	2x4	DRY	No.2	SPF
ALL WEBS	2x3	DRY	No.2	SPF

DRY: SEASONED LUMBER.

DESIGN CONSISTS OF 2 TRUSSES BUILT SEPARATELY THEN FASTENED TOGETHER AS FOLLOWS:

CHORDS	#ROWS	SURFACE SPACING (IN)	LOAD(PLF)
TOP CHORDS : (0.122"X3") SPIRAL NAILS			
F- A	1	12	TOP
A- C	1	12	TOP
C- D	1	12	TOP
BOTTOM CHORDS : (0.122"X3") SPIRAL NAILS			
F- D	1	12	SIDE(0.0)
WEBS : (0.122"X3") SPIRAL NAILS			
2x3	1	6	

NAILS TO BE DRIVEN FROM ONE SIDE ONLY.

GIRDER NAILING ASSUMES NAILED HANGERS ARE FASTENED WITH MIN. 3-0 INCH NAILS.

TOP - COMPONENTS ARE LOADED FROM THE TOP AND MUST BE PLACED ON TOP EDGE OF ALL PLIES FOR THE LOAD TO BE TRANSFERRED TO EACH PLY.

SIDE - PLF SHOWN IS THE EQUIVALENT UDL APPLIED TO ONE SIDE THAT THE CORRESPONDING NAILING PATTERN SHALL BE CAPABLE OF TRANSFERING. REMAINING PLF MUST BE APPLIED ON THE OPPOSITE SIDE OR ON THE TOP.

PLATES (table is in inches)

JT	TYPE	PLATES	W	LEN	Y	X
A	TMVW-t	MT20	4.0	6.0		
B	TMW+w	MT20	2.0	4.0		
C	TMVW-t	MT20	4.0	6.0		

LICENSED PROFESSIONAL ENGINEER
8/02/22
C. M. HEYENS
100505065
PROVINCE OF ONTARIO

STRUCTURAL COMPONENT ONLY
DWG # TR22080351 PG 1/2

DIMENSIONS, SUPPORTS AND LOADINGS SPECIFIED BY FABRICATOR TO BE VERIFIED BY BUILDING DESIGNER

BEARINGS

JT	FACTORED GROSS REACTION VERT	HORZ	MAXIMUM FACTORED GROSS REACTION DOWN	HORZ	UPLIFT	INPUT BRG IN-SX	REQRD BRG IN-SX
F	1108	0	1108	0	0	5-8	5-8
D	1222	0	1222	0	0	MECHANICAL	

A SUITABLE HANGER/MECHANICAL CONNECTION IS REQUIRED AT JOINT D. MINIMUM BEARING LENGTH AT JOINT D = 4-0.

UNFACTORED REACTIONS

JT	1ST LCASE COMBINED	MAX./MIN. COMPONENT REACTIONS SNOW	LIVE	PERM.LIVE	WIND	DEAD	SOIL
F	783	518 / 0	0 / 0	0 / 0	0 / 0	265 / 0	0 / 0
D	861	582 / 0	0 / 0	0 / 0	0 / 0	279 / 0	0 / 0

BEARING MATERIAL TO BE SPF NO.2 OR BETTER AT JOINT(S) F

BRACING
TOP CHORD TO BE SHEATHED OR MAX. PURLIN SPACING = 5.86 FT.
MAX. UNBRACED BOTTOM CHORD LENGTH = 10.00 FT OR RIGID CEILING DIRECTLY APPLIED.

ALL PITCH BREAKS AND PERIMETER CORNER JOINTS MUST BE LATERALLY RESTRAINED.

LOADING
TOTAL LOAD CASES: (4)

CHORDS

MEMB. FR-TO	MAX. FACTORED FORCE (LBS)	FACTORED VERT. LOAD (PLF) FROM	TO	LC1 CSI (LC)	MAX UNBRAC LENGTH
F- A	-1134 / 0	0.0	0.0	0.06 (1)	7.81
A- G	-1937 / 0	-95.2	-95.2	0.31 (1)	5.86
G- H	-1937 / 0	-95.2	-95.2	0.31 (1)	5.86
H- B	-1937 / 0	-95.2	-95.2	0.31 (1)	5.86
B- C	-1937 / 0	-95.2	-95.2	0.15 (1)	6.12
D- C	-897 / 0	0.0	0.0	0.05 (1)	7.81
F- E	0 / 0	-18.5	-18.5	0.11 (1)	10.00
E- I	0 / 0	-18.5	-18.5	0.33 (1)	10.00
I- J	0 / 0	-18.5	-18.5	0.33 (1)	10.00
J- D	0 / 0	-18.5	-18.5	0.33 (1)	10.00

WEBS

MEMB. FR-TO	MAX. FACTORED FORCE (LBS)	MAX CSI (LC)
A- E	0 / 2106	0.26 (1)
E- B	-969 / 0	0.08 (1)
E- C	0 / 2106	0.26 (1)

SPECIFIED CONCENTRATED LOADS (LBS)

JT	LOC.	LC1	MAX-	MAX+	FACE	DIR.	TYPE	HEEL	CONN.
G	1-8-12	-339	-339	---	TOP	VERT	TOTAL	---	C1
H	2-4-12	-234	-234	---	TOP	VERT	TOTAL	---	C1
I	3-8-12	-346	-346	---	BACK	VERT	TOTAL	---	C1
J	4-3-4	-269	-269	---	FRONT	VERT	TOTAL	---	C1

CONNECTION REQUIREMENTS

1) C1: A SUITABLE HANGER/MECHANICAL CONNECTION IS REQUIRED.

DESIGN CRITERIA

SPECIFIED LOADS:

TOP CH.	LL	=	26.7	PSF
	DL	=	6.0	PSF
BOT CH.	LL	=	0.0	PSF
	DL	=	7.4	PSF
TOTAL LOAD		=	40.1	PSF

SPACING = 24.0 IN. C/C

LOADING IN FLAT SECTION BASED ON A SLOPE OF 6.00/12

THIS TRUSS IS DESIGNED FOR RESIDENTIAL OR SMALL BUILDING REQUIREMENTS OF PART 9, NBCC 2015

THIS DESIGN COMPLIES WITH:
- PART 9 OF BCBC 2018 , ABC 2019
- PART 9 OF OBC 2012 (2019 AMENDMENT)
- CSA 086-14
- TPIC 2014

(55 % OF 33.4 P.S.F. G.S.L. PLUS 8.4 P.S.F. RAIN LOAD) EQUALS 26.7 P.S.F. SPECIFIED ROOF LIVE LOAD

ALLOWABLE DEFL.(LL)= L/360 (0.19")
CALCULATED VERT. DEFL.(LL) = L/ 999 (0.03")
ALLOWABLE DEFL.(TL)= L/360 (0.19")
CALCULATED VERT. DEFL.(TL) = L/ 999 (0.05")

CSI: TC=0.31/1.00 (A-B:1) , BC=0.33/1.00 (D-E:1) , WB=0.26/1.00 (A-E:1) , SSI=0.33/1.00 (A-B:1)

DOL LUMBER=1.00 NAIL=1.00 LS BEND=1.00 COMP=1.00 SHEAR=1.00 TENS= 1.00

COMPANION LIVE LOAD FACTOR = 1.00

TRUSS PLATE MANUFACTURER IS NOT RESPONSIBLE FOR QUALITY CONTROL IN THE TRUSS MANUFACTURING PLANT .

NAIL VALUES

PLATE	GRIP(DRY) (PSI) MAX	MIN	SHEAR (PLI) MAX	MIN	SECTION (PLI) MAX	MIN
MT20	650	371	1747	788	1987	1873

PLATE PLACEMENT TOL. = 0.250 inches

PLATE ROTATION TOL. = 5.0 Deg.

JSI GRIP= 0.61 (C) (INPUT = 0.90)
JSI METAL= 0.23 (C) (INPUT = 1.00)

CONTINUED ON PAGE 2

JOB NAME	TRUSS NAME	QUANTITY	PLY	JOB DESC. GREEN PARK HOMES	DRWG NO.
427679	T60	1	2	TRUSS DESC.	

Tamarack Roof Truss, Burlington

Version 8.530 S Feb 23 2022 MiTek Industries, Inc. Tue Aug 2 14:52:48 2022 Page 2
ID:bP_zphucbY03T7QZqjQJ9Vz?62X-GJ1Ty?yWxR1hXwq?kWJpHLJBfZnG?7aYV2msX8yrsxz

PLATES (table is in inches)

JT	TYPE	PLATES	W	LEN	Y	X
D	BMV1+p	MT20	3.0	4.0		
E	BMWWW-t	MT20	4.0	10.0		
F	BMV1+p	MT20	3.0	4.0		

NOTES- (1)
1) Lateral braces to be a minimum of 2X4 SPF #2.

LICENSED PROFESSIONAL ENGINEER
8/02/22
C. M. HEYENS
100505065
PROVINCE OF ONTARIO

STRUCTURAL COMPONENT ONLY
DWG # TR22080351 PG 2/2

JOB NAME	TRUSS NAME	QUANTITY	PLY	JOB DESC.	DRWG NO.
427633	G2	1	1	GREEN PARK HOMES TRUSS DESC.	

Tamarack Roof Truss, Burlington

Version 8.530 S Feb 23 2022 MiTek Industries, Inc. Tue Aug 2 14:58:56 2022 Page 1
ID:5jddhdQ2aVEKS8ltDc496Sz15V3-U6GaBqPLHVOTqTzjHov6CyZ7cvSBDc7i7IvLSpyrssD

Scale = 1:42.1

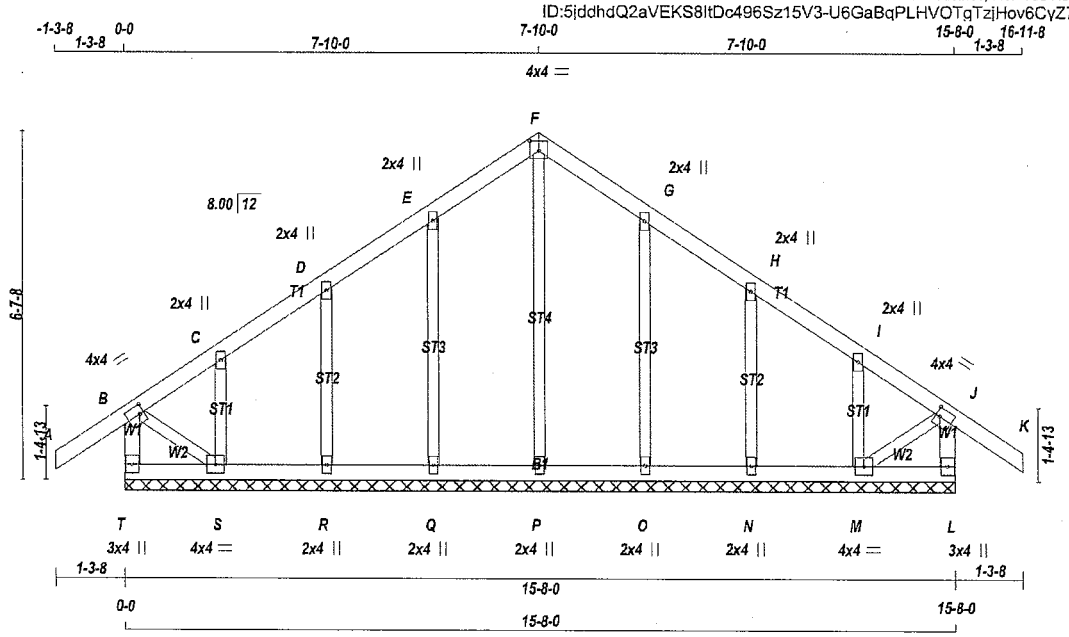

TOTAL WEIGHT = 70 lb

LUMBER
N. L. G. A. RULES

CHORDS	SIZE		LUMBER	DESCR.
T - B	2x4	DRY	No.2	SPF
A - F	2x4	DRY	No.2	SPF
F - K	2x4	DRY	No.2	SPF
L - J	2x4	DRY	No.2	SPF
T - L	2x4	DRY	No.2	SPF
ALL WEBS	2x3	DRY	No.2	SPF
ALL GABLE WEBS	2x3	DRY	No.2	SPF

DRY: SEASONED LUMBER.

GABLE STUDS SPACED AT 2-0-0 OC.

PLATES (table is in inches)

JT	TYPE	PLATES	W	LEN	Y	X
B	TMVW-t	MT20	4.0	4.0	2.00	1.00
C, D, E, G, H, I						
C	TMW+w	MT20	2.0	4.0		
F	TTW-p	MT20	4.0	4.0	2.25	2.00
J	TMVW-t	MT20	4.0	4.0	2.00	1.00
L	BMV1+p	MT20	3.0	4.0		
M	BMWW1-t	MT20	4.0	4.0		
N, O, P, Q, R						
N	BMW1+w	MT20	2.0	4.0		
S	BMWW1-t	MT20	4.0	4.0		
T	BMV1+p	MT20	3.0	4.0		

NOTES- (1)
1) Lateral braces to be a minimum of 2X4 SPF #2.

DIMENSIONS, SUPPORTS AND LOADINGS SPECIFIED BY FABRICATOR TO BE VERIFIED BY BUILDING DESIGNER

BEARINGS

THIS TRUSS DESIGNED FOR CONTINUOUS BEARINGS.

THIS TRUSS REQUIRES RIGID SHEATHING ON EXPOSED FACE.

BEARING MATERIAL TO BE SPF NO.2 OR BETTER AT JOINT(S)

BRACING
TOP CHORD TO BE SHEATHED OR MAX. PURLIN SPACING = 6.25 FT.
MAX. UNBRACED BOTTOM CHORD LENGTH = 10.00 FT OR RIGID CEILING DIRECTLY APPLIED.

ALL PITCH BREAKS AND PERIMETER CORNER JOINTS MUST BE LATERALLY RESTRAINED.

LOADING
TOTAL LOAD CASES: (4)

CHORDS

MEMB. FR-TO	MAX. FACTORED FORCE (LBS)	FACTORED VERT. LOAD LC1 (PLF) FROM	TO	MAX CSI (LC)	MAX. UNBRAC LENGTH
T- B	-286 / 0	0.0	0.0	0.03 (1)	7.81
A- B	0 / 36	-95.2	-95.2	0.13 (1)	10.00
B- C	-52 / 0	-95.2	-95.2	0.12 (1)	6.25
C- D	-17 / 0	-95.2	-95.2	0.05 (1)	6.25
D- E	-15 / 0	-95.2	-95.2	0.05 (1)	6.25
E- F	-23 / 0	-95.2	-95.2	0.05 (1)	6.25
F- G	-23 / 0	-95.2	-95.2	0.05 (1)	6.25
G- H	-15 / 0	-95.2	-95.2	0.05 (1)	6.25
H- I	-17 / 0	-95.2	-95.2	0.05 (1)	6.25
I- J	-52 / 0	-95.2	-95.2	0.12 (1)	6.25
J- K	0 / 36	-95.2	-95.2	0.13 (1)	10.00
L- J	-286 / 0	0.0	0.0	0.03 (1)	7.81
T- S	0 / 0	-18.5	-18.5	0.02 (4)	10.00
S- R	0 / 18	-18.5	-18.5	0.02 (4)	10.00
R- Q	0 / 14	-18.5	-18.5	0.02 (4)	10.00
Q- P	0 / 11	-18.5	-18.5	0.02 (4)	10.00
P- O	0 / 11	-18.5	-18.5	0.02 (4)	10.00
O- N	0 / 14	-18.5	-18.5	0.02 (4)	10.00
N- M	0 / 18	-18.5	-18.5	0.02 (4)	10.00
M- L	0 / 0	-18.5	-18.5	0.02 (4)	10.00

WEBS

MEMB. FR-TO	MAX. FACTORED FORCE (LBS)	MAX CSI (LC)
P- F	-146 / 0	0.10 (1)
Q- E	-214 / 0	0.09 (1)
R- D	-195 / 0	0.05 (1)
S- C	-122 / 0	0.02 (1)
O- G	-214 / 0	0.09 (1)
N- H	-195 / 0	0.05 (1)
M- I	-122 / 0	0.02 (1)
B- S	0 / 27	0.01 (1)
M- J	0 / 27	0.01 (1)

[M]

DESIGN CRITERIA

SPECIFIED LOADS:

TOP CH.	LL	=	26.7	PSF
	DL	=	6.0	PSF
BOT CH.	LL	=	0.0	PSF
	DL	=	7.4	PSF
TOTAL LOAD		=	40.1	PSF

SPACING = 24.0 IN. C/C

THIS TRUSS IS DESIGNED FOR RESIDENTIAL OR SMALL BUILDING REQUIREMENTS OF PART 9, NBCC 2015

THIS DESIGN COMPLIES WITH:
- PART 9 OF BCBC 2018 , ABC 2019
- PART 9 OF OBC 2012 (2019 AMENDMENT)
- CSA 086-14
- TPIC 2014

DESIGN ASSUMPTIONS
-OVERHANG NOT TO BE ALTERED OR CUT OFF.

(55 % OF 33.4 P.S.F. G.S.L. PLUS 8.4 P.S.F. RAIN LOAD) EQUALS 26.7 P.S.F. SPECIFIED ROOF LIVE LOAD

CSI: TC=0.13/1.00 (J-K:1) , BC=0.02/1.00 (R-S:4) , WB=0.10/1.00 (F-P:1) , SSI=0.08/1.00 (J-K:1)

DOL LUMBER=1.00 NAIL=1.00 LS BEND=1.10 COMP=1.10 SHEAR=1.10 TENS= 1.10

COMPANION LIVE LOAD FACTOR = 1.00

TRUSS PLATE MANUFACTURER IS NOT RESPONSIBLE FOR QUALITY CONTROL IN THE TRUSS MANUFACTURING PLANT .

NAIL VALUES

PLATE	GRIP(DRY) (PSI) MAX	MIN	SHEAR (PLI) MAX	MIN	SECTION (PLI) MAX	MIN
MT20	650	371	1747	788	1987	1873

PLATE PLACEMENT TOL. = 0.250 inches

PLATE ROTATION TOL. = 5.0 Deg.

JSI GRIP= 0.17 (J) (INPUT = 0.90)
JSI METAL= 0.11 (G) (INPUT = 1.00)

LICENSED PROFESSIONAL ENGINEER
8/02/22
C. M. HEYENS
100505065
PROVINCE OF ONTARIO

STRUCTURAL COMPONENT ONLY
DWG # TR22080273

JOB NAME	TRUSS NAME	QUANTITY	PLY	JOB DESC.	DRWG NO.
427633	G23	1	1	GREEN PARK HOMES TRUSS DESC.	

Tamarack Roof Truss, Burlington

Version 8.530 S Feb 23 2022 MiTek Industries, Inc. Tue Aug 2 14:58:57 2022 Page 1

ID:5jddhdQ2aVEKS8ltDc496Sz15V3-ylqzOAQz2pWKldYwrWQLkA5lMJoLy4KsMyfu?FyrssC

Scale = 1:28.4

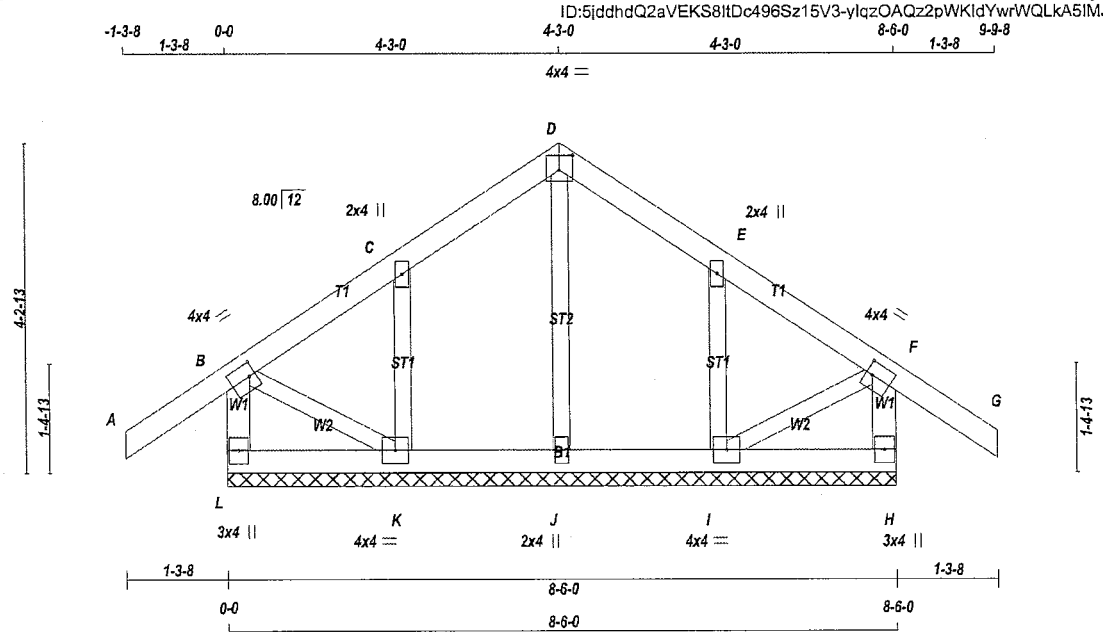

TOTAL WEIGHT = 38 lb

LUMBER

N. L. G. A. RULES

CHORDS	SIZE		LUMBER	DESCR.
L - B	2x4	DRY	No.2	SPF
A - D	2x4	DRY	No.2	SPF
D - G	2x4	DRY	No.2	SPF
H - F	2x4	DRY	No.2	SPF
L - H	2x4	DRY	No.2	SPF
ALL WEBS	2x3	DRY	No.2	SPF
ALL GABLE WEBS	2x3	DRY	No.2	SPF

DRY: SEASONED LUMBER.

GABLE STUDS SPACED AT 2-0-0 OC.

PLATES (table is in inches)

JT	TYPE	PLATES	W	LEN	Y	X
B	TMVW-t	MT20	4.0	4.0	2.00	1.00
C	TMW+w	MT20	2.0	4.0		
D	TTW-p	MT20	4.0	4.0	2.25	2.00
E	TMW+w	MT20	2.0	4.0		
F	TMVW-t	MT20	4.0	4.0	2.00	1.00
H	BMV1+p	MT20	3.0	4.0		
I	BMWW1-t	MT20	4.0	4.0		
J	BMW1+w	MT20	2.0	4.0		
K	BMWW1-t	MT20	4.0	4.0		
L	BMV1+p	MT20	3.0	4.0		

NOTES- (1)

1) Lateral braces to be a minimum of 2X4 SPF #2.

DIMENSIONS, SUPPORTS AND LOADINGS SPECIFIED BY FABRICATOR TO BE VERIFIED BY BUILDING DESIGNER

BEARINGS

THIS TRUSS DESIGNED FOR CONTINUOUS BEARINGS.

THIS TRUSS REQUIRES RIGID SHEATHING ON EXPOSED FACE.

BEARING MATERIAL TO BE SPF NO.2 OR BETTER AT JOINT(S)

BRACING

TOP CHORD TO BE SHEATHED OR MAX. PURLIN SPACING = 6.25 FT.
MAX. UNBRACED BOTTOM CHORD LENGTH = 10.00 FT OR RIGID CEILING DIRECTLY APPLIED.

ALL PITCH BREAKS AND PERIMETER CORNER JOINTS MUST BE LATERALLY RESTRAINED.

LOADING

TOTAL LOAD CASES: (4)

CHORDS

MEMB. FR-TO	MAX. FACTORED FORCE (LBS)	FACTORED VERT. LOAD (PLF) FROM	TO	LC1 MAX CSI (LC)	MAX. UNBRAC LENGTH
L- B	-231 / 0	0.0	0.0	0.02 (1)	7.81
A- B	0 / 36	-95.2	-95.2	0.13 (1)	10.00
B- C	-8 / 0	-95.2	-95.2	0.07 (1)	10.00
C- D	-26 / 0	-95.2	-95.2	0.07 (1)	6.25
D- E	-26 / 0	-95.2	-95.2	0.07 (1)	6.25
E- F	-8 / 0	-95.2	-95.2	0.07 (1)	10.00
F- G	0 / 36	-95.2	-95.2	0.13 (1)	10.00
H- F	-231 / 0	0.0	0.0	0.02 (1)	7.81
L- K	0 / 0	-18.5	-18.5	0.02 (4)	10.00
K- J	0 / 10	-18.5	-18.5	0.02 (4)	10.00
J- I	0 / 10	-18.5	-18.5	0.02 (4)	10.00
I- H	0 / 0	-18.5	-18.5	0.02 (4)	10.00

WEBS

MEMB. FR-TO	MAX. FACTORED FORCE (LBS)	MAX CSI (LC)
J- D	-134 / 0	0.04 (1)
K- C	-246 / 0	0.04 (1)
I- E	-246 / 0	0.04 (1)
B- K	0 / 20	0.00 (1)
I- F	0 / 20	0.00 (1)

[M]

DESIGN CRITERIA

SPECIFIED LOADS:

TOP CH.	LL	=	26.7	PSF
	DL	=	6.0	PSF
BOT CH.	LL	=	0.0	PSF
	DL	=	7.4	PSF
TOTAL LOAD		=	40.1	PSF

SPACING = 24.0 IN. C/C

THIS TRUSS IS DESIGNED FOR RESIDENTIAL OR SMALL BUILDING REQUIREMENTS OF PART 9, NBCC 2015

THIS DESIGN COMPLIES WITH:
- PART 9 OF BCBC 2018 , ABC 2019
- PART 9 OF OBC 2012 (2019 AMENDMENT)
- CSA 086-14
- TPIC 2014

(55 % OF 33.4 P.S.F. G.S.L. PLUS 8.4 P.S.F. RAIN LOAD) EQUALS 26.7 P.S.F. SPECIFIED ROOF LIVE LOAD

CSI: TC=0.13/1.00 (A-B:1) , BC=0.02/1.00 (J-K:4) , WB=0.04/1.00 (C-K:1) , SSI=0.08/1.00 (A-B:1)

DOL LUMBER=1.00 NAIL=1.00 LS BEND=1.10 COMP=1.10 SHEAR=1.10 TENS= 1.10

COMPANION LIVE LOAD FACTOR = 1.00

TRUSS PLATE MANUFACTURER IS NOT RESPONSIBLE FOR QUALITY CONTROL IN THE TRUSS MANUFACTURING PLANT .

NAIL VALUES

PLATE	GRIP(DRY) (PSI) MAX	MIN	SHEAR (PLI) MAX	MIN	SECTION (PLI) MAX	MIN
MT20	650	371	1747	788	1987	1873

PLATE PLACEMENT TOL. = 0.250 inches

PLATE ROTATION TOL. = 5.0 Deg.

JSI GRIP= 0.16 (E) (INPUT = 0.90)
JSI METAL= 0.13 (E) (INPUT = 1.00)

LICENSED PROFESSIONAL ENGINEER
8/02/22
C. M. HEYENS
100505065
PROVINCE OF ONTARIO

STRUCTURAL COMPONENT ONLY
DWG # TR22080274

JOB NAME	TRUSS NAME	QUANTITY	PLY	JOB DESC.	DRWG NO.
427633	J1	3	1	GREEN PARK HOMES TRUSS DESC.	

Tamarack Roof Truss, Burlington

Version 8.530 S Feb 23 2022 MiTek Industries, Inc. Tue Aug 2 14:12:53 2022 Page 1
ID:5jddhdQ2aVEKS8ltDc496Sz15V3-uYp3H3zDzZHVhsFiw0rAjldq77Q L0k0nx6e TyrtXO

Scale = 1:30.8

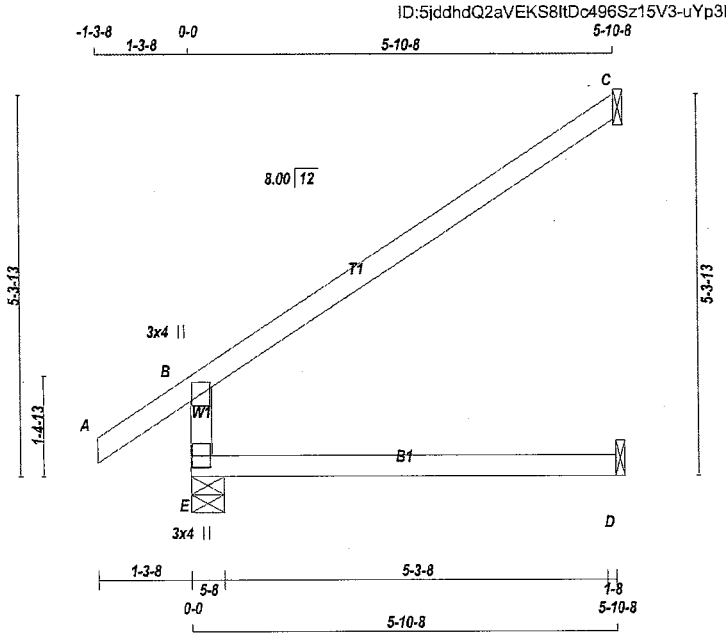

TOTAL WEIGHT = 3 X 18 = 53 lb

LUMBER
N. L. G. A. RULES

CHORDS	SIZE		LUMBER	DESCR.
E - B	2x4	DRY	No.2	SPF
A - C	2x4	DRY	No.2	SPF
E - D	2x4	DRY	No.2	SPF

DRY: SEASONED LUMBER.

PLATES (table is in inches)

JT	TYPE	PLATES	W	LEN	Y	X
B	TMV+p	MT20	3.0	4.0		
E	BMV1+p	MT20	3.0	4.0		

NOTES- (1)
1) Lateral braces to be a minimum of 2X4 SPF #2.

DIMENSIONS, SUPPORTS AND LOADINGS SPECIFIED BY FABRICATOR TO BE VERIFIED BY BUILDING DESIGNER

BEARINGS

JT	FACTORED GROSS REACTION VERT	HORZ	MAXIMUM FACTORED GROSS REACTION DOWN	HORZ	UPLIFT	INPUT BRG IN-SX	REQRD BRG IN-SX
E	543	0	543	0	0	5-8	5-8
C	210	0	210	0	0	1-8	1-8
D	46	0	51	0	0	1-8	1-8

SEE MITEK STANDARD DETAIL MSD2015-H FOR CONNECTION TO JOINT(S) C , D

UNFACTORED REACTIONS

JT	1ST LCASE COMBINED	MAX./MIN. COMPONENT REACTIONS SNOW	LIVE	PERM.LIVE	WIND	DEAD	SOIL
E	381	270 / 0	0 / 0	0 / 0	0 / 0	111 / 0	0 / 0
C	144	118 / 0	0 / 0	0 / 0	0 / 0	26 / 0	0 / 0
D	36	0 / 0	0 / 0	0 / 0	0 / 0	36 / 0	0 / 0

BEARING MATERIAL TO BE SPF NO.2 OR BETTER AT JOINT(S) E

BRACING
TOP CHORD TO BE SHEATHED OR MAX. PURLIN SPACING = 6.25 FT.
MAX. UNBRACED BOTTOM CHORD LENGTH = 10.00 FT OR RIGID CEILING DIRECTLY APPLIED.

ALL PITCH BREAKS AND PERIMETER CORNER JOINTS MUST BE LATERALLY RESTRAINED.

LOADING
TOTAL LOAD CASES: (4)

CHORDS

MEMB. FR-TO	MAX. FACTORED FORCE (LBS)	FACTORED VERT. LOAD (PLF) FROM	TO	LC1 MAX CSI (LC)	MAX. UNBRAC LENGTH
E- B	-480 / 0	0.0	0.0	0.12 (4)	7.81
A- B	0 / 36	-95.2	-95.2	0.13 (1)	10.00
B- C	-39 / 0	-95.2	-95.2	0.56 (1)	6.25
E- D	0 / 0	-18.5	-18.5	0.13 (4)	10.00

WEBS

MEMB. FR-TO	MAX. FACTORED FORCE (LBS)	MAX CSI (LC)

DESIGN CRITERIA

SPECIFIED LOADS:

TOP CH.	LL	=	26.7	PSF
	DL	=	6.0	PSF
BOT CH.	LL	=	0.0	PSF
	DL	=	7.4	PSF
TOTAL LOAD		=	40.1	PSF

SPACING = 24.0 IN. C/C

THIS TRUSS IS DESIGNED FOR RESIDENTIAL OR SMALL BUILDING REQUIREMENTS OF PART 9, NBCC 2015

THIS DESIGN COMPLIES WITH:
- PART 9 OF BCBC 2018 , ABC 2019
- PART 9 OF OBC 2012 (2019 AMENDMENT)
- CSA 086-14
- TPIC 2014

DESIGN ASSUMPTIONS
-OVERHANG NOT TO BE ALTERED OR CUT OFF.

(55 % OF 33.4 P.S.F. G.S.L. PLUS 8.4 P.S.F. RAIN LOAD) EQUALS 26.7 P.S.F. SPECIFIED ROOF LIVE LOAD

ALLOWABLE DEFL.(LL)= L/360 (0.20")
CALCULATED VERT. DEFL.(LL) = L/ 999 (0.00")
ALLOWABLE DEFL.(TL)= L/360 (0.20")
CALCULATED VERT. DEFL.(TL) = L/ 999 (0.03")

CSI: TC=0.56/1.00 (B-C:1) , BC=0.13/1.00 (D-E:4) , WB=0.00/1.00 (n/a:0) , SSI=0.23/1.00 (B-C:1)

DOL LUMBER=1.00 NAIL=1.00 LS BEND=1.10 COMP=1.10 SHEAR=1.10 TENS= 1.10

COMPANION LIVE LOAD FACTOR = 1.00

AUTOSOLVE RIGHT HEEL ONLY

TRUSS PLATE MANUFACTURER IS NOT RESPONSIBLE FOR QUALITY CONTROL IN THE TRUSS MANUFACTURING PLANT .

NAIL VALUES

PLATE	GRIP(DRY) (PSI) MAX	MIN	SHEAR (PLI) MAX	MIN	SECTION (PLI) MAX	MIN
MT20	650	371	1747	788	1987	1873

PLATE PLACEMENT TOL. = 0.250 inches

PLATE ROTATION TOL. = 5.0 Deg.

JSI GRIP= 0.20 (B) (INPUT = 0.90)
JSI METAL= 0.16 (B) (INPUT = 1.00)

LICENSED PROFESSIONAL ENGINEER
8/02/22
C. M. HEYENS
100505065
PROVINCE OF ONTARIO

STRUCTURAL COMPONENT ONLY
DWG # TR22080260

JOB NAME	TRUSS NAME	QUANTITY	PLY	JOB DESC.	DRWG NO.
427633	J2	1	1	GREEN PARK HOMES TRUSS DESC.	

Tamarack Roof Truss, Burlington

Version 8.530 S Feb 23 2022 MiTek Industries, Inc. Tue Aug 2 14:12:53 2022 Page 1
ID:5jddhdQ2aVEKS8ltDc496Sz15V3-uYp3H3zDzZHVhsFiw0rAjldxu7QsL0k0nx6e TyrtXO

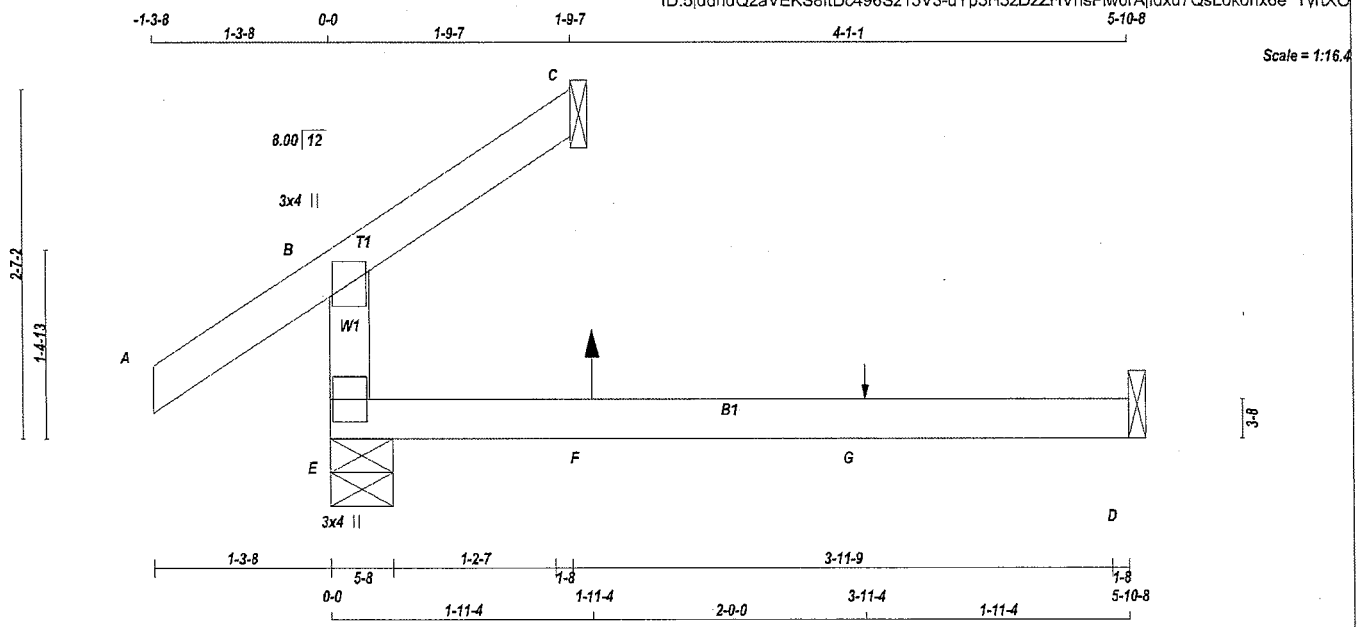

TOTAL WEIGHT = 12 lb

LUMBER
N. L. G. A. RULES

CHORDS	SIZE		LUMBER	DESCR.
E - B	2x4	DRY	No.2	SPF
A - C	2x4	DRY	No.2	SPF
E - D	2x4	DRY	No.2	SPF

DRY: SEASONED LUMBER.

PLATES (table is in inches)

JT	TYPE	PLATES	W	LEN	Y	X
B	TMV+p	MT20	3.0	4.0		
E	BMV1+p	MT20	3.0	4.0		

NOTES- (1)
1) Lateral braces to be a minimum of 2X4 SPF #2.

DIMENSIONS, SUPPORTS AND LOADINGS SPECIFIED BY FABRICATOR TO BE VERIFIED BY BUILDING DESIGNER

BEARINGS

JT	FACTORED GROSS REACTION VERT	HORZ	MAXIMUM FACTORED GROSS REACTION DOWN	HORZ	UPLIFT	INPUT BRG IN-SX	REQRD BRG IN-SX
E	297	0	297	0	0	5-8	5-8
C	62	0	62	0	0	1-8	1-8
D	44	0	53	0	0	1-8	1-8

SEE MITEK STANDARD DETAIL MSD2015-H FOR CONNECTION TO JOINT(S) C , D

UNFACTORED REACTIONS

JT	1ST LCASE COMBINED	MAX./MIN. COMPONENT REACTIONS SNOW	LIVE	PERM.LIVE	WIND	DEAD	SOIL
E	209	145 / 0	0 / 0	0 / 0	0 / 0	64 / 0	0 / 0
C	45	21 / 0	0 / 0	0 / 0	0 / 0	24 / 0	0 / 0
D	36	0 / -3	0 / 0	0 / 0	0 / 0	38 / 0	0 / 0

BEARING MATERIAL TO BE SPF NO.2 OR BETTER AT JOINT(S) E, C

BRACING
TOP CHORD TO BE SHEATHED OR MAX. PURLIN SPACING = 6.25 FT.
MAX. UNBRACED BOTTOM CHORD LENGTH = 10.00 FT OR RIGID CEILING DIRECTLY APPLIED.

ALL PITCH BREAKS AND PERIMETER CORNER JOINTS MUST BE LATERALLY RESTRAINED.

LOADING
TOTAL LOAD CASES: (7)

CHORDS

MEMB. FR-TO	MAX. FACTORED FORCE (LBS)	FACTORED VERT. LOAD (PLF) FROM	TO	LC1	MAX CSI (LC)	MAX. UNBRAC LENGTH
E- B	-241 / 0	0.0	0.0	0.10 (4)		7.81
A- B	0 / 36	-95.2	-95.2	0.13 (1)		10.00
B- C	-14 / 10	-95.2	-95.2	0.07 (4)		6.25
E- F	0 / 0	-18.5	-18.5	0.14 (4)		10.00
F- G	0 / 0	-18.5	-18.5	0.14 (4)		10.00
G- D	0 / 0	-18.5	-18.5	0.14 (4)		10.00

WEBS

MEMB. FR-TO	MAX. FACTORED FORCE (LBS)	MAX CSI (LC)

SPECIFIED CONCENTRATED LOADS (LBS)

JT	LOC.	LC1	MAX-	MAX+	FACE	DIR.	TYPE	HEEL	CONN.
F	1-11-4	5	1	8	FRONT	VERT	TOTAL	---	C1
G	3-11-4	1	1	---	FRONT	VERT	TOTAL	---	C1

CONNECTION REQUIREMENTS

1) **C1:** A SUITABLE HANGER/MECHANICAL CONNECTION IS REQUIRED.

DESIGN CRITERIA

SPECIFIED LOADS:

TOP CH.	LL	=	26.7	PSF
	DL	=	6.0	PSF
BOT CH.	LL	=	0.0	PSF
	DL	=	7.4	PSF
TOTAL LOAD		=	40.1	PSF

SPACING = 24.0 IN. C/C

THIS TRUSS IS DESIGNED FOR RESIDENTIAL OR SMALL BUILDING REQUIREMENTS OF PART 9, NBCC 2015

THIS DESIGN COMPLIES WITH:
- PART 9 OF BCBC 2018 , ABC 2019
- PART 9 OF OBC 2012 (2019 AMENDMENT)
- CSA 086-14
- TPIC 2014

DESIGN ASSUMPTIONS
-OVERHANG NOT TO BE ALTERED OR CUT OFF.

(55 % OF 33.4 P.S.F. G.S.L. PLUS 8.4 P.S.F. RAIN LOAD) EQUALS 26.7 P.S.F. SPECIFIED ROOF LIVE LOAD

ALLOWABLE DEFL.(LL)= L/360 (0.20")
CALCULATED VERT. DEFL.(LL) = L/ 999 (0.01")
ALLOWABLE DEFL.(TL)= L/360 (0.20")
CALCULATED VERT. DEFL.(TL) = L/ 999 (0.04")

CSI: TC=0.13/1.00 (A-B:1) , BC=0.14/1.00 (D-E:4) , WB=0.00/1.00 (n/a:0) , SSI=0.08/1.00 (A-B:1)

DOL LUMBER=1.00 NAIL=1.00 LS BEND=1.10 COMP=1.10 SHEAR=1.10 TENS= 1.10

COMPANION LIVE LOAD FACTOR = 1.00

AUTOSOLVE RIGHT HEEL ONLY

TRUSS PLATE MANUFACTURER IS NOT RESPONSIBLE FOR QUALITY CONTROL IN THE TRUSS MANUFACTURING PLANT .

NAIL VALUES

PLATE	GRIP(DRY) (PSI) MAX	MIN	SHEAR (PLI) MAX	MIN	SECTION (PLI) MAX	MIN
MT20	650	371	1747	788	1987	1873

PLATE PLACEMENT TOL. = 0.250 inches

PLATE ROTATION TOL. = 5.0 Deg.

JSI GRIP= 0.10 (B) (INPUT = 0.90)
JSI METAL= 0.08 (B) (INPUT = 1.00)

LICENSED PROFESSIONAL ENGINEER
8/02/22
C. M. HEYENS
100505065
PROVINCE OF ONTARIO

STRUCTURAL COMPONENT ONLY
DWG # TR22080261

JOB NAME	TRUSS NAME	QUANTITY	PLY	JOB DESC.	DRWG NO.
427633	J3	1	1	GREEN PARK HOMES TRUSS DESC.	

Tamarack Roof Truss, Burlington

Version 8.530 S Feb 23 2022 MiTek Industries, Inc. Tue Aug 2 14:12:54 2022 Page 1
ID:5jddhdQ2aVEKS8ItDc496Sz15V3-MlNRVP rktPMJ0puUkMPGVA40XmD4T A?brBWvyrtXN

Scale = 1:23.2

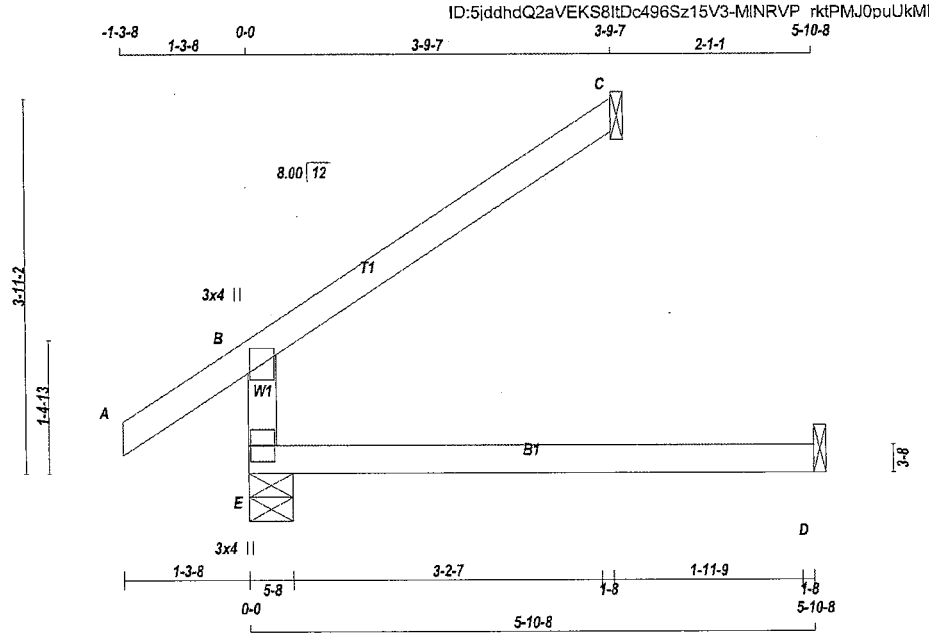

TOTAL WEIGHT = 15 lb

LUMBER
N. L. G. A. RULES

CHORDS	SIZE		LUMBER	DESCR.
E - B	2x4	DRY	No.2	SPF
A - C	2x4	DRY	No.2	SPF
E - D	2x4	DRY	No.2	SPF

DRY: SEASONED LUMBER.

PLATES (table is in inches)

JT	TYPE	PLATES	W	LEN	Y	X
B	TMV+p	MT20	3.0	4.0		
E	BMV1+p	MT20	3.0	4.0		

NOTES- (1)
1) Lateral braces to be a minimum of 2X4 SPF #2.

DIMENSIONS, SUPPORTS AND LOADINGS SPECIFIED BY FABRICATOR TO BE VERIFIED BY BUILDING DESIGNER

BEARINGS

JT	FACTORED GROSS REACTION VERT	HORZ	MAXIMUM FACTORED GROSS REACTION DOWN	HORZ	UPLIFT	INPUT BRG IN-SX	REQRD BRG IN-SX
E	419	0	419	0	0	5-8	5-8
C	135	0	135	0	0	1-8	1-8
D	46	0	51	0	0	1-8	1-8

SEE MITEK STANDARD DETAIL MSD2015-H FOR CONNECTION TO JOINT(S) C , D

UNFACTORED REACTIONS

JT	1ST LCASE COMBINED	MAX./MIN. COMPONENT REACTIONS SNOW	LIVE	PERM.LIVE	WIND	DEAD	SOIL
E	295	200 / 0	0 / 0	0 / 0	0 / 0	95 / 0	0 / 0
C	93	76 / 0	0 / 0	0 / 0	0 / 0	17 / 0	0 / 0
D	36	0 / 0	0 / 0	0 / 0	0 / 0	36 / 0	0 / 0

BEARING MATERIAL TO BE SPF NO.2 OR BETTER AT JOINT(S) E, C

BRACING
TOP CHORD TO BE SHEATHED OR MAX. PURLIN SPACING = 6.25 FT.
MAX. UNBRACED BOTTOM CHORD LENGTH = 10.00 FT OR RIGID CEILING DIRECTLY APPLIED.

ALL PITCH BREAKS AND PERIMETER CORNER JOINTS MUST BE LATERALLY RESTRAINED.

LOADING
TOTAL LOAD CASES: (4)

CHORDS

MEMB. FR-TO	MAX. FACTORED FORCE (LBS)	FACTORED VERT. LOAD LC1 (PLF) FROM	TO	MAX CSI (LC)	MAX. UNBRAC LENGTH
E- B	-356 / 0	0.0	0.0	0.12 (4)	7.81
A- B	0 / 36	-95.2	-95.2	0.13 (1)	10.00
B- C	-25 / 0	-95.2	-95.2	0.23 (1)	6.25
E- D	0 / 0	-18.5	-18.5	0.13 (4)	10.00

WEBS

MEMB. FR-TO	MAX. FACTORED FORCE (LBS)	MAX CSI (LC)

DESIGN CRITERIA

SPECIFIED LOADS:

TOP CH.	LL	=	26.7	PSF
	DL	=	6.0	PSF
BOT CH.	LL	=	0.0	PSF
	DL	=	7.4	PSF
TOTAL LOAD		=	40.1	PSF

SPACING = 24.0 IN. C/C

THIS TRUSS IS DESIGNED FOR RESIDENTIAL OR SMALL BUILDING REQUIREMENTS OF PART 9, NBCC 2015

THIS DESIGN COMPLIES WITH:
- PART 9 OF BCBC 2018 , ABC 2019
- PART 9 OF OBC 2012 (2019 AMENDMENT)
- CSA 086-14
- TPIC 2014

DESIGN ASSUMPTIONS
-OVERHANG NOT TO BE ALTERED OR CUT OFF.

(55 % OF 33.4 P.S.F. G.S.L. PLUS 8.4 P.S.F. RAIN LOAD) EQUALS 26.7 P.S.F. SPECIFIED ROOF LIVE LOAD

ALLOWABLE DEFL.(LL)= L/360 (0.20")
CALCULATED VERT. DEFL.(LL) = L/ 999 (0.00")
ALLOWABLE DEFL.(TL)= L/360 (0.20")
CALCULATED VERT. DEFL.(TL) = L/ 999 (0.03")

CSI: TC=0.23/1.00 (B-C:1) , BC=0.13/1.00 (D-E:4) , WB=0.00/1.00 (n/a:0) , SSI=0.15/1.00 (B-C:1)

DOL LUMBER=1.00 NAIL=1.00 LS BEND=1.10 COMP=1.10 SHEAR=1.10 TENS= 1.10

COMPANION LIVE LOAD FACTOR = 1.00

AUTOSOLVE RIGHT HEEL ONLY

TRUSS PLATE MANUFACTURER IS NOT RESPONSIBLE FOR QUALITY CONTROL IN THE TRUSS MANUFACTURING PLANT .

NAIL VALUES

PLATE	GRIP(DRY) (PSI) MAX	MIN	SHEAR (PLI) MAX	MIN	SECTION (PLI) MAX	MIN
MT20	650	371	1747	788	1987	1873

PLATE PLACEMENT TOL. = 0.250 inches

PLATE ROTATION TOL. = 5.0 Deg.

JSI GRIP= 0.15 (B) (INPUT = 0.90)
JSI METAL= 0.12 (B) (INPUT = 1.00)

LICENSED PROFESSIONAL ENGINEER
8/02/22
C. M. HEYENS
100505065
PROVINCE OF ONTARIO

STRUCTURAL COMPONENT ONLY
DWG # TR22080262

JOB NAME	TRUSS NAME	QUANTITY	PLY	JOB DESC.	DRWG NO.
427633	J4	1	1	GREEN PARK HOMES TRUSS DESC.	

Tamarack Roof Truss, Burlington

Version 8.530 S Feb 23 2022 MiTek Industries, Inc. Tue Aug 2 14:12:55 2022 Page 1
ID:5jddhdQ2aVEKS8ItDc496Sz15V3-qxxpil TVBXDx9O42RteojiHOw7xpvEJEFbl2LyrtXM

Scale = 1:16.4

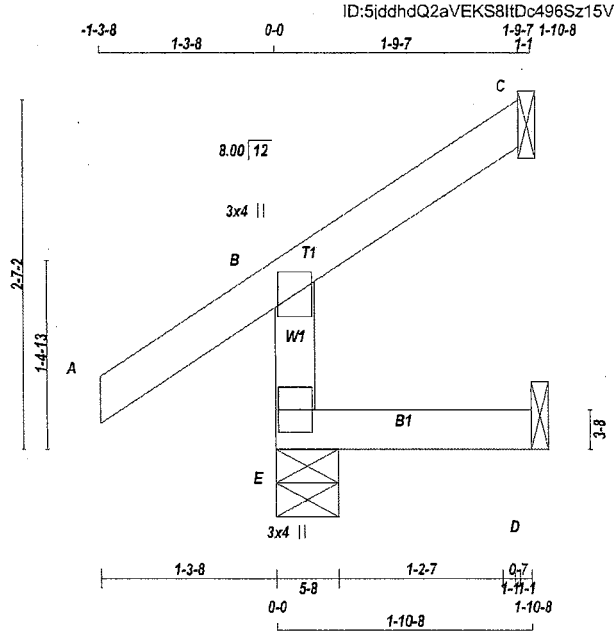

TOTAL WEIGHT = 8 lb [M]

LUMBER
N. L. G. A. RULES

CHORDS	SIZE		LUMBER	DESCR.
E - B	2x4	DRY	No.2	SPF
A - C	2x4	DRY	No.2	SPF
E - D	2x4	DRY	No.2	SPF

DRY: SEASONED LUMBER.

PLATES (table is in inches)

JT	TYPE	PLATES	W	LEN	Y	X
B	TMV+p	MT20	3.0	4.0		
E	BMV1+p	MT20	3.0	4.0		

NOTES- (1)
1) Lateral braces to be a minimum of 2X4 SPF #2.

DIMENSIONS, SUPPORTS AND LOADINGS SPECIFIED BY FABRICATOR TO BE VERIFIED BY BUILDING DESIGNER

BEARINGS

JT	FACTORED GROSS REACTION VERT	HORZ	MAXIMUM FACTORED GROSS REACTION DOWN	HORZ	UPLIFT	INPUT BRG IN-SX	REQRD BRG IN-SX
E	283	0	283	0	0	5-8	5-8
C	45	0	45	0	-25	1-8	1-8
D	8	0	17	0	-2	1-8	1-8

SEE MITEK STANDARD DETAIL MSD2015-H FOR CONNECTION TO JOINT(S) C , D

PROVIDE ANCHORAGE AT BEARING JOINT C FOR 150 LBS FACTORED UPLIFT
PROVIDE ANCHORAGE AT BEARING JOINT D FOR 150 LBS FACTORED UPLIFT

UNFACTORED REACTIONS

JT	1ST LCASE COMBINED	MAX./MIN. COMPONENT REACTIONS SNOW	LIVE	PERM.LIVE	WIND	DEAD	SOIL
E	196	149 / 0	0 / 0	0 / 0	0 / 0	47 / 0	0 / 0
C	31	25 / -20	0 / 0	0 / 0	0 / 0	6 / 0	0 / 0
D	7	0 / -8	0 / 0	0 / 0	0 / 0	12 / 0	0 / 0

BEARING MATERIAL TO BE SPF NO.2 OR BETTER AT JOINT(S) E, C

BRACING
TOP CHORD TO BE SHEATHED OR MAX. PURLIN SPACING = 6.25 FT.
MAX. UNBRACED BOTTOM CHORD LENGTH = 10.00 FT OR RIGID CEILING DIRECTLY APPLIED.

ALL PITCH BREAKS AND PERIMETER CORNER JOINTS MUST BE LATERALLY RESTRAINED.

LOADING
TOTAL LOAD CASES: (5)

CHORDS

MEMB. FR-TO	MAX. FACTORED FORCE (LBS)	FACTORED VERT. LOAD LC1 (PLF) FROM	TO	MAX CSI (LC)	MAX. UNBRAC LENGTH
E- B	-256 / 0	0.0	0.0	0.04 (5)	7.81
A- B	0 / 36	-95.2	-95.2	0.13 (1)	10.00
B- C	-22 / 0	-95.2	-95.2	0.10 (1)	6.25
E- D	0 / 0	-18.5	-18.5	0.04 (5)	10.00

WEBS

MEMB. FR-TO	MAX. FACTORED FORCE (LBS)	MAX CSI (LC)

CANTILEVER ANALYSIS HAS BEEN CONSIDERED IN THIS DESIGN

DESIGN CRITERIA

SPECIFIED LOADS:

TOP CH.	LL	=	26.7	PSF
	DL	=	6.0	PSF
BOT CH.	LL	=	0.0	PSF
	DL	=	7.4	PSF
TOTAL LOAD		=	40.1	PSF

SPACING = 24.0 IN. C/C

THIS TRUSS IS DESIGNED FOR RESIDENTIAL OR SMALL BUILDING REQUIREMENTS OF PART 9, NBCC 2015

THIS DESIGN COMPLIES WITH:
- PART 9 OF BCBC 2018 , ABC 2019
- PART 9 OF OBC 2012 (2019 AMENDMENT)
- CSA 086-14
- TPIC 2014

DESIGN ASSUMPTIONS
-OVERHANG NOT TO BE ALTERED OR CUT OFF.

(55 % OF 33.4 P.S.F. G.S.L. PLUS 8.4 P.S.F. RAIN LOAD) EQUALS 26.7 P.S.F. SPECIFIED ROOF LIVE LOAD

ALLOWABLE DEFL.(LL)= L/360 (0.19")
CALCULATED VERT. DEFL.(LL) = L/ 999 (0.00")
ALLOWABLE DEFL.(TL)= L/360 (0.19")
CALCULATED VERT. DEFL.(TL) = L/ 999 (0.00")

CSI: TC=0.13/1.00 (A-B:1) , BC=0.04/1.00 (D-E:5) , WB=0.00/1.00 (n/a:0) , SSI=0.08/1.00 (A-B:1)

DOL LUMBER=1.00 NAIL=1.00 LS BEND=1.10 COMP=1.10 SHEAR=1.10 TENS= 1.10

COMPANION LIVE LOAD FACTOR = 1.00

AUTOSOLVE RIGHT HEEL ONLY

TRUSS PLATE MANUFACTURER IS NOT RESPONSIBLE FOR QUALITY CONTROL IN THE TRUSS MANUFACTURING PLANT .

NAIL VALUES

PLATE	GRIP(DRY) (PSI) MAX	MIN	SHEAR (PLI) MAX	MIN	SECTION (PLI) MAX	MIN
MT20	650	371	1747	788	1987	1873

PLATE PLACEMENT TOL. = 0.250 inches

PLATE ROTATION TOL. = 5.0 Deg.

JSI GRIP= 0.11 (B) (INPUT = 0.90)
JSI METAL= 0.09 (B) (INPUT = 1.00)

LICENSED PROFESSIONAL ENGINEER
8/02/22
C. M. HEYENS
100505065
PROVINCE OF ONTARIO

STRUCTURAL COMPONENT ONLY
DWG # TR22080263

JOB NAME	TRUSS NAME	QUANTITY	PLY	JOB DESC.	DRWG NO.
427633	J5	1	1	GREEN PARK HOMES TRUSS DESC.	

Tamarack Roof Truss, Burlington

Version 8.530 S Feb 23 2022 MiTek Industries, Inc. Tue Aug 2 14:12:55 2022 Page 1
ID:5jddhdQ2aVEKS8ltDc496Sz15V3-qxxpil TVBXDx9O42RteojiFmw7GpvEJEFbl2LyrtXM

Scale = 1:23.5

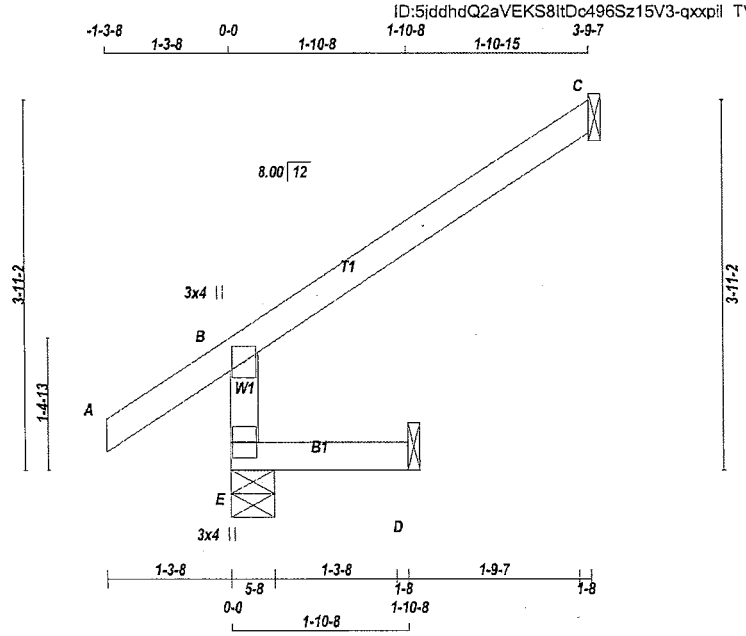

TOTAL WEIGHT = 10 lb

[M]

LUMBER
N. L. G. A. RULES

CHORDS	SIZE		LUMBER	DESCR.
E - B	2x4	DRY	No.2	SPF
A - C	2x4	DRY	No.2	SPF
E - D	2x4	DRY	No.2	SPF

DRY: SEASONED LUMBER.

PLATES (table is in inches)

JT	TYPE	PLATES	W	LEN	Y	X
B	TMV+p	MT20	3.0	4.0		
E	BMV1+p	MT20	3.0	4.0		

NOTES- (1)
1) Lateral braces to be a minimum of 2X4 SPF #2.

DIMENSIONS, SUPPORTS AND LOADINGS SPECIFIED BY FABRICATOR TO BE VERIFIED BY BUILDING DESIGNER

BEARINGS

JT	FACTORED GROSS REACTION VERT	HORZ	MAXIMUM FACTORED GROSS REACTION DOWN	HORZ	UPLIFT	INPUT BRG IN-SX	REQRD BRG IN-SX
E	375	0	375	0	0	5-8	5-8
C	135	0	135	0	0	1-8	1-8
D	16	0	18	0	0	1-8	1-8

SEE MITEK STANDARD DETAIL MSD2015-H FOR CONNECTION TO JOINT(S) C , D

UNFACTORED REACTIONS

JT	1ST LCASE COMBINED	MAX./MIN. COMPONENT REACTIONS SNOW	LIVE	PERM LIVE	WIND	DEAD	SOIL
E	260	200 / 0	0 / 0	0 / 0	0 / 0	60 / 0	0 / 0
C	93	76 / 0	0 / 0	0 / 0	0 / 0	17 / 0	0 / 0
D	13	0 / 0	0 / 0	0 / 0	0 / 0	13 / 0	0 / 0

BEARING MATERIAL TO BE SPF NO.2 OR BETTER AT JOINT(S) E

BRACING
TOP CHORD TO BE SHEATHED OR MAX. PURLIN SPACING = 6.25 FT.
MAX. UNBRACED BOTTOM CHORD LENGTH = 10.00 FT OR RIGID CEILING DIRECTLY APPLIED.

ALL PITCH BREAKS AND PERIMETER CORNER JOINTS MUST BE LATERALLY RESTRAINED.

LOADING
TOTAL LOAD CASES: (5)

CHORDS

MEMB. FR-TO	MAX. FACTORED FORCE (LBS)	FACTORED VERT. LOAD LC1 (PLF) FROM	TO	MAX CSI (LC)	MAX. UNBRAC LENGTH
E- B	-356 / 0	0.0	0.0	0.01 (4)	7.81
A- B	0 / 36	-95.2	-95.2	0.13 (5)	10.00
B- C	-25 / 0	-95.2	-95.2	0.23 (1)	6.25
E- D	0 / 0	-18.5	-18.5	0.02 (4)	10.00

WEBS

MEMB. FR-TO	MAX. FACTORED FORCE (LBS)	MAX CSI (LC)

CANTILEVER ANALYSIS HAS BEEN CONSIDERED IN THIS DESIGN

DESIGN CRITERIA

SPECIFIED LOADS:

TOP CH.	LL	=	26.7	PSF
	DL	=	6.0	PSF
BOT CH.	LL	=	0.0	PSF
	DL	=	7.4	PSF
TOTAL LOAD		=	40.1	PSF

SPACING = 24.0 IN. C/C

THIS TRUSS IS DESIGNED FOR RESIDENTIAL OR SMALL BUILDING REQUIREMENTS OF PART 9, NBCC 2015

THIS DESIGN COMPLIES WITH:
- PART 9 OF BCBC 2018 , ABC 2019
- PART 9 OF OBC 2012 (2019 AMENDMENT)
- CSA 086-14
- TPIC 2014

DESIGN ASSUMPTIONS
-OVERHANG NOT TO BE ALTERED OR CUT OFF.

(55 % OF 33.4 P.S.F. G.S.L. PLUS 8.4 P.S.F. RAIN LOAD) EQUALS 26.7 P.S.F. SPECIFIED ROOF LIVE LOAD

ALLOWABLE DEFL.(LL)= L/360 (0.19")
CALCULATED VERT. DEFL.(LL) = L/ 999 (0.00")
ALLOWABLE DEFL.(TL)= L/360 (0.19")
CALCULATED VERT. DEFL.(TL) = L/ 999 (0.00")

CSI: TC=0.23/1.00 (B-C:1) , BC=0.02/1.00 (D-E:4) , WB=0.00/1.00 (n/a:0) , SSI=0.15/1.00 (B-C:1)

DOL LUMBER=1.00 NAIL=1.00 LS BEND=1.10 COMP=1.10 SHEAR=1.10 TENS= 1.10

COMPANION LIVE LOAD FACTOR = 1.00

AUTOSOLVE RIGHT HEEL ONLY

TRUSS PLATE MANUFACTURER IS NOT RESPONSIBLE FOR QUALITY CONTROL IN THE TRUSS MANUFACTURING PLANT .

NAIL VALUES

PLATE	GRIP(DRY) (PSI) MAX	MIN	SHEAR (PLI) MAX	MIN	SECTION (PLI) MAX	MIN
MT20	650	371	1747	788	1987	1873

PLATE PLACEMENT TOL. = 0.250 inches

PLATE ROTATION TOL. = 5.0 Deg.

JSI GRIP= 0.15 (B) (INPUT = 0.90)
JSI METAL= 0.12 (B) (INPUT = 1.00)

LICENSED PROFESSIONAL ENGINEER
8/02/22
C. M. HEYENS
100505065
PROVINCE OF ONTARIO

STRUCTURAL COMPONENT ONLY
DWG # TR22080264

JOB NAME	TRUSS NAME	QUANTITY	PLY	JOB DESC. GREEN PARK HOMES	DRWG NO.
427633	J7	5	1	TRUSS DESC.	

Tamarack Roof Truss, Burlington

Version 8.530 S Feb 23 2022 MiTek Industries, Inc. Tue Aug 2 14:58:58 2022 Page 1
ID:5jddhdQ2aVEKS8ltDc496Sz15V3-RVNLbWQcp6eBvn76PDxaHNeP2j5NhXE?bcORXiyrssB

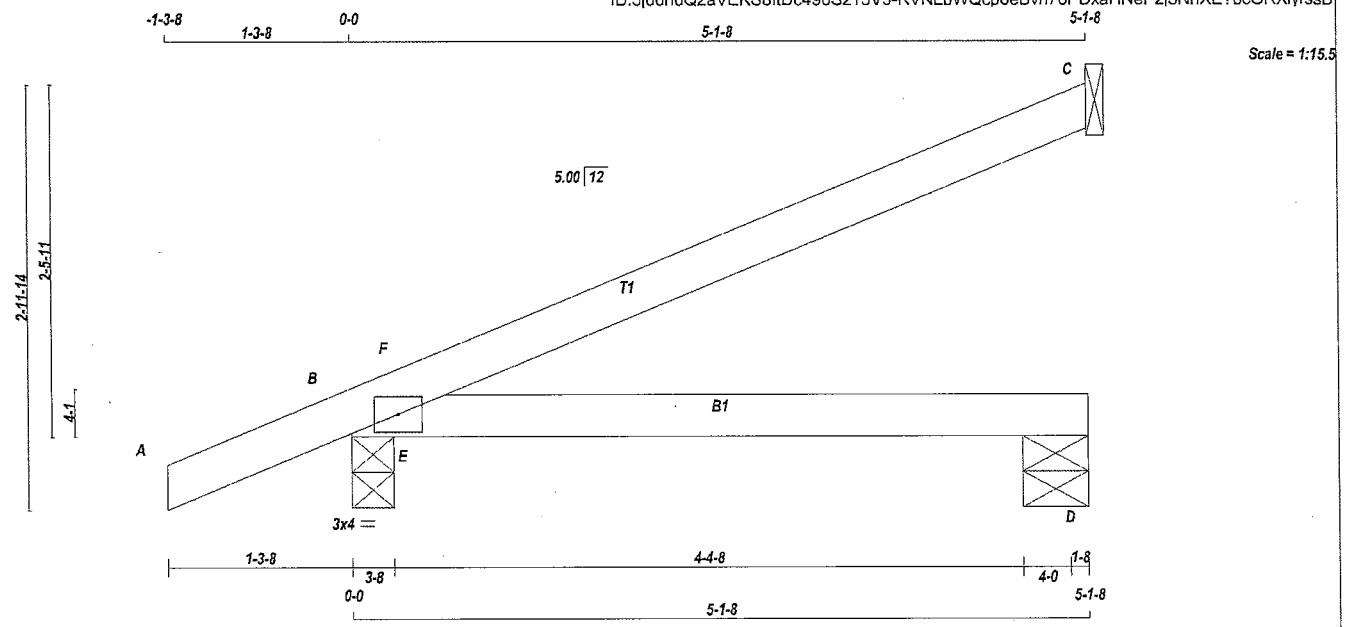

TOTAL WEIGHT = 5 X 14 = 70 lb

LUMBER
N. L. G. A. RULES

CHORDS	SIZE		LUMBER	DESCR.
A - C	2x4	DRY	No.2	SPF
B - D	2x4	DRY	No.2	SPF

DRY: SEASONED LUMBER.

PLATES (table is in inches)

JT	TYPE	PLATES	W	LEN	Y	X
B	TMB1-I	MT20	3.0	4.0		

NOTES- (1)
1) Lateral braces to be a minimum of 2X4 SPF #2.

DIMENSIONS, SUPPORTS AND LOADINGS SPECIFIED BY FABRICATOR TO BE VERIFIED BY BUILDING DESIGNER

BEARINGS

JT	FACTORED GROSS REACTION VERT	HORZ	MAXIMUM FACTORED GROSS REACTION DOWN	HORZ	UPLIFT	INPUT BRG IN-SX	REQRD BRG IN-SX
C	213	0	213	0	0	1-8	1-8
B	420	0	420	0	0	3-8	3-8
D	79	0	79	0	0	5-8	5-8

SEE MITEK STANDARD DETAIL MSD2015-H FOR CONNECTION TO JOINT(S) C

UNFACTORED REACTIONS

JT	1ST LCASE COMBINED	MAX./MIN. COMPONENT REACTIONS SNOW	LIVE	PERM LIVE	WIND	DEAD	SOIL
C	147	116 / 0	0 / 0	0 / 0	0 / 0	31 / 0	0 / 0
B	294	209 / 0	0 / 0	0 / 0	0 / 0	85 / 0	0 / 0
D	59	21 / 0	0 / 0	0 / 0	0 / 0	37 / 0	0 / 0

BEARING MATERIAL TO BE SPF NO.2 OR BETTER AT JOINT(S) C, B, D

BRACING
TOP CHORD TO BE SHEATHED OR MAX. PURLIN SPACING = 6.25 FT.
MAX. UNBRACED BOTTOM CHORD LENGTH = 10.00 FT OR RIGID CEILING DIRECTLY APPLIED.

ALL PITCH BREAKS AND PERIMETER CORNER JOINTS MUST BE LATERALLY RESTRAINED.

LOADING
TOTAL LOAD CASES: (4)

CHORDS

MEMB. FR-TO	MAX. FACTORED FORCE (LBS)	FACTORED VERT. LOAD LC1 (PLF) FROM	TO	MAX CSI (LC)	MAX. UNBRAC LENGTH
A- B	0 / 23	-95.2	-95.2	0.12 (1)	10.00
B- F	-21 / 34	-95.2	-95.2	0.06 (1)	6.25
F- C	-3 / 2	-95.2	-95.2	0.32 (1)	10.00
B- E	0 / 0	-18.5	-18.5	0.22 (1)	10.00
E- D	0 / 0	-18.5	-18.5	0.23 (1)	10.00

WEBS

MEMB. FR-TO	MAX. FACTORED FORCE (LBS)	MAX CSI (LC)
E- F	-329 / 10	0.00 (1)

DESIGN CRITERIA

SPECIFIED LOADS:

TOP CH.	LL	=	26.7	PSF
	DL	=	6.0	PSF
BOT CH.	LL	=	0.0	PSF
	DL	=	7.4	PSF
TOTAL LOAD		=	40.1	PSF

SPACING = 24.0 IN. C/C

THIS TRUSS IS DESIGNED FOR RESIDENTIAL OR SMALL BUILDING REQUIREMENTS OF PART 9, NBCC 2015

THIS DESIGN COMPLIES WITH:
- PART 9 OF BCBC 2018 , ABC 2019
- PART 9 OF OBC 2012 (2019 AMENDMENT)
- CSA 086-14
- TPIC 2014

(55 % OF 33.4 P.S.F. G.S.L. PLUS 8.4 P.S.F. RAIN LOAD) EQUALS 26.7 P.S.F. SPECIFIED ROOF LIVE LOAD

ALLOWABLE DEFL.(LL)= L/360 (0.19")
CALCULATED VERT. DEFL.(LL) = L/ 999 (0.04")
ALLOWABLE DEFL.(TL)= L/360 (0.19")
CALCULATED VERT. DEFL.(TL) = L/ 716 (0.09")

CSI: TC=0.32/1.00 (C-F:1) , BC=0.23/1.00 (D-E:1) , WB=0.00/1.00 (E-F:1) , SSI=0.27/1.00 (B-E:1)

DOL LUMBER=1.00 NAIL=1.00 LS BEND=1.10 COMP=1.10 SHEAR=1.10 TENS= 1.10

COMPANION LIVE LOAD FACTOR = 1.00

TRUSS PLATE MANUFACTURER IS NOT RESPONSIBLE FOR QUALITY CONTROL IN THE TRUSS MANUFACTURING PLANT .

NAIL VALUES

PLATE	GRIP(DRY) (PSI) MAX	MIN	SHEAR (PLI) MAX	MIN	SECTION (PLI) MAX	MIN
MT20	650	371	1747	788	1987	1873

PLATE PLACEMENT TOL. = 0.250 inches

PLATE ROTATION TOL. = 5.0 Deg.

JSI GRIP= 0.31 (B) (INPUT = 0.90)
JSI METAL= 0.07 (B) (INPUT = 1.00)

LICENSED PROFESSIONAL ENGINEER
8/02/22
C. M. HEYENS
100505065
PROVINCE OF ONTARIO

STRUCTURAL COMPONENT ONLY
DWG # TR22080275

JOB NAME	TRUSS NAME	QUANTITY	PLY	JOB DESC.	DRWG NO.
427633	J8	4	1	GREEN PARK HOMES TRUSS DESC.	

Tamarack Roof Truss, Burlington

Version 8.530 S Feb 23 2022 MiTek Industries, Inc. Tue Aug 2 14:58:58 2022 Page 1
ID:5jddhdQ2aVEKS8ltDc496Sz15V3-RVNLbWQcp6eBvn76PDxaHNeOcj4ThXE?bcORXiyrssB

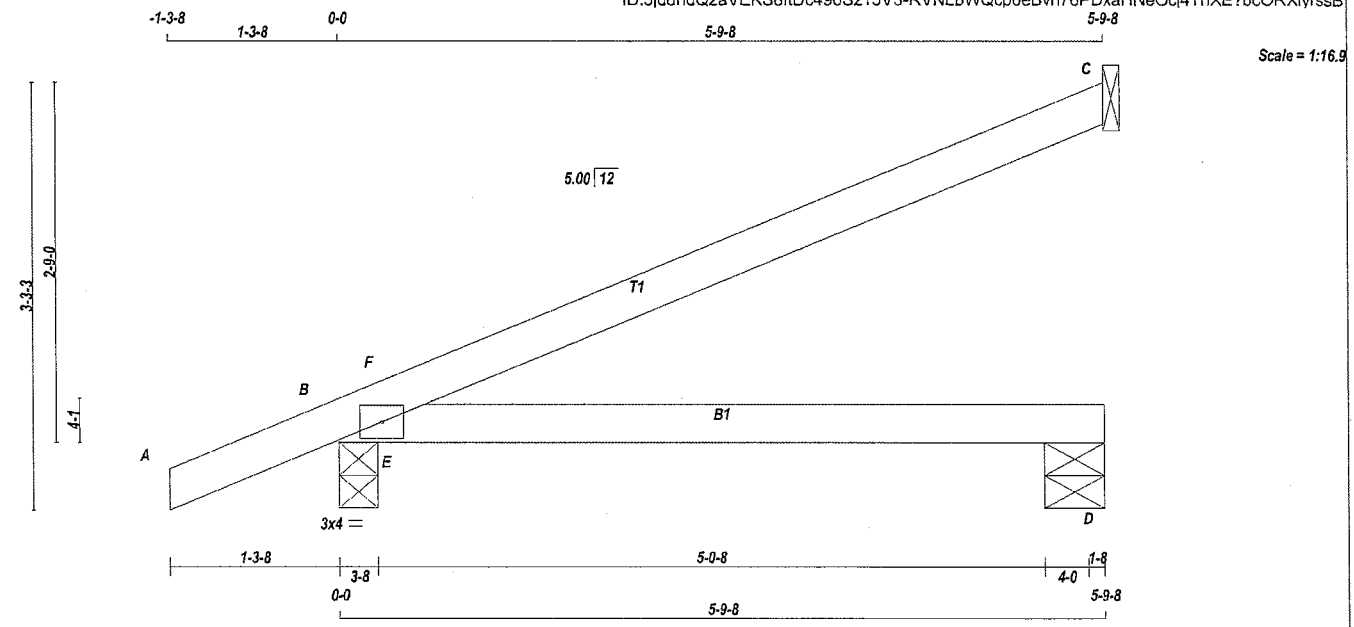

TOTAL WEIGHT = 4 X 15 = 62 lb

LUMBER
N. L. G. A. RULES

CHORDS	SIZE		LUMBER	DESCR.
A - C	2x4	DRY	No.2	SPF
B - D	2x4	DRY	No.2	SPF

DRY: SEASONED LUMBER.

PLATES (table is in inches)

JT	TYPE	PLATES	W	LEN	Y	X
B	TMB1-I	MT20	3.0	4.0		

NOTES- (1)
1) Lateral braces to be a minimum of 2X4 SPF #2.

DIMENSIONS, SUPPORTS AND LOADINGS SPECIFIED BY FABRICATOR TO BE VERIFIED BY BUILDING DESIGNER

BEARINGS

JT	FACTORED GROSS REACTION VERT	HORZ	MAXIMUM FACTORED GROSS REACTION DOWN	HORZ	UPLIFT	INPUT BRG IN-SX	REQRD BRG IN-SX
C	241	0	241	0	0	1-8	1-8
B	458	0	458	0	0	3-8	3-8
D	88	0	88	0	0	5-8	5-8

SEE MITEK STANDARD DETAIL MSD2015-H FOR CONNECTION TO JOINT(S) C

UNFACTORED REACTIONS

JT	1ST LCASE COMBINED	MAX./MIN. COMPONENT REACTIONS SNOW	LIVE	PERM.LIVE	WIND	DEAD	SOIL
C	167	131 / 0	0 / 0	0 / 0	0 / 0	35 / 0	0 / 0
B	321	227 / 0	0 / 0	0 / 0	0 / 0	94 / 0	0 / 0
D	66	24 / 0	0 / 0	0 / 0	0 / 0	42 / 0	0 / 0

BEARING MATERIAL TO BE SPF NO.2 OR BETTER AT JOINT(S) C, B, D

BRACING
TOP CHORD TO BE SHEATHED OR MAX. PURLIN SPACING = 6.25 FT.
MAX. UNBRACED BOTTOM CHORD LENGTH = 10.00 FT OR RIGID CEILING DIRECTLY APPLIED.

ALL PITCH BREAKS AND PERIMETER CORNER JOINTS MUST BE LATERALLY RESTRAINED.

LOADING
TOTAL LOAD CASES: (4)

CHORDS

MEMB. FR-TO	MAX. FACTORED FORCE (LBS)	FACTORED VERT. LOAD (PLF) FROM	TO	LC1	MAX CSI (LC)	MAX. UNBRAC LENGTH
A- B	0 / 23	-95.2	-95.2	0.12 (1)	10.00	
B- F	-24 / 55	-95.2	-95.2	0.09 (1)	6.25	
F- C	-4 / 2	-95.2	-95.2	0.42 (1)	10.00	
B- E	0 / 0	-18.5	-18.5	0.28 (1)	10.00	
E- D	0 / 0	-18.5	-18.5	0.28 (1)	10.00	

WEBS

MEMB. FR-TO	MAX. FACTORED FORCE (LBS)	MAX CSI (LC)
E- F	-412 / 12	0.00 (1)

DESIGN CRITERIA

SPECIFIED LOADS:

TOP CH.	LL =	26.7	PSF
	DL =	6.0	PSF
BOT CH.	LL =	0.0	PSF
	DL =	7.4	PSF
TOTAL LOAD	=	40.1	PSF

SPACING = 24.0 IN. C/C

THIS TRUSS IS DESIGNED FOR RESIDENTIAL OR SMALL BUILDING REQUIREMENTS OF PART 9, NBCC 2015

THIS DESIGN COMPLIES WITH:
- PART 9 OF BCBC 2018 , ABC 2019
- PART 9 OF OBC 2012 (2019 AMENDMENT)
- CSA 086-14
- TPIC 2014

(55 % OF 33.4 P.S.F. G.S.L. PLUS 8.4 P.S.F. RAIN LOAD) EQUALS 26.7 P.S.F. SPECIFIED ROOF LIVE LOAD

ALLOWABLE DEFL.(LL)= L/360 (0.19")
CALCULATED VERT. DEFL.(LL) = L/ 999 (0.07")
ALLOWABLE DEFL.(TL)= L/360 (0.19")
CALCULATED VERT. DEFL.(TL) = L/ 502 (0.14")

CSI: TC=0.42/1.00 (C-F:1) , BC=0.28/1.00 (D-E:1) , WB=0.00/1.00 (E-F:1) , SSI=0.34/1.00 (B-E:1)

DOL LUMBER=1.00 NAIL=1.00 LS BEND=1.10 COMP=1.10 SHEAR=1.10 TENS= 1.10

COMPANION LIVE LOAD FACTOR = 1.00

TRUSS PLATE MANUFACTURER IS NOT RESPONSIBLE FOR QUALITY CONTROL IN THE TRUSS MANUFACTURING PLANT .

NAIL VALUES

PLATE	GRIP(DRY) (PSI) MAX	MIN	SHEAR (PLI) MAX	MIN	SECTION (PLI) MAX	MIN
MT20	650	371	1747	788	1987	1873

PLATE PLACEMENT TOL. = 0.250 inches

PLATE ROTATION TOL. = 5.0 Deg.

JSI GRIP= 0.34 (B) (INPUT = 0.90)
JSI METAL= 0.08 (B) (INPUT = 1.00)

LICENSED PROFESSIONAL ENGINEER
8/02/22
C. M. HEYENS
100505065
PROVINCE OF ONTARIO

STRUCTURAL COMPONENT ONLY
DWG # TR22080276

JOB NAME	TRUSS NAME	QUANTITY	PLY	JOB DESC.	DRWG NO.
427633	J9	3	1	GREEN PARK HOMES TRUSS DESC.	

Tamarack Roof Truss, Burlington

Version 8.530 S Feb 23 2022 MiTek Industries, Inc. Tue Aug 2 14:58:59 2022 Page 1
ID:5jddhdQ2aVEKS8ItDc496Sz15V3-vhxjpsREZQm2XxilzwTpqbBdF6UHQ U9pG8?38yrssA

Scale = 1:25.3

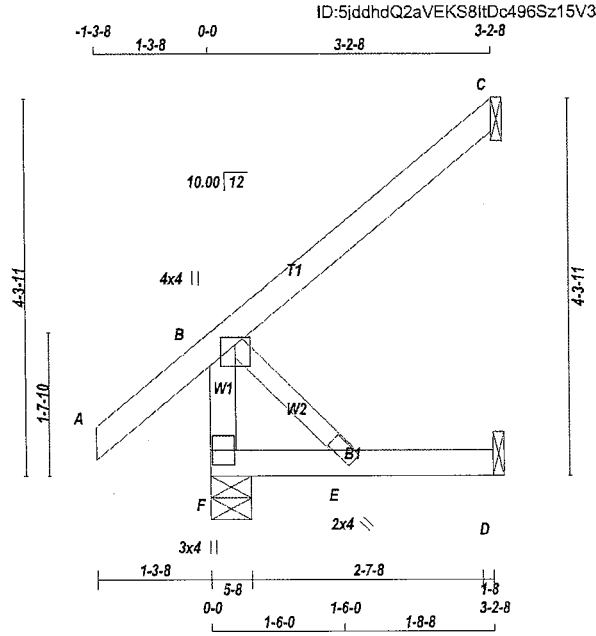

TOTAL WEIGHT = 3 X 13 = 40 lb

[M]

LUMBER
N. L. G. A. RULES

CHORDS	SIZE		LUMBER	DESCR.
F - B	2x4	DRY	No.2	SPF
A - C	2x4	DRY	No.2	SPF
F - D	2x4	DRY	No.2	SPF
ALL WEBS	2x3	DRY	No.2	SPF

DRY: SEASONED LUMBER.

PLATES (table is in inches)

JT	TYPE	PLATES	W	LEN	Y	X
B	TMVW+p	MT20	4.0	4.0	1.00	2.00
E	BMW+w	MT20	2.0	4.0		
F	BMV1+p	MT20	3.0	4.0		

NOTES- (1)
1) Lateral braces to be a minimum of 2X4 SPF #2.

DIMENSIONS, SUPPORTS AND LOADINGS SPECIFIED BY FABRICATOR TO BE VERIFIED BY BUILDING DESIGNER

BEARINGS

JT	FACTORED GROSS REACTION VERT	HORZ	MAXIMUM FACTORED GROSS REACTION DOWN	HORZ	UPLIFT	INPUT BRG IN-SX	REQRD BRG IN-SX
F	314	0	314	0	0	5-8	5-8
C	153	0	153	0	0	1-8	1-8
D	30	0	33	0	0	1-8	1-8

SEE MITEK STANDARD DETAIL MSD2015-H FOR CONNECTION TO JOINT(S) C , D

UNFACTORED REACTIONS

JT	1ST LCASE COMBINED	MAX./MIN. COMPONENT REACTIONS SNOW	LIVE	PERM.LIVE	WIND	DEAD	SOIL
F	219	160 / 0	0 / 0	0 / 0	0 / 0	60 / 0	0 / 0
C	105	86 / 0	0 / 0	0 / 0	0 / 0	19 / 0	0 / 0
D	24	0 / 0	0 / 0	0 / 0	0 / 0	24 / 0	0 / 0

BEARING MATERIAL TO BE SPF NO.2 OR BETTER AT JOINT(S) F

BRACING
TOP CHORD TO BE SHEATHED OR MAX. PURLIN SPACING = 10.00 FT.
MAX. UNBRACED BOTTOM CHORD LENGTH = 10.00 FT OR RIGID CEILING DIRECTLY APPLIED.

ALL PITCH BREAKS AND PERIMETER CORNER JOINTS MUST BE LATERALLY RESTRAINED.

LOADING
TOTAL LOAD CASES: (5)

CHORDS

MEMB. FR-TO	MAX. FACTORED FORCE (LBS)	FACTORED VERT. LOAD LC1 (PLF) FROM	TO	MAX CSI (LC)	MAX. UNBRAC LENGTH
F- B	-285 / 0	0.0	0.0	0.03 (1)	7.81
A- B	0 / 42	-95.2	-95.2	0.14 (5)	10.00
B- C	0 / 0	-95.2	-95.2	0.17 (1)	10.00
F- E	0 / 0	-18.5	-18.5	0.06 (4)	10.00
E- D	0 / 0	-18.5	-18.5	0.06 (4)	10.00

WEBS

MEMB. FR-TO	MAX. FACTORED FORCE (LBS)	MAX CSI (LC)
B- E	0 / 0	0.00 (1)

CANTILEVER ANALYSIS HAS BEEN CONSIDERED IN THIS DESIGN

DESIGN CRITERIA

SPECIFIED LOADS:

TOP CH.	LL	=	26.7	PSF
	DL	=	6.0	PSF
BOT CH.	LL	=	0.0	PSF
	DL	=	7.4	PSF
TOTAL LOAD		=	40.1	PSF

SPACING = 24.0 IN. C/C

THIS TRUSS IS DESIGNED FOR RESIDENTIAL OR SMALL BUILDING REQUIREMENTS OF PART 9, NBCC 2015

THIS DESIGN COMPLIES WITH:
- PART 9 OF BCBC 2018 , ABC 2019
- PART 9 OF OBC 2012 (2019 AMENDMENT)
- CSA 086-14
- TPIC 2014

(55 % OF 33.4 P.S.F. G.S.L. PLUS 8.4 P.S.F. RAIN LOAD) EQUALS 26.7 P.S.F. SPECIFIED ROOF LIVE LOAD

ALLOWABLE DEFL.(LL)= L/360 (0.19")
CALCULATED VERT. DEFL.(LL) = L/ 999 (0.00")
ALLOWABLE DEFL.(TL)= L/360 (0.19")
CALCULATED VERT. DEFL.(TL) = L/ 999 (0.00")

CSI: TC=0.17/1.00 (B-C:1) , BC=0.06/1.00 (D-E:4) , WB=0.00/1.00 (B-E:1) , SSI=0.09/1.00 (B-C:1)

DOL LUMBER=1.00 NAIL=1.00 LS BEND=1.10 COMP=1.10 SHEAR=1.10 TENS= 1.10

COMPANION LIVE LOAD FACTOR = 1.00

AUTOSOLVE RIGHT HEEL ONLY

TRUSS PLATE MANUFACTURER IS NOT RESPONSIBLE FOR QUALITY CONTROL IN THE TRUSS MANUFACTURING PLANT .

NAIL VALUES

PLATE	GRIP(DRY) (PSI) MAX	MIN	SHEAR (PLI) MAX	MIN	SECTION (PLI) MAX	MIN
MT20	650	371	1747	788	1987	1873

PLATE PLACEMENT TOL. = 0.250 inches

PLATE ROTATION TOL. = 5.0 Deg.

JSI GRIP= 0.21 (B) (INPUT = 0.90)
JSI METAL= 0.06 (B) (INPUT = 1.00)

LICENSED PROFESSIONAL ENGINEER
8/02/22
C. M. HEYENS
100505065
PROVINCE OF ONTARIO

STRUCTURAL COMPONENT ONLY
DWG # TR22080277

JOB NAME	TRUSS NAME	QUANTITY	PLY	JOB DESC.	DRWG NO.
427659	J10	4	1	GREEN PARK HOMES TRUSS DESC.	

Tamarack Roof Truss, Burlington

Version 8.530 S Feb 23 2022 MiTek Industries, Inc. Tue Aug 2 14:35:36 2022 Page 1
ID:X?b5302Mr04RJ9RlAuGw6Vz?TlO-UmqKM7SA M?6jJxfGnooSjassZedCS9eCUnGKzyrtC5

Scale = 1:20.2

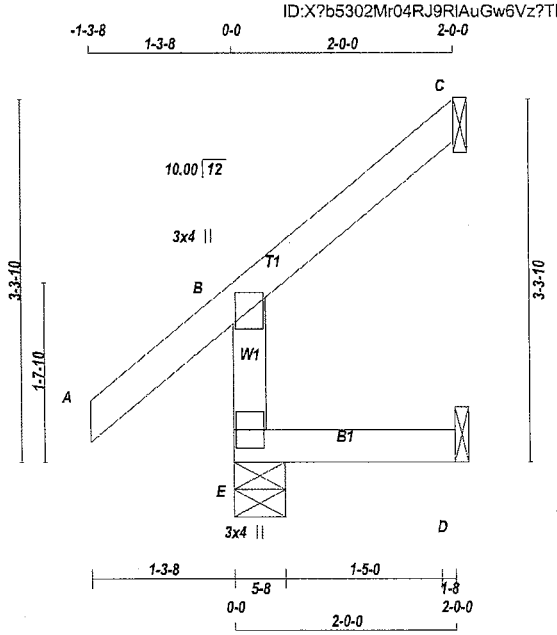

TOTAL WEIGHT = 4 X 9 = 35 lb [M]

LUMBER
N. L. G. A. RULES

CHORDS	SIZE		LUMBER	DESCR.
E - B	2x4	DRY	No.2	SPF
A - C	2x4	DRY	No.2	SPF
E - D	2x4	DRY	No.2	SPF

DRY: SEASONED LUMBER.

PLATES (table is in inches)

JT	TYPE	PLATES	W	LEN	Y	X
B	TMV+p	MT20	3.0	4.0		
E	BMV1+p	MT20	3.0	4.0		

NOTES- (1)
1) Lateral braces to be a minimum of 2X4 SPF #2.

DIMENSIONS, SUPPORTS AND LOADINGS SPECIFIED BY FABRICATOR TO BE VERIFIED BY BUILDING DESIGNER

BEARINGS

JT	FACTORED GROSS REACTION VERT	HORZ	MAXIMUM FACTORED GROSS REACTION DOWN	HORZ	UPLIFT	INPUT BRG IN-SX	REQRD BRG IN-SX
E	270	0	270	0	0	5-8	5-8
C	72	0	72	0	0	1-8	1-8
D	17	0	19	0	0	1-8	1-8

SEE MITEK STANDARD DETAIL MSD2015-H FOR CONNECTION TO JOINT(S) C , D

UNFACTORED REACTIONS

JT	1ST LCASE COMBINED	MAX./MIN. COMPONENT REACTIONS SNOW	LIVE	PERM.LIVE	WIND	DEAD	SOIL
E	188	140 / 0	0 / 0	0 / 0	0 / 0	48 / 0	0 / 0
C	50	41 / 0	0 / 0	0 / 0	0 / 0	9 / 0	0 / 0
D	14	0 / 0	0 / 0	0 / 0	0 / 0	14 / 0	0 / 0

BEARING MATERIAL TO BE SPF NO.2 OR BETTER AT JOINT(S) E

BRACING
TOP CHORD TO BE SHEATHED OR MAX. PURLIN SPACING = 6.25 FT.
MAX. UNBRACED BOTTOM CHORD LENGTH = 10.00 FT OR RIGID CEILING DIRECTLY APPLIED.

ALL PITCH BREAKS AND PERIMETER CORNER JOINTS MUST BE LATERALLY RESTRAINED.

LOADING
TOTAL LOAD CASES: (5)

CHORDS

MEMB. FR-TO	MAX. FACTORED FORCE (LBS)	FACTORED VERT. LOAD LC1 (PLF) FROM	TO	MAX CSI (LC)	MAX. UNBRAC LENGTH
E- B	-250 / 0	0.0	0.0	0.01 (4)	7.81
A- B	0 / 42	-95.2	-95.2	0.13 (1)	10.00
B- C	-15 / 0	-95.2	-95.2	0.06 (1)	6.25
E- D	0 / 0	-18.5	-18.5	0.02 (4)	10.00

WEBS

MEMB. FR-TO	MAX. FACTORED FORCE (LBS)	MAX CSI (LC)

CANTILEVER ANALYSIS HAS BEEN CONSIDERED IN THIS DESIGN

DESIGN CRITERIA

SPECIFIED LOADS:

TOP CH.	LL	=	26.7	PSF
	DL	=	6.0	PSF
BOT CH.	LL	=	0.0	PSF
	DL	=	7.4	PSF
TOTAL LOAD		=	40.1	PSF

SPACING = 24.0 IN. C/C

THIS TRUSS IS DESIGNED FOR RESIDENTIAL OR SMALL BUILDING REQUIREMENTS OF PART 9, NBCC 2015

THIS DESIGN COMPLIES WITH:
- PART 9 OF BCBC 2018 , ABC 2019
- PART 9 OF OBC 2012 (2019 AMENDMENT)
- CSA 086-14
- TPIC 2014

DESIGN ASSUMPTIONS
-OVERHANG NOT TO BE ALTERED OR CUT OFF.

(55 % OF 33.4 P.S.F. G.S.L. PLUS 8.4 P.S.F. RAIN LOAD) EQUALS 26.7 P.S.F. SPECIFIED ROOF LIVE LOAD

ALLOWABLE DEFL.(LL)= L/360 (0.19")
CALCULATED VERT. DEFL.(LL) = L/ 999 (0.00")
ALLOWABLE DEFL.(TL)= L/360 (0.19")
CALCULATED VERT. DEFL.(TL) = L/ 999 (0.00")

CSI: TC=0.13/1.00 (A-B:1) , BC=0.02/1.00 (D-E:4) , WB=0.00/1.00 (n/a:0) , SSI=0.08/1.00 (A-B:1)

DOL LUMBER=1.00 NAIL=1.00 LS BEND=1.10 COMP=1.10 SHEAR=1.10 TENS= 1.10

COMPANION LIVE LOAD FACTOR = 1.00

AUTOSOLVE RIGHT HEEL ONLY

TRUSS PLATE MANUFACTURER IS NOT RESPONSIBLE FOR QUALITY CONTROL IN THE TRUSS MANUFACTURING PLANT.

NAIL VALUES

PLATE	GRIP(DRY) (PSI) MAX	MIN	SHEAR (PLI) MAX	MIN	SECTION (PLI) MAX	MIN
MT20	650	371	1747	788	1987	1873

PLATE PLACEMENT TOL. = 0.250 inches

PLATE ROTATION TOL. = 5.0 Deg.

JSI GRIP= 0.11 (B) (INPUT = 0.90)
JSI METAL= 0.09 (B) (INPUT = 1.00)

LICENSED PROFESSIONAL ENGINEER
8/02/22
C. M. HEYENS
100505065
PROVINCE OF ONTARIO

STRUCTURAL COMPONENT ONLY
DWG # TR22080297

JOB NAME	TRUSS NAME	QUANTITY	PLY	JOB DESC.	DRWG NO.
427659	J12	5	1	GREEN PARK HOMES TRUSS DESC.	

Tamarack Roof Truss, Burlington

Version 8.530 S Feb 23 2022 MiTek Industries, Inc. Tue Aug 2 14:35:36 2022 Page 1
ID:X?b5302Mr04RJ9RlAuGw6Vz?TIO-UmgKM7SA M?6jJxfGnooSjapuZbICS9eCUnGKzyrtC5

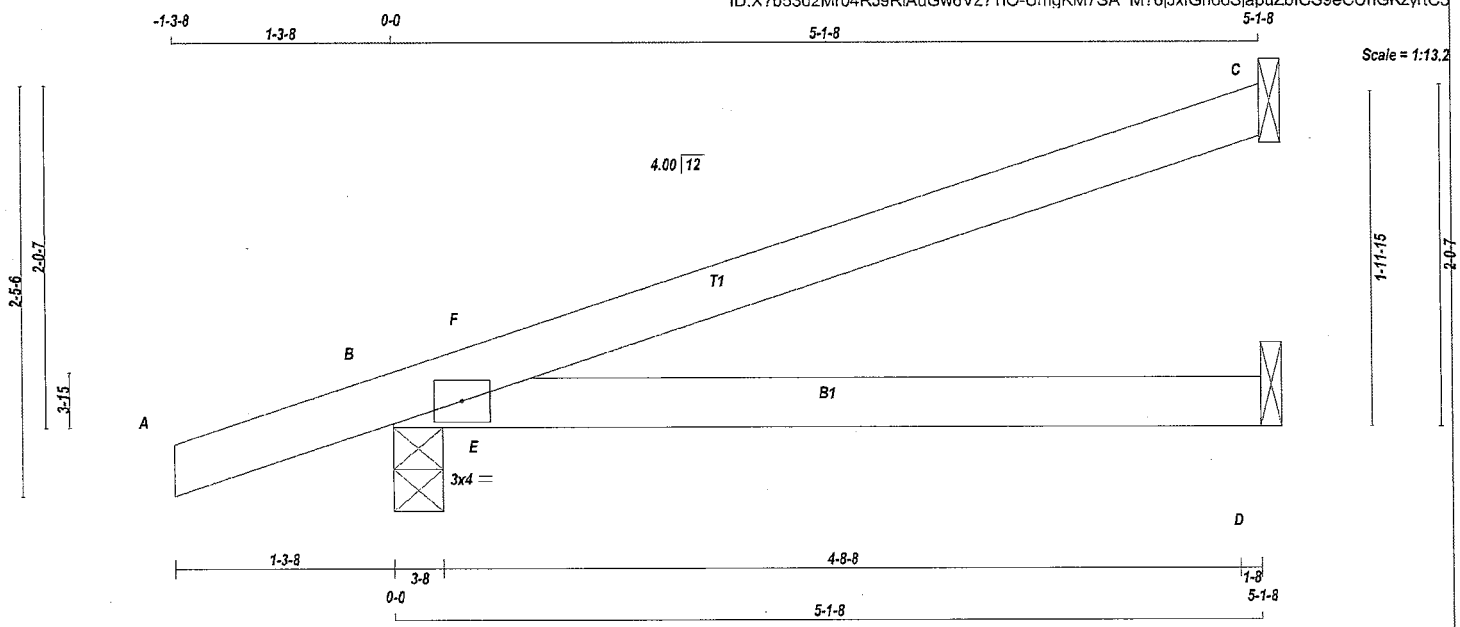

TOTAL WEIGHT = 5 X 14 = 68 lb

LUMBER
N. L. G. A. RULES

CHORDS	SIZE		LUMBER	DESCR.
A - C	2x4	DRY	No.2	SPF
B - D	2x4	DRY	No.2	SPF

DRY: SEASONED LUMBER.

PLATES (table is in inches)

JT	TYPE	PLATES	W	LEN	Y	X
B	TMB1-I	MT20	3.0	4.0		

NOTES- (1)
1) Lateral braces to be a minimum of 2X4 SPF #2.

DIMENSIONS, SUPPORTS AND LOADINGS SPECIFIED BY FABRICATOR TO BE VERIFIED BY BUILDING DESIGNER

BEARINGS

JT	FACTORED GROSS REACTION VERT	HORZ	MAXIMUM GROSS REACTION DOWN	HORZ	FACTORED UPLIFT	INPUT BRG IN-SX	REQRD BRG IN-SX
C	212	0	212	0	0	1-8	1-8
B	419	0	419	0	0	3-8	3-8
D	79	0	79	0	0	1-8	1-8

SEE MITEK STANDARD DETAIL MSD2015-H FOR CONNECTION TO JOINT(S) C , D

UNFACTORED REACTIONS

JT	1ST LCASE COMBINED	MAX./MIN. COMPONENT REACTIONS SNOW	LIVE	PERM.LIVE	WIND	DEAD	SOIL
C	147	115 / 0	0 / 0	0 / 0	0 / 0	32 / 0	0 / 0
B	293	209 / 0	0 / 0	0 / 0	0 / 0	85 / 0	0 / 0
D	59	22 / 0	0 / 0	0 / 0	0 / 0	37 / 0	0 / 0

BEARING MATERIAL TO BE SPF NO.2 OR BETTER AT JOINT(S) B, D

BRACING
TOP CHORD TO BE SHEATHED OR MAX. PURLIN SPACING = 6.25 FT.
MAX. UNBRACED BOTTOM CHORD LENGTH = 10.00 FT OR RIGID CEILING DIRECTLY APPLIED.

ALL PITCH BREAKS AND PERIMETER CORNER JOINTS MUST BE LATERALLY RESTRAINED.

LOADING
TOTAL LOAD CASES: (4)

CHORDS

MEMB. FR-TO	MAX. FACTORED FORCE (LBS)	FACTORED VERT. LOAD LC1 (PLF) FROM	TO	MAX CSI (LC)	MAX. UNBRAC LENGTH
A- B	0 / 19	-95.2	-95.2	0.12 (1)	10.00
B- F	-17 / 8	-95.2	-95.2	0.06 (4)	6.25
F- C	0 / 2	-95.2	-95.2	0.32 (1)	10.00
B- E	0 / 0	-18.5	-18.5	0.23 (1)	10.00
E- D	0 / 0	-18.5	-18.5	0.23 (1)	10.00

WEBS

MEMB. FR-TO	MAX. FACTORED FORCE (LBS)	MAX CSI (LC)
E- F	-269 / 10	0.00 (1)

DESIGN CRITERIA

SPECIFIED LOADS:

TOP CH.	LL	=	26.7	PSF
	DL	=	6.0	PSF
BOT CH.	LL	=	0.0	PSF
	DL	=	7.4	PSF
TOTAL LOAD		=	40.1	PSF

SPACING = 24.0 IN. C/C

THIS TRUSS IS DESIGNED FOR RESIDENTIAL OR SMALL BUILDING REQUIREMENTS OF PART 9, NBCC 2015

THIS DESIGN COMPLIES WITH:
- PART 9 OF BCBC 2018 , ABC 2019
- PART 9 OF OBC 2012 (2019 AMENDMENT)
- CSA 086-14
- TPIC 2014

(55 % OF 33.4 P.S.F. G.S.L. PLUS 8.4 P.S.F. RAIN LOAD) EQUALS 26.7 P.S.F. SPECIFIED ROOF LIVE LOAD

ALLOWABLE DEFL.(LL)= L/360 (0.19")
CALCULATED VERT. DEFL.(LL) = L/ 999 (0.04")
ALLOWABLE DEFL.(TL)= L/360 (0.19")
CALCULATED VERT. DEFL.(TL) = L/ 707 (0.09")

CSI: TC=0.32/1.00 (C-F:1) , BC=0.23/1.00 (D-E:1) , WB=0.00/1.00 (E-F:1) , SSI=0.22/1.00 (B-E:1)

DOL LUMBER=1.00 NAIL=1.00 LS BEND=1.10 COMP=1.10 SHEAR=1.10 TENS= 1.10

COMPANION LIVE LOAD FACTOR = 1.00

TRUSS PLATE MANUFACTURER IS NOT RESPONSIBLE FOR QUALITY CONTROL IN THE TRUSS MANUFACTURING PLANT .

NAIL VALUES

PLATE	GRIP(DRY) (PSI) MAX	MIN	SHEAR (PLI) MAX	MIN	SECTION (PLI) MAX	MIN
MT20	650	371	1747	788	1987	1873

PLATE PLACEMENT TOL. = 0.250 inches

PLATE ROTATION TOL. = 5.0 Deg.

JSI GRIP= 0.28 (B) (INPUT = 0.90)
JSI METAL= 0.07 (B) (INPUT = 1.00)

LICENSED PROFESSIONAL ENGINEER
8/02/22
C. M. HEYENS
100505065
PROVINCE OF ONTARIO

STRUCTURAL COMPONENT ONLY
DWG # TR22080298

JOB NAME	TRUSS NAME	QUANTITY	PLY	JOB DESC.	DRWG NO.
427659	J13	4	1	GREEN PARK HOMES TRUSS DESC.	

Tamarack Roof Truss, Burlington

Version 8.530 S Feb 23 2022 MiTek Industries, Inc. Tue Aug 2 14:35:37 2022 Page 1
ID:X?b5302Mr04RJ9RlAuGw6Vz?TlO-yzEiZTTplf7zKTWrqUJ1?x6zMywdxvPnQ8WqsPyrtC4

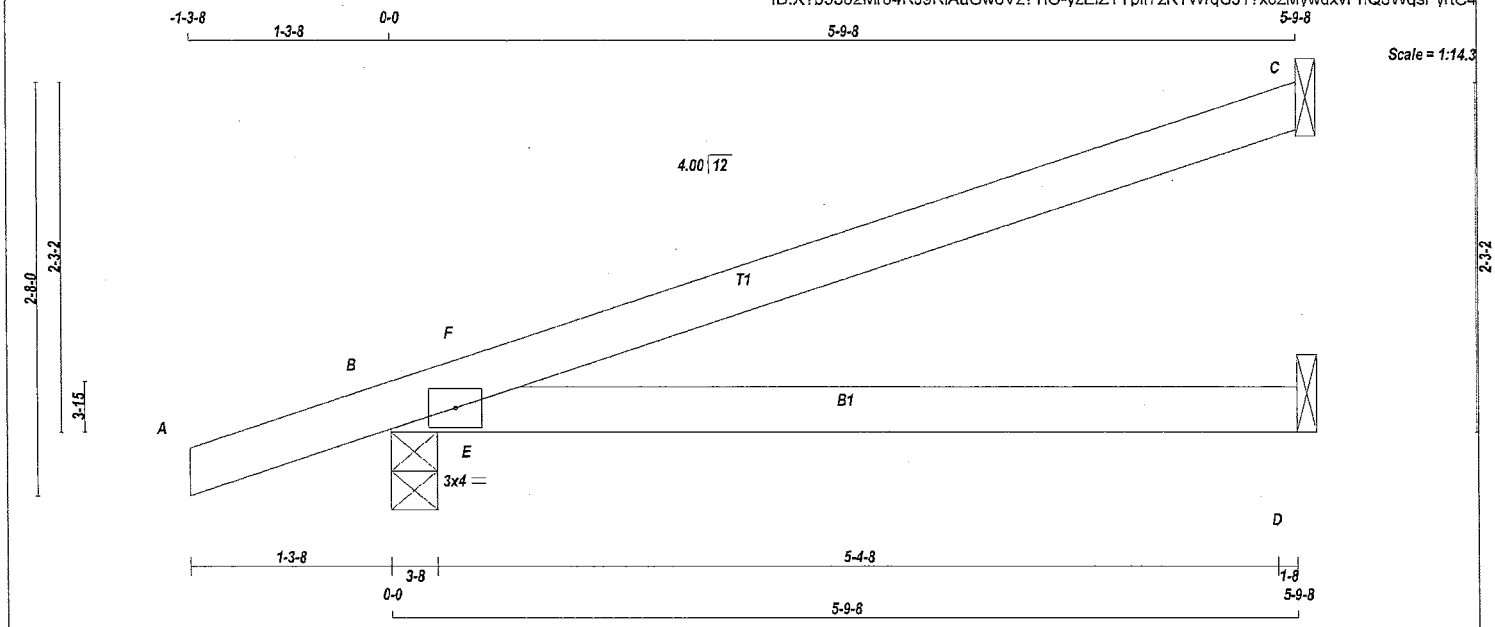

TOTAL WEIGHT = 4 X 15 = 61 lb

LUMBER
N. L. G. A. RULES

CHORDS	SIZE		LUMBER	DESCR.
A - C	2x4	DRY	No.2	SPF
B - D	2x4	DRY	No.2	SPF

DRY: SEASONED LUMBER.

PLATES (table is in inches)

JT	TYPE	PLATES	W	LEN	Y	X
B	TMB1-I	MT20	3.0	4.0		

NOTES- (1)
1) Lateral braces to be a minimum of 2X4 SPF #2.

DIMENSIONS, SUPPORTS AND LOADINGS SPECIFIED BY FABRICATOR TO BE VERIFIED BY BUILDING DESIGNER

BEARINGS

JT	FACTORED GROSS REACTION VERT	HORZ	MAXIMUM FACTORED GROSS REACTION DOWN	HORZ	UPLIFT	INPUT BRG IN-SX	REQRD BRG IN-SX
C	240	0	240	0	0	1-8	1-8
B	457	0	457	0	0	3-8	3-8
D	89	0	89	0	0	1-8	1-8

SEE MITEK STANDARD DETAIL MSD2015-H FOR CONNECTION TO JOINT(S) C , D

UNFACTORED REACTIONS

JT	1ST LCASE COMBINED	MAX./MIN. COMPONENT REACTIONS SNOW	LIVE	PERM.LIVE	WIND	DEAD	SOIL
C	166	131 / 0	0 / 0	0 / 0	0 / 0	36 / 0	0 / 0
B	320	226 / 0	0 / 0	0 / 0	0 / 0	94 / 0	0 / 0
D	66	24 / 0	0 / 0	0 / 0	0 / 0	42 / 0	0 / 0

BEARING MATERIAL TO BE SPF NO.2 OR BETTER AT JOINT(S) B, D

BRACING
TOP CHORD TO BE SHEATHED OR MAX. PURLIN SPACING = 6.25 FT.
MAX. UNBRACED BOTTOM CHORD LENGTH = 10.00 FT OR RIGID CEILING DIRECTLY APPLIED.

ALL PITCH BREAKS AND PERIMETER CORNER JOINTS MUST BE LATERALLY RESTRAINED.

LOADING
TOTAL LOAD CASES: (4)

CHORDS

MEMB. FR-TO	MAX. FACTORED FORCE (LBS)	FACTORED VERT. LOAD (PLF) FROM	TO	LC1	MAX CSI (LC)	MAX. UNBRAC LENGTH
A- B	0 / 19	-95.2	-95.2	0.12 (1)		10.00
B- F	-19 / 19	-95.2	-95.2	0.05 (4)		6.25
F- C	-2 / 2	-95.2	-95.2	0.40 (1)		10.00
B- E	0 / 0	-18.5	-18.5	0.29 (1)		10.00
E- D	0 / 0	-18.5	-18.5	0.29 (1)		10.00

WEBS

MEMB. FR-TO	MAX. FACTORED FORCE (LBS)	MAX CSI (LC)
E- F	-335 / 12	0.00 (1)

[M][F]

DESIGN CRITERIA

SPECIFIED LOADS:

TOP CH.	LL	=	26.7	PSF
	DL	=	6.0	PSF
BOT CH.	LL	=	0.0	PSF
	DL	=	7.4	PSF
TOTAL LOAD		=	40.1	PSF

SPACING = 24.0 IN. C/C

THIS TRUSS IS DESIGNED FOR RESIDENTIAL OR SMALL BUILDING REQUIREMENTS OF PART 9, NBCC 2015

THIS DESIGN COMPLIES WITH:
- PART 9 OF BCBC 2018 , ABC 2019
- PART 9 OF OBC 2012 (2019 AMENDMENT)
- CSA 086-14
- TPIC 2014

(55 % OF 33.4 P.S.F. G.S.L. PLUS 8.4 P.S.F. RAIN LOAD) EQUALS 26.7 P.S.F. SPECIFIED ROOF LIVE LOAD

ALLOWABLE DEFL.(LL)= L/360 (0.19")
CALCULATED VERT. DEFL.(LL) = L/ 999 (0.07")
ALLOWABLE DEFL.(TL)= L/360 (0.19")
CALCULATED VERT. DEFL.(TL) = L/ 497 (0.14")

CSI: TC=0.40/1.00 (C-F:1) , BC=0.29/1.00 (D-E:1) , WB=0.00/1.00 (E-F:1) , SSI=0.28/1.00 (B-E:1)

DOL LUMBER=1.00 NAIL=1.00 LS BEND=1.10 COMP=1.10 SHEAR=1.10 TENS= 1.10

COMPANION LIVE LOAD FACTOR = 1.00

TRUSS PLATE MANUFACTURER IS NOT RESPONSIBLE FOR QUALITY CONTROL IN THE TRUSS MANUFACTURING PLANT .

NAIL VALUES

PLATE	GRIP(DRY) (PSI) MAX	MIN	SHEAR (PLI) MAX	MIN	SECTION (PLI) MAX	MIN
MT20	650	371	1747	788	1987	1873

PLATE PLACEMENT TOL. = 0.250 inches

PLATE ROTATION TOL. = 5.0 Deg.

JSI GRIP= 0.30 (B) (INPUT = 0.90)
JSI METAL= 0.08 (B) (INPUT = 1.00)

LICENSED PROFESSIONAL ENGINEER
8/02/22
C. M. HEYENS
100505065
PROVINCE OF ONTARIO

STRUCTURAL COMPONENT ONLY
DWG # TR22080299

JOB NAME	TRUSS NAME	QUANTITY	PLY	JOB DESC.	DRWG NO.
427659	J25	7	1	GREEN PARK HOMES TRUSS DESC.	

Tamarack Roof Truss, Burlington

Version 8.530 S Feb 23 2022 MiTek Industries, Inc. Tue Aug 2 14:35:38 2022 Page 1
ID:X?b5302Mr04RJ9RIAuGw6Vz?TIO-Q9n4mpURVzFqyd52OBqGY8fBcMKhqMfxfoGNOryrtC3

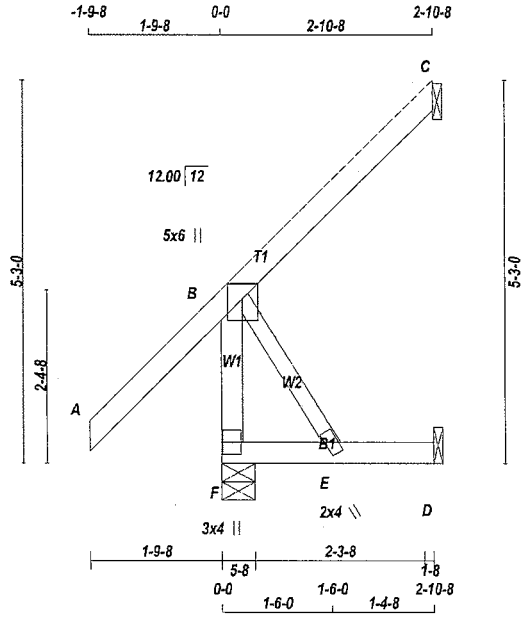

TOTAL WEIGHT = 7 X 15 = 107 lb

LUMBER
N. L. G. A. RULES

CHORDS	SIZE		LUMBER	DESCR.
F - B	2x4	DRY	No.2	SPF
A - C	2x4	DRY	No.2	SPF
F - D	2x4	DRY	No.2	SPF
ALL WEBS	2x3	DRY	No.2	SPF

DRY: SEASONED LUMBER.

PLATES (table is in inches)

JT	TYPE	PLATES	W	LEN	Y	X
B	TMVW+p	MT20	5.0	6.0	Edge	2.50
E	BMW+w	MT20	2.0	4.0		
F	BMV1+p	MT20	3.0	4.0		

Edge - INDICATES REFERENCE CORNER OF PLATE TOUCHES EDGE OF CHORD.

NOTES- (1)
1) Lateral braces to be a minimum of 2X4 SPF #2.

DIMENSIONS, SUPPORTS AND LOADINGS SPECIFIED BY FABRICATOR TO BE VERIFIED BY BUILDING DESIGNER

BEARINGS

JT	FACTORED GROSS REACTION VERT	HORZ	MAXIMUM FACTORED GROSS REACTION DOWN	HORZ	UPLIFT	INPUT BRG IN-SX	REORD BRG IN-SX
F	344	0	344	0	0	5-8	5-8
C	137	0	137	0	0	1-8	1-8
D	27	0	30	0	0	1-8	1-8

SEE MITEK STANDARD DETAIL MSD2015-H FOR CONNECTION TO JOINT(S) C , D

UNFACTORED REACTIONS

JT	1ST LCASE COMBINED	MAX./MIN. COMPONENT REACTIONS SNOW	LIVE	PERM.LIVE	WIND	DEAD	SOIL
F	239	178 / 0	0 / 0	0 / 0	0 / 0	61 / 0	0 / 0
C	94	77 / 0	0 / 0	0 / 0	0 / 0	17 / 0	0 / 0
D	21	0 / 0	0 / 0	0 / 0	0 / 0	21 / 0	0 / 0

BEARING MATERIAL TO BE SPF NO.2 OR BETTER AT JOINT(S) F

BRACING
TOP CHORD TO BE SHEATHED OR MAX. PURLIN SPACING = 10.00 FT.
MAX. UNBRACED BOTTOM CHORD LENGTH = 10.00 FT OR RIGID CEILING DIRECTLY APPLIED.

ALL PITCH BREAKS AND PERIMETER CORNER JOINTS MUST BE LATERALLY RESTRAINED.

LOADING
TOTAL LOAD CASES: (5)

CHORDS

MEMB. FR-TO	MAX. FACTORED FORCE (LBS)	FACTORED VERT. LOAD LC1 (PLF) FROM	TO	MAX CSI (LC)	MAX. UNBRAC LENGTH
F- B	-317 / 0	0.0	0.0	0.04 (1)	7.81
A- B	0 / 64	-95.2	-95.2	0.24 (1)	10.00
B- C	0 / 0	-95.2	-95.2	0.13 (1)	10.00
F- E	0 / 0	-18.5	-18.5	0.04 (4)	10.00
E- D	0 / 0	-18.5	-18.5	0.04 (4)	10.00

WEBS

MEMB. FR-TO	MAX. FACTORED FORCE (LBS)	MAX CSI (LC)
B- E	0 / 0	0.00 (1)

CANTILEVER ANALYSIS HAS BEEN CONSIDERED IN THIS DESIGN

[M]

DESIGN CRITERIA

SPECIFIED LOADS:

TOP CH.	LL	=	26.7	PSF
	DL	=	6.0	PSF
BOT CH.	LL	=	0.0	PSF
	DL	=	7.4	PSF
TOTAL LOAD		=	40.1	PSF

SPACING = 24.0 IN. C/C

THIS TRUSS IS DESIGNED FOR RESIDENTIAL OR SMALL BUILDING REQUIREMENTS OF PART 9, NBCC 2015

THIS DESIGN COMPLIES WITH:
- PART 9 OF BCBC 2018 , ABC 2019
- PART 9 OF OBC 2012 (2019 AMENDMENT)
- CSA 086-14
- TPIC 2014

(55 % OF 33.4 P.S.F. G.S.L. PLUS 8.4 P.S.F. RAIN LOAD) EQUALS 26.7 P.S.F. SPECIFIED ROOF LIVE LOAD

ALLOWABLE DEFL.(LL)= L/360 (0.19")
CALCULATED VERT. DEFL.(LL) = L/ 999 (0.00")
ALLOWABLE DEFL.(TL)= L/360 (0.19")
CALCULATED VERT. DEFL.(TL) = L/ 999 (0.00")

CSI: TC=0.24/1.00 (A-B:1) , BC=0.04/1.00 (E-F:4) , WB=0.00/1.00 (B-E:1) , SSI=0.10/1.00 (A-B:1)

DOL LUMBER=1.00 NAIL=1.00 LS BEND=1.10 COMP=1.10 SHEAR=1.10 TENS= 1.10

COMPANION LIVE LOAD FACTOR = 1.00

AUTOSOLVE RIGHT HEEL ONLY

TRUSS PLATE MANUFACTURER IS NOT RESPONSIBLE FOR QUALITY CONTROL IN THE TRUSS MANUFACTURING PLANT .

NAIL VALUES

PLATE	GRIP(DRY) (PSI) MAX	MIN	SHEAR (PLI) MAX	MIN	SECTION (PLI) MAX	MIN
MT20	650	371	1747	788	1987	1873

PLATE PLACEMENT TOL. = 0.250 inches

PLATE ROTATION TOL. = 5.0 Deg.

JSI GRIP= 0.16 (B) (INPUT = 0.90)
JSI METAL= 0.07 (B) (INPUT = 1.00)

LICENSED PROFESSIONAL ENGINEER
8/02/22
C. M. HEYENS
100505065
PROVINCE OF ONTARIO

STRUCTURAL COMPONENT ONLY
DWG # TR22080300

JOB NAME	TRUSS NAME	QUANTITY	PLY	JOB DESC.	DRWG NO.
427659	J28	4	1	GREEN PARK HOMES TRUSS DESC.	

Tamarack Roof Truss, Burlington

Version 8.530 S Feb 23 2022 MiTek Industries, Inc. Tue Aug 2 14:35:39 2022 Page 1
ID:X?b5302Mr04RJ9RlAuGw6Vz?TlO-uLLS 9V3GHOhangEyvLV4MCN4mf9Ppv4uS?wxHyrtC2

Scale = 1:21.6

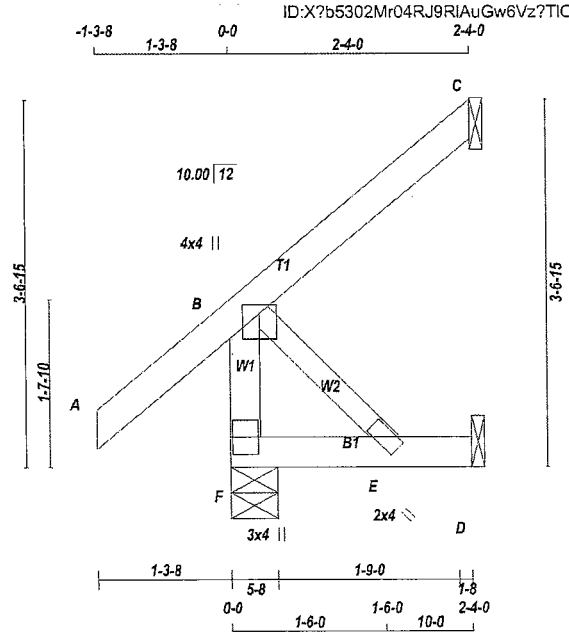

TOTAL WEIGHT = 4 X 11 = 45 lb

LUMBER
N. L. G. A. RULES

CHORDS	SIZE		LUMBER	DESCR.
F - B	2x4	DRY	No.2	SPF
A - C	2x4	DRY	No.2	SPF
F - D	2x4	DRY	No.2	SPF
ALL WEBS	2x3	DRY	No.2	SPF

DRY: SEASONED LUMBER.

PLATES (table is in inches)

JT	TYPE	PLATES	W	LEN	Y	X
B	TMVW+p	MT20	4.0	4.0	1.00	2.00
E	BMW+w	MT20	2.0	4.0		
F	BMV1+p	MT20	3.0	4.0		

NOTES- (1)
1) Lateral braces to be a minimum of 2X4 SPF #2.

DIMENSIONS, SUPPORTS AND LOADINGS SPECIFIED BY FABRICATOR TO BE VERIFIED BY BUILDING DESIGNER

BEARINGS

JT	FACTORED GROSS REACTION VERT	HORZ	MAXIMUM FACTORED GROSS REACTION DOWN	HORZ	UPLIFT	INPUT BRG IN-SX	REQRD BRG IN-SX
F	265	0	265	0	0	5-8	5-8
C	111	0	111	0	0	1-8	1-8
D	22	0	24	0	0	1-8	1-8

SEE MITEK STANDARD DETAIL MSD2015-H FOR CONNECTION TO JOINT(S) C , D

UNFACTORED REACTIONS

JT	1ST LCASE COMBINED	MAX./MIN. COMPONENT REACTIONS SNOW	LIVE	PERM.LIVE	WIND	DEAD	SOIL
F	184	136 / 0	0 / 0	0 / 0	0 / 0	48 / 0	0 / 0
C	76	62 / 0	0 / 0	0 / 0	0 / 0	14 / 0	0 / 0
D	17	0 / 0	0 / 0	0 / 0	0 / 0	17 / 0	0 / 0

BEARING MATERIAL TO BE SPF NO.2 OR BETTER AT JOINT(S) F

BRACING
TOP CHORD TO BE SHEATHED OR MAX. PURLIN SPACING = 10.00 FT.
MAX. UNBRACED BOTTOM CHORD LENGTH = 10.00 FT OR RIGID CEILING DIRECTLY APPLIED.

ALL PITCH BREAKS AND PERIMETER CORNER JOINTS MUST BE LATERALLY RESTRAINED.

LOADING
TOTAL LOAD CASES: (5)

CHORDS

MEMB. FR-TO	MAX. FACTORED FORCE (LBS)	FACTORED VERT. LOAD LC1 (PLF) FROM	TO	MAX CSI (LC)	MAX. UNBRAC LENGTH
F- B	-243 / 0	0.0	0.0	0.03 (1)	7.81
A- B	0 / 42	-95.2	-95.2	0.13 (5)	10.00
B- C	0 / 0	-95.2	-95.2	0.09 (1)	10.00
F- E	0 / 0	-18.5	-18.5	0.03 (4)	10.00
E- D	0 / 0	-18.5	-18.5	0.03 (4)	10.00

WEBS

MEMB. FR-TO	MAX. FACTORED FORCE (LBS)	MAX CSI (LC)
B- E	0 / 0	0.00 (1)

CANTILEVER ANALYSIS HAS BEEN CONSIDERED IN THIS DESIGN

[M]

DESIGN CRITERIA

SPECIFIED LOADS:

TOP CH.	LL	=	26.7	PSF
	DL	=	6.0	PSF
BOT CH.	LL	=	0.0	PSF
	DL	=	7.4	PSF
TOTAL LOAD		=	40.1	PSF

SPACING = 24.0 IN. C/C

THIS TRUSS IS DESIGNED FOR RESIDENTIAL OR SMALL BUILDING REQUIREMENTS OF PART 9, NBCC 2015

THIS DESIGN COMPLIES WITH:
- PART 9 OF BCBC 2018 , ABC 2019
- PART 9 OF OBC 2012 (2019 AMENDMENT)
- CSA 086-14
- TPIC 2014

(55 % OF 33.4 P.S.F. G.S.L. PLUS 8.4 P.S.F. RAIN LOAD) EQUALS 26.7 P.S.F. SPECIFIED ROOF LIVE LOAD

ALLOWABLE DEFL.(LL)= L/360 (0.19")
CALCULATED VERT. DEFL.(LL) = L/ 999 (0.00")
ALLOWABLE DEFL.(TL)= L/360 (0.19")
CALCULATED VERT. DEFL.(TL) = L/ 999 (0.00")

CSI: TC=0.13/1.00 (A-B:5) , BC=0.03/1.00 (E-F:4) , WB=0.00/1.00 (B-E:1) , SSI=0.08/1.00 (A-B:5)

DOL LUMBER=1.00 NAIL=1.00 LS BEND=1.10 COMP=1.10 SHEAR=1.10 TENS= 1.10

COMPANION LIVE LOAD FACTOR = 1.00

AUTOSOLVE RIGHT HEEL ONLY

TRUSS PLATE MANUFACTURER IS NOT RESPONSIBLE FOR QUALITY CONTROL IN THE TRUSS MANUFACTURING PLANT .

NAIL VALUES

PLATE	GRIP(DRY) (PSI) MAX	MIN	SHEAR (PLI) MAX	MIN	SECTION (PLI) MAX	MIN
MT20	650	371	1747	788	1987	1873

PLATE PLACEMENT TOL. = 0.250 inches

PLATE ROTATION TOL. = 5.0 Deg.

JSI GRIP= 0.18 (B) (INPUT = 0.90)
JSI METAL= 0.05 (B) (INPUT = 1.00)

LICENSED PROFESSIONAL ENGINEER
8/02/22
C. M. HEYENS
100505065
PROVINCE OF ONTARIO

STRUCTURAL COMPONENT ONLY
DWG # TR22080301

JOB NAME	TRUSS NAME	QUANTITY	PLY	JOB DESC.	DRWG NO.
427659	J31	4	1	GREEN PARK HOMES TRUSS DESC.	

Tamarack Roof Truss, Burlington

Version 8.530 S Feb 23 2022 MiTek Industries, Inc. Tue Aug 2 14:35:39 2022 Page 1
ID:bP zphucbY03T7QZqjQJ9Vz?62X-uLLS 9V3GHOhangEyvLV4MCN2mf9Ppv4uS?wxHyrtC2

Scale = 1:24.9

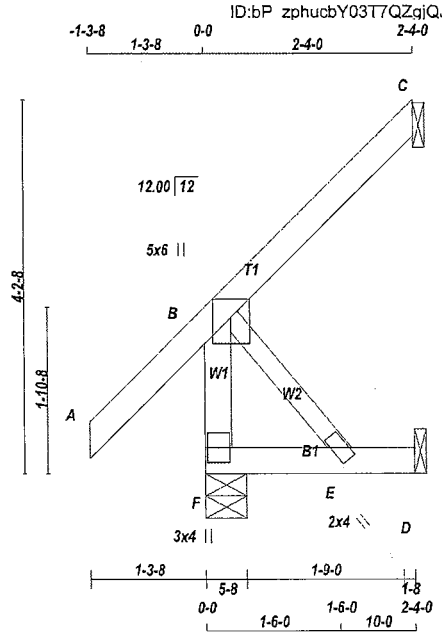

TOTAL WEIGHT = 4 X 12 = 49 lb

[M]

LUMBER
N. L. G. A. RULES

CHORDS	SIZE		LUMBER	DESCR.
F - B	2x4	DRY	No.2	SPF
A - C	2x4	DRY	No.2	SPF
F - D	2x4	DRY	No.2	SPF
ALL WEBS	2x3	DRY	No.2	SPF

DRY: SEASONED LUMBER.

PLATES (table is in inches)

JT	TYPE	PLATES	W	LEN	Y	X
B	TMVW+p	MT20	5.0	6.0	Edge	2.50
E	BMW+w	MT20	2.0	4.0		
F	BMV1+p	MT20	3.0	4.0		

Edge - INDICATES REFERENCE CORNER OF PLATE TOUCHES EDGE OF CHORD.

NOTES- (1)
1) Lateral braces to be a minimum of 2X4 SPF #2.

DIMENSIONS, SUPPORTS AND LOADINGS SPECIFIED BY FABRICATOR TO BE VERIFIED BY BUILDING DESIGNER

BEARINGS

JT	FACTORED GROSS REACTION VERT	HORZ	MAXIMUM FACTORED GROSS REACTION DOWN	HORZ	UPLIFT	INPUT BRG IN-SX	REQRD BRG IN-SX
F	265	0	265	0	0	5-8	5-8
C	111	0	111	0	0	1-8	1-8
D	22	0	24	0	0	1-8	1-8

SEE MITEK STANDARD DETAIL MSD2015-H FOR CONNECTION TO JOINT(S) C , D

UNFACTORED REACTIONS

JT	1ST LCASE COMBINED	MAX./MIN. COMPONENT REACTIONS SNOW	LIVE	PERM.LIVE	WIND	DEAD	SOIL
F	185	137 / 0	0 / 0	0 / 0	0 / 0	48 / 0	0 / 0
C	76	62 / 0	0 / 0	0 / 0	0 / 0	14 / 0	0 / 0
D	17	0 / 0	0 / 0	0 / 0	0 / 0	17 / 0	0 / 0

BEARING MATERIAL TO BE SPF NO.2 OR BETTER AT JOINT(S) F, C

BRACING
TOP CHORD TO BE SHEATHED OR MAX. PURLIN SPACING = 10.00 FT.
MAX. UNBRACED BOTTOM CHORD LENGTH = 10.00 FT OR RIGID CEILING DIRECTLY APPLIED.

ALL PITCH BREAKS AND PERIMETER CORNER JOINTS MUST BE LATERALLY RESTRAINED.

LOADING
TOTAL LOAD CASES: (5)

CHORDS

MEMB. FR-TO	MAX. FACTORED FORCE (LBS)	FACTORED VERT. LOAD LC1 (PLF) FROM	TO	MAX CSI (LC)	MAX. UNBRAC LENGTH
F- B	-244 / 0	0.0	0.0	0.03 (1)	7.81
A- B	0 / 47	-95.2	-95.2	0.13 (5)	10.00
B- C	0 / 0	-95.2	-95.2	0.09 (1)	10.00
F- E	0 / 0	-18.5	-18.5	0.03 (4)	10.00
E- D	0 / 0	-18.5	-18.5	0.03 (4)	10.00

WEBS

MEMB. FR-TO	MAX. FACTORED FORCE (LBS)	MAX CSI (LC)
B- E	0 / 0	0.00 (1)

CANTILEVER ANALYSIS HAS BEEN CONSIDERED IN THIS DESIGN

DESIGN CRITERIA

SPECIFIED LOADS:

TOP CH.	LL	=	26.7	PSF
	DL	=	6.0	PSF
BOT CH.	LL	=	0.0	PSF
	DL	=	7.4	PSF
TOTAL LOAD		=	40.1	PSF

SPACING = 24.0 IN. C/C

THIS TRUSS IS DESIGNED FOR RESIDENTIAL OR SMALL BUILDING REQUIREMENTS OF PART 9, NBCC 2015

THIS DESIGN COMPLIES WITH:
- PART 9 OF BCBC 2018 , ABC 2019
- PART 9 OF OBC 2012 (2019 AMENDMENT)
- CSA 086-14
- TPIC 2014

(55 % OF 33.4 P.S.F. G.S.L. PLUS 8.4 P.S.F. RAIN LOAD) EQUALS 26.7 P.S.F. SPECIFIED ROOF LIVE LOAD

ALLOWABLE DEFL.(LL)= L/360 (0.19")
CALCULATED VERT. DEFL.(LL) = L/ 999 (0.00")
ALLOWABLE DEFL.(TL)= L/360 (0.19")
CALCULATED VERT. DEFL.(TL) = L/ 999 (0.00")

CSI: TC=0.13/1.00 (A-B:5) , BC=0.03/1.00 (E-F:4) , WB=0.00/1.00 (B-E:1) , SSI=0.07/1.00 (A-B:5)

DOL LUMBER=1.00 NAIL=1.00 LS BEND=1.10 COMP=1.10 SHEAR=1.10 TENS= 1.10

COMPANION LIVE LOAD FACTOR = 1.00

AUTOSOLVE RIGHT HEEL ONLY

TRUSS PLATE MANUFACTURER IS NOT RESPONSIBLE FOR QUALITY CONTROL IN THE TRUSS MANUFACTURING PLANT .

NAIL VALUES

PLATE	GRIP(DRY) (PSI) MAX	MIN	SHEAR (PLI) MAX	MIN	SECTION (PLI) MAX	MIN
MT20	650	371	1747	788	1987	1873

PLATE PLACEMENT TOL. = 0.250 inches

PLATE ROTATION TOL. = 5.0 Deg.

JSI GRIP= 0.12 (B) (INPUT = 0.90)
JSI METAL= 0.05 (B) (INPUT = 1.00)

LICENSED PROFESSIONAL ENGINEER
8/02/22
C. M. HEYENS
100505065
PROVINCE OF ONTARIO

STRUCTURAL COMPONENT ONLY
DWG # TR22080302

JOB NAME	TRUSS NAME	QUANTITY	PLY	JOB DESC.	DRWG NO.
427659	J35	3	1	GREEN PARK HOMES TRUSS DESC.	

Tamarack Roof Truss, Burlington

Version 8.530 S Feb 23 2022 MiTek Industries, Inc. Tue Aug 2 14:35:40 2022 Page 1
ID:X?b5302Mr04RJ9RIAuGw6Vz?TiO-MYvrBUWh1aWYBxFQVcsldZkUMA H8G8E66IUTkyrtC1

Scale = 1:27.5

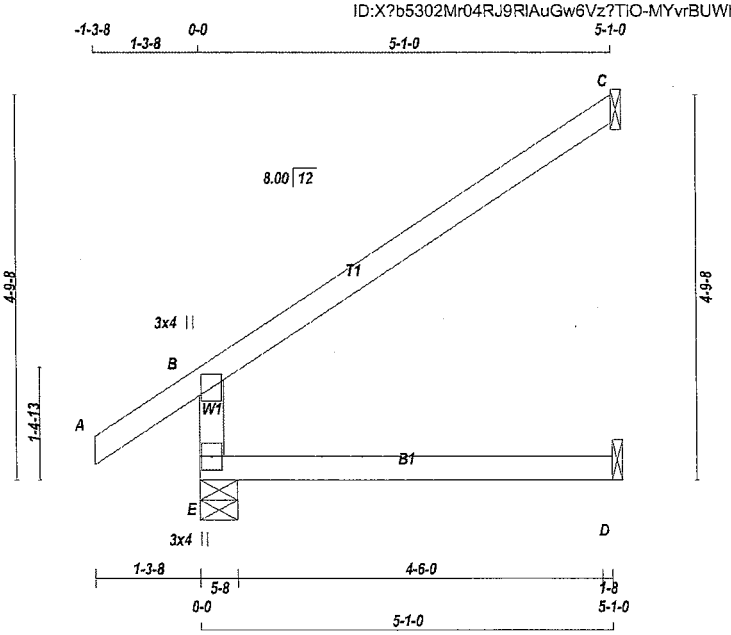

TOTAL WEIGHT = 3 X 16 = 48 lb

LUMBER
N. L. G. A. RULES

CHORDS	SIZE		LUMBER	DESCR.
E - B	2x4	DRY	No.2	SPF
A - C	2x4	DRY	No.2	SPF
E - D	2x4	DRY	No.2	SPF

DRY: SEASONED LUMBER.

PLATES (table is in inches)

JT	TYPE	PLATES	W	LEN	Y	X
B	TMV+p	MT20	3.0	4.0		
E	BMV1+p	MT20	3.0	4.0		

NOTES- (1)
1) Lateral braces to be a minimum of 2X4 SPF #2.

DIMENSIONS, SUPPORTS AND LOADINGS SPECIFIED BY FABRICATOR TO BE VERIFIED BY BUILDING DESIGNER

BEARINGS

JT	FACTORED GROSS REACTION VERT	HORZ	MAXIMUM FACTORED GROSS REACTION DOWN	HORZ	UPLIFT	INPUT BRG IN-SX	REQRD BRG IN-SX
E	487	0	487	0	0	5-8	5-8
C	182	0	182	0	0	1-8	1-8
D	40	0	45	0	0	1-8	1-8

SEE MITEK STANDARD DETAIL MSD2015-H FOR CONNECTION TO JOINT(S) C , D

UNFACTORED REACTIONS

JT	1ST LCASE COMBINED	MAX./MIN. COMPONENT REACTIONS SNOW	LIVE	PERM.LIVE	WIND	DEAD	SOIL
E	341	243 / 0	0 / 0	0 / 0	0 / 0	98 / 0	0 / 0
C	125	102 / 0	0 / 0	0 / 0	0 / 0	23 / 0	0 / 0
D	32	0 / 0	0 / 0	0 / 0	0 / 0	32 / 0	0 / 0

BEARING MATERIAL TO BE SPF NO.2 OR BETTER AT JOINT(S) E

BRACING
TOP CHORD TO BE SHEATHED OR MAX. PURLIN SPACING = 6.25 FT.
MAX. UNBRACED BOTTOM CHORD LENGTH = 10.00 FT OR RIGID CEILING DIRECTLY APPLIED.

ALL PITCH BREAKS AND PERIMETER CORNER JOINTS MUST BE LATERALLY RESTRAINED.

LOADING
TOTAL LOAD CASES: (4)

CHORDS

MEMB. FR-TO	MAX. FACTORED FORCE (LBS)	FACTORED VERT. LOAD LC1 (PLF) FROM	TO	MAX CSI (LC)	MAX. UNBRAC LENGTH
E- B	-433 / 0	0.0	0.0	0.09 (4)	7.81
A- B	0 / 36	-95.2	-95.2	0.13 (1)	10.00
B- C	-34 / 0	-95.2	-95.2	0.42 (1)	6.25
E- D	0 / 0	-18.5	-18.5	0.10 (4)	10.00

WEBS

MEMB. FR-TO	MAX. FACTORED FORCE (LBS)	MAX CSI (LC)

DESIGN CRITERIA

SPECIFIED LOADS:

TOP CH.	LL	=	26.7	PSF
	DL	=	6.0	PSF
BOT CH.	LL	=	0.0	PSF
	DL	=	7.4	PSF
TOTAL LOAD		=	40.1	PSF

SPACING = 24.0 IN. C/C

THIS TRUSS IS DESIGNED FOR RESIDENTIAL OR SMALL BUILDING REQUIREMENTS OF PART 9, NBCC 2015

THIS DESIGN COMPLIES WITH:
- PART 9 OF BCBC 2018 , ABC 2019
- PART 9 OF OBC 2012 (2019 AMENDMENT)
- CSA 086-14
- TPIC 2014

DESIGN ASSUMPTIONS
-OVERHANG NOT TO BE ALTERED OR CUT OFF.

(55 % OF 33.4 P.S.F. G.S.L. PLUS 8.4 P.S.F. RAIN LOAD) EQUALS 26.7 P.S.F. SPECIFIED ROOF LIVE LOAD

ALLOWABLE DEFL.(LL)= L/360 (0.19")
CALCULATED VERT. DEFL.(LL) = L/ 999 (0.00")
ALLOWABLE DEFL.(TL)= L/360 (0.19")
CALCULATED VERT. DEFL.(TL) = L/ 999 (0.02")

CSI: TC=0.42/1.00 (B-C:1) , BC=0.10/1.00 (D-E:4) , WB=0.00/1.00 (n/a:0) , SSI=0.20/1.00 (B-C:1)

DOL LUMBER=1.00 NAIL=1.00 LS BEND=1.10 COMP=1.10 SHEAR=1.10 TENS= 1.10

COMPANION LIVE LOAD FACTOR = 1.00

AUTOSOLVE RIGHT HEEL ONLY

TRUSS PLATE MANUFACTURER IS NOT RESPONSIBLE FOR QUALITY CONTROL IN THE TRUSS MANUFACTURING PLANT .

NAIL VALUES

PLATE	GRIP(DRY) (PSI) MAX	MIN	SHEAR (PLI) MAX	MIN	SECTION (PLI) MAX	MIN
MT20	650	371	1747	788	1987	1873

PLATE PLACEMENT TOL. = 0.250 inches

PLATE ROTATION TOL. = 5.0 Deg.

JSI GRIP= 0.18 (B) (INPUT = 0.90)
JSI METAL= 0.15 (B) (INPUT = 1.00)

LICENSED PROFESSIONAL ENGINEER
8/02/22
C. M. HEYENS
100505065
PROVINCE OF ONTARIO

STRUCTURAL COMPONENT ONLY
DWG # TR22080303

JOB NAME	TRUSS NAME	QUANTITY	PLY	JOB DESC.	DRWG NO.
427679	J40	2	1	GREEN PARK HOMES TRUSS DESC.	

Tamarack Roof Truss, Burlington

Version 8.530 S Feb 23 2022 MiTek Industries, Inc. Tue Aug 2 14:52:25 2022 Page 1
ID:bP zphucbY03T7QZgjQJ9Vz?62X-Ru8m78g5MN7yGNaatBOQsVsILI0g6ox9Dzh8E yrsyK

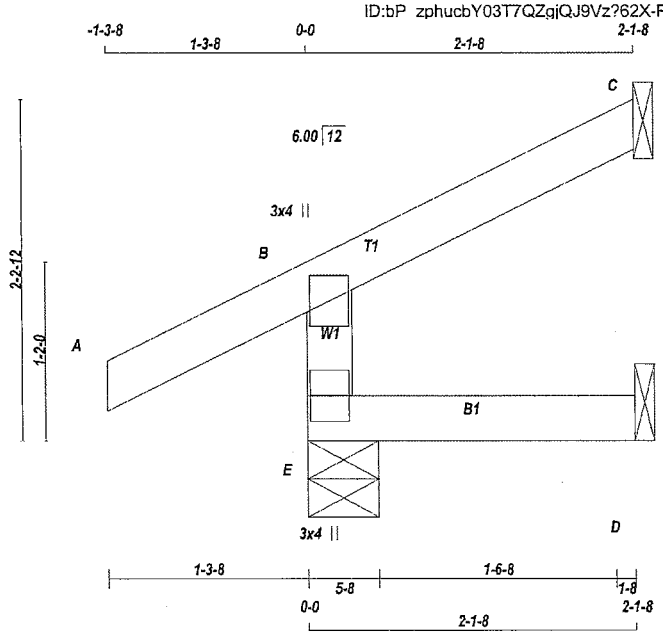

TOTAL WEIGHT = 2 X 8 = 15 lb [M]

LUMBER
N. L. G. A. RULES

CHORDS	SIZE		LUMBER	DESCR.
E - B	2x4	DRY	No.2	SPF
A - C	2x4	DRY	No.2	SPF
E - D	2x4	DRY	No.2	SPF

DRY: SEASONED LUMBER.

PLATES (table is in inches)

JT	TYPE	PLATES	W	LEN	Y	X
B	TMV+p	MT20	3.0	4.0		
E	BMV1+p	MT20	3.0	4.0		

NOTES- (1)
1) Lateral braces to be a minimum of 2X4 SPF #2.

DIMENSIONS, SUPPORTS AND LOADINGS SPECIFIED BY FABRICATOR TO BE VERIFIED BY BUILDING DESIGNER

BEARINGS

JT	FACTORED GROSS REACTION VERT	HORZ	MAXIMUM FACTORED GROSS REACTION DOWN	HORZ	UPLIFT	INPUT BRG IN-SX	REQRD BRG IN-SX
E	277	0	277	0	0	5-8	5-8
C	76	0	76	0	0	1-8	1-8
D	17	0	20	0	0	1-8	1-8

SEE MITEK STANDARD DETAIL MSD2015-H FOR CONNECTION TO JOINT(S) C , D

UNFACTORED REACTIONS

JT	1ST LCASE COMBINED	MAX./MIN. COMPONENT REACTIONS SNOW	LIVE	PERM.LIVE	WIND	DEAD	SOIL
E	193	143 / 0	0 / 0	0 / 0	0 / 0	50 / 0	0 / 0
C	52	43 / 0	0 / 0	0 / 0	0 / 0	10 / 0	0 / 0
D	14	0 / 0	0 / 0	0 / 0	0 / 0	14 / 0	0 / 0

BEARING MATERIAL TO BE SPF NO.2 OR BETTER AT JOINT(S) E, C

BRACING
TOP CHORD TO BE SHEATHED OR MAX. PURLIN SPACING = 6.25 FT.
MAX. UNBRACED BOTTOM CHORD LENGTH = 10.00 FT OR RIGID CEILING DIRECTLY APPLIED.

ALL PITCH BREAKS AND PERIMETER CORNER JOINTS MUST BE LATERALLY RESTRAINED.

LOADING
TOTAL LOAD CASES: (5)

CHORDS

MEMB. FR-TO	MAX. FACTORED FORCE (LBS)	FACTORED VERT. LOAD LC1 (PLF) FROM	TO	MAX CSI (LC)	MAX. UNBRAC LENGTH
E- B	-255 / 0	0.0	0.0	0.01 (4)	7.81
A- B	0 / 29	-95.2	-95.2	0.12 (1)	10.00
B- C	-11 / 0	-95.2	-95.2	0.07 (1)	6.25
E- D	0 / 0	-18.5	-18.5	0.02 (4)	10.00

WEBS

MEMB. FR-TO	MAX. FACTORED FORCE (LBS)	MAX CSI (LC)

CANTILEVER ANALYSIS HAS BEEN CONSIDERED IN THIS DESIGN

DESIGN CRITERIA

SPECIFIED LOADS:

TOP CH.	LL	=	26.7	PSF
	DL	=	6.0	PSF
BOT CH.	LL	=	0.0	PSF
	DL	=	7.4	PSF
TOTAL LOAD		=	40.1	PSF

SPACING = 24.0 IN. C/C

THIS TRUSS IS DESIGNED FOR RESIDENTIAL OR SMALL BUILDING REQUIREMENTS OF PART 9, NBCC 2015

THIS DESIGN COMPLIES WITH:
- PART 9 OF BCBC 2018 , ABC 2019
- PART 9 OF OBC 2012 (2019 AMENDMENT)
- CSA 086-14
- TPIC 2014

DESIGN ASSUMPTIONS
-OVERHANG NOT TO BE ALTERED OR CUT OFF.

(55 % OF 33.4 P.S.F. G.S.L. PLUS 8.4 P.S.F. RAIN LOAD) EQUALS 26.7 P.S.F. SPECIFIED ROOF LIVE LOAD

ALLOWABLE DEFL.(LL)= L/360 (0.19")
CALCULATED VERT. DEFL.(LL) = L/ 999 (0.00")
ALLOWABLE DEFL.(TL)= L/360 (0.19")
CALCULATED VERT. DEFL.(TL) = L/ 999 (0.00")

CSI: TC=0.12/1.00 (A-B:1) , BC=0.02/1.00 (D-E:4) , WB=0.00/1.00 (n/a:0) , SSI=0.09/1.00 (A-B:1)

DOL LUMBER=1.00 NAIL=1.00 LS BEND=1.10 COMP=1.10 SHEAR=1.10 TENS= 1.10

COMPANION LIVE LOAD FACTOR = 1.00

AUTOSOLVE RIGHT HEEL ONLY

TRUSS PLATE MANUFACTURER IS NOT RESPONSIBLE FOR QUALITY CONTROL IN THE TRUSS MANUFACTURING PLANT .

NAIL VALUES

PLATE	GRIP(DRY) (PSI) MAX	MIN	SHEAR (PLI) MAX	MIN	SECTION (PLI) MAX	MIN
MT20	650	371	1747	788	1987	1873

PLATE PLACEMENT TOL. = 0.250 inches

PLATE ROTATION TOL. = 5.0 Deg.

JSI GRIP= 0.10 (E) (INPUT = 0.90)
JSI METAL= 0.07 (B) (INPUT = 1.00)

LICENSED PROFESSIONAL ENGINEER
8/02/22
C. M. HEYENS
100505065
PROVINCE OF ONTARIO

STRUCTURAL COMPONENT ONLY
DWG # TR22080322

JOB NAME	TRUSS NAME	QUANTITY	PLY	JOB DESC.	DRWG NO.
427679	J41	8	1	GREEN PARK HOMES TRUSS DESC.	

Tamarack Roof Truss, Burlington

Version 8.530 S Feb 23 2022 MiTek Industries, Inc. Tue Aug 2 14:52:26 2022 Page 1
ID:bP zphucbY03T7QZqjQJ9Vz?62X-v4h8KUhj7gFpuX9mRuvfOiPRDhKxrFBISdRimQyrsyJ

Scale = 1:25.9

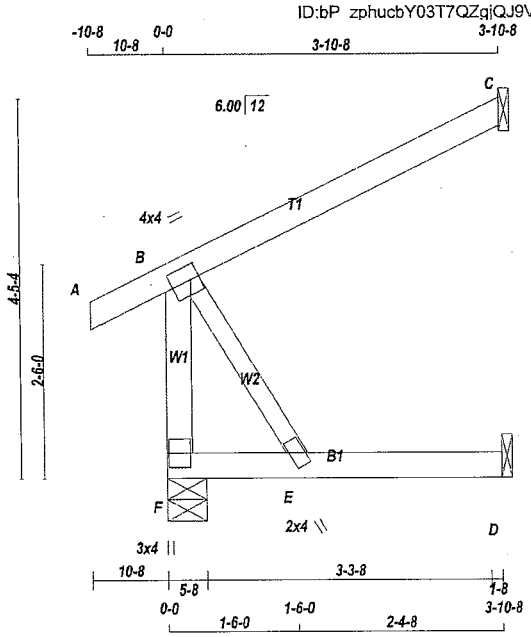

TOTAL WEIGHT = 8 X 15 = 119 lb

LUMBER
N. L. G. A. RULES

CHORDS	SIZE		LUMBER	DESCR.
F - B	2x4	DRY	No.2	SPF
A - C	2x4	DRY	No.2	SPF
F - D	2x4	DRY	No.2	SPF
ALL WEBS	2x3	DRY	No.2	SPF

DRY: SEASONED LUMBER.

PLATES (table is in inches)

JT	TYPE	PLATES	W	LEN	Y	X
B	TMVW-t	MT20	4.0	4.0	2.00	1.25
E	BMW+w	MT20	2.0	4.0		
F	BMV1+p	MT20	3.0	4.0		

NOTES- (1)
1) Lateral braces to be a minimum of 2X4 SPF #2.

DIMENSIONS, SUPPORTS AND LOADINGS SPECIFIED BY FABRICATOR TO BE VERIFIED BY BUILDING DESIGNER

BEARINGS

JT	FACTORED GROSS REACTION VERT	HORZ	MAXIMUM FACTORED GROSS REACTION DOWN	HORZ	UPLIFT	INPUT BRG IN-SX	REQRD BRG IN-SX
F	310	0	310	0	0	5-8	5-8
C	184	0	184	0	0	1-8	1-8
D	36	0	40	0	0	1-8	1-8

SEE MITEK STANDARD DETAIL MSD2015-H FOR CONNECTION TO JOINT(S) C , D

UNFACTORED REACTIONS

JT	1ST LCASE COMBINED	MAX/MIN COMPONENT REACTIONS SNOW	LIVE	PERM.LIVE	WIND	DEAD	SOIL
F	217	154 / 0	0 / 0	0 / 0	0 / 0	63 / 0	0 / 0
C	127	104 / 0	0 / 0	0 / 0	0 / 0	23 / 0	0 / 0
D	29	0 / 0	0 / 0	0 / 0	0 / 0	29 / 0	0 / 0

BEARING MATERIAL TO BE SPF NO.2 OR BETTER AT JOINT(S) F, C

BRACING
TOP CHORD TO BE SHEATHED OR MAX. PURLIN SPACING = 10.00 FT.
MAX. UNBRACED BOTTOM CHORD LENGTH = 10.00 FT OR RIGID CEILING DIRECTLY APPLIED.

ALL PITCH BREAKS AND PERIMETER CORNER JOINTS MUST BE LATERALLY RESTRAINED.

LOADING
TOTAL LOAD CASES: (4)

CHORDS

MEMB. FR-TO	MAX. FACTORED FORCE (LBS)	FACTORED VERT. LOAD LC1 (PLF) FROM	TO	MAX CSI (LC)	MAX. UNBRAC LENGTH
F- B	-274 / 0	0.0	0.0	0.04 (1)	7.81
A- B	0 / 20	-95.2	-95.2	0.06 (1)	10.00
B- C	0 / 0	-95.2	-95.2	0.24 (1)	10.00
F- E	0 / 0	-18.5	-18.5	0.08 (4)	10.00
E- D	0 / 0	-18.5	-18.5	0.08 (4)	10.00

WEBS

MEMB. FR-TO	MAX. FACTORED FORCE (LBS)	MAX CSI (LC)
B- E	0 / 0	0.00 (1)

DESIGN CRITERIA

SPECIFIED LOADS:

TOP CH.	LL	=	26.7	PSF
	DL	=	6.0	PSF
BOT CH.	LL	=	0.0	PSF
	DL	=	7.4	PSF
TOTAL LOAD		=	40.1	PSF

SPACING = 24.0 IN. C/C

THIS TRUSS IS DESIGNED FOR RESIDENTIAL OR SMALL BUILDING REQUIREMENTS OF PART 9, NBCC 2015

THIS DESIGN COMPLIES WITH:
- PART 9 OF BCBC 2018 , ABC 2019
- PART 9 OF OBC 2012 (2019 AMENDMENT)
- CSA 086-14
- TPIC 2014

(55 % OF 33.4 P.S.F. G.S.L. PLUS 8.4 P.S.F. RAIN LOAD) EQUALS 26.7 P.S.F. SPECIFIED ROOF LIVE LOAD

ALLOWABLE DEFL.(LL)= L/360 (0.19")
CALCULATED VERT. DEFL.(LL) = L/ 999 (0.00")
ALLOWABLE DEFL.(TL)= L/360 (0.19")
CALCULATED VERT. DEFL.(TL) = L/ 999 (0.01")

CSI: TC=0.24/1.00 (B-C:1) , BC=0.08/1.00 (D-E:4) , WB=0.00/1.00 (B-E:1) , SSI=0.13/1.00 (B-C:1)

DOL LUMBER=1.00 NAIL=1.00 LS BEND=1.10 COMP=1.10 SHEAR=1.10 TENS= 1.10

COMPANION LIVE LOAD FACTOR = 1.00

TRUSS PLATE MANUFACTURER IS NOT RESPONSIBLE FOR QUALITY CONTROL IN THE TRUSS MANUFACTURING PLANT .

NAIL VALUES

PLATE	GRIP(DRY) (PSI) MAX	MIN	SHEAR (PLI) MAX	MIN	SECTION (PLI) MAX	MIN
MT20	650	371	1747	788	1987	1873

PLATE PLACEMENT TOL. = 0.250 inches

PLATE ROTATION TOL. = 5.0 Deg.

JSI GRIP= 0.16 (B) (INPUT = 0.90)
JSI METAL= 0.04 (B) (INPUT = 1.00)

LICENSED PROFESSIONAL ENGINEER
8/02/22
C. M. HEYENS
100505065
PROVINCE OF ONTARIO

STRUCTURAL COMPONENT ONLY
DWG # TR22080323

JOB NAME	TRUSS NAME	QUANTITY	PLY	JOB DESC.	DRWG NO.
427679	J52	8	1	GREEN PARK HOMES TRUSS DESC.	

Tamarack Roof Truss, Burlington

Version 8.530 S Feb 23 2022 MiTek Industries, Inc. Tue Aug 2 14:52:26 2022 Page 1
ID:bP zphucbY03T7QZgjQJ9Vz?62X-v4h8KUhj7gFpuX9mRuvfOiPT2hLsrFBISdRimQyrsyJ

Scale = 1:15.0

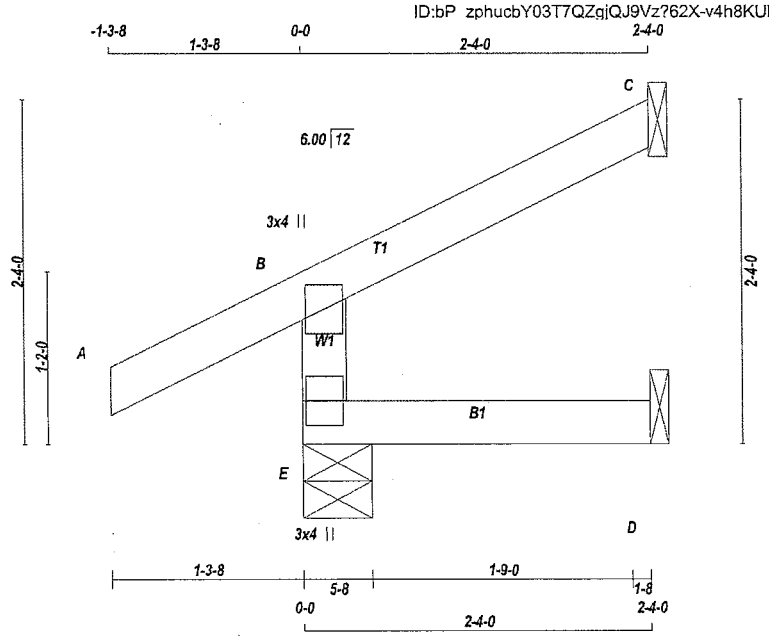

TOTAL WEIGHT = 8 X 8 = 66 lb [M]

LUMBER
N. L. G. A. RULES

CHORDS	SIZE		LUMBER	DESCR.
E - B	2x4	DRY	No.2	SPF
A - C	2x4	DRY	No.2	SPF
E - D	2x4	DRY	No.2	SPF

DRY: SEASONED LUMBER.

PLATES (table is in inches)

JT	TYPE	PLATES	W	LEN	Y	X
B	TMV+p	MT20	3.0	4.0		
E	BMV1+p	MT20	3.0	4.0		

NOTES- (1)
1) Lateral braces to be a minimum of 2X4 SPF #2.

DIMENSIONS, SUPPORTS AND LOADINGS SPECIFIED BY FABRICATOR TO BE VERIFIED BY BUILDING DESIGNER

BEARINGS

JT	FACTORED GROSS REACTION VERT	HORZ	MAXIMUM FACTORED GROSS REACTION DOWN	HORZ	UPLIFT	INPUT BRG IN-SX	REQRD BRG IN-SX
E	292	0	292	0	0	5-8	5-8
C	84	0	84	0	0	1-8	1-8
D	19	0	21	0	0	1-8	1-8

SEE MITEK STANDARD DETAIL MSD2015-H FOR CONNECTION TO JOINT(S) C , D

UNFACTORED REACTIONS

JT	1ST LCASE COMBINED	MAX./MIN. COMPONENT REACTIONS SNOW	LIVE	PERM LIVE	WIND	DEAD	SOIL
E	203	150 / 0	0 / 0	0 / 0	0 / 0	53 / 0	0 / 0
C	58	47 / 0	0 / 0	0 / 0	0 / 0	11 / 0	0 / 0
D	15	0 / 0	0 / 0	0 / 0	0 / 0	15 / 0	0 / 0

BEARING MATERIAL TO BE SPF NO.2 OR BETTER AT JOINT(S) E

BRACING
TOP CHORD TO BE SHEATHED OR MAX. PURLIN SPACING = 6.25 FT.
MAX. UNBRACED BOTTOM CHORD LENGTH = 10.00 FT OR RIGID CEILING DIRECTLY APPLIED.

ALL PITCH BREAKS AND PERIMETER CORNER JOINTS MUST BE LATERALLY RESTRAINED.

LOADING
TOTAL LOAD CASES: (5)

CHORDS

MEMB. FR-TO	MAX. FACTORED FORCE (LBS)	FACTORED VERT. LOAD (PLF) FROM	TO	LC1	MAX CSI (LC)
E- B	-268 / 0	0.0	0.0	0.01 (4)	
A- B	0 / 29	-95.2	-95.2	0.13 (5)	
B- C	-12 / 0	-95.2	-95.2	0.09 (1)	
E- D	0 / 0	-18.5	-18.5	0.02 (4)	

WEBS

MAX. UNBRAC LENGTH	MEMB. FR-TO	MAX. FACTORED FORCE (LBS)	MAX CSI (LC)
7.81			
10.00			
6.25			
10.00			

CANTILEVER ANALYSIS HAS BEEN CONSIDERED IN THIS DESIGN

DESIGN CRITERIA

SPECIFIED LOADS:

TOP CH.	LL	=	26.7	PSF
	DL	=	6.0	PSF
BOT CH.	LL	=	0.0	PSF
	DL	=	7.4	PSF
TOTAL LOAD		=	40.1	PSF

SPACING = 24.0 IN. C/C

THIS TRUSS IS DESIGNED FOR RESIDENTIAL OR SMALL BUILDING REQUIREMENTS OF PART 9, NBCC 2015

THIS DESIGN COMPLIES WITH:
- PART 9 OF BCBC 2018 , ABC 2019
- PART 9 OF OBC 2012 (2019 AMENDMENT)
- CSA 086-14
- TPIC 2014

DESIGN ASSUMPTIONS
-OVERHANG NOT TO BE ALTERED OR CUT OFF.

(55 % OF 33.4 P.S.F. G.S.L. PLUS 8.4 P.S.F. RAIN LOAD) EQUALS 26.7 P.S.F. SPECIFIED ROOF LIVE LOAD

ALLOWABLE DEFL.(LL)= L/360 (0.19")
CALCULATED VERT. DEFL.(LL) = L/ 999 (0.00")
ALLOWABLE DEFL.(TL)= L/360 (0.19")
CALCULATED VERT. DEFL.(TL) = L/ 999 (0.00")

CSI: TC=0.13/1.00 (A-B:5) , BC=0.02/1.00 (D-E:4) , WB=0.00/1.00 (n/a:0) , SSI=0.10/1.00 (B-C:1)

DOL LUMBER=1.00 NAIL=1.00 LS BEND=1.10 COMP=1.10 SHEAR=1.10 TENS= 1.10

COMPANION LIVE LOAD FACTOR = 1.00

AUTOSOLVE RIGHT HEEL ONLY

TRUSS PLATE MANUFACTURER IS NOT RESPONSIBLE FOR QUALITY CONTROL IN THE TRUSS MANUFACTURING PLANT .

NAIL VALUES

PLATE	GRIP(DRY) (PSI) MAX	MIN	SHEAR (PLI) MAX	MIN	SECTION (PLI) MAX	MIN
MT20	650	371	1747	788	1987	1873

PLATE PLACEMENT TOL. = 0.250 inches

PLATE ROTATION TOL. = 5.0 Deg.

JSI GRIP= 0.11 (E) (INPUT = 0.90)
JSI METAL= 0.07 (B) (INPUT = 1.00)

LICENSED PROFESSIONAL ENGINEER
8/02/22
C. M. HEYENS
100505065
PROVINCE OF ONTARIO

STRUCTURAL COMPONENT ONLY
DWG # TR22080324

JOB NAME	TRUSS NAME	QUANTITY	PLY	JOB DESC.	DRWG NO.
427679	J56	2	1	GREEN PARK HOMES TRUSS DESC.	

Tamarack Roof Truss, Burlington

Version 8.530 S Feb 23 2022 MiTek Industries, Inc. Tue Aug 2 14:52:27 2022 Page 1

ID:bP zphucbY03T7QZgjQJ9Vz?62X-NGFXXphLu NfVhkz?cRuxwyY?5gfaiRSgHAFJsyrsyl

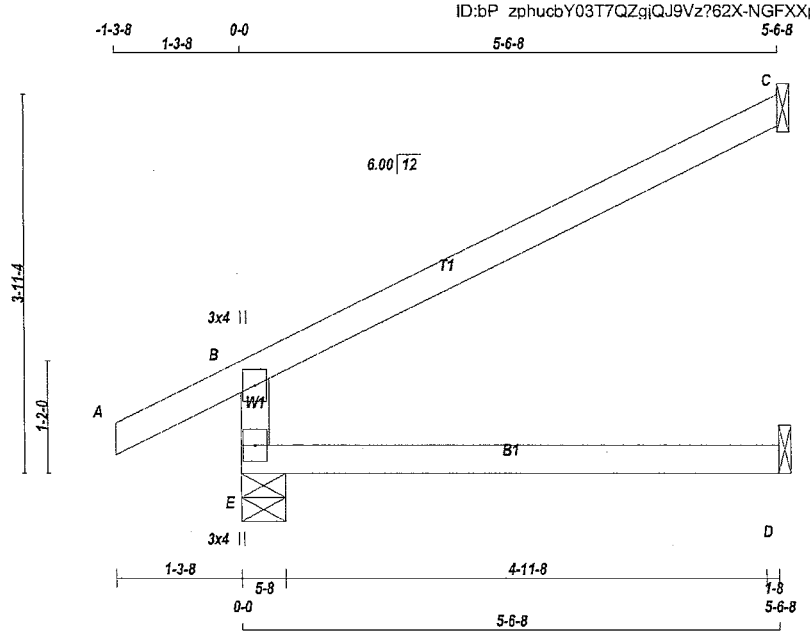

TOTAL WEIGHT = 2 X 16 = 32 lb

[M]

LUMBER

N. L. G. A. RULES

CHORDS	SIZE		LUMBER	DESCR.
E - B	2x4	DRY	No.2	SPF
A - C	2x4	DRY	No.2	SPF
E - D	2x4	DRY	No.2	SPF

DRY: SEASONED LUMBER.

PLATES (table is in inches)

JT	TYPE	PLATES	W	LEN	Y	X
B	TMV+p	MT20	3.0	4.0		
E	BMV1+p	MT20	3.0	4.0		

NOTES- (1)

1) Lateral braces to be a minimum of 2X4 SPF #2.

DIMENSIONS, SUPPORTS AND LOADINGS SPECIFIED BY FABRICATOR TO BE VERIFIED BY BUILDING DESIGNER

BEARINGS

JT	FACTORED GROSS REACTION VERT	HORZ	MAXIMUM FACTORED GROSS REACTION DOWN	HORZ	UPLIFT	INPUT BRG IN-SX	REQRD BRG IN-SX
E	519	0	519	0	0	5-8	5-8
C	198	0	198	0	0	1-8	1-8
D	43	0	48	0	0	1-8	1-8

SEE MITEK STANDARD DETAIL MSD2015-H FOR CONNECTION TO JOINT(S) C , D

UNFACTORED REACTIONS

MAX./MIN. COMPONENT REACTIONS

JT	1ST LCASE COMBINED	SNOW	LIVE	PERM.LIVE	WIND	DEAD	SOIL
E	364	258 / 0	0 / 0	0 / 0	0 / 0	106 / 0	0 / 0
C	136	111 / 0	0 / 0	0 / 0	0 / 0	25 / 0	0 / 0
D	34	0 / 0	0 / 0	0 / 0	0 / 0	34 / 0	0 / 0

BEARING MATERIAL TO BE SPF NO.2 OR BETTER AT JOINT(S) E, C

BRACING

TOP CHORD TO BE SHEATHED OR MAX. PURLIN SPACING = 6.25 FT.
MAX. UNBRACED BOTTOM CHORD LENGTH = 10.00 FT OR RIGID CEILING DIRECTLY APPLIED.

ALL PITCH BREAKS AND PERIMETER CORNER JOINTS MUST BE LATERALLY RESTRAINED.

LOADING

TOTAL LOAD CASES: (4)

CHORDS

MEMB. FR-TO	MAX. FACTORED FORCE (LBS)	FACTORED VERT. LOAD (PLF) FROM	TO	LC1	MAX CSI (LC)	MAX. UNBRAC LENGTH
E- B	-459 / 0	0.0	0.0	0.11 (4)		7.81
A- B	0 / 29	-95.2	-95.2	0.12 (1)		10.00
B- C	-29 / 0	-95.2	-95.2	0.50 (1)		6.25
E- D	0 / 0	-18.5	-18.5	0.11 (4)		10.00

WEBS

MEMB. FR-TO	MAX. FACTORED FORCE (LBS)	MAX CSI (LC)

DESIGN CRITERIA

SPECIFIED LOADS:

TOP CH.	LL	=	26.7	PSF
	DL	=	6.0	PSF
BOT CH.	LL	=	0.0	PSF
	DL	=	7.4	PSF
TOTAL LOAD		=	40.1	PSF

SPACING = 24.0 IN. C/C

THIS TRUSS IS DESIGNED FOR RESIDENTIAL OR SMALL BUILDING REQUIREMENTS OF PART 9, NBCC 2015

THIS DESIGN COMPLIES WITH:
- PART 9 OF BCBC 2018 , ABC 2019
- PART 9 OF OBC 2012 (2019 AMENDMENT)
- CSA 086-14
- TPIC 2014

DESIGN ASSUMPTIONS
-OVERHANG NOT TO BE ALTERED OR CUT OFF.

(55 % OF 33.4 P.S.F. G.S.L. PLUS 8.4 P.S.F. RAIN LOAD) EQUALS 26.7 P.S.F. SPECIFIED ROOF LIVE LOAD

ALLOWABLE DEFL.(LL)= L/360 (0.19")
CALCULATED VERT. DEFL.(LL) = L/ 999 (0.00")
ALLOWABLE DEFL.(TL)= L/360 (0.19")
CALCULATED VERT. DEFL.(TL) = L/ 999 (0.03")

CSI: TC=0.50/1.00 (B-C:1) , BC=0.11/1.00 (D-E:4) , WB=0.00/1.00 (n/a:0) , SSI=0.23/1.00 (B-C:1)

DOL LUMBER=1.00 NAIL=1.00 LS BEND=1.10 COMP=1.10 SHEAR=1.10 TENS= 1.10

COMPANION LIVE LOAD FACTOR = 1.00

AUTOSOLVE RIGHT HEEL ONLY

TRUSS PLATE MANUFACTURER IS NOT RESPONSIBLE FOR QUALITY CONTROL IN THE TRUSS MANUFACTURING PLANT .

NAIL VALUES

PLATE	GRIP(DRY) (PSI) MAX	MIN	SHEAR (PLI) MAX	MIN	SECTION (PLI) MAX	MIN
MT20	650	371	1747	788	1987	1873

PLATE PLACEMENT TOL. = 0.250 inches

PLATE ROTATION TOL. = 5.0 Deg.

JSI GRIP= 0.18 (E) (INPUT = 0.90)
JSI METAL= 0.13 (B) (INPUT = 1.00)

LICENSED PROFESSIONAL ENGINEER
8/02/22
C. M. HEYENS
100505065
PROVINCE OF ONTARIO

STRUCTURAL COMPONENT ONLY
DWG # TR22080325

JOB NAME	TRUSS NAME	QUANTITY	PLY	JOB DESC.	DRWG NO.
427679	J59	4	1	GREEN PARK HOMES TRUSS DESC.	

Tamarack Roof Truss, Burlington

Version 8.530 S Feb 23 2022 MiTek Industries, Inc. Tue Aug 2 14:52:28 2022 Page 1
ID:bP zphucbY03T7QZqjQJ9Vz?62X-rTpvl9izfHVW7rJ9ZJy7T7UpbV1PJ8hbvxwprJyrsyH

Scale = 1:14.1

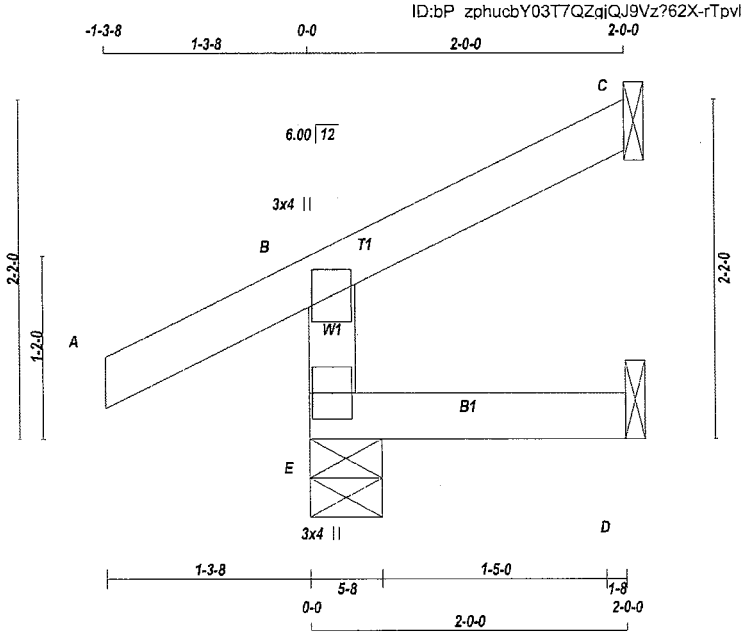

TOTAL WEIGHT = 4 X 7 = 30 lb

[M]

LUMBER
N. L. G. A. RULES

CHORDS	SIZE		LUMBER	DESCR.
E - B	2x4	DRY	No.2	SPF
A - C	2x4	DRY	No.2	SPF
E - D	2x4	DRY	No.2	SPF

DRY: SEASONED LUMBER.

PLATES (table is in inches)

JT	TYPE	PLATES	W	LEN	Y	X
B	TMV+p	MT20	3.0	4.0		
E	BMV1+p	MT20	3.0	4.0		

NOTES- (1)
1) Lateral braces to be a minimum of 2X4 SPF #2.

DIMENSIONS, SUPPORTS AND LOADINGS SPECIFIED BY FABRICATOR TO BE VERIFIED BY BUILDING DESIGNER

BEARINGS

JT	FACTORED GROSS REACTION VERT	HORZ	MAXIMUM FACTORED GROSS REACTION DOWN	HORZ	UPLIFT	INPUT BRG IN-SX	REQRD BRG IN-SX
E	268	0	268	0	0	5-8	5-8
C	72	0	72	0	0	1-8	1-8
D	16	0	18	0	0	1-8	1-8

SEE MITEK STANDARD DETAIL MSD2015-H FOR CONNECTION TO JOINT(S) C , D

UNFACTORED REACTIONS

JT	1ST LCASE COMBINED	MAX./MIN. COMPONENT REACTIONS SNOW	LIVE	PERM.LIVE	WIND	DEAD	SOIL
E	187	139 / 0	0 / 0	0 / 0	0 / 0	48 / 0	0 / 0
C	49	40 / 0	0 / 0	0 / 0	0 / 0	9 / 0	0 / 0
D	13	0 / 0	0 / 0	0 / 0	0 / 0	13 / 0	0 / 0

BEARING MATERIAL TO BE SPF NO.2 OR BETTER AT JOINT(S) E

BRACING
TOP CHORD TO BE SHEATHED OR MAX. PURLIN SPACING = 6.25 FT.
MAX. UNBRACED BOTTOM CHORD LENGTH = 10.00 FT OR RIGID CEILING DIRECTLY APPLIED.

ALL PITCH BREAKS AND PERIMETER CORNER JOINTS MUST BE LATERALLY RESTRAINED.

LOADING
TOTAL LOAD CASES: (5)

CHORDS

MEMB. FR-TO	MAX. FACTORED FORCE (LBS)	FACTORED VERT. LOAD LC1 (PLF) FROM	TO	MAX CSI (LC)	MAX. UNBRAC LENGTH
E- B	-248 / 0	0.0	0.0	0.01 (4)	7.81
A- B	0 / 29	-95.2	-95.2	0.12 (1)	10.00
B- C	-10 / 0	-95.2	-95.2	0.06 (1)	6.25
E- D	0 / 0	-18.5	-18.5	0.02 (4)	10.00

WEBS

MEMB. FR-TO	MAX. FACTORED FORCE (LBS)	MAX CSI (LC)

CANTILEVER ANALYSIS HAS BEEN CONSIDERED IN THIS DESIGN

DESIGN CRITERIA

SPECIFIED LOADS:

TOP CH.	LL	=	26.7	PSF
	DL	=	6.0	PSF
BOT CH.	LL	=	0.0	PSF
	DL	=	7.4	PSF
TOTAL LOAD		=	40.1	PSF

SPACING = 24.0 IN. C/C

THIS TRUSS IS DESIGNED FOR RESIDENTIAL OR SMALL BUILDING REQUIREMENTS OF PART 9, NBCC 2015

THIS DESIGN COMPLIES WITH:
- PART 9 OF BCBC 2018 , ABC 2019
- PART 9 OF OBC 2012 (2019 AMENDMENT)
- CSA 086-14
- TPIC 2014

DESIGN ASSUMPTIONS
-OVERHANG NOT TO BE ALTERED OR CUT OFF.

(55 % OF 33.4 P.S.F. G.S.L. PLUS 8.4 P.S.F. RAIN LOAD) EQUALS 26.7 P.S.F. SPECIFIED ROOF LIVE LOAD

ALLOWABLE DEFL.(LL)= L/360 (0.19")
CALCULATED VERT. DEFL.(LL) = L/ 999 (0.00")
ALLOWABLE DEFL.(TL)= L/360 (0.19")
CALCULATED VERT. DEFL.(TL) = L/ 999 (0.00")

CSI: TC=0.12/1.00 (A-B:1) , BC=0.02/1.00 (D-E:4) , WB=0.00/1.00 (n/a:0) , SSI=0.09/1.00 (A-B:1)

DOL LUMBER=1.00 NAIL=1.00 LS BEND=1.10 COMP=1.10 SHEAR=1.10 TENS= 1.10

COMPANION LIVE LOAD FACTOR = 1.00

AUTOSOLVE RIGHT HEEL ONLY

TRUSS PLATE MANUFACTURER IS NOT RESPONSIBLE FOR QUALITY CONTROL IN THE TRUSS MANUFACTURING PLANT .

NAIL VALUES

PLATE	GRIP(DRY) (PSI) MAX	MIN	SHEAR (PLI) MAX	MIN	SECTION (PLI) MAX	MIN
MT20	650	371	1747	788	1987	1873

PLATE PLACEMENT TOL. = 0.250 inches

PLATE ROTATION TOL. = 5.0 Deg.

JSI GRIP= 0.10 (E) (INPUT = 0.90)
JSI METAL= 0.07 (B) (INPUT = 1.00)

LICENSED PROFESSIONAL ENGINEER
8/02/22
C. M. HEYENS
100505065
PROVINCE OF ONTARIO

STRUCTURAL COMPONENT ONLY
DWG # TR22080326

JOB NAME	TRUSS NAME	QUANTITY	PLY	JOB DESC.	DRWG NO.
427633	J70	6	1	GREEN PARK HOMES TRUSS DESC.	

Tamarack Roof Truss, Burlington

Version 8.530 S Feb 23 2022 MiTek Industries, Inc. Tue Aug 2 14:13:51 2022 Page 1
ID:NUp5P5ms8UNEiFhG2dHqtsywVBs-BjJ TvqbJObHfmqrKCtn3X1rEVEbxE5Z6y9i06yrtWU

Scale: 1"=1'

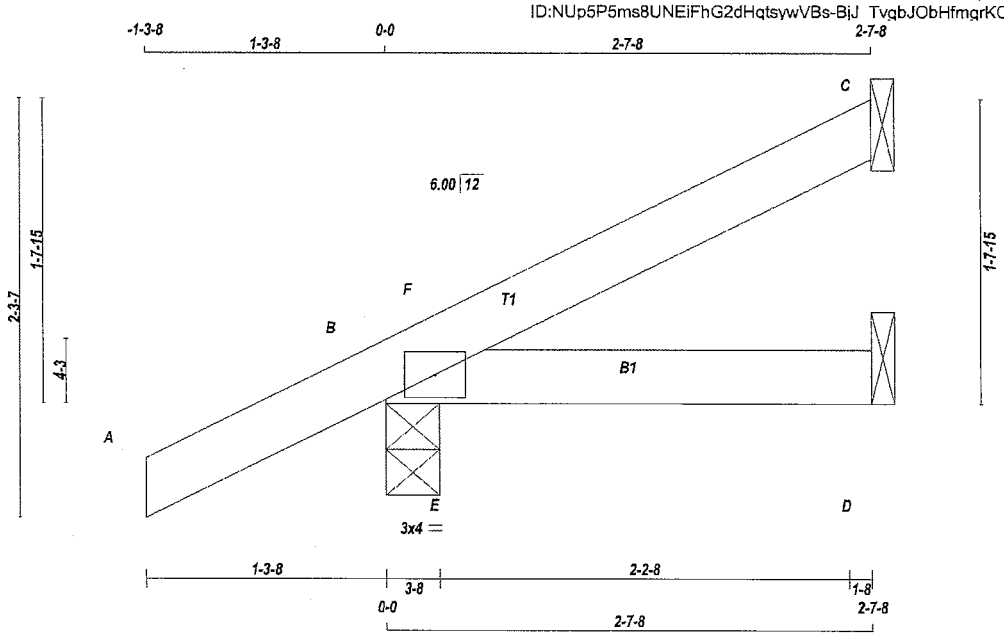

TOTAL WEIGHT = 6 X 8 = 49 lb

[M]

LUMBER
N. L. G. A. RULES

CHORDS	SIZE		LUMBER	DESCR.
A - C	2x4	DRY	No.2	SPF
B - D	2x4	DRY	No.2	SPF

DRY: SEASONED LUMBER.

PLATES (table is in inches)

JT	TYPE	PLATES	W	LEN	Y	X
B	TMB1-I	MT20	3.0	4.0		

NOTES- (1)
1) Lateral braces to be a minimum of 2X4 SPF #2.

DIMENSIONS, SUPPORTS AND LOADINGS SPECIFIED BY FABRICATOR TO BE VERIFIED BY BUILDING DESIGNER

BEARINGS

JT	FACTORED GROSS REACTION VERT	HORZ	MAXIMUM FACTORED GROSS REACTION DOWN	HORZ	UPLIFT	INPUT BRG IN-SX	REQRD BRG IN-SX
C	107	0	107	0	0	1-8	1-8
B	278	0	278	0	0	3-8	3-8
D	42	0	42	0	0	1-8	1-8

SEE MITEK STANDARD DETAIL MSD2015-H FOR CONNECTION TO JOINT(S) C , D

UNFACTORED REACTIONS

JT	1ST LCASE COMBINED	MAX./MIN. COMPONENT REACTIONS SNOW	LIVE	PERM.LIVE	WIND	DEAD	SOIL
C	74	58 / 0	0 / 0	0 / 0	0 / 0	16 / 0	0 / 0
B	194	143 / 0	0 / 0	0 / 0	0 / 0	51 / 0	0 / 0
D	31	12 / 0	0 / 0	0 / 0	0 / 0	19 / 0	0 / 0

BEARING MATERIAL TO BE SPF NO.2 OR BETTER AT JOINT(S) B, D

BRACING
TOP CHORD TO BE SHEATHED OR MAX. PURLIN SPACING = 6.25 FT.
MAX. UNBRACED BOTTOM CHORD LENGTH = 10.00 FT OR RIGID CEILING DIRECTLY APPLIED.

ALL PITCH BREAKS AND PERIMETER CORNER JOINTS MUST BE LATERALLY RESTRAINED.

LOADING
TOTAL LOAD CASES: (5)

CHORDS

MEMB. FR-TO	MAX. FACTORED FORCE (LBS)	FACTORED VERT. LOAD (PLF) FROM	TO	LC1 MAX CSI (LC)	MAX. UNBRAC LENGTH
A- B	0 / 27	-95.2	-95.2	0.13 (5)	10.00
B- F	-11 / 0	-95.2	-95.2	0.02 (4)	6.25
F- C	0 / 2	-95.2	-95.2	0.08 (1)	10.00
B- E	0 / 0	-18.5	-18.5	0.07 (1)	10.00
E- D	0 / 0	-18.5	-18.5	0.07 (1)	10.00

WEBS

MEMB. FR-TO	MAX. FACTORED FORCE (LBS)	MAX CSI (LC)
E- F	-118 / 2	0.00 (1)

CANTILEVER ANALYSIS HAS BEEN CONSIDERED IN THIS DESIGN

DESIGN CRITERIA

SPECIFIED LOADS:

TOP CH.	LL	=	26.7	PSF
	DL	=	6.0	PSF
BOT CH.	LL	=	0.0	PSF
	DL	=	7.4	PSF
TOTAL LOAD		=	40.1	PSF

SPACING = 24.0 IN. C/C

THIS TRUSS IS DESIGNED FOR RESIDENTIAL OR SMALL BUILDING REQUIREMENTS OF PART 9, NBCC 2015

THIS DESIGN COMPLIES WITH:
- PART 9 OF BCBC 2018 , ABC 2019
- PART 9 OF OBC 2012 (2019 AMENDMENT)
- CSA 086-14
- TPIC 2014

(55 % OF 33.4 P.S.F. G.S.L. PLUS 8.4 P.S.F. RAIN LOAD) EQUALS 26.7 P.S.F. SPECIFIED ROOF LIVE LOAD

ALLOWABLE DEFL.(LL)= L/360 (0.19")
CALCULATED VERT. DEFL.(LL) = L/ 999 (0.00")
ALLOWABLE DEFL.(TL)= L/360 (0.19")
CALCULATED VERT. DEFL.(TL) = L/ 999 (0.01")

CSI: TC=0.13/1.00 (A-B:5) , BC=0.07/1.00 (B-E:1) , WB=0.00/1.00 (E-F:1) , SSI=0.10/1.00 (B-E:1)

DOL LUMBER=1.00 NAIL=1.00 LS BEND=1.10 COMP=1.10 SHEAR=1.10 TENS= 1.10

COMPANION LIVE LOAD FACTOR = 1.00

TRUSS PLATE MANUFACTURER IS NOT RESPONSIBLE FOR QUALITY CONTROL IN THE TRUSS MANUFACTURING PLANT .

NAIL VALUES

PLATE	GRIP(DRY) (PSI) MAX	MIN	SHEAR (PLI) MAX	MIN	SECTION (PLI) MAX	MIN
MT20	650	371	1747	788	1987	1873

PLATE PLACEMENT TOL. = 0.250 inches

PLATE ROTATION TOL. = 5.0 Deg.

JSI GRIP= 0.22 (B) (INPUT = 0.90)
JSI METAL= 0.04 (B) (INPUT = 1.00)

LICENSED PROFESSIONAL ENGINEER
8/02/22
C. M. HEYENS
100505065
PROVINCE OF ONTARIO

STRUCTURAL COMPONENT ONLY
DWG # TR22080265

EWP DESIGN INC.

(905) 832-2250 FAX (905) 832-0286

RESPONSIBILITIES AND SPECIFICATIONS

RESPONSIBILITIES

1. EWP DESIGN INC. is responsible for the design of trusses as individual components.
2. It is the responsibility of others to ascertain that the design loads utilized on each drawing meet or exceed the actual dead load imposed by the structure, the live load imposed by the intended use and the snow load imposed by local building code or authorities with jurisdictions.
3. All dimensions are to be verified by the owner, contractor, architect or other authorities with jurisdictions before truss fabrication.
4. EWP DESIGN INC. bears no responsibility for the erection of trusses. Persons erecting trusses are cautioned to seek professional advice regarding the temporary and permanent bracing for the system. Bracing shown on EWP DESIGN INC. drawing is specified for the truss as a component only and forms an integral part of the truss design.
5. It is the truss manufacturer's responsibility to ensure that trusses are manufactured in conformance with specifications of EWP DESIGN INC. as outlined below.

SPECIFICATIONS

1. Trusses designed by EWP DESIGN INC. conform to the relevant section of the Ontario Building Code of Canada (Part 9 or Part 4) or to the Canadian code for farm buildings, whichever applies to the building type, as indicated on the EWP DESIGN INC. drawings, and conform to the design procedures established by the Truss Plate Institute of Canada. Unit stresses used for truss designs are as per the edition of CSA-O86 shown on EWP DESIGN INC. drawings.
2. Lumber is to be the size, species and grade as specified on EWP DESIGN INC. drawings.
3. Moisture content of lumber shall not exceed 19% in service unless specified otherwise.
4. Metal connector plates shall be applied to both faces of truss at each joint and shall be positioned as specified.
5. Top chords of trusses are assumed to be continuously braced laterally by roof sheathing or by purlins at intervals not exceeding 12.5 times the thickness of top chord member.
6. Bottom chords shall be laterally braced at intervals not exceeding 3M (10') o.c., where rigid ceiling is not applied directly to the underside of chords.

THESE DRAWINGS CONSTITUTE THE PROPERTY OF EWP DESIGN INC., SHALL NOT BE REPRODUCED, PUBLISHED, OR REDISTRIBUTED IN ANY MANNER OR UTILIZED FOR ANY PURPOSE OTHER THAN THE MANUFACTURE OF TRUSSES BY THE ALPA LUMBER GROUP, AND WILL BE RETRACTED BY EWP DESIGN INC. IF UTILIZED FOR ANY OTHER PURPOSE.

February 1, 2019

TOE-NAIL CAPACITY DETAILS

LATERAL AND WITHDRAWAL RESISTANCE OF BEARING ANCHORAGE BY TOE-NAILS

			SPF	D. FIR	SPF	D. FIR
COMMON WIRE	3.00	0.144	122	139	30	42
	3.25	0.144	127	144	32	45
	3.50	0.160	152	173	38	52
COMMON SPIRAL	3.00	0.122	96	108	26	36
	3.25	0.122	97	108	28	40
	3.50	0.152	142	161	36	50
3.25" Gun nail	3.25	0.120	94	105	28	39

Note: If using truss with D. Fir lumber and SPF bearing plate, use tabulated SPF values in table.

Nail type:	**Common wire**	**Common spiral**	**Common wire**	**Common spiral**	**Gun Nail**
Diameter (in.)	0.160	0.152	0.144	0.122	0.120
Length (in.)	3.50	3.50	3.00	3.00	3.25
2x4 SPF	2	2	3	3	3
2x6 SPF	4	4	4	5	5
2x4 D. FIR	2	2	2	2	2
2x6 D. FIR	3	3	3	4	4

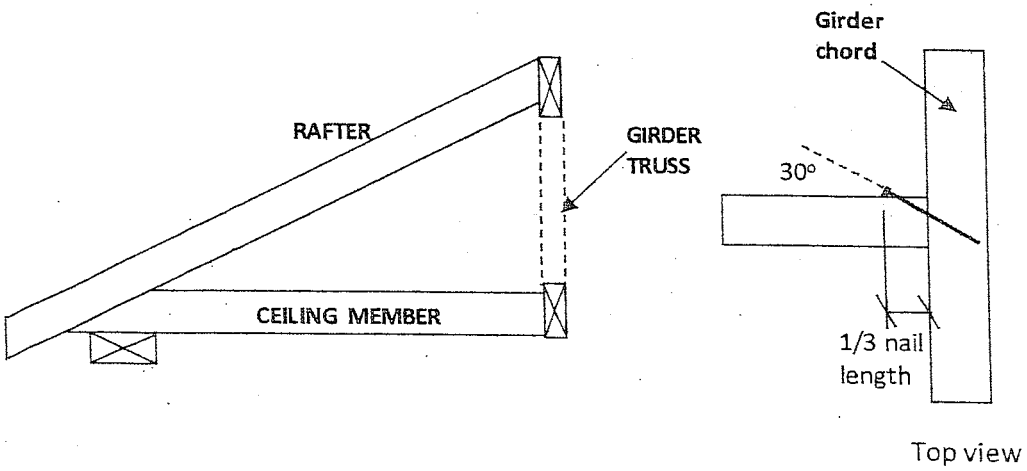

Figure 1: Toe-Nailing Rafter / Ceiling Member to Girder Truss

PEO
Certificate No. 10889485

LICENSED PROFESSIONAL ENGINEER
C. Cordogiannis
90553736
PROVINCE OF ONTARIO

December 21, 2020

©2020 MiTek Canada Inc., 240 Stirling Crescent, Bradford, Ontario, L3Z 4L5 | (800) 268-3434, www.mitek.ca

TOE-NAIL CAPACITY DETAILS

Figure 2: Toe-Nail Anchorage to Bearing Plate for Uplift

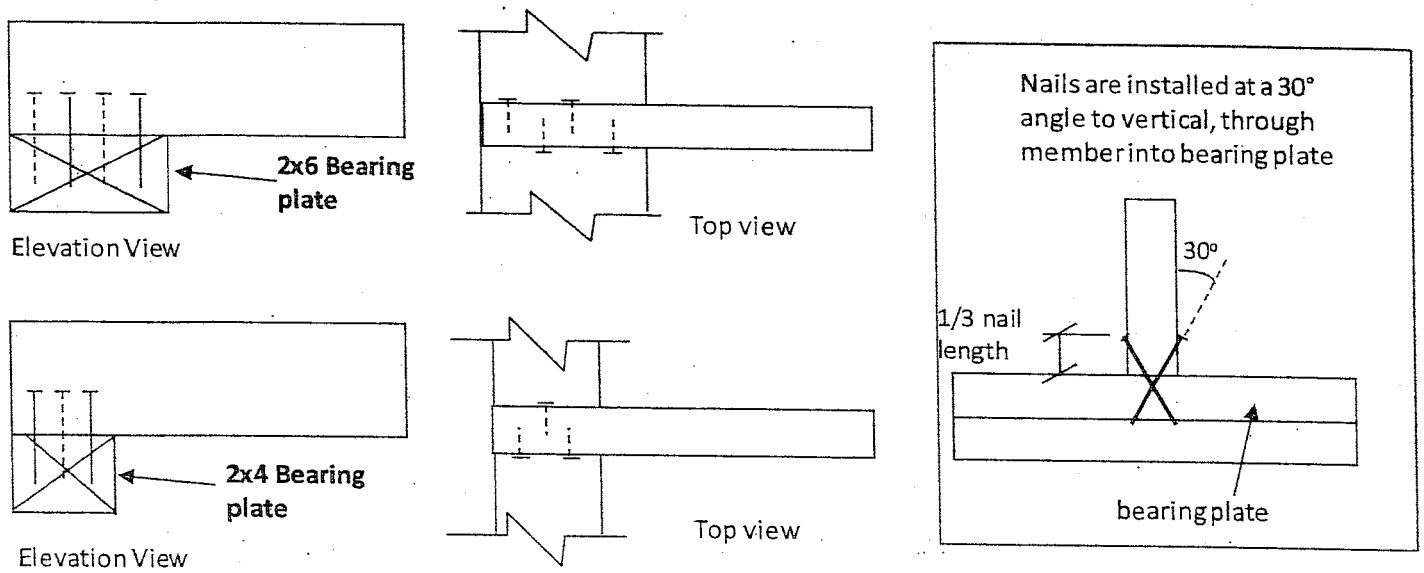

NOTES:

1. Rafter and ceiling members may be connected to top and bottom chords of girder truss by toe-nailing the members into the girder chords (see fig. 1), provided the factored vertical reactions of the supported members do not exceed the lateral resistance of the toe-nails. Mechanical connectors (hangers) are required if factored vertical reactions exceed the toe-nail capacity, or if the connection must resist horizontal loads (loads perpendicular to the face of girder or rafter).

2. Trusses, rafters or ceiling members may be anchored to the bearing plate with toe-nails (see fig. 2), provided that the factored uplift reactions due to **wind or earthquake loads** do not exceed the **withdrawal resistance of the toe-nails.** Mechanical anchors (tie-downs) are required for reactions that exceed the toe-nail withdrawal capacity. Toe-nail anchorage to bearing plates is **NOT** permitted if uplift reactions are generated from gravity loads (snow, floor live, dead).

3. Tabulated toe-nail resistances on page 1 are for **one** toe-nail. Multiply unit values by the number of nails used in the connection. Maximum number of nails in a connection shall not exceed the tabulated limits shown on page 1 for a given lumber size /species.

4. Nail values are based on specific gravity of G = 0.42 (SPF) and G = 0.49 (D. Fir).

5. Toe-nails shall be driven at approximately 1/3 the nail length from the edge of the joist/truss chord and driven at an angle of 30° to the grain of the member.

6. For wind / earthquake loads, tabulated lateral resistances may be multiplied by 1.15 (K_D factor). No increases are permitted for tabulated withdrawal resistances.

7. Lumber must be dry (< 19% moisture content) at the time of nail installation.

8. Nail values in this table comply with CSA O86-19, Clause 12.9.

PEO
Certificate No. 10889485

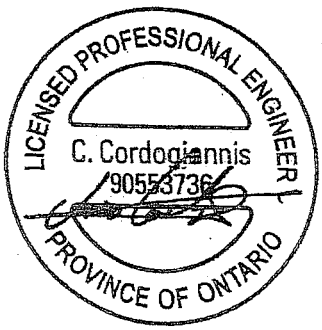

December 21, 2020

©2020 MiTek Canada Inc., 240 Stirling Crescent, Bradford, Ontario, L3Z 4L5 | (800) 268-3434, www.mitek.ca

LUL/LUS/LJS/HUS/HHUS/HGUS

SIMPSON Strong-Tie®

Standard and Double-Shear Joist Hangers

VALUE ENGINEERED

This product is preferable to similar connectors because of a) easier installation, b) higher capacities, c) lower installed cost, or a combination of these features.

Most hangers in this series have double-shear nailing — an innovation that distributes the load through two points on each joist nail for greater strength. This allows for fewer nails, faster installation, and the use of all common nails for the same connection. (Do not bend or remove tabs)

Double-shear hangers range from the light capacity LUS hangers to the highest capacity HGUS hangers. For medium load truss applications, the HUS offers a lower cost alternative and easier installation than the HGUS hangers, while providing greater load capacity and bearing than the LUS.

Material: See table on pp. 217–218.

Finish: Galvanized. Some products available in stainless steel or ZMAX® coating; see Corrosion Information, pp. 18–20.

Installation:

- Use all specified fasteners; see General Notes.
- Nails must be driven at an angle through the joist or truss into the header to achieve the tabulated resistances (except LUL).
- Where 16d commons are specified, 10d commons may be used at 0.83 of the tabulated factored resistance.
- Not designed for welded or nailer applications.
- With single ply 2x carrying members, use 10d x 1½" nails into the header and 10d commons into the joist, and reduce the resistance to 0.64 of the table value where 16d nails are specified and 0.77 where 10d nails are specified.

Options:

- LUS, LJS, LUL and HUS hangers cannot be modified.
- Other sizes available; consult your Simpson Strong-Tie representative.
- See Hanger Options information on pp. 105–107.

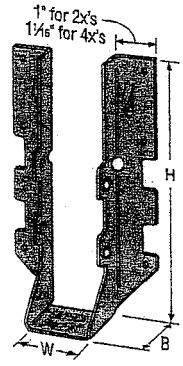

LUS28

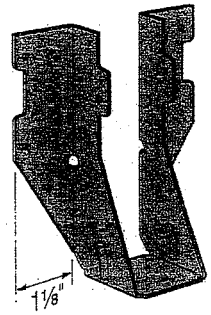

LU26L

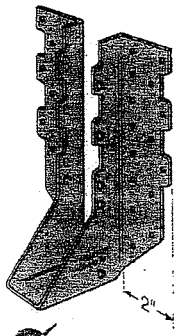

HUS210
(HUS26, HUS28, and HHUS similar)

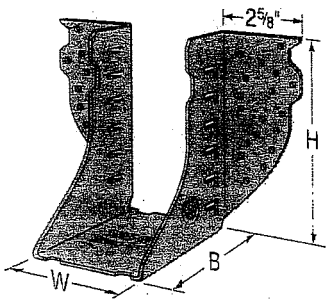

HGUS28-2

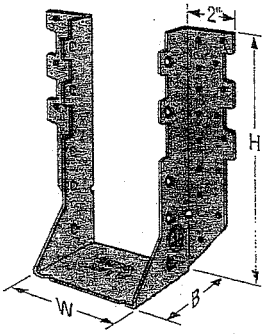

HHUS210-2

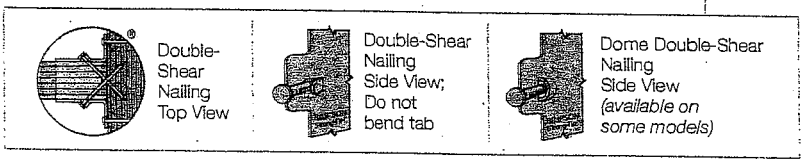

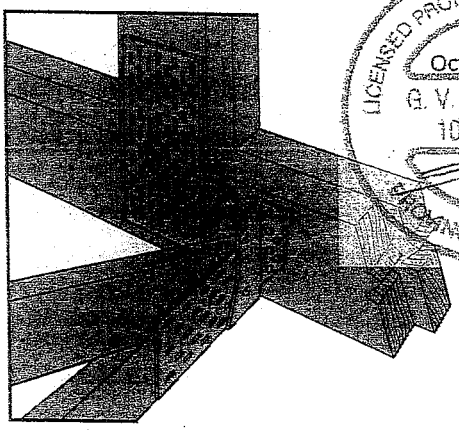

Typical HUS26 Installation with Reduced Heel Height
(Truss Designer to provide fastener quantity for connecting multiple members together)

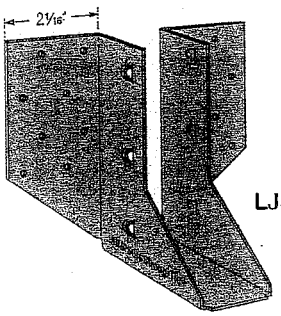

LJS26DS

LICENSED PROFESSIONAL ENGINEER
Oct. 14, 2020
G. V. LUBARSKY
100044453
PROVINCE OF ONTARIO

Plated Truss Connectors

C-C-CAN2020 © 2020 SIMPSON STRONG-TIE COMPANY INC.

TECHNICAL BULLETIN

LUS – Double Shear Joist Hangers

SIMPSON Strong-Tie®

All LUS hangers have double shear nailing. This patented innovation distributes the load through two points on each joist nail for greater strength. It also allows the use of fewer nails, faster installation and the use of common nails for all connections.

Material: 18 gauge

Finish: G90 galvanized

Design:

- Factored resistances are in accordance with CSA O86-14.
- Uplift resistances have been increased 15%. No further increase is permitted.
- Wood shear is not considered in the factored resistances given. The specifier must ensure that the joist and header capacities are capable of withstanding these loads.

Installation:

- Use all specified fasteners.
- Nails: 16d = 0.162" dia. x 3½" long common wire, 10d = 0.148" x 3" long common wire.
- Double shear nails must be driven at an angle through the joist or truss into the header to achieve the table loads.
- Not designed for welded or nailer applications.

Options:

- These hangers cannot be modified

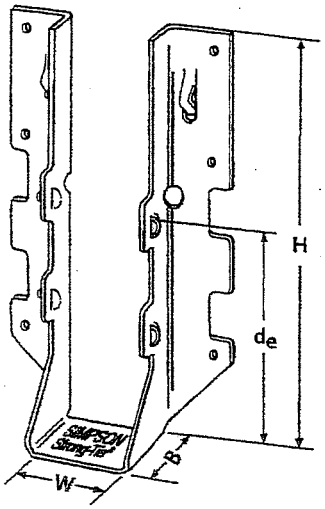

LUS28

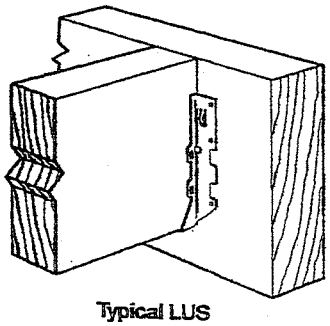

Typical LUS Installation

Model No.	Ga.	Dimensions (in.)				Fasteners		Factored Resistance (lb.)			
								D.Fir-L		S-P-F	
		W	H	B	d_e[1]	Face	Joist	Uplift (K_D=1.15)	Normal (K_D=1.00)	Uplift (K_D=1.15)	Normal (K_D=1.00)
LUS24	18	1 9/16	3 1/8	1 3/4	1 15/16	(4) 10d	(2) 10d	710	1630	645	1155
LUS24-2	18	3 1/8	3 1/8	2	1 13/16	(4) 16d	(2) 16d	835	2020	590	1435
LUS26	18	1 9/16	4 3/4	1 3/4	3 5/8	(4) 10d	(4) 10d	1420	2170	1290	1630
LUS26-2	18	3 1/8	4 7/8	2	4	(4) 16d	(4) 16d	1720	2595	1545	1920
LUS26-3	18	4 5/8	4 3/16	2	3 1/4	(4) 16d	(4) 16d	1720	2595	1545	2340
LUS28	18	1 9/16	6 5/8	1 3/4	3 3/4	(6) 10d	(6) 10d	1420	2520	1290	1790
LUS28-2	18	3 1/8	7	2	4	(6) 16d	(4) 16d	1720	3325	1545	2575
LUS28-3	18	4 5/8	6 1/4	2	3 1/4	(6) 16d	(4) 16d	1720	3325	1545	2375
LUS210	18	1 9/16	7 13/16	1 3/4	3 7/8	(8) 10d	(4) 10d	1420	2785	1290	2210
LUS210-2	18	3 1/8	9	2	6	(8) 16d	(6) 16d	2580	4500	2320	3195
LUS210-3	18	4 5/8	8 3/16	2	5 1/4	(8) 16d	(6) 16d	2580	3345	2320	2375

1. d_e is the distance from the seat of the hanger to the highest joist nail.

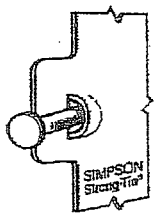

Dome Double Shear Nailing prevents tabs breaking off (available on some models).

U.S. Patent 5,603,580

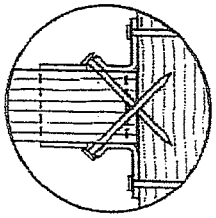

Double Shear Nailing Top View.

LICENSED PROFESSIONAL ENGINEER
04/01/2020
B. D. BUNTING
PROVINCE OF ONTARIO

LIMIT STATES DESIGN

This technical bulletin is effective until June 30, 2022, and reflects information available as of April 1, 2020. This information is updated periodically and should not be relied upon after June 30, 2022. Contact Simpson Strong-Tie for current information and limited warranty or see strongtie.com.

© 2020 Simpson Strong-Tie Company Inc.

(800) 999-5099
strongtie.com

TECHNICAL BULLETIN

HUS/LJS – Double Shear Joist Hangers

SIMPSON Strong-Tie®

All hangers have double shear nailing. This patented innovation distributes the load through two points on each joist nail for greater strength. It also allows the use of fewer nails, faster installation and the use of common nails for all connections. Do not bend or remove tabs.

Material: See table

Finish: G90 galvanized

Design:

- Factored resistances are in accordance with CSA O86 -14.
- Uplift resistances have been increased 15%. No further increase is permitted.
- Wood shear is not considered in the factored resistances given. The specifier must ensure that the joist and header capacities are capable of withstanding these loads.

Installation:

- Use all specified fasteners
- Nails: 16d = 0.162" dia. x 3½" long common wire
- Double shear nails must be driven at an angle through the joist or truss into the header to achieve the table loads
- Not designed for welded or nailer applications

Options:

- See current catalogue for options

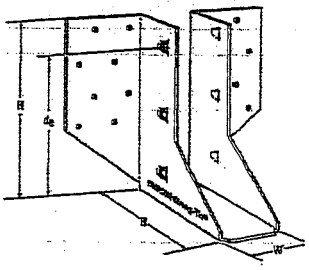

LJS26DS

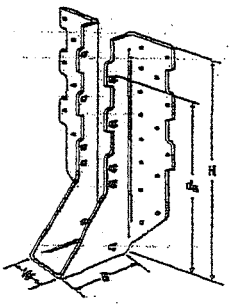

HUS210
(HUS26, HUS28, similar)

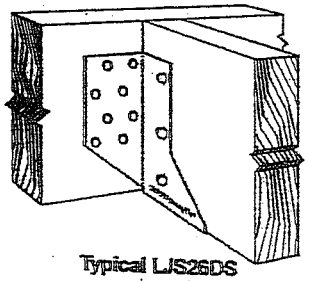

Typical LJS26DS Installation

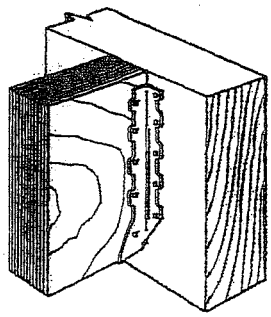

Typical HUS Installation

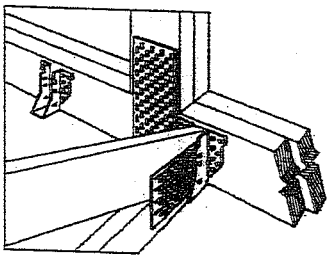

Typical HUS Installation
(Truss Designer to provide fastener quantity for connecting multiple members together)

Model No.	Ga.	Dimensions (in.)				Fasteners		Factored Resistance (lb.)			
								D.Fir-L.		S-P-F	
		W	H	B	d_a[1]	Face	Joist	Uplift (K_D=1.15) lb.	Normal (K_D=1.00) lb.	Uplift (K_D=1.15) lb.	Normal (K_D=1.00) lb.
LJS26DS	18	1 9/16	5	3½	4⅝	(16) 16d	(6) 16d	2055	4265	1460	4115
HUS26	16	1⅝	5⅜	3	3 15/16	(14) 16d	(6) 16d	2705	4940	2065	3875
HUS28	16	1⅝	7 3/32	3	6 3/32	(22) 16d	(8) 16d	3605	5365	2675	4345
HUS210	16	1⅝	9 3/32	3	7 31/32	(30) 16d	(10) 16d	4505	5795	4010	4740
HUS1.81/10	16	1 13/16	9	3	8	(30) 16d	(10) 16d	4505	6450	4010	5200

1. d_a is the distance from the seat of the hanger to the highest joist nail.

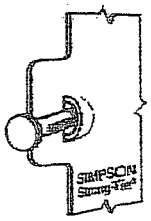

Dome Double Shear Nailing prevents tabs breaking off (available on some models).

U.S. Patent 5,603,580

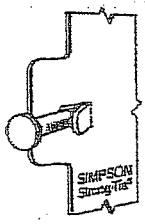

Double Shear Nailing Side View. Do not bend tab back.

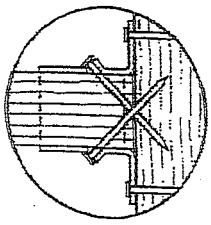

Double Shear Nailing Top View.

LICENSED PROFESSIONAL ENGINEER
04/01/2020
B. D. BUNTING
PROVINCE OF ONTARIO

LIMIT STATES DESIGN

This technical bulletin is effective until June 30, 2022, and reflects information available as of April 1, 2020. This information is updated periodically and should not be relied upon after June 30, 2022. Contact Simpson Strong-Tie for current information and limited warranty or see strongtie.com.

© 2020 Simpson Strong-Tie Company Inc.

(800) 999-5099
strongtie.com

TECHNICAL BULLETIN

HGUS – Double Shear Joist Hangers

SIMPSON Strong-Tie®

All HGUS hangers have double shear nailing. This patented innovation distributes the load through two points on each joist nail for greater strength. It also allows the use of fewer nails, faster installation and the use of common nails for all connections. Do not bend or remove tabs.

Material: 12 gauge

Finish: G90 galvanized

Design:

- Factored resistances are in accordance with CSA O86-14.
- Uplift resistances have been increased 15%. No further increase is permitted.
- Wood shear is not considered in the factored resistances given. The specifier must ensure that the joist and header capacities are capable of withstanding these loads.

Installation:

- Use all specified fasteners
- Nails: 16d = 0.162" dia x 3½" long common wire
- Double shear nails must be driven at an angle through the joist or truss into the header to achieve the table loads
- Not designed for welded or nailer applications

Options:

- See current catalogue for options

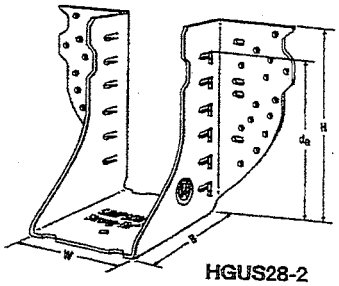

HGUS28-2

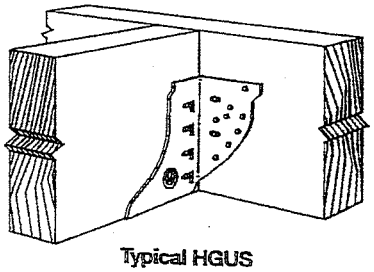

Typical HGUS Installation

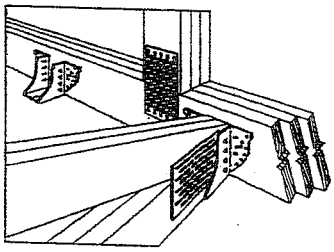

Typical HGUS Installation (Truss Designer to provide fastener quantity for connecting multiple members together)

Model No.	Ga.	Dimensions (in.)				Fasteners		Factored Resistance (lb.)			
								D.Fir-L		S-P-F	
		W	H	B	d_e[1]	Face	Joist	Uplift (K_D=1.15)	Normal (K_D=1.00)	Uplift (K_D=1.15)	Normal (K_D=1.00)
HGUS26	12	1⅝	5⅜	5	4 5/32	(20) 16d	(8) 16d	2685	6625	2685	5700
HGUS26-2	12	3 5/16	5 7/16	4	4⅛	(20) 16d	(8) 16d	4385	8950	3100	6355
HGUS26-3	12	4 15/16	5½	4	4⅛	(20) 16d	(8) 16d	4385	8950	3100	6355
HGUS26-4	12	6 9/16	5 7/16	4	4⅛	(20) 16d	(8) 16d	4385	8950	3100	6355
HGUS28	12	1⅝	7⅛	5	6⅛	(36) 16d	(12) 16d	3310	7675	3100	6900
HGUS28-2	12	3 5/16	7 3/16	4	6⅛	(36) 16d	(12) 16d	6070	12980	4310	9215
HGUS28-3	12	4 15/16	7¼	4	6⅜	(36) 16d	(12) 16d	6070	12980	4310	9215
HGUS28-4	12	6 9/16	7 3/16	4	6⅛	(36) 16d	(12) 16d	6070	12980	4310	9215
HGUS210	12	1⅝	9⅛	5	7⅞	(46) 16d	(16) 16d	3535	11070	2510	8090
HGUS210-2	12	3 5/16	9 3/16	4	8⅛	(46) 16d	(16) 16d	6840	14015	4855	10270
HGUS210-3	12	4 15/16	9¼	4	8⅜	(46) 16d	(16) 16d	6840	14645	4855	10400
HGUS210-4	12	6 9/16	9 3/16	4	8⅛	(46) 16d	(16) 16d	6840	14645	4855	10400
HGUS212-4	12	6 9/16	10⅝	4	10⅛	(56) 16d	(20) 16d	7640	14995	5425	10645
HGUS214-4	12	6 9/16	12⅝	4	11⅞	(66) 16d	(22) 16d	10130	16400	7195	11645

1. d_e is the distance from the seat of the hanger to the highest joist nail.

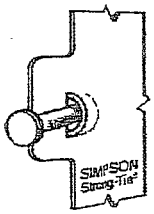

Dome Double Shear Nailing prevents tabs breaking off (available on some models).

U.S. Patent 5,603,580

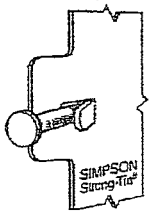

Double Shear Nailing Side View. Do not bend tab back.

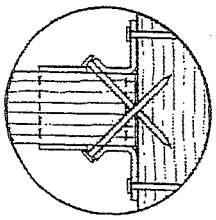

Double Shear Nailing Top View.

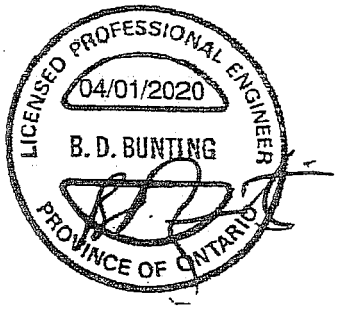

LIMIT STATES DESIGN

This technical bulletin is effective until June 30, 2022, and reflects information available as of April 1, 2020. This information is updated periodically and should not be relied upon after June 30, 2022. Contact Simpson Strong-Tie for current information and limited warranty or see strongtie.com.

© 2020 Simpson Strong-Tie Company Inc.

(800) 999-5099
strongtie.com

Symbols

PLATE LOCATION AND ORIENTATION

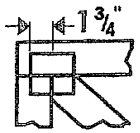

Center plate on joint unless x, y offsets are indicated. Dimensions are in ft-in-sixteenths or mm. Apply plates to both sides of truss and fully embed teeth.

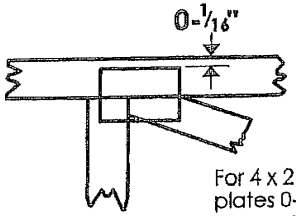

For 4 x 2 orientation, locate plates 0-1/16" from outside edge of truss.

This symbol indicates the required direction of slots in connector plates.

*Plate location details available in MiTek software or upon request.

PLATE SIZE

4 x 4

The first dimension is the plate width measured perpendicular to slots. Second dimension is the length parallel to slots.

LATERAL BRACING LOCATION

Indicated by symbol shown and/or by text in the bracing section of the output. Use T, I or Eliminator bracing if indicated.

BEARING

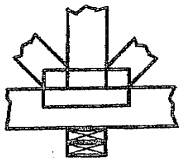

Indicates location where bearings (supports) occur. Icons vary but reaction section indicates joint number where bearings occur.

Industry Standards:

TPIC: Truss Design Procedures and Specifications for Light Metal Plate Connected Wood Trusses

DSB-89: Design Standard for Bracing.

BCSI: Building Component Safety Information, Guide to Good Practice for Handling, Installing & Bracing of Metal Plate Connected Wood Trusses.

Numbering System

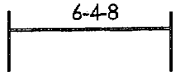

dimensions shown in ft-in-sixteenths or mm (Drawings not to scale)

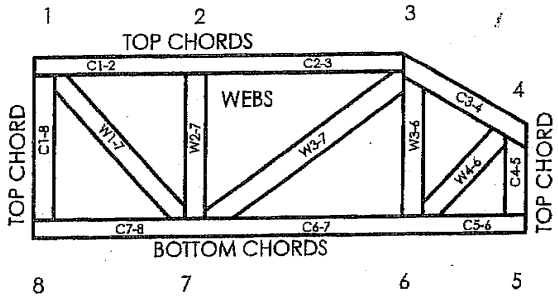

JOINTS ARE GENERALLY NUMBERED/LETTERED CLOCKWISE AROUND THE TRUSS STARTING AT THE JOINT FARTHEST TO THE LEFT.

CHORDS AND WEBS ARE IDENTIFIED BY END JOINT NUMBERS/LETTERS.

PRODUCT CODE APPROVALS

CCMC Reports:

11996-L, 10319-L, 13270-L, 12691-R

© 2007 MiTek® All Rights Reserved

MiTek®

POWER TO PERFORM.™

MiTek Engineering Reference Sheet: MII-7473C rev. 10-'08

General Safety Notes

Failure to Follow Could Cause Property Damage or Personal Injury

1. Additional stability bracing for truss system, e.g. diagonal or X-bracing, is always required. See BCSI.
2. Truss bracing must be designed by an engineer. For wide truss spacing, individual lateral braces themselves may require bracing, or alternative T, I, or Eliminator bracing should be considered.
3. Never exceed the design loading shown and never stack materials on inadequately braced trusses.
4. Provide copies of this truss design to the building designer, erection supervisor, property owner and all other interested parties.
5. Cut members to bear tightly against each other.
6. Place plates on each face of truss at each joint and embed fully. Knots and wane at joint locations are regulated by TPIC.
7. Design assumes trusses will be suitably protected from the environment in accord with TPIC.
8. Unless otherwise noted, moisture content of lumber shall not exceed 19% at time of fabrication.
9. Unless expressly noted, this design is not applicable for use with fire retardant, preservative treated, or green lumber.
10. Camber is a non-structural consideration and is the responsibility of truss fabricator. General practice is to camber for dead load deflection.
11. Plate type, size, orientation and location dimensions indicated are minimum plating requirements.
12. Lumber used shall be of the species and size, and in all respects, equal to or better than that specified.
13. Top chords must be sheathed or purlins provided at spacing indicated on design.
14. Bottom chords require lateral bracing at 10 ft. spacing, or less, if no ceiling is installed, unless otherwise noted.
15. Connections not shown are the responsibility of others.
16. Do not cut or alter truss member or plate without prior approval of an engineer.
17. Install and load vertically unless indicated otherwise.
18. Use of green or treated lumber may pose unacceptable environmental, health or performance risks. Consult with project engineer before use.
19. Review all portions of this design (front, back, words and pictures) before use. Reviewing pictures alone is not sufficient.
20. Design assumes manufacture in accordance with TPIC Quality Criteria.