Mackitecture Construction Notes Part 1 (MCN1)

(February 13, 2023)

CORPORATION OF THE CITY OF OSHAWA
TRUE COPY
OF PERMIT PLANS
Nov 21 2023
PER: _____
CHIEF BUILDING OFFICIAL

MHP 23033

A. Typical Abbreviations

AD	area drain	MECH	mechanical
AFF	above finished floor	MEP	mechanical electri
ALUM	aluminum	MIN	minimum
BFM	by floor manufacturer	OBC	Ontario Building Co
BRM	by roof manufacturer	O/C	on center
BSE	by structural engineer	OH	overhead
BG	fixed glass with black backing	O/O	outside to outside
BM	beam	OSB	oriented strand board
CRF	conventional roof framing	OTA	open to above
COL	column	OTB	open to below
CONC	concrete	PL	point load
CONT	continuous	POLY	polyethylene
CT	ceramic tile	PSL	parallel strand lumber
C/W	complete with	PT	pressure treated
DEMO	demolish	PTD	paint *or* painted
DJ	double joist	PVC	polyvinyl chloride
DN	down	RD	roof drain
D/O	do over	RT	roof truss
DROP	dropped	RWL	rain water leader
DS	downspout	SB	solid bearing
EIFS	exterior insulated finish system	SBFA	solid bearing from above
ELEC	electrical	SJ	single joist
EQ	equal	SPEC	specified *or* specification
EW	each way	SPF	spruce, pine, fir
EXT	exterior	STC	sound transmission coefficient
FA	flat arch	STL	steel
FD	floor Drain	TG	tongue and groove
FG	fixed glass	TJ	triple joist
FL	flush	T/O	top of
FND	foundation	TOC	top of concrete
FRR	fire resistance rating	TOS	top of steel
GT	girder truss	TOW	top of window
HB	hose bib	TYP	typical
HP	high point	UNO	unless noted otherwise
HVAC	heating, ventilating, and air conditioning	U/S	underside
I/I	inside to inside	W/	with
INSUL	insulated *or* insulation	WD	wood
LVL	laminated veneer lumber	WIC	Walk-in closet
LSL	laminated strand lumber	WP	weather proof
MAX	maximum		

B. Common Conversion Factors

Multiply	by	To Obtain / Multiply	by	To Obtain
mm	0.03937	in	25.4	mm
cm	0.3937	in	2.54	cm
m	39.37	in	0.0254	m
m	3.2808	ft	0.3048	m
cm²	0.1550	in²	6.4516	cm²
m²	10.764	ft²	0.0929	m²
m³	35.314	ft³	0.0283	m³
kg	2.205	lb	0.4536	kg
RSI	5.679	R	0.176	RSI
RSI/mm	144	R/in	0.00695	RSI/mm
MPa	145.03	lbf/in² (psi)	0.006895	MPa
kPa	0.14503	psi (lbf/in²)	6.89476	kPa
kg/m²	0.204816	lb/ft²	4.88243	kg/m²
kPa	20.886	lbf/ft²	0.04788	kPa
kW	3412.1	Btu/h	0.000293	kW

C. Legend of Typical Symbols

- 31.4 — Mackitecture Construction Note part 2 (MCN2) reference number
- 26 — Door width reference (inches) (Refer to MCN2 number 6.)
- V — Mechanical Ventilation (Refer to MCN2 number 35.)
- F — Flashing at exterior wall cladding and roofing
- S — Smoke alarm (Refer to MCN2 number 7.)
- C — Carbon monoxide alarm (Refer to MCN2 number 8.)
- EWB1 — Typical construction assembly
- 5 — Structural engineering letter reference number
- 2 — Revision note
- 2 / A5.1 — Drawing or detail number / Sheet number
- #J+#K — Number of required jack and king studs

D. Lintels

Wood Lintels (Refer to MCN2 number 25.)

1 1/2" Conventional Lumber — 2 - 2 x 8 — Nominal width, Nominal depth

Steel Lintel Legend, Size and Span Table

(Refer to MCN2 number 26.)

Table 9.20.5.2.B. Max. Allowable Spans for Stl. Lintels Supporting Masonry Veneer

Label	Angle size (Vert. x Horiz. x Thick.)	90mm Brick	100mm Stone
L2	3 1/2" x 3 1/2" x 1/4" (89 x 89 x 6.4)	8'-1" (2.47m)	7'-6" (2.30m)
L3	4" x 3 1/2" x 1/4" (102 x 89 x 6.4)	8'-9" (2.66m)	8'-1" (2.48m)
L4	4 7/8" x 3 1/2" x 5/16" (127 x 89 x 7.9)	10'-10" (3.31m)	10'-1" (3.08m)
L5	4 7/8" x 3 1/2" x 7/16" (127 x 89 x 11)	11'-5" (3.48m)	10'-8" (3.24m)
L6	4 7/8" x 3 1/2" x 17/32" (127 x 89 x 13)	11'-9" (3.59m)	10'-11" (3.33m)
L7	5 7/8" x 3 1/2" x 7/16" (152 x 89 x 11)	12'-6" (3.82m)	11'-7" (3.54m)
L8	5 7/8" x 3 1/2" x 17/32" (152 x 89 x 13)	13'-4" (4.07m)	12'-4" (3.77m)
L9	5 7/8 x 4" x 17/32" (152 x 102 x 13)	13'-6" (4.12m)	12'-6" (3.82m)
L10	7 1/8" x 4" x 7/16" (178 x 102 x 11)	14'-1" (4.30m)	13'-1" (3.99m)
L11	7 1/8" x 4" x 17/32" (178 x 102 x 13)	15'-1" (4.59m)	13'-11" (4.25m)

E. Stud Wall Reinforcement (9.5.2.3.)

9.5.2.3. Stud Wall Reinforcement

(1) If wood wall studs or sheet steel wall studs enclose the main bathroom in a dwelling unit, reinforcement shall be installed to permit the future installation of the following:

(a) for a water closet, a grab bar described in Clauses 3.8.3.8.(3)(a) and a grab bar described in Clause 3.8.3.8.(3)(c),

(b) for a shower, a grab bar described in Clause 3.8.3.13.(2)(f), and

(c) for a bathtub, a grab bar described in Clause 3.8.3.13.(4)(c).

All grab bars shall be installed to resist a load of at least 1.3 kN applied vertically or horizontally and have a slip-resistant surface. 3.8.3.8.(7)(a) and 3.8.3.8.(7)(d)

All grab bars shall have a clearance of not less than 1 ½" [38] and not more than 2" [50] from the wall to the inside surface of the grab bar 3.8.3.8.(7)(c)

All grab bars shall be not less than 1 3/8" [35] and not more than 1 5/8" [40] in diameter 3.8.3.8.(7)(b)

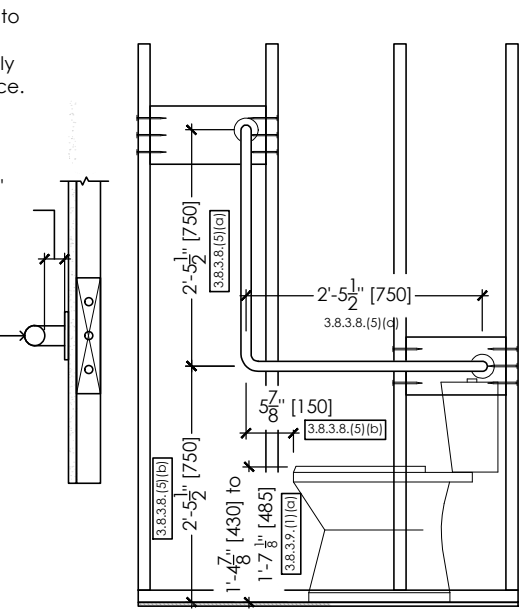

Water Closet Side Elevation

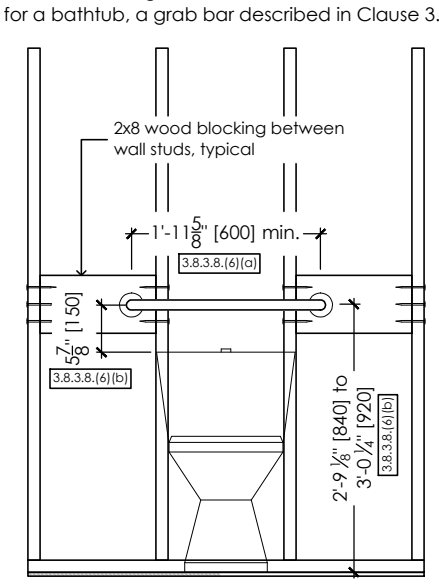

Water Closet Front Elevation

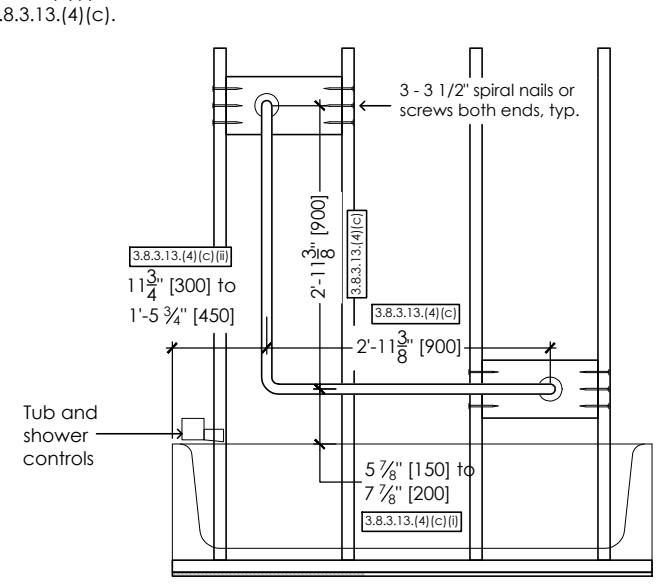

Shower/Tub Wall Side Elevation

(August 17, 2021)

www.mackitecture.ca
21 Simcoe Street South, Oshawa, ON L1H 4G1
Tel: 416-735-8190 Email: info@mackitecture.ca

The undersigned has reviewed and takes responsibility for this design, as well as having the qualifications and requirements mandated by the Ontario Building Code (O.B.C.) to be a Designer.

Qualification Information
Name: Jamie Mack — Signature: 35923
Registration Information: Mackitecture 103532

www.website.com
full address
Tel: 123-456-7890 email: email@email.com

title	marketing	version
-	-	-
project name	municipality	sheet no.
-	-	A1

project no.	drawn by	checked by	date	scale	filename
-	-	-	-	-	DETAILS 14 - POURED CONCRETE STAIRS

MHP 23033

Mackitecture Construction Notes Part 2 (MCN2)

CERTIFICATION OF THE CITY OF OSHAWA
TRUE COPY
OF PERMIT PLANS
Nov 21 2023
PER:
CHIEF BUILDING OFFICIAL

1. General

1.1. All drawings are the property of the Designer. The Designer retains copyright in these documents which may not be used for any other project without the written permission of the Designer.
1.2. All work shall conform to the Ontario Building Code, Ontario 332/12 and all amending regulations, the Ontario Health and Regulations for construction projects and all authorities having over the site.
1.3. Any and all changes and/or deviations from these drawings are to be noted on a set of "As Built" drawings maintained by the General Contractor or Project Manager.
1.4. All dimensional information and grades shown on drawings must be verified on site and any discrepancies reported to the Designer prior to commencing work, Drawings must not be scaled.
1.5. No responsibility is hereby assumed for details and information not contained in these drawings.
1.6. All Specifications and materials proposed by engineers shall be used in place of specifications and materials identified in Mackitecture Construction Notes.
1.7. All manufactured items to be installed in accordance with manufacturers printed instructions. Submit all installation instructions to owner upon completion of job.

2. Thermal Insulation (9.25.2.)

2.1. All walls, ceilings and floors separating heated space from unheated space, the exterior air or the exterior soil shall be provided with thermal insulation in conformance with Section 12.2. to prevent moisture condensation on their room side during the winter and to ensure comfortable conditions for the occupants. (9.25.2.1.)
2.2. Insulation in contact with the ground shall be inert to the action of soil and water and be such that its insulative properties are not significantly reduced by moisture.
2.3. MCN2 does not specify the required minimum thermal performance value of the building envelope component. The thermal performance values are specified in MCN1 item F. Energy Efficiency Design Summary (EEDS) table or on an attached EEDS report.
2.4 All foamed plastics shall be protected with 1/2" gypsum board interior finish per sentence 9.10.17.10.(1) of the OBC

3. Air Barrier Systems (9.25.3.)

3.1. Wall, ceiling and floor assemblies that separate conditioned spaces from unconditioned spaces or from the ground shall be constructed so as to include an air barrier system that will provide a continuous barrier to air leakage from the interior of the building into wall, floor, attic or roof spaces sufficient to prevent excessive moisture condensation in such spaces during the heating season, and from the exterior inward sufficient to prevent moisture condensation on the room side during the heating season.

4. Vapour Barriers (9.25.4.)

4.1. Thermally insulated wall, ceiling and floor assemblies shall be constructed with a vapour barrier sufficient to prevent condensation in the wall spaces, floor spaces or attic or roof spaces.

5. Windows (9.7.)

5.1. Windows in dwelling units shall comply with 9.7.5.3. Resistance to Forced Entry for Windows
5.2. A guard or a window with a maximum restricted opening width of 4" (100) is required where the top of the window sill is located less than 1'-7" (480) above fin. floor and the distance from the finished floor to the adjacent grade is greater than 5'-11" (1800). (9.8.8.1.)
5.3. Windows in exit stairways that extend to less than 2'-11" (900) shall be protected by guards in accordance with MCN1 33. or the window shall be non-operable and designed to withstand the specified loads for balcony guards as provided in 9.8.8.2
5.4 **Egress Requirements for Basements with Bedrooms**
At least 1 outside window in the basement shall provide the minimum egress requirements described in O.B.C. section (**9.9.10. Egress from Bedrooms.**). The egress window shall be openable from the inside without the use of tools, provide an individual, unobstructed open portion having a minimum area of 3.85 sq ft (0.35 sq m) with no dimensions less than15" (380mm) and maintains the required opening without the need for additional support. The 3'-3" (1.0m) minimum required sill height for egress windows do not apply to basement areas. When sliding windows are used, the minimum required dimension shall apply to the openable portion of the window. Where a window opens into a window well, a clearance of not less than 21 5/8" (550) shall be provided in front of the window. Where the sash of an egress window swings towards the window well, the operation of the sash shall not reduce the clearance in a manner that would restrict escape in an emergency. Where a protective enclosure is installed over the window well, such enclosure shall be openable from the inside without the use of keys, tools or special knowledge of the opening mechanism.

6. Doors (9.7.)

6.1. Minimum Thermal Resistance (SB-12, 3.1.1.10.): Except for doors in enclosed unheated vestibules and cold cellars, and except for glazed portions of doors, all doors that separate heated space from unheated space shall have a thermal resistance of not less than RSI 0.7 where a storm door is not provided.
6.2. All doors that separate heated space from unheated enclosed spaces shall have an insulated core and be installed with weatherstripping.
6.3. Entrance doors to dwelling units shall comply with 9.7.5.2. Resistance to Forced Entry for Doors.

7. Smoke Alarms (9.10.19)

7.1. Smoke alarms conforming to ULC-S531 shall be installed shall be installed in conformance with CAN/ULC-S553.
7.2. One smoke alarm shall be installed on each storey, including basements. Any storey of a dwelling unit containing sleeping rooms a smoke alarm shall be installed in each sleeping room and in a location between the sleeping rooms and the remainder of the storey. If the sleeping rooms are served by a hallway, the smoke alarm shall be located in the hallway.
7.3. Smoke alarms shall be installed on or near the ceiling and shall have a visual signalling component conforming to 9.10.19.3.(3) and (4).
7.4. Smoke alarms shall be installed with permanent connections to an electrical circuit and have no disconnect switch between the overcurrent device and the smoke alarm. In case the regular power supply to the smoke alarm is interrupted is shall be provided with a battery as an alternative power source that can continue to provide power to the smoke alarm for a period of not less than 7 days in the normal condition, followed by 4 min of alarm. Smoke alarms shall be wired so that the activation of one alarm will cause all alarms within the dwelling unit to sound.

8. Carbon Monoxide Alarms (9.33.4.)

8.1. A carbon monoxide alarm shall be installed adjacent to each sleeping area in a dwelling unit. Carbon monoxide alarms shall be permanently connected to an electrical circuit and shall have no disconnect switch between the overcurrent device and the carbon monoxide alarm. The alarm shall be be wired so that its activation will activate all carbon monoxide alarms within the dwelling and be equipped with an alarm that is audible within bedrooms when the intervening doors are closed.

9. Bearing Capacity

9.1. Concrete or unit masonry foundation walls and concrete footings not subject to surcharge shall bear on stable soils (firm clay) with an allowable bearing pressure of 75 kPa or greater for buildings of wood frame or masonry construction. (9.15.1.1.(1)(a)).

10. Excavation (9.12)

10.1. Every excavation shall be undertaken in such a manner to prevent damage to adjacent property, existing structures, utilities, roads and sidewalks at all stages of construction (9.12.1.4.(1)).
10.2. The topsoil and vegetable matter in all unexcavated areas under a building shall be removed (9.12.1.1.(1)).
10.3. The bottom of every excavation shall be free of all organic material (9.12.1.1.(3)).
10.4. Excavations shall be kept free of standing water (9.12.1.2.(1)).
10.5. Material shall not be placed nor shall equipment be operated or placed in or adjacent to an excavation in a manner that may endanger the integrity of the excavation or its supports (9.12.1.4.(2)).
10.6. Excavations for foundations shall extend to undisturbed soil (9.12.2.1.)
10.7. The minimum depth of foundations below finished ground level shall be 4'-0" (1.2m). (9.12.2.2.)

11. Drainage

11.1. 100 (4") Ø drain tile or pipe shall be laid on undisturbed or well-compacted soil so that the top of the tile or pipe is below the bottom of the floor slab or the ground cover of the crawl space. Protect perforated drain pipes from sand and sediment clogging with a drain-sleeve. Cover the pipe with 150 (6") crushed stone cover (9.14.3.).
11.2. The building shall be located or the building site graded so that water will not accumulate at or near the building and will not adversely affect adjacent properties. (9.14.6.1.)
11.3. Every window well shall be drained to the footing level or other suitable location with a 4" (100) weeping tile c/w a filter cloth wrap and filled with crushed stone.
11.4. Where downspouts are provided and are not connected to a sewer, extensions shall be provided to carry rainwater away from the building in a manner that will prevent soil erosion. (9.26.18.2.)

12. Poured Concrete Footings (9.15.3.)

12.1. Poured concrete footings shall rest on undisturbed soil, rock or compacted granular fill and have a minimum compressive strength of 15MPa.
12.2. Strip footings shall have a continuous shear key to provide lateral support of the wall above or 18" long 15M dowels at 3'-0" o/c max. to tie the strip footing to the foundation wall.
12.3. Where step footings are used the vertical rise between horizontal portions shall not exceed 24" and the horizontal distance between risers shall be not less than 24" mm. (9.15.3.9.)

(February 13, 2023)

13. Poured Concrete Foundation Walls

13.1. 15MPa (2200 psi) poured conc. foundation wall on continuous concrete footing. The outside of the foundation shall be damproofed from the top of the footing to finished grade and brush coated from the top to 2" below grade. Provide an approved drainage layer on the outside of the foundation wall. Seal the drainage layer at the top. The top of the conc. footing shall be damproofed.
Access the foundation wall at garage doors, person-doors and hydro services.
13.3. Foundation Reduction in Thickness for Floor Joists
Where the top of a foundation wall is reduced in thickness to permit the installation of floor joists, the reduced section shall be not more than 350 mm high and not less than 90 mm thick. (9.15.4.7.(1))
13.4. Foundation Reduction in Thickness for Masonry
Where the top of a foundation wall is reduced in thickness to permit the installation of a masonry exterior facing, the reduced section shall be not less than 90 mm thick, and tied to the facing material with metal ties conforming to Sentence 9.20.9.4.(3) spaced not more than 200 mm o.c. vertically, and 900 mm o.c. horizontally. The space between wall and facing shall be filled with mortar. (9.15.4.7.(2)(3))

14. Concrete Floor Slabs

14.1. Basement Floor Slabs (9.16.): 80 (3") minimum 25 MPa (3600psi) concrete slab on 100 (4") coarse granular fill, or 20MPa (2900psi) conc. with dampproofing below slab. Provide 1/2" (12.7) impervious board for bond break at edge of slab. Where a basement slab is within 24" (610) of the exterior grade provide rigid insulation around the perimeter extending minimum 610 (24") below grade. For slab on grade conditions rigid insulation shall be applied to the underside of the entire slab.
14.2. Garage Floor Slab (9.16.): 4" (100) 32MPa (4640psi) concrete slab with 5-8% air entrainment on optional 4" (100) coarse granular fill with compacted sub-base or compacted native fill. Slope to front @ minimum 1.5%.
14.3. Concrete Floor Slab over Cold Room (9.39): For max. 8'-2" (2500) porch depth, 5" (127) 32 MPa (4640psi) conc. slab w/ 5-8% air entrainment. Reinf. with 10M bars @ 7 7/8" (200) o.c. each direction, w/ 1 1/4" (30) clear cover from bottom of slab to first layer of bars & second layer of bars laid directly on top of lower layer in opposite direction. The slab shall bear not less than 75 mm on the supporting foundation walls and be anchored to the walls with 600 mm x 600 mm 10M bent dowels spaced at not more than 600 mm o.c. Exposed slabs shall be sloped to effectively shed water away from the exterior wall.
14.4. Concrete Floor Slab on Grade (9.16.): Minimum 4" (100) 32 MPa (4640psi) concrete slab w/ 5-8% air entrainment on 4" (100) coarse granular fill on compacted sub-grade or undisturbed soil.

15. General Wood Frame Construction

15.1. All lumber shall be spruce-pine-fir No. 1 & 2, and shall be identified by a grade stamp. (9.3.2.)
15.2. Wood framing members that are supported on concrete, in contact with the ground or fill shall be separated from the concrete by not less than 0.05 mm polyethylene film or Type S roll roofing. (9.23.2.3.)

16. Fasteners (9.23.3.)

16.1. Nailing of framing shall conform to Table 9.23.3.4.
16.2. Fastening of sheathing and subflooring shall conform to Table 9.23.3.5.

17. Notching and Drilling (9.23.5.)

17.1. Holes in floor, roof and ceiling members to be not larger than 1/4 the actual depth of member and not less than 50mm from edges. (9.23.5.1.)
17.2. Notches in Floor, roof and ceiling framing members are to be located on the top of the member within half the joist depth from the edge of bearing and is not deeper than one-third the joist depth. (9.23.5.2.)
17.3. Wall studs may be notched or drilled provided that no less than 2/3 the depth of the stud remains, if load bearing, and 40mm if non-load bearing, unless the weakened studs are suitably reinforced. (9.23.5.3.)
17.4. Roof truss members shall not be notched, drilled or weakened unless accommodated in the design. (9.23.5.4.)

18. Sill Plates

18.1. Minimum 2x4 (38x89) sill plate with 1/2" (12.7) Ø x anchor bolts embedded minimum 4" (100) into concrete space at maximum 7'-10" (2400) o/c. Provide continuous caulking or gasket between the plate and foundation. Use non-shrink grout to level the sill plate when required.

19. Steel Beams

19.1. All steel beams shall conform to OBC 9.23.4.3. unless noted otherwise.
19.2. Steel beams shall have a minimum bearing length of 3 1/2" (90) (9.23.8.1.).
19.3. Steel beams shall meet or exceed the requirements for 350 W steel in CSA G40.21-04.
19.4. All welding shall be performed by a Canadian Welding Bureau certified welder and conform to all applicable standards.
19.5. Provide sufficient lateral support for steel beams to prevent lateral torsional buckling. Sufficient lateral support examples:
19.5.1. Dropped steel beam: 19 mm x 38 mm wood strips in contact with top flange are nailed on both sides of the the beam to the bottom of the joist supported (9.23.4.3.(3))
19.5.2. Dropped steel beam: A 2x6 top plate w/ 3/8" thru-bolts c/w nuts and washers or Hilti X-U fasteners @ 24" o.c. staggered into the top flange & 2-3 1/4" nails from each joist into the top plate.
19.5.3. Flush steel beam: Solid blocking (2x lumber and plywood) bolted to the beam web with 1/2" dia. thru-bolts @ 16" o.c. staggered top and bottom and approved face-mount hangers for the joist to blocking connection

20. Steel Columns

20.1. All steel columns shall conform to OBC 9.17.3. unless noted otherwise.
20.2. Steel pipe columns shall have an outside diameter of not less than 73 mm and a wall thickness of not less than 4.76 mm.
20.3. Steel pipe columns shall be fitted with not less than 100 mm by 100 mm by 6.35 mm thick steel plates at each end, and where the column supports a wooden beam, the top plate shall extend across the full width of the beam.
20.4. Exterior steel columns susceptible to corrosion shall be treated on the outside surface with at least one coat of rust-inhibitive paint.
20.5. All steel columns shall be laterally supported top and bottom (e.g. by concrete slab on grade, 2-3/8" dia. bolts, or 2" of 1/4" fillet weld min.) Continue all columns down to foundation or full bearing on beams. Block solid in joist spaces, Typical.

21. Wood Columns

21.1. Columns shall be centrally located on a footing conforming to OBC 9.15.
21.2. Columns shall be securely fastened to the supported member to reduce the likelihood of lateral differential movement between the column and the supported member. columns shall be laterally supported directly or by connection to the supported members.
21.3. The width or diameter of a wood column shall be not less than the width of the supported member.
21.4. Columns shall be not less than 184 mm for round columns and 140 mm by 140 mm for rectangular columns
21.5. Wood columns shall be separated from concrete in contact with the ground by 0.05 mm polyethylene film or Type S roll roofing.

22. Floor Joists

22.1. Minimum end bearing for joists shall be 1 1/2"
22.2. Where indicated provide 1"x3" at 6'-11" o.c. wood strapping unless a panel type ceiling finish is applied.
22.3. Where indicated provide 2"x2" cross bridging or solid blocking @ 6'-11" o.c. max.
22.4. Minimum subfloor thickness shall be 5/8" tongue-and-groove plywood or OSB O-2 grade.
22.5. Double floor joists below non-load bearing walls or provide solid wood blocking @ 48" o.c.

23. Wall Studs (9.23.10.)

23.1. Bearing partitions shall be a minimum 2x4 (38x89) @ 16" (406) o.c. for 2 storey and 12" (305) o.c. for 3 storey
23.2. Non-bearing partitions shall be minimum 2x4 (38x89) @ 24" (610) o.c.
23.3. Wall plates shall be minimum 1 1/2" thick and not less then the width of the wall.
23.4. A bottom wall plate shall be provided in all cases. The bottom plate in exterior walls shall not project more than one-third the plate width over the support.
23.5. No fewer than two top plates shall be provided in loadbearing walls.
23.6. Where load-bearing interior walls are not finished, blocking or strapping shall be fastened to the studs at mid-height to prevent sideways buckling.

24. Stud Posts

24.1. The width of the stud post shall be not less than the width of the girder or beam that it supports.
24.2. The number of studs in a wall directly below a girder truss or roof beam shall conform to Tables A-34 to A-37, provided, the studs are nailed together to form a post with not less than 76 mm nails spaced not more than 300 mm o.c.

25. Wood Lintels (9.23.12.)

25.1. All lintels shall have 1 jack stud and 1 king stud at ends UNO.
25.2. Spans and sizes of wood lintels shall conform to the spans shown in Tables A-12 and A-15 of the OBC. (9.23.12.3). Refer to MCN1 item D.

26. Steel Lintels

26.1. Masonry over openings shall be supported on corrosion resistant or prime painted steel lintels with a minimum of 150mm end bearing and shall bear on masonry, concrete or steel. (9.20.5.2.)
26.2. Steel angle lintels supporting masonry veneer above openings shall conform to Table 9.20.5.2.B. (9.20.5.2.(3)). Refer to MCN1 item D. for Steel Lintel Legend, Size and Span table.

27. Storage Garages

27.1. Where a storage garage is attached to or built into a building of residential occupancy, an air barrier system shall be installed between the garage and the remainder of the building to provide an effective barrier to gas and exhaust fumes, and every door between the garage and the remainder of the building shall be tight-fitting and weatherstripped to provide an effective barrier against the passage of gases and exhaust fumes and shall be fitted with a self-closing device. Where membrane materials are used to provide the required air tightness in the air barrier system, all joints shall be sealed and structurally supported.

28. Assemblies and Details

28.1. Stud Wall Reinforcement (9.5.2.3.). See "detail E" on construction sheet.
28.2. Refer to project wall sections and details.

29. Floor Assemblies

29.1. Exposed Floor to Exterior: Provide 6 mil poly vapour barrier between floor sheathing and floor framing, insulation with approved minimum R value with an approved vented soffit. The vapour barrier can be omitted if the insulating material provides the minimum required vapour barrier.

30. Pre-engineered Systems

30.1. All pre-engineered systems (roof trusses, floor joists, etc.) shall be designed and sealed by a licensed Professional Engineer of Ontario. Provide layouts and sealed design sheets to Mackitecture and local building building division.

31. Roof Assemblies

31.1. Typical Roof and Overhang Construction: Minimum 210 lb (10.25 kg/m2) asphalt or fiberglass shingles on 3/8" plywood sheathing with "h" clips on approved wood trusses @ 24" (600) o.c. or conventional roof framing. Approved eaves protection to extend 36" (900) from edge of roof and min. 12" (305) beyond inner face of exterior wall, 2"x4"(38x89) truss bracing @ 6'-0" (1830) o.c. at bottom chord. Prefin. alum. eavestrough, fascia, RWL & vented soffit. Eavestrough to be 4" min. with RWL connected to storm sewers or to discharge onto concrete splash pads as per municipal requirements. Townhouses to have 5" (127) min. eavestrough with elec. traced heater cable along eavestrough and down RWL.
31.2. Conventional Roof Framing: 2"x6" (38x140) rafters @ 16" (406) o.c., 2"x8" (38x184) ridge board. 2"x4" (38x89) collar ties at mid-span. Ceiling joists to be 2"x4" (38x89) @ 16" (406) o.c. for max. 9'-3" (2819) span & 2"x6" (38x140) @ 16" (406) o.c. for max. span 14'-7" (4450). Rafters for built up roof over pre-engineered roof trusses and or conventional framing to be 2"x4" (38x89) @ 24" (610) o.c. unless otherwise specified.
31.3. Ice and Water Shield: Provide ice and water shield in the areas indicated. The ice and water shield shall be a self adhering and self sealing membrane. Side laps must be a minimum 3 1/2" (90) and end laps a minimum 6" (150) and extend up walls a minimum 12" (300).
31.4. Exposed Ceiling: Provide thermal insulation with 6 mil poly vapour barrier and 1/2" gypsum board finish.
31.5. Attic Access: 21 1/2" x 28 1/2" attic access hatch with weather stripping. Attic access hatch shall have a min. area of 0.32 m2 and no dim. less than 21 1/2" (545). Hatchways to the attic or roof space will be fitted with doors or covers and will be insulated with min. R20 (RSI 3.52) (SB-12 3.1.1.8.(1))

32. Stairs

32.1 Stair Width: Required exit stairs serving a house or an individual dwelling unit shall have a width of not less than 2'-10".
32.2. Height over stairs: The clear height over stairs shall be measured vertically, over the clear width of the stair, from a straight line tangent to the tread and landing nosings to the lowest point above, and not less than 6'-5" for stairs serving a single dwelling unit. (9.8.2.2.)
32.3. Maximum Height of Flights: The vertical height shall not exceed 12'-1 1/2"
32.4. Rise for Rectangular Treads, Tapered Treads and Winders and Run for Rectangular Treads shall conform to Table 9.8.4.1.
Table 9.8.4.1.

	Rise for All Steps		Run for Rectangular Treads	
	Max.	Min.	Max.	Min.
Private	7 7/8" (200)	4 7/8" (125)	13 7/8" (355)	10 1/16" (255)
Public	7 1/8" (180)	4 7/8" (125)	no limit	11" (280)

32.5. The depth of a rectangular tread shall be not less than its run and not more than its run plus 1" (25).
32.6. Tapered treads shall have a run that is not less than 6" at the narrow end of the tread, and complies with the dimensions for rectangular treads specified in Table 9.8.4.1. when measured at a point 11 7/8" from the centre line of the inside handrail. Tapered treads in required exit stairs shall conform to the requirements in Article 3.4.6.9. The depth of a tapered tread shall be not less than its run at any point and not more than its run at any point plus 1".
32.6 Uniformity and Tolerances for Risers and Treads shall comply with articles 8.8.4.4. and 9.8.4.4A.
32.7. Winders shall comply with article 9.8.4.5.
32.8. Exterior and Garage Steps: For the required number of steps refer to siting and grading drawings. Exterior concrete stairs with more than 2 risers and 2 treads shall be provided with foundation as required by article 9.8.9.2. or shall be cantilevered as per subsection 9.8.10. Exterior wood steps shall not be in direct contact with the ground unless suitably treated with a wood preservative.

33. Handrails

33.1. For stairs or ramps serving a single dwelling unit, at least one required handrail shall be continuous throughout the length of the stair or ramp, except where interrupted by, doorways, landings or newel posts at changes in direction.
33.2. Handrails shall be terminated in a manner that will not obstruct pedestrian travel or create a hazard.
33.3. The height of handrails on stairs and ramps shall be measured vertically from the top of the handrail to, a straight line drawn tangent to the tread nosings of the stair served by the handrail, or the surface of the ramp, floor or landing served by the handrail.
33.4. The height of handrails on stairs and ramps shall be not less than 34 1/8" (865) and not more than 42 1/8" (1070).
33.5. A clearance of not less than 50 mm shall be provided between a handrail and any surface behind it.
33.6. All handrails shall be constructed so as to be continually graspable along their entire length with no obstruction on or above them to break a handhold, except where the handrail is interrupted by newels at changes in direction.
33.7. Handrails and projections below handrails, including handrail supports and stair stringers, shall not project more than 4" (100) into the required width of a stair or ramp.

34. Guards

34.1. Guards are required where there is a difference in elevation of more than 23 5/8" (600) between the walking surface and the adjacent surface.
34.2. When an interior stair has more than two risers the sides of the stair and the landing or floor level around the stairwell shall be protected by a guard on each side that is not protected by a wall.
34.3. Doors in buildings of residential occupancy, where the finished floor on one side of the door is more than 23 5/8" (600) above the floor or other surface or ground level on the other side of the door, shall be protected by a guard in accordance with this Subsection, or a mechanism capable of controlling the free swinging or sliding of the door so as to limit any clear unobstructed opening to not more than 4" (100).
34.4. Guards are not required for windows when the top surface of the window sill is located more than 18 7/8" (480) above the finished floor on one side of the window, or the window is located in a room or space with the finished floor is located less than 5'-10 7/8" (1800) above the floor or ground on the other side of the window.
34.5. In dwelling units, glazing installed over stairs, ramps and landings that extends to less than 35" (900) above the surface of the treads, ramp or landing shall be protected by guards or non-openable and designed to withstand the specified lateral loads for guards as provided in Article 4.1.5.14.
34.6. Guards shall be designed to resist the specified loads prescribed in Table 9.8.8.2. or constructed in accordance with the requirements in MMAH Supplementary Standard SB-7, "Guards for Housing and Small Buildings".
34.7. All guards within dwelling units shall be not less than 35 7/16" (900) high.
34.8. Exterior guards serving not more than one dwelling unit shall be not less than 35 7/16" (900) high where the walking surface served by the guard is not more than 5'-10 7/8" (1800) above the finished ground level.
34.9. The height of guards shall be not less than 36 1/4" (920) for required exit stairs, and 42 1/8" (1070) around landings. (9.8.8.3.(5))
34.10. Openings through any required guard shall be of a size that will prevent the passage of a spherical object having a diameter of 4" (100 mm). (9.8.8.5.)
34.11. Guards shall be designed so that no member, attachment or opening located between 6" and 35" (140 mm and 900 mm) above the floor or walking surface protected by the guard will facilitate climbing. (9.8.8.6.)
34.12. Glass in guards shall be safety glass of the laminated or tempered type conforming to CAN/CGSB-12.1-M, "Tempered or Laminated Safety Glass", or wired glass conforming to CAN/CGSB-12.11-M, "Wired Safety Glass".

35. Ventilation

35.1. Laundry Drying Exhaust: A clothes dryer exhaust duct system shall conform to Part 6. (9.32.1.1.(5), 6.2.3.8.(7))
35.2. Mechanical Exhaust Fan for Natural Ventilation: Where a room or space is not provided with natural ventilation, mechanical ventilation shall be provided to exhaust inside air from or to introduce outside air to that room or space at the rate of one half air change per hour if the room or space is mechanically cooled in summer, and one air change per hour if it is not. (9.32.1.3.). Exhaust systems shall discharge directly to the outdoors. (6.2.3.8.)
35.3. Furnace Venting: Direct vent furnace terminal min. 3'-0" (915) from a gas regulator. Minimum 12" (305) above finished grade, and all openings, exhaust vents and intake vents. HRV intake to be a min. of 6'-0" (1830) from all exhaust vents. Refer to Gas Utilization Code.
35.4. Cooking Appliance Exhaust Fan: Ductwork for cooking appliance exhaust fans shall, be of noncombustible, corrosion-resistant material and lead directly to the outdoors without connection to other exhaust fans or ducts. Ductwork for cooking appliance exhaust fans shall be equipped with a grease filter at the intake. (9.32.3.10.(6))
35.5. Gas Fireplace Venting: Direct vent gas fireplace vent to be a min. 12" (305) from any opening and above fin. grade. Refer to Gas Utilization Code.
35.6. Roof Vents (Static Roof Vents): Provide static roof vent. The unobstructed vent area shall be not less than 1/300 of the insulated ceiling area. Roof vents shall be uniformly on opposite sides of the building, with not less than 25% of the required openings located at the top of the space, and with not less than 25% of the required openings located at the bottom of the space. (9.19.1.2.)

www.mackitecture.ca
21 Simcoe Street South, Oshawa, ON L1H 4G1
Tel: 416-735-8190 Email: info@mackitecture.ca

The undersigned has reviewed and takes responsibility for this design, as well as having the qualifications and requirements mandated by the Ontario Building Code (O.B.C.) to be a Designer.

Qualification Information
Name: Jamie Mack 35923 — Signature
Registration Information: Mackitecture 103532

www.website.com
full address
Tel: 123-456-7890 email: email@email.com

title	marketing	version
-	-	-
project name	municipality	sheet no.
-	-	A2

project no.	drawn by	checked by	date	scale	filename
-	-	-	-		- DETAILS 14 - POURED CONCRETE STAIRS

CONSTRUCTION NOTES (UNLESS OTHERWISE NOTED)

ALL CONSTRUCTION TO ADHERE TO THESE PLANS AND SPEC'S AND TO CONFORM TO THE ONTARIO BUILDING CODE AND ALL OTHER APPLICABE CODES AND AUTHORITIES HAVING JURISDICTION. THESE REQUIREMENTS ARE TO BE TAKEN AS MINIMUM SPECIFICATIONS. ONT. REG. 332/12 - 2012 OBC.

CORPORATION OF THE CITY OF OSHAWA
TRUE COPY
OF PERMIT PLANS
Nov 21 2023
PER:
CHIEF BUILDING OFFICIAL

1 ROOF CONSTRUCTION (*SEE OBC 9.19.)

NO. 210 (10.25kg/m2) ASHPHALT SHINGLES. 10mm (3/8") PLYWOOD SHEATHING WITH "H" CLIPS. APPROVED WOOD TRUSSES @600mm 24" o.c. MAX. APPROVED EAVE PROTECTION TO EXTEND 900mm (3'-0") FROM EDGE OF ROOF AND MIN. 300mm (12") BEYOND INNER FACE OF EXTERIOR WALL, 38x89 (2"x4") TRUSS BRACING @ 1830mm (6'-0") o.c. AT BOTTOM CHORD. PREFIN. ALUM. EAVESTROUGH, FASCIA, RWL & VENTED SOFFIT. PROVIDE ICE & WATER SHIELD TO ALL ROOF / WALL SURFACES SUSCEPTIBLE TO DAMMING. ROOF SHEATHING TO BE FASTENED 150 (6") c.c. ALONG EDGES & INTERMEDIATE SUPPORTS WHEN TRUSSES SPACED GREATER THAN 406 (16"). ATTIC VENTILATION 1:300 OF INSULATED CEILING AREA WITH 50% AT EAVES.

2 FRAME WALL CONSTRUCTION (2"x6")

SIDING, HARDIE BOARD, STUCCATO BOARD OR EQUAL AS PER ELEVATION, 19X64 (1"x3") VERTICAL WOOD FURRING, APPROVED SHEATHING PAPER, 7/16" O.S.B. EXTERIOR SHEATHING OR OBC COMPLIANT EQUIVALENT. 38X140 (2"X6") STUDS @ 400MM (16") O.C. W/APPROVED DIAGONAL WALL BRACING, RSI 3.87 (R22) INSULATION AND APPROVED VAPOUR BARRIER AND APPROVED CONT. AIR BARRIER, 13mm (1/2") INT. DRYWALL FINISH.

3 BRICK VENEER CONSTRUCTION (2"x6")

90mm (4") FACE BRICK 25mm (1") AIR SPACE, 22x180x0.76mm (7/8"x7"x0.03") GALV. METAL TIES @ 400mm (16") o.c. HORIZONTAL 600mm (24") o.c. VERTICAL. APPROVED SHEATHING PAPER, 7/16" O.S.B. EXTERIOR SHEATHING OR OBC COMPLIANT EQUIVALENT. 38x140 (2"x6") STUDS @ 400mm (16") o.c. W/APPROVED DIAGONAL WALL BRACING, RSI 3.87 (R22) INSUL. APPROVED VAPOUR BARRIER AND APPROVED CONT. AIR BARRIER, 13mm (1/2") INT. DRYWALL FINISH. PROVIDE WEEP HOLES @ 800mm (32") o.c. BOTTOM COURSE AND OVER OPENINGS. PROVIDE BASE
FLASHING UP MIN. 150mm (6") BEHIND BUILDING PAPER.

3A STUCCO WALL CONSTRUCTION (2"x6")

STUCCO CLADDING SYSTEM CONFIRMING TO OBC9.27.1.1.(2) & 9.28 THAT EMPLOY A MINIMUM 6mm (1/4") DRAINAGE CAVITY BEHIND THE CLADDING WITH POSITIVE DRAINAGE TO THE EXTERIOR AND APPLIED AS PER MANUFACTURERS SPECIFICATION ON 25mm (1") MINIMUM EXTRUDED OR EXPANDED RIGID INSULATION, APPROVED SHEATHING PAPER, 7/16" O.S.B. EXTERIOR SHEATHING OR OBC COMPLIANT EQUIVALENT. 38x140 (2"x6") STUDS @ 400mm (16") o.c. W/APPROVED DIAGONAL WALL BRACING, RSI 3.87 (R22) INSUL. APPROVED VAPOUR BARRIER AND APPROVED CONT. AIR BARRIER, 13mm (1/2") INT. DRYWALL FINISH. STUCCO TO BE MIN.200mm (8") ABOVE FINISH GRADE.

4 INTERIOR STUD PARTITIONS

(*SEE OBC 9.23.10.&9.23.11.)

BEARING PARTITION 38x89 (2"x4") @ 400mm (16") o.c. FOR 2 STOREYS AND 300mm (12") o.c. FOR 3 STOREYS. NON-BEARING PARTITIONS 38x89 (2"x4") @ 600mm (24") o.c.. PROVIDE 38x89 (2"x4") BOTTOM PLATE AND 2/38x89 (2-2"x4") TOP PLATE. 13mm (1/2") INTERIOR DRYWALL BOTH SIDES OF STUD, PROVIDE 38x140 (2"x6") STUDS/PLATES WHERE NOTED.

5 FOUNDATION WALL/FOOTINGS:

(*SEE OBC 9.15.3 & 9.15.4.)

MIN. 200mm (8") POURED CONC. FDTN. WALL 15MPa (2200psi) WITH BITUMENOUS DAMPROOFING AND DRAINAGE LAYER. MIN. 480x155 (19"x6") CONTIN. KEYED CONC. FTG. BRACE FOUNDATION WALL PRIOR TO BACKFILLING. ALL FOOTINGS SHALL REST ON NATURAL UNDISTURBED SOIL WITH MINIMUM BEARING CAPACITY OF 120kPa (17.4 psi) OR GREATER.

STRUDET INC.
REGISTERED PROFESSIONAL ENGINEER
B. MARINKOVIC
PROVINCE OF ONTARIO
FOR STRUCTURE ONLY

6 WEEPING TILE (* SEE OBC 9.14.3.)

100mm (4") DIA. WEEPING TILE 150mm (6") CRUSHED STONE OVER AND AROUND WEEPING TILES.

7 BASEMENT SLAB (*SEE OBC 9.16.-)

80mm (3") MIN. 25MPa (3600psi) CONC. SLAB ON 100mm (4") COARSE GRANULAR FILL, OR 15MPa (2200psi) CONC. WITH DAMPROOFING BELOW SLAB.

8 WOOD SUBFLOORS (*SEE OBC 9.23.14. & 9.30.2.)

19mm (3/4") T&G SUBFLOOR UNDER GROUND FLOOR FINISH FLOOR.
16mm (5/8") T&G SUBFLOOR UNDER SECOND FLOOR FINISH FLOOR.
16mm (5/8") PANEL-TYPE UNDERLAY FOR CERAMIC TILE APPLICATION.
6mm (1/4") PANEL-TYPE UNDERLAY UNDER RESILIENT & PARQUET FLOORING.

9 ROOF INSULATION (*SEE SB12 - 2.1.1.2.A & 2.1.1.7)

RSI 10.57 (R60) ROOF INSULATION AND APPROVED VAPOUR BARRIER, 16mm (5/8") INT. DRYWALL FINISH OR APPROVED EQUAL.

10 ALL STAIRS/EXTERIOR STAIRS (*SEE OBC 9.8.-)

MAX. RISE	=200	(7 7/8")	
MIN. RUN	=255	(10 1/4")	
MIN. TREAD	=280	(11")	
MAX. NOSING	=25	(1")	
MIN. HEADROOM	=1950	(6'-5")	
RAIL @ LANDING	=900	(2'-11")	
RAIL @ STAIR	=865	(2'-10")	TO 965 (3'-2")
MIN. STAIR WIDTH	=860	(2'-10")	
FOR CURVED STAIRS			
MIN. AVG. RUN	= 200	(8")	
MIN. RUN	= 150	(6")	

11 RAILING (*SEE OBC 9.8.8.)

FINISHED RAILING ON PICKETS SPACED MAXIMUM 100mm (4") BETWEEN PICKETS.

INTERIOR GUARDS:	= 900mm	(2'-11") MIN.
EXTERIOR GUARDS:	= 1070mm	(3'-6") MIN.

12 SILL PLATE (*SEE OBC 9.23.6 & 9.23.7.)

38x89 (2"x4") SILL PLATE WITH 13mm (1/2") DIA. ANCHOR BOLTS 200mm (8") LONG, EMBEDDED MIN. 100mm (4") INTO CONC. @ 2400mm (7'-10") o.c. CAULKING OR 25 (1") MIN. MINERAL WOOL BETWEEN PLATE AND TOP OF FDTN. WALL. USE MORTAR TO LEVEL SILL PLATE WHEN REQUIRED.

13 BASEMENT INSULATION (*SEE OBC 12.3.)

FOUNDATION WALLS ENCLOSING HEATED SPACE SHALL BE INSULATED FROM THE UNDERSIDE OF THE SUBFLOOR TO NOT MORE THAN 152mm (6") ABOVE THE FINISHED FLOOR OF THE BASEMENT AND NOT LESS THAN 50mm (2") TO THE SLAB.
FOUNDATION WALL INSULATION SHALL BE MINIMUM RSI. 3.52 (R20) BLANKET INSULATION, APPROVED VAPOUR BARRIER, DAMPROOFING W/BLDG. PAPER BETWEEN THE FDTN. AND INSUL.

14 BASEMENT BEARING STUD PARTITION

(*SEE OBC 9.23.10.)

38x89 (2"x4") STUDS @400mm (16") o.c. 38x89 (2"x4") SILL PLATE ON DAMPROOFING MATERIAL, 13mm (1/2") DIA. ANCHOR BOLTS 200mm (8") LONG, EMBEDDED MIN. 100mm (4") INTO CONC. @ 2400mm (7'-10") o.c. (4") HIGH CONC. CURB ON 305x155 (12"x6") CONC. FOOTING. ADD HORIZ. BLOCKING AT MID-HEIGHT IF WALL IS UNFINISHED.

15 STEEL BASEMENT COLUMN (* SEE OBC 9.17.3.)

90mm (3-1/2") DIA. x 4.78mm (.188) STL. COL. WITH 150x150x9.5mm (6"x6"x3/8") STL. TOP & BOTTOM PLATE.

15A STEEL COLUMN (* SEE OBC 9.17.3.)

90mm (3-1/2") DIA. x 4.78mm (.188) STL. COLUMN WITH 100x100x6.4mm (4"x4"x1/4") STEEL TOP & BOTTOM PLATE. FIELD WELD BOTTOM PLATE TO 250x100x12.5mm (10"x4"x1/2") BASE PLATE C/W 2-13mm (1/2") DIA. x 300mm (12") LONG x 50mm (2") HOOK ANCHORS.

16 NIB WALLS (* SEE OBC 9.23.8.)

BEAM POCKET OR 200x200 (8"x8") POURED CONCRETE NIB WALLS. MINIMUM BEARING 90mm (3-1/2")

17 STEEL BEAM STRAPPING (* SEE OBC 9.23.4.3.(3)(c))

19x38 (1"x2") CONTINUOUS WOOD STRAPPING BOTH SIDES OF STEEL BEAM.

18 GARAGE SLAB (*SEE OBC 9.16.-)

100mm (4") 32MPa (4640psi) CONC. SLAB WITH 5-8% AIR ENTRAINMENT ON OPT. 100 (4") COARSE GRANULAR FILL WITH COMPACTED SUB-BASE OR COMPACTED NATIVE FILL. SLOPE TO FRONT 1% MIN.

19 INTERIOR GARAGE WALLS & CEILING

(*SEE OBC 9.10.9.16.)

13mm (1/2") GYPSUM BOARD ON WALL AND CEILING BETWEEN HOUSE AND GARAGE, RSI 3.87 (R22) IN WALLS, RSI 5.46 (R31) IN CEILING. TAPE AND SEAL ALL JOINTS GAS TIGHT.

20 GARAGE DOOR GASPROOFING

(*SEE OBC 9.10.13.15.)

DOOR AND FRAME GASPROOFING. DOOR EQUIPPED WITH SELF CLOSING DEVICE AND WEATHER STRIPPING.

21 EXTERIOR STEP

(*SEE OBC 9.8.9.2, 9.8.9.3 & 9.8.10.)

PRECAST CONCRETE STEP OR WD. STEP WHERE NOT EXPOSED TO WEATHER MAX. RISE 200mm (7-7/8"); MINIMUM TREAD 250mm (9-1/2")

22 DRYER VENT (*SEE OBC 6.2.3.8.(7))

CAPPED DRYER EXHAUST VENTED TO EXTERIOR. USE 1000mm (4") DIA. SMOOTH WALL VENT PIPE.

23 ATTIC ACCESS (*SEE OBC 9.19.2.)

ATTIC ACCESS HATCH 545x700 (22"x28") WITH WEATHERSTRIPPING. RSI 5.46 (R31) RIGID INSULATION BACKING.

24 FIREPLACE CHIMNEYS (*OBC 9.21.-)

TOP OF FIREPLACE CHIMNEY SHALL BE 915mm (3-0") ABOVE THE HIGHEST POINT AT WHICH IT COMES IN CONTACT WITH THE ROOF AND 610mm (2'-0") ABOVE THE ROOF SURFACE WITHIN A HORIZ. DISTANCE OF 3050mm (10'-0") FROM THE CHIMNEY.

25 LINEN CLOSET

4 SHELVES MIN. 350mm (14") DEEP.

26 MECHANICAL EXHAUST

(*SEE OBC 9.32.3.5, 9.32.3.10.)

MECHANICAL EXHAUST FAN VENTED TO EXTERIOR.

27 STEEL BEARING PLATE FOR MASONRY WALLS

280x280x16 (11"x11"x5/8") STL. PLATE FOR STL BEAMS AND 280x280x12 (11"x11"x1/2") STL. PLATE FOR WOOD BEAMS BEARING ON CONC. BLOCK PARTYWALL, ANCHORED W/ 2-19mm (3/4") x200mm (8") LONG GALV. ANCHORS WITHIN SOLID BLOCK COURSE. LEVEL WITH NON-SHRINK GROUT.

28 CLASS "B" VENT

U.L.C. RATED CLASS "B" VENT 610mm (2'-0") ABOVE THE POINT IN CONTACT WITH THE ROOF FOR SLOPES UP TO 9/12, REFER TO THE ONTARIO GAS UTILIZATION CODE.

29 WOOD BASEMENT POST (*OBC 9.17.4.)

3-38x140 (3-2"x6") BUILT-UP POST ON METAL BASE SHOE ANCHORED TO CONC. WITH 12.7 (1/2") DIA. BOLT ON 406x406x203 (16"x16"x8") CONC. FOOTING.

30 STEP FOOTINGS (*OBC 9.15.3.9.)

MIN. HORIZ. STEP = 610mm (24"). MAX. VERT. STEP = 610mm (24")

31 SLAB ON GRADE (*SEE OBC 9.16.-)

100mm (4") 32MPa (4640psi) CONC. SLAB WITH 5-8% AIR ENTRAINMENT ON OPT. 100 (4") COARSE GRANULAR FILL WITH COMPACTED SUB-BASE OR COMPACTED NATIVE FILL. REINFORCED W/ 6x6-W2.9xW2.9 MESH PLACED NEAR MID-DEPTH OF SLAB.

32 DIRECT VENT FURNACE ●

DIRECT VENT FURNACE TERMINAL MIN. 900mm (36") FROM A GAS REGULATOR. MIN 300mm (12") ABOVE FIN. GRADE, FROM ALL OPENINGS, EXHAUST & INTAKE VENTS. HRV INTAKE TO BE A MIN. OF 1830mm (6'-0") FROM ALL EXHAUST TERMINALS. REFER TO GAS UTILIZATION CODE. ALL AIR INTAKES SHALL BE LOCATED SO THAT THEY ARE SEPARATED FROM KITCHEN EXHAUST BY 3.0m IN COMPLIANCE WITH O.B.C. DIV.-B TABLE 6.2.3.12..

33 DIRECT VENT GAS FIREPLACE

DIRECT VENT GAS FIREPLACE. VENT TO BE A MINIMUM 300mm (12") FROM ANY OPENING AND ABOVE FIN. GRADE. REFER TO GAS UTILIZATION CODE

34 JOIST STRAPPING & BRIDGING (*SEE OBC 23.9.4.)

ALL FLOOR JOISTS TO BE BRIDGED WITH 38x38 (2"x2") CROSS BRACING OR SOLID BLOCKING @2100mm (6'-11") o.c. MAX. 19x64 (1"x3") @2100mm (6'-11") o.c. UNLESS A PANEL TYPE CEILING FINISH IS APPLIED.

35 EXPOSED BUILDING FACE (* SEE OBC 9.10.15.)

EXTERIOR WALLS TO HAVE A FIRE RESISTANCE RATING OF NOT LESS THAN 45min. WHERE LIMITING DISTANCE IS LESS THAN 1.2M (3'-11") WHERE THE LIMITING DISTANCE IS LESS THAN 600mm (1'-11") THE EXPOSING FACE SHALL BE CLAD IN NON-COMBUSTABLE MATERIAL.

36 COLD CELLAR PORCH SLAB (* SEE OBC 9.40.)

FOR MAX. 2500mm (8'-2") PORCH DEPTH, 125mm (5") 32Mpa (4640 psi) CONC. SLAB WITH 5-8% AIR ENTRAINMENT. REINF. WITH 10M BARS @200mm (8") o.c. EACH WAY IN BOTTOM THIRD OF SLAB, ANCHORED IN PERIMETER FDTN. WALLS W/ 610x610 (24"x24") 10M @600mm (24") o.c. DOWELS. SLOPE SLAB MIN. 1.0% FROM DOOR. SLAB TO HAVE A MIN. 75mm (3") BEARING ON FDTN. WALLS. PROVIDE (WL1) LINTELS OVER CELLAR DOOR.

37 FDTN. WALL REDUCTION IN THICKNESS

(*SEE OBC 9.15.4.7.)

FDTN. WALL SHALL NOT BE REDUCED TO LESS THAN 90mm (3-1/2") THICK TO A MAX. DEPTH OF 660mm (26") FOR 8" FDTN. WALL. 10" FDTN. WALL WHEN REDUCTION IN THICNESS IS GREATER THAN 26". FDTN. WALL SHALL BE TIED TO THE FACING MATERIAL WITH METAL TIES SPACED 200mm (8")o.c. VERTICALLY AND 900mm (36")o.c. HORIZONTALLY. FILL SPACE BETWEEN WALL AND FACING SOLID WITH MORTAR.

38 CONVENTIONAL ROOF FRAMING

(*SEE OBC 9.23.4.2.(1))

FOR MAX. 2240mm (7'-4") SPAN, 38x89 (2"x4") RAFTERS @400mm (16") o.c.. FOR MAX. 3530mm (11'-7") SPAN, 38x140 (2"x6") RAFTERS @400mm (16") o.c.. RIDGE BOARD TO BE 51mm (2") DEEPER. 38x39 (2"x4") COLLAR TIES AT MIDSPANS. CEILING JOISTS TO BE 38x89 (2"x4") @400mm (16") o.c. FOR MAX. 2830mm (9'-3") SPAN & 38x140 (2"x6") @ 400 (16") o.c. FOR MAX. 4450mm (14'-7") SPAN. RAFTERS FOR BUILT-UP ROOF TO BE 38x89 (2"x4") @600mm (24") o.c. WITH A 38x89 (2"x4") CENTER POST TO THE TRUSS BELOW, LATERALLY BRACED @1800mm (6'-0") o.c. VERTICALLY.

39 TWO STOREY VOLUME SPACES

FOR A MAXIMUM 5490mm (18'-0") HEIGHT, PROVIDE 2-38x140 (2-2"x6") CONTINUOUS STUDS @300mm (12") o.c. FOR BRICK AND 400mm (16") o.c. FOR SIDING. PROVIDE SOLID WOOD BLOCKING BETWEEN STUDS @1220mm (4'-0") o.c. VERT. 7/16" EXT. PLYWOOD.

40 EXPOSED FLOOR TO EXTERIOR (*SB12 - 2.1.1.2.A)

PROVIDE RSI 5.46 (R31) INSULATION, APPROVED VAPOUR BARRIER AND CONTINUOUS AIR BARRIER, FINISHED SOFFIT.

41 PARTYWALLS

TYPICAL 1 HOUR RATED PARTYWALL. REFER TO DETAILS FOR TYPE AND SPECIFICATIONS.

42 EXTERIOR WALLS FOR WALK-OUT CONDITION

THE EXTERIOR BASEMENT STUD WALL TO BE 38x140mm (2"x6") STUDS @400mm (16") o.c. MATCH FLOOR JOIST SPACING WHEN PARALEL WITH FLOOR JOISTS.

43 SMOKE ALARM ● (*OBC 9.10.19)

PROVIDE 1 PER FLOOR, NEAR THE STAIRS CONNECTING THE FLOOR LEVEL AND ALSO 1 IN EACH BEDROOM NEAR HALL DOOR. ALARMS TO BE CONNECTED TO AN ELECTRICAL CIRCUIT AND INTERCONNECTED TO ACTIVATE ALL ALARMS IF ONE SOUNDS. BATTERY BACK-UP REQUIRED. SMOKE ALARMS TO INCORPORATE VISUAL SIGNALLING COMPONENT. (9.10.19.3.(3)).

44 CARBON MONOXIDE ALARM ● (*OBC 9.33.4.)

WHERE A FUEL-BURNING APPLIANCE IS INSTALLED IN A DWELLING UNIT, A BARBON MONOXIDE DETECTOR CONFORMING TO CAN./CGA-6.19, CSA 6.19 OR UL2034 SHALL BE INSTALLED ADJACENT TO EACH SLEEPING AREA. CARBON MONOXIDE DETECTOR(S) SHALL BE PERMANENTLY WIRED SO THAT IT IS ACTIVATION WILL ACTIVATE ALL CARBON MONOXIDE DETECTORS AND BE EQUIPPED WITH AN ALARM THAT IS AUDIBLE WITHIN BEDROOMS WHEN THE INTERVENING DOORS ARE CLOSED

45 SOIL GAS CONTROL (*OBC 9.13.4.)

PROVIDE CONSTRUCTION TO PREVENT LEAKAGE OF SOIL GAS INTO THE BUILDING AS REQUIRED.

MHP 23033

Compliance Package A1

Contractor shall check all dimensions and elevations before commencing with work and report any discrepancies to the Designer. Prints are not to be scaled.

The undersigned has reviewed and takes responsibility for this design, as well as having the qualifications and requirements mandated by the Ontario Building Code (O.B.C.) to be a Designer.

Qualification Information

Name	BCIN	Signature
Jamie Mack	35923	

Registration Information **Mackitecture** 103532

www.mackitecture.ca
975A Elgin Street West, Suite 353
Cobourg, ON K9A 5J3
Tel: 416-735-8190 Email: info@mackitecture.ca

title: **Construction Notes**

scale	by	area	sheet no.
not to scale	Greenpark	-	1
date	**type**	**project no.**	
2023-07-18	-	22-012	

www.greenparkgroup.ca

project name: **Zadorra Estates Inc.**

Drawing created with Mackitecture v.1.0 (build 2758), File P:\2022\22-012-GREENPARK-ZADORRA-OSHAWA\UNITS\WORKING\DETAILS\DETAILS 01 - CONSTRUCTION NOTES PACKAGE A1.DWG plotted on 2023-11-17 at 3:42:58 PM by JMACK

CORPORATION OF THE CITY OF OSHAWA
TRUE COPY
OF PERMIT PLANS
Nov 21 2023
PER: CHIEF BUILDING OFFICIAL

STRIP FOOTINGS - SEMIS UP TO 2 STOREY

FOUNDATION WALLS WITH 2"x8" / 2"x10" FLOOR JOISTS
20"x8" CONCRETE STRIP FOOTINGS BELOW FOUNDATION WALLS.
24"x8" CONCRETE STRIP FOOTINGS BELOW PARTY WALLS.

FOUNDATION WALLS WITH ENGINEEED JOISTS OVER 16' SPANS
24"x8" CONCRETE STRIP FOOTINGS BELOW FOUNDATION WALLS.

FOOTINGS ON ENGINEERED FILL
24"x8" CONCRETE STRIP FOOTINGS WITH REINFORCING BELOW EXTERIOR WALLS.
30"x8" CONCRETE STRIP FOOTINGS WITH REINFORCING BELOW PARTY WALLS.
(REFER TO FOOTING DETAILS ON ENGINEERED FILL)

ASSUME THE LARGER FOOTING SIZE WHEN TWO CONDITIONS APPLY
~~ASSUMED 120 KPa (18 p.s.i.)~~ SOIL BEARING CAPACITY OR 90 KPa ENGINEERED SOIL FILL, TO BE VERIFIED ON SITE.

PAD FOOTINGS

120 KPa NATIVE SOIL	90 KPa ENGINEERED FILL SOIL
F1 = 42"x42"x18" CONCRETE PAD	F1 = 48"x48"x20" CONCRETE PAD
F2 = 36"x36"x16" CONCRETE PAD	F2 = 40"x40"x16" CONCRETE PAD
F3 = 30"x30"x12" CONCRETE PAD	F3 = 34"x34"x14" CONCRETE PAD
F4 = 24"x24"x12" CONCRETE PAD	F4 = 28"x28"x12" CONCRETE PAD
F5 = 16"x16"x8" CONCRETE PAD	F5 = 18"x18"x8" CONCRETE PAD

(REFER TO FLOOR PLAN FOR UNUSUAL SIZE PADS NOT ON CHART)

BRICK VENEER LINTELS

WL1 = 3-1/2"x3-1/2"x1/4"L (90x90x6.0L) + 2-2"x8" SPR. No.2
WL2 = 4"x3-1/2"x5/16"L (100x90x8.0L) + 2-2"x8" SPR. No.2
WL3 = 5"x3-1/2"x5/16"L (125x90x8.0L) + 2-2"x10" SPR. No.2
WL4 = 6"x3-1/2"x3/8"L (150x90x10.0L) + 2-2"x12" SPR. No.2
WL5 = 6"x4"x3/8"L (150x100x10.0L) + 2-2"x12" SPR. No.2
WL6 = 5"x3-1/2"x5/16"L (125x90x8.0L) + 2-2"x12" SPR. No.2
WL7 = 5"x3-1/2"x5/16"L (125x90x8.0L) + 3-2"x10" SPR. No.2
WL8 = 5"x3-1/2"x5/16"L (125x90x8.0L) + 3-2"x12" SPR. No.2
WL9 = 6"x4"x3/8"L (150x100x10.0L) + 3-2"x12" SPR. No.2

LINTELS AND BEAMS

WB1 = 2-2"x8" SPR. No.2 (2-38x184 SPR. No.2)
WB2 = 3-2"x8" SPR. No.2 (3-38x184 SPR. No.2)
WB3 = 2-2"x10" SPR. No.2 (2-38x235 SPR. No.2)
WB4 = 3-2"x10" SPR. No.2 (3-38x235 SPR. No.2)
WB5 = 2-2"x12" SPR. No.2 (2-38x286 SPR. No.2)
WB6 = 3-2"x12" SPR. No.2 (3-38x286 SPR. No.2)
WB7 = 5-2"x12" SPR. No.2 (5-38x286 SPR. No.2)
WB11 = 4-2"x10" SPR. No.2 (4-38x235 SPR. No.2)
WB12 = 4-2"x12" SPR. No.2 (4-38x286 SPR. No.2)

LAMINATED VENEER LUMBER (LVL) BEAMS

LVL1A = 1-1 3/4" x 7 1/4" (1-45x184)
LVL1 = 2-1 3/4" x 7 1/4" (2-45x184)
LVL2 = 3-1 3/4" x 7 1/4" (3-45x184)
LVL3 = 4-1 3/4" x 7 1/4" (4-45x184)
LVL4A = 1-1 3/4" x 9 1/2" (1-45x240)
LVL4 = 2-1 3/4" x 9 1/2" (2-45x240)
LVL5 = 3-1 3/4" x 9 1/2" (3-45x240)
LVL5A = 4-1 3/4" x 9 1/2" (4-45x240)
LVL6A = 1-1 3/4" x 11 7/8" (1-45x300)
LVL6 = 2-1 3/4" x 11 7/8" (2-45x300)
LVL7 = 3-1 3/4" x 11 7/8" (3-45x300)
LVL7A = 4-1 3/4" x 11 7/8" (4-45x300)
LVL8 = 2-1 3/4" x 14" (2-45x356)
LVL9 = 3-1 3/4" x 14" (3-45x356)
LVL10 = 2-1 3/4" x 18" (3-45x456)

LVL BEAMS SHALL BE VERSA-LAM 2.0E (Fb=2800psi MIN.) OR EQUIVALENT.

LOOSE STEEL LINTELS

L1 = 3-1/2"x3-1/2"x1/4"L (90x90x6.0L)
L2 = 4"x3-1/2"x5/16"L (100x90x8.0L)
L3 = 5"x3-1/2"x5/16"L (125x90x8.0L)
L4 = 6"x3-1/2"x3/8"L (150x90x10.0L)
L5 = 6"x4"x3/8"L (150x100x10.0L)
L6 = 7"x4"x3/8"L (175x100x10.0L)

DOOR SCHEDULE

NOS.	WIDTH	HEIGHT 8'-9' CEILING	HEIGHT 10' OR MORE CEILING	TYPE
1	2'-10"	6'-8"	8'-0"	INSULATED ENTRANCE DOOR
1a	2'-8"	6'-8"	8'-0"	INSULATED FRONT DOORS
2	2'-8"	6'-8"	8'-0"	WOOD & GLASS DOOR
3	2'-8"	6'-8"	8'-0"	EXTERIOR SLAB DOOR
4	2'-8"	6'-8"	8'-0"	INTERIOR SLAB DOOR
5	2'-6"	6'-8"	8'-0"	INTERIOR SLAB DOOR
6	2'-2"	6'-8"	8'-0"	INTERIOR SLAB DOOR
7	1'-6"	6'-8"	8'-0"	INTERIOR SLAB DOOR

It is the builder's complete responsibility to ensure that all plans submitted for approval fully comply with the Architectural Guidelines and all applicable regulations and requirements including zoning provisions and any provisions in the subdivision agreement. The Control Architect is not responsible in any way for examining or approving site (lotting) plans or working drawings with respect to any zoning or building code or permit matter or that any house can be properly built or located on its lot.

This is to certify that these plans comply with the applicable Architectural Design Guidelines approved by the City of Oshawa

SPACE CONVENTIONAL FLOOR JOISTS @ 12" O.C. BELOW ALL CERAMIC TILE AREAS. PROVIDE 1 ROW BRIDGING FOR SPANS OF 5'-7', 2 ROWS FOR SPANS GREATER THAN 7'

REFER TO ROOF TRUSS SHOP DRAWINGS FOR ALL ROOF FRAMING INFORMATION

PLANS NOT DRAWN TO ACTUAL GRADE. REFER TO FINAL GRADING PLAN.

REFER TO FLOOR FRAMING SHOP DRAWINGS FOR ENGINEERED FRAMING LAYOUTS

2-2"x6" STUD WALL NAILED TOGETHER AND SPACED @12" O.C. FULL HT C/W SOLID BLOCKING 4'-0" O.C. VERTICAL AND 7/16" EXT. PLYWOOD SHEATHING.

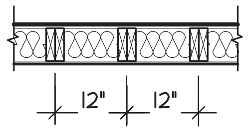

NOTE: MAXIMUM HEIGHT OF WALL FOR THIS DETAIL IS 18'-0"

TWO STORY HEIGHT WALL DETAIL

2 - 1 1/2" x 5 1/2" TIMBERSTRAND (LSL) 1.5E STUD WALL GLUED AND NAILED TOGETHER AND SPACED MAX. @10"O.C. FULL HT C/W SOLID BLOCKING MAX. 8'-0"O.C. VERTICAL AND 7/16" EXT. OSB SHEATHING.

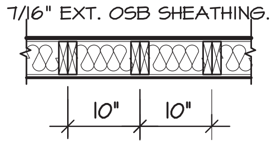

NOTE: MAXIMUM HEIGHT OF WALL FOR THIS DETAIL IS 20'-2" AND MAXIMUM WIDTH IS 40'-0"

TWO STORY HEIGHT WALL DETAIL

THE MINIMUM THERMAL PERFORMANCE OF BUILDING ENVELOPE AND EQUIPMENT SHALL CONFORM TO THE FOLLOWING

COMPLIANCE PACKAGE "A1"	
COMPONENT	NOTE
CEILING WITH ATTIC SPACE MINIMUM RSI (R) VALUE	10.57 (R60)
CEILING WITHOUT ATTIC SPACE MINIMUM RSI (R) VALUE	5.46 (R31)
EXPOSE FLOOR MINIMUM RSI (R) VALUE	5.46 (R31)
WALLS ABOVE GRADE MINIMUM RSI (R) VALUE	3.87 (R22)
BASEMENT WALLS MINIMUM RSI (R) VALUE	3.52 (R20 BLANKET)
HEATED SLAB OR SLAB ≤ 600mm BELOW GRADE MINIMUM RSI (R) VALUE	1.76 (R10)
WINDOWS & SLIDING GLASS DOORS MAXIMUM U-VALUE	ENERGY RATING = 25, MAX. U=0.28
SPACE HEATING EQUIPMENT MINIMUM AFUE	96%
HRV MINIMUM EFFICIENCY	75%
HOT WATER TANK	MIN. EF 0.80

PENROSE 1	ELEV.1		COMPLIANCE PACKAGE "A1"		
ELEVATION	WALL FT²	WALL MT²	OPENING FT²	OPENING MT²	PERCENTAGE
FRONT	729.09	67.73	101.46	9.43	13.92 %
LEFT SIDE	1100.75	102.26	98.53	9.15	8.95 %
RIGHT SIDE	1155.58	107.36	34.17	3.17	2.96 %
REAR	628.95	58.43	135.78	12.61	21.59 %
TOTAL	3614.37	335.79	369.94	34.37	10.24 %

PENROSE 1	ELEV.2		COMPLIANCE PACKAGE "A1"		
ELEVATION	WALL FT²	WALL MT²	OPENING FT²	OPENING MT²	PERCENTAGE
FRONT	723.09	67.18	70.74	6.57	9.78 %
LEFT SIDE	1100.75	102.26	98.53	9.15	8.95 %
RIGHT SIDE	1155.58	107.36	34.17	3.17	2.96 %
REAR	628.95	58.43	135.78	12.61	21.59 %
TOTAL	3608.37	335.23	339.22	31.51	9.40 %

PENROSE 1	ELEV.3		COMPLIANCE PACKAGE "A1"		
ELEVATION	WALL FT²	WALL MT²	OPENING FT²	OPENING MT²	PERCENTAGE
FRONT	680.42	63.21	114.08	10.60	16.77 %
LEFT SIDE	1100.75	102.26	98.53	9.15	8.95 %
RIGHT SIDE	1155.58	107.36	34.17	3.17	2.96 %
REAR	628.95	58.43	135.78	12.61	21.59 %
TOTAL	3565.70	331.26	382.56	35.54	10.73 %

AREA CALCULATIONS				ELEV. 1	
GROUND FLOOR AREA			=	1298	Sq. Ft.
SECOND FLOOR AREA			=	1626	Sq. Ft.
TOTAL FLOOR AREA			=	**2924**	**Sq. Ft.**
				271.65	**Sq. M.**
1st FLOOR OPEN AREA	=	0		Sq. Ft.	
2nd FLOOR OPEN AREA	=	12		Sq. Ft.	
ADD TOTAL OPEN AREAS			=	12	Sq. Ft.
ADD FIN. BASEMENT AREA			=	0	Sq. Ft.
GROSS FLOOR AREA			=	**2936**	Sq. Ft.
				272.76	**Sq. M.**
GROUND FLOOR COVERAGE			=	1298	Sq. Ft.
GARAGE COVERAGE / AREA			=	408	Sq. Ft.
PORCH COVERAGE / AREA			=	75	Sq. Ft.
TOTAL COVERAGE W/ PORCH			=	**1781**	**Sq. Ft.**
			=	165.46	Sq. m.
TOTAL COVERAGE W/O PORCH			=	**1706**	**Sq. Ft.**
			=	158.49	Sq. m.

AREA CALCULATIONS				ELEV. 2	
GROUND FLOOR AREA			=	1298	Sq. Ft.
SECOND FLOOR AREA			=	1628	Sq. Ft.
TOTAL FLOOR AREA			=	**2926**	**Sq. Ft.**
				271.83	**Sq. M.**
1st FLOOR OPEN AREA	=	0		Sq. Ft.	
2nd FLOOR OPEN AREA	=	12		Sq. Ft.	
ADD TOTAL OPEN AREAS			=	12	Sq. Ft.
ADD FIN. BASEMENT AREA			=	0	Sq. Ft.
GROSS FLOOR AREA			=	**2938**	Sq. Ft.
				272.95	**Sq. M.**
GROUND FLOOR COVERAGE			=	1298	Sq. Ft.
GARAGE COVERAGE / AREA			=	408	Sq. Ft.
PORCH COVERAGE / AREA			=	75	Sq. Ft.
TOTAL COVERAGE W/ PORCH			=	**1781**	**Sq. Ft.**
			=	165.46	Sq. m.
TOTAL COVERAGE W/O PORCH			=	**1706**	**Sq. Ft.**
			=	158.49	Sq. m.

AREA CALCULATIONS				ELEV. 3	
GROUND FLOOR AREA			=	1298	Sq. Ft.
SECOND FLOOR AREA			=	1629	Sq. Ft.
TOTAL FLOOR AREA			=	**2927**	**Sq. Ft.**
				271.93	**Sq. M.**
1st FLOOR OPEN AREA	=	0		Sq. Ft.	
2nd FLOOR OPEN AREA	=	12		Sq. Ft.	
ADD TOTAL OPEN AREAS			=	12	Sq. Ft.
ADD FIN. BASEMENT AREA			=	0	Sq. Ft.
GROSS FLOOR AREA			=	**2939**	Sq. Ft.
				273.04	**Sq. M.**
GROUND FLOOR COVERAGE			=	1298	Sq. Ft.
GARAGE COVERAGE / AREA			=	408	Sq. Ft.
PORCH COVERAGE / AREA			=	75	Sq. Ft.
TOTAL COVERAGE W/ PORCH			=	**1781**	**Sq. Ft.**
			=	165.46	Sq. m.
TOTAL COVERAGE W/O PORCH			=	**1706**	**Sq. Ft.**
			=	158.49	Sq. m.

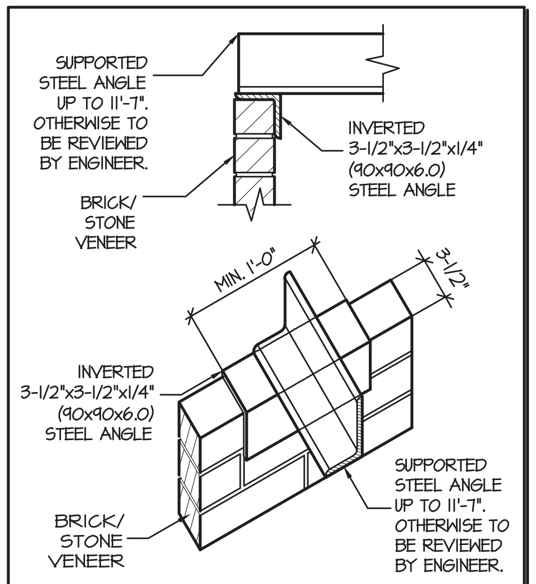

INVERTED STEEL ANGLE DETAIL

STRUDET INC.
REGISTERED PROFESSIONAL ENGINEER
B. MARINKOVIC
JUNE 27/2022
PROVINCE OF ONTARIO
FOR STRUCTURE ONLY

PENROSE 1

COMPLIANCE PACKAGE "A1"

5.		
4.		
3.		
2.		
1.	UPDATED FROM PINEBROOK 1A	APR 2022

REVISIONS

The undersigned has reviewed and takes responsibility for this design, and has the qualifications and meets the requirements set out in the Ontario Building Code to be a designer.
QUALIFICATION INFORMATION
Required unless design is exempt under Division C, Subsection 3.2.5 of the building code
VIKAS GAJJAR — NAME | SIGNATURE | 28770 — BCIN

REGION DESIGN INC.
8700 DUFFERIN ST.
CONCORD, ONTARIO
L4K 4S6
P (416) 736-4096
F (905) 660-0746
REGION DESIGN INC.

SHEET TITLE: AREA CHARTS
SCALE: NA | BY: VG
DATE: APR 2022 | TYPE:
AREA: 2938 | PROJECT: XXX | PAGE No. 0

CONTRACTOR SHALL CHECK ALL DIMENSIONS AND ELEVATIONS BEFORE COMMENCING WITH WORK AND REPORT ANY DISCREPANCIES TO THE DESIGNER. PRINTS ARE NOT TO BE SCALED.

Greenpark™
PROJECT NAME: ZADORRA

June 13, 2022 11:24:56 AM M:\PROJECTS\ZADORRA OSHAWA\STANDARD\PENROSE 1\PENROSE 1.DWG

CORPORATION OF THE CITY OF OSHAWA
TRUE COPY
OF PERMIT PLANS
Nov 21 2023
CHIEF BUILDING OFFICIAL

MHP 23033

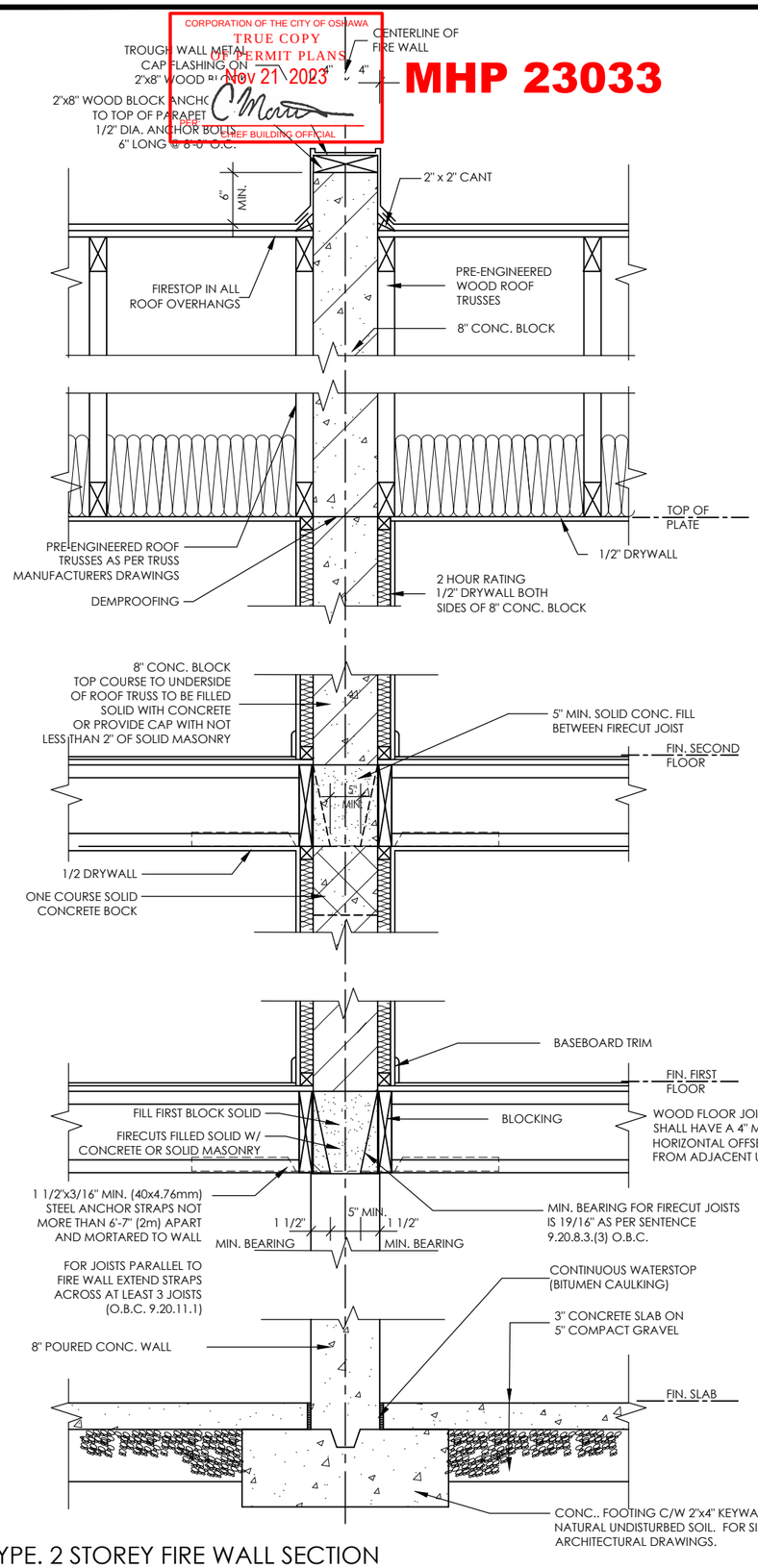

TYPE. 2 STOREY FIRE WALL SECTION
TRUSSES PARALLEL TO PARTY WALL

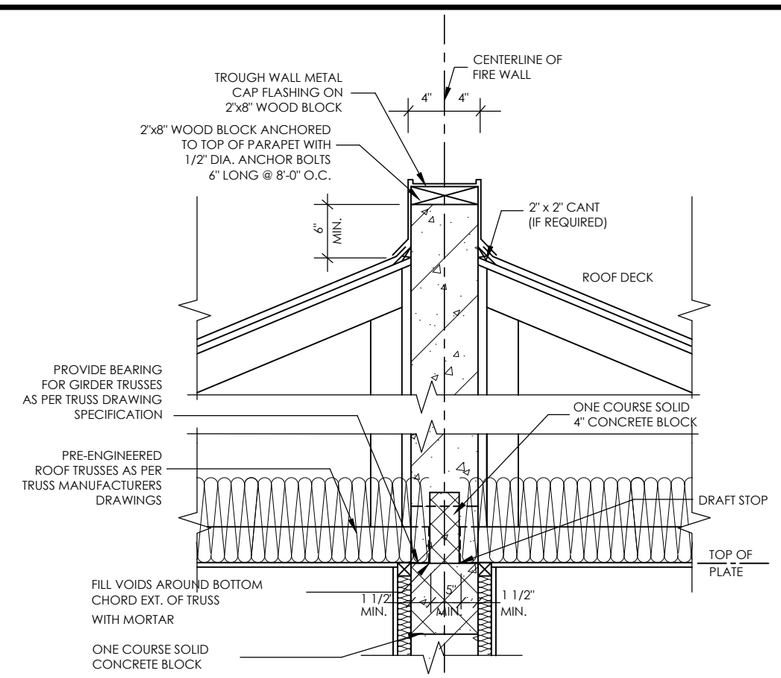

FIRE WALL SECTION - TRUSSES PERPENDICULAR

SOUND ABSORPTIVE MATERIAL REQUIREMENTS
SOUND ABSORPTIVE MATERIAL INCLUDES FIBRE PROCESSED FROM ROCK, SLAG, GLASS OR CELLULOSE FIBRE. IT MUST FILL AT LEAST 90% OF THE CAVITY THICKNESS FOR THE WALL TO PROVIDE THE LISTED STC VALUE.

SOUND TRANSMISSION RATING
MINIMUM REQUIRED S.T.C. RATING OF 50 (O.B.C. DIV. B 9.11.2.1(1))

FIRE RESISTANCE RATING
FIRE RESISTANCE RATING REQUIRED IS 2 HR. MIN.(AS PER SENTENCE DIV. B 3.1.10.2 O.B.C.)

WALL TYPE
SEE SUPPLEMENTARY STANDARDS SB3 TABLE 1. (WALL NO. B6E) 8"(190MM) CONCRETE BLOCK WALL: WITH 1½" x 1½" STRAPPING & 1/2" DRYWALL FILLED W/ SOUND ABSORPTIVE MATERIAL EACH SIDE. (FRR 2H)(STC 57)

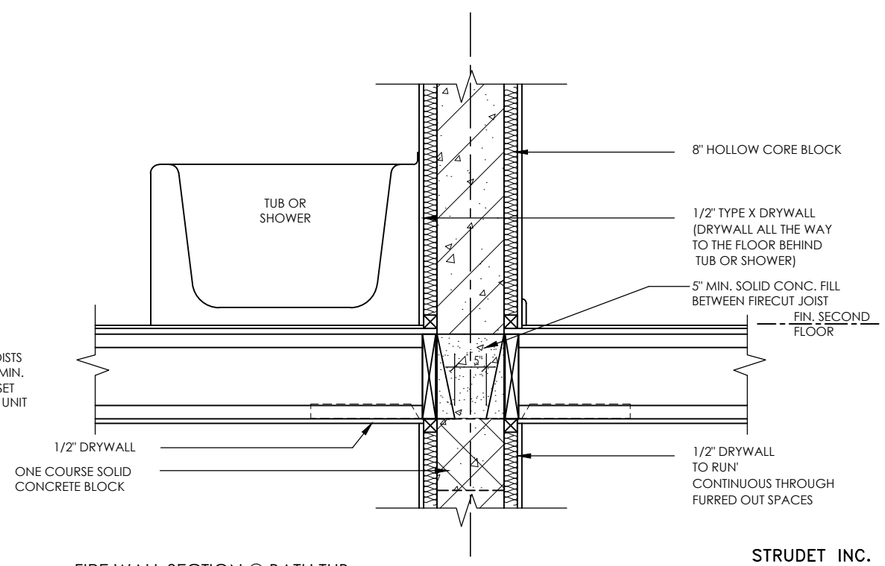

FIRE WALL SECTION @ BATH TUB

A FIREWALL SHALL EXTEND FROM THE GROUND CONTINUOUSLY THROUGH, OR ADJACENT TO, ALL STOREYS OF A BUILDING. (O.B.C. 3.1.10.3 (1))

ENGINEERED FLOOR SYSTEM INSTALLATION TO CONFORM TO MANUFACTURES APPROVED DETAILS AND SPECIFIACATIONS

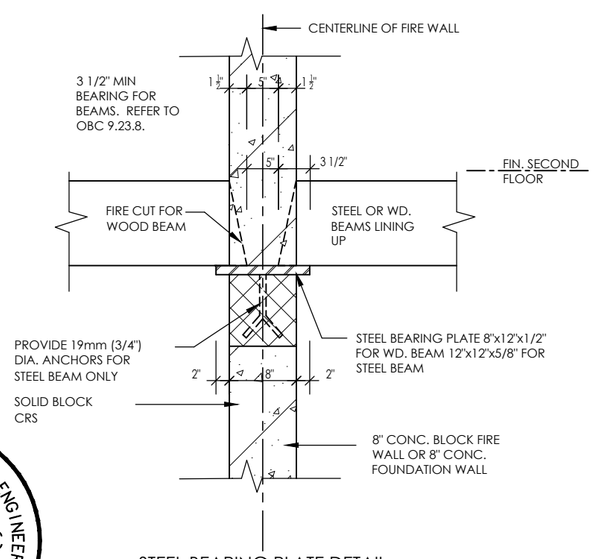

STEEL BEARING PLATE DETAIL

STRUDET INC.

REGISTERED PROFESSIONAL ENGINEER
B. MARINKOVIC
PROVINCE OF ONTARIO
Mar 10 2023

FOR STRUCTURE ONLY

Compliance Package A1

Contractor shall check all dimensions and elevations before commencing with work and report any discrepancies to the Designer. Prints are not to be scaled.

The undersigned has reviewed and takes responsibility for this design, as well as having the qualifications and requirements mandated by the Ontario Building Code (O.B.C.) to be a Designer.

Qualification Information

Name	BCIN	Signature
Jamie Mack	35923	

Registration Information **Mackitecture** 103532

www.mackitecture.ca
975A Elgin Street West, Suite 353
Cobourg, ON K9A 5J3
Tel: 416-735-8190 Email: info@mackitecture.ca

title: **Fire Wall**

scale	by	area	sheet no.
3/4" = 1'-0"	Greenpark	-	3
date: 2023-04-28	type: -	project no.: 21-018	

Greenpark
www.greenparkgroup.ca

project name: **Zadorra Estates Inc.**

Drawing created with Mackitecture v.1.0.0 (build 2643). File P:\2022\22-012-GREENPARK-ZADORRA-OSHAWA\UNITS\WORKING\DETAILS\DETAILS 03 - FIRE WALL DETAIL PACKAGE A1.DWG plotted on 2023-04-28 at 1:28:47 PM by JMACK

CORPORATION OF THE CITY OF OSHAWA
TRUE COPY
OF PERMIT PLANS
Nov 21 2023
PER:
CHIEF BUILDING OFFICIAL

MHP 23033

STRUDET INC.

REGISTERED PROFESSIONAL ENGINEER
B. MARINKOVIC
May 10,2023
PROVINCE OF ONTARIO

FOR STRUCTURE ONLY

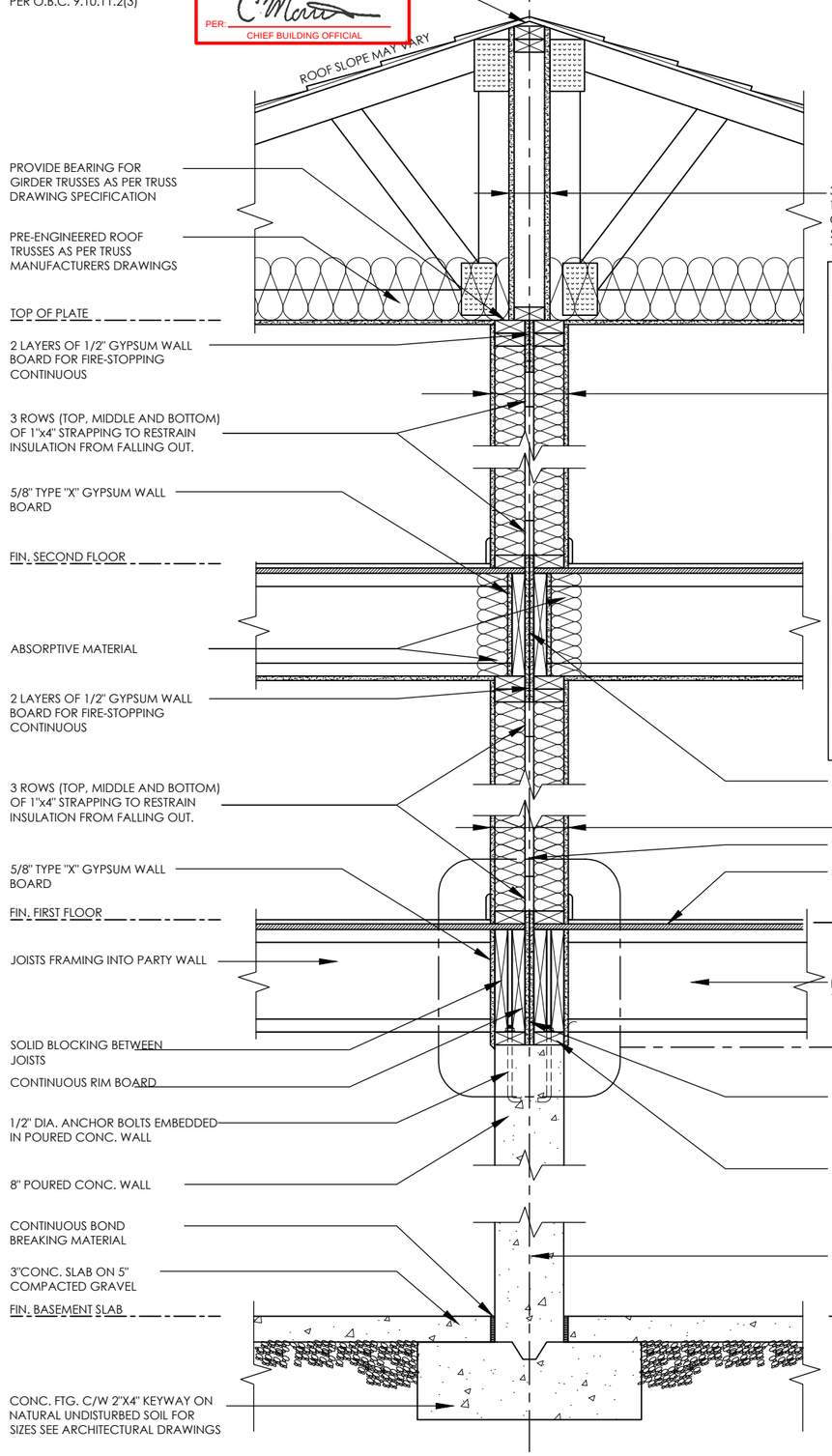

SOUND ABSORPTIVE MATERIAL REQUIREMENTS
SOUND ABSORPTIVE MATERIAL INCLUDES FIBRE PROCESSED FROM ROCK, SLAG, GLASS OR CELLULOSE FIBRE. IT MUST FILL AT LEAST 90% OF THE CAVITY THICKNESS FOR THE WALL TO PROVIDE THE LISTED STC VALUE.

SOUND TRANSMISSION RATING
MINIMUM REQUIRED S.T.C. RATING OF 50 (O.B.C. DIV. B 9.11.2.1(1))

WALL TYPE
SEE SUPPLEMENTARY STANDARDS SB3 TABLE 1. W13A BEARING WALL WITH 2 ROWS OF 2X4 SPR. @ 16" O.C. ON SEPARATE 2X4 PLATES SET 1" APART WITH 4" ABSORPTIVE MATERIAL AND 1 LAYER 5/8" TYPE 'X' GYPSUM WALL BOARD ON EACH SIDE (SEE NOTES 5 TO TABLE 1)

FIRE RESISTANCE RATING
FIRE RESISTANCE RATING REQUIRED IS 1 HR. MIN.(AS PER SENTENCE DIV. B 9.10.11.2.[1] O.B.C.)

WOOD FRAME PARTY WALL
TRUSSES PERPENDICULAR TO PARTY WALL

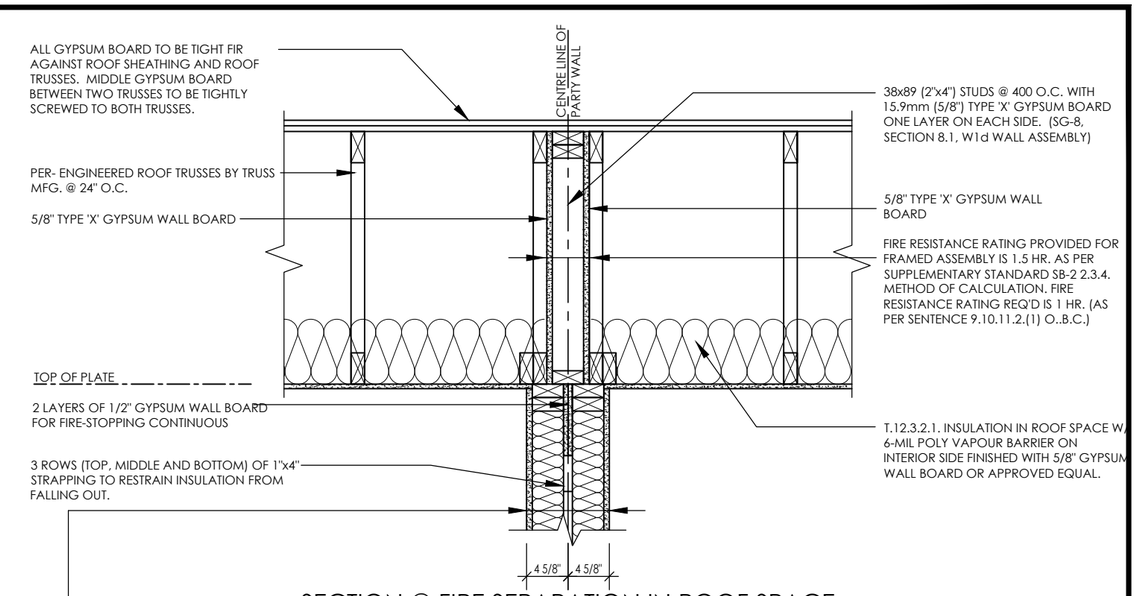

SECTION @ FIRE SEPARATION IN ROOF SPACE
TRUSSES PARALLEL TO PARTY WALL

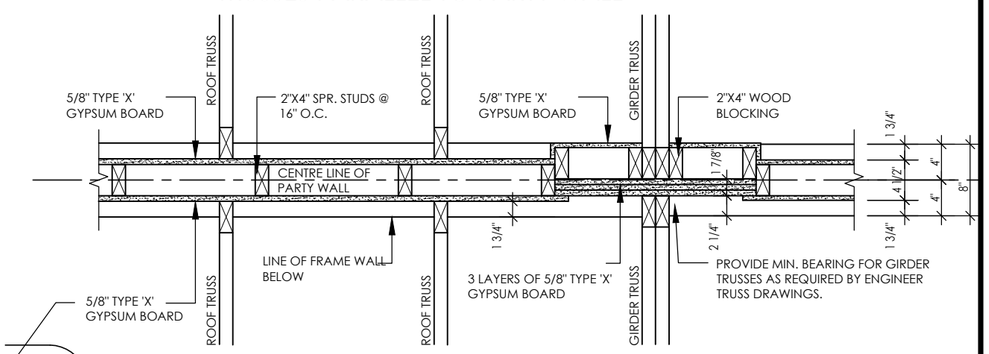

PLAN OF FIRE SEPARATION IN ROOF SPACE
TRUSSES PERPENDICULAR TO PARTY WALL

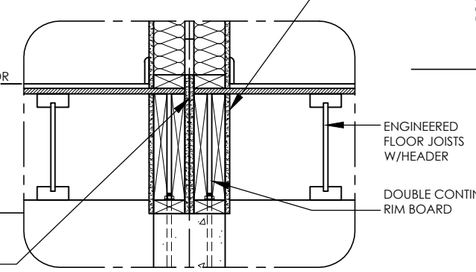

FLOOR JOISTS PARALLEL

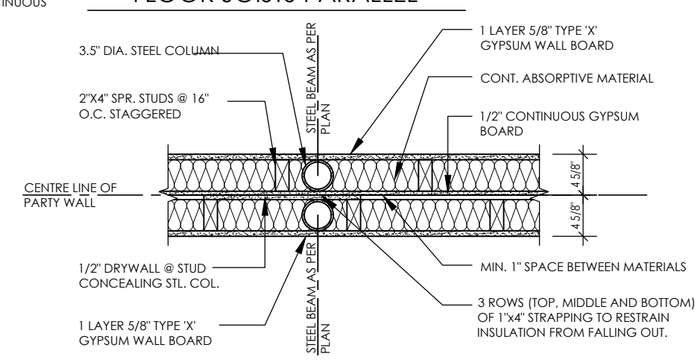

PLAN OF PARTY WALL IN GARAGE

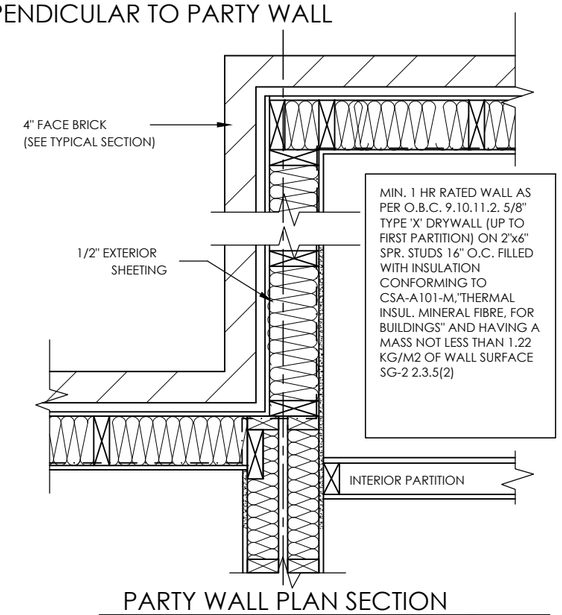

PARTY WALL PLAN SECTION

Compliance Package A1

Contractor shall check all dimensions and elevations before commencing with work and report any discrepancies to the Designer. Prints are not to be scaled.

The undersigned has reviewed and takes responsibility for this design, as well as having the qualifications and requirements mandated by the Ontario Building Code (O.B.C.) to be a Designer.

Qualification Information

Name	BCIN	Signature
Jamie Mack	35923	
Registration Information	**Mackitecture**	103532

www.mackitecture.ca
975A Elgin Street West, Suite 353
Cobourg, ON K9A 5J3
Tel: 416-735-8190 Email: info@mackitecture.ca

title: **Party Wall - Wood**

scale	by	area	sheet no.
3/4" = 1'-0"	Greenpark	-	4
date: 2023-04-28	type: -	project no.: 21-018	

Greenpark
www.greenparkgroup.ca

project name: **Zadorra Estates Inc.**

Drawing created with Mackitecture v.1.0.0 (build 2643). File P:\2022\22-012-GREENPARK-ZADORRA-OSHAWA\UNITS\WORKING\DETAILS\DETAILS 04 - PARTY WALL DETAIL PACKAGE A1.DWG plotted on 2023-04-28 at 1:28:33 PM by JMACK

CORPORATION OF THE CITY OF OSHAWA
TRUE COPY
OF PERMIT PLANS
Nov 21 2023
PER
CHIEF BUILDING OFFICIAL

MHP 23033

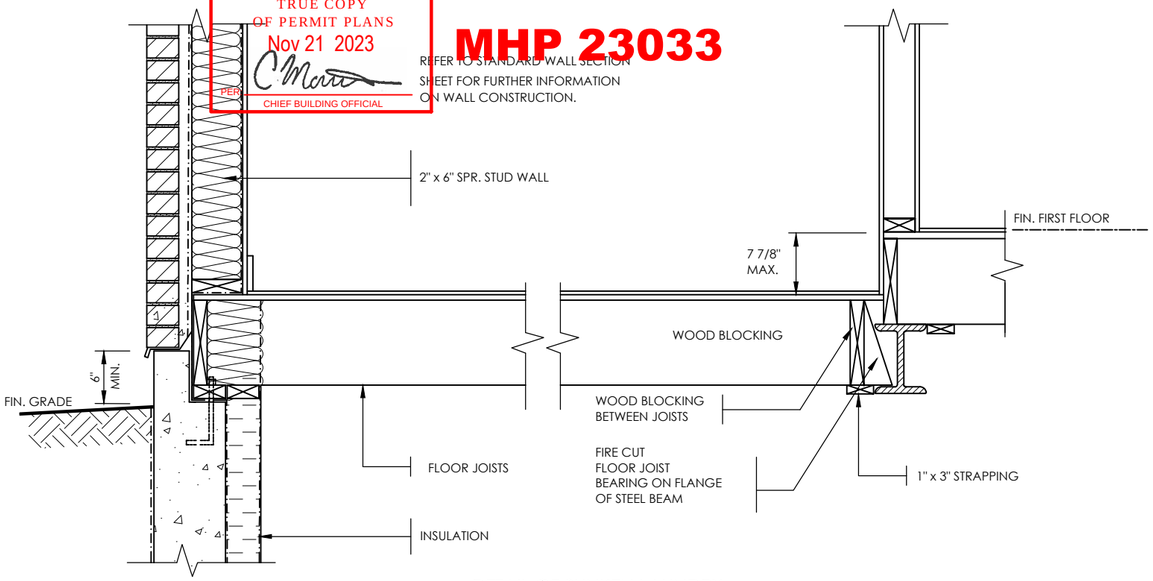

DETAIL OF SUNKEN LAUNDRY
(ONE RISER)

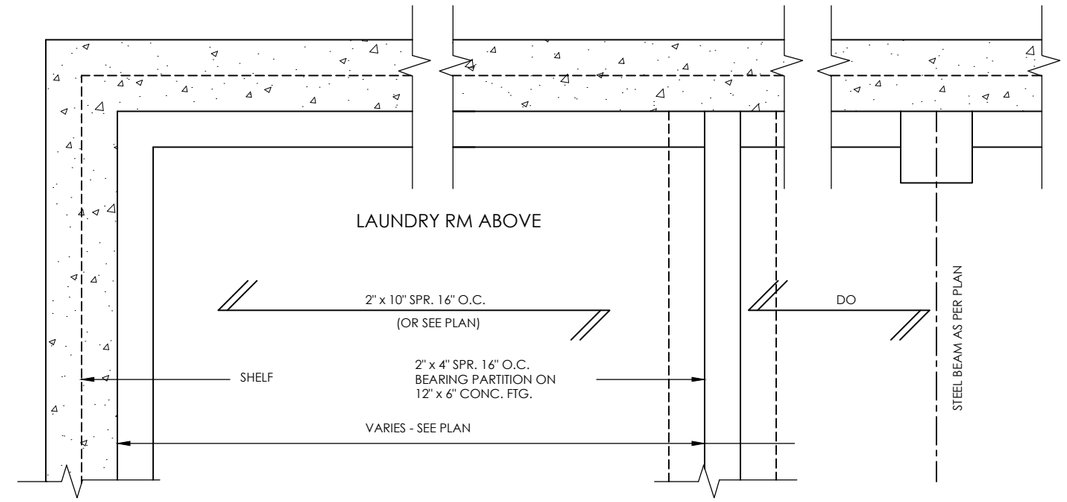

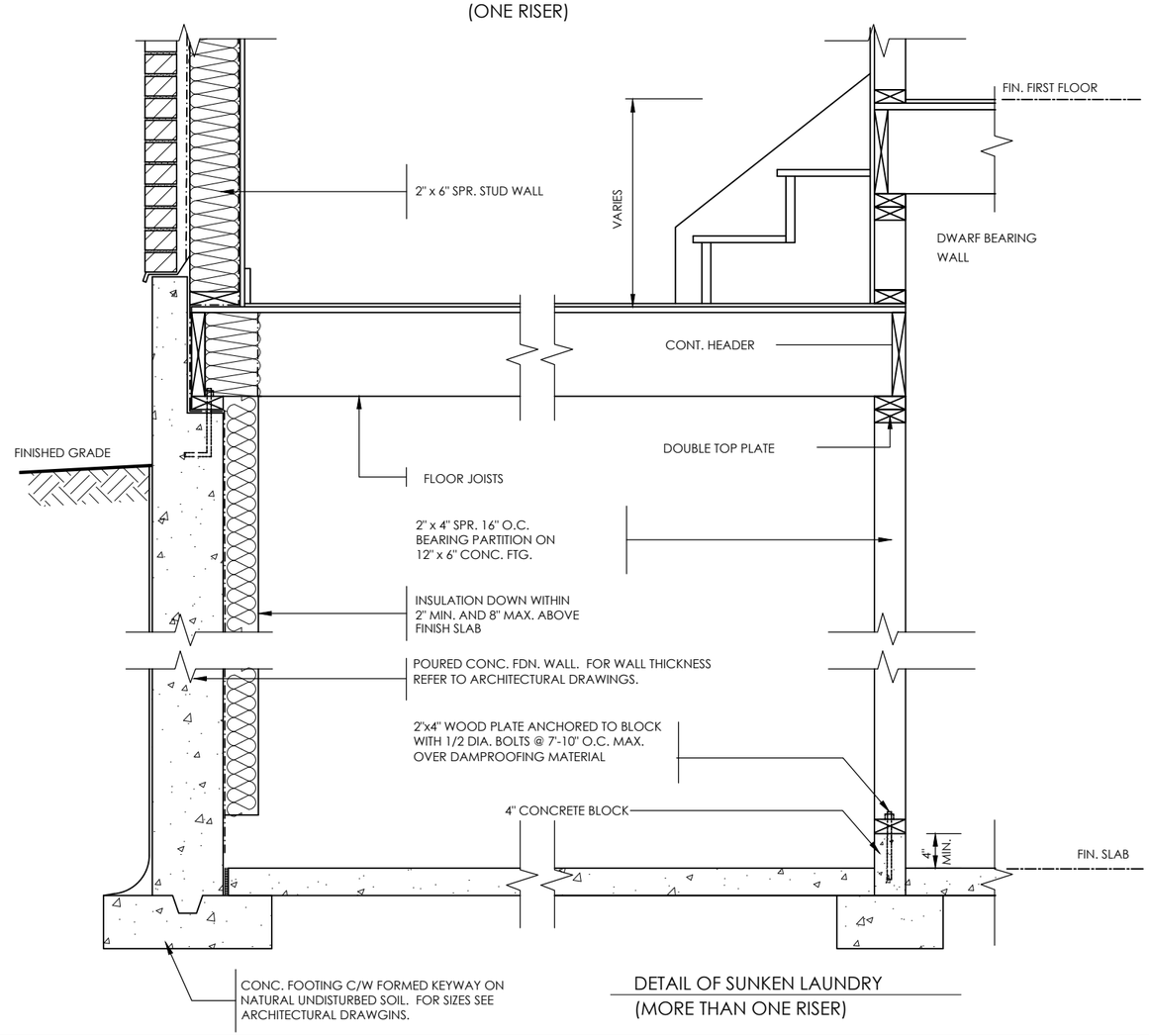

DETAIL OF SUNKEN LAUNDRY
(MORE THAN ONE RISER)

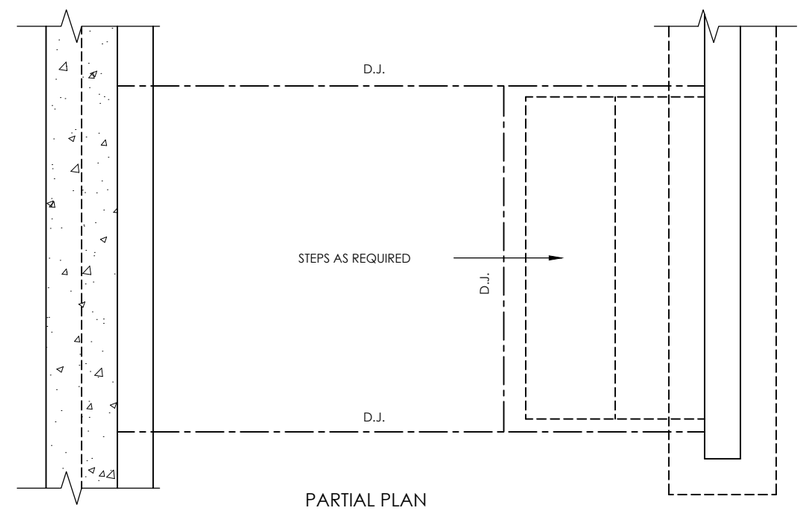

PARTIAL PLAN

STRUDET INC.
REGISTERED PROFESSIONAL ENGINEER
B. MARINKOVIC
May 10, 2023
PROVINCE OF ONTARIO
FOR STRUCTURE ONLY

Compliance Package A1

Contractor shall check all dimensions and elevations before commencing with work and report any discrepancies to the Designer. Prints are not to be scaled.

The undersigned has reviewed and takes responsibility for this design, as well as having the qualifications and requirements mandated by the Ontario Building Code (O.B.C.) to be a Designer.

Qualification Information

Name	BCIN	Signature
Jamie Mack	35923	
Registration Information	**Mackitecture**	103532

www.mackitecture.ca
975A Elgin Street West, Suite 353
Cobourg, ON K9A 5J3
Tel: 416-735-8190 Email: info@mackitecture.ca

title: **Sunken Laundry Details**

scale	by	area	sheet no.
3/4" = 1'-0"	**Greenpark**	-	**5**
date **2023-04-28**	type -	project no. **22-012**	

Greenpark
www.greenparkgroup.ca

project name: **Zadorra Estates Inc.**

Drawing created with Mackitecture v.1.0.0 (build 2643), File P:\2022\22-012-GREENPARK-ZADORRA-OSHAWA\UNITS\WORKING\DETAILS\DETAILS 05 - SUNKEN LAUNDRY ROOM PACKAGE A1.DWG plotted on 2023-04-28 at 1:27:47 PM by JMACK

CORPORATION OF THE CITY OF OSHAWA
MHP 23033
NOV 21 2023
CHIEF BUILDING OFFICIAL

STRUDET INC.
REGISTERED PROFESSIONAL ENGINEER
B. MARINKOVIC
MAY 10, 2023
PROVINCE OF ONTARIO
FOR STRUCTURE ONLY

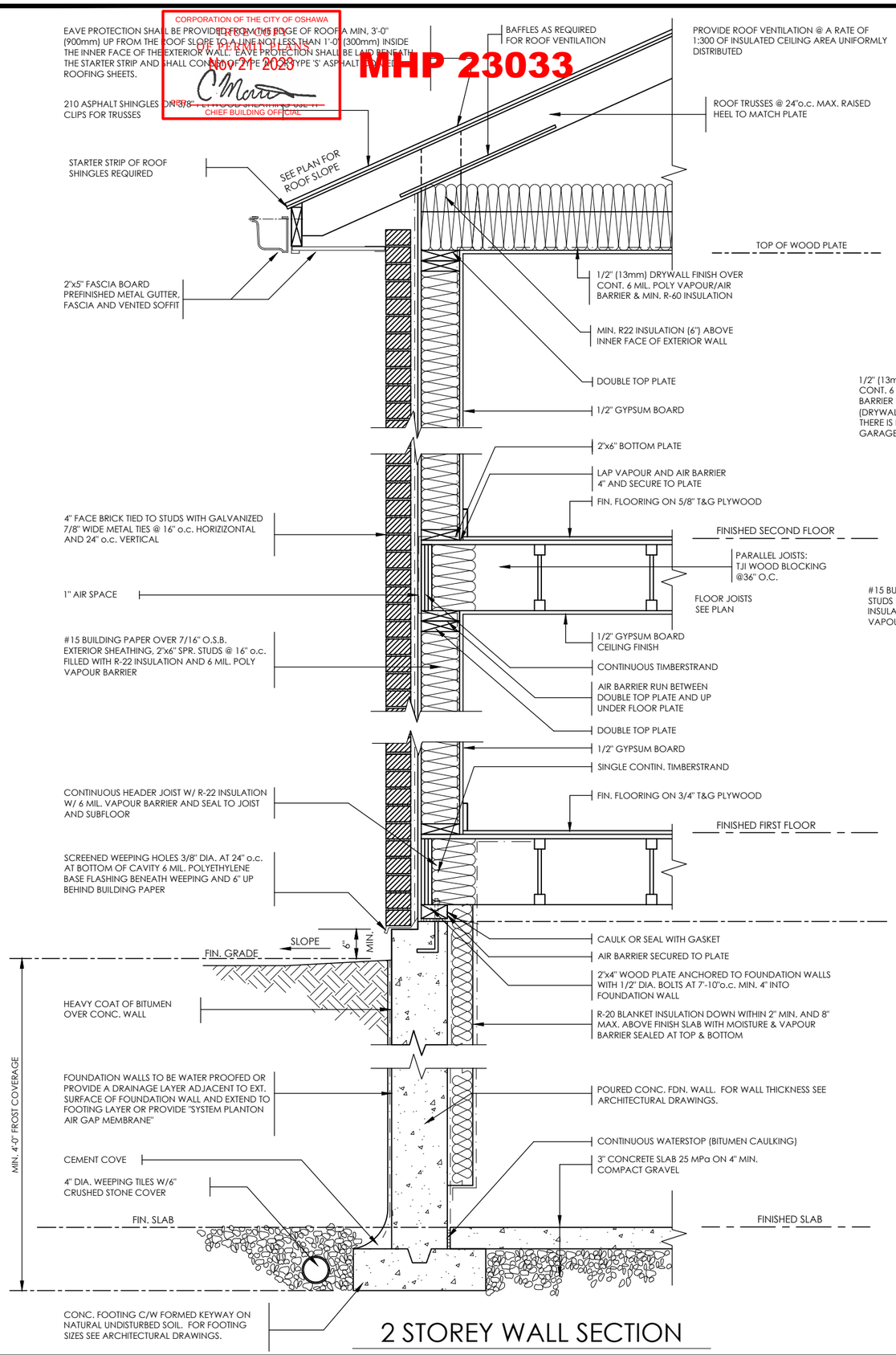

2 STOREY WALL SECTION

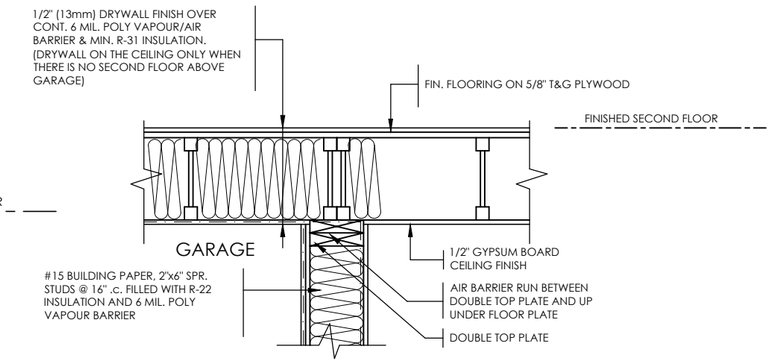

DETAIL FOR INTERIOR GARAGE WALLS & CEILINGS

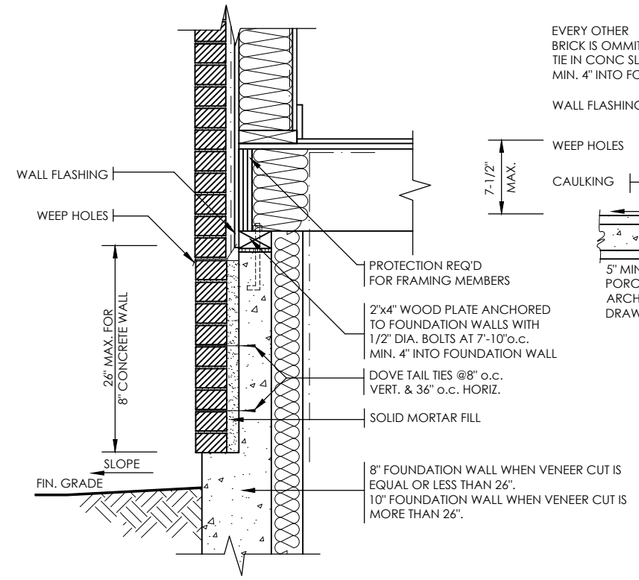

DETAIL FOR CONCRETE VENEER DROPPED GRADE

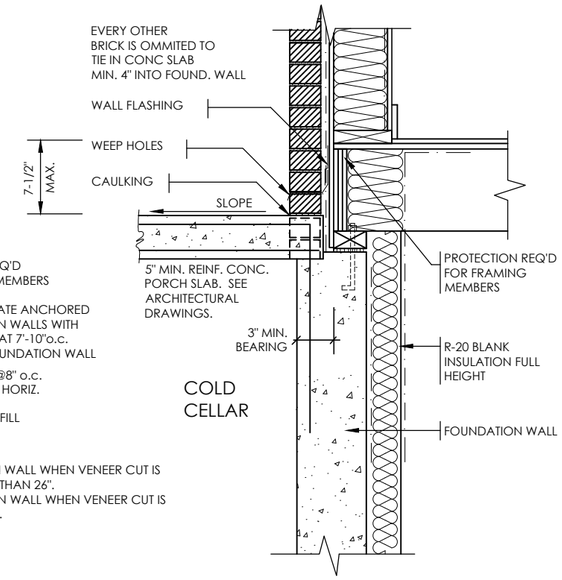

DETAIL FOR COLD CELLAR PORCH SLAB

Compliance Package A1

Contractor shall check all dimensions and elevations before commencing with work and report any discrepancies to the Designer. Prints are not to be scaled.

The undersigned has reviewed and takes responsibility for this design, as well as having the qualifications and requirements mandated by the Ontario Building Code (O.B.C.) to be a Designer.

Qualification Information

Name	BCIN	Signature
Jamie Mack	35923	
Registration Information	**Mackitecture**	103532

www.mackitecture.ca
975A Elgin Street West, Suite 353
Cobourg, ON K9A 5J3
Tel: 416-735-8190 Email: info@mackitecture.ca

title: **2x6 Brick Veneer 2 Storey**

scale	by	area	sheet no.
3/4" = 1'-0"	Greenpark	-	6
date: 2023-04-28	type: -	project no.: 22-012	

Greenpark
www.greenparkgroup.ca

project name: **Zadorra Estates Inc.**

Drawing created with Mackitecture v.1.0.0 (build 2643). File P:\2022\22-012-GREENPARK-ZADORRA-OSHAWA\UNITS\WORKING\DETAILS\DETAILS 06 - 2 STOREY SECTION 2X6 PACKAGE A1.DWG plotted on 2023-04-28 at 1:27:34 PM by JMACK

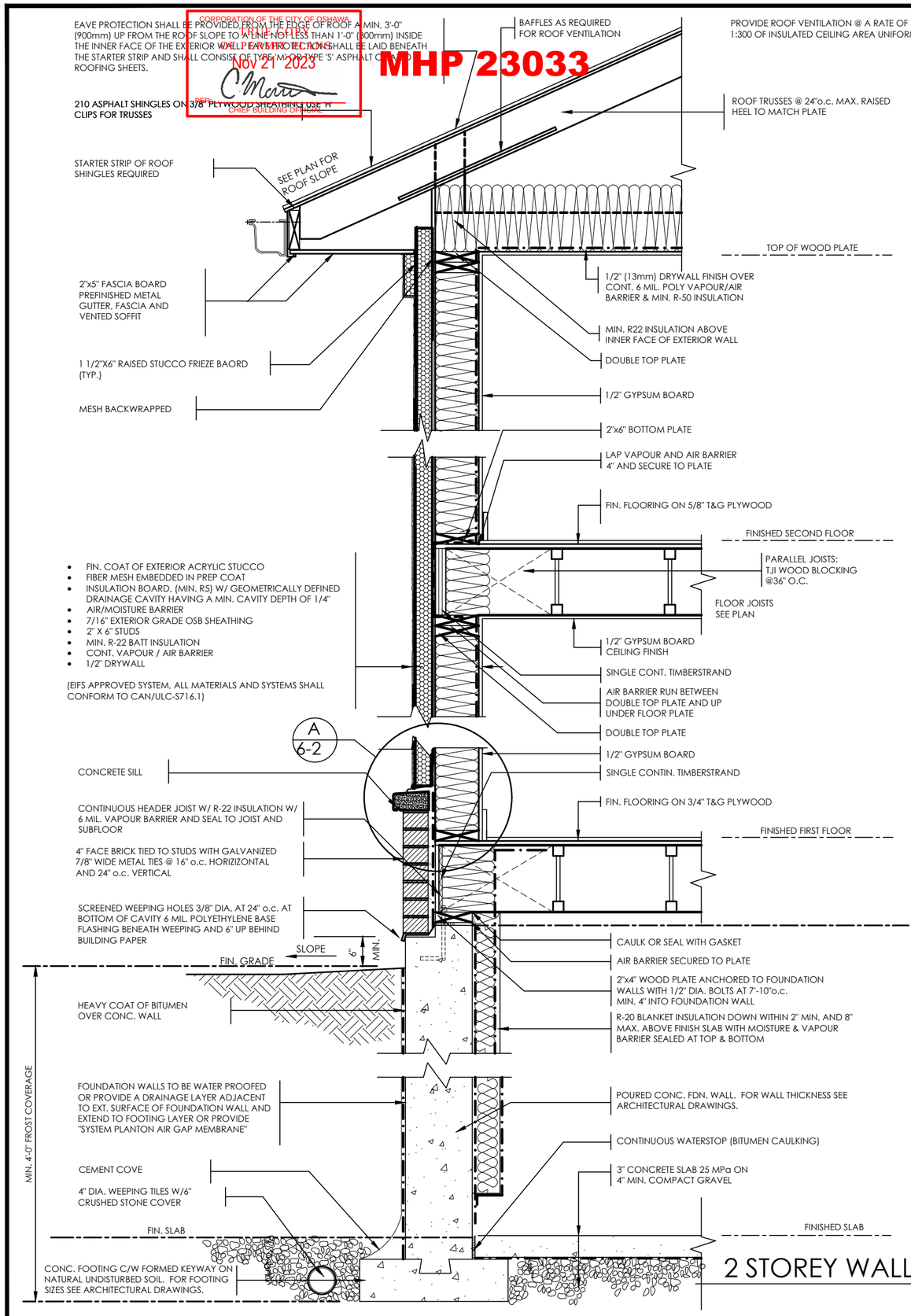

2 STOREY WALL SECTION

CORPORATION OF THE CITY OF OSHAWA
BUILDING DIVISION
PLUMBING PERMIT
Nov 21 2023
CHIEF BUILDING OFFICIAL

MHP 23033

STRUDET INC.
REGISTERED PROFESSIONAL ENGINEER
B. MARINKOVIC
May 10, 2023
PROVINCE OF ONTARIO
FOR STRUCTURE ONLY

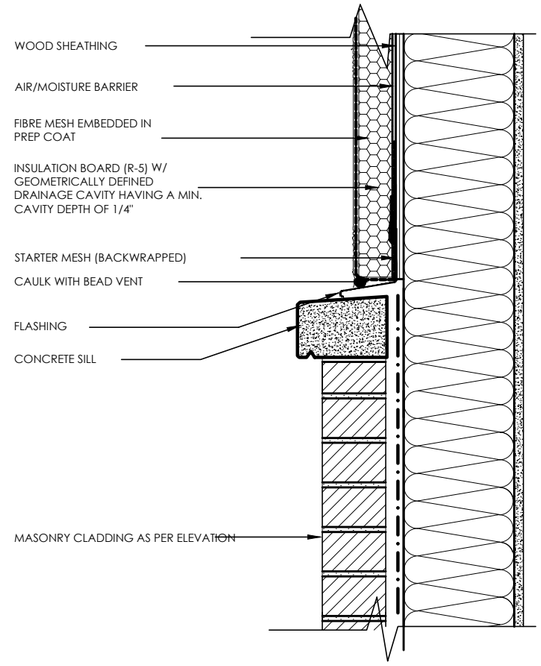

A. TERMINATION AT MASONRY CLADDING WITH SEALANT

1 1/2"=1'0"

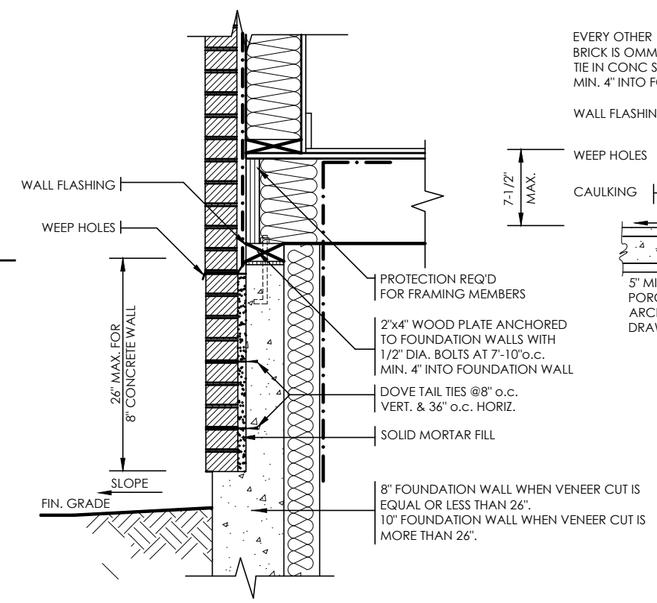

DETAIL FOR CONCRETE VENEER DROPPED GRADE

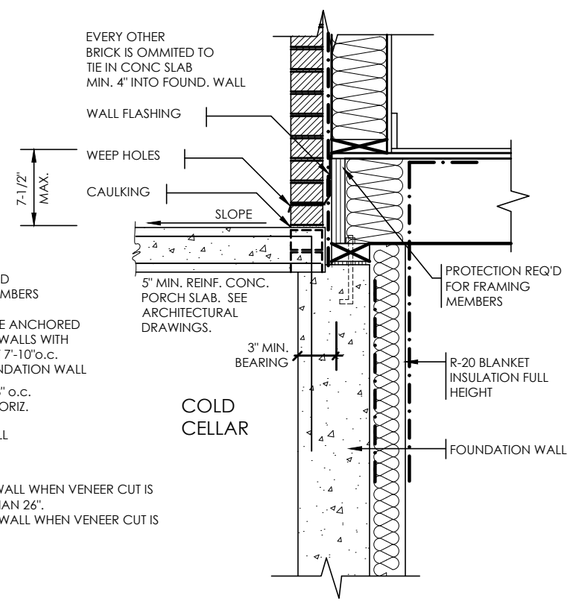

DETAIL FOR COLD CELLAR PORCH SLAB

Compliance Package A1

Contractor shall check all dimensions and elevations before commencing with work and report any discrepancies to the Designer. Prints are not to be scaled.

The undersigned has reviewed and takes responsibility for this design, as well as having the qualifications and requirements mandated by the Ontario Building Code (O.B.C.) to be a Designer.

Qualification Information

Jamie Mack	35923	
Name	BCIN	Signature
Registration Information	**Mackitecture**	103532

www.mackitecture.ca
975A Elgin Street West, Suite 353
Cobourg, ON K9A 5J3
Tel: 416-735-8190 Email: info@mackitecture.ca

title: **2x6 Stucco Wall 2 Storey**

scale	by	area	sheet no.
as noted	Greenpark	-	6-2
date: 2023-04-28	type: -	project no.: 22-012	

Greenpark
www.greenparkgroup.ca

project name: **Zadorra Estates Inc.**

Drawing created with Mackitecture v.1.0.0 (build 2643). File P:\2022\22-012-GREENPARK-ZADORRA-OSHAWA\UNITS\WORKING\DETAILS\DETAILS 06-2 - 2 STOREY SECTION 2X6- STUCCO PACKAGE A1.DWG plotted on 2023-04-28 at 1:27:22 PM by JMACK

CORPORATION OF THE CITY OF OSHAWA
TRUE COPY
OF PERMIT PLANS
Nov 21 2023
PER: C Morr
CHIEF BUILDING OFFICIAL

MHP 23033

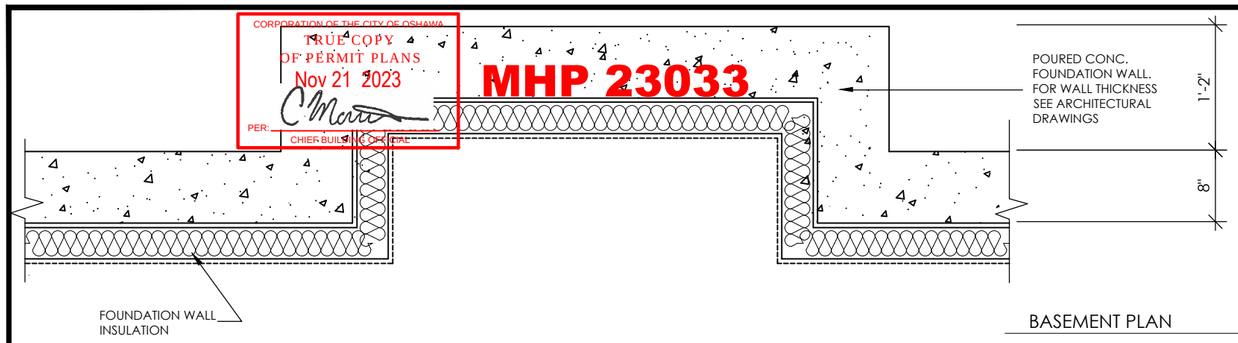

BASEMENT PLAN

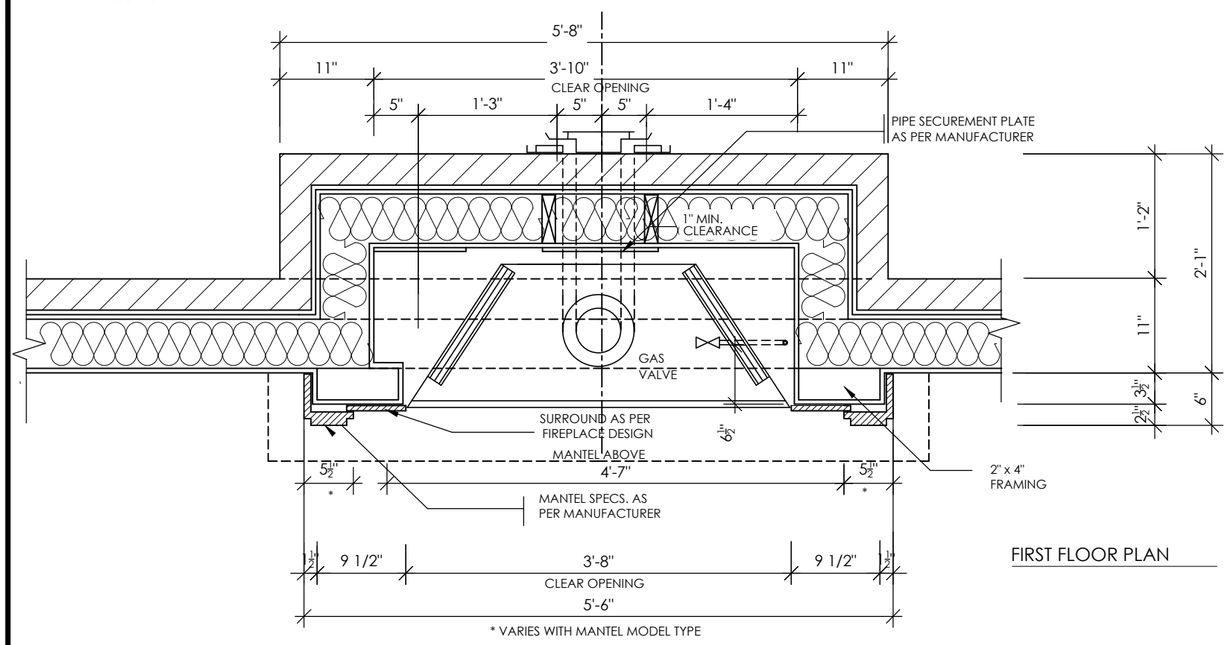

FIRST FLOOR PLAN

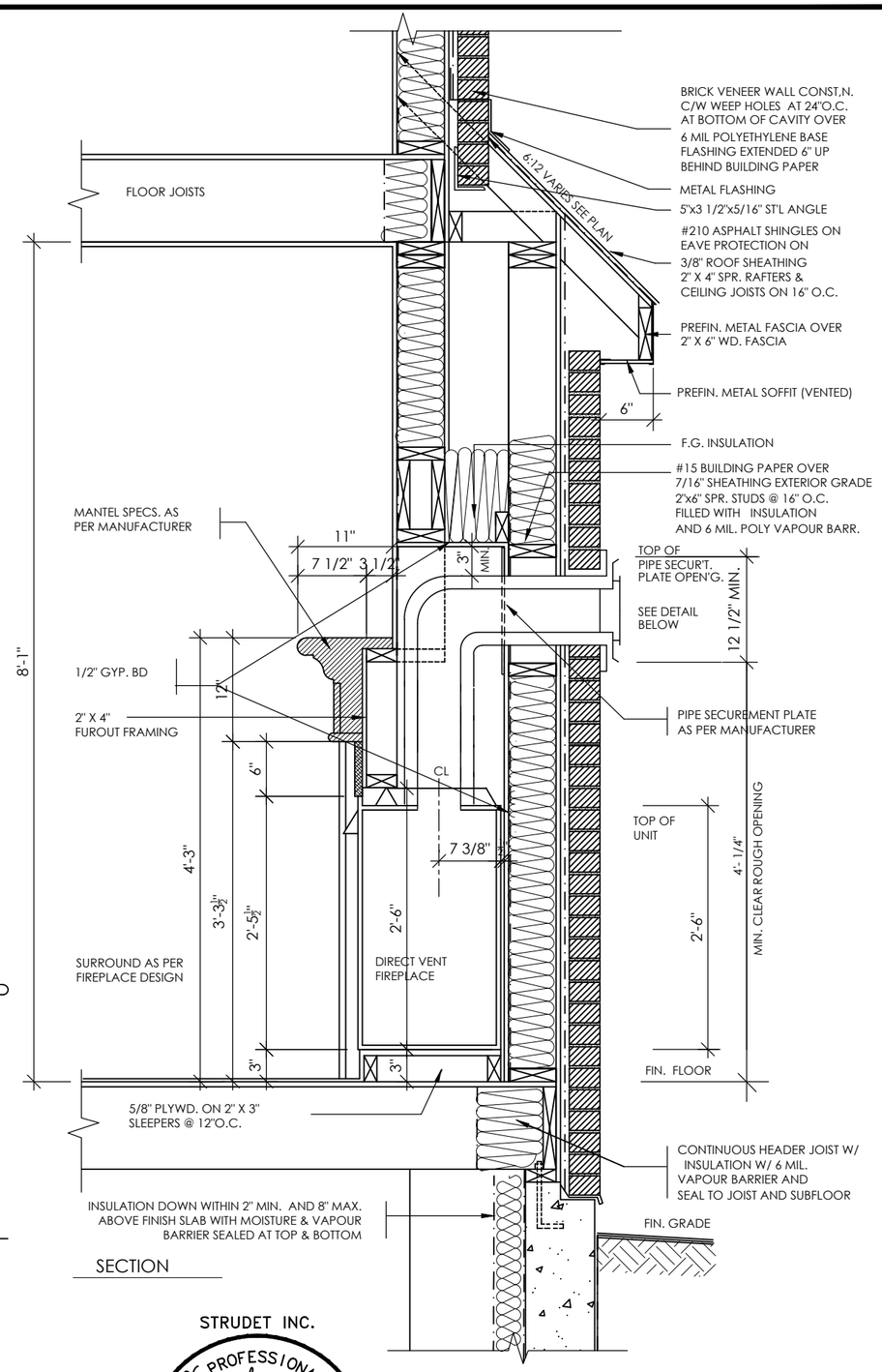

SECTION

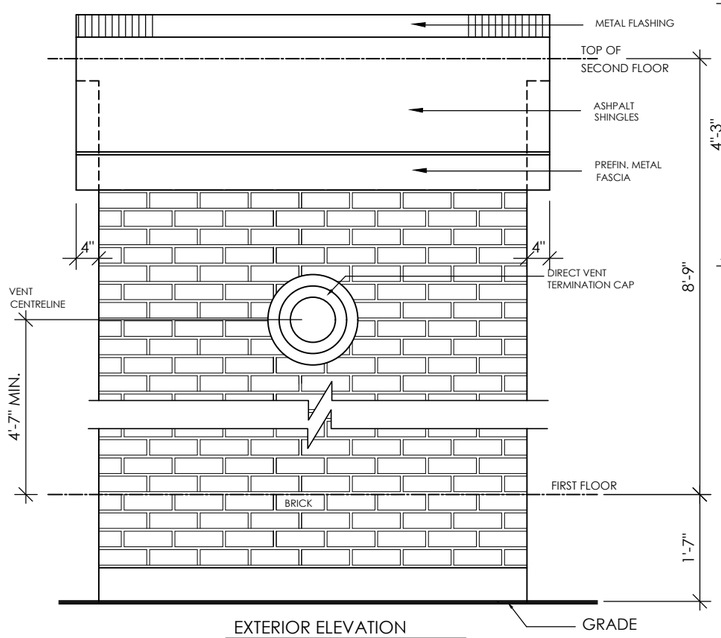

EXTERIOR ELEVATION

NOT TO SCALE

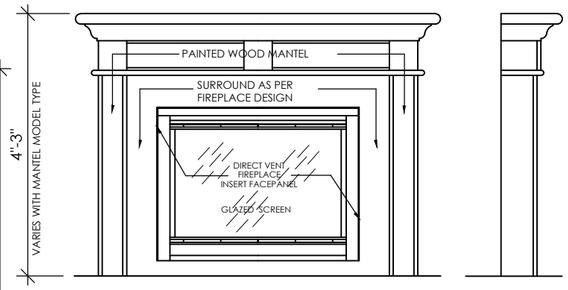

FRONT/SIDE ELEVATION

NOT TO SCALE

GENERAL INSTALLATION NOTES

1.0 UNIT INSTALLATION TO STRICTLY CONFORM TO MANUFACTURERS INSTALLATION MANUAL AND ALL APPLICABLE CODES OF LOCAL AUTHORTIES HAVING JURISDICTION INCLUDING CAN/OGA-B149.1 & 2.

2.0 INSTALL WITH THE FOLLOWING MINIMUM CLEARANCES TO COMBUSTIBLES:
- -FROM TOP OF UNIT 0"
- -FROM BACK OF UNIT 1/2"
- -FROM SIDES OF UNIT 1/2"
- -FROM TOP OF HORIZ.VENT 3"
- -FROM SIDES TO VENT 1"

3.0 THE DIRECT VENT UNIT ILLUSTRATED IS THE GC150 MODEL AS MANUFACTURED BY HEATILATOR.

4.0 THE MANTEL ILLUSTRATED IS THE S-2 GB AS SUPPLIED BY GREATER TORONTO FIREPLACE.

STRUDET INC.

REGISTERED PROFESSIONAL ENGINEER
B. MARINKOVIC
May 10, 2023
PROVINCE OF ONTARIO

FOR STRUCTURE ONLY

Compliance Package A1

Contractor shall check all dimensions and elevations before commencing with work and report any discrepancies to the Designer. Prints are not to be scaled.

The undersigned has reviewed and takes responsibility for this design, as well as having the qualifications and requirements mandated by the Ontario Building Code (O.B.C.) to be a Designer.

Qualification Information

Name	BCIN	Signature
Jamie Mack	35923	
Registration Information	**Mackitecture**	103532

www.mackitecture.ca
975A Elgin Street West, Suite 353
Cobourg, ON K9A 5J3
Tel: 416-735-8190 Email: info@mackitecture.ca

title: **Direct Vent Fireplace Conventional Framed Roof**

scale	by	area	sheet no.
3/4" = 1'-0"	Greenpark	-	7
date: 2023-04-28	type: -	project no.: 22-012	

Greenpark
www.greenparkgroup.ca

project name: **Zadorra Estates Inc.**

Drawing created with Mackitecture v.1.0.0 (build 2643), File P:\2022\22-012-GREENPARK-ZADORRA-OSHAWA\UNITS\WORKING\DETAILS\DETAILS 07 - DIRECT VENT FIRE PLACE PACKAGE A1.DWG plotted on 2023-04-28 at 1:27:10 PM by JMACK

CORPORATION OF THE CITY OF OSHAWA
TRUE COPY OF PERMIT PLANS
Nov 21 2023
PER: CHIEF BUILDING OFFICIAL

MHP 23033

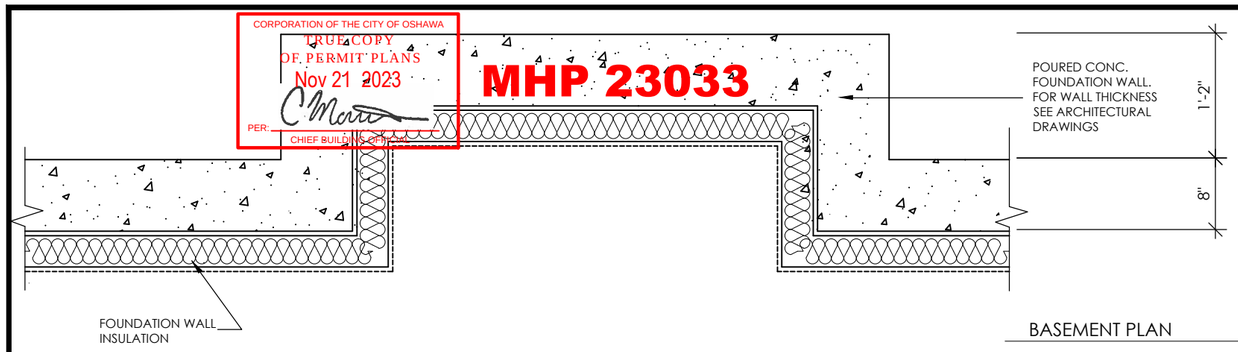

BASEMENT PLAN

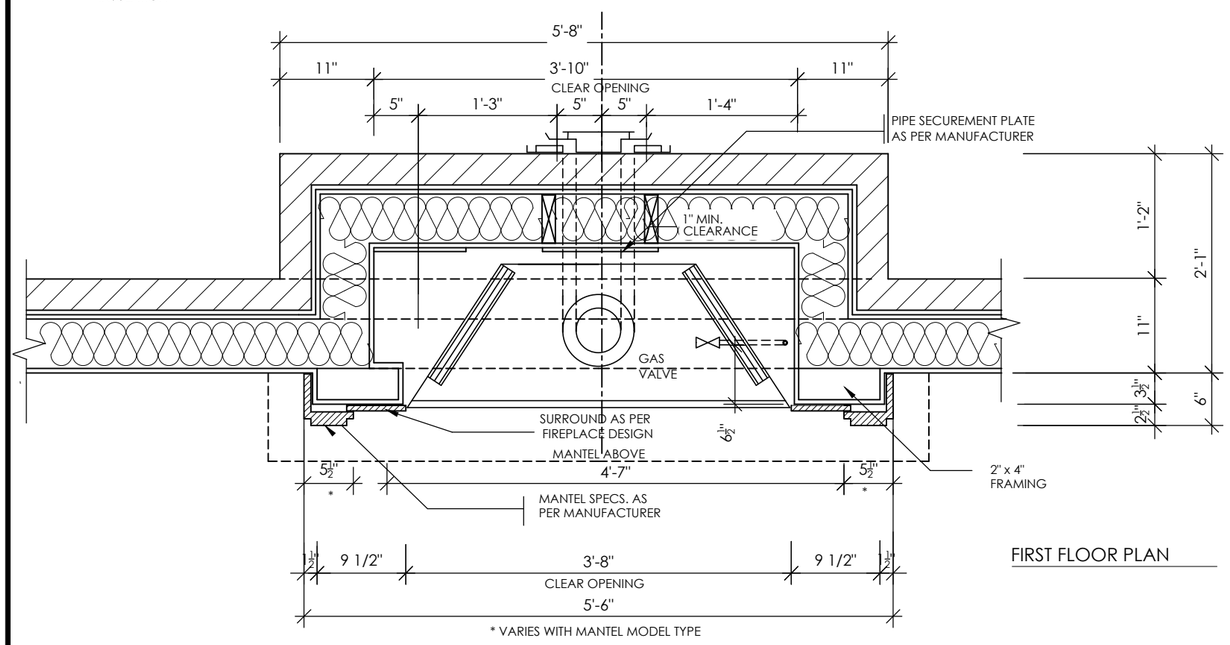

FIRST FLOOR PLAN

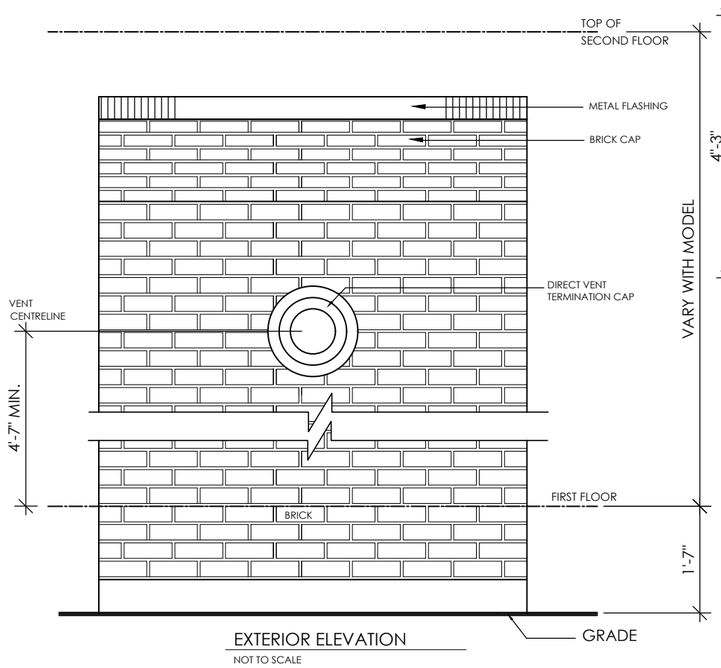

EXTERIOR ELEVATION

NOT TO SCALE

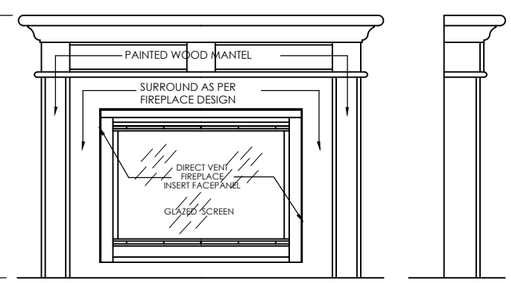

FRONT/SIDE ELEVATION

NOT TO SCALE

GENERAL INSTALLATION NOTES

1.0 UNIT INSTALLATION TO STRICTLY CONFORM TO MANUFACTURERS INSTALLATION MANUAL AND ALL APPLICABLE CODES OF LOCAL AUTHORITIES HAVING JURISDICTION INCLUDING CAN/OGA-B149.1 & 2.

2.0 INSTALL WITH THE FOLLOWING MINIMUM CLEARANCES TO COMBUSTIBLES:
- -FROM TOP OF UNIT 0"
- -FROM BACK OF UNIT 1/2"
- -FROM SIDES OF UNIT 1/2"
- -FROM TOP OF HORIZ.VENT 3"
- -FROM SIDES TO VENT 1"

3.0 THE DIRECT VENT UNIT ILLUSTRATED IS THE GC150 MODEL AS MANUFACTURED BY HEATILATOR.

4.0 THE MANTEL ILLUSTRATED IS THE S-2 GB AS SUPPLIED BY GREATER TORONTO FIREPLACE.

STRUDET INC.
REGISTERED PROFESSIONAL ENGINEER
B. MARINKOVIC
May 10, 2023
PROVINCE OF ONTARIO
FOR STRUCTURE ONLY

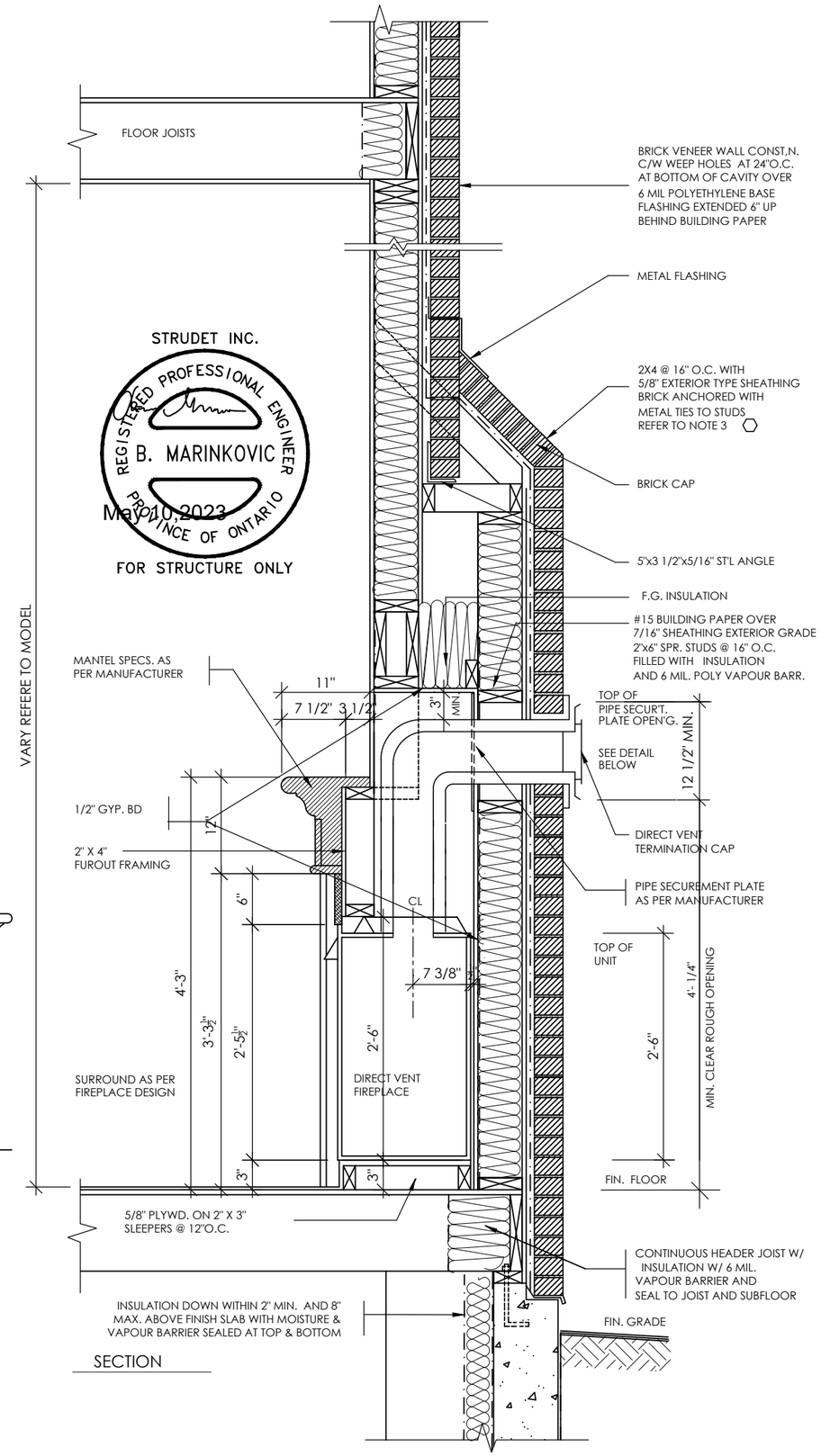

SECTION

Compliance Package A1

Contractor shall check all dimensions and elevations before commencing with work and report any discrepancies to the Designer. Prints are not to be scaled.

The undersigned has reviewed and takes responsibility for this design, as well as having the qualifications and requirements mandated by the Ontario Building Code (O.B.C.) to be a Designer.

Qualification Information

Name	BCIN	Signature
Jamie Mack	35923	
Registration Information	Mackitecture	103532

www.mackitecture.ca
975A Elgin Street West, Suite 353
Cobourg, ON K9A 5J3
Tel: 416-735-8190 Email: info@mackitecture.ca

title: **Direct Vent Fireplace Brick Veneer Roof**

scale	by	area	sheet no.
3/4" = 1'-0"	Greenpark	-	7-2
date: 2023-04-28	type: -	project no.: 22-012	

Greenpark
www.greenparkgroup.ca

project name: **Zadorra Estates Inc.**

Drawing created with Mackitecture v.1.0.0 (build 2643), File P:\2022\22-012-GREENPARK-ZADORRA-OSHAWA\UNITS\WORKING\DETAILS\DETAILS 07-2 - DIRECT VENT FIRE PACKAGE A1.DWG plotted on 2023-04-28 at 1:26:57 PM by JMACK

CORPORATION OF THE CITY OF OSHAWA
TRUE COPY
OF PERMIT PLANS
Nov 21 2023
PER: C. Morr
CHIEF BUILDING OFFICIAL

MHP 23033

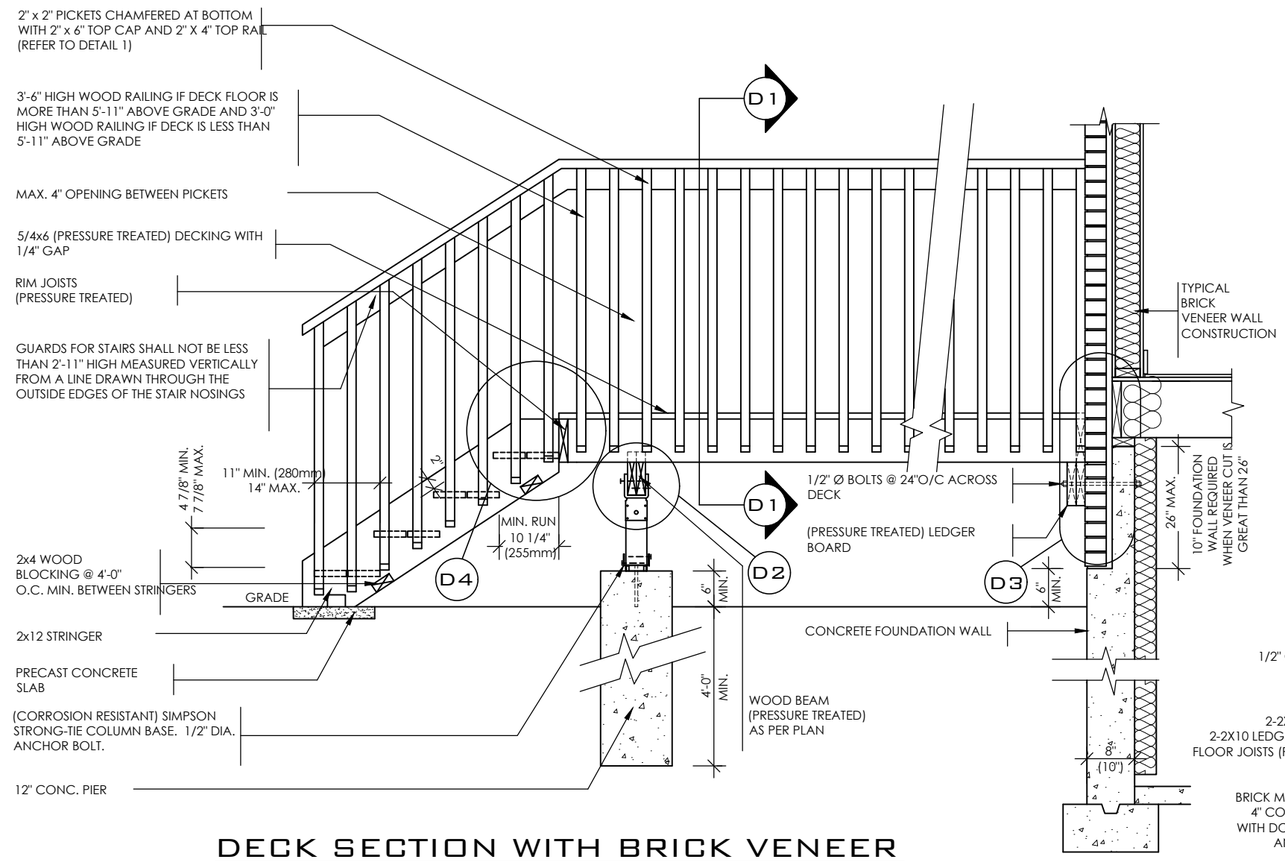

DECK SECTION WITH BRICK VENEER
SCALE: 1/2"=1'-0"

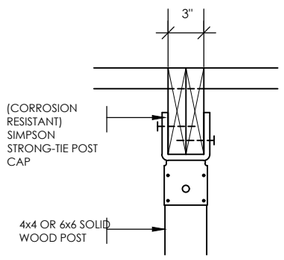

DETAIL 2 - BEAM-TO-POST
SCALE: 1" = 1'-0"

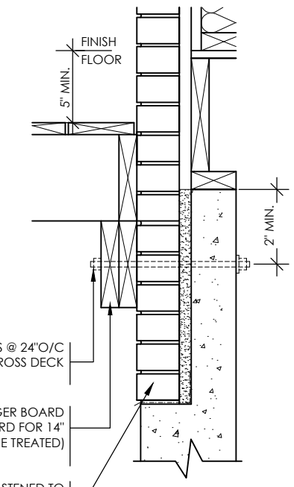

DETAIL 3
ANCHOR BOLT
SCALE: 1" = 1'-0"

DETAIL 1
CANTILEVERED PICKET SCREWED TO RIM JOIST AND DECK

GUARD PARALLEL TO FLOOR JOISTS
SCALE: 1" = 1'-0"

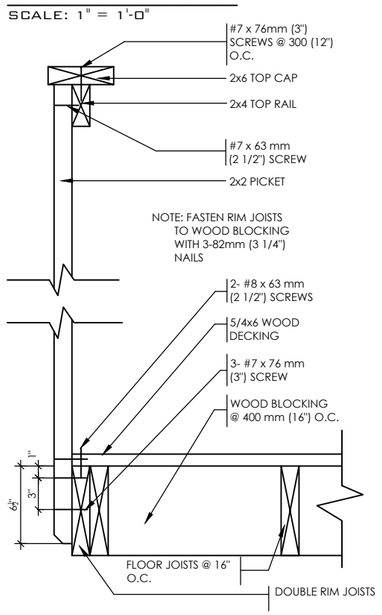

GUARD PERPENDICULAR TO FLOOR JOISTS
SCALE: 1" = 1'-0"

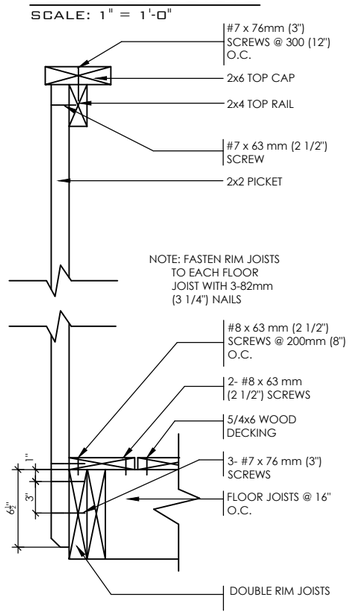

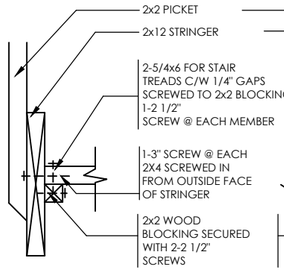

DETAIL 5
SECTION THROUGH STAIR STRINGER
SCALE: 1" = 1'-0"

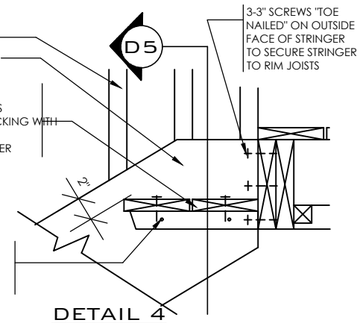

DETAIL 4
SECTION @ TREAD AND STRINGER SECUREMENT
SCALE: 1" = 1'-0"

GENERAL NOTES

1. BRICK TO BE COMPRESSIVE STRENGTH OF 15mPa (2200 p.s.i.) MIN. UNITS TO BE LAID WITH FULL HEAD AND BED JOINTS.
2. MORTAR TO BE TYPE S WITH JOINT THICKNESS OF 10mm (3 /8") MIN. AND 20mm (3 /4") MAX.
3. ALL NAILS AND SCREWS TO BE GALVANIZED.
4. WOOD FOR CANTILEVERED PICKETS PICKETS SHALL BE DOUGLAS FIR-LARCH, SPRUCE-PINE-FIR, OR HEM-FIR SPECIES.
5. THE DECK HAS BEEN DESIGNED TO SAFELY SUPPORT A SUPERIMPOSED LOAD OF 1.9kPa [40psf].
6. CONCRETE SHALL HAVE COMPRESSIVE STRENGTH OF 20MPa AT 28 DAYS AND 5-8% AIR ENTRAINED.
7. FOOTING TO BE PLACED ON UNDISTURBED SOIL WITH MIN. BEARING PRESSURE OF 150kPa [3130psf].

STRUDET INC.
REGISTERED PROFESSIONAL ENGINEER
B. MARINKOVIC
PROVINCE OF ONTARIO
FOR STRUCTURE ONLY

Compliance Package A1

Contractor shall check all dimensions and elevations before commencing with work and report any discrepancies to the Designer. Prints are not to be scaled.

The undersigned has reviewed and takes responsibility for this design, as well as having the qualifications and requirements mandated by the Ontario Building Code (O.B.C.) to be a Designer.

Qualification Information

Name	BCIN	Signature
Jamie Mack	35923	
Registration Information	**Mackitecture**	103532

www.mackitecture.ca
975A Elgin Street West, Suite 353
Cobourg, ON K9A 5J3
Tel: 416-735-8190 Email: info@mackitecture.ca

title: **Wood Deck Details**

scale	by	area	sheet no.
As shown	Greenpark	-	8
date: 2023-07-18	type: -	project no.: 22-012	

Greenpark
www.greenparkgroup.ca

project name: **Zadorra Estates Inc.**

CORPORATION OF THE CITY OF OSHAWA
TRUE COPY
OF PERMIT PLANS
Nov 21 2023
PER:
CHIEF BUILDING OFFICIAL

MHP 23033

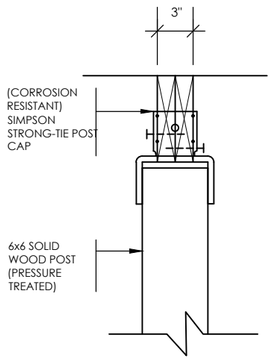

DETAIL 2 - BEAM-TO-POST

SCALE: 1" = 1'-0"

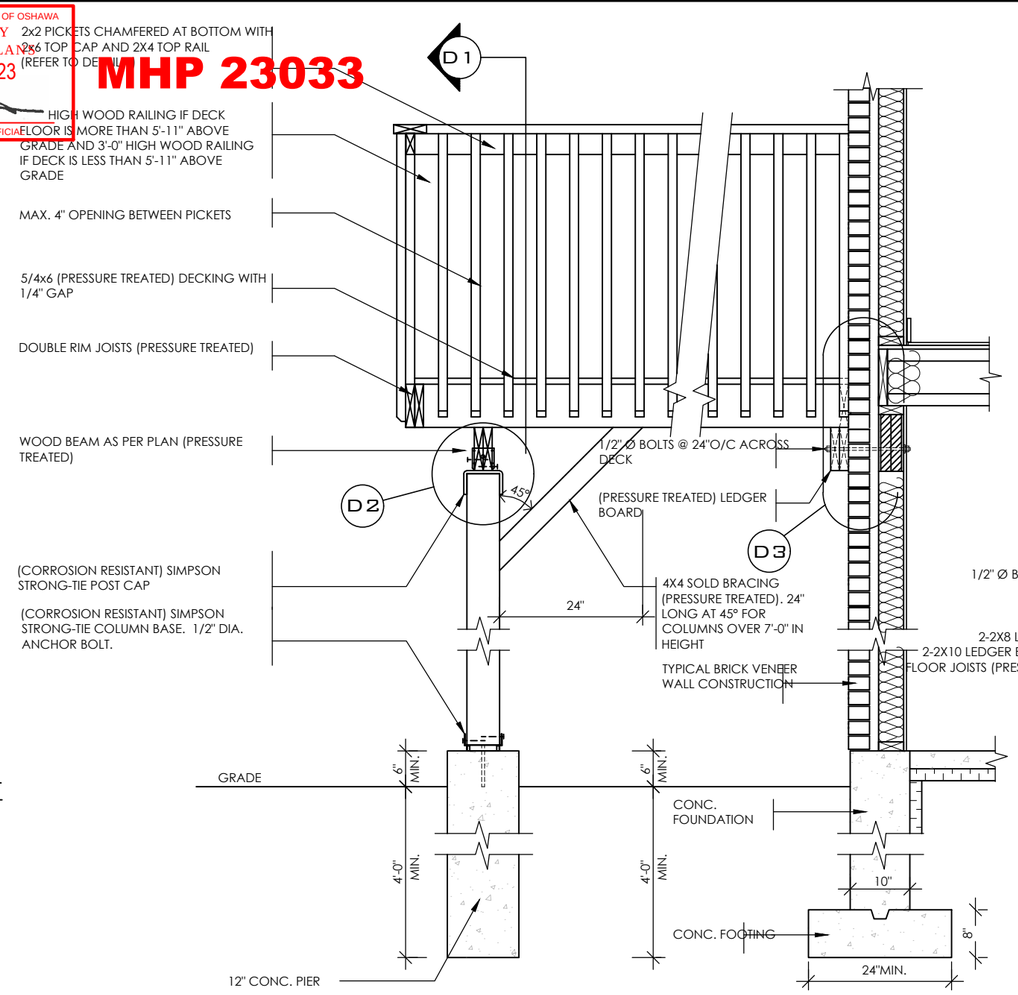

DETAIL 3 BEAM-TO-STUD WALL

SCALE: 1" = 1'-0"

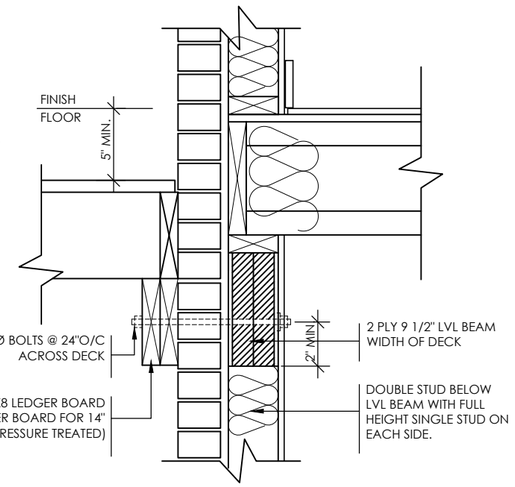

DECK SECTION WITH BRICK VENEER

SCALE: 1/2"=1'-0"

DETAIL 1
CANTILEVERED PICKET SCREWED TO RIM JOIST AND DECK

GUARD PARALLEL TO FLOOR JOISTS

SCALE: 1" = 1'-0"

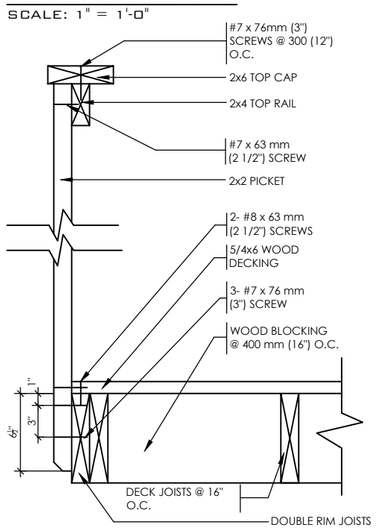

GUARD PERPENDICULAR TO FLOOR JOISTS

SCALE: 1" = 1'-0"

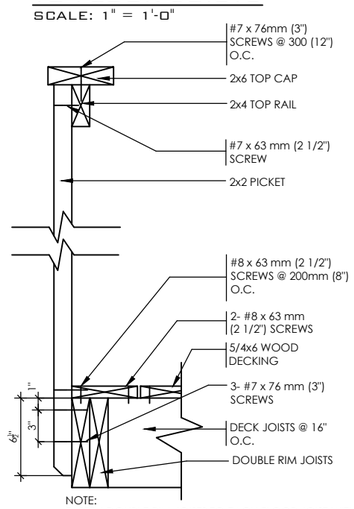

NOTE:
FASTEN DOUBLE RIM JOISTS TO EACH FLOOR JOIST WITH 3-82mm (3 1/4") NAILS

GENERAL NOTES

1. THE DECK HAS BEEN DESIGNED TO SAFELY SUPPORT A SUPERIMPOSED LOAD OF 1.9kPa [40psf]
2. ALL NAILS AND SCREWS TO BE GALVANIZED
3. WOOD FOR CANTILEVERED PICKETS PICKETS SHALL BE DOUGLAS FIR-LARCH, SPRUCE-PINE-FIR, OR HEM-FIR SPECIES
4. CONCRETE SHALL HAVE COMPRESSIVE STRENGTH OF 20MPa AT 28 DAYS AND 5-8% AIR ENTRAINED
5. FOOTING TO BE PLACED ON UNDISTURBED SOIL WITH MIN. BEARING PRESSURE OF 150kPa [3130psf]

STRUDET INC.
REGISTERED PROFESSIONAL ENGINEER
B. MARINKOVIC
MAY 10, 2023
PROVINCE OF ONTARIO
FOR STRUCTURE ONLY

Compliance Package A1

Contractor shall check all dimensions and elevations before commencing with work and report any discrepancies to the Designer. Prints are not to be scaled.

The undersigned has reviewed and takes responsibility for this design, as well as having the qualifications and requirements mandated by the Ontario Building Code (O.B.C.) to be a Designer.

Qualification Information

Name	BCIN	Signature
Jamie Mack	35923	
Registration Information	Mackitecture	103532

www.mackitecture.ca
975A Elgin Street West, Suite 353
Cobourg, ON K9A 5J3
Tel: 416-735-8190 Email: info@mackitecture.ca

title: **Walk-out Deck Details**

scale	by	area	sheet no.
As shown	Greenpark	-	8-2
date: 2023-04-28	type: -	project no.: 22-012	

Greenpark
www.greenparkgroup.ca

project name: **Zadorra Estates Inc.**

CORPORATION OF THE CITY OF OSHAWA
TRUE COPY
OF PERMIT PLANS
Nov 21 2023
PER: C. Morris
CHIEF BUILDING OFFICIAL

MHP 23033

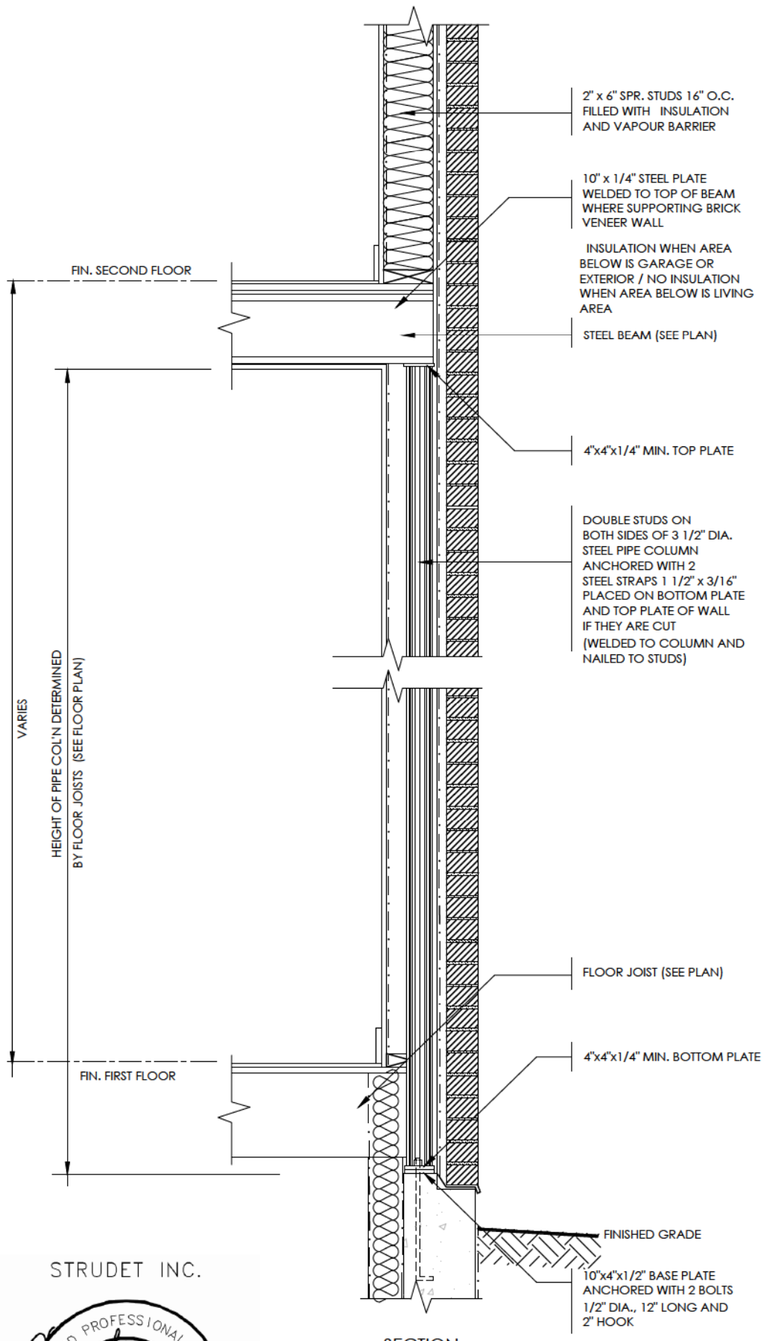

SECTION

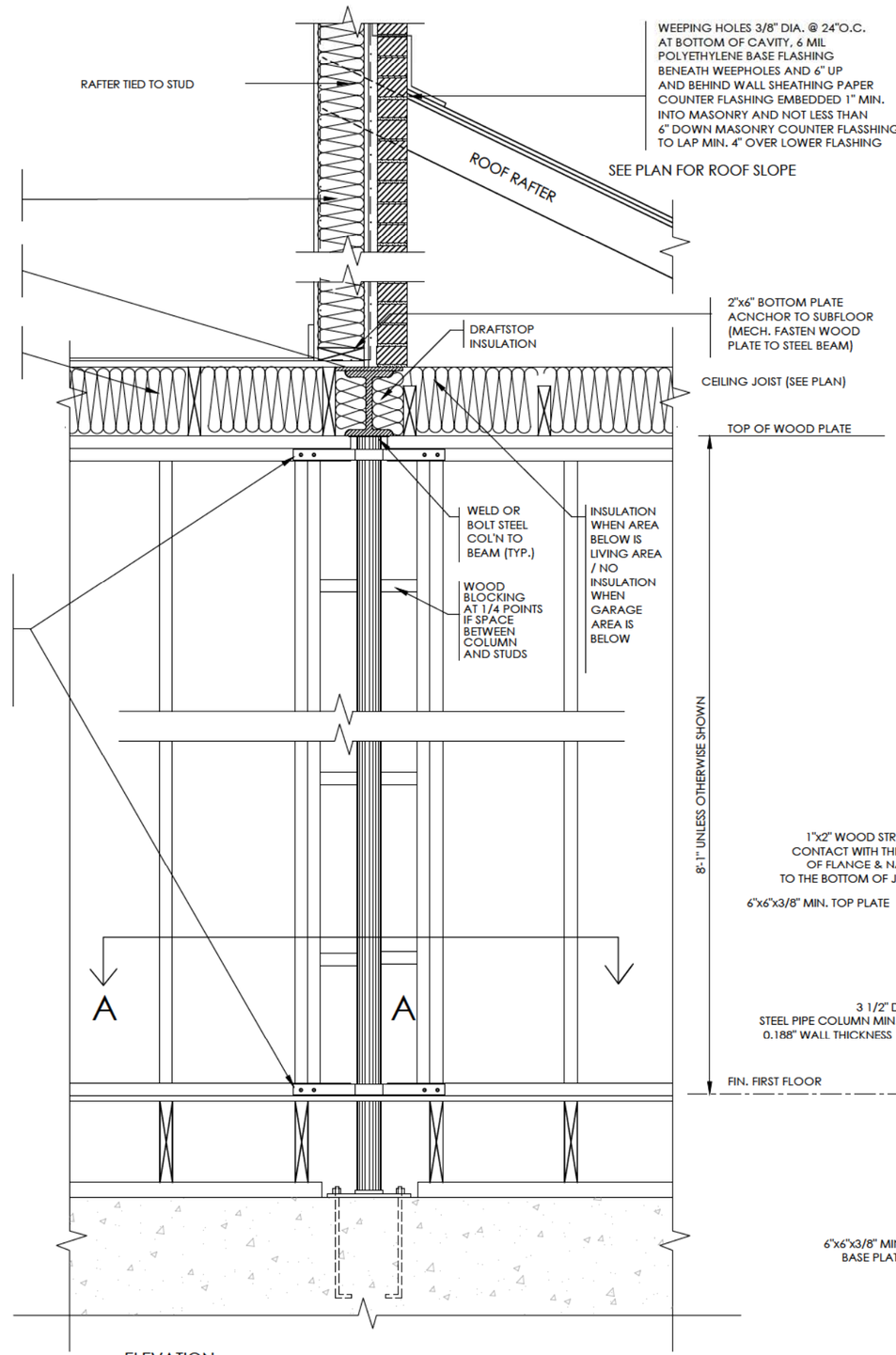

ELEVATION

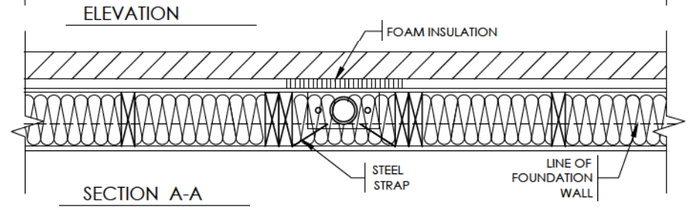

SECTION A-A

SECTION THROUGH STEEL BEAM SUPPORTING MASONRY & BEARING STUD PARTITION

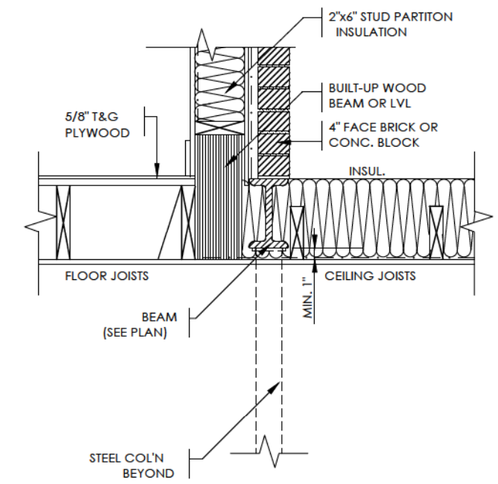

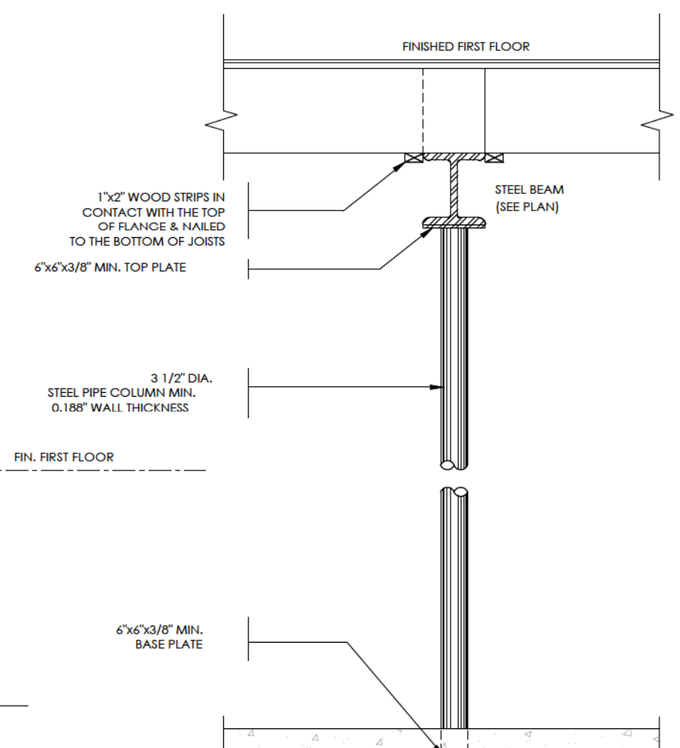

DETAIL OF STEEL BASEMENT COLUMN

STRUDET INC.

REGISTERED PROFESSIONAL ENGINEER
B. MARINKOVIC
May 11,2023
PROVINCE OF ONTARIO

FOR STRUCTURE ONLY

Compliance Package A1

Contractor shall check all dimensions and elevations before commencing with work and report any discrepancies to the Designer. Prints are not to be scaled.

The undersigned has reviewed and takes responsibility for this design, as well as having the qualifications and requirements mandated by the Ontario Building Code (O.B.C.) to be a Designer.

Qualification Information

Name	BCIN	Signature
Jamie Mack	35923	
Registration Information	Mackitecture	103532

www.mackitecture.ca
975A Elgin Street West, Suite 353
Cobourg, ON K9A 5J3
Tel: 416-735-8190 Email: info@mackitecture.ca

title: **Steel Column Details**

scale	by	area	sheet no.
3/4" = 1'-0"	Greenpark	-	9
date: 2023-05-12	type: -	project no.: 22-012	

Greenpark
www.greenparkgroup.ca

project name: **Zadorra Estates Inc.**

Drawing created with Mackitecture v.1.0.0 (build 2645), File P:\2022\22-012-GREENPARK-ZADORRA-OSHAWA\UNITS\WORKING\DETAILS\P 9 - STEEL COLUMN DETAILS PACKAGE A1.DWG plotted on 2023-05-12 at 12:00:51 PM by JMACK

CORPORATION OF THE CITY OF OSHAWA
TRUE COPY
OF PERMIT PLANS
Nov 21 2023
PER: C. Morr
CHIEF BUILDING OFFICIAL

MHP 23033

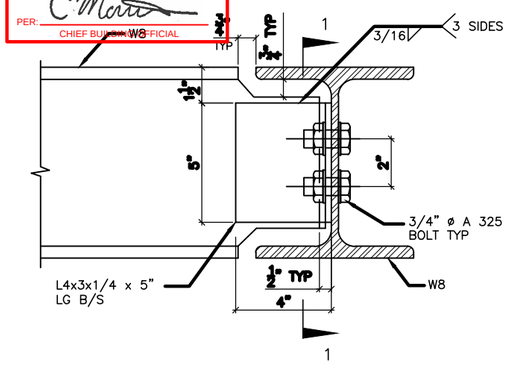

DETAIL 1.

W8
TO
W8
CONNECTION

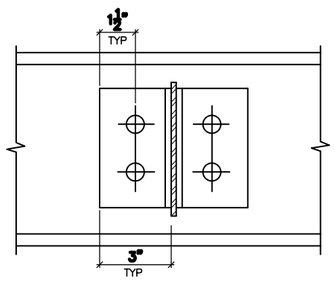

SECTION 1–1

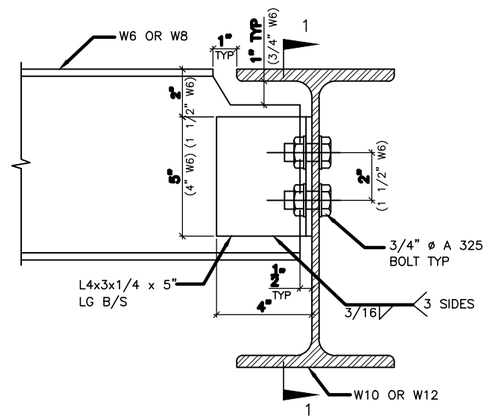

DETAIL 2.

W6(W8)
TO
W10(W12)
CONNECTION

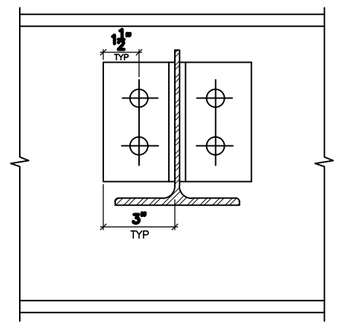

SECTION 1–1

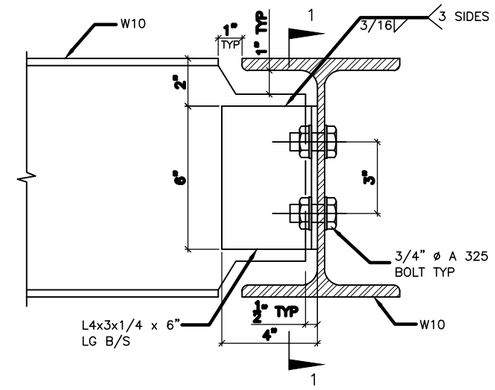

DETAIL 3.

W10
TO
W10
CONNECTION

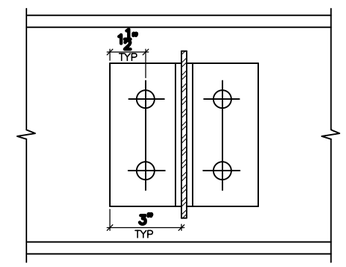

SECTION 1–1

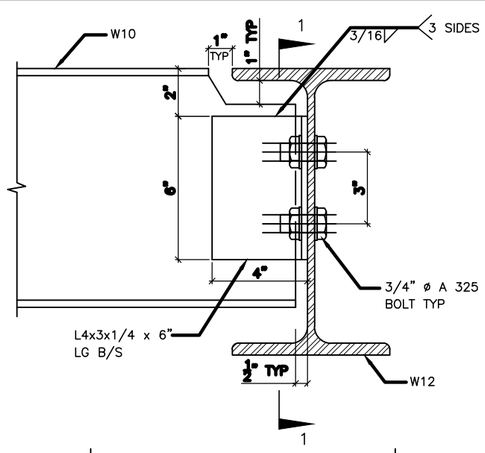

DETAIL 4.

W10
TO
W12
CONNECTION

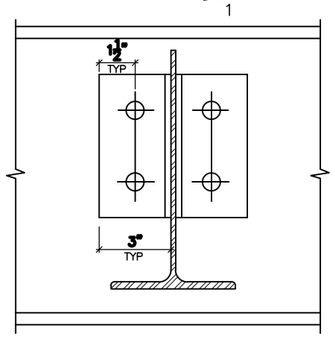

SECTION 1–1

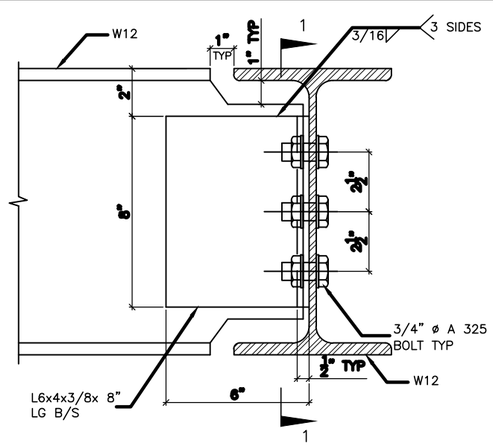

DETAIL 5.

W12
TO
W12
CONNECTION

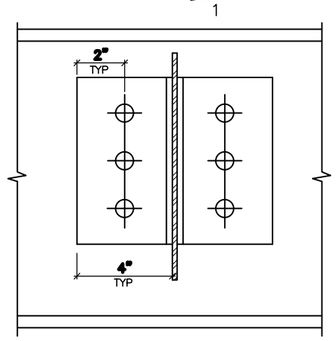

SECTION 1–1

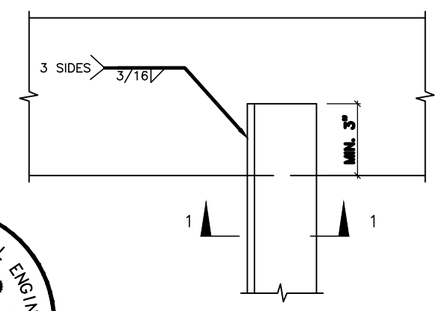

PLAN VIEW

STRUDET INC.
REGISTERED PROFESSIONAL ENGINEER
B. MARINKOVIC
May 10 2023
PROVINCE OF ONTARIO
FOR STRUCTURE ONLY

DETAIL 6.

ANGLE
TO
BEAM
CONNECTION

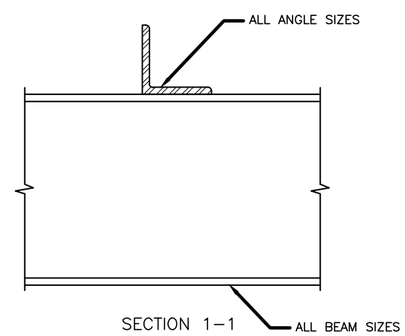

SECTION 1–1

Compliance Package A1

Contractor shall check all dimensions and elevations before commencing with work and report any discrepancies to the Designer. Prints are not to be scaled.

The undersigned has reviewed and takes responsibility for this design, as well as having the qualifications and requirements mandated by the Ontario Building Code (O.B.C.) to be a Designer.

Qualification Information

Name	BCIN	Signature
Jamie Mack	35923	
Registration Information	**Mackitecture**	103532

www.mackitecture.ca
975A Elgin Street West, Suite 353
Cobourg, ON K9A 5J3
Tel: 416-735-8190 Email: info@mackitecture.ca

title: **Steel Beam Connection Details**

scale	by	area	sheet no.
not to scale	**Greenpark**	-	**10**
date: **2023-04-28**	type: -	project no.: **22-012**	

Greenpark
www.greenparkgroup.ca

project name: **Zadorra Estates Inc.**

CORPORATION OF THE CITY OF OSHAWA
TRUE COPY
OF PERMIT PLANS
Nov 21 2023
PER: C. Morton
CHIEF BUILDING OFFICIAL

MHP 23033

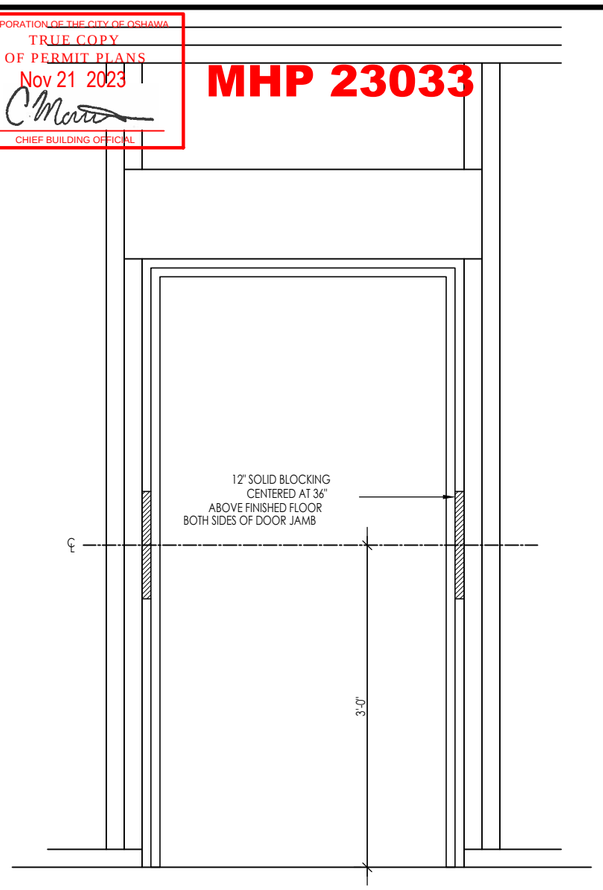

RESISTANCE TO FORCED ENTRY (OBC 9.6.8.)

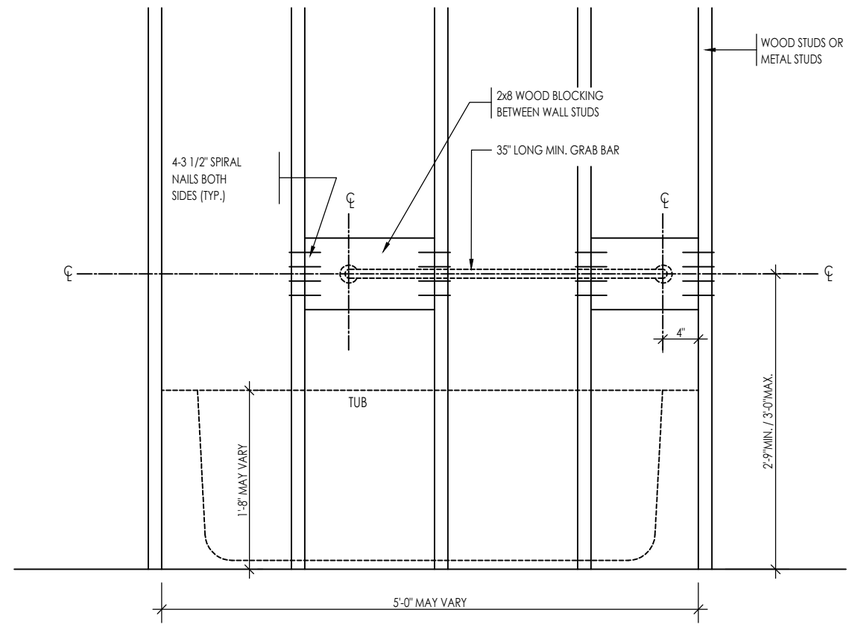

BATH TUB FRONT ELEVATION

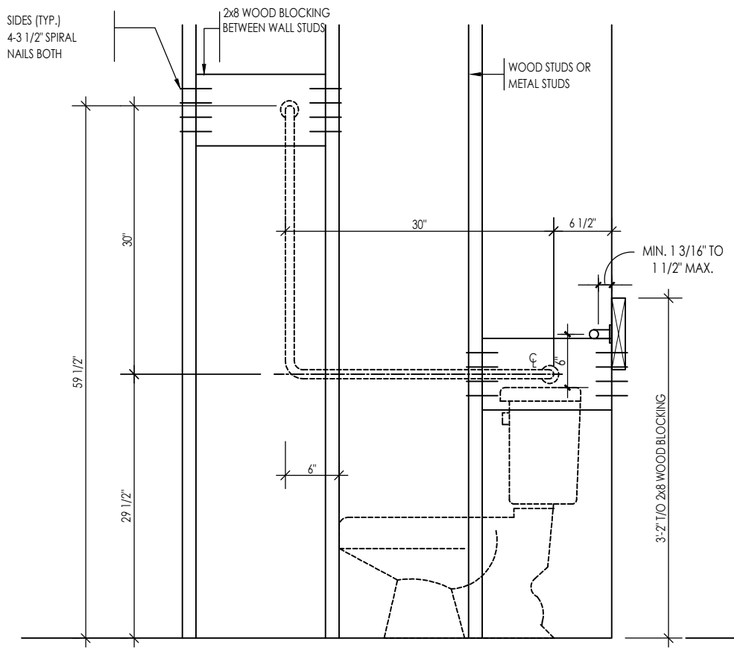

TOILET SIDE ELEVATION

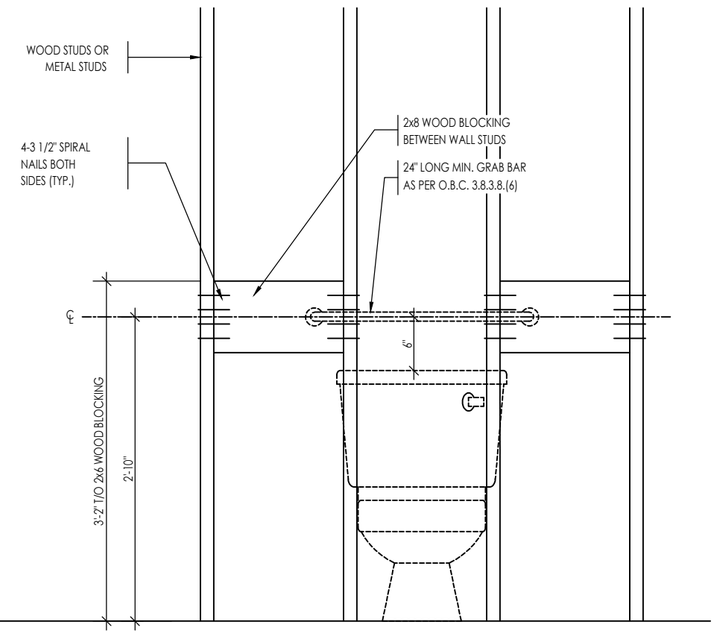

TOILET FRONT ELEVATION

STRUCTURAL REINFORCEMENT FOR GRAB BAR (OBC 9.5.2.3.)

STRUDET INC.
REGISTERED PROFESSIONAL ENGINEER
B. MARINKOVIC
PROVINCE OF ONTARIO
May 10, 2023
FOR STRUCTURE ONLY

Compliance Package A1

Contractor shall check all dimensions and elevations before commencing with work and report any discrepancies to the Designer. Prints are not to be scaled.

The undersigned has reviewed and takes responsibility for this design, as well as having the qualifications and requirements mandated by the Ontario Building Code (O.B.C.) to be a Designer.

Qualification Information

Name	BCIN	Signature
Jamie Mack	35923	
Registration Information	**Mackitecture**	103532

www.mackitecture.ca
975A Elgin Street West, Suite 353
Cobourg, ON K9A 5J3
Tel: 416-735-8190 Email: info@mackitecture.ca

title: **Blocking Details for Forced Entry and Main Bath Grab Bars**

scale	by	area	sheet no.
3/4" = 1'-0"	Greenpark	-	11
date: 2023-04-28	type: -	project no.: 22-012	

Greenpark
www.greenparkgroup.ca

project name: **Zadorra Estates Inc.**

CORPORATION OF THE CITY OF OSHAWA
TRUE COPY
OF PERMIT PLANS
Nov 21 2023
PER: C. Morr
CHIEF BUILDING OFFICIAL

MHP 23033

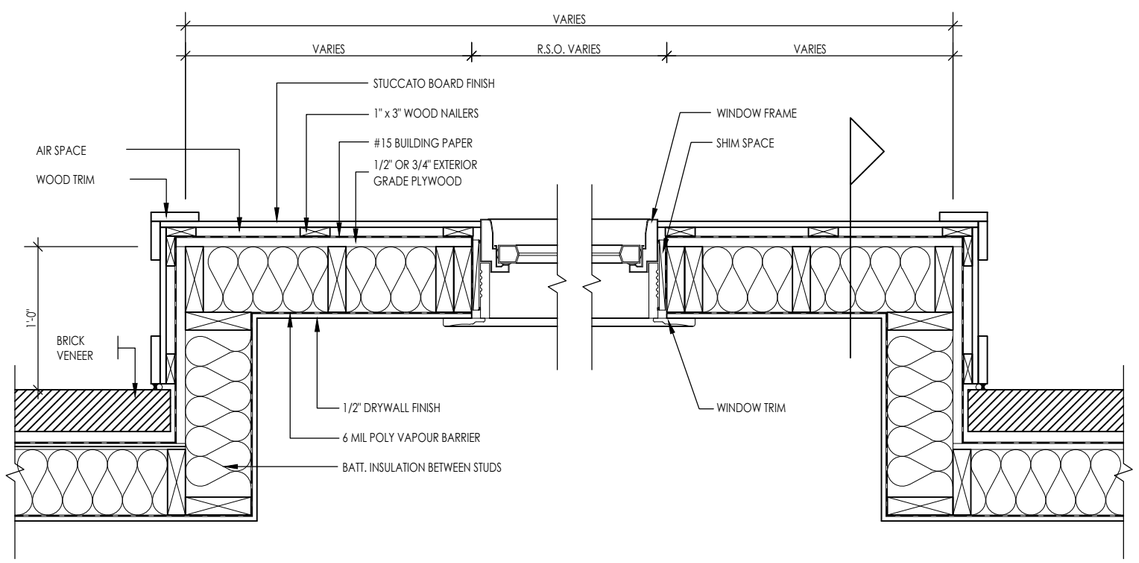

PLAN VIEW

STUCCATO BOARD FINISH CLADDING (OBC 9.27.)

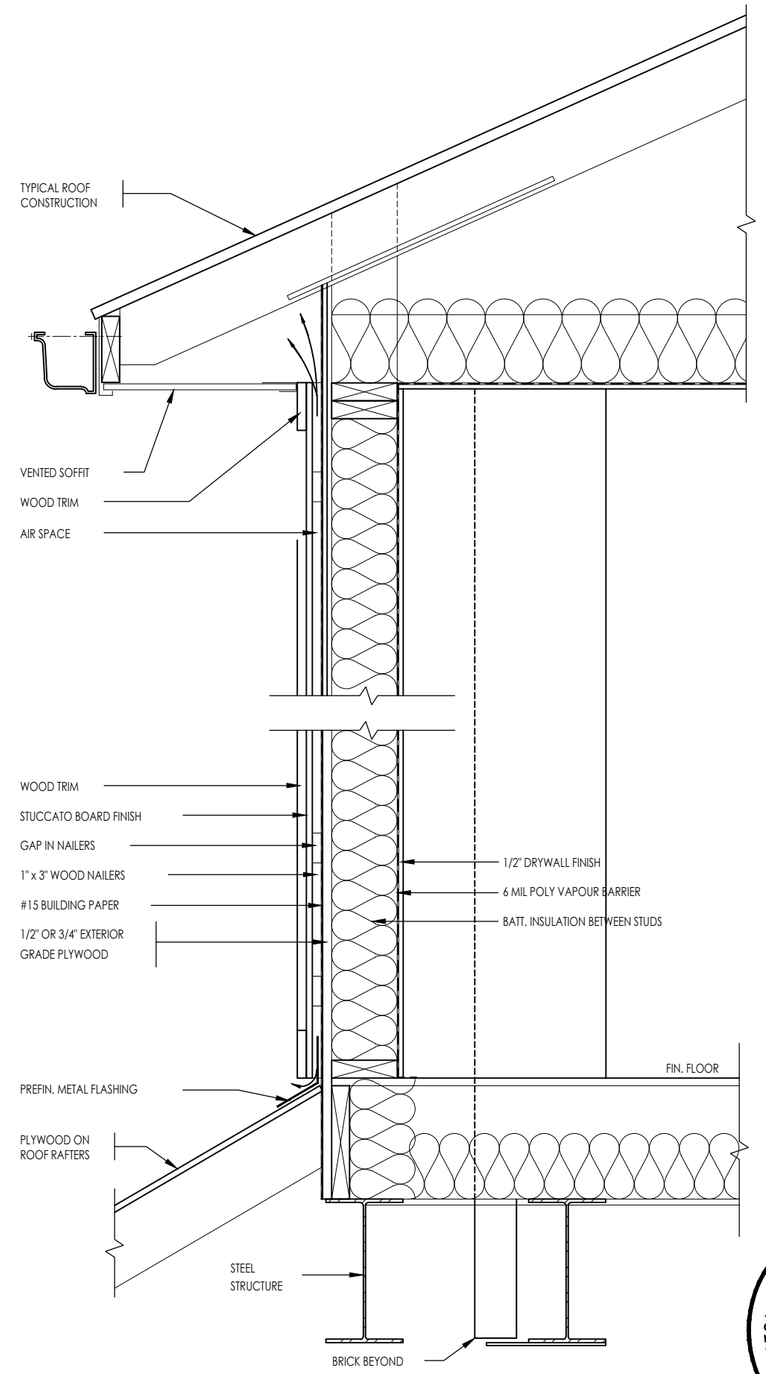

CROSS SECTION

STRUDET INC.
REGISTERED PROFESSIONAL ENGINEER
B. MARINKOVIC
May 10, 2023
PROVINCE OF ONTARIO
FOR STRUCTURE ONLY

Compliance Package A1

Contractor shall check all dimensions and elevations before commencing with work and report any discrepancies to the Designer. Prints are not to be scaled.

The undersigned has reviewed and takes responsibility for this design, as well as having the qualifications and requirements mandated by the Ontario Building Code (O.B.C.) to be a Designer.

Qualification Information

Name	BCIN	Signature
Jamie Mack	35923	
Registration Information	Mackitecture	103532

www.mackitecture.ca
975A Elgin Street West, Suite 353
Cobourg, ON K9A 5J3
Tel: 416-735-8190 Email: info@mackitecture.ca

title: **Stuccato Board Exterior Cladding**

scale	by	area	sheet no.
1/2" = 1'-0"	Greenpark	-	12
date: 2023-04-28	type: -	project no.: 22-012	

Greenpark
www.greenparkgroup.ca

project name: **Zadorra Estates Inc.**

Drawing created with Mackitecture v.1.0.0 (build 2643), File P:\2022\22-012-GREENPARK-ZADORRA-OSHAWA\UNITS\WORKING\DETAILS\DETAILS 12 - STUCCATO BOARD PACKAGE A1.DWG plotted on 2023-04-28 at 1:25:31 PM by JMACK

CORPORATION OF THE CITY OF OSHAWA
TRUE COPY
OF PERMIT PLANS
Nov 21 2023
PER:
CHIEF BUILDING OFFICIAL

MHP 23033

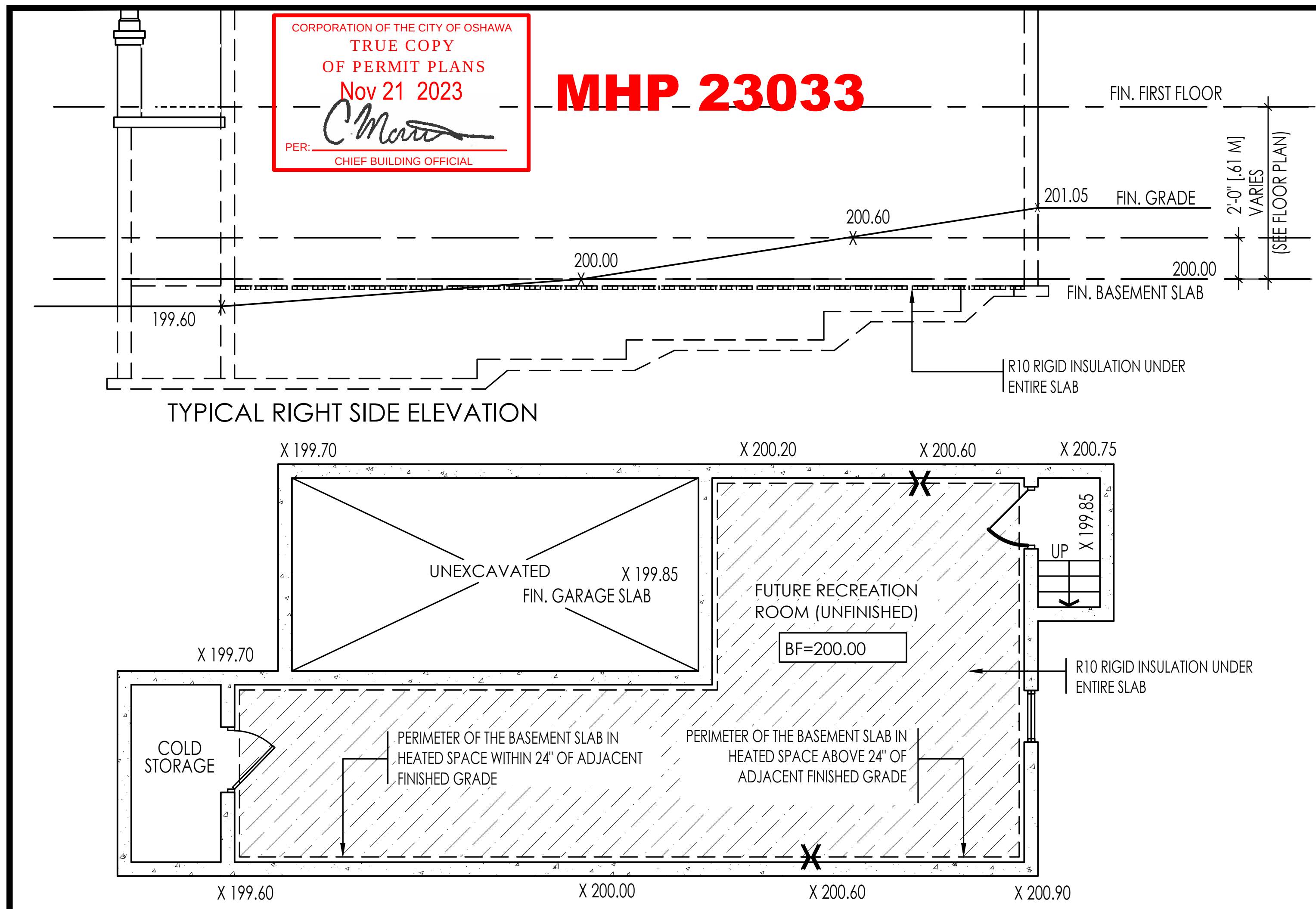

NOTES:
1. LEVELS SHOWN ON THE PLANS ARE FOR ILLUSTRATION PURPOSE ONLY, SEE FINAL GRADING PLAN FOR ACTUAL LEVELS
2. ALL LEVELS ARE SHOWN IN METRIC

SLAB ON GRADE CONDITION

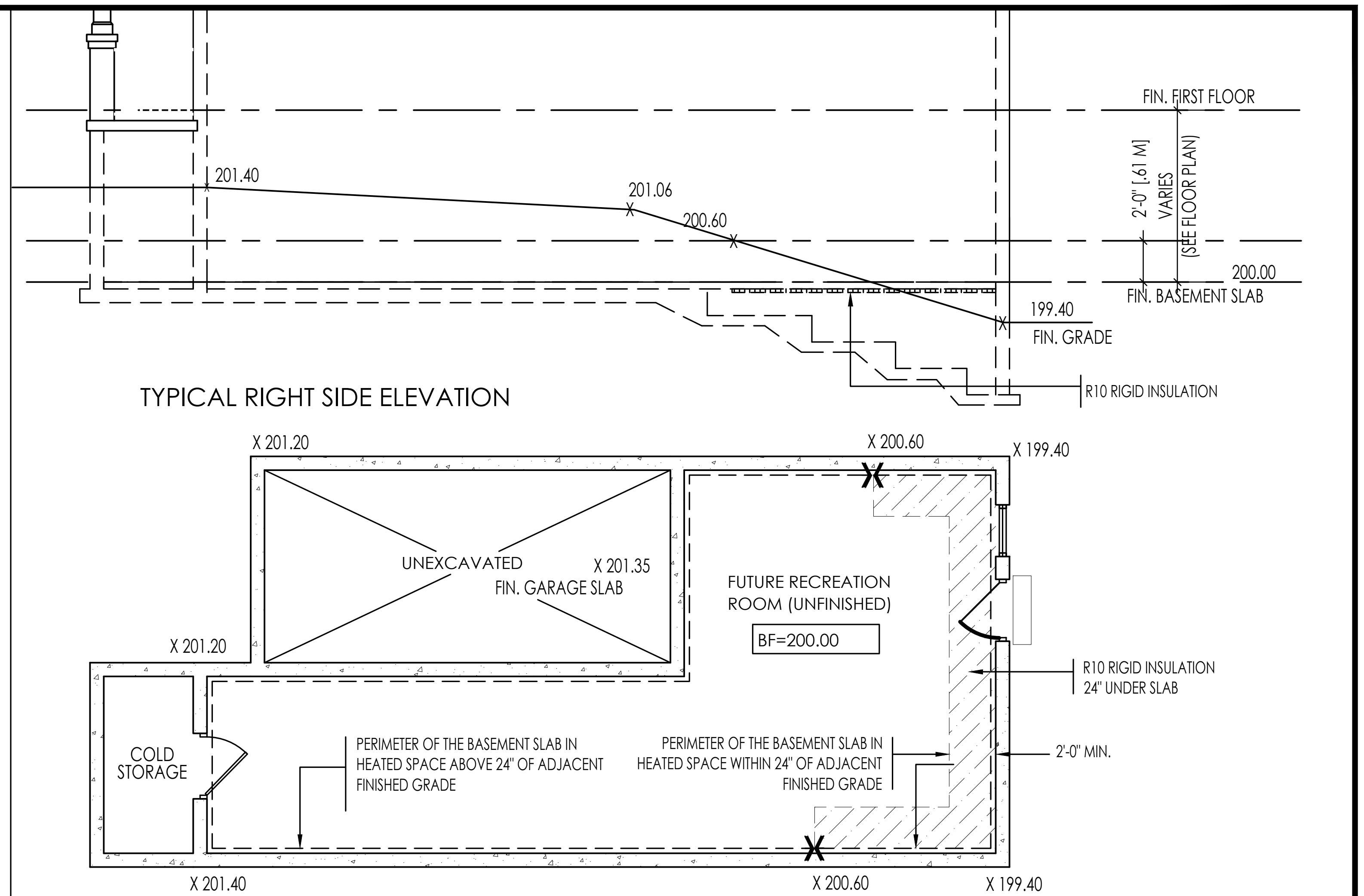

NOTES:
1. LEVELS SHOWN ON THE PLANS ARE FOR ILLUSTRATION PURPOSE ONLY, SEE FINAL GRADING PLAN FOR ACTUAL LEVELS
2. ALL LEVELS ARE SHOWN IN METRIC

WALK OUT BASEMENT CONDITION

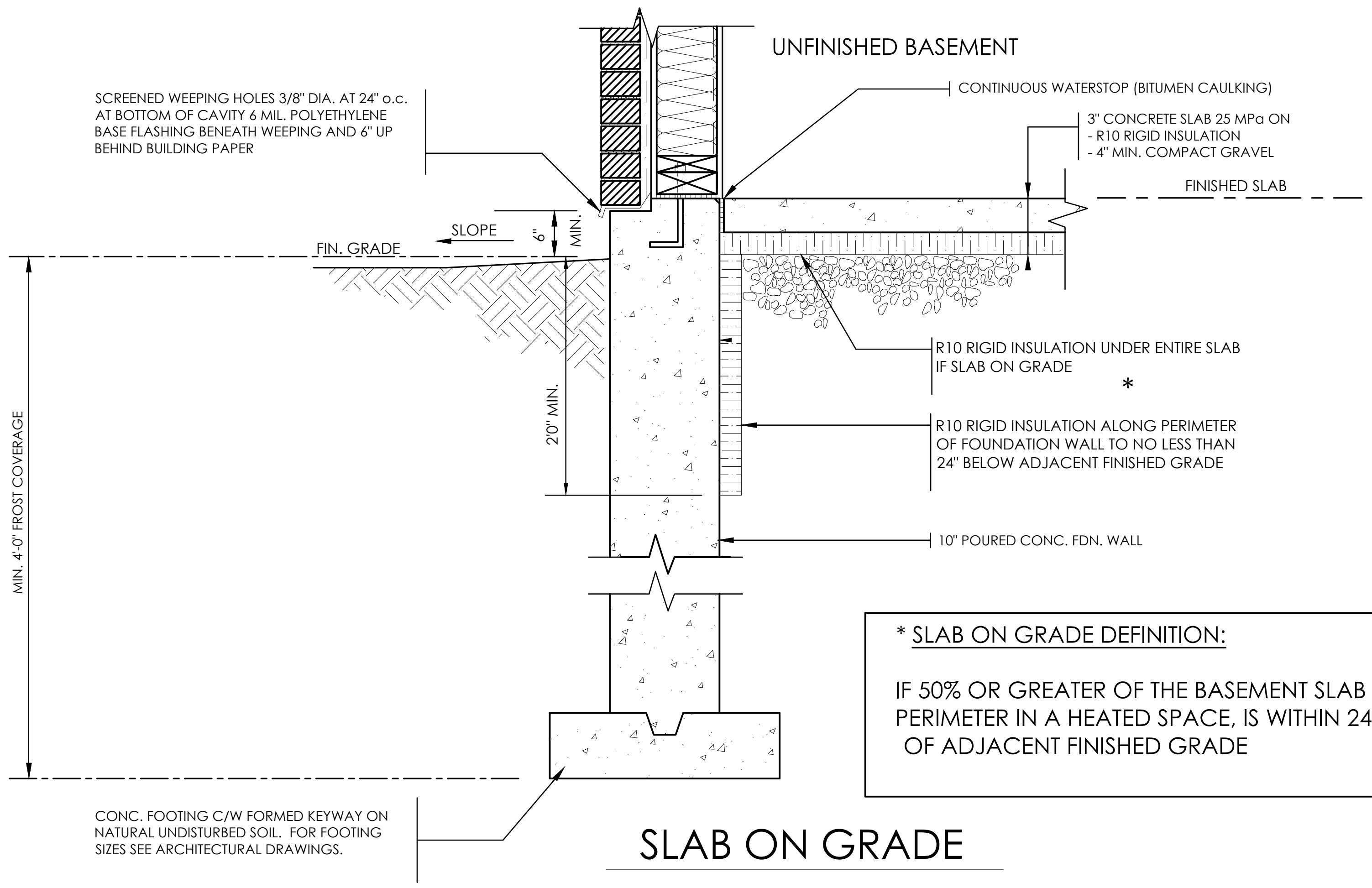

* SLAB ON GRADE DEFINITION:

IF 50% OR GREATER OF THE BASEMENT SLAB PERIMETER IN A HEATED SPACE, IS WITHIN 24" OF ADJACENT FINISHED GRADE

SLAB ON GRADE

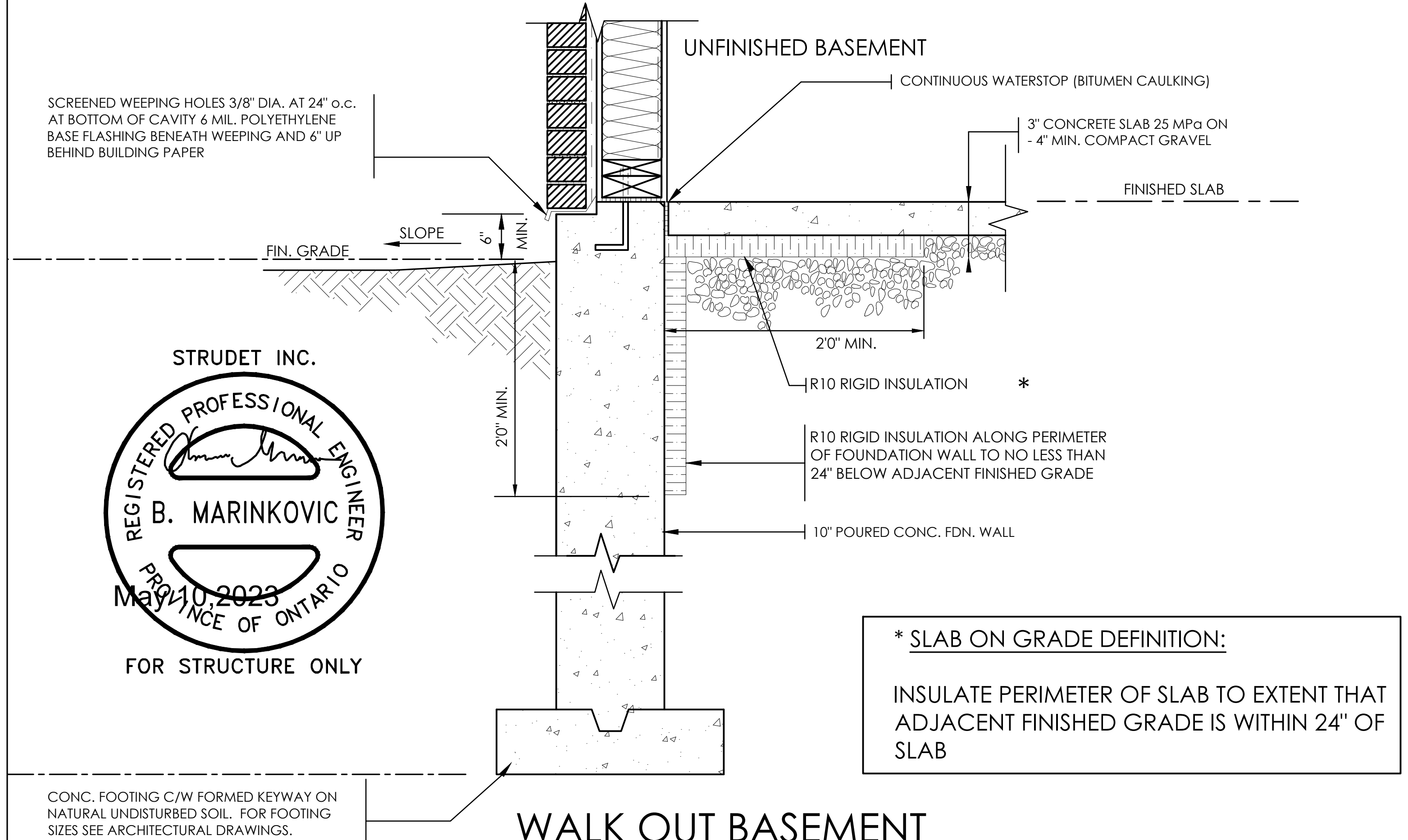

STRUDET INC.
REGISTERED PROFESSIONAL ENGINEER
B. MARINKOVIC
PROVINCE OF ONTARIO
May 10 2023
FOR STRUCTURE ONLY

* SLAB ON GRADE DEFINITION:

INSULATE PERIMETER OF SLAB TO EXTENT THAT ADJACENT FINISHED GRADE IS WITHIN 24" OF SLAB

WALK OUT BASEMENT

Compliance Package A1

Contractor shall check all dimensions and elevations before commencing with work and report any discrepancies to the Designer. Prints are not to be scaled.

The undersigned has reviewed and takes responsibility for this design, as well as having the qualifications and requirements mandated by the Ontario Building Code (O.B.C.) to be a Designer.

Qualification Information

Jamie Mack	35923	
Name	BCIN	Signature
Registration Information	**Mackitecture**	103532

www.mackitecture.ca
975A Elgin Street West, Suite 353
Cobourg, ON K9A 5J3
Tel: 416-735-8190 Email: info@mackitecture.ca

title: **Slab On Grade for Walkout Basement**

scale	by	area	sheet no.
not to scale	**Greenpark**	-	**13**
date	type	project no.	
2023-04-28	-	**22-012**	

Greenpark
www.greenparkgroup.ca
project name
Zadorra Estates Inc.

Drawing created with Mackitecture v.1.0.0 (build 2643). File P:\2022\22-012-GREENPARK-ZADORRA-OSHAWA\UNITS\WORKING\DETAILS\DETAILS 13 - WALKOUT - WALKUP DETAILS PACKAGE A1.DWG plotted on 2023-04-28 at 1:25:07 PM by JMACK

CORPORATION OF THE CITY OF OSHAWA
TRUE COPY
OF PERMIT PLANS
Nov 21 2023
PER: C. Morr
CHIEF BUILDING OFFICIAL

MHP 23033

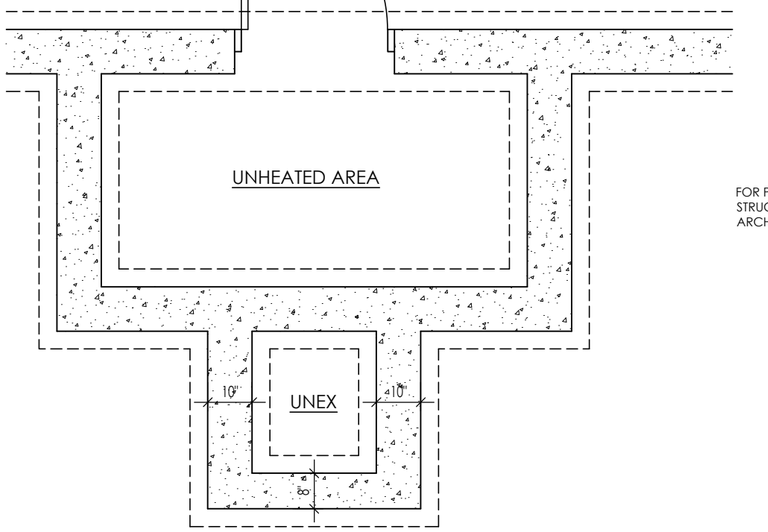

FOUNDATION PLAN

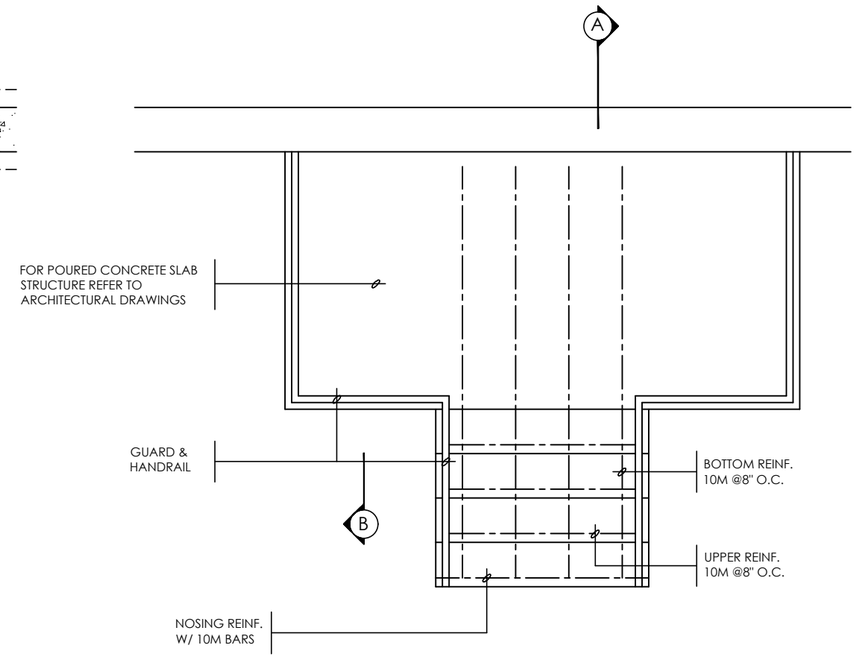

GROUND FLOOR PLAN

GENERAL NOTES

1. EXTERIOR STAIRS

   7 7/8" RISE MAXIMUM
   8 1/4" RUN MINIMUM
   9 1/4" TREAD MINIMUM

2. MASONRY TIES

   WHEN BRICK FACING IS USED ABOVE GROUND LEVEL, PROVIDE 3/16" DIA. CORROSION RESISTANT METAL TIES @ 36" HORIZONTAL & 8" VERTICAL

3. GUARDS

   ARE REQUIRED AROUND CONCRETE SLAB IF MORE THAN 2'-0" ABOVE GRADE & ON BOTH SIDES OF STAIRS CONTAINING MORE THAN 6 RISERS. MINIMUM 31" HIGH FOR STAIRS MINIMUM 35" HIGH FOR PORCHES UP TO 5'-11" ABOVE GRADE. MINIMUM 42" HIGH FOR GREATER HTS.

4. HANDRAIL

   ARE REQUIRED WHERE STEPS HAVE MORE THAN 3 RISERS . HANDRAIL HEIGHT 31" - 38".

5. FOUNDATION WALLS

   THICKNESS OF FOUNDATION WALLS IS DEPENDANT UPON VENEER CUT 8" FOR UP TO 26" VENEER CUT HEIGHT 10" FOR VENEER CUT OVER 26" HIGH

6. CONCRETE

   MINIMUM CONCRETE STRENGTH SHALL BE 4650 PSI [32MPa] W/ 5%-8% AIR ENTRAINMENT MINIMUM CONCRETE SLAB THICKNESS 5"

7. CONCRETE COVER

   PROVIDE MINIMUM 3/4" CLEAR CONCRETE COVER TO REINFORCING BARS

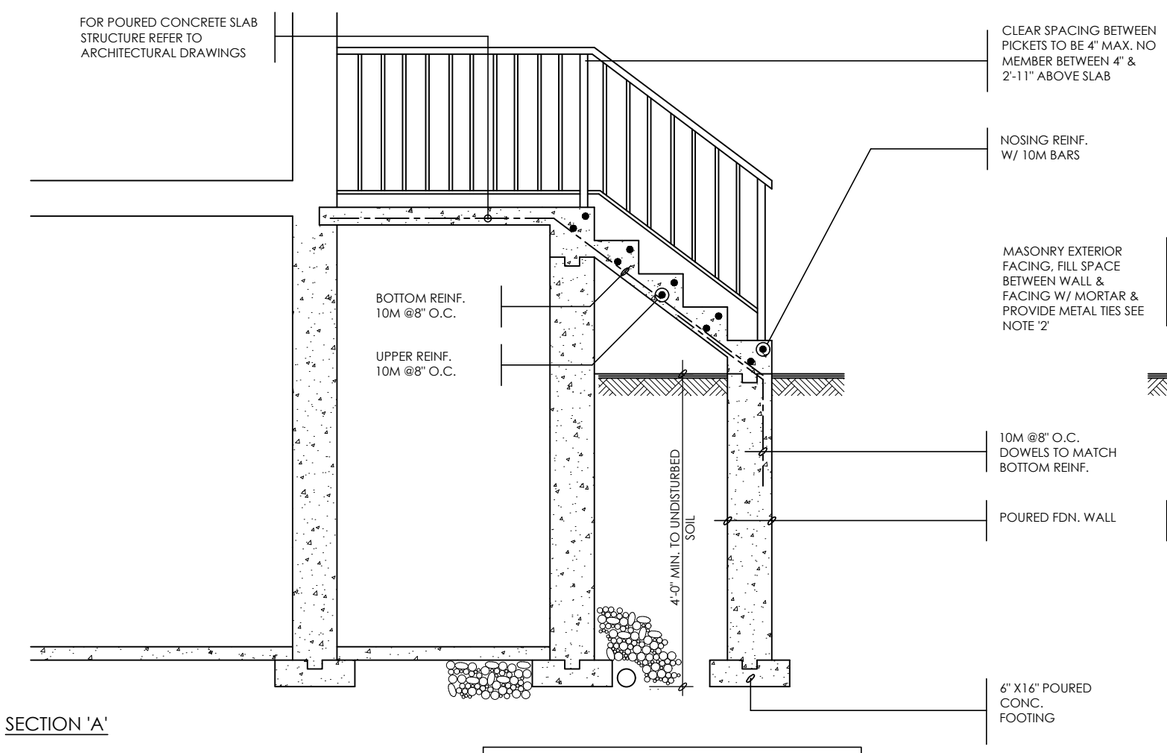

SECTION 'A'

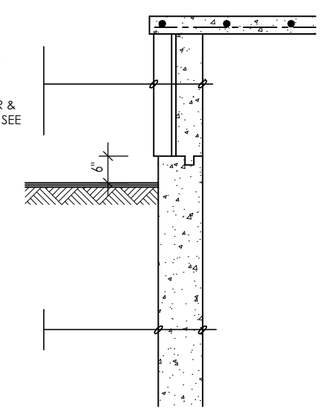

SECTION 'B'

NOTE: FOR MORE THAN 8 RISERS

STRUDET INC.
REGISTERED PROFESSIONAL ENGINEER
B. MARINKOVIC
May 19, 2023
PROVINCE OF ONTARIO
FOR STRUCTURE ONLY

Compliance Package A1

Contractor shall check all dimensions and elevations before commencing with work and report any discrepancies to the Designer. Prints are not to be scaled.

The undersigned has reviewed and takes responsibility for this design, as well as having the qualifications and requirements mandated by the Ontario Building Code (O.B.C.) to be a Designer.

Qualification Information

Name	BCIN	Signature
Jamie Mack	35923	
Registration Information	**Mackitecture**	103532

www.mackitecture.ca
975A Elgin Street West, Suite 353
Cobourg, ON K9A 5J3
Tel: 416-735-8190 Email: info@mackitecture.ca

title: **Poured Concrete Stairs**

scale	by	area	sheet no.
3/8" = 1'-0"	Greenpark	-	14
date: 2023-04-28	type: -	project no.: 22-012	

Greenpark
www.greenparkgroup.ca

project name: **Zadorra Estates Inc.**