JOB NAME	TRUSS NAME	QUANTITY	PLY	JOB DESC.		DRWG NO.
T-RIVER 11-2	J10A	2	1	TRUSS DESC.	ZADORRA ESTATES INC	ME23-5777-23

Kott, Uxbridge,ON

Version 8.630 S Mar 22 2023 MiTek Industries, Inc. Wed Jul 5 11:02:16 2023 Page 1
ID:oVFDr6Fdws2a9wd?_pY7R0zKcfG-VzrackcOPJqYMyvYMeltK4VM7aWdV_IWfF9C6Nz?8y5

CORPORATION OF THE CITY OF OSHAWA
TRUE COPY
OF PERMIT PLANS
Nov 16 2023
PER: _____
CHIEF BUILDING OFFICIAL

MHP 23027

Scale = 1:9.1

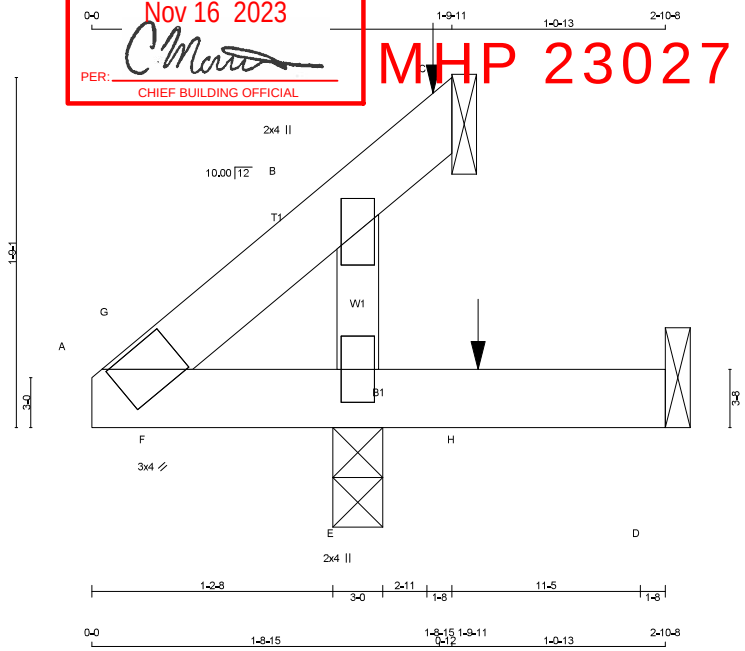

TOTAL WEIGHT = 2 X 7 = 13 lb [M]

LUMBER
N. L. G. A. RULES

CHORDS	SIZE		LUMBER	DESCR.
A - C	2x4	DRY	No.2	SPF
A - D	2x4	DRY	No.2	SPF
ALL WEBS	2x3	DRY	No.2	SPF

DRY: SEASONED LUMBER.

PLATES (table is in inches)

JT	TYPE	PLATES	W	LEN	Y	X
A	TBM-h	MT20	3.0	4.0		
B	TMW+w	MT20	2.0	4.0		
E	BMW1+w	MT20	2.0	4.0		

DIMENSIONS, SUPPORTS AND LOADINGS SPECIFIED BY FABRICATOR TO BE VERIFIED BY BUILDING DESIGNER

BEARINGS

JT	FACTORED GROSS REACTION VERT	HORZ	MAXIMUM FACTORED GROSS REACTION DOWN	HORZ	UPLIFT	INPUT BRG IN-SX	REQRD BRG IN-SX
C	15	0	15	0	-97	1-8	1-8
D	-19	0	6	0	-31	1-8	1-8
E	400	0	400	0	0	3-0	1-8

SEE MITEK STANDARD DETAIL MSD2015-H FOR CONNECTION TO JOINT(S) C , D

PROVIDE ANCHORAGE AT BEARING JOINT C FOR 150 LBS FACTORED UPLIFT
PROVIDE ANCHORAGE AT BEARING JOINT D FOR 150 LBS FACTORED UPLIFT

UNFACTORED REACTIONS

JT	1ST LCASE COMBINED	MAX./MIN. COMPONENT REACTIONS SNOW	LIVE	PERM.LIVE	WIND	DEAD	SOIL
C	10	12 / -60	0 / 0	0 / 0	0 / 0	1 / -2	0 / 0
D	-12	0 / -22	0 / 0	0 / 0	0 / 0	5 / 0	0 / 0
E	280	199 / 0	0 / 0	0 / 0	0 / 0	83 / 0	0 / 0

BEARING MATERIAL TO BE SPF NO.2 OR BETTER AT JOINT(S) C, E

BRACING
TOP CHORD TO BE SHEATHED OR MAX. PURLIN SPACING = 6.25 FT.
MAX. UNBRACED BOTTOM CHORD LENGTH = 10.00 FT OR RIGID CEILING DIRECTLY APPLIED.

ALL PITCH BREAKS AND PERIMETER CORNER JOINTS MUST BE LATERALLY RESTRAINED.

LOADING
TOTAL LOAD CASES: (5)

CHORDS

MEMB. FR-TO	MAX. FACTORED FORCE (LBS)	FACTORED VERT. LOAD (PLF) FROM	TO	LC1	MAX CSI (LC)	MAX. UNBRAC LENGTH
A- G	-8 / 0	-119.4	-119.4	0.02 (1)	10.00	
G- B	0 / 12	-119.4	-119.4	0.10 (5)	10.00	
B- C	-73 / 0	-119.4	-119.4	0.09 (5)	6.25	
A- F	0 / 25	-18.3	-18.3	0.01 (5)	10.00	
F- E	0 / 23	-18.2	-18.2	0.10 (5)	10.00	
E- H	0 / 0	-18.2	-18.2	0.10 (5)	10.00	
H- D	0 / 0	-18.2	-18.2	0.10 (5)	10.00	

WEBS

MEMB. FR-TO	MAX. FACTORED FORCE (LBS)	MAX CSI (LC)
E- B	-236 / 0	0.03 (1)
F- G	-50 / 0	0.00 (1)

FACTORED CONCENTRATED LOADS (LBS)

JT	LOC.	LC1	MAX-	MAX+	FACE	DIR.	TYPE	HEEL	CONN.
C	1-9-11	-92	-92	---	FRONT	VERT	TOTAL	---	C1
H	1-11-4	-35	-35	---	FRONT	VERT	TOTAL	---	C1

CONNECTION REQUIREMENTS

1) **C1:** A SUITABLE HANGER/MECHANICAL CONNECTION IS REQUIRED.

CANTILEVER ANALYSIS HAS BEEN CONSIDERED IN THIS DESIGN

PATTERN-LOADING CHECK APPLIED TO THIS TRUSS.

DESIGN CRITERIA

SPECIFIED LOADS:

TOP CH.	LL	=	34.8	PSF
	DL	=	6.0	PSF
BOT CH.	LL	=	0.0	PSF
	DL	=	7.3	PSF
TOTAL LOAD		=	48.1	PSF

SPACING = 24.0 IN. C/C

THIS TRUSS IS DESIGNED FOR RESIDENTIAL OR SMALL BUILDING REQUIREMENTS OF PART 9, NBCC 2015

THIS DESIGN COMPLIES WITH:
- PART 9 OF BCBC 2018 , NBC-2019AE
- PART 9 OF OBC 2012 (2019 AMENDMENT)
- CSA 086-14
- TPIC 2014

(55 % OF 48.1 P.S.F. G.S.L. PLUS 8.4 P.S.F. RAIN LOAD) EQUALS 34.8 P.S.F. SPECIFIED ROOF LIVE LOAD

ALLOWABLE DEFL.(LL)= L/360 (0.19")
CALCULATED VERT. DEFL.(LL) = L/ 999 (0.00")
ALLOWABLE DEFL.(TL)= L/360 (0.19")
CALCULATED VERT. DEFL.(TL) = L/ 999 (0.00")

CANTILEVER DEFLECTION:
ALLOWABLE DEFL.(LL)= L/120 (0.19")
CALCULATED VERT. DEFL.(LL) = L/ 999 (0.01")
ALLOWABLE DEFL.(TL)= L/120 (0.19")
CALCULATED VERT. DEFL.(TL) = L/ 999 (0.02")

CSI: TC=0.10/1.00 (B-G:5) , BC=0.10/1.00 (E-F:5) , WB=0.03/1.00 (B-E:1) , SSI=0.09/1.00 (B-C:1)

DOL LUMBER=1.00 NAIL=1.00 LS BEND=1.10 COMP=1.10 SHEAR=1.10 TENS= 1.10

COMPANION LIVE LOAD FACTOR = 1.00

AUTOSOLVE RIGHT HEEL ONLY

TRUSS PLATE MANUFACTURER IS NOT RESPONSIBLE FOR QUALITY CONTROL IN THE TRUSS MANUFACTURING PLANT .

NAIL VALUES

PLATE	GRIP(DRY) (PSI) MAX	MIN	SHEAR (PLI) MAX	MIN	SECTION (PLI) MAX	MIN
MT20	650	371	1747	788	1987	1873

PLATE PLACEMENT TOL. = 0.250 inches

PLATE ROTATION TOL. = 5.0 Deg.

JSI GRIP= 0.17 (B) (INPUT = 0.90)
JSI METAL= 0.13 (B) (INPUT = 1.00)

MODULUS ENGINEERING LTD.

LICENSED PROFESSIONAL ENGINEER
07/05/2023
D. A. SHERMAN
100123373
PROVINCE OF ONTARIO

REVIEW FOR TRUSS COMPONENT ONLY

NOTE: ALTERING THIS DOCUMENT VOIDS THE ENGINEERS SEAL

WARNING - Verify design parameters and READ NOTES ON THIS AND INCLUDED IN MODULUS ENGINEERING LTD. NOTES ME-TCD01 (VER 06/2017) BEFORE USE.
Design valid for use only with Mitek connectors. This design is based only upon parameters shown, and is for individual building components. Applicability of design parameters and proper incorporation of component is responsibility of building designer - not truss designer. Bracing shown is for lateral support of individual web members only. Additional temporary bracing to ensure stability during construction is the responsibility of the erector. Additional permanent bracing of the overall structure is the responsibility of the building designer. For general guidance regarding fabrication, quality control, storage, delivery, erection and bracing, consult
TPIC Appendix G - Minimum quality Manufacturing Criteria available from **www.tpic.ca** and **BCSI-CANADA (Building Component Safety Information) available** from TPI, 781 N. Lee Street, Suite 312, Alexandria, VA 22314 or www.sbcindustry.com

KOTT

JOB NAME	TRUSS NAME	QUANTITY	PLY	JOB DESC.		DRWG NO.
T-RIVER 11-2	J11	2	1	TRUSS DESC.	ZADORRA ESTATES INC	ME23-5777-24

Kott, Uxbridge,ON

Version 8.630 S Mar 22 2023 MiTek Industries, Inc. Wed Jul 5 11:02:17 2023 Page 1
ID:oVFDr6Fdws2a9wd?_pY7R0zKcfG-zAPzp4d09dyPz6UkvLH6tI1XW_suERWguvvmfpz?8y4

CORPORATION OF THE CITY OF OSHAWA
TRUE COPY
OF PERMIT PLANS
Nov 16 2023
PER: _____
CHIEF BUILDING OFFICIAL

MHP 23027

Scale = 1:9.1

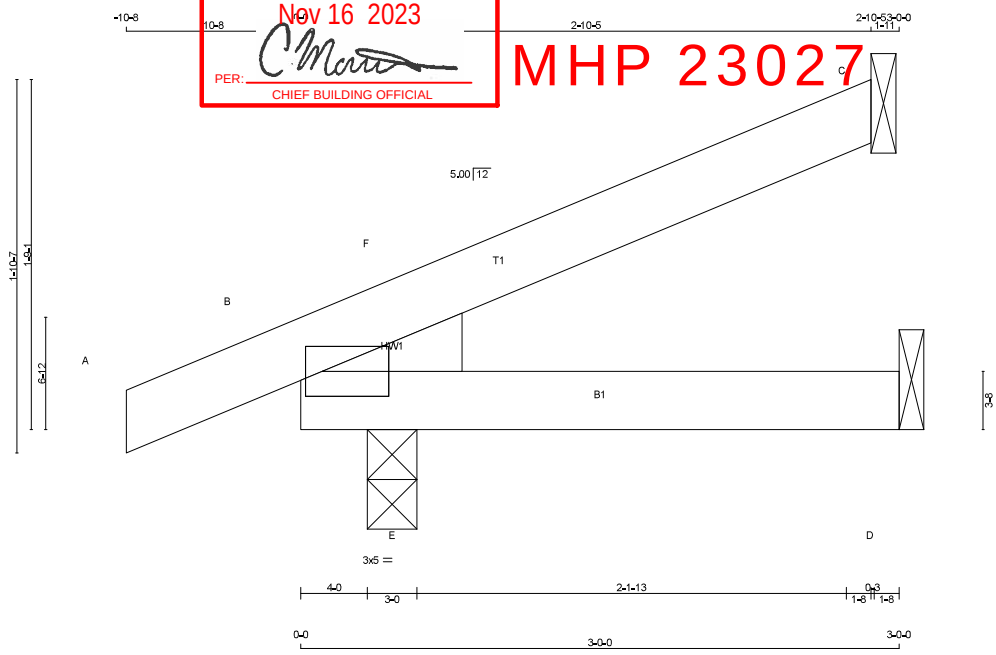

TOTAL WEIGHT = 2 X 9 = 18 lb
[M]

LUMBER
N. L. G. A. RULES

CHORDS	SIZE		LUMBER	DESCR.
A - C	2x4	DRY	No.2	SPF
B - D	2x4	DRY	No.2	SPF

DRY: SEASONED LUMBER.

PLATES (table is in inches)

JT	TYPE	PLATES	W	LEN	Y	X
B	TMBH1-I	MT20	3.0	5.0	1.50	1.00

DIMENSIONS, SUPPORTS AND LOADINGS SPECIFIED BY FABRICATOR TO BE VERIFIED BY BUILDING DESIGNER

BEARINGS

JT	FACTORED GROSS REACTION VERT	HORZ	MAXIMUM FACTORED GROSS REACTION DOWN	HORZ	UPLIFT	INPUT BRG IN-SX	REQRD BRG IN-SX	HEEL WEDGE
C	144	0	144	0	0	1-8	1-8	
B	311	0	311	0	0	3-0	1-8	2x4 L
D	53	0	53	0	0	1-8	1-8	

SEE MITEK STANDARD DETAIL MSD2015-H FOR CONNECTION TO JOINT(S) C , D

UNFACTORED REACTIONS

JT	1ST LCASE COMBINED	MAX./MIN. COMPONENT REACTIONS SNOW	LIVE	PERM.LIVE	WIND	DEAD	SOIL
C	99	81 / 0	0 / 0	0 / 0	0 / 0	18 / 0	0 / 0
B	215	165 / 0	0 / 0	0 / 0	0 / 0	50 / 0	0 / 0
D	39	18 / 0	0 / 0	0 / 0	0 / 0	21 / 0	0 / 0

BEARING MATERIAL TO BE SPF NO.2 OR BETTER AT JOINT(S) C, B

BRACING
TOP CHORD TO BE SHEATHED OR MAX. PURLIN SPACING = 6.25 FT.
MAX. UNBRACED BOTTOM CHORD LENGTH = 10.00 FT OR RIGID CEILING DIRECTLY APPLIED.

ALL PITCH BREAKS AND PERIMETER CORNER JOINTS MUST BE LATERALLY RESTRAINED.

LOADING
TOTAL LOAD CASES: (7)

CHORDS

MEMB. FR-TO	MAX. FACTORED FORCE (LBS)	FACTORED VERT. LOAD (PLF) FROM	TO	LC1	MAX CSI (LC)	MAX. UNBRAC LENGTH
A- B	0 / 8	-119.4	-119.4		0.08 (7)	10.00
B- F	-23 / 0	-119.4	-119.4		0.03 (4)	6.25
F- C	0 / 4	-119.4	-119.4		0.12 (1)	10.00
B- E	0 / 0	-18.2	-18.2		0.10 (1)	10.00
E- D	0 / 0	-18.2	-18.2		0.10 (1)	10.00

WEBS

MEMB. FR-TO	MAX. FACTORED FORCE (LBS)	MAX CSI (LC)
E- F	-126 / 6	0.00 (1)

CANTILEVER ANALYSIS HAS BEEN CONSIDERED IN THIS DESIGN

PATTERN-LOADING CHECK APPLIED TO THIS TRUSS.

DESIGN CRITERIA

SPECIFIED LOADS:

TOP CH.	LL	=	34.8	PSF
	DL	=	6.0	PSF
BOT CH.	LL	=	0.0	PSF
	DL	=	7.3	PSF
TOTAL LOAD		=	48.1	PSF

SPACING = 24.0 IN. C/C

THIS TRUSS IS DESIGNED FOR RESIDENTIAL OR SMALL BUILDING REQUIREMENTS OF PART 9, NBCC 2015

THIS DESIGN COMPLIES WITH:
- PART 9 OF BCBC 2018 , NBC-2019AE
- PART 9 OF OBC 2012 (2019 AMENDMENT)
- CSA 086-14
- TPIC 2014

(55 % OF 48.1 P.S.F. G.S.L. PLUS 8.4 P.S.F. RAIN LOAD) EQUALS 34.8 P.S.F. SPECIFIED ROOF LIVE LOAD

ALLOWABLE DEFL.(LL)= L/360 (0.19")
CALCULATED VERT. DEFL.(LL) = L/ 999 (0.01")
ALLOWABLE DEFL.(TL)= L/360 (0.19")
CALCULATED VERT. DEFL.(TL) = L/ 999 (0.01")

CSI: TC=0.12/1.00 (C-F:1) , BC=0.10/1.00 (B-E:1) , WB=0.00/1.00 (E-F:1) , SSI=0.10/1.00 (C-F:1)

DOL LUMBER=1.00 NAIL=1.00 LS BEND=1.10 COMP=1.10 SHEAR=1.10 TENS= 1.10

COMPANION LIVE LOAD FACTOR = 1.00

TRUSS PLATE MANUFACTURER IS NOT RESPONSIBLE FOR QUALITY CONTROL IN THE TRUSS MANUFACTURING PLANT .

NAIL VALUES

PLATE	GRIP(DRY) (PSI) MAX	MIN	SHEAR (PLI) MAX	MIN	SECTION (PLI) MAX	MIN
MT20	650	371	1747	788	1987	1873

PLATE PLACEMENT TOL. = 0.250 inches

PLATE ROTATION TOL. = 5.0 Deg.

JSI GRIP= 0.52 (B) (INPUT = 0.90)
JSI METAL= 0.04 (B) (INPUT = 1.00)

MODULUS ENGINEERING LTD.

LICENSED PROFESSIONAL ENGINEER
07/05/2023
D. A. SHERMAN
100123373
PROVINCE OF ONTARIO

REVIEW FOR TRUSS COMPONENT ONLY

NOTE: ALTERING THIS DOCUMENT VOIDS THE ENGINEERS SEAL

WARNING - Verify design parameters and READ NOTES ON THIS AND INCLUDED IN MODULUS ENGINEERING LTD. NOTES ME-TCD01 (VER 06/2017) BEFORE USE.
Design valid for use only with Mitek connectors. This design is based only upon parameters shown, and is for individual building components. Applicability of design parameters and proper incorporation of component is responsibility of building designer - not truss designer. Bracing shown is for lateral support of individual web members only. Additional temporary bracing to ensure stability during construction is the responsibility of the erector. Additional permanent bracing of the overall structure is the responsibility of the building designer. For general guidance regarding fabrication, quality control, storage, delivery, erection and bracing, consult
TPIC Appendix G - Minimum quality Manufacturing Criteria available from **www.tpic.ca** and **BCSI-CANADA (Building Component Safety Information) available** from TPI, 781 N. Lee Street, Suite 312, Alexandria, VA 22314 or www.sbcindustry.com

KOTT

JOB NAME	TRUSS NAME	QUANTITY	PLY	JOB DESC.		DRWG NO.
T-RIVER 11-2	J12	2	1	TRUSS DESC.	ZADORRA ESTATES INC	ME23-5777-25

Kott, Uxbridge,ON

Version 8.630 S Mar 22 2023 MiTek Industries, Inc. Wed Jul 5 11:02:18 2023 Page 1
ID:oVFDr6Fdws2a9wd?_pY7R0zKcfG-RMzL0Qdeww4GbG2wT2oLPVahvODGzump6ZeJBFz?8y3

CORPORATION OF THE CITY OF OSHAWA
TRUE COPY
OF PERMIT PLANS
Nov 16 2023
PER:
CHIEF BUILDING OFFICIAL

MHP 23027

Scale = 1:14.3

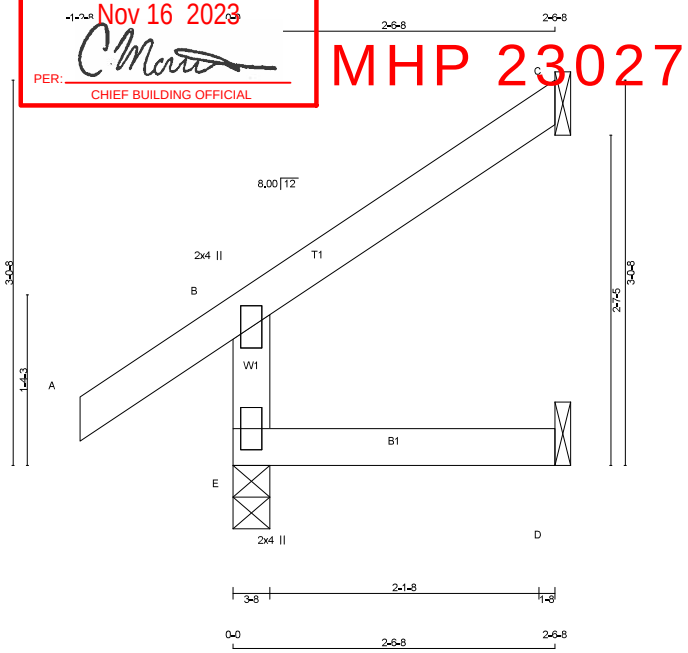

TOTAL WEIGHT = 2 X 9 = 19 lb [M]

LUMBER
N. L. G. A. RULES

CHORDS	SIZE		LUMBER	DESCR.
E - B	2x4	DRY	No.2	SPF
A - C	2x4	DRY	No.2	SPF
E - D	2x4	DRY	No.2	SPF

DRY: SEASONED LUMBER.

PLATES (table is in inches)

JT	TYPE	PLATES	W	LEN	Y	X
B	TMV+p	MT20	2.0	4.0		
E	BMV1+p	MT20	2.0	4.0		

DIMENSIONS, SUPPORTS AND LOADINGS SPECIFIED BY FABRICATOR TO BE VERIFIED BY BUILDING DESIGNER

BEARINGS

JT	FACTORED GROSS REACTION VERT	HORZ	MAXIMUM GROSS REACTION DOWN	HORZ	UPLIFT	FACTORED INPUT BRG IN-SX	REQRD BRG IN-SX
E	369	0	369	0	0	3-8	1-8
C	114	0	114	0	0	1-8	1-8
D	21	0	23	0	0	1-8	1-8

SEE MITEK STANDARD DETAIL MSD2015-H FOR CONNECTION TO JOINT(S) C , D

UNFACTORED REACTIONS

MAX./MIN. COMPONENT REACTIONS

JT	1ST LCASE COMBINED	SNOW	LIVE	PERM.LIVE	WIND	DEAD	SOIL
E	255	200 / 0	0 / 0	0 / 0	0 / 0	55 / 0	0 / 0
C	78	67 / 0	0 / 0	0 / 0	0 / 0	11 / 0	0 / 0
D	16	0 / 0	0 / 0	0 / 0	0 / 0	16 / 0	0 / 0

BEARING MATERIAL TO BE SPF NO.2 OR BETTER AT JOINT(S) E

BRACING
TOP CHORD TO BE SHEATHED OR MAX. PURLIN SPACING = 6.25 FT.
MAX. UNBRACED BOTTOM CHORD LENGTH = 10.00 FT OR RIGID CEILING DIRECTLY APPLIED.

ALL PITCH BREAKS AND PERIMETER CORNER JOINTS MUST BE LATERALLY RESTRAINED.

LOADING
TOTAL LOAD CASES: (7)

CHORDS

MEMB. FR-TO	MAX. FACTORED FORCE (LBS)	FACTORED VERT. LOAD (PLF) FROM	TO	LC1	MAX CSI (LC)	MAX. UNBRAC LENGTH
E- B	-343 / 0	0.0	0.0	0.02 (4)		7.81
A- B	0 / 43	-119.4	-119.4	0.14 (1)		10.00
B- C	-21 / 0	-119.4	-119.4	0.13 (6)		6.25
E- D	0 / 0	-18.2	-18.2	0.03 (4)		10.00

WEBS

MEMB. FR-TO	MAX. FACTORED FORCE (LBS)	MAX CSI (LC)

CANTILEVER ANALYSIS HAS BEEN CONSIDERED IN THIS DESIGN

PATTERN-LOADING CHECK APPLIED TO THIS TRUSS.

DESIGN CRITERIA

SPECIFIED LOADS:

TOP CH.	LL	=	34.8	PSF
	DL	=	6.0	PSF
BOT CH.	LL	=	0.0	PSF
	DL	=	7.3	PSF
TOTAL LOAD		=	48.1	PSF

SPACING = 24.0 IN. C/C

THIS TRUSS IS DESIGNED FOR RESIDENTIAL OR SMALL BUILDING REQUIREMENTS OF PART 9, NBCC 2015

THIS DESIGN COMPLIES WITH:
- PART 9 OF BCBC 2018 , NBC-2019AE
- PART 9 OF OBC 2012 (2019 AMENDMENT)
- CSA 086-14
- TPIC 2014

DESIGN ASSUMPTIONS
-OVERHANG NOT TO BE ALTERED OR CUT OFF.

(55 % OF 48.1 P.S.F. G.S.L. PLUS 8.4 P.S.F. RAIN LOAD) EQUALS 34.8 P.S.F. SPECIFIED ROOF LIVE LOAD

ALLOWABLE DEFL.(LL)= L/360 (0.19")
CALCULATED VERT. DEFL.(LL) = L/ 999 (0.00")
ALLOWABLE DEFL.(TL)= L/360 (0.19")
CALCULATED VERT. DEFL.(TL) = L/ 999 (0.00")

CSI: TC=0.14/1.00 (A-B:1) , BC=0.03/1.00 (D-E:4) , WB=0.00/1.00 (n/a:0) , SSI=0.12/1.00 (B-C:6)

DOL LUMBER=1.00 NAIL=1.00 LS BEND=1.10 COMP=1.10 SHEAR=1.10 TENS= 1.10

COMPANION LIVE LOAD FACTOR = 1.00

TRUSS PLATE MANUFACTURER IS NOT RESPONSIBLE FOR QUALITY CONTROL IN THE TRUSS MANUFACTURING PLANT .

NAIL VALUES

PLATE	GRIP(DRY) (PSI) MAX	MIN	SHEAR (PLI) MAX	MIN	SECTION (PLI) MAX	MIN
MT20	650	371	1747	788	1987	1873

PLATE PLACEMENT TOL. = 0.250 inches

PLATE ROTATION TOL. = 5.0 Deg.

JSI GRIP= 0.21 (B) (INPUT = 0.90)
JSI METAL= 0.18 (B) (INPUT = 1.00)

MODULUS ENGINEERING LTD.

LICENSED PROFESSIONAL ENGINEER
07/05/2023
D. A. SHERMAN
100123373
PROVINCE OF ONTARIO

REVIEW FOR TRUSS COMPONENT ONLY

NOTE: ALTERING THIS DOCUMENT VOIDS THE ENGINEERS SEAL

WARNING - Verify design parameters and READ NOTES ON THIS AND INCLUDED IN MODULUS ENGINEERING LTD. NOTES ME-TCD01 (VER 06/2017) BEFORE USE.
Design valid for use only with Mitek connectors. This design is based only upon parameters shown, and is for individual building components. Applicability of design parameters and proper incorporation of component is responsibility of building designer - not truss designer. Bracing shown is for lateral support of individual web members only. Additional temporary bracing to ensure stability during construction is the responsibility of the erector. Additional permanent bracing of the overall structure is the responsibility of the building designer. For general guidance regarding fabrication, quality control, storage, delivery, erection and bracing, consult
TPIC Appendix G - Minimum quality Manufacturing Criteria available from **www.tpic.ca** and **BCSI-CANADA (Building Component Safety Information) available** from TPI, 781 N. Lee Street, Suite 312, Alexandria, VA 22314 or www.sbcindustry.com

KOTT

JOB NAME	TRUSS NAME	QUANTITY	PLY	JOB DESC.		DRWG NO.
T-RIVER 11-2	J13	3	1	TRUSS DESC.	ZADORRA ESTATES INC	ME23-5777-26

Kott, Uxbridge,ON

Version 8.630 S Mar 22 2023 MiTek Industries, Inc. Wed Jul 5 11:02:19 2023 Page 1
ID:oVFDr6Fdws2a9wd?_pY7R0zKcfG-wYWjEmeGhEC7DQd61mJayj7sfoYKiL0yLDOsjiz?8y2

CORPORATION OF THE CITY OF OSHAWA
TRUE COPY
OF PERMIT PLANS
Nov 16 2023
PER:
CHIEF BUILDING OFFICIAL
MHP 23027

Scale = 1:11.5

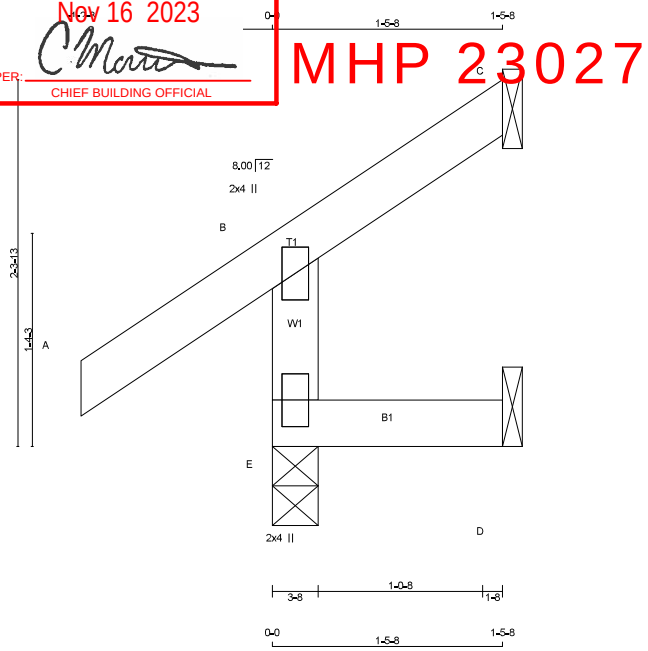

TOTAL WEIGHT = 3 X 7 = 20 lb [M]

LUMBER
N. L. G. A. RULES

CHORDS	SIZE		LUMBER	DESCR.
E - B	2x4	DRY	No.2	SPF
A - C	2x4	DRY	No.2	SPF
E - D	2x4	DRY	No.2	SPF

DRY: SEASONED LUMBER.

PLATES (table is in inches)

JT	TYPE	PLATES	W	LEN	Y	X
B	TMV+p	MT20	2.0	4.0		
E	BMV1+p	MT20	2.0	4.0		

DIMENSIONS, SUPPORTS AND LOADINGS SPECIFIED BY FABRICATOR TO BE VERIFIED BY BUILDING DESIGNER

BEARINGS

JT	FACTORED GROSS REACTION VERT	HORZ	MAXIMUM FACTORED GROSS REACTION DOWN	HORZ	UPLIFT	INPUT BRG IN-SX	REQRD BRG IN-SX
E	322	0	322	0	0	3-8	1-8
C	33	0	33	0	-41	1-8	1-8
D	0	0	12	0	-10	1-8	1-8

SEE MITEK STANDARD DETAIL MSD2015-H FOR CONNECTION TO JOINT(S) C , D

PROVIDE ANCHORAGE AT BEARING JOINT C FOR 150 LBS FACTORED UPLIFT
PROVIDE ANCHORAGE AT BEARING JOINT D FOR 150 LBS FACTORED UPLIFT

UNFACTORED REACTIONS

JT	1ST LCASE COMBINED	MAX./MIN. COMPONENT REACTIONS SNOW	LIVE	PERM.LIVE	WIND	DEAD	SOIL
E	222	180 / 0	0 / 0	0 / 0	0 / 0	42 / 0	0 / 0
C	23	19 / -28	0 / 0	0 / 0	0 / 0	4 / 0	0 / 0
D	0	0 / -11	0 / 0	0 / 0	0 / 0	9 / 0	0 / 0

BEARING MATERIAL TO BE SPF NO.2 OR BETTER AT JOINT(S) E, C

BRACING
TOP CHORD TO BE SHEATHED OR MAX. PURLIN SPACING = 6.25 FT.
MAX. UNBRACED BOTTOM CHORD LENGTH = 10.00 FT OR RIGID CEILING DIRECTLY APPLIED.

ALL PITCH BREAKS AND PERIMETER CORNER JOINTS MUST BE LATERALLY RESTRAINED.

LOADING
TOTAL LOAD CASES: (5)

CHORDS

MEMB. FR-TO	MAX. FACTORED FORCE (LBS)	FACTORED VERT. LOAD (PLF) FROM	TO	LC1 MAX CSI (LC)	MAX. UNBRAC LENGTH
E- B	-295 / 0	0.0	0.0	0.04 (5)	7.81
A- B	0 / 43	-119.4	-119.4	0.14 (1)	10.00
B- C	-30 / 0	-119.4	-119.4	0.11 (1)	6.25
E- D	0 / 0	-18.2	-18.2	0.04 (5)	10.00

WEBS

MEMB. FR-TO	MAX. FACTORED FORCE (LBS)	MAX CSI (LC)

CANTILEVER ANALYSIS HAS BEEN CONSIDERED IN THIS DESIGN

PATTERN-LOADING CHECK APPLIED TO THIS TRUSS.

DESIGN CRITERIA

SPECIFIED LOADS:

TOP CH.	LL	=	34.8	PSF
	DL	=	6.0	PSF
BOT CH.	LL	=	0.0	PSF
	DL	=	7.3	PSF
TOTAL LOAD		=	48.1	PSF

SPACING = 24.0 IN. C/C

THIS TRUSS IS DESIGNED FOR RESIDENTIAL OR SMALL BUILDING REQUIREMENTS OF PART 9, NBCC 2015

THIS DESIGN COMPLIES WITH:
- PART 9 OF BCBC 2018 , NBC-2019AE
- PART 9 OF OBC 2012 (2019 AMENDMENT)
- CSA 086-14
- TPIC 2014

DESIGN ASSUMPTIONS
-OVERHANG NOT TO BE ALTERED OR CUT OFF.

(55 % OF 48.1 P.S.F. G.S.L. PLUS 8.4 P.S.F. RAIN LOAD) EQUALS 34.8 P.S.F. SPECIFIED ROOF LIVE LOAD

ALLOWABLE DEFL.(LL)= L/360 (0.19")
CALCULATED VERT. DEFL.(LL) = L/ 999 (0.00")
ALLOWABLE DEFL.(TL)= L/360 (0.19")
CALCULATED VERT. DEFL.(TL) = L/ 999 (0.00")

CSI: TC=0.14/1.00 (A-B:1) , BC=0.04/1.00 (D-E:5) , WB=0.00/1.00 (n/a:0) , SSI=0.10/1.00 (A-B:1)

DOL LUMBER=1.00 NAIL=1.00 LS BEND=1.10 COMP=1.10 SHEAR=1.10 TENS= 1.10

COMPANION LIVE LOAD FACTOR = 1.00

TRUSS PLATE MANUFACTURER IS NOT RESPONSIBLE FOR QUALITY CONTROL IN THE TRUSS MANUFACTURING PLANT .

NAIL VALUES

PLATE	GRIP(DRY) (PSI) MAX	MIN	SHEAR (PLI) MAX	MIN	SECTION (PLI) MAX	MIN
MT20	650	371	1747	788	1987	1873

PLATE PLACEMENT TOL. = 0.250 inches

PLATE ROTATION TOL. = 5.0 Deg.

JSI GRIP= 0.18 (B) (INPUT = 0.90)
JSI METAL= 0.15 (B) (INPUT = 1.00)

MODULUS ENGINEERING LTD.

LICENSED PROFESSIONAL ENGINEER
07/05/2023
D. A. SHERMAN
100123373
PROVINCE OF ONTARIO

REVIEW FOR TRUSS COMPONENT ONLY

NOTE: ALTERING THIS DOCUMENT VOIDS THE ENGINEERS SEAL

WARNING - Verify design parameters and READ NOTES ON THIS AND INCLUDED IN MODULUS ENGINEERING LTD. NOTES ME-TCD01 (VER 06/2017) BEFORE USE.
Design valid for use only with Mitek connectors. This design is based only upon parameters shown, and is for individual building components. Applicability of design parameters and proper incorporation of component is responsibility of building designer - not truss designer. Bracing shown is for lateral support of individual web members only. Additional temporary bracing to ensure stability during construction is the responsibility of the erector. Additional permanent bracing of the overall structure is the responsibility of the building designer. For general guidance regarding fabrication, quality control, storage, delivery, erection and bracing, consult
TPIC Appendix G - Minimum quality Manufacturing Criteria available from **www.tpic.ca** and **BCSI-CANADA (Building Component Safety Information) available** from TPI, 781 N. Lee Street, Suite 312, Alexandria, VA 22314 or www.sbcindustry.com

KOTT

JOB NAME	TRUSS NAME	QUANTITY	PLY	JOB DESC.	DRWG NO.
T-RIVER 11-2	T01	1	1	ZADORRA ESTATES INC TRUSS DESC.	ME23-5777-27

Kott, Uxbridge,ON

Version 8.630 S Mar 22 2023 MiTek Industries, Inc. Wed Jul 5 11:02:20 2023 Page 1

ID:oVFDr6Fdws2a9wd?_pY7R0zKcfG-OI45R6fvSYK_qZCJaTqpUwfvNBqhRY76at7QF8z?8y1

CORPORATION OF THE CITY OF OSHAWA
TRUE COPY
OF PERMIT PLANS
Nov 16 2023
PER:
CHIEF BUILDING OFFICIAL

MHP 23027

Scale = 1:38.9

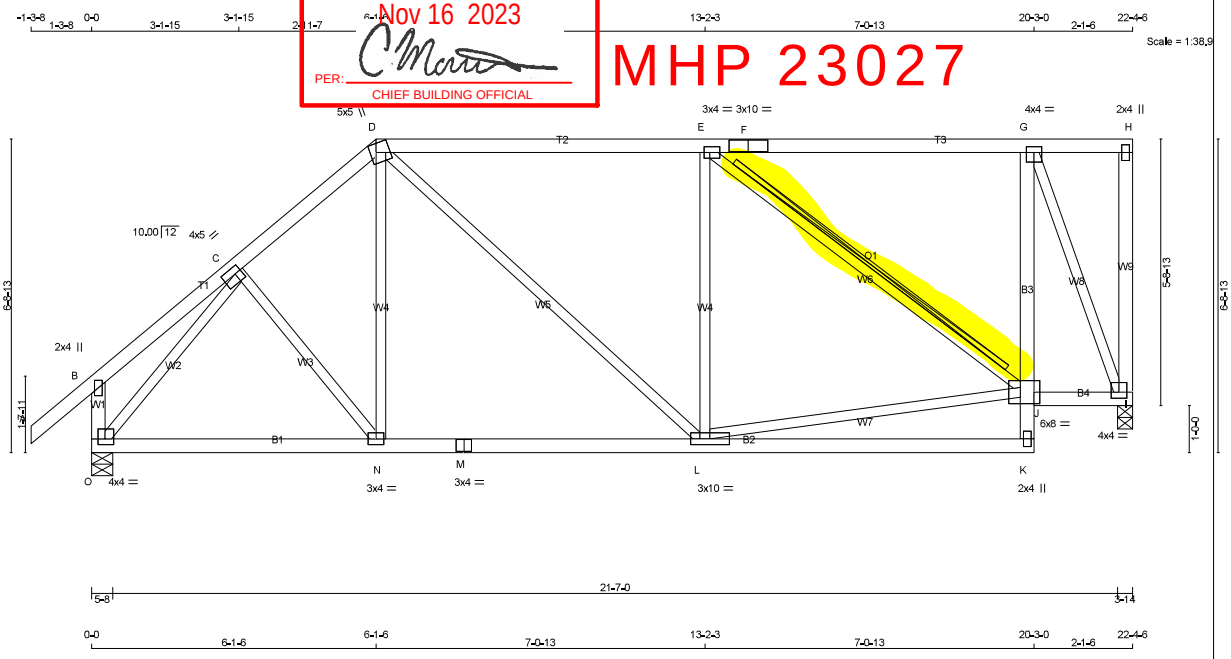

TOTAL WEIGHT = 111 lb [M]

LUMBER

N. L. G. A. RULES

CHORDS	SIZE		LUMBER	DESCR.
A - D	2x4	DRY	No.2	SPF
D - F	2x4	DRY	2100F 1.8E	SPF
F - H	2x4	DRY	No.2	SPF
I - H	2x4	DRY	No.2	SPF
O - B	2x4	DRY	No.2	SPF
O - M	2x4	DRY	No.2	SPF
M - K	2x4	DRY	No.2	SPF
K - G	2x4	DRY	No.2	SPF
J - I	2x4	DRY	No.2	SPF
ALL WEBS EXCEPT	2x3	DRY	No.2	SPF

DRY: SEASONED LUMBER.

PLATES (table is in inches)

JT	TYPE	PLATES	W	LEN	Y	X
B	TMV+p	MT20	2.0	4.0		
C	TMWW-t	MT20	4.0	5.0	1.75	1.75
D	TTWW+m	MT20	5.0	5.0	2.25	1.50
E	TMWW-t	MT20	3.0	4.0	1.50	1.50
F	TS-t	MT20	3.0	10.0		
G	TMVW-t	MT20	4.0	4.0	1.50	2.00
H	TMV+p	MT20	2.0	4.0		
I	BMVW1-t	MT20	4.0	4.0	1.50	2.00
J	BVMWW-I	MT20	6.0	8.0	4.25	5.00
K	BMV+p	MT20	2.0	4.0		
L	BMWWW-t	MT20	3.0	10.0	1.50	2.50
M	BS-t	MT20	3.0	4.0		
N	BMWW-t	MT20	3.0	4.0		
O	BMVW1-t	MT20	4.0	4.0	1.50	1.75

DIMENSIONS, SUPPORTS AND LOADINGS SPECIFIED BY FABRICATOR TO BE VERIFIED BY BUILDING DESIGNER

BEARINGS

JT	FACTORED GROSS REACTION VERT	HORZ	MAXIMUM GROSS REACTION DOWN	HORZ	UPLIFT	FACTORED INPUT BRG	REQRD BRG
I	1540	0	1540	0	0	3-14	1-11
O	1705	0	1705	0	0	5-8	1-14

UNFACTORED REACTIONS

JT	1ST LCASE COMBINED	MAX./MIN. COMPONENT REACTIONS SNOW	LIVE	PERM.LIVE	WIND	DEAD	SOIL
I	1076	778 / 0	0 / 0	0 / 0	0 / 0	297 / 0	0 / 0
O	1189	875 / 0	0 / 0	0 / 0	0 / 0	314 / 0	0 / 0

BEARING MATERIAL TO BE SPF NO.2 OR BETTER AT JOINT(S) I, O

BRACING

TOP CHORD TO BE SHEATHED OR MAX. PURLIN SPACING = 5.26 FT.
MAX. UNBRACED BOTTOM CHORD LENGTH = 10.00 FT OR RIGID CEILING DIRECTLY APPLIED.

ALL PITCH BREAKS AND PERIMETER CORNER JOINTS MUST BE LATERALLY RESTRAINED.

2x4 DRY SPF No.2 T-BRACE AT E-J

FASTEN T AND I-BRACES TO NARROW EDGE OF WEB WITH ONE ROW PER PLY OF 3" COMMON WIRE NAILS @ 6" O.C. WITH 3" MINIMUM END DISTANCE. BRACE MUST COVER 90% OF WEB LENGTH.

END VERTICAL(S) MUST BE SHEATHED OR HAVE BRACES AS INDICATED IN THE MAX. UNBRACED LENGTH COLUMN OF THE TABLE BELOW

LOADING

TOTAL LOAD CASES: (4)

CHORDS

MEMB. FR-TO	MAX. FACTORED FORCE (LBS)	FACTORED VERT. LOAD LC1 (PLF) FROM	TO	MAX CSI (LC)	MAX. UNBRAC LENGTH
A- B	0 / 53	-119.4	-119.4	0.16 (1)	10.00
B- C	0 / 25	-119.4	-119.4	0.16 (1)	10.00
C- D	-1429 / 0	-119.4	-119.4	0.19 (1)	5.26
D- E	-1404 / 0	-119.4	-119.4	0.66 (1)	5.43
E- F	-644 / 0	-119.4	-119.4	0.61 (1)	6.25
F- G	-644 / 0	-119.4	-119.4	0.61 (1)	6.25
G- H	0 / 0	-119.4	-119.4	0.41 (1)	10.00
I- H	0 / 0	0.0	0.0	0.00 (1)	7.81
O- B	-307 / 0	0.0	0.0	0.03 (1)	7.81
O- N	0 / 1069	-18.2	-18.2	0.27 (1)	10.00
N- M	0 / 1077	-18.2	-18.2	0.29 (1)	10.00
M- L	0 / 1077	-18.2	-18.2	0.29 (1)	10.00
L- K	0 / 30	-18.2	-18.2	0.21 (4)	10.00
K- J	0 / 57	0.0	0.0	0.06 (1)	10.00
J- G	0 / 934	0.0	0.0	0.20 (1)	10.00
J- I	0 / 652	-18.2	-18.2	0.12 (1)	10.00

WEBS

MEMB. FR-TO	MAX. FACTORED FORCE (LBS)	MAX CSI (LC)
C- N	0 / 42	0.01 (4)
N- D	0 / 122	0.04 (4)
D- L	0 / 445	0.10 (1)
L- E	-390 / 26	0.29 (1)
L- J	0 / 1399	0.31 (1)
E- J	-963 / 0	0.56 (1)
G- I	-1696 / 0	0.97 (1)
O- C	-1724 / 0	0.66 (1)

DESIGN CRITERIA

SPECIFIED LOADS:

TOP CH.	LL	=	34.8	PSF
	DL	=	6.0	PSF
BOT CH.	LL	=	0.0	PSF
	DL	=	7.3	PSF
TOTAL LOAD		=	48.1	PSF

SPACING = 24.0 IN. C/C

LOADING IN FLAT SECTION BASED ON A SLOPE OF 2.00/12 MINIMUM

THIS TRUSS IS DESIGNED FOR RESIDENTIAL OR SMALL BUILDING REQUIREMENTS OF PART 9, NBCC 2015

THIS DESIGN COMPLIES WITH:
- PART 9 OF BCBC 2018 , NBC-2019AE
- PART 9 OF OBC 2012 (2019 AMENDMENT)
- CSA 086-14
- TPIC 2014

(55 % OF 48.1 P.S.F. G.S.L. PLUS 8.4 P.S.F. RAIN LOAD) EQUALS 34.8 P.S.F. SPECIFIED ROOF LIVE LOAD

ALLOWABLE DEFL.(LL)= L/360 (0.75")
CALCULATED VERT. DEFL.(LL) = L/ 999 (0.05")
ALLOWABLE DEFL.(TL)= L/360 (0.75")
CALCULATED VERT. DEFL.(TL) = L/ 999 (0.12")

CSI: TC=0.66/1.00 (D-E:1) , BC=0.29/1.00 (L-N:1) , WB=0.97/1.00 (G-I:1) , SSI=0.40/1.00 (D-E:1)

DOL LUMBER=1.00 NAIL=1.00 LS BEND=1.10 COMP=1.10 SHEAR=1.10 TENS= 1.10

COMPANION LIVE LOAD FACTOR = 1.00

TRUSS PLATE MANUFACTURER IS NOT RESPONSIBLE FOR QUALITY CONTROL IN THE TRUSS MANUFACTURING PLANT .

NAIL VALUES

PLATE	GRIP(DRY) (PSI) MAX	MIN	SHEAR (PLI) MAX	MIN	SECTION (PLI) MAX	MIN
MT20	650	371	1747	788	1987	1873

PLATE PLACEMENT TOL. = 0.250 inches

PLATE ROTATION TOL. = 5.0 Deg.

JSI GRIP= 0.89 (E) (INPUT = 0.90)
JSI METAL= 0.55 (F) (INPUT = 1.00)

MODULUS ENGINEERING LTD.

LICENSED PROFESSIONAL ENGINEER
07/05/2023
D. A. SHERMAN
100123373
PROVINCE OF ONTARIO

REVIEW FOR TRUSS COMPONENT ONLY

NOTE: ALTERING THIS DOCUMENT VOIDS THE ENGINEERS SEAL

WARNING - Verify design parameters and READ NOTES ON THIS AND INCLUDED IN MODULUS ENGINEERING LTD. NOTES ME-TCD01 (VER 06/2017) BEFORE USE.
Design valid for use only with Mitek connectors. This design is based only upon parameters shown, and is for individual building components. Applicability of design parameters and proper incorporation of component is responsibility of building designer - not truss designer. Bracing shown is for lateral support of individual web members only. Additional temporary bracing to ensure stability during construction is the responsibility of the erector. Additional permanent bracing of the overall structure is the responsibility of the building designer. For general guidance regarding fabrication, quality control, storage, delivery, erection and bracing, consult
TPIC Appendix G - Minimum quality Manufacturing Criteria available from **www.tpic.ca** and **BCSI-CANADA (Building Component Safety Information) available** from TPI, 781 N. Lee Street, Suite 312, Alexandria, VA 22314 or www.sbcindustry.com

KOTT

JOB NAME	TRUSS NAME	QUANTITY	PLY	JOB DESC.		DRWG NO.
T-RIVER 11-2	T02	1	1	TRUSS DESC.	ZADORRA ESTATES INC	ME23-5777-28

Kott, Uxbridge,ON

Version 8.630 S Mar 22 2023 MiTek Industries, Inc. Wed Jul 5 11:02:22 2023 Page 1
ID:oVFDr6Fdws2a9wd?_pY7R0zKcfG-K7Cssnh9_9ai4tMhiusHaLIJg?VdvWVP1BcWK1z?8y?

CORPORATION OF THE CITY OF OSHAWA
TRUE COPY
OF PERMIT PLANS
Nov 16 2023
PER:
CHIEF BUILDING OFFICIAL

MHP 23027

Scale = 1:38.4

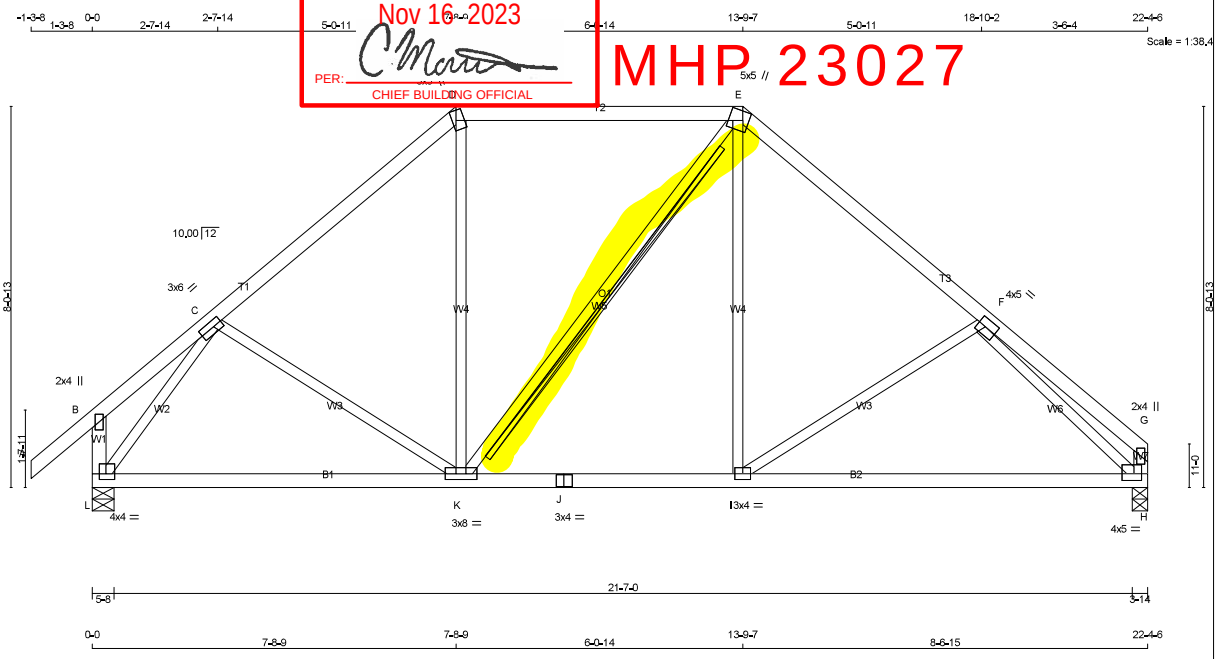

TOTAL WEIGHT = 97 lb

[M][F]

LUMBER
N. L. G. A. RULES

CHORDS	SIZE		LUMBER	DESCR.
A - D	2x4	DRY	No.2	SPF
D - E	2x4	DRY	2100F 1.8E	SPF
E - G	2x4	DRY	No.2	SPF
L - B	2x4	DRY	No.2	SPF
H - G	2x4	DRY	No.2	SPF
L - J	2x4	DRY	No.2	SPF
J - H	2x4	DRY	No.2	SPF
ALL WEBS EXCEPT	2x3	DRY	No.2	SPF

DRY: SEASONED LUMBER.

PLATES (table is in inches)

JT	TYPE	PLATES	W	LEN	Y	X
B	TMV+p	MT20	2.0	4.0		
C	TMWW-t	MT20	3.0	6.0	1.50	2.25
D	TTW+m	MT20	3.0	5.0	Edge	1.00
E	TTWW+m	MT20	5.0	5.0	2.25	1.50
F	TMWW-t	MT20	4.0	5.0	2.00	2.00
G	TMV+p	MT20	2.0	4.0		
H	BMVW1-t	MT20	4.0	5.0	1.75	2.00
I	BMWW-t	MT20	3.0	4.0		
J	BS-t	MT20	3.0	4.0		
K	BMWWW-t	MT20	3.0	8.0		
L	BMVW1-t	MT20	4.0	4.0	1.50	1.75

Edge - INDICATES REFERENCE CORNER OF PLATE TOUCHES EDGE OF CHORD.

DIMENSIONS, SUPPORTS AND LOADINGS SPECIFIED BY FABRICATOR TO BE VERIFIED BY BUILDING DESIGNER

BEARINGS

JT	FACTORED GROSS REACTION VERT	HORZ	MAXIMUM FACTORED GROSS REACTION DOWN	HORZ	UPLIFT	INPUT BRG IN-SX	REQRD BRG IN-SX
L	1705	0	1705	0	0	5-8	1-14
H	1540	0	1540	0	0	3-14	1-11

UNFACTORED REACTIONS

JT	1ST LCASE COMBINED	MAX./MIN. COMPONENT REACTIONS SNOW	LIVE	PERM.LIVE	WIND	DEAD	SOIL
L	1189	875 / 0	0 / 0	0 / 0	0 / 0	314 / 0	0 / 0
H	1076	778 / 0	0 / 0	0 / 0	0 / 0	297 / 0	0 / 0

BEARING MATERIAL TO BE SPF NO.2 OR BETTER AT JOINT(S) L, H

BRACING
TOP CHORD TO BE SHEATHED OR MAX. PURLIN SPACING = 5.01 FT.
MAX. UNBRACED BOTTOM CHORD LENGTH = 10.00 FT OR RIGID CEILING DIRECTLY APPLIED.

ALL PITCH BREAKS AND PERIMETER CORNER JOINTS MUST BE LATERALLY RESTRAINED.

2x4 DRY SPF No.2 T-BRACE AT E-K

FASTEN T AND I-BRACES TO NARROW EDGE OF WEB WITH ONE ROW PER PLY OF 3" COMMON WIRE NAILS @ 6" O.C. WITH 3" MINIMUM END DISTANCE. BRACE MUST COVER 90% OF WEB LENGTH.

END VERTICAL(S) MUST BE SHEATHED OR HAVE BRACES AS INDICATED IN THE MAX. UNBRACED LENGTH COLUMN OF THE TABLE BELOW

LOADING
TOTAL LOAD CASES: (4)

CHORDS

MEMB. FR-TO	MAX. FACTORED FORCE (LBS)	FACTORED VERT. LOAD (PLF) FROM	TO	LC1	MAX CSI (LC)	MAX. UNBRAC LENGTH
A- B	0 / 53	-119.4	-119.4	0.16 (1)	10.00	
B- C	0 / 71	-119.4	-119.4	0.39 (1)	10.00	
C- D	-1356 / 0	-119.4	-119.4	0.41 (1)	5.09	
D- E	-1016 / 0	-119.4	-119.4	0.38 (1)	6.25	
E- F	-1418 / 0	-119.4	-119.4	0.41 (1)	5.01	
F- G	0 / 54	-119.4	-119.4	0.40 (1)	10.00	
L- B	-205 / 0	0.0	0.0	0.02 (1)	7.81	
H- G	-119 / 0	0.0	0.0	0.01 (1)	7.81	
L- K	0 / 1066	-18.2	-18.2	0.31 (1)	10.00	
K- J	0 / 1065	-18.2	-18.2	0.34 (4)	10.00	
J- I	0 / 1065	-18.2	-18.2	0.34 (4)	10.00	
I- H	0 / 1348	-18.2	-18.2	0.38 (1)	10.00	

WEBS

MEMB. FR-TO	MAX. FACTORED FORCE (LBS)	MAX CSI (LC)
C- K	-64 / 35	0.05 (1)
K- D	0 / 230	0.05 (4)
K- E	-80 / 0	0.06 (1)
I- E	0 / 335	0.08 (1)
I- F	-343 / 0	0.24 (1)
L- C	-1792 / 0	0.52 (1)
F- H	-1910 / 0	0.72 (1)

DESIGN CRITERIA

SPECIFIED LOADS:

TOP CH.	LL	=	34.8	PSF
	DL	=	6.0	PSF
BOT CH.	LL	=	0.0	PSF
	DL	=	7.3	PSF
TOTAL LOAD		=	48.1	PSF

SPACING = 24.0 IN. C/C

LOADING IN FLAT SECTION BASED ON A SLOPE OF 2.00/12 MINIMUM

THIS TRUSS IS DESIGNED FOR RESIDENTIAL OR SMALL BUILDING REQUIREMENTS OF PART 9, NBCC 2015

THIS DESIGN COMPLIES WITH:
- PART 9 OF BCBC 2018 , NBC-2019AE
- PART 9 OF OBC 2012 (2019 AMENDMENT)
- CSA 086-14
- TPIC 2014

(55 % OF 48.1 P.S.F. G.S.L. PLUS 8.4 P.S.F. RAIN LOAD) EQUALS 34.8 P.S.F. SPECIFIED ROOF LIVE LOAD

ALLOWABLE DEFL.(LL)= L/360 (0.75")
CALCULATED VERT. DEFL.(LL) = L/ 999 (0.04")
ALLOWABLE DEFL.(TL)= L/360 (0.75")
CALCULATED VERT. DEFL.(TL) = L/ 999 (0.19")

CSI: TC=0.41/1.00 (C-D:1) , BC=0.38/1.00 (H-I:1) , WB=0.72/1.00 (F-H:1) , SSI=0.28/1.00 (D-E:1)

DOL LUMBER=1.00 NAIL=1.00 LS BEND=1.10 COMP=1.10 SHEAR=1.10 TENS= 1.10

COMPANION LIVE LOAD FACTOR = 1.00

TRUSS PLATE MANUFACTURER IS NOT RESPONSIBLE FOR QUALITY CONTROL IN THE TRUSS MANUFACTURING PLANT .

NAIL VALUES

PLATE	GRIP(DRY) (PSI) MAX	MIN	SHEAR (PLI) MAX	MIN	SECTION (PLI) MAX	MIN
MT20	650	371	1747	788	1987	1873

PLATE PLACEMENT TOL. = 0.250 inches

PLATE ROTATION TOL. = 5.0 Deg.

JSI GRIP= 0.90 (C) (INPUT = 0.90)
JSI METAL= 0.49 (F) (INPUT = 1.00)

MODULUS ENGINEERING LTD.

LICENSED PROFESSIONAL ENGINEER
07/05/2023
D. A. SHERMAN
100123373
PROVINCE OF ONTARIO

REVIEW FOR TRUSS COMPONENT ONLY

NOTE: ALTERING THIS DOCUMENT VOIDS THE ENGINEERS SEAL

WARNING - Verify design parameters and READ NOTES ON THIS AND INCLUDED IN MODULUS ENGINEERING LTD. NOTES ME-TCD01 (VER 06/2017) BEFORE USE.
Design valid for use only with Mitek connectors. This design is based only upon parameters shown, and is for individual building components. Applicability of design parameters and proper incorporation of component is responsibility of building designer - not truss designer. Bracing shown is for lateral support of individual web members only. Additional temporary bracing to ensure stability during construction is the responsibility of the erector. Additional permanent bracing of the overall structure is the responsibility of the building designer. For general guidance regarding fabrication, quality control, storage, delivery, erection and bracing, consult
TPIC Appendix G - Minimum quality Manufacturing Criteria available from **www.tpic.ca** and **BCSI-CANADA (Building Component Safety Information) available** from TPI, 781 N. Lee Street, Suite 312, Alexandria, VA 22314 or www.sbcindustry.com

KOTT

JOB NAME	TRUSS NAME	QUANTITY	PLY	JOB DESC.		DRWG NO.
T-RIVER 11-2	T03	1	1	TRUSS DESC.	ZADORRA ESTATES INC	ME23-5777-29

Kott, Uxbridge,ON

Version 8.630 S Mar 22 2023 MiTek Industries, Inc. Wed Jul 5 11:02:23 2023 Page 1
ID:oVFDr6Fdws2a9wd?_pY7R0zKcfG-oKmE47hnlTiZh1xuGcNW6ZHS3Pp9eyXYGrM4sTz?8y_

CORPORATION OF THE CITY OF OSHAWA
TRUE COPY
OF PERMIT PLANS
Nov 16 2023
PER: _____
CHIEF BUILDING OFFICIAL

MHP 23027

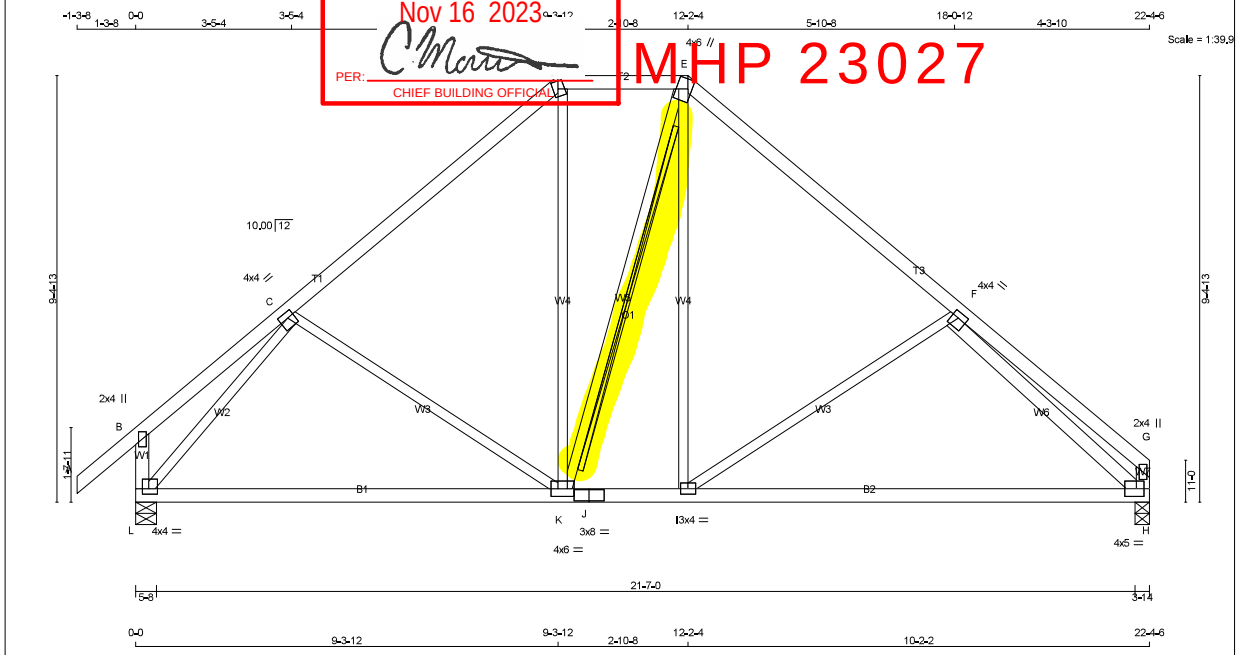

TOTAL WEIGHT = 106 lb
[M][F]

LUMBER
N. L. G. A. RULES

CHORDS	SIZE		LUMBER	DESCR.
A - D	2x4	DRY	No.2	SPF
D - E	2x4	DRY	No.2	SPF
E - G	2x4	DRY	No.2	SPF
L - B	2x4	DRY	No.2	SPF
H - G	2x4	DRY	No.2	SPF
L - J	2x4	DRY	No.2	SPF
J - H	2x4	DRY	No.2	SPF
ALL WEBS EXCEPT	2x3	DRY	No.2	SPF
F - H	2x4	DRY	No.2	SPF

DRY: SEASONED LUMBER.

PLATES (table is in inches)

JT	TYPE	PLATES	W	LEN	Y	X
B	TMV+p	MT20	2.0	4.0		
C	TMWW-t	MT20	4.0	4.0	1.50	1.75
D	TTW+m	MT20	3.0	4.0	2.00	1.25
E	TTWW+m	MT20	4.0	6.0	Edge	1.00
F	TMWW-t	MT20	4.0	4.0	1.50	1.75
G	TMV+p	MT20	2.0	4.0		
H	BMVW1-t	MT20	4.0	5.0	2.00	2.00
I	BMWW-t	MT20	3.0	4.0		
J	BS-t	MT20	3.0	8.0		
K	BMWWW-t	MT20	4.0	6.0		
L	BMVW1-t	MT20	4.0	4.0	1.50	1.75

Edge - INDICATES REFERENCE CORNER OF PLATE TOUCHES EDGE OF CHORD.

DIMENSIONS, SUPPORTS AND LOADINGS SPECIFIED BY FABRICATOR TO BE VERIFIED BY BUILDING DESIGNER

BEARINGS

JT	FACTORED GROSS REACTION VERT	HORZ	MAXIMUM GROSS REACTION DOWN	HORZ	UPLIFT	INPUT BRG IN-SX	REQRD BRG IN-SX
L	1705	0	1705	0	0	5-8	1-14
H	1540	0	1540	0	0	3-14	1-11

UNFACTORED REACTIONS

JT	1ST LCASE COMBINED	MAX./MIN. COMPONENT REACTIONS SNOW	LIVE	PERM.LIVE	WIND	DEAD	SOIL
L	1189	875 / 0	0 / 0	0 / 0	0 / 0	314 / 0	0 / 0
H	1076	778 / 0	0 / 0	0 / 0	0 / 0	297 / 0	0 / 0

BEARING MATERIAL TO BE SPF NO.2 OR BETTER AT JOINT(S) L, H

BRACING
TOP CHORD TO BE SHEATHED OR MAX. PURLIN SPACING = 4.97 FT.
MAX. UNBRACED BOTTOM CHORD LENGTH = 10.00 FT OR RIGID CEILING DIRECTLY APPLIED.

ALL PITCH BREAKS AND PERIMETER CORNER JOINTS MUST BE LATERALLY RESTRAINED.

2x4 DRY SPF No.2 T-BRACE AT E-K

FASTEN T AND I-BRACES TO NARROW EDGE OF WEB WITH ONE ROW PER PLY OF 3" COMMON WIRE NAILS @ 6" O.C. WITH 3" MINIMUM END DISTANCE. BRACE MUST COVER 90% OF WEB LENGTH.

END VERTICAL(S) MUST BE SHEATHED OR HAVE BRACES AS INDICATED IN THE MAX. UNBRACED LENGTH COLUMN OF THE TABLE BELOW

LOADING
TOTAL LOAD CASES: (4)

CHORDS

MEMB. FR-TO	MAX. FACTORED FORCE (LBS)	FACTORED VERT. LOAD (PLF) FROM	TO	LC1	MAX CSI (LC)	MAX. UNBRAC LENGTH
A- B	0 / 53	-119.4	-119.4	0.16 (1)	10.00	
B- C	0 / 75	-119.4	-119.4	0.54 (1)	10.00	
C- D	-1258 / 0	-119.4	-119.4	0.55 (1)	5.00	
D- E	-937 / 0	-119.4	-119.4	0.14 (1)	6.25	
E- F	-1287 / 0	-119.4	-119.4	0.55 (1)	4.97	
F- G	0 / 62	-119.4	-119.4	0.56 (1)	10.00	
L- B	-247 / 0	0.0	0.0	0.03 (1)	7.81	
H- G	-154 / 0	0.0	0.0	0.02 (1)	7.81	
L- K	0 / 1130	-18.2	-18.2	0.40 (4)	10.00	
K- J	0 / 959	-18.2	-18.2	0.48 (4)	10.00	
J- I	0 / 959	-18.2	-18.2	0.48 (4)	10.00	
I- H	0 / 1346	-18.2	-18.2	0.49 (4)	10.00	

WEBS

MEMB. FR-TO	MAX. FACTORED FORCE (LBS)	MAX CSI (LC)
C- K	-237 / 0	0.25 (1)
K- D	0 / 316	0.07 (1)
K- E	-74 / 0	0.05 (1)
I- E	0 / 408	0.09 (1)
I- F	-472 / 0	0.50 (1)
L- C	-1789 / 0	0.80 (1)
F- H	-1877 / 0	0.78 (1)

DESIGN CRITERIA

SPECIFIED LOADS:

TOP CH.	LL	=	34.8	PSF
	DL	=	6.0	PSF
BOT CH.	LL	=	0.0	PSF
	DL	=	7.3	PSF
TOTAL LOAD		=	48.1	PSF

SPACING = 24.0 IN. C/C

LOADING IN FLAT SECTION BASED ON A SLOPE OF 2.00/12 MINIMUM

THIS TRUSS IS DESIGNED FOR RESIDENTIAL OR SMALL BUILDING REQUIREMENTS OF PART 9, NBCC 2015

THIS DESIGN COMPLIES WITH:
- PART 9 OF BCBC 2018 , NBC-2019AE
- PART 9 OF OBC 2012 (2019 AMENDMENT)
- CSA 086-14
- TPIC 2014

(55 % OF 48.1 P.S.F. G.S.L. PLUS 8.4 P.S.F. RAIN LOAD) EQUALS 34.8 P.S.F. SPECIFIED ROOF LIVE LOAD

ALLOWABLE DEFL.(LL)= L/360 (0.75")
CALCULATED VERT. DEFL.(LL) = L/ 999 (0.04")
ALLOWABLE DEFL.(TL)= L/360 (0.75")
CALCULATED VERT. DEFL.(TL) = L/ 819 (0.33")

CSI: TC=0.56/1.00 (F-G:1) , BC=0.49/1.00 (H-I:4) , WB=0.80/1.00 (C-L:1) , SSI=0.25/1.00 (E-F:1)

DOL LUMBER=1.00 NAIL=1.00 LS BEND=1.10 COMP=1.10 SHEAR=1.10 TENS= 1.10

COMPANION LIVE LOAD FACTOR = 1.00

AUTOSOLVE LEFT HEEL ONLY

TRUSS PLATE MANUFACTURER IS NOT RESPONSIBLE FOR QUALITY CONTROL IN THE TRUSS MANUFACTURING PLANT .

NAIL VALUES

PLATE	GRIP(DRY) (PSI) MAX	MIN	SHEAR (PLI) MAX	MIN	SECTION (PLI) MAX	MIN
MT20	650	371	1747	788	1987	1873

PLATE PLACEMENT TOL. = 0.250 inches

PLATE ROTATION TOL. = 5.0 Deg.

JSI GRIP= 0.90 (D) (INPUT = 0.90)
JSI METAL= 0.75 (J) (INPUT = 1.00)

MODULUS ENGINEERING LTD.

LICENSED PROFESSIONAL ENGINEER
07/05/2023
D. A. SHERMAN
100123373
PROVINCE OF ONTARIO

REVIEW FOR TRUSS COMPONENT ONLY

NOTE: ALTERING THIS DOCUMENT VOIDS THE ENGINEERS SEAL

WARNING - Verify design parameters and READ NOTES ON THIS AND INCLUDED IN MODULUS ENGINEERING LTD. NOTES ME-TCD01 (VER 06/2017) BEFORE USE.
Design valid for use only with Mitek connectors. This design is based only upon parameters shown, and is for individual building components. Applicability of design parameters and proper incorporation of component is responsibility of building designer - not truss designer. Bracing shown is for lateral support of individual web members only. Additional temporary bracing to ensure stability during construction is the responsibility of the erector. Additional permanent bracing of the overall structure is the responsibility of the building designer. For general guidance regarding fabrication, quality control, storage, delivery, erection and bracing, consult
TPIC Appendix G - Minimum quality Manufacturing Criteria available from **www.tpic.ca** and **BCSI-CANADA (Building Component Safety Information) available** from TPI, 781 N. Lee Street, Suite 312, Alexandria, VA 22314 or www.sbcindustry.com

KOTT

JOB NAME	TRUSS NAME	QUANTITY	PLY	JOB DESC.		DRWG NO.
T-RIVER 11-2	T04	1	1	TRUSS DESC.	ZADORRA ESTATES INC	ME23-5777-30

Kott, Uxbridge,ON

Version 8.630 S Mar 22 2023 MiTek Industries, Inc. Wed Jul 5 11:02:24 2023 Page 1
ID:oVFDr6Fdws2a9wd?_pY7R0zKcfG-GWKcHTiPWmqPJBW4pJvIfmqc9p8INPSiVV5dOvz?8xz

CORPORATION OF THE CITY OF OSHAWA
TRUE COPY
OF PERMIT PLANS
Nov 16 2023
PER:
CHIEF BUILDING OFFICIAL

MHP 23027

Scale = 1:45.2

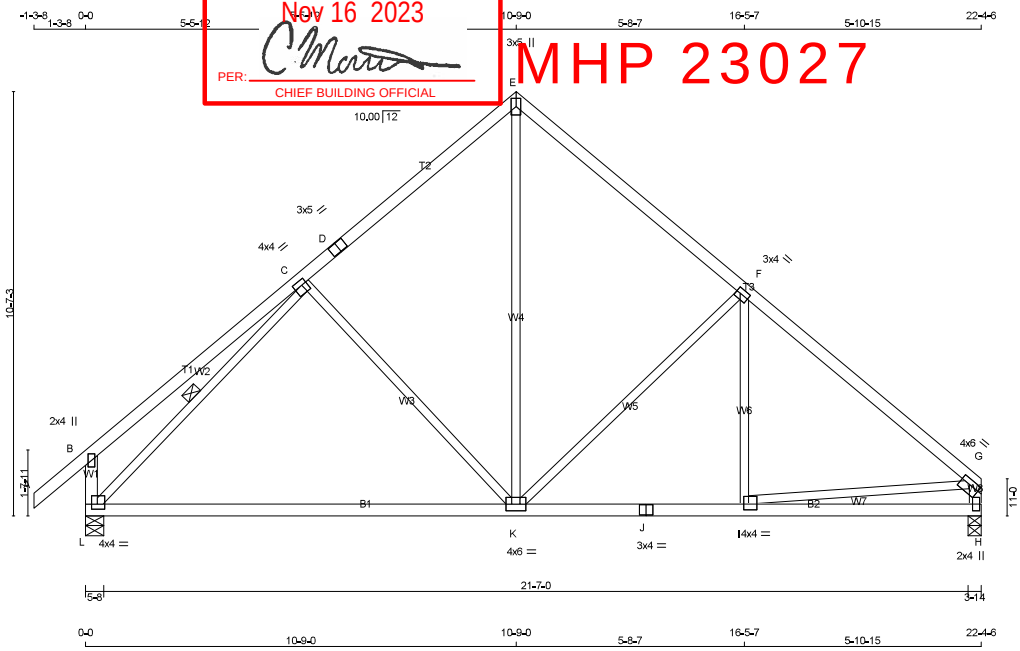

TOTAL WEIGHT = 98 lb

[M][F]

LUMBER
N. L. G. A. RULES

CHORDS	SIZE		LUMBER	DESCR.
A - D	2x4	DRY	No.2	SPF
D - E	2x4	DRY	No.2	SPF
E - G	2x4	DRY	No.2	SPF
L - B	2x4	DRY	No.2	SPF
H - G	2x4	DRY	No.2	SPF
L - J	2x4	DRY	No.2	SPF
J - H	2x4	DRY	No.2	SPF
ALL WEBS EXCEPT	2x3	DRY	No.2	SPF

DRY: SEASONED LUMBER.

PLATES (table is in inches)

JT	TYPE	PLATES	W	LEN	Y	X
B	TMV+p	MT20	2.0	4.0		
C	TMWW-t	MT20	4.0	4.0	1.50	1.50
D	TS-t	MT20	3.0	5.0		
E	TTW+p	MT20	3.0	5.0		
F	TMWW-t	MT20	3.0	4.0	1.50	1.25
G	TMVW-t	MT20	4.0	6.0	1.50	2.75
H	BMV1+p	MT20	2.0	4.0	2.00	1.00
I	BMWW-t	MT20	4.0	4.0	1.75	1.50
J	BS-t	MT20	3.0	4.0		
K	BMWWW-t	MT20	4.0	6.0		
L	BMVW1-t	MT20	4.0	4.0	1.50	1.75

DIMENSIONS, SUPPORTS AND LOADINGS SPECIFIED BY FABRICATOR TO BE VERIFIED BY BUILDING DESIGNER

BEARINGS

JT	FACTORED GROSS REACTION VERT	HORZ	MAXIMUM FACTORED GROSS REACTION DOWN	HORZ	UPLIFT	INPUT BRG IN-SX	REQRD BRG IN-SX
L	1705	0	1705	0	0	5-8	1-14
H	1540	0	1540	0	0	3-14	1-11

UNFACTORED REACTIONS

1ST LCASE MAX./MIN. COMPONENT REACTIONS

JT	COMBINED	SNOW	LIVE	PERM.LIVE	WIND	DEAD	SOIL
L	1189	875 / 0	0 / 0	0 / 0	0 / 0	314 / 0	0 / 0
H	1076	778 / 0	0 / 0	0 / 0	0 / 0	297 / 0	0 / 0

BEARING MATERIAL TO BE SPF NO.2 OR BETTER AT JOINT(S) L, H

BRACING

TOP CHORD TO BE SHEATHED OR MAX. PURLIN SPACING = 4.43 FT.
MAX. UNBRACED BOTTOM CHORD LENGTH = 10.00 FT OR RIGID CEILING DIRECTLY APPLIED.

ALL PITCH BREAKS AND PERIMETER CORNER JOINTS MUST BE LATERALLY RESTRAINED.

1 LATERAL BRACE(S) AT 1/ 2 LENGTH OF C-L.

END VERTICAL(S) MUST BE SHEATHED OR HAVE BRACES AS INDICATED IN THE MAX. UNBRACED LENGTH COLUMN OF THE TABLE BELOW

LOADING

TOTAL LOAD CASES: (4)

CHORDS

MEMB. FR-TO	MAX. FACTORED FORCE (LBS)	FACTORED VERT. LOAD (PLF) FROM	TO	LC1	MAX CSI (LC)	MAX. UNBRAC LENGTH
A- B	0 / 53	-119.4	-119.4	0.16 (1)	10.00	
B- C	0 / 50	-119.4	-119.4	0.57 (1)	10.00	
C- D	-1163 / 0	-119.4	-119.4	0.47 (1)	5.30	
D- E	-1163 / 0	-119.4	-119.4	0.47 (1)	5.30	
E- F	-1169 / 0	-119.4	-119.4	0.55 (1)	5.14	
F- G	-1649 / 0	-119.4	-119.4	0.60 (1)	4.43	
L- B	-407 / 0	0.0	0.0	0.04 (1)	7.81	
H- G	-1488 / 0	0.0	0.0	0.15 (1)	6.72	
L- K	0 / 1130	-18.2	-18.2	0.52 (4)	10.00	
K- J	0 / 1307	-18.2	-18.2	0.53 (4)	10.00	
J- I	0 / 1307	-18.2	-18.2	0.53 (4)	10.00	
I- H	0 / 0	-18.2	-18.2	0.16 (4)	10.00	

WEBS

MEMB. FR-TO	MAX. FACTORED FORCE (LBS)	MAX CSI (LC)
C- K	-400 / 0	0.52 (1)
K- E	0 / 926	0.21 (1)
K- F	-628 / 0	0.82 (1)
I- F	-50 / 57	0.03 (1)
L- C	-1660 / 0	0.68 (1)
I- G	0 / 1314	0.30 (1)

DESIGN CRITERIA

SPECIFIED LOADS:

TOP CH.	LL	=	34.8	PSF
	DL	=	6.0	PSF
BOT CH.	LL	=	0.0	PSF
	DL	=	7.3	PSF
TOTAL LOAD		=	48.1	PSF

SPACING = 24.0 IN. C/C

THIS TRUSS IS DESIGNED FOR RESIDENTIAL OR SMALL BUILDING REQUIREMENTS OF PART 9, NBCC 2015

THIS DESIGN COMPLIES WITH:
- PART 9 OF BCBC 2018 , NBC-2019AE
- PART 9 OF OBC 2012 (2019 AMENDMENT)
- CSA 086-14
- TPIC 2014

(55 % OF 48.1 P.S.F. G.S.L. PLUS 8.4 P.S.F. RAIN LOAD) EQUALS 34.8 P.S.F. SPECIFIED ROOF LIVE LOAD

ALLOWABLE DEFL.(LL)= L/360 (0.75")
CALCULATED VERT. DEFL.(LL) = L/ 999 (0.05")
ALLOWABLE DEFL.(TL)= L/360 (0.75")
CALCULATED VERT. DEFL.(TL) = L/ 694 (0.39")

CSI: TC=0.60/1.00 (F-G:1) , BC=0.53/1.00 (I-K:4) , WB=0.82/1.00 (F-K:1) , SSI=0.26/1.00 (F-G:1)

DOL LUMBER=1.00 NAIL=1.00 LS BEND=1.10 COMP=1.10 SHEAR=1.10 TENS= 1.10

COMPANION LIVE LOAD FACTOR = 1.00

TRUSS PLATE MANUFACTURER IS NOT RESPONSIBLE FOR QUALITY CONTROL IN THE TRUSS MANUFACTURING PLANT .

NAIL VALUES

PLATE	GRIP(DRY) (PSI) MAX	MIN	SHEAR (PLI) MAX	MIN	SECTION (PLI) MAX	MIN
MT20	650	371	1747	788	1987	1873

PLATE PLACEMENT TOL. = 0.250 inches

PLATE ROTATION TOL. = 5.0 Deg.

JSI GRIP= 0.85 (H) (INPUT = 0.90)
JSI METAL= 0.55 (C) (INPUT = 1.00)

MODULUS ENGINEERING LTD.

LICENSED PROFESSIONAL ENGINEER
07/05/2023
D. A. SHERMAN
100123373
PROVINCE OF ONTARIO

REVIEW FOR TRUSS COMPONENT ONLY

NOTE: ALTERING THIS DOCUMENT VOIDS THE ENGINEERS SEAL

WARNING - Verify design parameters and READ NOTES ON THIS AND INCLUDED IN MODULUS ENGINEERING LTD. NOTES ME-TCD01 (VER 06/2017) BEFORE USE.
Design valid for use only with Mitek connectors. This design is based only upon parameters shown, and is for individual building components. Applicability of design parameters and proper incorporation of component is responsibility of building designer - not truss designer. Bracing shown is for lateral support of individual web members only. Additional temporary bracing to ensure stability during construction is the responsibility of the erector. Additional permanent bracing of the overall structure is the responsibility of the building designer. For general guidance regarding fabrication, quality control, storage, delivery, erection and bracing, consult
TPIC Appendix G - Minimum quality Manufacturing Criteria available from **www.tpic.ca** and **BCSI-CANADA (Building Component Safety Information) available** from TPI, 781 N. Lee Street, Suite 312, Alexandria, VA 22314 or www.sbcindustry.com

KOTT

JOB NAME	TRUSS NAME	QUANTITY	PLY	JOB DESC.		DRWG NO.
T-RIVER 11-2	T05	1	1	TRUSS DESC.	ZADORRA ESTATES INC	ME23-5777-31

Kott, Uxbridge,ON

Version 8.630 S Mar 22 2023 MiTek Industries, Inc. Wed Jul 5 11:02:26 2023 Page 1
ID:oVFDr6Fdws2a9wd?_pY7R0zKcfG-CvSMi9kf2O47YUgTxkxDkBvz9cpKrLd_ypakSoz?8xx

CORPORATION OF THE CITY OF OSHAWA
TRUE COPY
OF PERMIT PLANS
Nov 16 2023
PER:
CHIEF BUILDING OFFICIAL

MHP 23027

Scale = 1:45.2

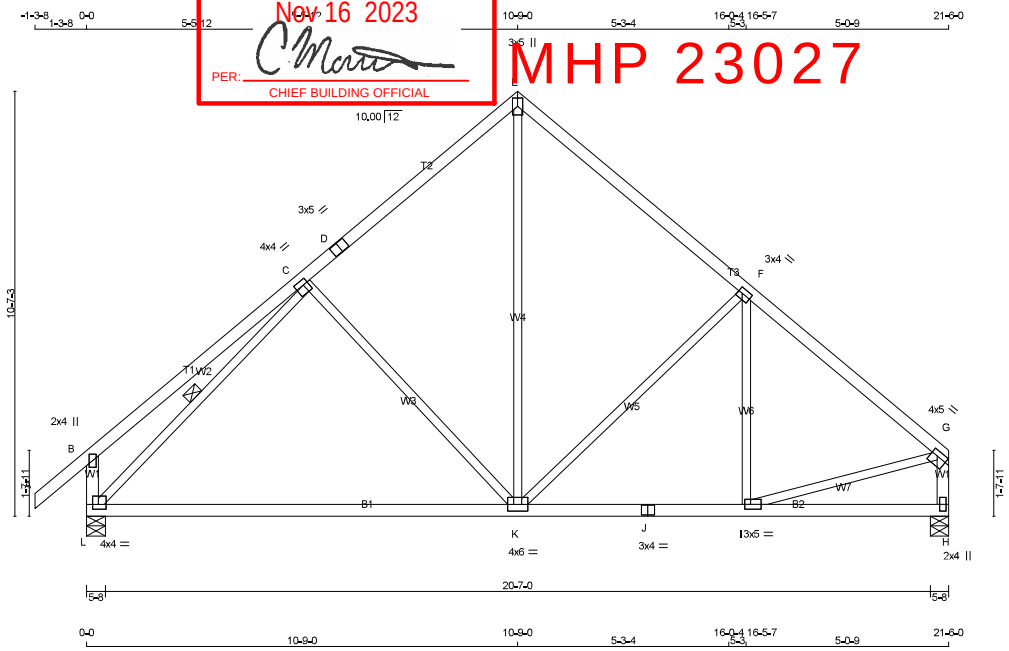

TOTAL WEIGHT = 96 lb

[M][F]

LUMBER
N. L. G. A. RULES

CHORDS	SIZE		LUMBER	DESCR.
A - D	2x4	DRY	No.2	SPF
D - E	2x4	DRY	No.2	SPF
E - G	2x4	DRY	No.2	SPF
L - B	2x4	DRY	No.2	SPF
H - G	2x4	DRY	No.2	SPF
L - J	2x4	DRY	No.2	SPF
J - H	2x4	DRY	No.2	SPF
ALL WEBS EXCEPT	2x3	DRY	No.2	SPF

DRY: SEASONED LUMBER.

PLATES (table is in inches)

JT	TYPE	PLATES	W	LEN	Y	X
B	TMV+p	MT20	2.0	4.0		
C	TMWW-t	MT20	4.0	4.0	1.50	1.50
D	TS-t	MT20	3.0	5.0		
E	TTW+p	MT20	3.0	5.0		
F	TMWW-t	MT20	3.0	4.0	1.50	1.25
G	TMVW-t	MT20	4.0	5.0	1.50	1.75
H	BMV1+p	MT20	2.0	4.0		
I	BMWW-t	MT20	3.0	5.0	1.50	1.75
J	BS-t	MT20	3.0	4.0		
K	BMWWW-t	MT20	4.0	6.0		
L	BMVW1-t	MT20	4.0	4.0	1.50	1.75

DIMENSIONS, SUPPORTS AND LOADINGS SPECIFIED BY FABRICATOR TO BE VERIFIED BY BUILDING DESIGNER

BEARINGS

JT	FACTORED GROSS REACTION VERT	HORZ	MAXIMUM FACTORED GROSS REACTION DOWN	HORZ	UPLIFT	INPUT BRG	REQRD BRG
H	1480	0	1480	0	0	5-8	1-10
L	1645	0	1645	0	0	5-8	1-13

UNFACTORED REACTIONS

1ST LCASE MAX./MIN. COMPONENT REACTIONS

JT	COMBINED	SNOW	LIVE	PERM.LIVE	WIND	DEAD	SOIL
H	1034	748 / 0	0 / 0	0 / 0	0 / 0	286 / 0	0 / 0
L	1147	845 / 0	0 / 0	0 / 0	0 / 0	303 / 0	0 / 0

BEARING MATERIAL TO BE SPF NO.2 OR BETTER AT JOINT(S) H, L

BRACING
TOP CHORD TO BE SHEATHED OR MAX. PURLIN SPACING = 4.91 FT.
MAX. UNBRACED BOTTOM CHORD LENGTH = 10.00 FT OR RIGID CEILING DIRECTLY APPLIED.

ALL PITCH BREAKS AND PERIMETER CORNER JOINTS MUST BE LATERALLY RESTRAINED.

1 LATERAL BRACE(S) AT 1/ 2 LENGTH OF C-L.

END VERTICAL(S) MUST BE SHEATHED OR HAVE BRACES AS INDICATED IN THE MAX. UNBRACED LENGTH COLUMN OF THE TABLE BELOW

LOADING
TOTAL LOAD CASES: (4)

CHORDS

MEMB. FR-TO	MAX. FACTORED FORCE (LBS)	FACTORED VERT. LOAD (PLF) FROM	TO	LC1 CSI (LC)	MAX UNBRAC LENGTH
A- B	0 / 53	-119.4	-119.4	0.16 (1)	10.00
B- C	0 / 50	-119.4	-119.4	0.57 (1)	10.00
C- D	-1082 / 0	-119.4	-119.4	0.46 (1)	5.44
D- E	-1082 / 0	-119.4	-119.4	0.46 (1)	5.44
E- F	-1081 / 0	-119.4	-119.4	0.50 (1)	5.40
F- G	-1398 / 0	-119.4	-119.4	0.48 (1)	4.91
L- B	-407 / 0	0.0	0.0	0.04 (1)	7.81
H- G	-1435 / 0	0.0	0.0	0.15 (1)	6.82
L- K	0 / 1075	-18.2	-18.2	0.52 (4)	10.00
K- J	0 / 1115	-18.2	-18.2	0.53 (4)	10.00
J- I	0 / 1115	-18.2	-18.2	0.53 (4)	10.00
I- H	0 / 0	-18.2	-18.2	0.12 (4)	10.00

WEBS

MEMB. FR-TO	MAX. FACTORED FORCE (LBS)	MAX CSI (LC)
C- K	-411 / 0	0.53 (1)
K- E	0 / 811	0.18 (1)
K- F	-448 / 0	0.58 (1)
I- G	0 / 1152	0.26 (1)
I- F	-221 / 1	0.12 (1)
L- C	-1580 / 0	0.65 (1)

DESIGN CRITERIA

SPECIFIED LOADS:

TOP CH.	LL	=	34.8	PSF
	DL	=	6.0	PSF
BOT CH.	LL	=	0.0	PSF
	DL	=	7.3	PSF
TOTAL LOAD		=	48.1	PSF

SPACING = 24.0 IN. C/C

THIS TRUSS IS DESIGNED FOR RESIDENTIAL OR SMALL BUILDING REQUIREMENTS OF PART 9, NBCC 2015

THIS DESIGN COMPLIES WITH:
- PART 9 OF BCBC 2018 , NBC-2019AE
- PART 9 OF OBC 2012 (2019 AMENDMENT)
- CSA 086-14
- TPIC 2014

(55 % OF 48.1 P.S.F. G.S.L. PLUS 8.4 P.S.F. RAIN LOAD) EQUALS 34.8 P.S.F. SPECIFIED ROOF LIVE LOAD

ALLOWABLE DEFL.(LL)= L/360 (0.72")
CALCULATED VERT. DEFL.(LL) = L/ 999 (0.04")
ALLOWABLE DEFL.(TL)= L/360 (0.72")
CALCULATED VERT. DEFL.(TL) = L/ 684 (0.38")

CSI: TC=0.57/1.00 (B-C:1) , BC=0.53/1.00 (I-K:4) , WB=0.65/1.00 (C-L:1) , SSI=0.25/1.00 (E-F:1)

DOL LUMBER=1.00 NAIL=1.00 LS BEND=1.10 COMP=1.10 SHEAR=1.10 TENS= 1.10

COMPANION LIVE LOAD FACTOR = 1.00

TRUSS PLATE MANUFACTURER IS NOT RESPONSIBLE FOR QUALITY CONTROL IN THE TRUSS MANUFACTURING PLANT .

NAIL VALUES

PLATE	GRIP(DRY) (PSI) MAX	MIN	SHEAR (PLI) MAX	MIN	SECTION (PLI) MAX	MIN
MT20	650	371	1747	788	1987	1873

PLATE PLACEMENT TOL. = 0.250 inches

PLATE ROTATION TOL. = 5.0 Deg.

JSI GRIP= 0.85 (I) (INPUT = 0.90)
JSI METAL= 0.53 (C) (INPUT = 1.00)

MODULUS ENGINEERING LTD.

LICENSED PROFESSIONAL ENGINEER
07/05/2023
D. A. SHERMAN
100123373
PROVINCE OF ONTARIO

REVIEW FOR TRUSS COMPONENT ONLY

NOTE: ALTERING THIS DOCUMENT VOIDS THE ENGINEERS SEAL

WARNING - Verify design parameters and READ NOTES ON THIS AND INCLUDED IN MODULUS ENGINEERING LTD. NOTES ME-TCD01 (VER 06/2017) BEFORE USE.
Design valid for use only with Mitek connectors. This design is based only upon parameters shown, and is for individual building components. Applicability of design parameters and proper incorporation of component is responsibility of building designer - not truss designer. Bracing shown is for lateral support of individual web members only. Additional temporary bracing to ensure stability during construction is the responsibility of the erector. Additional permanent bracing of the overall structure is the responsibility of the building designer. For general guidance regarding fabrication, quality control, storage, delivery, erection and bracing, consult
TPIC Appendix G - Minimum quality Manufacturing Criteria available from **www.tpic.ca** and **BCSI-CANADA (Building Component Safety Information) available** from TPI, 781 N. Lee Street, Suite 312, Alexandria, VA 22314 or www.sbcindustry.com

KOTT

JOB NAME	TRUSS NAME	QUANTITY	PLY	JOB DESC.		DRWG NO.
T-RIVER 11-2	T06	3	1	TRUSS DESC.	ZADORRA ESTATES INC	ME23-5777-32

Kott, Uxbridge,ON

Version 8.630 S Mar 22 2023 MiTek Industries, Inc. Wed Jul 5 11:02:27 2023 Page 1
ID:oVFDr6Fdws2a9wd?_pY7R0zKcfG-h5?lvVkIphC_AeFfVRSSGPS8v09Zaot8BSKH_Ez?8xw

CORPORATION OF THE CITY OF OSHAWA
TRUE COPY
OF PERMIT PLANS
Nov 16 2023
PER:
CHIEF BUILDING OFFICIAL

MHP 23027

Scale = 1:44.9

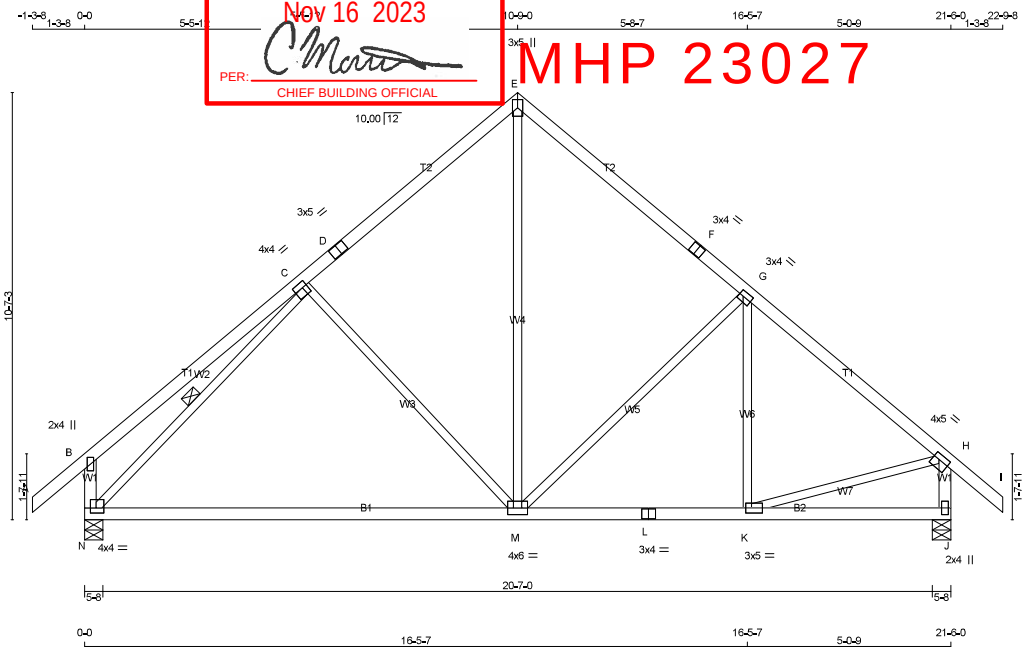

TOTAL WEIGHT = 3 X 98 = 295 lb
[M][F]

LUMBER
N. L. G. A. RULES

CHORDS	SIZE		LUMBER	DESCR.
A - D	2x4	DRY	No.2	SPF
D - E	2x4	DRY	No.2	SPF
E - F	2x4	DRY	No.2	SPF
F - I	2x4	DRY	No.2	SPF
N - B	2x4	DRY	No.2	SPF
J - H	2x4	DRY	No.2	SPF
N - L	2x4	DRY	No.2	SPF
L - J	2x4	DRY	No.2	SPF
ALL WEBS EXCEPT	2x3	DRY	No.2	SPF

DRY: SEASONED LUMBER.

PLATES (table is in inches)

JT	TYPE	PLATES	W	LEN	Y	X
B	TMV+p	MT20	2.0	4.0		
C	TMWW-t	MT20	4.0	4.0	1.50	1.50
D	TS-t	MT20	3.0	5.0		
E	TTW+p	MT20	3.0	5.0		
F	TS-t	MT20	3.0	4.0		
G	TMWW-t	MT20	3.0	4.0	1.50	1.25
H	TMVW-t	MT20	4.0	5.0	1.50	1.75
J	BMV1+p	MT20	2.0	4.0		
K	BMWW-t	MT20	3.0	5.0	1.50	1.75
L	BS-t	MT20	3.0	4.0		
M	BMWWW-t	MT20	4.0	6.0		
N	BMVW1-t	MT20	4.0	4.0	1.50	1.75

DIMENSIONS, SUPPORTS AND LOADINGS SPECIFIED BY FABRICATOR TO BE VERIFIED BY BUILDING DESIGNER

BEARINGS

JT	FACTORED GROSS REACTION VERT	HORZ	MAXIMUM GROSS REACTION DOWN	FACTORED HORZ	UPLIFT	INPUT BRG	REQRD BRG
J	1645	0	1645	0	0	5-8	1-14
N	1645	0	1645	0	0	5-8	1-13

UNFACTORED REACTIONS

1ST LCASE MAX./MIN. COMPONENT REACTIONS

JT	COMBINED	SNOW	LIVE	PERM.LIVE	WIND	DEAD	SOIL
J	1147	845 / 0	0 / 0	0 / 0	0 / 0	303 / 0	0 / 0
N	1147	845 / 0	0 / 0	0 / 0	0 / 0	303 / 0	0 / 0

BEARING MATERIAL TO BE SPF NO.2 OR BETTER AT JOINT(S) J, N

BRACING
TOP CHORD TO BE SHEATHED OR MAX. PURLIN SPACING = 4.91 FT.
MAX. UNBRACED BOTTOM CHORD LENGTH = 10.00 FT OR RIGID CEILING DIRECTLY APPLIED.

ALL PITCH BREAKS AND PERIMETER CORNER JOINTS MUST BE LATERALLY RESTRAINED.

1 LATERAL BRACE(S) AT 1/ 2 LENGTH OF C-N.

END VERTICAL(S) MUST BE SHEATHED OR HAVE BRACES AS INDICATED IN THE MAX. UNBRACED LENGTH COLUMN OF THE TABLE BELOW

LOADING
TOTAL LOAD CASES: (4)

CHORDS

MEMB. FR-TO	MAX. FACTORED FORCE (LBS)	FACTORED VERT. LOAD (PLF) FROM	TO	LC1	MAX CSI (LC)	MAX. UNBRAC LENGTH
A- B	0 / 53	-119.4	-119.4	0.16 (1)		10.00
B- C	0 / 50	-119.4	-119.4	0.57 (1)		10.00
C- D	-1082 / 0	-119.4	-119.4	0.46 (1)		5.44
D- E	-1082 / 0	-119.4	-119.4	0.46 (1)		5.44
E- F	-1081 / 0	-119.4	-119.4	0.50 (1)		5.40
F- G	-1081 / 0	-119.4	-119.4	0.50 (1)		5.40
G- H	-1398 / 0	-119.4	-119.4	0.48 (1)		4.91
H- I	0 / 53	-119.4	-119.4	0.16 (1)		10.00
N- B	-407 / 0	0.0	0.0	0.04 (1)		7.81
J- H	-1600 / 0	0.0	0.0	0.17 (1)		6.53
N- M	0 / 1075	-18.2	-18.2	0.52 (4)		10.00
M- L	0 / 1115	-18.2	-18.2	0.53 (4)		10.00
L- K	0 / 1115	-18.2	-18.2	0.53 (4)		10.00
K- J	0 / 0	-18.2	-18.2	0.12 (4)		10.00

WEBS

MEMB. FR-TO	MAX. FACTORED FORCE (LBS)	MAX CSI (LC)
C- M	-411 / 0	0.53 (1)
M- E	0 / 811	0.18 (1)
M- G	-448 / 0	0.58 (1)
K- H	0 / 1152	0.26 (1)
K- G	-221 / 1	0.12 (1)
N- C	-1580 / 0	0.65 (1)

DESIGN CRITERIA

SPECIFIED LOADS:

TOP CH.	LL	=	34.8	PSF
	DL	=	6.0	PSF
BOT CH.	LL	=	0.0	PSF
	DL	=	7.3	PSF
TOTAL LOAD		=	48.1	PSF

SPACING = 24.0 IN. C/C

THIS TRUSS IS DESIGNED FOR RESIDENTIAL OR SMALL BUILDING REQUIREMENTS OF PART 9, NBCC 2015

THIS DESIGN COMPLIES WITH:
- PART 9 OF BCBC 2018 , NBC-2019AE
- PART 9 OF OBC 2012 (2019 AMENDMENT)
- CSA 086-14
- TPIC 2014

(55 % OF 48.1 P.S.F. G.S.L. PLUS 8.4 P.S.F. RAIN LOAD) EQUALS 34.8 P.S.F. SPECIFIED ROOF LIVE LOAD

ALLOWABLE DEFL.(LL)= L/360 (0.72")
CALCULATED VERT. DEFL.(LL) = L/ 999 (0.04")
ALLOWABLE DEFL.(TL)= L/360 (0.72")
CALCULATED VERT. DEFL.(TL) = L/ 683 (0.38")

CSI: TC=0.57/1.00 (B-C:1) , BC=0.53/1.00 (K-M:4) , WB=0.65/1.00 (C-N:1) , SSI=0.25/1.00 (E-G:1)

DOL LUMBER=1.00 NAIL=1.00 LS BEND=1.10 COMP=1.10 SHEAR=1.10 TENS= 1.10

COMPANION LIVE LOAD FACTOR = 1.00

TRUSS PLATE MANUFACTURER IS NOT RESPONSIBLE FOR QUALITY CONTROL IN THE TRUSS MANUFACTURING PLANT .

NAIL VALUES

PLATE	GRIP(DRY) (PSI) MAX	MIN	SHEAR (PLI) MAX	MIN	SECTION (PLI) MAX	MIN
MT20	650	371	1747	788	1987	1873

PLATE PLACEMENT TOL. = 0.250 inches

PLATE ROTATION TOL. = 5.0 Deg.

JSI GRIP= 0.85 (K) (INPUT = 0.90)
JSI METAL= 0.53 (C) (INPUT = 1.00)

MODULUS ENGINEERING LTD.

LICENSED PROFESSIONAL ENGINEER
07/05/2023
D. A. SHERMAN
100123373
PROVINCE OF ONTARIO

REVIEW FOR TRUSS COMPONENT ONLY

NOTE: ALTERING THIS DOCUMENT VOIDS THE ENGINEERS SEAL

WARNING - Verify design parameters and READ NOTES ON THIS AND INCLUDED IN MODULUS ENGINEERING LTD. NOTES ME-TCD01 (VER 06/2017) BEFORE USE.
Design valid for use only with Mitek connectors. This design is based only upon parameters shown, and is for individual building components. Applicability of design parameters and proper incorporation of component is responsibility of building designer - not truss designer. Bracing shown is for lateral support of individual web members only. Additional temporary bracing to ensure stability during construction is the responsibility of the erector. Additional permanent bracing of the overall structure is the responsibility of the building designer. For general guidance regarding fabrication, quality control, storage, delivery, erection and bracing, consult
TPIC Appendix G - Minimum quality Manufacturing Criteria available from **www.tpic.ca** and **BCSI-CANADA (Building Component Safety Information) available** from TPI, 781 N. Lee Street, Suite 312, Alexandria, VA 22314 or www.sbcindustry.com

KOTT

JOB NAME	TRUSS NAME	QUANTITY	PLY	JOB DESC.		DRWG NO.
T-RIVER 11-2	T06A	3	1	TRUSS DESC.	ZADORRA ESTATES INC	ME23-5777-33

Kott, Uxbridge,ON

Version 8.630 S Mar 22 2023 MiTek Industries, Inc. Wed Jul 5 11:02:28 2023 Page 1
ID:oVFDr6Fdws2a9wd?_pY7R0zKcfG-9HZ77rlwa?Kroopr29zhpc_KwQYiJGJHQ63rXgz?8xv

CORPORATION OF THE CITY OF OSHAWA
TRUE COPY
OF PERMIT PLANS
Nov 16 2023
PER: CHIEF BUILDING OFFICIAL

MHP 23027

Scale = 1:45.2

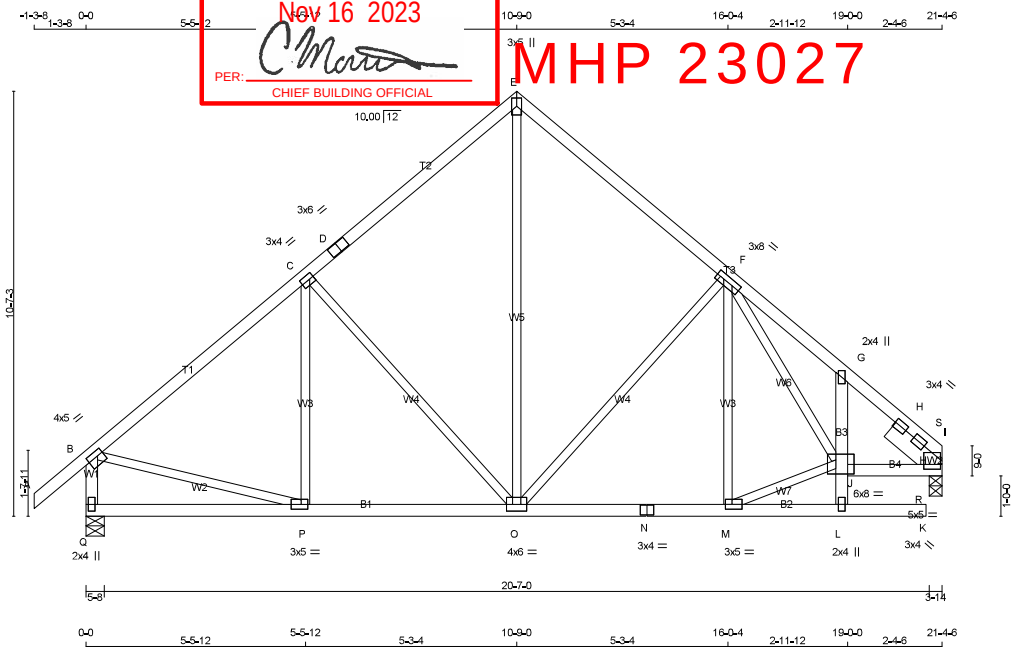

TOTAL WEIGHT = 3 X 109 = 327 lb
[M][F]

LUMBER
N. L. G. A. RULES

CHORDS	SIZE		LUMBER	DESCR.
A - D	2x4	DRY	No.2	SPF
D - E	2x4	DRY	No.2	SPF
E - I	2x4	DRY	No.2	SPF
Q - B	2x4	DRY	No.2	SPF
Q - N	2x4	DRY	No.2	SPF
N - K	2x4	DRY	No.2	SPF
L - G	2x4	DRY	No.2	SPF
J - I	2x4	DRY	No.2	SPF
REINFORCING MEMBERS				
HW2	2x6	DRY	No.2	SPF
ALL WEBS EXCEPT	2x3	DRY	No.2	SPF

DRY: SEASONED LUMBER.

PLATES (table is in inches)

JT	TYPE	PLATES	W	LEN	Y	X
B	TMVW-t	MT20	4.0	5.0	1.50	1.75
C	TMWW-t	MT20	3.0	4.0	1.50	1.25
D	TS-t	MT20	3.0	6.0		
E	TTW+p	MT20	3.0	5.0		
F	TMWWW-t	MT20	3.0	8.0		
G	TMV+p	MT20	2.0	4.0		
I	TMBMR1-I	MT20	5.0	5.0	2.50	0.50
I	RT-t	MT20	3.0	4.0		
I	RT-t	MT20	3.0	4.0		
J	BVMWW-I	MT20	6.0	8.0	4.25	5.50
L	BMV+p	MT20	2.0	4.0		
M	BMWW-t	MT20	3.0	5.0	1.50	2.00
N	BS-t	MT20	3.0	4.0		
O	BMWWW-t	MT20	4.0	6.0		
P	BMWW-t	MT20	3.0	5.0	1.50	2.00
Q	BMV1+p	MT20	2.0	4.0		

DIMENSIONS, SUPPORTS AND LOADINGS SPECIFIED BY FABRICATOR TO BE VERIFIED BY BUILDING DESIGNER

BEARINGS

JT	FACTORED GROSS REACTION VERT	HORZ	MAXIMUM FACTORED GROSS REACTION DOWN	HORZ	UPLIFT	INPUT BRG IN-SX	REQRD BRG IN-SX
I	1506	0	1506	0	0	3-14	1-10
Q	1639	0	1639	0	0	5-8	1-13

UNFACTORED REACTIONS

JT	1ST LCASE COMBINED	MAX./MIN. COMPONENT REACTIONS SNOW	LIVE	PERM.LIVE	WIND	DEAD	SOIL
I	1056	744 / 0	0 / 0	0 / 0	0 / 0	313 / 0	0 / 0
Q	1143	840 / 0	0 / 0	0 / 0	0 / 0	303 / 0	0 / 0

BEARING MATERIAL TO BE SPF NO.2 OR BETTER AT JOINT(S) I, Q

BRACING
TOP CHORD TO BE SHEATHED OR MAX. PURLIN SPACING = 4.71 FT.
MAX. UNBRACED BOTTOM CHORD LENGTH = 10.00 FT OR RIGID CEILING DIRECTLY APPLIED.

ALL PITCH BREAKS AND PERIMETER CORNER JOINTS MUST BE LATERALLY RESTRAINED.

LOADING
TOTAL LOAD CASES: (4)

CHORDS

MEMB. FR-TO	MAX. FORCE (LBS)	FACTORED VERT. LOAD (PLF) FROM	TO	LC1	MAX CSI (LC)	MAX. UNBRAC LENGTH
A- B	0 / 53	-119.4	-119.4	0.16 (1)	10.00	
B- C	-1385 / 0	-119.4	-119.4	0.49 (1)	4.92	
C- D	-1056 / 0	-119.4	-119.4	0.46 (1)	5.50	
D- E	-1056 / 0	-119.4	-119.4	0.46 (1)	5.50	
E- F	-1045 / 0	-119.4	-119.4	0.40 (1)	5.63	
F- G	-1681 / 0	-119.4	-119.4	0.37 (1)	4.71	
G- H	-1456 / 0	-119.4	-119.4	0.25 (1)	5.16	
H- S	-1456 / 0	-119.4	-119.4	0.25 (1)	5.16	
S- I	-1915 / 0	-119.4	-119.4	0.04 (1)	4.86	
Q- B	-1597 / 0	0.0	0.0	0.17 (1)	6.54	
Q- P	0 / 0	-18.2	-18.2	0.12 (4)	10.00	
P- O	0 / 1102	-18.2	-18.2	0.24 (1)	10.00	
O- N	0 / 1071	-18.2	-18.2	0.23 (1)	10.00	
N- M	0 / 1071	-18.2	-18.2	0.23 (1)	10.00	
M- L	0 / 63	-18.2	-18.2	0.10 (4)	10.00	
L- K	0 / 0	-18.2	-18.2	0.09 (4)	10.00	
L- J	0 / 77	0.0	0.0	0.11 (1)	10.00	
J- G	0 / 125	0.0	0.0	0.12 (1)	10.00	
J- R	0 / 1398	-18.2	-18.2	0.34 (1)	10.00	
R- I	0 / 960	-18.2	-18.2	0.27 (1)	10.00	

WEBS

MEMB. FR-TO	MAX. FORCE (LBS)	MAX CSI (LC)
C- P	-155 / 52	0.09 (1)
C- O	-494 / 0	0.64 (1)
O- E	0 / 799	0.18 (1)
O- F	-448 / 0	0.58 (1)
M- F	-361 / 0	0.22 (1)
M- J	0 / 1095	0.25 (1)
F- J	0 / 568	0.13 (1)
B- P	0 / 1133	0.25 (1)
R- S	0 / 1195	0.00 (1)
R- H	-1170 / 0	0.08 (1)

DESIGN CRITERIA

SPECIFIED LOADS:

TOP CH.	LL	=	34.8	PSF
	DL	=	6.0	PSF
BOT CH.	LL	=	0.0	PSF
	DL	=	7.3	PSF
TOTAL LOAD		=	48.1	PSF

SPACING = 24.0 IN. C/C

THIS TRUSS IS DESIGNED FOR RESIDENTIAL OR SMALL BUILDING REQUIREMENTS OF PART 9, NBCC 2015

THIS DESIGN COMPLIES WITH:
- PART 9 OF BCBC 2018 , NBC-2019AE
- PART 9 OF OBC 2012 (2019 AMENDMENT)
- CSA 086-14
- TPIC 2014

DESIGN ASSUMPTIONS
-OVERHANG NOT TO BE ALTERED OR CUT OFF.

(55 % OF 48.1 P.S.F. G.S.L. PLUS 8.4 P.S.F. RAIN LOAD) EQUALS 34.8 P.S.F. SPECIFIED ROOF LIVE LOAD

ALLOWABLE DEFL.(LL)= L/360 (0.71")
CALCULATED VERT. DEFL.(LL) = L/ 999 (0.04")
ALLOWABLE DEFL.(TL)= L/360 (0.71")
CALCULATED VERT. DEFL.(TL) = L/ 999 (0.08")

CSI: TC=0.49/1.00 (B-C:1) , BC=0.34/1.00 (J-R:1) , WB=0.64/1.00 (C-O:1) , SSI=0.25/1.00 (G-S:1)

DOL LUMBER=1.00 NAIL=1.00 LS BEND=1.10 COMP=1.10 SHEAR=1.10 TENS= 1.10

COMPANION LIVE LOAD FACTOR = 1.00

TRUSS PLATE MANUFACTURER IS NOT RESPONSIBLE FOR QUALITY CONTROL IN THE TRUSS MANUFACTURING PLANT .

NAIL VALUES

PLATE	GRIP(DRY) (PSI) MAX	MIN	SHEAR (PLI) MAX	MIN	SECTION (PLI) MAX	MIN
MT20	650	371	1747	788	1987	1873

PLATE PLACEMENT TOL. = 0.250 inches

PLATE ROTATION TOL. = 5.0 Deg.

JSI GRIP= 0.89 (P) (INPUT = 0.90)
JSI METAL= 0.49 (B) (INPUT = 1.00)

MODULUS ENGINEERING LTD.

LICENSED PROFESSIONAL ENGINEER
07/05/2023
D. A. SHERMAN
100123373
PROVINCE OF ONTARIO

REVIEW FOR TRUSS COMPONENT ONLY

NOTE: ALTERING THIS DOCUMENT VOIDS THE ENGINEERS SEAL

WARNING - Verify design parameters and READ NOTES ON THIS AND INCLUDED IN MODULUS ENGINEERING LTD. NOTES ME-TCD01 (VER 06/2017) BEFORE USE.
Design valid for use only with Mitek connectors. This design is based only upon parameters shown, and is for individual building components. Applicability of design parameters and proper incorporation of component is responsibility of building designer - not truss designer. Bracing shown is for lateral support of individual web members only. Additional temporary bracing to ensure stability during construction is the responsibility of the erector. Additional permanent bracing of the overall structure is the responsibility of the building designer. For general guidance regarding fabrication, quality control, storage, delivery, erection and bracing, consult
TPIC Appendix G - Minimum quality Manufacturing Criteria available from **www.tpic.ca** and **BCSI-CANADA (Building Component Safety Information) available** from TPI, 781 N. Lee Street, Suite 312, Alexandria, VA 22314 or www.sbcindustry.com

KOTT

JOB NAME	TRUSS NAME	QUANTITY	PLY	JOB DESC.		DRWG NO.
T-RIVER 11-2	T06B	2	1	TRUSS DESC.	ZADORRA ESTATES INC	ME23-5777-34

Kott, Uxbridge,ON

Version 8.630 S Mar 22 2023 MiTek Industries, Inc. Wed Jul 5 11:02:30 2023 Page 1
ID:oVFDr6Fdws2a9wd?_pY7R0zKcfG-5ghtYWnA6caZ16zEAa09u14gPDELnAoatQYybZz?8xt

CORPORATION OF THE CITY OF OSHAWA
TRUE COPY
OF PERMIT PLANS
Nov 16 2023
PER:
CHIEF BUILDING OFFICIAL

MHP 23027

Scale = 1:45.2

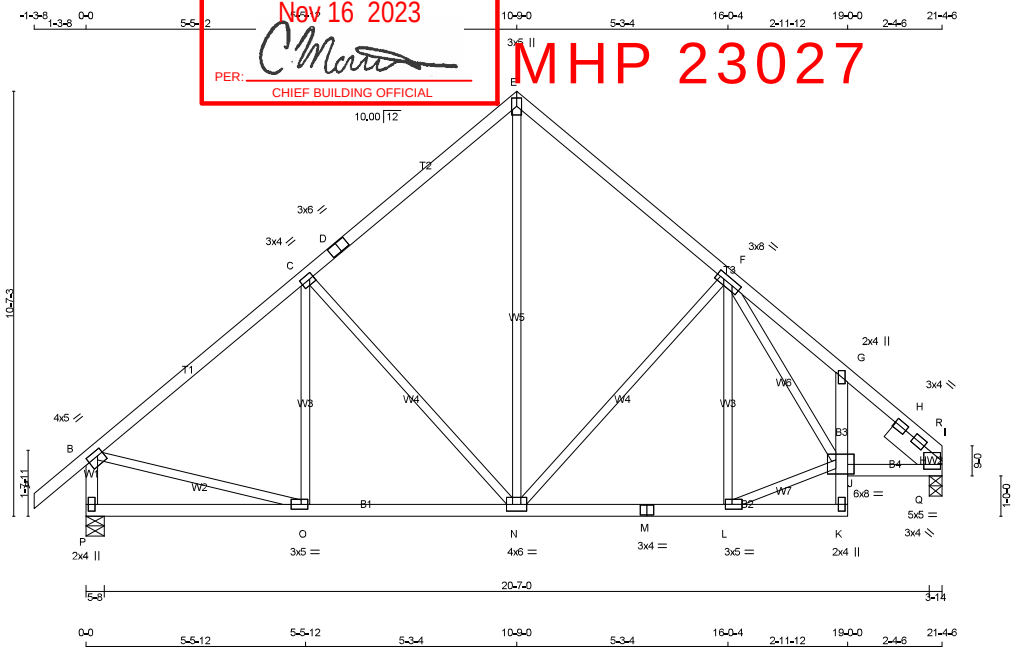

TOTAL WEIGHT = 2 X 107 = 213 lb
[M][F]

LUMBER
N. L. G. A. RULES

CHORDS	SIZE		LUMBER	DESCR.
A - D	2x4	DRY	No.2	SPF
D - E	2x4	DRY	No.2	SPF
E - I	2x4	DRY	No.2	SPF
P - B	2x4	DRY	No.2	SPF
P - M	2x4	DRY	No.2	SPF
M - K	2x4	DRY	No.2	SPF
K - G	2x4	DRY	No.2	SPF
J - I	2x4	DRY	No.2	SPF
REINFORCING MEMBERS				
HW2	2x6	DRY	No.2	SPF
ALL WEBS EXCEPT	2x3	DRY	No.2	SPF

DRY: SEASONED LUMBER.

PLATES (table is in inches)

JT	TYPE	PLATES	W	LEN	Y	X
B	TMVW-t	MT20	4.0	5.0	1.50	1.75
C	TMWW-t	MT20	3.0	4.0	1.50	1.25
D	TS-t	MT20	3.0	6.0		
E	TTW+p	MT20	3.0	5.0		
F	TMWWW-t	MT20	3.0	8.0		
G	TMV+p	MT20	2.0	4.0		
I	TMBMR1-I	MT20	5.0	5.0	2.50	0.50
I	RT-t	MT20	3.0	4.0		
I	RT-t	MT20	3.0	4.0		
J	BVMWW-I	MT20	6.0	8.0	4.25	5.50
K	BMV+p	MT20	2.0	4.0		
L	BMWW-t	MT20	3.0	5.0	1.50	2.00
M	BS-t	MT20	3.0	4.0		
N	BMWWW-t	MT20	4.0	6.0		
O	BMWW-t	MT20	3.0	5.0	1.50	2.00
P	BMV1+p	MT20	2.0	4.0		

DIMENSIONS, SUPPORTS AND LOADINGS SPECIFIED BY FABRICATOR TO BE VERIFIED BY BUILDING DESIGNER

BEARINGS

JT	FACTORED GROSS REACTION VERT	HORZ	MAXIMUM FACTORED GROSS REACTION DOWN	HORZ	UPLIFT	INPUT BRG	REQRD BRG
I	1471	0	1471	0	0	3-14	1-9
P	1636	0	1636	0	0	5-8	1-13

UNFACTORED REACTIONS

JT	1ST LCASE COMBINED	MAX./MIN. COMPONENT REACTIONS SNOW	LIVE	PERM.LIVE	WIND	DEAD	SOIL
I	1028	744 / 0	0 / 0	0 / 0	0 / 0	284 / 0	0 / 0
P	1141	840 / 0	0 / 0	0 / 0	0 / 0	301 / 0	0 / 0

BEARING MATERIAL TO BE SPF NO.2 OR BETTER AT JOINT(S) I, P

BRACING
TOP CHORD TO BE SHEATHED OR MAX. PURLIN SPACING = 4.76 FT.
MAX. UNBRACED BOTTOM CHORD LENGTH = 10.00 FT OR RIGID CEILING DIRECTLY APPLIED.

ALL PITCH BREAKS AND PERIMETER CORNER JOINTS MUST BE LATERALLY RESTRAINED.

LOADING
TOTAL LOAD CASES: (4)

CHORDS

MEMB. FR-TO	MAX. FACTORED FORCE (LBS)	FACTORED VERT. LOAD LC1 FROM (PLF)	TO	MAX CSI (LC)	MAX. UNBRAC LENGTH
A- B	0 / 53	-119.4	-119.4	0.16 (1)	10.00
B- C	-1382 / 0	-119.4	-119.4	0.49 (1)	4.93
C- D	-1052 / 0	-119.4	-119.4	0.46 (1)	5.51
D- E	-1052 / 0	-119.4	-119.4	0.46 (1)	5.51
E- F	-1041 / 0	-119.4	-119.4	0.40 (1)	5.63
F- G	-1636 / 0	-119.4	-119.4	0.37 (1)	4.76
G- H	-1418 / 0	-119.4	-119.4	0.24 (1)	5.22
H- R	-1418 / 0	-119.4	-119.4	0.24 (1)	5.22
R- I	-1866 / 0	-119.4	-119.4	0.04 (1)	4.91
P- B	-1594 / 0	0.0	0.0	0.17 (1)	6.54
P- O	0 / 0	-18.2	-18.2	0.12 (4)	10.00
O- N	0 / 1100	-18.2	-18.2	0.24 (1)	10.00
N- M	0 / 1065	-18.2	-18.2	0.22 (1)	10.00
M- L	0 / 1065	-18.2	-18.2	0.22 (1)	10.00
L- K	0 / 61	-18.2	-18.2	0.08 (4)	10.00
K- J	0 / 16	0.0	0.0	0.10 (1)	10.00
J- G	0 / 115	0.0	0.0	0.12 (1)	10.00
J- Q	0 / 1361	-18.2	-18.2	0.33 (1)	10.00
Q- I	0 / 936	-18.2	-18.2	0.26 (1)	10.00

WEBS

MEMB. FR-TO	MAX. FACTORED FORCE (LBS)	MAX CSI (LC)
C- C	-154 / 53	0.09 (1)
C- N	-495 / 0	0.64 (1)
N- E	0 / 794	0.18 (1)
N- F	-443 / 0	0.57 (1)
L- F	-341 / 0	0.21 (1)
L- J	0 / 1091	0.25 (1)
F- J	0 / 511	0.12 (1)
B- O	0 / 1130	0.25 (1)
Q- R	0 / 1161	0.00 (1)
Q- H	-1138 / 0	0.08 (1)

DESIGN CRITERIA

SPECIFIED LOADS:

TOP CH.	LL	=	34.8	PSF
	DL	=	6.0	PSF
BOT CH.	LL	=	0.0	PSF
	DL	=	7.3	PSF
TOTAL LOAD		=	48.1	PSF

SPACING = 24.0 IN. C/C

THIS TRUSS IS DESIGNED FOR RESIDENTIAL OR SMALL BUILDING REQUIREMENTS OF PART 9, NBCC 2015

THIS DESIGN COMPLIES WITH:
- PART 9 OF BCBC 2018 , NBC-2019AE
- PART 9 OF OBC 2012 (2019 AMENDMENT)
- CSA 086-14
- TPIC 2014

(55 % OF 48.1 P.S.F. G.S.L. PLUS 8.4 P.S.F. RAIN LOAD) EQUALS 34.8 P.S.F. SPECIFIED ROOF LIVE LOAD

ALLOWABLE DEFL.(LL)= L/360 (0.71")
CALCULATED VERT. DEFL.(LL) = L/ 999 (0.04")
ALLOWABLE DEFL.(TL)= L/360 (0.71")
CALCULATED VERT. DEFL.(TL) = L/ 999 (0.08")

CSI: TC=0.49/1.00 (B-C:1) , BC=0.33/1.00 (J-Q:1) , WB=0.64/1.00 (C-N:1) , SSI=0.25/1.00 (G-R:1)

DOL LUMBER=1.00 NAIL=1.00 LS BEND=1.10 COMP=1.10 SHEAR=1.10 TENS= 1.10

COMPANION LIVE LOAD FACTOR = 1.00

TRUSS PLATE MANUFACTURER IS NOT RESPONSIBLE FOR QUALITY CONTROL IN THE TRUSS MANUFACTURING PLANT .

NAIL VALUES

PLATE	GRIP(DRY) (PSI) MAX	MIN	SHEAR (PLI) MAX	MIN	SECTION (PLI) MAX	MIN
MT20	650	371	1747	788	1987	1873

PLATE PLACEMENT TOL. = 0.250 inches

PLATE ROTATION TOL. = 5.0 Deg.

JSI GRIP= 0.89 (O) (INPUT = 0.90)
JSI METAL= 0.48 (B) (INPUT = 1.00)

MODULUS ENGINEERING LTD.

LICENSED PROFESSIONAL ENGINEER
07/05/2023
D. A. SHERMAN
100123373
PROVINCE OF ONTARIO

REVIEW FOR TRUSS COMPONENT ONLY

NOTE: ALTERING THIS DOCUMENT VOIDS THE ENGINEERS SEAL

WARNING - Verify design parameters and READ NOTES ON THIS AND INCLUDED IN MODULUS ENGINEERING LTD. NOTES ME-TCD01 (VER 06/2017) BEFORE USE.
Design valid for use only with Mitek connectors. This design is based only upon parameters shown, and is for individual building components. Applicability of design parameters and proper incorporation of component is responsibility of building designer - not truss designer. Bracing shown is for lateral support of individual web members only. Additional temporary bracing to ensure stability during construction is the responsibility of the erector. Additional permanent bracing of the overall structure is the responsibility of the building designer. For general guidance regarding fabrication, quality control, storage, delivery, erection and bracing, consult
TPIC Appendix G - Minimum quality Manufacturing Criteria available from **www.tpic.ca** and **BCSI-CANADA (Building Component Safety Information) available** from TPI, 781 N. Lee Street, Suite 312, Alexandria, VA 22314 or www.sbcindustry.com

KOTT

JOB NAME	TRUSS NAME	QUANTITY	PLY	JOB DESC.		DRWG NO.
T-RIVER 11-2	T07	1	1	TRUSS DESC.	ZADORRA ESTATES INC	ME23-5777-35

Kott, Uxbridge,ON

Version 8.630 S Mar 22 2023 MiTek Industries, Inc. Wed Jul 5 11:02:31 2023 Page 1
ID:oVFDr6Fdws2a9wd?_pY7R0zKcfG-ZsFFIsnoswiQfGYQkHXORFcordXrWbyk64IV7?z?8xs

CORPORATION OF THE CITY OF OSHAWA
TRUE COPY
OF PERMIT PLANS
Nov 16 2023
PER: C Marr
CHIEF BUILDING OFFICIAL

MHP 23027

Scale = 1:42.1

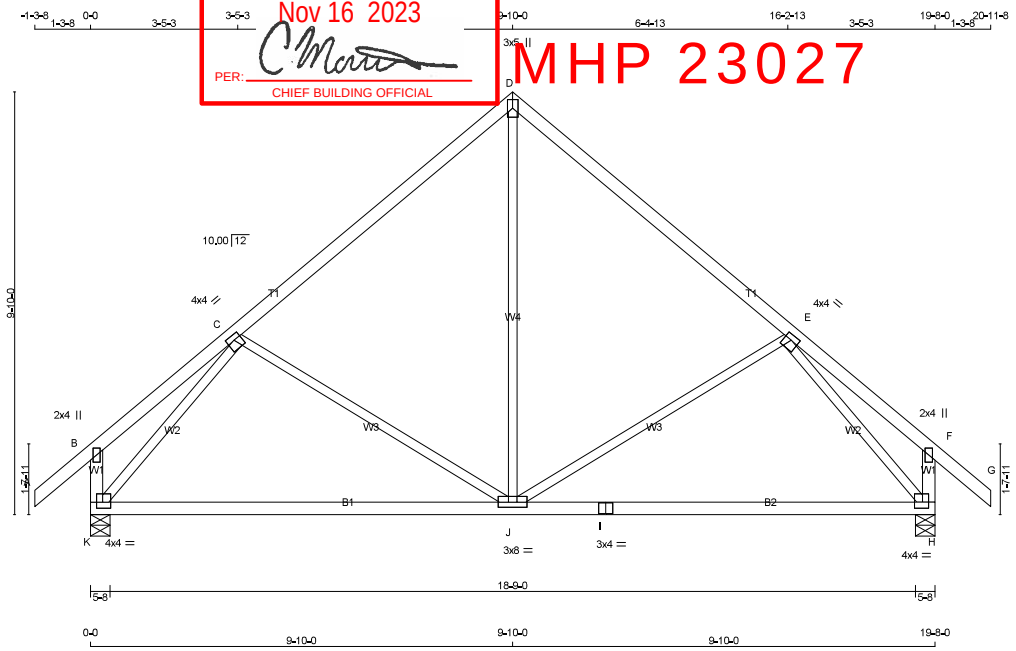

TOTAL WEIGHT = 86 lb
[M][F]

LUMBER
N. L. G. A. RULES

CHORDS	SIZE		LUMBER	DESCR.
A - D	2x4	DRY	No.2	SPF
D - G	2x4	DRY	No.2	SPF
K - B	2x4	DRY	No.2	SPF
H - F	2x4	DRY	No.2	SPF
K - I	2x4	DRY	No.2	SPF
I - H	2x4	DRY	No.2	SPF
ALL WEBS EXCEPT	2x3	DRY	No.2	SPF

DRY: SEASONED LUMBER.

PLATES (table is in inches)

JT	TYPE	PLATES	W	LEN	Y	X
B	TMV+p	MT20	2.0	4.0		
C	TMWW-t	MT20	4.0	4.0	1.50	2.00
D	TTW+p	MT20	3.0	5.0		
E	TMWW-t	MT20	4.0	4.0	1.50	2.00
F	TMV+p	MT20	2.0	4.0		
H	BMVW1-t	MT20	4.0	4.0	1.75	1.75
I	BS-t	MT20	3.0	4.0		
J	BMWWW-t	MT20	3.0	8.0		
K	BMVW1-t	MT20	4.0	4.0	1.75	1.75

DIMENSIONS, SUPPORTS AND LOADINGS SPECIFIED BY FABRICATOR TO BE VERIFIED BY BUILDING DESIGNER

BEARINGS

JT	FACTORED GROSS REACTION VERT	HORZ	MAXIMUM GROSS REACTION DOWN	FACTORED HORZ	UPLIFT	INPUT BRG	REQRD BRG
K	1519	0	1519	0	0	5-8	1-10
H	1519	0	1519	0	0	5-8	1-10

UNFACTORED REACTIONS

JT	1ST LCASE COMBINED	MAX./MIN. COMPONENT REACTIONS SNOW	LIVE	PERM.LIVE	WIND	DEAD	SOIL
K	1059	781 / 0	0 / 0	0 / 0	0 / 0	278 / 0	0 / 0
H	1059	781 / 0	0 / 0	0 / 0	0 / 0	278 / 0	0 / 0

BEARING MATERIAL TO BE SPF NO.2 OR BETTER AT JOINT(S) K, H

BRACING
TOP CHORD TO BE SHEATHED OR MAX. PURLIN SPACING = 5.29 FT.
MAX. UNBRACED BOTTOM CHORD LENGTH = 10.00 FT OR RIGID CEILING DIRECTLY APPLIED.

ALL PITCH BREAKS AND PERIMETER CORNER JOINTS MUST BE LATERALLY RESTRAINED.

LOADING
TOTAL LOAD CASES: (4)

CHORDS

MEMB. FR-TO	MAX. FORCE (LBS)	FACTORED VERT. LOAD (PLF) FROM	TO	LC1 MAX CSI (LC)	MAX. UNBRAC LENGTH
A- B	0 / 53	-119.4	-119.4	0.16 (1)	10.00
B- C	0 / 89	-119.4	-119.4	0.64 (1)	10.00
C- D	-986 / 0	-119.4	-119.4	0.64 (1)	5.29
D- E	-986 / 0	-119.4	-119.4	0.64 (1)	5.29
E- F	0 / 89	-119.4	-119.4	0.64 (1)	10.00
F- G	0 / 53	-119.4	-119.4	0.16 (1)	10.00
K- B	-225 / 0	0.0	0.0	0.02 (1)	7.81
H- F	-225 / 0	0.0	0.0	0.02 (1)	7.81
K- J	0 / 999	-18.2	-18.2	0.57 (4)	10.00
J- I	0 / 999	-18.2	-18.2	0.57 (4)	10.00
I- H	0 / 999	-18.2	-18.2	0.57 (4)	10.00

WEBS

MEMB. FR-TO	MAX. FORCE (LBS)	MAX CSI (LC)
J- D	0 / 567	0.13 (1)
J- E	-326 / 0	0.40 (1)
C- J	-326 / 0	0.40 (1)
K- C	-1582 / 0	0.71 (1)
E- H	-1582 / 0	0.71 (1)

DESIGN CRITERIA

SPECIFIED LOADS:

TOP CH.	LL	=	34.8	PSF
	DL	=	6.0	PSF
BOT CH.	LL	=	0.0	PSF
	DL	=	7.3	PSF
TOTAL LOAD		=	48.1	PSF

SPACING = 24.0 IN. C/C

THIS TRUSS IS DESIGNED FOR RESIDENTIAL OR SMALL BUILDING REQUIREMENTS OF PART 9, NBCC 2015

THIS DESIGN COMPLIES WITH:
- PART 9 OF BCBC 2018 , NBC-2019AE
- PART 9 OF OBC 2012 (2019 AMENDMENT)
- CSA 086-14
- TPIC 2014

(55 % OF 48.1 P.S.F. G.S.L. PLUS 8.4 P.S.F. RAIN LOAD) EQUALS 34.8 P.S.F. SPECIFIED ROOF LIVE LOAD

ALLOWABLE DEFL.(LL)= L/360 (0.66")
CALCULATED VERT. DEFL.(LL) = L/ 999 (0.03")
ALLOWABLE DEFL.(TL)= L/360 (0.66")
CALCULATED VERT. DEFL.(TL) = L/ 999 (0.21")

CSI: TC=0.64/1.00 (C-D:1) , BC=0.57/1.00 (J-K:4) , WB=0.71/1.00 (C-K:1) , SSI=0.28/1.00 (C-D:1)

DOL LUMBER=1.00 NAIL=1.00 LS BEND=1.10 COMP=1.10 SHEAR=1.10 TENS= 1.10

COMPANION LIVE LOAD FACTOR = 1.00

TRUSS PLATE MANUFACTURER IS NOT RESPONSIBLE FOR QUALITY CONTROL IN THE TRUSS MANUFACTURING PLANT .

NAIL VALUES

PLATE	GRIP(DRY) (PSI) MAX	MIN	SHEAR (PLI) MAX	MIN	SECTION (PLI) MAX	MIN
MT20	650	371	1747	788	1987	1873

PLATE PLACEMENT TOL. = 0.250 inches

PLATE ROTATION TOL. = 5.0 Deg.

JSI GRIP= 0.88 (H) (INPUT = 0.90)
JSI METAL= 0.49 (E) (INPUT = 1.00)

MODULUS ENGINEERING LTD.

LICENSED PROFESSIONAL ENGINEER
07/05/2023
D. A. SHERMAN
100123373
PROVINCE OF ONTARIO

REVIEW FOR TRUSS COMPONENT ONLY

NOTE: ALTERING THIS DOCUMENT VOIDS THE ENGINEERS SEAL

WARNING - Verify design parameters and READ NOTES ON THIS AND INCLUDED IN MODULUS ENGINEERING LTD. NOTES ME-TCD01 (VER 06/2017) BEFORE USE.
Design valid for use only with Mitek connectors. This design is based only upon parameters shown, and is for individual building components. Applicability of design parameters and proper incorporation of component is responsibility of building designer - not truss designer. Bracing shown is for lateral support of individual web members only. Additional temporary bracing to ensure stability during construction is the responsibility of the erector. Additional permanent bracing of the overall structure is the responsibility of the building designer. For general guidance regarding fabrication, quality control, storage, delivery, erection and bracing, consult
TPIC Appendix G - Minimum quality Manufacturing Criteria available from **www.tpic.ca** and **BCSI-CANADA (Building Component Safety Information) available** from TPI, 781 N. Lee Street, Suite 312, Alexandria, VA 22314 or www.sbcindustry.com

KOTT

JOB NAME	TRUSS NAME	QUANTITY	PLY	JOB DESC.		DRWG NO.
T-RIVER 11-2	T07A	1	1	TRUSS DESC.	ZADORRA ESTATES INC	ME23-5777-36

Kott, Uxbridge,ON

Version 8.630 S Mar 22 2023 MiTek Industries, Inc. Wed Jul 5 11:02:32 2023 Page 1
ID:oVFDr6Fdws2a9wd?_pY7R0zKcfG-12pezCoQdErHGP7cH?2dzS9yO1sUF?ntKk12gRz?8xr

CORPORATION OF THE CITY OF OSHAWA
TRUE COPY
OF PERMIT PLANS
Nov 16 2023
PER:
CHIEF BUILDING OFFICIAL

MHP 23027

Scale = 1:41.4

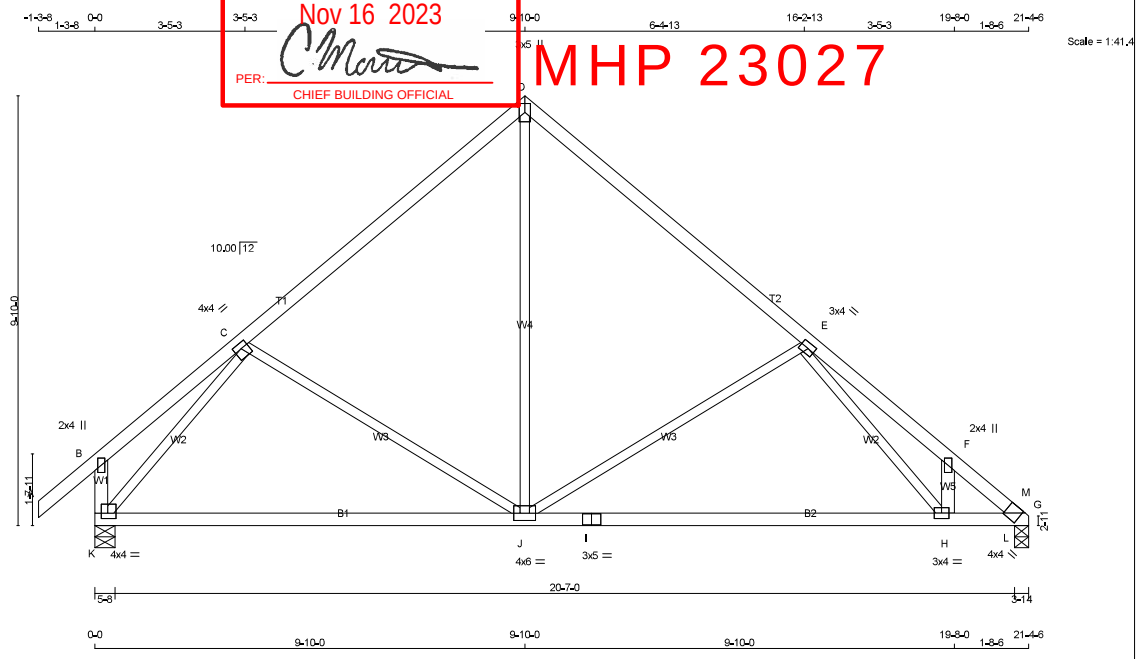

TOTAL WEIGHT = 88 lb

[M][F]

LUMBER
N. L. G. A. RULES

CHORDS	SIZE		LUMBER	DESCR.
A - D	2x4	DRY	No.2	SPF
D - G	2x4	DRY	No.2	SPF
K - B	2x4	DRY	No.2	SPF
K - I	2x4	DRY	No.2	SPF
I - G	2x4	DRY	No.2	SPF
ALL WEBS EXCEPT	2x3	DRY	No.2	SPF
H - F	2x4	DRY	No.2	SPF

DRY: SEASONED LUMBER.

PLATES (table is in inches)

JT	TYPE	PLATES	W	LEN	Y	X
B	TMV+p	MT20	2.0	4.0		
C	TMWW-t	MT20	4.0	4.0	1.50	2.00
D	TTW+p	MT20	3.0	5.0		
E	TMWW-t	MT20	3.0	4.0	1.50	1.75
F	TMW+w	MT20	2.0	4.0		
G	TBM1-h	MT20	4.0	4.0	Edge	0.50
H	BMWW-t	MT20	3.0	4.0		
I	BS-t	MT20	3.0	5.0		
J	BMWWW-t	MT20	4.0	6.0		
K	BMVW1-t	MT20	4.0	4.0	1.50	1.75

Edge - INDICATES REFERENCE CORNER OF PLATE TOUCHES EDGE OF CHORD.

DIMENSIONS, SUPPORTS AND LOADINGS SPECIFIED BY FABRICATOR TO BE VERIFIED BY BUILDING DESIGNER

BEARINGS

JT	FACTORED GROSS REACTION VERT	HORZ	MAXIMUM GROSS REACTION DOWN	FACTORED HORZ	UPLIFT	INPUT BRG	REQRD BRG
G	1471	0	1471	0	0	3-14	1-9
K	1636	0	1636	0	0	5-8	1-12

UNFACTORED REACTIONS

1ST LCASE MAX./MIN. COMPONENT REACTIONS

JT	COMBINED	SNOW	LIVE	PERM.LIVE	WIND	DEAD	SOIL
G	1028	744 / 0	0 / 0	0 / 0	0 / 0	284 / 0	0 / 0
K	1141	840 / 0	0 / 0	0 / 0	0 / 0	301 / 0	0 / 0

BEARING MATERIAL TO BE SPF NO.2 OR BETTER AT JOINT(S) G, K

BRACING
TOP CHORD TO BE SHEATHED OR MAX. PURLIN SPACING = 3.99 FT.
MAX. UNBRACED BOTTOM CHORD LENGTH = 10.00 FT OR RIGID CEILING DIRECTLY APPLIED.

ALL PITCH BREAKS AND PERIMETER CORNER JOINTS MUST BE LATERALLY RESTRAINED.

LOADING
TOTAL LOAD CASES: (4)

CHORDS

MEMB. FR-TO	MAX. FACTORED FORCE (LBS)	FACTORED VERT. LOAD (PLF) FROM	TO	LC1 CSI (LC)	MAX UNBRAC LENGTH
A- B	0 / 53	-119.4	-119.4	0.16 (1)	10.00
B- C	0 / 88	-119.4	-119.4	0.64 (1)	10.00
C- D	-1141 / 0	-119.4	-119.4	0.65 (1)	4.98
D- E	-1143 / 0	-119.4	-119.4	0.65 (1)	4.99
E- F	-2120 / 0	-119.4	-119.4	0.56 (1)	3.99
F- M	-2271 / 0	-119.4	-119.4	0.19 (1)	4.38
M- G	-2296 / 0	-119.4	-119.4	0.09 (1)	4.46
K- B	-225 / 0	0.0	0.0	0.02 (1)	7.81
K- J	0 / 1092	-18.2	-18.2	0.51 (4)	10.00
J- I	0 / 1488	-18.2	-18.2	0.54 (4)	10.00
I- H	0 / 1488	-18.2	-18.2	0.54 (4)	10.00
H- L	0 / 1720	-18.2	-18.2	0.49 (1)	10.00
L- G	0 / 1685	-18.2	-18.2	0.48 (1)	10.00

WEBS

MEMB. FR-TO	MAX. FACTORED FORCE (LBS)	MAX CSI (LC)
K- C	-1729 / 0	0.77 (1)
C- J	-295 / 0	0.36 (1)
J- D	0 / 769	0.17 (1)
J- E	-761 / 0	0.93 (1)
E- H	0 / 373	0.08 (1)
H- F	-42 / 22	0.01 (4)
L- M	-65 / 0	0.00 (1)

DESIGN CRITERIA

SPECIFIED LOADS:

TOP CH.	LL	=	34.8	PSF
	DL	=	6.0	PSF
BOT CH.	LL	=	0.0	PSF
	DL	=	7.3	PSF
TOTAL LOAD		=	48.1	PSF

SPACING = 24.0 IN. C/C

THIS TRUSS IS DESIGNED FOR RESIDENTIAL OR SMALL BUILDING REQUIREMENTS OF PART 9, NBCC 2015

THIS DESIGN COMPLIES WITH:
- PART 9 OF BCBC 2018 , NBC-2019AE
- PART 9 OF OBC 2012 (2019 AMENDMENT)
- CSA 086-14
- TPIC 2014

(55 % OF 48.1 P.S.F. G.S.L. PLUS 8.4 P.S.F. RAIN LOAD) EQUALS 34.8 P.S.F. SPECIFIED ROOF LIVE LOAD

ALLOWABLE DEFL.(LL)= L/360 (0.71")
CALCULATED VERT. DEFL.(LL) = L/ 999 (0.06")
ALLOWABLE DEFL.(TL)= L/360 (0.71")
CALCULATED VERT. DEFL.(TL) = L/ 999 (0.24")

CSI: TC=0.65/1.00 (C-D:1) , BC=0.54/1.00 (H-J:4) , WB=0.93/1.00 (E-J:1) , SSI=0.28/1.00 (G-L:1)

DOL LUMBER=1.00 NAIL=1.00 LS BEND=1.10 COMP=1.10 SHEAR=1.10 TENS= 1.10

COMPANION LIVE LOAD FACTOR = 1.00

TRUSS PLATE MANUFACTURER IS NOT RESPONSIBLE FOR QUALITY CONTROL IN THE TRUSS MANUFACTURING PLANT .

NAIL VALUES

PLATE	GRIP(DRY) (PSI) MAX	MIN	SHEAR (PLI) MAX	MIN	SECTION (PLI) MAX	MIN
MT20	650	371	1747	788	1987	1873

PLATE PLACEMENT TOL. = 0.250 inches

PLATE ROTATION TOL. = 5.0 Deg.

JSI GRIP= 0.89 (G) (INPUT = 0.90)
JSI METAL= 0.57 (I) (INPUT = 1.00)

MODULUS ENGINEERING LTD.

LICENSED PROFESSIONAL ENGINEER
07/05/2023
D. A. SHERMAN
100123373
PROVINCE OF ONTARIO

REVIEW FOR TRUSS COMPONENT ONLY

NOTE: ALTERING THIS DOCUMENT VOIDS THE ENGINEERS SEAL

WARNING - Verify design parameters and READ NOTES ON THIS AND INCLUDED IN MODULUS ENGINEERING LTD. NOTES ME-TCD01 (VER 06/2017) BEFORE USE.
Design valid for use only with Mitek connectors. This design is based only upon parameters shown, and is for individual building components. Applicability of design parameters and proper incorporation of component is responsibility of building designer - not truss designer. Bracing shown is for lateral support of individual web members only. Additional temporary bracing to ensure stability during construction is the responsibility of the erector. Additional permanent bracing of the overall structure is the responsibility of the building designer. For general guidance regarding fabrication, quality control, storage, delivery, erection and bracing, consult
TPIC Appendix G - Minimum quality Manufacturing Criteria available from **www.tpic.ca** and **BCSI-CANADA (Building Component Safety Information) available** from TPI, 781 N. Lee Street, Suite 312, Alexandria, VA 22314 or www.sbcindustry.com

KOTT

JOB NAME	TRUSS NAME	QUANTITY	PLY	JOB DESC.		DRWG NO.
T-RIVER 11-2	T07B	4	1	TRUSS DESC.	ZADORRA ESTATES INC	ME23-5777-37

Kott, Uxbridge,ON

Version 8.630 S Mar 22 2023 MiTek Industries, Inc. Wed Jul 5 11:02:33 2023 Page 1
ID:oVFDr6Fdws2a9wd?_pY7R0zKcfG-VFN0AYp2OXz8uZipriZsWgiAxRDQ_Wr0ZOncCuz?8xq

CORPORATION OF THE CITY OF OSHAWA
TRUE COPY
OF PERMIT PLANS
Nov 16 2023
PER:
CHIEF BUILDING OFFICIAL

MHP 23027

Scale = 1:42.4

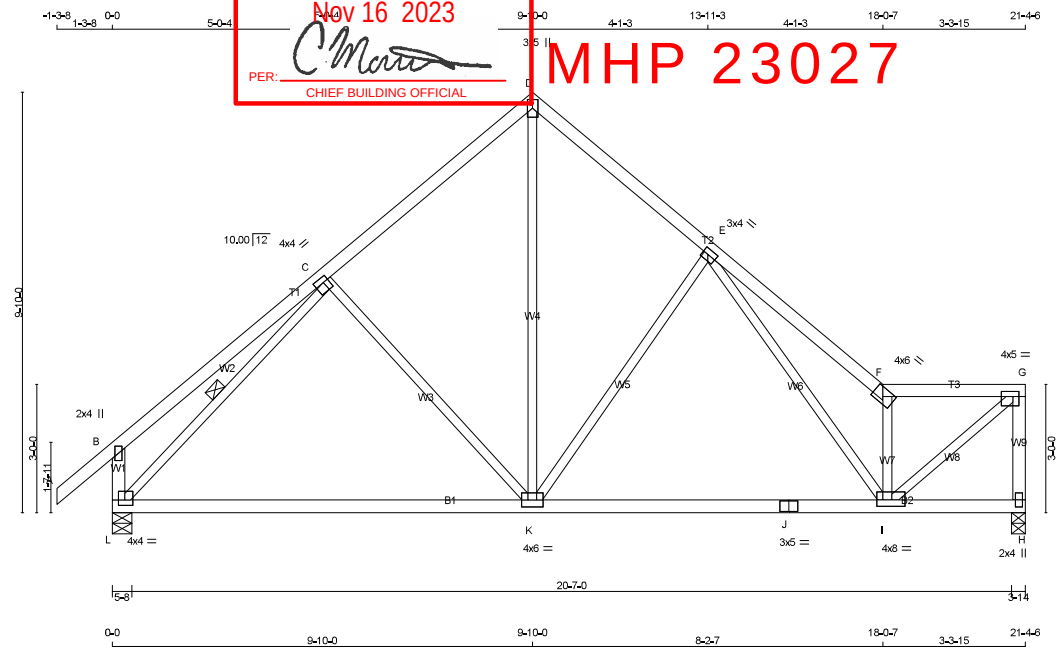

TOTAL WEIGHT = 4 X 97 = 387 lb
[M][F]

LUMBER
N. L. G. A. RULES

CHORDS	SIZE		LUMBER	DESCR.
A - D	2x4	DRY	No.2	SPF
D - F	2x4	DRY	No.2	SPF
F - G	2x4	DRY	No.2	SPF
H - G	2x4	DRY	No.2	SPF
L - B	2x4	DRY	No.2	SPF
L - J	2x4	DRY	No.2	SPF
J - H	2x4	DRY	No.2	SPF
ALL WEBS EXCEPT	2x3	DRY	No.2	SPF

DRY: SEASONED LUMBER.

PLATES (table is in inches)

JT	TYPE	PLATES	W	LEN	Y	X
B	TMV+p	MT20	2.0	4.0		
C	TMWW-t	MT20	4.0	4.0	1.50	1.50
D	TTW+p	MT20	3.0	5.0		
E	TMWW-t	MT20	3.0	4.0	1.50	1.50
F	TTW-h	MT20	4.0	6.0	2.25	3.00
G	TMVW-t	MT20	4.0	5.0	1.50	1.75
H	BMV1+p	MT20	2.0	4.0		
I	BMWWW-t	MT20	4.0	8.0	1.75	1.75
J	BS-t	MT20	3.0	5.0		
K	BMWWW-t	MT20	4.0	6.0		
L	BMVW1-t	MT20	4.0	4.0	1.50	1.75

DIMENSIONS, SUPPORTS AND LOADINGS SPECIFIED BY FABRICATOR TO BE VERIFIED BY BUILDING DESIGNER

BEARINGS

JT	FACTORED GROSS REACTION VERT	HORZ	MAXIMUM GROSS REACTION DOWN	FACTORED HORZ	UPLIFT	INPUT BRG	REQRD BRG
H	1471	0	1471	0	0	3-14	1-9
L	1636	0	1636	0	0	5-8	1-12

UNFACTORED REACTIONS

1ST LCASE — MAX./MIN. COMPONENT REACTIONS

JT	COMBINED	SNOW	LIVE	PERM.LIVE	WIND	DEAD	SOIL
H	1028	744 / 0	0 / 0	0 / 0	0 / 0	284 / 0	0 / 0
L	1141	840 / 0	0 / 0	0 / 0	0 / 0	301 / 0	0 / 0

BEARING MATERIAL TO BE SPF NO.2 OR BETTER AT JOINT(S) H, L

BRACING
TOP CHORD TO BE SHEATHED OR MAX. PURLIN SPACING = 4.49 FT.
MAX. UNBRACED BOTTOM CHORD LENGTH = 10.00 FT OR RIGID CEILING DIRECTLY APPLIED.

ALL PITCH BREAKS AND PERIMETER CORNER JOINTS MUST BE LATERALLY RESTRAINED.

1 LATERAL BRACE(S) AT 1/ 2 LENGTH OF C-L.

END VERTICAL(S) MUST BE SHEATHED OR HAVE BRACES AS INDICATED IN THE MAX. UNBRACED LENGTH COLUMN OF THE TABLE BELOW

LOADING
TOTAL LOAD CASES: (4)

CHORDS

MEMB. FR-TO	MAX. FACTORED FORCE (LBS)	FACTORED VERT. LOAD (PLF) FROM	TO	LC1 CSI (LC)	MAX UNBRAC LENGTH
A- B	0 / 53	-119.4	-119.4	0.16 (1)	10.00
B- C	0 / 45	-119.4	-119.4	0.47 (1)	10.00
C- D	-1139 / 0	-119.4	-119.4	0.38 (1)	5.48
D- E	-1133 / 0	-119.4	-119.4	0.28 (1)	5.65
E- F	-1990 / 0	-119.4	-119.4	0.32 (1)	4.49
F- G	-1497 / 0	-119.4	-119.4	0.19 (1)	5.18
H- G	-1446 / 0	0.0	0.0	0.22 (1)	6.80
L- B	-387 / 0	0.0	0.0	0.04 (1)	7.81
L- K	0 / 1070	-18.2	-18.2	0.48 (4)	10.00
K- J	0 / 1203	-18.2	-18.2	0.50 (4)	10.00
J- I	0 / 1203	-18.2	-18.2	0.50 (4)	10.00
I- H	0 / 0	-18.2	-18.2	0.11 (4)	10.00

WEBS

MEMB. FR-TO	MAX. FACTORED FORCE (LBS)	MAX CSI (LC)
C- K	-339 / 0	0.35 (1)
K- D	0 / 990	0.22 (1)
K- E	-648 / 0	0.68 (1)
E- I	0 / 633	0.14 (1)
I- F	-1689 / 0	0.30 (1)
I- G	0 / 1955	0.44 (1)
L- C	-1591 / 0	0.56 (1)

DESIGN CRITERIA

SPECIFIED LOADS:

TOP CH.	LL	=	34.8	PSF
	DL	=	6.0	PSF
BOT CH.	LL	=	0.0	PSF
	DL	=	7.3	PSF
TOTAL LOAD		=	48.1	PSF

SPACING = 24.0 IN. C/C

LOADING IN ALL FLAT SECTIONS BASED ON A SLOPE OF 2.00/12 MINIMUM

THIS TRUSS IS DESIGNED FOR RESIDENTIAL OR SMALL BUILDING REQUIREMENTS OF PART 9, NBCC 2015

THIS DESIGN COMPLIES WITH:
- PART 9 OF BCBC 2018 , NBC-2019AE
- PART 9 OF OBC 2012 (2019 AMENDMENT)
- CSA 086-14
- TPIC 2014

(55 % OF 48.1 P.S.F. G.S.L. PLUS 8.4 P.S.F. RAIN LOAD) EQUALS 34.8 P.S.F. SPECIFIED ROOF LIVE LOAD

ALLOWABLE DEFL.(LL)= L/360 (0.71")
CALCULATED VERT. DEFL.(LL) = L/ 999 (0.08")
ALLOWABLE DEFL.(TL)= L/360 (0.71")
CALCULATED VERT. DEFL.(TL) = L/ 980 (0.26")

CSI: TC=0.47/1.00 (B-C:1) , BC=0.50/1.00 (I-K:4) , WB=0.68/1.00 (E-K:1) , SSI=0.22/1.00 (C-D:1)

DOL LUMBER=1.00 NAIL=1.00 LS BEND=1.10 COMP=1.10 SHEAR=1.10 TENS= 1.10

COMPANION LIVE LOAD FACTOR = 1.00

TRUSS PLATE MANUFACTURER IS NOT RESPONSIBLE FOR QUALITY CONTROL IN THE TRUSS MANUFACTURING PLANT .

NAIL VALUES

PLATE	GRIP(DRY) (PSI) MAX	MIN	SHEAR (PLI) MAX	MIN	SECTION (PLI) MAX	MIN
MT20	650	371	1747	788	1987	1873

PLATE PLACEMENT TOL. = 0.250 inches

PLATE ROTATION TOL. = 5.0 Deg.

JSI GRIP= 0.90 (I) (INPUT = 0.90)
JSI METAL= 0.55 (F) (INPUT = 1.00)

MODULUS ENGINEERING LTD.

LICENSED PROFESSIONAL ENGINEER
07/05/2023
D. A. SHERMAN
100123373
PROVINCE OF ONTARIO

REVIEW FOR TRUSS COMPONENT ONLY

NOTE: ALTERING THIS DOCUMENT VOIDS THE ENGINEERS SEAL

WARNING - Verify design parameters and READ NOTES ON THIS AND INCLUDED IN MODULUS ENGINEERING LTD. NOTES ME-TCD01 (VER 06/2017) BEFORE USE.
Design valid for use only with Mitek connectors. This design is based only upon parameters shown, and is for individual building components. Applicability of design parameters and proper incorporation of component is responsibility of building designer - not truss designer. Bracing shown is for lateral support of individual web members only. Additional temporary bracing to ensure stability during construction is the responsibility of the erector. Additional permanent bracing of the overall structure is the responsibility of the building designer. For general guidance regarding fabrication, quality control, storage, delivery, erection and bracing, consult
TPIC Appendix G - Minimum quality Manufacturing Criteria available from **www.tpic.ca** and **BCSI-CANADA (Building Component Safety Information) available** from TPI, 781 N. Lee Street, Suite 312, Alexandria, VA 22314 or www.sbcindustry.com

KOTT

JOB NAME	TRUSS NAME	QUANTITY	PLY	JOB DESC.		DRWG NO.
T-RIVER 11-2	T07C	2	1	TRUSS DESC.	ZADORRA ESTATES INC	ME23-5777-38

Kott, Uxbridge,ON

Version 8.630 S Mar 22 2023 MiTek Industries, Inc. Wed Jul 5 11:02:35 2023 Page 1
ID:oVFDr6Fdws2a9wd?_pY7R0zKcfG-SdUmbErJw9Ds7tsBz7bKb5nWREvxSQ9J1iGjGmz?8xo

CORPORATION OF THE CITY OF OSHAWA
TRUE COPY
OF PERMIT PLANS
Nov 16 2023
PER:
CHIEF BUILDING OFFICIAL

MHP 23027

Scale = 1:43.8

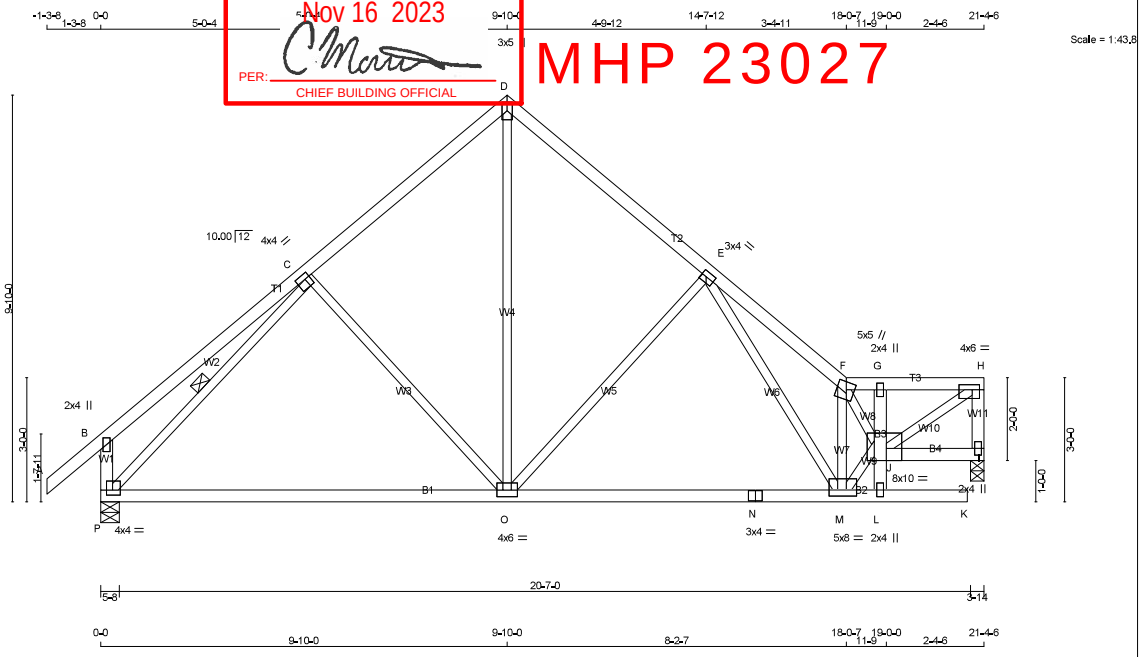

TOTAL WEIGHT = 2 X 101 = 202 lb
[M][F]

LUMBER
N. L. G. A. RULES

CHORDS	SIZE		LUMBER	DESCR.
A - D	2x4	DRY	No.2	SPF
D - F	2x4	DRY	No.2	SPF
F - H	2x4	DRY	No.2	SPF
I - H	2x4	DRY	No.2	SPF
P - B	2x4	DRY	No.2	SPF
P - N	2x4	DRY	No.2	SPF
N - K	2x4	DRY	No.2	SPF
L - G	2x4	DRY	No.2	SPF
J - I	2x4	DRY	No.2	SPF
ALL WEBS EXCEPT	2x3	DRY	No.2	SPF

DRY: SEASONED LUMBER.

PLATES (table is in inches)

JT	TYPE	PLATES	W	LEN	Y	X
B	TMV+p	MT20	2.0	4.0		
C	TMWW-t	MT20	4.0	4.0	1.50	1.50
D	TTW+p	MT20	3.0	5.0		
E	TMWW-t	MT20	3.0	4.0	1.50	1.50
F	TTWW+m	MT20	5.0	5.0	2.25	2.25
G	TMV+p	MT20	2.0	4.0		
H	TMVW-t	MT20	4.0	6.0	1.50	2.25
I	BMV1+p	MT20	2.0	4.0		
J	BVMWWW-l	MT20	8.0	10.0	Edge	4.50
L	BMV+p	MT20	2.0	4.0		
M	BMWWW-t	MT20	5.0	8.0	1.75	2.50
N	BS-t	MT20	3.0	4.0		
O	BMWWW-t	MT20	4.0	6.0		
P	BMVW1-t	MT20	4.0	4.0	1.50	1.75

Edge - INDICATES REFERENCE CORNER OF PLATE TOUCHES EDGE OF CHORD.

DIMENSIONS, SUPPORTS AND LOADINGS SPECIFIED BY FABRICATOR TO BE VERIFIED BY BUILDING DESIGNER

BEARINGS

JT	FACTORED GROSS REACTION VERT	HORZ	MAXIMUM GROSS REACTION DOWN	HORZ	FACTORED UPLIFT	INPUT BRG	REQRD BRG
I	1506	0	1506	0	0	3-14	1-10
P	1639	0	1639	0	0	5-8	1-12

UNFACTORED REACTIONS

1ST LCASE — MAX./MIN. COMPONENT REACTIONS

JT	COMBINED	SNOW	LIVE	PERM.LIVE	WIND	DEAD	SOIL
I	1056	744 / 0	0 / 0	0 / 0	0 / 0	313 / 0	0 / 0
P	1143	840 / 0	0 / 0	0 / 0	0 / 0	303 / 0	0 / 0

BEARING MATERIAL TO BE SPF NO.2 OR BETTER AT JOINT(S) I, P

BRACING
TOP CHORD TO BE SHEATHED OR MAX. PURLIN SPACING = 4.48 FT.
MAX. UNBRACED BOTTOM CHORD LENGTH = 7.81 FT OR RIGID CEILING DIRECTLY APPLIED.

ALL PITCH BREAKS AND PERIMETER CORNER JOINTS MUST BE LATERALLY RESTRAINED.

1 LATERAL BRACE(S) AT 1/ 2 LENGTH OF C-P.

END VERTICAL(S) MUST BE SHEATHED OR HAVE BRACES AS INDICATED IN THE MAX. UNBRACED LENGTH COLUMN OF THE TABLE BELOW

LOADING
TOTAL LOAD CASES: (4)

CHORDS

MEMB. FR-TO	MAX. FACTORED FORCE (LBS)	FACTORED VERT. LOAD LC1 (PLF) FROM	TO	MAX CSI (LC)	MAX. UNBRAC LENGTH
A- B	0 / 53	-119.4	-119.4	0.16 (1)	10.00
B- C	0 / 45	-119.4	-119.4	0.47 (1)	10.00
C- D	-1141 / 0	-119.4	-119.4	0.38 (1)	5.47
D- E	-1132 / 0	-119.4	-119.4	0.34 (1)	5.57
E- F	-1968 / 0	-119.4	-119.4	0.33 (1)	4.48
F- G	-1874 / 0	-119.4	-119.4	0.05 (1)	4.88
G- H	-1954 / 0	-119.4	-119.4	0.16 (1)	4.70
I- H	-1484 / 0	0.0	0.0	0.16 (1)	6.73
P- B	-387 / 0	0.0	0.0	0.04 (1)	7.81
P- O	0 / 1072	-18.2	-18.2	0.48 (4)	10.00
O- N	0 / 1281	-18.2	-18.2	0.49 (4)	10.00
N- M	0 / 1281	-18.2	-18.2	0.49 (4)	10.00
M- L	0 / 138	-18.2	-18.2	0.13 (4)	10.00
L- K	0 / 0	-18.2	-18.2	0.09 (4)	10.00
L- J	0 / 47	0.0	0.0	0.20 (1)	10.00
J- G	-132 / 8	0.0	0.0	0.14 (1)	7.81
J- I	0 / 0	-18.2	-18.2	0.03 (4)	10.00

WEBS

MEMB. FR-TO	MAX. FACTORED FORCE (LBS)	MAX CSI (LC)
C- O	-339 / 0	0.35 (1)
O- D	0 / 947	0.21 (1)
O- E	-665 / 0	0.69 (1)
E- M	0 / 535	0.12 (1)
M- F	-2015 / 0	0.37 (1)
M- J	0 / 2205	0.50 (1)
F- J	0 / 547	0.12 (1)
J- H	0 / 2363	0.53 (1)
P- C	-1593 / 0	0.56 (1)

DESIGN CRITERIA

SPECIFIED LOADS:

TOP CH.	LL	=	34.8	PSF
	DL	=	6.0	PSF
BOT CH.	LL	=	0.0	PSF
	DL	=	7.3	PSF
TOTAL LOAD		=	48.1	PSF

SPACING = 24.0 IN. C/C

LOADING IN ALL FLAT SECTIONS BASED ON A SLOPE OF 2.00/12 MINIMUM

THIS TRUSS IS DESIGNED FOR RESIDENTIAL OR SMALL BUILDING REQUIREMENTS OF PART 9, NBCC 2015

THIS DESIGN COMPLIES WITH:
- PART 9 OF BCBC 2018 , NBC-2019AE
- PART 9 OF OBC 2012 (2019 AMENDMENT)
- CSA 086-14
- TPIC 2014

DESIGN ASSUMPTIONS
-OVERHANG NOT TO BE ALTERED OR CUT OFF.

(55 % OF 48.1 P.S.F. G.S.L. PLUS 8.4 P.S.F. RAIN LOAD) EQUALS 34.8 P.S.F. SPECIFIED ROOF LIVE LOAD

ALLOWABLE DEFL.(LL)= L/360 (0.71")
CALCULATED VERT. DEFL.(LL) = L/ 999 (0.07")
ALLOWABLE DEFL.(TL)= L/360 (0.71")
CALCULATED VERT. DEFL.(TL) = L/ 928 (0.28")

CSI: TC=0.47/1.00 (B-C:1) , BC=0.49/1.00 (M-O:4) , WB=0.69/1.00 (E-O:1) ; SSI=0.22/1.00 (C-D:1)

DOL LUMBER=1.00 NAIL=1.00 LS BEND=1.10 COMP=1.10 SHEAR=1.10 TENS= 1.10

COMPANION LIVE LOAD FACTOR = 1.00

TRUSS PLATE MANUFACTURER IS NOT RESPONSIBLE FOR QUALITY CONTROL IN THE TRUSS MANUFACTURING PLANT .

NAIL VALUES

PLATE	GRIP(DRY) (PSI) MAX	MIN	SHEAR (PLI) MAX	MIN	SECTION (PLI) MAX	MIN
MT20	650	371	1747	788	1987	1873

PLATE PLACEMENT TOL. = 0.250 inches

PLATE ROTATION TOL. = 5.0 Deg.

JSI GRIP= 0.89 (F) (INPUT = 0.90)
JSI METAL= 0.53 (C) (INPUT = 1.00)

MODULUS ENGINEERING LTD.

LICENSED PROFESSIONAL ENGINEER
07/05/2023
D. A. SHERMAN
100123373
PROVINCE OF ONTARIO

REVIEW FOR TRUSS COMPONENT ONLY

NOTE: ALTERING THIS DOCUMENT VOIDS THE ENGINEERS SEAL

WARNING - Verify design parameters and READ NOTES ON THIS AND INCLUDED IN MODULUS ENGINEERING LTD. NOTES ME-TCD01 (VER 06/2017) BEFORE USE.
Design valid for use only with Mitek connectors. This design is based only upon parameters shown, and is for individual building components. Applicability of design parameters and proper incorporation of component is responsibility of building designer - not truss designer. Bracing shown is for lateral support of individual web members only. Additional temporary bracing to ensure stability during construction is the responsibility of the erector. Additional permanent bracing of the overall structure is the responsibility of the building designer. For general guidance regarding fabrication, quality control, storage, delivery, erection and bracing, consult
TPIC Appendix G - Minimum quality Manufacturing Criteria available from **www.tpic.ca** and **BCSI-CANADA (Building Component Safety Information) available** from TPI, 781 N. Lee Street, Suite 312, Alexandria, VA 22314 or www.sbcindustry.com

KOTT

JOB NAME	TRUSS NAME	QUANTITY	PLY	JOB DESC.		DRWG NO.
T-RIVER 11-2	T14	1	1	TRUSS DESC.	ZADORRA ESTATES INC	ME23-5777-39

Kott, Uxbridge,ON

Version 8.630 S Mar 22 2023 MiTek Industries, Inc. Wed Jul 5 11:02:36 2023 Page 1
ID:oVFDr6Fdws2a9wd?_pY7R0zKcfG-wq28oarxhSLil1ROWq6Z8lKj7eHWB1UTFM?GpDz?8xn

CORPORATION OF THE CITY OF OSHAWA
TRUE COPY
OF PERMIT PLANS
Nov 16 2023
PER:
CHIEF BUILDING OFFICIAL

MHP 23027

Scale = 1:18.0

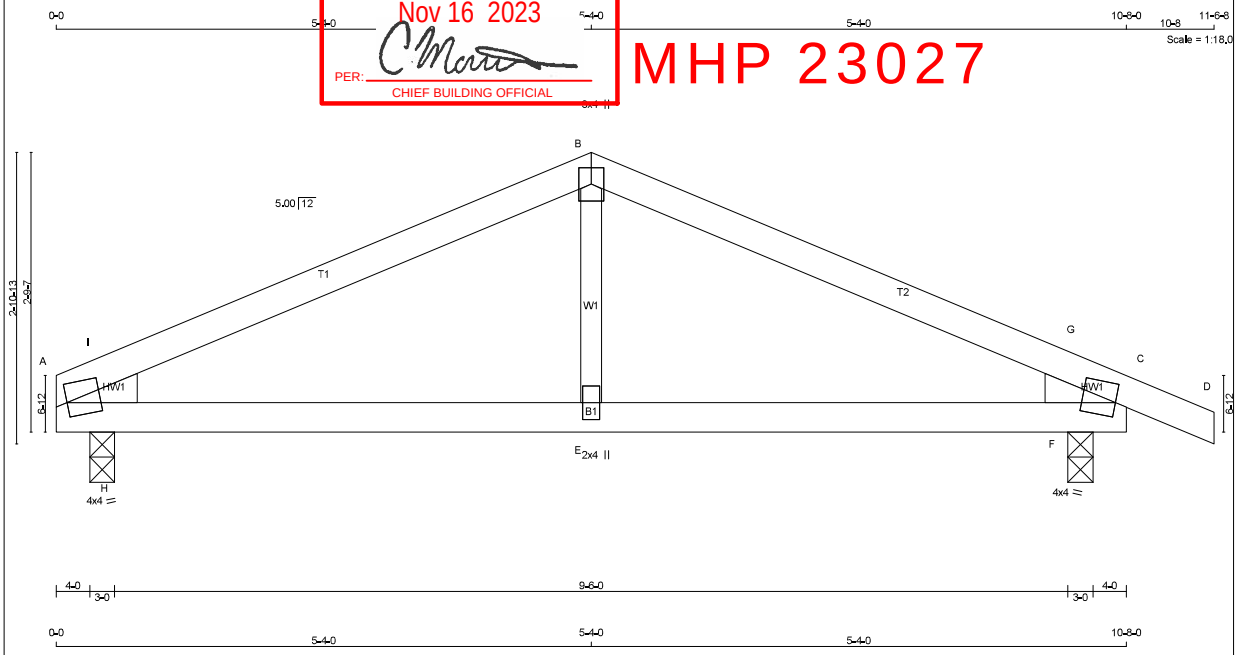

TOTAL WEIGHT = 30 lb

[M][F]

LUMBER
N. L. G. A. RULES

CHORDS	SIZE		LUMBER	DESCR.
A - B	2x4	DRY	No.2	SPF
B - D	2x4	DRY	No.2	SPF
A - C	2x4	DRY	No.2	SPF
ALL WEBS	2x3	DRY	No.2	SPF

DRY: SEASONED LUMBER.

PLATES (table is in inches)

JT	TYPE	PLATES	W	LEN	Y	X
A	TMBH1-m	MT20	4.0	4.0	1.75	
B	TTW+p	MT20	3.0	4.0		
C	TMBH1-m	MT20	4.0	4.0	1.75	
E	BMW+w	MT20	2.0	4.0		

DIMENSIONS, SUPPORTS AND LOADINGS SPECIFIED BY FABRICATOR TO BE VERIFIED BY BUILDING DESIGNER

BEARINGS

JT	FACTORED GROSS REACTION VERT	HORZ	MAXIMUM GROSS REACTION DOWN	HORZ	UPLIFT	INPUT BRG IN-SX	REQRD BRG IN-SX	HEEL WEDGE
C	845	0	845	0	0	3-0	1-8	2x4 R
A	734	0	734	0	0	3-0	1-8	2x4 L

UNFACTORED REACTIONS

JT	1ST LCASE COMBINED	MAX./MIN. COMPONENT REACTIONS SNOW	LIVE	PERM.LIVE	WIND	DEAD	SOIL
C	589	436 / 0	0 / 0	0 / 0	0 / 0	153 / 0	0 / 0
A	513	371 / 0	0 / 0	0 / 0	0 / 0	142 / 0	0 / 0

BEARING MATERIAL TO BE SPF NO.2 OR BETTER AT JOINT(S) C, A

BRACING
TOP CHORD TO BE SHEATHED OR MAX. PURLIN SPACING = 5.96 FT.
MAX. UNBRACED BOTTOM CHORD LENGTH = 10.00 FT OR RIGID CEILING DIRECTLY APPLIED.

ALL PITCH BREAKS AND PERIMETER CORNER JOINTS MUST BE LATERALLY RESTRAINED.

LOADING
TOTAL LOAD CASES: (4)

CHORDS

MEMB. FR-TO	MAX. FACTORED FORCE (LBS)	FACTORED VERT. LOAD (PLF) FROM	TO	LC1	MAX CSI (LC)	MAX. UNBRAC LENGTH
A- I	-930 / 0	-119.4	-119.4	0.18 (1)	6.20	
I- B	-930 / 0	-119.4	-119.4	0.35 (1)	5.96	
B- G	-930 / 0	-119.4	-119.4	0.35 (1)	5.96	
G- C	-930 / 0	-119.4	-119.4	0.18 (1)	6.20	
C- D	0 / 8	-119.4	-119.4	0.07 (1)	10.00	
A- H	0 / 846	-18.2	-18.2	0.34 (1)	10.00	
H- E	0 / 846	-18.2	-18.2	0.34 (1)	10.00	
E- F	0 / 846	-18.2	-18.2	0.34 (1)	10.00	
F- C	0 / 846	-18.2	-18.2	0.34 (1)	10.00	

WEBS

MEMB. FR-TO	MAX. FACTORED FORCE (LBS)	MAX CSI (LC)
E- B	0 / 210	0.05 (1)
F- G	-267 / 30	0.00 (1)
H- I	-267 / 30	0.00 (1)

DESIGN CRITERIA

SPECIFIED LOADS:

TOP CH.	LL	=	34.8	PSF
	DL	=	6.0	PSF
BOT CH.	LL	=	0.0	PSF
	DL	=	7.3	PSF
TOTAL LOAD		=	48.1	PSF

SPACING = 24.0 IN. C/C

THIS TRUSS IS DESIGNED FOR RESIDENTIAL OR SMALL BUILDING REQUIREMENTS OF PART 9, NBCC 2015

THIS DESIGN COMPLIES WITH:
- PART 9 OF BCBC 2018 , NBC-2019AE
- PART 9 OF OBC 2012 (2019 AMENDMENT)
- CSA 086-14
- TPIC 2014

(55 % OF 48.1 P.S.F. G.S.L. PLUS 8.4 P.S.F. RAIN LOAD) EQUALS 34.8 P.S.F. SPECIFIED ROOF LIVE LOAD

ALLOWABLE DEFL.(LL)= L/360 (0.36")
CALCULATED VERT. DEFL.(LL) = L/ 999 (0.03")
ALLOWABLE DEFL.(TL)= L/360 (0.36")
CALCULATED VERT. DEFL.(TL) = L/ 999 (0.05")

CSI: TC=0.35/1.00 (B-I:1) , BC=0.34/1.00 (A-H:1) , WB=0.05/1.00 (B-E:1) , SSI=0.23/1.00 (B-G:1)

DOL LUMBER=1.00 NAIL=1.00 LS BEND=1.10 COMP=1.10 SHEAR=1.10 TENS= 1.10

COMPANION LIVE LOAD FACTOR = 1.00

TRUSS PLATE MANUFACTURER IS NOT RESPONSIBLE FOR QUALITY CONTROL IN THE TRUSS MANUFACTURING PLANT .

NAIL VALUES

PLATE	GRIP(DRY) (PSI) MAX	MIN	SHEAR (PLI) MAX	MIN	SECTION (PLI) MAX	MIN
MT20	650	371	1747	788	1987	1873

PLATE PLACEMENT TOL. = 0.250 inches

PLATE ROTATION TOL. = 5.0 Deg.

JSI GRIP= 0.87 (C) (INPUT = 0.90)
JSI METAL= 0.38 (A) (INPUT = 1.00)

MODULUS ENGINEERING LTD.

LICENSED PROFESSIONAL ENGINEER
07/05/2023
D. A. SHERMAN
100123373
PROVINCE OF ONTARIO

REVIEW FOR TRUSS COMPONENT ONLY

NOTE: ALTERING THIS DOCUMENT VOIDS THE ENGINEERS SEAL

WARNING - Verify design parameters and READ NOTES ON THIS AND INCLUDED IN MODULUS ENGINEERING LTD. NOTES ME-TCD01 (VER 06/2017) BEFORE USE.
Design valid for use only with Mitek connectors. This design is based only upon parameters shown, and is for individual building components. Applicability of design parameters and proper incorporation of component is responsibility of building designer - not truss designer. Bracing shown is for lateral support of individual web members only. Additional temporary bracing to ensure stability during construction is the responsibility of the erector. Additional permanent bracing of the overall structure is the responsibility of the building designer. For general guidance regarding fabrication, quality control, storage, delivery, erection and bracing, consult
TPIC Appendix G - Minimum quality Manufacturing Criteria available from **www.tpic.ca** and **BCSI-CANADA (Building Component Safety Information) available** from TPI, 781 N. Lee Street, Suite 312, Alexandria, VA 22314 or www.sbcindustry.com

KOTT

JOB NAME	TRUSS NAME	QUANTITY	PLY	JOB DESC.	ZADORRA ESTATES INC	DRWG NO.
T-RIVER 11-2	V01	1	1	TRUSS DESC.		ME23-5777-40

Kott, Uxbridge,ON

Version 8.630 S Mar 22 2023 MiTek Industries, Inc. Wed Jul 5 11:02:37 2023 Page 1
ID:oVFDr6Fdws2a9wd?_pY7R0zKcfG-O0cX0wsZSmTZNB?a4YeogWsrn2c7wR5cU0lpLfz?8xm

CORPORATION OF THE CITY OF OSHAWA
TRUE COPY
OF PERMIT PLANS
Nov 16 2023
PER:
CHIEF BUILDING OFFICIAL

MHP 23027

Scale = 1:28.9

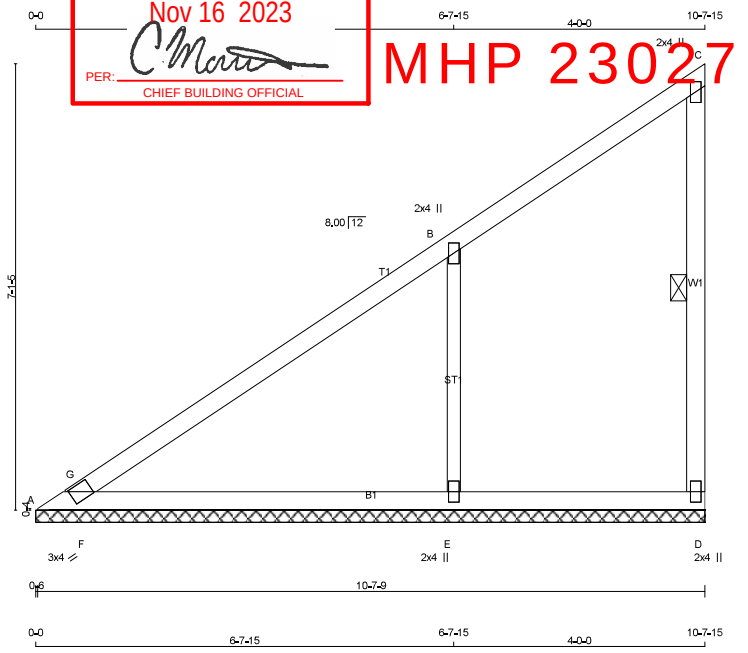

TOTAL WEIGHT = 37 lb
[M]

LUMBER
N. L. G. A. RULES

CHORDS	SIZE		LUMBER	DESCR.
A - C	2x4	DRY	No.2	SPF
D - C	2x4	DRY	No.2	SPF
A - D	2x4	DRY	No.2	SPF
ALL WEBS	2x3	DRY	No.2	SPF

DRY: SEASONED LUMBER.

PLATES (table is in inches)

JT	TYPE	PLATES	W	LEN Y	X
A	TBM1-h	MT20	3.0	4.0	
B	TMW+w	MT20	2.0	4.0	
C	TMV+p	MT20	2.0	4.0	
D	BMV1+p	MT20	2.0	4.0	
E	BMW1+w	MT20	2.0	4.0	

DIMENSIONS, SUPPORTS AND LOADINGS SPECIFIED BY FABRICATOR TO BE VERIFIED BY BUILDING DESIGNER

BEARINGS

JT	FACTORED GROSS REACTION VERT	HORZ	MAXIMUM GROSS REACTION DOWN	HORZ	UPLIFT	INPUT BRG IN-SX	REQRD BRG IN-SX
A	375	0	375	0	0	10-7-15 (10-7-99)	
D	141	0	141	0	0	10-7-15 (10-7-99)	
E	948	0	948	0	0	10-7-15 (10-7-99)	

VALUE IN PARENTHESIS INDICATES EFFECTIVE BEARING LENGTH

UNFACTORED REACTIONS

JT	1ST LCASE COMBINED	MAX./MIN. COMPONENT REACTIONS SNOW	LIVE	PERM.LIVE	WIND	DEAD	SOIL
A	262	190 / 0	0 / 0	0 / 0	0 / 0	72 / 0	0 / 0
D	98	72 / 0	0 / 0	0 / 0	0 / 0	26 / 0	0 / 0
E	663	478 / 0	0 / 0	0 / 0	0 / 0	184 / 0	0 / 0

BEARING MATERIAL TO BE SPF NO.2 OR BETTER AT JOINT(S) A, D, E

BRACING
TOP CHORD TO BE SHEATHED OR MAX. PURLIN SPACING = 6.25 FT.
MAX. UNBRACED BOTTOM CHORD LENGTH = 6.25 FT OR RIGID CEILING DIRECTLY APPLIED.

ALL PITCH BREAKS AND PERIMETER CORNER JOINTS MUST BE LATERALLY RESTRAINED.

1 LATERAL BRACE(S) AT 1/ 2 LENGTH OF C-D.

END VERTICAL(S) MUST BE SHEATHED OR HAVE BRACES AS INDICATED IN THE MAX. UNBRACED LENGTH COLUMN OF THE TABLE BELOW

LOADING
TOTAL LOAD CASES: (4)

CHORDS

MEMB. FR-TO	MAX. FACTORED FORCE (LBS)	FACTORED VERT. LOAD (PLF) FROM	TO	LC1	MAX CSI (LC)	MAX. UNBRAC LENGTH
A- G	-20 / 0	-119.4	-119.4	0.07 (4)	6.25	
G- B	0 / 18	-119.4	-119.4	0.55 (1)	10.00	
B- C	-54 / 0	-119.4	-119.4	0.55 (1)	6.25	
D- C	-146 / 0	0.0	0.0	0.03 (1)	6.25	
A- F	-48 / 0	-18.3	-18.3	0.38 (1)	6.25	
F- E	0 / 15	-18.2	-18.2	0.38 (1)	10.00	
E- D	0 / 0	-18.2	-18.2	0.23 (1)	10.00	

WEBS

MEMB. FR-TO	MAX. FACTORED FORCE (LBS)	MAX CSI (LC)
E- B	-740 / 0	0.22 (1)
F- G	-364 / 3	0.00 (1)

DESIGN CRITERIA

SPECIFIED LOADS:

TOP CH.	LL	=	34.8	PSF
	DL	=	6.0	PSF
BOT CH.	LL	=	0.0	PSF
	DL	=	7.3	PSF
TOTAL LOAD		=	48.1	PSF

SPACING = 24.0 IN. C/C

THIS TRUSS IS DESIGNED FOR RESIDENTIAL OR SMALL BUILDING REQUIREMENTS OF PART 9, NBCC 2015

THIS DESIGN COMPLIES WITH:
- PART 9 OF BCBC 2018 , NBC-2019AE
- PART 9 OF OBC 2012 (2019 AMENDMENT)
- CSA 086-14
- TPIC 2014

(55 % OF 48.1 P.S.F. G.S.L. PLUS 8.4 P.S.F. RAIN LOAD) EQUALS 34.8 P.S.F. SPECIFIED ROOF LIVE LOAD

CSI: TC=0.55/1.00 (B-G:1) , BC=0.38/1.00 (E-F:1) , WB=0.22/1.00 (B-E:1) , SSI=0.27/1.00 (A-F:1)

DOL LUMBER=1.00 NAIL=1.00 LS BEND=1.10 COMP=1.10 SHEAR=1.10 TENS= 1.10

COMPANION LIVE LOAD FACTOR = 1.00

TRUSS PLATE MANUFACTURER IS NOT RESPONSIBLE FOR QUALITY CONTROL IN THE TRUSS MANUFACTURING PLANT .

NAIL VALUES

PLATE	GRIP(DRY) (PSI) MAX	MIN	SHEAR (PLI) MAX	MIN	SECTION (PLI) MAX	MIN
MT20	650	371	1747	788	1987	1873

PLATE PLACEMENT TOL. = 0.250 inches

PLATE ROTATION TOL. = 5.0 Deg.

JSI GRIP= 0.48 (B) (INPUT = 0.90)
JSI METAL= 0.38 (B) (INPUT = 1.00)

MODULUS ENGINEERING LTD.

LICENSED PROFESSIONAL ENGINEER
07/05/2023
D. A. SHERMAN
100123373
PROVINCE OF ONTARIO

REVIEW FOR TRUSS COMPONENT ONLY

NOTE: ALTERING THIS DOCUMENT VOIDS THE ENGINEERS SEAL

WARNING - Verify design parameters and READ NOTES ON THIS AND INCLUDED IN MODULUS ENGINEERING LTD. NOTES ME-TCD01 (VER 06/2017) BEFORE USE.
Design valid for use only with Mitek connectors. This design is based only upon parameters shown, and is for individual building components. Applicability of design parameters and proper incorporation of component is responsibility of building designer - not truss designer. Bracing shown is for lateral support of individual web members only. Additional temporary bracing to ensure stability during construction is the responsibility of the erector. Additional permanent bracing of the overall structure is the responsibility of the building designer. For general guidance regarding fabrication, quality control, storage, delivery, erection and bracing, consult
TPIC Appendix G - Minimum quality Manufacturing Criteria available from **www.tpic.ca** and **BCSI-CANADA (Building Component Safety Information) available** from TPI, 781 N. Lee Street, Suite 312, Alexandria, VA 22314 or www.sbcindustry.com

KOTT

JOB NAME	TRUSS NAME	QUANTITY	PLY	JOB DESC.		DRWG NO.
T-RIVER 11-2	V02	1	1	TRUSS DESC.	ZADORRA ESTATES INC	ME23-5777-41

Kott, Uxbridge,ON

Version 8.630 S Mar 22 2023 MiTek Industries, Inc. Wed Jul 5 11:02:39 2023 Page 1
ID:oVFDr6Fdws2a9wd?_pY7R0zKcfG-KPkHRbup_NjHcU9yCzgGmxyDwsJ3OLVvxKEwPXz?8xk

CORPORATION OF THE CITY OF OSHAWA
TRUE COPY
OF PERMIT PLANS
Nov 16 2023
PER:
CHIEF BUILDING OFFICIAL

MHP 23027

Scale = 1:27.2

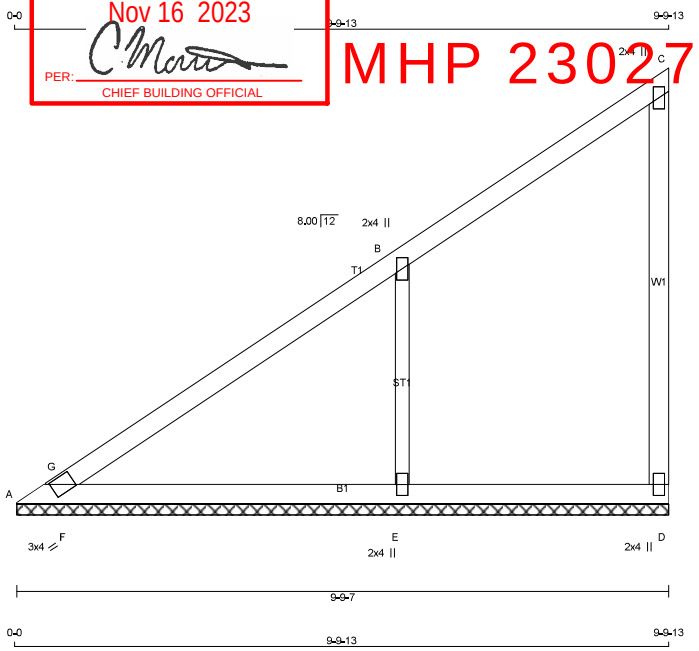

TOTAL WEIGHT = 33 lb [M]

LUMBER
N. L. G. A. RULES

CHORDS	SIZE		LUMBER	DESCR.
A - C	2x4	DRY	No.2	SPF
D - C	2x4	DRY	No.2	SPF
A - D	2x4	DRY	No.2	SPF
ALL WEBS	2x3	DRY	No.2	SPF

DRY: SEASONED LUMBER.

PLATES (table is in inches)

JT	TYPE	PLATES	W	LEN	Y	X
A	TBM1-h	MT20	3.0	4.0		
B	TMW+w	MT20	2.0	4.0		
C	TMV+p	MT20	2.0	4.0		
D	BMV1+p	MT20	2.0	4.0		
E	BMW1+w	MT20	2.0	4.0		

DIMENSIONS, SUPPORTS AND LOADINGS SPECIFIED BY FABRICATOR TO BE VERIFIED BY BUILDING DESIGNER

BEARINGS

JT	FACTORED GROSS REACTION VERT	HORZ	MAXIMUM FACTORED GROSS REACTION DOWN	HORZ	UPLIFT	INPUT BRG	REQRD BRG
A	326	0	326	0	0	9-9-7	1-8
D	170	0	170	0	0	9-9-7	1-8
E	852	0	852	0	0	9-9-7	1-8

UNFACTORED REACTIONS

JT	1ST LCASE COMBINED	MAX./MIN. COMPONENT REACTIONS SNOW	LIVE	PERM.LIVE	WIND	DEAD	SOIL
A	227	165 / 0	0 / 0	0 / 0	0 / 0	62 / 0	0 / 0
D	119	86 / 0	0 / 0	0 / 0	0 / 0	32 / 0	0 / 0
E	596	430 / 0	0 / 0	0 / 0	0 / 0	166 / 0	0 / 0

BEARING MATERIAL TO BE SPF NO.2 OR BETTER AT JOINT(S) A, D, E

BRACING
TOP CHORD TO BE SHEATHED OR MAX. PURLIN SPACING = 6.25 FT.
MAX. UNBRACED BOTTOM CHORD LENGTH = 6.25 FT OR RIGID CEILING DIRECTLY APPLIED.

ALL PITCH BREAKS AND PERIMETER CORNER JOINTS MUST BE LATERALLY RESTRAINED.

LOADING
TOTAL LOAD CASES: (4)

CHORDS

MEMB. FR-TO	MAX. FACTORED FORCE (LBS)	FACTORED VERT. LOAD (PLF) FROM	TO	LC1	MAX CSI (LC)	MAX. UNBRAC LENGTH
A- G	-18 / 0	-119.4	-119.4	0.06 (4)		6.25
G- B	0 / 18	-119.4	-119.4	0.44 (1)		10.00
B- C	-44 / 0	-119.4	-119.4	0.44 (1)		6.25
D- C	-165 / 0	0.0	0.0	0.14 (1)		7.81
A- F	-32 / 0	-18.3	-18.3	0.29 (1)		6.25
F- E	0 / 15	-18.2	-18.2	0.29 (1)		10.00
E- D	0 / 0	-18.2	-18.2	0.17 (1)		10.00

WEBS

MEMB. FR-TO	MAX. FACTORED FORCE (LBS)	MAX CSI (LC)
E- B	-672 / 0	0.16 (1)
F- G	-276 / 3	0.00 (1)

DESIGN CRITERIA

SPECIFIED LOADS:

TOP CH.	LL	=	34.8	PSF
	DL	=	6.0	PSF
BOT CH.	LL	=	0.0	PSF
	DL	=	7.3	PSF
TOTAL LOAD		=	48.1	PSF

SPACING = 24.0 IN. C/C

THIS TRUSS IS DESIGNED FOR RESIDENTIAL OR SMALL BUILDING REQUIREMENTS OF PART 9, NBCC 2015

THIS DESIGN COMPLIES WITH:
- PART 9 OF BCBC 2018 , NBC-2019AE
- PART 9 OF OBC 2012 (2019 AMENDMENT)
- CSA 086-14
- TPIC 2014

(55 % OF 48.1 P.S.F. G.S.L. PLUS 8.4 P.S.F. RAIN LOAD) EQUALS 34.8 P.S.F. SPECIFIED ROOF LIVE LOAD

CSI: TC=0.44/1.00 (B-G:1) , BC=0.29/1.00 (E-F:1) , WB=0.16/1.00 (B-E:1) , SSI=0.23/1.00 (B-G:1)

DOL LUMBER=1.00 NAIL=1.00 LS BEND=1.10 COMP=1.10 SHEAR=1.10 TENS= 1.10

COMPANION LIVE LOAD FACTOR = 1.00

TRUSS PLATE MANUFACTURER IS NOT RESPONSIBLE FOR QUALITY CONTROL IN THE TRUSS MANUFACTURING PLANT .

NAIL VALUES

PLATE	GRIP(DRY) (PSI) MAX	MIN	SHEAR (PLI) MAX	MIN	SECTION (PLI) MAX	MIN
MT20	650	371	1747	788	1987	1873

PLATE PLACEMENT TOL. = 0.250 inches

PLATE ROTATION TOL. = 5.0 Deg.

JSI GRIP= 0.44 (B) (INPUT = 0.90)
JSI METAL= 0.34 (B) (INPUT = 1.00)

MODULUS ENGINEERING LTD.

LICENSED PROFESSIONAL ENGINEER
07/05/2023
D. A. SHERMAN
100123373
PROVINCE OF ONTARIO

REVIEW FOR TRUSS COMPONENT ONLY

NOTE: ALTERING THIS DOCUMENT VOIDS THE ENGINEERS SEAL

WARNING - Verify design parameters and READ NOTES ON THIS AND INCLUDED IN MODULUS ENGINEERING LTD. NOTES ME-TCD01 (VER 06/2017) BEFORE USE.
Design valid for use only with Mitek connectors. This design is based only upon parameters shown, and is for individual building components. Applicability of design parameters and proper incorporation of component is responsibility of building designer - not truss designer. Bracing shown is for lateral support of individual web members only. Additional temporary bracing to ensure stability during construction is the responsibility of the erector. Additional permanent bracing of the overall structure is the responsibility of the building designer. For general guidance regarding fabrication, quality control, storage, delivery, erection and bracing, consult
TPIC Appendix G - Minimum quality Manufacturing Criteria available from **www.tpic.ca** and **BCSI-CANADA (Building Component Safety Information) available** from TPI, 781 N. Lee Street, Suite 312, Alexandria, VA 22314 or www.sbcindustry.com

KOTT

JOB NAME	TRUSS NAME	QUANTITY	PLY	JOB DESC.		DRWG NO.
T-RIVER 11-2	V03	1	1	TRUSS DESC.	ZADORRA ESTATES INC	ME23-5777-42

Kott, Uxbridge,ON

Version 8.630 S Mar 22 2023 MiTek Industries, Inc. Wed Jul 5 11:02:40 2023 Page 1
ID:oVFDr6Fdws2a9wd?_pY7R0zKcfG-obIfexuRIhr8Eek9IgBVI8UQJFih7p?2A_zTy_z?8x

CORPORATION OF THE CITY OF OSHAWA
TRUE COPY
OF PERMIT PLANS
Nov 16 2023
PER: _____
CHIEF BUILDING OFFICIAL

MHP 23027

Scale = 1:21.0

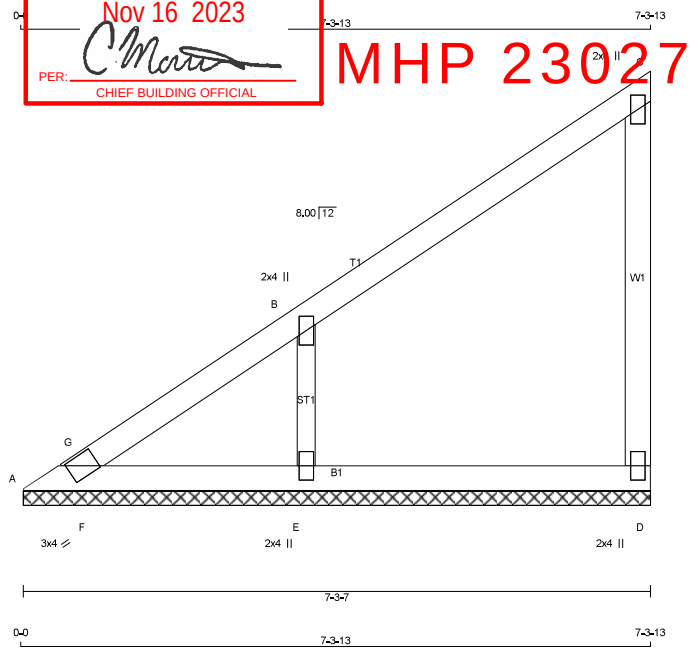

TOTAL WEIGHT = 24 lb [M]

LUMBER
N. L. G. A. RULES

CHORDS	SIZE		LUMBER	DESCR.
A - C	2x4	DRY	No.2	SPF
D - C	2x4	DRY	No.2	SPF
A - D	2x4	DRY	No.2	SPF
ALL WEBS	2x3	DRY	No.2	SPF

DRY: SEASONED LUMBER.

PLATES (table is in inches)

JT	TYPE	PLATES	W	LEN	Y	X
A	TBM1-h	MT20	3.0	4.0		
B	TMW+w	MT20	2.0	4.0		
C	TMV+p	MT20	2.0	4.0		
D	BMV1+p	MT20	2.0	4.0		
E	BMW1+w	MT20	2.0	4.0		

DIMENSIONS, SUPPORTS AND LOADINGS SPECIFIED BY FABRICATOR TO BE VERIFIED BY BUILDING DESIGNER

BEARINGS

JT	FACTORED GROSS REACTION VERT	HORZ	MAXIMUM FACTORED GROSS REACTION DOWN	HORZ	UPLIFT	INPUT BRG IN-SX	REQRD BRG IN-SX
A	161	0	161	0	0	7-3-7	1-8
D	222	0	222	0	0	7-3-7	1-8
E	621	0	621	0	0	7-3-7	1-8

UNFACTORED REACTIONS

JT	1ST LCASE COMBINED	MAX./MIN. COMPONENT REACTIONS SNOW	LIVE	PERM.LIVE	WIND	DEAD	SOIL
A	112	82 / 0	0 / 0	0 / 0	0 / 0	31 / 0	0 / 0
D	155	112 / 0	0 / 0	0 / 0	0 / 0	42 / 0	0 / 0
E	434	313 / 0	0 / 0	0 / 0	0 / 0	121 / 0	0 / 0

BEARING MATERIAL TO BE SPF NO.2 OR BETTER AT JOINT(S) A, D, E

BRACING
TOP CHORD TO BE SHEATHED OR MAX. PURLIN SPACING = 6.25 FT.
MAX. UNBRACED BOTTOM CHORD LENGTH = 10.00 FT OR RIGID CEILING DIRECTLY APPLIED.

ALL PITCH BREAKS AND PERIMETER CORNER JOINTS MUST BE LATERALLY RESTRAINED.

LOADING
TOTAL LOAD CASES: (4)

CHORDS

MEMB. FR-TO	MAX. FACTORED FORCE (LBS)	FACTORED VERT. LOAD (PLF) FROM	TO	LC1 CSI (LC)	MAX UNBRAC LENGTH
A- G	-45 / 0	-119.4	-119.4	0.05 (1)	6.25
G- B	0 / 27	-119.4	-119.4	0.27 (1)	10.00
B- C	-27 / 0	-119.4	-119.4	0.27 (1)	6.25
D- C	-195 / 0	0.0	0.0	0.07 (1)	7.81
A- F	0 / 14	-18.3	-18.3	0.06 (1)	10.00
F- E	0 / 23	-18.2	-18.2	0.07 (4)	10.00
E- D	0 / 0	-18.2	-18.2	0.07 (4)	10.00

WEBS

MEMB. FR-TO	MAX. FACTORED FORCE (LBS)	MAX CSI (LC)
E- B	-519 / 0	0.08 (1)
F- G	-52 / 2	0.00 (1)

DESIGN CRITERIA

SPECIFIED LOADS:

TOP CH.	LL	=	34.8	PSF
	DL	=	6.0	PSF
BOT CH.	LL	=	0.0	PSF
	DL	=	7.3	PSF
TOTAL LOAD		=	48.1	PSF

SPACING = 24.0 IN. C/C

THIS TRUSS IS DESIGNED FOR RESIDENTIAL OR SMALL BUILDING REQUIREMENTS OF PART 9, NBCC 2015

THIS DESIGN COMPLIES WITH:
- PART 9 OF BCBC 2018 , NBC-2019AE
- PART 9 OF OBC 2012 (2019 AMENDMENT)
- CSA 086-14
- TPIC 2014

(55 % OF 48.1 P.S.F. G.S.L. PLUS 8.4 P.S.F. RAIN LOAD) EQUALS 34.8 P.S.F. SPECIFIED ROOF LIVE LOAD

CSI: TC=0.27/1.00 (B-G:1) , BC=0.07/1.00 (E-F:4) , WB=0.08/1.00 (B-E:1) , SSI=0.19/1.00 (B-C:1)

DOL LUMBER=1.00 NAIL=1.00 LS BEND=1.10 COMP=1.10 SHEAR=1.10 TENS= 1.10

COMPANION LIVE LOAD FACTOR = 1.00

TRUSS PLATE MANUFACTURER IS NOT RESPONSIBLE FOR QUALITY CONTROL IN THE TRUSS MANUFACTURING PLANT .

NAIL VALUES

PLATE	GRIP(DRY) (PSI) MAX	MIN	SHEAR (PLI) MAX	MIN	SECTION (PLI) MAX	MIN
MT20	650	371	1747	788	1987	1873

PLATE PLACEMENT TOL. = 0.250 inches

PLATE ROTATION TOL. = 5.0 Deg.

JSI GRIP= 0.34 (B) (INPUT = 0.90)
JSI METAL= 0.26 (B) (INPUT = 1.00)

MODULUS ENGINEERING LTD.

LICENSED PROFESSIONAL ENGINEER
07/05/2023
D. A. SHERMAN
100123373
PROVINCE OF ONTARIO

REVIEW FOR TRUSS COMPONENT ONLY

NOTE: ALTERING THIS DOCUMENT VOIDS THE ENGINEERS SEAL

WARNING - Verify design parameters and READ NOTES ON THIS AND INCLUDED IN MODULUS ENGINEERING LTD. NOTES ME-TCD01 (VER 06/2017) BEFORE USE.
Design valid for use only with Mitek connectors. This design is based only upon parameters shown, and is for individual building components. Applicability of design parameters and proper incorporation of component is responsibility of building designer - not truss designer. Bracing shown is for lateral support of individual web members only. Additional temporary bracing to ensure stability during construction is the responsibility of the erector. Additional permanent bracing of the overall structure is the responsibility of the building designer. For general guidance regarding fabrication, quality control, storage, delivery, erection and bracing, consult
TPIC Appendix G - Minimum quality Manufacturing Criteria available from **www.tpic.ca** and **BCSI-CANADA (Building Component Safety Information) available** from TPI, 781 N. Lee Street, Suite 312, Alexandria, VA 22314 or www.sbcindustry.com

KOTT

JOB NAME	TRUSS NAME	QUANTITY	PLY	JOB DESC.		DRWG NO.
T-RIVER 11-2	V04	1	1	TRUSS DESC.	ZADORRA ESTATES INC	ME23-5777-43

Kott, Uxbridge,ON

Version 8.630 S Mar 22 2023 MiTek Industries, Inc. Wed Jul 5 11:02:41 2023 Page 1
ID:oVFDr6Fdws2a9wd?_pY7R0zKcfG-Gns1rHv4W?z?soJLJOikrM1aDf?VsHSCPej1UQz?8x

CORPORATION OF THE CITY OF OSHAWA
TRUE COPY
OF PERMIT PLANS
Nov 16 2023
PER:
CHIEF BUILDING OFFICIAL

MHP 23027

Scale = 1:14.8

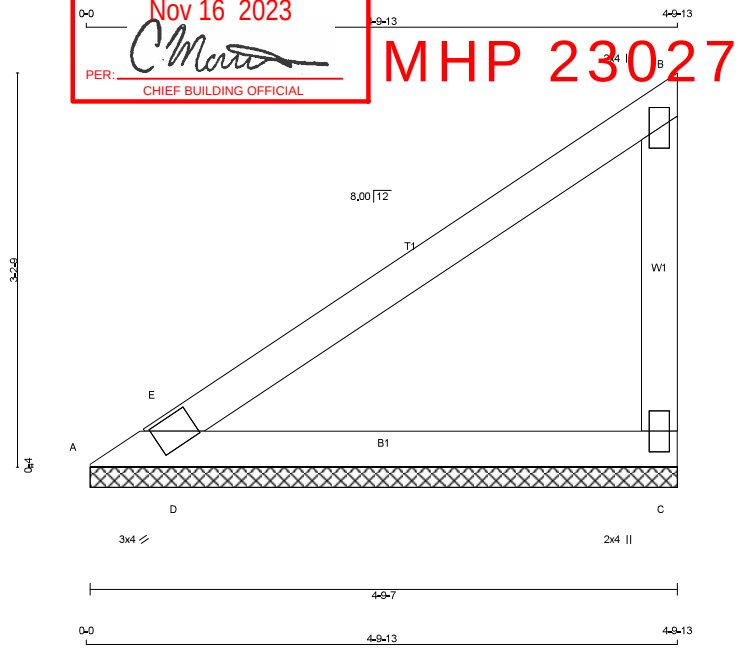

TOTAL WEIGHT = 14 lb [M]

LUMBER
N. L. G. A. RULES

CHORDS	SIZE		LUMBER	DESCR.
A - B	2x4	DRY	No.2	SPF
C - B	2x4	DRY	No.2	SPF
A - C	2x4	DRY	No.2	SPF

DRY: SEASONED LUMBER.

PLATES (table is in inches)

JT	TYPE	PLATES	W	LEN	Y	X
A	TBM1-h	MT20	3.0	4.0		
B	TMV+p	MT20	2.0	4.0		
C	BMV1+p	MT20	2.0	4.0		

DIMENSIONS, SUPPORTS AND LOADINGS SPECIFIED BY FABRICATOR TO BE VERIFIED BY BUILDING DESIGNER

BEARINGS

JT	FACTORED GROSS REACTION VERT	HORZ	MAXIMUM FACTORED GROSS REACTION DOWN	HORZ	UPLIFT	INPUT BRG IN-SX	REQRD BRG IN-SX
A	330	0	330	0	0	4-9-7	1-8
C	330	0	330	0	0	4-9-7	1-8

UNFACTORED REACTIONS

1ST LCASE MAX./MIN. COMPONENT REACTIONS

JT	COMBINED	SNOW	LIVE	PERM.LIVE	WIND	DEAD	SOIL
A	230	167 / 0	0 / 0	0 / 0	0 / 0	64 / 0	0 / 0
C	230	167 / 0	0 / 0	0 / 0	0 / 0	64 / 0	0 / 0

BEARING MATERIAL TO BE SPF NO.2 OR BETTER AT JOINT(S) A, C

BRACING
TOP CHORD TO BE SHEATHED OR MAX. PURLIN SPACING = 6.25 FT.
MAX. UNBRACED BOTTOM CHORD LENGTH = 6.25 FT OR RIGID CEILING DIRECTLY APPLIED.

ALL PITCH BREAKS AND PERIMETER CORNER JOINTS MUST BE LATERALLY RESTRAINED.

LOADING
TOTAL LOAD CASES: (4)

CHORDS

MEMB. FR-TO	MAX. FACTORED FORCE (LBS)	FACTORED VERT. LOAD (PLF) FROM	TO	LC1	MAX CSI (LC)	MAX. UNBRAC LENGTH
A- E	-15 / 0	-119.4	-119.4	0.06 (4)		6.25
E- B	0 / 4	-119.4	-119.4	0.33 (1)		10.00
C- B	-239 / 0	0.0	0.0	0.04 (1)		7.81
A- D	-48 / 0	-18.3	-18.3	0.29 (1)		6.25
D- C	0 / 0	-18.2	-18.2	0.29 (1)		10.00

WEBS

MEMB. FR-TO	MAX. FACTORED FORCE (LBS)	MAX CSI (LC)
D- E	-278 / 0	0.00 (1)

DESIGN CRITERIA

SPECIFIED LOADS:

TOP CH.	LL	=	34.8	PSF
	DL	=	6.0	PSF
BOT CH.	LL	=	0.0	PSF
	DL	=	7.3	PSF
TOTAL LOAD		=	48.1	PSF

SPACING = 24.0 IN. C/C

THIS TRUSS IS DESIGNED FOR RESIDENTIAL OR SMALL BUILDING REQUIREMENTS OF PART 9, NBCC 2015

THIS DESIGN COMPLIES WITH:
- PART 9 OF BCBC 2018 , NBC-2019AE
- PART 9 OF OBC 2012 (2019 AMENDMENT)
- CSA 086-14
- TPIC 2014

(55 % OF 48.1 P.S.F. G.S.L. PLUS 8.4 P.S.F. RAIN LOAD) EQUALS 34.8 P.S.F. SPECIFIED ROOF LIVE LOAD

CSI: TC=0.33/1.00 (B-E:1) , BC=0.29/1.00 (A-D:1) , WB=0.00/1.00 (D-E:1) , SSI=0.21/1.00 (A-D:1)

DOL LUMBER=1.00 NAIL=1.00 LS BEND=1.10 COMP=1.10 SHEAR=1.10 TENS= 1.10

COMPANION LIVE LOAD FACTOR = 1.00

TRUSS PLATE MANUFACTURER IS NOT RESPONSIBLE FOR QUALITY CONTROL IN THE TRUSS MANUFACTURING PLANT .

NAIL VALUES

PLATE	GRIP(DRY) (PSI) MAX	MIN	SHEAR (PLI) MAX	MIN	SECTION (PLI) MAX	MIN
MT20	650	371	1747	788	1987	1873

PLATE PLACEMENT TOL. = 0.250 inches

PLATE ROTATION TOL. = 5.0 Deg.

JSI GRIP= 0.20 (A) (INPUT = 0.90)
JSI METAL= 0.12 (B) (INPUT = 1.00)

MODULUS ENGINEERING LTD.

LICENSED PROFESSIONAL ENGINEER
07/05/2023
D. A. SHERMAN
100123373
PROVINCE OF ONTARIO

REVIEW FOR TRUSS COMPONENT ONLY

NOTE: ALTERING THIS DOCUMENT VOIDS THE ENGINEERS SEAL

WARNING - Verify design parameters and READ NOTES ON THIS AND INCLUDED IN MODULUS ENGINEERING LTD. NOTES ME-TCD01 (VER 06/2017) BEFORE USE.
Design valid for use only with Mitek connectors. This design is based only upon parameters shown, and is for individual building components. Applicability of design parameters and proper incorporation of component is responsibility of building designer - not truss designer. Bracing shown is for lateral support of individual web members only. Additional temporary bracing to ensure stability during construction is the responsibility of the erector. Additional permanent bracing of the overall structure is the responsibility of the building designer. For general guidance regarding fabrication, quality control, storage, delivery, erection and bracing, consult
TPIC Appendix G - Minimum quality Manufacturing Criteria available from **www.tpic.ca** and **BCSI-CANADA (Building Component Safety Information) available** from TPI, 781 N. Lee Street, Suite 312, Alexandria, VA 22314 or www.sbcindustry.com

KOTT

JOB NAME	TRUSS NAME	QUANTITY	PLY	JOB DESC.		DRWG NO.
T-RIVER 11-2	V05	1	1	TRUSS DESC.	ZADORRA ESTATES INC	ME23-5777-44

Kott, Uxbridge,ON

Version 8.630 S Mar 22 2023 MiTek Industries, Inc. Wed Jul 5 11:02:42 2023 Page 1
ID:oVFDr6Fdws2a9wd?_pY7R0zKcfG-k_PP3dwiHI5sTyuXt5DzNZajn3LQbi2LeISa0sz?8xh

CORPORATION OF THE CITY OF OSHAWA
TRUE COPY
OF PERMIT PLANS
Nov 16 2023
PER:
CHIEF BUILDING OFFICIAL
MHP 23027

Scale = 1:27.3

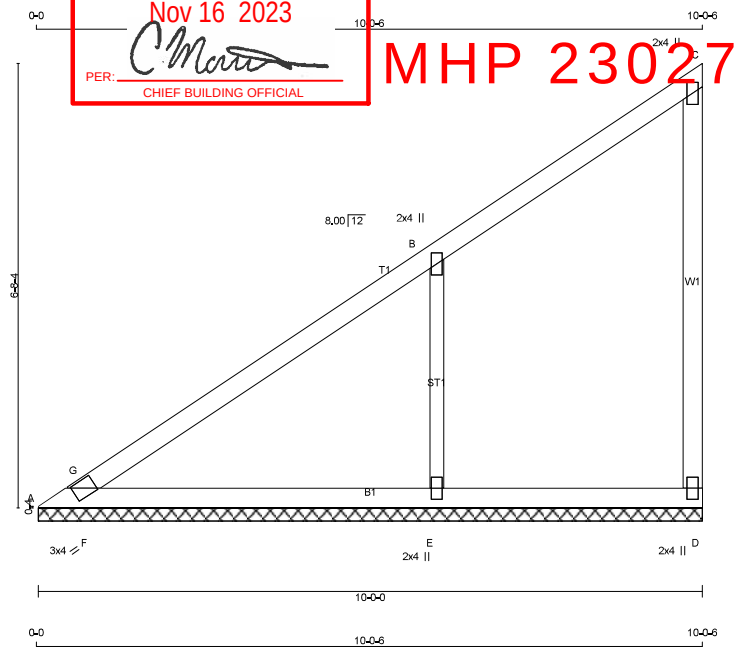

TOTAL WEIGHT = 34 lb
[M]

LUMBER
N. L. G. A. RULES

CHORDS	SIZE		LUMBER	DESCR.
A - C	2x4	DRY	No.2	SPF
D - C	2x4	DRY	No.2	SPF
A - D	2x4	DRY	No.2	SPF
ALL WEBS	2x3	DRY	No.2	SPF

DRY: SEASONED LUMBER.

PLATES (table is in inches)

JT	TYPE	PLATES	W	LEN Y	X
A	TBM1-h	MT20	3.0	4.0	
B	TMW+w	MT20	2.0	4.0	
C	TMV+p	MT20	2.0	4.0	
D	BMV1+p	MT20	2.0	4.0	
E	BMW1+w	MT20	2.0	4.0	

DIMENSIONS, SUPPORTS AND LOADINGS SPECIFIED BY FABRICATOR TO BE VERIFIED BY BUILDING DESIGNER

BEARINGS

JT	FACTORED GROSS REACTION VERT	HORZ	MAXIMUM GROSS REACTION DOWN	HORZ	UPLIFT	INPUT BRG IN-SX	REQRD BRG IN-SX
A	338	0	338	0	0	10-0-0	1-8
D	163	0	163	0	0	10-0-0	1-8
E	875	0	875	0	0	10-0-0	1-8

UNFACTORED REACTIONS

JT	1ST LCASE COMBINED	MAX./MIN. COMPONENT REACTIONS SNOW	LIVE	PERM.LIVE	WIND	DEAD	SOIL
A	236	171 / 0	0 / 0	0 / 0	0 / 0	65 / 0	0 / 0
D	114	83 / 0	0 / 0	0 / 0	0 / 0	31 / 0	0 / 0
E	612	442 / 0	0 / 0	0 / 0	0 / 0	170 / 0	0 / 0

BEARING MATERIAL TO BE SPF NO.2 OR BETTER AT JOINT(S) A, D, E

BRACING
TOP CHORD TO BE SHEATHED OR MAX. PURLIN SPACING = 6.25 FT.
MAX. UNBRACED BOTTOM CHORD LENGTH = 6.25 FT OR RIGID CEILING DIRECTLY APPLIED.

ALL PITCH BREAKS AND PERIMETER CORNER JOINTS MUST BE LATERALLY RESTRAINED.

LOADING
TOTAL LOAD CASES: (4)

CHORDS

MEMB. FR-TO	MAX. FACTORED FORCE (LBS)	FACTORED VERT. LOAD (PLF) FROM	TO	LC1	MAX CSI (LC)	MAX. UNBRAC LENGTH
A- G	-18 / 0	-119.4	-119.4		0.06 (4)	6.25
G- B	0 / 18	-119.4	-119.4		0.47 (1)	10.00
B- C	-46 / 0	-119.4	-119.4		0.46 (1)	6.25
D- C	-160 / 0	0.0	0.0		0.15 (1)	7.81
A- F	-36 / 0	-18.2	-18.2		0.31 (1)	6.25
F- E	0 / 15	-18.2	-18.2		0.31 (1)	10.00
E- D	0 / 0	-18.2	-18.2		0.18 (1)	10.00

WEBS

MEMB. FR-TO	MAX. FACTORED FORCE (LBS)	MAX CSI (LC)
E- B	-688 / 0	0.17 (1)
F- G	-297 / 3	0.00 (1)

DESIGN CRITERIA

SPECIFIED LOADS:

TOP CH.	LL	=	34.8	PSF
	DL	=	6.0	PSF
BOT CH.	LL	=	0.0	PSF
	DL	=	7.3	PSF
TOTAL LOAD		=	48.1	PSF

SPACING = 24.0 IN. C/C

THIS TRUSS IS DESIGNED FOR RESIDENTIAL OR SMALL BUILDING REQUIREMENTS OF PART 9, NBCC 2015

THIS DESIGN COMPLIES WITH:
- PART 9 OF BCBC 2018 , NBC-2019AE
- PART 9 OF OBC 2012 (2019 AMENDMENT)
- CSA 086-14
- TPIC 2014

(55 % OF 48.1 P.S.F. G.S.L. PLUS 8.4 P.S.F. RAIN LOAD) EQUALS 34.8 P.S.F. SPECIFIED ROOF LIVE LOAD

CSI: TC=0.47/1.00 (B-G:1) , BC=0.31/1.00 (E-F:1) , WB=0.17/1.00 (B-E:1) , SSI=0.24/1.00 (B-G:1)

DOL LUMBER=1.00 NAIL=1.00 LS BEND=1.10 COMP=1.10 SHEAR=1.10 TENS= 1.10

COMPANION LIVE LOAD FACTOR = 1.00

TRUSS PLATE MANUFACTURER IS NOT RESPONSIBLE FOR QUALITY CONTROL IN THE TRUSS MANUFACTURING PLANT .

NAIL VALUES

PLATE	GRIP(DRY) (PSI) MAX	MIN	SHEAR (PLI) MAX	MIN	SECTION (PLI) MAX	MIN
MT20	650	371	1747	788	1987	1873

PLATE PLACEMENT TOL. = 0.250 inches

PLATE ROTATION TOL. = 5.0 Deg.

JSI GRIP= 0.45 (B) (INPUT = 0.90)
JSI METAL= 0.35 (B) (INPUT = 1.00)

MODULUS ENGINEERING LTD.

LICENSED PROFESSIONAL ENGINEER
07/05/2023
D. A. SHERMAN
100123373
PROVINCE OF ONTARIO

REVIEW FOR TRUSS COMPONENT ONLY

NOTE: ALTERING THIS DOCUMENT VOIDS THE ENGINEERS SEAL

WARNING - Verify design parameters and READ NOTES ON THIS AND INCLUDED IN MODULUS ENGINEERING LTD. NOTES ME-TCD01 (VER 06/2017) BEFORE USE.
Design valid for use only with Mitek connectors. This design is based only upon parameters shown, and is for individual building components. Applicability of design parameters and proper incorporation of component is responsibility of building designer - not truss designer. Bracing shown is for lateral support of individual web members only. Additional temporary bracing to ensure stability during construction is the responsibility of the erector. Additional permanent bracing of the overall structure is the responsibility of the building designer. For general guidance regarding fabrication, quality control, storage, delivery, erection and bracing, consult
TPIC Appendix G - Minimum quality Manufacturing Criteria available from **www.tpic.ca** and **BCSI-CANADA (Building Component Safety Information) available** from TPI, 781 N. Lee Street, Suite 312, Alexandria, VA 22314 or www.sbcindustry.com

KOTT

JOB NAME	TRUSS NAME	QUANTITY	PLY	JOB DESC.		DRWG NO.
T-RIVER 11-2	V06	1	1	TRUSS DESC.	ZADORRA ESTATES INC	ME23-5777-45

Kott, Uxbridge,ON

Version 8.630 S Mar 22 2023 MiTek Industries, Inc. Wed Jul 5 11:02:43 2023 Page 1
ID:oVFDr6Fdws2a9wd?_pY7R0zKcfG-DAzoGzxK2cDj56TkRokCwn6xSTkKKAhVsyC8ZJz?8xg

CORPORATION OF THE CITY OF OSHAWA
TRUE COPY
OF PERMIT PLANS
Nov 16 2023
PER:
CHIEF BUILDING OFFICIAL

MHP 23027

Scale = 1:21.6

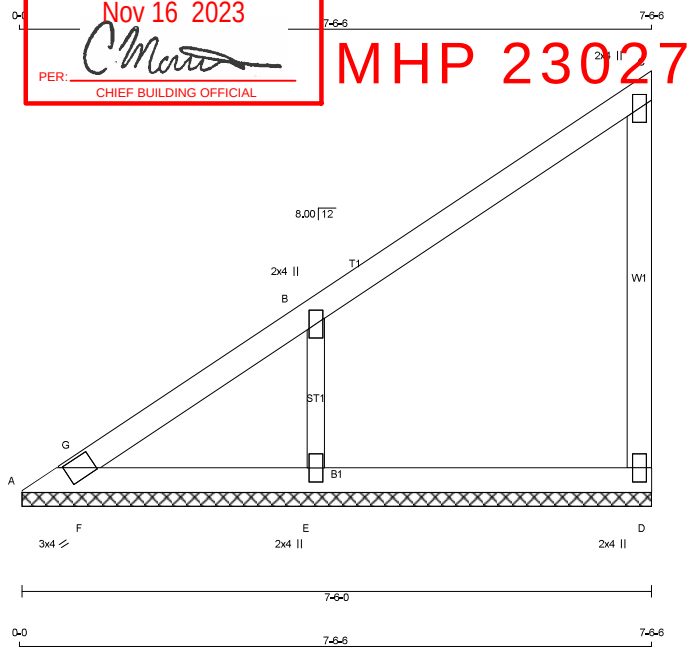

TOTAL WEIGHT = 25 lb [M]

LUMBER
N. L. G. A. RULES

CHORDS	SIZE		LUMBER	DESCR.
A - C	2x4	DRY	No.2	SPF
D - C	2x4	DRY	No.2	SPF
A - D	2x4	DRY	No.2	SPF
ALL WEBS	2x3	DRY	No.2	SPF

DRY: SEASONED LUMBER.

PLATES (table is in inches)

JT	TYPE	PLATES	W	LEN Y	X
A	TBM1-h	MT20	3.0	4.0	
B	TMW+w	MT20	2.0	4.0	
C	TMV+p	MT20	2.0	4.0	
D	BMV1+p	MT20	2.0	4.0	
E	BMW1+w	MT20	2.0	4.0	

DIMENSIONS, SUPPORTS AND LOADINGS SPECIFIED BY FABRICATOR TO BE VERIFIED BY BUILDING DESIGNER

BEARINGS

JT	FACTORED GROSS REACTION VERT	HORZ	MAXIMUM FACTORED GROSS REACTION DOWN	HORZ	UPLIFT	INPUT BRG IN-SX	REQRD BRG IN-SX
A	177	0	177	0	0	7-6-0	1-8
D	219	0	219	0	0	7-6-0	1-8
E	636	0	636	0	0	7-6-0	1-8

UNFACTORED REACTIONS

JT	1ST LCASE COMBINED	MAX./MIN. COMPONENT REACTIONS SNOW	LIVE	PERM.LIVE	WIND	DEAD	SOIL
A	123	90 / 0	0 / 0	0 / 0	0 / 0	34 / 0	0 / 0
D	153	111 / 0	0 / 0	0 / 0	0 / 0	42 / 0	0 / 0
E	445	321 / 0	0 / 0	0 / 0	0 / 0	124 / 0	0 / 0

BEARING MATERIAL TO BE SPF NO.2 OR BETTER AT JOINT(S) A, D, E

BRACING
TOP CHORD TO BE SHEATHED OR MAX. PURLIN SPACING = 6.25 FT.
MAX. UNBRACED BOTTOM CHORD LENGTH = 10.00 FT OR RIGID CEILING DIRECTLY APPLIED.

ALL PITCH BREAKS AND PERIMETER CORNER JOINTS MUST BE LATERALLY RESTRAINED.

LOADING
TOTAL LOAD CASES: (4)

CHORDS

MEMB. FR-TO	MAX. FACTORED FORCE (LBS)	FACTORED VERT. LOAD (PLF) FROM	TO	LC1	MAX CSI (LC)	MAX. UNBRAC LENGTH
A- G	-44 / 0	-119.4	-119.4	0.05 (1)		6.25
G- B	0 / 25	-119.4	-119.4	0.28 (1)		10.00
B- C	-27 / 0	-119.4	-119.4	0.28 (1)		6.25
D- C	-194 / 0	0.0	0.0	0.08 (1)		7.81
A- F	0 / 10	-18.2	-18.2	0.08 (1)		10.00
F- E	0 / 22	-18.2	-18.2	0.08 (1)		10.00
E- D	0 / 0	-18.2	-18.2	0.08 (4)		10.00

WEBS

MEMB. FR-TO	MAX. FACTORED FORCE (LBS)	MAX CSI (LC)
E- B	-527 / 0	0.08 (1)
F- G	-69 / 2	0.00 (1)

DESIGN CRITERIA

SPECIFIED LOADS:

TOP CH.	LL	=	34.8	PSF
	DL	=	6.0	PSF
BOT CH.	LL	=	0.0	PSF
	DL	=	7.3	PSF
TOTAL LOAD		=	48.1	PSF

SPACING = 24.0 IN. C/C

THIS TRUSS IS DESIGNED FOR RESIDENTIAL OR SMALL BUILDING REQUIREMENTS OF PART 9, NBCC 2015

THIS DESIGN COMPLIES WITH:
- PART 9 OF BCBC 2018 , NBC-2019AE
- PART 9 OF OBC 2012 (2019 AMENDMENT)
- CSA 086-14
- TPIC 2014

(55 % OF 48.1 P.S.F. G.S.L. PLUS 8.4 P.S.F. RAIN LOAD) EQUALS 34.8 P.S.F. SPECIFIED ROOF LIVE LOAD

CSI: TC=0.28/1.00 (B-G:1) , BC=0.08/1.00 (E-F:1) , WB=0.08/1.00 (B-E:1) , SSI=0.19/1.00 (B-C:1)

DOL LUMBER=1.00 NAIL=1.00 LS BEND=1.10 COMP=1.10 SHEAR=1.10 TENS= 1.10

COMPANION LIVE LOAD FACTOR = 1.00

TRUSS PLATE MANUFACTURER IS NOT RESPONSIBLE FOR QUALITY CONTROL IN THE TRUSS MANUFACTURING PLANT .

NAIL VALUES

PLATE	GRIP(DRY) (PSI) MAX	MIN	SHEAR (PLI) MAX	MIN	SECTION (PLI) MAX	MIN
MT20	650	371	1747	788	1987	1873

PLATE PLACEMENT TOL. = 0.250 inches

PLATE ROTATION TOL. = 5.0 Deg.

JSI GRIP= 0.34 (B) (INPUT = 0.90)
JSI METAL= 0.27 (B) (INPUT = 1.00)

MODULUS ENGINEERING LTD.

LICENSED PROFESSIONAL ENGINEER
07/05/2023
D. A. SHERMAN
100123373
PROVINCE OF ONTARIO

REVIEW FOR TRUSS COMPONENT ONLY

NOTE: ALTERING THIS DOCUMENT VOIDS THE ENGINEERS SEAL

WARNING - Verify design parameters and READ NOTES ON THIS AND INCLUDED IN MODULUS ENGINEERING LTD. NOTES ME-TCD01 (VER 06/2017) BEFORE USE.
Design valid for use only with Mitek connectors. This design is based only upon parameters shown, and is for individual building components. Applicability of design parameters and proper incorporation of component is responsibility of building designer - not truss designer. Bracing shown is for lateral support of individual web members only. Additional temporary bracing to ensure stability during construction is the responsibility of the erector. Additional permanent bracing of the overall structure is the responsibility of the building designer. For general guidance regarding fabrication, quality control, storage, delivery, erection and bracing, consult
TPIC Appendix G - Minimum quality Manufacturing Criteria available from **www.tpic.ca** and **BCSI-CANADA (Building Component Safety Information) available** from TPI, 781 N. Lee Street, Suite 312, Alexandria, VA 22314 or www.sbcindustry.com

KOTT

JOB NAME	TRUSS NAME	QUANTITY	PLY	JOB DESC.		DRWG NO.
T-RIVER 11-2	V07	1	1	TRUSS DESC.	ZADORRA ESTATES INC	ME23-5777-46

Kott, Uxbridge,ON

Version 8.630 S Mar 22 2023 MiTek Industries, Inc. Wed Jul 5 11:02:45 2023 Page 1
ID:oVFDr6Fdws2a9wd?_pY7R0zKcfG-9Y5YhfyaZDTRKPd6YDng?CCGjGM4o5SnKGhEdBz?8xe

CORPORATION OF THE CITY OF OSHAWA
TRUE COPY
OF PERMIT PLANS
Nov 16 2023
PER:
CHIEF BUILDING OFFICIAL

MHP 23027

Scale = 1:15.3

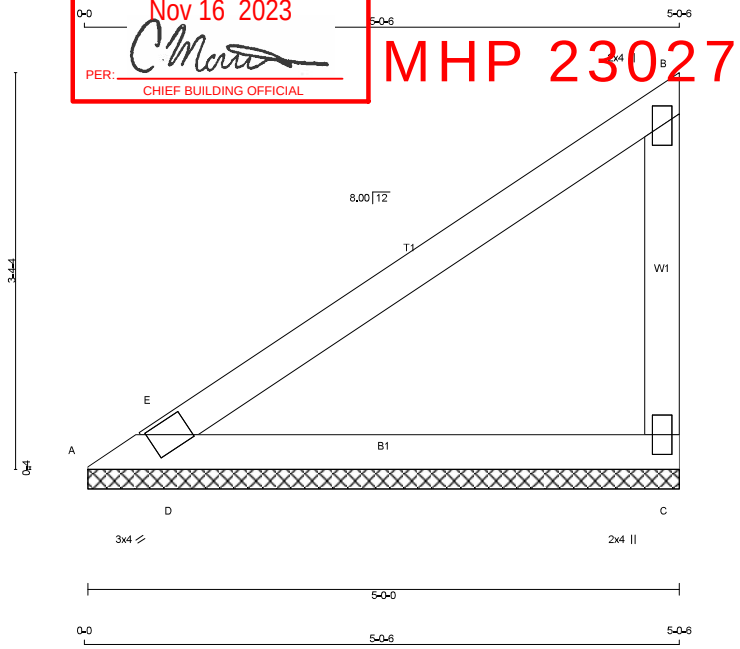

TOTAL WEIGHT = 15 lb [M]

LUMBER
N. L. G. A. RULES

CHORDS	SIZE		LUMBER	DESCR.
A - B	2x4	DRY	No.2	SPF
C - B	2x4	DRY	No.2	SPF
A - C	2x4	DRY	No.2	SPF

DRY: SEASONED LUMBER.

PLATES (table is in inches)

JT	TYPE	PLATES	W	LEN	Y	X
A	TBM1-h	MT20	3.0	4.0		
B	TMV+p	MT20	2.0	4.0		
C	BMV1+p	MT20	2.0	4.0		

DIMENSIONS, SUPPORTS AND LOADINGS SPECIFIED BY FABRICATOR TO BE VERIFIED BY BUILDING DESIGNER

BEARINGS

JT	FACTORED GROSS REACTION VERT	HORZ	MAXIMUM FACTORED GROSS REACTION DOWN	HORZ	UPLIFT	INPUT BRG	REQRD BRG
A	344	0	344	0	0	5-0-0	1-8
C	344	0	344	0	0	5-0-0	1-8

UNFACTORED REACTIONS

1ST LCASE MAX./MIN. COMPONENT REACTIONS

JT	COMBINED	SNOW	LIVE	PERM.LIVE	WIND	DEAD	SOIL
A	241	174 / 0	0 / 0	0 / 0	0 / 0	66 / 0	0 / 0
C	241	174 / 0	0 / 0	0 / 0	0 / 0	66 / 0	0 / 0

BEARING MATERIAL TO BE SPF NO.2 OR BETTER AT JOINT(S) A, C

BRACING
TOP CHORD TO BE SHEATHED OR MAX. PURLIN SPACING = 6.25 FT.
MAX. UNBRACED BOTTOM CHORD LENGTH = 6.25 FT OR RIGID CEILING DIRECTLY APPLIED.

ALL PITCH BREAKS AND PERIMETER CORNER JOINTS MUST BE LATERALLY RESTRAINED.

LOADING
TOTAL LOAD CASES: (4)

CHORDS

MEMB. FR-TO	MAX. FACTORED FORCE (LBS)	FACTORED VERT. LOAD (PLF) FROM	TO	LC1	MAX CSI (LC)	MAX. UNBRAC LENGTH
A- E	-15 / 0	-119.4	-119.4		0.06 (4)	6.25
E- B	0 / 4	-119.4	-119.4		0.36 (1)	10.00
C- B	-251 / 0	0.0	0.0		0.04 (1)	7.81
A- D	-52 / 0	-18.2	-18.2		0.32 (1)	6.25
D- C	0 / 0	-18.2	-18.2		0.32 (1)	10.00

WEBS

MEMB. FR-TO	MAX. FACTORED FORCE (LBS)	MAX CSI (LC)
D- E	-300 / 0	0.00 (1)

DESIGN CRITERIA

SPECIFIED LOADS:

TOP CH.	LL	=	34.8	PSF
	DL	=	6.0	PSF
BOT CH.	LL	=	0.0	PSF
	DL	=	7.3	PSF
TOTAL LOAD		=	48.1	PSF

SPACING = 24.0 IN. C/C

THIS TRUSS IS DESIGNED FOR RESIDENTIAL OR SMALL BUILDING REQUIREMENTS OF PART 9, NBCC 2015

THIS DESIGN COMPLIES WITH:
- PART 9 OF BCBC 2018 , NBC-2019AE
- PART 9 OF OBC 2012 (2019 AMENDMENT)
- CSA 086-14
- TPIC 2014

(55 % OF 48.1 P.S.F. G.S.L. PLUS 8.4 P.S.F. RAIN LOAD) EQUALS 34.8 P.S.F. SPECIFIED ROOF LIVE LOAD

CSI: TC=0.36/1.00 (B-E:1) , BC=0.32/1.00 (A-D:1) , WB=0.00/1.00 (D-E:1) , SSI=0.23/1.00 (A-D:1)

DOL LUMBER=1.00 NAIL=1.00 LS BEND=1.10 COMP=1.10 SHEAR=1.10 TENS= 1.10

COMPANION LIVE LOAD FACTOR = 1.00

TRUSS PLATE MANUFACTURER IS NOT RESPONSIBLE FOR QUALITY CONTROL IN THE TRUSS MANUFACTURING PLANT .

NAIL VALUES

PLATE	GRIP(DRY) (PSI) MAX	MIN	SHEAR (PLI) MAX	MIN	SECTION (PLI) MAX	MIN
MT20	650	371	1747	788	1987	1873

PLATE PLACEMENT TOL. = 0.250 inches

PLATE ROTATION TOL. = 5.0 Deg.

JSI GRIP= 0.22 (A) (INPUT = 0.90)
JSI METAL= 0.13 (B) (INPUT = 1.00)

MODULUS ENGINEERING LTD.

LICENSED PROFESSIONAL ENGINEER
07/05/2023
D. A. SHERMAN
100123373
PROVINCE OF ONTARIO

REVIEW FOR TRUSS COMPONENT ONLY

NOTE: ALTERING THIS DOCUMENT VOIDS THE ENGINEERS SEAL

WARNING - Verify design parameters and READ NOTES ON THIS AND INCLUDED IN MODULUS ENGINEERING LTD. NOTES ME-TCD01 (VER 06/2017) BEFORE USE.
Design valid for use only with Mitek connectors. This design is based only upon parameters shown, and is for individual building components. Applicability of design parameters and proper incorporation of component is responsibility of building designer - not truss designer. Bracing shown is for lateral support of individual web members only. Additional temporary bracing to ensure stability during construction is the responsibility of the erector. Additional permanent bracing of the overall structure is the responsibility of the building designer. For general guidance regarding fabrication, quality control, storage, delivery, erection and bracing, consult
TPIC Appendix G - Minimum quality Manufacturing Criteria available from **www.tpic.ca** and **BCSI-CANADA (Building Component Safety Information) available** from TPI, 781 N. Lee Street, Suite 312, Alexandria, VA 22314 or www.sbcindustry.com

KOTT