JOB NAME	TRUSS NAME	QUANTITY	PLY	JOB DESC.	DRWG NO.
T-RIVER 9-3	J02	3	1	ZADORRA ESTATES INC TRUSS DESC.	ME23-5775-14

Kott, Uxbridge,ON

Version 8.630 S Mar 22 2023 MiTek Industries, Inc. Wed Jul 5 08:43:19 2023 Page 1

ID:akA_Is?YGX_ucIN5I0pn2xzMVXv-64bsr1jtnmSTfk3ESDhpx_iZWu7odQMOZg7Y?5z?B_M

CORPORATION OF THE CITY OF OSHAWA
TRUE COPY
OF PERMIT PLANS
Nov 22 2023
PER:
CHIEF BUILDING OFFICIAL

MHP 23026

Scale = 1:14.7

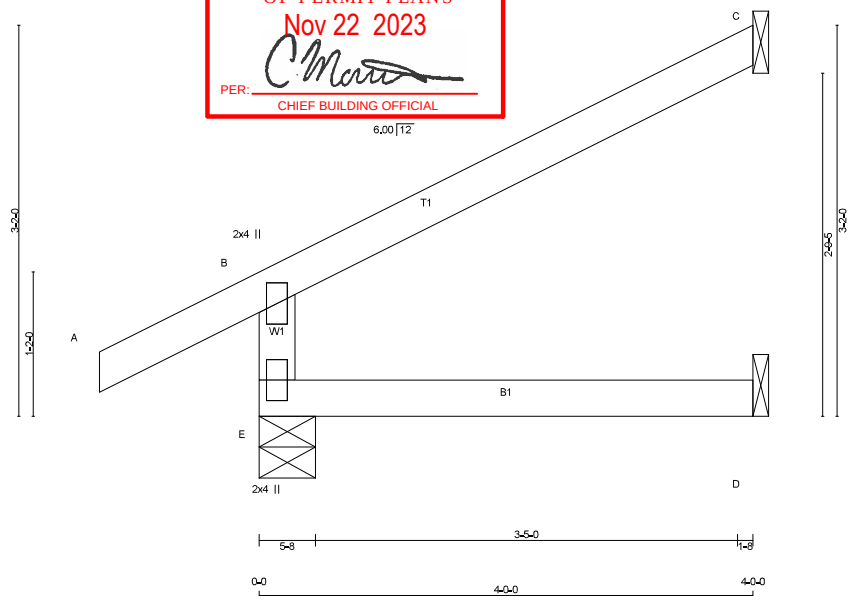

TOTAL WEIGHT = 3 X 12 = 37 lb [M]

LUMBER
N. L. G. A. RULES

CHORDS	SIZE		LUMBER	DESCR.
E - B	2x4	DRY	No.2	SPF
A - C	2x4	DRY	No.2	SPF
E - D	2x4	DRY	No.2	SPF

DRY: SEASONED LUMBER.

PLATES (table is in inches)

JT	TYPE	PLATES	W	LEN	Y	X
B	TMV+p	MT20	2.0	4.0		
E	BMV1+p	MT20	2.0	4.0		

DIMENSIONS, SUPPORTS AND LOADINGS SPECIFIED BY FABRICATOR TO BE VERIFIED BY BUILDING DESIGNER

BEARINGS

JT	FACTORED GROSS REACTION VERT	HORZ	MAXIMUM GROSS REACTION DOWN	HORZ	UPLIFT	INPUT BRG IN-SX	REQRD BRG IN-SX
E	503	0	503	0	0	5-8	1-8
C	179	0	179	0	0	1-8	1-8
D	31	0	35	0	0	1-8	1-8

SEE MITEK STANDARD DETAIL MSD2015-H FOR CONNECTION TO JOINT(S) C , D

UNFACTORED REACTIONS

JT	1ST LCASE COMBINED	MAX./MIN. COMPONENT REACTIONS SNOW	LIVE	PERM.LIVE	WIND	DEAD	SOIL
E	348	268 / 0	0 / 0	0 / 0	0 / 0	80 / 0	0 / 0
C	123	105 / 0	0 / 0	0 / 0	0 / 0	18 / 0	0 / 0
D	25	0 / 0	0 / 0	0 / 0	0 / 0	25 / 0	0 / 0

BEARING MATERIAL TO BE SPF NO.2 OR BETTER AT JOINT(S) E

BRACING
TOP CHORD TO BE SHEATHED OR MAX. PURLIN SPACING = 6.25 FT.
MAX. UNBRACED BOTTOM CHORD LENGTH = 10.00 FT OR RIGID CEILING DIRECTLY APPLIED.

ALL PITCH BREAKS AND PERIMETER CORNER JOINTS MUST BE LATERALLY RESTRAINED.

LOADING
TOTAL LOAD CASES: (4)

CHORDS

MEMB. FR-TO	MAX. FACTORED FORCE (LBS)	FACTORED VERT. LOAD (PLF) FROM	TO	LC1 CSI (LC)	MAX UNBRAC LENGTH
E- B	-460 / 0	0.0	0.0	0.05 (4)	7.81
A- B	0 / 36	-119.4	-119.4	0.16 (1)	10.00
B- C	-27 / 0	-119.4	-119.4	0.32 (1)	6.25
E- D	0 / 0	-18.2	-18.2	0.06 (4)	10.00

WEBS

MEMB.	MAX. FACTORED FORCE (LBS)	MAX CSI (LC)

DESIGN CRITERIA

SPECIFIED LOADS:

TOP CH.	LL	=	34.8	PSF
	DL	=	6.0	PSF
BOT CH.	LL	=	0.0	PSF
	DL	=	7.3	PSF
TOTAL LOAD		=	48.1	PSF

SPACING = 24.0 IN. C/C

THIS TRUSS IS DESIGNED FOR RESIDENTIAL OR SMALL BUILDING REQUIREMENTS OF PART 9, NBCC 2015

THIS DESIGN COMPLIES WITH:
- PART 9 OF BCBC 2018 , NBC-2019AE
- PART 9 OF OBC 2012 (2019 AMENDMENT)
- CSA 086-14
- TPIC 2014

DESIGN ASSUMPTIONS
-OVERHANG NOT TO BE ALTERED OR CUT OFF.

(55 % OF 48.1 P.S.F. G.S.L. PLUS 8.4 P.S.F. RAIN LOAD) EQUALS 34.8 P.S.F. SPECIFIED ROOF LIVE LOAD

ALLOWABLE DEFL.(LL)= L/360 (0.19")
CALCULATED VERT. DEFL.(LL) = L/ 999 (0.00")
ALLOWABLE DEFL.(TL)= L/360 (0.19")
CALCULATED VERT. DEFL.(TL) = L/ 999 (0.01")

CSI: TC=0.32/1.00 (B-C:1) , BC=0.06/1.00 (D-E:4) , WB=0.00/1.00 (n/a:0) , SSI=0.21/1.00 (B-C:1)

DOL LUMBER=1.00 NAIL=1.00 LS BEND=1.10 COMP=1.10 SHEAR=1.10 TENS= 1.10

COMPANION LIVE LOAD FACTOR = 1.00

TRUSS PLATE MANUFACTURER IS NOT RESPONSIBLE FOR QUALITY CONTROL IN THE TRUSS MANUFACTURING PLANT .

NAIL VALUES

PLATE	GRIP(DRY) (PSI) MAX	MIN	SHEAR (PLI) MAX	MIN	SECTION (PLI) MAX	MIN
MT20	650	371	1747	788	1987	1873

PLATE PLACEMENT TOL. = 0.250 inches

PLATE ROTATION TOL. = 5.0 Deg.

JSI GRIP= 0.26 (B) (INPUT = 0.90)
JSI METAL= 0.19 (B) (INPUT = 1.00)

MODULUS ENGINEERING LTD.

LICENSED PROFESSIONAL ENGINEER
07/05/2023
D. A. SHERMAN
100123373
PROVINCE OF ONTARIO

REVIEW FOR TRUSS COMPONENT ONLY

NOTE: ALTERING THIS DOCUMENT VOIDS THE ENGINEERS SEAL

WARNING - Verify design parameters and READ NOTES ON THIS AND INCLUDED IN MODULUS ENGINEERING LTD. NOTES ME-TCD01 (VER 06/2017) BEFORE USE.
Design valid for use only with Mitek connectors. This design is based only upon parameters shown, and is for individual building components. Applicability of design parameters and proper incorporation of component is responsibility of building designer - not truss designer. Bracing shown is for lateral support of individual web members only. Additional temporary bracing to ensure stability during construction is the responsibility of the erector. Additional permanent bracing of the overall structure is the responsibility of the building designer. For general guidance regarding fabrication, quality control, storage, delivery, erection and bracing, consult
TPIC Appendix G - Minimum quality Manufacturing Criteria available from **www.tpic.ca** and **BCSI-CANADA (Building Component Safety Information) available** from TPI, 781 N. Lee Street, Suite 312, Alexandria, VA 22314 or www.sbcindustry.com

KOTT

JOB NAME	TRUSS NAME	QUANTITY	PLY	JOB DESC.	DRWG NO.
T-RIVER 9-3	J02A	2	1	ZADORRA ESTATES INC TRUSS DESC.	ME23-5775-15

Kott, Uxbridge,ON

Version 8.630 S Mar 22 2023 MiTek Industries, Inc. Wed Jul 5 08:43:20 2023 Page 1

!DvakA_ls?YGX_ucIN5I0pn2xzMVXv-aG8E3NjWX4aKHudQ0wC2TBFnuIT1MtcXoKs5XYz?B_L

CORPORATION OF THE CITY OF OSHAWA
TRUE COPY
OF PERMIT PLANS
Nov 22 2023
PER:
CHIEF BUILDING OFFICIAL

MHP 23026

Scale = 1:10.6

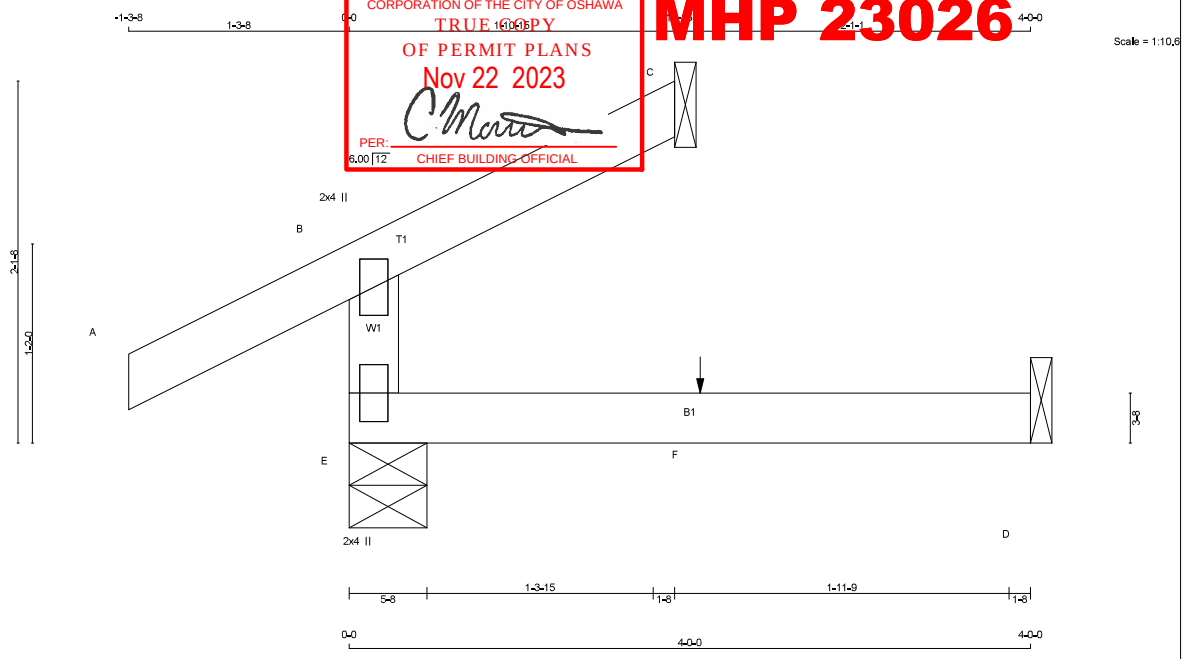

TOTAL WEIGHT = 2 X 10 = 19 lb [M]

LUMBER
N. L. G. A. RULES

CHORDS	SIZE		LUMBER	DESCR.
E - B	2x4	DRY	No.2	SPF
A - C	2x4	DRY	No.2	SPF
E - D	2x4	DRY	No.2	SPF

DRY: SEASONED LUMBER.

PLATES (table is in inches)

JT	TYPE	PLATES	W	LEN	Y	X
B	TMV+p	MT20	2.0	4.0		
E	BMV1+p	MT20	2.0	4.0		

DIMENSIONS, SUPPORTS AND LOADINGS SPECIFIED BY FABRICATOR TO BE VERIFIED BY BUILDING DESIGNER

BEARINGS

JT	FACTORED GROSS REACTION VERT	HORZ	MAXIMUM GROSS REACTION DOWN	HORZ	UPLIFT	FACTORED INPUT BRG IN-SX	REQRD BRG IN-SX
E	346	0	346	0	0	5-8	1-8
C	86	0	86	0	0	1-8	1-8
D	31	0	35	0	0	1-8	1-8

SEE MITEK STANDARD DETAIL MSD2015-H FOR CONNECTION TO JOINT(S) C , D

UNFACTORED REACTIONS

MAX./MIN. COMPONENT REACTIONS

JT	1ST LCASE COMBINED	SNOW	LIVE	PERM.LIVE	WIND	DEAD	SOIL
E	241	177 / 0	0 / 0	0 / 0	0 / 0	64 / 0	0 / 0
C	59	50 / 0	0 / 0	0 / 0	0 / 0	9 / 0	0 / 0
D	25	0 / 0	0 / 0	0 / 0	0 / 0	25 / 0	0 / 0

BEARING MATERIAL TO BE SPF NO.2 OR BETTER AT JOINT(S) E, C

BRACING
TOP CHORD TO BE SHEATHED OR MAX. PURLIN SPACING = 6.25 FT.
MAX. UNBRACED BOTTOM CHORD LENGTH = 10.00 FT OR RIGID CEILING DIRECTLY APPLIED.

ALL PITCH BREAKS AND PERIMETER CORNER JOINTS MUST BE LATERALLY RESTRAINED.

LOADING
TOTAL LOAD CASES: (4)

CHORDS

MEMB.	MAX. FORCE (LBS)	FACTORED VERT. LOAD (PLF)	LC1	MAX CSI (LC)	MAX. UNBRAC LENGTH FR-TO FROM	TO
E- B	-304 / 0	0.0	0.0	0.05 (4)	7.81	
A- B	0 / 36	-119.4	-119.4	0.16 (1)	10.00	
B- C	-12 / 0	-119.4	-119.4	0.07 (1)	6.25	
E- F	0 / 0	-18.2	-18.2	0.06 (4)	10.00	
F- D	0 / 0	-18.2	-18.2	0.06 (4)	10.00	

WEBS

MEMB.	MAX. FORCE (LBS)	MAX CSI (LC)

FACTORED CONCENTRATED LOADS (LBS)

JT	LOC.	LC1	MAX-	MAX+	FACE	DIR.	TYPE	HEEL	CONN.
F	2-0-12	1	1	---	BACK	VERT	TOTAL	---	C1

CONNECTION REQUIREMENTS

1) **C1:** A SUITABLE HANGER/MECHANICAL CONNECTION IS REQUIRED.

DESIGN CRITERIA

SPECIFIED LOADS:

TOP CH.	LL	=	34.8	PSF
	DL	=	6.0	PSF
BOT CH.	LL	=	0.0	PSF
	DL	=	7.3	PSF
TOTAL LOAD		=	48.1	PSF

SPACING = 24.0 IN. C/C

THIS TRUSS IS DESIGNED FOR RESIDENTIAL OR SMALL BUILDING REQUIREMENTS OF PART 9, NBCC 2015

THIS DESIGN COMPLIES WITH:
- PART 9 OF BCBC 2018 , NBC-2019AE
- PART 9 OF OBC 2012 (2019 AMENDMENT)
- CSA 086-14
- TPIC 2014

DESIGN ASSUMPTIONS
-OVERHANG NOT TO BE ALTERED OR CUT OFF.

(55 % OF 48.1 P.S.F. G.S.L. PLUS 8.4 P.S.F. RAIN LOAD) EQUALS 34.8 P.S.F. SPECIFIED ROOF LIVE LOAD

ALLOWABLE DEFL.(LL)= L/360 (0.19")
CALCULATED VERT. DEFL.(LL) = L/ 999 (0.00")
ALLOWABLE DEFL.(TL)= L/360 (0.19")
CALCULATED VERT. DEFL.(TL) = L/ 999 (0.01")

CSI: TC=0.16/1.00 (A-B:1) , BC=0.06/1.00 (D-E:4) , WB=0.00/1.00 (n/a:0) , SSI=0.11/1.00 (A-B:1)

DOL LUMBER=1.00 NAIL=1.00 LS BEND=1.10 COMP=1.10 SHEAR=1.10 TENS= 1.10

COMPANION LIVE LOAD FACTOR = 1.00

TRUSS PLATE MANUFACTURER IS NOT RESPONSIBLE FOR QUALITY CONTROL IN THE TRUSS MANUFACTURING PLANT .

NAIL VALUES

PLATE	GRIP(DRY) (PSI) MAX	MIN	SHEAR (PLI) MAX	MIN	SECTION (PLI) MAX	MIN
MT20	650	371	1747	788	1987	1873

PLATE PLACEMENT TOL. = 0.250 inches

PLATE ROTATION TOL. = 5.0 Deg.

JSI GRIP= 0.17 (B) (INPUT = 0.90)
JSI METAL= 0.13 (B) (INPUT = 1.00)

MODULUS ENGINEERING LTD.

LICENSED PROFESSIONAL ENGINEER
07/05/2023
D. A. SHERMAN
100123373
PROVINCE OF ONTARIO

REVIEW FOR TRUSS COMPONENT ONLY

NOTE: ALTERING THIS DOCUMENT VOIDS THE ENGINEERS SEAL

WARNING - Verify design parameters and READ NOTES ON THIS AND INCLUDED IN MODULUS ENGINEERING LTD. NOTES ME-TCD01 (VER 06/2017) BEFORE USE.
Design valid for use only with Mitek connectors. This design is based only upon parameters shown, and is for individual building components. Applicability of design parameters and proper incorporation of component is responsibility of building designer - not truss designer. Bracing shown is for lateral support of individual web members only. Additional temporary bracing to ensure stability during construction is the responsibility of the erector. Additional permanent bracing of the overall structure is the responsibility of the building designer. For general guidance regarding fabrication, quality control, storage, delivery, erection and bracing, consult
TPIC Appendix G - Minimum quality Manufacturing Criteria available from **www.tpic.ca** and **BCSI-CANADA (Building Component Safety Information) available** from TPI, 781 N. Lee Street, Suite 312, Alexandria, VA 22314 or www.sbcindustry.com

KOTT

JOB NAME	TRUSS NAME	QUANTITY	PLY	JOB DESC.	DRWG NO.
T-RIVER 9-3	J03	2	1	ZADORRA ESTATES INC TRUSS DESC.	ME23-5775-16

Kott, Uxbridge,ON

Version 8.630 S Mar 22 2023 MiTek Industries, Inc. Wed Jul 5 08:43:21 2023 Page 1

ID:zkA_ls?YGX_ucIN5I0pn2xzMVXv-2SicGik8IOiBu2CdaejH0PnyShpv5Jsh1_cf3_z?B_K

CORPORATION OF THE CITY OF OSHAWA
TRUE COPY
OF PERMIT PLANS
Nov 22 2023
PER:
CHIEF BUILDING OFFICIAL

MHP 23026

Scale = 1:18.2

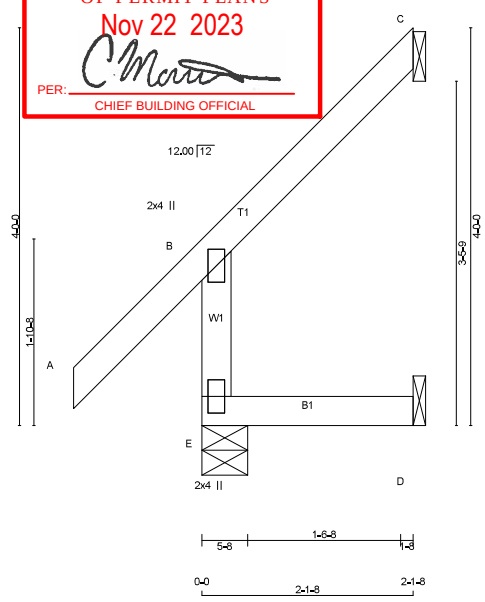

TOTAL WEIGHT = 2 X 10 = 20 lb [M]

LUMBER
N. L. G. A. RULES

CHORDS	SIZE		LUMBER	DESCR.
E - B	2x4	DRY	No.2	SPF
A - C	2x4	DRY	No.2	SPF
E - D	2x4	DRY	No.2	SPF

DRY: SEASONED LUMBER.

PLATES (table is in inches)

JT	TYPE	PLATES	W	LEN	Y	X
B	TMV+p	MT20	2.0	4.0		
E	BMV1+p	MT20	2.0	4.0		

DIMENSIONS, SUPPORTS AND LOADINGS SPECIFIED BY FABRICATOR TO BE VERIFIED BY BUILDING DESIGNER

BEARINGS

JT	FACTORED GROSS REACTION VERT	HORZ	MAXIMUM GROSS REACTION DOWN	HORZ	UPLIFT	FACTORED INPUT BRG IN-SX	REQRD BRG IN-SX
E	345	0	345	0	0	5-8	1-8
C	96	0	96	0	0	1-8	1-8
D	18	0	20	0	0	1-8	1-8

SEE MITEK STANDARD DETAIL MSD2015-H FOR CONNECTION TO JOINT(S) C , D

UNFACTORED REACTIONS

MAX./MIN. COMPONENT REACTIONS

JT	1ST LCASE COMBINED	SNOW	LIVE	PERM.LIVE	WIND	DEAD	SOIL
E	238	189 / 0	0 / 0	0 / 0	0 / 0	49 / 0	0 / 0
C	66	56 / 0	0 / 0	0 / 0	0 / 0	10 / 0	0 / 0
D	14	0 / 0	0 / 0	0 / 0	0 / 0	14 / 0	0 / 0

BEARING MATERIAL TO BE SPF NO.2 OR BETTER AT JOINT(S) E

BRACING
TOP CHORD TO BE SHEATHED OR MAX. PURLIN SPACING = 6.25 FT.
MAX. UNBRACED BOTTOM CHORD LENGTH = 10.00 FT OR RIGID CEILING DIRECTLY APPLIED.

ALL PITCH BREAKS AND PERIMETER CORNER JOINTS MUST BE LATERALLY RESTRAINED.

LOADING
TOTAL LOAD CASES: (5)

CHORDS

MEMB. FR-TO	MAX. FACTORED FORCE (LBS)	FACTORED VERT. LOAD (PLF) FROM	TO	LC1	MAX CSI (LC)	MAX. UNBRAC LENGTH
E- B	-324 / 0	0.0	0.0	0.01 (4)		7.81
A- B	0 / 59	-119.4	-119.4	0.17 (1)		10.00
B- C	-22 / 0	-119.4	-119.4	0.09 (1)		6.25
E- D	0 / 0	-18.2	-18.2	0.02 (4)		10.00

WEBS

MEMB. FR-TO	MAX. FACTORED FORCE (LBS)	MAX CSI (LC)

CANTILEVER ANALYSIS HAS BEEN CONSIDERED IN THIS DESIGN

PATTERN-LOADING CHECK APPLIED TO THIS TRUSS.

DESIGN CRITERIA

SPECIFIED LOADS:

TOP CH.	LL	=	34.8	PSF
	DL	=	6.0	PSF
BOT CH.	LL	=	0.0	PSF
	DL	=	7.3	PSF
TOTAL LOAD		=	48.1	PSF

SPACING = 24.0 IN. C/C

THIS TRUSS IS DESIGNED FOR RESIDENTIAL OR SMALL BUILDING REQUIREMENTS OF PART 9, NBCC 2015

THIS DESIGN COMPLIES WITH:
- PART 9 OF BCBC 2018 , NBC-2019AE
- PART 9 OF OBC 2012 (2019 AMENDMENT)
- CSA 086-14
- TPIC 2014

DESIGN ASSUMPTIONS
-OVERHANG NOT TO BE ALTERED OR CUT OFF.

(55 % OF 48.1 P.S.F. G.S.L. PLUS 8.4 P.S.F. RAIN LOAD) EQUALS 34.8 P.S.F. SPECIFIED ROOF LIVE LOAD

ALLOWABLE DEFL.(LL)= L/360 (0.19")
CALCULATED VERT. DEFL.(LL) = L/ 999 (0.00")
ALLOWABLE DEFL.(TL)= L/360 (0.19")
CALCULATED VERT. DEFL.(TL) = L/ 999 (0.00")

CSI: TC=0.17/1.00 (A-B:1) , BC=0.02/1.00 (D-E:4) , WB=0.00/1.00 (n/a:0) , SSI=0.09/1.00 (A-B:1)

DOL LUMBER=1.00 NAIL=1.00 LS BEND=1.10 COMP=1.10 SHEAR=1.10 TENS= 1.10

COMPANION LIVE LOAD FACTOR = 1.00

TRUSS PLATE MANUFACTURER IS NOT RESPONSIBLE FOR QUALITY CONTROL IN THE TRUSS MANUFACTURING PLANT .

NAIL VALUES

PLATE	GRIP(DRY) (PSI) MAX	MIN	SHEAR (PLI) MAX	MIN	SECTION (PLI) MAX	MIN
MT20	650	371	1747	788	1987	1873

PLATE PLACEMENT TOL. = 0.250 inches

PLATE ROTATION TOL. = 5.0 Deg.

JSI GRIP= 0.24 (B) (INPUT = 0.90)
JSI METAL= 0.17 (B) (INPUT = 1.00)

MODULUS ENGINEERING LTD.

LICENSED PROFESSIONAL ENGINEER
07/05/2023
D. A. SHERMAN
100123373
PROVINCE OF ONTARIO

REVIEW FOR TRUSS COMPONENT ONLY

NOTE: ALTERING THIS DOCUMENT VOIDS THE ENGINEERS SEAL

WARNING - Verify design parameters and READ NOTES ON THIS AND INCLUDED IN MODULUS ENGINEERING LTD. NOTES ME-TCD01 (VER 06/2017) BEFORE USE.
Design valid for use only with Mitek connectors. This design is based only upon parameters shown, and is for individual building components. Applicability of design parameters and proper incorporation of component is responsibility of building designer - not truss designer. Bracing shown is for lateral support of individual web members only. Additional temporary bracing to ensure stability during construction is the responsibility of the erector. Additional permanent bracing of the overall structure is the responsibility of the building designer. For general guidance regarding fabrication, quality control, storage, delivery, erection and bracing, consult
TPIC Appendix G - Minimum quality Manufacturing Criteria available from **www.tpic.ca** and **BCSI-CANADA (Building Component Safety Information) available** from TPI, 781 N. Lee Street, Suite 312, Alexandria, VA 22314 or www.sbcindustry.com

KOTT

JOB NAME	TRUSS NAME	QUANTITY	PLY	JOB DESC.	DRWG NO.
T-RIVER 9-3	J03A	2	1	ZADORRA ESTATES INC TRUSS DESC.	ME23-5775-17

Kott, Uxbridge,ON

Version 8.630 S Mar 22 2023 MiTek Industries, Inc. Wed Jul 5 08:43:22 2023 Page 1

ID:zkA_Io?YGX_ucIN5I0pn2xzMVXv-WfG_U2Im3hq2WCnp8LEWZcK7C58xqm6qFeLCcQz?B_J

CORPORATION OF THE CITY OF OSHAWA
TRUE COPY
OF PERMIT PLANS
Nov 22 2023
PER: CHIEF BUILDING OFFICIAL

MHP 23026

Scale = 1:14.0

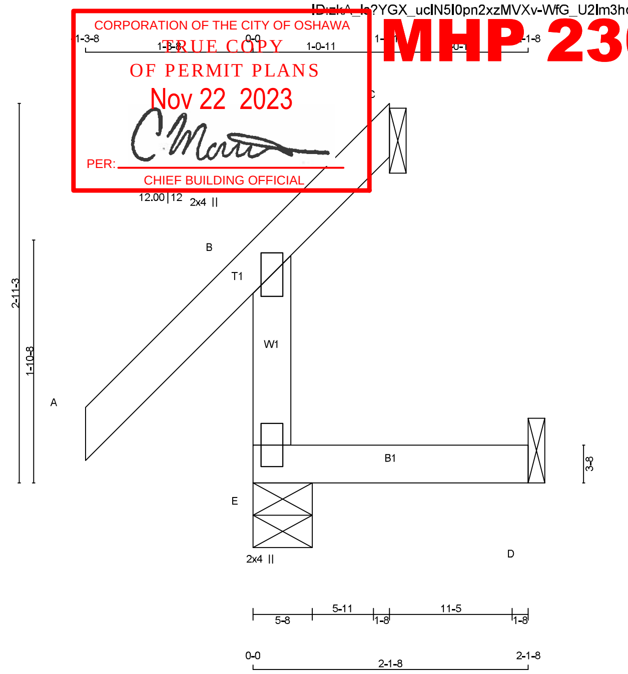

TOTAL WEIGHT = 2 X 8 = 16 lb
[M]

LUMBER
N. L. G. A. RULES

CHORDS	SIZE		LUMBER	DESCR.
E - B	2x4	DRY	No.2	SPF
A - C	2x4	DRY	No.2	SPF
E - D	2x4	DRY	No.2	SPF

DRY: SEASONED LUMBER.

PLATES (table is in inches)

JT	TYPE	PLATES	W	LEN	Y	X
B	TMV+p	MT20	2.0	4.0		
E	BMV1+p	MT20	2.0	4.0		

DIMENSIONS, SUPPORTS AND LOADINGS SPECIFIED BY FABRICATOR TO BE VERIFIED BY BUILDING DESIGNER

BEARINGS

JT	FACTORED GROSS REACTION VERT	HORZ	MAXIMUM FACTORED GROSS REACTION DOWN	HORZ	UPLIFT	INPUT BRG IN-SX	REQRD BRG IN-SX
E	348	0	348	0	0	5-8	1-8
C	-26	0	0	0	-82	1-8	1-8
D	9	0	19	0	0	1-8	1-8

SEE MITEK STANDARD DETAIL MSD2015-H FOR CONNECTION TO JOINT(S) C , D

PROVIDE ANCHORAGE AT BEARING JOINT C FOR 150 LBS FACTORED UPLIFT

UNFACTORED REACTIONS

JT	1ST LCASE COMBINED	MAX./MIN. COMPONENT REACTIONS SNOW	LIVE	PERM.LIVE	WIND	DEAD	SOIL
E	240	193 / 0	0 / 0	0 / 0	0 / 0	48 / 0	0 / 0
C	-18	0 / -52	0 / 0	0 / 0	0 / 0	0 / -1	0 / 0
D	8	0 / -6	0 / 0	0 / 0	0 / 0	14 / 0	0 / 0

BEARING MATERIAL TO BE SPF NO.2 OR BETTER AT JOINT(S) E, C

BRACING
TOP CHORD TO BE SHEATHED OR MAX. PURLIN SPACING = 6.25 FT.
MAX. UNBRACED BOTTOM CHORD LENGTH = 10.00 FT OR RIGID CEILING DIRECTLY APPLIED.

ALL PITCH BREAKS AND PERIMETER CORNER JOINTS MUST BE LATERALLY RESTRAINED.

LOADING
TOTAL LOAD CASES: (5)

CHORDS MEMB. FR-TO	MAX. FACTORED FORCE (LBS)	FACTORED VERT. LOAD LC1 (PLF) FROM	TO	MAX CSI (LC)	MAX. UNBRAC LENGTH	WEBS MEMB. FR-TO	MAX. FACTORED FORCE (LBS)	MAX CSI (LC)
E- B	-319 / 0	0.0	0.0	0.03 (5)	7.81			
A- B	0 / 59	-119.4	-119.4	0.17 (1)	10.00			
B- C	-63 / 0	-119.4	-119.4	0.13 (1)	6.25			
E- D	0 / 0	-18.2	-18.2	0.03 (5)	10.00			

CANTILEVER ANALYSIS HAS BEEN CONSIDERED IN THIS DESIGN

PATTERN-LOADING CHECK APPLIED TO THIS TRUSS.

DESIGN CRITERIA

SPECIFIED LOADS:

TOP CH.	LL =	34.8	PSF
	DL =	6.0	PSF
BOT CH.	LL =	0.0	PSF
	DL =	7.3	PSF
TOTAL LOAD	=	48.1	PSF

SPACING = 24.0 IN. C/C

THIS TRUSS IS DESIGNED FOR RESIDENTIAL OR SMALL BUILDING REQUIREMENTS OF PART 9, NBCC 2015

THIS DESIGN COMPLIES WITH:
- PART 9 OF BCBC 2018 , NBC-2019AE
- PART 9 OF OBC 2012 (2019 AMENDMENT)
- CSA 086-14
- TPIC 2014

DESIGN ASSUMPTIONS
-OVERHANG NOT TO BE ALTERED OR CUT OFF.

(55 % OF 48.1 P.S.F. G.S.L. PLUS 8.4 P.S.F. RAIN LOAD) EQUALS 34.8 P.S.F. SPECIFIED ROOF LIVE LOAD

ALLOWABLE DEFL.(LL)= L/360 (0.19")
CALCULATED VERT. DEFL.(LL) = L/ 999 (0.00")
ALLOWABLE DEFL.(TL)= L/360 (0.19")
CALCULATED VERT. DEFL.(TL) = L/ 999 (0.00")

CSI: TC=0.17/1.00 (A-B:1) , BC=0.03/1.00 (D-E:5) , WB=0.00/1.00 (n/a:0) , SSI=0.09/1.00 (A-B:1)

DOL LUMBER=1.00 NAIL=1.00 LS BEND=1.10 COMP=1.10 SHEAR=1.10 TENS= 1.10

COMPANION LIVE LOAD FACTOR = 1.00

TRUSS PLATE MANUFACTURER IS NOT RESPONSIBLE FOR QUALITY CONTROL IN THE TRUSS MANUFACTURING PLANT .

NAIL VALUES

PLATE	GRIP(DRY) (PSI) MAX	MIN	SHEAR (PLI) MAX	MIN	SECTION (PLI) MAX	MIN
MT20	650	371	1747	788	1987	1873

PLATE PLACEMENT TOL. = 0.250 inches

PLATE ROTATION TOL. = 5.0 Deg.

JSI GRIP= 0.24 (B) (INPUT = 0.90)
JSI METAL= 0.17 (B) (INPUT = 1.00)

MODULUS ENGINEERING LTD.

REVIEW FOR TRUSS COMPONENT ONLY

NOTE: ALTERING THIS DOCUMENT VOIDS THE ENGINEERS SEAL

WARNING - Verify design parameters and READ NOTES ON THIS AND INCLUDED IN MODULUS ENGINEERING LTD. NOTES ME-TCD01 (VER 06/2017) BEFORE USE.
Design valid for use only with Mitek connectors. This design is based only upon parameters shown, and is for individual building components. Applicability of design parameters and proper incorporation of component is responsibility of building designer - not truss designer. Bracing shown is for lateral support of individual web members only. Additional temporary bracing to ensure stability during construction is the responsibility of the erector. Additional permanent bracing of the overall structure is the responsibility of the building designer. For general guidance regarding fabrication, quality control, storage, delivery, erection and bracing, consult **TPIC Appendix G - Minimum quality Manufacturing Criteria** available from **www.tpic.ca** and **BCSI-CANADA (Building Component Safety Information) available** from TPI, 781 N. Lee Street, Suite 312, Alexandria, VA 22314 or www.sbcindustry.com

KOTT

JOB NAME	TRUSS NAME	QUANTITY	PLY	JOB DESC.	DRWG NO.
T-RIVER 9-3	J03B	1	1	ZADORRA ESTATES INC TRUSS DESC.	ME23-5775-18

Kott, Uxbridge,ON

Version 8.630 S Mar 22 2023 MiTek Industries, Inc. Wed Jul 5 08:43:24 2023 Page 1

ID:zkA_ls?YGX_ucIN5I0pn2xzMVXv-T1OIvkm0bJ4mIVxCFmH_e1PTuvpoIgb7jyqJgJz?B_H

CORPORATION OF THE CITY OF OSHAWA
TRUE COPY
OF PERMIT PLANS
Nov 22 2023
PER:
CHIEF BUILDING OFFICIAL

MHP 23026

Scale = 1:9.9

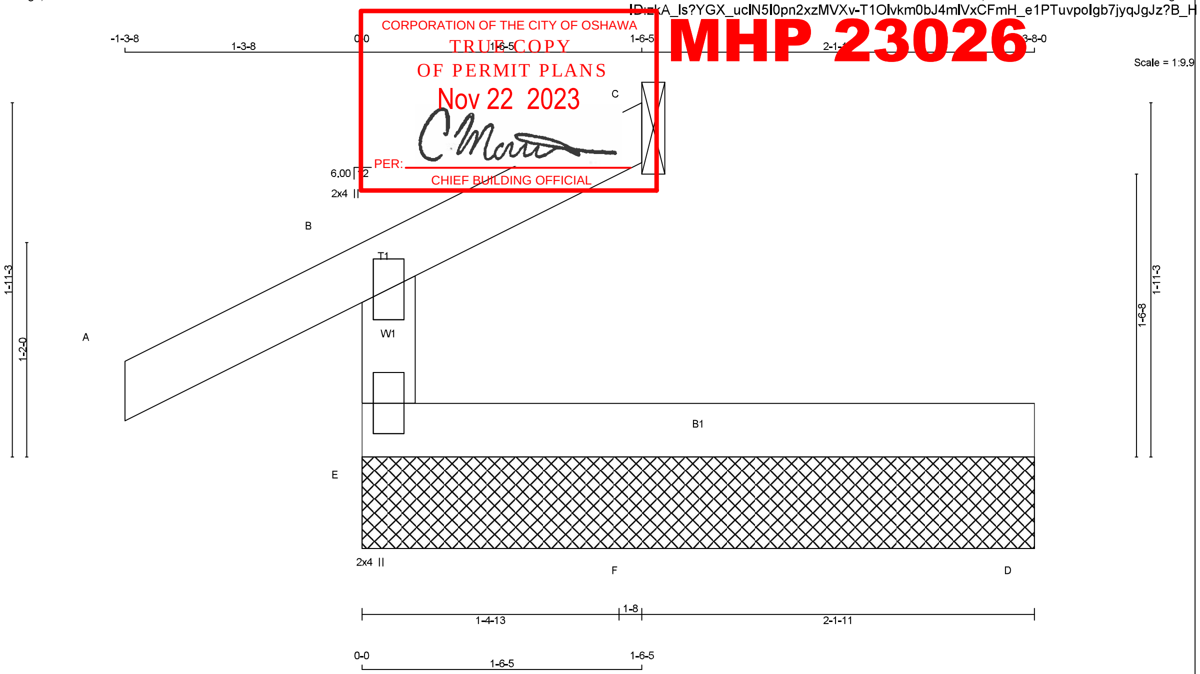

TOTAL WEIGHT = 9 lb

[M]

LUMBER

N. L. G. A. RULES

CHORDS	SIZE		LUMBER	DESCR.
E - B	2x4	DRY	No.2	SPF
A - C	2x4	DRY	No.2	SPF
E - D	2x4	DRY	No.2	SPF

DRY: SEASONED LUMBER.

PLATES (table is in inches)

JT	TYPE	PLATES	W	LEN	Y	X
B	TMV+p	MT20	2.0	4.0		
E	BMV1+p	MT20	2.0	4.0		

MODULUS ENGINEERING LTD.

LICENSED PROFESSIONAL ENGINEER
07/05/2023
D. A. SHERMAN
100123373
PROVINCE OF ONTARIO

REVIEW FOR TRUSS COMPONENT ONLY

NOTE: ALTERING THIS DOCUMENT VOIDS THE ENGINEERS SEAL

DIMENSIONS, SUPPORTS AND LOADINGS SPECIFIED BY FABRICATOR TO BE VERIFIED BY BUILDING DESIGNER

BEARINGS

	FACTORED GROSS REACTION		MAXIMUM FACTORED GROSS REACTION			INPUT BRG	REQRD BRG
JT	VERT	HORZ	DOWN	HORZ	UPLIFT	IN-SX	IN-SX
E	359	0	359	0	0	3-8-0	1-8
C	19	0	82	0	-64	1-8	1-8
D	33	0	37	0	0	3-8-0	1-8

SEE MITEK STANDARD DETAIL MSD2015-H FOR CONNECTION TO JOINT(S) C

PROVIDE ANCHORAGE AT BEARING JOINT C FOR 150 LBS FACTORED UPLIFT

UNFACTORED REACTIONS

	1ST LCASE	MAX./MIN. COMPONENT REACTIONS					
JT	COMBINED	SNOW	LIVE	PERM.LIVE	WIND	DEAD	SOIL
E	249	190 / 0	0 / 0	0 / 0	0 / 0	59 / 0	0 / 0
C	13	53 / -42	0 / 0	0 / 0	0 / 0	2 / 0	0 / 0
D	27	0 / 0	0 / 0	0 / 0	0 / 0	27 / 0	0 / 0

BEARING MATERIAL TO BE SPF NO.2 OR BETTER AT JOINT(S) E, D

BRACING

TOP CHORD TO BE SHEATHED OR MAX. PURLIN SPACING = 6.25 FT.
MAX. UNBRACED BOTTOM CHORD LENGTH = 10.00 FT OR RIGID CEILING DIRECTLY APPLIED.

ALL PITCH BREAKS AND PERIMETER CORNER JOINTS MUST BE LATERALLY RESTRAINED.

LOADING

TOTAL LOAD CASES: (13)

CHORDS

MEMB. FR-TO	MAX. FACTORED FORCE (LBS)	FACTORED VERT. LOAD LC1 (PLF) FROM	TO	MAX CSI (LC)	MAX. UNBRAC LENGTH
E- B	-325 / 0	0.0	0.0	0.03 (1)	7.81
A- B	0 / 36	-119.4	-119.4	0.16 (1)	10.00
B- C	-32 / 0	-119.4	-119.4	0.15 (1)	6.25
E- F	0 / 0	-18.2	-18.2	0.07 (4)	10.00
F- D	0 / 0	-18.2	-18.2	0.07 (4)	10.00

WEBS

MEMB. FR-TO	MAX. FACTORED FORCE (LBS)	MAX CSI (LC)

CANTILEVER ANALYSIS HAS BEEN CONSIDERED IN THIS DESIGN

PATTERN-LOADING CHECK APPLIED TO THIS TRUSS.

DESIGN CRITERIA

SPECIFIED LOADS:

TOP	CH.	LL	=	34.8	PSF
		DL	=	6.0	PSF
BOT	CH.	LL	=	0.0	PSF
		DL	=	7.3	PSF
TOTAL	LOAD		=	48.1	PSF

SPACING = 24.0 IN. C/C

THIS TRUSS IS DESIGNED FOR RESIDENTIAL OR SMALL BUILDING REQUIREMENTS OF PART 9, NBCC 2015

THIS DESIGN COMPLIES WITH:
- PART 9 OF BCBC 2018 , NBC-2019AE
- PART 9 OF OBC 2012 (2019 AMENDMENT)
- CSA 086-14
- TPIC 2014

DESIGN ASSUMPTIONS
-OVERHANG NOT TO BE ALTERED OR CUT OFF.

(55 % OF 48.1 P.S.F. G.S.L. PLUS 8.4 P.S.F. RAIN LOAD) EQUALS 34.8 P.S.F. SPECIFIED ROOF LIVE LOAD

ALLOWABLE DEFL.(TL)= L/360 (0.19")
CALCULATED VERT. DEFL.(TL) = L/ 999 (0.01")

CSI: TC=0.16/1.00 (A-B:1) , BC=0.07/1.00 (D-E:4) , WB=0.00/1.00 (n/a:0) , SSI=0.11/1.00 (B-C:1)

DOL LUMBER=1.00 NAIL=1.00 LS BEND=1.10 COMP=1.10 SHEAR=1.10 TENS= 1.10

COMPANION LIVE LOAD FACTOR = 1.00

TRUSS PLATE MANUFACTURER IS NOT RESPONSIBLE FOR QUALITY CONTROL IN THE TRUSS MANUFACTURING PLANT .

NAIL VALUES

PLATE	GRIP(DRY) (PSI) MAX	MIN	SHEAR (PLI) MAX	MIN	SECTION (PLI) MAX	MIN
MT20	650	371	1747	788	1987	1873

PLATE PLACEMENT TOL. = 0.250 inches

PLATE ROTATION TOL. = 5.0 Deg.

JSI GRIP= 0.18 (B) (INPUT = 0.90)
JSI METAL= 0.14 (B) (INPUT = 1.00)

WARNING - Verify design parameters and READ NOTES ON THIS AND INCLUDED IN MODULUS ENGINEERING LTD. NOTES ME-TCD01 (VER 06/2017) BEFORE USE.
Design valid for use only with Mitek connectors. This design is based only upon parameters shown, and is for individual building components. Applicability of design parameters and proper incorporation of component is responsibility of building designer - not truss designer. Bracing shown is for lateral support of individual web members only. Additional temporary bracing to ensure stability during construction is the responsibility of the erector. Additional permanent bracing of the overall structure is the responsibility of the building designer. For general guidance regarding fabrication, quality control, storage, delivery, erection and bracing, consult **TPIC Appendix G - Minimum quality Manufacturing Criteria** available from **www.tpic.ca** and **BCSI-CANADA (Building Component Safety Information) available** from TPI, 781 N. Lee Street, Suite 312, Alexandria, VA 22314 or www.sbcindustry.com

KOTT

JOB NAME	TRUSS NAME	QUANTITY	PLY	JOB DESC.	DRWG NO.
T-RIVER 9-3	J03C	1	1	ZADORRA ESTATES INC TRUSS DESC.	ME23-5775-19

Kott, Uxbridge,ON

Version 8.630 S Mar 22 2023 MiTek Industries, Inc. Wed Jul 5 08:43:25 2023 Page 1

ID:zkA_ls?YGX_ucIN5I0pn2xzMVXv-xEy764neMcCdNfWOpToDAFygFJAF17rGxcasClz?B_G

CORPORATION OF THE CITY OF OSHAWA
TRUE COPY
OF PERMIT PLANS
Nov 22 2023
PER:
CHIEF BUILDING OFFICIAL

MHP 23026

Scale = 1:9.7

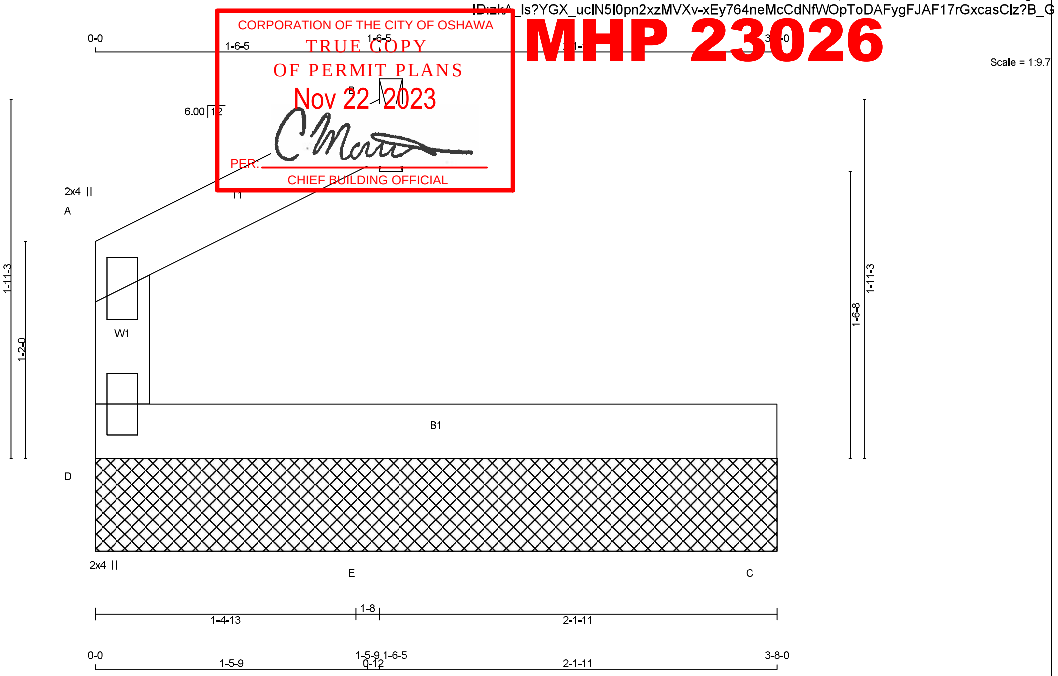

TOTAL WEIGHT = 7 lb [M]

LUMBER
N. L. G. A. RULES

CHORDS	SIZE		LUMBER	DESCR.
D - A	2x4	DRY	No.2	SPF
A - B	2x4	DRY	No.2	SPF
D - C	2x4	DRY	No.2	SPF

DRY: SEASONED LUMBER.

PLATES (table is in inches)

JT	TYPE	PLATES	W	LEN	Y	X
A	TMV+p	MT20	2.0	4.0		
D	BMV1+p	MT20	2.0	4.0		

DIMENSIONS, SUPPORTS AND LOADINGS SPECIFIED BY FABRICATOR TO BE VERIFIED BY BUILDING DESIGNER

BEARINGS

JT	FACTORED GROSS REACTION VERT	HORZ	MAXIMUM FACTORED GROSS REACTION DOWN	HORZ	UPLIFT	INPUT BRG IN-SX	REQRD BRG IN-SX
D	122	0	122	0	0	3-8-0	1-8
B	96	0	96	0	0	1-8	1-8
C	32	0	33	0	0	3-8-0	1-8

SEE MITEK STANDARD DETAIL MSD2015-H FOR CONNECTION TO JOINT(S) B

UNFACTORED REACTIONS

JT	1ST LCASE COMBINED	SNOW	LIVE	PERM.LIVE	WIND	DEAD	SOIL
		MAX./MIN. COMPONENT REACTIONS					
D	87	55 / 0	0 / 0	0 / 0	0 / 0	32 / 0	0 / 0
B	66	50 / 0	0 / 0	0 / 0	0 / 0	16 / 0	0 / 0
C	25	1 / 0	0 / 0	0 / 0	0 / 0	24 / 0	0 / 0

BEARING MATERIAL TO BE SPF NO.2 OR BETTER AT JOINT(S) D, C

BRACING
TOP CHORD TO BE SHEATHED OR MAX. PURLIN SPACING = 10.00 FT.
MAX. UNBRACED BOTTOM CHORD LENGTH = 10.00 FT OR RIGID CEILING DIRECTLY APPLIED.

ALL PITCH BREAKS AND PERIMETER CORNER JOINTS MUST BE LATERALLY RESTRAINED.

LOADING
TOTAL LOAD CASES: (7)

CHORDS

MEMB. FR-TO	MAX. FACTORED FORCE (LBS)	FACTORED VERT. LOAD LC1 (PLF) FROM	TO	MAX CSI (LC)	MAX. UNBRAC LENGTH
D- A	-87 / 0	0.0	0.0	0.03 (4)	7.81
A- B	0 / 4	-119.4	-119.4	0.05 (1)	10.00
D- E	0 / 0	-18.2	-18.2	0.06 (4)	10.00
E- C	0 / 0	-18.2	-18.2	0.06 (4)	10.00

WEBS

MEMB. FR-TO	MAX. FACTORED FORCE (LBS)	MAX CSI (LC)

CANTILEVER ANALYSIS HAS BEEN CONSIDERED IN THIS DESIGN

PATTERN-LOADING CHECK APPLIED TO THIS TRUSS.

DESIGN CRITERIA

SPECIFIED LOADS:

TOP CH.	LL =	34.8	PSF
	DL =	6.0	PSF
BOT CH.	LL =	0.0	PSF
	DL =	7.3	PSF
TOTAL LOAD	=	48.1	PSF

SPACING = 24.0 IN. C/C

THIS TRUSS IS DESIGNED FOR RESIDENTIAL OR SMALL BUILDING REQUIREMENTS OF PART 9, NBCC 2015

THIS DESIGN COMPLIES WITH:
- PART 9 OF BCBC 2018 , NBC-2019AE
- PART 9 OF OBC 2012 (2019 AMENDMENT)
- CSA 086-14
- TPIC 2014

(55 % OF 48.1 P.S.F. G.S.L. PLUS 8.4 P.S.F. RAIN LOAD) EQUALS 34.8 P.S.F. SPECIFIED ROOF LIVE LOAD

ALLOWABLE DEFL.(LL)= L/360 (0.19")
CALCULATED VERT. DEFL.(LL) = L/ 999 (0.00")
ALLOWABLE DEFL.(TL)= L/360 (0.19")
CALCULATED VERT. DEFL.(TL) = L/ 999 (0.01")

CSI: TC=0.05/1.00 (A-B:1) , BC=0.06/1.00 (C-D:4) , WB=0.00/1.00 (n/a:0) , SSI=0.07/1.00 (A-B:1)

DOL LUMBER=1.00 NAIL=1.00 LS BEND=1.10 COMP=1.10 SHEAR=1.10 TENS= 1.10

COMPANION LIVE LOAD FACTOR = 1.00

TRUSS PLATE MANUFACTURER IS NOT RESPONSIBLE FOR QUALITY CONTROL IN THE TRUSS MANUFACTURING PLANT .

NAIL VALUES

PLATE	GRIP(DRY) (PSI) MAX	MIN	SHEAR (PLI) MAX	MIN	SECTION (PLI) MAX	MIN
MT20	650	371	1747	788	1987	1873

PLATE PLACEMENT TOL. = 0.250 inches

PLATE ROTATION TOL. = 5.0 Deg.

JSI GRIP= 0.05 (A) (INPUT = 0.90)
JSI METAL= 0.04 (A) (INPUT = 1.00)

MODULUS ENGINEERING LTD.

REVIEW FOR TRUSS COMPONENT ONLY

NOTE: ALTERING THIS DOCUMENT VOIDS THE ENGINEERS SEAL

WARNING - Verify design parameters and READ NOTES ON THIS AND INCLUDED IN MODULUS ENGINEERING LTD. NOTES ME-TCD01 (VER 06/2017) BEFORE USE.
Design valid for use only with Mitek connectors. This design is based only upon parameters shown, and is for individual building components. Applicability of design parameters and proper incorporation of component is responsibility of building designer - not truss designer. Bracing shown is for lateral support of individual web members only. Additional temporary bracing to ensure stability during construction is the responsibility of the erector. Additional permanent bracing of the overall structure is the responsibility of the building designer. For general guidance regarding fabrication, quality control, storage, delivery, erection and bracing, consult **TPIC Appendix G - Minimum quality Manufacturing Criteria** available from **www.tpic.ca** and **BCSI-CANADA (Building Component Safety Information) available** from TPI, 781 N. Lee Street, Suite 312, Alexandria, VA 22314 or www.sbcindustry.com

KOTT

JOB NAME	TRUSS NAME	QUANTITY	PLY	JOB DESC.	DRWG NO.
T-RIVER 9-3	J04	5	1	ZADORRA ESTATES INC TRUSS DESC.	ME23-5775-20

Kott, Uxbridge,ON

Version 8.630 S Mar 22 2023 MiTek Industries, Inc. Wed Jul 5 08:43:26 2023 Page 1

ID:akA_Ie?YGX_ucIN5I0pn2xzMVXv-PQWVJQoG7wKU?p5aNBJSjSUpOiV2ma5QAGJQIBz?B_F

CORPORATION OF THE CITY OF OSHAWA
TRUE COPY
OF PERMIT PLANS
Nov 22 2023
PER: C Martin
CHIEF BUILDING OFFICIAL

MHP 23026

Scale = 1:10.8

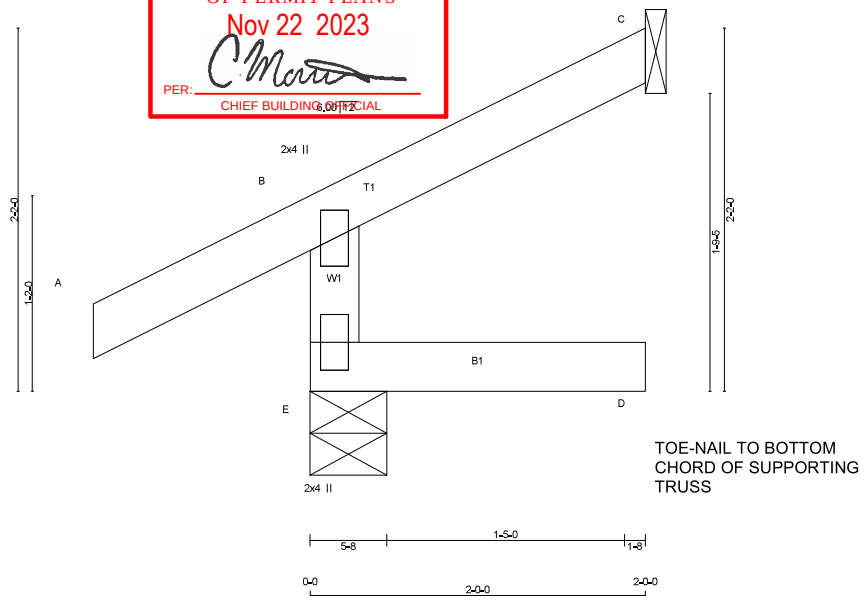

TOE-NAIL TO BOTTOM CHORD OF SUPPORTING TRUSS

TOTAL WEIGHT = 5 X 7 = 37 lb [M]

LUMBER
N. L. G. A. RULES

CHORDS	SIZE		LUMBER	DESCR.
E - B	2x4	DRY	No.2	SPF
A - C	2x4	DRY	No.2	SPF
E - D	2x4	DRY	No.2	SPF

DRY: SEASONED LUMBER.

PLATES (table is in inches)

JT	TYPE	PLATES	W	LEN	Y	X
B	TMV+p	MT20	2.0	4.0		
E	BMV1+p	MT20	2.0	4.0		

DIMENSIONS, SUPPORTS AND LOADINGS SPECIFIED BY FABRICATOR TO BE VERIFIED BY BUILDING DESIGNER

BEARINGS

JT	FACTORED GROSS REACTION VERT	HORZ	MAXIMUM GROSS REACTION DOWN	HORZ	UPLIFT	INPUT BRG IN-SX	REQRD BRG IN-SX
E	347	0	347	0	0	5-8	1-8
C	90	0	90	0	0	1-8	1-8

SEE MITEK STANDARD DETAIL MSD2015-H FOR CONNECTION TO JOINT(S) C

UNFACTORED REACTIONS

JT	1ST LCASE COMBINED	MAX./MIN. COMPONENT REACTIONS SNOW	LIVE	PERM.LIVE	WIND	DEAD	SOIL
E	242	181 / 0	0 / 0	0 / 0	0 / 0	60 / 0	0 / 0
C	62	53 / 0	0 / 0	0 / 0	0 / 0	9 / 0	0 / 0

BEARING MATERIAL TO BE SPF NO.2 OR BETTER AT JOINT(S) E

BRACING
TOP CHORD TO BE SHEATHED OR MAX. PURLIN SPACING = 6.25 FT.
MAX. UNBRACED BOTTOM CHORD LENGTH = 10.00 FT OR RIGID CEILING DIRECTLY APPLIED.

ALL PITCH BREAKS AND PERIMETER CORNER JOINTS MUST BE LATERALLY RESTRAINED.

LOADING
TOTAL LOAD CASES: (5)

CHORDS

MEMB. FR-TO	MAX. FORCE (LBS)	FACTORED VERT. LOAD (PLF)	LC1	MAX CSI (LC)	MAX. UNBRAC LENGTH FROM	TO
E- B	-311 / 0	0.0	0.0	0.03 (1)	7.81	
A- B	0 / 36	-119.4	-119.4	0.16 (1)	10.00	
B- C	-13 / 0	-119.4	-119.4	0.08 (1)	6.25	
E- D	0 / 0	-18.2	-18.2	0.09 (4)	10.00	

WEBS

MEMB. FR-TO	MAX. FORCE (LBS)	MAX CSI (LC)

CANTILEVER ANALYSIS HAS BEEN CONSIDERED IN THIS DESIGN

PATTERN-LOADING CHECK APPLIED TO THIS TRUSS.

DESIGN CRITERIA

SPECIFIED LOADS:

TOP CH.	LL	=	34.8	PSF
	DL	=	6.0	PSF
BOT CH.	LL	=	0.0	PSF
	DL	=	7.3	PSF
TOTAL LOAD		=	48.1	PSF

SPACING = 24.0 IN. C/C

THIS TRUSS IS DESIGNED FOR RESIDENTIAL OR SMALL BUILDING REQUIREMENTS OF PART 9, NBCC 2015

THIS DESIGN COMPLIES WITH:
- PART 9 OF BCBC 2018 , NBC-2019AE
- PART 9 OF OBC 2012 (2019 AMENDMENT)
- CSA 086-14
- TPIC 2014

DESIGN ASSUMPTIONS
-OVERHANG NOT TO BE ALTERED OR CUT OFF.

(55 % OF 48.1 P.S.F. G.S.L. PLUS 8.4 P.S.F. RAIN LOAD) EQUALS 34.8 P.S.F. SPECIFIED ROOF LIVE LOAD

ALLOWABLE DEFL.(TL)= L/360 (0.19")
CALCULATED VERT. DEFL.(TL) = L/ 999 (0.01")

CSI: TC=0.16/1.00 (A-B:1) , BC=0.09/1.00 (D-E:4) , WB=0.00/1.00 (n/a:0) , SSI=0.11/1.00 (A-B:1)

DOL LUMBER=1.00 NAIL=1.00 LS BEND=1.10 COMP=1.10 SHEAR=1.10 TENS= 1.10

COMPANION LIVE LOAD FACTOR = 1.00

TRUSS PLATE MANUFACTURER IS NOT RESPONSIBLE FOR QUALITY CONTROL IN THE TRUSS MANUFACTURING PLANT .

NAIL VALUES

PLATE	GRIP(DRY) (PSI) MAX	MIN	SHEAR (PLI) MAX	MIN	SECTION (PLI) MAX	MIN
MT20	650	371	1747	788	1987	1873

PLATE PLACEMENT TOL. = 0.250 inches

PLATE ROTATION TOL. = 5.0 Deg.

JSI GRIP= 0.17 (B) (INPUT = 0.90)
JSI METAL= 0.13 (B) (INPUT = 1.00)

MODULUS ENGINEERING LTD.

LICENSED PROFESSIONAL ENGINEER
07/05/2023
D. A. SHERMAN
100123373
PROVINCE OF ONTARIO

REVIEW FOR TRUSS COMPONENT ONLY

NOTE: ALTERING THIS DOCUMENT VOIDS THE ENGINEERS SEAL

WARNING - Verify design parameters and READ NOTES ON THIS AND INCLUDED IN MODULUS ENGINEERING LTD. NOTES ME-TCD01 (VER 06/2017) BEFORE USE.
Design valid for use only with Mitek connectors. This design is based only upon parameters shown, and is for individual building components. Applicability of design parameters and proper incorporation of component is responsibility of building designer - not truss designer. Bracing shown is for lateral support of individual web members only. Additional temporary bracing to ensure stability during construction is the responsibility of the erector. Additional permanent bracing of the overall structure is the responsibility of the building designer. For general guidance regarding fabrication, quality control, storage, delivery, erection and bracing, consult
TPIC Appendix G - Minimum quality Manufacturing Criteria available from **www.tpic.ca** and **BCSI-CANADA (Building Component Safety Information) available** from TPI, 781 N. Lee Street, Suite 312, Alexandria, VA 22314 or www.sbcindustry.com

KOTT

JOB NAME	TRUSS NAME	QUANTITY	PLY	JOB DESC. ZADORRA ESTATES INC	DRWG NO.
T-RIVER 9-3	J05	5	1	TRUSS DESC.	ME23-5775-21

Kott, Uxbridge,ON

Version 8.630 S Mar 22 2023 MiTek Industries, Inc. Wed Jul 5 08:48:28 2023 Page 1

ID:zkA_Is?YGX_ucIN5I0pn2xzMVXv-LpdFk6qXfXaBE7FzUcLwota9tWBWEUbieaoXp4z?B_D

CORPORATION OF THE CITY OF OSHAWA
TRUE COPY
OF PERMIT PLANS
Nov 22 2023
PER: C Matt
CHIEF BUILDING OFFICIAL

MHP 23026

Scale = 1:8.8

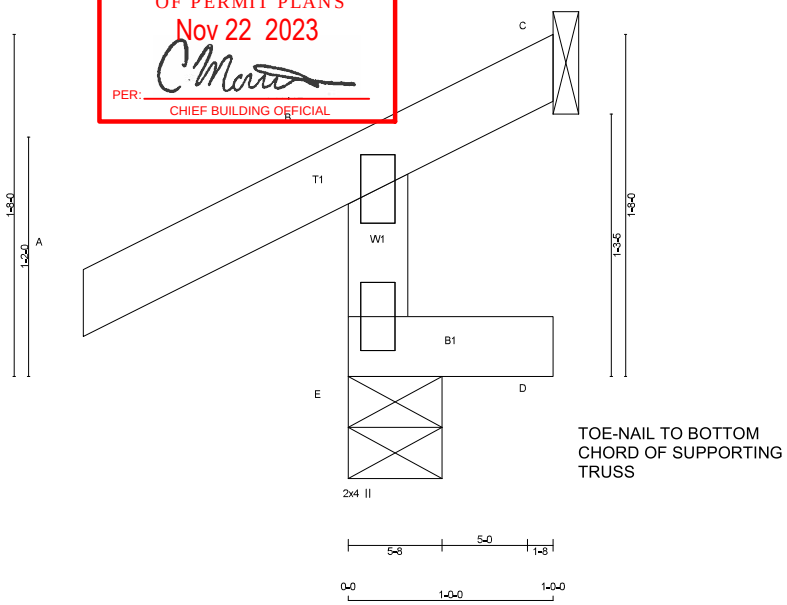

TOE-NAIL TO BOTTOM CHORD OF SUPPORTING TRUSS

TOTAL WEIGHT = 5 X 5 = 25 lb [M]

LUMBER
N. L. G. A. RULES

CHORDS	SIZE		LUMBER	DESCR.
E - B	2x4	DRY	No.2	SPF
A - C	2x4	DRY	No.2	SPF
E - D	2x4	DRY	No.2	SPF

DRY: SEASONED LUMBER.

PLATES (table is in inches)

JT	TYPE	PLATES	W	LEN Y	X
B	TMV+p	MT20	2.0	4.0	
E	BMV1+p	MT20	2.0	4.0	

DIMENSIONS, SUPPORTS AND LOADINGS SPECIFIED BY FABRICATOR TO BE VERIFIED BY BUILDING DESIGNER

BEARINGS

JT	FACTORED GROSS REACTION VERT	HORZ	MAXIMUM FACTORED GROSS REACTION DOWN	HORZ	UPLIFT	INPUT BRG	REQRD BRG
E	320	0	320	0	0	5-8	1-8
C	-20	0	0	0	-70	1-8	1-8

SEE MITEK STANDARD DETAIL MSD2015-H FOR CONNECTION TO JOINT(S) C

PROVIDE ANCHORAGE AT BEARING JOINT C FOR 150 LBS FACTORED UPLIFT

UNFACTORED REACTIONS

JT	1ST LCASE COMBINED	MAX./MIN. COMPONENT REACTIONS SNOW	LIVE	PERM.LIVE	WIND	DEAD	SOIL
E	221	176 / 0	0 / 0	0 / 0	0 / 0	45 / 0	0 / 0
C	-14	0 / -44	0 / 0	0 / 0	0 / 0	0 / -2	0 / 0

BEARING MATERIAL TO BE SPF NO.2 OR BETTER AT JOINT(S) E

BRACING
TOP CHORD TO BE SHEATHED OR MAX. PURLIN SPACING = 6.25 FT.
MAX. UNBRACED BOTTOM CHORD LENGTH = 10.00 FT OR RIGID CEILING DIRECTLY APPLIED.

ALL PITCH BREAKS AND PERIMETER CORNER JOINTS MUST BE LATERALLY RESTRAINED.

LOADING
TOTAL LOAD CASES: (5)

CHORDS

MEMB. FR-TO	MAX. FACTORED FORCE (LBS)	FACTORED VERT. LOAD (PLF) FROM	TO	LC1 CSI (LC)	MAX UNBRAC LENGTH
E- B	-301 / 0	0.0	0.0	0.05 (5)	7.81
A- B	0 / 36	-119.4	-119.4	0.16 (1)	10.00
B- C	-36 / 0	-119.4	-119.4	0.11 (1)	6.25
E- D	0 / 0	-18.2	-18.2	0.02 (4)	10.00

WEBS

MEMB. FR-TO	MAX. FACTORED FORCE (LBS)	MAX CSI (LC)

CANTILEVER ANALYSIS HAS BEEN CONSIDERED IN THIS DESIGN

PATTERN-LOADING CHECK APPLIED TO THIS TRUSS.

DESIGN CRITERIA

SPECIFIED LOADS:

TOP CH.	LL	=	34.8	PSF
	DL	=	6.0	PSF
BOT CH.	LL	=	0.0	PSF
	DL	=	7.3	PSF
TOTAL LOAD		=	48.1	PSF

SPACING = 24.0 IN. C/C

THIS TRUSS IS DESIGNED FOR RESIDENTIAL OR SMALL BUILDING REQUIREMENTS OF PART 9, NBCC 2015

THIS DESIGN COMPLIES WITH:
- PART 9 OF BCBC 2018 , NBC-2019AE
- PART 9 OF OBC 2012 (2019 AMENDMENT)
- CSA 086-14
- TPIC 2014

DESIGN ASSUMPTIONS
-OVERHANG NOT TO BE ALTERED OR CUT OFF.

(55 % OF 48.1 P.S.F. G.S.L. PLUS 8.4 P.S.F. RAIN LOAD) EQUALS 34.8 P.S.F. SPECIFIED ROOF LIVE LOAD

ALLOWABLE DEFL.(TL)= L/360 (0.19")
CALCULATED VERT. DEFL.(TL) = L/ 999 (0.00")

CSI: TC=0.16/1.00 (A-B:1) , BC=0.02/1.00 (D-E:4) , WB=0.00/1.00 (n/a:0) , SSI=0.11/1.00 (A-B:1)

DOL LUMBER=1.00 NAIL=1.00 LS BEND=1.10 COMP=1.10 SHEAR=1.10 TENS= 1.10

COMPANION LIVE LOAD FACTOR = 1.00

TRUSS PLATE MANUFACTURER IS NOT RESPONSIBLE FOR QUALITY CONTROL IN THE TRUSS MANUFACTURING PLANT .

NAIL VALUES

PLATE	GRIP(DRY) (PSI) MAX	MIN	SHEAR (PLI) MAX	MIN	SECTION (PLI) MAX	MIN
MT20	650	371	1747	788	1987	1873

PLATE PLACEMENT TOL. = 0.250 inches

PLATE ROTATION TOL. = 5.0 Deg.

JSI GRIP= 0.17 (B) (INPUT = 0.90)
JSI METAL= 0.13 (B) (INPUT = 1.00)

MODULUS ENGINEERING LTD.

LICENSED PROFESSIONAL ENGINEER
07/05/2023
D. A. SHERMAN
100123373
PROVINCE OF ONTARIO

REVIEW FOR TRUSS COMPONENT ONLY

NOTE: ALTERING THIS DOCUMENT VOIDS THE ENGINEERS SEAL

WARNING - Verify design parameters and READ NOTES ON THIS AND INCLUDED IN MODULUS ENGINEERING LTD. NOTES ME-TCD01 (VER 06/2017) BEFORE USE.
Design valid for use only with Mitek connectors. This design is based only upon parameters shown, and is for individual building components. Applicability of design parameters and proper incorporation of component is responsibility of building designer - not truss designer. Bracing shown is for lateral support of individual web members only. Additional temporary bracing to ensure stability during construction is the responsibility of the erector. Additional permanent bracing of the overall structure is the responsibility of the building designer. For general guidance regarding fabrication, quality control, storage, delivery, erection and bracing, consult
TPIC Appendix G - Minimum quality Manufacturing Criteria available from **www.tpic.ca** and **BCSI-CANADA (Building Component Safety Information) available** from TPI, 781 N. Lee Street, Suite 312, Alexandria, VA 22314 or www.sbcindustry.com

KOTT

JOB NAME	TRUSS NAME	QUANTITY	PLY	JOB DESC.	DRWG NO.
T-RIVER 9-3	T01	7	1	ZADORRA ESTATES INC TRUSS DESC.	ME23-5775-22

Kott, Uxbridge,ON

Version 8.630 S Mar 22 2023 MiTek Industries, Inc. Wed Jul 5 08:43:29 2023 Page 1

ID:wkA_Is?YGX_ucIN5I0pn2xzMVXv-p?BeySq9Qri2sGq92Js9L56D8wREzmbssEY4LWz?B_C

CORPORATION OF THE CITY OF OSHAWA
TRUE COPY
OF PERMIT PLANS
Nov 22 2023
PER: C Martin
CHIEF BUILDING OFFICIAL

MHP 23026

Scale = 1:39.7

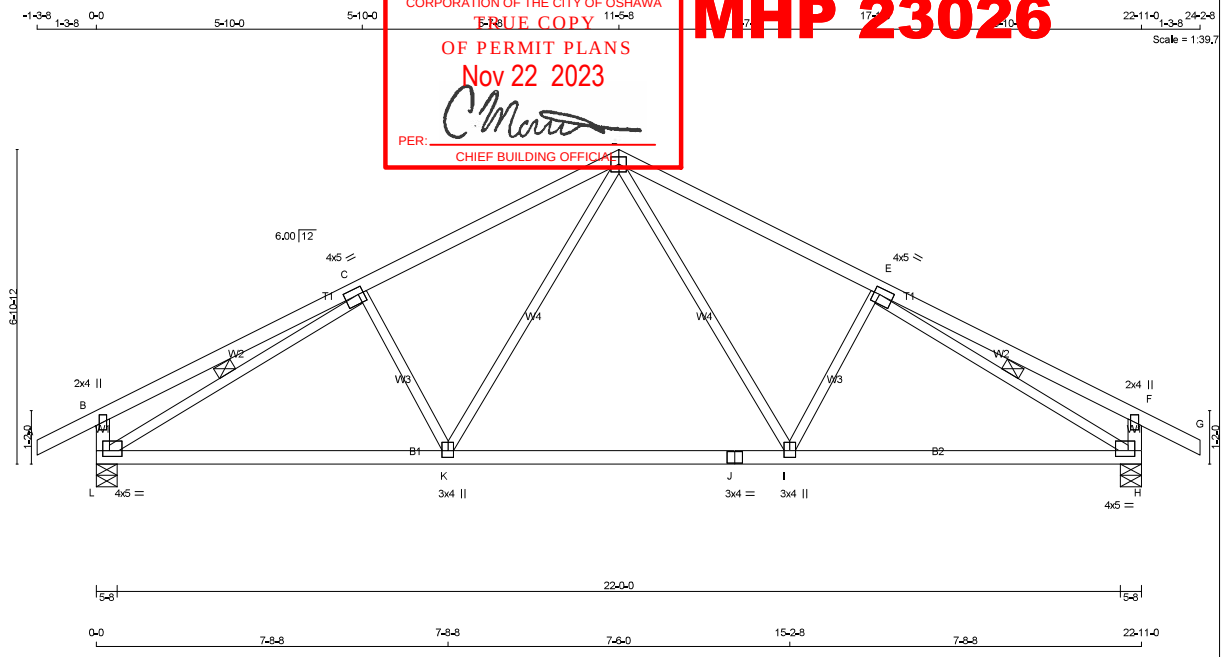

TOTAL WEIGHT = 7 X 89 = 626 lb [M][F]

LUMBER

N. L. G. A. RULES

CHORDS	SIZE		LUMBER	DESCR.
A - D	2x4	DRY	No.2	SPF
D - G	2x4	DRY	No.2	SPF
L - B	2x4	DRY	No.2	SPF
H - F	2x4	DRY	No.2	SPF
L - J	2x4	DRY	No.2	SPF
J - H	2x4	DRY	No.2	SPF
ALL WEBS EXCEPT	2x3	DRY	No.2	SPF

DRY: SEASONED LUMBER.

PLATES (table is in inches)

JT	TYPE	PLATES	W	LEN	Y	X
B	TMV+p	MT20	2.0	4.0		
C	TMWW+t	MT20	4.0	5.0	1.75	1.50
D	TTWW+p	MT20	4.0	4.0		
E	TMWW+t	MT20	4.0	5.0	1.75	1.50
F	TMV+p	MT20	2.0	4.0		
H	BMVW1+t	MT20	4.0	5.0	1.50	1.75
I	BMWW+t	MT20	3.0	4.0	1.75	1.50
J	BS+t	MT20	3.0	4.0		
K	BMWW+t	MT20	3.0	4.0	1.75	1.50
L	BMVW1+t	MT20	4.0	5.0	1.50	1.75

DIMENSIONS, SUPPORTS AND LOADINGS SPECIFIED BY FABRICATOR TO BE VERIFIED BY BUILDING DESIGNER

BEARINGS

JT	FACTORED GROSS REACTION VERT	HORZ	MAXIMUM FACTORED GROSS REACTION DOWN	HORZ	UPLIFT	INPUT BRG	REQRD BRG
L	1740	0	1740	0	0	5-8	1-14
H	1740	0	1740	0	0	5-8	1-14

UNFACTORED REACTIONS

JT	1ST LCASE COMBINED	SNOW	LIVE	PERM.LIVE	WIND	DEAD	SOIL
		MAX./MIN. COMPONENT REACTIONS					
L	1213	892 / 0	0 / 0	0 / 0	0 / 0	321 / 0	0 / 0
H	1213	892 / 0	0 / 0	0 / 0	0 / 0	321 / 0	0 / 0

BEARING MATERIAL TO BE SPF NO.2 OR BETTER AT JOINT(S) L, H

BRACING

TOP CHORD TO BE SHEATHED OR MAX. PURLIN SPACING = 4.20 FT.
MAX. UNBRACED BOTTOM CHORD LENGTH = 10.00 FT OR RIGID CEILING DIRECTLY APPLIED.

ALL PITCH BREAKS AND PERIMETER CORNER JOINTS MUST BE LATERALLY RESTRAINED.

1 LATERAL BRACE(S) AT 1/ 2 LENGTH OF C-L, E-H.

END VERTICAL(S) MUST BE SHEATHED OR HAVE BRACES AS INDICATED IN THE MAX. UNBRACED LENGTH COLUMN OF THE TABLE BELOW

LOADING

TOTAL LOAD CASES: (4)

CHORDS

MEMB. FR-TO	MAX. FACTORED FORCE (LBS)	FACTORED VERT. LOAD (PLF) FROM	TO	LC1	MAX CSI (LC)	MAX. UNBRAC LENGTH
A- B	0 / 36	-119.4	-119.4	0.16 (1)	10.00	
B- C	0 / 36	-119.4	-119.4	0.63 (1)	10.00	
C- D	-1939 / 0	-119.4	-119.4	0.56 (1)	4.20	
D- E	-1939 / 0	-119.4	-119.4	0.56 (1)	4.20	
E- F	0 / 36	-119.4	-119.4	0.63 (1)	10.00	
F- G	0 / 36	-119.4	-119.4	0.16 (1)	10.00	
L- B	-424 / 0	0.0	0.0	0.04 (1)	7.81	
H- F	-424 / 0	0.0	0.0	0.04 (1)	7.81	
L- K	0 / 1936	-18.2	-18.2	0.44 (1)	10.00	
K- J	0 / 1367	-18.2	-18.2	0.34 (1)	10.00	
J- I	0 / 1367	-18.2	-18.2	0.34 (1)	10.00	
I- H	0 / 1936	-18.2	-18.2	0.44 (1)	10.00	

WEBS

MEMB. FR-TO	MAX. FACTORED FORCE (LBS)	MAX CSI (LC)
D- I	0 / 679	0.15 (1)
I- E	-497 / 0	0.15 (1)
K- D	0 / 679	0.15 (1)
C- K	-497 / 0	0.15 (1)
L- C	-2308 / 0	0.72 (1)
E- H	-2308 / 0	0.72 (1)

DESIGN CRITERIA

SPECIFIED LOADS:

TOP CH.	LL	=	34.8	PSF
	DL	=	6.0	PSF
BOT CH.	LL	=	0.0	PSF
	DL	=	7.3	PSF
TOTAL LOAD		=	48.1	PSF

SPACING = 24.0 IN. C/C

THIS TRUSS IS DESIGNED FOR RESIDENTIAL OR SMALL BUILDING REQUIREMENTS OF PART 9, NBCC 2015

THIS DESIGN COMPLIES WITH:
- PART 9 OF BCBC 2018 , NBC-2019AE
- PART 9 OF OBC 2012 (2019 AMENDMENT)
- CSA 086-14
- TPIC 2014

(55 % OF 48.1 P.S.F. G.S.L. PLUS 8.4 P.S.F. RAIN LOAD) EQUALS 34.8 P.S.F. SPECIFIED ROOF LIVE LOAD

ALLOWABLE DEFL.(LL)= L/360 (0.76")
CALCULATED VERT. DEFL.(LL) = L/ 999 (0.09")
ALLOWABLE DEFL.(TL)= L/360 (0.76")
CALCULATED VERT. DEFL.(TL) = L/ 999 (0.17")

CSI: TC=0.63/1.00 (E-F:1) , BC=0.44/1.00 (H-I:1) , WB=0.72/1.00 (E-H:1) , SSI=0.30/1.00 (E-F:1)

DOL LUMBER=1.00 NAIL=1.00 LS BEND=1.10 COMP=1.10 SHEAR=1.10 TENS= 1.10

COMPANION LIVE LOAD FACTOR = 1.00

TRUSS PLATE MANUFACTURER IS NOT RESPONSIBLE FOR QUALITY CONTROL IN THE TRUSS MANUFACTURING PLANT .

NAIL VALUES

PLATE	GRIP(DRY) (PSI) MAX	MIN	SHEAR (PLI) MAX	MIN	SECTION (PLI) MAX	MIN
MT20	650	371	1747	788	1987	1873

PLATE PLACEMENT TOL. = 0.250 inches

PLATE ROTATION TOL. = 5.0 Deg.

JSI GRIP= 0.89 (E) (INPUT = 0.90)
JSI METAL= 0.62 (C) (INPUT = 1.00)

MODULUS ENGINEERING LTD.

LICENSED PROFESSIONAL ENGINEER
07/05/2023
D. A. SHERMAN
100123373
PROVINCE OF ONTARIO

REVIEW FOR TRUSS COMPONENT ONLY

NOTE: ALTERING THIS DOCUMENT VOIDS THE ENGINEERS SEAL

WARNING - Verify design parameters and READ NOTES ON THIS AND INCLUDED IN MODULUS ENGINEERING LTD. NOTES ME-TCD01 (VER 06/2017) BEFORE USE.
Design valid for use only with Mitek connectors. This design is based only upon parameters shown, and is for individual building components. Applicability of design parameters and proper incorporation of component is responsibility of building designer - not truss designer. Bracing shown is for lateral support of individual web members only. Additional temporary bracing to ensure stability during construction is the responsibility of the erector. Additional permanent bracing of the overall structure is the responsibility of the building designer. For general guidance regarding fabrication, quality control, storage, delivery, erection and bracing, consult
TPIC Appendix G - Minimum quality Manufacturing Criteria available from **www.tpic.ca** and **BCSI-CANADA (Building Component Safety Information) available** from TPI, 781 N. Lee Street, Suite 312, Alexandria, VA 22314 or www.sbcindustry.com

KOTT

JOB NAME	TRUSS NAME	QUANTITY	PLY	JOB DESC.	DRWG NO.
T-RIVER 9-3	T01A	8	1	ZADORRA ESTATES INC TRUSS DESC.	ME23-5775-23

Kott, Uxbridge,ON

Version 8.630 S Mar 22 2023 MiTek Industries, Inc. Wed Jul 5 08:43:31 2023 Page 1

ID:zkA_Is?YGX_ucIN5I0pn2xzMVXv-INJON7sPySym5azY9kvdQWCZdj7nRgF9KY1BQPz?B_A

CORPORATION OF THE CITY OF OSHAWA
TRUE COPY
OF PERMIT PLANS
Nov 22 2023
PER: C Martin
CHIEF BUILDING OFFICIAL

MHP 23026

Scale = 1:37.9

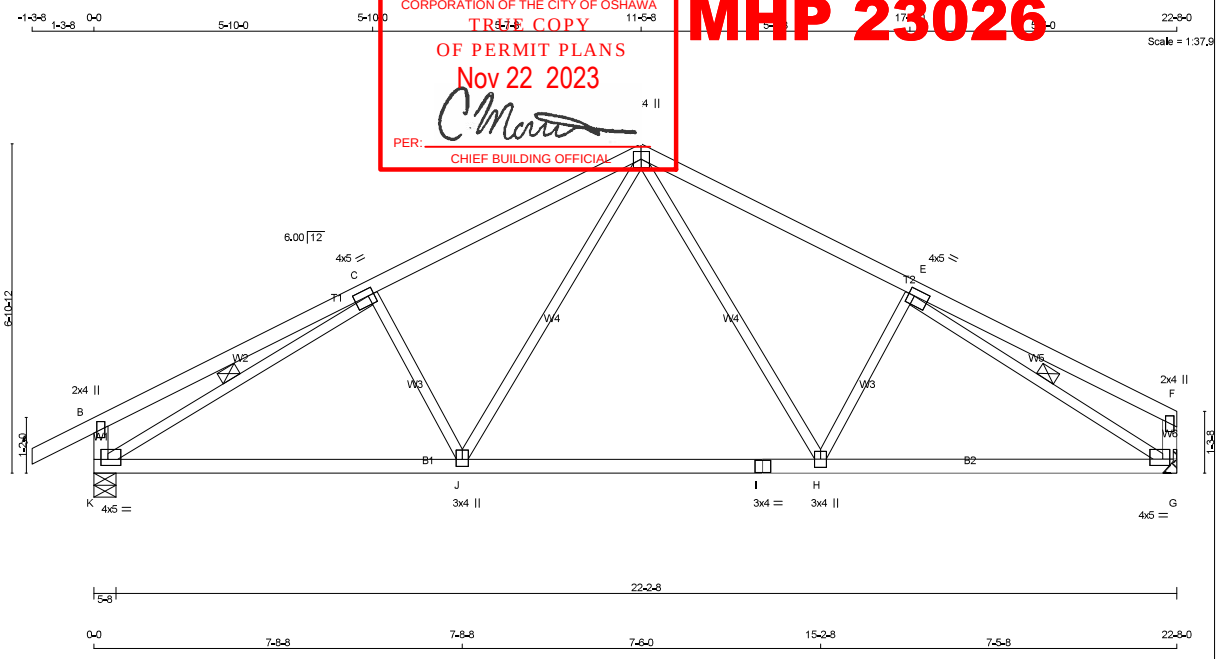

TOTAL WEIGHT = 8 X 87 = 697 lb

[M][F]

LUMBER

N. L. G. A. RULES

CHORDS	SIZE		LUMBER	DESCR.
A - D	2x4	DRY	No.2	SPF
D - F	2x4	DRY	No.2	SPF
K - B	2x4	DRY	No.2	SPF
G - F	2x4	DRY	No.2	SPF
K - I	2x4	DRY	No.2	SPF
I - G	2x4	DRY	No.2	SPF
ALL WEBS EXCEPT	2x3	DRY	No.2	SPF

DRY: SEASONED LUMBER.

PLATES (table is in inches)

JT	TYPE	PLATES	W	LEN	Y	X
B	TMV+p	MT20	2.0	4.0		
C	TMWW+t	MT20	4.0	5.0	1.75	1.50
D	TTWW+p	MT20	4.0	4.0		
E	TMWW+t	MT20	4.0	5.0	1.75	1.50
F	TMV+p	MT20	2.0	4.0		
G	BMVW1+t	MT20	4.0	5.0	1.50	1.75
H	BMWW+t	MT20	3.0	4.0		
I	BS+t	MT20	3.0	4.0		
J	BMWW+t	MT20	3.0	4.0	1.75	1.50
K	BMVW1+t	MT20	4.0	5.0	1.50	1.75

DIMENSIONS, SUPPORTS AND LOADINGS SPECIFIED BY FABRICATOR TO BE VERIFIED BY BUILDING DESIGNER

BEARINGS

JT	FACTORED GROSS REACTION VERT	HORZ	MAXIMUM GROSS REACTION DOWN	HORZ	UPLIFT	INPUT BRG	REQRD BRG
K	1722	0	1722	0	0	5-8	1-14
G	1560	0	1560	0	0	MECHANICAL	

A SUITABLE HANGER/MECHANICAL CONNECTION IS REQUIRED AT JOINT G. MINIMUM BEARING LENGTH AT JOINT G = 1-11.

UNFACTORED REACTIONS

JT	1ST LCASE COMBINED	SNOW	MAX./MIN. COMPONENT REACTIONS LIVE	PERM.LIVE	WIND	DEAD	SOIL
K	1201	883 / 0	0 / 0	0 / 0	0 / 0	318 / 0	0 / 0
G	1090	789 / 0	0 / 0	0 / 0	0 / 0	301 / 0	0 / 0

BEARING MATERIAL TO BE SPF NO.2 OR BETTER AT JOINT(S) K

BRACING

TOP CHORD TO BE SHEATHED OR MAX. PURLIN SPACING = 4.23 FT.
MAX. UNBRACED BOTTOM CHORD LENGTH = 10.00 FT OR RIGID CEILING DIRECTLY APPLIED.

ALL PITCH BREAKS AND PERIMETER CORNER JOINTS MUST BE LATERALLY RESTRAINED.

1 LATERAL BRACE(S) AT 1/ 2 LENGTH OF C-K, E-G.

END VERTICAL(S) MUST BE SHEATHED OR HAVE BRACES AS INDICATED IN THE MAX. UNBRACED LENGTH COLUMN OF THE TABLE BELOW

LOADING

TOTAL LOAD CASES: (4)

CHORDS

MEMB. FR-TO	MAX. FACTORED FORCE (LBS)	FACTORED VERT. LOAD LC1 (PLF) FROM	TO	MAX CSI (LC)	MAX. UNBRAC LENGTH
A- B	0 / 36	-119.4	-119.4	0.16 (1)	10.00
B- C	0 / 36	-119.4	-119.4	0.64 (1)	10.00
C- D	-1908 / 0	-119.4	-119.4	0.55 (1)	4.23
D- E	-1872 / 0	-119.4	-119.4	0.54 (1)	4.29
E- F	0 / 36	-119.4	-119.4	0.61 (1)	10.00
K- B	-424 / 0	0.0	0.0	0.04 (1)	7.81
G- F	-247 / 0	0.0	0.0	0.03 (1)	7.81
K- J	0 / 1909	-18.2	-18.2	0.43 (1)	10.00
J- I	0 / 1336	-18.2	-18.2	0.34 (1)	10.00
I- H	0 / 1336	-18.2	-18.2	0.34 (1)	10.00
H- G	0 / 1851	-18.2	-18.2	0.42 (1)	10.00

WEBS

MEMB. FR-TO	MAX. FACTORED FORCE (LBS)	MAX CSI (LC)
D- H	0 / 620	0.14 (1)
H- E	-443 / 0	0.13 (1)
J- D	0 / 683	0.15 (1)
C- J	-501 / 0	0.15 (1)
K- C	-2277 / 0	0.71 (1)
E- G	-2238 / 0	0.66 (1)

DESIGN CRITERIA

SPECIFIED LOADS:

TOP CH.	LL	=	34.8	PSF
	DL	=	6.0	PSF
BOT CH.	LL	=	0.0	PSF
	DL	=	7.3	PSF
TOTAL LOAD		=	48.1	PSF

SPACING = 24.0 IN. C/C

THIS TRUSS IS DESIGNED FOR RESIDENTIAL OR SMALL BUILDING REQUIREMENTS OF PART 9, NBCC 2015

THIS DESIGN COMPLIES WITH:
- PART 9 OF BCBC 2018 , NBC-2019AE
- PART 9 OF OBC 2012 (2019 AMENDMENT)
- CSA 086-14
- TPIC 2014

(55 % OF 48.1 P.S.F. G.S.L. PLUS 8.4 P.S.F. RAIN LOAD) EQUALS 34.8 P.S.F. SPECIFIED ROOF LIVE LOAD

ALLOWABLE DEFL.(LL)= L/360 (0.76")
CALCULATED VERT. DEFL.(LL) = L/ 999 (0.09")
ALLOWABLE DEFL.(TL)= L/360 (0.76")
CALCULATED VERT. DEFL.(TL) = L/ 999 (0.17")

CSI: TC=0.64/1.00 (B-C:1) , BC=0.43/1.00 (J-K:1) , WB=0.71/1.00 (C-K:1) , SSI=0.30/1.00 (B-C:1)

DOL LUMBER=1.00 NAIL=1.00 LS BEND=1.10 COMP=1.10 SHEAR=1.10 TENS= 1.10

COMPANION LIVE LOAD FACTOR = 1.00

TRUSS PLATE MANUFACTURER IS NOT RESPONSIBLE FOR QUALITY CONTROL IN THE TRUSS MANUFACTURING PLANT .

NAIL VALUES

PLATE	GRIP(DRY) (PSI) MAX	MIN	SHEAR (PLI) MAX	MIN	SECTION (PLI) MAX	MIN
MT20	650	371	1747	788	1987	1873

PLATE PLACEMENT TOL. = 0.250 inches

PLATE ROTATION TOL. = 5.0 Deg.

JSI GRIP= 0.89 (D) (INPUT = 0.90)
JSI METAL= 0.61 (C) (INPUT = 1.00)

MODULUS ENGINEERING LTD.

LICENSED PROFESSIONAL ENGINEER
07/05/2023
D. A. SHERMAN
100123373
PROVINCE OF ONTARIO

REVIEW FOR TRUSS COMPONENT ONLY

NOTE: ALTERING THIS DOCUMENT VOIDS THE ENGINEERS SEAL

WARNING - Verify design parameters and READ NOTES ON THIS AND INCLUDED IN MODULUS ENGINEERING LTD. NOTES ME-TCD01 (VER 06/2017) BEFORE USE.
Design valid for use only with Mitek connectors. This design is based only upon parameters shown, and is for individual building components. Applicability of design parameters and proper incorporation of component is responsibility of building designer - not truss designer. Bracing shown is for lateral support of individual web members only. Additional temporary bracing to ensure stability during construction is the responsibility of the erector. Additional permanent bracing of the overall structure is the responsibility of the building designer. For general guidance regarding fabrication, quality control, storage, delivery, erection and bracing, consult
TPIC Appendix G - Minimum quality Manufacturing Criteria available from **www.tpic.ca** and **BCSI-CANADA (Building Component Safety Information) available** from TPI, 781 N. Lee Street, Suite 312, Alexandria, VA 22314 or www.sbcindustry.com

KOTT

JOB NAME	TRUSS NAME	QUANTITY	PLY	JOB DESC.	DRWG NO.
T-RIVER 9-3	T02	1	1	ZADORRA ESTATES INC TRUSS DESC.	ME23-5775-24

Kott, Uxbridge,ON

Version 8.630 S Mar 22 2023 MiTek Industries, Inc. Wed Jul 5 08:43:32 2023 Page 1

ID:zkA_Is?YGX_ucIN5I0pn2xzMVXv-EatmaTt1jm4djkYkjRQszjkjJ7RaA8dIZCmkyrz?B_9

CORPORATION OF THE CITY OF OSHAWA
TRUE COPY
OF PERMIT PLANS
Nov 22 2023
PER: C. Martin
CHIEF BUILDING OFFICIAL

MHP 23026

Scale = 1:40.2

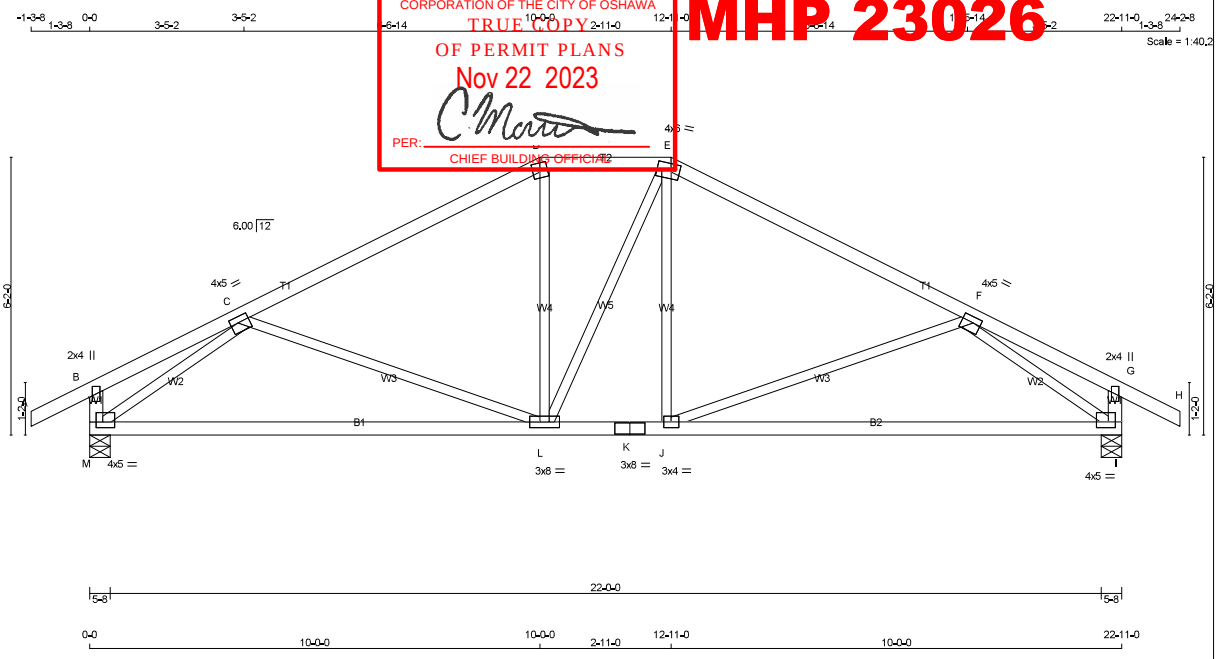

TOTAL WEIGHT = 92 lb

[M][F]

LUMBER

N. L. G. A. RULES

CHORDS	SIZE		LUMBER	DESCR.
A - D	2x4	DRY	No.2	SPF
D - E	2x4	DRY	No.2	SPF
E - H	2x4	DRY	No.2	SPF
M - B	2x4	DRY	No.2	SPF
I - G	2x4	DRY	No.2	SPF
M - K	2x4	DRY	No.2	SPF
K - I	2x4	DRY	No.2	SPF
ALL WEBS EXCEPT	2x3	DRY	No.2	SPF

DRY: SEASONED LUMBER.

PLATES (table is in inches)

JT	TYPE	PLATES	W	LEN	Y	X
B	TMV+p	MT20	2.0	4.0		
C	TMWW-t	MT20	4.0	5.0	1.50	2.00
D	TTW-m	MT20	4.0	4.0		
E	TTWW-m	MT20	4.0	6.0	1.75	2.25
F	TMWW-t	MT20	4.0	5.0	1.50	2.00
G	TMV+p	MT20	2.0	4.0		
I	BMVW1-t	MT20	4.0	5.0	1.50	1.75
J	BMWW-t	MT20	3.0	4.0		
K	BS-t	MT20	3.0	8.0		
L	BMWWW-t	MT20	3.0	8.0		
M	BMVW1-t	MT20	4.0	5.0	1.50	1.75

DIMENSIONS, SUPPORTS AND LOADINGS SPECIFIED BY FABRICATOR TO BE VERIFIED BY BUILDING DESIGNER

BEARINGS

JT	FACTORED GROSS REACTION VERT	HORZ	MAXIMUM FACTORED GROSS REACTION DOWN	HORZ	UPLIFT	INPUT BRG IN-SX	REQRD BRG IN-SX
M	1740	0	1740	0	0	5-8	1-14
I	1740	0	1740	0	0	5-8	1-14

UNFACTORED REACTIONS

1ST LCASE MAX./MIN. COMPONENT REACTIONS

JT	COMBINED	SNOW	LIVE	PERM.LIVE	WIND	DEAD	SOIL
M	1213	892 / 0	0 / 0	0 / 0	0 / 0	321 / 0	0 / 0
I	1213	892 / 0	0 / 0	0 / 0	0 / 0	321 / 0	0 / 0

BEARING MATERIAL TO BE SPF NO.2 OR BETTER AT JOINT(S) M, I

BRACING

TOP CHORD TO BE SHEATHED OR MAX. PURLIN SPACING = 4.10 FT.
MAX. UNBRACED BOTTOM CHORD LENGTH = 10.00 FT OR RIGID CEILING DIRECTLY APPLIED.

ALL PITCH BREAKS AND PERIMETER CORNER JOINTS MUST BE LATERALLY RESTRAINED.

LOADING

TOTAL LOAD CASES: (4)

CHORDS

MEMB. FR-TO	MAX. FORCE (LBS)	FACTORED VERT. LOAD (PLF) FROM	TO	LC1	MAX CSI (LC)	MAX. UNBRAC LENGTH
A- B	0 / 36	-119.4	-119.4	0.16 (1)	10.00	
B- C	0 / 62	-119.4	-119.4	0.64 (1)	10.00	
C- D	-1752 / 0	-119.4	-119.4	0.70 (1)	4.10	
D- E	-1543 / 0	-119.4	-119.4	0.16 (1)	5.16	
E- F	-1752 / 0	-119.4	-119.4	0.70 (1)	4.10	
F- G	0 / 62	-119.4	-119.4	0.64 (1)	10.00	
G- H	0 / 36	-119.4	-119.4	0.16 (1)	10.00	
M- B	-223 / 0	0.0	0.0	0.02 (1)	7.81	
I- G	-223 / 0	0.0	0.0	0.02 (1)	7.81	
M- L	0 / 1903	-18.2	-18.2	0.52 (1)	10.00	
L- K	0 / 1543	-18.2	-18.2	0.50 (4)	10.00	
K- J	0 / 1543	-18.2	-18.2	0.50 (4)	10.00	
J- I	0 / 1903	-18.2	-18.2	0.53 (1)	10.00	

WEBS

MEMB. FR-TO	MAX. FORCE (LBS)	MAX CSI (LC)
C- L	-390 / 0	0.42 (1)
L- D	0 / 269	0.06 (1)
L- E	0 / 1	0.00 (1)
J- E	0 / 268	0.06 (1)
J- F	-390 / 0	0.42 (1)
M- C	-2386 / 0	0.70 (1)
F- I	-2386 / 0	0.70 (1)

DESIGN CRITERIA

SPECIFIED LOADS:

TOP CH.	LL	=	34.8	PSF
	DL	=	6.0	PSF
BOT CH.	LL	=	0.0	PSF
	DL	=	7.3	PSF
TOTAL LOAD		=	48.1	PSF

SPACING = 24.0 IN. C/C

LOADING IN FLAT SECTION BASED ON A SLOPE OF 2.00/12 MINIMUM

THIS TRUSS IS DESIGNED FOR RESIDENTIAL OR SMALL BUILDING REQUIREMENTS OF PART 9, NBCC 2015

THIS DESIGN COMPLIES WITH:
- PART 9 OF BCBC 2018 , NBC-2019AE
- PART 9 OF OBC 2012 (2019 AMENDMENT)
- CSA 086-14
- TPIC 2014

(55 % OF 48.1 P.S.F. G.S.L. PLUS 8.4 P.S.F. RAIN LOAD) EQUALS 34.8 P.S.F. SPECIFIED ROOF LIVE LOAD

ALLOWABLE DEFL.(LL)= L/360 (0.76")
CALCULATED VERT. DEFL.(LL) = L/ 999 (0.07")
ALLOWABLE DEFL.(TL)= L/360 (0.76")
CALCULATED VERT. DEFL.(TL) = L/ 813 (0.34")

CSI: TC=0.70/1.00 (C-D:1) , BC=0.53/1.00 (I-J:1) , WB=0.70/1.00 (C-M:1) , SSI=0.33/1.00 (E-F:1)

DOL LUMBER=1.00 NAIL=1.00 LS BEND=1.10 COMP=1.10 SHEAR=1.10 TENS= 1.10

COMPANION LIVE LOAD FACTOR = 1.00

TRUSS PLATE MANUFACTURER IS NOT RESPONSIBLE FOR QUALITY CONTROL IN THE TRUSS MANUFACTURING PLANT .

NAIL VALUES

PLATE	GRIP(DRY) (PSI) MAX	MIN	SHEAR (PLI) MAX	MIN	SECTION (PLI) MAX	MIN
MT20	650	371	1747	788	1987	1873

PLATE PLACEMENT TOL. = 0.250 inches

PLATE ROTATION TOL. = 5.0 Deg.

JSI GRIP= 0.88 (K) (INPUT = 0.90)
JSI METAL= 0.89 (K) (INPUT = 1.00)

MODULUS ENGINEERING LTD.

LICENSED PROFESSIONAL ENGINEER
07/05/2023
D. A. SHERMAN
100123373
PROVINCE OF ONTARIO

REVIEW FOR TRUSS COMPONENT ONLY

NOTE: ALTERING THIS DOCUMENT VOIDS THE ENGINEERS SEAL

WARNING - Verify design parameters and READ NOTES ON THIS AND INCLUDED IN MODULUS ENGINEERING LTD. NOTES ME-TCD01 (VER 06/2017) BEFORE USE.
Design valid for use only with Mitek connectors. This design is based only upon parameters shown, and is for individual building components. Applicability of design parameters and proper incorporation of component is responsibility of building designer - not truss designer. Bracing shown is for lateral support of individual web members only. Additional temporary bracing to ensure stability during construction is the responsibility of the erector. Additional permanent bracing of the overall structure is the responsibility of the building designer. For general guidance regarding fabrication, quality control, storage, delivery, erection and bracing, consult
TPIC Appendix G - Minimum quality Manufacturing Criteria available from **www.tpic.ca** and **BCSI-CANADA (Building Component Safety Information) available** from TPI, 781 N. Lee Street, Suite 312, Alexandria, VA 22314 or www.sbcindustry.com

KOTT

JOB NAME	TRUSS NAME	QUANTITY	PLY	JOB DESC.	DRWG NO.
T-RIVER 9-3	T02A	1	1	ZADORRA ESTATES INC TRUSS DESC.	ME23-5775-25

Kott, Uxbridge,ON

Version 8.630 S Mar 22 2023 MiTek Industries, Inc. Wed Jul 5 08:43:33 2023 Page 1

ID:zkA_Is?YGX_ucIN5I0pn2xzMVXv-imR8nptgU4CUKu7wH9x5VxHu5Xnvvb?SnsWHVHz?B_8

CORPORATION OF THE CITY OF OSHAWA
TRUE COPY
OF PERMIT PLANS
Nov 22 2023
PER: C. Martin
CHIEF BUILDING OFFICIAL

MHP 23026

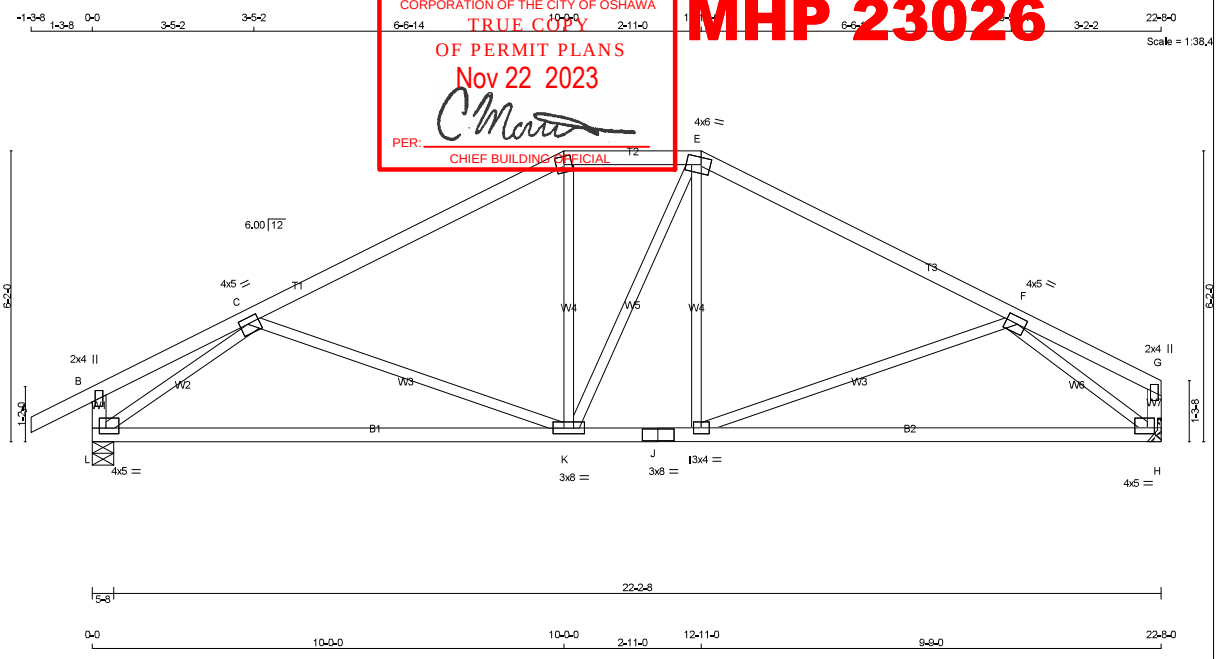

TOTAL WEIGHT = 90 lb

[M][F]

LUMBER

N. L. G. A. RULES

CHORDS	SIZE		LUMBER	DESCR.
A - D	2x4	DRY	No.2	SPF
D - E	2x4	DRY	No.2	SPF
E - G	2x4	DRY	No.2	SPF
L - B	2x4	DRY	No.2	SPF
H - G	2x4	DRY	No.2	SPF
L - J	2x4	DRY	No.2	SPF
J - H	2x4	DRY	No.2	SPF
ALL WEBS EXCEPT	2x3	DRY	No.2	SPF

DRY: SEASONED LUMBER.

PLATES (table is in inches)

JT	TYPE	PLATES	W	LEN	Y	X
B	TMV+p	MT20	2.0	4.0		
C	TMWW-t	MT20	4.0	5.0	1.50	2.00
D	TTW-m	MT20	4.0	4.0		
E	TTWW-m	MT20	4.0	6.0	1.75	2.25
F	TMWW-t	MT20	4.0	5.0	1.75	2.00
G	TMV+p	MT20	2.0	4.0		
H	BMVW1-t	MT20	4.0	5.0	1.50	1.75
I	BMWW-t	MT20	3.0	4.0		
J	BS-t	MT20	3.0	8.0		
K	BMWWW-t	MT20	3.0	8.0		
L	BMVW1-t	MT20	4.0	5.0	1.50	1.75

DIMENSIONS, SUPPORTS AND LOADINGS SPECIFIED BY FABRICATOR TO BE VERIFIED BY BUILDING DESIGNER

BEARINGS

JT	FACTORED GROSS REACTION VERT	HORZ	MAXIMUM GROSS REACTION DOWN	FACTORED HORZ	UPLIFT	INPUT BRG	REQRD BRG
L	1722	0	1722	0	0	5-8	1-14
H	1560	0	1560	0	0	MECHANICAL	

A SUITABLE HANGER/MECHANICAL CONNECTION IS REQUIRED AT JOINT H. MINIMUM BEARING LENGTH AT JOINT H = 1-11.

UNFACTORED REACTIONS

JT	1ST LCASE COMBINED	SNOW	MAX./MIN. COMPONENT REACTIONS LIVE	PERM.LIVE	WIND	DEAD	SOIL
L	1201	883 / 0	0 / 0	0 / 0	0 / 0	318 / 0	0 / 0
H	1090	789 / 0	0 / 0	0 / 0	0 / 0	301 / 0	0 / 0

BEARING MATERIAL TO BE SPF NO.2 OR BETTER AT JOINT(S) L

BRACING

TOP CHORD TO BE SHEATHED OR MAX. PURLIN SPACING = 4.13 FT.
MAX. UNBRACED BOTTOM CHORD LENGTH = 10.00 FT OR RIGID CEILING DIRECTLY APPLIED.

ALL PITCH BREAKS AND PERIMETER CORNER JOINTS MUST BE LATERALLY RESTRAINED.

LOADING

TOTAL LOAD CASES: (4)

CHORDS

MEMB. FR-TO	MAX. FACTORED FORCE (LBS)	FACTORED VERT. LOAD (PLF) FROM	TO	LC1	MAX CSI (LC)	MAX. UNBRAC LENGTH
A- B	0 / 36	-119.4	-119.4	0.16 (1)	10.00	
B- C	0 / 62	-119.4	-119.4	0.64 (1)	10.00	
C- D	-1719 / 0	-119.4	-119.4	0.70 (1)	4.13	
D- E	-1514 / 0	-119.4	-119.4	0.15 (1)	5.20	
E- F	-1708 / 0	-119.4	-119.4	0.70 (1)	4.15	
F- G	0 / 67	-119.4	-119.4	0.64 (1)	10.00	
L- B	-223 / 0	0.0	0.0	0.02 (1)	7.81	
H- G	-34 / 0	0.0	0.0	0.00 (1)	7.81	
L- K	0 / 1881	-18.2	-18.2	0.52 (1)	10.00	
K- J	0 / 1503	-18.2	-18.2	0.50 (4)	10.00	
J- I	0 / 1503	-18.2	-18.2	0.50 (4)	10.00	
I- H	0 / 1775	-18.2	-18.2	0.50 (1)	10.00	

WEBS

MEMB. FR-TO	MAX. FACTORED FORCE (LBS)	MAX CSI (LC)
C- K	-397 / 0	0.42 (1)
K- D	0 / 255	0.06 (1)
K- E	0 / 24	0.01 (1)
I- E	0 / 228	0.05 (1)
I- F	-294 / 21	0.31 (1)
L- C	-2358 / 0	0.69 (1)
F- H	-2292 / 0	0.62 (1)

DESIGN CRITERIA

SPECIFIED LOADS:

TOP CH.	LL	=	34.8	PSF
	DL	=	6.0	PSF
BOT CH.	LL	=	0.0	PSF
	DL	=	7.3	PSF
TOTAL LOAD		=	48.1	PSF

SPACING = 24.0 IN. C/C

LOADING IN FLAT SECTION BASED ON A SLOPE OF 2.00/12 MINIMUM

THIS TRUSS IS DESIGNED FOR RESIDENTIAL OR SMALL BUILDING REQUIREMENTS OF PART 9, NBCC 2015

THIS DESIGN COMPLIES WITH:
- PART 9 OF BCBC 2018 , NBC-2019AE
- PART 9 OF OBC 2012 (2019 AMENDMENT)
- CSA 086-14
- TPIC 2014

(55 % OF 48.1 P.S.F. G.S.L. PLUS 8.4 P.S.F. RAIN LOAD) EQUALS 34.8 P.S.F. SPECIFIED ROOF LIVE LOAD

ALLOWABLE DEFL.(LL)= L/360 (0.76")
CALCULATED VERT. DEFL.(LL) = L/ 999 (0.07")
ALLOWABLE DEFL.(TL)= L/360 (0.76")
CALCULATED VERT. DEFL.(TL) = L/ 827 (0.33")

CSI: TC=0.70/1.00 (C-D:1) , BC=0.52/1.00 (K-L:1) , WB=0.69/1.00 (C-L:1) , SSI=0.33/1.00 (E-F:1)

DOL LUMBER=1.00 NAIL=1.00 LS BEND=1.10 COMP=1.10 SHEAR=1.10 TENS= 1.10

COMPANION LIVE LOAD FACTOR = 1.00

TRUSS PLATE MANUFACTURER IS NOT RESPONSIBLE FOR QUALITY CONTROL IN THE TRUSS MANUFACTURING PLANT .

NAIL VALUES

PLATE	GRIP(DRY) (PSI) MAX	MIN	SHEAR (PLI) MAX	MIN	SECTION (PLI) MAX	MIN
MT20	650	371	1747	788	1987	1873

PLATE PLACEMENT TOL. = 0.250 inches

PLATE ROTATION TOL. = 5.0 Deg.

JSI GRIP= 0.89 (F) (INPUT = 0.90)
JSI METAL= 0.85 (J) (INPUT = 1.00)

MODULUS ENGINEERING LTD.

LICENSED PROFESSIONAL ENGINEER
07/05/2023
D. A. SHERMAN
100123373
PROVINCE OF ONTARIO

REVIEW FOR TRUSS COMPONENT ONLY

NOTE: ALTERING THIS DOCUMENT VOIDS THE ENGINEERS SEAL

WARNING - Verify design parameters and READ NOTES ON THIS AND INCLUDED IN MODULUS ENGINEERING LTD. NOTES ME-TCD01 (VER 06/2017) BEFORE USE.
Design valid for use only with Mitek connectors. This design is based only upon parameters shown, and is for individual building components. Applicability of design parameters and proper incorporation of component is responsibility of building designer - not truss designer. Bracing shown is for lateral support of individual web members only. Additional temporary bracing to ensure stability during construction is the responsibility of the erector. Additional permanent bracing of the overall structure is the responsibility of the building designer. For general guidance regarding fabrication, quality control, storage, delivery, erection and bracing, consult
TPIC Appendix G - Minimum quality Manufacturing Criteria available from **www.tpic.ca** and **BCSI-CANADA (Building Component Safety Information) available** from TPI, 781 N. Lee Street, Suite 312, Alexandria, VA 22314 or www.sbcindustry.com

KOTT

JOB NAME	TRUSS NAME	QUANTITY	PLY	JOB DESC. ZADORRA ESTATES INC	DRWG NO.
T-RIVER 9-3	T03	1	1	TRUSS DESC.	ME23-5775-26

Kott, Uxbridge,ON — Version 8.630 S Mar 22 2023 MiTek Industries, Inc. Wed Jul 5 08:43:35 2023 Page 1

ID:zkA_Ie?YGX_ucIN5I0pn2xzMVXv-e9YvCVvw?hTCaBHJOazZaMMJ7KTiNRCkFA?OZAz?B_6

CORPORATION OF THE CITY OF OSHAWA
TRUE COPY
OF PERMIT PLANS
Nov 22 2023
PER: CHIEF BUILDING OFFICIAL

MHP 23026

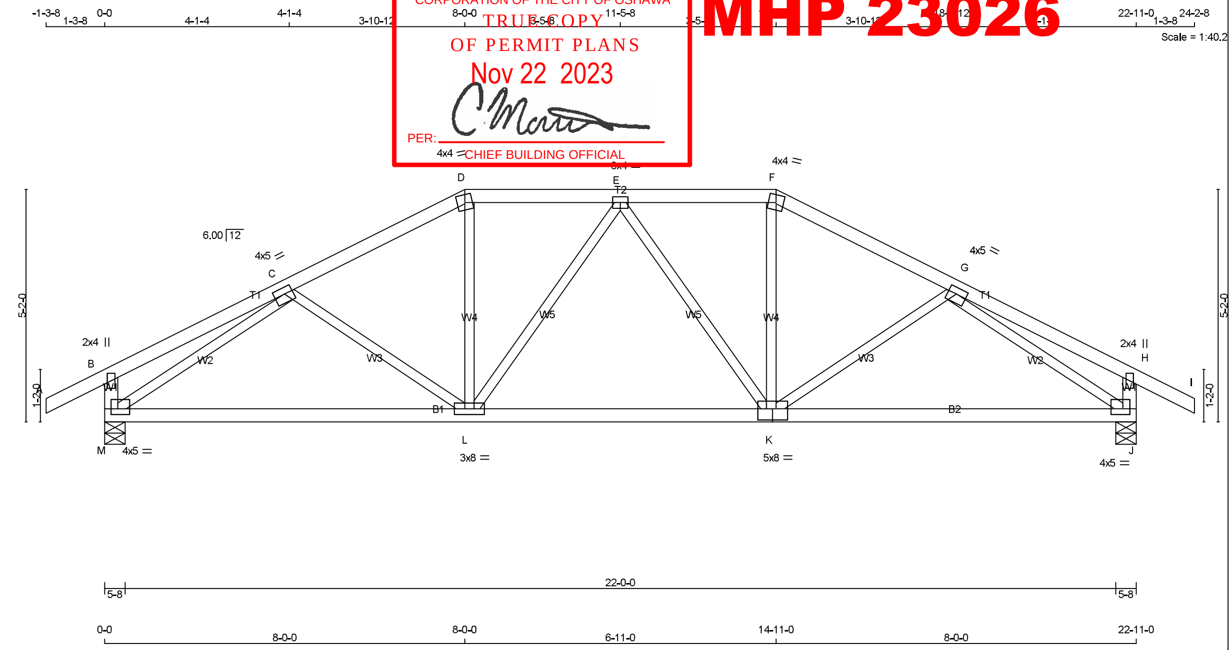

TOTAL WEIGHT = 91 lb
[M][F]

LUMBER
N. L. G. A. RULES

CHORDS	SIZE		LUMBER	DESCR.
A - D	2x4	DRY	No.2	SPF
D - F	2x4	DRY	No.2	SPF
F - I	2x4	DRY	No.2	SPF
M - B	2x4	DRY	No.2	SPF
J - H	2x4	DRY	No.2	SPF
M - K	2x4	DRY	No.2	SPF
K - J	2x4	DRY	No.2	SPF
ALL WEBS EXCEPT	2x3	DRY	No.2	SPF

DRY: SEASONED LUMBER.

PLATES (table is in inches)

JT	TYPE	PLATES	W	LEN	Y	X
B	TMV+p	MT20	2.0	4.0		
C	TMWW-t	MT20	4.0	5.0	1.75	2.25
D	TTW-m	MT20	4.0	4.0		
E	TMWW-t	MT20	3.0	4.0		
F	TTW-m	MT20	4.0	4.0		
G	TMWW-t	MT20	4.0	5.0	1.75	2.25
H	TMV+p	MT20	2.0	4.0		
J	BMWW1-t	MT20	4.0	5.0	1.50	1.75
K	BSWWW-l	MT20	5.0	8.0	3.00	4.00
L	BMWWW-t	MT20	3.0	8.0		
M	BMWW1-t	MT20	4.0	5.0	1.50	1.75

MODULUS ENGINEERING LTD.

LICENSED PROFESSIONAL ENGINEER
07/05/2023
D. A. SHERMAN
100123373
PROVINCE OF ONTARIO

REVIEW FOR TRUSS COMPONENT ONLY

NOTE: ALTERING THIS DOCUMENT VOIDS THE ENGINEERS SEAL

DIMENSIONS, SUPPORTS AND LOADINGS SPECIFIED BY FABRICATOR TO BE VERIFIED BY BUILDING DESIGNER

BEARINGS

JT	FACTORED GROSS REACTION VERT	HORZ	MAXIMUM FACTORED GROSS REACTION DOWN	HORZ	UPLIFT	INPUT BRG IN-SX	REQRD BRG IN-SX
M	1740	0	1740	0	0	5-8	1-14
J	1740	0	1740	0	0	5-8	1-14

UNFACTORED REACTIONS

JT	1ST LCASE COMBINED	SNOW	LIVE	PERM.LIVE	WIND	DEAD	SOIL
M	1213	892 / 0	0 / 0	0 / 0	0 / 0	321 / 0	0 / 0
J	1213	892 / 0	0 / 0	0 / 0	0 / 0	321 / 0	0 / 0

(SNOW through SOIL: MAX./MIN. COMPONENT REACTIONS)

BEARING MATERIAL TO BE SPF NO.2 OR BETTER AT JOINT(S) M, J

BRACING
TOP CHORD TO BE SHEATHED OR MAX. PURLIN SPACING = 4.60 FT.
MAX. UNBRACED BOTTOM CHORD LENGTH = 10.00 FT OR RIGID CEILING DIRECTLY APPLIED.

ALL PITCH BREAKS AND PERIMETER CORNER JOINTS MUST BE LATERALLY RESTRAINED.

LOADING
TOTAL LOAD CASES: (4)

CHORDS

MEMB. FR-TO	MAX. FACTORED FORCE (LBS)	FACTORED VERT. LOAD LC1 (PLF) FROM	TO	MAX CSI (LC)	MAX. UNBRAC LENGTH
A- B	0 / 36	-119.4	-119.4	0.16 (1)	10.00
B- C	0 / 23	-119.4	-119.4	0.28 (1)	10.00
C- D	-1933 / 0	-119.4	-119.4	0.26 (1)	4.60
D- E	-1718 / 0	-119.4	-119.4	0.20 (1)	4.90
E- F	-1693 / 0	-119.4	-119.4	0.20 (1)	4.93
F- G	-1909 / 0	-119.4	-119.4	0.26 (1)	4.63
G- H	0 / 23	-119.4	-119.4	0.28 (1)	10.00
H- I	0 / 36	-119.4	-119.4	0.16 (1)	10.00
M- B	-351 / 0	0.0	0.0	0.04 (1)	7.81
J- H	-351 / 0	0.0	0.0	0.04 (1)	7.81
M- L	0 / 1862	-18.2	-18.2	0.45 (1)	10.00
L- K	0 / 1877	-18.2	-18.2	0.46 (1)	10.00
K- J	0 / 1843	-18.2	-18.2	0.50 (1)	10.00

WEBS

MEMB. FR-TO	MAX. FACTORED FORCE (LBS)	MAX CSI (LC)
C- L	-189 / 19	0.08 (1)
L- D	0 / 506	0.11 (1)
L- E	-281 / 0	0.17 (1)
E- K	-323 / 0	0.20 (1)
K- F	0 / 495	0.11 (1)
K- G	-193 / 14	0.08 (1)
M- C	-2288 / 0	0.90 (1)
G- J	-2264 / 0	0.89 (1)

DESIGN CRITERIA

SPECIFIED LOADS:

TOP CH.	LL	=	34.8	PSF
	DL	=	6.0	PSF
BOT CH.	LL	=	0.0	PSF
	DL	=	7.3	PSF
TOTAL LOAD		=	48.1	PSF

SPACING = 24.0 IN. C/C

LOADING IN FLAT SECTION BASED ON A SLOPE OF 2.00/12 MINIMUM

THIS TRUSS IS DESIGNED FOR RESIDENTIAL OR SMALL BUILDING REQUIREMENTS OF PART 9, NBCC 2015

THIS DESIGN COMPLIES WITH:
- PART 9 OF BCBC 2018 , NBC-2019AE
- PART 9 OF OBC 2012 (2019 AMENDMENT)
- CSA 086-14
- TPIC 2014

(55 % OF 48.1 P.S.F. G.S.L. PLUS 8.4 P.S.F. RAIN LOAD) EQUALS 34.8 P.S.F. SPECIFIED ROOF LIVE LOAD

ALLOWABLE DEFL.(LL)= L/360 (0.76")
CALCULATED VERT. DEFL.(LL) = L/ 999 (0.08")
ALLOWABLE DEFL.(TL)= L/360 (0.76")
CALCULATED VERT. DEFL.(TL) = L/ 999 (0.26")

CSI: TC=0.28/1.00 (G-H:1) , BC=0.50/1.00 (J-K:1) , WB=0.90/1.00 (C-M:1) , SSI=0.20/1.00 (G-H:1)

DOL LUMBER=1.00 NAIL=1.00 LS BEND=1.10 COMP=1.10 SHEAR=1.10 TENS= 1.10

COMPANION LIVE LOAD FACTOR = 1.00

TRUSS PLATE MANUFACTURER IS NOT RESPONSIBLE FOR QUALITY CONTROL IN THE TRUSS MANUFACTURING PLANT .

NAIL VALUES

PLATE	GRIP(DRY) (PSI) MAX	MIN	SHEAR (PLI) MAX	MIN	SECTION (PLI) MAX	MIN
MT20	650	371	1747	788	1987	1873

PLATE PLACEMENT TOL. = 0.250 inches

PLATE ROTATION TOL. = 5.0 Deg.

JSI GRIP= 0.88 (K) (INPUT = 0.90)
JSI METAL= 0.59 (C) (INPUT = 1.00)

WARNING - Verify design parameters and READ NOTES ON THIS AND INCLUDED IN MODULUS ENGINEERING LTD. NOTES ME-TCD01 (VER 06/2017) BEFORE USE.
Design valid for use only with Mitek connectors. This design is based only upon parameters shown, and is for individual building components. Applicability of design parameters and proper incorporation of component is responsibility of building designer - not truss designer. Bracing shown is for lateral support of individual web members only. Additional temporary bracing to ensure stability during construction is the responsibility of the erector. Additional permanent bracing of the overall structure is the responsibility of the building designer. For general guidance regarding fabrication, quality control, storage, delivery, erection and bracing, consult **TPIC Appendix G - Minimum quality Manufacturing Criteria** available from **www.tpic.ca** and **BCSI-CANADA (Building Component Safety Information) available** from TPI, 781 N. Lee Street, Suite 312, Alexandria, VA 22314 or www.sbcindustry.com

KOTT

JOB NAME	TRUSS NAME	QUANTITY	PLY	JOB DESC.	DRWG NO.
T-RIVER 9-3	T03A	1	1	ZADORRA ESTATES INC TRUSS DESC.	ME23-5775-27

Kott, Uxbridge,ON

Version 8.630 S Mar 22 2023 MiTek Industries, Inc. Wed Jul 5 08:43:36 2023 Page 1

ID:ekA_ls?YGX_ucIN5I0pn2xzMVXv-6L6HQrwYm?b3BLsVyHUo7ZvUtkpQ6veuTqky5cz?B_5

CORPORATION OF THE CITY OF OSHAWA
TRUE COPY
OF PERMIT PLANS
Nov 22 2023
PER: C Matt
CHIEF BUILDING OFFICIAL

MHP 23026

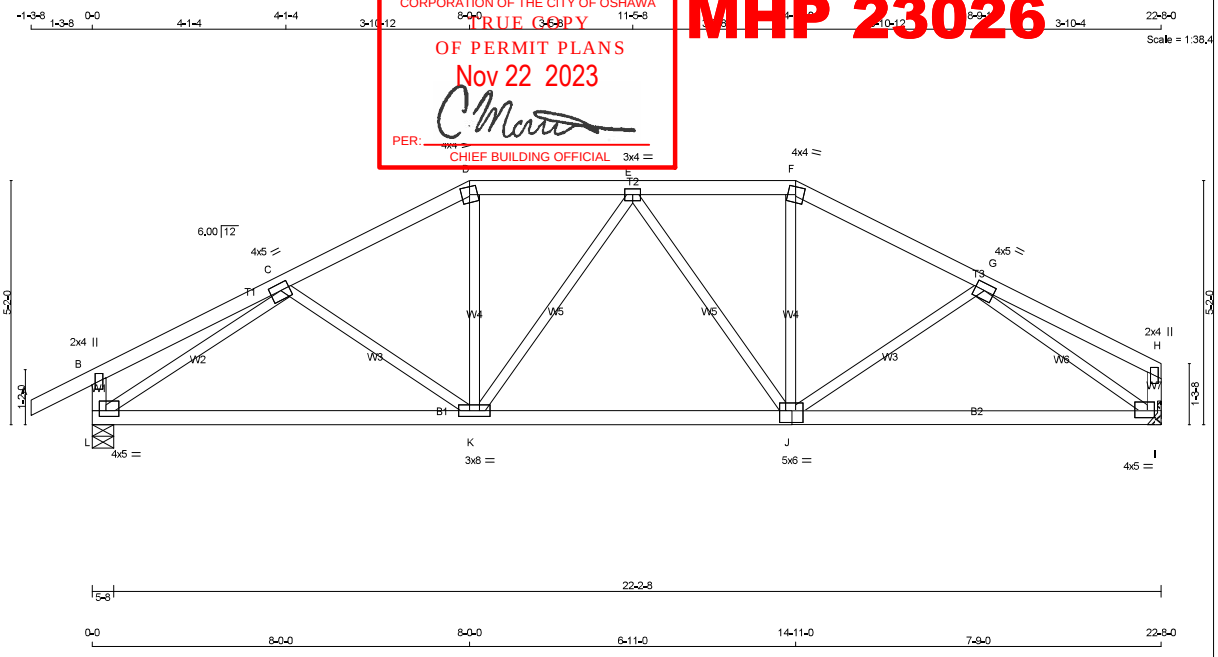

TOTAL WEIGHT = 89 lb

[M][F]

LUMBER
N. L. G. A. RULES

CHORDS	SIZE		LUMBER	DESCR.
A - D	2x4	DRY	No.2	SPF
D - F	2x4	DRY	No.2	SPF
F - H	2x4	DRY	No.2	SPF
L - B	2x4	DRY	No.2	SPF
I - H	2x4	DRY	No.2	SPF
L - J	2x4	DRY	No.2	SPF
J - I	2x4	DRY	No.2	SPF
ALL WEBS EXCEPT	2x3	DRY	No.2	SPF

DRY: SEASONED LUMBER.

PLATES (table is in inches)

JT	TYPE	PLATES	W	LEN	Y	X
B	TMV+p	MT20	2.0	4.0		
C	TMWW-t	MT20	4.0	5.0	1.75	2.25
D	TTW-m	MT20	4.0	4.0		
E	TMWW-t	MT20	3.0	4.0		
F	TTW-m	MT20	4.0	4.0		
G	TMWW-t	MT20	4.0	5.0	1.75	2.50
H	TMV+p	MT20	2.0	4.0		
I	BMVW1-t	MT20	4.0	5.0	1.75	1.75
J	BSWWW-t	MT20	5.0	6.0	3.00	2.75
K	BMWWW-t	MT20	3.0	8.0		
L	BMVW1-t	MT20	4.0	5.0	1.50	1.75

DIMENSIONS, SUPPORTS AND LOADINGS SPECIFIED BY FABRICATOR TO BE VERIFIED BY BUILDING DESIGNER

BEARINGS

JT	FACTORED GROSS REACTION VERT	HORZ	MAXIMUM FACTORED GROSS REACTION DOWN	HORZ	UPLIFT	INPUT BRG	REQRD BRG
L	1722	0	1722	0	0	5-8	1-14
I	1560	0	1560	0	0	MECHANICAL	

A SUITABLE HANGER/MECHANICAL CONNECTION IS REQUIRED AT JOINT I. MINIMUM BEARING LENGTH AT JOINT I = 1-11.

UNFACTORED REACTIONS

JT	1ST LCASE COMBINED	MAX./MIN. COMPONENT REACTIONS SNOW	LIVE	PERM.LIVE	WIND	DEAD	SOIL
L	1201	883 / 0	0 / 0	0 / 0	0 / 0	318 / 0	0 / 0
I	1090	789 / 0	0 / 0	0 / 0	0 / 0	301 / 0	0 / 0

BEARING MATERIAL TO BE SPF NO.2 OR BETTER AT JOINT(S) L

BRACING

TOP CHORD TO BE SHEATHED OR MAX. PURLIN SPACING = 4.64 FT.
MAX. UNBRACED BOTTOM CHORD LENGTH = 10.00 FT OR RIGID CEILING DIRECTLY APPLIED.

ALL PITCH BREAKS AND PERIMETER CORNER JOINTS MUST BE LATERALLY RESTRAINED.

LOADING

TOTAL LOAD CASES: (4)

CHORDS

MEMB. FR-TO	MAX. FACTORED FORCE (LBS)	FACTORED VERT. LOAD (PLF) FROM	TO	LC1	MAX CSI (LC)	MAX. UNBRAC LENGTH
A- B	0 / 36	-119.4	-119.4	0.16 (1)	10.00	
B- C	0 / 23	-119.4	-119.4	0.28 (1)	10.00	
C- D	-1902 / 0	-119.4	-119.4	0.26 (1)	4.64	
D- E	-1689 / 0	-119.4	-119.4	0.20 (1)	4.93	
E- F	-1640 / 0	-119.4	-119.4	0.20 (1)	4.99	
F- G	-1849 / 0	-119.4	-119.4	0.25 (1)	4.71	
G- H	0 / 23	-119.4	-119.4	0.27 (1)	10.00	
L- B	-351 / 0	0.0	0.0	0.04 (1)	7.81	
I- H	-174 / 0	0.0	0.0	0.02 (1)	7.81	
L- K	0 / 1838	-18.2	-18.2	0.45 (1)	10.00	
K- J	0 / 1837	-18.2	-18.2	0.45 (1)	10.00	
J- I	0 / 1728	-18.2	-18.2	0.47 (1)	10.00	

WEBS

MEMB. FR-TO	MAX. FACTORED FORCE (LBS)	MAX CSI (LC)
C- K	-194 / 18	0.08 (1)
K- D	0 / 492	0.11 (1)
K- E	-260 / 0	0.16 (1)
E- J	-344 / 0	0.21 (1)
J- F	0 / 466	0.10 (1)
J- G	-116 / 31	0.05 (1)
L- C	-2258 / 0	0.89 (1)
G- I	-2172 / 0	0.78 (1)

DESIGN CRITERIA

SPECIFIED LOADS:

TOP CH.	LL	=	34.8	PSF
	DL	=	6.0	PSF
BOT CH.	LL	=	0.0	PSF
	DL	=	7.3	PSF
TOTAL LOAD		=	48.1	PSF

SPACING = 24.0 IN. C/C

LOADING IN FLAT SECTION BASED ON A SLOPE OF 2.00/12 MINIMUM

THIS TRUSS IS DESIGNED FOR RESIDENTIAL OR SMALL BUILDING REQUIREMENTS OF PART 9, NBCC 2015

THIS DESIGN COMPLIES WITH:
- PART 9 OF BCBC 2018 , NBC-2019AE
- PART 9 OF OBC 2012 (2019 AMENDMENT)
- CSA 086-14
- TPIC 2014

(55 % OF 48.1 P.S.F. G.S.L. PLUS 8.4 P.S.F. RAIN LOAD) EQUALS 34.8 P.S.F. SPECIFIED ROOF LIVE LOAD

ALLOWABLE DEFL.(LL)= L/360 (0.76")
CALCULATED VERT. DEFL.(LL) = L/ 999 (0.07")
ALLOWABLE DEFL.(TL)= L/360 (0.76")
CALCULATED VERT. DEFL.(TL) = L/ 999 (0.23")

CSI: TC=0.28/1.00 (B-C:1) , BC=0.47/1.00 (I-J:1) , WB=0.89/1.00 (C-L:1) , SSI=0.20/1.00 (B-C:1)

DOL LUMBER=1.00 NAIL=1.00 LS BEND=1.10 COMP=1.10 SHEAR=1.10 TENS= 1.10

COMPANION LIVE LOAD FACTOR = 1.00

TRUSS PLATE MANUFACTURER IS NOT RESPONSIBLE FOR QUALITY CONTROL IN THE TRUSS MANUFACTURING PLANT .

NAIL VALUES

PLATE	GRIP(DRY) (PSI) MAX	MIN	SHEAR (PLI) MAX	MIN	SECTION (PLI) MAX	MIN
MT20	650	371	1747	788	1987	1873

PLATE PLACEMENT TOL. = 0.250 inches

PLATE ROTATION TOL. = 5.0 Deg.

JSI GRIP= 0.90 (G) (INPUT = 0.90)
JSI METAL= 0.58 (C) (INPUT = 1.00)

MODULUS ENGINEERING LTD.

LICENSED PROFESSIONAL ENGINEER
07/05/2023
D. A. SHERMAN
100123373
PROVINCE OF ONTARIO

REVIEW FOR TRUSS COMPONENT ONLY

NOTE: ALTERING THIS DOCUMENT VOIDS THE ENGINEERS SEAL

WARNING - Verify design parameters and READ NOTES ON THIS AND INCLUDED IN MODULUS ENGINEERING LTD. NOTES ME-TCD01 (VER 06/2017) BEFORE USE.
Design valid for use only with Mitek connectors. This design is based only upon parameters shown, and is for individual building components. Applicability of design parameters and proper incorporation of component is responsibility of building designer - not truss designer. Bracing shown is for lateral support of individual web members only. Additional temporary bracing to ensure stability during construction is the responsibility of the erector. Additional permanent bracing of the overall structure is the responsibility of the building designer. For general guidance regarding fabrication, quality control, storage, delivery, erection and bracing, consult
TPIC Appendix G - Minimum quality Manufacturing Criteria available from **www.tpic.ca** and **BCSI-CANADA (Building Component Safety Information) available** from TPI, 781 N. Lee Street, Suite 312, Alexandria, VA 22314 or www.sbcindustry.com

KOTT

JOB NAME	TRUSS NAME	QUANTITY	PLY	JOB DESC.	DRWG NO.
T-RIVER 9-3	T04	1	1	ZADORRA ESTATES INC TRUSS DESC.	ME23-5775-28

Kott, Uxbridge,ON

Version 8.630 S Mar 22 2023 MiTek Industries, Inc. Wed Jul 5 08:43:37 2023 Page 1

ID:kA_Is?YGX_ucIN5I0pn2xzMVXv-aXgfdBxAXIjwpVRhW?01fnScJ8EHrXc1iUUVe2z?B_4

CORPORATION OF THE CITY OF OSHAWA
TRUE COPY
OF PERMIT PLANS
Nov 22 2023
PER: _____
CHIEF BUILDING OFFICIAL

MHP 23026

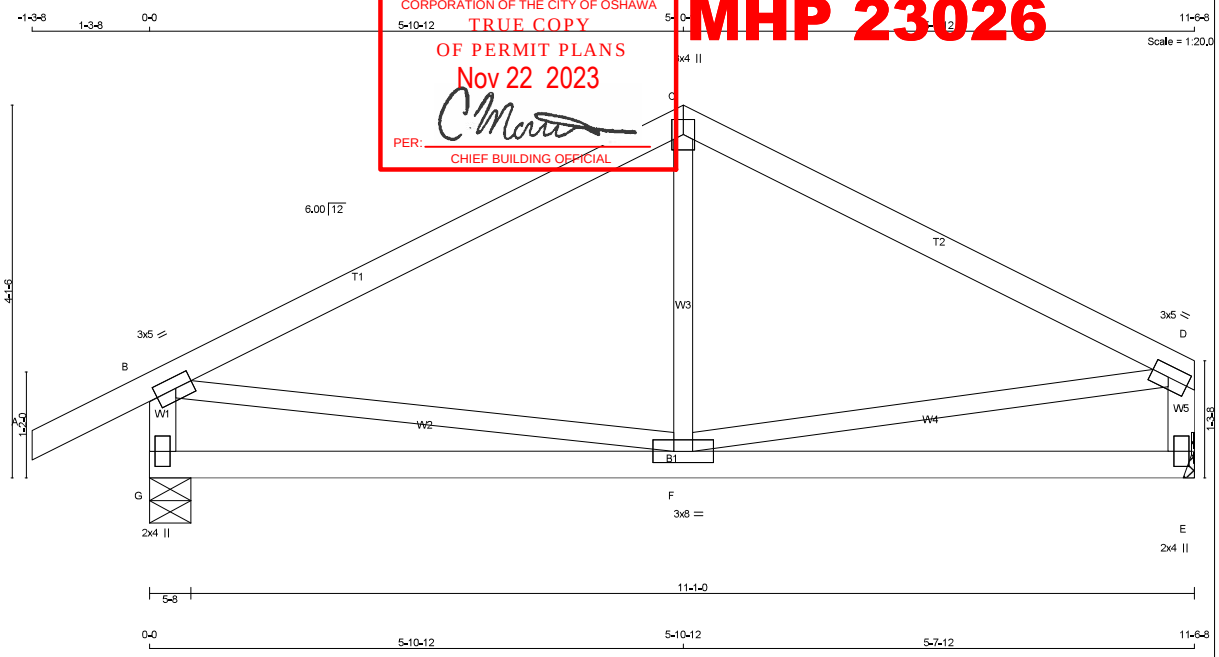

TOTAL WEIGHT = 43 lb

LUMBER
N. L. G. A. RULES

CHORDS	SIZE		LUMBER	DESCR.
A - C	2x4	DRY	2100F 1.8E	SPF
C - D	2x4	DRY	No.2	SPF
G - B	2x4	DRY	No.2	SPF
E - D	2x4	DRY	No.2	SPF
G - E	2x4	DRY	No.2	SPF
ALL WEBS EXCEPT	2x3	DRY	No.2	SPF

DRY: SEASONED LUMBER.

PLATES (table is in inches)

JT	TYPE	PLATES	W	LEN	Y	X
B	TMVW+	MT20	3.0	5.0	1.50	2.25
C	TTW+p	MT20	3.0	4.0		
D	TMVW+	MT20	3.0	5.0	1.50	2.25
E	BMV1+p	MT20	2.0	4.0		
F	BMWWW+	MT20	3.0	8.0		
G	BMV1+p	MT20	2.0	4.0		

DIMENSIONS, SUPPORTS AND LOADINGS SPECIFIED BY FABRICATOR TO BE VERIFIED BY BUILDING DESIGNER

BEARINGS

JT	FACTORED GROSS REACTION VERT	HORZ	MAXIMUM FACTORED GROSS REACTION DOWN	HORZ	UPLIFT	INPUT BRG IN-SX	REQRD BRG IN-SX
G	957	0	957	0	0	5-8	1-8
E	795	0	795	0	0	MECHANICAL	

A SUITABLE HANGER/MECHANICAL CONNECTION IS REQUIRED AT JOINT E. MINIMUM BEARING LENGTH AT JOINT E = 1-8.

UNFACTORED REACTIONS

1ST LCASE MAX./MIN. COMPONENT REACTIONS

JT	COMBINED	SNOW	LIVE	PERM.LIVE	WIND	DEAD	SOIL
G	666	496 / 0	0 / 0	0 / 0	0 / 0	170 / 0	0 / 0
E	555	402 / 0	0 / 0	0 / 0	0 / 0	154 / 0	0 / 0

BEARING MATERIAL TO BE SPF NO.2 OR BETTER AT JOINT(S) G

BRACING

TOP CHORD TO BE SHEATHED OR MAX. PURLIN SPACING = 6.25 FT.
MAX. UNBRACED BOTTOM CHORD LENGTH = 10.00 FT OR RIGID CEILING DIRECTLY APPLIED.

ALL PITCH BREAKS AND PERIMETER CORNER JOINTS MUST BE LATERALLY RESTRAINED.

LOADING

TOTAL LOAD CASES: (4)

CHORDS

MEMB. FR-TO	MAX. FACTORED FORCE (LBS)	FACTORED VERT. LOAD (PLF) FROM	TO	LC1	MAX CSI (LC)	MAX. UNBRAC LENGTH
A- B	0 / 36	-119.4	-119.4	0.10 (1)	10.00	
B- C	-693 / 0	-119.4	-119.4	0.35 (1)	6.25	
C- D	-693 / 0	-119.4	-119.4	0.49 (1)	6.25	
G- B	-914 / 0	0.0	0.0	0.09 (1)	7.81	
E- D	-755 / 0	0.0	0.0	0.08 (1)	7.81	
G- F	0 / 0	-18.2	-18.2	0.17 (4)	10.00	
F- E	0 / 0	-18.2	-18.2	0.17 (4)	10.00	

WEBS

MEMB. FR-TO	MAX. FACTORED FORCE (LBS)	MAX CSI (LC)
F- C	-70 / 87	0.03 (4)
B- F	0 / 626	0.14 (1)
F- D	0 / 629	0.14 (1)

DESIGN CRITERIA

SPECIFIED LOADS:

TOP CH.	LL	=	34.8	PSF
	DL	=	6.0	PSF
BOT CH.	LL	=	0.0	PSF
	DL	=	7.3	PSF
TOTAL LOAD		=	48.1	PSF

SPACING = 24.0 IN. C/C

THIS TRUSS IS DESIGNED FOR RESIDENTIAL OR SMALL BUILDING REQUIREMENTS OF PART 9, NBCC 2015

THIS DESIGN COMPLIES WITH:
- PART 9 OF BCBC 2018 , NBC-2019AE
- PART 9 OF OBC 2012 (2019 AMENDMENT)
- CSA 086-14
- TPIC 2014

(55 % OF 48.1 P.S.F. G.S.L. PLUS 8.4 P.S.F. RAIN LOAD) EQUALS 34.8 P.S.F. SPECIFIED ROOF LIVE LOAD

ALLOWABLE DEFL.(LL)= L/360 (0.38")
CALCULATED VERT. DEFL.(LL) = L/ 999 (0.01")
ALLOWABLE DEFL.(TL)= L/360 (0.38")
CALCULATED VERT. DEFL.(TL) = L/ 999 (0.04")

CSI: TC=0.49/1.00 (C-D:1) , BC=0.17/1.00 (E-F:4) , WB=0.14/1.00 (D-F:1) , SSI=0.25/1.00 (B-C:1)

DOL LUMBER=1.00 NAIL=1.00 LS BEND=1.10 COMP=1.10 SHEAR=1.10 TENS= 1.10

COMPANION LIVE LOAD FACTOR = 1.00

TRUSS PLATE MANUFACTURER IS NOT RESPONSIBLE FOR QUALITY CONTROL IN THE TRUSS MANUFACTURING PLANT .

NAIL VALUES

PLATE	GRIP(DRY) (PSI) MAX	MIN	SHEAR (PLI) MAX	MIN	SECTION (PLI) MAX	MIN
MT20	650	371	1747	788	1987	1873

PLATE PLACEMENT TOL. = 0.250 inches

PLATE ROTATION TOL. = 5.0 Deg.

JSI GRIP= 0.80 (B) (INPUT = 0.90)
JSI METAL= 0.26 (B) (INPUT = 1.00)

MODULUS ENGINEERING LTD.

LICENSED PROFESSIONAL ENGINEER
07/05/2023
D. A. SHERMAN
100123373
PROVINCE OF ONTARIO

REVIEW FOR TRUSS COMPONENT ONLY

NOTE: ALTERING THIS DOCUMENT VOIDS THE ENGINEERS SEAL

WARNING - Verify design parameters and READ NOTES ON THIS AND INCLUDED IN MODULUS ENGINEERING LTD. NOTES ME-TCD01 (VER 06/2017) BEFORE USE.
Design valid for use only with Mitek connectors. This design is based only upon parameters shown, and is for individual building components. Applicability of design parameters and proper incorporation of component is responsibility of building designer - not truss designer. Bracing shown is for lateral support of individual web members only. Additional temporary bracing to ensure stability during construction is the responsibility of the erector. Additional permanent bracing of the overall structure is the responsibility of the building designer. For general guidance regarding fabrication, quality control, storage, delivery, erection and bracing, consult
TPIC Appendix G - Minimum quality Manufacturing Criteria available from **www.tpic.ca** and **BCSI-CANADA (Building Component Safety Information) available** from TPI, 781 N. Lee Street, Suite 312, Alexandria, VA 22314 or www.sbcindustry.com

KOTT

JOB NAME	TRUSS NAME	QUANTITY	PLY	JOB DESC. ZADORRA ESTATES INC	DRWG NO.
T-RIVER 9-3	T05	3	1	TRUSS DESC.	ME23-5775-29

Kott, Uxbridge,ON

Version 8.630 S Mar 22 2023 MiTek Industries, Inc. Wed Jul 5 08:43:39 2023 Page 1

ID:zkA_Is?YGX_ucIN5I0pn2xzMVXv-WwoQ2syQ3wze2pa4dQ2VlCX_DywjJQ3KAnzcixz?B_2

CORPORATION OF THE CITY OF OSHAWA
TRUE COPY
OF PERMIT PLANS
Nov 22 2023
PER: CHIEF BUILDING OFFICIAL

MHP 23026

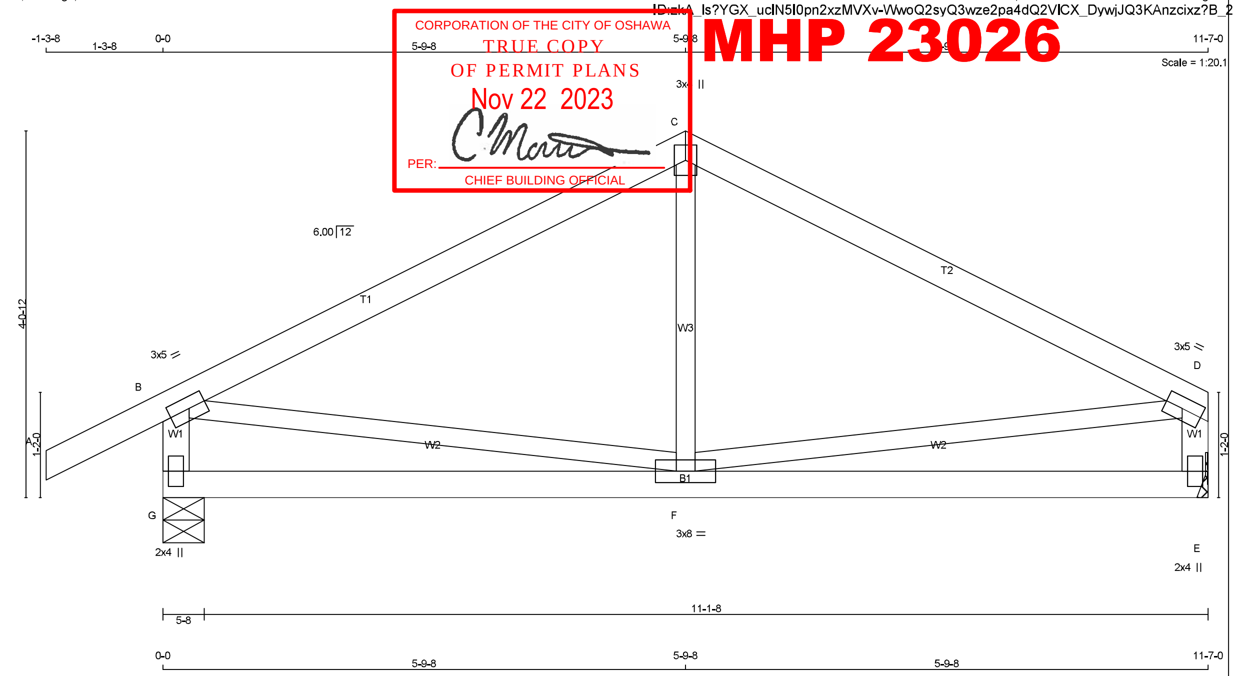

TOTAL WEIGHT = 3 X 43 = 130 lb

[M][F]

LUMBER

N. L. G. A. RULES

CHORDS	SIZE		LUMBER	DESCR.
A - C	2x4	DRY	2100F 1.8E	SPF
C - D	2x4	DRY	2100F 1.8E	SPF
G - B	2x4	DRY	No.2	SPF
E - D	2x4	DRY	No.2	SPF
G - E	2x4	DRY	No.2	SPF
ALL WEBS EXCEPT	2x3	DRY	No.2	SPF

DRY: SEASONED LUMBER.

PLATES (table is in inches)

JT	TYPE	PLATES	W	LEN	Y	X
B	TMVW-t	MT20	3.0	5.0	1.50	2.25
C	TTW+p	MT20	3.0	4.0		
D	TMVW-t	MT20	3.0	5.0	1.50	2.25
E	BMV1+p	MT20	2.0	4.0		
F	BMWWW-t	MT20	3.0	8.0		
G	BMV1+p	MT20	2.0	4.0		

DIMENSIONS, SUPPORTS AND LOADINGS SPECIFIED BY FABRICATOR TO BE VERIFIED BY BUILDING DESIGNER

BEARINGS

JT	FACTORED GROSS REACTION VERT	HORZ	MAXIMUM FACTORED GROSS REACTION DOWN	HORZ	UPLIFT	INPUT BRG IN-SX	REQRD BRG IN-SX
G	959	0	959	0	0	5-8	1-8
E	797	0	797	0	0	MECHANICAL	

A SUITABLE HANGER/MECHANICAL CONNECTION IS REQUIRED AT JOINT E. MINIMUM BEARING LENGTH AT JOINT E = 1-8.

UNFACTORED REACTIONS

JT	1ST LCASE COMBINED	MAX./MIN. COMPONENT REACTIONS SNOW	LIVE	PERM.LIVE	WIND	DEAD	SOIL
G	668	498 / 0	0 / 0	0 / 0	0 / 0	170 / 0	0 / 0
E	557	403 / 0	0 / 0	0 / 0	0 / 0	154 / 0	0 / 0

BEARING MATERIAL TO BE SPF NO.2 OR BETTER AT JOINT(S) G

BRACING

TOP CHORD TO BE SHEATHED OR MAX. PURLIN SPACING = 6.25 FT.
MAX. UNBRACED BOTTOM CHORD LENGTH = 10.00 FT OR RIGID CEILING DIRECTLY APPLIED.

ALL PITCH BREAKS AND PERIMETER CORNER JOINTS MUST BE LATERALLY RESTRAINED.

LOADING

TOTAL LOAD CASES: (4)

CHORDS

MEMB. FR-TO	MAX. FACTORED FORCE (LBS)	FACTORED VERT. LOAD LC1 (PLF) FROM	TO	MAX CSI (LC)	MAX. UNBRAC LENGTH
A- B	0 / 36	-119.4	-119.4	0.10 (1)	10.00
B- C	-708 / 0	-119.4	-119.4	0.34 (1)	6.25
C- D	-708 / 0	-119.4	-119.4	0.34 (1)	6.25
G- B	-918 / 0	0.0	0.0	0.09 (1)	7.81
E- D	-756 / 0	0.0	0.0	0.08 (1)	7.81
G- F	0 / 0	-18.2	-18.2	0.17 (4)	10.00
F- E	0 / 0	-18.2	-18.2	0.17 (4)	10.00

WEBS

MEMB. FR-TO	MAX. FACTORED FORCE (LBS)	MAX CSI (LC)
F- C	-59 / 91	0.03 (4)
B- F	0 / 640	0.14 (1)
F- D	0 / 640	0.14 (1)

DESIGN CRITERIA

SPECIFIED LOADS:

TOP CH.	LL	=	34.8	PSF
	DL	=	6.0	PSF
BOT CH.	LL	=	0.0	PSF
	DL	=	7.3	PSF
TOTAL LOAD		=	48.1	PSF

SPACING = 24.0 IN. C/C

THIS TRUSS IS DESIGNED FOR RESIDENTIAL OR SMALL BUILDING REQUIREMENTS OF PART 9, NBCC 2015

THIS DESIGN COMPLIES WITH:
- PART 9 OF BCBC 2018 , NBC-2019AE
- PART 9 OF OBC 2012 (2019 AMENDMENT)
- CSA 086-14
- TPIC 2014

(55 % OF 48.1 P.S.F. G.S.L. PLUS 8.4 P.S.F. RAIN LOAD) EQUALS 34.8 P.S.F. SPECIFIED ROOF LIVE LOAD

ALLOWABLE DEFL.(LL)= L/360 (0.39")
CALCULATED VERT. DEFL.(LL) = L/ 999 (0.01")
ALLOWABLE DEFL.(TL)= L/360 (0.39")
CALCULATED VERT. DEFL.(TL) = L/ 999 (0.03")

CSI: TC=0.34/1.00 (C-D:1) , BC=0.17/1.00 (E-F:4) , WB=0.14/1.00 (B-F:1) , SSI=0.24/1.00 (C-D:1)

DOL LUMBER=1.00 NAIL=1.00 LS BEND=1.10 COMP=1.10 SHEAR=1.10 TENS= 1.10

COMPANION LIVE LOAD FACTOR = 1.00

TRUSS PLATE MANUFACTURER IS NOT RESPONSIBLE FOR QUALITY CONTROL IN THE TRUSS MANUFACTURING PLANT .

NAIL VALUES

PLATE	GRIP(DRY) (PSI) MAX	MIN	SHEAR (PLI) MAX	MIN	SECTION (PLI) MAX	MIN
MT20	650	371	1747	788	1987	1873

PLATE PLACEMENT TOL. = 0.250 inches

PLATE ROTATION TOL. = 5.0 Deg.

JSI GRIP= 0.81 (D) (INPUT = 0.90)
JSI METAL= 0.27 (D) (INPUT = 1.00)

MODULUS ENGINEERING LTD.

LICENSED PROFESSIONAL ENGINEER
07/05/2023
D. A. SHERMAN
100123373
PROVINCE OF ONTARIO

REVIEW FOR TRUSS COMPONENT ONLY

NOTE: ALTERING THIS DOCUMENT VOIDS THE ENGINEERS SEAL

WARNING - **Verify design parameters and READ NOTES ON THIS AND INCLUDED IN MODULUS ENGINEERING LTD. NOTES ME-TCD01 (VER 06/2017) BEFORE USE.**
Design valid for use only with Mitek connectors. This design is based only upon parameters shown, and is for individual building components. Applicability of design parameters and proper incorporation of component is responsibility of building designer - not truss designer. Bracing shown is for lateral support of individual web members only. Additional temporary bracing to ensure stability during construction is the responsibility of the erector. Additional permanent bracing of the overall structure is the responsibility of the building designer. For general guidance regarding fabrication, quality control, storage, delivery, erection and bracing, consult **TPIC Appendix G - Minimum quality Manufacturing Criteria** available from **www.tpic.ca** and **BCSI-CANADA (Building Component Safety Information) available** from TPI, 781 N. Lee Street, Suite 312, Alexandria, VA 22314 or www.sbcindustry.com

KOTT