CORPORATION OF THE CITY OF OSHAWA
TRUE COPY
OF PERMIT PLANS
Oct 31 2023
PER: C Marr
CHIEF BUILDING OFFICIAL

JOB NAME	TRUSS NAME	QUANTITY	PLY	JOB DESC.	DRWG NO.
NE0723-038	G01	1	3	GREENPARK - ZADORRA ESTATES - ROSE 10-2	

MHP 23031

Version 8.630 S Mar 22 2023 MiTek Industries, Inc. Fri Jul 7 15:13:27 2023 Page 1
ID:5vUDB17_Ic6Oj0vAxsr4RFzBM45-KdESnYzTVEv1ejbftHJmRH24GWWvUyiUXm80Zaz_R4c

Scale: 3/16"=1'

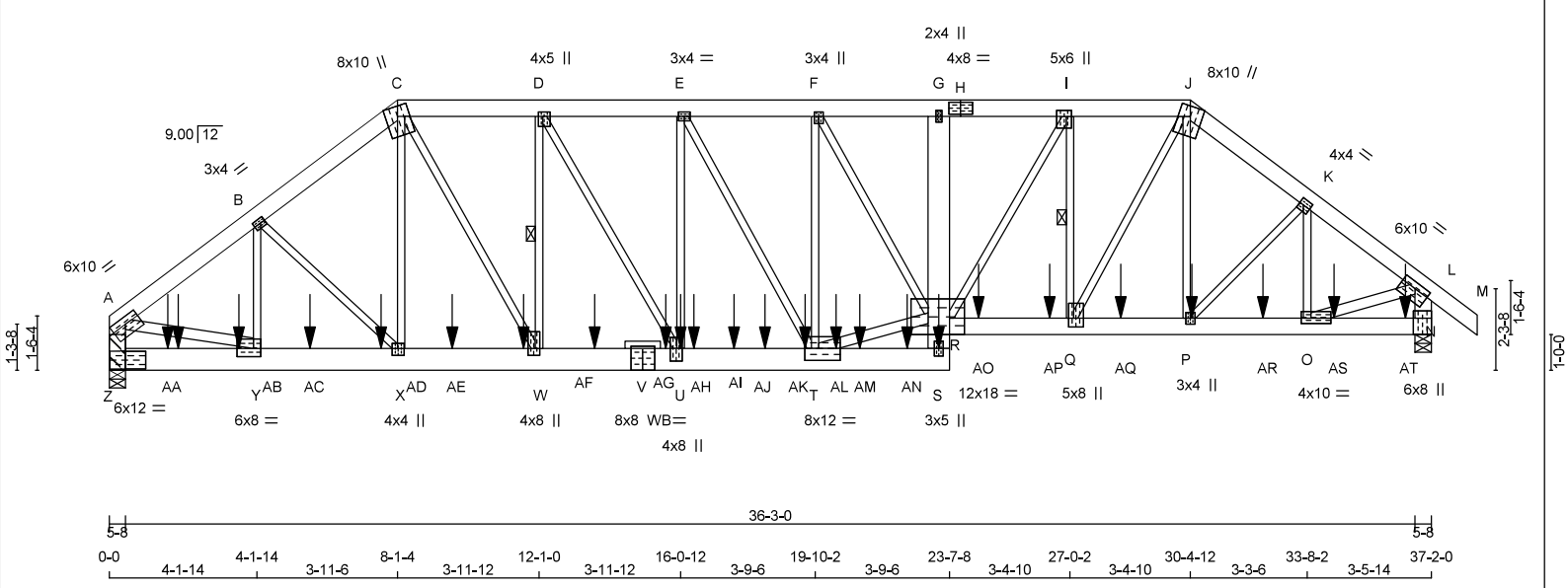

TOTAL WEIGHT = 3 X 268 = 803 lb [M]

LUMBER
N. L. G. A. RULES

CHORDS	SIZE		LUMBER	DESCR.
A - C	2x6	DRY	No.2	SPF
C - H	2x6	DRY	No.2	SPF
H - J	2x6	DRY	No.2	SPF
J - M	2x6	DRY	No.2	SPF
Z - A	2x6	DRY	No.2	SPF
N - L	2x6	DRY	No.2	SPF
Z - V	2x8	DRY	1950F 1.7E	SPF
V - S	2x8	DRY	1950F 1.7E	SPF
S - G	2x8	DRY	No.2	SPF
R - N	2x6	DRY	2100F 1.8E	SPF
ALL WEBS EXCEPT	2x3	DRY	No.2	SPF
T - R	2x4	DRY	2100F 1.8E	SPF
A - Y	2x4	DRY	No.2	SPF
O - L	2x4	DRY	No.2	SPF

DRY: SEASONED LUMBER.

DESIGN CONSISTS OF 3 TRUSSES BUILT SEPARATELY THEN FASTENED TOGETHER AS FOLLOWS:

CHORDS	#ROWS	SURFACE SPACING (IN)	LOAD(PLF)
TOP CHORDS : (0.122"X3") SPIRAL NAILS			
A- C	2	12	TOP
C- H	2	12	TOP
H- J	2	12	TOP
J- M	2	12	TOP
Z- A	2	12	TOP
N- L	2	12	TOP
BOTTOM CHORDS : (0.122"X3") SPIRAL NAILS			
Z- V	2	7	SIDE(536.8)
V- S	2	4	SIDE(720.5)
S- G	2	12	TOP
R- N	2	10	SIDE(583.1)
WEBS : (0.122"X3") SPIRAL NAILS			
2x3	1	6	
2x4	1	6	

STAGGER NAILS BY HALF THE SURFACE SPACING IN ADJACENT PLIES.

GIRDER NAILING ASSUMES NAILED HANGERS ARE FASTENED WITH MIN. 3-0 INCH NAILS.

DIMENSIONS, SUPPORTS AND LOADINGS SPECIFIED BY FABRICATOR TO BE VERIFIED BY BUILDING DESIGNER

BEARINGS

JT	FACTORED GROSS REACTION VERT	HORZ	MAXIMUM FACTORED GROSS REACTION DOWN	HORZ	UPLIFT	INPUT BRG IN-SX	REQRD BRG IN-SX
Z	17914	0	17914	0	0	5-8	5-8 & BLOCK
N	17037	0	17037	0	0	5-8	5-8

UNFACTORED REACTIONS

JT	1ST LCASE COMBINED	MAX./MIN. COMPONENT REACTIONS SNOW	LIVE	PERM.LIVE	WIND	DEAD	SOIL
Z	12505	9134 / 0	0 / 0	0 / 0	0 / 0	3370 / 0	0 / 0
N	11892	8691 / 0	0 / 0	0 / 0	0 / 0	3200 / 0	0 / 0

BEARING MATERIAL TO BE SPF NO.2 OR BETTER AT JOINT(S) Z, N
BEARING SIZE FACTOR = 1.15 AT JNT(S) Z, N (BASED ON SUPPORT DEPTH = 1-8)

2x6 DRY SPF No.2 BEARING BLOCK 12" LONG AT JT. Z ATTACHED TO FRONT SIDE WITH 3 ROWS OF (0.122"X3") SPIRAL NAILS SPACED 4" C.C. 6 NAILS TOTAL.

BRACING
TOP CHORD TO BE SHEATHED OR MAX. PURLIN SPACING = 2.58 FT.
MAX. UNBRACED BOTTOM CHORD LENGTH = 7.81 FT OR RIGID CEILING DIRECTLY APPLIED.

ALL PITCH BREAKS AND PERIMETER CORNER JOINTS MUST BE LATERALLY RESTRAINED.

1 - 1x4 LATERAL BRACE(S) AT 1/ 2 LENGTH OF D-W. DBS = 4-0-0 . CBF = 158 LBS.
1 - 2x4 DRY SPF No.2 LATERAL BRACE(S) AT 1/ 2 LENGTH OF I-Q. DBS = 4-0-0 . CBF = 206 LBS.

DBS = DIAGONAL BRACE SPACING (MAX). CBF = CUMULATIVE BRACING FORCE (PER BRACE). FASTEN LATERAL BRACE(S) TO EACH PLY USING (0.122"X3") SPIRAL NAILS : 1 NAIL FOR 2x3 BRACE(S), 2 FOR 1x4, 2x4, 2x5, 3 FOR 2x6, 4 FOR 2x8, 5 FOR 2x10, AND 6 FOR 2x12.

END VERTICAL(S) MUST BE SHEATHED OR HAVE BRACES AS INDICATED IN THE MAX. UNBRACED LENGTH COLUMN OF THE TABLE BELOW

LOADING
TOTAL LOAD CASES: (4)

CHORDS

MEMB. FR-TO	MAX. FACTORED FORCE (LBS)	FACTORED VERT. LOAD (PLF) FROM	TO	LC1	MAX CSI (LC)	MAX. UNBRAC LENGTH
A- B	-20074 / 0	-119.4	-119.4	0.29 (1)	3.21	
B- C	-20091 / 0	-119.4	-119.4	0.28 (1)	3.22	
C- D	-21128 / 0	-119.4	-119.4	0.34 (1)	3.13	
D- E	-24517 / 0	-119.4	-119.4	0.44 (1)	2.81	
E- F	-24985 / 0	-119.4	-119.4	0.42 (1)	2.81	
F- G	-26195 / 0	-119.4	-119.4	0.51 (1)	2.64	
G- H	-26598 / 0	-119.4	-119.4	0.55 (1)	2.58	
H- I	-26598 / 0	-119.4	-119.4	0.55 (1)	2.58	
I- J	-21795 / 0	-119.4	-119.4	0.35 (1)	3.06	
J- K	-20038 / 0	-119.4	-119.4	0.26 (1)	3.23	
K- L	-18626 / 0	-119.4	-119.4	0.24 (1)	3.36	
L- M	0 / 51	-119.4	-119.4	0.03 (1)	10.00	
Z- A	-15916 / 0	0.0	0.0	0.36 (1)	4.64	
N- L	-15879 / 0	0.0	0.0	0.34 (1)	4.64	
Z-AA	0 / 0	-18.2	-18.2	0.25 (1)	10.00	
AA-AB	0 / 0	-18.2	-18.2	0.25 (1)	10.00	
AB- Y	0 / 0	-18.2	-18.2	0.25 (1)	10.00	
Y-AC	0 / 16040	-18.2	-18.2	0.31 (1)	10.00	
AC-AD	0 / 16040	-18.2	-18.2	0.31 (1)	10.00	
AD- X	0 / 16040	-18.2	-18.2	0.31 (1)	10.00	
X-AE	0 / 16074	-18.2	-18.2	0.31 (1)	10.00	
AE-AF	0 / 16074	-18.2	-18.2	0.31 (1)	10.00	
AF- W	0 / 16074	-18.2	-18.2	0.31 (1)	10.00	
W-AG	0 / 21127	-18.2	-18.2	0.37 (1)	10.00	
AG- V	0 / 21127	-18.2	-18.2	0.37 (1)	10.00	
V-AH	0 / 21127	-18.2	-18.2	0.37 (1)	10.00	
AH- U	0 / 21127	-18.2	-18.2	0.37 (1)	10.00	
U-AI	0 / 24517	-18.2	-18.2	0.44 (1)	10.00	
AI-AJ	0 / 24517	-18.2	-18.2	0.44 (1)	10.00	
AJ-AK	0 / 24517	-18.2	-18.2	0.44 (1)	10.00	
AK- T	0 / 24517	-18.2	-18.2	0.44 (1)	10.00	
T-AL	0 / 2668	-18.2	-18.2	0.13 (1)	10.00	
AL-AM	0 / 2668	-18.2	-18.2	0.13 (1)	10.00	
AM-AN	0 / 2668	-18.2	-18.2	0.13 (1)	10.00	
AN- S	0 / 2668	-18.2	-18.2	0.13 (1)	10.00	
S- R	0 / 3148	0.0	0.0	0.47 (1)	10.00	
R- G	-225 / 0	0.0	0.0	0.37 (1)	7.81	

WEBS

MEMB. FR-TO	MAX. FACTORED FORCE (LBS)	MAX CSI (LC)
Y- B	-512 / 0	0.04 (1)
B- X	-5 / 26	0.00 (4)
X- C	0 / 2511	0.19 (1)
C- W	0 / 10268	0.77 (1)
W- D	-6307 / 0	0.67 (1)
D- U	0 / 6909	0.52 (1)
U- E	-1310 / 0	0.38 (1)
E- T	0 / 993	0.07 (1)
T- F	-2750 / 0	0.81 (1)
T- R	0 / 23096	0.58 (1)
F- R	0 / 2455	0.18 (1)
R- I	0 / 9331	0.70 (1)
Q- I	-8233 / 0	0.71 (1)
Q- J	0 / 11933	0.90 (1)
P- J	0 / 985	0.07 (1)
P- K	0 / 1647	0.12 (1)
O- K	-2461 / 0	0.18 (1)
A- Y	0 / 16439	0.88 (1)
O- L	0 / 15476	0.83 (1)

DESIGN CRITERIA

*** SPECIAL LOADS ANALYSIS ***
GEOMETRY AND/OR BASIC LOADS CHANGED BY USER.
LOADS WERE DERIVED FROM USER INPUT
NO FURTHER MODIFICATIONS WERE MADE

SPECIFIED LOADS:

TOP CH.	LL	=	34.8	PSF
	DL	=	6.0	PSF
BOT CH.	LL	=	0.0	PSF
	DL	=	7.3	PSF
TOTAL LOAD		=	48.1	PSF

SPACING = 24.0 IN. C/C

LOADING IN FLAT SECTION BASED ON A SLOPE OF 2.00/12 MINIMUM

*** NON STANDARD GIRDER ***
ADDT'L USER-DEFINED LOADS APPLIED TO ALL LOAD CASES.

THIS TRUSS IS DESIGNED FOR RESIDENTIAL OR SMALL BUILDING REQUIREMENTS OF PART 9, NBCC 2015

THIS DESIGN COMPLIES WITH:
- PART 9 OF BCBC 2018 , NBC-2019AE
- PART 9 OF OBC 2012 (2019 AMENDMENT)
- CSA 086-14
- TPIC 2014

(55 % OF 48.1 P.S.F. G.S.L. PLUS 8.4 P.S.F. RAIN LOAD) EQUALS 34.8 P.S.F. SPECIFIED ROOF LIVE LOAD

ALLOWABLE DEFL.(LL)= L/360 (1.24")
CALCULATED VERT. DEFL.(LL) = L/ 999 (0.33")
ALLOWABLE DEFL.(TL)= L/360 (1.24")
CALCULATED VERT. DEFL.(TL) = L/ 801 (0.56")

CSI: TC=0.55/0.97 (G-I:1) , BC=0.47/0.97 (R-S:1) , WB=0.90/0.97 (J-Q:1) , SSI=0.47/1.00 (R-S:1)

DOL LUMBER=1.00 NAIL=1.00 LS BEND=1.10 COMP=1.10 SHEAR=1.10 TENS= 1.10

COMPANION LIVE LOAD FACTOR = 1.00

AUTOSOLVE HEELS OFF

TRUSS PLATE MANUFACTURER IS NOT RESPONSIBLE FOR QUALITY CONTROL IN THE TRUSS MANUFACTURING PLANT .

NAIL VALUES

PLATE	GRIP(DRY) (PSI) MAX	MIN	SHEAR (PLI) MAX	MIN	SECTION (PLI) MAX	MIN
MT20	650	371	1747	788	1987	1873

PLATE PLACEMENT TOL. = 0.250 inches

PLATE ROTATION TOL. = 5.0 Deg.

JSI GRIP= 0.90 (W) (INPUT = 0.90)
JSI METAL= 0.96 (A) (INPUT = 1.00)

CONTINUED ON PAGE 2

LICENSED PROFESSIONAL ENGINEER
N.A. EL-MASRI
PROVINCE OF ONTARIO
Jul 07, 2023

READ ALL NOTES ON THIS PAGE AND ON THE ENGINEERING NOTES: TRUSSES. THE NOTE PAGE IS AN INTEGRAL PART OF THIS DRAWING AS IT CONTAINS SPECIFICATIONS AND CRITERIA USED IN THE DESIGN OF THIS COMPONENT.

KOTT

CORPORATION OF THE CITY OF OSHAWA
TRUE COPY
OF PERMIT PLANS
Oct 31 2023
PER: C Marr
CHIEF BUILDING OFFICIAL

JOB NAME	TRUSS NAME	QUANTITY	PLY	JOB DESC.	DRWG NO.
NE0723-038	G01	1	3	GREENPARK - ZADORRA ESTATES - ROSE 10-2	

MHP 23031

Version 8.630 S Mar 22 2023 MiTek Industries, Inc. Fri Jul 7 15:13:27 2023 Page 2
ID:5vUDB17_Ic6Oj0vAxsr4RFzBM45-KdESnYzTVEv1ejbftHJmRH24GWWvUyiUXm80Zaz_R4c

PLATES (table is in inches)

JT	TYPE	PLATES	W	LEN	Y	X
A	TMVW-t	MT20	6.0	10.0	2.25	5.00
B	TMWW-t	MT20	3.0	4.0	1.50	1.50
C	TTWW+m	MT20	8.0	10.0	Edge	
D	TMWW+t	MT20	4.0	5.0	1.50	1.50
E	TMWW-t	MT20	3.0	4.0		
F	TMWW+t	MT20	3.0	4.0	1.50	1.50
G	TMV+p	MT20	2.0	4.0		
H	TS-t	MT20	4.0	8.0		
I	TMWW+t	MT20	5.0	6.0	2.00	1.75
J	TTWW+m	MT20	8.0	10.0	Edge	
K	TMWW-t	MT20	4.0	4.0	2.00	1.50
L	TMVW-t	MT20	6.0	10.0	2.00	5.00
N	BMV1+t	MT20	6.0	8.0	Edge	0.50
O	BMWW-t	MT20	4.0	10.0	1.75	3.25
P	BMWW+t	MT20	3.0	4.0		
Q	BMWW+t	MT20	5.0	8.0	3.00	1.75
R	BVMWWW-I	MT20	12.0	18.0	Edge	5.00
S	BMV+p	MT20	3.0	5.0		
T	BMWWW-t	MT20	8.0	12.0	4.00	2.25
U	BMWW+t	MT20	4.0	8.0	4.25	1.75
V	BS-t	MT20	8.0	8.0		
W	BMWW+t	MT20	4.0	8.0	2.25	1.50
X	BMWW+t	MT20	4.0	4.0	2.25	1.75
Y	BMWW-t	MT20	6.0	8.0	2.75	2.50
Z	BVM1-I	MT20	6.0	12.0	0.25	6.75

Edge - INDICATES REFERENCE CORNER OF PLATE TOUCHES EDGE OF CHORD.

WB - INDICATES BLOCKING REQUIRED

LOADING
TOTAL LOAD CASES: (4)

CHORDS

MEMB. FR-TO	MAX. FACTORED FORCE (LBS)	VERT. LOAD (PLF) FROM	TO	LC1 MAX CSI (LC)	MAX. UNBRAC LENGTH
R-AO	0 / 21794	-18.2	-18.2	0.46 (1)	10.00
AO-AP	0 / 21794	-18.2	-18.2	0.46 (1)	10.00
AP-Q	0 / 21794	-18.2	-18.2	0.46 (1)	10.00
Q-AQ	0 / 16012	-18.2	-18.2	0.34 (1)	10.00
AQ-P	0 / 16012	-18.2	-18.2	0.34 (1)	10.00
P-AR	0 / 14871	-18.2	-18.2	0.32 (1)	10.00
AR-O	0 / 14871	-18.2	-18.2	0.32 (1)	10.00
O-AS	0 / 0	-18.2	-18.2	0.10 (1)	10.00
AS-AT	0 / 0	-18.2	-18.2	0.10 (1)	10.00
AT-N	0 / 0	-18.2	-18.2	0.10 (1)	10.00

WEBS

MEMB. FR-TO	MAX. FACTORED FORCE (LBS)	MAX CSI (LC)

SPECIFIED CONCENTRATED LOADS (LBS)

JT	LOC.	LC1	MAX-	MAX+	FACE	DIR.	TYPE	HEEL	CONN.
P	30-5-4	-779	-779	—	BACK	VERT	TOTAL	—	C1
S	23-3-14	-1540	-1540	—	FRONT	VERT	TOTAL	—	C1
T	19-6-12	-375	-375	—	FRONT	VERT	TOTAL	—	C1
U	16-0-12	-1534	-1534	—	FRONT	VERT	TOTAL	—	C1
AA	1-7-12	-779	-779	—	BACK	VERT	TOTAL	—	C1
AA	1-11-4	-1434	-1434	—	FRONT	VERT	TOTAL	—	C1
AB	3-7-12	-779	-779	—	BACK	VERT	TOTAL	—	C1
AC	5-7-12	-779	-779	—	BACK	VERT	TOTAL	—	C1
AD	7-7-12	-779	-779	—	BACK	VERT	TOTAL	—	C1
AE	9-7-12	-779	-779	—	BACK	VERT	TOTAL	—	C1
AF	11-7-12	-779	-779	—	BACK	VERT	TOTAL	—	C1
AG	13-7-12	-809	-809	—	BACK	VERT	TOTAL	—	C1
AH	15-7-12	-809	-809	—	BACK	VERT	TOTAL	—	C1
AI	16-5-4	-809	-809	—	BACK	VERT	TOTAL	—	C1
AJ	17-6-12	-375	-375	—	FRONT	VERT	TOTAL	—	C1
AK	18-5-4	-809	-809	—	BACK	VERT	TOTAL	—	C1
AL	20-5-4	-809	-809	—	BACK	VERT	TOTAL	—	C1
AM	21-1-4	-375	-375	—	FRONT	VERT	TOTAL	—	C1
AN	22-5-4	-810	-810	—	BACK	VERT	TOTAL	—	C1
AO	24-5-4	-809	-809	—	BACK	VERT	TOTAL	—	C1
AP	26-5-4	-779	-779	—	BACK	VERT	TOTAL	—	C1
AQ	28-5-4	-779	-779	—	BACK	VERT	TOTAL	—	C1
AR	32-5-4	-779	-779	—	BACK	VERT	TOTAL	—	C1
AS	34-5-4	-779	-779	—	BACK	VERT	TOTAL	—	C1
AT	36-5-4	-833	-833	—	BACK	VERT	TOTAL	—	C1

CONNECTION REQUIREMENTS

1) **C1:** A SUITABLE HANGER/MECHANICAL CONNECTION IS REQUIRED.

LICENSED PROFESSIONAL ENGINEER
N.A. EL-MASRI
PROVINCE OF ONTARIO
Jul 07, 2023

READ ALL NOTES ON THIS PAGE AND ON THE ENGINEERING NOTES: TRUSSES. THE NOTE PAGE IS AN INTEGRAL PART OF THIS DRAWING AS IT CONTAINS SPECIFICATIONS AND CRITERIA USED IN THE DESIGN OF THIS COMPONENT.

KOTT

CORPORATION OF THE CITY OF OSHAWA
TRUE COPY
OF PERMIT PLANS
Oct 31 2023
PER: C Marr
CHIEF BUILDING OFFICIAL

JOB NAME	TRUSS NAME	QUANTITY	PLY	JOB DESC.	DRWG NO.
NE0723-038	G02	1	4	GREENPARK - ZADORRA ESTATES - ROSE 10-2	

MHP 23031

Version 8.630 S Mar 22 2023 MiTek Industries, Inc. Fri Jul 7 15:07:15 2023 Page 1
ID:5vUDB17_Ic6Oj0vAxsr4RFzBM45-D3mpiMT86x1p0Y9949eXMqeTFZY1KiXk_u1KV8z_RAQ

6-9-11 10-1-5 14-5-6 18-9-7 23-1-8 27-5-9 32-1-15 36-10-6 39-11-7 43-0-7 46-4-0 47-7-8
3-3-10 4-4-1 4-4-1 4-4-1 4-4-1 4-4-1 4-8-6 4-8-6 3-1-1 3-1-1 3-3-9 1-3-8

Scale = 1:80.1

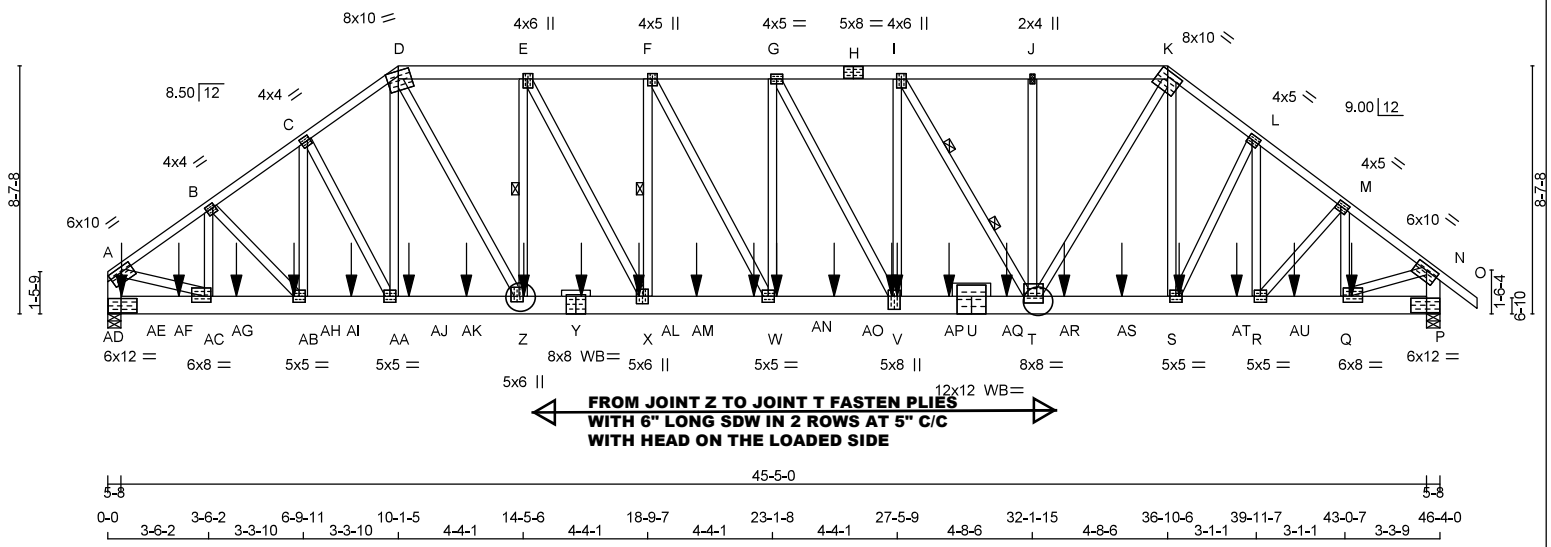

45-5-0
5-8 5-8
0-0 3-6-2 6-9-11 10-1-5 14-5-6 18-9-7 23-1-8 27-5-9 32-1-15 36-10-6 39-11-7 43-0-7 46-4-0
3-6-2 3-3-10 3-3-10 4-4-1 4-4-1 4-4-1 4-4-1 4-8-6 4-8-6 3-1-1 3-1-1 3-3-9

TOTAL WEIGHT = 4 X 363 = 1453 lb

LUMBER
N. L. G. A. RULES

CHORDS	SIZE		LUMBER	DESCR.
A - D	2x4	DRY	2100F 1.8E	SPF
D - H	2x6	DRY	No.2	SPF
H - K	2x6	DRY	No.2	SPF
K - O	2x4	DRY	2100F 1.8E	SPF
AD- A	2x6	DRY	No.2	SPF
P - N	2x6	DRY	No.2	SPF
AD- Y	2x8	DRY	1950F 1.7E	SPF
Y - U	2x8	DRY	1950F 1.7E	SPF
U - P	2x8	DRY	1950F 1.7E	SPF
ALL WEBS EXCEPT	2x4	DRY	No.2	SPF

DRY: SEASONED LUMBER.

DESIGN CONSISTS OF 4 TRUSSES BUILT SEPARATELY THEN FASTENED TOGETHER AS FOLLOWS:

CHORDS	#ROWS	SURFACE SPACING (IN)	LOAD(PLF)
TOP CHORDS : (0.122"X3") SPIRAL NAILS			
A- D	1	12	TOP
K- O	1	12	TOP
D- H	2	12	TOP
H- K	2	12	TOP
AD- A	2	12	TOP
P- N	2	12	TOP
BOTTOM CHORDS : (0.122"X3") SPIRAL NAILS			
AD- Y	3	5	SIDE(583.1)
Z-T	**SDW 5" 2 ROWS 6" C/C**		SIDE(2761.7)
U- P	2	6	SIDE(894.2)
WEBS : (0.122"X3") SPIRAL NAILS			
2x4	1	6	

STAGGER NAILS BY HALF THE SURFACE SPACING IN ADJACENT PLIES.

DIMENSIONS, SUPPORTS AND LOADINGS SPECIFIED BY FABRICATOR TO BE VERIFIED BY BUILDING DESIGNER

BEARINGS

JT	FACTORED GROSS REACTION VERT	HORZ	MAXIMUM FACTORED GROSS REACTION DOWN	HORZ	UPLIFT	INPUT BRG IN-SX	REQRD BRG IN-SX
AD	21942	0	21942	0	0	5-8	5-8
P	22035	0	22035	0	0	5-8	5-8

UNFACTORED REACTIONS

JT	1ST LCASE COMBINED	MAX./MIN. COMPONENT REACTIONS SNOW	LIVE	PERM.LIVE	WIND	DEAD	SOIL
AD	15436	11052 / 0	463 / 0	0 / 0	0 / 0	3921 / 0	0 / 0
P	15499	11107 / 0	463 / 0	0 / 0	0 / 0	3929 / 0	0 / 0

BEARING MATERIAL TO BE SPF NO.2 OR BETTER AT JOINT(S) AD, P
BEARING SIZE FACTOR = 1.15 AT JNT(S) AD, P (BASED ON SUPPORT DEPTH = 1-8)

BRACING
MAX. UNBRACED TOP CHORD LENGTH = 2.34 FT.
MAX. UNBRACED BOTTOM CHORD LENGTH = 10.00 FT OR RIGID CEILING DIRECTLY APPLIED.

ALL PITCH BREAKS AND PERIMETER CORNER JOINTS MUST BE LATERALLY RESTRAINED.

1 - 2x4 DRY SPF No.2 LATERAL BRACE(S) AT 1/ 2 LENGTH OF E-Z. DBS = 4-0-0 . CBF = 231 LBS.
1 - 2x4 DRY SPF No.2 LATERAL BRACE(S) AT 1/ 2 LENGTH OF F-X. DBS = 6-0-0 . CBF = 228 LBS.
2 - 2x6 DRY SPF No.2 LATERAL BRACE(S) AT 1/ 3 LENGTH OF I-T. DBS = 4-0-0 . CBF = 281 LBS.

DBS = DIAGONAL BRACE SPACING (MAX). CBF = CUMULATIVE BRACING FORCE (PER BRACE). FASTEN LATERAL BRACE(S) TO EACH PLY USING (0.122"X3") SPIRAL NAILS : 1 NAIL FOR 2x3 BRACE(S), 2 FOR 1x4, 2x4, 2x5, 3 FOR 2x6, 4 FOR 2x8, 5 FOR 2x10, AND 6 FOR 2x12.

END VERTICAL(S) MUST BE SHEATHED OR HAVE BRACES AS INDICATED IN THE MAX. UNBRACED LENGTH COLUMN OF THE TABLE BELOW

LOADING
TOTAL LOAD CASES: (4)

CHORDS

MEMB. FR-TO	MAX. FACTORED FORCE (LBS)	FACTORED VERT. LOAD (PLF) FROM	TO	LC1 MAX CSI (LC)	MAX. UNBRAC LENGTH
A- B	-24456 / 0	-155.5	-155.5	0.36 (1)	3.12
B- C	-26726 / 0	-155.5	-155.5	0.36 (1)	2.98
C- D	-26660 / 0	-155.5	-155.5	0.36 (1)	2.98
D- E	-28243 / 0	-155.5	-155.5	0.43 (1)	2.90
E- F	-32753 / 0	-155.5	-155.5	0.54 (1)	2.59
F- G	-35613 / 0	-155.5	-155.5	0.65 (1)	2.37
G- H	-36195 / 0	-155.5	-155.5	0.67 (1)	2.34
H- I	-36195 / 0	-155.5	-155.5	0.67 (1)	2.34
I- J	-30541 / 0	-155.5	-155.5	0.49 (1)	2.74
J- K	-30542 / 0	-155.5	-155.5	0.51 (1)	2.72
K- L	-28022 / 0	-155.5	-155.5	0.37 (1)	2.89
L- M	-27693 / 0	-155.5	-155.5	0.36 (1)	2.91
M- N	-24823 / 0	-155.5	-155.5	0.34 (1)	3.10
N- O	0 / 64	-155.5	-155.5	0.05 (1)	10.00
AD- A	-19986 / 0	0.0	0.0	0.39 (1)	4.52
P- N	-21609 / 0	0.0	0.0	0.43 (1)	4.33
AD-AE	0 / 0	-38.2	-38.2	0.10 (1)	10.00
AE-AF	0 / 0	-38.2	-38.2	0.10 (1)	10.00
AF-AC	0 / 0	-38.2	-38.2	0.10 (1)	10.00
AC-AG	0 / 19960	-38.2	-38.2	0.32 (1)	10.00
AG-AH	0 / 19960	-38.2	-38.2	0.32 (1)	10.00
AH-AB	0 / 19960	-38.2	-38.2	0.32 (1)	10.00
AB-AI	0 / 21819	-38.2	-38.2	0.33 (1)	10.00
AI-AA	0 / 21819	-38.2	-38.2	0.33 (1)	10.00
AA-AJ	0 / 21770	-38.2	-38.2	0.32 (1)	10.00
AJ-AK	0 / 21770	-38.2	-38.2	0.32 (1)	10.00
AK- Z	0 / 21770	-38.2	-38.2	0.32 (1)	10.00
Z- Y	0 / 28242	-38.2	-38.2	0.38 (1)	10.00
Y-AL	0 / 28242	-38.2	-38.2	0.38 (1)	10.00
AL- X	0 / 28242	-38.2	-38.2	0.38 (1)	10.00
X-AM	0 / 32753	-38.2	-38.2	0.46 (1)	10.00
AM-AN	0 / 32753	-38.2	-38.2	0.46 (1)	10.00
AN- W	0 / 32753	-38.2	-38.2	0.46 (1)	10.00
W-AO	0 / 35613	-38.2	-38.2	0.51 (1)	10.00

WEBS

MEMB. FR-TO	MAX. FACTORED FORCE (LBS)	MAX CSI (LC)
AC- B	-3783 / 0	0.15 (1)
B-AB	0 / 2696	0.11 (1)
AB- C	-399 / 0	0.04 (1)
C-AA	0 / 44	0.00 (4)
AA- D	0 / 2791	0.11 (1)
D- Z	0 / 13729	0.55 (1)
Z- E	-9256 / 0	0.69 (1)
E- X	0 / 9544	0.38 (1)
X- F	-6069 / 0	0.45 (1)
F- W	0 / 6054	0.24 (1)
W- G	-1635 / 0	0.37 (1)
G- V	0 / 1232	0.05 (1)
V- I	0 / 8945	0.36 (1)
I- T	-11256 / 0	0.57 (1)
T- J	-884 / 0	0.20 (1)
T- K	0 / 16147	0.65 (1)
S- K	0 / 2307	0.09 (1)
S- L	0 / 723	0.03 (1)
R- L	-1238 / 0	0.13 (1)
R- M	0 / 3488	0.14 (1)
Q- M	-4827 / 0	0.19 (1)
A-AC	0 / 20725	0.83 (1)
Q- N	0 / 20819	0.84 (1)

[M]

DESIGN CRITERIA

*** SPECIAL LOADS ANALYSIS ***
GEOMETRY AND/OR BASIC LOADS CHANGED BY USER.
LOADS WERE DERIVED FROM USER INPUT
NO FURTHER MODIFICATIONS WERE MADE

SPECIFIED LOADS:

TOP CH.	LL	=	46.9	PSF
	DL	=	6.0	PSF
BOT CH.	LL	=	10.0	PSF
	DL	=	7.3	PSF
TOTAL LOAD		=	70.1	PSF

SPACING = 24.0 IN. C/C

LOADING IN FLAT SECTION BASED ON A SLOPE OF 8.50/12

*** NON STANDARD GIRDER ***
ADDT'L USER-DEFINED LOADS APPLIED TO ALL LOAD CASES.

THIS TRUSS IS DESIGNED FOR COMMERCIAL OR INDUSTRIAL BUILDING REQUIREMENTS OF PART 4, NBCC 2015

THIS DESIGN COMPLIES WITH:
- PART 4 OF BCBC 2018 , NBC-2019AE
- PART 4 OF OBC 2012 (2019 AMENDMENT)
- CSA 086-14
- TPIC 2014

DESIGN ASSUMPTIONS
- SLOPE REDUCTION FACTOR NOT USED

(80 % OF 48.1 P.S.F. G.S.L. PLUS 8.4 P.S.F. RAIN LOAD) TIMES IMPORTANCE FACTOR EQUALS 46.9 P.S.F. SPECIFIED ROOF LIVE LOAD

ALLOWABLE DEFL.(LL)= L/360 (1.54")
CALCULATED VERT. DEFL.(LL) = L/ 999 (0.35")
ALLOWABLE DEFL.(TL)= L/360 (1.54")
CALCULATED VERT. DEFL.(TL) = L/ 999 (0.48")

CSI: TC=0.67/0.97 (G-I:1) , BC=0.53/0.97 (T-V:1) , WB=0.84/0.97 (N-Q:1) , SSI=0.28/1.00 (AC-AD:1)

DOL LUMBER=1.00 NAIL=1.00 LS BEND=1.10 COMP=1.10 SHEAR=1.10 TENS= 1.10

SNOW LOAD IMPORTANCE FACTOR = 1.00
LIVE LOAD IMPORTANCE FACTOR = 1.00
COMPANION LIVE LOAD FACTOR = 1.00

AUTOSOLVE HEELS OFF

TRUSS PLATE MANUFACTURER IS NOT RESPONSIBLE FOR QUALITY CONTROL IN THE TRUSS MANUFACTURING PLANT .

CONTINUED ON PAGE 2

LICENSED PROFESSIONAL ENGINEER
N.A. EL-MASRI
PROVINCE OF ONTARIO
Jul 07, 2023

READ ALL NOTES ON THIS PAGE AND ON THE ENGINEERING NOTES: TRUSSES. THE NOTE PAGE IS AN INTEGRAL PART OF THIS DRAWING AS IT CONTAINS SPECIFICATIONS AND CRITERIA USED IN THE DESIGN OF THIS COMPONENT.

KOTT

CORPORATION OF THE CITY OF OSHAWA
TRUE COPY
OF PERMIT PLANS
Oct 31 2023
PER:
CHIEF BUILDING OFFICIAL

JOB NAME	TRUSS NAME	QUANTITY	PLY	JOB DESC.	DRWG NO.
NE0723-038	G02	1	14	GREENPARK - ZADORRA ESTATES - ROSE 10-2	

MHP 23031

TRUSS DESC.

Version 8.630 S Mar 22 2023 MiTek Industries, Inc. Fri Jul 7 15:07:16 2023 Page 2
ID:5vUDB17_Ic6Oj0vAxsr4RFzBM45-hFKCwhUmtF9geikMes9mv2Ae?zuG39ntDYnt1bz_RAP

IN ADDITION, PRE-DRILL ONE 0.56" DIAM. HOLE IN EACH CHORD PANEL AND INSTALL 0.50" DIAM. ASTM A307 BOLTS WITH WASHERS, BOTH SIDES. FOR OTHER BOLT TYPES SEE CSA086 3.3.2.

GIRDER NAILING ASSUMES NAILED HANGERS ARE FASTENED WITH MIN. 3-0 INCH NAILS.

PLATES (table is in inches)

JT	TYPE	PLATES	W	LEN	Y	X
A	TMVW-t	MT20	6.0	10.0	2.00	5.00
B	TMWW-t	MT20	4.0	4.0	1.75	1.00
C	TMWW-t	MT20	4.0	4.0	2.00	1.00
D	TTWW-m	MT20	8.0	10.0	Edge	
E	TMWW+t	MT20	4.0	6.0	2.25	1.75
F	TMWW+t	MT20	4.0	5.0	2.25	1.75
G	TMWW-t	MT20	4.0	5.0		
H	TS-t	MT20	5.0	8.0		
I	TMWW+t	MT20	4.0	6.0	2.25	2.00
J	TMW+w	MT20	2.0	4.0		
K	TTWW-h	MT20	8.0	10.0	2.25	6.25
L	TMWW-t	MT20	4.0	5.0	2.00	1.75
M	TMWW-t	MT20	4.0	5.0	2.00	1.75
N	TMVW-t	MT20	6.0	10.0	2.00	5.00
P	BVM1-I	MT20	6.0	12.0	0.50	6.50
Q	BMWW-t	MT20	6.0	8.0	2.50	2.50
R, S, W, AA, AB						
R	BMWW-t	MT20	5.0	5.0		
T	BMWWW-t	MT20	8.0	8.0	2.75	1.75
U	BS-t	MT20	12.0	12.0		
V	BMWW+t	MT20	5.0	8.0	5.50	2.00
X	BMWW+t	MT20	5.0	6.0	3.00	2.00
Y	BS-t	MT20	8.0	8.0		
Z	BMWW+t	MT20	5.0	6.0	2.25	1.75
AC	BMWW-t	MT20	6.0	8.0	2.50	2.75
AD	BVM1-I	MT20	6.0	12.0	0.25	6.75

Edge - INDICATES REFERENCE CORNER OF PLATE TOUCHES EDGE OF CHORD.

WB - INDICATES BLOCKING REQUIRED

THIS TRUSS IS NOT DESIGNED FOR WIND

LOADING
TOTAL LOAD CASES: (4)

CHORDS

MEMB. FR-TO	MAX. FACTORED FORCE (LBS)	VERT. LOAD (PLF) FROM	TO	LC1	MAX CSI (LC)
AO- V	0 / 35613	-38.2	-38.2	0.51 (1)	
V-AP	0 / 36195	-38.2	-38.2	0.53 (1)	
AP- U	0 / 36195	-38.2	-38.2	0.53 (1)	
U-AQ	0 / 36195	-38.2	-38.2	0.53 (1)	
AQ- T	0 / 36195	-38.2	-38.2	0.53 (1)	
T-AR	0 / 22448	-38.2	-38.2	0.34 (1)	
AR-AS	0 / 22448	-38.2	-38.2	0.34 (1)	
AS- S	0 / 22448	-38.2	-38.2	0.34 (1)	
S-AT	0 / 22163	-38.2	-38.2	0.32 (1)	
AT- R	0 / 22163	-38.2	-38.2	0.32 (1)	
R-AU	0 / 19859	-38.2	-38.2	0.33 (1)	
AU- Q	0 / 19859	-38.2	-38.2	0.33 (1)	
Q- P	0 / 0	-38.2	-38.2	0.08 (1)	

WEBS

MEMB. FR-TO	MAX. FACTORED FORCE (LBS)	MAX CSI (LC)	MAX. UNBRAC LENGTH
			10.00
			10.00
			10.00
			10.00
			10.00
			10.00
			10.00
			10.00
			10.00
			10.00
			10.00
			10.00

SPECIFIED CONCENTRATED LOADS (LBS)

JT	LOC.	LC1	MAX-	MAX+	FACE	DIR.	TYPE	HEEL	CONN.
Q	43-3-4	-1012	-1012	—	FRONT	VERT	TOTAL	—	C1
S	37-3-4	-779	-779	—	FRONT	VERT	TOTAL	—	C1
V	27-3-4	-815	-815	—	FRONT	VERT	TOTAL	—	C1
V	27-5-9	-5541	-5541	—	BACK	VERT	TOTAL	—	C1
W	23-3-4	-815	-815	—	FRONT	VERT	TOTAL	—	C1
Y	16-5-12	-779	-779	—	FRONT	VERT	TOTAL	—	C1
Z	14-5-12	-779	-779	—	FRONT	VERT	TOTAL	—	C1
AE	5-12	-1122	-1122	—	FRONT	VERT	TOTAL	—	C1
AF	2-5-12	-779	-779	—	FRONT	VERT	TOTAL	—	C1
AG	4-5-12	-779	-779	—	FRONT	VERT	TOTAL	—	C1
AH	6-5-12	-779	-779	—	FRONT	VERT	TOTAL	—	C1
AI	8-5-12	-779	-779	—	FRONT	VERT	TOTAL	—	C1
AJ	10-5-12	-779	-779	—	FRONT	VERT	TOTAL	—	C1
AK	12-5-12	-779	-779	—	FRONT	VERT	TOTAL	—	C1
AL	18-5-12	-779	-779	—	FRONT	VERT	TOTAL	—	C1
AM	20-5-12	-815	-815	—	FRONT	VERT	TOTAL	—	C1
AN	22-5-12	-815	-815	—	FRONT	VERT	TOTAL	—	C1
AO	25-3-4	-815	-815	—	FRONT	VERT	TOTAL	—	C1
AP	29-3-4	-815	-815	—	FRONT	VERT	TOTAL	—	C1
AQ	31-3-4	-815	-815	—	FRONT	VERT	TOTAL	—	C1
AR	33-3-4	-779	-779	—	FRONT	VERT	TOTAL	—	C1
AS	35-3-4	-779	-779	—	FRONT	VERT	TOTAL	—	C1
AT	39-3-4	-779	-779	—	FRONT	VERT	TOTAL	—	C1
AU	41-3-4	-779	-779	—	FRONT	VERT	TOTAL	—	C1

CONNECTION REQUIREMENTS

1) **C1:** A SUITABLE HANGER/MECHANICAL CONNECTION IS REQUIRED.

NAIL VALUES

PLATE	GRIP(DRY) (PSI) MAX	MIN	SHEAR (PLI) MAX	MIN	SECTION (PLI) MAX	MIN
MT20	650	371	1747	788	1987	1873

PLATE PLACEMENT TOL. = 0.250 inches

PLATE ROTATION TOL. = 5.0 Deg.

JSI GRIP= 0.88 (N) (INPUT = 0.90)
JSI METAL= 0.97 (Q) (INPUT = 1.00)

LICENSED PROFESSIONAL ENGINEER
N.A. EL-MASRI
PROVINCE OF ONTARIO
Jul 07, 2023

READ ALL NOTES ON THIS PAGE AND ON THE ENGINEERING NOTES: TRUSSES. THE NOTE PAGE IS AN INTEGRAL PART OF THIS DRAWING AS IT CONTAINS SPECIFICATIONS AND CRITERIA USED IN THE DESIGN OF THIS COMPONENT.

KOTT

CORPORATION OF THE CITY OF OSHAWA
TRUE COPY
OF PERMIT PLANS
Oct 31 2023
PER: ____
CHIEF BUILDING OFFICIAL

JOB NAME	TRUSS NAME	QUANTITY	PLY	JOB DESC.	DRWG NO.
NE0723-038	G03	1	1	GREENPARK - ZADORRA ESTATES - ROSE 10-2	

MHP 23031

Version 8.630 S Mar 22 2023 MiTek Industries, Inc. Fri Jul 7 15:07:16 2023 Page 1
ID:5vUDB17_Ic6Oj0vAxsr4RFzBM45-hFKCwhUmtF9geikMes9mv2AhQzy73HftDYnt1bz_RAP

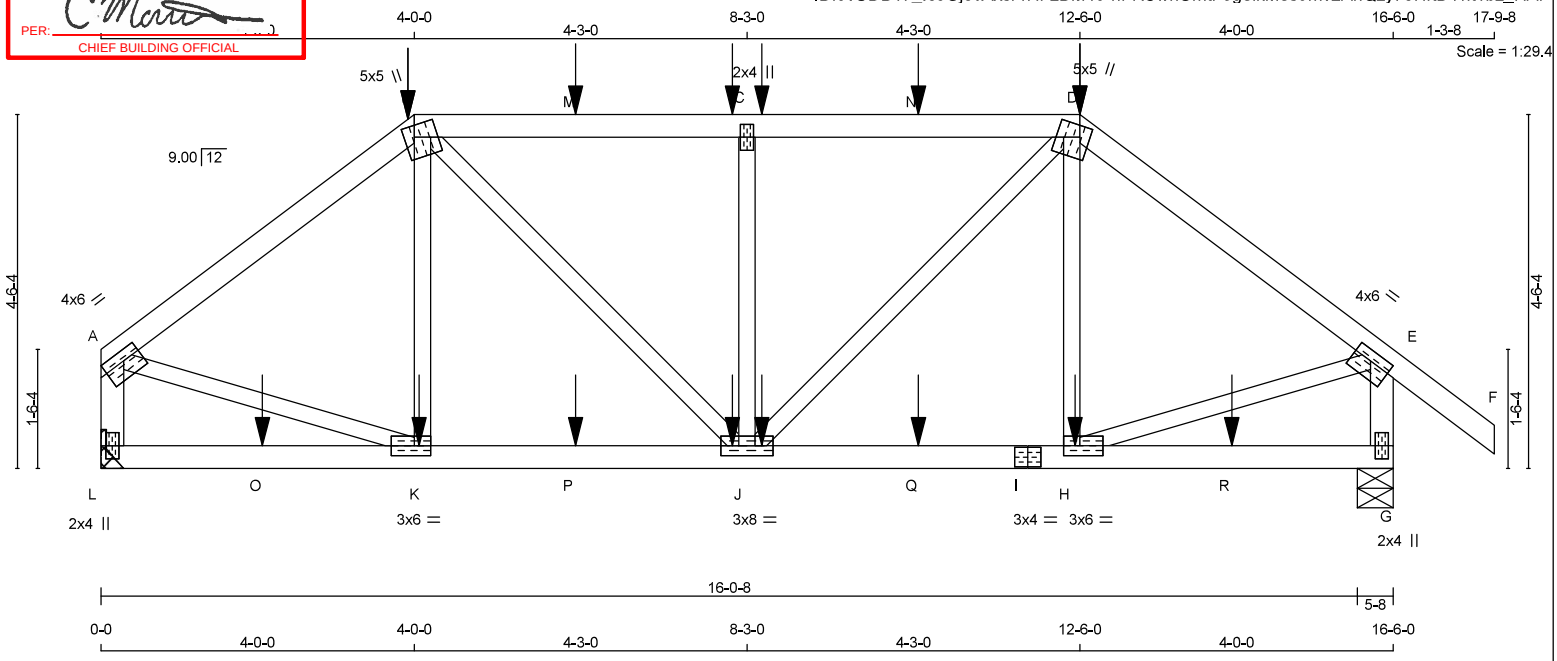

TOTAL WEIGHT = 70 lb [M]

LUMBER
N. L. G. A. RULES

CHORDS	SIZE		LUMBER	DESCR.
A - B	2x4	DRY	No.2	SPF
B - D	2x4	DRY	No.2	SPF
D - F	2x4	DRY	No.2	SPF
L - A	2x4	DRY	No.2	SPF
G - E	2x4	DRY	No.2	SPF
L - I	2x4	DRY	No.2	SPF
I - G	2x4	DRY	No.2	SPF
ALL WEBS EXCEPT	2x3	DRY	No.2	SPF

DRY: SEASONED LUMBER.

PLATES (table is in inches)

JT	TYPE	PLATES	W	LEN	Y	X
A	TMVW-t	MT20	4.0	6.0	1.50	Edge
B	TTWW+m	MT20	5.0	5.0	1.75	1.50
C	TMW+w	MT20	2.0	4.0		
D	TTWW+m	MT20	5.0	5.0	1.75	1.50
E	TMVW-t	MT20	4.0	6.0	1.50	2.75
G	BMV1+p	MT20	2.0	4.0		
H	BMWW-t	MT20	3.0	6.0	1.50	2.50
I	BS-t	MT20	3.0	4.0		
J	BMWWW-t	MT20	3.0	8.0		
K	BMWW-t	MT20	3.0	6.0	1.50	2.50
L	BMV1+p	MT20	2.0	4.0		

Edge - INDICATES REFERENCE CORNER OF PLATE TOUCHES EDGE OF CHORD.

DIMENSIONS, SUPPORTS AND LOADINGS SPECIFIED BY FABRICATOR TO BE VERIFIED BY BUILDING DESIGNER

BEARINGS

JT	FACTORED GROSS REACTION VERT	HORZ	MAXIMUM FACTORED GROSS REACTION DOWN	HORZ	UPLIFT	INPUT BRG IN-SX	REQRD BRG IN-SX
L	1621	0	1621	0	0	MECHANICAL	
G	1786	0	1786	0	0	5-8	2-5

A SUITABLE HANGER/MECHANICAL CONNECTION IS REQUIRED AT JOINT L. MINIMUM BEARING LENGTH AT JOINT L = 1-12.

UNFACTORED REACTIONS

JT	1ST LCASE COMBINED	MAX./MIN. COMPONENT REACTIONS SNOW	LIVE	PERM.LIVE	WIND	DEAD	SOIL
L	1133	821 / 0	0 / 0	0 / 0	0 / 0	312 / 0	0 / 0
G	1245	917 / 0	0 / 0	0 / 0	0 / 0	328 / 0	0 / 0

BEARING MATERIAL TO BE SPF NO.2 OR BETTER AT JOINT(S) G

BRACING
TOP CHORD TO BE SHEATHED OR MAX. PURLIN SPACING = 4.30 FT.
MAX. UNBRACED BOTTOM CHORD LENGTH = 10.00 FT OR RIGID CEILING DIRECTLY APPLIED.

ALL PITCH BREAKS AND PERIMETER CORNER JOINTS MUST BE LATERALLY RESTRAINED.

LOADING
TOTAL LOAD CASES: (4)

CHORDS

MEMB. FR-TO	MAX. FORCE (LBS)	FACTORED VERT. LOAD (PLF) FROM	TO	LC1	MAX CSI (LC)	MAX. UNBRAC LENGTH
A- B	-1617 / 0	-119.4	-119.4	0.43 (1)	4.61	
B- M	-1745 / 0	-119.4	-119.4	0.51 (1)	4.30	
M- C	-1745 / 0	-119.4	-119.4	0.51 (1)	4.30	
C- N	-1745 / 0	-119.4	-119.4	0.51 (1)	4.30	
N- D	-1745 / 0	-119.4	-119.4	0.51 (1)	4.30	
D- E	-1617 / 0	-119.4	-119.4	0.43 (1)	4.61	
E- F	0 / 49	-119.4	-119.4	0.18 (1)	10.00	
L- A	-1588 / 0	0.0	0.0	0.18 (1)	6.43	
G- E	-1753 / 0	0.0	0.0	0.20 (1)	6.17	
L- O	0 / 0	-18.2	-18.2	0.10 (4)	10.00	
O- K	0 / 0	-18.2	-18.2	0.10 (4)	10.00	
K- P	0 / 1285	-18.2	-18.2	0.28 (1)	10.00	
P- J	0 / 1285	-18.2	-18.2	0.28 (1)	10.00	
J- Q	0 / 1285	-18.2	-18.2	0.28 (1)	10.00	
Q- I	0 / 1285	-18.2	-18.2	0.28 (1)	10.00	
I- H	0 / 1285	-18.2	-18.2	0.28 (1)	10.00	
H- R	0 / 0	-18.2	-18.2	0.10 (4)	10.00	
R- G	0 / 0	-18.2	-18.2	0.10 (4)	10.00	

WEBS

MEMB. FR-TO	MAX. FORCE (LBS)	MAX CSI (LC)
K- B	-262 / 29	0.08 (1)
B- J	0 / 648	0.16 (1)
J- C	-809 / 0	0.26 (1)
J- D	0 / 648	0.16 (1)
H- D	-262 / 29	0.08 (1)
A- K	0 / 1344	0.33 (1)
H- E	0 / 1344	0.33 (1)

SPECIFIED CONCENTRATED LOADS (LBS)

JT	LOC.	LC1	MAX-	MAX+	FACE	DIR.	TYPE	HEEL	CONN.
B	4-0-0	-218	-218	—	FRONT	VERT	TOTAL	—	C1
C	8-0-12	-41	-41	—	FRONT	VERT	TOTAL	—	C1
C	8-5-4	-41	-41	—	FRONT	VERT	TOTAL	—	C1
D	12-6-0	-218	-218	—	FRONT	VERT	TOTAL	—	C1
H	12-5-4	-11	-11	—	FRONT	VERT	TOTAL	—	C1
J	8-0-12	-11	-11	—	FRONT	VERT	TOTAL	—	C1
J	8-5-4	-11	-11	—	FRONT	VERT	TOTAL	—	C1
K	4-0-12	-11	-11	—	FRONT	VERT	TOTAL	—	C1
M	6-0-12	-41	-41	—	FRONT	VERT	TOTAL	—	C1
N	10-5-4	-41	-41	—	FRONT	VERT	TOTAL	—	C1
O	2-0-12	-7	-7	—	FRONT	VERT	TOTAL	—	C1
P	6-0-12	-11	-11	—	FRONT	VERT	TOTAL	—	C1
Q	10-5-4	-11	-11	—	FRONT	VERT	TOTAL	—	C1
R	14-5-4	-7	-7	—	FRONT	VERT	TOTAL	—	C1

CONNECTION REQUIREMENTS

1) **C1:** A SUITABLE HANGER/MECHANICAL CONNECTION IS REQUIRED.

DESIGN CRITERIA

*** SPECIAL LOADS ANALYSIS ***
GEOMETRY AND/OR BASIC LOADS CHANGED BY USER.
LOADS WERE DERIVED FROM USER INPUT
NO FURTHER MODIFICATIONS WERE MADE

SPECIFIED LOADS:

TOP CH.	LL	=	34.8	PSF
	DL	=	6.0	PSF
BOT CH.	LL	=	0.0	PSF
	DL	=	7.3	PSF
TOTAL LOAD		=	48.1	PSF

SPACING = 24.0 IN. C/C

LOADING IN FLAT SECTION BASED ON A SLOPE OF 2.00/12 MINIMUM

*** NON STANDARD GIRDER ***
ADDT'L USER-DEFINED LOADS APPLIED TO ALL LOAD CASES.

THIS TRUSS IS DESIGNED FOR RESIDENTIAL OR SMALL BUILDING REQUIREMENTS OF PART 9, NBCC 2015

THIS DESIGN COMPLIES WITH:
- PART 9 OF BCBC 2018 , NBC-2019AE
- PART 9 OF OBC 2012 (2019 AMENDMENT)
- CSA 086-14
- TPIC 2014

(55 % OF 48.1 P.S.F. G.S.L. PLUS 8.4 P.S.F. RAIN LOAD) EQUALS 34.8 P.S.F. SPECIFIED ROOF LIVE LOAD

ALLOWABLE DEFL.(LL)= L/360 (0.55")
CALCULATED VERT. DEFL.(LL) = L/ 999 (0.04")
ALLOWABLE DEFL.(TL)= L/360 (0.55")
CALCULATED VERT. DEFL.(TL) = L/ 999 (0.07")

CSI: TC=0.51/0.97 (B-C:1) , BC=0.28/0.97 (J-K:1) , WB=0.33/0.97 (A-K:1) , SSI=0.30/1.00 (B-C:1)

DOL LUMBER=1.00 NAIL=1.00 LS BEND=1.00 COMP=1.00 SHEAR=1.00 TENS= 1.00

COMPANION LIVE LOAD FACTOR = 1.00

TRUSS PLATE MANUFACTURER IS NOT RESPONSIBLE FOR QUALITY CONTROL IN THE TRUSS MANUFACTURING PLANT .

NAIL VALUES

PLATE	GRIP(DRY) (PSI) MAX	MIN	SHEAR (PLI) MAX	MIN	SECTION (PLI) MAX	MIN
MT20	650	371	1747	788	1987	1873

PLATE PLACEMENT TOL. = 0.250 inches

PLATE ROTATION TOL. = 5.0 Deg.

JSI GRIP= 0.87 (G) (INPUT = 0.90)
JSI METAL= 0.44 (E) (INPUT = 1.00)

LICENSED PROFESSIONAL ENGINEER
N.A. EL-MASRI
PROVINCE OF ONTARIO
Jul 07, 2023

READ ALL NOTES ON THIS PAGE AND ON THE ENGINEERING NOTES: TRUSSES. THE NOTE PAGE IS AN INTEGRAL PART OF THIS DRAWING AS IT CONTAINS SPECIFICATIONS AND CRITERIA USED IN THE DESIGN OF THIS COMPONENT.

KOTT

CORPORATION OF THE CITY OF OSHAWA
TRUE COPY
OF PERMIT PLANS
Oct 31 2023
PER:
CHIEF BUILDING OFFICIAL

JOB NAME	TRUSS NAME	QUANTITY	PLY	JOB DESC.	DRWG NO.
NE0723-038	G04	1	1	GREENPARK - ZADORRA ESTATES - ROSE 10-2	

MHP 23031

Version 8.630 S Mar 22 2023 MiTek Industries, Inc. Fri Jul 7 15:07:17 2023 Page 1
ID:5vUDB17_Ic6Oj0vAxsr4RFzBM45-ASta71VOeYHXFsJYCZh?SFjpQN9Toea1RCWRa1z_RAO

-1-3-8 1-3-8 2-10-12 6-0-0 5-1-12 11-1-12 5-0-8 16-2-4 5-1-12 21-4-0 2-10-12 24-2-12 3-1-4 27-4-0

Scale = 1:45.8

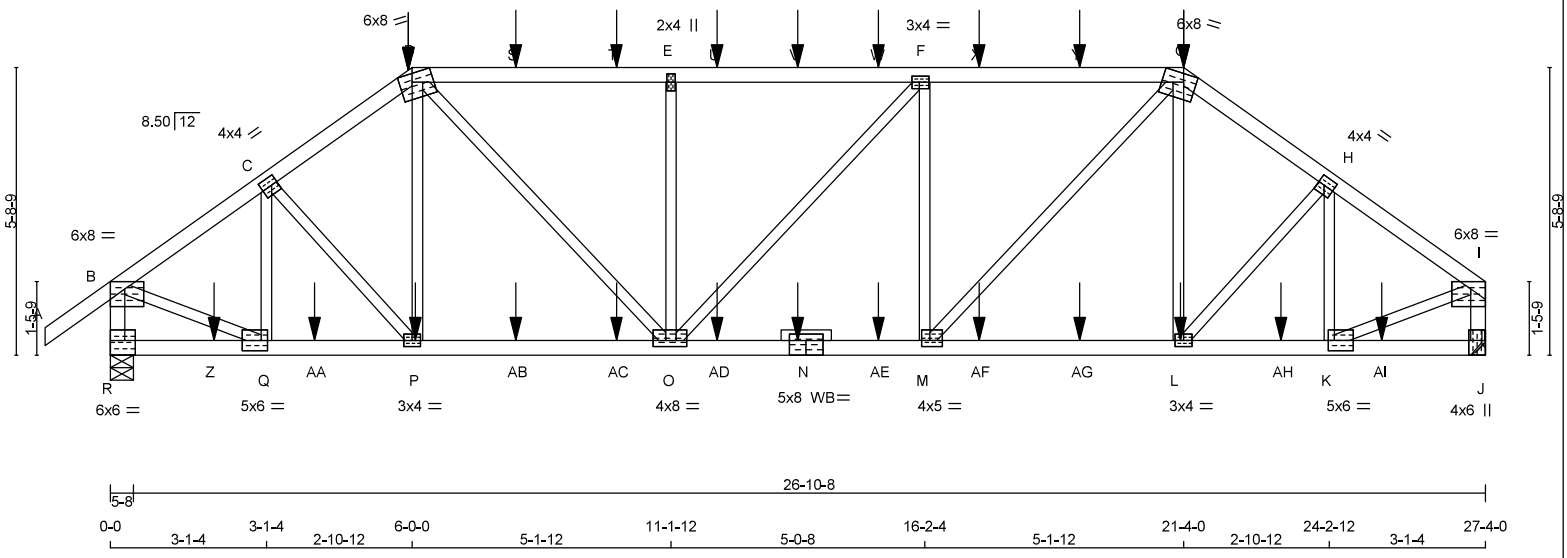

26-10-8

5-8 0-0 3-1-4 3-1-4 2-10-12 6-0-0 5-1-12 11-1-12 5-0-8 16-2-4 5-1-12 21-4-0 2-10-12 24-2-12 3-1-4 27-4-0

TOTAL WEIGHT = 121 lb [M]

LUMBER
N. L. G. A. RULES

CHORDS	SIZE		LUMBER	DESCR.
A - D	2x4	DRY	No.2	SPF
D - G	2x4	DRY	2100F 1.8E	SPF
G - I	2x4	DRY	No.2	SPF
R - B	2x4	DRY	No.2	SPF
J - I	2x4	DRY	No.2	SPF
R - N	2x4	DRY	No.2	SPF
N - J	2x4	DRY	No.2	SPF
ALL WEBS EXCEPT	2x3	DRY	No.2	SPF

DRY: SEASONED LUMBER.

PLATES (table is in inches)

JT	TYPE	PLATES	W	LEN	Y	X
B	TMVW-p	MT20	6.0	8.0	Edge	3.50
C	TMWW-t	MT20	4.0	4.0	2.00	1.50
D	TTWW-m	MT20	6.0	8.0	2.00	3.00
E	TMW+w	MT20	2.0	4.0		
F	TMWW-t	MT20	3.0	4.0	1.50	1.75
G	TTWW-m	MT20	6.0	8.0	2.00	3.00
H	TMWW-t	MT20	4.0	4.0	2.00	1.50
I	TMVW-p	MT20	6.0	8.0	Edge	3.50
J	BMV1+t	MT20	4.0	6.0	Edge	0.50
K	BMWW-t	MT20	5.0	6.0	2.50	1.50
L	BMWW-t	MT20	3.0	4.0		
M	BMWW-t	MT20	4.0	5.0	1.50	2.00
N	BS-t	MT20	5.0	8.0		
O	BMWWW-t	MT20	4.0	8.0	1.50	3.00
P	BMWW-t	MT20	3.0	4.0		
Q	BMWW-t	MT20	5.0	6.0	2.50	1.50
R	BMV1-t	MT20	6.0	6.0	3.50	

Edge - INDICATES REFERENCE CORNER OF PLATE TOUCHES EDGE OF CHORD.

WB - INDICATES BLOCKING REQUIRED

DIMENSIONS, SUPPORTS AND LOADINGS SPECIFIED BY FABRICATOR TO BE VERIFIED BY BUILDING DESIGNER

BEARINGS

JT	FACTORED GROSS REACTION VERT	HORZ	MAXIMUM FACTORED GROSS REACTION DOWN	HORZ	UPLIFT	INPUT BRG IN-SX	REQRD BRG IN-SX
R	3363	0	3363	0	0	5-8	5-8
J	3199	0	3199	0	0	MECHANICAL	

A SUITABLE HANGER/MECHANICAL CONNECTION IS REQUIRED AT JOINT J. MINIMUM BEARING LENGTH AT JOINT J = 3-8.

UNFACTORED REACTIONS

JT	1ST LCASE COMBINED	SNOW	MAX./MIN. COMPONENT REACTIONS LIVE	PERM.LIVE	WIND	DEAD	SOIL
R	2350	1703 / 0	0 / 0	0 / 0	0 / 0	648 / 0	0 / 0
J	2238	1607 / 0	0 / 0	0 / 0	0 / 0	631 / 0	0 / 0

BEARING MATERIAL TO BE SPF NO.2 OR BETTER AT JOINT(S) R
BEARING SIZE FACTOR = 1.15 AT JNT(S) R (BASED ON SUPPORT DEPTH = 1-8)

BRACING
TOP CHORD TO BE SHEATHED OR MAX. PURLIN SPACING = 3.23 FT.
MAX. UNBRACED BOTTOM CHORD LENGTH = 10.00 FT OR RIGID CEILING DIRECTLY APPLIED.

ALL PITCH BREAKS AND PERIMETER CORNER JOINTS MUST BE LATERALLY RESTRAINED.

LOADING
TOTAL LOAD CASES: (4)

CHORDS

MEMB. FR-TO	MAX. FACTORED FORCE (LBS)	FACTORED VERT. LOAD (PLF) FROM	TO	LC1	MAX CSI (LC)
A- B	0 / 47	-119.4	-119.4	0.18 (1)	10.00
B- C	-3410 / 0	-119.4	-119.4	0.33 (1)	3.45
C- D	-3805 / 0	-119.4	-119.4	0.37 (1)	3.23
D- S	-4276 / 0	-119.4	-119.4	0.68 (1)	3.38
S- T	-4276 / 0	-119.4	-119.4	0.68 (1)	3.38
T- E	-4276 / 0	-119.4	-119.4	0.68 (1)	3.38
E- U	-4276 / 0	-119.4	-119.4	0.68 (1)	3.36
U- V	-4276 / 0	-119.4	-119.4	0.68 (1)	3.36
V- W	-4276 / 0	-119.4	-119.4	0.68 (1)	3.36
W- F	-4276 / 0	-119.4	-119.4	0.68 (1)	3.36
F- X	-4279 / 0	-119.4	-119.4	0.69 (1)	3.36
X- Y	-4279 / 0	-119.4	-119.4	0.69 (1)	3.36
Y- G	-4279 / 0	-119.4	-119.4	0.69 (1)	3.36
G- H	-3805 / 0	-119.4	-119.4	0.37 (1)	3.24
H- I	-3411 / 0	-119.4	-119.4	0.33 (1)	3.45
R- B	-3324 / 0	0.0	0.0	0.38 (1)	4.59
J- I	-3160 / 0	0.0	0.0	0.36 (1)	4.71
R- Z	0 / 0	-18.2	-18.2	0.07 (4)	10.00
Z- Q	0 / 0	-18.2	-18.2	0.07 (4)	10.00
Q-AA	0 / 2798	-18.2	-18.2	0.57 (1)	10.00
AA- P	0 / 2798	-18.2	-18.2	0.57 (1)	10.00
P-AB	0 / 3076	-18.2	-18.2	0.62 (1)	10.00
AB-AC	0 / 3076	-18.2	-18.2	0.62 (1)	10.00
AC- O	0 / 3076	-18.2	-18.2	0.62 (1)	10.00
O-AD	0 / 4280	-18.2	-18.2	0.85 (1)	10.00
AD- N	0 / 4280	-18.2	-18.2	0.85 (1)	10.00
N-AE	0 / 4280	-18.2	-18.2	0.85 (1)	10.00
AE- M	0 / 4280	-18.2	-18.2	0.85 (1)	10.00
M-AF	0 / 3076	-18.2	-18.2	0.64 (1)	10.00
AF-AG	0 / 3076	-18.2	-18.2	0.64 (1)	10.00
AG- L	0 / 3076	-18.2	-18.2	0.64 (1)	10.00
L-AH	0 / 2799	-18.2	-18.2	0.57 (1)	10.00
AH- K	0 / 2799	-18.2	-18.2	0.57 (1)	10.00
K-AI	0 / 0	-18.2	-18.2	0.07 (4)	10.00
AI- J	0 / 0	-18.2	-18.2	0.07 (4)	10.00

WEBS

MEMB. FR-TO	MAX. FACTORED FORCE (LBS)	MAX UNBRAC LENGTH	MEMB. FR-TO	MAX. FACTORED FORCE (LBS)	MAX CSI (LC)
Q- C	-957 / 0				0.22 (1)
C- P	0 / 420				0.10 (1)
P- D	-160 / 81				0.08 (1)
D- O	0 / 1740				0.43 (1)
O- E	-1092 / 0				0.56 (1)
O- F	-5 / 0				0.01 (1)
M- F	-1093 / 0				0.56 (1)
M- G	0 / 1745				0.43 (1)
L- G	-162 / 81				0.08 (1)
L- H	0 / 419				0.10 (1)
K- H	-956 / 0				0.22 (1)
B- Q	0 / 2980				0.74 (1)
K- I	0 / 2981				0.74 (1)

SPECIFIED CONCENTRATED LOADS (LBS)

JT	LOC.	LC1	MAX-	MAX+	FACE	DIR.	TYPE	HEEL	CONN.
D	6-0-0	-423	-423	—	BACK	VERT	TOTAL	—	C1
G	21-4-0	-423	-423	—	BACK	VERT	TOTAL	—	C1
L	21-3-4	-22	-22	—	BACK	VERT	TOTAL	—	C1
N	13-8-0	-22	-22	—	BACK	VERT	TOTAL	—	C1
P	6-0-12	-22	-22	—	BACK	VERT	TOTAL	—	C1
S	8-0-12	-102	-102	—	BACK	VERT	TOTAL	—	C1
T	10-0-12	-102	-102	—	BACK	VERT	TOTAL	—	C1
U	12-0-12	-102	-102	—	BACK	VERT	TOTAL	—	C1

DESIGN CRITERIA

*** SPECIAL LOADS ANALYSIS ***
GEOMETRY AND/OR BASIC LOADS CHANGED BY USER.
LOADS WERE DERIVED FROM USER INPUT
NO FURTHER MODIFICATIONS WERE MADE

SPECIFIED LOADS:

TOP CH.	LL	=	34.8	PSF
	DL	=	6.0	PSF
BOT CH.	LL	=	0.0	PSF
	DL	=	7.3	PSF
TOTAL LOAD		=	48.1	PSF

SPACING = 24.0 IN. C/C

LOADING IN FLAT SECTION BASED ON A SLOPE OF 2.00/12 MINIMUM

*** NON STANDARD GIRDER ***
ADDT'L USER-DEFINED LOADS APPLIED TO ALL LOAD CASES.

THIS TRUSS IS DESIGNED FOR RESIDENTIAL OR SMALL BUILDING REQUIREMENTS OF PART 9, NBCC 2015

THIS DESIGN COMPLIES WITH:
- PART 9 OF BCBC 2018 , NBC-2019AE
- PART 9 OF OBC 2012 (2019 AMENDMENT)
- CSA 086-14
- TPIC 2014

(55 % OF 48.1 P.S.F. G.S.L. PLUS 8.4 P.S.F. RAIN LOAD) EQUALS 34.8 P.S.F. SPECIFIED ROOF LIVE LOAD

ALLOWABLE DEFL.(LL)= L/360 (0.91")
CALCULATED VERT. DEFL.(LL) = L/ 999 (0.16")
ALLOWABLE DEFL.(TL)= L/360 (0.91")
CALCULATED VERT. DEFL.(TL) = L/ 999 (0.28")

CSI: TC=0.69/0.97 (F-G:1) , BC=0.85/0.97 (M-O:1) , WB=0.74/0.97 (I-K:1) , SSI=0.50/1.00 (F-G:1)

DOL LUMBER=1.00 NAIL=1.00 LS BEND=1.00 COMP=1.00 SHEAR=1.00 TENS= 1.00

COMPANION LIVE LOAD FACTOR = 1.00

TRUSS PLATE MANUFACTURER IS NOT RESPONSIBLE FOR QUALITY CONTROL IN THE TRUSS MANUFACTURING PLANT .

NAIL VALUES

PLATE	GRIP(DRY) (PSI) MAX	MIN	SHEAR (PLI) MAX	MIN	SECTION (PLI) MAX	MIN
MT20	650	371	1747	788	1987	1873

PLATE PLACEMENT TOL. = 0.250 inches

PLATE ROTATION TOL. = 5.0 Deg.

JSI GRIP= 0.89 (F) (INPUT = 0.90)
JSI METAL= 0.93 (N) (INPUT = 1.00)

CONTINUED ON PAGE 2

LICENSED PROFESSIONAL ENGINEER
N.A. EL-MASRI
PROVINCE OF ONTARIO
Jul 07, 2023

READ ALL NOTES ON THIS PAGE AND ON THE ENGINEERING NOTES: TRUSSES. THE NOTE PAGE IS AN INTEGRAL PART OF THIS DRAWING AS IT CONTAINS SPECIFICATIONS AND CRITERIA USED IN THE DESIGN OF THIS COMPONENT.

KOTT

CORPORATION OF THE CITY OF OSHAWA
TRUE COPY
OF PERMIT PLANS
Oct 31 2023
PER:
CHIEF BUILDING OFFICIAL

JOB NAME	TRUSS NAME	QUANTITY	PLY	JOB DESC.	DRWG NO.
NE0723-038	G04	1	1	GREENPARK - ZADORRA ESTATES - ROSE 10-2	

MHP 23031

TRUSS DESC.

Version 8.630 S Mar 22 2023 MiTek Industries, Inc. Fri Jul 7 15:07:17 2023 Page 2
ID:5vUDB17_Ic6Oj0vAxsr4RFzBM45-ASta71VOeYHXFsJYCZh?SFjpQN9Toea1RCWRa1z_RAO

SPECIFIED CONCENTRATED LOADS (LBS)

JT	LOC.	LC1	MAX-	MAX+	FACE	DIR.	TYPE	HEEL	CONN.
V	13-8-0	-102	-102	—	BACK	VERT	TOTAL	—	C1
W	15-3-4	-102	-102	—	BACK	VERT	TOTAL	—	C1
X	17-3-4	-102	-102	—	BACK	VERT	TOTAL	—	C1
Y	19-3-4	-102	-102	—	BACK	VERT	TOTAL	—	C1
Z	2-0-12	-21	-21	—	BACK	VERT	TOTAL	—	C1
AA	4-0-12	-22	-22	—	BACK	VERT	TOTAL	—	C1
AB	8-0-12	-22	-22	—	BACK	VERT	TOTAL	—	C1
AC	10-0-12	-22	-22	—	BACK	VERT	TOTAL	—	C1
AD	12-0-12	-22	-22	—	BACK	VERT	TOTAL	—	C1
AE	15-3-4	-22	-22	—	BACK	VERT	TOTAL	—	C1
AF	17-3-4	-22	-22	—	BACK	VERT	TOTAL	—	C1
AG	19-3-4	-22	-22	—	BACK	VERT	TOTAL	—	C1
AH	23-3-4	-22	-22	—	BACK	VERT	TOTAL	—	C1
AI	25-3-4	-21	-21	—	BACK	VERT	TOTAL	—	C1

CONNECTION REQUIREMENTS

1) **C1:** A SUITABLE HANGER/MECHANICAL CONNECTION IS REQUIRED.

LICENSED PROFESSIONAL ENGINEER
N.A. EL-MASRI
PROVINCE OF ONTARIO
Jul 07, 2023

READ ALL NOTES ON THIS PAGE AND ON THE ENGINEERING NOTES: TRUSSES. THE NOTE PAGE IS AN INTEGRAL PART OF THIS DRAWING AS IT CONTAINS SPECIFICATIONS AND CRITERIA USED IN THE DESIGN OF THIS COMPONENT.

KOTT

CORPORATION OF THE CITY OF OSHAWA
TRUE COPY
OF PERMIT PLANS
Oct 31 2023
PER: _____
CHIEF BUILDING OFFICIAL

JOB NAME	TRUSS NAME	QUANTITY	PLY	JOB DESC.	DRWG NO.
NE0723-038	G05	1	1	GREENPARK - ZADORRA ESTATES - ROSE 10-2	

MHP 23031

TRUSS DESC.

Version 8.630 S Mar 22 2023 MiTek Industries, Inc. Fri Jul 7 15:07:18 2023 Page 1
ID:5vUDB17_Ic6Oj0vAxsr4RFzBM45-eeRyKNW0OsPOt0ukmHCE_TG?xnc7X8NAgsG_6Tz_RAN

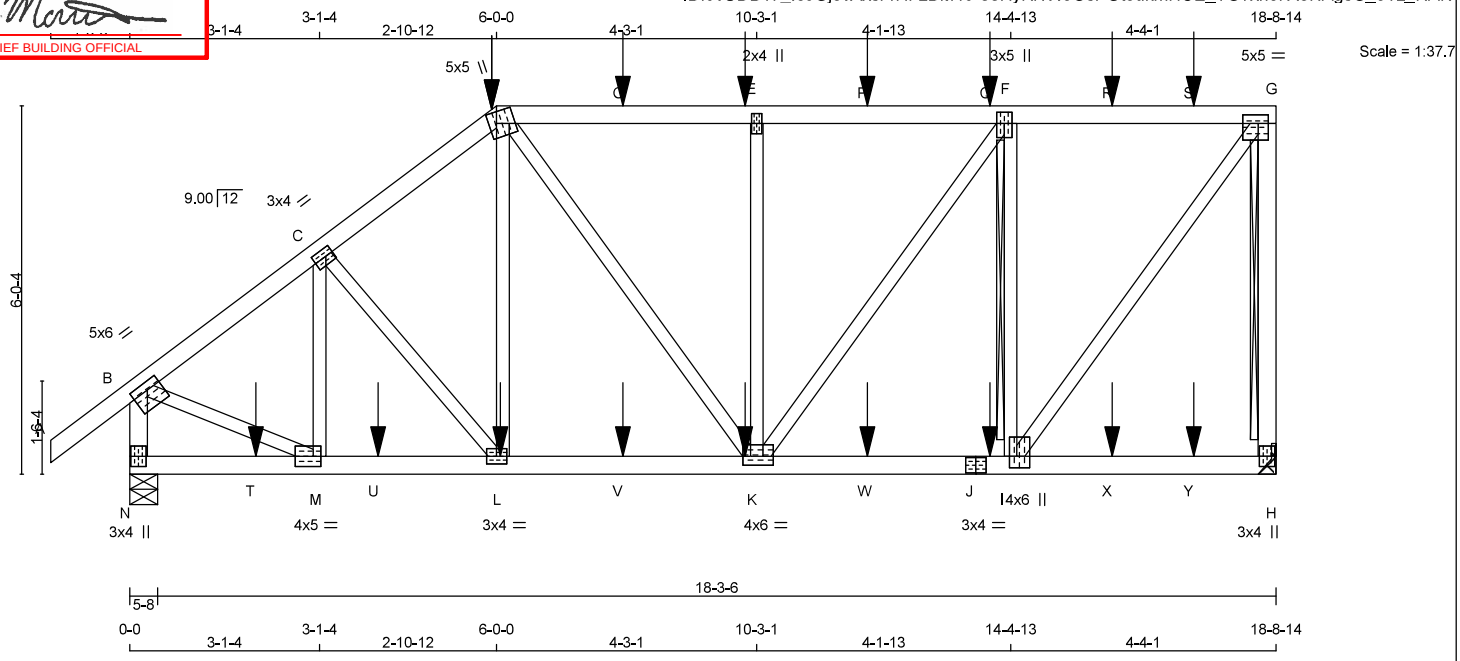

TOTAL WEIGHT = 92 lb [M]

LUMBER
N. L. G. A. RULES

CHORDS	SIZE		LUMBER	DESCR.
A - D	2x4	DRY	No.2	SPF
D - G	2x4	DRY	No.2	SPF
H - G	2x4	DRY	No.2	SPF
N - B	2x4	DRY	No.2	SPF
N - J	2x4	DRY	No.2	SPF
J - H	2x4	DRY	No.2	SPF
ALL WEBS EXCEPT	2x3	DRY	No.2	SPF

DRY: SEASONED LUMBER.

PLATES (table is in inches)

JT	TYPE	PLATES	W	LEN	Y	X
B	TMVW-t	MT20	5.0	6.0	1.50	2.75
C	TMWW-t	MT20	3.0	4.0	1.50	1.50
D	TTWW+m	MT20	5.0	5.0	2.25	1.50
E	TMW+w	MT20	2.0	4.0		
F	TMWW+t	MT20	3.0	5.0	2.25	1.50
G	TMVW-t	MT20	5.0	5.0	1.75	2.00
H	BMV1+p	MT20	3.0	4.0		
I	BMWW+t	MT20	4.0	6.0	2.25	1.50
J	BS-t	MT20	3.0	4.0		
K	BMWWW-t	MT20	4.0	6.0	1.75	1.50
L	BMWW-t	MT20	3.0	4.0		
M	BMWW-t	MT20	4.0	5.0	2.00	1.50
N	BMV1+p	MT20	3.0	4.0		

DIMENSIONS, SUPPORTS AND LOADINGS SPECIFIED BY FABRICATOR TO BE VERIFIED BY BUILDING DESIGNER

BEARINGS

JT	FACTORED GROSS REACTION VERT	HORZ	MAXIMUM FACTORED GROSS REACTION DOWN	HORZ	UPLIFT	INPUT BRG IN-SX	REQRD BRG IN-SX
H	2242	0	2242	0	0	MECHANICAL	
N	2265	0	2265	0	0	5-8	3-14

A SUITABLE HANGER/MECHANICAL CONNECTION IS REQUIRED AT JOINT H. MINIMUM BEARING LENGTH AT JOINT H = 3-13.

UNFACTORED REACTIONS

JT	1ST LCASE COMBINED	MAX./MIN. COMPONENT REACTIONS SNOW	LIVE	PERM.LIVE	WIND	DEAD	SOIL
H	1568	1127 / 0	0 / 0	0 / 0	0 / 0	441 / 0	0 / 0
N	1582	1147 / 0	0 / 0	0 / 0	0 / 0	436 / 0	0 / 0

BEARING MATERIAL TO BE SPF NO.2 OR BETTER AT JOINT(S) N

BRACING
TOP CHORD TO BE SHEATHED OR MAX. PURLIN SPACING = 3.83 FT.
MAX. UNBRACED BOTTOM CHORD LENGTH = 10.00 FT OR RIGID CEILING DIRECTLY APPLIED.

ALL PITCH BREAKS AND PERIMETER CORNER JOINTS MUST BE LATERALLY RESTRAINED.

2x4 DRY SPF No.2 T-BRACE AT G-H, F-I

FASTEN T AND I-BRACES TO NARROW EDGE OF WEB WITH ONE ROW PER PLY OF 3" COMMON WIRE NAILS @ 6" O.C. WITH 3" MINIMUM END DISTANCE. BRACE MUST COVER 90% OF WEB LENGTH.

END VERTICAL(S) MUST BE SHEATHED OR HAVE BRACES AS INDICATED IN THE MAX. UNBRACED LENGTH COLUMN OF THE TABLE BELOW

LOADING
TOTAL LOAD CASES: (4)

CHORDS

MEMB. FR-TO	MAX. FACTORED FORCE (LBS)	FACTORED VERT. LOAD (PLF) FROM	TO	LC1	MAX CSI (LC)	MAX. UNBRAC LENGTH
A- B	0 / 49	-119.4	-119.4	0.18 (1)	10.00	
B- C	-2090 / 0	-119.4	-119.4	0.24 (1)	4.39	
C- D	-2220 / 0	-119.4	-119.4	0.25 (1)	4.27	
D- O	-1934 / 0	-119.4	-119.4	0.52 (1)	4.10	
O- E	-1934 / 0	-119.4	-119.4	0.52 (1)	4.10	
E- P	-1934 / 0	-119.4	-119.4	0.64 (1)	3.83	
P- Q	-1934 / 0	-119.4	-119.4	0.64 (1)	3.83	
Q- F	-1934 / 0	-119.4	-119.4	0.64 (1)	3.83	
F- R	-1402 / 0	-119.4	-119.4	0.61 (1)	4.47	
R- S	-1402 / 0	-119.4	-119.4	0.61 (1)	4.47	
S- G	-1402 / 0	-119.4	-119.4	0.61 (1)	4.47	
H- G	-2186 / 0	0.0	0.0	0.46 (1)	7.81	
N- B	-2230 / 0	0.0	0.0	0.26 (1)	5.57	
N- T	0 / 0	-18.2	-18.2	0.07 (4)	10.00	
T- M	0 / 0	-18.2	-18.2	0.07 (4)	10.00	
M- U	0 / 1690	-18.2	-18.2	0.35 (1)	10.00	
U- L	0 / 1690	-18.2	-18.2	0.35 (1)	10.00	
L- V	0 / 1752	-18.2	-18.2	0.37 (1)	10.00	
V- K	0 / 1752	-18.2	-18.2	0.37 (1)	10.00	
K- W	0 / 1402	-18.2	-18.2	0.34 (1)	10.00	
W- J	0 / 1402	-18.2	-18.2	0.34 (1)	10.00	
J- I	0 / 1402	-18.2	-18.2	0.34 (1)	10.00	
I- X	0 / 0	-18.2	-18.2	0.17 (4)	10.00	
X- Y	0 / 0	-18.2	-18.2	0.17 (4)	10.00	
Y- H	0 / 0	-18.2	-18.2	0.17 (4)	10.00	

WEBS

MEMB. FR-TO	MAX. FACTORED FORCE (LBS)	MAX CSI (LC)
M- C	-564 / 0	0.14 (1)
C- L	0 / 94	0.02 (1)
L- D	0 / 128	0.05 (4)
D- K	0 / 304	0.08 (1)
K- E	-856 / 0	0.50 (1)
K- F	0 / 908	0.22 (1)
I- F	-1688 / 0	0.47 (1)
I- G	0 / 2322	0.57 (1)
B- M	0 / 1811	0.45 (1)

SPECIFIED CONCENTRATED LOADS (LBS)

JT	LOC.	LC1	MAX-	MAX+	FACE	DIR.	TYPE	HEEL	CONN.
D	6-0-0	-423	-423	—	FRONT	VERT	TOTAL	—	C1
E	10-0-12	-102	-102	—	FRONT	VERT	TOTAL	—	C1
J	14-0-12	-22	-22	—	FRONT	VERT	TOTAL	—	C1
K	10-0-12	-22	-22	—	FRONT	VERT	TOTAL	—	C1
L	6-0-12	-22	-22	—	FRONT	VERT	TOTAL	—	C1
O	8-0-12	-102	-102	—	FRONT	VERT	TOTAL	—	C1
P	12-0-12	-102	-102	—	FRONT	VERT	TOTAL	—	C1
Q	14-0-12	-102	-102	—	FRONT	VERT	TOTAL	—	C1
R	16-0-12	-102	-102	—	FRONT	VERT	TOTAL	—	C1
S	17-4-12	-102	-102	—	FRONT	VERT	TOTAL	—	C1
T	2-0-12	-21	-21	—	FRONT	VERT	TOTAL	—	C1

DESIGN CRITERIA

*** SPECIAL LOADS ANALYSIS ***
GEOMETRY AND/OR BASIC LOADS CHANGED BY USER.
LOADS WERE DERIVED FROM USER INPUT
NO FURTHER MODIFICATIONS WERE MADE

SPECIFIED LOADS:

TOP CH.	LL	=	34.8	PSF
	DL	=	6.0	PSF
BOT CH.	LL	=	0.0	PSF
	DL	=	7.3	PSF
TOTAL LOAD		=	48.1	PSF

SPACING = 24.0 IN. C/C

LOADING IN FLAT SECTION BASED ON A SLOPE OF 2.00/12 MINIMUM

*** NON STANDARD GIRDER ***
ADDT'L USER-DEFINED LOADS APPLIED TO ALL LOAD CASES.

THIS TRUSS IS DESIGNED FOR RESIDENTIAL OR SMALL BUILDING REQUIREMENTS OF PART 9, NBCC 2015

THIS DESIGN COMPLIES WITH:
- PART 9 OF BCBC 2018 , NBC-2019AE
- PART 9 OF OBC 2012 (2019 AMENDMENT)
- CSA 086-14
- TPIC 2014

(55 % OF 48.1 P.S.F. G.S.L. PLUS 8.4 P.S.F. RAIN LOAD) EQUALS 34.8 P.S.F. SPECIFIED ROOF LIVE LOAD

ALLOWABLE DEFL.(LL)= L/360 (0.62")
CALCULATED VERT. DEFL.(LL) = L/ 999 (0.06")
ALLOWABLE DEFL.(TL)= L/360 (0.62")
CALCULATED VERT. DEFL.(TL) = L/ 999 (0.11")

CSI: TC=0.64/0.97 (E-F:1) , BC=0.37/0.97 (K-L:1) , WB=0.57/0.97 (G-I:1) , SSI=0.41/1.00 (F-G:1)

DOL LUMBER=1.00 NAIL=1.00 LS BEND=1.00 COMP=1.00 SHEAR=1.00 TENS= 1.00

COMPANION LIVE LOAD FACTOR = 1.00

TRUSS PLATE MANUFACTURER IS NOT RESPONSIBLE FOR QUALITY CONTROL IN THE TRUSS MANUFACTURING PLANT .

NAIL VALUES

PLATE	GRIP(DRY) (PSI) MAX	MIN	SHEAR (PLI) MAX	MIN	SECTION (PLI) MAX	MIN
MT20	650	371	1747	788	1987	1873

PLATE PLACEMENT TOL. = 0.250 inches

PLATE ROTATION TOL. = 5.0 Deg.

JSI GRIP= 0.90 (C) (INPUT = 0.90)
JSI METAL= 0.62 (I) (INPUT = 1.00)

CONTINUED ON PAGE 2

LICENSED PROFESSIONAL ENGINEER
N.A. EL-MASRI
PROVINCE OF ONTARIO
Jul 07, 2023

READ ALL NOTES ON THIS PAGE AND ON THE ENGINEERING NOTES: TRUSSES. THE NOTE PAGE IS AN INTEGRAL PART OF THIS DRAWING AS IT CONTAINS SPECIFICATIONS AND CRITERIA USED IN THE DESIGN OF THIS COMPONENT.

KOTT

CORPORATION OF THE CITY OF OSHAWA
TRUE COPY
OF PERMIT PLANS
Oct 31 2023
PER:
CHIEF BUILDING OFFICIAL

JOB NAME	TRUSS NAME	QUANTITY	PLY	JOB DESC.	DRWG NO.
NE0723-038	G05	1	1	GREENPARK - ZADORRA ESTATES - ROSE 10-2	

MHP 23031

TRUSS DESC.

Version 8.630 S Mar 22 2023 MiTek Industries, Inc. Fri Jul 7 15:07:18 2023 Page 2
ID:5vUDB17_Ic6Oj0vAxsr4RFzBM45-eeRyKNW0OsPOt0ukmHCE_TG?xnc7X8NAgsG_6Tz_RAN

SPECIFIED CONCENTRATED LOADS (LBS)

JT	LOC.	LC1	MAX-	MAX+	FACE	DIR.	TYPE	HEEL	CONN.
U	4-0-12	-22	-22	—	FRONT	VERT	TOTAL	—	C1
V	8-0-12	-22	-22	—	FRONT	VERT	TOTAL	—	C1
W	12-0-12	-22	-22	—	FRONT	VERT	TOTAL	—	C1
X	16-0-12	-22	-22	—	FRONT	VERT	TOTAL	—	C1
Y	17-4-12	-22	-22	—	FRONT	VERT	TOTAL	—	C1

CONNECTION REQUIREMENTS

1) **C1:** A SUITABLE HANGER/MECHANICAL CONNECTION IS REQUIRED.

LICENSED PROFESSIONAL ENGINEER
N.A. EL-MASRI
PROVINCE OF ONTARIO
Jul 07, 2023

READ ALL NOTES ON THIS PAGE AND ON THE ENGINEERING NOTES: TRUSSES. THE NOTE PAGE IS AN INTEGRAL PART OF THIS DRAWING AS IT CONTAINS SPECIFICATIONS AND CRITERIA USED IN THE DESIGN OF THIS COMPONENT.

KOTT

CORPORATION OF THE CITY OF OSHAWA
TRUE COPY
OF PERMIT PLANS
Oct 31 2023
PER:
CHIEF BUILDING OFFICIAL

JOB NAME	TRUSS NAME	QUANTITY	PLY	JOB DESC.	DRWG NO.
NE0723-038	G06	1	2	GREENPARK - ZADORRA ESTATES - ROSE 10-2	

MHP 23031

Version 8.630 S Mar 22 2023 MiTek Industries, Inc. Fri Jul 7 15:07:19 2023 Page 1
ID:5vUDB17_Ic6Oj0vAxsr4RFzBM45-6q?KYjWe9AXFV9TwJ_jTXgoG1BqXGV6JvW?Xevz_RAM

Scale = 1:48.9

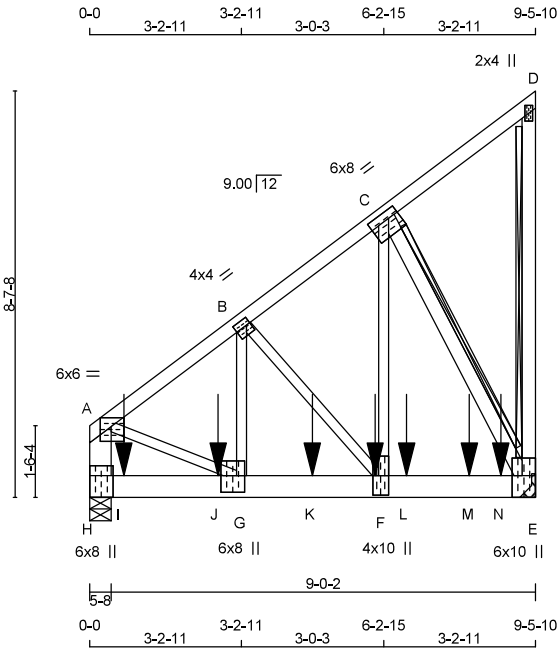

TOTAL WEIGHT = 2 X 61 = 123 lb [M]

LUMBER
N. L. G. A. RULES

CHORDS	SIZE		LUMBER	DESCR.
H - A	2x6	DRY	No.2	SPF
A - D	2x4	DRY	No.2	SPF
E - D	2x4	DRY	No.2	SPF
H - E	2x6	DRY	No.2	SPF
ALL WEBS	2x3	DRY	No.2	SPF
EXCEPT				
C - E	2x4	DRY	No.2	SPF

DRY: SEASONED LUMBER.

DESIGN CONSISTS OF 2 TRUSSES BUILT SEPARATELY THEN FASTENED TOGETHER AS FOLLOWS:

CHORDS #ROWS	SURFACE SPACING (IN)	LOAD(PLF)
TOP CHORDS : (0.122"X3") SPIRAL NAILS		
H- A 2	12	TOP
A- D 1	12	TOP
D- E 1	12	TOP
BOTTOM CHORDS : (0.122"X3") SPIRAL NAILS		
H- E 2	12	SIDE(0.0)
WEBS : (0.122"X3") SPIRAL NAILS		
2x3 1	6	
2x4 1	6	

NAILS TO BE DRIVEN FROM ONE SIDE ONLY.

GIRDER NAILING ASSUMES NAILED HANGERS ARE FASTENED WITH MIN. 3-0 INCH NAILS.

TOP - COMPONENTS ARE LOADED FROM THE TOP AND MUST BE PLACED ON TOP EDGE OF ALL PLIES FOR THE LOAD TO BE TRANSFERRED TO EACH PLY.

SIDE - PLF SHOWN IS THE EQUIVALENT UDL APPLIED TO ONE SIDE THAT THE CORRESPONDING NAILING PATTERN SHALL BE CAPABLE OF TRANSFERING. REMAINING PLF MUST BE APPLIED ON THE OPPOSITE SIDE OR ON THE TOP.

PLATES (table is in inches)

JT	TYPE	PLATES	W	LEN	Y	X
A	TMVW-p	MT20	6.0	6.0	2.25	2.75
B	TMWW-t	MT20	4.0	4.0	1.75	1.00
C	TMWW-t	MT20	6.0	8.0	2.00	2.75

LICENSED PROFESSIONAL ENGINEER
N.A. EL-MASRI
PROVINCE OF ONTARIO
Jul 07, 2023

READ ALL NOTES ON THIS PAGE AND ON THE ENGINEERING NOTES: TRUSSES. THE NOTE PAGE IS AN INTEGRAL PART OF THIS DRAWING AS IT CONTAINS SPECIFICATIONS AND CRITERIA USED IN THE DESIGN OF THIS COMPONENT.

DIMENSIONS, SUPPORTS AND LOADINGS SPECIFIED BY FABRICATOR TO BE VERIFIED BY BUILDING DESIGNER

BEARINGS

JT	FACTORED GROSS REACTION VERT	HORZ	MAXIMUM FACTORED GROSS REACTION DOWN	HORZ	UPLIFT	INPUT BRG IN-SX	REQRD BRG IN-SX
H	7481	0	7481	0	0	5-8	5-8
E	7958	0	7958	0	0	MECHANICAL	

A SUITABLE HANGER/MECHANICAL CONNECTION IS REQUIRED AT JOINT E. MINIMUM BEARING LENGTH AT JOINT E = 4-0.

UNFACTORED REACTIONS

JT	1ST LCASE COMBINED	SNOW	MAX./MIN. COMPONENT REACTIONS LIVE	PERM.LIVE	WIND	DEAD	SOIL
H	5225	3797 / 0	0 / 0	0 / 0	0 / 0	1429 / 0	0 / 0
E	5555	4055 / 0	0 / 0	0 / 0	0 / 0	1501 / 0	0 / 0

BEARING MATERIAL TO BE SPF NO.2 OR BETTER AT JOINT(S) H
BEARING SIZE FACTOR = 1.15 AT JNT(S) H (BASED ON SUPPORT DEPTH = 1-8)

BRACING
TOP CHORD TO BE SHEATHED OR MAX. PURLIN SPACING = 3.94 FT.
MAX. UNBRACED BOTTOM CHORD LENGTH = 10.00 FT OR RIGID CEILING DIRECTLY APPLIED.

ALL PITCH BREAKS AND PERIMETER CORNER JOINTS MUST BE LATERALLY RESTRAINED.

2x4 DRY SPF No.2 T-BRACE AT D-E
2x6 DRY SPF No.2 T-BRACE AT C-E

FASTEN T AND I-BRACES TO NARROW EDGE OF WEB WITH ONE ROW PER PLY OF 3" COMMON WIRE NAILS @ 6" O.C. WITH 3" MINIMUM END DISTANCE. BRACE MUST COVER 90% OF WEB LENGTH.

END VERTICAL(S) MUST BE SHEATHED OR HAVE BRACES AS INDICATED IN THE MAX. UNBRACED LENGTH COLUMN OF THE TABLE BELOW

LOADING
TOTAL LOAD CASES: (4)

CHORDS

MEMB. FR-TO	MAX. FACTORED FORCE (LBS)	FACTORED VERT. LOAD (PLF) FROM	TO	LC1	MAX CSI (LC)	MAX. UNBRAC LENGTH
H- A	-4974 / 0	0.0	0.0	0.18 (1)	6.44	
A- B	-5463 / 0	-119.4	-119.4	0.23 (1)	3.94	
B- C	-3882 / 0	-119.4	-119.4	0.17 (1)	4.63	
C- D	-27 / 0	-119.4	-119.4	0.11 (1)	6.25	
E- D	-148 / 0	0.0	0.0	0.04 (1)	7.81	
H- I	0 / 0	-18.2	-18.2	0.67 (1)	10.00	
I- J	0 / 0	-18.2	-18.2	0.67 (1)	10.00	
J- G	0 / 0	-18.2	-18.2	0.67 (1)	10.00	
G- K	0 / 4371	-18.2	-18.2	0.61 (1)	10.00	
K- F	0 / 4371	-18.2	-18.2	0.61 (1)	10.00	
F- L	0 / 3128	-18.2	-18.2	0.87 (1)	10.00	
L- M	0 / 3128	-18.2	-18.2	0.87 (1)	10.00	
M- N	0 / 3128	-18.2	-18.2	0.87 (1)	10.00	
N- E	0 / 3128	-18.2	-18.2	0.87 (1)	10.00	

WEBS

MEMB. FR-TO	MAX. FACTORED FORCE (LBS)	MAX CSI (LC)
A- G	0 / 4622	0.57 (1)
G- B	0 / 2060	0.25 (1)
B- F	-1913 / 0	0.34 (1)
F- C	0 / 7498	0.93 (1)
C- E	-6429 / 0	0.52 (1)

SPECIFIED CONCENTRATED LOADS (LBS)

JT	LOC.	LC1	MAX-	MAX+	FACE	DIR.	TYPE	HEEL	CONN.
F	6-0-12	-1554	-1554	—	BACK	VERT	TOTAL	—	C1
I	8-12	-2226	-2226	—	FRONT	VERT	TOTAL	—	C1
J	2-8-12	-1300	-1300	—	FRONT	VERT	TOTAL	—	C1
K	4-8-12	-1300	-1300	—	FRONT	VERT	TOTAL	—	C1
L	6-8-12	-1300	-1300	—	FRONT	VERT	TOTAL	—	C1
M	8-0-12	-887	-887	—	BACK	VERT	TOTAL	—	C1
N	8-8-12	-1302	-1302	—	FRONT	VERT	TOTAL	—	C1

CONNECTION REQUIREMENTS

1) **C1:** A SUITABLE HANGER/MECHANICAL CONNECTION IS REQUIRED.

DESIGN CRITERIA

*** SPECIAL LOADS ANALYSIS ***
GEOMETRY AND/OR BASIC LOADS CHANGED BY USER.
LOADS WERE DERIVED FROM USER INPUT
NO FURTHER MODIFICATIONS WERE MADE

SPECIFIED LOADS:

TOP CH.	LL	=	34.8	PSF
	DL	=	6.0	PSF
BOT CH.	LL	=	0.0	PSF
	DL	=	7.3	PSF
TOTAL LOAD		=	48.1	PSF

SPACING = 24.0 IN. C/C

*** NON STANDARD GIRDER ***
ADDT'L USER-DEFINED LOADS APPLIED TO ALL LOAD CASES.

THIS TRUSS IS DESIGNED FOR RESIDENTIAL OR SMALL BUILDING REQUIREMENTS OF PART 9, NBCC 2015

THIS DESIGN COMPLIES WITH:
- PART 9 OF BCBC 2018 , NBC-2019AE
- PART 9 OF OBC 2012 (2019 AMENDMENT)
- CSA 086-14
- TPIC 2014

(55 % OF 48.1 P.S.F. G.S.L. PLUS 8.4 P.S.F. RAIN LOAD) EQUALS 34.8 P.S.F. SPECIFIED ROOF LIVE LOAD

ALLOWABLE DEFL.(LL)= L/360 (0.32")
CALCULATED VERT. DEFL.(LL) = L/ 999 (0.05")
ALLOWABLE DEFL.(TL)= L/360 (0.32")
CALCULATED VERT. DEFL.(TL) = L/ 999 (0.09")

CSI: TC=0.23/0.97 (A-B:1) , BC=0.87/0.97 (E-F:1) , WB=0.93/0.97 (C-F:1) , SSI=0.95/1.00 (E-F:1)

DOL LUMBER=1.00 NAIL=1.00 LS BEND=1.00 COMP=1.00 SHEAR=1.00 TENS= 1.00

COMPANION LIVE LOAD FACTOR = 1.00

TRUSS PLATE MANUFACTURER IS NOT RESPONSIBLE FOR QUALITY CONTROL IN THE TRUSS MANUFACTURING PLANT .

NAIL VALUES

PLATE	GRIP(DRY) (PSI) MAX	MIN	SHEAR (PLI) MAX	MIN	SECTION (PLI) MAX	MIN
MT20	650	371	1747	788	1987	1873

PLATE PLACEMENT TOL. = 0.250 inches

PLATE ROTATION TOL. = 5.0 Deg.

JSI GRIP= 0.89 (C) (INPUT = 0.90)
JSI METAL= 0.66 (G) (INPUT = 1.00)

CONTINUED ON PAGE 2

KOTT

CORPORATION OF THE CITY OF OSHAWA
TRUE COPY
OF PERMIT PLANS
Oct 31 2023
PER:
BUILDING OFFICIAL

JOB NAME	TRUSS NAME	QUANTITY	PLY	JOB DESC.	DRWG NO.
NE0723-038	G06	1	2	GREENPARK - ZADORRA ESTATES - ROSE 10-2	

MHP 23031

Version 8.630 S Mar 22 2023 MiTek Industries, Inc. Fri Jul 7 15:07:19 2023 Page 2
ID:5vUDB17_Ic6Oj0vAxsr4RFzBM45-6q?KYjWe9AXFV9TwJ_jTXgoG1BqXGV6JvW?Xevz_RAM

PLATES (table is in inches)

JT	TYPE	PLATES	W	LEN	X	Y
D	TMV+p	MT20	2.0	4.0		
E	BMVW1+t	MT20	6.0	10.0	Edge	2.50
F	BMWW+t	MT20	4.0	10.0	5.00	1.50
G	BMWW+t	MT20	6.0	8.0	4.25	2.00
H	BMV1+t	MT20	6.0	8.0	5.50	

Edge - INDICATES REFERENCE CORNER OF PLATE TOUCHES EDGE OF CHORD.

LICENSED PROFESSIONAL ENGINEER
N.A. EL-MASRI
PROVINCE OF ONTARIO
Jul 07, 2023

READ ALL NOTES ON THIS PAGE AND ON THE ENGINEERING NOTES: TRUSSES. THE NOTE PAGE IS AN INTEGRAL PART OF THIS DRAWING AS IT CONTAINS SPECIFICATIONS AND CRITERIA USED IN THE DESIGN OF THIS COMPONENT.

KOTT

CORPORATION OF THE CITY OF OSHAWA
TRUE COPY
OF PERMIT PLANS
Oct 31 2023
PER: C Marr
CHIEF BUILDING OFFICIAL

JOB NAME	TRUSS NAME	QUANTITY	PLY	JOB DESC.	DRWG NO.
NE0723-038	G08	2	1	GREENPARK - ZADORRA ESTATES - ROSE 10-2	

MHP 23031

TRUSS DESC.

Version 8.630 S Mar 22 2023 MiTek Industries, Inc. Fri Jul 7 15:07:19 2023 Page 1
ID:5vUDB17_Ic6Oj0vAxsr4RFzBM45-6q?KYjWe9AXFV9TwJ_jTXgoD2BrEGbsJvW?Xevz_RAM

Scale = 1:43.3

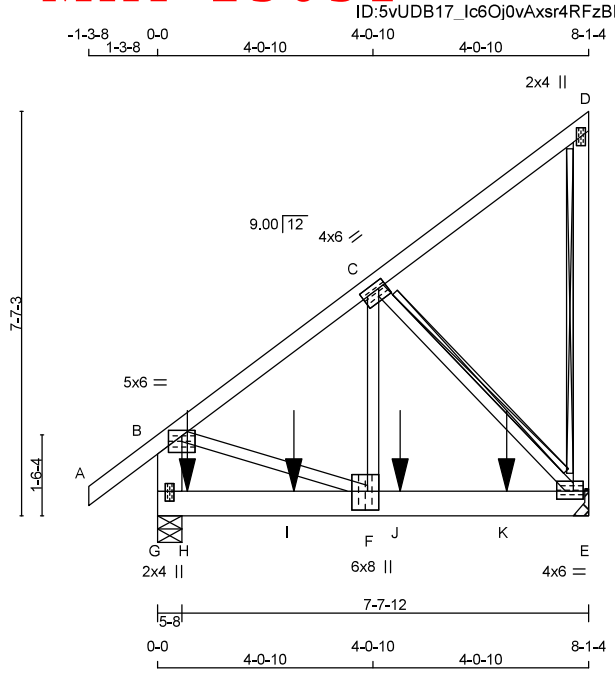

TOTAL WEIGHT = 2 X 48 = 96 lb
[M]

LUMBER
N. L. G. A. RULES

CHORDS	SIZE		LUMBER	DESCR.
A - D	2x4	DRY	No.2	SPF
E - D	2x4	DRY	No.2	SPF
G - B	2x6	DRY	No.2	SPF
G - E	2x6	DRY	No.2	SPF
ALL WEBS EXCEPT	2x3	DRY	No.2	SPF

DRY: SEASONED LUMBER.

PLATES (table is in inches)

JT	TYPE	PLATES	W	LEN	Y	X
B	TMVW-p	MT20	5.0	6.0	1.25	3.00
C	TMWW-t	MT20	4.0	6.0	1.50	1.75
D	TMV+p	MT20	2.0	4.0		
E	BMVW1-t	MT20	4.0	6.0	1.75	2.25
F	BMWW+t	MT20	6.0	8.0	4.25	2.50
G	BMV1+p	MT20	2.0	4.0	2.25	1.00

DIMENSIONS, SUPPORTS AND LOADINGS SPECIFIED BY FABRICATOR TO BE VERIFIED BY BUILDING DESIGNER

BEARINGS

JT	FACTORED GROSS REACTION VERT	HORZ	MAXIMUM FACTORED GROSS REACTION DOWN	HORZ	UPLIFT	INPUT BRG IN-SX	REQRD BRG IN-SX
E	2221	0	2221	0	0	MECHANICAL	
G	2846	0	2846	0	0	5-8	3-12

A SUITABLE HANGER/MECHANICAL CONNECTION IS REQUIRED AT JOINT E. MINIMUM BEARING LENGTH AT JOINT E = 2-7.

UNFACTORED REACTIONS

JT	1ST LCASE COMBINED	SNOW	MAX./MIN. COMPONENT REACTIONS LIVE	PERM.LIVE	WIND	DEAD	SOIL
E	1549	1139 / 0	0 / 0	0 / 0	0 / 0	410 / 0	0 / 0
G	1982	1470 / 0	0 / 0	0 / 0	0 / 0	512 / 0	0 / 0

BEARING MATERIAL TO BE SPF NO.2 OR BETTER AT JOINT(S) G

BRACING
TOP CHORD TO BE SHEATHED OR MAX. PURLIN SPACING = 4.43 FT.
MAX. UNBRACED BOTTOM CHORD LENGTH = 10.00 FT OR RIGID CEILING DIRECTLY APPLIED.

ALL PITCH BREAKS AND PERIMETER CORNER JOINTS MUST BE LATERALLY RESTRAINED.

2x4 DRY SPF No.2 T-BRACE AT D-E, C-E

FASTEN T AND I-BRACES TO NARROW EDGE OF WEB WITH ONE ROW PER PLY OF 3" COMMON WIRE NAILS @ 6" O.C. WITH 3" MINIMUM END DISTANCE. BRACE MUST COVER 90% OF WEB LENGTH.

END VERTICAL(S) MUST BE SHEATHED OR HAVE BRACES AS INDICATED IN THE MAX. UNBRACED LENGTH COLUMN OF THE TABLE BELOW

LOADING
TOTAL LOAD CASES: (4)

CHORDS

MEMB. FR-TO	MAX. FACTORED FORCE (LBS)	FACTORED VERT. LOAD (PLF) FROM	TO	LC1	MAX CSI (LC)	MAX. UNBRAC LENGTH
A- B	0 / 49	-119.4	-119.4	0.18 (1)	10.00	
B- C	-1806 / 0	-119.4	-119.4	0.42 (1)	4.43	
C- D	-33 / 0	-119.4	-119.4	0.34 (1)	6.25	
E- D	-186 / 0	0.0	0.0	0.06 (1)	7.81	
G- B	-1857 / 0	0.0	0.0	0.13 (1)	7.23	
G- H	0 / 0	-18.2	-18.2	0.64 (1)	10.00	
H- I	0 / 0	-18.2	-18.2	0.64 (1)	10.00	
I- F	0 / 0	-18.2	-18.2	0.64 (1)	10.00	
F- J	0 / 1471	-18.2	-18.2	0.83 (1)	10.00	
J- K	0 / 1471	-18.2	-18.2	0.83 (1)	10.00	
K- E	0 / 1471	-18.2	-18.2	0.83 (1)	10.00	

WEBS

MEMB. FR-TO	MAX. FACTORED FORCE (LBS)	MAX CSI (LC)
F- C	0 / 2015	0.50 (1)
C- E	-2106 / 0	0.56 (1)
B- F	0 / 1526	0.38 (1)

SPECIFIED CONCENTRATED LOADS (LBS)

JT	LOC.	LC1	MAX-	MAX+	FACE	DIR.	TYPE	HEEL	CONN.
H	6-12	-662	-662	—	TOP	VERT	TOTAL	—	C1
I	2-6-12	-659	-659	—	TOP	VERT	TOTAL	—	C1
J	4-6-12	-659	-659	—	TOP	VERT	TOTAL	—	C1
K	6-6-12	-659	-659	—	TOP	VERT	TOTAL	—	C1

CONNECTION REQUIREMENTS

1) **C1:** A SUITABLE HANGER/MECHANICAL CONNECTION IS REQUIRED.

DESIGN CRITERIA

*** SPECIAL LOADS ANALYSIS ***
GEOMETRY AND/OR BASIC LOADS CHANGED BY USER.
LOADS WERE DERIVED FROM USER INPUT
NO FURTHER MODIFICATIONS WERE MADE

SPECIFIED LOADS:

TOP CH.	LL	=	34.8	PSF
	DL	=	6.0	PSF
BOT CH.	LL	=	0.0	PSF
	DL	=	7.3	PSF
TOTAL LOAD		=	48.1	PSF

SPACING = 24.0 IN. C/C

*** NON STANDARD GIRDER ***
ADDT'L USER-DEFINED LOADS APPLIED TO ALL LOAD CASES.

THIS TRUSS IS DESIGNED FOR RESIDENTIAL OR SMALL BUILDING REQUIREMENTS OF PART 9, NBCC 2015

THIS DESIGN COMPLIES WITH:
- PART 9 OF BCBC 2018 , NBC-2019AE
- PART 9 OF OBC 2012 (2019 AMENDMENT)
- CSA 086-14
- TPIC 2014

(55 % OF 48.1 P.S.F. G.S.L. PLUS 8.4 P.S.F. RAIN LOAD) EQUALS 34.8 P.S.F. SPECIFIED ROOF LIVE LOAD

ALLOWABLE DEFL.(LL)= L/360 (0.27")
CALCULATED VERT. DEFL.(LL) = L/ 999 (0.04")
ALLOWABLE DEFL.(TL)= L/360 (0.27")
CALCULATED VERT. DEFL.(TL) = L/ 999 (0.07")

CSI: TC=0.42/0.97 (B-C:1) , BC=0.83/0.97 (E-F:1) , WB=0.56/0.97 (C-E:1) , SSI=0.95/1.00 (E-F:1)

DOL LUMBER=1.00 NAIL=1.00 LS BEND=1.00 COMP=1.00 SHEAR=1.00 TENS= 1.00

COMPANION LIVE LOAD FACTOR = 1.00

AUTOSOLVE RIGHT HEEL ONLY

TRUSS PLATE MANUFACTURER IS NOT RESPONSIBLE FOR QUALITY CONTROL IN THE TRUSS MANUFACTURING PLANT .

NAIL VALUES

PLATE	GRIP(DRY) (PSI) MAX	MIN	SHEAR (PLI) MAX	MIN	SECTION (PLI) MAX	MIN
MT20	650	371	1747	788	1987	1873

PLATE PLACEMENT TOL. = 0.250 inches

PLATE ROTATION TOL. = 5.0 Deg.

JSI GRIP= 0.90 (E) (INPUT = 0.90)
JSI METAL= 0.44 (F) (INPUT = 1.00)

LICENSED PROFESSIONAL ENGINEER
N.A. EL-MASRI
PROVINCE OF ONTARIO
Jul 07, 2023

READ ALL NOTES ON THIS PAGE AND ON THE ENGINEERING NOTES: TRUSSES. THE NOTE PAGE IS AN INTEGRAL PART OF THIS DRAWING AS IT CONTAINS SPECIFICATIONS AND CRITERIA USED IN THE DESIGN OF THIS COMPONENT.

KOTT

CORPORATION OF THE CITY OF OSHAWA
TRUE COPY
OF PERMIT PLANS
Oct 31 2023
PER:
CHIEF BUILDING OFFICIAL

JOB NAME	TRUSS NAME	QUANTITY	PLY	JOB DESC.	DRWG NO.
NE0723-038	G09	1	1	GREENPARK - ZADORRA ESTATES - ROSE 10-2	

MHP 23031

TRUSS DESC.

Version 8.630 S Mar 22 2023 MiTek Industries, Inc. Fri Jul 7 15:07:20 2023 Page 1
ID:5vUDB17_Ic6Oj0vAxsr4RFzBM45-a1ZiI3XGwTf66J27tiEi3uLRFaEt?AqT8AI5AMz_RAL

Scale = 1:22.1

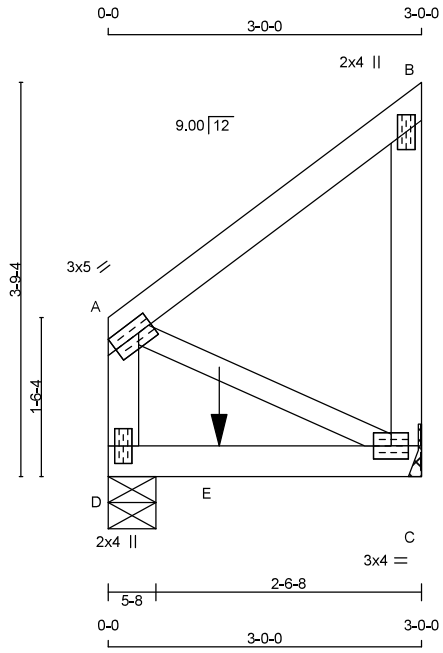

TOTAL WEIGHT = 15 lb
[M]

LUMBER
N. L. G. A. RULES

CHORDS	SIZE		LUMBER	DESCR.
A - B	2x4	DRY	No.2	SPF
C - B	2x4	DRY	No.2	SPF
D - A	2x4	DRY	No.2	SPF
D - C	2x4	DRY	No.2	SPF
ALL WEBS	2x3	DRY	No.2	SPF

DRY: SEASONED LUMBER.

PLATES (table is in inches)

JT	TYPE	PLATES	W	LEN	Y	X
A	TMVW-t	MT20	3.0	5.0	1.50	Edge
B	TMV+p	MT20	2.0	4.0		
C	BMVW1-t	MT20	3.0	4.0		
D	BMV1+p	MT20	2.0	4.0		

Edge - INDICATES REFERENCE CORNER OF PLATE TOUCHES EDGE OF CHORD.

DIMENSIONS, SUPPORTS AND LOADINGS SPECIFIED BY FABRICATOR TO BE VERIFIED BY BUILDING DESIGNER

BEARINGS

JT	FACTORED GROSS REACTION VERT	HORZ	MAXIMUM FACTORED GROSS REACTION DOWN	HORZ	UPLIFT	INPUT BRG IN-SX	REQRD BRG IN-SX
C	407	0	407	0	0	MECHANICAL	
D	573	0	573	0	0	5-8	1-8

A SUITABLE HANGER/MECHANICAL CONNECTION IS REQUIRED AT JOINT C. MINIMUM BEARING LENGTH AT JOINT C = 1-8.

UNFACTORED REACTIONS

JT	1ST LCASE COMBINED	MAX./MIN. COMPONENT REACTIONS SNOW	LIVE	PERM.LIVE	WIND	DEAD	SOIL
C	284	209 / 0	0 / 0	0 / 0	0 / 0	75 / 0	0 / 0
D	399	295 / 0	0 / 0	0 / 0	0 / 0	103 / 0	0 / 0

BEARING MATERIAL TO BE SPF NO.2 OR BETTER AT JOINT(S) D

BRACING
TOP CHORD TO BE SHEATHED OR MAX. PURLIN SPACING = 10.00 FT.
MAX. UNBRACED BOTTOM CHORD LENGTH = 10.00 FT OR RIGID CEILING DIRECTLY APPLIED.

ALL PITCH BREAKS AND PERIMETER CORNER JOINTS MUST BE LATERALLY RESTRAINED.

LOADING
TOTAL LOAD CASES: (4)

CHORDS

MEMB. FR-TO	MAX. FORCE (LBS)	FACTORED VERT. LOAD (PLF) FROM	TO	LC1 CSI	MAX (LC)	MAX. UNBRAC LENGTH
A- B	0 / 0	-119.4	-119.4	0.20	(1)	10.00
C- B	-179 / 0	0.0	0.0	0.04	(1)	7.81
D- A	-179 / 0	0.0	0.0	0.02	(1)	7.81
D- E	0 / 0	-18.2	-18.2	0.61	(1)	10.00
E- C	0 / 0	-18.2	-18.2	0.61	(1)	10.00

WEBS

MEMB. FR-TO	MAX. FORCE (LBS)	MAX CSI (LC)
A- C	0 / 0	0.00 (1)

SPECIFIED CONCENTRATED LOADS (LBS)

JT	LOC.	LC1	MAX-	MAX+	FACE	DIR.	TYPE	HEEL	CONN.
E	1-0-12	-394	-394	—	BACK	VERT	TOTAL	—	C1

CONNECTION REQUIREMENTS

1) **C1:** A SUITABLE HANGER/MECHANICAL CONNECTION IS REQUIRED.

DESIGN CRITERIA

*** SPECIAL LOADS ANALYSIS ***
GEOMETRY AND/OR BASIC LOADS CHANGED BY USER.
LOADS WERE DERIVED FROM USER INPUT
NO FURTHER MODIFICATIONS WERE MADE

SPECIFIED LOADS:

TOP CH.	LL	=	34.8	PSF
	DL	=	6.0	PSF
BOT CH.	LL	=	0.0	PSF
	DL	=	7.3	PSF
TOTAL LOAD		=	48.1	PSF

SPACING = 24.0 IN. C/C

*** NON STANDARD GIRDER ***
ADDT'L USER-DEFINED LOADS APPLIED TO ALL LOAD CASES.

THIS TRUSS IS DESIGNED FOR RESIDENTIAL OR SMALL BUILDING REQUIREMENTS OF PART 9, NBCC 2015

THIS DESIGN COMPLIES WITH:
- PART 9 OF BCBC 2018 , NBC-2019AE
- PART 9 OF OBC 2012 (2019 AMENDMENT)
- CSA 086-14
- TPIC 2014

(55 % OF 48.1 P.S.F. G.S.L. PLUS 8.4 P.S.F. RAIN LOAD) EQUALS 34.8 P.S.F. SPECIFIED ROOF LIVE LOAD

ALLOWABLE DEFL.(LL)= L/360 (0.19")
CALCULATED VERT. DEFL.(LL) = L/ 999 (0.03")
ALLOWABLE DEFL.(TL)= L/360 (0.19")
CALCULATED VERT. DEFL.(TL) = L/ 586 (0.06")

CSI: TC=0.20/0.97 (A-B:1) , BC=0.61/0.97 (C-D:1) , WB=0.00/0.97 (A-C:1) , SSI=0.34/1.00 (C-D:1)

DOL LUMBER=1.00 NAIL=1.00 LS BEND=1.00 COMP=1.00 SHEAR=1.00 TENS= 1.00

COMPANION LIVE LOAD FACTOR = 1.00

TRUSS PLATE MANUFACTURER IS NOT RESPONSIBLE FOR QUALITY CONTROL IN THE TRUSS MANUFACTURING PLANT .

NAIL VALUES

PLATE	GRIP(DRY) (PSI) MAX	MIN	SHEAR (PLI) MAX	MIN	SECTION (PLI) MAX	MIN
MT20	650	371	1747	788	1987	1873

PLATE PLACEMENT TOL. = 0.250 inches

PLATE ROTATION TOL. = 5.0 Deg.

JSI GRIP= 0.17 (C) (INPUT = 0.90)
JSI METAL= 0.09 (B) (INPUT = 1.00)

LICENSED PROFESSIONAL ENGINEER
N.A. EL-MASRI
PROVINCE OF ONTARIO
Jul 07, 2023

READ ALL NOTES ON THIS PAGE AND ON THE ENGINEERING NOTES: TRUSSES. THE NOTE PAGE IS AN INTEGRAL PART OF THIS DRAWING AS IT CONTAINS SPECIFICATIONS AND CRITERIA USED IN THE DESIGN OF THIS COMPONENT.

KOTT

CORPORATION OF THE CITY OF OSHAWA
TRUE COPY
OF PERMIT PLANS
Oct 31 2023
PER: ...3
CHIEF BUILDING OFFICIAL

JOB NAME	TRUSS NAME	QUANTITY	PLY	JOB DESC.	DRWG NO.
NE0723-038	G10	1	1	GREENPARK - ZADORRA ESTATES - ROSE 10-2	

MHP 23031

TRUSS DESC.

Version 8.630 S Mar 22 2023 MiTek Industries, Inc. Fri Jul 7 15:07:21 2023 Page 1
ID:5vUDB17_Ic6Oj0vAxsr4RFzBM45-2D74zPYuhnnykTdJRPIxc5uXC_bEkTRcMqUejoz_RAK

Scale = 1:27.7

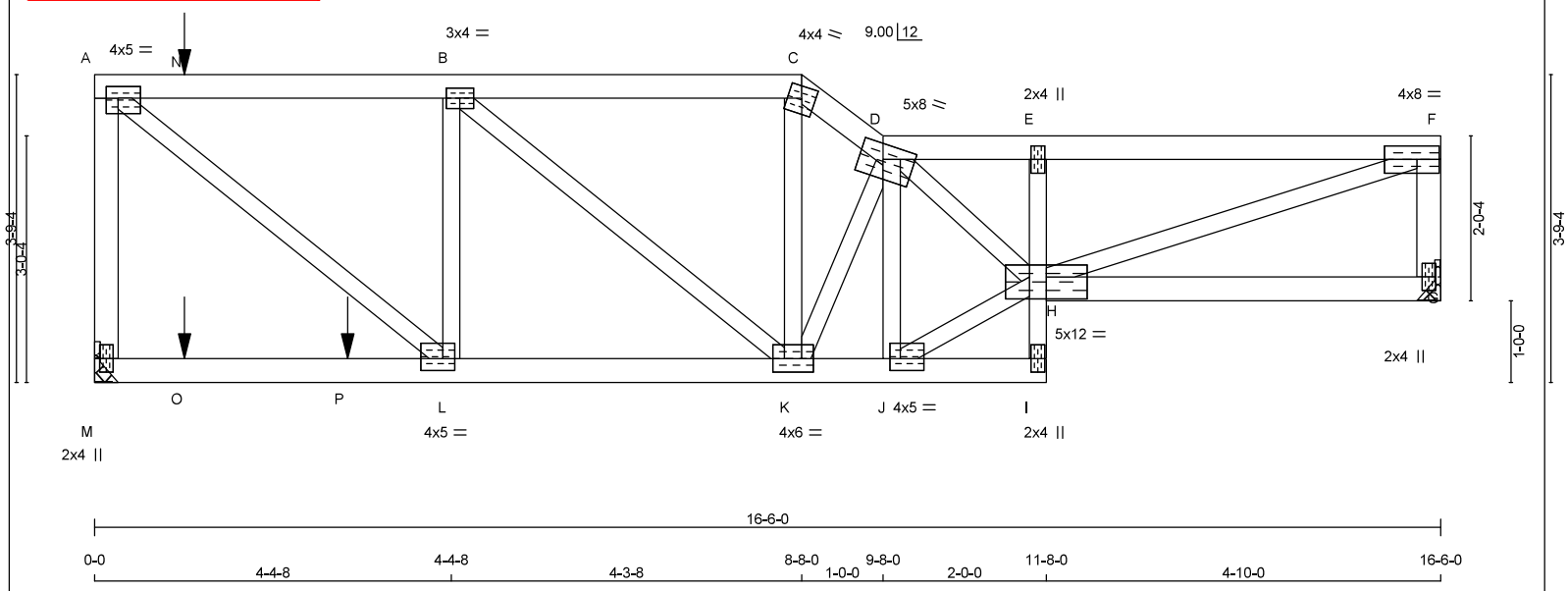

TOTAL WEIGHT = 70 lb
[M]

LUMBER
N. L. G. A. RULES

CHORDS	SIZE		LUMBER	DESCR.
M - A	2x4	DRY	No.2	SPF
A - C	2x4	DRY	No.2	SPF
C - D	2x4	DRY	No.2	SPF
D - F	2x4	DRY	No.2	SPF
G - F	2x4	DRY	No.2	SPF
M - I	2x4	DRY	No.2	SPF
I - E	2x3	DRY	No.2	SPF
H - G	2x4	DRY	No.2	SPF
ALL WEBS	2x3	DRY	No.2	SPF

DRY: SEASONED LUMBER.

PLATES (table is in inches)

JT	TYPE	PLATES	W	LEN	Y	X
A	TMVW-t	MT20	4.0	5.0	1.75	1.75
B	TMWW-t	MT20	3.0	4.0		
C	TTW-m	MT20	4.0	4.0	1.75	2.00
D	TTWWW-m	MT20	5.0	8.0	2.25	3.50
E	TMV+p	MT20	2.0	4.0		
F	TMVW-t	MT20	4.0	8.0	2.00	3.25
G	BMV1+p	MT20	2.0	4.0		
H	BVMWWW-l	MT20	5.0	12.0	3.25	6.00
I	BMV+p	MT20	2.0	4.0		
J	BMWW-t	MT20	4.0	5.0	1.75	1.50
K	BMWWW-t	MT20	4.0	6.0		
L	BMWW-t	MT20	4.0	5.0	1.75	1.75
M	BMV1+p	MT20	2.0	4.0		

DIMENSIONS, SUPPORTS AND LOADINGS SPECIFIED BY FABRICATOR TO BE VERIFIED BY BUILDING DESIGNER

BEARINGS

JT	FACTORED GROSS REACTION VERT	HORZ	MAXIMUM GROSS REACTION DOWN	HORZ	FACTORED UPLIFT	INPUT BRG IN-SX	REQRD BRG IN-SX
M	1472	0	1472	0	0	MECHANICAL	
G	1210	0	1210	0	0	MECHANICAL	

A SUITABLE HANGER/MECHANICAL CONNECTION IS REQUIRED AT JOINT M, G. MINIMUM BEARING LENGTH AT JOINT M = 1-10, JOINT G = 1-8.

UNFACTORED REACTIONS

JT	1ST LCASE COMBINED	MAX./MIN. COMPONENT REACTIONS SNOW	LIVE	PERM.LIVE	WIND	DEAD	SOIL
M	1027	753 / 0	0 / 0	0 / 0	0 / 0	274 / 0	0 / 0
G	846	614 / 0	0 / 0	0 / 0	0 / 0	231 / 0	0 / 0

BRACING
TOP CHORD TO BE SHEATHED OR MAX. PURLIN SPACING = 3.58 FT.
MAX. UNBRACED BOTTOM CHORD LENGTH = 7.81 FT OR RIGID CEILING DIRECTLY APPLIED.

ALL PITCH BREAKS AND PERIMETER CORNER JOINTS MUST BE LATERALLY RESTRAINED.

LOADING
TOTAL LOAD CASES: (4)

CHORDS

MEMB. FR-TO	MAX. FACTORED FORCE (LBS)	FACTORED VERT. LOAD (PLF) FROM	TO	LC1	MAX CSI (LC)	MAX. UNBRAC LENGTH
M- A	-1357 / 0	0.0	0.0	0.31 (1)	6.85	
A- N	-1439 / 0	-119.4	-119.4	0.44 (1)	4.79	
N- B	-1439 / 0	-119.4	-119.4	0.44 (1)	4.79	
B- C	-1499 / 0	-119.4	-119.4	0.44 (1)	4.70	
C- D	-1843 / 0	-119.4	-119.4	0.06 (1)	4.84	
D- E	-2575 / 0	-119.4	-119.4	0.38 (1)	3.80	
E- F	-2599 / 0	-119.4	-119.4	0.57 (1)	3.58	
G- F	-1165 / 0	0.0	0.0	0.14 (1)	7.26	
M- O	0 / 0	-18.2	-18.2	0.38 (1)	10.00	
O- P	0 / 0	-18.2	-18.2	0.38 (1)	10.00	
P- L	0 / 0	-18.2	-18.2	0.38 (1)	10.00	
L- K	0 / 1439	-18.2	-18.2	0.54 (1)	10.00	
K- J	0 / 1866	-18.2	-18.2	0.42 (1)	10.00	
J- I	0 / 40	-18.2	-18.2	0.02 (1)	10.00	
I- H	0 / 16	0.0	0.0	0.12 (1)	10.00	
H- E	-526 / 0	0.0	0.0	0.13 (1)	7.81	
H- G	0 / 0	-18.2	-18.2	0.14 (4)	10.00	

WEBS

MEMB. FR-TO	MAX. FACTORED FORCE (LBS)	MAX CSI (LC)
A- L	0 / 1838	0.45 (1)
L- B	-685 / 0	0.16 (1)
B- K	0 / 79	0.02 (1)
K- C	0 / 844	0.21 (1)
K- D	-1040 / 0	0.21 (1)
J- D	-910 / 0	0.17 (1)
J- H	0 / 2051	0.51 (1)
D- H	0 / 1003	0.25 (1)
H- F	0 / 2754	0.68 (1)

SPECIFIED CONCENTRATED LOADS (LBS)

JT	LOC.	LC1	MAX-	MAX+	FACE	DIR.	TYPE	HEEL	CONN.
N	1-1-4	-10	-10	—	BACK	VERT	TOTAL	—	C1
O	1-1-4	-5	-5	—	BACK	VERT	TOTAL	—	C1
P	3-1-4	-269	-269	—	BACK	VERT	TOTAL	—	C1

CONNECTION REQUIREMENTS

1) **C1:** A SUITABLE HANGER/MECHANICAL CONNECTION IS REQUIRED.

DESIGN CRITERIA

*** SPECIAL LOADS ANALYSIS ***
GEOMETRY AND/OR BASIC LOADS CHANGED BY USER.
LOADS WERE DERIVED FROM USER INPUT
NO FURTHER MODIFICATIONS WERE MADE

SPECIFIED LOADS:

TOP CH.	LL	=	34.8	PSF
	DL	=	6.0	PSF
BOT CH.	LL	=	0.0	PSF
	DL	=	7.3	PSF
TOTAL LOAD		=	48.1	PSF

SPACING = 24.0 IN. C/C

LOADING IN ALL FLAT SECTIONS BASED ON A SLOPE OF 2.00/12 MINIMUM

*** NON STANDARD GIRDER ***
ADDT'L USER-DEFINED LOADS APPLIED TO ALL LOAD CASES.

THIS TRUSS IS DESIGNED FOR RESIDENTIAL OR SMALL BUILDING REQUIREMENTS OF PART 9, NBCC 2015

THIS DESIGN COMPLIES WITH:
- PART 9 OF BCBC 2018 , NBC-2019AE
- PART 9 OF OBC 2012 (2019 AMENDMENT)
- CSA 086-14
- TPIC 2014

(55 % OF 48.1 P.S.F. G.S.L. PLUS 8.4 P.S.F. RAIN LOAD)
EQUALS 34.8 P.S.F. SPECIFIED ROOF LIVE LOAD

ALLOWABLE DEFL.(LL)= L/360 (0.55")
CALCULATED VERT. DEFL.(LL) = L/ 999 (0.10")
ALLOWABLE DEFL.(TL)= L/360 (0.55")
CALCULATED VERT. DEFL.(TL) = L/ 999 (0.18")

CSI: TC=0.57/0.97 (E-F:1) , BC=0.54/0.97 (K-L:1) , WB=0.68/0.97 (F-H:1) , SSI=0.31/1.00 (L-M:1)

DOL LUMBER=1.00 NAIL=1.00 LS BEND=1.00 COMP=1.00 SHEAR=1.00 TENS= 1.00

COMPANION LIVE LOAD FACTOR = 1.00

TRUSS PLATE MANUFACTURER IS NOT RESPONSIBLE FOR QUALITY CONTROL IN THE TRUSS MANUFACTURING PLANT .

NAIL VALUES

PLATE	GRIP(DRY) (PSI) MAX	MIN	SHEAR (PLI) MAX	MIN	SECTION (PLI) MAX	MIN
MT20	650	371	1747	788	1987	1873

PLATE PLACEMENT TOL. = 0.250 inches

PLATE ROTATION TOL. = 5.0 Deg.

JSI GRIP= 0.89 (F) (INPUT = 0.90)
JSI METAL= 0.50 (H) (INPUT = 1.00)

LICENSED PROFESSIONAL ENGINEER
N.A. EL-MASRI
PROVINCE OF ONTARIO
Jul 07, 2023

READ ALL NOTES ON THIS PAGE AND ON THE ENGINEERING NOTES: TRUSSES. THE NOTE PAGE IS AN INTEGRAL PART OF THIS DRAWING AS IT CONTAINS SPECIFICATIONS AND CRITERIA USED IN THE DESIGN OF THIS COMPONENT.

KOTT

CORPORATION OF THE CITY OF OSHAWA
TRUE COPY
OF PERMIT PLANS
Oct 31 2023
PER:
CHIEF BUILDING OFFICIAL

JOB NAME	TRUSS NAME	QUANTITY	PLY	JOB DESC.	DRWG NO.
NE0723-038	G11	1	1	GREENPARK - ZADORRA ESTATES - ROSE 10-2	

MHP 23031

TRUSS DESC.

Version 8.630 S Mar 22 2023 MiTek Industries, Inc. Fri Jul 7 15:07:22 2023 Page 1
ID:5vUDB17_Ic6Oj0vAxsr4RFzBM45-WPhTAlZXS5vpMdCV?7GA9JQfROvdTuRmbUECFEz_RAJ

-1-3-8 4-9-12 9-5-0 13-7-0 18-2-4 23-0-0 24-3-8
4-7-4 4-2-0 4-7-4 4-9-12 1-3-8

Scale = 1:40.1

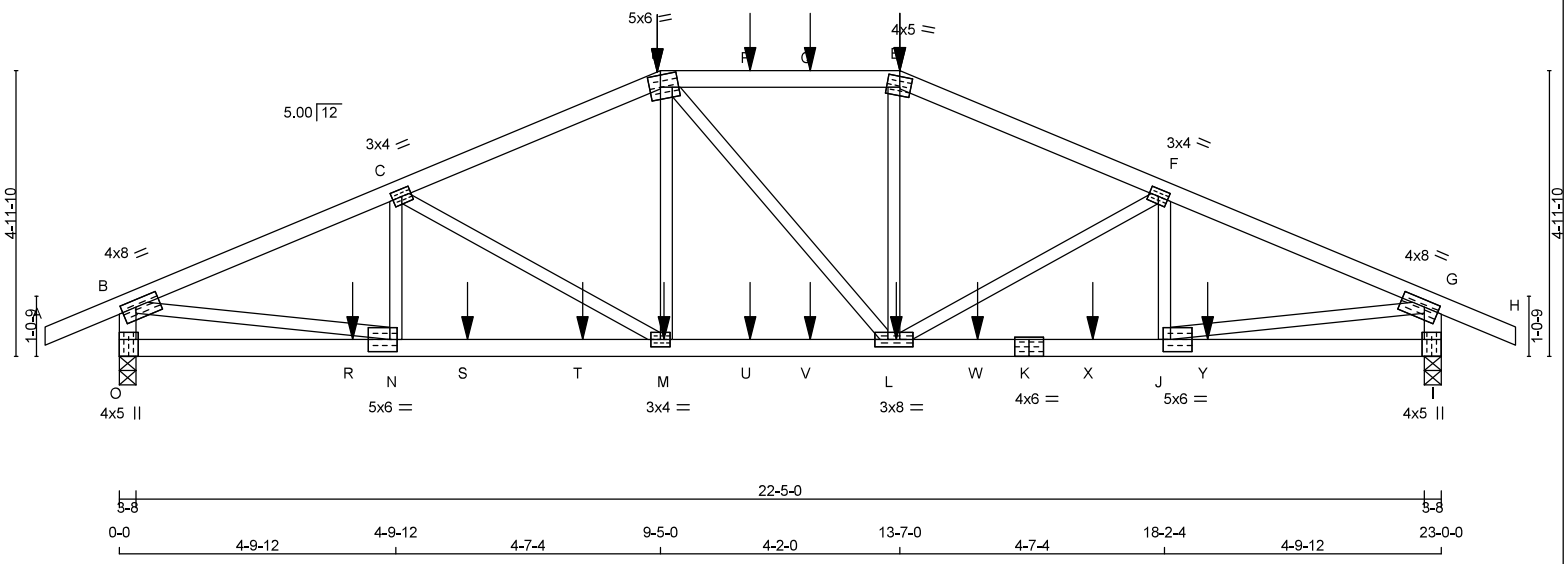

TOTAL WEIGHT = 91 lb
[M]

LUMBER
N. L. G. A. RULES

CHORDS	SIZE		LUMBER	DESCR.
A - D	2x4	DRY	No.2	SPF
D - E	2x4	DRY	No.2	SPF
E - H	2x4	DRY	No.2	SPF
O - B	2x4	DRY	No.2	SPF
I - G	2x4	DRY	No.2	SPF
O - K	2x4	DRY	No.2	SPF
K - I	2x4	DRY	No.2	SPF
ALL WEBS EXCEPT	2x3	DRY	No.2	SPF

DRY: SEASONED LUMBER.

PLATES (table is in inches)

JT	TYPE	PLATES	W	LEN	Y	X
B	TMVW-t	MT20	4.0	8.0	1.50	3.00
C	TMWW-t	MT20	3.0	4.0		
D	TTWW-m	MT20	5.0	6.0	2.50	2.25
E	TTW-m	MT20	4.0	5.0	2.25	2.25
F	TMWW-t	MT20	3.0	4.0		
G	TMVW-t	MT20	4.0	8.0	1.50	3.00
I	BMV1+t	MT20	4.0	5.0	Edge	0.50
J	BMWW-t	MT20	5.0	6.0	2.50	1.50
K	BS-t	MT20	4.0	6.0		
L	BMWWW-t	MT20	3.0	8.0		
M	BMWW-t	MT20	3.0	4.0		
N	BMWW-t	MT20	5.0	6.0	2.50	1.50
O	BMV1+t	MT20	4.0	5.0	3.50	

Edge - INDICATES REFERENCE CORNER OF PLATE TOUCHES EDGE OF CHORD.

DIMENSIONS, SUPPORTS AND LOADINGS SPECIFIED BY FABRICATOR TO BE VERIFIED BY BUILDING DESIGNER

BEARINGS

JT	FACTORED GROSS REACTION VERT	HORZ	MAXIMUM FACTORED GROSS REACTION DOWN	HORZ	UPLIFT	INPUT BRG IN-SX	REQRD BRG IN-SX
O	2317	0	2317	0	0	3-8	3-8
I	2317	0	2317	0	0	3-8	3-8

UNFACTORED REACTIONS

JT	1ST LCASE COMBINED	MAX./MIN. COMPONENT REACTIONS SNOW	LIVE	PERM.LIVE	WIND	DEAD	SOIL
O	1618	1179 / 0	0 / 0	0 / 0	0 / 0	439 / 0	0 / 0
I	1618	1179 / 0	0 / 0	0 / 0	0 / 0	439 / 0	0 / 0

BEARING MATERIAL TO BE SPF NO.2 OR BETTER AT JOINT(S) O, I
BEARING SIZE FACTOR = 1.15 AT JNT(S) O, I (BASED ON SUPPORT DEPTH = 1-8)

BRACING
TOP CHORD TO BE SHEATHED OR MAX. PURLIN SPACING = 2.92 FT.
MAX. UNBRACED BOTTOM CHORD LENGTH = 10.00 FT OR RIGID CEILING DIRECTLY APPLIED.

ALL PITCH BREAKS AND PERIMETER CORNER JOINTS MUST BE LATERALLY RESTRAINED.

LOADING
TOTAL LOAD CASES: (4)

CHORDS

MEMB. FR-TO	MAX. FACTORED FORCE (LBS)	FACTORED VERT. LOAD (PLF) FROM	TO	LC1	MAX CSI (LC)	MAX. UNBRAC LENGTH
A- B	0 / 31	-119.4	-119.4	0.17 (1)	10.00	
B- C	-3550 / 0	-119.4	-119.4	0.73 (1)	2.92	
C- D	-3292 / 0	-119.4	-119.4	0.68 (1)	3.07	
D- P	-3022 / 0	-119.4	-119.4	0.72 (1)	3.00	
P- Q	-3022 / 0	-119.4	-119.4	0.72 (1)	3.00	
Q- E	-3022 / 0	-119.4	-119.4	0.72 (1)	3.00	
E- F	-3293 / 0	-119.4	-119.4	0.68 (1)	3.07	
F- G	-3550 / 0	-119.4	-119.4	0.73 (1)	2.92	
G- H	0 / 31	-119.4	-119.4	0.17 (1)	10.00	
O- B	-2273 / 0	0.0	0.0	0.25 (1)	5.52	
I- G	-2272 / 0	0.0	0.0	0.25 (1)	5.52	
O- R	0 / 0	-18.2	-18.2	0.11 (4)	10.00	
R- N	0 / 0	-18.2	-18.2	0.11 (4)	10.00	
N- S	0 / 3298	-18.2	-18.2	0.66 (1)	10.00	
S- T	0 / 3298	-18.2	-18.2	0.66 (1)	10.00	
T- M	0 / 3298	-18.2	-18.2	0.66 (1)	10.00	
M- U	0 / 3022	-18.2	-18.2	0.59 (1)	10.00	
U- V	0 / 3022	-18.2	-18.2	0.59 (1)	10.00	
V- L	0 / 3022	-18.2	-18.2	0.59 (1)	10.00	
L- W	0 / 3297	-18.2	-18.2	0.65 (1)	10.00	
W- K	0 / 3297	-18.2	-18.2	0.65 (1)	10.00	
K- X	0 / 3297	-18.2	-18.2	0.65 (1)	10.00	
X- J	0 / 3297	-18.2	-18.2	0.65 (1)	10.00	
J- Y	0 / 0	-18.2	-18.2	0.11 (4)	10.00	
Y- I	0 / 0	-18.2	-18.2	0.11 (4)	10.00	

WEBS

MEMB. FR-TO	MAX. FACTORED FORCE (LBS)	MAX CSI (LC)
N- C	-404 / 0	0.08 (1)
C- M	-327 / 0	0.17 (1)
M- D	0 / 290	0.07 (1)
D- L	0 / 1	0.00 (1)
L- E	0 / 291	0.07 (1)
L- F	-326 / 0	0.17 (1)
J- F	-405 / 0	0.08 (1)
B- N	0 / 3337	0.83 (1)
J- G	0 / 3337	0.83 (1)

SPECIFIED CONCENTRATED LOADS (LBS)

JT	LOC.	LC1	MAX-	MAX+	FACE	DIR.	TYPE	HEEL	CONN.
D	9-5-0	-308	-308	—	FRONT	VERT	TOTAL	—	C1
E	13-7-0	-308	-308	—	FRONT	VERT	TOTAL	—	C1
L	13-6-4	-11	-11	—	FRONT	VERT	TOTAL	—	C1
M	9-5-12	-11	-11	—	FRONT	VERT	TOTAL	—	C1
P	10-11-12	-41	-41	—	FRONT	VERT	TOTAL	—	C1
Q	12-0-4	-41	-41	—	FRONT	VERT	TOTAL	—	C1
R	4-0-12	-9	-9	—	FRONT	VERT	TOTAL	—	C1
S	6-0-12	-11	-11	—	FRONT	VERT	TOTAL	—	C1
T	8-0-12	-11	-11	—	FRONT	VERT	TOTAL	—	C1
U	10-11-12	-11	-11	—	FRONT	VERT	TOTAL	—	C1
V	12-0-4	-11	-11	—	FRONT	VERT	TOTAL	—	C1
W	14-11-4	-11	-11	—	FRONT	VERT	TOTAL	—	C1
X	16-11-4	-11	-11	—	FRONT	VERT	TOTAL	—	C1
Y	18-11-4	-9	-9	—	FRONT	VERT	TOTAL	—	C1

CONNECTION REQUIREMENTS

1) **C1:** A SUITABLE HANGER/MECHANICAL CONNECTION IS REQUIRED.

DESIGN CRITERIA

*** SPECIAL LOADS ANALYSIS ***
GEOMETRY AND/OR BASIC LOADS CHANGED BY USER.
LOADS WERE DERIVED FROM USER INPUT
NO FURTHER MODIFICATIONS WERE MADE

SPECIFIED LOADS:

TOP CH.	LL	=	34.8	PSF
	DL	=	6.0	PSF
BOT CH.	LL	=	0.0	PSF
	DL	=	7.3	PSF
TOTAL LOAD		=	48.1	PSF

SPACING = 24.0 IN. C/C

LOADING IN FLAT SECTION BASED ON A SLOPE OF 2.00/12 MINIMUM

*** NON STANDARD GIRDER ***
ADDT'L USER-DEFINED LOADS APPLIED TO ALL LOAD CASES.

THIS TRUSS IS DESIGNED FOR RESIDENTIAL OR SMALL BUILDING REQUIREMENTS OF PART 9, NBCC 2015

THIS DESIGN COMPLIES WITH:
- PART 9 OF BCBC 2018 , NBC-2019AE
- PART 9 OF OBC 2012 (2019 AMENDMENT)
- CSA 086-14
- TPIC 2014

(55 % OF 48.1 P.S.F. G.S.L. PLUS 8.4 P.S.F. RAIN LOAD) EQUALS 34.8 P.S.F. SPECIFIED ROOF LIVE LOAD

ALLOWABLE DEFL.(LL)= L/360 (0.77")
CALCULATED VERT. DEFL.(LL) = L/ 999 (0.14")
ALLOWABLE DEFL.(TL)= L/360 (0.77")
CALCULATED VERT. DEFL.(TL) = L/ 999 (0.24")

CSI: TC=0.73/0.97 (B-C:1) , BC=0.66/0.97 (M-N:1) , WB=0.83/0.97 (B-N:1) , SSI=0.27/1.00 (F-G:1)

DOL LUMBER=1.00 NAIL=1.00 LS BEND=1.00 COMP=1.00 SHEAR=1.00 TENS= 1.00

COMPANION LIVE LOAD FACTOR = 1.00

TRUSS PLATE MANUFACTURER IS NOT RESPONSIBLE FOR QUALITY CONTROL IN THE TRUSS MANUFACTURING PLANT .

NAIL VALUES

PLATE	GRIP(DRY) (PSI) MAX	MIN	SHEAR (PLI) MAX	MIN	SECTION (PLI) MAX	MIN
MT20	650	371	1747	788	1987	1873

PLATE PLACEMENT TOL. = 0.250 inches

PLATE ROTATION TOL. = 5.0 Deg.

JSI GRIP= 0.89 (B) (INPUT = 0.90)
JSI METAL= 0.77 (K) (INPUT = 1.00)

LICENSED PROFESSIONAL ENGINEER
N.A. EL-MASRI
PROVINCE OF ONTARIO
Jul 07, 2023

READ ALL NOTES ON THIS PAGE AND ON THE ENGINEERING NOTES: TRUSSES. THE NOTE PAGE IS AN INTEGRAL PART OF THIS DRAWING AS IT CONTAINS SPECIFICATIONS AND CRITERIA USED IN THE DESIGN OF THIS COMPONENT.

KOTT

CORPORATION OF THE CITY OF OSHAWA
TRUE COPY
OF PERMIT PLANS
Oct 31 2023
PER: _____
CHIEF BUILDING OFFICIAL

JOB NAME	TRUSS NAME	QUANTITY	PLY	JOB DESC.	DRWG NO.
NE0723-038	G12	1	1	GREENPARK - ZADORRA ESTATES - ROSE 10-2	

MHP 23031

Version 8.630 S Mar 22 2023 MiTek Industries, Inc. Fri Jul 7 15:07:23 2023 Page 1
ID:5vUDB17_Ic6Oj0vAxsr4RFzBM45-_cFrO5Z9DO2gznniYqnPhWzxHoAyCOpvq8zInhz_RAI

Scale = 1:18.2

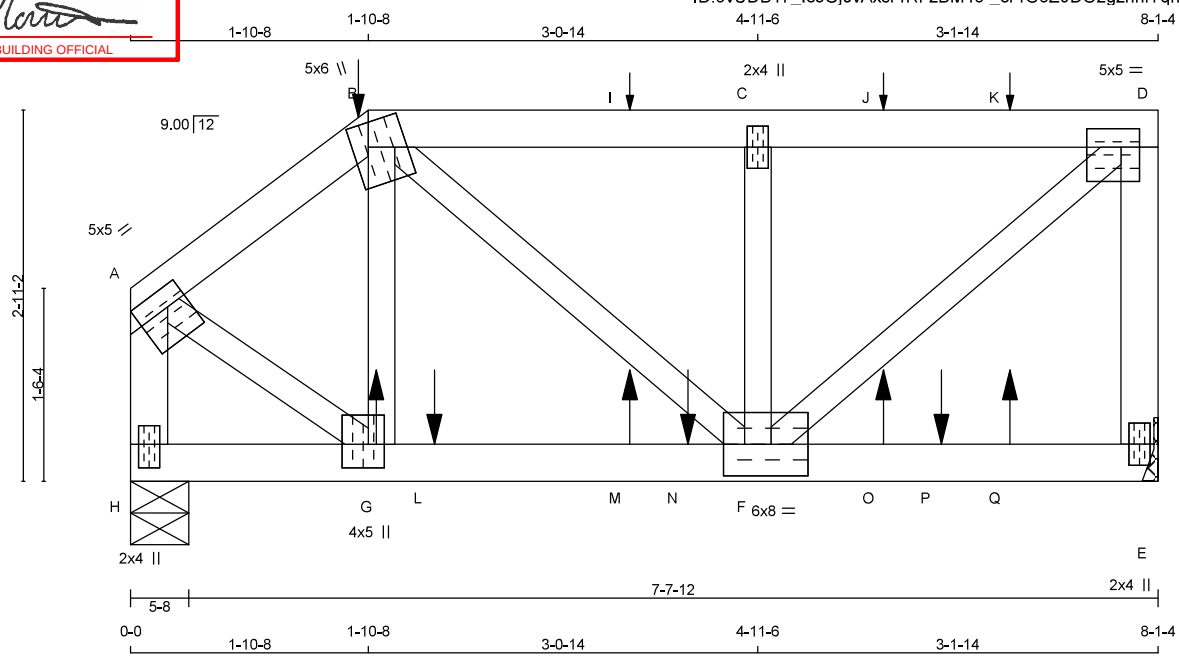

TOTAL WEIGHT = 34 lb
[M]

LUMBER
N. L. G. A. RULES

CHORDS	SIZE		LUMBER	DESCR.
A - B	2x4	DRY	No.2	SPF
B - D	2x4	DRY	No.2	SPF
E - D	2x4	DRY	No.2	SPF
H - A	2x4	DRY	No.2	SPF
H - E	2x4	DRY	No.2	SPF
ALL WEBS EXCEPT	2x3	DRY	No.2	SPF

DRY: SEASONED LUMBER.

PLATES (table is in inches)

JT	TYPE	PLATES	W	LEN	Y	X
A	TMVW-t	MT20	5.0	5.0	1.75	Edge
B	TTWW+m	MT20	5.0	6.0	2.25	1.50
C	TMW+w	MT20	2.0	4.0		
D	TMVW-t	MT20	5.0	5.0	1.75	1.75
E	BMV1+p	MT20	2.0	4.0		
F	BMWWW-t	MT20	6.0	8.0	3.00	2.00
G	BMWW+t	MT20	4.0	5.0	2.25	1.50
H	BMV1+p	MT20	2.0	4.0	2.25	1.00

Edge - INDICATES REFERENCE CORNER OF PLATE TOUCHES EDGE OF CHORD.

DIMENSIONS, SUPPORTS AND LOADINGS SPECIFIED BY FABRICATOR TO BE VERIFIED BY BUILDING DESIGNER

BEARINGS

JT	FACTORED GROSS REACTION VERT	HORZ	MAXIMUM FACTORED GROSS REACTION DOWN	HORZ	UPLIFT	INPUT BRG IN-SX	REQRD BRG IN-SX
E	2076	0	2076	0	0	MECHANICAL	
H	1841	0	1841	0	0	5-8	2-8

A SUITABLE HANGER/MECHANICAL CONNECTION IS REQUIRED AT JOINT E. MINIMUM BEARING LENGTH AT JOINT E = 3-4.

UNFACTORED REACTIONS

JT	1ST LCASE COMBINED	MAX./MIN. COMPONENT REACTIONS SNOW	LIVE	PERM.LIVE	WIND	DEAD	SOIL
E	1449	1061 / 0	0 / 0	0 / 0	0 / 0	387 / 0	0 / 0
H	1285	941 / 0	0 / 0	0 / 0	0 / 0	344 / 0	0 / 0

BEARING MATERIAL TO BE SPF NO.2 OR BETTER AT JOINT(S) H

BRACING
TOP CHORD TO BE SHEATHED OR MAX. PURLIN SPACING = 4.57 FT.
MAX. UNBRACED BOTTOM CHORD LENGTH = 10.00 FT OR RIGID CEILING DIRECTLY APPLIED.

ALL PITCH BREAKS AND PERIMETER CORNER JOINTS MUST BE LATERALLY RESTRAINED.

LOADING
TOTAL LOAD CASES: (4)

CHORDS

MEMB. FR-TO	MAX. FORCE (LBS)	FACTORED VERT. LOAD LC1 (PLF) FROM	TO	MAX CSI (LC)	MAX. UNBRAC LENGTH
A- B	-1664 / 0	-119.4	-119.4	0.11 (1)	4.98
B- I	-1938 / 0	-119.4	-119.4	0.20 (1)	4.58
I- C	-1938 / 0	-119.4	-119.4	0.20 (1)	4.58
C- J	-1939 / 0	-119.4	-119.4	0.21 (1)	4.57
J- K	-1939 / 0	-119.4	-119.4	0.21 (1)	4.57
K- D	-1939 / 0	-119.4	-119.4	0.21 (1)	4.57
E- D	-1777 / 0	0.0	0.0	0.28 (1)	6.13
H- A	-1917 / 0	0.0	0.0	0.22 (1)	5.95
H- G	0 / 0	-18.2	-18.2	0.28 (1)	10.00
G- L	0 / 1333	-18.2	-18.2	0.97 (1)	10.00
L- M	0 / 1333	-18.2	-18.2	0.97 (1)	10.00
M- N	0 / 1333	-18.2	-18.2	0.97 (1)	10.00
N- F	0 / 1333	-18.2	-18.2	0.97 (1)	10.00
F- O	0 / 0	-18.2	-18.2	0.73 (1)	10.00
O- P	0 / 0	-18.2	-18.2	0.73 (1)	10.00
P- Q	0 / 0	-18.2	-18.2	0.73 (1)	10.00
Q- E	0 / 0	-18.2	-18.2	0.73 (1)	10.00

WEBS

MEMB. FR-TO	MAX. FORCE (LBS)	MAX CSI (LC)
G- B	0 / 214	0.05 (1)
B- F	0 / 795	0.20 (1)
F- C	-421 / 0	0.08 (1)
F- D	0 / 2525	0.63 (1)
A- G	0 / 1547	0.38 (1)

SPECIFIED CONCENTRATED LOADS (LBS)

JT	LOC.	LC1	MAX-	MAX+	FACE	DIR.	TYPE	HEEL	CONN.
B	1-10-8	-1	-1	—	BACK	VERT	TOTAL	—	C1
G	1-11-4	6	1	6	BACK	VERT	TOTAL	—	C1
I	3-11-4	1	1	—	BACK	VERT	TOTAL	—	C1
J	5-11-4	1	1	—	BACK	VERT	TOTAL	—	C1
K	6-11-4	1	1	—	BACK	VERT	TOTAL	—	C1
L	2-4-12	-659	-659	—	FRONT	VERT	TOTAL	—	C1
M	3-11-4	6	1	6	BACK	VERT	TOTAL	—	C1
N	4-4-12	-659	-659	—	FRONT	VERT	TOTAL	—	C1
O	5-11-4	6	1	6	BACK	VERT	TOTAL	—	C1
P	6-4-12	-659	-659	—	FRONT	VERT	TOTAL	—	C1
Q	6-11-4	6	1	6	BACK	VERT	TOTAL	—	C1

CONNECTION REQUIREMENTS

1) **C1:** A SUITABLE HANGER/MECHANICAL CONNECTION IS REQUIRED.

DESIGN CRITERIA

*** SPECIAL LOADS ANALYSIS ***
GEOMETRY AND/OR BASIC LOADS CHANGED BY USER.
LOADS WERE DERIVED FROM USER INPUT
NO FURTHER MODIFICATIONS WERE MADE

SPECIFIED LOADS:

TOP CH.	LL	=	34.8	PSF
	DL	=	6.0	PSF
BOT CH.	LL	=	0.0	PSF
	DL	=	7.3	PSF
TOTAL LOAD		=	48.1	PSF

SPACING = 24.0 IN. C/C

LOADING IN FLAT SECTION BASED ON A SLOPE OF 2.00/12 MINIMUM

*** NON STANDARD GIRDER ***
ADDT'L USER-DEFINED LOADS APPLIED TO ALL LOAD CASES.

THIS TRUSS IS DESIGNED FOR RESIDENTIAL OR SMALL BUILDING REQUIREMENTS OF PART 9, NBCC 2015

THIS DESIGN COMPLIES WITH:
- PART 9 OF BCBC 2018 , NBC-2019AE
- PART 9 OF OBC 2012 (2019 AMENDMENT)
- CSA 086-14
- TPIC 2014

(55 % OF 48.1 P.S.F. G.S.L. PLUS 8.4 P.S.F. RAIN LOAD) EQUALS 34.8 P.S.F. SPECIFIED ROOF LIVE LOAD

ALLOWABLE DEFL.(LL)= L/360 (0.27")
CALCULATED VERT. DEFL.(LL) = L/ 999 (0.05")
ALLOWABLE DEFL.(TL)= L/360 (0.27")
CALCULATED VERT. DEFL.(TL) = L/ 999 (0.09")

CSI: TC=0.28/0.97 (D-E:1) , BC=0.97/0.97 (F-G:1) , WB=0.63/0.97 (D-F:1) , SSI=0.88/1.00 (F-G:1)

DOL LUMBER=1.00 NAIL=1.00 LS BEND=1.00 COMP=1.00 SHEAR=1.00 TENS= 1.00

COMPANION LIVE LOAD FACTOR = 1.00

TRUSS PLATE MANUFACTURER IS NOT RESPONSIBLE FOR QUALITY CONTROL IN THE TRUSS MANUFACTURING PLANT .

NAIL VALUES

PLATE	GRIP(DRY) (PSI) MAX	MIN	SHEAR (PLI) MAX	MIN	SECTION (PLI) MAX	MIN
MT20	650	371	1747	788	1987	1873

PLATE PLACEMENT TOL. = 0.250 inches

PLATE ROTATION TOL. = 5.0 Deg.

JSI GRIP= 0.89 (G) (INPUT = 0.90)
JSI METAL= 0.59 (G) (INPUT = 1.00)

LICENSED PROFESSIONAL ENGINEER
N.A. EL-MASRI
PROVINCE OF ONTARIO
Jul 07, 2023

READ ALL NOTES ON THIS PAGE AND ON THE ENGINEERING NOTES: TRUSSES. THE NOTE PAGE IS AN INTEGRAL PART OF THIS DRAWING AS IT CONTAINS SPECIFICATIONS AND CRITERIA USED IN THE DESIGN OF THIS COMPONENT.

KOTT

CORPORATION OF THE CITY OF OSHAWA
TRUE COPY
OF PERMIT PLANS
Oct 31 2023
PER: _____
CHIEF BUILDING OFFICIAL

JOB NAME	TRUSS NAME	QUANTITY	PLY	JOB DESC.	DRWG NO.
NE0723-038	GE01	2	1	GREENPARK - ZADORRA ESTATES - ROSE 10-2	

MHP 23031

TRUSS DESC.

Version 8.630 S Mar 22 2023 MiTek Industries, Inc. Fri Jul 7 15:07:24 2023 Page 1
ID:5vUDB17_Ic6Oj0vAxsr4RFzBM45-SopDbRan_iAXbxLu6XJeEkW8sCk6xxM32ojIJ7z_RAH

Scale = 1:37.1

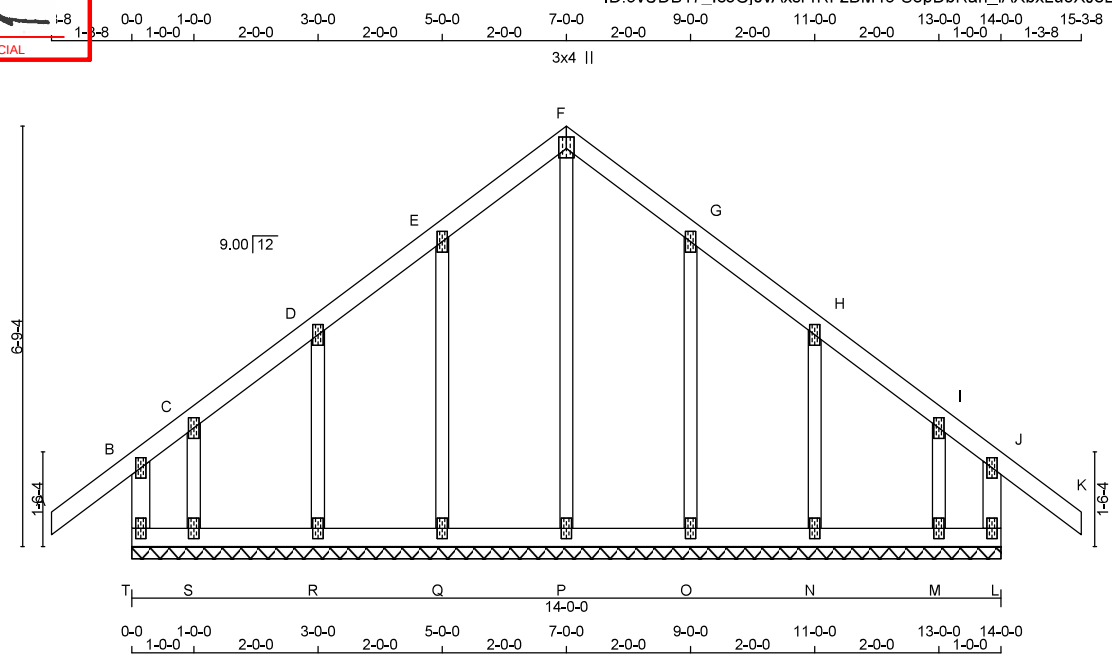

TOTAL WEIGHT = 2 X 63 = 126 lb [M]

LUMBER
N. L. G. A. RULES

CHORDS	SIZE		LUMBER	DESCR.
T - B	2x4	DRY	No.2	SPF
A - F	2x4	DRY	No.2	SPF
F - K	2x4	DRY	No.2	SPF
L - J	2x4	DRY	No.2	SPF
T - L	2x4	DRY	No.2	SPF
ALL WEBS	2x3	DRY	No.2	SPF
ALL GABLE WEBS	2x3	DRY	No.2	SPF

DRY: SEASONED LUMBER.

GABLE STUDS SPACED AT 2-0-0 OC.

PLATES (table is in inches)

JT	TYPE	PLATES	W	LEN	Y	X
B	TMV+p	MT20	2.0	4.0		
C, D, E, G, H, I						
C	TMW+w	MT20	2.0	4.0		
F	TTW+p	MT20	3.0	4.0	2.25	1.50
J	TMV+p	MT20	2.0	4.0		
L	BMV1+p	MT20	2.0	4.0		
M, N, O, P, Q, R, S						
M	BMW1+w	MT20	2.0	4.0		
T	BMV1+p	MT20	2.0	4.0		

DIMENSIONS, SUPPORTS AND LOADINGS SPECIFIED BY FABRICATOR TO BE VERIFIED BY BUILDING DESIGNER

BEARINGS

THIS TRUSS DESIGNED FOR CONTINUOUS BEARINGS.

THIS TRUSS REQUIRES RIGID SHEATHING ON EXPOSED FACE.

BEARING MATERIAL TO BE SPF NO.2 OR BETTER AT JOINT(S)

BRACING
TOP CHORD TO BE SHEATHED OR MAX. PURLIN SPACING = 6.25 FT.
MAX. UNBRACED BOTTOM CHORD LENGTH = 6.25 FT OR RIGID CEILING DIRECTLY APPLIED.

ALL PITCH BREAKS AND PERIMETER CORNER JOINTS MUST BE LATERALLY RESTRAINED.

LOADING
TOTAL LOAD CASES: (4)

CHORDS

MEMB. FR-TO	MAX. FACTORED FORCE (LBS)	FACTORED VERT. LOAD (PLF) FROM	TO	LC1 CSI (LC)	MAX UNBRAC LENGTH
T- B	-270 / 0	0.0	0.0	0.05 (1)	7.81
A- B	0 / 49	-119.4	-119.4	0.16 (1)	10.00
B- C	-15 / 0	-119.4	-119.4	0.11 (1)	6.25
C- D	0 / 37	-119.4	-119.4	0.06 (1)	10.00
D- E	0 / 38	-119.4	-119.4	0.06 (1)	10.00
E- F	0 / 43	-119.4	-119.4	0.07 (1)	10.00
F- G	0 / 43	-119.4	-119.4	0.07 (1)	10.00
G- H	0 / 38	-119.4	-119.4	0.06 (1)	10.00
H- I	0 / 37	-119.4	-119.4	0.06 (1)	10.00
I- J	-15 / 0	-119.4	-119.4	0.11 (1)	6.25
J- K	0 / 49	-119.4	-119.4	0.16 (1)	10.00
L- J	-270 / 0	0.0	0.0	0.05 (1)	7.81
T- S	-20 / 0	-18.2	-18.2	0.01 (1)	6.25
S- R	-24 / 0	-18.2	-18.2	0.02 (4)	6.25
R- Q	-31 / 0	-18.2	-18.2	0.02 (4)	6.25
Q- P	-35 / 0	-18.2	-18.2	0.01 (4)	6.25
P- O	-35 / 0	-18.2	-18.2	0.01 (4)	6.25
O- N	-31 / 0	-18.2	-18.2	0.02 (4)	6.25
N- M	-24 / 0	-18.2	-18.2	0.02 (4)	6.25
M- L	-20 / 0	-18.2	-18.2	0.01 (1)	6.25

WEBS

MEMB. FR-TO	MAX. FACTORED FORCE (LBS)	MAX CSI (LC)
P- F	-298 / 0	0.22 (1)
Q- E	-242 / 0	0.10 (1)
R- D	-246 / 0	0.06 (1)
S- C	-94 / 0	0.01 (1)
O- G	-242 / 0	0.10 (1)
N- H	-246 / 0	0.06 (1)
M- I	-94 / 0	0.01 (1)

DESIGN CRITERIA

SPECIFIED LOADS:

TOP CH.	LL	=	34.8	PSF
	DL	=	6.0	PSF
BOT CH.	LL	=	0.0	PSF
	DL	=	7.3	PSF
TOTAL LOAD		=	48.1	PSF

SPACING = 24.0 IN. C/C

THIS TRUSS IS DESIGNED FOR RESIDENTIAL OR SMALL BUILDING REQUIREMENTS OF PART 9, NBCC 2015

THIS DESIGN COMPLIES WITH:
- PART 9 OF BCBC 2018 , NBC-2019AE
- PART 9 OF OBC 2012 (2019 AMENDMENT)
- CSA 086-14
- TPIC 2014

DESIGN ASSUMPTIONS
-OVERHANG NOT TO BE ALTERED OR CUT OFF.

(55 % OF 48.1 P.S.F. G.S.L. PLUS 8.4 P.S.F. RAIN LOAD) EQUALS 34.8 P.S.F. SPECIFIED ROOF LIVE LOAD

CSI: TC=0.16/0.97 (A-B:1) , BC=0.02/0.97 (Q-R:4) , WB=0.22/0.97 (F-P:1) , SSI=0.10/1.00 (A-B:1)

DOL LUMBER=1.00 NAIL=1.00 LS BEND=1.10 COMP=1.10 SHEAR=1.10 TENS= 1.10

COMPANION LIVE LOAD FACTOR = 1.00

TRUSS PLATE MANUFACTURER IS NOT RESPONSIBLE FOR QUALITY CONTROL IN THE TRUSS MANUFACTURING PLANT .

NAIL VALUES

PLATE	GRIP(DRY) (PSI) MAX	MIN	SHEAR (PLI) MAX	MIN	SECTION (PLI) MAX	MIN
MT20	650	371	1747	788	1987	1873

PLATE PLACEMENT TOL. = 0.250 inches

PLATE ROTATION TOL. = 0.5 Deg.

JSI GRIP= 0.20 (F) (INPUT = 0.90)
JSI METAL= 0.13 (H) (INPUT = 1.00)

LICENSED PROFESSIONAL ENGINEER
N.A. EL-MASRI
PROVINCE OF ONTARIO
Jul 07, 2023

READ ALL NOTES ON THIS PAGE AND ON THE ENGINEERING NOTES: TRUSSES. THE NOTE PAGE IS AN INTEGRAL PART OF THIS DRAWING AS IT CONTAINS SPECIFICATIONS AND CRITERIA USED IN THE DESIGN OF THIS COMPONENT.

KOTT

CORPORATION OF THE CITY OF OSHAWA
TRUE COPY
OF PERMIT PLANS
Oct 31 2023
PER: _____
CHIEF BUILDING OFFICIAL

JOB NAME	TRUSS NAME	QUANTITY	PLY	JOB DESC.	DRWG NO.
NE0723-038	GE03	1	1	GREENPARK - ZADORRA ESTATES - ROSE 10-2	

MHP 23031

Version 8.630 S Mar 22 2023 MiTek Industries, Inc. Fri Jul 7 15:07:24 2023 Page 1
ID:5vUDB17_Ic6Oj0vAxsr4RFzBM45-SopDbRan_iAXbxLu6XJeEkW8sCk2xzj32ojIJ7z_RAH

Scale = 1:29.5

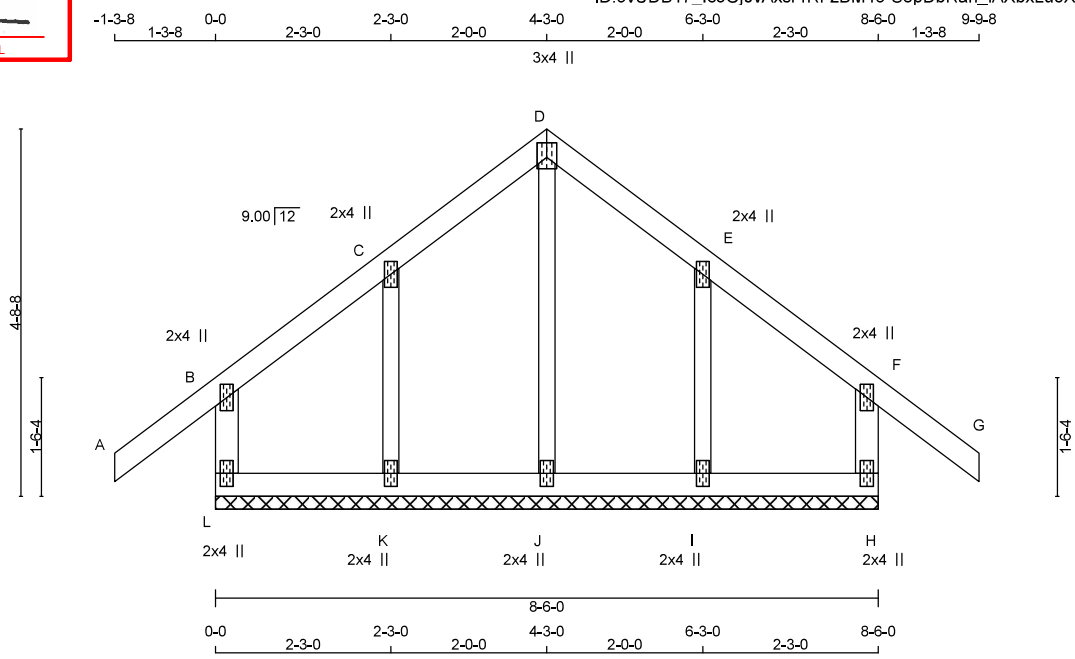

TOTAL WEIGHT = 36 lb [M]

LUMBER
N. L. G. A. RULES

CHORDS	SIZE		LUMBER	DESCR.
L - B	2x4	DRY	No.2	SPF
A - D	2x4	DRY	No.2	SPF
D - G	2x4	DRY	No.2	SPF
H - F	2x4	DRY	No.2	SPF
L - H	2x4	DRY	No.2	SPF
ALL WEBS	2x3	DRY	No.2	SPF
ALL GABLE WEBS	2x3	DRY	No.2	SPF

DRY: SEASONED LUMBER.

GABLE STUDS SPACED AT 2-0-0 OC.

PLATES (table is in inches)

JT	TYPE	PLATES	W	LEN	Y	X
B	TMV+p	MT20	2.0	4.0		
C	TMW+w	MT20	2.0	4.0		
D	TTW+p	MT20	3.0	4.0	2.25	1.50
E	TMW+w	MT20	2.0	4.0		
F	TMV+p	MT20	2.0	4.0		
H	BMV1+p	MT20	2.0	4.0		
I, J, K						
I	BMW1+w	MT20	2.0	4.0		
L	BMV1+p	MT20	2.0	4.0		

DIMENSIONS, SUPPORTS AND LOADINGS SPECIFIED BY FABRICATOR TO BE VERIFIED BY BUILDING DESIGNER

BEARINGS

THIS TRUSS DESIGNED FOR CONTINUOUS BEARINGS.

THIS TRUSS REQUIRES RIGID SHEATHING ON EXPOSED FACE.

BEARING MATERIAL TO BE SPF NO.2 OR BETTER AT JOINT(S)

BRACING
TOP CHORD TO BE SHEATHED OR MAX. PURLIN SPACING = 6.25 FT.
MAX. UNBRACED BOTTOM CHORD LENGTH = 10.00 FT OR RIGID CEILING DIRECTLY APPLIED.

ALL PITCH BREAKS AND PERIMETER CORNER JOINTS MUST BE LATERALLY RESTRAINED.

LOADING
TOTAL LOAD CASES: (4)

CHORDS

MEMB. FR-TO	MAX. FACTORED FORCE (LBS)	FACTORED VERT. LOAD (PLF) FROM	TO	LC1 CSI (LC)	MAX UNBRAC LENGTH
L- B	-312 / 0	0.0	0.0	0.02 (1)	7.81
A- B	0 / 49	-119.4	-119.4	0.16 (1)	10.00
B- C	-27 / 0	-119.4	-119.4	0.07 (1)	6.25
C- D	-17 / 0	-119.4	-119.4	0.06 (1)	6.25
D- E	-17 / 0	-119.4	-119.4	0.06 (1)	6.25
E- F	-27 / 0	-119.4	-119.4	0.07 (1)	6.25
F- G	0 / 49	-119.4	-119.4	0.16 (1)	10.00
H- F	-312 / 0	0.0	0.0	0.02 (1)	7.81
L- K	0 / 20	-18.2	-18.2	0.02 (4)	10.00
K- J	0 / 13	-18.2	-18.2	0.02 (4)	10.00
J- I	0 / 13	-18.2	-18.2	0.02 (4)	10.00
I- H	0 / 20	-18.2	-18.2	0.02 (4)	10.00

WEBS

MEMB. FR-TO	MAX. FACTORED FORCE (LBS)	MAX CSI (LC)
J- D	-227 / 0	0.07 (1)
K- C	-247 / 0	0.05 (1)
I- E	-247 / 0	0.05 (1)

DESIGN CRITERIA

SPECIFIED LOADS:

TOP CH.	LL	=	34.8	PSF
	DL	=	6.0	PSF
BOT CH.	LL	=	0.0	PSF
	DL	=	7.3	PSF
TOTAL LOAD		=	48.1	PSF

SPACING = 24.0 IN. C/C

THIS TRUSS IS DESIGNED FOR RESIDENTIAL OR SMALL BUILDING REQUIREMENTS OF PART 9, NBCC 2015

THIS DESIGN COMPLIES WITH:
- PART 9 OF BCBC 2018 , NBC-2019AE
- PART 9 OF OBC 2012 (2019 AMENDMENT)
- CSA 086-14
- TPIC 2014

DESIGN ASSUMPTIONS
-OVERHANG NOT TO BE ALTERED OR CUT OFF.

(55 % OF 48.1 P.S.F. G.S.L. PLUS 8.4 P.S.F. RAIN LOAD) EQUALS 34.8 P.S.F. SPECIFIED ROOF LIVE LOAD

CSI: TC=0.16/0.97 (F-G:1) , BC=0.02/0.97 (K-L:4) , WB=0.07/0.97 (D-J:1) , SSI=0.10/1.00 (F-G:1)

DOL LUMBER=1.00 NAIL=1.00 LS BEND=1.10 COMP=1.10 SHEAR=1.10 TENS= 1.10

COMPANION LIVE LOAD FACTOR = 1.00

TRUSS PLATE MANUFACTURER IS NOT RESPONSIBLE FOR QUALITY CONTROL IN THE TRUSS MANUFACTURING PLANT .

NAIL VALUES

PLATE	GRIP(DRY) (PSI) MAX	MIN	SHEAR (PLI) MAX	MIN	SECTION (PLI) MAX	MIN
MT20	650	371	1747	788	1987	1873

PLATE PLACEMENT TOL. = 0.250 inches

PLATE ROTATION TOL. = 5.0 Deg.

JSI GRIP= 0.22 (B) (INPUT = 0.90)
JSI METAL= 0.18 (B) (INPUT = 1.00)

LICENSED PROFESSIONAL ENGINEER
N.A. EL-MASRI
PROVINCE OF ONTARIO
Jul 07, 2023

READ ALL NOTES ON THIS PAGE AND ON THE ENGINEERING NOTES: TRUSSES. THE NOTE PAGE IS AN INTEGRAL PART OF THIS DRAWING AS IT CONTAINS SPECIFICATIONS AND CRITERIA USED IN THE DESIGN OF THIS COMPONENT.

KOTT

CORPORATION OF THE CITY OF OSHAWA
TRUE COPY
OF PERMIT PLANS
Oct 31 2023
PER: C. Marr
CHIEF BUILDING OFFICIAL

JOB NAME	TRUSS NAME	QUANTITY	PLY	JOB DESC.	DRWG NO.
NE0723-038	J01	9	1	GREENPARK - ZADORRA ESTATES - ROSE 10-2	

MHP 23031

TRUSS DESC.

Version 8.630 S Mar 22 2023 MiTek Industries, Inc. Fri Jul 7 15:07:25 2023 Page 1
ID:5vUDB17_Ic6Oj0vAxsr4RFzBM45-x_MbombPI0IOD4w4gFqumx2Agb2SgR4CHSSssZz_RAG

Scale = 1:32.7

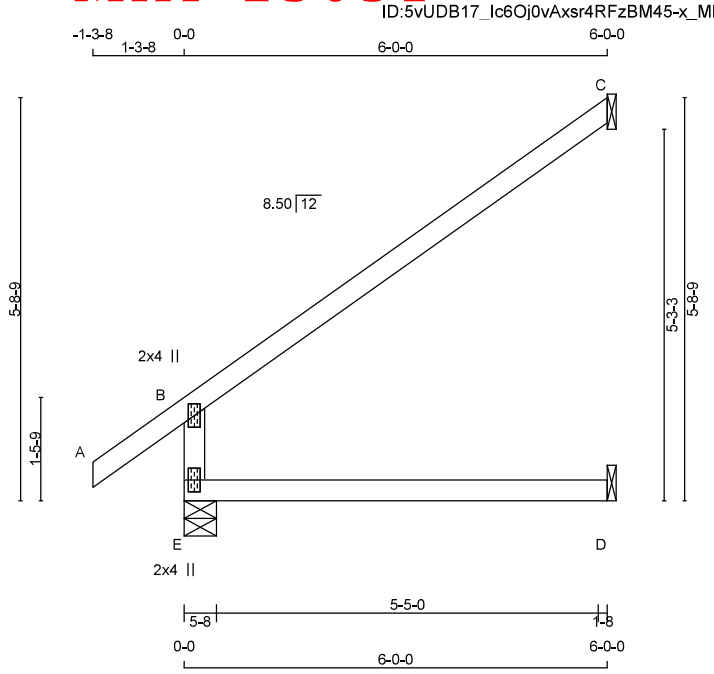

TOTAL WEIGHT = 9 X 18 = 166 lb [M]

LUMBER
N. L. G. A. RULES

CHORDS	SIZE		LUMBER	DESCR.
E - B	2x4	DRY	No.2	SPF
A - C	2x4	DRY	No.2	SPF
E - D	2x4	DRY	No.2	SPF

DRY: SEASONED LUMBER.

PLATES (table is in inches)

JT	TYPE	PLATES	W	LEN	Y	X
B	TMV+p	MT20	2.0	4.0		
E	BMV1+p	MT20	2.0	4.0		

DIMENSIONS, SUPPORTS AND LOADINGS SPECIFIED BY FABRICATOR TO BE VERIFIED BY BUILDING DESIGNER

BEARINGS

JT	FACTORED GROSS REACTION VERT	HORZ	MAXIMUM FACTORED GROSS REACTION DOWN	HORZ	UPLIFT	INPUT BRG IN-SX	REQRD BRG IN-SX
E	676	0	676	0	0	5-8	1-8
C	269	0	269	0	0	1-8	1-8
D	46	0	52	0	0	1-8	1-8

SEE MITEK STANDARD DETAIL MSD2015-H FOR CONNECTION TO JOINT(S) C , D

UNFACTORED REACTIONS

JT	1ST LCASE COMBINED	MAX./MIN. COMPONENT REACTIONS SNOW	LIVE	PERM.LIVE	WIND	DEAD	SOIL
E	469	357 / 0	0 / 0	0 / 0	0 / 0	112 / 0	0 / 0
C	184	157 / 0	0 / 0	0 / 0	0 / 0	27 / 0	0 / 0
D	37	0 / 0	0 / 0	0 / 0	0 / 0	37 / 0	0 / 0

BEARING MATERIAL TO BE SPF NO.2 OR BETTER AT JOINT(S) E

BRACING
TOP CHORD TO BE SHEATHED OR MAX. PURLIN SPACING = 6.25 FT.
MAX. UNBRACED BOTTOM CHORD LENGTH = 10.00 FT OR RIGID CEILING DIRECTLY APPLIED.

ALL PITCH BREAKS AND PERIMETER CORNER JOINTS MUST BE LATERALLY RESTRAINED.

LOADING
TOTAL LOAD CASES: (4)

CHORDS

MEMB. FR-TO	MAX. FACTORED FORCE (LBS)	FACTORED VERT. LOAD (PLF) FROM	TO	LC1 MAX CSI (LC)
E- B	-612 / 0	0.0	0.0	0.12 (4)
A- B	0 / 47	-119.4	-119.4	0.16 (1)
B- C	-52 / 0	-119.4	-119.4	0.73 (1)
E- D	0 / 0	-18.2	-18.2	0.14 (4)

WEBS

MEMB. FR-TO	MAX. FACTORED FORCE (LBS)	MAX CSI (LC)	MAX. UNBRAC LENGTH
E- B			7.81
A- B			10.00
B- C			6.25
E- D			10.00

DESIGN CRITERIA

SPECIFIED LOADS:

TOP CH.	LL =	34.8	PSF
	DL =	6.0	PSF
BOT CH.	LL =	0.0	PSF
	DL =	7.3	PSF
TOTAL LOAD	=	48.1	PSF

SPACING = 24.0 IN. C/C

THIS TRUSS IS DESIGNED FOR RESIDENTIAL OR SMALL BUILDING REQUIREMENTS OF PART 9, NBCC 2015

THIS DESIGN COMPLIES WITH:
- PART 9 OF BCBC 2018 , NBC-2019AE
- PART 9 OF OBC 2012 (2019 AMENDMENT)
- CSA 086-14
- TPIC 2014

DESIGN ASSUMPTIONS
-OVERHANG NOT TO BE ALTERED OR CUT OFF.

(55 % OF 48.1 P.S.F. G.S.L. PLUS 8.4 P.S.F. RAIN LOAD) EQUALS 34.8 P.S.F. SPECIFIED ROOF LIVE LOAD

ALLOWABLE DEFL.(LL)= L/360 (0.20")
CALCULATED VERT. DEFL.(LL) = L/ 999 (0.00")
ALLOWABLE DEFL.(TL)= L/360 (0.20")
CALCULATED VERT. DEFL.(TL) = L/ 999 (0.04")

CSI: TC=0.73/0.97 (B-C:1) , BC=0.14/0.97 (D-E:4) , WB=0.00/0.97 (n/a:0) , SSI=0.29/1.00 (B-C:1)

DOL LUMBER=1.00 NAIL=1.00 LS BEND=1.10 COMP=1.10 SHEAR=1.10 TENS= 1.10

COMPANION LIVE LOAD FACTOR = 1.00

TRUSS PLATE MANUFACTURER IS NOT RESPONSIBLE FOR QUALITY CONTROL IN THE TRUSS MANUFACTURING PLANT .

NAIL VALUES

PLATE	GRIP(DRY) (PSI) MAX	MIN	SHEAR (PLI) MAX	MIN	SECTION (PLI) MAX	MIN
MT20	650	371	1747	788	1987	1873

PLATE PLACEMENT TOL. = 0.250 inches

PLATE ROTATION TOL. = 5.0 Deg.

JSI GRIP= 0.39 (B) (INPUT = 0.90)
JSI METAL= 0.32 (B) (INPUT = 1.00)

LICENSED PROFESSIONAL ENGINEER
N.A. EL-MASRI
PROVINCE OF ONTARIO
Jul 07, 2023

READ ALL NOTES ON THIS PAGE AND ON THE ENGINEERING NOTES: TRUSSES. THE NOTE PAGE IS AN INTEGRAL PART OF THIS DRAWING AS IT CONTAINS SPECIFICATIONS AND CRITERIA USED IN THE DESIGN OF THIS COMPONENT.

KOTT

CORPORATION OF THE CITY OF OSHAWA
TRUE COPY
OF PERMIT PLANS
Oct 31 2023
PER: C Marr
CHIEF BUILDING OFFICIAL

JOB NAME	TRUSS NAME	QUANTITY	PLY	JOB DESC.	DRWG NO.
NE0723-038	J02	7	1	GREENPARK - ZADORRA ESTATES - ROSE 10-2	

MHP 23031

Version 8.630 S Mar 22 2023 MiTek Industries, Inc. Fri Jul 7 15:07:25 2023 Page 1
ID:5vUDB17_Ic6Oj0vAxsr4RFzBM45-x_MbombPI0IOD4w4gFqumx2Agb2SgR4CHSSssZz_RAG

Scale = 1:34.3

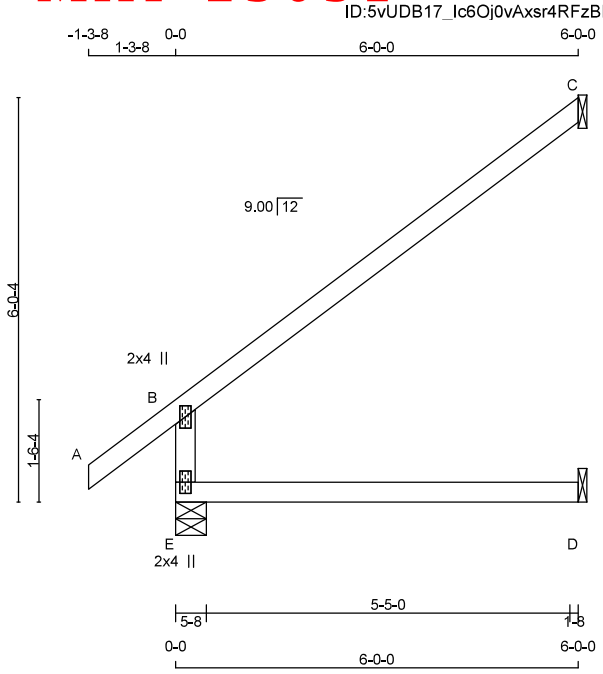

TOTAL WEIGHT = 7 X 19 = 131 lb
[M]

LUMBER
N. L. G. A. RULES

CHORDS	SIZE		LUMBER	DESCR.
E - B	2x4	DRY	No.2	SPF
A - C	2x4	DRY	No.2	SPF
E - D	2x4	DRY	No.2	SPF

DRY: SEASONED LUMBER.

PLATES (table is in inches)

JT	TYPE	PLATES	W	LEN	Y	X
B	TMV+p	MT20	2.0	4.0		
E	BMV1+p	MT20	2.0	4.0		

DIMENSIONS, SUPPORTS AND LOADINGS SPECIFIED BY FABRICATOR TO BE VERIFIED BY BUILDING DESIGNER

BEARINGS

JT	FACTORED GROSS REACTION VERT	HORZ	MAXIMUM FACTORED GROSS REACTION DOWN	HORZ	UPLIFT	INPUT BRG IN-SX	REQRD BRG IN-SX
E	676	0	676	0	0	5-8	1-8
C	269	0	269	0	0	1-8	1-8
D	46	0	52	0	0	1-8	1-8

SEE MITEK STANDARD DETAIL MSD2015-H FOR CONNECTION TO JOINT(S) C , D

UNFACTORED REACTIONS

JT	1ST LCASE COMBINED	MAX./MIN. COMPONENT REACTIONS SNOW	LIVE	PERM.LIVE	WIND	DEAD	SOIL
E	469	357 / 0	0 / 0	0 / 0	0 / 0	112 / 0	0 / 0
C	184	157 / 0	0 / 0	0 / 0	0 / 0	27 / 0	0 / 0
D	37	0 / 0	0 / 0	0 / 0	0 / 0	37 / 0	0 / 0

BEARING MATERIAL TO BE SPF NO.2 OR BETTER AT JOINT(S) E, C

BRACING
TOP CHORD TO BE SHEATHED OR MAX. PURLIN SPACING = 6.25 FT.
MAX. UNBRACED BOTTOM CHORD LENGTH = 10.00 FT OR RIGID CEILING DIRECTLY APPLIED.

ALL PITCH BREAKS AND PERIMETER CORNER JOINTS MUST BE LATERALLY RESTRAINED.

LOADING
TOTAL LOAD CASES: (4)

CHORDS MEMB. FR-TO	MAX. FACTORED FORCE (LBS)	FACTORED VERT. LOAD (PLF) FROM	TO	LC1 MAX CSI (LC)	WEBS MEMB. FR-TO	MAX. FACTORED FORCE (LBS)	MAX CSI (LC)	MAX UNBRAC LENGTH
E- B	-612 / 0	0.0	0.0	0.12 (4)				7.81
A- B	0 / 49	-119.4	-119.4	0.16 (1)				10.00
B- C	-54 / 0	-119.4	-119.4	0.73 (1)				6.25
E- D	0 / 0	-18.2	-18.2	0.14 (4)				10.00

DESIGN CRITERIA

SPECIFIED LOADS:

TOP CH.	LL =	34.8	PSF
	DL =	6.0	PSF
BOT CH.	LL =	0.0	PSF
	DL =	7.3	PSF
TOTAL LOAD	=	48.1	PSF

SPACING = 24.0 IN. C/C

THIS TRUSS IS DESIGNED FOR RESIDENTIAL OR SMALL BUILDING REQUIREMENTS OF PART 9, NBCC 2015

THIS DESIGN COMPLIES WITH:
- PART 9 OF BCBC 2018 , NBC-2019AE
- PART 9 OF OBC 2012 (2019 AMENDMENT)
- CSA 086-14
- TPIC 2014

DESIGN ASSUMPTIONS
-OVERHANG NOT TO BE ALTERED OR CUT OFF.

(55 % OF 48.1 P.S.F. G.S.L. PLUS 8.4 P.S.F. RAIN LOAD) EQUALS 34.8 P.S.F. SPECIFIED ROOF LIVE LOAD

ALLOWABLE DEFL.(LL)= L/360 (0.20")
CALCULATED VERT. DEFL.(LL) = L/ 999 (0.00")
ALLOWABLE DEFL.(TL)= L/360 (0.20")
CALCULATED VERT. DEFL.(TL) = L/ 999 (0.04")

CSI: TC=0.73/0.97 (B-C:1) , BC=0.14/0.97 (D-E:4) , WB=0.00/0.97 (n/a:0) , SSI=0.28/1.00 (B-C:1)

DOL LUMBER=1.00 NAIL=1.00 LS BEND=1.10 COMP=1.10 SHEAR=1.10 TENS= 1.10

COMPANION LIVE LOAD FACTOR = 1.00

TRUSS PLATE MANUFACTURER IS NOT RESPONSIBLE FOR QUALITY CONTROL IN THE TRUSS MANUFACTURING PLANT .

NAIL VALUES

PLATE	GRIP(DRY) (PSI) MAX	MIN	SHEAR (PLI) MAX	MIN	SECTION (PLI) MAX	MIN
MT20	650	371	1747	788	1987	1873

PLATE PLACEMENT TOL. = 0.250 inches

PLATE ROTATION TOL. = 5.0 Deg.

JSI GRIP= 0.40 (B) (INPUT = 0.90)
JSI METAL= 0.32 (B) (INPUT = 1.00)

LICENSED PROFESSIONAL ENGINEER
N.A. EL-MASRI
PROVINCE OF ONTARIO
Jul 07, 2023

READ ALL NOTES ON THIS PAGE AND ON THE ENGINEERING NOTES: TRUSSES. THE NOTE PAGE IS AN INTEGRAL PART OF THIS DRAWING AS IT CONTAINS SPECIFICATIONS AND CRITERIA USED IN THE DESIGN OF THIS COMPONENT.

KOTT

CORPORATION OF THE CITY OF OSHAWA
TRUE COPY
OF PERMIT PLANS
Oct 31 2023
PER: C Marr
CHIEF BUILDING OFFICIAL

JOB NAME	TRUSS NAME	QUANTITY	PLY	JOB DESC.	DRWG NO.
NE0723-038	J03	6	1	GREENPARK - ZADORRA ESTATES - ROSE 10-2	

MHP 23031

Version 8.630 S Mar 22 2023 MiTek Industries, Inc. Fri Jul 7 15:07:25 2023 Page 1
ID:5vUDB17_Ic6Oj0vAxsr4RFzBM45-x_MbombPI0IOD4w4gFqumx2G4b3agR4CHSSssZz_RAG

Scale = 1:25.8

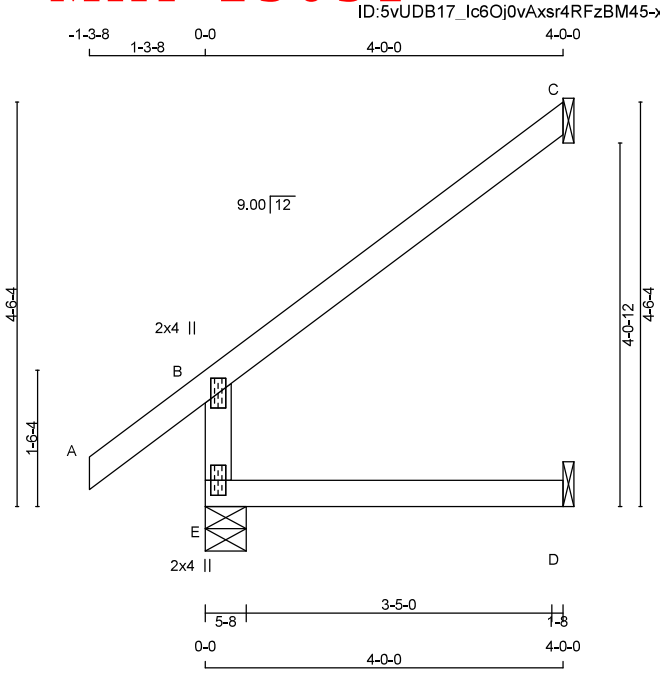

TOTAL WEIGHT = 6 X 14 = 82 lb [M]

LUMBER
N. L. G. A. RULES

CHORDS	SIZE		LUMBER	DESCR.
E - B	2x4	DRY	No.2	SPF
A - C	2x4	DRY	No.2	SPF
E - D	2x4	DRY	No.2	SPF

DRY: SEASONED LUMBER.

PLATES (table is in inches)

JT	TYPE	PLATES	W	LEN	Y	X
B	TMV+p	MT20	2.0	4.0		
E	BMV1+p	MT20	2.0	4.0		

DIMENSIONS, SUPPORTS AND LOADINGS SPECIFIED BY FABRICATOR TO BE VERIFIED BY BUILDING DESIGNER

BEARINGS

JT	FACTORED GROSS REACTION VERT	HORZ	MAXIMUM FACTORED GROSS REACTION DOWN	HORZ	UPLIFT	INPUT BRG IN-SX	REQRD BRG IN-SX
E	504	0	504	0	0	5-8	1-8
C	179	0	179	0	0	1-8	1-8
D	32	0	35	0	0	1-8	1-8

SEE MITEK STANDARD DETAIL MSD2015-H FOR CONNECTION TO JOINT(S) C , D

UNFACTORED REACTIONS

JT	1ST LCASE COMBINED	MAX./MIN. COMPONENT REACTIONS SNOW	LIVE	PERM.LIVE	WIND	DEAD	SOIL
E	350	270 / 0	0 / 0	0 / 0	0 / 0	80 / 0	0 / 0
C	123	105 / 0	0 / 0	0 / 0	0 / 0	18 / 0	0 / 0
D	25	0 / 0	0 / 0	0 / 0	0 / 0	25 / 0	0 / 0

BEARING MATERIAL TO BE SPF NO.2 OR BETTER AT JOINT(S) E

BRACING
TOP CHORD TO BE SHEATHED OR MAX. PURLIN SPACING = 6.25 FT.
MAX. UNBRACED BOTTOM CHORD LENGTH = 10.00 FT OR RIGID CEILING DIRECTLY APPLIED.

ALL PITCH BREAKS AND PERIMETER CORNER JOINTS MUST BE LATERALLY RESTRAINED.

LOADING
TOTAL LOAD CASES: (4)

CHORDS

MEMB. FR-TO	MAX. FACTORED FORCE (LBS)	FACTORED VERT. LOAD (PLF) FROM	TO	LC1 MAX CSI (LC)
E- B	-463 / 0	0.0	0.0	0.05 (4)
A- B	0 / 49	-119.4	-119.4	0.16 (1)
B- C	-36 / 0	-119.4	-119.4	0.32 (1)
E- D	0 / 0	-18.2	-18.2	0.06 (4)

WEBS

MEMB. FR-TO	MAX. UNBRAC LENGTH	MAX. FACTORED FORCE (LBS)	MAX CSI (LC)
E- B	7.81		
A- B	10.00		
B- C	6.25		
E- D	10.00		

DESIGN CRITERIA

SPECIFIED LOADS:

TOP CH.	LL =	34.8	PSF
	DL =	6.0	PSF
BOT CH.	LL =	0.0	PSF
	DL =	7.3	PSF
TOTAL LOAD	=	48.1	PSF

SPACING = 24.0 IN. C/C

THIS TRUSS IS DESIGNED FOR RESIDENTIAL OR SMALL BUILDING REQUIREMENTS OF PART 9, NBCC 2015

THIS DESIGN COMPLIES WITH:
- PART 9 OF BCBC 2018 , NBC-2019AE
- PART 9 OF OBC 2012 (2019 AMENDMENT)
- CSA 086-14
- TPIC 2014

DESIGN ASSUMPTIONS
-OVERHANG NOT TO BE ALTERED OR CUT OFF.

(55 % OF 48.1 P.S.F. G.S.L. PLUS 8.4 P.S.F. RAIN LOAD) EQUALS 34.8 P.S.F. SPECIFIED ROOF LIVE LOAD

ALLOWABLE DEFL.(LL)= L/360 (0.19")
CALCULATED VERT. DEFL.(LL) = L/ 999 (0.00")
ALLOWABLE DEFL.(TL)= L/360 (0.19")
CALCULATED VERT. DEFL.(TL) = L/ 999 (0.01")

CSI: TC=0.32/0.97 (B-C:1) , BC=0.06/0.97 (D-E:4) , WB=0.00/0.97 (n/a:0) , SSI=0.19/1.00 (B-C:1)

DOL LUMBER=1.00 NAIL=1.00 LS BEND=1.10 COMP=1.10 SHEAR=1.10 TENS= 1.10

COMPANION LIVE LOAD FACTOR = 1.00

TRUSS PLATE MANUFACTURER IS NOT RESPONSIBLE FOR QUALITY CONTROL IN THE TRUSS MANUFACTURING PLANT .

NAIL VALUES

PLATE	GRIP(DRY) (PSI) MAX	MIN	SHEAR (PLI) MAX	MIN	SECTION (PLI) MAX	MIN
MT20	650	371	1747	788	1987	1873

PLATE PLACEMENT TOL. = 0.250 inches

PLATE ROTATION TOL. = 5.0 Deg.

JSI GRIP= 0.30 (B) (INPUT = 0.90)
JSI METAL= 0.25 (B) (INPUT = 1.00)

LICENSED PROFESSIONAL ENGINEER
N.A. EL-MASRI
PROVINCE OF ONTARIO
Jul 07, 2023

READ ALL NOTES ON THIS PAGE AND ON THE ENGINEERING NOTES: TRUSSES. THE NOTE PAGE IS AN INTEGRAL PART OF THIS DRAWING AS IT CONTAINS SPECIFICATIONS AND CRITERIA USED IN THE DESIGN OF THIS COMPONENT.

KOTT

CORPORATION OF THE CITY OF OSHAWA
TRUE COPY
OF PERMIT PLANS
Oct 31 2023
PER: C Marr
CHIEF BUILDING OFFICIAL

JOB NAME	TRUSS NAME	QUANTITY	PLY	JOB DESC.	DRWG NO.
NE0723-038	J04	2	1	GREENPARK - ZADORRA ESTATES - ROSE 10-2	

MHP 23031

TRUSS DESC.

Version 8.630 S Mar 22 2023 MiTek Industries, Inc. Fri Jul 7 15:07:26 2023 Page 1
ID:5vUDB17_Ic6Oj0vAxsr4RFzBM45-PAwz06c1WJQFqEVHEyL7J9bR2?OhPuJLW6CPO?z_RAF

Scale = 1:24.3

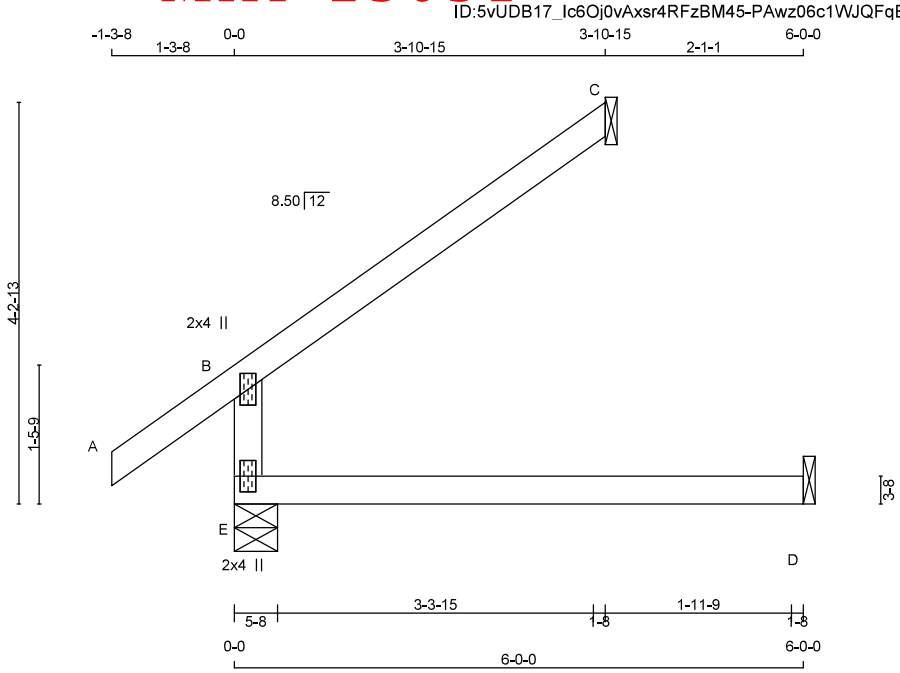

TOTAL WEIGHT = 2 X 16 = 31 lb [M]

LUMBER
N. L. G. A. RULES

CHORDS	SIZE		LUMBER	DESCR.
E - B	2x4	DRY	No.2	SPF
A - C	2x4	DRY	No.2	SPF
E - D	2x4	DRY	No.2	SPF

DRY: SEASONED LUMBER.

PLATES (table is in inches)

JT	TYPE	PLATES	W	LEN	Y	X
B	TMV+p	MT20	2.0	4.0		
E	BMV1+p	MT20	2.0	4.0		

DIMENSIONS, SUPPORTS AND LOADINGS SPECIFIED BY FABRICATOR TO BE VERIFIED BY BUILDING DESIGNER

BEARINGS

JT	FACTORED GROSS REACTION VERT	HORZ	MAXIMUM FACTORED GROSS REACTION DOWN	HORZ	UPLIFT	INPUT BRG IN-SX	REQRD BRG IN-SX
E	520	0	520	0	0	5-8	1-8
C	175	0	175	0	0	1-8	1-8
D	46	0	52	0	0	1-8	1-8

SEE MITEK STANDARD DETAIL MSD2015-H FOR CONNECTION TO JOINT(S) C , D

UNFACTORED REACTIONS

JT	1ST LCASE COMBINED	MAX./MIN. COMPONENT REACTIONS SNOW	LIVE	PERM.LIVE	WIND	DEAD	SOIL
E	362	266 / 0	0 / 0	0 / 0	0 / 0	97 / 0	0 / 0
C	120	102 / 0	0 / 0	0 / 0	0 / 0	18 / 0	0 / 0
D	37	0 / 0	0 / 0	0 / 0	0 / 0	37 / 0	0 / 0

BEARING MATERIAL TO BE SPF NO.2 OR BETTER AT JOINT(S) E, C

BRACING
TOP CHORD TO BE SHEATHED OR MAX. PURLIN SPACING = 6.25 FT.
MAX. UNBRACED BOTTOM CHORD LENGTH = 10.00 FT OR RIGID CEILING DIRECTLY APPLIED.

ALL PITCH BREAKS AND PERIMETER CORNER JOINTS MUST BE LATERALLY RESTRAINED.

LOADING
TOTAL LOAD CASES: (4)

CHORDS MEMB. FR-TO	MAX. FACTORED FORCE (LBS)	FACTORED VERT. LOAD (PLF) FROM	TO	LC1 MAX CSI (LC)	WEBS MAX. UNBRAC LENGTH	MEMB. FR-TO	MAX. FACTORED FORCE (LBS)	MAX CSI (LC)
E- B	-456 / 0	0.0	0.0	0.12 (4)	7.81			
A- B	0 / 47	-119.4	-119.4	0.16 (1)	10.00			
B- C	-34 / 0	-119.4	-119.4	0.31 (1)	6.25			
E- D	0 / 0	-18.2	-18.2	0.14 (4)	10.00			

DESIGN CRITERIA

SPECIFIED LOADS:

TOP CH.	LL	=	34.8	PSF
	DL	=	6.0	PSF
BOT CH.	LL	=	0.0	PSF
	DL	=	7.3	PSF
TOTAL LOAD		=	48.1	PSF

SPACING = 24.0 IN. C/C

THIS TRUSS IS DESIGNED FOR RESIDENTIAL OR SMALL BUILDING REQUIREMENTS OF PART 9, NBCC 2015

THIS DESIGN COMPLIES WITH:
- PART 9 OF BCBC 2018 , NBC-2019AE
- PART 9 OF OBC 2012 (2019 AMENDMENT)
- CSA 086-14
- TPIC 2014

DESIGN ASSUMPTIONS
-OVERHANG NOT TO BE ALTERED OR CUT OFF.

(55 % OF 48.1 P.S.F. G.S.L. PLUS 8.4 P.S.F. RAIN LOAD) EQUALS 34.8 P.S.F. SPECIFIED ROOF LIVE LOAD

ALLOWABLE DEFL.(LL)= L/360 (0.20")
CALCULATED VERT. DEFL.(LL) = L/ 999 (0.00")
ALLOWABLE DEFL.(TL)= L/360 (0.20")
CALCULATED VERT. DEFL.(TL) = L/ 999 (0.04")

CSI: TC=0.31/0.97 (B-C:1) , BC=0.14/0.97 (D-E:4) , WB=0.00/0.97 (n/a:0) , SSI=0.19/1.00 (B-C:1)

DOL LUMBER=1.00 NAIL=1.00 LS BEND=1.10 COMP=1.10 SHEAR=1.10 TENS= 1.10

COMPANION LIVE LOAD FACTOR = 1.00

TRUSS PLATE MANUFACTURER IS NOT RESPONSIBLE FOR QUALITY CONTROL IN THE TRUSS MANUFACTURING PLANT .

NAIL VALUES

PLATE	GRIP(DRY) (PSI) MAX	MIN	SHEAR (PLI) MAX	MIN	SECTION (PLI) MAX	MIN
MT20	650	371	1747	788	1987	1873

PLATE PLACEMENT TOL. = 0.250 inches

PLATE ROTATION TOL. = 5.0 Deg.

JSI GRIP= 0.29 (B) (INPUT = 0.90)
JSI METAL= 0.24 (B) (INPUT = 1.00)

LICENSED PROFESSIONAL ENGINEER
N.A. EL-MASRI
PROVINCE OF ONTARIO
Jul 07, 2023

READ ALL NOTES ON THIS PAGE AND ON THE ENGINEERING NOTES: TRUSSES. THE NOTE PAGE IS AN INTEGRAL PART OF THIS DRAWING AS IT CONTAINS SPECIFICATIONS AND CRITERIA USED IN THE DESIGN OF THIS COMPONENT.

KOTT

CORPORATION OF THE CITY OF OSHAWA
TRUE COPY
OF PERMIT PLANS
Oct 31 2023
PER: C Marr
CHIEF BUILDING OFFICIAL

JOB NAME	TRUSS NAME	QUANTITY	PLY	JOB DESC.	DRWG NO.
NE0723-038	J05	1	1	GREENPARK - ZADORRA ESTATES - ROSE 10-2	

MHP 23031

Version 8.630 S Mar 22 2023 MiTek Industries, Inc. Fri Jul 7 15:07:26 2023 Page 1
ID:5vUDB17_Ic6Oj0vAxsr4RFzBM45-PAwz06c1WJQFqEVHEyL7J9bR2?OhPuJLW6CPO?z_RAF

Scale = 1:25.4

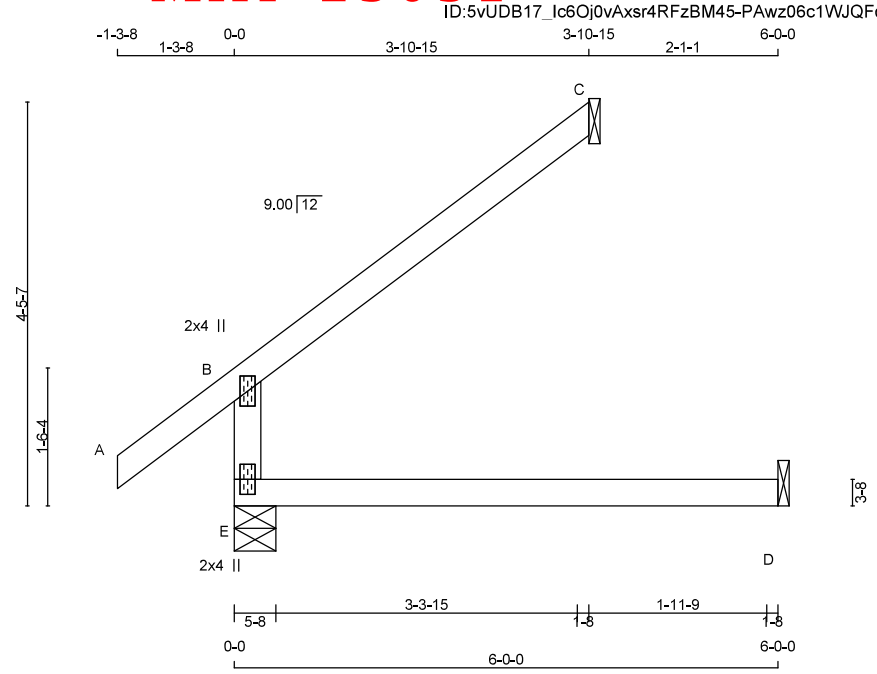

TOTAL WEIGHT = 16 lb [M]

LUMBER
N. L. G. A. RULES

CHORDS	SIZE		LUMBER	DESCR.
E - B	2x4	DRY	No.2	SPF
A - C	2x4	DRY	No.2	SPF
E - D	2x4	DRY	No.2	SPF

DRY: SEASONED LUMBER.

PLATES (table is in inches)

JT	TYPE	PLATES	W	LEN	Y	X
B	TMV+p	MT20	2.0	4.0		
E	BMV1+p	MT20	2.0	4.0		

DIMENSIONS, SUPPORTS AND LOADINGS SPECIFIED BY FABRICATOR TO BE VERIFIED BY BUILDING DESIGNER

BEARINGS

JT	FACTORED GROSS REACTION VERT	HORZ	MAXIMUM FACTORED GROSS REACTION DOWN	HORZ	UPLIFT	INPUT BRG IN-SX	REQRD BRG IN-SX
E	520	0	520	0	0	5-8	1-8
C	175	0	175	0	0	1-8	1-8
D	46	0	52	0	0	1-8	1-8

SEE MITEK STANDARD DETAIL MSD2015-H FOR CONNECTION TO JOINT(S) C , D

UNFACTORED REACTIONS

JT	1ST LCASE COMBINED	MAX./MIN. COMPONENT REACTIONS SNOW	LIVE	PERM.LIVE	WIND	DEAD	SOIL
E	363	266 / 0	0 / 0	0 / 0	0 / 0	97 / 0	0 / 0
C	120	102 / 0	0 / 0	0 / 0	0 / 0	18 / 0	0 / 0
D	37	0 / 0	0 / 0	0 / 0	0 / 0	37 / 0	0 / 0

BEARING MATERIAL TO BE SPF NO.2 OR BETTER AT JOINT(S) E, C

BRACING
TOP CHORD TO BE SHEATHED OR MAX. PURLIN SPACING = 6.25 FT.
MAX. UNBRACED BOTTOM CHORD LENGTH = 10.00 FT OR RIGID CEILING DIRECTLY APPLIED.

ALL PITCH BREAKS AND PERIMETER CORNER JOINTS MUST BE LATERALLY RESTRAINED.

LOADING
TOTAL LOAD CASES: (4)

CHORDS MEMB. FR-TO	MAX. FACTORED FORCE (LBS)	FACTORED VERT. LOAD (PLF) FROM	TO	LC1 MAX CSI (LC)	WEBS MAX. UNBRAC LENGTH	MEMB. FR-TO	MAX. FACTORED FORCE (LBS)	MAX CSI (LC)
E- B	-456 / 0	0.0	0.0	0.12 (4)	7.81			
A- B	0 / 49	-119.4	-119.4	0.16 (1)	10.00			
B- C	-35 / 0	-119.4	-119.4	0.31 (1)	6.25			
E- D	0 / 0	-18.2	-18.2	0.14 (4)	10.00			

DESIGN CRITERIA

SPECIFIED LOADS:

TOP CH.	LL	=	34.8	PSF
	DL	=	6.0	PSF
BOT CH.	LL	=	0.0	PSF
	DL	=	7.3	PSF
TOTAL LOAD		=	48.1	PSF

SPACING = 24.0 IN. C/C

THIS TRUSS IS DESIGNED FOR RESIDENTIAL OR SMALL BUILDING REQUIREMENTS OF PART 9, NBCC 2015

THIS DESIGN COMPLIES WITH:
- PART 9 OF BCBC 2018 , NBC-2019AE
- PART 9 OF OBC 2012 (2019 AMENDMENT)
- CSA 086-14
- TPIC 2014

DESIGN ASSUMPTIONS
-OVERHANG NOT TO BE ALTERED OR CUT OFF.

(55 % OF 48.1 P.S.F. G.S.L. PLUS 8.4 P.S.F. RAIN LOAD) EQUALS 34.8 P.S.F. SPECIFIED ROOF LIVE LOAD

ALLOWABLE DEFL.(LL)= L/360 (0.20")
CALCULATED VERT. DEFL.(LL) = L/ 999 (0.00")
ALLOWABLE DEFL.(TL)= L/360 (0.20")
CALCULATED VERT. DEFL.(TL) = L/ 999 (0.04")

CSI: TC=0.31/0.97 (B-C:1) , BC=0.14/0.97 (D-E:4) , WB=0.00/0.97 (n/a:0) , SSI=0.18/1.00 (B-C:1)

DOL LUMBER=1.00 NAIL=1.00 LS BEND=1.10 COMP=1.10 SHEAR=1.10 TENS= 1.10

COMPANION LIVE LOAD FACTOR = 1.00

TRUSS PLATE MANUFACTURER IS NOT RESPONSIBLE FOR QUALITY CONTROL IN THE TRUSS MANUFACTURING PLANT .

NAIL VALUES

PLATE	GRIP(DRY) (PSI) MAX	MIN	SHEAR (PLI) MAX	MIN	SECTION (PLI) MAX	MIN
MT20	650	371	1747	788	1987	1873

PLATE PLACEMENT TOL. = 0.250 inches

PLATE ROTATION TOL. = 5.0 Deg.

JSI GRIP= 0.30 (B) (INPUT = 0.90)
JSI METAL= 0.24 (B) (INPUT = 1.00)

LICENSED PROFESSIONAL ENGINEER
N.A. EL-MASRI
PROVINCE OF ONTARIO
Jul 07, 2023

READ ALL NOTES ON THIS PAGE AND ON THE ENGINEERING NOTES: TRUSSES. THE NOTE PAGE IS AN INTEGRAL PART OF THIS DRAWING AS IT CONTAINS SPECIFICATIONS AND CRITERIA USED IN THE DESIGN OF THIS COMPONENT.

KOTT

CORPORATION OF THE CITY OF OSHAWA
TRUE COPY
OF PERMIT PLANS
Oct 31 2023
PER: C Marr
CHIEF BUILDING OFFICIAL

JOB NAME	TRUSS NAME	QUANTITY	PLY	JOB DESC.	DRWG NO.
NE0723-038	J06	2	1	GREENPARK - ZADORRA ESTATES - ROSE 10-2	

MHP 23031

TRUSS DESC.

Version 8.630 S Mar 22 2023 MiTek Industries, Inc. Fri Jul 7 15:07:27 2023 Page 1
ID:5vUDB17_Ic6Oj0vAxsr4RFzBM45-tNUMDSdfHdY6SO4TngsMsM8e5PI?8KZVImxywSz_RAE

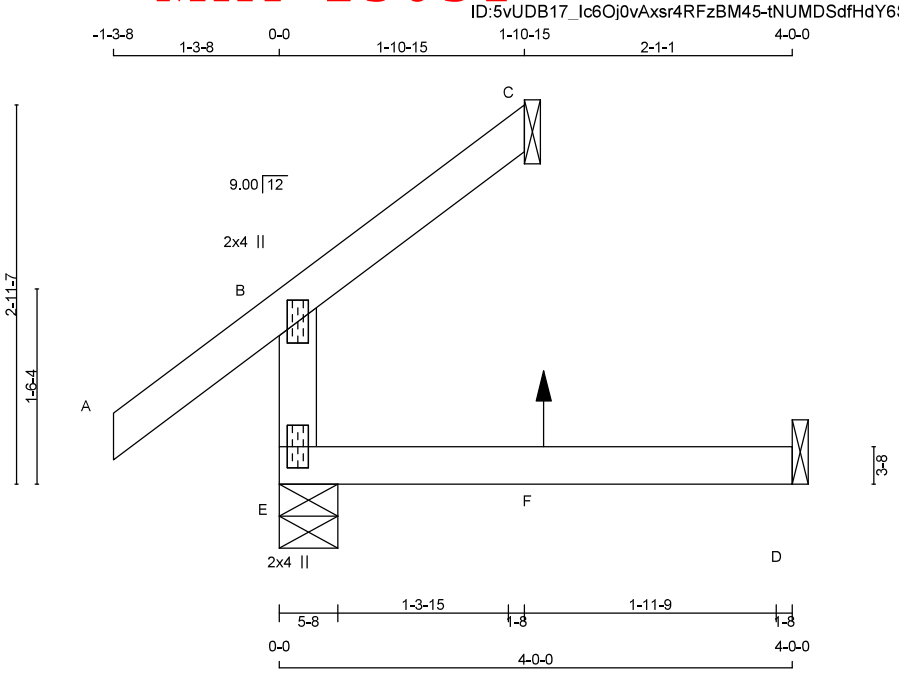

TOTAL WEIGHT = 2 X 11 = 21 lb [M]

LUMBER
N. L. G. A. RULES

CHORDS	SIZE		LUMBER	DESCR.
E - B	2x4	DRY	No.2	SPF
A - C	2x4	DRY	No.2	SPF
E - D	2x4	DRY	No.2	SPF

DRY: SEASONED LUMBER.

PLATES (table is in inches)

JT	TYPE	PLATES	W	LEN	Y	X
B	TMV+p	MT20	2.0	4.0		
E	BMV1+p	MT20	2.0	4.0		

DIMENSIONS, SUPPORTS AND LOADINGS SPECIFIED BY FABRICATOR TO BE VERIFIED BY BUILDING DESIGNER

BEARINGS

JT	FACTORED GROSS REACTION VERT	HORZ	MAXIMUM FACTORED GROSS REACTION DOWN	HORZ	UPLIFT	INPUT BRG IN-SX	REQRD BRG IN-SX
E	364	0	364	0	0	5-8	1-8
C	69	0	69	0	0	1-8	1-8
D	26	0	36	0	0	1-8	1-8

SEE MITEK STANDARD DETAIL MSD2015-H FOR CONNECTION TO JOINT(S) C , D

UNFACTORED REACTIONS

JT	1ST LCASE COMBINED	MAX./MIN. COMPONENT REACTIONS SNOW	LIVE	PERM.LIVE	WIND	DEAD	SOIL
E	252	193 / 0	0 / 0	0 / 0	0 / 0	60 / 0	0 / 0
C	48	36 / 0	0 / 0	0 / 0	0 / 0	12 / 0	0 / 0
D	21	0 / -4	0 / 0	0 / 0	0 / 0	26 / 0	0 / 0

BEARING MATERIAL TO BE SPF NO.2 OR BETTER AT JOINT(S) E, C

BRACING
TOP CHORD TO BE SHEATHED OR MAX. PURLIN SPACING = 6.25 FT.
MAX. UNBRACED BOTTOM CHORD LENGTH = 10.00 FT OR RIGID CEILING DIRECTLY APPLIED.

ALL PITCH BREAKS AND PERIMETER CORNER JOINTS MUST BE LATERALLY RESTRAINED.

LOADING
TOTAL LOAD CASES: (4)

CHORDS MEMB. FR-TO	MAX. FACTORED FORCE (LBS)	FACTORED VERT. LOAD (PLF) FROM	TO	LC1 CSI (LC)	MAX	WEBS MEMB. FR-TO	MAX. FACTORED FORCE (LBS)	MAX CSI (LC) UNBRAC LENGTH
E- B	-324 / 0	0.0	0.0	0.04 (4)	7.81			
A- B	0 / 49	-119.4	-119.4	0.16 (1)	10.00			
B- C	-27 / 0	-119.4	-119.4	0.12 (1)	6.25			
E- F	0 / 0	-18.2	-18.2	0.07 (4)	10.00			
F- D	0 / 0	-18.2	-18.2	0.07 (4)	10.00			

SPECIFIED CONCENTRATED LOADS (LBS)

JT	LOC.	LC1	MAX-	MAX+	FACE	DIR.	TYPE	HEEL	CONN.
F	2-0-12	5	1	5	BACK	VERT	TOTAL	—	C1

CONNECTION REQUIREMENTS

1) **C1:** A SUITABLE HANGER/MECHANICAL CONNECTION IS REQUIRED.

DESIGN CRITERIA

*** SPECIAL LOADS ANALYSIS ***
GEOMETRY AND/OR BASIC LOADS CHANGED BY USER.
LOADS WERE DERIVED FROM USER INPUT
NO FURTHER MODIFICATIONS WERE MADE

SPECIFIED LOADS:

TOP CH.	LL	=	34.8	PSF
	DL	=	6.0	PSF
BOT CH.	LL	=	0.0	PSF
	DL	=	7.3	PSF
TOTAL LOAD		=	48.1	PSF

SPACING = 24.0 IN. C/C

*** NON STANDARD GIRDER ***
ADDT'L USER-DEFINED LOADS APPLIED TO ALL LOAD CASES.

THIS TRUSS IS DESIGNED FOR RESIDENTIAL OR SMALL BUILDING REQUIREMENTS OF PART 9, NBCC 2015

THIS DESIGN COMPLIES WITH:
- PART 9 OF BCBC 2018 , NBC-2019AE
- PART 9 OF OBC 2012 (2019 AMENDMENT)
- CSA 086-14
- TPIC 2014

DESIGN ASSUMPTIONS
-OVERHANG NOT TO BE ALTERED OR CUT OFF.

(55 % OF 48.1 P.S.F. G.S.L. PLUS 8.4 P.S.F. RAIN LOAD) EQUALS 34.8 P.S.F. SPECIFIED ROOF LIVE LOAD

ALLOWABLE DEFL.(LL)= L/360 (0.19")
CALCULATED VERT. DEFL.(LL) = L/ 999 (0.00")
ALLOWABLE DEFL.(TL)= L/360 (0.19")
CALCULATED VERT. DEFL.(TL) = L/ 999 (0.01")

CSI: TC=0.16/0.97 (A-B:1) , BC=0.07/0.97 (D-E:4) , WB=0.00/0.97 (n/a:0) , SSI=0.10/1.00 (A-B:1)

DOL LUMBER=1.00 NAIL=1.00 LS BEND=1.10 COMP=1.10 SHEAR=1.10 TENS= 1.10

COMPANION LIVE LOAD FACTOR = 1.00

TRUSS PLATE MANUFACTURER IS NOT RESPONSIBLE FOR QUALITY CONTROL IN THE TRUSS MANUFACTURING PLANT .

NAIL VALUES

PLATE	GRIP(DRY) (PSI) MAX	MIN	SHEAR (PLI) MAX	MIN	SECTION (PLI) MAX	MIN
MT20	650	371	1747	788	1987	1873

PLATE PLACEMENT TOL. = 0.250 inches

PLATE ROTATION TOL. = 5.0 Deg.

JSI GRIP= 0.21 (B) (INPUT = 0.90)
JSI METAL= 0.17 (B) (INPUT = 1.00)

LICENSED PROFESSIONAL ENGINEER
N.A. EL-MASRI
PROVINCE OF ONTARIO
Jul 07, 2023

READ ALL NOTES ON THIS PAGE AND ON THE ENGINEERING NOTES: TRUSSES. THE NOTE PAGE IS AN INTEGRAL PART OF THIS DRAWING AS IT CONTAINS SPECIFICATIONS AND CRITERIA USED IN THE DESIGN OF THIS COMPONENT.

KOTT

CORPORATION OF THE CITY OF OSHAWA
TRUE COPY
OF PERMIT PLANS
Oct 31 2023
PER: C Marr
CHIEF BUILDING OFFICIAL

JOB NAME	TRUSS NAME	QUANTITY	PLY	JOB DESC.	DRWG NO.
NE0723-038	J07	2	1	GREENPARK - ZADORRA ESTATES - ROSE 10-2	

MHP 23031

Version 8.630 S Mar 22 2023 MiTek Industries, Inc. Fri Jul 7 15:07:27 2023 Page 1
ID:5vUDB17_Ic6Oj0vAxsr4RFzBM45-tNUMDSdfHdY6SO4TngsMsM8e6Pkn8KZVImxywSz_RAE

-1-3-8 1-3-8 0-0 1-10-15 1-10-15 4-1-1 6-0-0

Scale = 1:17.2

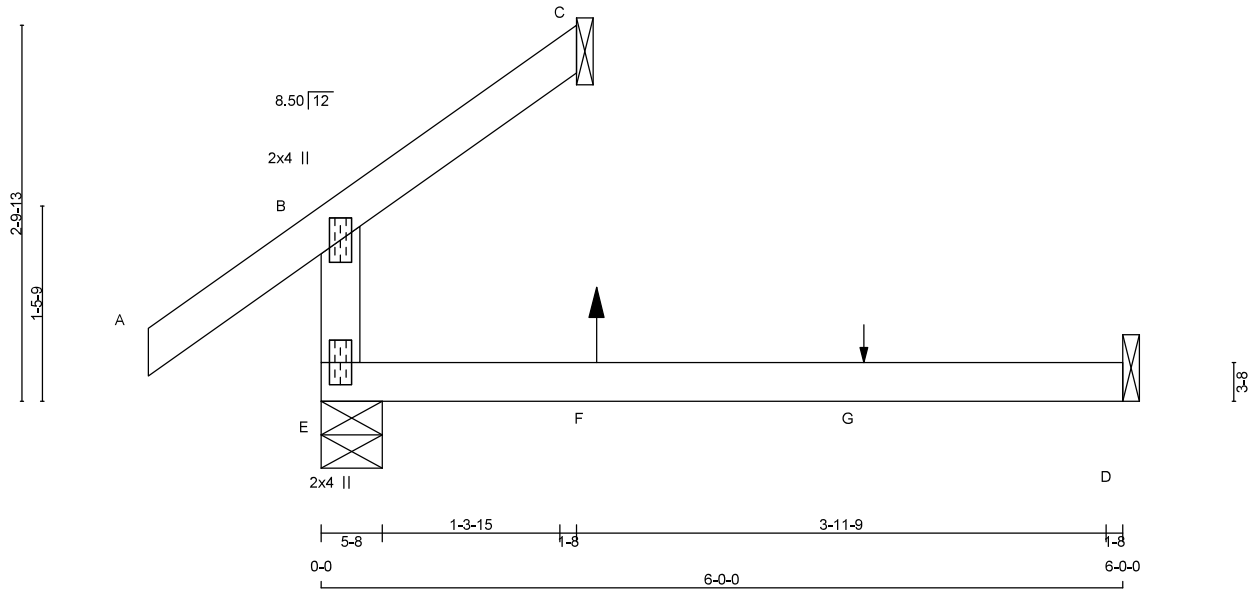

TOTAL WEIGHT = 2 X 13 = 25 lb [M]

LUMBER
N. L. G. A. RULES

CHORDS	SIZE		LUMBER	DESCR.
E - B	2x4	DRY	No.2	SPF
A - C	2x4	DRY	No.2	SPF
E - D	2x4	DRY	No.2	SPF

DRY: SEASONED LUMBER.

PLATES (table is in inches)

JT	TYPE	PLATES	W	LEN	Y	X
B	TMV+p	MT20	2.0	4.0		
E	BMV1+p	MT20	2.0	4.0		

DIMENSIONS, SUPPORTS AND LOADINGS SPECIFIED BY FABRICATOR TO BE VERIFIED BY BUILDING DESIGNER

BEARINGS

JT	FACTORED GROSS REACTION VERT	HORZ	MAXIMUM FACTORED GROSS REACTION DOWN	HORZ	UPLIFT	INPUT BRG IN-SX	REQRD BRG IN-SX
E	370	0	370	0	0	5-8	1-8
C	81	0	81	0	0	1-8	1-8
D	44	0	53	0	0	1-8	1-8

SEE MITEK STANDARD DETAIL MSD2015-H FOR CONNECTION TO JOINT(S) C , D

UNFACTORED REACTIONS

JT	1ST LCASE COMBINED	MAX./MIN. COMPONENT REACTIONS SNOW	LIVE	PERM.LIVE	WIND	DEAD	SOIL
E	257	192 / 0	0 / 0	0 / 0	0 / 0	65 / 0	0 / 0
C	58	34 / 0	0 / 0	0 / 0	0 / 0	24 / 0	0 / 0
D	36	0 / -2	0 / 0	0 / 0	0 / 0	38 / 0	0 / 0

BEARING MATERIAL TO BE SPF NO.2 OR BETTER AT JOINT(S) E, C

BRACING
TOP CHORD TO BE SHEATHED OR MAX. PURLIN SPACING = 6.25 FT.
MAX. UNBRACED BOTTOM CHORD LENGTH = 10.00 FT OR RIGID CEILING DIRECTLY APPLIED.

ALL PITCH BREAKS AND PERIMETER CORNER JOINTS MUST BE LATERALLY RESTRAINED.

LOADING
TOTAL LOAD CASES: (4)

CHORDS MEMB. FR-TO	MAX. FACTORED FORCE (LBS)	FACTORED VERT. LOAD (PLF) FROM	TO	LC1 CSI (LC)	MAX UNBRAC LENGTH	WEBS MEMB. FR-TO	MAX. FACTORED FORCE (LBS)	MAX CSI (LC)
E- B	-312 / 0	0.0	0.0	0.10 (4)	7.81			
A- B	0 / 47	-119.4	-119.4	0.16 (1)	10.00			
B- C	-19 / 10	-119.4	-119.4	0.09 (1)	6.25			
E- F	0 / 0	-18.2	-18.2	0.15 (4)	10.00			
F- G	0 / 0	-18.2	-18.2	0.15 (4)	10.00			
G- D	0 / 0	-18.2	-18.2	0.15 (4)	10.00			

SPECIFIED CONCENTRATED LOADS (LBS)

JT	LOC.	LC1	MAX-	MAX+	FACE	DIR.	TYPE	HEEL	CONN.
F	2-0-12	5	1	5	FRONT	VERT	TOTAL	—	C1
G	4-0-12	1	1	—	FRONT	VERT	TOTAL	—	C1

CONNECTION REQUIREMENTS

1) **C1:** A SUITABLE HANGER/MECHANICAL CONNECTION IS REQUIRED.

DESIGN CRITERIA

*** SPECIAL LOADS ANALYSIS ***
GEOMETRY AND/OR BASIC LOADS CHANGED BY USER.
LOADS WERE DERIVED FROM USER INPUT
NO FURTHER MODIFICATIONS WERE MADE

SPECIFIED LOADS:

TOP CH.	LL	=	34.8	PSF
	DL	=	6.0	PSF
BOT CH.	LL	=	0.0	PSF
	DL	=	7.3	PSF
TOTAL LOAD		=	48.1	PSF

SPACING = 24.0 IN. C/C

*** NON STANDARD GIRDER ***
ADDT'L USER-DEFINED LOADS APPLIED TO ALL LOAD CASES.

THIS TRUSS IS DESIGNED FOR RESIDENTIAL OR SMALL BUILDING REQUIREMENTS OF PART 9, NBCC 2015

THIS DESIGN COMPLIES WITH:
- PART 9 OF BCBC 2018 , NBC-2019AE
- PART 9 OF OBC 2012 (2019 AMENDMENT)
- CSA 086-14
- TPIC 2014

DESIGN ASSUMPTIONS
-OVERHANG NOT TO BE ALTERED OR CUT OFF.

(55 % OF 48.1 P.S.F. G.S.L. PLUS 8.4 P.S.F. RAIN LOAD) EQUALS 34.8 P.S.F. SPECIFIED ROOF LIVE LOAD

ALLOWABLE DEFL.(LL)= L/360 (0.20")
CALCULATED VERT. DEFL.(LL) = L/ 999 (0.01")
ALLOWABLE DEFL.(TL)= L/360 (0.20")
CALCULATED VERT. DEFL.(TL) = L/ 999 (0.04")

CSI: TC=0.16/0.97 (A-B:1) , BC=0.15/0.97 (D-E:4) , WB=0.00/0.97 (n/a:0) , SSI=0.10/1.00 (A-B:1)

DOL LUMBER=1.00 NAIL=1.00 LS BEND=1.10 COMP=1.10 SHEAR=1.10 TENS= 1.10

COMPANION LIVE LOAD FACTOR = 1.00

TRUSS PLATE MANUFACTURER IS NOT RESPONSIBLE FOR QUALITY CONTROL IN THE TRUSS MANUFACTURING PLANT .

NAIL VALUES

PLATE	GRIP(DRY) (PSI) MAX	MIN	SHEAR (PLI) MAX	MIN	SECTION (PLI) MAX	MIN
MT20	650	371	1747	788	1987	1873

PLATE PLACEMENT TOL. = 0.250 inches

PLATE ROTATION TOL. = 5.0 Deg.

JSI GRIP= 0.20 (B) (INPUT = 0.90)
JSI METAL= 0.16 (B) (INPUT = 1.00)

LICENSED PROFESSIONAL ENGINEER
N.A. EL-MASRI
PROVINCE OF ONTARIO
Jul 07, 2023

READ ALL NOTES ON THIS PAGE AND ON THE ENGINEERING NOTES: TRUSSES. THE NOTE PAGE IS AN INTEGRAL PART OF THIS DRAWING AS IT CONTAINS SPECIFICATIONS AND CRITERIA USED IN THE DESIGN OF THIS COMPONENT.

KOTT

CORPORATION OF THE CITY OF OSHAWA
TRUE COPY
OF PERMIT PLANS
Oct 31 2023
PER: C Marr
CHIEF BUILDING OFFICIAL

JOB NAME	TRUSS NAME	QUANTITY	PLY	JOB DESC.	DRWG NO.
NE0723-038	J08	1	1	GREENPARK - ZADORRA ESTATES - ROSE 10-2	

MHP 23031

TRUSS DESC.

Version 8.630 S Mar 22 2023 MiTek Industries, Inc. Fri Jul 7 15:07:27 2023 Page 1
ID:5vUDB17_Ic6Oj0vAxsr4RFzBM45-tNUMDSdfHdY6SO4TngsMsM8e5Pkn8KZVImxywSz_RAE

Scale = 1:18.0

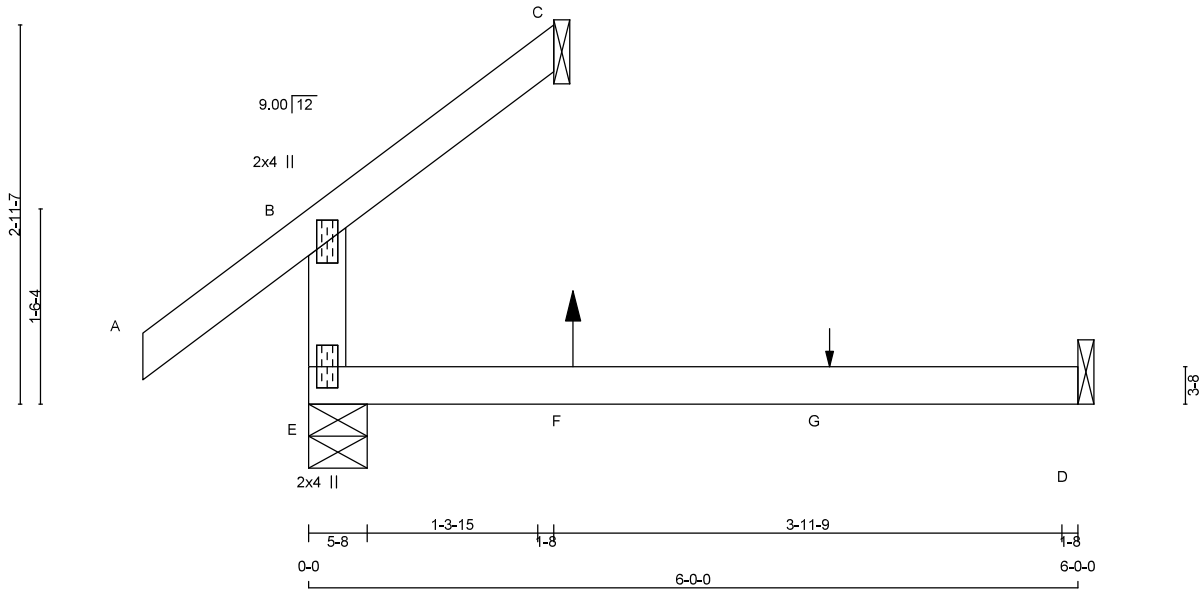

TOTAL WEIGHT = 13 lb
[M]

LUMBER
N. L. G. A. RULES

CHORDS	SIZE		LUMBER	DESCR.
E - B	2x4	DRY	No.2	SPF
A - C	2x4	DRY	No.2	SPF
E - D	2x4	DRY	No.2	SPF

DRY: SEASONED LUMBER.

PLATES (table is in inches)

JT	TYPE	PLATES	W	LEN	Y	X
B	TMV+p	MT20	2.0	4.0		
E	BMV1+p	MT20	2.0	4.0		

DIMENSIONS, SUPPORTS AND LOADINGS SPECIFIED BY FABRICATOR TO BE VERIFIED BY BUILDING DESIGNER

BEARINGS

JT	FACTORED GROSS REACTION VERT	HORZ	MAXIMUM FACTORED GROSS REACTION DOWN	HORZ	UPLIFT	INPUT BRG IN-SX	REQRD BRG IN-SX
E	370	0	370	0	0	5-8	1-8
C	80	0	80	0	0	1-8	1-8
D	44	0	53	0	0	1-8	1-8

SEE MITEK STANDARD DETAIL MSD2015-H FOR CONNECTION TO JOINT(S) C , D

UNFACTORED REACTIONS

JT	1ST LCASE COMBINED	MAX./MIN. COMPONENT REACTIONS SNOW	LIVE	PERM.LIVE	WIND	DEAD	SOIL
E	258	192 / 0	0 / 0	0 / 0	0 / 0	66 / 0	0 / 0
C	57	34 / 0	0 / 0	0 / 0	0 / 0	23 / 0	0 / 0
D	36	0 / -3	0 / 0	0 / 0	0 / 0	38 / 0	0 / 0

BEARING MATERIAL TO BE SPF NO.2 OR BETTER AT JOINT(S) E, C

BRACING
TOP CHORD TO BE SHEATHED OR MAX. PURLIN SPACING = 6.25 FT.
MAX. UNBRACED BOTTOM CHORD LENGTH = 10.00 FT OR RIGID CEILING DIRECTLY APPLIED.

ALL PITCH BREAKS AND PERIMETER CORNER JOINTS MUST BE LATERALLY RESTRAINED.

LOADING
TOTAL LOAD CASES: (4)

CHORDS MEMB. FR-TO	MAX. FACTORED FORCE (LBS)	FACTORED VERT. LOAD (PLF) FROM	TO	LC1 MAX CSI (LC)	WEBS MAX. UNBRAC LENGTH	MEMB. FR-TO	MAX. FACTORED FORCE (LBS)	MAX CSI (LC)
E- B	-313 / 0	0.0	0.0	0.10 (4)	7.81			
A- B	0 / 49	-119.4	-119.4	0.16 (1)	10.00			
B- C	-20 / 10	-119.4	-119.4	0.09 (1)	6.25			
E- F	0 / 0	-18.2	-18.2	0.15 (4)	10.00			
F- G	0 / 0	-18.2	-18.2	0.15 (4)	10.00			
G- D	0 / 0	-18.2	-18.2	0.15 (4)	10.00			

SPECIFIED CONCENTRATED LOADS (LBS)

JT	LOC.	LC1	MAX-	MAX+	FACE	DIR.	TYPE	HEEL	CONN.
F	2-0-12	5	1	5	BACK	VERT	TOTAL	—	C1
G	4-0-12	1	1	—	BACK	VERT	TOTAL	—	C1

CONNECTION REQUIREMENTS

1) **C1:** A SUITABLE HANGER/MECHANICAL CONNECTION IS REQUIRED.

DESIGN CRITERIA

*** SPECIAL LOADS ANALYSIS ***
GEOMETRY AND/OR BASIC LOADS CHANGED BY USER.
LOADS WERE DERIVED FROM USER INPUT
NO FURTHER MODIFICATIONS WERE MADE

SPECIFIED LOADS:

TOP CH.	LL	=	34.8	PSF
	DL	=	6.0	PSF
BOT CH.	LL	=	0.0	PSF
	DL	=	7.3	PSF
TOTAL LOAD		=	48.1	PSF

SPACING = 24.0 IN. C/C

*** NON STANDARD GIRDER ***
ADDT'L USER-DEFINED LOADS APPLIED TO ALL LOAD CASES.

THIS TRUSS IS DESIGNED FOR RESIDENTIAL OR SMALL BUILDING REQUIREMENTS OF PART 9, NBCC 2015

THIS DESIGN COMPLIES WITH:
- PART 9 OF BCBC 2018 , NBC-2019AE
- PART 9 OF OBC 2012 (2019 AMENDMENT)
- CSA 086-14
- TPIC 2014

DESIGN ASSUMPTIONS
-OVERHANG NOT TO BE ALTERED OR CUT OFF.

(55 % OF 48.1 P.S.F. G.S.L. PLUS 8.4 P.S.F. RAIN LOAD) EQUALS 34.8 P.S.F. SPECIFIED ROOF LIVE LOAD

ALLOWABLE DEFL.(LL)= L/360 (0.20")
CALCULATED VERT. DEFL.(LL) = L/ 999 (0.01")
ALLOWABLE DEFL.(TL)= L/360 (0.20")
CALCULATED VERT. DEFL.(TL) = L/ 999 (0.04")

CSI: TC=0.16/0.97 (A-B:1) , BC=0.15/0.97 (D-E:4) , WB=0.00/0.97 (n/a:0) , SSI=0.10/1.00 (A-B:1)

DOL LUMBER=1.00 NAIL=1.00 LS BEND=1.10 COMP=1.10 SHEAR=1.10 TENS= 1.10

COMPANION LIVE LOAD FACTOR = 1.00

TRUSS PLATE MANUFACTURER IS NOT RESPONSIBLE FOR QUALITY CONTROL IN THE TRUSS MANUFACTURING PLANT .

NAIL VALUES

PLATE	GRIP(DRY) (PSI) MAX	MIN	SHEAR (PLI) MAX	MIN	SECTION (PLI) MAX	MIN
MT20	650	371	1747	788	1987	1873

PLATE PLACEMENT TOL. = 0.250 inches

PLATE ROTATION TOL. = 5.0 Deg.

JSI GRIP= 0.20 (B) (INPUT = 0.90)
JSI METAL= 0.17 (B) (INPUT = 1.00)

LICENSED PROFESSIONAL ENGINEER
N.A. EL-MASRI
PROVINCE OF ONTARIO
Jul 07, 2023

READ ALL NOTES ON THIS PAGE AND ON THE ENGINEERING NOTES: TRUSSES. THE NOTE PAGE IS AN INTEGRAL PART OF THIS DRAWING AS IT CONTAINS SPECIFICATIONS AND CRITERIA USED IN THE DESIGN OF THIS COMPONENT.

KOTT

CORPORATION OF THE CITY OF OSHAWA
TRUE COPY
OF PERMIT PLANS
Oct 31 2023
PER: C Marr
CHIEF BUILDING OFFICIAL

JOB NAME	TRUSS NAME	QUANTITY	PLY	JOB DESC.	DRWG NO.
NE0723-038	J09	2	1	GREENPARK - ZADORRA ESTATES - ROSE 10-2	

MHP 23031

Version 8.630 S Mar 22 2023 MiTek Industries, Inc. Fri Jul 7 15:07:28 2023 Page 1
ID:5vUDB17_Ic6Oj0vAxsr4RFzBM45-LZ2kRodH2xgz4YffLNNbOagnXp60tnpezQhWSuz_RAD

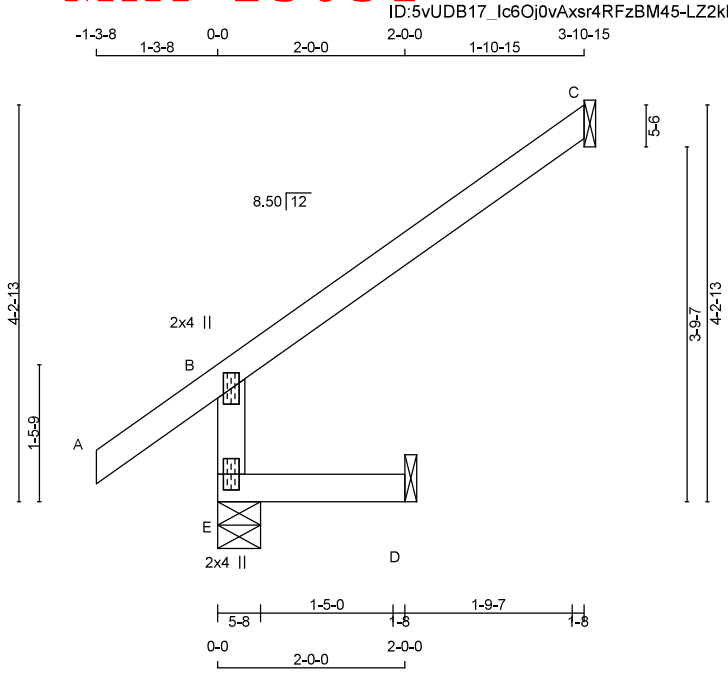

TOTAL WEIGHT = 2 X 11 = 22 lb [M]

LUMBER
N. L. G. A. RULES

CHORDS	SIZE		LUMBER	DESCR.
E - B	2x4	DRY	No.2	SPF
A - C	2x4	DRY	No.2	SPF
E - D	2x4	DRY	No.2	SPF

DRY: SEASONED LUMBER.

PLATES (table is in inches)

JT	TYPE	PLATES	W	LEN	Y	X
B	TMV+p	MT20	2.0	4.0		
E	BMV1+p	MT20	2.0	4.0		

DIMENSIONS, SUPPORTS AND LOADINGS SPECIFIED BY FABRICATOR TO BE VERIFIED BY BUILDING DESIGNER

BEARINGS

JT	FACTORED GROSS REACTION VERT	HORZ	MAXIMUM FACTORED GROSS REACTION DOWN	HORZ	UPLIFT	INPUT BRG IN-SX	REQRD BRG IN-SX
E	476	0	476	0	0	5-8	1-8
C	175	0	175	0	0	1-8	1-8
D	17	0	19	0	0	1-8	1-8

SEE MITEK STANDARD DETAIL MSD2015-H FOR CONNECTION TO JOINT(S) C , D

UNFACTORED REACTIONS

JT	1ST LCASE COMBINED	MAX./MIN. COMPONENT REACTIONS SNOW	LIVE	PERM.LIVE	WIND	DEAD	SOIL
E	328	266 / 0	0 / 0	0 / 0	0 / 0	62 / 0	0 / 0
C	120	102 / 0	0 / 0	0 / 0	0 / 0	18 / 0	0 / 0
D	13	0 / 0	0 / 0	0 / 0	0 / 0	13 / 0	0 / 0

BEARING MATERIAL TO BE SPF NO.2 OR BETTER AT JOINT(S) E

BRACING
TOP CHORD TO BE SHEATHED OR MAX. PURLIN SPACING = 6.25 FT.
MAX. UNBRACED BOTTOM CHORD LENGTH = 10.00 FT OR RIGID CEILING DIRECTLY APPLIED.

ALL PITCH BREAKS AND PERIMETER CORNER JOINTS MUST BE LATERALLY RESTRAINED.

LOADING
TOTAL LOAD CASES: (5)

CHORDS

MEMB. FR-TO	MAX. FACTORED FORCE (LBS)	FACTORED VERT. LOAD LC1 (PLF) FROM	TO	MAX CSI (LC)
E- B	-456 / 0	0.0	0.0	0.01 (4)
A- B	0 / 47	-119.4	-119.4	0.16 (1)
B- C	-34 / 0	-119.4	-119.4	0.31 (1)
E- D	0 / 0	-18.2	-18.2	0.02 (4)

WEBS

MEMB. FR-TO	MAX. UNBRAC LENGTH	MAX. FACTORED FORCE (LBS)	MAX CSI (LC)
E- B	7.81		
A- B	10.00		
B- C	6.25		
E- D	10.00		

CANTILEVER ANALYSIS HAS BEEN CONSIDERED IN THIS DESIGN

PATTERN-LOADING CHECK APPLIED TO THIS TRUSS.

DESIGN CRITERIA

SPECIFIED LOADS:

TOP CH.	LL	=	34.8	PSF
	DL	=	6.0	PSF
BOT CH.	LL	=	0.0	PSF
	DL	=	7.3	PSF
TOTAL LOAD		=	48.1	PSF

SPACING = 24.0 IN. C/C

THIS TRUSS IS DESIGNED FOR RESIDENTIAL OR SMALL BUILDING REQUIREMENTS OF PART 9, NBCC 2015

THIS DESIGN COMPLIES WITH:
- PART 9 OF BCBC 2018 , NBC-2019AE
- PART 9 OF OBC 2012 (2019 AMENDMENT)
- CSA 086-14
- TPIC 2014

DESIGN ASSUMPTIONS
-OVERHANG NOT TO BE ALTERED OR CUT OFF.

(55 % OF 48.1 P.S.F. G.S.L. PLUS 8.4 P.S.F. RAIN LOAD) EQUALS 34.8 P.S.F. SPECIFIED ROOF LIVE LOAD

ALLOWABLE DEFL.(LL)= L/360 (0.19")
CALCULATED VERT. DEFL.(LL) = L/ 999 (0.00")
ALLOWABLE DEFL.(TL)= L/360 (0.19")
CALCULATED VERT. DEFL.(TL) = L/ 999 (0.00")

CSI: TC=0.31/0.97 (B-C:1) , BC=0.02/0.97 (D-E:4) , WB=0.00/0.97 (n/a:0) , SSI=0.19/1.00 (B-C:1)

DOL LUMBER=1.00 NAIL=1.00 LS BEND=1.10 COMP=1.10 SHEAR=1.10 TENS= 1.10

COMPANION LIVE LOAD FACTOR = 1.00

TRUSS PLATE MANUFACTURER IS NOT RESPONSIBLE FOR QUALITY CONTROL IN THE TRUSS MANUFACTURING PLANT .

NAIL VALUES

PLATE	GRIP(DRY) (PSI) MAX	MIN	SHEAR (PLI) MAX	MIN	SECTION (PLI) MAX	MIN
MT20	650	371	1747	788	1987	1873

PLATE PLACEMENT TOL. = 0.250 inches

PLATE ROTATION TOL. = 5.0 Deg.

JSI GRIP= 0.29 (B) (INPUT = 0.90)
JSI METAL= 0.24 (B) (INPUT = 1.00)

LICENSED PROFESSIONAL ENGINEER
N.A. EL-MASRI
PROVINCE OF ONTARIO
Jul 07, 2023

READ ALL NOTES ON THIS PAGE AND ON THE ENGINEERING NOTES: TRUSSES. THE NOTE PAGE IS AN INTEGRAL PART OF THIS DRAWING AS IT CONTAINS SPECIFICATIONS AND CRITERIA USED IN THE DESIGN OF THIS COMPONENT.

KOTT

CORPORATION OF THE CITY OF OSHAWA
TRUE COPY
OF PERMIT PLANS
Oct 31 2023
PER: C Marr
CHIEF BUILDING OFFICIAL

JOB NAME	TRUSS NAME	QUANTITY	PLY	JOB DESC.	DRWG NO.
NE0723-038	J10	1	1	GREENPARK - ZADORRA ESTATES - ROSE 10-2	

MHP 23031

TRUSS DESC.

Version 8.630 S Mar 22 2023 MiTek Industries, Inc. Fri Jul 7 15:07:28 2023 Page 1
ID:5vUDB17_Ic6Oj0vAxsr4RFzBM45-LZ2kRodH2xgz4YffLNNbOagnXp60tnpezQhWSuz_RAD

Scale = 1:25.7

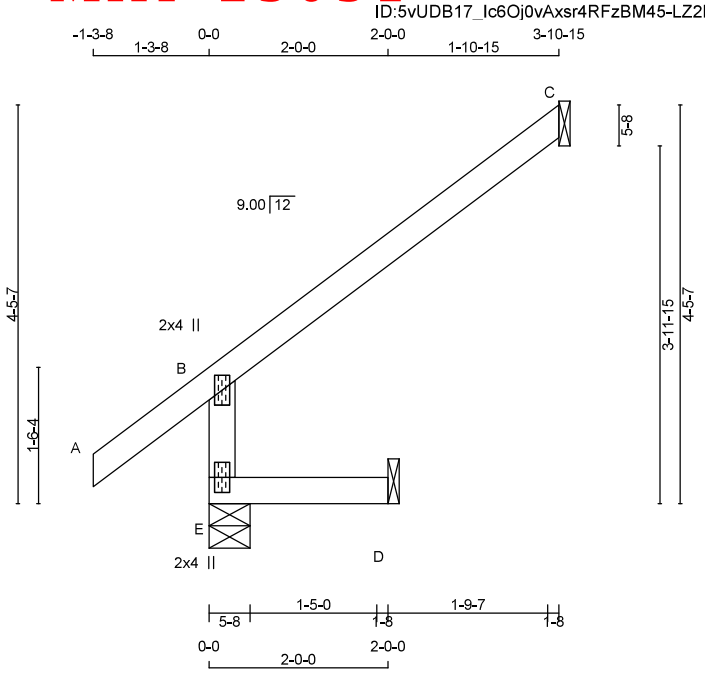

TOTAL WEIGHT = 11 lb
[M]

LUMBER
N. L. G. A. RULES

CHORDS	SIZE		LUMBER	DESCR.
E - B	2x4	DRY	No.2	SPF
A - C	2x4	DRY	No.2	SPF
E - D	2x4	DRY	No.2	SPF

DRY: SEASONED LUMBER.

PLATES (table is in inches)

JT	TYPE	PLATES	W	LEN	Y	X
B	TMV+p	MT20	2.0	4.0		
E	BMV1+p	MT20	2.0	4.0		

DIMENSIONS, SUPPORTS AND LOADINGS SPECIFIED BY FABRICATOR TO BE VERIFIED BY BUILDING DESIGNER

BEARINGS

JT	FACTORED GROSS REACTION VERT	HORZ	MAXIMUM FACTORED GROSS REACTION DOWN	HORZ	UPLIFT	INPUT BRG IN-SX	REQRD BRG IN-SX
E	476	0	476	0	0	5-8	1-8
C	175	0	175	0	0	1-8	1-8
D	17	0	19	0	0	1-8	1-8

SEE MITEK STANDARD DETAIL MSD2015-H FOR CONNECTION TO JOINT(S) C , D

UNFACTORED REACTIONS

JT	1ST LCASE COMBINED	MAX./MIN. COMPONENT REACTIONS SNOW	LIVE	PERM.LIVE	WIND	DEAD	SOIL
E	328	266 / 0	0 / 0	0 / 0	0 / 0	62 / 0	0 / 0
C	120	102 / 0	0 / 0	0 / 0	0 / 0	18 / 0	0 / 0
D	13	0 / 0	0 / 0	0 / 0	0 / 0	13 / 0	0 / 0

BEARING MATERIAL TO BE SPF NO.2 OR BETTER AT JOINT(S) E

BRACING
TOP CHORD TO BE SHEATHED OR MAX. PURLIN SPACING = 6.25 FT.
MAX. UNBRACED BOTTOM CHORD LENGTH = 10.00 FT OR RIGID CEILING DIRECTLY APPLIED.

ALL PITCH BREAKS AND PERIMETER CORNER JOINTS MUST BE LATERALLY RESTRAINED.

LOADING
TOTAL LOAD CASES: (5)

CHORDS MEMB. FR-TO	MAX. FACTORED FORCE (LBS)	FACTORED VERT. LOAD (PLF) FROM	TO	LC1 MAX CSI (LC)	WEBS MAX. UNBRAC LENGTH	MEMB. FR-TO	MAX. FACTORED FORCE (LBS)	MAX CSI (LC)
E- B	-456 / 0	0.0	0.0	0.01 (4)	7.81			
A- B	0 / 49	-119.4	-119.4	0.16 (1)	10.00			
B- C	-35 / 0	-119.4	-119.4	0.31 (1)	6.25			
E- D	0 / 0	-18.2	-18.2	0.02 (4)	10.00			

CANTILEVER ANALYSIS HAS BEEN CONSIDERED IN THIS DESIGN

PATTERN-LOADING CHECK APPLIED TO THIS TRUSS.

DESIGN CRITERIA

SPECIFIED LOADS:

TOP CH.	LL	=	34.8	PSF
	DL	=	6.0	PSF
BOT CH.	LL	=	0.0	PSF
	DL	=	7.3	PSF
TOTAL LOAD		=	48.1	PSF

SPACING = 24.0 IN. C/C

THIS TRUSS IS DESIGNED FOR RESIDENTIAL OR SMALL BUILDING REQUIREMENTS OF PART 9, NBCC 2015

THIS DESIGN COMPLIES WITH:
- PART 9 OF BCBC 2018 , NBC-2019AE
- PART 9 OF OBC 2012 (2019 AMENDMENT)
- CSA 086-14
- TPIC 2014

DESIGN ASSUMPTIONS
-OVERHANG NOT TO BE ALTERED OR CUT OFF.

(55 % OF 48.1 P.S.F. G.S.L. PLUS 8.4 P.S.F. RAIN LOAD) EQUALS 34.8 P.S.F. SPECIFIED ROOF LIVE LOAD

ALLOWABLE DEFL.(LL)= L/360 (0.19")
CALCULATED VERT. DEFL.(LL) = L/ 999 (0.00")
ALLOWABLE DEFL.(TL)= L/360 (0.19")
CALCULATED VERT. DEFL.(TL) = L/ 999 (0.00")

CSI: TC=0.31/0.97 (B-C:1) , BC=0.02/0.97 (D-E:4) , WB=0.00/0.97 (n/a:0) , SSI=0.18/1.00 (B-C:1)

DOL LUMBER=1.00 NAIL=1.00 LS BEND=1.10 COMP=1.10 SHEAR=1.10 TENS= 1.10

COMPANION LIVE LOAD FACTOR = 1.00

TRUSS PLATE MANUFACTURER IS NOT RESPONSIBLE FOR QUALITY CONTROL IN THE TRUSS MANUFACTURING PLANT .

NAIL VALUES

PLATE	GRIP(DRY) (PSI) MAX	MIN	SHEAR (PLI) MAX	MIN	SECTION (PLI) MAX	MIN
MT20	650	371	1747	788	1987	1873

PLATE PLACEMENT TOL. = 0.250 inches

PLATE ROTATION TOL. = 5.0 Deg.

JSI GRIP= 0.30 (B) (INPUT = 0.90)
JSI METAL= 0.24 (B) (INPUT = 1.00)

LICENSED PROFESSIONAL ENGINEER
N.A. EL-MASRI
PROVINCE OF ONTARIO
Jul 07, 2023

READ ALL NOTES ON THIS PAGE AND ON THE ENGINEERING NOTES: TRUSSES. THE NOTE PAGE IS AN INTEGRAL PART OF THIS DRAWING AS IT CONTAINS SPECIFICATIONS AND CRITERIA USED IN THE DESIGN OF THIS COMPONENT.

KOTT

CORPORATION OF THE CITY OF OSHAWA
TRUE COPY
OF PERMIT PLANS
Oct 31 2023
PER: C Marr
CHIEF BUILDING OFFICIAL

JOB NAME	TRUSS NAME	QUANTITY	PLY	JOB DESC.	DRWG NO.
NE0723-038	J11	2	1	GREENPARK - ZADORRA ESTATES - ROSE 10-2	

MHP 23031

TRUSS DESC.

Version 8.630 S Mar 22 2023 MiTek Industries, Inc. Fri Jul 7 15:07:29 2023 Page 1
ID:5vUDB17_Ic6Oj0vAxsr4RFzBM45-pIc6e8ewpEoqhiErv5uqxnD_cDSncE3oC4Q3?Kz_RAC

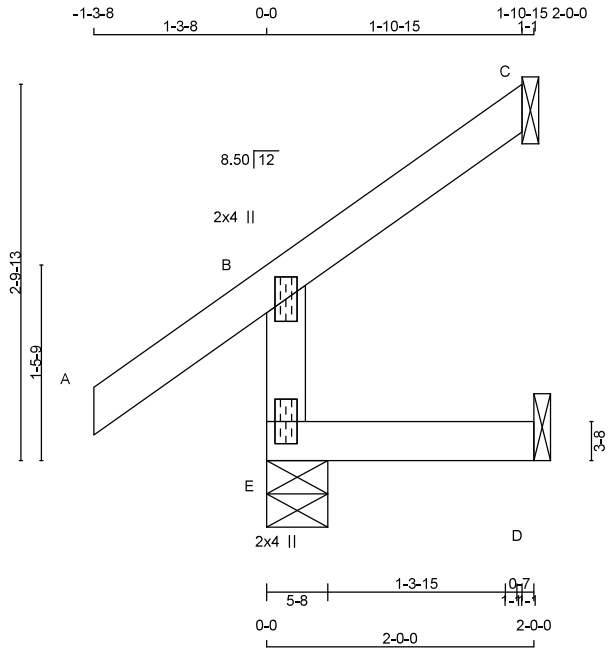

TOTAL WEIGHT = 2 X 8 = 16 lb
[M]

LUMBER
N. L. G. A. RULES

CHORDS	SIZE		LUMBER	DESCR.
E - B	2x4	DRY	No.2	SPF
A - C	2x4	DRY	No.2	SPF
E - D	2x4	DRY	No.2	SPF

DRY: SEASONED LUMBER.

PLATES (table is in inches)

JT	TYPE	PLATES	W	LEN	Y	X
B	TMV+p	MT20	2.0	4.0		
E	BMV1+p	MT20	2.0	4.0		

DIMENSIONS, SUPPORTS AND LOADINGS SPECIFIED BY FABRICATOR TO BE VERIFIED BY BUILDING DESIGNER

BEARINGS

JT	FACTORED GROSS REACTION VERT	HORZ	MAXIMUM FACTORED GROSS REACTION DOWN	HORZ	UPLIFT	INPUT BRG IN-SX	REQRD BRG IN-SX
E	355	0	355	0	0	5-8	1-8
C	66	0	66	0	-31	1-8	1-8
D	8	0	18	0	-4	1-8	1-8

SEE MITEK STANDARD DETAIL MSD2015-H FOR CONNECTION TO JOINT(S) C , D

PROVIDE ANCHORAGE AT BEARING JOINT C FOR 150 LBS FACTORED UPLIFT
PROVIDE ANCHORAGE AT BEARING JOINT D FOR 150 LBS FACTORED UPLIFT

UNFACTORED REACTIONS

JT	1ST LCASE COMBINED	MAX./MIN. COMPONENT REACTIONS SNOW	LIVE	PERM.LIVE	WIND	DEAD	SOIL
E	245	197 / 0	0 / 0	0 / 0	0 / 0	48 / 0	0 / 0
C	45	38 / -24	0 / 0	0 / 0	0 / 0	7 / 0	0 / 0
D	7	0 / -10	0 / 0	0 / 0	0 / 0	13 / 0	0 / 0

BEARING MATERIAL TO BE SPF NO.2 OR BETTER AT JOINT(S) E, C

BRACING
TOP CHORD TO BE SHEATHED OR MAX. PURLIN SPACING = 6.25 FT.
MAX. UNBRACED BOTTOM CHORD LENGTH = 10.00 FT OR RIGID CEILING DIRECTLY APPLIED.

ALL PITCH BREAKS AND PERIMETER CORNER JOINTS MUST BE LATERALLY RESTRAINED.

LOADING
TOTAL LOAD CASES: (5)

CHORDS MEMB. FR-TO	MAX. FACTORED FORCE (LBS)	VERT. LOAD (PLF) FROM	TO	LC1	MAX CSI (LC)	WEBS MEMB. FR-TO	MAX. UNBRAC LENGTH	MAX. FACTORED FORCE (LBS)	MAX CSI (LC)
E- B	-327 / 0	0.0	0.0		0.05 (5)		7.81		
A- B	0 / 47	-119.4	-119.4		0.16 (1)		10.00		
B- C	-28 / 0	-119.4	-119.4		0.13 (1)		6.25		
E- D	0 / 0	-18.2	-18.2		0.05 (5)		10.00		

CANTILEVER ANALYSIS HAS BEEN CONSIDERED IN THIS DESIGN

PATTERN-LOADING CHECK APPLIED TO THIS TRUSS.

DESIGN CRITERIA

SPECIFIED LOADS:

TOP CH.	LL	=	34.8	PSF
	DL	=	6.0	PSF
BOT CH.	LL	=	0.0	PSF
	DL	=	7.3	PSF
TOTAL LOAD		=	48.1	PSF

SPACING = 24.0 IN. C/C

THIS TRUSS IS DESIGNED FOR RESIDENTIAL OR SMALL BUILDING REQUIREMENTS OF PART 9, NBCC 2015

THIS DESIGN COMPLIES WITH:
- PART 9 OF BCBC 2018 , NBC-2019AE
- PART 9 OF OBC 2012 (2019 AMENDMENT)
- CSA 086-14
- TPIC 2014

DESIGN ASSUMPTIONS
-OVERHANG NOT TO BE ALTERED OR CUT OFF.

(55 % OF 48.1 P.S.F. G.S.L. PLUS 8.4 P.S.F. RAIN LOAD) EQUALS 34.8 P.S.F. SPECIFIED ROOF LIVE LOAD

ALLOWABLE DEFL.(LL)= L/360 (0.19")
CALCULATED VERT. DEFL.(LL) = L/ 999 (0.00")
ALLOWABLE DEFL.(TL)= L/360 (0.19")
CALCULATED VERT. DEFL.(TL) = L/ 999 (0.00")

CSI: TC=0.16/0.97 (A-B:1) , BC=0.05/0.97 (D-E:5) , WB=0.00/0.97 (n/a:0) , SSI=0.10/1.00 (A-B:1)

DOL LUMBER=1.00 NAIL=1.00 LS BEND=1.10 COMP=1.10 SHEAR=1.10 TENS= 1.10

COMPANION LIVE LOAD FACTOR = 1.00

TRUSS PLATE MANUFACTURER IS NOT RESPONSIBLE FOR QUALITY CONTROL IN THE TRUSS MANUFACTURING PLANT .

NAIL VALUES

PLATE	GRIP(DRY) (PSI) MAX	MIN	SHEAR (PLI) MAX	MIN	SECTION (PLI) MAX	MIN
MT20	650	371	1747	788	1987	1873

PLATE PLACEMENT TOL. = 0.250 inches

PLATE ROTATION TOL. = 5.0 Deg.

JSI GRIP= 0.21 (B) (INPUT = 0.90)
JSI METAL= 0.17 (B) (INPUT = 1.00)

LICENSED PROFESSIONAL ENGINEER
N.A. EL-MASRI
PROVINCE OF ONTARIO
Jul 07, 2023

READ ALL NOTES ON THIS PAGE AND ON THE ENGINEERING NOTES: TRUSSES. THE NOTE PAGE IS AN INTEGRAL PART OF THIS DRAWING AS IT CONTAINS SPECIFICATIONS AND CRITERIA USED IN THE DESIGN OF THIS COMPONENT.

KOTT

CORPORATION OF THE CITY OF OSHAWA
TRUE COPY
OF PERMIT PLANS
Oct 31 2023
PER: C Marr
CHIEF BUILDING OFFICIAL

JOB NAME	TRUSS NAME	QUANTITY	PLY	JOB DESC.	DRWG NO.
NE0723-038	J12	1	1	GREENPARK - ZADORRA ESTATES - ROSE 10-2	

MHP 23031

TRUSS DESC.

Version 8.630 S Mar 22 2023 MiTek Industries, Inc. Fri Jul 7 15:07:29 2023 Page 1
ID:5vUDB17_Ic6Oj0vAxsr4RFzBM45-plc6e8ewpEoqhiErv5uqxnD_bDSncE3oC4Q3?Kz_RAC

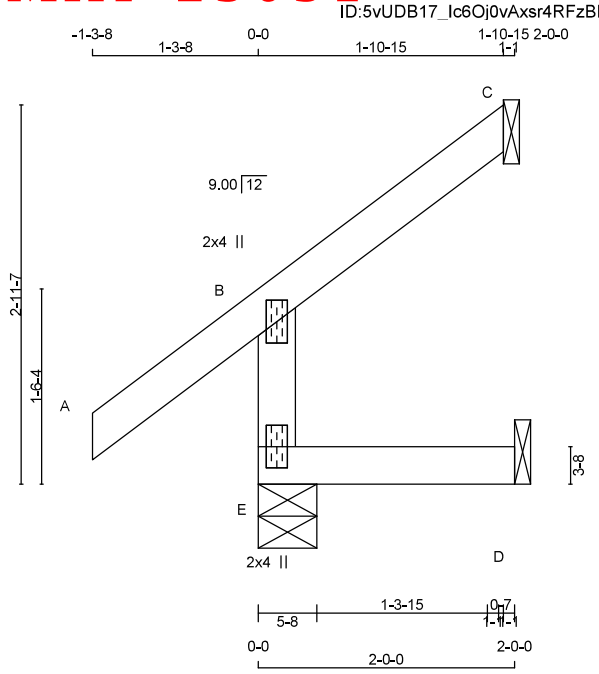

TOTAL WEIGHT = 8 lb
[M]

LUMBER
N. L. G. A. RULES

CHORDS	SIZE		LUMBER	DESCR.
E - B	2x4	DRY	No.2	SPF
A - C	2x4	DRY	No.2	SPF
E - D	2x4	DRY	No.2	SPF

DRY: SEASONED LUMBER.

PLATES (table is in inches)

JT	TYPE	PLATES	W	LEN	Y	X
B	TMV+p	MT20	2.0	4.0		
E	BMV1+p	MT20	2.0	4.0		

DIMENSIONS, SUPPORTS AND LOADINGS SPECIFIED BY FABRICATOR TO BE VERIFIED BY BUILDING DESIGNER

BEARINGS

JT	FACTORED GROSS REACTION VERT	HORZ	MAXIMUM FACTORED GROSS REACTION DOWN	HORZ	UPLIFT	INPUT BRG IN-SX	REQRD BRG IN-SX
E	356	0	356	0	0	5-8	1-8
C	66	0	66	0	-31	1-8	1-8
D	8	0	18	0	-4	1-8	1-8

SEE MITEK STANDARD DETAIL MSD2015-H FOR CONNECTION TO JOINT(S) C , D

PROVIDE ANCHORAGE AT BEARING JOINT C FOR 150 LBS FACTORED UPLIFT
PROVIDE ANCHORAGE AT BEARING JOINT D FOR 150 LBS FACTORED UPLIFT

UNFACTORED REACTIONS

JT	1ST LCASE COMBINED	MAX./MIN. COMPONENT REACTIONS SNOW	LIVE	PERM.LIVE	WIND	DEAD	SOIL
E	245	197 / 0	0 / 0	0 / 0	0 / 0	49 / 0	0 / 0
C	45	37 / -24	0 / 0	0 / 0	0 / 0	7 / 0	0 / 0
D	7	0 / -10	0 / 0	0 / 0	0 / 0	13 / 0	0 / 0

BEARING MATERIAL TO BE SPF NO.2 OR BETTER AT JOINT(S) E, C

BRACING
TOP CHORD TO BE SHEATHED OR MAX. PURLIN SPACING = 6.25 FT.
MAX. UNBRACED BOTTOM CHORD LENGTH = 10.00 FT OR RIGID CEILING DIRECTLY APPLIED.

ALL PITCH BREAKS AND PERIMETER CORNER JOINTS MUST BE LATERALLY RESTRAINED.

LOADING
TOTAL LOAD CASES: (5)

CHORDS MEMB. FR-TO	MAX. FACTORED FORCE (LBS)	VERT. LOAD (PLF) FROM	TO	LC1 MAX CSI (LC)	WEBS MEMB. FR-TO	MAX. UNBRAC LENGTH	MAX. FACTORED FORCE (LBS)	MAX CSI (LC)
E- B	-328 / 0	0.0	0.0	0.05 (5)		7.81		
A- B	0 / 49	-119.4	-119.4	0.16 (1)		10.00		
B- C	-29 / 0	-119.4	-119.4	0.13 (1)		6.25		
E- D	0 / 0	-18.2	-18.2	0.05 (5)		10.00		

CANTILEVER ANALYSIS HAS BEEN CONSIDERED IN THIS DESIGN

PATTERN-LOADING CHECK APPLIED TO THIS TRUSS.

DESIGN CRITERIA

SPECIFIED LOADS:

TOP CH.	LL =	34.8	PSF
	DL =	6.0	PSF
BOT CH.	LL =	0.0	PSF
	DL =	7.3	PSF
TOTAL LOAD	=	48.1	PSF

SPACING = 24.0 IN. C/C

THIS TRUSS IS DESIGNED FOR RESIDENTIAL OR SMALL BUILDING REQUIREMENTS OF PART 9, NBCC 2015

THIS DESIGN COMPLIES WITH:
- PART 9 OF BCBC 2018 , NBC-2019AE
- PART 9 OF OBC 2012 (2019 AMENDMENT)
- CSA 086-14
- TPIC 2014

DESIGN ASSUMPTIONS
-OVERHANG NOT TO BE ALTERED OR CUT OFF.

(55 % OF 48.1 P.S.F. G.S.L. PLUS 8.4 P.S.F. RAIN LOAD) EQUALS 34.8 P.S.F. SPECIFIED ROOF LIVE LOAD

ALLOWABLE DEFL.(LL)= L/360 (0.19")
CALCULATED VERT. DEFL.(LL) = L/ 999 (0.00")
ALLOWABLE DEFL.(TL)= L/360 (0.19")
CALCULATED VERT. DEFL.(TL) = L/ 999 (0.00")

CSI: TC=0.16/0.97 (A-B:1) , BC=0.05/0.97 (D-E:5) , WB=0.00/0.97 (n/a:0) , SSI=0.10/1.00 (A-B:1)

DOL LUMBER=1.00 NAIL=1.00 LS BEND=1.10 COMP=1.10 SHEAR=1.10 TENS= 1.10

COMPANION LIVE LOAD FACTOR = 1.00

TRUSS PLATE MANUFACTURER IS NOT RESPONSIBLE FOR QUALITY CONTROL IN THE TRUSS MANUFACTURING PLANT .

NAIL VALUES

PLATE	GRIP(DRY) (PSI) MAX	MIN	SHEAR (PLI) MAX	MIN	SECTION (PLI) MAX	MIN
MT20	650	371	1747	788	1987	1873

PLATE PLACEMENT TOL. = 0.250 inches

PLATE ROTATION TOL. = 5.0 Deg.

JSI GRIP= 0.21 (B) (INPUT = 0.90)
JSI METAL= 0.17 (B) (INPUT = 1.00)

LICENSED PROFESSIONAL ENGINEER
N.A. EL-MASRI
PROVINCE OF ONTARIO
Jul 07, 2023

READ ALL NOTES ON THIS PAGE AND ON THE ENGINEERING NOTES: TRUSSES. THE NOTE PAGE IS AN INTEGRAL PART OF THIS DRAWING AS IT CONTAINS SPECIFICATIONS AND CRITERIA USED IN THE DESIGN OF THIS COMPONENT.

KOTT

CORPORATION OF THE CITY OF OSHAWA
TRUE COPY
OF PERMIT PLANS
Oct 31 2023
PER:
CHIEF BUILDING OFFICIAL

JOB NAME	TRUSS NAME	QUANTITY	PLY	JOB DESC.	DRWG NO.
NE0723-038	J13	2	1	GREENPARK - ZADORRA ESTATES - ROSE 10-2	

MHP 23031

TRUSS DESC.

Version 8.630 S Mar 22 2023 MiTek Industries, Inc. Fri Jul 7 15:07:30 2023 Page 1
ID:5vUDB17_Ic6Oj0vAxsr4RFzBM45-HyAUsUfYaYwhJsp2ToP3T?I9Lcn0LhJxRkAdXnz_RAB

Scale = 1:18.0

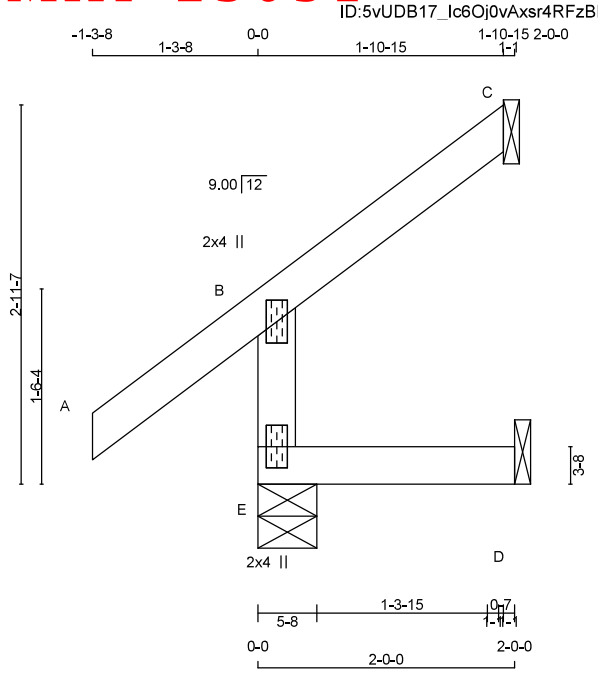

TOTAL WEIGHT = 2 X 8 = 17 lb [M]

LUMBER
N. L. G. A. RULES

CHORDS	SIZE		LUMBER	DESCR.
E - B	2x4	DRY	No.2	SPF
A - C	2x4	DRY	No.2	SPF
E - D	2x4	DRY	No.2	SPF

DRY: SEASONED LUMBER.

PLATES (table is in inches)

JT	TYPE	PLATES	W	LEN	Y	X
B	TMV+p	MT20	2.0	4.0		
E	BMV1+p	MT20	2.0	4.0		

DIMENSIONS, SUPPORTS AND LOADINGS SPECIFIED BY FABRICATOR TO BE VERIFIED BY BUILDING DESIGNER

BEARINGS

JT	FACTORED GROSS REACTION VERT	HORZ	MAXIMUM FACTORED GROSS REACTION DOWN	HORZ	UPLIFT	INPUT BRG IN-SX	REQRD BRG IN-SX
E	356	0	356	0	0	5-8	1-8
C	66	0	66	0	-31	1-8	1-8
D	8	0	18	0	-4	1-8	1-8

SEE MITEK STANDARD DETAIL MSD2015-H FOR CONNECTION TO JOINT(S) C , D

PROVIDE ANCHORAGE AT BEARING JOINT C FOR 150 LBS FACTORED UPLIFT
PROVIDE ANCHORAGE AT BEARING JOINT D FOR 150 LBS FACTORED UPLIFT

UNFACTORED REACTIONS

JT	1ST LCASE COMBINED	MAX./MIN. COMPONENT REACTIONS SNOW	LIVE	PERM.LIVE	WIND	DEAD	SOIL
E	245	197 / 0	0 / 0	0 / 0	0 / 0	49 / 0	0 / 0
C	45	37 / -24	0 / 0	0 / 0	0 / 0	7 / 0	0 / 0
D	7	0 / -10	0 / 0	0 / 0	0 / 0	13 / 0	0 / 0

BEARING MATERIAL TO BE SPF NO.2 OR BETTER AT JOINT(S) E, C

BRACING
TOP CHORD TO BE SHEATHED OR MAX. PURLIN SPACING = 6.25 FT.
MAX. UNBRACED BOTTOM CHORD LENGTH = 10.00 FT OR RIGID CEILING DIRECTLY APPLIED.

ALL PITCH BREAKS AND PERIMETER CORNER JOINTS MUST BE LATERALLY RESTRAINED.

LOADING
TOTAL LOAD CASES: (5)

CHORDS MEMB. FR-TO	MAX. FACTORED FORCE (LBS)	VERT. LOAD (PLF) FROM	TO	LC1 MAX CSI (LC)	WEBS MEMB.	MAX. UNBRAC LENGTH	MAX. FACTORED FORCE (LBS)	MAX CSI (LC) FR-TO
E- B	-328 / 0	0.0	0.0	0.05 (5)		7.81		
A- B	0 / 49	-119.4	-119.4	0.16 (1)		10.00		
B- C	-29 / 0	-119.4	-119.4	0.13 (1)		6.25		
E- D	0 / 0	-18.2	-18.2	0.05 (5)		10.00		

CANTILEVER ANALYSIS HAS BEEN CONSIDERED IN THIS DESIGN

PATTERN-LOADING CHECK APPLIED TO THIS TRUSS.

DESIGN CRITERIA

SPECIFIED LOADS:

TOP CH.	LL	=	34.8	PSF
	DL	=	6.0	PSF
BOT CH.	LL	=	0.0	PSF
	DL	=	7.3	PSF
TOTAL LOAD		=	48.1	PSF

SPACING = 24.0 IN. C/C

THIS TRUSS IS DESIGNED FOR RESIDENTIAL OR SMALL BUILDING REQUIREMENTS OF PART 9, NBCC 2015

THIS DESIGN COMPLIES WITH:
- PART 9 OF BCBC 2018 , NBC-2019AE
- PART 9 OF OBC 2012 (2019 AMENDMENT)
- CSA 086-14
- TPIC 2014

DESIGN ASSUMPTIONS
-OVERHANG NOT TO BE ALTERED OR CUT OFF.

(55 % OF 48.1 P.S.F. G.S.L. PLUS 8.4 P.S.F. RAIN LOAD) EQUALS 34.8 P.S.F. SPECIFIED ROOF LIVE LOAD

ALLOWABLE DEFL.(LL)= L/360 (0.19")
CALCULATED VERT. DEFL.(LL) = L/ 999 (0.00")
ALLOWABLE DEFL.(TL)= L/360 (0.19")
CALCULATED VERT. DEFL.(TL) = L/ 999 (0.00")

CSI: TC=0.16/0.97 (A-B:1) , BC=0.05/0.97 (D-E:5) , WB=0.00/0.97 (n/a:0) , SSI=0.10/1.00 (A-B:1)

DOL LUMBER=1.00 NAIL=1.00 LS BEND=1.10 COMP=1.10 SHEAR=1.10 TENS= 1.10

COMPANION LIVE LOAD FACTOR = 1.00

TRUSS PLATE MANUFACTURER IS NOT RESPONSIBLE FOR QUALITY CONTROL IN THE TRUSS MANUFACTURING PLANT .

NAIL VALUES

PLATE	GRIP(DRY) (PSI) MAX	MIN	SHEAR (PLI) MAX	MIN	SECTION (PLI) MAX	MIN
MT20	650	371	1747	788	1987	1873

PLATE PLACEMENT TOL. = 0.250 inches

PLATE ROTATION TOL. = 5.0 Deg.

JSI GRIP= 0.21 (B) (INPUT = 0.90)
JSI METAL= 0.17 (B) (INPUT = 1.00)

LICENSED PROFESSIONAL ENGINEER
N.A. EL-MASRI
PROVINCE OF ONTARIO
Jul 07, 2023

READ ALL NOTES ON THIS PAGE AND ON THE ENGINEERING NOTES: TRUSSES. THE NOTE PAGE IS AN INTEGRAL PART OF THIS DRAWING AS IT CONTAINS SPECIFICATIONS AND CRITERIA USED IN THE DESIGN OF THIS COMPONENT.

KOTT

CORPORATION OF THE CITY OF OSHAWA
TRUE COPY
OF PERMIT PLANS
Oct 31 2023
PER: C Marr
CHIEF BUILDING OFFICIAL

JOB NAME	TRUSS NAME	QUANTITY	PLY	JOB DESC.	DRWG NO.
NE0723-038	J14	1	1	GREENPARK - ZADORRA ESTATES - ROSE 10-2	

MHP 23031

TRUSS DESC.

Version 8.630 S Mar 22 2023 MiTek Industries, Inc. Fri Jul 7 15:07:30 2023 Page 1
ID:5vUDB17_Ic6Oj0vAxsr4RFzBM45-HyAUsUfYaYwhJsp2ToP3T?I91cnALhJxRkAdXnz_RAB

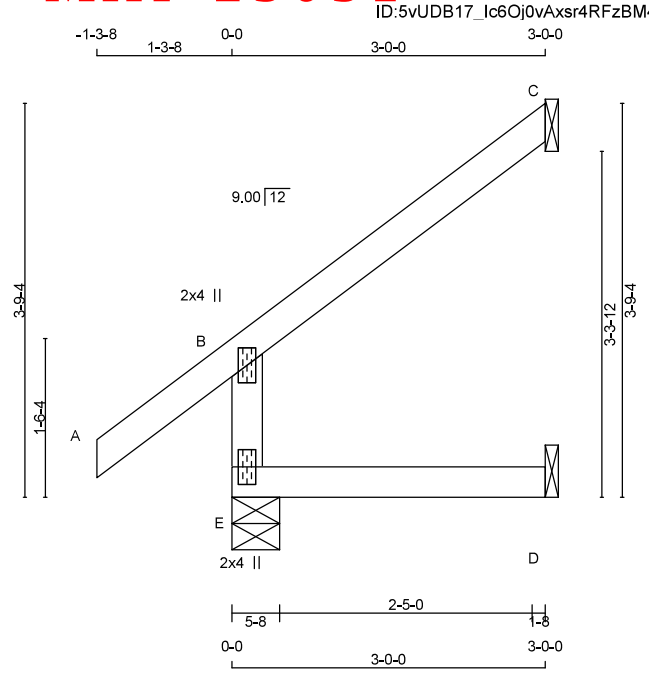

TOTAL WEIGHT = 11 lb
[M]

LUMBER
N. L. G. A. RULES

CHORDS	SIZE		LUMBER	DESCR.
E - B	2x4	DRY	No.2	SPF
A - C	2x4	DRY	No.2	SPF
E - D	2x4	DRY	No.2	SPF

DRY: SEASONED LUMBER.

PLATES (table is in inches)

JT	TYPE	PLATES	W	LEN	Y	X
B	TMV+p	MT20	2.0	4.0		
E	BMV1+p	MT20	2.0	4.0		

DIMENSIONS, SUPPORTS AND LOADINGS SPECIFIED BY FABRICATOR TO BE VERIFIED BY BUILDING DESIGNER

BEARINGS

JT	FACTORED GROSS REACTION VERT	HORZ	MAXIMUM FACTORED GROSS REACTION DOWN	HORZ	UPLIFT	INPUT BRG IN-SX	REQRD BRG IN-SX
E	419	0	419	0	0	5-8	1-8
C	135	0	135	0	0	1-8	1-8
D	24	0	27	0	0	1-8	1-8

SEE MITEK STANDARD DETAIL MSD2015-H FOR CONNECTION TO JOINT(S) C , D

UNFACTORED REACTIONS

JT	1ST LCASE COMBINED	MAX./MIN. COMPONENT REACTIONS SNOW	LIVE	PERM.LIVE	WIND	DEAD	SOIL
E	290	226 / 0	0 / 0	0 / 0	0 / 0	63 / 0	0 / 0
C	92	79 / 0	0 / 0	0 / 0	0 / 0	14 / 0	0 / 0
D	19	0 / 0	0 / 0	0 / 0	0 / 0	19 / 0	0 / 0

BEARING MATERIAL TO BE SPF NO.2 OR BETTER AT JOINT(S) E

BRACING
TOP CHORD TO BE SHEATHED OR MAX. PURLIN SPACING = 6.25 FT.
MAX. UNBRACED BOTTOM CHORD LENGTH = 10.00 FT OR RIGID CEILING DIRECTLY APPLIED.

ALL PITCH BREAKS AND PERIMETER CORNER JOINTS MUST BE LATERALLY RESTRAINED.

LOADING
TOTAL LOAD CASES: (7)

CHORDS

MEMB. FR-TO	MAX. FACTORED FORCE (LBS)	VERT. LOAD (PLF) FROM	TO	LC1 MAX CSI (LC)	UNBRAC LENGTH
E- B	-388 / 0	0.0	0.0	0.02 (4)	7.81
A- B	0 / 49	-119.4	-119.4	0.16 (1)	10.00
B- C	-27 / 0	-119.4	-119.4	0.18 (6)	6.25
E- D	0 / 0	-18.2	-18.2	0.04 (4)	10.00

WEBS

MEMB. FR-TO	MAX. FACTORED FORCE (LBS)	MAX CSI (LC)

CANTILEVER ANALYSIS HAS BEEN CONSIDERED IN THIS DESIGN

PATTERN-LOADING CHECK APPLIED TO THIS TRUSS.

DESIGN CRITERIA

SPECIFIED LOADS:

TOP CH.	LL	=	34.8	PSF
	DL	=	6.0	PSF
BOT CH.	LL	=	0.0	PSF
	DL	=	7.3	PSF
TOTAL LOAD		=	48.1	PSF

SPACING = 24.0 IN. C/C

THIS TRUSS IS DESIGNED FOR RESIDENTIAL OR SMALL BUILDING REQUIREMENTS OF PART 9, NBCC 2015

THIS DESIGN COMPLIES WITH:
- PART 9 OF BCBC 2018 , NBC-2019AE
- PART 9 OF OBC 2012 (2019 AMENDMENT)
- CSA 086-14
- TPIC 2014

DESIGN ASSUMPTIONS
-OVERHANG NOT TO BE ALTERED OR CUT OFF.

(55 % OF 48.1 P.S.F. G.S.L. PLUS 8.4 P.S.F. RAIN LOAD) EQUALS 34.8 P.S.F. SPECIFIED ROOF LIVE LOAD

ALLOWABLE DEFL.(LL)= L/360 (0.19")
CALCULATED VERT. DEFL.(LL) = L/ 999 (0.00")
ALLOWABLE DEFL.(TL)= L/360 (0.19")
CALCULATED VERT. DEFL.(TL) = L/ 999 (0.00")

CSI: TC=0.18/0.97 (B-C:6) , BC=0.04/0.97 (D-E:4) , WB=0.00/0.97 (n/a:0) , SSI=0.14/1.00 (B-C:6)

DOL LUMBER=1.00 NAIL=1.00 LS BEND=1.10 COMP=1.10 SHEAR=1.10 TENS= 1.10

COMPANION LIVE LOAD FACTOR = 1.00

TRUSS PLATE MANUFACTURER IS NOT RESPONSIBLE FOR QUALITY CONTROL IN THE TRUSS MANUFACTURING PLANT .

NAIL VALUES

PLATE	GRIP(DRY) (PSI) MAX	MIN	SHEAR (PLI) MAX	MIN	SECTION (PLI) MAX	MIN
MT20	650	371	1747	788	1987	1873

PLATE PLACEMENT TOL. = 0.250 inches

PLATE ROTATION TOL. = 5.0 Deg.

JSI GRIP= 0.25 (B) (INPUT = 0.90)
JSI METAL= 0.21 (B) (INPUT = 1.00)

LICENSED PROFESSIONAL ENGINEER
N.A. EL-MASRI
PROVINCE OF ONTARIO
Jul 07, 2023

READ ALL NOTES ON THIS PAGE AND ON THE ENGINEERING NOTES: TRUSSES. THE NOTE PAGE IS AN INTEGRAL PART OF THIS DRAWING AS IT CONTAINS SPECIFICATIONS AND CRITERIA USED IN THE DESIGN OF THIS COMPONENT.

KOTT

CORPORATION OF THE CITY OF OSHAWA
TRUE COPY
OF PERMIT PLANS
Oct 31 2023
PER:
CHIEF BUILDING OFFICIAL

JOB NAME	TRUSS NAME	QUANTITY	PLY	JOB DESC.	DRWG NO.
NE0723-038	J15	4	1	GREENPARK - ZADORRA ESTATES - ROSE 10-2	

MHP 23031

TRUSS DESC.

Version 8.630 S Mar 22 2023 MiTek Industries, Inc. Fri Jul 7 15:07:30 2023 Page 1
ID:5vUDB17_Ic6Oj0vAxsr4RFzBM45-HyAUsUfYaYwhJsp2ToP3T?I6pcmkLhJxRkAdXnz_RAB

Scale = 1:28.1

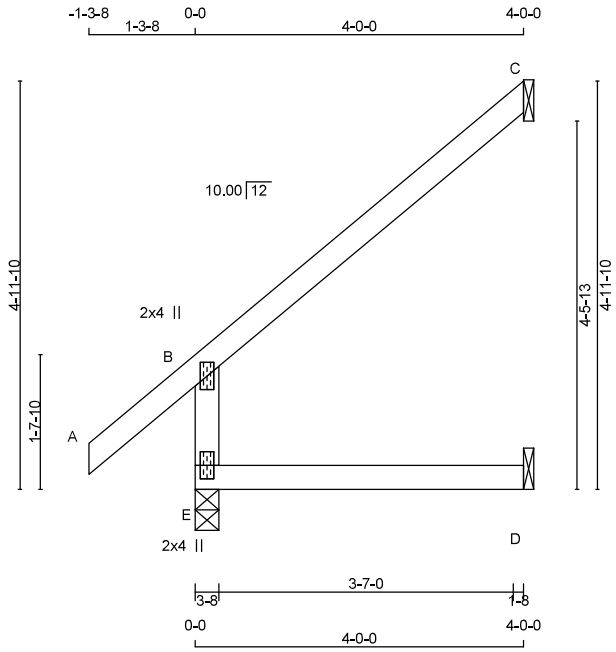

TOTAL WEIGHT = 4 X 14 = 56 lb
[M]

LUMBER
N. L. G. A. RULES

CHORDS	SIZE		LUMBER	DESCR.
E - B	2x4	DRY	No.2	SPF
A - C	2x4	DRY	No.2	SPF
E - D	2x4	DRY	No.2	SPF

DRY: SEASONED LUMBER.

PLATES (table is in inches)

JT	TYPE	PLATES	W	LEN	Y	X
B	TMV+p	MT20	2.0	4.0		
E	BMV1+p	MT20	2.0	4.0		

DIMENSIONS, SUPPORTS AND LOADINGS SPECIFIED BY FABRICATOR TO BE VERIFIED BY BUILDING DESIGNER

BEARINGS

JT	FACTORED GROSS REACTION VERT	HORZ	MAXIMUM FACTORED GROSS REACTION DOWN	HORZ	UPLIFT	INPUT BRG IN-SX	REQRD BRG IN-SX
E	505	0	505	0	0	3-8	1-8
C	179	0	179	0	0	1-8	1-8
D	32	0	36	0	0	1-8	1-8

SEE MITEK STANDARD DETAIL MSD2015-H FOR CONNECTION TO JOINT(S) C , D

UNFACTORED REACTIONS

JT	1ST LCASE COMBINED	MAX./MIN. COMPONENT REACTIONS SNOW	LIVE	PERM.LIVE	WIND	DEAD	SOIL
E	350	270 / 0	0 / 0	0 / 0	0 / 0	79 / 0	0 / 0
C	123	105 / 0	0 / 0	0 / 0	0 / 0	18 / 0	0 / 0
D	26	0 / 0	0 / 0	0 / 0	0 / 0	26 / 0	0 / 0

BEARING MATERIAL TO BE SPF NO.2 OR BETTER AT JOINT(S) E

BRACING
TOP CHORD TO BE SHEATHED OR MAX. PURLIN SPACING = 6.25 FT.
MAX. UNBRACED BOTTOM CHORD LENGTH = 10.00 FT OR RIGID CEILING DIRECTLY APPLIED.

ALL PITCH BREAKS AND PERIMETER CORNER JOINTS MUST BE LATERALLY RESTRAINED.

LOADING
TOTAL LOAD CASES: (4)

CHORDS

MEMB. FR-TO	MAX. FACTORED FORCE (LBS)	FACTORED VERT. LOAD (PLF) FROM	TO	LC1 MAX CSI (LC)
E- B	-464 / 0	0.0	0.0	0.04 (4)
A- B	0 / 53	-119.4	-119.4	0.16 (1)
B- C	-38 / 0	-119.4	-119.4	0.32 (1)
E- D	0 / 0	-18.2	-18.2	0.07 (4)

WEBS

MEMB. FR-TO	MAX. UNBRAC LENGTH	MAX. FACTORED FORCE (LBS)	MAX CSI (LC)
E- B	7.81		
A- B	10.00		
B- C	6.25		
E- D	10.00		

DESIGN CRITERIA

SPECIFIED LOADS:

TOP CH.	LL =	34.8	PSF
	DL =	6.0	PSF
BOT CH.	LL =	0.0	PSF
	DL =	7.3	PSF
TOTAL LOAD	=	48.1	PSF

SPACING = 24.0 IN. C/C

THIS TRUSS IS DESIGNED FOR RESIDENTIAL OR SMALL BUILDING REQUIREMENTS OF PART 9, NBCC 2015

THIS DESIGN COMPLIES WITH:
- PART 9 OF BCBC 2018 , NBC-2019AE
- PART 9 OF OBC 2012 (2019 AMENDMENT)
- CSA 086-14
- TPIC 2014

DESIGN ASSUMPTIONS
-OVERHANG NOT TO BE ALTERED OR CUT OFF.

(55 % OF 48.1 P.S.F. G.S.L. PLUS 8.4 P.S.F. RAIN LOAD) EQUALS 34.8 P.S.F. SPECIFIED ROOF LIVE LOAD

ALLOWABLE DEFL.(LL)= L/360 (0.19")
CALCULATED VERT. DEFL.(LL) = L/ 999 (0.00")
ALLOWABLE DEFL.(TL)= L/360 (0.19")
CALCULATED VERT. DEFL.(TL) = L/ 999 (0.01")

CSI: TC=0.32/0.97 (B-C:1) , BC=0.07/0.97 (D-E:4) , WB=0.00/0.97 (n/a:0) , SSI=0.18/1.00 (B-C:1)

DOL LUMBER=1.00 NAIL=1.00 LS BEND=1.10 COMP=1.10 SHEAR=1.10 TENS= 1.10

COMPANION LIVE LOAD FACTOR = 1.00

TRUSS PLATE MANUFACTURER IS NOT RESPONSIBLE FOR QUALITY CONTROL IN THE TRUSS MANUFACTURING PLANT .

NAIL VALUES

PLATE	GRIP(DRY) (PSI) MAX	MIN	SHEAR (PLI) MAX	MIN	SECTION (PLI) MAX	MIN
MT20	650	371	1747	788	1987	1873

PLATE PLACEMENT TOL. = 0.250 inches

PLATE ROTATION TOL. = 5.0 Deg.

JSI GRIP= 0.32 (B) (INPUT = 0.90)
JSI METAL= 0.25 (B) (INPUT = 1.00)

LICENSED PROFESSIONAL ENGINEER
N.A. EL-MASRI
PROVINCE OF ONTARIO
Jul 07, 2023

READ ALL NOTES ON THIS PAGE AND ON THE ENGINEERING NOTES: TRUSSES. THE NOTE PAGE IS AN INTEGRAL PART OF THIS DRAWING AS IT CONTAINS SPECIFICATIONS AND CRITERIA USED IN THE DESIGN OF THIS COMPONENT.

KOTT

CORPORATION OF THE CITY OF OSHAWA
TRUE COPY
OF PERMIT PLANS
Oct 31 2023
PER:
CHIEF BUILDING OFFICIAL

JOB NAME	TRUSS NAME	QUANTITY	PLY	JOB DESC.	DRWG NO.
NE0723-038	J16	2	1	GREENPARK - ZADORRA ESTATES - ROSE 10-2	

MHP 23031

Version 8.630 S Mar 22 2023 MiTek Industries, Inc. Fri Jul 7 15:07:31 2023 Page 1
ID:5vUDB17_Ic6Oj0vAxsr4RFzBM45-I8ks3qgALs2Yx?OE0WxI0CIJL06z48Z5fNvA3Dz_RAA

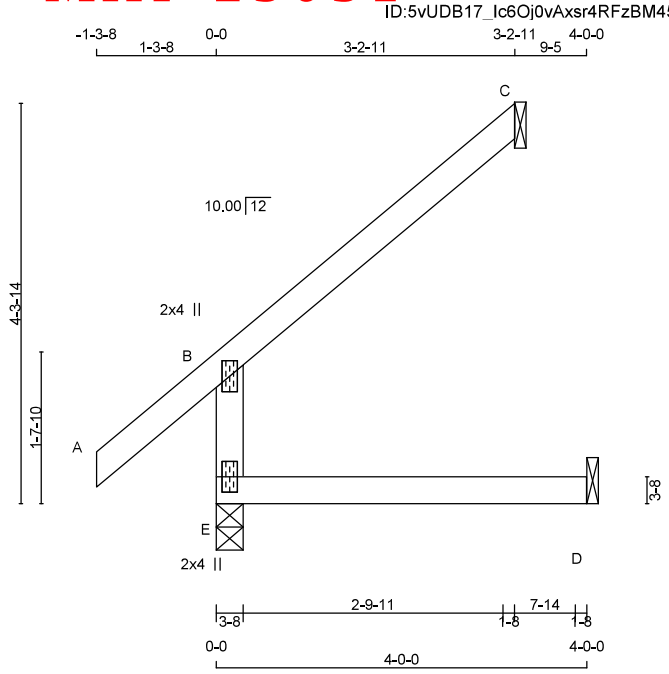

TOTAL WEIGHT = 2 X 13 = 26 lb [M]

LUMBER
N. L. G. A. RULES

CHORDS	SIZE		LUMBER	DESCR.
E - B	2x4	DRY	No.2	SPF
A - C	2x4	DRY	No.2	SPF
E - D	2x4	DRY	No.2	SPF

DRY: SEASONED LUMBER.

PLATES (table is in inches)

JT	TYPE	PLATES	W	LEN	Y	X
B	TMV+p	MT20	2.0	4.0		
E	BMV1+p	MT20	2.0	4.0		

DIMENSIONS, SUPPORTS AND LOADINGS SPECIFIED BY FABRICATOR TO BE VERIFIED BY BUILDING DESIGNER

BEARINGS

JT	FACTORED GROSS REACTION VERT	HORZ	MAXIMUM FACTORED GROSS REACTION DOWN	HORZ	UPLIFT	INPUT BRG IN-SX	REQRD BRG IN-SX
E	447	0	447	0	0	3-8	1-8
C	145	0	145	0	0	1-8	1-8
D	32	0	36	0	0	1-8	1-8

SEE MITEK STANDARD DETAIL MSD2015-H FOR CONNECTION TO JOINT(S) C , D

UNFACTORED REACTIONS

JT	1ST LCASE COMBINED	MAX./MIN. COMPONENT REACTIONS SNOW	LIVE	PERM.LIVE	WIND	DEAD	SOIL
E	310	237 / 0	0 / 0	0 / 0	0 / 0	74 / 0	0 / 0
C	99	84 / 0	0 / 0	0 / 0	0 / 0	15 / 0	0 / 0
D	26	0 / 0	0 / 0	0 / 0	0 / 0	26 / 0	0 / 0

BEARING MATERIAL TO BE SPF NO.2 OR BETTER AT JOINT(S) E, C

BRACING
TOP CHORD TO BE SHEATHED OR MAX. PURLIN SPACING = 6.25 FT.
MAX. UNBRACED BOTTOM CHORD LENGTH = 10.00 FT OR RIGID CEILING DIRECTLY APPLIED.

ALL PITCH BREAKS AND PERIMETER CORNER JOINTS MUST BE LATERALLY RESTRAINED.

LOADING
TOTAL LOAD CASES: (4)

CHORDS MEMB. FR-TO	MAX. FACTORED FORCE (LBS)	FACTORED VERT. LOAD (PLF) FROM	TO	LC1 MAX CSI (LC)	WEBS MEMB. FR-TO	MAX. UNBRAC LENGTH	MAX. FACTORED FORCE (LBS)	MAX CSI (LC)
E- B	-406 / 0	0.0	0.0	0.04 (4)		7.81		
A- B	0 / 53	-119.4	-119.4	0.16 (1)		10.00		
B- C	-31 / 0	-119.4	-119.4	0.21 (1)		6.25		
E- D	0 / 0	-18.2	-18.2	0.07 (4)		10.00		

DESIGN CRITERIA

SPECIFIED LOADS:

TOP CH.	LL	=	34.8	PSF
	DL	=	6.0	PSF
BOT CH.	LL	=	0.0	PSF
	DL	=	7.3	PSF
TOTAL LOAD		=	48.1	PSF

SPACING = 24.0 IN. C/C

THIS TRUSS IS DESIGNED FOR RESIDENTIAL OR SMALL BUILDING REQUIREMENTS OF PART 9, NBCC 2015

THIS DESIGN COMPLIES WITH:
- PART 9 OF BCBC 2018 , NBC-2019AE
- PART 9 OF OBC 2012 (2019 AMENDMENT)
- CSA 086-14
- TPIC 2014

DESIGN ASSUMPTIONS
-OVERHANG NOT TO BE ALTERED OR CUT OFF.

(55 % OF 48.1 P.S.F. G.S.L. PLUS 8.4 P.S.F. RAIN LOAD) EQUALS 34.8 P.S.F. SPECIFIED ROOF LIVE LOAD

ALLOWABLE DEFL.(LL)= L/360 (0.19")
CALCULATED VERT. DEFL.(LL) = L/ 999 (0.00")
ALLOWABLE DEFL.(TL)= L/360 (0.19")
CALCULATED VERT. DEFL.(TL) = L/ 999 (0.01")

CSI: TC=0.21/0.97 (B-C:1) , BC=0.07/0.97 (D-E:4) , WB=0.00/0.97 (n/a:0) , SSI=0.14/1.00 (B-C:1)

DOL LUMBER=1.00 NAIL=1.00 LS BEND=1.10 COMP=1.10 SHEAR=1.10 TENS= 1.10

COMPANION LIVE LOAD FACTOR = 1.00

TRUSS PLATE MANUFACTURER IS NOT RESPONSIBLE FOR QUALITY CONTROL IN THE TRUSS MANUFACTURING PLANT .

NAIL VALUES

PLATE	GRIP(DRY) (PSI) MAX	MIN	SHEAR (PLI) MAX	MIN	SECTION (PLI) MAX	MIN
MT20	650	371	1747	788	1987	1873

PLATE PLACEMENT TOL. = 0.250 inches

PLATE ROTATION TOL. = 5.0 Deg.

JSI GRIP= 0.28 (B) (INPUT = 0.90)
JSI METAL= 0.22 (B) (INPUT = 1.00)

LICENSED PROFESSIONAL ENGINEER
N.A. EL-MASRI
PROVINCE OF ONTARIO
Jul 07, 2023

READ ALL NOTES ON THIS PAGE AND ON THE ENGINEERING NOTES: TRUSSES. THE NOTE PAGE IS AN INTEGRAL PART OF THIS DRAWING AS IT CONTAINS SPECIFICATIONS AND CRITERIA USED IN THE DESIGN OF THIS COMPONENT.

KOTT

CORPORATION OF THE CITY OF OSHAWA
TRUE COPY
OF PERMIT PLANS
Oct 31 2023
PER: C Marr
CHIEF BUILDING OFFICIAL

JOB NAME	TRUSS NAME	QUANTITY	PLY	JOB DESC.	DRWG NO.
NE0723-038	J17	2	1	GREENPARK - ZADORRA ESTATES - ROSE 10-2	

MHP 23031

TRUSS DESC.

Version 8.630 S Mar 22 2023 MiTek Industries, Inc. Fri Jul 7 15:07:31 2023 Page 1
ID:5vUDB17_Ic6Oj0vAxsr4RFzBM45-I8ks3qgALs2Yx?OE0WxI0CIK306z48Z5fNvA3Dz_RAA

Scale = 1:20.7

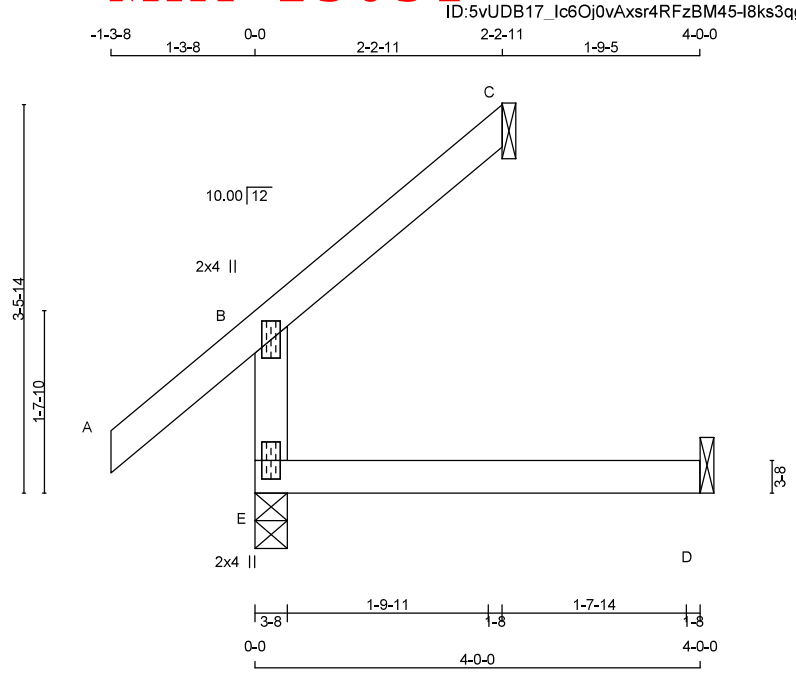

TOTAL WEIGHT = 2 X 11 = 23 lb [M]

LUMBER
N. L. G. A. RULES

CHORDS	SIZE		LUMBER	DESCR.
E - B	2x4	DRY	No.2	SPF
A - C	2x4	DRY	No.2	SPF
E - D	2x4	DRY	No.2	SPF

DRY: SEASONED LUMBER.

PLATES (table is in inches)

JT	TYPE	PLATES	W	LEN	Y	X
B	TMV+p	MT20	2.0	4.0		
E	BMV1+p	MT20	2.0	4.0		

DIMENSIONS, SUPPORTS AND LOADINGS SPECIFIED BY FABRICATOR TO BE VERIFIED BY BUILDING DESIGNER

BEARINGS

JT	FACTORED GROSS REACTION VERT	HORZ	MAXIMUM FACTORED GROSS REACTION DOWN	HORZ	UPLIFT	INPUT BRG IN-SX	REQRD BRG IN-SX
E	372	0	372	0	0	3-8	1-8
C	100	0	100	0	0	1-8	1-8
D	32	0	36	0	0	1-8	1-8

SEE MITEK STANDARD DETAIL MSD2015-H FOR CONNECTION TO JOINT(S) C , D

UNFACTORED REACTIONS

JT	1ST LCASE COMBINED	MAX./MIN. COMPONENT REACTIONS SNOW	LIVE	PERM.LIVE	WIND	DEAD	SOIL
E	259	193 / 0	0 / 0	0 / 0	0 / 0	66 / 0	0 / 0
C	69	58 / 0	0 / 0	0 / 0	0 / 0	10 / 0	0 / 0
D	26	0 / 0	0 / 0	0 / 0	0 / 0	26 / 0	0 / 0

BEARING MATERIAL TO BE SPF NO.2 OR BETTER AT JOINT(S) E, C

BRACING
TOP CHORD TO BE SHEATHED OR MAX. PURLIN SPACING = 6.25 FT.
MAX. UNBRACED BOTTOM CHORD LENGTH = 10.00 FT OR RIGID CEILING DIRECTLY APPLIED.

ALL PITCH BREAKS AND PERIMETER CORNER JOINTS MUST BE LATERALLY RESTRAINED.

LOADING
TOTAL LOAD CASES: (4)

CHORDS MEMB. FR-TO	MAX. FACTORED FORCE (LBS)	FACTORED VERT. LOAD (PLF) FROM	TO	LC1 MAX CSI (LC)	WEBS MEMB. FR-TO	MAX. UNBRAC LENGTH	MAX. FACTORED FORCE (LBS)	MAX CSI (LC)
E- B	-331 / 0	0.0	0.0	0.04 (4)		7.81		
A- B	0 / 53	-119.4	-119.4	0.16 (1)		10.00		
B- C	-21 / 0	-119.4	-119.4	0.10 (1)		6.25		
E- D	0 / 0	-18.2	-18.2	0.07 (4)		10.00		

DESIGN CRITERIA

SPECIFIED LOADS:

TOP CH.	LL	=	34.8	PSF
	DL	=	6.0	PSF
BOT CH.	LL	=	0.0	PSF
	DL	=	7.3	PSF
TOTAL LOAD		=	48.1	PSF

SPACING = 24.0 IN. C/C

THIS TRUSS IS DESIGNED FOR RESIDENTIAL OR SMALL BUILDING REQUIREMENTS OF PART 9, NBCC 2015

THIS DESIGN COMPLIES WITH:
- PART 9 OF BCBC 2018 , NBC-2019AE
- PART 9 OF OBC 2012 (2019 AMENDMENT)
- CSA 086-14
- TPIC 2014

DESIGN ASSUMPTIONS
-OVERHANG NOT TO BE ALTERED OR CUT OFF.

(55 % OF 48.1 P.S.F. G.S.L. PLUS 8.4 P.S.F. RAIN LOAD) EQUALS 34.8 P.S.F. SPECIFIED ROOF LIVE LOAD

ALLOWABLE DEFL.(LL)= L/360 (0.19")
CALCULATED VERT. DEFL.(LL) = L/ 999 (0.00")
ALLOWABLE DEFL.(TL)= L/360 (0.19")
CALCULATED VERT. DEFL.(TL) = L/ 999 (0.01")

CSI: TC=0.16/0.97 (A-B:1) , BC=0.07/0.97 (D-E:4) , WB=0.00/0.97 (n/a:0) , SSI=0.10/1.00 (A-B:1)

DOL LUMBER=1.00 NAIL=1.00 LS BEND=1.10 COMP=1.10 SHEAR=1.10 TENS= 1.10

COMPANION LIVE LOAD FACTOR = 1.00

TRUSS PLATE MANUFACTURER IS NOT RESPONSIBLE FOR QUALITY CONTROL IN THE TRUSS MANUFACTURING PLANT .

NAIL VALUES

PLATE	GRIP(DRY) (PSI) MAX	MIN	SHEAR (PLI) MAX	MIN	SECTION (PLI) MAX	MIN
MT20	650	371	1747	788	1987	1873

PLATE PLACEMENT TOL. = 0.250 inches

PLATE ROTATION TOL. = 5.0 Deg.

JSI GRIP= 0.23 (B) (INPUT = 0.90)
JSI METAL= 0.18 (B) (INPUT = 1.00)

LICENSED PROFESSIONAL ENGINEER
N.A. EL-MASRI
PROVINCE OF ONTARIO
Jul 07, 2023

READ ALL NOTES ON THIS PAGE AND ON THE ENGINEERING NOTES: TRUSSES. THE NOTE PAGE IS AN INTEGRAL PART OF THIS DRAWING AS IT CONTAINS SPECIFICATIONS AND CRITERIA USED IN THE DESIGN OF THIS COMPONENT.

KOTT

CORPORATION OF THE CITY OF OSHAWA
TRUE COPY
OF PERMIT PLANS
Oct 31 2023
PER: C Marr
CHIEF BUILDING OFFICIAL

JOB NAME	TRUSS NAME	QUANTITY	PLY	JOB DESC.	DRWG NO.
NE0723-038	J18	2	1	GREENPARK - ZADORRA ESTATES - ROSE 10-2	

MHP 23031

TRUSS DESC.

Version 8.630 S Mar 22 2023 MiTek Industries, Inc. Fri Jul 7 15:07:32 2023 Page 1
ID:5vUDB17_Ic6Oj0vAxsr4RFzBM45-DKHFGAgo59APY9zQaDSXZQrVpQSBpbpEu1fjcfz_RA9

Scale = 1:16.5

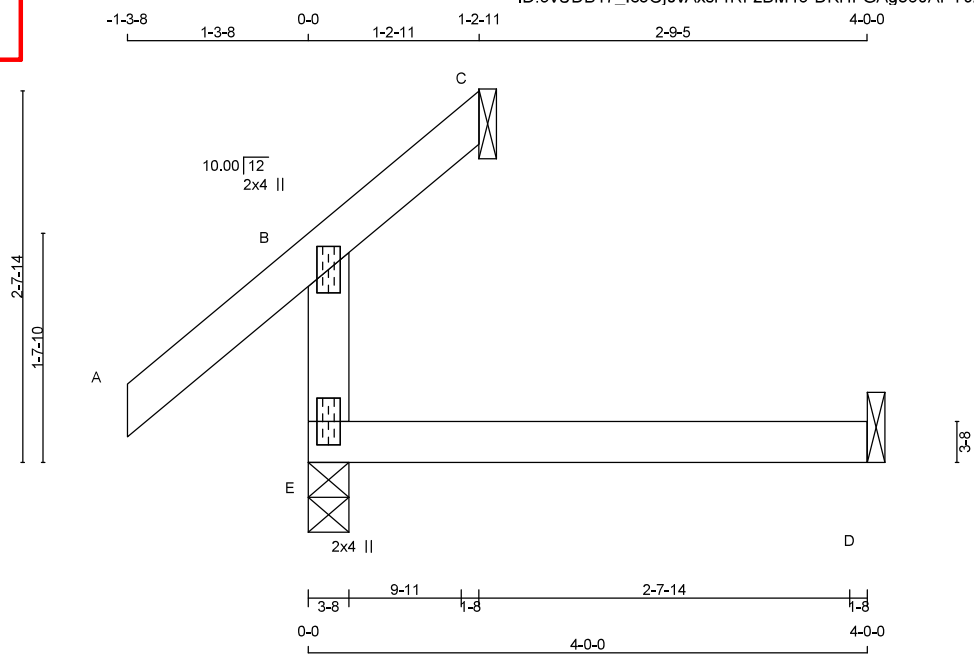

TOTAL WEIGHT = 2 X 10 = 20 lb
[M]

LUMBER
N. L. G. A. RULES

CHORDS	SIZE		LUMBER	DESCR.
E - B	2x4	DRY	No.2	SPF
A - C	2x4	DRY	No.2	SPF
E - D	2x4	DRY	No.2	SPF

DRY: SEASONED LUMBER.

PLATES (table is in inches)

JT	TYPE	PLATES	W	LEN	Y	X
B	TMV+p	MT20	2.0	4.0		
E	BMV1+p	MT20	2.0	4.0		

DIMENSIONS, SUPPORTS AND LOADINGS SPECIFIED BY FABRICATOR TO BE VERIFIED BY BUILDING DESIGNER

BEARINGS

JT	FACTORED GROSS REACTION VERT	HORZ	MAXIMUM FACTORED GROSS REACTION DOWN	HORZ	UPLIFT	INPUT BRG IN-SX	REQRD BRG IN-SX
E	351	0	351	0	0	3-8	1-8
C	5	0	13	0	0	1-8	1-8
D	29	0	36	0	0	1-8	1-8

SEE MITEK STANDARD DETAIL MSD2015-H FOR CONNECTION TO JOINT(S) C , D

UNFACTORED REACTIONS

JT	1ST LCASE COMBINED	MAX./MIN. COMPONENT REACTIONS SNOW	LIVE	PERM.LIVE	WIND	DEAD	SOIL
E	243	188 / 0	0 / 0	0 / 0	0 / 0	55 / 0	0 / 0
C	5	0 / -4	0 / 0	0 / 0	0 / 0	9 / 0	0 / 0
D	23	0 / -2	0 / 0	0 / 0	0 / 0	26 / 0	0 / 0

BEARING MATERIAL TO BE SPF NO.2 OR BETTER AT JOINT(S) E, C

BRACING
TOP CHORD TO BE SHEATHED OR MAX. PURLIN SPACING = 6.25 FT.
MAX. UNBRACED BOTTOM CHORD LENGTH = 10.00 FT OR RIGID CEILING DIRECTLY APPLIED.

ALL PITCH BREAKS AND PERIMETER CORNER JOINTS MUST BE LATERALLY RESTRAINED.

LOADING
TOTAL LOAD CASES: (4)

CHORDS

MEMB. FR-TO	MAX. FACTORED FORCE (LBS)	VERT. LOAD (PLF) FROM	TO	LC1 MAX CSI (LC)
E- B	-306 / 0	0.0	0.0	0.04 (1)
A- B	0 / 53	-119.4	-119.4	0.16 (1)
B- C	-43 / 2	-119.4	-119.4	0.11 (1)
E- D	0 / 0	-18.2	-18.2	0.07 (4)

WEBS

MEMB. FR-TO	MAX. UNBRAC LENGTH	MAX. FACTORED FORCE (LBS)	MAX CSI (LC)

DESIGN CRITERIA

SPECIFIED LOADS:

TOP CH.	LL =	34.8	PSF
	DL =	6.0	PSF
BOT CH.	LL =	0.0	PSF
	DL =	7.3	PSF
TOTAL LOAD	=	48.1	PSF

SPACING = 24.0 IN. C/C

THIS TRUSS IS DESIGNED FOR RESIDENTIAL OR SMALL BUILDING REQUIREMENTS OF PART 9, NBCC 2015

THIS DESIGN COMPLIES WITH:
- PART 9 OF BCBC 2018 , NBC-2019AE
- PART 9 OF OBC 2012 (2019 AMENDMENT)
- CSA 086-14
- TPIC 2014

DESIGN ASSUMPTIONS
-OVERHANG NOT TO BE ALTERED OR CUT OFF.

(55 % OF 48.1 P.S.F. G.S.L. PLUS 8.4 P.S.F. RAIN LOAD) EQUALS 34.8 P.S.F. SPECIFIED ROOF LIVE LOAD

ALLOWABLE DEFL.(LL)= L/360 (0.19")
CALCULATED VERT. DEFL.(LL) = L/ 999 (0.00")
ALLOWABLE DEFL.(TL)= L/360 (0.19")
CALCULATED VERT. DEFL.(TL) = L/ 999 (0.01")

CSI: TC=0.16/0.97 (A-B:1) , BC=0.07/0.97 (D-E:4) , WB=0.00/0.97 (n/a:0) , SSI=0.10/1.00 (A-B:1)

DOL LUMBER=1.00 NAIL=1.00 LS BEND=1.10 COMP=1.10 SHEAR=1.10 TENS= 1.10

COMPANION LIVE LOAD FACTOR = 1.00

TRUSS PLATE MANUFACTURER IS NOT RESPONSIBLE FOR QUALITY CONTROL IN THE TRUSS MANUFACTURING PLANT .

NAIL VALUES

PLATE	GRIP(DRY) (PSI) MAX	MIN	SHEAR (PLI) MAX	MIN	SECTION (PLI) MAX	MIN
MT20	650	371	1747	788	1987	1873

PLATE PLACEMENT TOL. = 0.250 inches

PLATE ROTATION TOL. = 5.0 Deg.

JSI GRIP= 0.21 (B) (INPUT = 0.90)
JSI METAL= 0.16 (B) (INPUT = 1.00)

LICENSED PROFESSIONAL ENGINEER
N.A. EL-MASRI
PROVINCE OF ONTARIO
Jul 07, 2023

READ ALL NOTES ON THIS PAGE AND ON THE ENGINEERING NOTES: TRUSSES. THE NOTE PAGE IS AN INTEGRAL PART OF THIS DRAWING AS IT CONTAINS SPECIFICATIONS AND CRITERIA USED IN THE DESIGN OF THIS COMPONENT.

KOTT

CORPORATION OF THE CITY OF OSHAWA
TRUE COPY
OF PERMIT PLANS
Oct 31 2023
PER: C Marr
CHIEF BUILDING OFFICIAL

JOB NAME	TRUSS NAME	QUANTITY	PLY	JOB DESC.	DRWG NO.
NE0723-038	J20	2	1	GREENPARK - ZADORRA ESTATES - ROSE 10-2	

MHP 23031

TRUSS DESC.

Version 8.630 S Mar 22 2023 MiTek Industries, Inc. Fri Jul 7 15:07:32 2023 Page 1
ID:5vUDB17_Ic6Oj0vAxsr4RFzBM45-DKHFGAgo59APY9zQaDSXZQrPYQTHpbpEu1fjcfz_RA9

Scale = 1:19.5

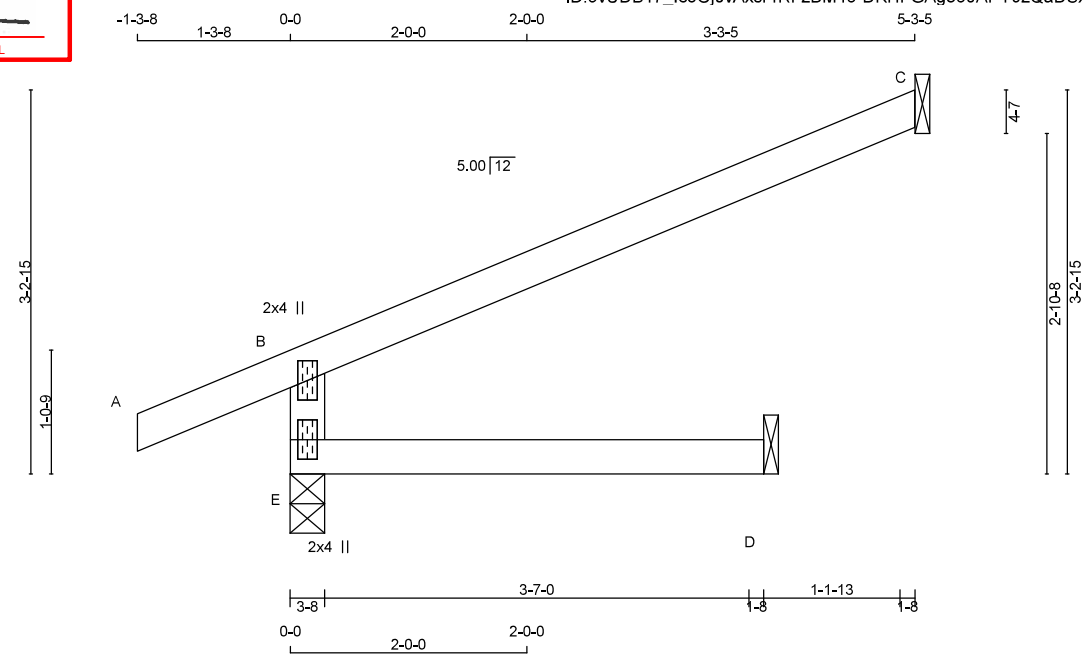

TOTAL WEIGHT = 2 X 13 = 27 lb [M]

LUMBER
N. L. G. A. RULES

CHORDS	SIZE		LUMBER	DESCR.
E - B	2x4	DRY	No.2	SPF
A - C	2x4	DRY	No.2	SPF
E - D	2x4	DRY	No.2	SPF

DRY: SEASONED LUMBER.

PLATES (table is in inches)

JT	TYPE	PLATES	W	LEN	Y	X
B	TMV+p	MT20	2.0	4.0		
E	BMV1+p	MT20	2.0	4.0		

DIMENSIONS, SUPPORTS AND LOADINGS SPECIFIED BY FABRICATOR TO BE VERIFIED BY BUILDING DESIGNER

BEARINGS

JT	FACTORED GROSS REACTION VERT	HORZ	MAXIMUM FACTORED GROSS REACTION DOWN	HORZ	UPLIFT	INPUT BRG IN-SX	REQRD BRG IN-SX
E	597	0	597	0	0	3-8	1-8
C	236	0	236	0	0	1-8	1-8
D	31	0	34	0	0	1-8	1-8

SEE MITEK STANDARD DETAIL MSD2015-H FOR CONNECTION TO JOINT(S) C , D

UNFACTORED REACTIONS

JT	1ST LCASE COMBINED	MAX./MIN. COMPONENT REACTIONS SNOW	LIVE	PERM.LIVE	WIND	DEAD	SOIL
E	413	323 / 0	0 / 0	0 / 0	0 / 0	90 / 0	0 / 0
C	162	138 / 0	0 / 0	0 / 0	0 / 0	24 / 0	0 / 0
D	25	0 / 0	0 / 0	0 / 0	0 / 0	25 / 0	0 / 0

BEARING MATERIAL TO BE SPF NO.2 OR BETTER AT JOINT(S) E

BRACING
TOP CHORD TO BE SHEATHED OR MAX. PURLIN SPACING = 6.25 FT.
MAX. UNBRACED BOTTOM CHORD LENGTH = 10.00 FT OR RIGID CEILING DIRECTLY APPLIED.

ALL PITCH BREAKS AND PERIMETER CORNER JOINTS MUST BE LATERALLY RESTRAINED.

LOADING
TOTAL LOAD CASES: (4)

CHORDS MEMB. FR-TO	MAX. FACTORED FORCE (LBS)	FACTORED VERT. LOAD (PLF) FROM	TO	LC1	MAX CSI (LC)	WEBS MAX. UNBRAC LENGTH	MEMB. FR-TO	MAX. FACTORED FORCE (LBS)	MAX CSI (LC)
E- B	-555 / 0	0.0	0.0		0.06 (4)	7.81			
A- B	0 / 31	-119.4	-119.4		0.15 (1)	10.00			
B- C	-30 / 0	-119.4	-119.4		0.57 (1)	6.25			
E- D	0 / 0	-18.2	-18.2		0.06 (4)	10.00			

DESIGN CRITERIA

SPECIFIED LOADS:

TOP CH.	LL =	34.8	PSF
	DL =	6.0	PSF
BOT CH.	LL =	0.0	PSF
	DL =	7.3	PSF
TOTAL LOAD	=	48.1	PSF

SPACING = 24.0 IN. C/C

THIS TRUSS IS DESIGNED FOR RESIDENTIAL OR SMALL BUILDING REQUIREMENTS OF PART 9, NBCC 2015

THIS DESIGN COMPLIES WITH:
- PART 9 OF BCBC 2018 , NBC-2019AE
- PART 9 OF OBC 2012 (2019 AMENDMENT)
- CSA 086-14
- TPIC 2014

DESIGN ASSUMPTIONS
-OVERHANG NOT TO BE ALTERED OR CUT OFF.

(55 % OF 48.1 P.S.F. G.S.L. PLUS 8.4 P.S.F. RAIN LOAD) EQUALS 34.8 P.S.F. SPECIFIED ROOF LIVE LOAD

ALLOWABLE DEFL.(LL)= L/360 (0.19")
CALCULATED VERT. DEFL.(LL) = L/ 999 (0.00")
ALLOWABLE DEFL.(TL)= L/360 (0.19")
CALCULATED VERT. DEFL.(TL) = L/ 999 (0.01")

CSI: TC=0.57/0.97 (B-C:1) , BC=0.06/0.97 (D-E:4) , WB=0.00/0.97 (n/a:0) , SSI=0.28/1.00 (B-C:1)

DOL LUMBER=1.00 NAIL=1.00 LS BEND=1.10 COMP=1.10 SHEAR=1.10 TENS= 1.10

COMPANION LIVE LOAD FACTOR = 1.00

TRUSS PLATE MANUFACTURER IS NOT RESPONSIBLE FOR QUALITY CONTROL IN THE TRUSS MANUFACTURING PLANT .

NAIL VALUES

PLATE	GRIP(DRY) (PSI) MAX	MIN	SHEAR (PLI) MAX	MIN	SECTION (PLI) MAX	MIN
MT20	650	371	1747	788	1987	1873

PLATE PLACEMENT TOL. = 0.250 inches

PLATE ROTATION TOL. = 5.0 Deg.

JSI GRIP= 0.30 (B) (INPUT = 0.90)
JSI METAL= 0.20 (B) (INPUT = 1.00)

LICENSED PROFESSIONAL ENGINEER
N.A. EL-MASRI
PROVINCE OF ONTARIO
Jul 07, 2023

READ ALL NOTES ON THIS PAGE AND ON THE ENGINEERING NOTES: TRUSSES. THE NOTE PAGE IS AN INTEGRAL PART OF THIS DRAWING AS IT CONTAINS SPECIFICATIONS AND CRITERIA USED IN THE DESIGN OF THIS COMPONENT.

KOTT