MHP 23034

CORPORATION OF THE CITY OF OSHAWA
TRUE COPY
OF PERMIT PLANS
Nov 14 2023
PER: C Marto
CHIEF BUILDING OFFICIAL

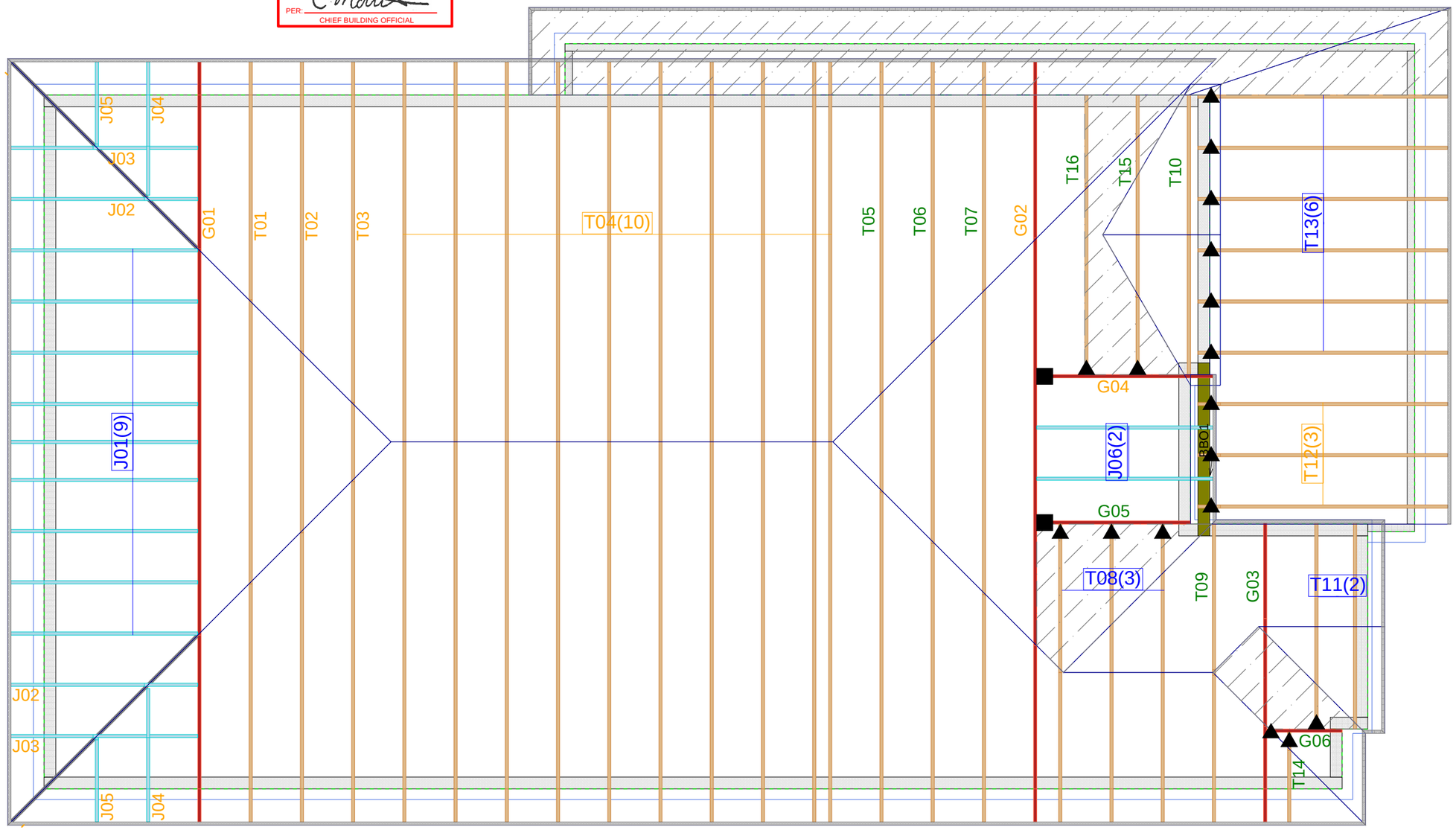

Hanger Name	Symbol	QTY
LUS24	▲	17
LJS26DS	■	2

CONVENTIONAL FRAMING BY OTHERS

ALL CONVENTIONAL FRAMING TO CONFORM WITH PART 9 OF THE OBC. ROOF RAFTERS THAT CROSS OVER TRUSSES TO BE MIN. 2x4 SPF @ 24" C/C WITH A 2x4 VERTICAL POST TO THE TRUSS BELOW. VERTICAL POSTS TO BE LATERALLY BRACED SO THAT UNBRACED LENGTH DOES NOT EXCEED 6'. DESIGN OF CONVENTIONAL FRAMING IS THE RESPONSIBILITY OF THE PROJECT ENGINEER.

JOB INFORMATION

Customer	GREENPARK HOMES
Job #	23-00106R0
Address	ZADORRA ESTATES OSHAWA,ON
Model	VILLA 2 ELEV-3
Sales Rep	RALPH MIRIGELLO
Designer	RB
Date	6/02/23
Path	C:\MITEK\CA\JOBS\GREENPARK\ZADORRA ESTATES\VILLA 2-ELEV 3\VILLA 2 ELEV-3\

DESIGN INFORMATION

Code	NBCC 2015
Bldg	Residential - HSB (NBCC Part 9)
TC LL	34.8 lb/ft²
TC DL	6.0 lb/ft²
BC LL	0.0 lb/ft²
BC DL	7.3 lb/ft²
Deflection	LL=L/360 TL=L/360
Spacing	24" O/C unless otherwise noted
Complies With	OBC 2012 (2019 Amendment) CSA O86-14 and TPIC 2014

IMPORTANT INFORMATION

Hangers and Fasteners to be installed as per manufacturer

Refer to truss drawings in the Truss Engineering Package for ply-to-ply attachment notes

For site-framed valleys: top chords of all roof trusses must be laterally supported using 2x4 continuous bracing @24 O/C - all bracing must be anchored at ends as per TPIC Installation Guidelines

Read all notes on this page in addition to those shown on the KOTT Truss Engineering package

Field erection, handling and bracing are not the responsibility of KOTT, or KOTT Engineering

Unless noted otherwise, hurricane ties are to be installed at the bearings of all trusses > 40 ft clear span, and any girder or beam supporting trusses with a clear span >40 ft. See hanger legend for type.

Unless noted otherwise, for Part 9 bldgs, all trusses are to be anchored to the top of supporting walls as follows: trusses with a clear span <40 ft use 3-1/4" nails @ each bearing; trusses with a clear span >40 ft use 3-1/4" nails @ each bearing in addition to the appropriate hurricane tie.

KOTT Inc.
14 Anderson Blvd.
Uxbridge, ON
905.642.4400

KOTT

Engineering Notes: Trusses

NE0723-089
GREENPARK - ZADORRA ESTATES - VILLA 2-3

MHP 23034

CORPORATION OF THE CITY OF OSHAWA
TRUE COPY
OF PERMIT PLANS
Nov 14 2023
PER
CHIEF BUILDING OFFICIAL

PLEASE READ [illegible] TO INSTALLATION OF THE COMPONENT

RESPONSIBILITIES

THE UNDERSIGNED ENGINEER IS ONLY RESPONSIBLE FOR THE STRUCTURAL INTEGRITY OF THIS BUILDING COMPONENT FOR THE CONDITIONS AND LOADS SHOWN ON CALCULATION PAGE. THE STRUCTURAL INTEGRITY OF THE BUILDING AND THE VERIFICATION OF THE DIMENSIONS AND THE DESIGN LOADS USED ARE THE RESPONSIBILITY OF THE BUILDING DESIGNER.
THE UNDERSIGNED ENGINEER DISCLAIMS ANY RESPONSIBILITY FOR DAMAGES AS A RESULT OF FAULTY OR INCORRECT INFORMATION, SPECIFICATION AND/OR DESIGNS FURNISHED TO THE ENGINEER.
IT IS THE RESPONSIBILITY OF KOTT Inc. TO ENSURE THAT TRUSSES ARE MANUFACTURED IN CONFORMANCE WITH THESE DESIGNS AND WITH THE SPECIFICATIONS OUTLINED BELOW. THE UNDERSIGNED ENGINEER IS NOT RESPONSIBLE FOR QUALITY CONTROL IN THE TRUSS MANUFACTURING PLANT.

DESIGN INFORMATION

THIS DESIGN IS FOR AN INDIVIDUAL BUILDING COMPONENT AND HAS BEEN BASED ON INFORMATION PROVIDED BY KOTT DESIGN.

1. THE BUILDING USE AND OCCUPANCY TYPE IS AS INDICATED ON THE DRAWING.
2. GEOMETRY OF THE TRUSS AND DIMENSIONS INDICATED ON THE DRAWING ARE IDENTICAL TO THOSE OF THE INSTALLED TRUSS.
3. THE TRUSS LOADING INTENSITY AND DISTRIBUTION AS WELL AS LOAD TRANSFER MECHANISM IS THAT INDICATED ON THE DRAWING. NO BUILDINGS, TREES, PARAPETS OR OTHER PROJECTIONS HIGHER THAN THE ROOF FOR WHICH THE TRUSSES ARE USED ARE LOCATED WITHIN A DISTANCE LESS THAN TEN (10) TIMES THE DIFFERENCE IN HEIGHT, OR FIVE METERS (16 FT) WHICHEVER IS GREATER, UNLESS THE DRAWING INDICATES THAT THE SNOW DRIFTING HAS BEEN TAKEN INTO ACCOUNT.
4. THE TRUSSES ARE TO BE SUPPORTED AT THE BEARING POINTS INDICATED AND ANCHORED TO THE SUPPORTS WHERE CONSIDERED NECESSARY BY THE DESIGNER OF THE OVERALL STRUCTURE. BEARING SIZES SHOWN ARE THE MINIMUM REQUIRED TO PREVENT CRUSHING OF THE TRUSS MEMBERS AND DO NOT NECESSARILY TAKE INTO ACCOUNT STABILITY OF THE OVERALL BUILDING STRUCTURE. ELEVATION OF BEARINGS MUST BE CAREFULLY CHECKED AND SHIMMED TO ALIGNMENT FOR SOLID BEARINGS. ADEQUATE WOOD TRUSS BEARING IS THE RESPONSIBILITY OF THE BUILDING DESIGNER.

CODE

TRUSSES ARE DESIGNED IN CONFORMANCE WITH THE RELEVANT SECTIONS OF THE NATIONAL BUILDING CODE OF CANADA OR THE CANADIAN CODE FOR FARM BUILDINGS, WHICHEVER APPLIES TO THE BUILDING TYPE INDICATED ON THE DRAWING, THE ONTARIO BUILDING CODE, TPIC AND CANADIAN STANDARDS ASSOCIATION GUIDELINES.

HANDLING, INSTALLATION AND BRACING

1. THE TRUSSES MUST BE HANDLED AND INSTALLED BY A QUALIFIED PROFESSIONAL AS PER THE SUPPLIED DOCUMENT TITLED INFORMATION FOR TRUSS INSTALLERS AND THE BCSI-B1 AND BCSI-B3 SUMMARY SHEETS.
2. THE COMPRESSION CHORDS ARE LATERALLY BRACED BY CONTINUOUS RIGID DIAPHRAGM SHEATHING OR AS SPECIFIED ON THE DRAWING.
3. TEMPORARY AND PERMANENT BRACING MUST BE INSTALLED AS INDICATED ON THE TRUSS DRAWING AND ACCORDING TO THE BCSI-B1 AND BCSI-B3 SUMMARY SHEETS. BRACING FOR THE LATERAL STABILITY OF THE TRUSS IS TO BE PROVIDED BY THE BUILDING DESIGNER.
4. IT IS RECOMMENDED THAT A PROFESSIONAL ENGINEER'S ADVICE BE OBTAINED FOR THE BRACING OF TRUSSES SPANNING MORE THAN 12.37M (40'-7").

JOB NAME	TRUSS NAME	QUANTITY	PLY	JOB DESC.	DRWG NO.
NE0723-089	G01	1	1	TRUSS DESC.	

Version 8.630 S Mar 22 2023 MiTek Industries, Inc. Sat Jul 15 10:29:43 2023 Page 1

MHP 23034
CORPORATION OF THE CITY OF OSHAWA
TRUE COPY
OF PERMIT PLANS
Nov 14 2023
PER:
CHIEF BUILDING OFFICIAL

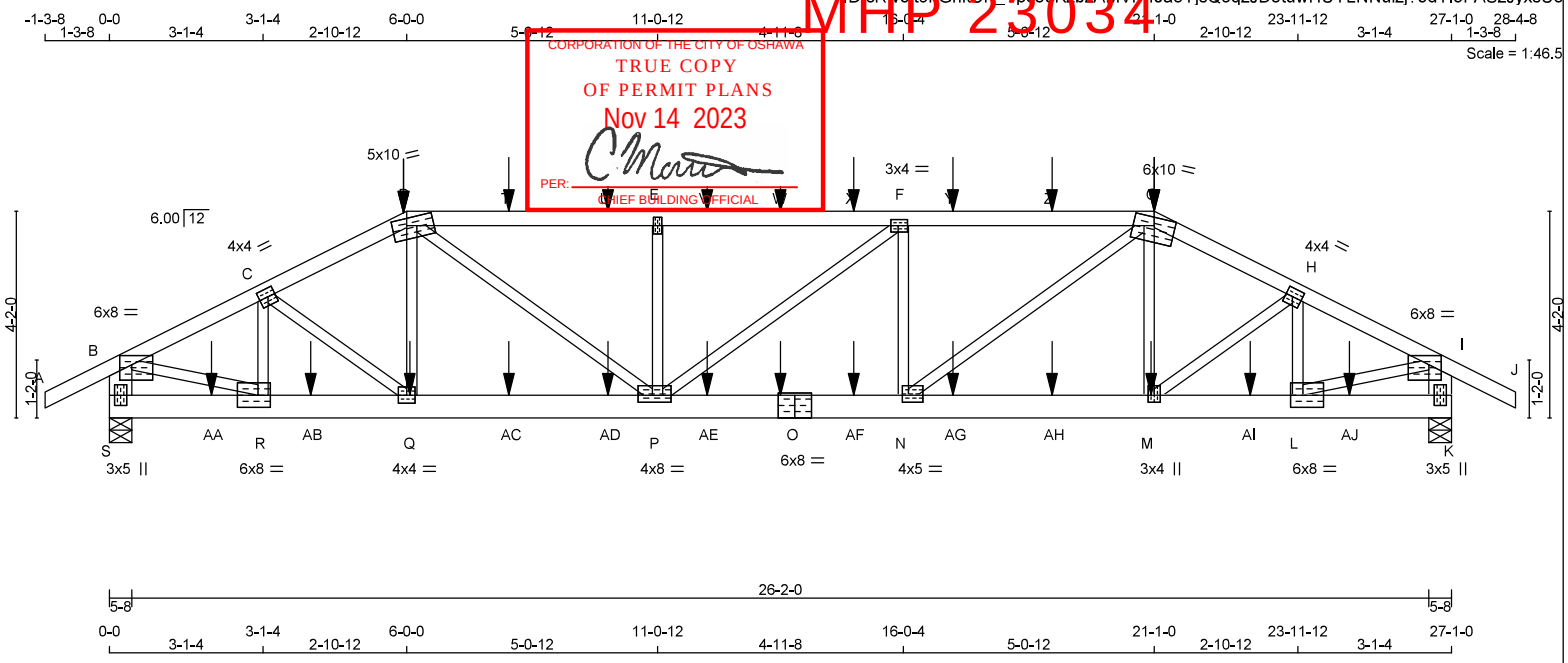

TOTAL WEIGHT = 125 lb

LUMBER
N. L. G. A. RULES

CHORDS	SIZE		LUMBER	DESCR.
A - D	2x4	DRY	No.2	SPF
D - G	2x4	DRY	2100F 1.8E	SPF
G - J	2x4	DRY	No.2	SPF
S - B	2x6	DRY	No.2	SPF
K - I	2x6	DRY	No.2	SPF
S - O	2x6	DRY	No.2	SPF
O - K	2x6	DRY	No.2	SPF
ALL WEBS EXCEPT	2x3	DRY	No.2	SPF

DRY: SEASONED LUMBER.

PLATES (table is in inches)

JT	TYPE	PLATES	W	LEN	Y	X
B	TMVW-p	MT20	6.0	8.0	2.25	3.00
C	TMWW-t	MT20	4.0	4.0	2.00	1.75
D	TTWW-m	MT20	5.0	10.0	1.75	3.50
E	TMW+w	MT20	2.0	4.0		
F	TMWW-t	MT20	3.0	4.0	1.50	1.75
G	TTWW-m	MT20	6.0	10.0	Edge	
H	TMWW-t	MT20	4.0	4.0	2.00	1.75
I	TMVW-p	MT20	6.0	8.0	2.25	3.00
K	BMV1+p	MT20	3.0	5.0		
L	BMWW-t	MT20	6.0	8.0	3.00	3.00
M	BMWW+t	MT20	3.0	4.0	1.75	1.50
N	BMWW-t	MT20	4.0	5.0	1.75	1.50
O	BS-t	MT20	6.0	8.0		
P	BMWWW-t	MT20	4.0	8.0	1.75	3.50
Q	BMWW-t	MT20	4.0	4.0		
R	BMWW-t	MT20	6.0	8.0	3.00	3.00
S	BMV1+p	MT20	3.0	5.0		

Edge - INDICATES REFERENCE CORNER OF PLATE TOUCHES EDGE OF CHORD.

READ ALL NOTES ON THIS PAGE AND ON THE ENGINEERING NOTES: TRUSSES. THE NOTE PAGE IS AN INTEGRAL PART OF THIS DRAWING AS IT CONTAINS SPECIFICATIONS AND CRITERIA USED IN THE DESIGN OF THIS COMPONENT.

DIMENSIONS, SUPPORTS AND LOADINGS SPECIFIED BY FABRICATOR TO BE VERIFIED BY BUILDING DESIGNER

BEARINGS

JT	FACTORED GROSS REACTION VERT	HORZ	MAXIMUM FACTORED GROSS REACTION DOWN	HORZ	UPLIFT	INPUT BRG IN-SX	REQRD BRG IN-SX
S	3335	0	3335	0	0	5-8	5-5
K	3335	0	3335	0	0	5-8	5-5

UNFACTORED REACTIONS

JT	1ST LCASE COMBINED	MAX./MIN. COMPONENT REACTIONS SNOW	LIVE	PERM.LIVE	WIND	DEAD	SOIL
S	2329	1694 / 0	0 / 0	0 / 0	0 / 0	635 / 0	0 / 0
K	2329	1694 / 0	0 / 0	0 / 0	0 / 0	636 / 0	0 / 0

BEARING MATERIAL TO BE SPF NO.2 OR BETTER AT JOINT(S) S, K

BRACING
TOP CHORD TO BE SHEATHED OR MAX. PURLIN SPACING = 2.78 FT.
MAX. UNBRACED BOTTOM CHORD LENGTH = 10.00 FT OR RIGID CEILING DIRECTLY APPLIED.

ALL PITCH BREAKS AND PERIMETER CORNER JOINTS MUST BE LATERALLY RESTRAINED.

LOADING
TOTAL LOAD CASES: (4)

CHORDS

MEMB. FR-TO	MAX. FACTORED FORCE (LBS)	FACTORED VERT. LOAD (PLF) FROM	TO	LC1	MAX CSI (LC)	MAX. UNBRAC LENGTH
A- B	0 / 36	-119.4	-119.4	0.17 (1)	10.00	
B- C	-4336 / 0	-119.4	-119.4	0.43 (1)	3.00	
C- D	-4898 / 0	-119.4	-119.4	0.46 (1)	2.78	
D- T	-5991 / 0	-119.4	-119.4	0.78 (1)	2.83	
T- U	-5991 / 0	-119.4	-119.4	0.78 (1)	2.83	
U- E	-5991 / 0	-119.4	-119.4	0.78 (1)	2.83	
E- V	-5991 / 0	-119.4	-119.4	0.79 (1)	2.81	
V- W	-5991 / 0	-119.4	-119.4	0.79 (1)	2.81	
W- X	-5991 / 0	-119.4	-119.4	0.79 (1)	2.81	
X- F	-5991 / 0	-119.4	-119.4	0.79 (1)	2.81	
F- Y	-6006 / 0	-119.4	-119.4	0.80 (1)	2.80	
Y- Z	-6006 / 0	-119.4	-119.4	0.80 (1)	2.80	
Z- G	-6006 / 0	-119.4	-119.4	0.80 (1)	2.80	
G- H	-4895 / 0	-119.4	-119.4	0.46 (1)	2.78	
H- I	-4338 / 0	-119.4	-119.4	0.43 (1)	3.00	
I- J	0 / 36	-119.4	-119.4	0.17 (1)	10.00	
S- B	-3236 / 0	0.0	0.0	0.23 (1)	5.84	
K- I	-3237 / 0	0.0	0.0	0.23 (1)	5.84	
S-AA	0 / 0	-18.2	-18.2	0.14 (1)	10.00	
AA- R	0 / 0	-18.2	-18.2	0.14 (1)	10.00	
R-AB	0 / 3889	-18.2	-18.2	0.65 (1)	10.00	
AB- Q	0 / 3889	-18.2	-18.2	0.65 (1)	10.00	
Q-AC	0 / 4361	-18.2	-18.2	0.64 (1)	10.00	
AC-AD	0 / 4361	-18.2	-18.2	0.64 (1)	10.00	
AD- P	0 / 4361	-18.2	-18.2	0.64 (1)	10.00	
P-AE	0 / 6006	-18.2	-18.2	0.90 (1)	10.00	
AE- O	0 / 6006	-18.2	-18.2	0.90 (1)	10.00	
O-AF	0 / 6006	-18.2	-18.2	0.90 (1)	10.00	
AF- N	0 / 6006	-18.2	-18.2	0.90 (1)	10.00	
N-AG	0 / 4358	-18.2	-18.2	0.63 (1)	10.00	
AG-AH	0 / 4358	-18.2	-18.2	0.63 (1)	10.00	
AH- M	0 / 4358	-18.2	-18.2	0.63 (1)	10.00	
M-AI	0 / 3890	-18.2	-18.2	0.64 (1)	10.00	
AI- L	0 / 3890	-18.2	-18.2	0.64 (1)	10.00	
L-AJ	0 / 0	-18.2	-18.2	0.14 (1)	10.00	
AJ- K	0 / 0	-18.2	-18.2	0.14 (1)	10.00	

WEBS

MEMB. FR-TO	MAX. FACTORED FORCE (LBS)	MAX CSI (LC)
R- C	-1032 / 0	0.18 (1)
C- Q	0 / 602	0.15 (1)
Q- D	-116 / 90	0.03 (4)
D- P	0 / 2035	0.50 (1)
P- E	-1084 / 0	0.28 (1)
P- F	-19 / 0	0.01 (1)
N- F	-1080 / 0	0.28 (1)
N- G	0 / 2057	0.51 (1)
M- G	-128 / 88	0.03 (4)
M- H	0 / 597	0.15 (1)
L- H	-1027 / 0	0.18 (1)
B- R	0 / 4008	0.99 (1)
L- I	0 / 4010	0.99 (1)

SPECIFIED CONCENTRATED LOADS (LBS)

JT	LOC.	LC1	MAX-	MAX+	FACE	DIR.	TYPE	HEEL	CONN.
D	6-0-0	-418	-418	—	FRONT	VERT	TOTAL	—	C1
G	21-1-0	-418	-418	—	FRONT	VERT	TOTAL	—	C1
M	21-0-4	-22	-22	—	FRONT	VERT	TOTAL	—	C1
O	13-6-8	-22	-22	—	FRONT	VERT	TOTAL	—	C1
Q	6-0-12	-22	-22	—	FRONT	VERT	TOTAL	—	C1
T	8-0-12	-102	-102	—	FRONT	VERT	TOTAL	—	C1
U	10-0-12	-102	-102	—	FRONT	VERT	TOTAL	—	C1
V	12-0-12	-102	-102	—	FRONT	VERT	TOTAL	—	C1
W	13-6-8	-102	-102	—	FRONT	VERT	TOTAL	—	C1
X	15-0-4	-102	-102	—	FRONT	VERT	TOTAL	—	C1
Y	17-0-4	-102	-102	—	FRONT	VERT	TOTAL	—	C1
Z	19-0-4	-102	-102	—	FRONT	VERT	TOTAL	—	C1

DESIGN CRITERIA

*** SPECIAL LOADS ANALYSIS ***
GEOMETRY AND/OR BASIC LOADS CHANGED BY USER.
LOADS WERE DERIVED FROM USER INPUT
NO FURTHER MODIFICATIONS WERE MADE

SPECIFIED LOADS:

TOP CH.	LL	=	34.8	PSF
	DL	=	6.0	PSF
BOT CH.	LL	=	0.0	PSF
	DL	=	7.3	PSF
TOTAL LOAD		=	48.1	PSF

SPACING = 24.0 IN. C/C

LOADING IN FLAT SECTION BASED ON A SLOPE OF 2.00/12 MINIMUM

*** NON STANDARD GIRDER ***
ADDT'L USER-DEFINED LOADS APPLIED TO ALL LOAD CASES.

THIS TRUSS IS DESIGNED FOR RESIDENTIAL OR SMALL BUILDING REQUIREMENTS OF PART 9, NBCC 2015

THIS DESIGN COMPLIES WITH:
- PART 9 OF BCBC 2018 , NBC-2019AE
- PART 9 OF OBC 2012 (2019 AMENDMENT)
- CSA 086-14
- TPIC 2014

(55 % OF 48.1 P.S.F. G.S.L. PLUS 8.4 P.S.F. RAIN LOAD) EQUALS 34.8 P.S.F. SPECIFIED ROOF LIVE LOAD

ALLOWABLE DEFL.(LL)= L/360 (0.90")
CALCULATED VERT. DEFL.(LL) = L/ 999 (0.24")
ALLOWABLE DEFL.(TL)= L/360 (0.90")
CALCULATED VERT. DEFL.(TL) = L/ 790 (0.41")

CSI: TC=0.80/1.00 (F-G:1) , BC=0.90/1.00 (N-P:1) , WB=0.99/1.00 (I-L:1) , SSI=0.50/1.00 (F-G:1)

DOL LUMBER=1.00 NAIL=1.00 LS BEND=1.00 COMP=1.00 SHEAR=1.00 TENS= 1.00

COMPANION LIVE LOAD FACTOR = 1.00

AUTOSOLVE HEELS OFF

TRUSS PLATE MANUFACTURER IS NOT RESPONSIBLE FOR QUALITY CONTROL IN THE TRUSS MANUFACTURING PLANT .

NAIL VALUES

PLATE	GRIP(DRY) (PSI) MAX	MIN	SHEAR (PLI) MAX	MIN	SECTION (PLI) MAX	MIN
MT20	650	371	1747	788	1987	1873

PLATE PLACEMENT TOL. = 0.250 inches

PLATE ROTATION TOL. = 5.0 Deg.

JSI GRIP= 0.90 (M) (INPUT = 0.90)
JSI METAL= 0.96 (O) (INPUT = 1.00)

CONTINUED ON PAGE 2

KOTT

JOB NAME	TRUSS NAME	QUANTITY	PLY	JOB DESC.	DRWG NO.
NE0723-089	G01	1	1	TRUSS DESC.	

Version 8.630 S Mar 22 2023 MiTek Industries, Inc. Sat Jul 15 10:29:43 2023 Page 2
ID:cRrv3ft5hGhkC1K_Tpco0KzbzAMVr-n0aoYjsQ6qzJD6tuwHUYLNNuizj?3dTI3FASzJyxsUc

MHP 23034
CORPORATION OF THE CITY OF OSHAWA
TRUE COPY OF PERMIT PLANS
Nov 14 2023
PER: CHIEF BUILDING OFFICIAL

SPECIFIED CONCENTRATED LOADS (LBS)

JT	LOC.	LC1	MAX-	MAX+	FACE	DIR	TYPE	HEEL	CONN.
AA	2-0-2	-22	-22	—	FRONT	VERT	TOTAL	—	C1
AB	4-0-2	-22	-22	—	FRONT	VERT	TOTAL	—	C1
AC	8-0-2	-22	-22	—	FRONT	VERT	TOTAL	—	C1
AD	10-0-2	-				VERT	TOTAL	—	C1
AE	12-0-2	-				VERT	TOTAL	—	C1
AF	15-0-4	-				VERT	TOTAL	—	C1
AG	17-0-4	-				VERT	TOTAL	—	C1
AH	19-0-4	-22	-22	—	FRONT	VERT	TOTAL	—	C1
AI	23-0-4	-22	-22	—	FRONT	VERT	TOTAL	—	C1
AJ	25-0-4	-22	-22	—	FRONT	VERT	TOTAL	—	C1

CONNECTION REQUIREMENTS

1) **C1:** A SUITABLE HANGER/MECHANICAL CONNECTION IS REQUIRED.

LICENSED PROFESSIONAL ENGINEER
N.A. EL-MASRI
Jul 15, 2023

READ ALL NOTES ON THIS PAGE AND ON THE ENGINEERING NOTES: TRUSSES. THE NOTE PAGE IS AN INTEGRAL PART OF THIS DRAWING AS IT CONTAINS SPECIFICATIONS AND CRITERIA USED IN THE DESIGN OF THIS COMPONENT.

KOTT

JOB NAME	TRUSS NAME	QUANTITY	PLY	JOB DESC.	DRWG NO.
NE0723-089	G02	1	1	TRUSS DESC.	

Version 8.630 S Mar 22 2023 MiTek Industries, Inc. Sat Jul 15 10:29:44 2023 Page 1

ID:cRw3it5nGhkCK_Tpoo0KzbzAMwr-9D8Al3t2s85AqGS4U_?nuav50N9yo4rRHvw?VmyxsUb

MHP 23034

CORPORATION OF THE CITY OF OSHAWA
TRUE COPY
OF PERMIT PLANS
Nov 14 2023
PER: _____
CHIEF BUILDING OFFICIAL

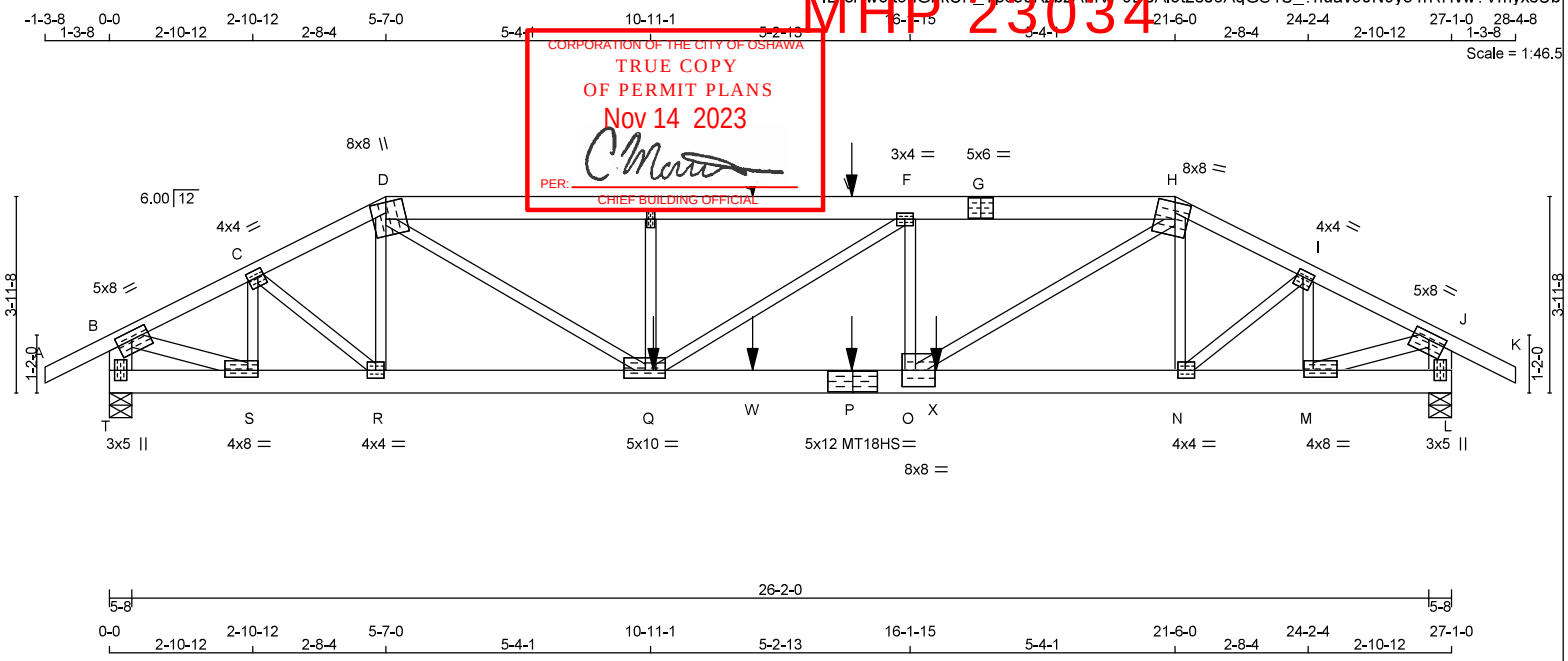

TOTAL WEIGHT = 135 lb

LUMBER

N. L. G. A. RULES

CHORDS	SIZE		LUMBER	DESCR.
A - D	2x4	DRY	No.2	SPF
D - G	2x6	DRY	No.2	SPF
G - H	2x6	DRY	No.2	SPF
H - K	2x4	DRY	No.2	SPF
T - B	2x6	DRY	No.2	SPF
L - J	2x6	DRY	No.2	SPF
T - P	2x6	DRY	2100F 1.8E	SPF
P - L	2x6	DRY	2100F 1.8E	SPF
ALL WEBS	2x3	DRY	No.2	SPF
EXCEPT				
B - S	2x4	DRY	No.2	SPF
M - J	2x4	DRY	No.2	SPF

DRY: SEASONED LUMBER.

PLATES (table is in inches)

JT	TYPE	PLATES	W	LEN	Y	X
B	TMVW-t	MT20	5.0	8.0	2.00	3.75
C	TMWW-t	MT20	4.0	4.0	1.75	1.50
D	TTWW+m	MT20	8.0	8.0	2.50	3.50
E	TMW+w	MT20	2.0	4.0		
F	TMWW-t	MT20	3.0	4.0		
G	TS-t	MT20	5.0	6.0		
H	TTWW-m	MT20	8.0	8.0	2.50	3.50
I	TMWW-t	MT20	4.0	4.0	1.50	1.50
J	TMVW-t	MT20	5.0	8.0	1.75	4.00
L	BMV1+p	MT20	3.0	5.0		
M	BMWW-t	MT20	4.0	8.0	1.75	2.25
N	BMWW-t	MT20	4.0	4.0	2.00	1.75
O	BMWW-t	MT20	8.0	8.0	4.00	3.25
P	BS-t	MT18HS	5.0	12.0		
Q	BMWWW-t	MT20	5.0	10.0	2.00	4.75
R	BMWW-t	MT20	4.0	4.0		
S	BMWW-t	MT20	4.0	8.0	1.75	2.50
T	BMV1+p	MT20	3.0	5.0		

DIMENSIONS, SUPPORTS AND LOADINGS SPECIFIED BY FABRICATOR TO BE VERIFIED BY BUILDING DESIGNER

BEARINGS

JT	FACTORED GROSS REACTION VERT	HORZ	MAXIMUM FACTORED GROSS REACTION DOWN	HORZ	UPLIFT	INPUT BRG IN-SX	REQRD BRG IN-SX
T	3430	0	3430	0	0	5-8	3-10
L	3555	0	3555	0	0	5-8	3-15

UNFACTORED REACTIONS

JT	1ST LCASE COMBINED	MAX./MIN. COMPONENT REACTIONS SNOW	LIVE	PERM.LIVE	WIND	DEAD	SOIL
T	2391	1765 / 0	0 / 0	0 / 0	0 / 0	626 / 0	0 / 0
L	2478	1829 / 0	0 / 0	0 / 0	0 / 0	649 / 0	0 / 0

BEARING MATERIAL TO BE SPF NO.2 OR BETTER AT JOINT(S) T, L
BEARING SIZE FACTOR = 1.15 AT JNT(S) T, L (BASED ON SUPPORT DEPTH = 1-8)

BRACING

TOP CHORD TO BE SHEATHED OR MAX. PURLIN SPACING = 2.50 FT.
MAX. UNBRACED BOTTOM CHORD LENGTH = 10.00 FT OR RIGID CEILING DIRECTLY APPLIED.

ALL PITCH BREAKS AND PERIMETER CORNER JOINTS MUST BE LATERALLY RESTRAINED.

LOADING

TOTAL LOAD CASES: (4)

CHORDS

MEMB. FR-TO	MAX. FACTORED FORCE (LBS)	FACTORED VERT. LOAD (PLF) FROM	TO	LC1	MAX CSI (LC)	MAX. UNBRAC LENGTH
A- B	0 / 36	-119.4	-119.4	0.17 (1)	10.00	
B- C	-4377 / 0	-119.4	-119.4	0.40 (1)	3.02	
C- D	-5129 / 0	-119.4	-119.4	0.46 (1)	2.70	
D- E	-7848 / 0	-119.4	-119.4	0.64 (1)	2.61	
E- U	-7848 / 0	-119.4	-119.4	0.70 (1)	2.52	
U- V	-7848 / 0	-119.4	-119.4	0.70 (1)	2.52	
V- F	-7848 / 0	-119.4	-119.4	0.70 (1)	2.52	
F- G	-8150 / 0	-119.4	-119.4	0.69 (1)	2.50	
G- H	-8150 / 0	-119.4	-119.4	0.69 (1)	2.50	
H- I	-5383 / 0	-119.4	-119.4	0.50 (1)	2.59	
I- J	-4543 / 0	-119.4	-119.4	0.42 (1)	2.94	
J- K	0 / 36	-119.4	-119.4	0.17 (1)	10.00	
T- B	-3322 / 0	0.0	0.0	0.23 (1)	5.78	
L- J	-3437 / 0	0.0	0.0	0.24 (1)	5.69	
T- S	0 / 0	-18.2	-18.2	0.09 (1)	10.00	
S- R	0 / 3925	-18.2	-18.2	0.30 (1)	10.00	
R- Q	0 / 4607	-18.2	-18.2	0.35 (1)	10.00	
Q- W	0 / 8151	-18.2	-18.2	0.53 (1)	10.00	
W- P	0 / 8151	-18.2	-18.2	0.53 (1)	10.00	
P- O	0 / 8151	-18.2	-18.2	0.53 (1)	10.00	
O- X	0 / 4833	-18.2	-18.2	0.47 (1)	10.00	
X- N	0 / 4833	-18.2	-18.2	0.47 (1)	10.00	
N- M	0 / 4073	-18.2	-18.2	0.33 (1)	10.00	
M- L	0 / 0	-18.2	-18.2	0.11 (1)	10.00	

WEBS

MEMB. FR-TO	MAX. FACTORED FORCE (LBS)	MAX CSI (LC)
S- C	-1246 / 0	0.21 (1)
C- R	0 / 889	0.22 (1)
R- D	-259 / 0	0.06 (1)
D- Q	0 / 3886	0.96 (1)
Q- E	-839 / 0	0.19 (1)
Q- F	-365 / 0	0.25 (1)
O- F	-721 / 0	0.16 (1)
O- H	0 / 3978	0.98 (1)
N- H	-187 / 6	0.04 (1)
N- I	0 / 995	0.25 (1)
M- I	-1351 / 0	0.23 (1)
B- S	0 / 4063	0.72 (1)
M- J	0 / 4216	0.75 (1)

SPECIFIED CONCENTRATED LOADS (LBS)

JT	LOC.	LC1	MAX-	MAX+	FACE	DIR.	TYPE	HEEL	CONN.
P	14-11-12	-21	-21	—	BACK	VERT	TOTAL	—	C1
Q	10-11-12	-795	-795	—	BACK	VERT	TOTAL	—	C1
U	12-11-12	-102	-102	—	BACK	VERT	TOTAL	—	C1
V	14-11-12	-102	-102	—	BACK	VERT	TOTAL	—	C1
W	12-11-12	-21	-21	—	BACK	VERT	TOTAL	—	C1
X	16-8-4	-1001	-1001	—	BACK	VERT	TOTAL	—	C1

CONNECTION REQUIREMENTS

1) **C1:** A SUITABLE HANGER/MECHANICAL CONNECTION IS REQUIRED.

DESIGN CRITERIA

*** SPECIAL LOADS ANALYSIS ***
GEOMETRY AND/OR BASIC LOADS CHANGED BY USER.
LOADS WERE DERIVED FROM USER INPUT
NO FURTHER MODIFICATIONS WERE MADE

SPECIFIED LOADS:

TOP CH.	LL	=	34.8	PSF
	DL	=	6.0	PSF
BOT CH.	LL	=	0.0	PSF
	DL	=	7.3	PSF
TOTAL LOAD		=	48.1	PSF

SPACING = 24.0 IN. C/C

LOADING IN FLAT SECTION BASED ON A SLOPE OF 2.00/12 MINIMUM

*** NON STANDARD GIRDER ***
ADDT'L USER-DEFINED LOADS APPLIED TO ALL LOAD CASES.

THIS TRUSS IS DESIGNED FOR RESIDENTIAL OR SMALL BUILDING REQUIREMENTS OF PART 9, NBCC 2015

THIS DESIGN COMPLIES WITH:
- PART 9 OF BCBC 2018 , NBC-2019AE
- PART 9 OF OBC 2012 (2019 AMENDMENT)
- CSA 086-14
- TPIC 2014

(55 % OF 48.1 P.S.F. G.S.L. PLUS 8.4 P.S.F. RAIN LOAD) EQUALS 34.8 P.S.F. SPECIFIED ROOF LIVE LOAD

ALLOWABLE DEFL.(LL)= L/360 (0.90")
CALCULATED VERT. DEFL.(LL) = L/ 999 (0.28")
ALLOWABLE DEFL.(TL)= L/360 (0.90")
CALCULATED VERT. DEFL.(TL) = L/ 674 (0.48")

CSI: TC=0.70/1.00 (E-F:1) , BC=0.53/1.00 (O-Q:1) , WB=0.98/1.00 (H-O:1) , SSI=0.87/1.00 (N-O:1)

DOL LUMBER=1.00 NAIL=1.00 LS BEND=1.00 COMP=1.00 SHEAR=1.00 TENS= 1.00

COMPANION LIVE LOAD FACTOR = 1.00

AUTOSOLVE HEELS OFF

TRUSS PLATE MANUFACTURER IS NOT RESPONSIBLE FOR QUALITY CONTROL IN THE TRUSS MANUFACTURING PLANT .

NAIL VALUES

PLATE	GRIP(DRY) (PSI) MAX	MIN	SHEAR (PLI) MAX	MIN	SECTION (PLI) MAX	MIN
MT20	650	371	1747	788	1987	1873
MT18HS	586	403	2455	1382	3163	3004

PLATE PLACEMENT TOL. = 0.250 inches

PLATE ROTATION TOL. = 0.5 Deg.

JSI GRIP= 0.90 (H) (INPUT = 0.90)
JSI METAL= 0.92 (P) (INPUT = 1.00)

LICENSED PROFESSIONAL ENGINEER
N.A. EL-MASRI
Jul 15, 2023

READ ALL NOTES ON THIS PAGE AND ON THE ENGINEERING NOTES: TRUSSES. THE NOTE PAGE IS AN INTEGRAL PART OF THIS DRAWING AS IT CONTAINS SPECIFICATIONS AND CRITERIA USED IN THE DESIGN OF THIS COMPONENT.

KOTT

JOB NAME	TRUSS NAME	QUANTITY	PLY	JOB DESC.	DRWG NO.
NE0723-089	G03	1	1	TRUSS DESC.	

Version 8.630 S Mar 22 2023 MiTek Industries, Inc. Sat Jul 15 10:29:45 2023 Page 1
ID:cRw8jt5hQHkCK_Tpco0KzbzAMVr-dPiYzPtgdSD1SQ1H2iW0RoSK1mZ7XhHbWZfZ1CyxsUa

MHP 23-034
CORPORATION OF THE CITY OF OSHAWA
TRUE COPY
OF PERMIT PLANS
Nov 14 2023
PER
CHIEF BUILDING OFFICIAL

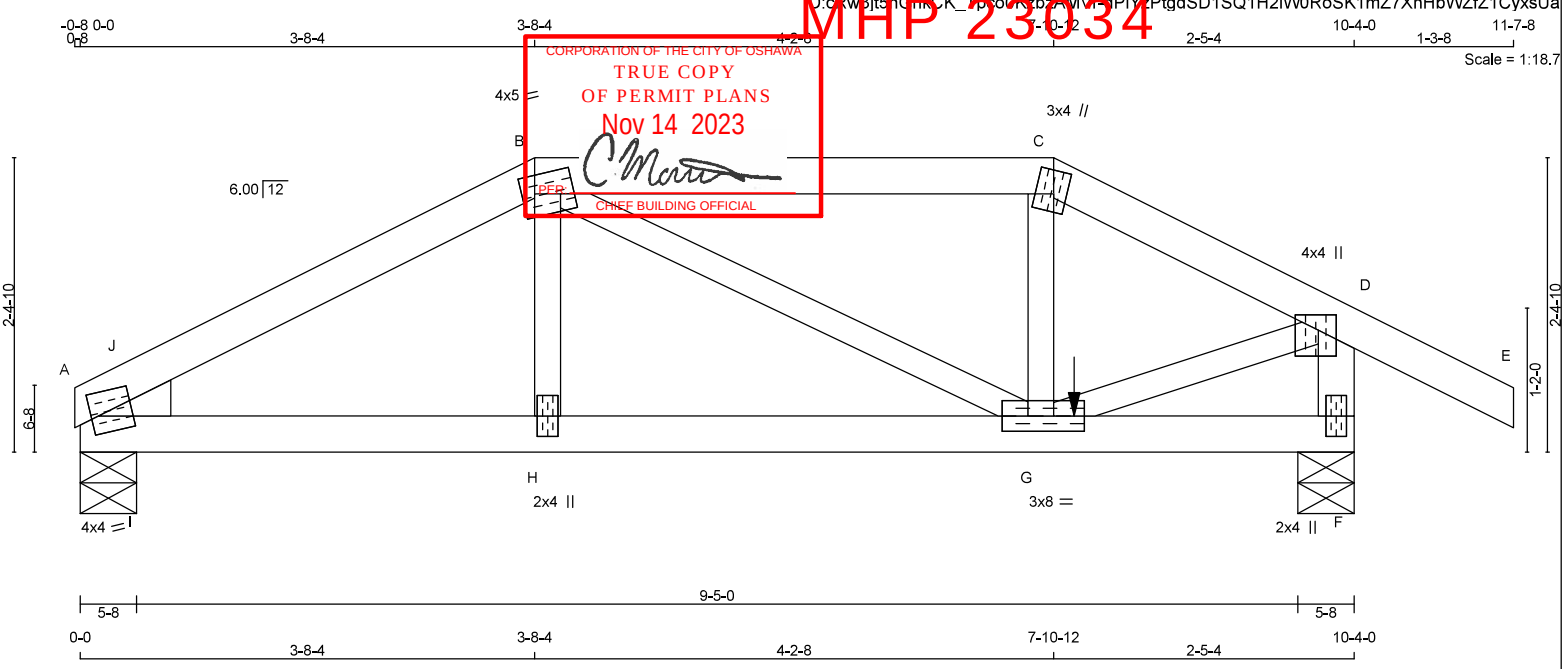

TOTAL WEIGHT = 36 lb [M]

LUMBER
N. L. G. A. RULES

CHORDS	SIZE		LUMBER	DESCR.
A - B	2x4	DRY	No.2	SPF
B - C	2x4	DRY	No.2	SPF
C - E	2x4	DRY	No.2	SPF
F - D	2x4	DRY	No.2	SPF
A - F	2x4	DRY	No.2	SPF
ALL WEBS EXCEPT	2x3	DRY	No.2	SPF

DRY: SEASONED LUMBER.

PLATES (table is in inches)

JT	TYPE	PLATES	W	LEN	Y	X
A	TMBH1-m	MT20	4.0	4.0	1.75	0.75
B	TTWW-m	MT20	4.0	5.0	1.75	1.25
C	TTW+m	MT20	3.0	4.0	2.25	1.25
D	TMVW+p	MT20	4.0	4.0	1.50	1.75
F	BMV1+p	MT20	2.0	4.0		
G	BMWWW-t	MT20	3.0	8.0	1.50	2.50
H	BMW+w	MT20	2.0	4.0		

DIMENSIONS, SUPPORTS AND LOADINGS SPECIFIED BY FABRICATOR TO BE VERIFIED BY BUILDING DESIGNER

BEARINGS

JT	FACTORED GROSS REACTION VERT	HORZ	MAXIMUM FACTORED GROSS REACTION DOWN	HORZ	UPLIFT	INPUT BRG IN-SX	REQRD BRG IN-SX	HEEL WEDGE
A	816	0	816	0	0	5-8	1-8	2x4 L
F	1194	0	1194	0	0	5-8	1-8	

UNFACTORED REACTIONS

JT	1ST LCASE COMBINED	MAX./MIN. COMPONENT REACTIONS SNOW	LIVE	PERM.LIVE	WIND	DEAD	SOIL
A	570	416 / 0	0 / 0	0 / 0	0 / 0	153 / 0	0 / 0
F	830	628 / 0	0 / 0	0 / 0	0 / 0	202 / 0	0 / 0

BEARING MATERIAL TO BE SPF NO.2 OR BETTER AT JOINT(S) A, F

BRACING
TOP CHORD TO BE SHEATHED OR MAX. PURLIN SPACING = 5.52 FT.
MAX. UNBRACED BOTTOM CHORD LENGTH = 10.00 FT OR RIGID CEILING DIRECTLY APPLIED.

ALL PITCH BREAKS AND PERIMETER CORNER JOINTS MUST BE LATERALLY RESTRAINED.

LOADING
TOTAL LOAD CASES: (4)

CHORDS

MEMB. FR-TO	MAX. FACTORED FORCE (LBS)	FACTORED VERT. LOAD (PLF) FROM	TO	LC1 MAX CSI (LC)	MAX. UNBRAC LENGTH
A- J	-1242 / 0	-119.4	-119.4	0.17 (1)	5.54
J- B	-1135 / 0	-119.4	-119.4	0.17 (1)	5.73
B- C	-1034 / 0	-119.4	-119.4	0.43 (1)	5.52
C- D	-1150 / 0	-119.4	-119.4	0.15 (1)	5.73
D- E	0 / 36	-119.4	-119.4	0.17 (1)	10.00
F- D	-1172 / 0	0.0	0.0	0.13 (1)	7.33
A- I	0 / 1001	-18.2	-18.2	0.20 (1)	10.00
I- H	0 / 1001	-18.2	-18.2	0.22 (1)	10.00
H- G	0 / 1005	-18.2	-18.2	0.22 (1)	10.00
G- F	0 / 0	-18.2	-18.2	0.05 (4)	10.00

WEBS

MEMB. FR-TO	MAX. FACTORED FORCE (LBS)	MAX CSI (LC)
H- B	0 / 82	0.03 (4)
B- G	-4 / 32	0.01 (1)
G- C	0 / 121	0.03 (1)
G- D	0 / 1084	0.27 (1)
I- J	-9 / 51	0.00 (1)

SPECIFIED CONCENTRATED LOADS (LBS)

JT	LOC.	LC1	MAX-	MAX+	FACE	DIR.	TYPE	HEEL	CONN.
G	8-0-12	-294	-294	—	BACK	VERT	TOTAL	—	C1

CONNECTION REQUIREMENTS

1) **C1:** A SUITABLE HANGER/MECHANICAL CONNECTION IS REQUIRED.

DESIGN CRITERIA

*** SPECIAL LOADS ANALYSIS ***
GEOMETRY AND/OR BASIC LOADS CHANGED BY USER.
LOADS WERE DERIVED FROM USER INPUT
NO FURTHER MODIFICATIONS WERE MADE

SPECIFIED LOADS:

TOP CH.	LL	=	34.8	PSF
	DL	=	6.0	PSF
BOT CH.	LL	=	0.0	PSF
	DL	=	7.3	PSF
TOTAL LOAD		=	48.1	PSF

SPACING = 24.0 IN. C/C

LOADING IN FLAT SECTION BASED ON A SLOPE OF 2.00/12 MINIMUM

*** NON STANDARD GIRDER ***
ADDT'L USER-DEFINED LOADS APPLIED TO ALL LOAD CASES.

THIS TRUSS IS DESIGNED FOR RESIDENTIAL OR SMALL BUILDING REQUIREMENTS OF PART 9, NBCC 2015

THIS DESIGN COMPLIES WITH:
- PART 9 OF BCBC 2018 , NBC-2019AE
- PART 9 OF OBC 2012 (2019 AMENDMENT)
- CSA 086-14
- TPIC 2014

(55 % OF 48.1 P.S.F. G.S.L. PLUS 8.4 P.S.F. RAIN LOAD)
EQUALS 34.8 P.S.F. SPECIFIED ROOF LIVE LOAD

ALLOWABLE DEFL.(LL)= L/360 (0.34")
CALCULATED VERT. DEFL.(LL) = L/ 999 (0.02")
ALLOWABLE DEFL.(TL)= L/360 (0.34")
CALCULATED VERT. DEFL.(TL) = L/ 999 (0.03")

CSI: TC=0.43/1.00 (B-C:1) , BC=0.22/1.00 (G-H:1) , WB=0.27/1.00 (D-G:1) , SSI=0.22/1.00 (B-C:1)

DOL LUMBER=1.00 NAIL=1.00 LS BEND=1.00 COMP=1.00 SHEAR=1.00 TENS= 1.00

COMPANION LIVE LOAD FACTOR = 1.00

TRUSS PLATE MANUFACTURER IS NOT RESPONSIBLE FOR QUALITY CONTROL IN THE TRUSS MANUFACTURING PLANT .

NAIL VALUES

PLATE	GRIP(DRY) (PSI) MAX	MIN	SHEAR (PLI) MAX	MIN	SECTION (PLI) MAX	MIN
MT20	650	371	1747	788	1987	1873

PLATE PLACEMENT TOL. = 0.250 inches

PLATE ROTATION TOL. = 5.0 Deg.

JSI GRIP= 0.90 (B) (INPUT = 0.90)
JSI METAL= 0.44 (A) (INPUT = 1.00)

LICENSED PROFESSIONAL ENGINEER
N.A. EL-MASRI
Jul 15, 2023

READ ALL NOTES ON THIS PAGE AND ON THE ENGINEERING NOTES: TRUSSES. THE NOTE PAGE IS AN INTEGRAL PART OF THIS DRAWING AS IT CONTAINS SPECIFICATIONS AND CRITERIA USED IN THE DESIGN OF THIS COMPONENT.

KOTT

JOB NAME	TRUSS NAME	QUANTITY	PLY	JOB DESC.	DRWG NO.
NE0723-089	G04	1	1	TRUSS DESC.	

Version 8.630 S Mar 22 2023 MiTek Industries, Inc. Sat Jul 15 10:29:46 2023 Page 1

ID:cRw3itSHnShkCKnTpcc0KzbzAMvr-6LGwAluIOlLu4acTbP1Fz??ZaAmXG78kIDP6aeyxsUZ

MHP 23034
CORPORATION OF THE CITY OF OSHAWA
TRUE COPY
OF PERMIT PLANS
Nov 14 2023
PER:
CHIEF BUILDING OFFICIAL

Scale = 1:23.2

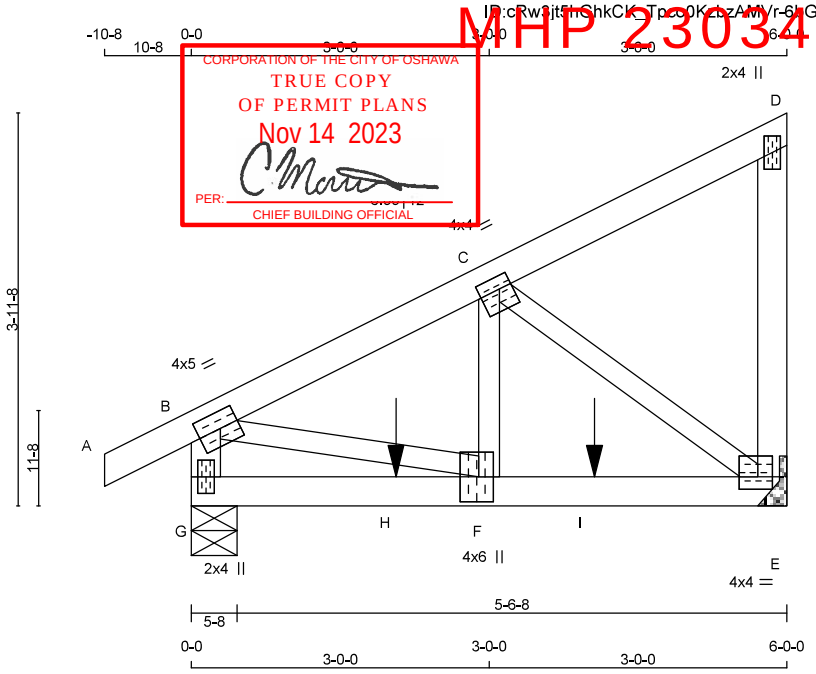

TOTAL WEIGHT = 26 lb [M]

LUMBER
N. L. G. A. RULES

CHORDS	SIZE		LUMBER	DESCR.
A - D	2x4	DRY	No.2	SPF
E - D	2x4	DRY	No.2	SPF
G - B	2x4	DRY	No.2	SPF
G - E	2x4	DRY	No.2	SPF
ALL WEBS EXCEPT	2x3	DRY	No.2	SPF

DRY: SEASONED LUMBER.

PLATES (table is in inches)

JT	TYPE	PLATES	W	LEN	Y	X
B	TMVW-t	MT20	4.0	5.0	2.00	2.25
C	TMWW-t	MT20	4.0	4.0	1.50	1.50
D	TMV+p	MT20	2.0	4.0		
E	BMVW1-t	MT20	4.0	4.0	1.50	1.75
F	BMWW+t	MT20	4.0	6.0	3.00	1.75
G	BMV1+p	MT20	2.0	4.0		

DIMENSIONS, SUPPORTS AND LOADINGS SPECIFIED BY FABRICATOR TO BE VERIFIED BY BUILDING DESIGNER

BEARINGS

JT	FACTORED GROSS REACTION VERT	HORZ	MAXIMUM FACTORED GROSS REACTION DOWN	HORZ	UPLIFT	INPUT BRG IN-SX	REQRD BRG IN-SX
E	1161	0	1161	0	0	MECHANICAL	
G	1243	0	1243	0	0	5-8	1-8

A SUITABLE HANGER/MECHANICAL CONNECTION IS REQUIRED AT JOINT E. MINIMUM BEARING LENGTH AT JOINT E = 1-8.

UNFACTORED REACTIONS

JT	1ST LCASE COMBINED	SNOW	MAX./MIN. COMPONENT REACTIONS LIVE	PERM.LIVE	WIND	DEAD	SOIL
E	810	597 / 0	0 / 0	0 / 0	0 / 0	213 / 0	0 / 0
G	865	646 / 0	0 / 0	0 / 0	0 / 0	219 / 0	0 / 0

BEARING MATERIAL TO BE SPF NO.2 OR BETTER AT JOINT(S) G

BRACING
TOP CHORD TO BE SHEATHED OR MAX. PURLIN SPACING = 5.40 FT.
MAX. UNBRACED BOTTOM CHORD LENGTH = 10.00 FT OR RIGID CEILING DIRECTLY APPLIED.

ALL PITCH BREAKS AND PERIMETER CORNER JOINTS MUST BE LATERALLY RESTRAINED.

LOADING
TOTAL LOAD CASES: (4)

CHORDS

MEMB. FR-TO	MAX. FACTORED FORCE (LBS)	VERT. LOAD (PLF) FROM	TO	LC1	MAX CSI (LC)	MAX. UNBRAC LENGTH
A- B	0 / 25	-119.4	-119.4	0.08 (1)	10.00	
B- C	-1322 / 0	-119.4	-119.4	0.18 (1)	5.40	
C- D	-15 / 0	-119.4	-119.4	0.16 (1)	6.25	
E- D	-145 / 0	0.0	0.0	0.04 (1)	7.81	
G- B	-1114 / 0	0.0	0.0	0.12 (1)	7.48	
G- H	0 / 0	-18.2	-18.2	0.57 (1)	10.00	
H- F	0 / 0	-18.2	-18.2	0.57 (1)	10.00	
F- I	0 / 1196	-18.2	-18.2	0.78 (1)	10.00	
I- E	0 / 1196	-18.2	-18.2	0.78 (1)	10.00	

WEBS

MEMB. FR-TO	MAX. FACTORED FORCE (LBS)	MAX CSI (LC)
F- C	0 / 1028	0.25 (1)
C- E	-1472 / 0	0.36 (1)
B- F	0 / 1224	0.30 (1)

SPECIFIED CONCENTRATED LOADS (LBS)

JT	LOC.	LC1	MAX-	MAX+	FACE	DIR.	TYPE	HEEL	CONN.
H	2-0-12	-511	-511	—	FRONT	VERT	TOTAL	—	C1
I	4-0-12	-511	-511	—	FRONT	VERT	TOTAL	—	C1

CONNECTION REQUIREMENTS

1) **C1:** A SUITABLE HANGER/MECHANICAL CONNECTION IS REQUIRED.

DESIGN CRITERIA

*** SPECIAL LOADS ANALYSIS ***
GEOMETRY AND/OR BASIC LOADS CHANGED BY USER.
LOADS WERE DERIVED FROM USER INPUT
NO FURTHER MODIFICATIONS WERE MADE

SPECIFIED LOADS:

TOP CH.	LL	=	34.8	PSF
	DL	=	6.0	PSF
BOT CH.	LL	=	0.0	PSF
	DL	=	7.3	PSF
TOTAL LOAD		=	48.1	PSF

SPACING = 24.0 IN. C/C

*** NON STANDARD GIRDER ***
ADDT'L USER-DEFINED LOADS APPLIED TO ALL LOAD CASES.

THIS TRUSS IS DESIGNED FOR RESIDENTIAL OR SMALL BUILDING REQUIREMENTS OF PART 9, NBCC 2015

THIS DESIGN COMPLIES WITH:
- PART 9 OF BCBC 2018 , NBC-2019AE
- PART 9 OF OBC 2012 (2019 AMENDMENT)
- CSA 086-14
- TPIC 2014

(55 % OF 48.1 P.S.F. G.S.L. PLUS 8.4 P.S.F. RAIN LOAD) EQUALS 34.8 P.S.F. SPECIFIED ROOF LIVE LOAD

ALLOWABLE DEFL.(LL)= L/360 (0.20")
CALCULATED VERT. DEFL.(LL) = L/ 999 (0.03")
ALLOWABLE DEFL.(TL)= L/360 (0.20")
CALCULATED VERT. DEFL.(TL) = L/ 999 (0.05")

CSI: TC=0.18/1.00 (B-C:1) , BC=0.78/1.00 (E-F:1) , WB=0.36/1.00 (C-E:1) , SSI=0.57/1.00 (F-G:1)

DOL LUMBER=1.00 NAIL=1.00 LS BEND=1.00 COMP=1.00 SHEAR=1.00 TENS= 1.00

COMPANION LIVE LOAD FACTOR = 1.00

TRUSS PLATE MANUFACTURER IS NOT RESPONSIBLE FOR QUALITY CONTROL IN THE TRUSS MANUFACTURING PLANT .

NAIL VALUES

PLATE	GRIP(DRY) (PSI) MAX	MIN	SHEAR (PLI) MAX	MIN	SECTION (PLI) MAX	MIN
MT20	650	371	1747	788	1987	1873

PLATE PLACEMENT TOL. = 0.250 inches

PLATE ROTATION TOL. = 5.0 Deg.

JSI GRIP= 0.88 (B) (INPUT = 0.90)
JSI METAL= 0.54 (F) (INPUT = 1.00)

LICENSED PROFESSIONAL ENGINEER
N.A. EL-MASRI
Jul 15, 2023

READ ALL NOTES ON THIS PAGE AND ON THE ENGINEERING NOTES: TRUSSES. THE NOTE PAGE IS AN INTEGRAL PART OF THIS DRAWING AS IT CONTAINS SPECIFICATIONS AND CRITERIA USED IN THE DESIGN OF THIS COMPONENT.

KOTT

JOB NAME	TRUSS NAME	QUANTITY	PLY	JOB DESC.	DRWG NO.
NE0723-089	G05	1	1	TRUSS DESC.	

Version 8.630 S Mar 22 2023 MiTek Industries, Inc. Sat Jul 15 10:29:46 2023 Page 1
ID:cRwBitFhGhkCK-Tpc_0KzbzAMVr-6bGwAIuIOILu4acTbP1Fz??ZZAmgG7skIDP6aeyxsUZ

MHP 23034

CORPORATION OF THE CITY OF OSHAWA
TRUE COPY
OF PERMIT PLANS
Nov 14 2023
PER:
CHIEF BUILDING OFFICIAL

Scale = 1:23.2

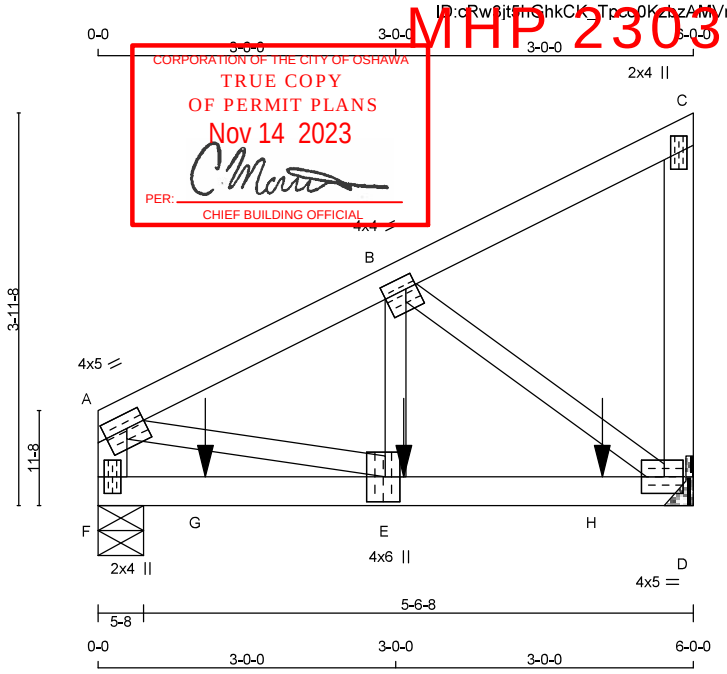

TOTAL WEIGHT = 25 lb
[M]

LUMBER
N. L. G. A. RULES

CHORDS	SIZE		LUMBER	DESCR.
A - C	2x4	DRY	No.2	SPF
D - C	2x4	DRY	No.2	SPF
F - A	2x4	DRY	No.2	SPF
F - D	2x4	DRY	No.2	SPF
ALL WEBS EXCEPT	2x3	DRY	No.2	SPF

DRY: SEASONED LUMBER.

PLATES (table is in inches)

JT	TYPE	PLATES	W	LEN	Y	X
A	TMVW-t	MT20	4.0	5.0	1.75	2.25
B	TMWW-t	MT20	4.0	4.0	1.50	1.25
C	TMV+p	MT20	2.0	4.0		
D	BMVW1-t	MT20	4.0	5.0	2.00	2.25
E	BMWW+t	MT20	4.0	6.0	3.00	1.75
F	BMV1+p	MT20	2.0	4.0		

DIMENSIONS, SUPPORTS AND LOADINGS SPECIFIED BY FABRICATOR TO BE VERIFIED BY BUILDING DESIGNER

BEARINGS

JT	FACTORED GROSS REACTION VERT	HORZ	MAXIMUM FACTORED GROSS REACTION DOWN	HORZ	UPLIFT	INPUT BRG IN-SX	REQRD BRG IN-SX
D	1456	0	1456	0	0	MECHANICAL	
F	1418	0	1418	0	0	5-8	1-9

A SUITABLE HANGER/MECHANICAL CONNECTION IS REQUIRED AT JOINT D. MINIMUM BEARING LENGTH AT JOINT D = 1-9.

UNFACTORED REACTIONS

JT	1ST LCASE COMBINED	MAX./MIN. COMPONENT REACTIONS SNOW	LIVE	PERM.LIVE	WIND	DEAD	SOIL
D	1015	749 / 0	0 / 0	0 / 0	0 / 0	266 / 0	0 / 0
F	988	729 / 0	0 / 0	0 / 0	0 / 0	259 / 0	0 / 0

BEARING MATERIAL TO BE SPF NO.2 OR BETTER AT JOINT(S) F

BRACING
TOP CHORD TO BE SHEATHED OR MAX. PURLIN SPACING = 5.29 FT.
MAX. UNBRACED BOTTOM CHORD LENGTH = 10.00 FT OR RIGID CEILING DIRECTLY APPLIED.

ALL PITCH BREAKS AND PERIMETER CORNER JOINTS MUST BE LATERALLY RESTRAINED.

LOADING
TOTAL LOAD CASES: (4)

CHORDS

MEMB. FR-TO	MAX. FORCE (LBS)	FACTORED VERT. LOAD (PLF) FROM	TO	LC1	MAX CSI (LC)
A- B	-1391 / 0	-119.4	-119.4	0.18 (1)	
B- C	-15 / 0	-119.4	-119.4	0.15 (1)	
D- C	-145 / 0	0.0	0.0	0.04 (1)	
F- A	-1046 / 0	0.0	0.0	0.12 (1)	
F- G	0 / 0	-18.2	-18.2	0.59 (1)	
G- E	0 / 0	-18.2	-18.2	0.59 (1)	
E- H	0 / 1258	-18.2	-18.2	0.77 (1)	
H- D	0 / 1258	-18.2	-18.2	0.77 (1)	

WEBS

MAX. UNBRAC LENGTH	MEMB. FR-TO	MAX. FORCE (LBS)	MAX CSI (LC)
5.29	E- B	0 / 1104	0.27 (1)
6.25	B- D	-1547 / 0	0.37 (1)
7.81	A- E	0 / 1287	0.32 (1)
7.66			
10.00			
10.00			
10.00			
10.00			

SPECIFIED CONCENTRATED LOADS (LBS)

JT	LOC.	LC1	MAX-	MAX+	FACE	DIR.	TYPE	HEEL	CONN.
E	3-1-0	-475	-475	—	BACK	VERT	TOTAL	—	C1
G	1-1-0	-475	-475	—	BACK	VERT	TOTAL	—	C1
H	5-1-0	-476	-476	—	BACK	VERT	TOTAL	—	C1

CONNECTION REQUIREMENTS

1) **C1:** A SUITABLE HANGER/MECHANICAL CONNECTION IS REQUIRED.

DESIGN CRITERIA

*** SPECIAL LOADS ANALYSIS ***
GEOMETRY AND/OR BASIC LOADS CHANGED BY USER.
LOADS WERE DERIVED FROM USER INPUT
NO FURTHER MODIFICATIONS WERE MADE

SPECIFIED LOADS:

TOP CH.	LL	=	34.8	PSF
	DL	=	6.0	PSF
BOT CH.	LL	=	0.0	PSF
	DL	=	7.3	PSF
TOTAL LOAD		=	48.1	PSF

SPACING = 24.0 IN. C/C

*** NON STANDARD GIRDER ***
ADDT'L USER-DEFINED LOADS APPLIED TO ALL LOAD CASES.

THIS TRUSS IS DESIGNED FOR RESIDENTIAL OR SMALL BUILDING REQUIREMENTS OF PART 9, NBCC 2015

THIS DESIGN COMPLIES WITH:
- PART 9 OF BCBC 2018 , NBC-2019AE
- PART 9 OF OBC 2012 (2019 AMENDMENT)
- CSA 086-14
- TPIC 2014

(55 % OF 48.1 P.S.F. G.S.L. PLUS 8.4 P.S.F. RAIN LOAD) EQUALS 34.8 P.S.F. SPECIFIED ROOF LIVE LOAD

ALLOWABLE DEFL.(LL)= L/360 (0.20")
CALCULATED VERT. DEFL.(LL) = L/ 999 (0.03")
ALLOWABLE DEFL.(TL)= L/360 (0.20")
CALCULATED VERT. DEFL.(TL) = L/ 999 (0.06")

CSI: TC=0.18/1.00 (A-B:1) , BC=0.77/1.00 (D-E:1) , WB=0.37/1.00 (B-D:1) , SSI=0.35/1.00 (D-E:1)

DOL LUMBER=1.00 NAIL=1.00 LS BEND=1.00 COMP=1.00 SHEAR=1.00 TENS= 1.00

COMPANION LIVE LOAD FACTOR = 1.00

TRUSS PLATE MANUFACTURER IS NOT RESPONSIBLE FOR QUALITY CONTROL IN THE TRUSS MANUFACTURING PLANT .

NAIL VALUES

PLATE	GRIP(DRY) (PSI) MAX	MIN	SHEAR (PLI) MAX	MIN	SECTION (PLI) MAX	MIN
MT20	650	371	1747	788	1987	1873

PLATE PLACEMENT TOL. = 0.250 inches

PLATE ROTATION TOL. = 5.0 Deg.

JSI GRIP= 0.88 (E) (INPUT = 0.90)
JSI METAL= 0.57 (E) (INPUT = 1.00)

LICENSED PROFESSIONAL ENGINEER
N.A. EL-MASRI
Jul 15, 2023

READ ALL NOTES ON THIS PAGE AND ON THE ENGINEERING NOTES: TRUSSES. THE NOTE PAGE IS AN INTEGRAL PART OF THIS DRAWING AS IT CONTAINS SPECIFICATIONS AND CRITERIA USED IN THE DESIGN OF THIS COMPONENT.

KOTT

JOB NAME	TRUSS NAME	QUANTITY	PLY	JOB DESC.	DRWG NO.
NE0723-089	G06	1	1	TRUSS DESC.	

Version 8.630 S Mar 22 2023 MiTek Industries, Inc. Sat Jul 15 10:29:47 2023 Page 1
ID:cRv3i5hGhkOK_Tjcc0KzbzAMVr-oqIN5vw93TkhkBf97YUWDXjAa9m?fyu_t8f65yxsUY

MHP 23034

CORPORATION OF THE CITY OF OSHAWA
TRUE COPY
OF PERMIT PLANS
Nov 14 2023
PER: _____
CHIEF BUILDING OFFICIAL

Scale = 1:14.3

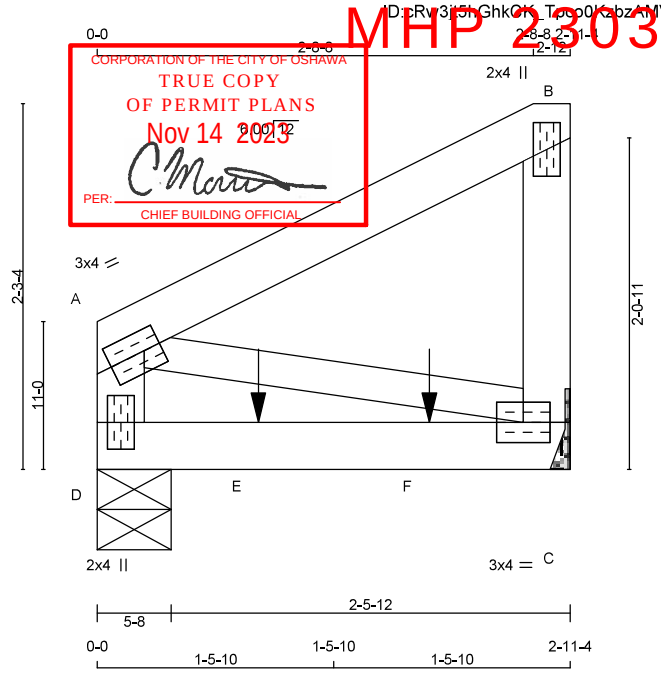

TOTAL WEIGHT = 12 lb
[M]

LUMBER
N. L. G. A. RULES

CHORDS	SIZE		LUMBER	DESCR.
A - B	2x4	DRY	No.2	SPF
C - B	2x4	DRY	No.2	SPF
D - A	2x4	DRY	No.2	SPF
D - C	2x4	DRY	No.2	SPF
ALL WEBS	2x3	DRY	No.2	SPF

DRY: SEASONED LUMBER.

PLATES (table is in inches)

JT	TYPE	PLATES	W	LEN	Y	X
A	TMVW-t	MT20	3.0	4.0	1.50	1.25
B	TMV+p	MT20	2.0	4.0		
C	BMVW1-t	MT20	3.0	4.0		
D	BMV1+p	MT20	2.0	4.0		

DIMENSIONS, SUPPORTS AND LOADINGS SPECIFIED BY FABRICATOR TO BE VERIFIED BY BUILDING DESIGNER

BEARINGS

JT	FACTORED GROSS REACTION VERT	HORZ	MAXIMUM FACTORED GROSS REACTION DOWN	HORZ	UPLIFT	INPUT BRG IN-SX	REQRD BRG IN-SX
C	444	0	444	0	0	MECHANICAL	
D	579	0	579	0	0	5-8	1-8

A SUITABLE HANGER/MECHANICAL CONNECTION IS REQUIRED AT JOINT C. MINIMUM BEARING LENGTH AT JOINT C = 1-8.

UNFACTORED REACTIONS

JT	1ST LCASE COMBINED	MAX./MIN. COMPONENT REACTIONS SNOW	LIVE	PERM.LIVE	WIND	DEAD	SOIL
C	309	231 / 0	0 / 0	0 / 0	0 / 0	78 / 0	0 / 0
D	403	300 / 0	0 / 0	0 / 0	0 / 0	103 / 0	0 / 0

BEARING MATERIAL TO BE SPF NO.2 OR BETTER AT JOINT(S) D

BRACING
TOP CHORD TO BE SHEATHED OR MAX. PURLIN SPACING = 10.00 FT.
MAX. UNBRACED BOTTOM CHORD LENGTH = 10.00 FT OR RIGID CEILING DIRECTLY APPLIED.

ALL PITCH BREAKS AND PERIMETER CORNER JOINTS MUST BE LATERALLY RESTRAINED.

LOADING
TOTAL LOAD CASES: (4)

CHORDS

MEMB. FR-TO	MAX. FORCE (LBS)	FACTORED VERT. LOAD (PLF) FROM	TO	LC1	MAX CSI (LC)	MAX UNBRAC LENGTH
A- B	0 / 0	-119.4	-119.4	0.19 (1)	10.00	
C- B	-175 / 0	0.0	0.0	0.02 (1)	7.81	
D- A	-175 / 0	0.0	0.0	0.02 (1)	7.81	
D- E	0 / 0	-18.2	-18.2	0.59 (1)	10.00	
E- F	0 / 0	-18.2	-18.2	0.59 (1)	10.00	
F- C	0 / 0	-18.2	-18.2	0.59 (1)	10.00	

WEBS

MEMB. FR-TO	MAX. FORCE (LBS)	MAX CSI (LC)
A- C	0 / 0	0.00 (1)

SPECIFIED CONCENTRATED LOADS (LBS)

JT	LOC.	LC1	MAX-	MAX+	FACE	DIR.	TYPE	HEEL	CONN.
E	1-0-0	-370	-370	—	FRONT	VERT	TOTAL	—	C1
F	2-0-12	-59	-59	—	BACK	VERT	TOTAL	—	C1

CONNECTION REQUIREMENTS

1) **C1:** A SUITABLE HANGER/MECHANICAL CONNECTION IS REQUIRED.

DESIGN CRITERIA

*** SPECIAL LOADS ANALYSIS ***
GEOMETRY AND/OR BASIC LOADS CHANGED BY USER.
LOADS WERE DERIVED FROM USER INPUT
NO FURTHER MODIFICATIONS WERE MADE

SPECIFIED LOADS:

TOP CH.	LL	=	34.8	PSF
	DL	=	6.0	PSF
BOT CH.	LL	=	0.0	PSF
	DL	=	7.3	PSF
TOTAL LOAD		=	48.1	PSF

SPACING = 24.0 IN. C/C

*** NON STANDARD GIRDER ***
ADDT'L USER-DEFINED LOADS APPLIED TO ALL LOAD CASES.

THIS TRUSS IS DESIGNED FOR RESIDENTIAL OR SMALL BUILDING REQUIREMENTS OF PART 9, NBCC 2015

THIS DESIGN COMPLIES WITH:
- PART 9 OF BCBC 2018 , NBC-2019AE
- PART 9 OF OBC 2012 (2019 AMENDMENT)
- CSA 086-14
- TPIC 2014

(55 % OF 48.1 P.S.F. G.S.L. PLUS 8.4 P.S.F. RAIN LOAD) EQUALS 34.8 P.S.F. SPECIFIED ROOF LIVE LOAD

ALLOWABLE DEFL.(LL)= L/360 (0.19")
CALCULATED VERT. DEFL.(LL) = L/ 999 (0.03")
ALLOWABLE DEFL.(TL)= L/360 (0.19")
CALCULATED VERT. DEFL.(TL) = L/ 585 (0.06")

CSI: TC=0.19/1.00 (A-B:1) , BC=0.59/1.00 (C-D:1) , WB=0.00/1.00 (A-C:1) , SSI=0.35/1.00 (C-D:1)

DOL LUMBER=1.00 NAIL=1.00 LS BEND=1.00 COMP=1.00 SHEAR=1.00 TENS= 1.00

COMPANION LIVE LOAD FACTOR = 1.00

TRUSS PLATE MANUFACTURER IS NOT RESPONSIBLE FOR QUALITY CONTROL IN THE TRUSS MANUFACTURING PLANT .

NAIL VALUES

PLATE	GRIP(DRY) (PSI) MAX	MIN	SHEAR (PLI) MAX	MIN	SECTION (PLI) MAX	MIN
MT20	650	371	1747	788	1987	1873

PLATE PLACEMENT TOL. = 0.250 inches

PLATE ROTATION TOL. = 5.0 Deg.

JSI GRIP= 0.17 (C) (INPUT = 0.90)
JSI METAL= 0.07 (B) (INPUT = 1.00)

LICENSED PROFESSIONAL ENGINEER
N.A. EL-MASRI
Jul 15, 2023

READ ALL NOTES ON THIS PAGE AND ON THE ENGINEERING NOTES: TRUSSES. THE NOTE PAGE IS AN INTEGRAL PART OF THIS DRAWING AS IT CONTAINS SPECIFICATIONS AND CRITERIA USED IN THE DESIGN OF THIS COMPONENT.

KOTT

JOB NAME	TRUSS NAME	QUANTITY	PLY	JOB DESC.	DRWG NO.
NE0723-089	J01	9	1	TRUSS DESC.	

Version 8.630 S Mar 22 2023 MiTek Industries, Inc. Sat Jul 15 10:29:47 2023 Page 1
ID:cRv3!f5hGhkCK_Tpco0Kzbz4MVr-aoqIN5vw93TkhkBf97YUWDXbjaGu?fyu_t8f65yxsUY

MHP 23034
CORPORATION OF THE CITY OF OSHAWA
TRUE COPY
OF PERMIT PLANS
Nov 14 2023
PER:
CHIEF BUILDING OFFICIAL

Scale = 1:23.6

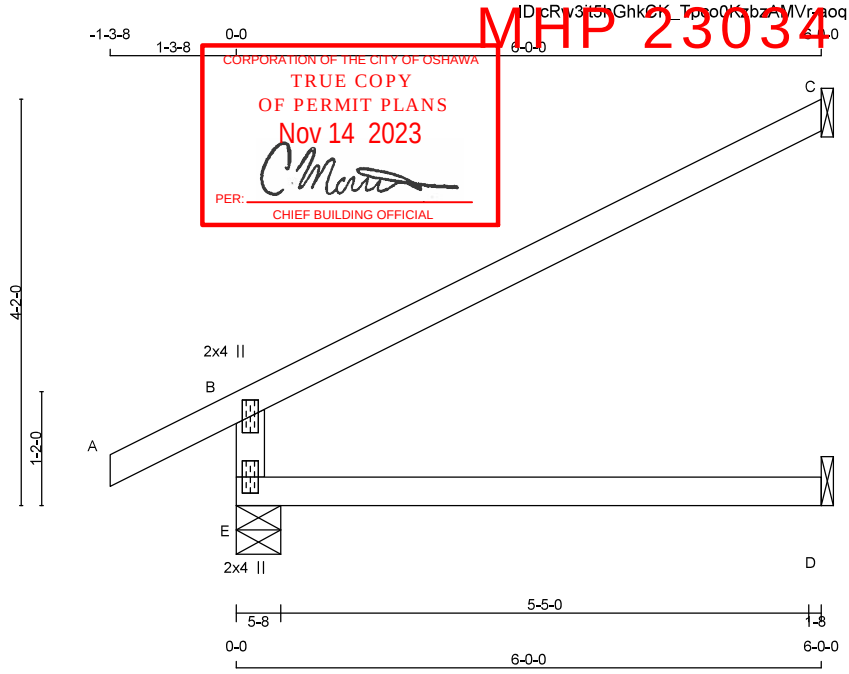

TOTAL WEIGHT = 9 X 17 = 154 lb
[M]

LUMBER
N. L. G. A. RULES

CHORDS	SIZE		LUMBER	DESCR.
E - B	2x4	DRY	No.2	SPF
A - C	2x4	DRY	No.2	SPF
E - D	2x4	DRY	No.2	SPF

DRY: SEASONED LUMBER.

PLATES (table is in inches)

JT	TYPE	PLATES	W	LEN	Y	X
B	TMV+p	MT20	2.0	4.0		
E	BMV1+p	MT20	2.0	4.0		

DIMENSIONS, SUPPORTS AND LOADINGS SPECIFIED BY FABRICATOR TO BE VERIFIED BY BUILDING DESIGNER

BEARINGS

JT	FACTORED GROSS REACTION VERT	HORZ	MAXIMUM FACTORED GROSS REACTION DOWN	HORZ	UPLIFT	INPUT BRG IN-SX	REQRD BRG IN-SX
E	674	0	674	0	0	5-8	1-8
C	269	0	269	0	0	1-8	1-8
D	45	0	51	0	0	1-8	1-8

SEE MITEK STANDARD DETAIL MSD2015-H FOR CONNECTION TO JOINT(S) C , D

UNFACTORED REACTIONS

JT	1ST LCASE COMBINED	MAX./MIN. COMPONENT REACTIONS SNOW	LIVE	PERM.LIVE	WIND	DEAD	SOIL
E	468	355 / 0	0 / 0	0 / 0	0 / 0	113 / 0	0 / 0
C	184	157 / 0	0 / 0	0 / 0	0 / 0	27 / 0	0 / 0
D	36	0 / 0	0 / 0	0 / 0	0 / 0	36 / 0	0 / 0

BEARING MATERIAL TO BE SPF NO.2 OR BETTER AT JOINT(S) E, C

BRACING
TOP CHORD TO BE SHEATHED OR MAX. PURLIN SPACING = 6.25 FT.
MAX. UNBRACED BOTTOM CHORD LENGTH = 10.00 FT OR RIGID CEILING DIRECTLY APPLIED.

ALL PITCH BREAKS AND PERIMETER CORNER JOINTS MUST BE LATERALLY RESTRAINED.

LOADING
TOTAL LOAD CASES: (4)

CHORDS

MEMB. FR-TO	MAX. FACTORED FORCE (LBS)	FACTORED VERT. LOAD (PLF) FROM	TO	LC1 MAX CSI (LC)
E- B	-610 / 0	0.0	0.0	0.13 (4)
A- B	0 / 36	-119.4	-119.4	0.16 (1)
B- C	-40 / 0	-119.4	-119.4	0.73 (1)
E- D	0 / 0	-18.2	-18.2	0.13 (4)

WEBS

MEMB. FR-TO	MAX. FACTORED FORCE (LBS)	MAX CSI (LC)	MAX UNBRAC LENGTH
E- B	-610 / 0	0.13 (4)	7.81
A- B	0 / 36	0.16 (1)	10.00
B- C	-40 / 0	0.73 (1)	6.25
E- D	0 / 0	0.13 (4)	10.00

DESIGN CRITERIA

SPECIFIED LOADS:

TOP CH.	LL	=	34.8	PSF
	DL	=	6.0	PSF
BOT CH.	LL	=	0.0	PSF
	DL	=	7.3	PSF
TOTAL LOAD		=	48.1	PSF

SPACING = 24.0 IN. C/C

THIS TRUSS IS DESIGNED FOR RESIDENTIAL OR SMALL BUILDING REQUIREMENTS OF PART 9, NBCC 2015

THIS DESIGN COMPLIES WITH:
- PART 9 OF BCBC 2018 , NBC-2019AE
- PART 9 OF OBC 2012 (2019 AMENDMENT)
- CSA 086-14
- TPIC 2014

DESIGN ASSUMPTIONS
-OVERHANG NOT TO BE ALTERED OR CUT OFF.

(55 % OF 48.1 P.S.F. G.S.L. PLUS 8.4 P.S.F. RAIN LOAD) EQUALS 34.8 P.S.F. SPECIFIED ROOF LIVE LOAD

ALLOWABLE DEFL.(LL)= L/360 (0.20")
CALCULATED VERT. DEFL.(LL) = L/ 999 (0.00")
ALLOWABLE DEFL.(TL)= L/360 (0.20")
CALCULATED VERT. DEFL.(TL) = L/ 999 (0.03")

CSI: TC=0.73/1.00 (B-C:1) , BC=0.13/1.00 (D-E:4) , WB=0.00/1.00 (n/a:0) , SSI=0.31/1.00 (B-C:1)

DOL LUMBER=1.00 NAIL=1.00 LS BEND=1.10 COMP=1.10 SHEAR=1.10 TENS= 1.10

COMPANION LIVE LOAD FACTOR = 1.00

TRUSS PLATE MANUFACTURER IS NOT RESPONSIBLE FOR QUALITY CONTROL IN THE TRUSS MANUFACTURING PLANT .

NAIL VALUES

PLATE	GRIP(DRY) (PSI) MAX	MIN	SHEAR (PLI) MAX	MIN	SECTION (PLI) MAX	MIN
MT20	650	371	1747	788	1987	1873

PLATE PLACEMENT TOL. = 0.250 inches

PLATE ROTATION TOL. = 5.0 Deg.

JSI GRIP= 0.34 (B) (INPUT = 0.90)
JSI METAL= 0.25 (B) (INPUT = 1.00)

LICENSED PROFESSIONAL ENGINEER
N.A. EL-MASRI
Jul 15, 2023

READ ALL NOTES ON THIS PAGE AND ON THE ENGINEERING NOTES: TRUSSES. THE NOTE PAGE IS AN INTEGRAL PART OF THIS DRAWING AS IT CONTAINS SPECIFICATIONS AND CRITERIA USED IN THE DESIGN OF THIS COMPONENT.

KOTT

JOB NAME	TRUSS NAME	QUANTITY	PLY	JOB DESC.	DRWG NO.
NE0723-089	J02	2	1	TRUSS DESC.	

Version 8.630 S Mar 22 2023 MiTek Industries, Inc. Sat Jul 15 10:29:47 2023 Page 1

MHP 23034
CORPORATION OF THE CITY OF OSHAWA
TRUE COPY
OF PERMIT PLANS
Nov 14 2023
PER:
CHIEF BUILDING OFFICIAL

Scale = 1:18.6

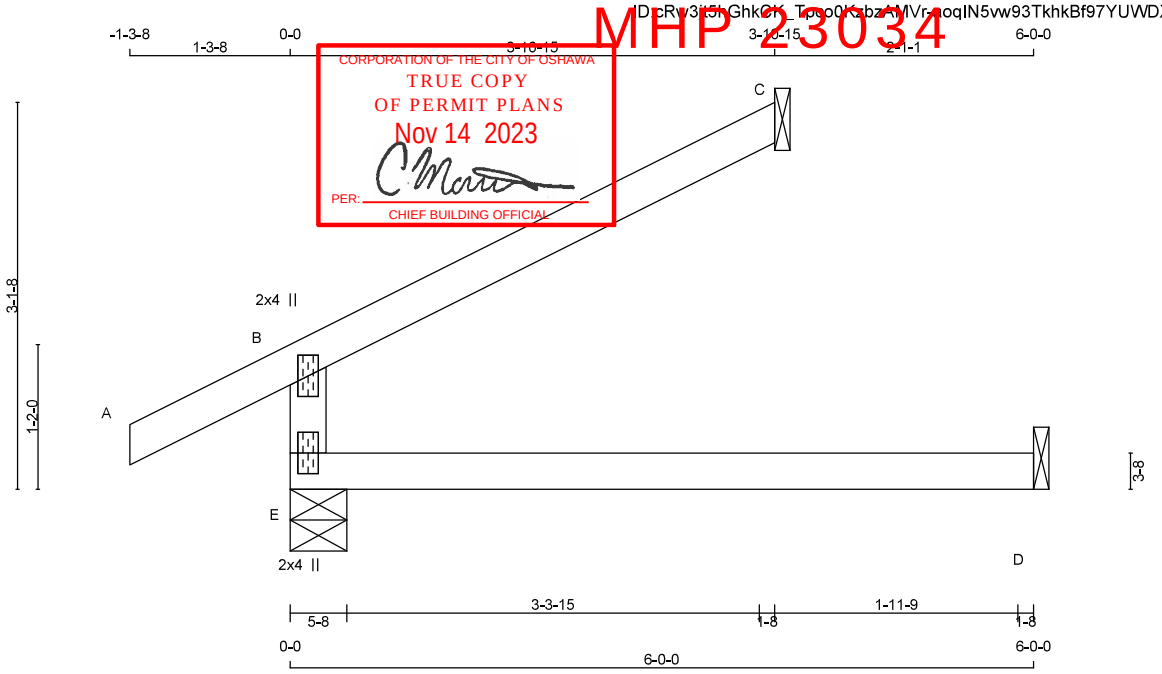

TOTAL WEIGHT = 2 X 14 = 29 lb

LUMBER
N. L. G. A. RULES

CHORDS	SIZE		LUMBER	DESCR.
E - B	2x4	DRY	No.2	SPF
A - C	2x4	DRY	No.2	SPF
E - D	2x4	DRY	No.2	SPF

DRY: SEASONED LUMBER.

PLATES (table is in inches)

JT	TYPE	PLATES	W	LEN	Y	X
B	TMV+p	MT20	2.0	4.0		
E	BMV1+p	MT20	2.0	4.0		

DIMENSIONS, SUPPORTS AND LOADINGS SPECIFIED BY FABRICATOR TO BE VERIFIED BY BUILDING DESIGNER

BEARINGS

JT	FACTORED GROSS REACTION VERT	HORZ	MAXIMUM FACTORED GROSS REACTION DOWN	HORZ	UPLIFT	INPUT BRG IN-SX	REQRD BRG IN-SX
E	518	0	518	0	0	5-8	1-8
C	175	0	175	0	0	1-8	1-8
D	45	0	51	0	0	1-8	1-8

SEE MITEK STANDARD DETAIL MSD2015-H FOR CONNECTION TO JOINT(S) C , D

UNFACTORED REACTIONS

JT	1ST LCASE COMBINED	MAX./MIN. COMPONENT REACTIONS SNOW	LIVE	PERM.LIVE	WIND	DEAD	SOIL
E	362	265 / 0	0 / 0	0 / 0	0 / 0	97 / 0	0 / 0
C	120	102 / 0	0 / 0	0 / 0	0 / 0	18 / 0	0 / 0
D	36	0 / 0	0 / 0	0 / 0	0 / 0	36 / 0	0 / 0

BEARING MATERIAL TO BE SPF NO.2 OR BETTER AT JOINT(S) E, C

BRACING
TOP CHORD TO BE SHEATHED OR MAX. PURLIN SPACING = 6.25 FT.
MAX. UNBRACED BOTTOM CHORD LENGTH = 10.00 FT OR RIGID CEILING DIRECTLY APPLIED.

ALL PITCH BREAKS AND PERIMETER CORNER JOINTS MUST BE LATERALLY RESTRAINED.

LOADING
TOTAL LOAD CASES: (4)

CHORDS MEMB. FR-TO	MAX. FACTORED FORCE (LBS)	FACTORED VERT. LOAD (PLF) FROM	TO	LC1 MAX CSI (LC)	WEBS MAX. UNBRAC LENGTH	MEMB. FR-TO	MAX. FACTORED FORCE (LBS)	MAX CSI (LC)
E- B	-454 / 0	0.0	0.0	0.13 (4)	7.81			
A- B	0 / 36	-119.4	-119.4	0.16 (1)	10.00			
B- C	-26 / 0	-119.4	-119.4	0.31 (1)	6.25			
E- D	0 / 0	-18.2	-18.2	0.13 (4)	10.00			

DESIGN CRITERIA

SPECIFIED LOADS:

TOP CH.	LL =	34.8	PSF
	DL =	6.0	PSF
BOT CH.	LL =	0.0	PSF
	DL =	7.3	PSF
TOTAL LOAD	=	48.1	PSF

SPACING = 24.0 IN. C/C

THIS TRUSS IS DESIGNED FOR RESIDENTIAL OR SMALL BUILDING REQUIREMENTS OF PART 9, NBCC 2015

THIS DESIGN COMPLIES WITH:
- PART 9 OF BCBC 2018 , NBC-2019AE
- PART 9 OF OBC 2012 (2019 AMENDMENT)
- CSA 086-14
- TPIC 2014

DESIGN ASSUMPTIONS
-OVERHANG NOT TO BE ALTERED OR CUT OFF.

(55 % OF 48.1 P.S.F. G.S.L. PLUS 8.4 P.S.F. RAIN LOAD) EQUALS 34.8 P.S.F. SPECIFIED ROOF LIVE LOAD

ALLOWABLE DEFL.(LL)= L/360 (0.20")
CALCULATED VERT. DEFL.(LL) = L/ 999 (0.00")
ALLOWABLE DEFL.(TL)= L/360 (0.20")
CALCULATED VERT. DEFL.(TL) = L/ 999 (0.03")

CSI: TC=0.31/1.00 (B-C:1) , BC=0.13/1.00 (D-E:4) , WB=0.00/1.00 (n/a:0) , SSI=0.20/1.00 (B-C:1)

DOL LUMBER=1.00 NAIL=1.00 LS BEND=1.10 COMP=1.10 SHEAR=1.10 TENS= 1.10

COMPANION LIVE LOAD FACTOR = 1.00

TRUSS PLATE MANUFACTURER IS NOT RESPONSIBLE FOR QUALITY CONTROL IN THE TRUSS MANUFACTURING PLANT .

NAIL VALUES

PLATE	GRIP(DRY) (PSI) MAX	MIN	SHEAR (PLI) MAX	MIN	SECTION (PLI) MAX	MIN
MT20	650	371	1747	788	1987	1873

PLATE PLACEMENT TOL. = 0.250 inches

PLATE ROTATION TOL. = 5.0 Deg.

JSI GRIP= 0.25 (B) (INPUT = 0.90)
JSI METAL= 0.19 (B) (INPUT = 1.00)

LICENSED PROFESSIONAL ENGINEER
N.A. EL-MASRI
Jul 15, 2023

READ ALL NOTES ON THIS PAGE AND ON THE ENGINEERING NOTES: TRUSSES. THE NOTE PAGE IS AN INTEGRAL PART OF THIS DRAWING AS IT CONTAINS SPECIFICATIONS AND CRITERIA USED IN THE DESIGN OF THIS COMPONENT.

KOTT

JOB NAME	TRUSS NAME	QUANTITY	PLY	JOB DESC.	DRWG NO.
NE0723-089	J03	2	1	TRUSS DESC.	

Version 8.630 S Mar 22 2023 MiTek Industries, Inc. Sat Jul 15 10:29:48 2023 Page 1

ID:cRw3it5hChkCk_Tpc0KzbzAMyr-2_OhbQwYwNbbJulrjq4j2Q4vV_c7k6C1CXuDeXyxsUX

MHP 23034

CORPORATION OF THE CITY OF OSHAWA
TRUE COPY
OF PERMIT PLANS
Nov 14 2023
PER:
CHIEF BUILDING OFFICIAL

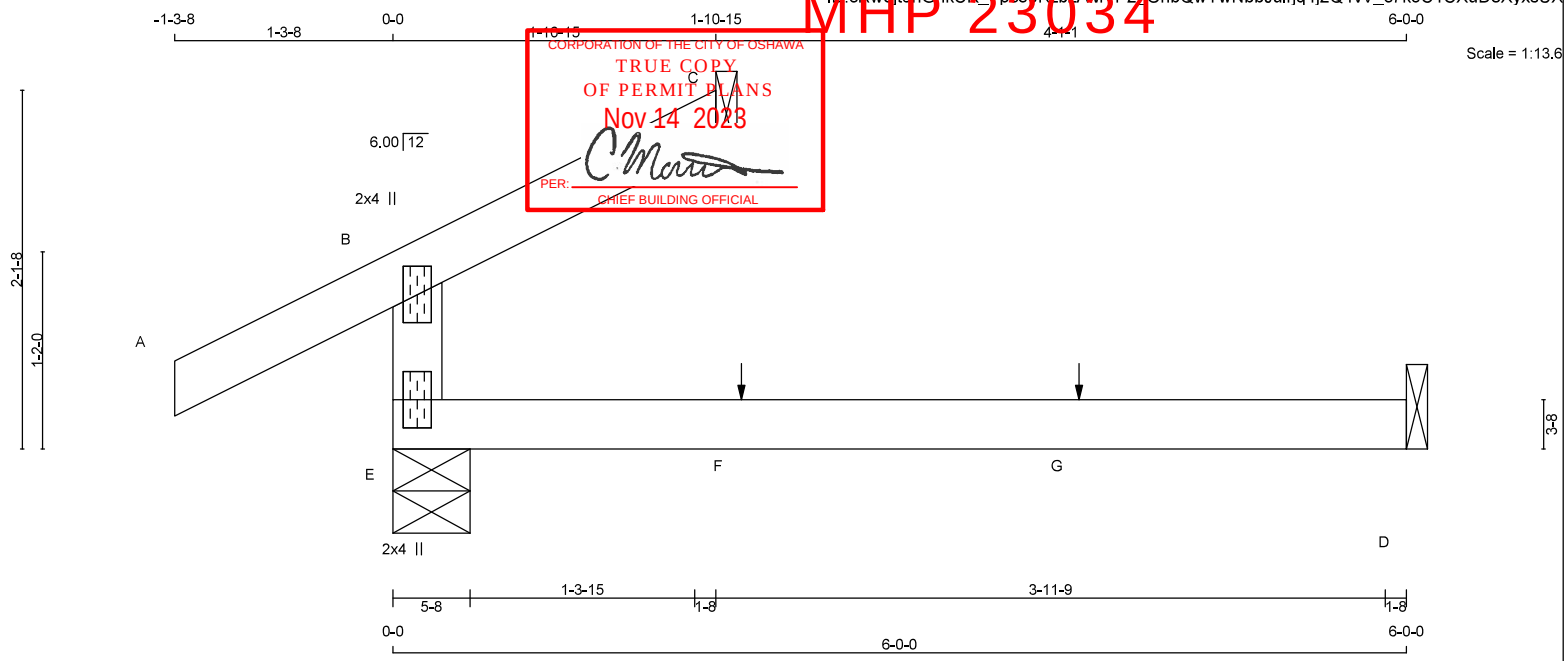

TOTAL WEIGHT = 2 X 12 = 24 lb [M]

LUMBER
N. L. G. A. RULES

CHORDS	SIZE		LUMBER	DESCR.
E - B	2x4	DRY	No.2	SPF
A - C	2x4	DRY	No.2	SPF
E - D	2x4	DRY	No.2	SPF

DRY: SEASONED LUMBER.

PLATES (table is in inches)

JT	TYPE	PLATES	W	LEN	Y	X
B	TMV+p	MT20	2.0	4.0		
E	BMV1+p	MT20	2.0	4.0		

DIMENSIONS, SUPPORTS AND LOADINGS SPECIFIED BY FABRICATOR TO BE VERIFIED BY BUILDING DESIGNER

BEARINGS

JT	FACTORED GROSS REACTION VERT	HORZ	MAXIMUM FACTORED GROSS REACTION DOWN	HORZ	UPLIFT	INPUT BRG IN-SX	REQRD BRG IN-SX
E	368	0	368	0	0	5-8	1-8
C	86	0	86	0	0	1-8	1-8
D	45	0	51	0	0	1-8	1-8

SEE MITEK STANDARD DETAIL MSD2015-H FOR CONNECTION TO JOINT(S) C , D

UNFACTORED REACTIONS

JT	1ST LCASE COMBINED	MAX./MIN. COMPONENT REACTIONS SNOW	LIVE	PERM.LIVE	WIND	DEAD	SOIL
E	259	177 / 0	0 / 0	0 / 0	0 / 0	82 / 0	0 / 0
C	59	50 / 0	0 / 0	0 / 0	0 / 0	9 / 0	0 / 0
D	36	0 / 0	0 / 0	0 / 0	0 / 0	36 / 0	0 / 0

BEARING MATERIAL TO BE SPF NO.2 OR BETTER AT JOINT(S) E, C

BRACING
TOP CHORD TO BE SHEATHED OR MAX. PURLIN SPACING = 6.25 FT.
MAX. UNBRACED BOTTOM CHORD LENGTH = 10.00 FT OR RIGID CEILING DIRECTLY APPLIED.

ALL PITCH BREAKS AND PERIMETER CORNER JOINTS MUST BE LATERALLY RESTRAINED.

LOADING
TOTAL LOAD CASES: (4)

CHORDS MEMB. FR-TO	MAX. FACTORED FORCE (LBS)	FACTORED VERT. LOAD (PLF) FROM	TO	LC1 MAX CSI (LC)	WEBS MEMB. FR-TO	MAX. FACTORED FORCE (LBS)	MAX CSI (LC) UNBRAC LENGTH
E- B	-304 / 0	0.0	0.0	0.13 (4)	7.81		
A- B	0 / 36	-119.4	-119.4	0.16 (1)	10.00		
B- C	-12 / 0	-119.4	-119.4	0.07 (1)	6.25		
E- F	0 / 0	-18.2	-18.2	0.13 (4)	10.00		
F- G	0 / 0	-18.2	-18.2	0.13 (4)	10.00		
G- D	0 / 0	-18.2	-18.2	0.13 (4)	10.00		

SPECIFIED CONCENTRATED LOADS (LBS)

JT	LOC.	LC1	MAX-	MAX+	FACE	DIR.	TYPE	HEEL	CONN.
F	2-0-12	1	1	—	BACK	VERT	TOTAL	—	C1
G	4-0-12	1	1	—	BACK	VERT	TOTAL	—	C1

CONNECTION REQUIREMENTS

1) **C1:** A SUITABLE HANGER/MECHANICAL CONNECTION IS REQUIRED.

DESIGN CRITERIA

*** SPECIAL LOADS ANALYSIS ***
GEOMETRY AND/OR BASIC LOADS CHANGED BY USER.
LOADS WERE DERIVED FROM USER INPUT
NO FURTHER MODIFICATIONS WERE MADE

SPECIFIED LOADS:

TOP CH.	LL	=	34.8	PSF
	DL	=	6.0	PSF
BOT CH.	LL	=	0.0	PSF
	DL	=	7.3	PSF
TOTAL LOAD		=	48.1	PSF

SPACING = 24.0 IN. C/C

*** NON STANDARD GIRDER ***
ADDT'L USER-DEFINED LOADS APPLIED TO ALL LOAD CASES.

THIS TRUSS IS DESIGNED FOR RESIDENTIAL OR SMALL BUILDING REQUIREMENTS OF PART 9, NBCC 2015

THIS DESIGN COMPLIES WITH:
- PART 9 OF BCBC 2018 , NBC-2019AE
- PART 9 OF OBC 2012 (2019 AMENDMENT)
- CSA 086-14
- TPIC 2014

DESIGN ASSUMPTIONS
-OVERHANG NOT TO BE ALTERED OR CUT OFF.

(55 % OF 48.1 P.S.F. G.S.L. PLUS 8.4 P.S.F. RAIN LOAD) EQUALS 34.8 P.S.F. SPECIFIED ROOF LIVE LOAD

ALLOWABLE DEFL.(LL)= L/360 (0.20")
CALCULATED VERT. DEFL.(LL) = L/ 999 (0.00")
ALLOWABLE DEFL.(TL)= L/360 (0.20")
CALCULATED VERT. DEFL.(TL) = L/ 999 (0.03")

CSI: TC=0.16/1.00 (A-B:1) , BC=0.13/1.00 (D-E:4) , WB=0.00/1.00 (n/a:0) , SSI=0.11/1.00 (A-B:1)

DOL LUMBER=1.00 NAIL=1.00 LS BEND=1.10 COMP=1.10 SHEAR=1.10 TENS= 1.10

COMPANION LIVE LOAD FACTOR = 1.00

TRUSS PLATE MANUFACTURER IS NOT RESPONSIBLE FOR QUALITY CONTROL IN THE TRUSS MANUFACTURING PLANT .

NAIL VALUES

PLATE	GRIP(DRY) (PSI) MAX	MIN	SHEAR (PLI) MAX	MIN	SECTION (PLI) MAX	MIN
MT20	650	371	1747	788	1987	1873

PLATE PLACEMENT TOL. = 0.250 inches

PLATE ROTATION TOL. = 5.0 Deg.

JSI GRIP= 0.17 (B) (INPUT = 0.90)
JSI METAL= 0.13 (B) (INPUT = 1.00)

LICENSED PROFESSIONAL ENGINEER
N.A. EL-MASRI
Jul 15, 2023

READ ALL NOTES ON THIS PAGE AND ON THE ENGINEERING NOTES: TRUSSES. THE NOTE PAGE IS AN INTEGRAL PART OF THIS DRAWING AS IT CONTAINS SPECIFICATIONS AND CRITERIA USED IN THE DESIGN OF THIS COMPONENT.

KOTT

JOB NAME	TRUSS NAME	QUANTITY	PLY	JOB DESC.	DRWG NO.
NE0723-089	J04	2	1	TRUSS DESC.	

Version 8.630 S Mar 22 2023 MiTek Industries, Inc. Sat Jul 15 10:29:49 2023 Page 1

ID:cRv3jt6hGhtCK_Tpcc0KzbzAMYr-WAx3cmxAhgkSx1K2HYybbed2pO_CTZSARBdmAzyxsUW

MHP 23034

CORPORATION OF THE CITY OF OSHAWA
TRUE COPY
OF PERMIT PLANS
Nov 14 2023
PER:
CHIEF BUILDING OFFICIAL

Scale = 1:18.8

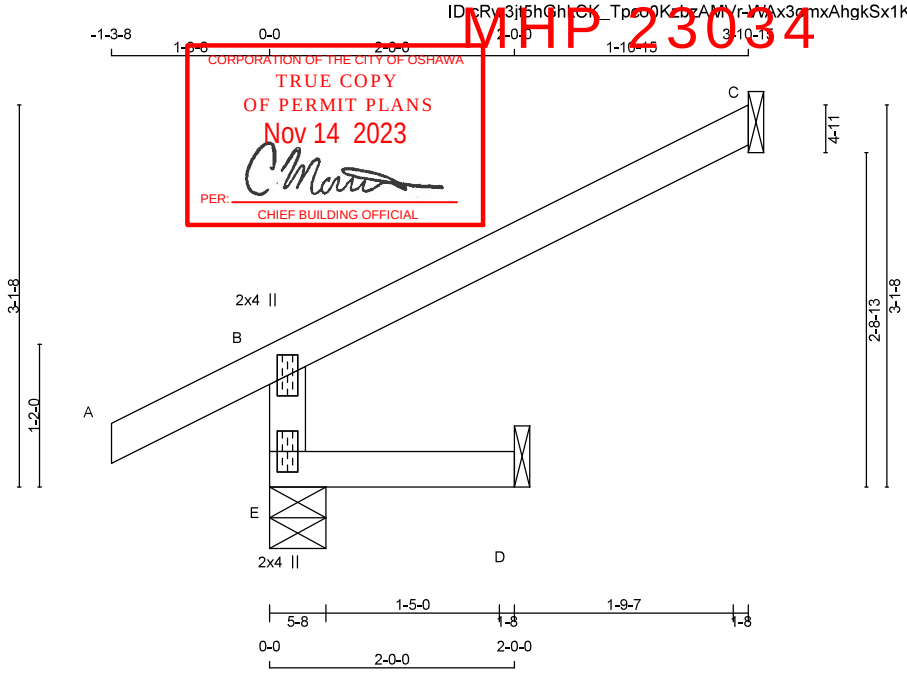

TOTAL WEIGHT = 2 X 10 = 20 lb

LUMBER
N. L. G. A. RULES

CHORDS	SIZE		LUMBER	DESCR.
E - B	2x4	DRY	No.2	SPF
A - C	2x4	DRY	No.2	SPF
E - D	2x4	DRY	No.2	SPF

DRY: SEASONED LUMBER.

PLATES (table is in inches)

JT	TYPE	PLATES	W	LEN	Y	X
B	TMV+p	MT20	2.0	4.0		
E	BMV1+p	MT20	2.0	4.0		

DIMENSIONS, SUPPORTS AND LOADINGS SPECIFIED BY FABRICATOR TO BE VERIFIED BY BUILDING DESIGNER

BEARINGS

JT	FACTORED GROSS REACTION VERT	HORZ	MAXIMUM FACTORED GROSS REACTION DOWN	HORZ	UPLIFT	INPUT BRG IN-SX	REQRD BRG IN-SX
E	474	0	474	0	0	5-8	1-8
C	175	0	175	0	0	1-8	1-8
D	16	0	18	0	0	1-8	1-8

SEE MITEK STANDARD DETAIL MSD2015-H FOR CONNECTION TO JOINT(S) C , D

UNFACTORED REACTIONS

JT	1ST LCASE COMBINED	MAX./MIN. COMPONENT REACTIONS SNOW	LIVE	PERM.LIVE	WIND	DEAD	SOIL
E	326	265 / 0	0 / 0	0 / 0	0 / 0	62 / 0	0 / 0
C	120	102 / 0	0 / 0	0 / 0	0 / 0	18 / 0	0 / 0
D	13	0 / 0	0 / 0	0 / 0	0 / 0	13 / 0	0 / 0

BEARING MATERIAL TO BE SPF NO.2 OR BETTER AT JOINT(S) E

BRACING
TOP CHORD TO BE SHEATHED OR MAX. PURLIN SPACING = 6.25 FT.
MAX. UNBRACED BOTTOM CHORD LENGTH = 10.00 FT OR RIGID CEILING DIRECTLY APPLIED.

ALL PITCH BREAKS AND PERIMETER CORNER JOINTS MUST BE LATERALLY RESTRAINED.

LOADING
TOTAL LOAD CASES: (5)

CHORDS

MEMB. FR-TO	MAX. FACTORED FORCE (LBS)	VERT. LOAD LC1 FROM (PLF)	TO	MAX CSI (LC)
E- B	-454 / 0	0.0	0.0	0.01 (4)
A- B	0 / 36	-119.4	-119.4	0.16 (1)
B- C	-26 / 0	-119.4	-119.4	0.31 (1)
E- D	0 / 0	-18.2	-18.2	0.02 (4)

WEBS

MEMB. FR-TO	MAX. FACTORED FORCE (LBS)	MAX CSI (LC)	MAX UNBRAC LENGTH
			7.81
			10.00
			6.25
			10.00

CANTILEVER ANALYSIS HAS BEEN CONSIDERED IN THIS DESIGN

PATTERN-LOADING CHECK APPLIED TO THIS TRUSS.

[M]

DESIGN CRITERIA

SPECIFIED LOADS:

TOP CH.	LL	=	34.8	PSF
	DL	=	6.0	PSF
BOT CH.	LL	=	0.0	PSF
	DL	=	7.3	PSF
TOTAL LOAD		=	48.1	PSF

SPACING = 24.0 IN. C/C

THIS TRUSS IS DESIGNED FOR RESIDENTIAL OR SMALL BUILDING REQUIREMENTS OF PART 9, NBCC 2015

THIS DESIGN COMPLIES WITH:
- PART 9 OF BCBC 2018 , NBC-2019AE
- PART 9 OF OBC 2012 (2019 AMENDMENT)
- CSA 086-14
- TPIC 2014

DESIGN ASSUMPTIONS
-OVERHANG NOT TO BE ALTERED OR CUT OFF.

(55 % OF 48.1 P.S.F. G.S.L. PLUS 8.4 P.S.F. RAIN LOAD) EQUALS 34.8 P.S.F. SPECIFIED ROOF LIVE LOAD

ALLOWABLE DEFL.(LL)= L/360 (0.19")
CALCULATED VERT. DEFL.(LL) = L/ 999 (0.00")
ALLOWABLE DEFL.(TL)= L/360 (0.19")
CALCULATED VERT. DEFL.(TL) = L/ 999 (0.00")

CSI: TC=0.31/1.00 (B-C:1) , BC=0.02/1.00 (D-E:4) , WB=0.00/1.00 (n/a:0) , SSI=0.20/1.00 (B-C:1)

DOL LUMBER=1.00 NAIL=1.00 LS BEND=1.10 COMP=1.10 SHEAR=1.10 TENS= 1.10

COMPANION LIVE LOAD FACTOR = 1.00

TRUSS PLATE MANUFACTURER IS NOT RESPONSIBLE FOR QUALITY CONTROL IN THE TRUSS MANUFACTURING PLANT .

NAIL VALUES

PLATE	GRIP(DRY) (PSI) MAX	MIN	SHEAR (PLI) MAX	MIN	SECTION (PLI) MAX	MIN
MT20	650	371	1747	788	1987	1873

PLATE PLACEMENT TOL. = 0.250 inches

PLATE ROTATION TOL. = 5.0 Deg.

JSI GRIP= 0.25 (B) (INPUT = 0.90)
JSI METAL= 0.19 (B) (INPUT = 1.00)

LICENSED PROFESSIONAL ENGINEER
N.A. EL-MASRI
Jul 15, 2023

READ ALL NOTES ON THIS PAGE AND ON THE ENGINEERING NOTES: TRUSSES. THE NOTE PAGE IS AN INTEGRAL PART OF THIS DRAWING AS IT CONTAINS SPECIFICATIONS AND CRITERIA USED IN THE DESIGN OF THIS COMPONENT.

KOTT

JOB NAME	TRUSS NAME	QUANTITY	PLY	JOB DESC.	DRWG NO.
NE0723-089	J05	2	1	TRUSS DESC.	

Version 8.630 S Mar 22 2023 MiTek Industries, Inc. Sat Jul 15 10:29:49 2023 Page 1

ID:cRv3j5hGhhCK_Tpc0KzbzAMy-Wwx3cmxAhgkSx1K2HYybed4EO_CTZSARBdmAzyxsUW

MHP 23-034

CORPORATION OF THE CITY OF OSHAWA
TRUE COPY
OF PERMIT PLANS
Nov 14 2023
PER: _____
CHIEF BUILDING OFFICIAL

Scale = 1:13.6

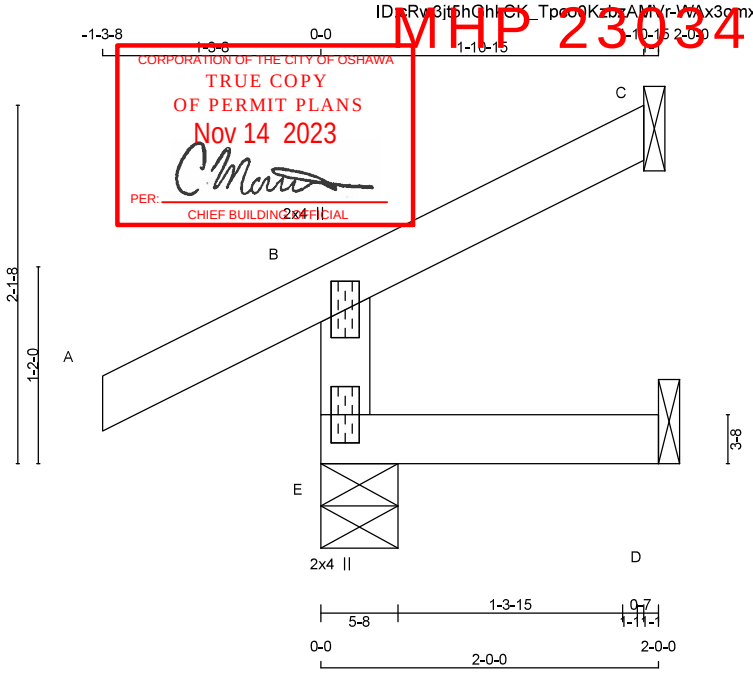

TOTAL WEIGHT = 2 X 7 = 15 lb

LUMBER
N. L. G. A. RULES

CHORDS	SIZE		LUMBER	DESCR.
E - B	2x4	DRY	No.2	SPF
A - C	2x4	DRY	No.2	SPF
E - D	2x4	DRY	No.2	SPF

DRY: SEASONED LUMBER.

PLATES (table is in inches)

JT	TYPE	PLATES	W	LEN	Y	X
B	TMV+p	MT20	2.0	4.0		
E	BMV1+p	MT20	2.0	4.0		

DIMENSIONS, SUPPORTS AND LOADINGS SPECIFIED BY FABRICATOR TO BE VERIFIED BY BUILDING DESIGNER

BEARINGS

JT	FACTORED GROSS REACTION VERT	HORZ	MAXIMUM FACTORED GROSS REACTION DOWN	HORZ	UPLIFT	INPUT BRG IN-SX	REQRD BRG IN-SX
E	324	0	324	0	0	5-8	1-8
C	86	0	86	0	0	1-8	1-8
D	16	0	18	0	0	1-8	1-8

SEE MITEK STANDARD DETAIL MSD2015-H FOR CONNECTION TO JOINT(S) C , D

UNFACTORED REACTIONS

JT	1ST LCASE COMBINED	MAX./MIN. COMPONENT REACTIONS SNOW	LIVE	PERM.LIVE	WIND	DEAD	SOIL
E	224	177 / 0	0 / 0	0 / 0	0 / 0	47 / 0	0 / 0
C	59	50 / 0	0 / 0	0 / 0	0 / 0	9 / 0	0 / 0
D	13	0 / 0	0 / 0	0 / 0	0 / 0	13 / 0	0 / 0

BEARING MATERIAL TO BE SPF NO.2 OR BETTER AT JOINT(S) E, C

BRACING
TOP CHORD TO BE SHEATHED OR MAX. PURLIN SPACING = 6.25 FT.
MAX. UNBRACED BOTTOM CHORD LENGTH = 10.00 FT OR RIGID CEILING DIRECTLY APPLIED.

ALL PITCH BREAKS AND PERIMETER CORNER JOINTS MUST BE LATERALLY RESTRAINED.

LOADING
TOTAL LOAD CASES: (5)

CHORDS MEMB. FR-TO	MAX. FACTORED FORCE (LBS)	FACTORED VERT. LOAD (PLF) FROM	TO	LC1 MAX CSI (LC)	WEBS MEMB. FR-TO	MAX. UNBRAC LENGTH	MAX. FACTORED FORCE (LBS)	MAX CSI (LC)
E- B	-304 / 0	0.0	0.0	0.01 (4)		7.81		
A- B	0 / 36	-119.4	-119.4	0.16 (1)		10.00		
B- C	-12 / 0	-119.4	-119.4	0.07 (1)		6.25		
E- D	0 / 0	-18.2	-18.2	0.02 (4)		10.00		

CANTILEVER ANALYSIS HAS BEEN CONSIDERED IN THIS DESIGN

PATTERN-LOADING CHECK APPLIED TO THIS TRUSS.

DESIGN CRITERIA

SPECIFIED LOADS:

TOP CH.	LL =	34.8	PSF
	DL =	6.0	PSF
BOT CH.	LL =	0.0	PSF
	DL =	7.3	PSF
TOTAL LOAD	=	48.1	PSF

SPACING = 24.0 IN. C/C

THIS TRUSS IS DESIGNED FOR RESIDENTIAL OR SMALL BUILDING REQUIREMENTS OF PART 9, NBCC 2015

THIS DESIGN COMPLIES WITH:
- PART 9 OF BCBC 2018 , NBC-2019AE
- PART 9 OF OBC 2012 (2019 AMENDMENT)
- CSA 086-14
- TPIC 2014

DESIGN ASSUMPTIONS
-OVERHANG NOT TO BE ALTERED OR CUT OFF.

(55 % OF 48.1 P.S.F. G.S.L. PLUS 8.4 P.S.F. RAIN LOAD) EQUALS 34.8 P.S.F. SPECIFIED ROOF LIVE LOAD

ALLOWABLE DEFL.(LL)= L/360 (0.19")
CALCULATED VERT. DEFL.(LL) = L/ 999 (0.00")
ALLOWABLE DEFL.(TL)= L/360 (0.19")
CALCULATED VERT. DEFL.(TL) = L/ 999 (0.00")

CSI: TC=0.16/1.00 (A-B:1) , BC=0.02/1.00 (D-E:4) , WB=0.00/1.00 (n/a:0) , SSI=0.11/1.00 (A-B:1)

DOL LUMBER=1.00 NAIL=1.00 LS BEND=1.10 COMP=1.10 SHEAR=1.10 TENS= 1.10

COMPANION LIVE LOAD FACTOR = 1.00

TRUSS PLATE MANUFACTURER IS NOT RESPONSIBLE FOR QUALITY CONTROL IN THE TRUSS MANUFACTURING PLANT .

NAIL VALUES

PLATE	GRIP(DRY) (PSI) MAX	MIN	SHEAR (PLI) MAX	MIN	SECTION (PLI) MAX	MIN
MT20	650	371	1747	788	1987	1873

PLATE PLACEMENT TOL. = 0.250 inches

PLATE ROTATION TOL. = 5.0 Deg.

JSI GRIP= 0.17 (B) (INPUT = 0.90)
JSI METAL= 0.13 (B) (INPUT = 1.00)

LICENSED PROFESSIONAL ENGINEER
N.A. EL-MASRI
Jul 15, 2023

READ ALL NOTES ON THIS PAGE AND ON THE ENGINEERING NOTES: TRUSSES. THE NOTE PAGE IS AN INTEGRAL PART OF THIS DRAWING AS IT CONTAINS SPECIFICATIONS AND CRITERIA USED IN THE DESIGN OF THIS COMPONENT.

KOTT

JOB NAME	TRUSS NAME	QUANTITY	PLY	JOB DESC.	DRWG NO.
NE0723-089	J06	2	1	TRUSS DESC.	

Version 8.630 S Mar 22 2023 MiTek Industries, Inc. Sat Jul 15 10:29:49 2023 Page 1

ID:cRnv3it5hGhkSK_Tnce0kzbzAMVrAYAx3pmxAhgkSx1K2HYbybed_tOyBTZSARBdmAzyxsUW

MHP 23034

CORPORATION OF THE CITY OF OSHAWA
TRUE COPY
OF PERMIT PLANS
Nov 14 2023
PER:
CHIEF BUILDING OFFICIAL

Scale = 1:22.6

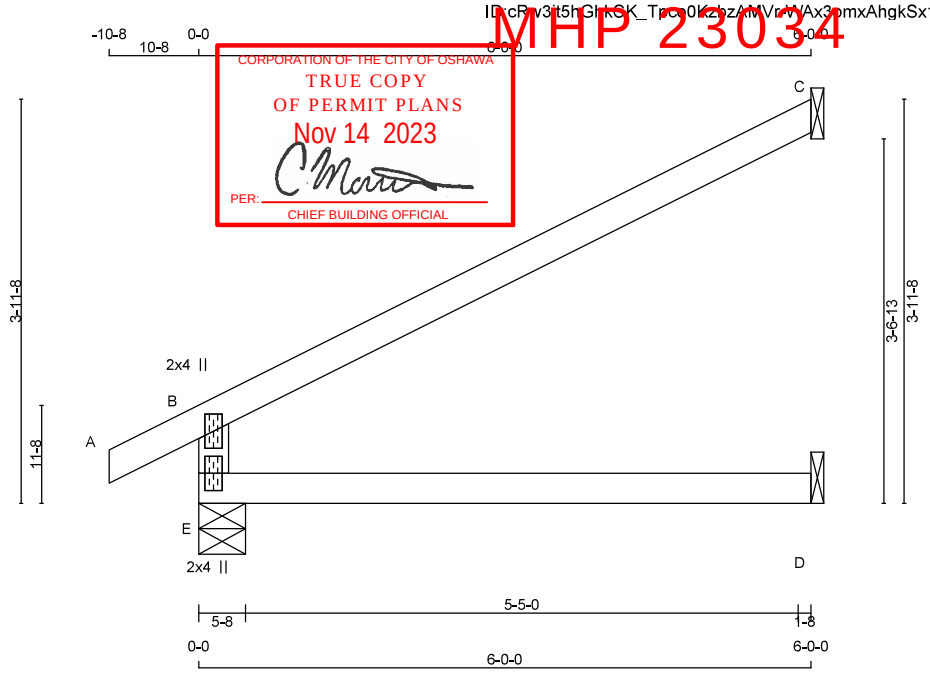

TOTAL WEIGHT = 2 X 16 = 33 lb

LUMBER
N. L. G. A. RULES

CHORDS	SIZE		LUMBER	DESCR.
E - B	2x4	DRY	No.2	SPF
A - C	2x4	DRY	No.2	SPF
E - D	2x4	DRY	No.2	SPF

DRY: SEASONED LUMBER.

PLATES (table is in inches)

JT	TYPE	PLATES	W	LEN	Y	X
B	TMV+p	MT20	2.0	4.0		
E	BMV1+p	MT20	2.0	4.0		

DIMENSIONS, SUPPORTS AND LOADINGS SPECIFIED BY FABRICATOR TO BE VERIFIED BY BUILDING DESIGNER

BEARINGS

JT	FACTORED GROSS REACTION VERT	HORZ	MAXIMUM FACTORED GROSS REACTION DOWN	HORZ	UPLIFT	INPUT BRG IN-SX	REQRD BRG IN-SX
E	625	0	625	0	0	5-8	1-8
C	269	0	269	0	0	1-8	1-8
D	44	0	50	0	0	1-8	1-8

SEE MITEK STANDARD DETAIL MSD2015-H FOR CONNECTION TO JOINT(S) C , D

UNFACTORED REACTIONS

JT	1ST LCASE COMBINED	MAX./MIN. COMPONENT REACTIONS SNOW	LIVE	PERM.LIVE	WIND	DEAD	SOIL
E	435	326 / 0	0 / 0	0 / 0	0 / 0	108 / 0	0 / 0
C	184	157 / 0	0 / 0	0 / 0	0 / 0	27 / 0	0 / 0
D	36	0 / 0	0 / 0	0 / 0	0 / 0	36 / 0	0 / 0

BEARING MATERIAL TO BE SPF NO.2 OR BETTER AT JOINT(S) E

BRACING
TOP CHORD TO BE SHEATHED OR MAX. PURLIN SPACING = 6.25 FT.
MAX. UNBRACED BOTTOM CHORD LENGTH = 10.00 FT OR RIGID CEILING DIRECTLY APPLIED.

ALL PITCH BREAKS AND PERIMETER CORNER JOINTS MUST BE LATERALLY RESTRAINED.

LOADING
TOTAL LOAD CASES: (4)

CHORDS

MEMB. FR-TO	MAX. FACTORED FORCE (LBS)	VERT. LOAD (PLF) FROM	TO	LC1 MAX CSI (LC)
E- B	-560 / 0	0.0	0.0	0.12 (4)
A- B	0 / 25	-119.4	-119.4	0.08 (1)
B- C	-40 / 0	-119.4	-119.4	0.56 (1)
E- D	0 / 0	-18.2	-18.2	0.15 (4)

WEBS

MEMB. FR-TO	MAX. UNBRAC LENGTH	MAX. FACTORED FORCE (LBS)	MAX CSI (LC)
E- B	7.81		
A- B	10.00		
B- C	6.25		
E- D	10.00		

DESIGN CRITERIA

SPECIFIED LOADS:

TOP CH.	LL =	34.8	PSF
	DL =	6.0	PSF
BOT CH.	LL =	0.0	PSF
	DL =	7.3	PSF
TOTAL LOAD	=	48.1	PSF

SPACING = 24.0 IN. C/C

THIS TRUSS IS DESIGNED FOR RESIDENTIAL OR SMALL BUILDING REQUIREMENTS OF PART 9, NBCC 2015

THIS DESIGN COMPLIES WITH:
- PART 9 OF BCBC 2018 , NBC-2019AE
- PART 9 OF OBC 2012 (2019 AMENDMENT)
- CSA 086-14
- TPIC 2014

DESIGN ASSUMPTIONS
-OVERHANG NOT TO BE ALTERED OR CUT OFF.

(55 % OF 48.1 P.S.F. G.S.L. PLUS 8.4 P.S.F. RAIN LOAD) EQUALS 34.8 P.S.F. SPECIFIED ROOF LIVE LOAD

ALLOWABLE DEFL.(LL)= L/360 (0.20")
CALCULATED VERT. DEFL.(LL) = L/ 999 (0.00")
ALLOWABLE DEFL.(TL)= L/360 (0.20")
CALCULATED VERT. DEFL.(TL) = L/ 999 (0.03")

CSI: TC=0.56/1.00 (B-C:1) , BC=0.15/1.00 (D-E:4) , WB=0.00/1.00 (n/a:0) , SSI=0.31/1.00 (B-C:1)

DOL LUMBER=1.00 NAIL=1.00 LS BEND=1.10 COMP=1.10 SHEAR=1.10 TENS= 1.10

COMPANION LIVE LOAD FACTOR = 1.00

TRUSS PLATE MANUFACTURER IS NOT RESPONSIBLE FOR QUALITY CONTROL IN THE TRUSS MANUFACTURING PLANT .

NAIL VALUES

PLATE	GRIP(DRY) (PSI) MAX	MIN	SHEAR (PLI) MAX	MIN	SECTION (PLI) MAX	MIN
MT20	650	371	1747	788	1987	1873

PLATE PLACEMENT TOL. = 0.250 inches

PLATE ROTATION TOL. = 5.0 Deg.

JSI GRIP= 0.31 (B) (INPUT = 0.90)
JSI METAL= 0.23 (B) (INPUT = 1.00)

LICENSED PROFESSIONAL ENGINEER
N.A. EL-MASRI
Jul 15, 2023

READ ALL NOTES ON THIS PAGE AND ON THE ENGINEERING NOTES: TRUSSES. THE NOTE PAGE IS AN INTEGRAL PART OF THIS DRAWING AS IT CONTAINS SPECIFICATIONS AND CRITERIA USED IN THE DESIGN OF THIS COMPONENT.

KOTT

JOB NAME	TRUSS NAME	QUANTITY	PLY	JOB DESC.	DRWG NO.
NE0723-089	T01	1	1	TRUSS DESC.	

Version 8.630 S Mar 22 2023 MiTek Industries, Inc. Sat Jul 15 10:29:50 2023 Page 1
ID:cRv3jt5hGhkCK_TocoOKzbzAMvt-_MyR06xpS_sJYBvEqF6B8r99XnE4CuSKgrNKjPyxsUV

MHP 23034

CORPORATION OF THE CITY OF OSHAWA
TRUE COPY
OF PERMIT PLANS
Nov 14 2023
PER: _____
CHIEF BUILDING OFFICIAL

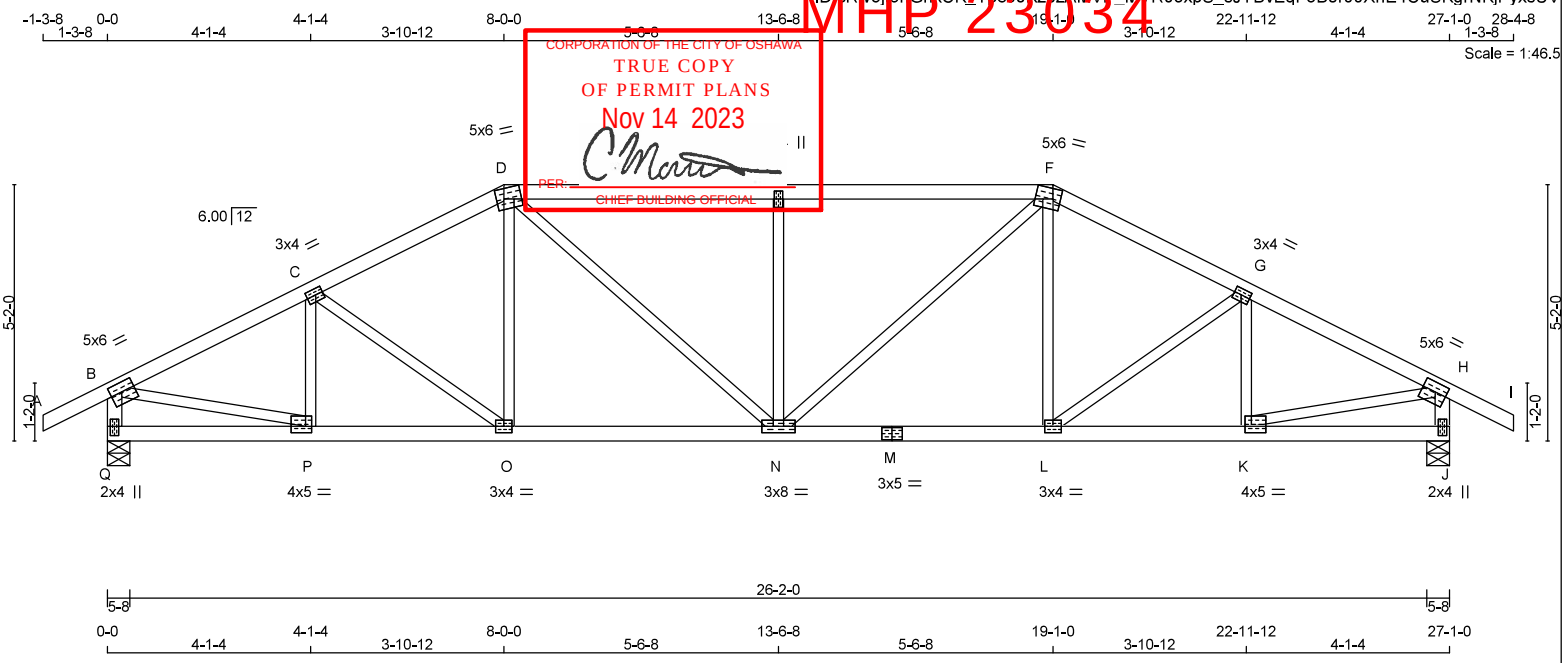

TOTAL WEIGHT = 110 lb
[M][F]

LUMBER
N. L. G. A. RULES

CHORDS	SIZE		LUMBER	DESCR.
A - D	2x4	DRY	No.2	SPF
D - F	2x4	DRY	No.2	SPF
F - I	2x4	DRY	No.2	SPF
Q - B	2x4	DRY	No.2	SPF
J - H	2x4	DRY	No.2	SPF
Q - M	2x4	DRY	No.2	SPF
M - J	2x4	DRY	No.2	SPF
ALL WEBS EXCEPT	2x3	DRY	No.2	SPF

DRY: SEASONED LUMBER.

PLATES (table is in inches)

JT	TYPE	PLATES	W	LEN	Y	X
B	TMVW-t	MT20	5.0	6.0	2.25	2.75
C	TMWW-t	MT20	3.0	4.0	1.50	1.75
D	TTWW-m	MT20	5.0	6.0	2.50	1.75
E	TMW+w	MT20	2.0	4.0		
F	TTWW-m	MT20	5.0	6.0	2.50	1.75
G	TMWW-t	MT20	3.0	4.0	1.50	1.75
H	TMVW-t	MT20	5.0	6.0	2.25	2.75
J	BMV1+p	MT20	2.0	4.0	2.25	1.00
K	BMWW-t	MT20	4.0	5.0	1.50	1.50
L	BMWW-t	MT20	3.0	4.0		
M	BS-t	MT20	3.0	5.0		
N	BMWWW-t	MT20	3.0	8.0		
O	BMWW-t	MT20	3.0	4.0		
P	BMWW-t	MT20	4.0	5.0	1.50	1.50
Q	BMV1+p	MT20	2.0	4.0	2.25	1.00

DIMENSIONS, SUPPORTS AND LOADINGS SPECIFIED BY FABRICATOR TO BE VERIFIED BY BUILDING DESIGNER

BEARINGS

JT	FACTORED GROSS REACTION VERT	HORZ	MAXIMUM FACTORED GROSS REACTION DOWN	HORZ	UPLIFT	INPUT BRG IN-SX	REQRD BRG IN-SX
Q	2026	0	2026	0	0	5-8	3-1
J	2026	0	2026	0	0	5-8	3-1

UNFACTORED REACTIONS

JT	1ST LCASE COMBINED	MAX./MIN. COMPONENT REACTIONS SNOW	LIVE	PERM.LIVE	WIND	DEAD	SOIL
Q	1414	1037 / 0	0 / 0	0 / 0	0 / 0	376 / 0	0 / 0
J	1414	1037 / 0	0 / 0	0 / 0	0 / 0	376 / 0	0 / 0

BEARING MATERIAL TO BE SPF NO.2 OR BETTER AT JOINT(S) Q, J

BRACING
TOP CHORD TO BE SHEATHED OR MAX. PURLIN SPACING = 3.63 FT.
MAX. UNBRACED BOTTOM CHORD LENGTH = 10.00 FT OR RIGID CEILING DIRECTLY APPLIED.

ALL PITCH BREAKS AND PERIMETER CORNER JOINTS MUST BE LATERALLY RESTRAINED.

LOADING
TOTAL LOAD CASES: (4)

CHORDS

MEMB. FR-TO	MAX. FACTORED FORCE (LBS)	VERT. LOAD (PLF) FROM	TO	LC1	MAX CSI (LC)	MAX. UNBRAC LENGTH
A- B	0 / 36	-119.4	-119.4	0.16 (1)	10.00	
B- C	-2549 / 0	-119.4	-119.4	0.30 (1)	4.06	
C- D	-2446 / 0	-119.4	-119.4	0.29 (1)	4.14	
D- E	-2685 / 0	-119.4	-119.4	0.57 (1)	3.63	
E- F	-2685 / 0	-119.4	-119.4	0.57 (1)	3.63	
F- G	-2446 / 0	-119.4	-119.4	0.29 (1)	4.14	
G- H	-2549 / 0	-119.4	-119.4	0.30 (1)	4.06	
H- I	0 / 36	-119.4	-119.4	0.16 (1)	10.00	
Q- B	-1988 / 0	0.0	0.0	0.20 (1)	5.98	
J- H	-1988 / 0	0.0	0.0	0.20 (1)	5.98	
Q- P	0 / 0	-18.2	-18.2	0.07 (4)	10.00	
P- O	0 / 2301	-18.2	-18.2	0.42 (1)	10.00	
O- N	0 / 2169	-18.2	-18.2	0.40 (1)	10.00	
N- M	0 / 2169	-18.2	-18.2	0.40 (1)	10.00	
M- L	0 / 2169	-18.2	-18.2	0.40 (1)	10.00	
L- K	0 / 2301	-18.2	-18.2	0.42 (1)	10.00	
K- J	0 / 0	-18.2	-18.2	0.07 (4)	10.00	

WEBS

MEMB. FR-TO	MAX. FACTORED FORCE (LBS)	MAX CSI (LC)
P- C	-419 / 0	0.08 (1)
C- O	-168 / 0	0.07 (1)
O- D	0 / 198	0.04 (1)
D- N	0 / 687	0.15 (1)
N- E	-811 / 0	0.32 (1)
N- F	0 / 687	0.15 (1)
L- F	0 / 198	0.04 (1)
L- G	-168 / 0	0.07 (1)
K- G	-419 / 0	0.08 (1)
B- P	0 / 2350	0.53 (1)
K- H	0 / 2350	0.53 (1)

DESIGN CRITERIA

SPECIFIED LOADS:

TOP CH.	LL =	34.8	PSF
	DL =	6.0	PSF
BOT CH.	LL =	0.0	PSF
	DL =	7.3	PSF
TOTAL LOAD	=	48.1	PSF

SPACING = 24.0 IN. C/C

LOADING IN FLAT SECTION BASED ON A SLOPE OF 2.00/12 MINIMUM

THIS TRUSS IS DESIGNED FOR RESIDENTIAL OR SMALL BUILDING REQUIREMENTS OF PART 9, NBCC 2015

THIS DESIGN COMPLIES WITH:
- PART 9 OF BCBC 2018 , NBC-2019AE
- PART 9 OF OBC 2012 (2019 AMENDMENT)
- CSA 086-14
- TPIC 2014

(55 % OF 48.1 P.S.F. G.S.L. PLUS 8.4 P.S.F. RAIN LOAD) EQUALS 34.8 P.S.F. SPECIFIED ROOF LIVE LOAD

ALLOWABLE DEFL.(LL)= L/360 (0.90")
CALCULATED VERT. DEFL.(LL) = L/ 999 (0.12")
ALLOWABLE DEFL.(TL)= L/360 (0.90")
CALCULATED VERT. DEFL.(TL) = L/ 999 (0.21")

CSI: TC=0.57/1.00 (D-E:1) , BC=0.42/1.00 (K-L:1) , WB=0.53/1.00 (H-K:1) , SSI=0.32/1.00 (D-E:1)

DOL LUMBER=1.00 NAIL=1.00 LS BEND=1.10 COMP=1.10 SHEAR=1.10 TENS= 1.10

COMPANION LIVE LOAD FACTOR = 1.00

TRUSS PLATE MANUFACTURER IS NOT RESPONSIBLE FOR QUALITY CONTROL IN THE TRUSS MANUFACTURING PLANT .

NAIL VALUES

PLATE	GRIP(DRY) (PSI) MAX	MIN	SHEAR (PLI) MAX	MIN	SECTION (PLI) MAX	MIN
MT20	650	371	1747	788	1987	1873

PLATE PLACEMENT TOL. = 0.250 inches

PLATE ROTATION TOL. = 5.0 Deg.

JSI GRIP= 0.88 (P) (INPUT = 0.90)
JSI METAL= 0.69 (M) (INPUT = 1.00)

LICENSED PROFESSIONAL ENGINEER
N.A. EL-MASRI
Jul 15, 2023

READ ALL NOTES ON THIS PAGE AND ON THE ENGINEERING NOTES: TRUSSES. THE NOTE PAGE IS AN INTEGRAL PART OF THIS DRAWING AS IT CONTAINS SPECIFICATIONS AND CRITERIA USED IN THE DESIGN OF THIS COMPONENT.

KOTT

JOB NAME	TRUSS NAME	QUANTITY	PLY	JOB DESC.	DRWG NO.
NE0723-089	T02	1	1	TRUSS DESC.	

Version 8.630 S Mar 22 2023 MiTek Industries, Inc. Sat Jul 15 10:29:51 2023 Page 1
ID:cRw3jt5hQHCK_TpcoPKzbzAMYr-SZ3-DSyRDI_AALUQOzdQg3iLnBZYxLWTuV6tFsyxsUU

MHP23034

CORPORATION OF THE CITY OF OSHAWA
TRUE COPY
OF PERMIT PLANS
Nov 14 2023
PER: C. Martin
CHIEF BUILDING OFFICIAL

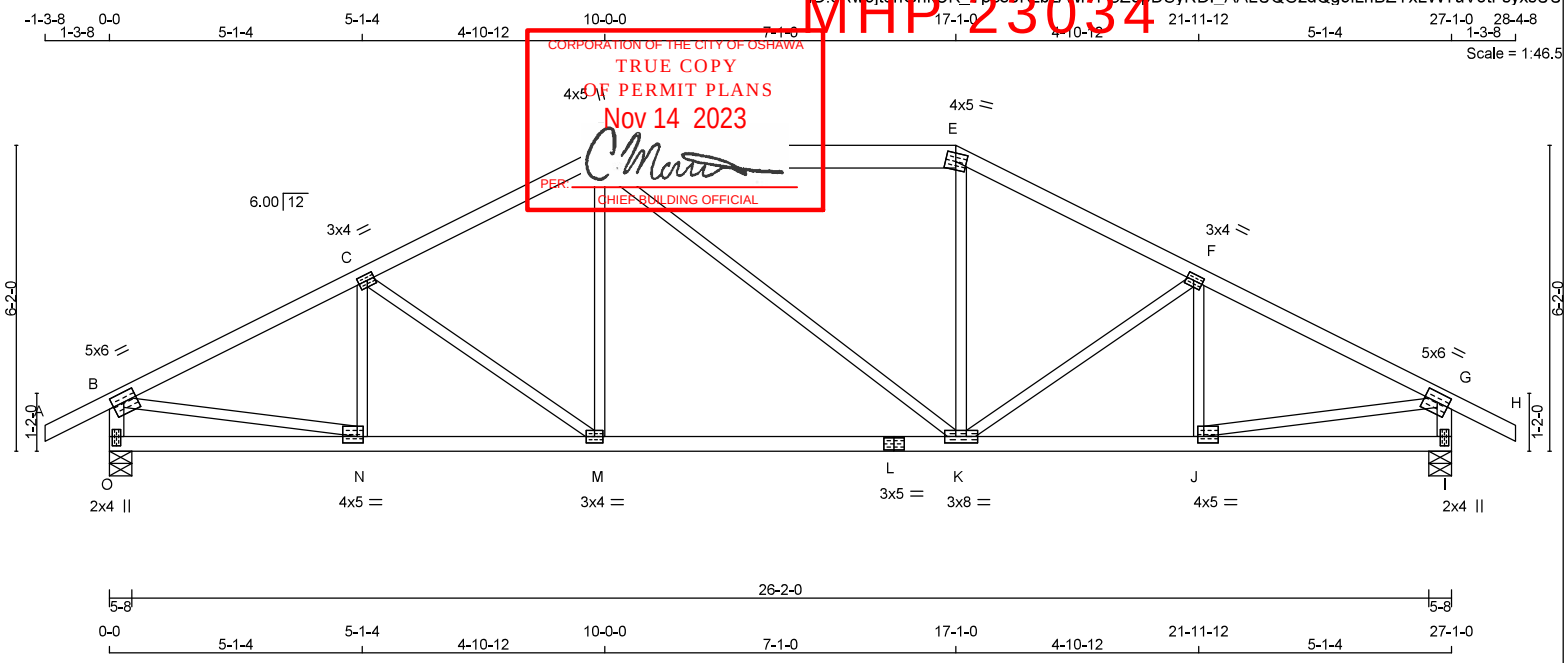

TOTAL WEIGHT = 113 lb
[M][F]

LUMBER
N. L. G. A. RULES

CHORDS	SIZE		LUMBER	DESCR.
A - D	2x4	DRY	No.2	SPF
D - E	2x6	DRY	No.2	SPF
E - H	2x4	DRY	No.2	SPF
O - B	2x4	DRY	No.2	SPF
I - G	2x4	DRY	No.2	SPF
O - L	2x4	DRY	No.2	SPF
L - I	2x4	DRY	No.2	SPF
ALL WEBS EXCEPT	2x3	DRY	No.2	SPF

DRY: SEASONED LUMBER.

PLATES (table is in inches)

JT	TYPE	PLATES	W	LEN	Y	X
B	TMVW-t	MT20	5.0	6.0	2.25	2.75
C	TMWW-t	MT20	3.0	4.0	1.50	1.75
D	TTWW+m	MT20	4.0	5.0	2.00	1.75
E	TTW-m	MT20	4.0	5.0		
F	TMWW-t	MT20	3.0	4.0	1.50	1.75
G	TMVW-t	MT20	5.0	6.0	2.25	2.75
I	BMV1+p	MT20	2.0	4.0	2.25	1.00
J	BMWW-t	MT20	4.0	5.0	1.50	1.50
K	BMWWW-t	MT20	3.0	8.0		
L	BS-t	MT20	3.0	5.0		
M	BMWW-t	MT20	3.0	4.0		
N	BMWW-t	MT20	4.0	5.0	1.50	1.50
O	BMV1+p	MT20	2.0	4.0	2.25	1.00

DIMENSIONS, SUPPORTS AND LOADINGS SPECIFIED BY FABRICATOR TO BE VERIFIED BY BUILDING DESIGNER

BEARINGS

JT	FACTORED GROSS REACTION VERT	HORZ	MAXIMUM FACTORED GROSS REACTION DOWN	HORZ	UPLIFT	INPUT BRG IN-SX	REQRD BRG IN-SX
O	2026	0	2026	0	0	5-8	3-1
I	2026	0	2026	0	0	5-8	3-1

UNFACTORED REACTIONS

JT	1ST LCASE COMBINED	MAX./MIN. COMPONENT REACTIONS SNOW	LIVE	PERM.LIVE	WIND	DEAD	SOIL
O	1414	1037 / 0	0 / 0	0 / 0	0 / 0	376 / 0	0 / 0
I	1414	1037 / 0	0 / 0	0 / 0	0 / 0	376 / 0	0 / 0

BEARING MATERIAL TO BE SPF NO.2 OR BETTER AT JOINT(S) O, I

BRACING
TOP CHORD TO BE SHEATHED OR MAX. PURLIN SPACING = 3.83 FT.
MAX. UNBRACED BOTTOM CHORD LENGTH = 10.00 FT OR RIGID CEILING DIRECTLY APPLIED.

ALL PITCH BREAKS AND PERIMETER CORNER JOINTS MUST BE LATERALLY RESTRAINED.

LOADING
TOTAL LOAD CASES: (4)

CHORDS

MEMB. FR-TO	MAX. FACTORED FORCE (LBS)	FACTORED VERT. LOAD (PLF) FROM	TO	LC1	MAX CSI (LC)	MAX. UNBRAC LENGTH
A- B	0 / 36	-119.4	-119.4	0.16 (1)	10.00	
B- C	-2618 / 0	-119.4	-119.4	0.47 (1)	3.83	
C- D	-2300 / 0	-119.4	-119.4	0.44 (1)	4.07	
D- E	-2029 / 0	-119.4	-119.4	0.40 (1)	5.19	
E- F	-2301 / 0	-119.4	-119.4	0.44 (1)	4.07	
F- G	-2618 / 0	-119.4	-119.4	0.47 (1)	3.83	
G- H	0 / 36	-119.4	-119.4	0.16 (1)	10.00	
O- B	-1982 / 0	0.0	0.0	0.20 (1)	5.99	
I- G	-1982 / 0	0.0	0.0	0.20 (1)	5.99	
O- N	0 / 0	-18.2	-18.2	0.10 (4)	10.00	
N- M	0 / 2369	-18.2	-18.2	0.47 (1)	10.00	
M- L	0 / 2029	-18.2	-18.2	0.42 (1)	10.00	
L- K	0 / 2029	-18.2	-18.2	0.42 (1)	10.00	
K- J	0 / 2369	-18.2	-18.2	0.47 (1)	10.00	
J- I	0 / 0	-18.2	-18.2	0.10 (4)	10.00	

WEBS

MEMB. FR-TO	MAX. FACTORED FORCE (LBS)	MAX CSI (LC)
N- C	-317 / 0	0.07 (1)
C- M	-410 / 0	0.24 (1)
M- D	0 / 358	0.08 (1)
D- K	0 / 0	0.00 (1)
K- E	0 / 359	0.08 (1)
K- F	-408 / 0	0.24 (1)
J- F	-318 / 0	0.07 (1)
B- N	0 / 2402	0.54 (1)
J- G	0 / 2402	0.54 (1)

DESIGN CRITERIA

SPECIFIED LOADS:

TOP CH.	LL	=	34.8	PSF
	DL	=	6.0	PSF
BOT CH.	LL	=	0.0	PSF
	DL	=	7.3	PSF
TOTAL LOAD		=	48.1	PSF

SPACING = 24.0 IN. C/C

LOADING IN FLAT SECTION BASED ON A SLOPE OF 2.00/12 MINIMUM

THIS TRUSS IS DESIGNED FOR RESIDENTIAL OR SMALL BUILDING REQUIREMENTS OF PART 9, NBCC 2015

THIS DESIGN COMPLIES WITH:
- PART 9 OF BCBC 2018 , NBC-2019AE
- PART 9 OF OBC 2012 (2019 AMENDMENT)
- CSA 086-14
- TPIC 2014

(55 % OF 48.1 P.S.F. G.S.L. PLUS 8.4 P.S.F. RAIN LOAD) EQUALS 34.8 P.S.F. SPECIFIED ROOF LIVE LOAD

ALLOWABLE DEFL.(LL)= L/360 (0.90")
CALCULATED VERT. DEFL.(LL) = L/ 999 (0.10")
ALLOWABLE DEFL.(TL)= L/360 (0.90")
CALCULATED VERT. DEFL.(TL) = L/ 999 (0.21")

CSI: TC=0.47/1.00 (B-C:1) , BC=0.47/1.00 (J-K:1) , WB=0.54/1.00 (B-N:1) , SSI=0.26/1.00 (F-G:1)

DOL LUMBER=1.00 NAIL=1.00 LS BEND=1.10 COMP=1.10 SHEAR=1.10 TENS= 1.10

COMPANION LIVE LOAD FACTOR = 1.00

TRUSS PLATE MANUFACTURER IS NOT RESPONSIBLE FOR QUALITY CONTROL IN THE TRUSS MANUFACTURING PLANT .

NAIL VALUES

PLATE	GRIP(DRY) (PSI) MAX	MIN	SHEAR (PLI) MAX	MIN	SECTION (PLI) MAX	MIN
MT20	650	371	1747	788	1987	1873

PLATE PLACEMENT TOL. = 0.250 inches

PLATE ROTATION TOL. = 5.0 Deg.

JSI GRIP= 0.90 (D) (INPUT = 0.90)
JSI METAL= 0.68 (N) (INPUT = 1.00)

LICENSED PROFESSIONAL ENGINEER
N.A. EL-MASRI
Jul 15, 2023

READ ALL NOTES ON THIS PAGE AND ON THE ENGINEERING NOTES: TRUSSES. THE NOTE PAGE IS AN INTEGRAL PART OF THIS DRAWING AS IT CONTAINS SPECIFICATIONS AND CRITERIA USED IN THE DESIGN OF THIS COMPONENT.

KOTT

JOB NAME	TRUSS NAME	QUANTITY	PLY	JOB DESC.	DRWG NO.
NE0723-089	T03	1	1	TRUSS DESC.	

Version 8.630 S Mar 22 2023 MiTek Industries, Inc. Sat Jul 15 10:29:52 2023 Page 1

ID:cRw3it5nzShkCk_Tpc0KzbzAMy-wdBRoz3_b61oV3dyg8fDGFT3bu8gmPd79sQnIyxsUT

MHP 23034

CORPORATION OF THE CITY OF OSHAWA
TRUE COPY
OF PERMIT PLANS
Nov 14 2023
PER:
CHIEF BUILDING OFFICIAL

Scale = 1:47.1

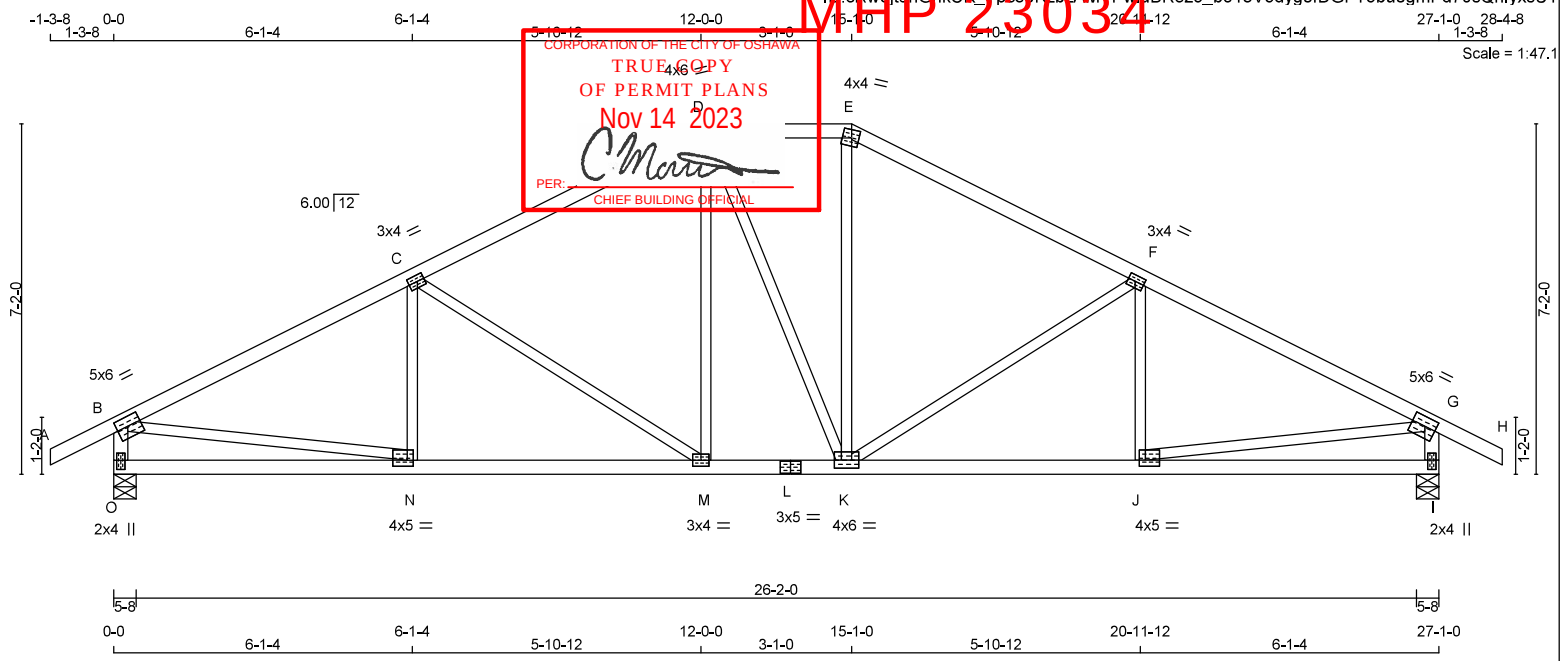

TOTAL WEIGHT = 113 lb

[M][F]

LUMBER

N. L. G. A. RULES

CHORDS	SIZE		LUMBER	DESCR.
A - D	2x4	DRY	No.2	SPF
D - E	2x4	DRY	No.2	SPF
E - H	2x4	DRY	No.2	SPF
O - B	2x4	DRY	No.2	SPF
I - G	2x4	DRY	No.2	SPF
O - L	2x4	DRY	No.2	SPF
L - I	2x4	DRY	No.2	SPF
ALL WEBS EXCEPT	2x3	DRY	No.2	SPF

DRY: SEASONED LUMBER.

PLATES (table is in inches)

JT	TYPE	PLATES	W	LEN	Y	X
B	TMVW-t	MT20	5.0	6.0	2.25	2.75
C	TMWW-t	MT20	3.0	4.0	1.50	1.75
D	TTWW-m	MT20	4.0	6.0	1.75	2.25
E	TTW-m	MT20	4.0	4.0	2.00	1.75
F	TMWW-t	MT20	3.0	4.0	1.50	1.75
G	TMVW-t	MT20	5.0	6.0	2.25	2.75
I	BMV1+p	MT20	2.0	4.0	2.25	1.00
J	BMWW-t	MT20	4.0	5.0	1.50	1.50
K	BMWWW-t	MT20	4.0	6.0		
L	BS-t	MT20	3.0	5.0		
M	BMWW-t	MT20	3.0	4.0		
N	BMWW-t	MT20	4.0	5.0	1.50	1.50
O	BMV1+p	MT20	2.0	4.0	2.25	1.00

DIMENSIONS, SUPPORTS AND LOADINGS SPECIFIED BY FABRICATOR TO BE VERIFIED BY BUILDING DESIGNER

BEARINGS

JT	FACTORED GROSS REACTION VERT	HORZ	MAXIMUM FACTORED GROSS REACTION DOWN	HORZ	UPLIFT	INPUT BRG IN-SX	REQRD BRG IN-SX
O	2026	0	2026	0	0	5-8	3-1
I	2026	0	2026	0	0	5-8	3-1

UNFACTORED REACTIONS

JT	1ST LCASE COMBINED	MAX./MIN. COMPONENT REACTIONS SNOW	LIVE	PERM.LIVE	WIND	DEAD	SOIL
O	1414	1037 / 0	0 / 0	0 / 0	0 / 0	376 / 0	0 / 0
I	1414	1037 / 0	0 / 0	0 / 0	0 / 0	376 / 0	0 / 0

BEARING MATERIAL TO BE SPF NO.2 OR BETTER AT JOINT(S) O, I

BRACING

TOP CHORD TO BE SHEATHED OR MAX. PURLIN SPACING = 3.50 FT.
MAX. UNBRACED BOTTOM CHORD LENGTH = 10.00 FT OR RIGID CEILING DIRECTLY APPLIED.

ALL PITCH BREAKS AND PERIMETER CORNER JOINTS MUST BE LATERALLY RESTRAINED.

LOADING

TOTAL LOAD CASES: (4)

CHORDS

MEMB. FR-TO	MAX. FACTORED FORCE (LBS)	FACTORED VERT. LOAD (PLF) FROM	TO	LC1	MAX CSI (LC)	MAX. UNBRAC LENGTH
A- B	0 / 36	-119.4	-119.4	0.16 (1)	10.00	
B- C	-2643 / 0	-119.4	-119.4	0.69 (1)	3.50	
C- D	-2066 / 0	-119.4	-119.4	0.62 (1)	3.98	
D- E	-1821 / 0	-119.4	-119.4	0.18 (1)	4.80	
E- F	-2068 / 0	-119.4	-119.4	0.62 (1)	3.98	
F- G	-2642 / 0	-119.4	-119.4	0.69 (1)	3.50	
G- H	0 / 36	-119.4	-119.4	0.16 (1)	10.00	
O- B	-1979 / 0	0.0	0.0	0.20 (1)	6.00	
I- G	-1978 / 0	0.0	0.0	0.20 (1)	6.00	
O- N	0 / 0	-18.2	-18.2	0.16 (4)	10.00	
N- M	0 / 2398	-18.2	-18.2	0.45 (1)	10.00	
M- L	0 / 1819	-18.2	-18.2	0.35 (1)	10.00	
L- K	0 / 1819	-18.2	-18.2	0.35 (1)	10.00	
K- J	0 / 2397	-18.2	-18.2	0.45 (1)	10.00	
J- I	0 / 0	-18.2	-18.2	0.16 (4)	10.00	

WEBS

MEMB. FR-TO	MAX. FACTORED FORCE (LBS)	MAX CSI (LC)
N- C	-216 / 53	0.06 (1)
C- M	-698 / 0	0.69 (1)
M- D	0 / 456	0.10 (1)
D- K	0 / 4	0.00 (1)
K- E	0 / 460	0.10 (1)
K- F	-696 / 0	0.69 (1)
J- F	-218 / 52	0.06 (1)
B- N	0 / 2421	0.54 (1)
J- G	0 / 2421	0.54 (1)

DESIGN CRITERIA

SPECIFIED LOADS:

TOP CH.	LL	=	34.8	PSF
	DL	=	6.0	PSF
BOT CH.	LL	=	0.0	PSF
	DL	=	7.3	PSF
TOTAL LOAD		=	48.1	PSF

SPACING = 24.0 IN. C/C

LOADING IN FLAT SECTION BASED ON A SLOPE OF 2.00/12 MINIMUM

THIS TRUSS IS DESIGNED FOR RESIDENTIAL OR SMALL BUILDING REQUIREMENTS OF PART 9, NBCC 2015

THIS DESIGN COMPLIES WITH:
- PART 9 OF BCBC 2018 , NBC-2019AE
- PART 9 OF OBC 2012 (2019 AMENDMENT)
- CSA 086-14
- TPIC 2014

(55 % OF 48.1 P.S.F. G.S.L. PLUS 8.4 P.S.F. RAIN LOAD) EQUALS 34.8 P.S.F. SPECIFIED ROOF LIVE LOAD

ALLOWABLE DEFL.(LL)= L/360 (0.90")
CALCULATED VERT. DEFL.(LL) = L/ 999 (0.11")
ALLOWABLE DEFL.(TL)= L/360 (0.90")
CALCULATED VERT. DEFL.(TL) = L/ 999 (0.20")

CSI: TC=0.69/1.00 (B-C:1) , BC=0.45/1.00 (M-N:1) , WB=0.69/1.00 (C-M:1) , SSI=0.31/1.00 (F-G:1)

DOL LUMBER=1.00 NAIL=1.00 LS BEND=1.10 COMP=1.10 SHEAR=1.10 TENS= 1.10

COMPANION LIVE LOAD FACTOR = 1.00

TRUSS PLATE MANUFACTURER IS NOT RESPONSIBLE FOR QUALITY CONTROL IN THE TRUSS MANUFACTURING PLANT .

NAIL VALUES

PLATE	GRIP(DRY) (PSI) MAX	MIN	SHEAR (PLI) MAX	MIN	SECTION (PLI) MAX	MIN
MT20	650	371	1747	788	1987	1873

PLATE PLACEMENT TOL. = 0.250 inches

PLATE ROTATION TOL. = 5.0 Deg.

JSI GRIP= 0.89 (B) (INPUT = 0.90)
JSI METAL= 0.68 (N) (INPUT = 1.00)

LICENSED PROFESSIONAL ENGINEER
N.A. EL-MASRI
Jul 15, 2023

READ ALL NOTES ON THIS PAGE AND ON THE ENGINEERING NOTES: TRUSSES. THE NOTE PAGE IS AN INTEGRAL PART OF THIS DRAWING AS IT CONTAINS SPECIFICATIONS AND CRITERIA USED IN THE DESIGN OF THIS COMPONENT.

KOTT

JOB NAME	TRUSS NAME	QUANTITY	PLY	JOB DESC.	DRWG NO.
NE0723-089	T04	8	1	TRUSS DESC.	

Version 8.630 S Mar 22 2023 MiTek Industries, Inc. Sat Jul 15 10:29:52 2023 Page 1

ID:cRw3t5hGhkCK_Tpoo0KzbzAMVr-ldBRoz3_b61oV3dyg8fDGFPkbulgokd79sQnIyxsUT

MHP 23034
CORPORATION OF THE CITY OF OSHAWA
TRUE COPY
OF PERMIT PLANS
Nov 14 2023
PER:
CHIEF BUILDING OFFICIAL

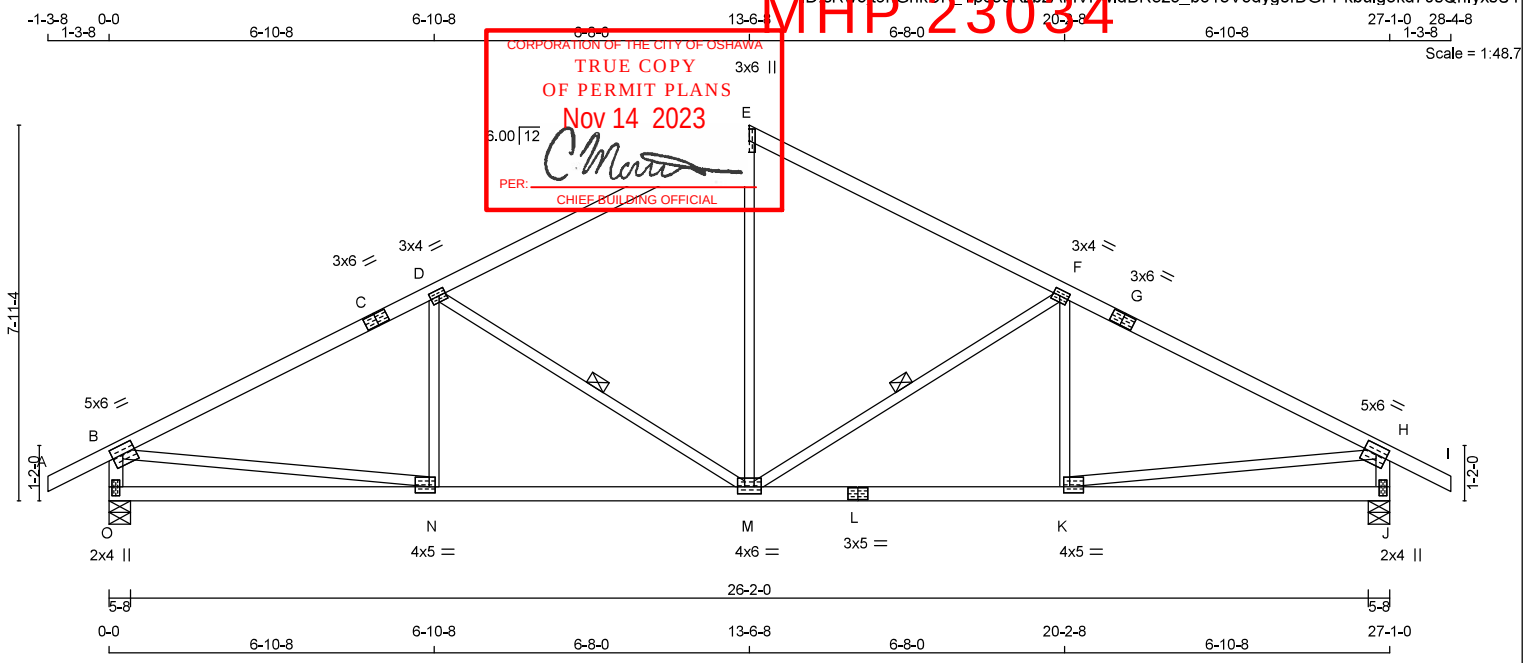

TOTAL WEIGHT = 8 X 106 = 849 lb

[M][F]

LUMBER

N. L. G. A. RULES

CHORDS	SIZE		LUMBER	DESCR.
A - C	2x4	DRY	No.2	SPF
C - E	2x4	DRY	No.2	SPF
E - G	2x4	DRY	No.2	SPF
G - I	2x4	DRY	No.2	SPF
O - B	2x4	DRY	No.2	SPF
J - H	2x4	DRY	No.2	SPF
O - L	2x4	DRY	No.2	SPF
L - J	2x4	DRY	No.2	SPF
ALL WEBS EXCEPT	2x3	DRY	No.2	SPF

DRY: SEASONED LUMBER.

PLATES (table is in inches)

JT	TYPE	PLATES	W	LEN	Y	X
B	TMVW-t	MT20	5.0	6.0	2.25	2.75
C	TS-t	MT20	3.0	6.0		
D	TMWW-t	MT20	3.0	4.0	1.50	1.75
E	TTW+p	MT20	3.0	6.0		
F	TMWW-t	MT20	3.0	4.0	1.50	1.75
G	TS-t	MT20	3.0	6.0		
H	TMVW-t	MT20	5.0	6.0	2.25	2.75
J	BMV1+p	MT20	2.0	4.0	2.25	1.00
K	BMWW-t	MT20	4.0	5.0	1.50	1.50
L	BS-t	MT20	3.0	5.0		
M	BMWWW-t	MT20	4.0	6.0	1.75	3.00
N	BMWW-t	MT20	4.0	5.0	1.50	1.50
O	BMV1+p	MT20	2.0	4.0	2.25	1.00

DIMENSIONS, SUPPORTS AND LOADINGS SPECIFIED BY FABRICATOR TO BE VERIFIED BY BUILDING DESIGNER

BEARINGS

JT	FACTORED GROSS REACTION VERT	HORZ	MAXIMUM FACTORED GROSS REACTION DOWN	HORZ	UPLIFT	INPUT BRG IN-SX	REQRD BRG IN-SX
O	2026	0	2026	0	0	5-8	3-1
J	2026	0	2026	0	0	5-8	3-1

UNFACTORED REACTIONS

JT	1ST LCASE COMBINED	MAX./MIN. COMPONENT REACTIONS SNOW	LIVE	PERM.LIVE	WIND	DEAD	SOIL
O	1414	1037 / 0	0 / 0	0 / 0	0 / 0	376 / 0	0 / 0
J	1414	1037 / 0	0 / 0	0 / 0	0 / 0	376 / 0	0 / 0

BEARING MATERIAL TO BE SPF NO.2 OR BETTER AT JOINT(S) O, J

BRACING

TOP CHORD TO BE SHEATHED OR MAX. PURLIN SPACING = 3.08 FT.
MAX. UNBRACED BOTTOM CHORD LENGTH = 10.00 FT OR RIGID CEILING DIRECTLY APPLIED.

ALL PITCH BREAKS AND PERIMETER CORNER JOINTS MUST BE LATERALLY RESTRAINED.

1 - 1x4 LATERAL BRACE(S) AT 1/ 2 LENGTH OF F-M, D-M. DBS = 20-0-0 . CBF = 109 LBS.

DBS = DIAGONAL BRACE SPACING (MAX). CBF = CUMULATIVE BRACING FORCE (PER BRACE). FASTEN LATERAL BRACE(S) USING (0.122"X3") SPIRAL NAILS : 1 NAIL FOR 2x3 BRACE(S), 2 FOR 1x4, 2x4, 2x5, 3 FOR 2x6, 4 FOR 2x8, 5 FOR 2x10, AND 6 FOR 2x12.

END VERTICAL(S) MUST BE SHEATHED OR HAVE BRACES AS INDICATED IN THE MAX. UNBRACED LENGTH COLUMN OF THE TABLE BELOW

LOADING

TOTAL LOAD CASES: (4)

CHORDS

MEMB. FR-TO	MAX. FACTORED FORCE (LBS)	FACTORED VERT. LOAD LC1 (PLF) FROM	TO	MAX CSI (LC)	MAX. UNBRAC LENGTH
A- B	0 / 36	-119.4	-119.4	0.16 (1)	10.00
B- C	-2634 / 0	-119.4	-119.4	0.91 (1)	3.08
C- D	-2634 / 0	-119.4	-119.4	0.91 (1)	3.08
D- E	-1904 / 0	-119.4	-119.4	0.79 (1)	3.75
E- F	-1904 / 0	-119.4	-119.4	0.79 (1)	3.75
F- G	-2634 / 0	-119.4	-119.4	0.91 (1)	3.08
G- H	-2634 / 0	-119.4	-119.4	0.91 (1)	3.08
H- I	0 / 36	-119.4	-119.4	0.16 (1)	10.00
O- B	-1973 / 0	0.0	0.0	0.20 (1)	6.00
J- H	-1973 / 0	0.0	0.0	0.20 (1)	6.00
O- N	0 / 0	-18.2	-18.2	0.20 (4)	10.00
N- M	0 / 2394	-18.2	-18.2	0.47 (1)	10.00
M- L	0 / 2394	-18.2	-18.2	0.47 (1)	10.00
L- K	0 / 2394	-18.2	-18.2	0.47 (1)	10.00
K- J	0 / 0	-18.2	-18.2	0.20 (4)	10.00

WEBS

MEMB. FR-TO	MAX. FACTORED FORCE (LBS)	MAX CSI (LC)
M- E	0 / 1065	0.24 (1)
M- F	-870 / 0	0.37 (1)
K- F	-167 / 76	0.05 (1)
D- M	-870 / 0	0.37 (1)
N- D	-167 / 76	0.05 (1)
B- N	0 / 2413	0.54 (1)
K- H	0 / 2413	0.54 (1)

DESIGN CRITERIA

SPECIFIED LOADS:

TOP CH.	LL =	34.8	PSF
	DL =	6.0	PSF
BOT CH.	LL =	0.0	PSF
	DL =	7.3	PSF
TOTAL LOAD	=	48.1	PSF

SPACING = 24.0 IN. C/C

THIS TRUSS IS DESIGNED FOR RESIDENTIAL OR SMALL BUILDING REQUIREMENTS OF PART 9, NBCC 2015

THIS DESIGN COMPLIES WITH:
- PART 9 OF BCBC 2018 , NBC-2019AE
- PART 9 OF OBC 2012 (2019 AMENDMENT)
- CSA 086-14
- TPIC 2014

(55 % OF 48.1 P.S.F. G.S.L. PLUS 8.4 P.S.F. RAIN LOAD) EQUALS 34.8 P.S.F. SPECIFIED ROOF LIVE LOAD

ALLOWABLE DEFL.(LL)= L/360 (0.90")
CALCULATED VERT. DEFL.(LL) = L/ 999 (0.12")
ALLOWABLE DEFL.(TL)= L/360 (0.90")
CALCULATED VERT. DEFL.(TL) = L/ 999 (0.21")

CSI: TC=0.91/1.00 (B-D:1) , BC=0.47/1.00 (K-M:1) , WB=0.54/1.00 (H-K:1) , SSI=0.35/1.00 (B-D:1)

DOL LUMBER=1.00 NAIL=1.00 LS BEND=1.10 COMP=1.10 SHEAR=1.10 TENS= 1.10

COMPANION LIVE LOAD FACTOR = 1.00

TRUSS PLATE MANUFACTURER IS NOT RESPONSIBLE FOR QUALITY CONTROL IN THE TRUSS MANUFACTURING PLANT .

NAIL VALUES

PLATE	GRIP(DRY) (PSI) MAX	MIN	SHEAR (PLI) MAX	MIN	SECTION (PLI) MAX	MIN
MT20	650	371	1747	788	1987	1873

PLATE PLACEMENT TOL. = 0.250 inches

PLATE ROTATION TOL. = 5.0 Deg.

JSI GRIP= 0.89 (B) (INPUT = 0.90)
JSI METAL= 0.74 (L) (INPUT = 1.00)

LICENSED PROFESSIONAL ENGINEER
N.A. EL-MASRI
Jul 15, 2023

READ ALL NOTES ON THIS PAGE AND ON THE ENGINEERING NOTES: TRUSSES. THE NOTE PAGE IS AN INTEGRAL PART OF THIS DRAWING AS IT CONTAINS SPECIFICATIONS AND CRITERIA USED IN THE DESIGN OF THIS COMPONENT.

KOTT

JOB NAME	TRUSS NAME	QUANTITY	PLY	JOB DESC.	DRWG NO.
NE0723-089	T05	1	1	TRUSS DESC.	

Version 8.630 S Mar 22 2023 MiTek Industries, Inc. Sat Jul 15 10:29:53 2023 Page 1

MFP 23034

CORPORATION OF THE CITY OF OSHAWA
TRUE COPY
OF PERMIT PLANS
Nov 14 2023
PER:
CHIEF BUILDING OFFICIAL

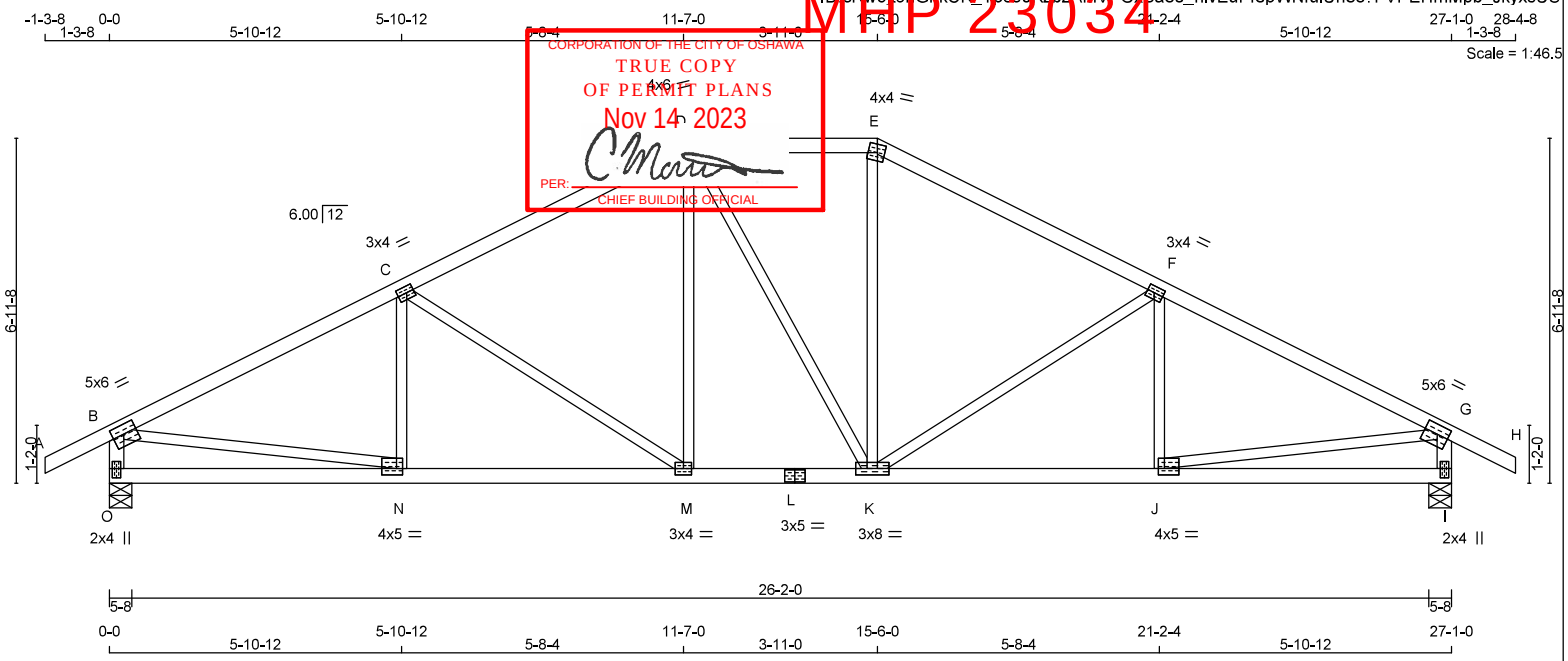

TOTAL WEIGHT = 112 lb

[M][F]

LUMBER

N. L. G. A. RULES

CHORDS	SIZE		LUMBER	DESCR.
A - D	2x4	DRY	No.2	SPF
D - E	2x4	DRY	No.2	SPF
E - H	2x4	DRY	No.2	SPF
O - B	2x4	DRY	No.2	SPF
I - G	2x4	DRY	No.2	SPF
O - L	2x4	DRY	No.2	SPF
L - I	2x4	DRY	No.2	SPF
ALL WEBS EXCEPT	2x3	DRY	No.2	SPF

DRY: SEASONED LUMBER.

PLATES (table is in inches)

JT	TYPE	PLATES	W	LEN	Y	X
B	TMVW-t	MT20	5.0	6.0	2.25	2.75
C	TMWW-t	MT20	3.0	4.0	1.50	1.75
D	TTWW-m	MT20	4.0	6.0	1.75	2.25
E	TTW-m	MT20	4.0	4.0	2.00	1.75
F	TMWW-t	MT20	3.0	4.0	1.50	1.75
G	TMVW-t	MT20	5.0	6.0	2.25	2.75
I	BMV1+p	MT20	2.0	4.0	2.25	1.00
J	BMWW-t	MT20	4.0	5.0	1.50	1.50
K	BMWWW-t	MT20	3.0	8.0		
L	BS-t	MT20	3.0	5.0		
M	BMWW-t	MT20	3.0	4.0		
N	BMWW-t	MT20	4.0	5.0	1.50	1.50
O	BMV1+p	MT20	2.0	4.0	2.25	1.00

DIMENSIONS, SUPPORTS AND LOADINGS SPECIFIED BY FABRICATOR TO BE VERIFIED BY BUILDING DESIGNER

BEARINGS

JT	FACTORED GROSS REACTION VERT	HORZ	MAXIMUM FACTORED GROSS REACTION DOWN	HORZ	UPLIFT	INPUT BRG IN-SX	REQRD BRG IN-SX
O	2026	0	2026	0	0	5-8	3-1
I	2026	0	2026	0	0	5-8	3-1

UNFACTORED REACTIONS

JT	1ST LCASE COMBINED	MAX./MIN. COMPONENT REACTIONS SNOW	LIVE	PERM.LIVE	WIND	DEAD	SOIL
O	1414	1037 / 0	0 / 0	0 / 0	0 / 0	376 / 0	0 / 0
I	1414	1037 / 0	0 / 0	0 / 0	0 / 0	376 / 0	0 / 0

BEARING MATERIAL TO BE SPF NO.2 OR BETTER AT JOINT(S) O, I

BRACING

TOP CHORD TO BE SHEATHED OR MAX. PURLIN SPACING = 3.58 FT.
MAX. UNBRACED BOTTOM CHORD LENGTH = 10.00 FT OR RIGID CEILING DIRECTLY APPLIED.

ALL PITCH BREAKS AND PERIMETER CORNER JOINTS MUST BE LATERALLY RESTRAINED.

LOADING

TOTAL LOAD CASES: (4)

CHORDS

MEMB. FR-TO	MAX. FACTORED FORCE (LBS)	FACTORED VERT. LOAD (PLF) FROM	TO	LC1	MAX CSI (LC)	MAX. UNBRAC LENGTH
A- B	0 / 36	-119.4	-119.4	0.16 (1)	10.00	
B- C	-2642 / 0	-119.4	-119.4	0.64 (1)	3.58	
C- D	-2112 / 0	-119.4	-119.4	0.58 (1)	4.01	
D- E	-1862 / 0	-119.4	-119.4	0.27 (1)	4.65	
E- F	-2113 / 0	-119.4	-119.4	0.58 (1)	4.01	
F- G	-2641 / 0	-119.4	-119.4	0.64 (1)	3.58	
G- H	0 / 36	-119.4	-119.4	0.16 (1)	10.00	
O- B	-1980 / 0	0.0	0.0	0.20 (1)	5.99	
I- G	-1979 / 0	0.0	0.0	0.20 (1)	5.99	
O- N	0 / 0	-18.2	-18.2	0.15 (4)	10.00	
N- M	0 / 2395	-18.2	-18.2	0.44 (1)	10.00	
M- L	0 / 1861	-18.2	-18.2	0.35 (1)	10.00	
L- K	0 / 1861	-18.2	-18.2	0.35 (1)	10.00	
K- J	0 / 2395	-18.2	-18.2	0.44 (1)	10.00	
J- I	0 / 0	-18.2	-18.2	0.15 (4)	10.00	

WEBS

MEMB. FR-TO	MAX. FACTORED FORCE (LBS)	MAX CSI (LC)
N- C	-233 / 44	0.06 (1)
C- M	-647 / 0	0.59 (1)
M- D	0 / 438	0.10 (1)
D- K	0 / 2	0.00 (1)
K- E	0 / 440	0.10 (1)
K- F	-645 / 0	0.58 (1)
J- F	-235 / 43	0.06 (1)
B- N	0 / 2420	0.54 (1)
J- G	0 / 2420	0.54 (1)

DESIGN CRITERIA

SPECIFIED LOADS:

TOP CH.	LL	=	34.8	PSF
	DL	=	6.0	PSF
BOT CH.	LL	=	0.0	PSF
	DL	=	7.3	PSF
TOTAL LOAD		=	48.1	PSF

SPACING = 24.0 IN. C/C

LOADING IN FLAT SECTION BASED ON A SLOPE OF 2.00/12 MINIMUM

THIS TRUSS IS DESIGNED FOR RESIDENTIAL OR SMALL BUILDING REQUIREMENTS OF PART 9, NBCC 2015

THIS DESIGN COMPLIES WITH:
- PART 9 OF BCBC 2018 , NBC-2019AE
- PART 9 OF OBC 2012 (2019 AMENDMENT)
- CSA 086-14
- TPIC 2014

(55 % OF 48.1 P.S.F. G.S.L. PLUS 8.4 P.S.F. RAIN LOAD) EQUALS 34.8 P.S.F. SPECIFIED ROOF LIVE LOAD

ALLOWABLE DEFL.(LL)= L/360 (0.90")
CALCULATED VERT. DEFL.(LL) = L/ 999 (0.11")
ALLOWABLE DEFL.(TL)= L/360 (0.90")
CALCULATED VERT. DEFL.(TL) = L/ 999 (0.20")

CSI: TC=0.64/1.00 (B-C:1) , BC=0.44/1.00 (M-N:1) , WB=0.59/1.00 (C-M:1) , SSI=0.30/1.00 (F-G:1)

DOL LUMBER=1.00 NAIL=1.00 LS BEND=1.10 COMP=1.10 SHEAR=1.10 TENS= 1.10

COMPANION LIVE LOAD FACTOR = 1.00

TRUSS PLATE MANUFACTURER IS NOT RESPONSIBLE FOR QUALITY CONTROL IN THE TRUSS MANUFACTURING PLANT .

NAIL VALUES

PLATE	GRIP(DRY) (PSI) MAX	MIN	SHEAR (PLI) MAX	MIN	SECTION (PLI) MAX	MIN
MT20	650	371	1747	788	1987	1873

PLATE PLACEMENT TOL. = 0.250 inches

PLATE ROTATION TOL. = 5.0 Deg.

JSI GRIP= 0.89 (B) (INPUT = 0.90)
JSI METAL= 0.68 (N) (INPUT = 1.00)

READ ALL NOTES ON THIS PAGE AND ON THE ENGINEERING NOTES: TRUSSES. THE NOTE PAGE IS AN INTEGRAL PART OF THIS DRAWING AS IT CONTAINS SPECIFICATIONS AND CRITERIA USED IN THE DESIGN OF THIS COMPONENT.

KOTT

JOB NAME	TRUSS NAME	QUANTITY	PLY	JOB DESC.	DRWG NO.
NE0723-089	T06	1	1	TRUSS DESC.	

Version 8.630 S Mar 22 2023 MiTek Industries, Inc. Sat Jul 15 10:29:53 2023 Page 1

MHP 23034
CORPORATION OF THE CITY OF OSHAWA
TRUE COPY
OF PERMIT PLANS
Nov 14 2023
PER: CHIEF BUILDING OFFICIAL

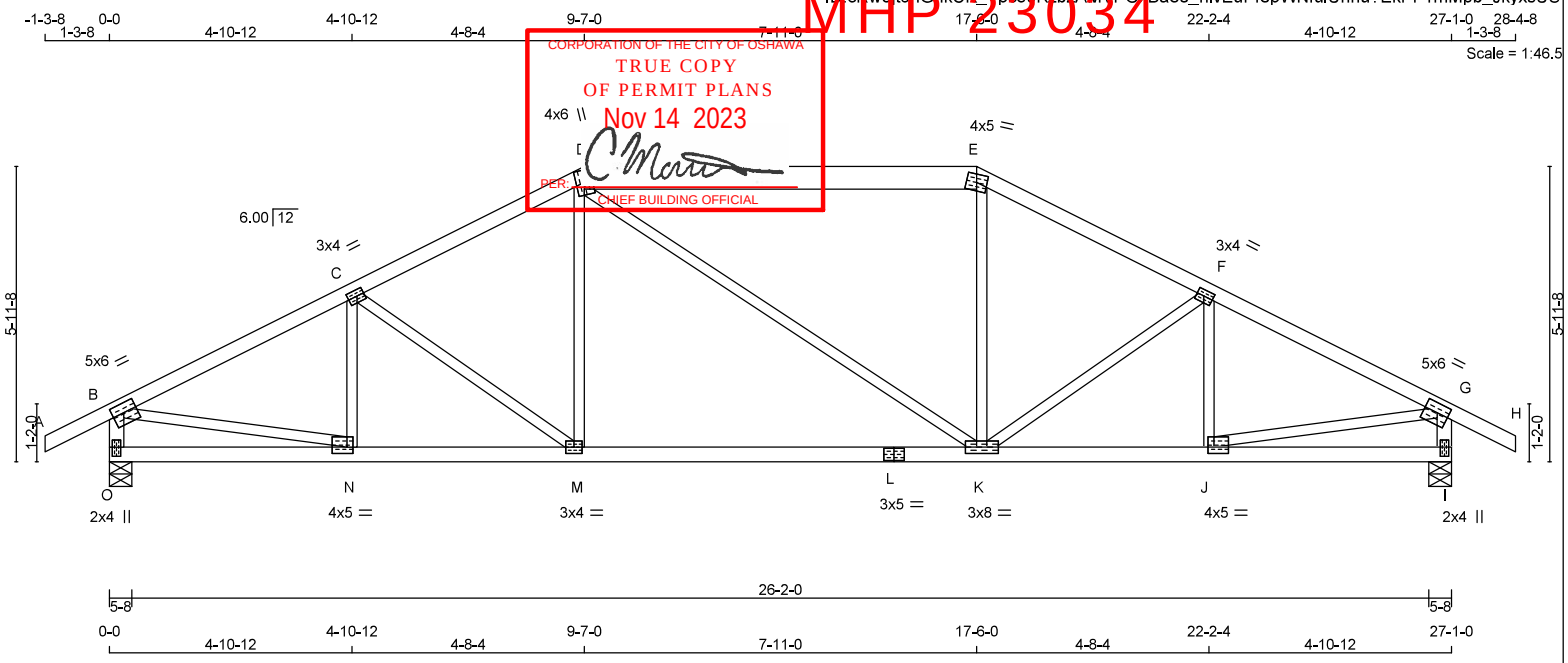

TOTAL WEIGHT = 112 lb

[M][F]

LUMBER

N. L. G. A. RULES

CHORDS	SIZE		LUMBER	DESCR.
A - D	2x4	DRY	No.2	SPF
D - E	2x6	DRY	No.2	SPF
E - H	2x4	DRY	No.2	SPF
O - B	2x4	DRY	No.2	SPF
I - G	2x4	DRY	No.2	SPF
O - L	2x4	DRY	No.2	SPF
L - I	2x4	DRY	No.2	SPF
ALL WEBS EXCEPT	2x3	DRY	No.2	SPF

DRY: SEASONED LUMBER.

PLATES (table is in inches)

JT	TYPE	PLATES	W	LEN	Y	X
B	TMVW-t	MT20	5.0	6.0	2.25	2.75
C	TMWW-t	MT20	3.0	4.0	1.50	1.75
D	TTWW+m	MT20	4.0	6.0		
E	TTW-m	MT20	4.0	5.0		
F	TMWW-t	MT20	3.0	4.0	1.50	1.75
G	TMVW-t	MT20	5.0	6.0	2.25	2.75
I	BMV1+p	MT20	2.0	4.0	2.25	1.00
J	BMWW-t	MT20	4.0	5.0	1.50	1.50
K	BMWWW-t	MT20	3.0	8.0		
L	BS-t	MT20	3.0	5.0		
M	BMWW-t	MT20	3.0	4.0		
N	BMWW-t	MT20	4.0	5.0	1.50	1.50
O	BMV1+p	MT20	2.0	4.0	2.25	1.00

DIMENSIONS, SUPPORTS AND LOADINGS SPECIFIED BY FABRICATOR TO BE VERIFIED BY BUILDING DESIGNER

BEARINGS

JT	FACTORED GROSS REACTION VERT	HORZ	MAXIMUM FACTORED GROSS REACTION DOWN	HORZ	UPLIFT	INPUT BRG IN-SX	REQRD BRG IN-SX
O	2026	0	2026	0	0	5-8	3-1
I	2026	0	2026	0	0	5-8	3-1

UNFACTORED REACTIONS

JT	1ST LCASE COMBINED	MAX./MIN. COMPONENT REACTIONS SNOW	LIVE	PERM.LIVE	WIND	DEAD	SOIL
O	1414	1037 / 0	0 / 0	0 / 0	0 / 0	376 / 0	0 / 0
I	1414	1037 / 0	0 / 0	0 / 0	0 / 0	376 / 0	0 / 0

BEARING MATERIAL TO BE SPF NO.2 OR BETTER AT JOINT(S) O, I

BRACING

TOP CHORD TO BE SHEATHED OR MAX. PURLIN SPACING = 3.88 FT.
MAX. UNBRACED BOTTOM CHORD LENGTH = 10.00 FT OR RIGID CEILING DIRECTLY APPLIED.

ALL PITCH BREAKS AND PERIMETER CORNER JOINTS MUST BE LATERALLY RESTRAINED.

LOADING

TOTAL LOAD CASES: (4)

CHORDS

MEMB. FR-TO	MAX. FORCE (LBS)	FACTORED VERT. LOAD (PLF) FROM	TO	LC1	MAX CSI (LC)	MAX. UNBRAC LENGTH
A- B	0 / 36	-119.4	-119.4	0.16 (1)	10.00	
B- C	-2607 / 0	-119.4	-119.4	0.43 (1)	3.88	
C- D	-2342 / 0	-119.4	-119.4	0.41 (1)	4.08	
D- E	-2069 / 0	-119.4	-119.4	0.50 (1)	4.98	
E- F	-2343 / 0	-119.4	-119.4	0.41 (1)	4.08	
F- G	-2607 / 0	-119.4	-119.4	0.43 (1)	3.88	
G- H	0 / 36	-119.4	-119.4	0.16 (1)	10.00	
O- B	-1982 / 0	0.0	0.0	0.20 (1)	5.99	
I- G	-1982 / 0	0.0	0.0	0.20 (1)	5.99	
O- N	0 / 0	-18.2	-18.2	0.10 (4)	10.00	
N- M	0 / 2357	-18.2	-18.2	0.48 (1)	10.00	
M- L	0 / 2068	-18.2	-18.2	0.44 (1)	10.00	
L- K	0 / 2068	-18.2	-18.2	0.44 (1)	10.00	
K- J	0 / 2357	-18.2	-18.2	0.49 (1)	10.00	
J- I	0 / 0	-18.2	-18.2	0.10 (4)	10.00	

WEBS

MEMB. FR-TO	MAX. FORCE (LBS)	MAX CSI (LC)
N- C	-343 / 0	0.07 (1)
C- M	-349 / 0	0.19 (1)
M- D	0 / 336	0.08 (1)
D- K	0 / 0	0.00 (1)
K- E	0 / 337	0.08 (1)
K- F	-348 / 0	0.19 (1)
J- F	-344 / 0	0.07 (1)
B- N	0 / 2393	0.54 (1)
J- G	0 / 2393	0.54 (1)

DESIGN CRITERIA

SPECIFIED LOADS:

TOP CH.	LL	=	34.8	PSF
	DL	=	6.0	PSF
BOT CH.	LL	=	0.0	PSF
	DL	=	7.3	PSF
TOTAL LOAD		=	48.1	PSF

SPACING = 24.0 IN. C/C

LOADING IN FLAT SECTION BASED ON A SLOPE OF 2.00/12 MINIMUM

THIS TRUSS IS DESIGNED FOR RESIDENTIAL OR SMALL BUILDING REQUIREMENTS OF PART 9, NBCC 2015

THIS DESIGN COMPLIES WITH:
- PART 9 OF BCBC 2018 , NBC-2019AE
- PART 9 OF OBC 2012 (2019 AMENDMENT)
- CSA 086-14
- TPIC 2014

(55 % OF 48.1 P.S.F. G.S.L. PLUS 8.4 P.S.F. RAIN LOAD) EQUALS 34.8 P.S.F. SPECIFIED ROOF LIVE LOAD

ALLOWABLE DEFL.(LL)= L/360 (0.90")
CALCULATED VERT. DEFL.(LL) = L/ 999 (0.10")
ALLOWABLE DEFL.(TL)= L/360 (0.90")
CALCULATED VERT. DEFL.(TL) = L/ 999 (0.24")

CSI: TC=0.50/1.00 (D-E:1) , BC=0.49/1.00 (J-K:1) , WB=0.54/1.00 (B-N:1) , SSI=0.29/1.00 (D-E:1)

DOL LUMBER=1.00 NAIL=1.00 LS BEND=1.10 COMP=1.10 SHEAR=1.10 TENS= 1.10

COMPANION LIVE LOAD FACTOR = 1.00

TRUSS PLATE MANUFACTURER IS NOT RESPONSIBLE FOR QUALITY CONTROL IN THE TRUSS MANUFACTURING PLANT .

NAIL VALUES

PLATE	GRIP(DRY) (PSI) MAX	MIN	SHEAR (PLI) MAX	MIN	SECTION (PLI) MAX	MIN
MT20	650	371	1747	788	1987	1873

PLATE PLACEMENT TOL. = 0.250 inches

PLATE ROTATION TOL. = 5.0 Deg.

JSI GRIP= 0.88 (B) (INPUT = 0.90)
JSI METAL= 0.67 (N) (INPUT = 1.00)

LICENSED PROFESSIONAL ENGINEER
N.A. EL-MASRI
Jul 15, 2023

READ ALL NOTES ON THIS PAGE AND ON THE ENGINEERING NOTES: TRUSSES. THE NOTE PAGE IS AN INTEGRAL PART OF THIS DRAWING AS IT CONTAINS SPECIFICATIONS AND CRITERIA USED IN THE DESIGN OF THIS COMPONENT.

KOTT

JOB NAME	TRUSS NAME	QUANTITY	PLY	JOB DESC.	DRWG NO.
NE0723-089	T07	1	1	TRUSS DESC.	

Version 8.630 S Mar 22 2023 MiTek Industries, Inc. Sat Jul 15 10:29:54 2023 Page 1

MHP 23034

CORPORATION OF THE CITY OF OSHAWA
TRUE COPY
OF PERMIT PLANS
Nov 14 2023
PER:
CHIEF BUILDING OFFICIAL

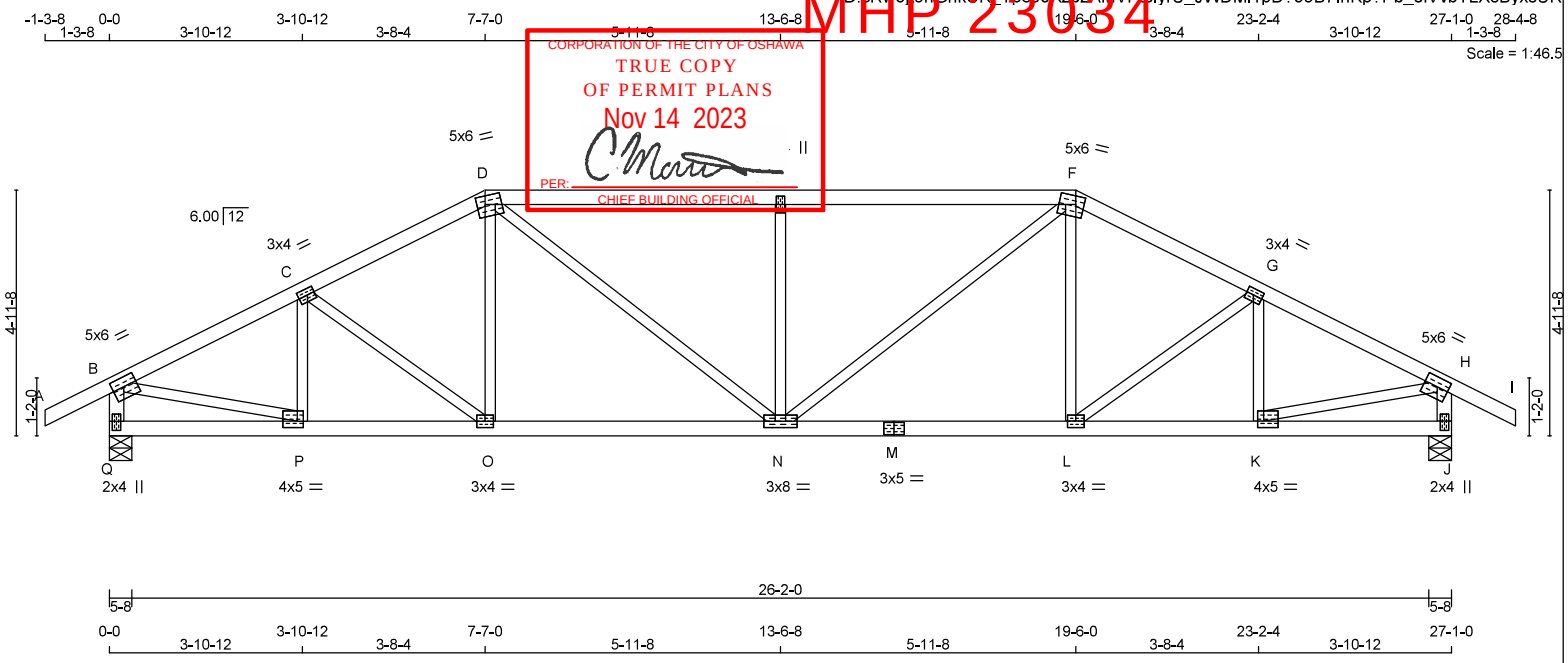

TOTAL WEIGHT = 108 lb

[M][F]

LUMBER

N. L. G. A. RULES

CHORDS	SIZE		LUMBER	DESCR.
A - D	2x4	DRY	No.2	SPF
D - F	2x4	DRY	No.2	SPF
F - I	2x4	DRY	No.2	SPF
Q - B	2x4	DRY	No.2	SPF
J - H	2x4	DRY	No.2	SPF
Q - M	2x4	DRY	No.2	SPF
M - J	2x4	DRY	No.2	SPF
ALL WEBS EXCEPT	2x3	DRY	No.2	SPF

DRY: SEASONED LUMBER.

PLATES (table is in inches)

JT	TYPE	PLATES	W	LEN	Y	X
B	TMVW-t	MT20	5.0	6.0	2.25	2.75
C	TMWW-t	MT20	3.0	4.0	1.50	1.75
D	TTWW-m	MT20	5.0	6.0	2.00	2.00
E	TMW+w	MT20	2.0	4.0		
F	TTWW-m	MT20	5.0	6.0	2.00	2.00
G	TMWW-t	MT20	3.0	4.0	1.50	1.75
H	TMVW-t	MT20	5.0	6.0	2.25	2.75
J	BMV1+p	MT20	2.0	4.0	2.25	1.00
K	BMWW-t	MT20	4.0	5.0	1.50	1.50
L	BMWW-t	MT20	3.0	4.0		
M	BS-t	MT20	3.0	5.0		
N	BMWWW-t	MT20	3.0	8.0		
O	BMWW-t	MT20	3.0	4.0		
P	BMWW-t	MT20	4.0	5.0	1.50	1.50
Q	BMV1+p	MT20	2.0	4.0	2.25	1.00

DIMENSIONS, SUPPORTS AND LOADINGS SPECIFIED BY FABRICATOR TO BE VERIFIED BY BUILDING DESIGNER

BEARINGS

JT	FACTORED GROSS REACTION VERT	HORZ	MAXIMUM FACTORED GROSS REACTION DOWN	HORZ	UPLIFT	INPUT BRG IN-SX	REQRD BRG IN-SX
Q	2026	0	2026	0	0	5-8	3-1
J	2026	0	2026	0	0	5-8	3-1

UNFACTORED REACTIONS

JT	1ST LCASE COMBINED	MAX./MIN. COMPONENT REACTIONS SNOW	LIVE	PERM.LIVE	WIND	DEAD	SOIL
Q	1414	1037 / 0	0 / 0	0 / 0	0 / 0	376 / 0	0 / 0
J	1414	1037 / 0	0 / 0	0 / 0	0 / 0	376 / 0	0 / 0

BEARING MATERIAL TO BE SPF NO.2 OR BETTER AT JOINT(S) Q, J

BRACING

TOP CHORD TO BE SHEATHED OR MAX. PURLIN SPACING = 3.40 FT.
MAX. UNBRACED BOTTOM CHORD LENGTH = 10.00 FT OR RIGID CEILING DIRECTLY APPLIED.

ALL PITCH BREAKS AND PERIMETER CORNER JOINTS MUST BE LATERALLY RESTRAINED.

LOADING

TOTAL LOAD CASES: (4)

CHORDS

MEMB. FR-TO	MAX. FACTORED FORCE (LBS)	FACTORED VERT. LOAD (PLF) FROM	TO	LC1 MAX CSI (LC)	MAX. UNBRAC LENGTH
A- B	0 / 36	-119.4	-119.4	0.16 (1)	10.00
B- C	-2526 / 0	-119.4	-119.4	0.27 (1)	4.11
C- D	-2476 / 0	-119.4	-119.4	0.27 (1)	4.16
D- E	-2821 / 0	-119.4	-119.4	0.67 (1)	3.40
E- F	-2821 / 0	-119.4	-119.4	0.67 (1)	3.40
F- G	-2476 / 0	-119.4	-119.4	0.27 (1)	4.16
G- H	-2526 / 0	-119.4	-119.4	0.27 (1)	4.11
H- I	0 / 36	-119.4	-119.4	0.16 (1)	10.00
Q- B	-1988 / 0	0.0	0.0	0.20 (1)	5.98
J- H	-1988 / 0	0.0	0.0	0.20 (1)	5.98
Q- P	0 / 0	-18.2	-18.2	0.06 (4)	10.00
P- O	0 / 2278	-18.2	-18.2	0.43 (1)	10.00
O- N	0 / 2196	-18.2	-18.2	0.41 (1)	10.00
N- M	0 / 2196	-18.2	-18.2	0.41 (1)	10.00
M- L	0 / 2196	-18.2	-18.2	0.41 (1)	10.00
L- K	0 / 2278	-18.2	-18.2	0.43 (1)	10.00
K- J	0 / 0	-18.2	-18.2	0.06 (4)	10.00

WEBS

MEMB. FR-TO	MAX. FACTORED FORCE (LBS)	MAX CSI (LC)
P- C	-449 / 0	0.08 (1)
C- O	-106 / 0	0.04 (1)
O- D	0 / 167	0.04 (4)
D- N	0 / 793	0.18 (1)
N- E	-873 / 0	0.32 (1)
N- F	0 / 793	0.18 (1)
L- F	0 / 167	0.04 (4)
L- G	-106 / 0	0.04 (1)
K- G	-449 / 0	0.08 (1)
B- P	0 / 2332	0.52 (1)
K- H	0 / 2332	0.52 (1)

DESIGN CRITERIA

SPECIFIED LOADS:

TOP CH.	LL =	34.8	PSF
	DL =	6.0	PSF
BOT CH.	LL =	0.0	PSF
	DL =	7.3	PSF
TOTAL LOAD	=	48.1	PSF

SPACING = 24.0 IN. C/C

LOADING IN FLAT SECTION BASED ON A SLOPE OF 2.00/12 MINIMUM

THIS TRUSS IS DESIGNED FOR RESIDENTIAL OR SMALL BUILDING REQUIREMENTS OF PART 9, NBCC 2015

THIS DESIGN COMPLIES WITH:
- PART 9 OF BCBC 2018 , NBC-2019AE
- PART 9 OF OBC 2012 (2019 AMENDMENT)
- CSA 086-14
- TPIC 2014

(55 % OF 48.1 P.S.F. G.S.L. PLUS 8.4 P.S.F. RAIN LOAD) EQUALS 34.8 P.S.F. SPECIFIED ROOF LIVE LOAD

ALLOWABLE DEFL.(LL)= L/360 (0.90")
CALCULATED VERT. DEFL.(LL) = L/ 999 (0.13")
ALLOWABLE DEFL.(TL)= L/360 (0.90")
CALCULATED VERT. DEFL.(TL) = L/ 999 (0.22")

CSI: TC=0.67/1.00 (D-E:1) , BC=0.43/1.00 (K-L:1) , WB=0.52/1.00 (H-K:1) , SSI=0.34/1.00 (D-E:1)

DOL LUMBER=1.00 NAIL=1.00 LS BEND=1.10 COMP=1.10 SHEAR=1.10 TENS= 1.10

COMPANION LIVE LOAD FACTOR = 1.00

TRUSS PLATE MANUFACTURER IS NOT RESPONSIBLE FOR QUALITY CONTROL IN THE TRUSS MANUFACTURING PLANT .

NAIL VALUES

PLATE	GRIP(DRY) (PSI) MAX	MIN	SHEAR (PLI) MAX	MIN	SECTION (PLI) MAX	MIN
MT20	650	371	1747	788	1987	1873

PLATE PLACEMENT TOL. = 0.250 inches

PLATE ROTATION TOL. = 5.0 Deg.

JSI GRIP= 0.88 (K) (INPUT = 0.90)
JSI METAL= 0.71 (M) (INPUT = 1.00)

READ ALL NOTES ON THIS PAGE AND ON THE ENGINEERING NOTES: TRUSSES. THE NOTE PAGE IS AN INTEGRAL PART OF THIS DRAWING AS IT CONTAINS SPECIFICATIONS AND CRITERIA USED IN THE DESIGN OF THIS COMPONENT.

KOTT

JOB NAME	TRUSS NAME	QUANTITY	PLY	JOB DESC.	DRWG NO.
NE0723-089	T08	3	1	TRUSS DESC.	

Version 8.630 S Mar 22 2023 MiTek Industries, Inc. Sat Jul 15 10:29:55 2023 Page 1

MHP 23034

CORPORATION OF THE CITY OF OSHAWA
TRUE COPY
OF PERMIT PLANS
Nov 14 2023
PER:
CHIEF BUILDING OFFICIAL

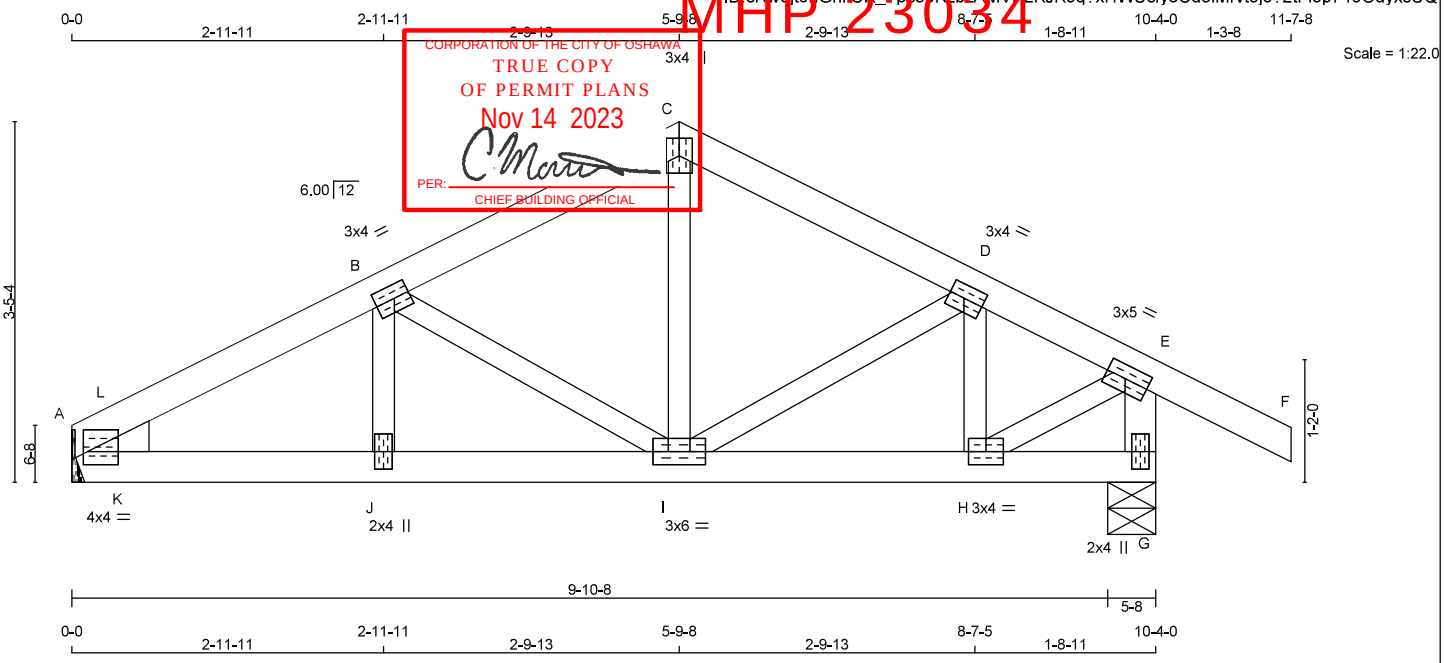

TOTAL WEIGHT = 3 X 39 = 117 lb

LUMBER
N. L. G. A. RULES

CHORDS	SIZE		LUMBER	DESCR.
A - C	2x4	DRY	No.2	SPF
C - F	2x4	DRY	No.2	SPF
G - E	2x4	DRY	No.2	SPF
A - G	2x4	DRY	No.2	SPF
ALL WEBS EXCEPT	2x3	DRY	No.2	SPF

DRY: SEASONED LUMBER.

PLATES (table is in inches)

JT	TYPE	PLATES	W	LEN	Y	X
A	TMBH1-I	MT20	4.0	4.0	1.50	0.50
B	TMWW-t	MT20	3.0	4.0	1.50	1.75
C	TTW+p	MT20	3.0	4.0		
D	TMWW-t	MT20	3.0	4.0	1.50	1.75
E	TMVW-t	MT20	3.0	5.0	1.50	2.25
G	BMV1+p	MT20	2.0	4.0		
H	BMWW-t	MT20	3.0	4.0		
I	BMWWW-t	MT20	3.0	6.0		
J	BMW+w	MT20	2.0	4.0		

DIMENSIONS, SUPPORTS AND LOADINGS SPECIFIED BY FABRICATOR TO BE VERIFIED BY BUILDING DESIGNER

BEARINGS

JT	FACTORED GROSS REACTION VERT	HORZ	MAXIMUM FACTORED GROSS REACTION DOWN	HORZ	UPLIFT	INPUT BRG IN-SX	REQRD BRG IN-SX	HEEL WEDGE
G	884	0	884	0	0	5-8	1-8	
A	701	0	701	0	0	MECHANICAL		2x4 L

A SUITABLE HANGER/MECHANICAL CONNECTION IS REQUIRED AT JOINT A. MINIMUM BEARING LENGTH AT JOINT A = 1-8.

UNFACTORED REACTIONS

JT	1ST LCASE COMBINED	MAX./MIN. COMPONENT REACTIONS SNOW	LIVE	PERM.LIVE	WIND	DEAD	SOIL
G	615	460 / 0	0 / 0	0 / 0	0 / 0	155 / 0	0 / 0
A	490	353 / 0	0 / 0	0 / 0	0 / 0	136 / 0	0 / 0

BEARING MATERIAL TO BE SPF NO.2 OR BETTER AT JOINT(S) G

BRACING
TOP CHORD TO BE SHEATHED OR MAX. PURLIN SPACING = 5.90 FT.
MAX. UNBRACED BOTTOM CHORD LENGTH = 10.00 FT OR RIGID CEILING DIRECTLY APPLIED.

ALL PITCH BREAKS AND PERIMETER CORNER JOINTS MUST BE LATERALLY RESTRAINED.

LOADING
TOTAL LOAD CASES: (4)

CHORDS

MEMB. FR-TO	MAX. FACTORED FORCE (LBS)	FACTORED VERT. LOAD LC1 (PLF) FROM	TO	MAX CSI (LC)	MAX. UNBRAC LENGTH
A- L	-1133 / 0	-119.4	-119.4	0.07 (1)	5.90
L- B	-984 / 0	-119.4	-119.4	0.08 (1)	6.21
B- C	-643 / 0	-119.4	-119.4	0.11 (1)	6.25
C- D	-641 / 0	-119.4	-119.4	0.12 (1)	6.25
D- E	-650 / 0	-119.4	-119.4	0.12 (1)	6.25
E- F	0 / 36	-119.4	-119.4	0.16 (1)	10.00
G- E	-865 / 0	0.0	0.0	0.09 (1)	7.81
A- K	0 / 882	-18.2	-18.2	0.18 (1)	10.00
K- J	0 / 882	-18.2	-18.2	0.18 (1)	10.00
J- I	0 / 882	-18.2	-18.2	0.18 (1)	10.00
I- H	0 / 569	-18.2	-18.2	0.12 (1)	10.00
H- G	0 / 0	-18.2	-18.2	0.01 (1)	10.00

WEBS

MEMB. FR-TO	MAX. FACTORED FORCE (LBS)	MAX CSI (LC)
J- B	0 / 45	0.02 (4)
B- I	-371 / 0	0.08 (1)
I- C	0 / 272	0.06 (1)
I- D	-4 / 0	0.00 (1)
H- D	-255 / 0	0.04 (1)
H- E	0 / 636	0.14 (1)
K- L	0 / 101	0.00 (1)

DESIGN CRITERIA

SPECIFIED LOADS:

TOP CH.	LL =	34.8	PSF
	DL =	6.0	PSF
BOT CH.	LL =	0.0	PSF
	DL =	7.3	PSF
TOTAL LOAD	=	48.1	PSF

SPACING = 24.0 IN. C/C

THIS TRUSS IS DESIGNED FOR RESIDENTIAL OR SMALL BUILDING REQUIREMENTS OF PART 9, NBCC 2015

THIS DESIGN COMPLIES WITH:
- PART 9 OF BCBC 2018 , NBC-2019AE
- PART 9 OF OBC 2012 (2019 AMENDMENT)
- CSA 086-14
- TPIC 2014

DESIGN ASSUMPTIONS
-OVERHANG NOT TO BE ALTERED OR CUT OFF.

(55 % OF 48.1 P.S.F. G.S.L. PLUS 8.4 P.S.F. RAIN LOAD) EQUALS 34.8 P.S.F. SPECIFIED ROOF LIVE LOAD

ALLOWABLE DEFL.(LL)= L/360 (0.34")
CALCULATED VERT. DEFL.(LL) = L/ 999 (0.02")
ALLOWABLE DEFL.(TL)= L/360 (0.34")
CALCULATED VERT. DEFL.(TL) = L/ 999 (0.03")

CSI: TC=0.16/1.00 (E-F:1) , BC=0.18/1.00 (J-K:1) , WB=0.14/1.00 (E-H:1) , SSI=0.13/1.00 (B-C:1)

DOL LUMBER=1.00 NAIL=1.00 LS BEND=1.10 COMP=1.10 SHEAR=1.10 TENS= 1.10

COMPANION LIVE LOAD FACTOR = 1.00

TRUSS PLATE MANUFACTURER IS NOT RESPONSIBLE FOR QUALITY CONTROL IN THE TRUSS MANUFACTURING PLANT .

NAIL VALUES

PLATE	GRIP(DRY) (PSI) MAX	MIN	SHEAR (PLI) MAX	MIN	SECTION (PLI) MAX	MIN
MT20	650	371	1747	788	1987	1873

PLATE PLACEMENT TOL. = 0.250 inches

PLATE ROTATION TOL. = 5.0 Deg.

JSI GRIP= 0.89 (H) (INPUT = 0.90)
JSI METAL= 0.38 (A) (INPUT = 1.00)

LICENSED PROFESSIONAL ENGINEER
N.A. EL-MASRI
Jul 15, 2023

READ ALL NOTES ON THIS PAGE AND ON THE ENGINEERING NOTES: TRUSSES. THE NOTE PAGE IS AN INTEGRAL PART OF THIS DRAWING AS IT CONTAINS SPECIFICATIONS AND CRITERIA USED IN THE DESIGN OF THIS COMPONENT.

KOTT

JOB NAME	TRUSS NAME	QUANTITY	PLY	JOB DESC.	DRWG NO.
NE0723-089	T09	1	1	TRUSS DESC.	

Version 8.630 S Mar 22 2023 MiTek Industries, Inc. Sat Jul 15 10:29:55 2023 Page 1

ID:cRv3i5hGhkOK_Tzcc0KzbzAMVr-LKJK3q?xHWUcfyoCdoiMrvt38o?ttFq3p745OdyxsUQ

MHP 23034
CORPORATION OF THE CITY OF OSHAWA
TRUE COPY
OF PERMIT PLANS
Nov 14 2023
PER:
CHIEF BUILDING OFFICIAL

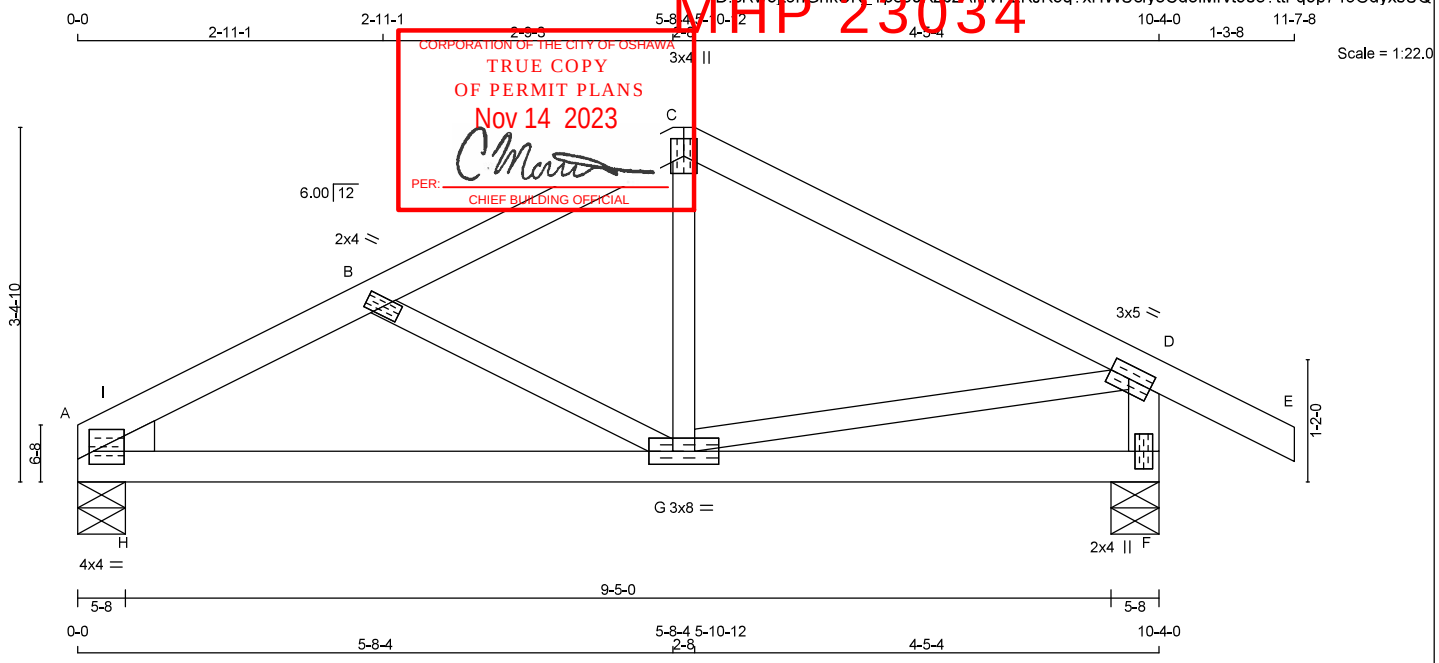

TOTAL WEIGHT = 37 lb

[M][F]

LUMBER

N. L. G. A. RULES

CHORDS	SIZE		LUMBER	DESCR.
A - C	2x4	DRY	No.2	SPF
C - E	2x4	DRY	No.2	SPF
F - D	2x4	DRY	No.2	SPF
A - F	2x4	DRY	No.2	SPF
ALL WEBS EXCEPT	2x3	DRY	No.2	SPF

DRY: SEASONED LUMBER.

PLATES (table is in inches)

JT	TYPE	PLATES	W	LEN	Y	X
A	TMBH1-I	MT20	4.0	4.0	1.50	0.50
B	TMW+w	MT20	2.0	4.0		
C	TTW+p	MT20	3.0	4.0		
D	TMVW-t	MT20	3.0	5.0	1.50	2.25
F	BMV1+p	MT20	2.0	4.0		
G	BMWWW-t	MT20	3.0	8.0		

DIMENSIONS, SUPPORTS AND LOADINGS SPECIFIED BY FABRICATOR TO BE VERIFIED BY BUILDING DESIGNER

BEARINGS

JT	FACTORED GROSS REACTION VERT	HORZ	MAXIMUM FACTORED GROSS REACTION DOWN	HORZ	UPLIFT	INPUT BRG IN-SX	REQRD BRG IN-SX	HEEL WEDGE
F	873	0	873	0	0	5-8	1-8	
A	711	0	711	0	0	5-8	1-8	2x4 L

UNFACTORED REACTIONS

JT	1ST LCASE COMBINED	MAX./MIN. COMPONENT REACTIONS SNOW	LIVE	PERM.LIVE	WIND	DEAD	SOIL
F	608	454 / 0	0 / 0	0 / 0	0 / 0	154 / 0	0 / 0
A	497	360 / 0	0 / 0	0 / 0	0 / 0	137 / 0	0 / 0

BEARING MATERIAL TO BE SPF NO.2 OR BETTER AT JOINT(S) F, A

BRACING

TOP CHORD TO BE SHEATHED OR MAX. PURLIN SPACING = 5.83 FT.
MAX. UNBRACED BOTTOM CHORD LENGTH = 10.00 FT OR RIGID CEILING DIRECTLY APPLIED.

ALL PITCH BREAKS AND PERIMETER CORNER JOINTS MUST BE LATERALLY RESTRAINED.

LOADING

TOTAL LOAD CASES: (4)

CHORDS

MEMB. FR-TO	MAX. FACTORED FORCE (LBS)	FACTORED VERT. LOAD LC1 (PLF) FROM	TO	MAX CSI (LC)	MAX. UNBRAC LENGTH
A- I	-1166 / 0	-119.4	-119.4	0.07 (1)	5.83
I- B	-1015 / 0	-119.4	-119.4	0.08 (1)	6.13
B- C	-678 / 0	-119.4	-119.4	0.12 (1)	6.25
C- D	-661 / 0	-119.4	-119.4	0.32 (1)	6.25
D- E	0 / 36	-119.4	-119.4	0.16 (1)	10.00
F- D	-838 / 0	0.0	0.0	0.08 (1)	7.81
A- H	0 / 909	-18.2	-18.2	0.19 (1)	10.00
H- G	0 / 909	-18.2	-18.2	0.19 (1)	10.00
G- F	0 / 0	-18.2	-18.2	0.11 (4)	10.00

WEBS

MEMB. FR-TO	MAX. FACTORED FORCE (LBS)	MAX CSI (LC)
B- G	-362 / 0	0.08 (1)
G- C	0 / 171	0.04 (4)
G- D	0 / 601	0.14 (1)
H- I	0 / 113	0.00 (1)

DESIGN CRITERIA

SPECIFIED LOADS:

TOP CH.	LL =	34.8	PSF
	DL =	6.0	PSF
BOT CH.	LL =	0.0	PSF
	DL =	7.3	PSF
TOTAL LOAD	=	48.1	PSF

SPACING = 24.0 IN. C/C

THIS TRUSS IS DESIGNED FOR RESIDENTIAL OR SMALL BUILDING REQUIREMENTS OF PART 9, NBCC 2015

THIS DESIGN COMPLIES WITH:
- PART 9 OF BCBC 2018 , NBC-2019AE
- PART 9 OF OBC 2012 (2019 AMENDMENT)
- CSA 086-14
- TPIC 2014

(55 % OF 48.1 P.S.F. G.S.L. PLUS 8.4 P.S.F. RAIN LOAD) EQUALS 34.8 P.S.F. SPECIFIED ROOF LIVE LOAD

ALLOWABLE DEFL.(LL)= L/360 (0.34")
CALCULATED VERT. DEFL.(LL) = L/ 999 (0.01")
ALLOWABLE DEFL.(TL)= L/360 (0.34")
CALCULATED VERT. DEFL.(TL) = L/ 999 (0.03")

CSI: TC=0.32/1.00 (C-D:1) , BC=0.19/1.00 (A-H:1) , WB=0.14/1.00 (D-G:1) , SSI=0.19/1.00 (C-D:1)

DOL LUMBER=1.00 NAIL=1.00 LS BEND=1.10 COMP=1.10 SHEAR=1.10 TENS= 1.10

COMPANION LIVE LOAD FACTOR = 1.00

TRUSS PLATE MANUFACTURER IS NOT RESPONSIBLE FOR QUALITY CONTROL IN THE TRUSS MANUFACTURING PLANT .

NAIL VALUES

PLATE	GRIP(DRY) (PSI) MAX	MIN	SHEAR (PLI) MAX	MIN	SECTION (PLI) MAX	MIN
MT20	650	371	1747	788	1987	1873

PLATE PLACEMENT TOL. = 0.250 inches

PLATE ROTATION TOL. = 5.0 Deg.

JSI GRIP= 0.83 (A) (INPUT = 0.90)
JSI METAL= 0.39 (A) (INPUT = 1.00)

LICENSED PROFESSIONAL ENGINEER
N.A. EL-MASRI
Jul 15, 2023

READ ALL NOTES ON THIS PAGE AND ON THE ENGINEERING NOTES: TRUSSES. THE NOTE PAGE IS AN INTEGRAL PART OF THIS DRAWING AS IT CONTAINS SPECIFICATIONS AND CRITERIA USED IN THE DESIGN OF THIS COMPONENT.

KOTT

JOB NAME	TRUSS NAME	QUANTITY	PLY	JOB DESC.	DRWG NO.
NE0723-089	T10	1	1	TRUSS DESC.	

Version 8.630 S Mar 22 2023 MiTek Industries, Inc. Sat Jul 15 10:29:56 2023 Page 1

ID:cRy3j5hGhkCK_Tpcc0KzbzAMVr-pWsiGA0Z2qcTG6NOBWDbN6PCbCLpch2C2nqew3yxsUP

MHP 23034
CORPORATION OF THE CITY OF OSHAWA
TRUE COPY
OF PERMIT PLANS
Nov 14 2023
PER:
CHIEF BUILDING OFFICIAL

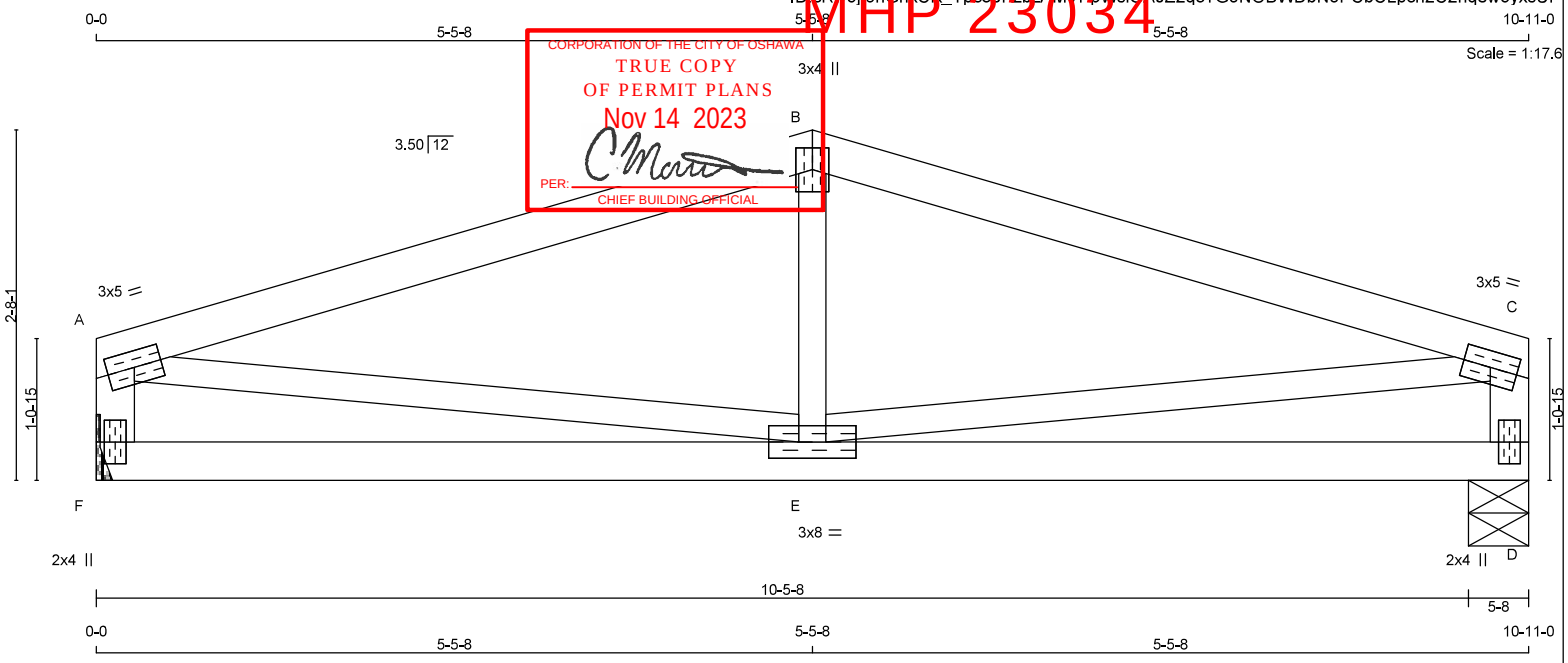

TOTAL WEIGHT = 37 lb

LUMBER

N. L. G. A. RULES

CHORDS	SIZE		LUMBER	DESCR.
A - B	2x4	DRY	No.2	SPF
B - C	2x4	DRY	No.2	SPF
D - C	2x4	DRY	No.2	SPF
F - A	2x4	DRY	No.2	SPF
F - D	2x4	DRY	No.2	SPF
ALL WEBS EXCEPT	2x3	DRY	No.2	SPF

DRY: SEASONED LUMBER.

PLATES (table is in inches)

JT	TYPE	PLATES	W	LEN	Y	X
A	TMVW-t	MT20	3.0	5.0		
B	TTW+p	MT20	3.0	4.0		
C	TMVW-t	MT20	3.0	5.0		
D	BMV1+p	MT20	2.0	4.0		
E	BMWWW-t	MT20	3.0	8.0		
F	BMV1+p	MT20	2.0	4.0		

DIMENSIONS, SUPPORTS AND LOADINGS SPECIFIED BY FABRICATOR TO BE VERIFIED BY BUILDING DESIGNER

BEARINGS

JT	FACTORED GROSS REACTION VERT	HORZ	MAXIMUM FACTORED GROSS REACTION DOWN	HORZ	UPLIFT	INPUT BRG IN-SX	REQRD BRG IN-SX
F	751	0	751	0	0	MECHANICAL	
D	751	0	751	0	0	5-8	1-8

A SUITABLE HANGER/MECHANICAL CONNECTION IS REQUIRED AT JOINT F. MINIMUM BEARING LENGTH AT JOINT F = 1-8.

UNFACTORED REACTIONS

JT	1ST LCASE COMBINED	MAX./MIN. COMPONENT REACTIONS SNOW	LIVE	PERM.LIVE	WIND	DEAD	SOIL
F	525	380 / 0	0 / 0	0 / 0	0 / 0	145 / 0	0 / 0
D	525	380 / 0	0 / 0	0 / 0	0 / 0	145 / 0	0 / 0

BEARING MATERIAL TO BE SPF NO.2 OR BETTER AT JOINT(S) D

BRACING

TOP CHORD TO BE SHEATHED OR MAX. PURLIN SPACING = 5.76 FT.
MAX. UNBRACED BOTTOM CHORD LENGTH = 10.00 FT OR RIGID CEILING DIRECTLY APPLIED.

ALL PITCH BREAKS AND PERIMETER CORNER JOINTS MUST BE LATERALLY RESTRAINED.

LOADING

TOTAL LOAD CASES: (4)

CHORDS

MEMB. FR-TO	MAX. FACTORED FORCE (LBS)	VERT. LOAD LC1 (PLF) FROM	TO	MAX CSI (LC)	MAX. UNBRAC LENGTH
A- B	-921 / 0	-119.4	-119.4	0.47 (1)	5.76
B- C	-921 / 0	-119.4	-119.4	0.47 (1)	5.76
D- C	-710 / 0	0.0	0.0	0.07 (1)	7.81
F- A	-710 / 0	0.0	0.0	0.07 (1)	7.81
F- E	0 / 0	-18.2	-18.2	0.15 (4)	10.00
E- D	0 / 0	-18.2	-18.2	0.15 (4)	10.00

WEBS

MEMB. FR-TO	MAX. FACTORED FORCE (LBS)	MAX CSI (LC)
E- B	-136 / 62	0.02 (1)
E- C	0 / 893	0.20 (1)
A- E	0 / 893	0.20 (1)

DESIGN CRITERIA

SPECIFIED LOADS:

TOP CH.	LL =	34.8	PSF
	DL =	6.0	PSF
BOT CH.	LL =	0.0	PSF
	DL =	7.3	PSF
TOTAL LOAD	=	48.1	PSF

SPACING = 24.0 IN. C/C

THIS TRUSS IS DESIGNED FOR RESIDENTIAL OR SMALL BUILDING REQUIREMENTS OF PART 9, NBCC 2015

THIS DESIGN COMPLIES WITH:
- PART 9 OF BCBC 2018 , NBC-2019AE
- PART 9 OF OBC 2012 (2019 AMENDMENT)
- CSA 086-14
- TPIC 2014

(55 % OF 48.1 P.S.F. G.S.L. PLUS 8.4 P.S.F. RAIN LOAD) EQUALS 34.8 P.S.F. SPECIFIED ROOF LIVE LOAD

ALLOWABLE DEFL.(LL)= L/360 (0.36")
CALCULATED VERT. DEFL.(LL) = L/ 999 (0.02")
ALLOWABLE DEFL.(TL)= L/360 (0.36")
CALCULATED VERT. DEFL.(TL) = L/ 999 (0.05")

CSI: TC=0.47/1.00 (A-B:1) , BC=0.15/1.00 (D-E:4) , WB=0.20/1.00 (C-E:1) , SSI=0.24/1.00 (A-B:1)

DOL LUMBER=1.00 NAIL=1.00 LS BEND=1.10 COMP=1.10 SHEAR=1.10 TENS= 1.10

COMPANION LIVE LOAD FACTOR = 1.00

TRUSS PLATE MANUFACTURER IS NOT RESPONSIBLE FOR QUALITY CONTROL IN THE TRUSS MANUFACTURING PLANT .

NAIL VALUES

PLATE	GRIP(DRY) (PSI) MAX	MIN	SHEAR (PLI) MAX	MIN	SECTION (PLI) MAX	MIN
MT20	650	371	1747	788	1987	1873

PLATE PLACEMENT TOL. = 0.250 inches

PLATE ROTATION TOL. = 5.0 Deg.

JSI GRIP= 0.90 (E) (INPUT = 0.90)
JSI METAL= 0.29 (A) (INPUT = 1.00)

LICENSED PROFESSIONAL ENGINEER
N.A. EL-MASRI
Jul 15, 2023

READ ALL NOTES ON THIS PAGE AND ON THE ENGINEERING NOTES: TRUSSES. THE NOTE PAGE IS AN INTEGRAL PART OF THIS DRAWING AS IT CONTAINS SPECIFICATIONS AND CRITERIA USED IN THE DESIGN OF THIS COMPONENT.

KOTT

JOB NAME	TRUSS NAME	QUANTITY	PLY	JOB DESC.	DRWG NO.
NE0723-089	T11	2	1	TRUSS DESC.	

Version 8.630 S Mar 22 2023 MiTek Industries, Inc. Sat Jul 15 10:29:56 2023 Page 1

ID:cRy3jt5hGhtcK_Tpcc0KzbzAMYr-nWsiGA0Z2qcTG6NOBWDbN6PH4CKpckdC2nqew3yxsUP

MHP 23034
CORPORATION OF THE CITY OF OSHAWA
TRUE COPY
OF PERMIT PLANS
Nov 14 2023
PER:
CHIEF BUILDING OFFICIAL

Scale = 1:17.7

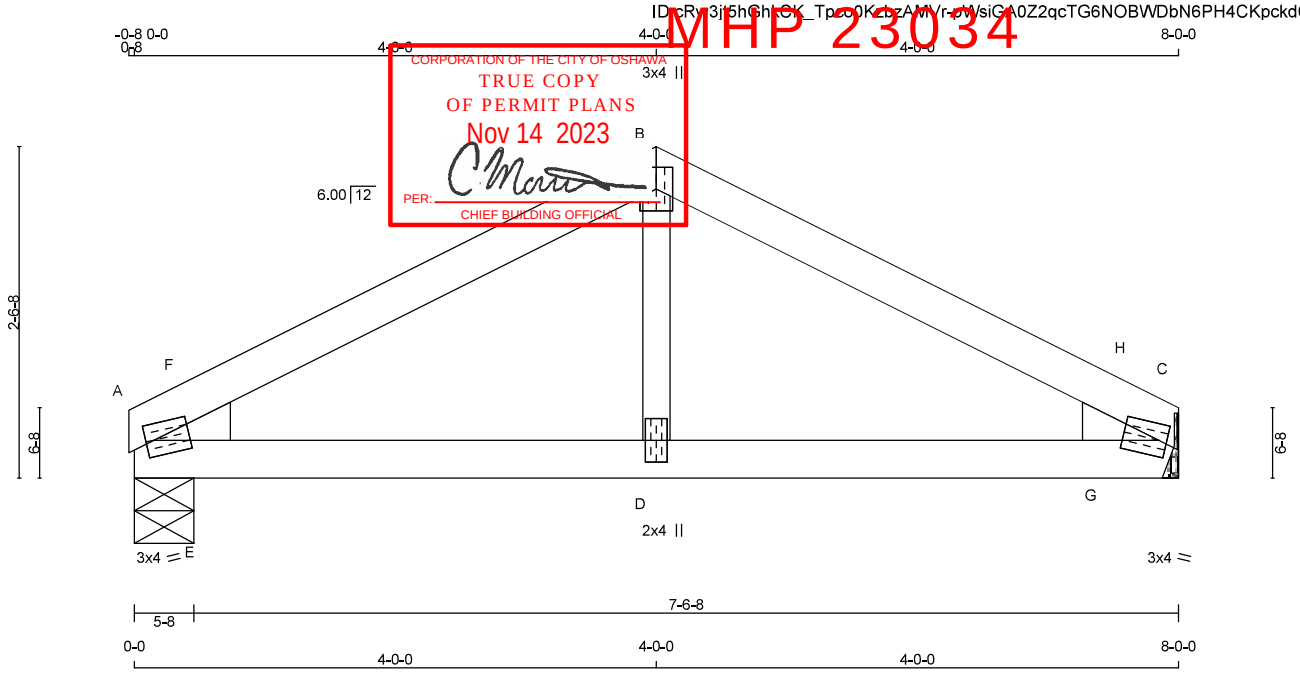

TOTAL WEIGHT = 2 X 23 = 45 lb
[M][F]

LUMBER
N. L. G. A. RULES

CHORDS	SIZE		LUMBER	DESCR.
A - B	2x4	DRY	No.2	SPF
B - C	2x4	DRY	No.2	SPF
A - C	2x4	DRY	No.2	SPF
ALL WEBS	2x3	DRY	No.2	SPF

DRY: SEASONED LUMBER.

PLATES (table is in inches)

JT	TYPE	PLATES	W	LEN	Y	X
A	TMBH1-m	MT20	3.0	4.0	1.50	0.75
B	TTW+p	MT20	3.0	4.0		
C	TMBH1-m	MT20	3.0	4.0	1.50	0.75
D	BMW+w	MT20	2.0	4.0		

DIMENSIONS, SUPPORTS AND LOADINGS SPECIFIED BY FABRICATOR TO BE VERIFIED BY BUILDING DESIGNER

BEARINGS

JT	FACTORED GROSS REACTION VERT	HORZ	MAXIMUM GROSS REACTION DOWN	HORZ	FACTORED UPLIFT	INPUT BRG IN-SX	REQRD BRG IN-SX	HEEL WEDGE
A	551	0	551	0	0	5-8	1-8	2x4 L
C	551	0	551	0	0	MECHANICAL		2x4 R

A SUITABLE HANGER/MECHANICAL CONNECTION IS REQUIRED AT JOINT C. MINIMUM BEARING LENGTH AT JOINT C = 1-8.

UNFACTORED REACTIONS

JT	1ST LCASE COMBINED	MAX./MIN. COMPONENT REACTIONS SNOW	LIVE	PERM.LIVE	WIND	DEAD	SOIL
A	385	278 / 0	0 / 0	0 / 0	0 / 0	106 / 0	0 / 0
C	385	278 / 0	0 / 0	0 / 0	0 / 0	106 / 0	0 / 0

BEARING MATERIAL TO BE SPF NO.2 OR BETTER AT JOINT(S) A

BRACING
TOP CHORD TO BE SHEATHED OR MAX. PURLIN SPACING = 6.25 FT.
MAX. UNBRACED BOTTOM CHORD LENGTH = 10.00 FT OR RIGID CEILING DIRECTLY APPLIED.

ALL PITCH BREAKS AND PERIMETER CORNER JOINTS MUST BE LATERALLY RESTRAINED.

LOADING
TOTAL LOAD CASES: (4)

CHORDS

MEMB. FR-TO	MAX. FACTORED FORCE (LBS)	FACTORED VERT. LOAD LC1 (PLF) FROM	TO	MAX CSI (LC)	MAX. UNBRAC LENGTH
A- F	-623 / 0	-119.4	-119.4	0.09 (1)	6.25
F- B	-601 / 0	-119.4	-119.4	0.18 (1)	6.25
B- H	-601 / 0	-119.4	-119.4	0.18 (1)	6.25
H- C	-623 / 0	-119.4	-119.4	0.09 (1)	6.25
A- E	0 / 529	-18.2	-18.2	0.21 (1)	10.00
E- D	0 / 529	-18.2	-18.2	0.21 (1)	10.00
D- G	0 / 529	-18.2	-18.2	0.21 (1)	10.00
G- C	0 / 529	-18.2	-18.2	0.21 (1)	10.00

WEBS

MEMB. FR-TO	MAX. FACTORED FORCE (LBS)	MAX CSI (LC)
D- B	0 / 162	0.04 (1)
E- F	-180 / 18	0.00 (1)
G- H	-180 / 18	0.00 (1)

DESIGN CRITERIA

SPECIFIED LOADS:

TOP CH.	LL =	34.8	PSF
	DL =	6.0	PSF
BOT CH.	LL =	0.0	PSF
	DL =	7.3	PSF
TOTAL LOAD	=	48.1	PSF

SPACING = 24.0 IN. C/C

THIS TRUSS IS DESIGNED FOR RESIDENTIAL OR SMALL BUILDING REQUIREMENTS OF PART 9, NBCC 2015

THIS DESIGN COMPLIES WITH:
- PART 9 OF BCBC 2018 , NBC-2019AE
- PART 9 OF OBC 2012 (2019 AMENDMENT)
- CSA 086-14
- TPIC 2014

(55 % OF 48.1 P.S.F. G.S.L. PLUS 8.4 P.S.F. RAIN LOAD) EQUALS 34.8 P.S.F. SPECIFIED ROOF LIVE LOAD

ALLOWABLE DEFL.(LL)= L/360 (0.27")
CALCULATED VERT. DEFL.(LL) = L/ 999 (0.01")
ALLOWABLE DEFL.(TL)= L/360 (0.27")
CALCULATED VERT. DEFL.(TL) = L/ 999 (0.02")

CSI: TC=0.18/1.00 (B-H:1) , BC=0.21/1.00 (D-G:1) , WB=0.04/1.00 (B-D:1) , SSI=0.16/1.00 (B-H:1)

DOL LUMBER=1.00 NAIL=1.00 LS BEND=1.10 COMP=1.10 SHEAR=1.10 TENS= 1.10

COMPANION LIVE LOAD FACTOR = 1.00

TRUSS PLATE MANUFACTURER IS NOT RESPONSIBLE FOR QUALITY CONTROL IN THE TRUSS MANUFACTURING PLANT .

NAIL VALUES

PLATE	GRIP(DRY) (PSI) MAX	MIN	SHEAR (PLI) MAX	MIN	SECTION (PLI) MAX	MIN
MT20	650	371	1747	788	1987	1873

PLATE PLACEMENT TOL. = 0.250 inches

PLATE ROTATION TOL. = 5.0 Deg.

JSI GRIP= 0.88 (A) (INPUT = 0.90)
JSI METAL= 0.22 (A) (INPUT = 1.00)

LICENSED PROFESSIONAL ENGINEER
N.A. EL-MASRI
Jul 15, 2023

READ ALL NOTES ON THIS PAGE AND ON THE ENGINEERING NOTES: TRUSSES. THE NOTE PAGE IS AN INTEGRAL PART OF THIS DRAWING AS IT CONTAINS SPECIFICATIONS AND CRITERIA USED IN THE DESIGN OF THIS COMPONENT.

KOTT

JOB NAME	TRUSS NAME	QUANTITY	PLY	JOB DESC.	DRWG NO.
NE0723-089	T12	3	1	TRUSS DESC.	

Version 8.630 S Mar 22 2023 MiTek Industries, Inc. Sat Jul 15 10:29:57 2023 Page 1
ID:nRw6jtshGhkCK_Tpo0KzbzAMvr-HnQ4UX1Cp8kKuGxaIDkqwKyPmcbML9mMHQZBSWyxsUO

MHP 23034

CORPORATION OF THE CITY OF OSHAWA
TRUE COPY
OF PERMIT PLANS
Nov 14 2023
PER:
CHIEF BUILDING OFFICIAL

Scale = 1:20.4

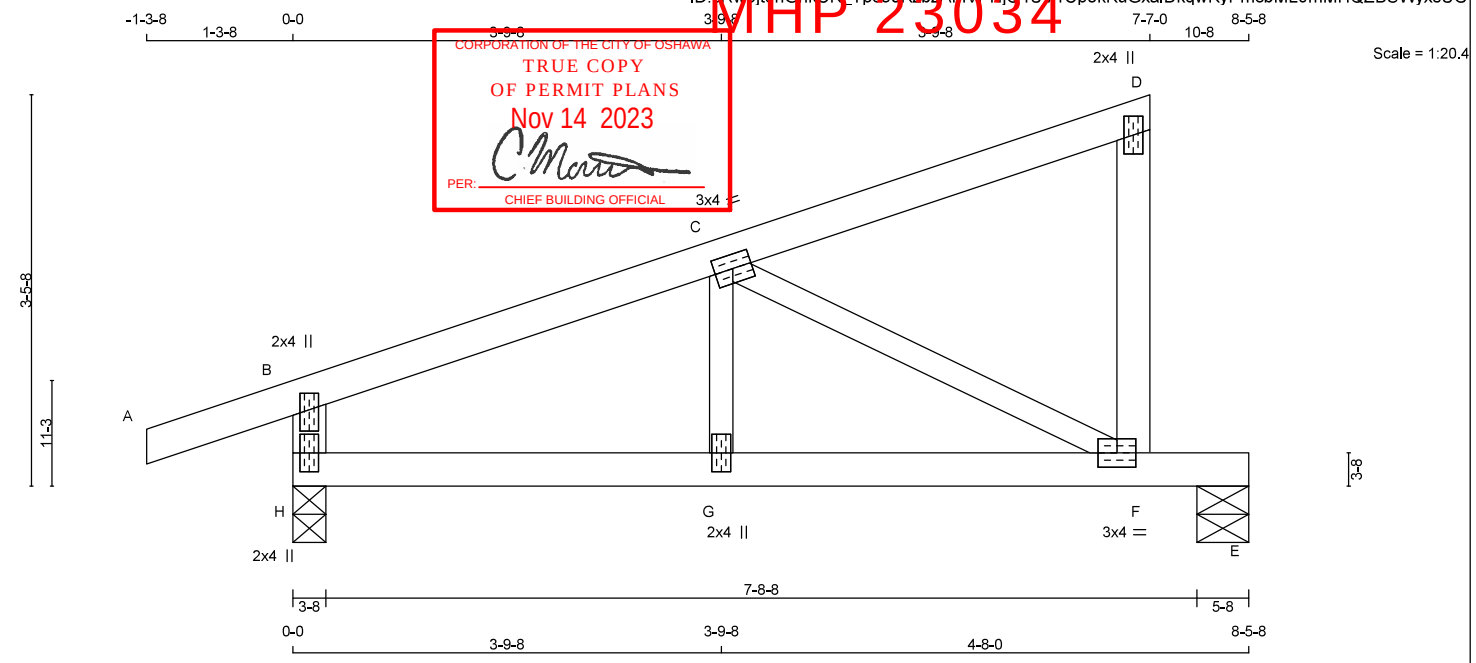

TOTAL WEIGHT = 3 X 29 = 86 lb
[M][F]

LUMBER
N. L. G. A. RULES

CHORDS	SIZE		LUMBER	DESCR.
A - D	2x4	DRY	No.2	SPF
F - D	2x4	DRY	No.2	SPF
H - B	2x4	DRY	No.2	SPF
H - E	2x4	DRY	No.2	SPF
ALL WEBS EXCEPT	2x3	DRY	No.2	SPF

DRY: SEASONED LUMBER.

PLATES (table is in inches)

JT	TYPE	PLATES	W	LEN	Y	X
B	TMV+p	MT20	2.0	4.0	1.75	1.00
C	TMWV-t	MT20	3.0	4.0		
D	TMV+p	MT20	2.0	4.0		
F	BMVW-t	MT20	3.0	4.0		
G	BMW+w	MT20	2.0	4.0		
H	BMV1+p	MT20	2.0	4.0		

DIMENSIONS, SUPPORTS AND LOADINGS SPECIFIED BY FABRICATOR TO BE VERIFIED BY BUILDING DESIGNER

BEARINGS

JT	FACTORED GROSS REACTION VERT	HORZ	MAXIMUM FACTORED GROSS REACTION DOWN	HORZ	UPLIFT	INPUT BRG IN-SX	REQRD BRG IN-SX
H	730	0	730	0	0	3-8	1-8
E	490	0	490	0	0	5-8	1-8

UNFACTORED REACTIONS

JT	1ST LCASE COMBINED	MAX./MIN. COMPONENT REACTIONS SNOW	LIVE	PERM.LIVE	WIND	DEAD	SOIL
H	507	381 / 0	0 / 0	0 / 0	0 / 0	126 / 0	0 / 0
E	344	240 / 0	0 / 0	0 / 0	0 / 0	104 / 0	0 / 0

BEARING MATERIAL TO BE SPF NO.2 OR BETTER AT JOINT(S) H, E

BRACING
TOP CHORD TO BE SHEATHED OR MAX. PURLIN SPACING = 6.25 FT.
MAX. UNBRACED BOTTOM CHORD LENGTH = 10.00 FT OR RIGID CEILING DIRECTLY APPLIED.

ALL PITCH BREAKS AND PERIMETER CORNER JOINTS MUST BE LATERALLY RESTRAINED.

LOADING
TOTAL LOAD CASES: (4)

CHORDS

MEMB. FR-TO	MAX. FACTORED FORCE (LBS)	FACTORED VERT. LOAD (PLF) FROM	TO	LC1 MAX CSI (LC)	MAX. UNBRAC LENGTH
A- B	0 / 25	-119.4	-119.4	0.15 (1)	10.00
B- C	-739 / 0	-119.4	-119.4	0.25 (1)	6.25
C- D	-145 / 0	-119.4	-119.4	0.17 (1)	6.25
F- D	-200 / 0	0.0	0.0	0.31 (1)	7.81
H- B	-656 / 0	0.0	0.0	0.31 (1)	7.81
H- G	0 / 689	-18.2	-18.2	0.30 (1)	10.00
G- F	0 / 689	-18.2	-18.2	0.29 (1)	10.00
F- E	0 / 0	-18.2	-18.2	0.57 (1)	10.00

WEBS

MEMB. FR-TO	MAX. FACTORED FORCE (LBS)	MAX CSI (LC)
G- C	0 / 84	0.03 (4)
C- F	-609 / 0	0.17 (1)

DESIGN CRITERIA

SPECIFIED LOADS:

TOP CH.	LL	=	34.8	PSF
	DL	=	6.0	PSF
BOT CH.	LL	=	0.0	PSF
	DL	=	7.3	PSF
TOTAL LOAD		=	48.1	PSF

SPACING = 24.0 IN. C/C

THIS TRUSS IS DESIGNED FOR RESIDENTIAL OR SMALL BUILDING REQUIREMENTS OF PART 9, NBCC 2015

THIS DESIGN COMPLIES WITH:
- PART 9 OF BCBC 2018 , NBC-2019AE
- PART 9 OF OBC 2012 (2019 AMENDMENT)
- CSA 086-14
- TPIC 2014

DESIGN ASSUMPTIONS
-OVERHANG NOT TO BE ALTERED OR CUT OFF.

(55 % OF 48.1 P.S.F. G.S.L. PLUS 8.4 P.S.F. RAIN LOAD) EQUALS 34.8 P.S.F. SPECIFIED ROOF LIVE LOAD

ALLOWABLE DEFL.(LL)= L/360 (0.28")
CALCULATED VERT. DEFL.(LL) = L/ 999 (0.05")
ALLOWABLE DEFL.(TL)= L/360 (0.28")
CALCULATED VERT. DEFL.(TL) = L/ 999 (0.10")

CSI: TC=0.31/1.00 (B-H:1) , BC=0.57/1.00 (E-F:1) , WB=0.17/1.00 (C-F:1) , SSI=0.54/1.00 (B-H:1)

DOL LUMBER=1.00 NAIL=1.00 LS BEND=1.10 COMP=1.10 SHEAR=1.10 TENS= 1.10

COMPANION LIVE LOAD FACTOR = 1.00

TRUSS PLATE MANUFACTURER IS NOT RESPONSIBLE FOR QUALITY CONTROL IN THE TRUSS MANUFACTURING PLANT .

NAIL VALUES

PLATE	GRIP(DRY) (PSI) MAX	MIN	SHEAR (PLI) MAX	MIN	SECTION (PLI) MAX	MIN
MT20	650	371	1747	788	1987	1873

PLATE PLACEMENT TOL. = 0.250 inches

PLATE ROTATION TOL. = 5.0 Deg.

JSI GRIP= 0.83 (H) (INPUT = 0.90)
JSI METAL= 0.80 (B) (INPUT = 1.00)

LICENSED PROFESSIONAL ENGINEER
N.A. EL-MASRI
Jul 15, 2023

READ ALL NOTES ON THIS PAGE AND ON THE ENGINEERING NOTES: TRUSSES. THE NOTE PAGE IS AN INTEGRAL PART OF THIS DRAWING AS IT CONTAINS SPECIFICATIONS AND CRITERIA USED IN THE DESIGN OF THIS COMPONENT.

KOTT

JOB NAME	TRUSS NAME	QUANTITY	PLY	JOB DESC.	DRWG NO.
NE0723-089	T13	6	1	TRUSS DESC.	

Version 8.630 S Mar 22 2023 MiTek Industries, Inc. Sat Jul 15 10:29:57 2023 Page 1

ID:nRw6jtshGhkCK_Tpo0KzbaAMvr-HjQ4UX1Cp8kKuGxaIDkqwKyQNcZWL8YMHQZBSWyxsUO

MHP 23034

CORPORATION OF THE CITY OF OSHAWA
TRUE COPY
OF PERMIT PLANS
Nov 14 2023
PER:
CHIEF BUILDING OFFICIAL

Scale = 1:20.4

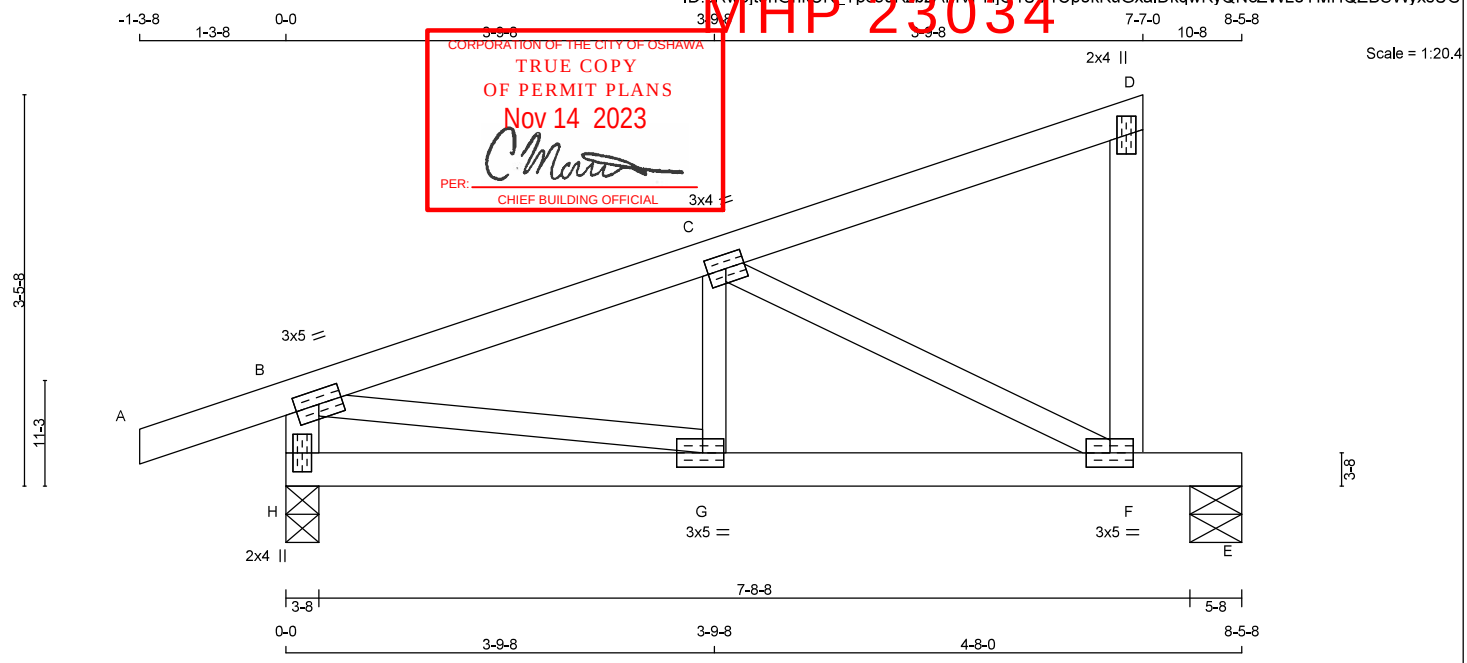

TOTAL WEIGHT = 6 X 31 = 188 lb
[M][F]

LUMBER
N. L. G. A. RULES

CHORDS	SIZE		LUMBER	DESCR.
A - D	2x4	DRY	No.2	SPF
F - D	2x4	DRY	No.2	SPF
H - B	2x4	DRY	No.2	SPF
H - E	2x4	DRY	No.2	SPF
ALL WEBS EXCEPT	2x3	DRY	No.2	SPF

DRY: SEASONED LUMBER.

PLATES (table is in inches)

JT	TYPE	PLATES	W	LEN	Y	X
B	TMVW-t	MT20	3.0	5.0		
C	TMWW-t	MT20	3.0	4.0		
D	TMV+p	MT20	2.0	4.0		
F	BMVW-t	MT20	3.0	5.0		
G	BMWW-t	MT20	3.0	5.0	1.50	2.25
H	BMV1+p	MT20	2.0	4.0		

DIMENSIONS, SUPPORTS AND LOADINGS SPECIFIED BY FABRICATOR TO BE VERIFIED BY BUILDING DESIGNER

BEARINGS

JT	FACTORED GROSS REACTION VERT	HORZ	MAXIMUM FACTORED GROSS REACTION DOWN	HORZ	UPLIFT	INPUT BRG IN-SX	REQRD BRG IN-SX
H	737	0	737	0	0	3-8	1-8
E	483	0	483	0	0	5-8	1-8

UNFACTORED REACTIONS

JT	1ST LCASE COMBINED	MAX./MIN. COMPONENT REACTIONS SNOW	LIVE	PERM.LIVE	WIND	DEAD	SOIL
H	512	384 / 0	0 / 0	0 / 0	0 / 0	128 / 0	0 / 0
E	339	237 / 0	0 / 0	0 / 0	0 / 0	103 / 0	0 / 0

BEARING MATERIAL TO BE SPF NO.2 OR BETTER AT JOINT(S) H, E

BRACING
TOP CHORD TO BE SHEATHED OR MAX. PURLIN SPACING = 6.25 FT.
MAX. UNBRACED BOTTOM CHORD LENGTH = 10.00 FT OR RIGID CEILING DIRECTLY APPLIED.

ALL PITCH BREAKS AND PERIMETER CORNER JOINTS MUST BE LATERALLY RESTRAINED.

LOADING
TOTAL LOAD CASES: (4)

CHORDS

MEMB. FR-TO	MAX. FACTORED FORCE (LBS)	FACTORED VERT. LOAD (PLF) FROM	TO	LC1 MAX CSI (LC)	MAX. UNBRAC LENGTH
A- B	0 / 25	-119.4	-119.4	0.15 (1)	10.00
B- C	-818 / 0	-119.4	-119.4	0.21 (1)	6.25
C- D	-16 / 0	-119.4	-119.4	0.20 (1)	6.25
F- D	-176 / 0	0.0	0.0	0.03 (1)	7.81
H- B	-731 / 0	0.0	0.0	0.07 (1)	7.81
H- G	0 / 0	-18.2	-18.2	0.15 (1)	10.00
G- F	0 / 792	-18.2	-18.2	0.69 (1)	10.00
F- E	0 / 0	-18.2	-18.2	0.57 (1)	10.00

WEBS

MEMB. FR-TO	MAX. FACTORED FORCE (LBS)	MAX CSI (LC)
G- C	0 / 106	0.04 (4)
C- F	-885 / 0	0.25 (1)
B- G	0 / 803	0.18 (1)

DESIGN CRITERIA

SPECIFIED LOADS:

TOP CH.	LL =	34.8	PSF
	DL =	6.0	PSF
BOT CH.	LL =	0.0	PSF
	DL =	7.3	PSF
TOTAL LOAD	=	48.1	PSF

SPACING = 24.0 IN. C/C

THIS TRUSS IS DESIGNED FOR RESIDENTIAL OR SMALL BUILDING REQUIREMENTS OF PART 9, NBCC 2015

THIS DESIGN COMPLIES WITH:
- PART 9 OF BCBC 2018 , NBC-2019AE
- PART 9 OF OBC 2012 (2019 AMENDMENT)
- CSA 086-14
- TPIC 2014

(55 % OF 48.1 P.S.F. G.S.L. PLUS 8.4 P.S.F. RAIN LOAD) EQUALS 34.8 P.S.F. SPECIFIED ROOF LIVE LOAD

ALLOWABLE DEFL.(LL)= L/360 (0.28")
CALCULATED VERT. DEFL.(LL) = L/ 999 (0.09")
ALLOWABLE DEFL.(TL)= L/360 (0.28")
CALCULATED VERT. DEFL.(TL) = L/ 628 (0.16")

CSI: TC=0.21/1.00 (B-C:1) , BC=0.69/1.00 (F-G:1) , WB=0.25/1.00 (C-F:1) , SSI=0.38/1.00 (E-F:1)

DOL LUMBER=1.00 NAIL=1.00 LS BEND=1.10 COMP=1.10 SHEAR=1.10 TENS= 1.10

COMPANION LIVE LOAD FACTOR = 1.00

TRUSS PLATE MANUFACTURER IS NOT RESPONSIBLE FOR QUALITY CONTROL IN THE TRUSS MANUFACTURING PLANT .

NAIL VALUES

PLATE	GRIP(DRY) (PSI) MAX	MIN	SHEAR (PLI) MAX	MIN	SECTION (PLI) MAX	MIN
MT20	650	371	1747	788	1987	1873

PLATE PLACEMENT TOL. = 0.250 inches

PLATE ROTATION TOL. = 5.0 Deg.

JSI GRIP= 0.83 (F) (INPUT = 0.90)
JSI METAL= 0.27 (B) (INPUT = 1.00)

LICENSED PROFESSIONAL ENGINEER
N.A. EL-MASRI
Jul 15, 2023

READ ALL NOTES ON THIS PAGE AND ON THE ENGINEERING NOTES: TRUSSES. THE NOTE PAGE IS AN INTEGRAL PART OF THIS DRAWING AS IT CONTAINS SPECIFICATIONS AND CRITERIA USED IN THE DESIGN OF THIS COMPONENT.

KOTT

JOB NAME	TRUSS NAME	QUANTITY	PLY	JOB DESC.	DRWG NO.
NE0723-089	T14	1	1	TRUSS DESC.	

Version 8.630 S Mar 22 2023 MiTek Industries, Inc. Sat Jul 15 10:29:58 2023 Page 1

MHP 23034

CORPORATION OF THE CITY OF OSHAWA
TRUE COPY
OF PERMIT PLANS
Nov 14 2023
PER:
CHIEF BUILDING OFFICIAL

Scale = 1:12.5

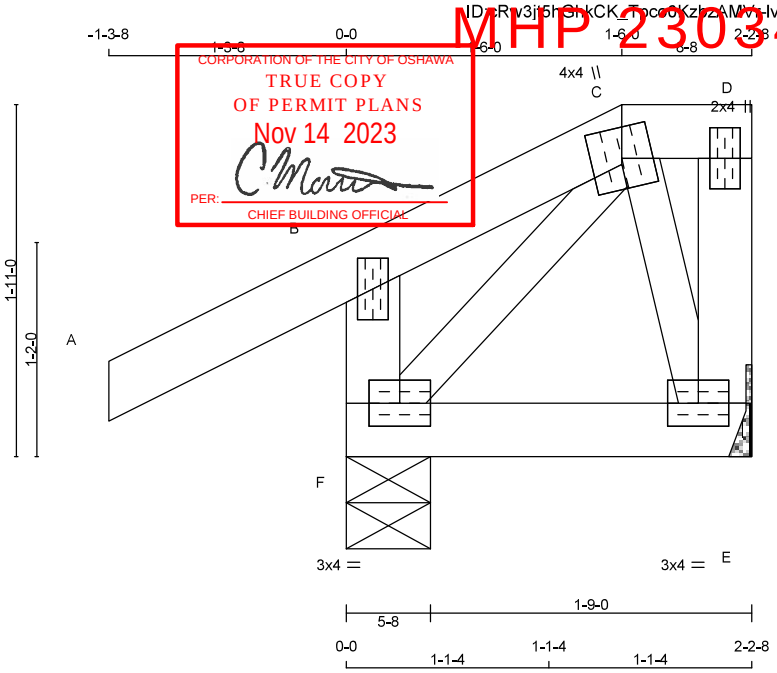

TOTAL WEIGHT = 12 lb [M]

LUMBER
N. L. G. A. RULES

CHORDS	SIZE		LUMBER	DESCR.
A - C	2x4	DRY	No.2	SPF
C - D	2x4	DRY	No.2	SPF
E - D	2x4	DRY	No.2	SPF
F - B	2x4	DRY	No.2	SPF
F - E	2x4	DRY	No.2	SPF
ALL WEBS EXCEPT	2x3	DRY	No.2	SPF

DRY: SEASONED LUMBER.

PLATES (table is in inches)

JT	TYPE	PLATES	W	LEN	Y	X
B	TMV+p	MT20	2.0	4.0		
C	TTWW+m	MT20	4.0	4.0		
D	TMV+p	MT20	2.0	4.0		
E	BMVW1-t	MT20	3.0	4.0		
F	BMVW1-t	MT20	3.0	4.0		

DIMENSIONS, SUPPORTS AND LOADINGS SPECIFIED BY FABRICATOR TO BE VERIFIED BY BUILDING DESIGNER

BEARINGS

JT	FACTORED GROSS REACTION VERT	HORZ	MAXIMUM FACTORED GROSS REACTION DOWN	HORZ	UPLIFT	INPUT BRG IN-SX	REQRD BRG IN-SX
E	102	0	102	0	-23	MECHANICAL	
F	364	0	364	0	0	5-8	1-8

A SUITABLE HANGER/MECHANICAL CONNECTION IS REQUIRED AT JOINT E. MINIMUM BEARING LENGTH AT JOINT E = 1-8.

PROVIDE ANCHORAGE AT BEARING JOINT E FOR 150 LBS FACTORED UPLIFT

UNFACTORED REACTIONS

JT	1ST LCASE COMBINED	MAX./MIN. COMPONENT REACTIONS SNOW	LIVE	PERM.LIVE	WIND	DEAD	SOIL
E	72	48 / -29	0 / 0	0 / 0	0 / 0	24 / 0	0 / 0
F	251	200 / 0	0 / 0	0 / 0	0 / 0	51 / 0	0 / 0

BEARING MATERIAL TO BE SPF NO.2 OR BETTER AT JOINT(S) F

BRACING
TOP CHORD TO BE SHEATHED OR MAX. PURLIN SPACING = 6.25 FT.
MAX. UNBRACED BOTTOM CHORD LENGTH = 6.25 FT OR RIGID CEILING DIRECTLY APPLIED.

ALL PITCH BREAKS AND PERIMETER CORNER JOINTS MUST BE LATERALLY RESTRAINED.

LOADING
TOTAL LOAD CASES: (5)

CHORDS

MEMB. FR-TO	MAX. FACTORED FORCE (LBS)	FACTORED VERT. LOAD (PLF) FROM	TO	LC1 MAX CSI (LC)	MAX. UNBRAC LENGTH
A- B	0 / 36	-119.4	-119.4	0.16 (1)	10.00
B- C	-33 / 0	-119.4	-119.4	0.15 (1)	6.25
C- D	0 / 0	-119.4	-119.4	0.01 (1)	10.00
E- D	-42 / 0	0.0	0.0	0.00 (1)	7.81
F- B	-325 / 0	0.0	0.0	0.03 (1)	7.81
F- E	-18 / 17	-18.2	-18.2	0.03 (4)	6.25

WEBS

MEMB. FR-TO	MAX. FACTORED FORCE (LBS)	MAX CSI (LC)
C- E	-43 / 46	0.01 (5)
F- C	-26 / 27	0.01 (5)

CANTILEVER ANALYSIS HAS BEEN CONSIDERED IN THIS DESIGN

PATTERN-LOADING CHECK APPLIED TO THIS TRUSS.

DESIGN CRITERIA

SPECIFIED LOADS:

TOP CH.	LL =	34.8	PSF
	DL =	6.0	PSF
BOT CH.	LL =	0.0	PSF
	DL =	7.3	PSF
TOTAL LOAD	=	48.1	PSF

SPACING = 24.0 IN. C/C

LOADING IN FLAT SECTION BASED ON A SLOPE OF 2.00/12 MINIMUM

THIS TRUSS IS DESIGNED FOR RESIDENTIAL OR SMALL BUILDING REQUIREMENTS OF PART 9, NBCC 2015

THIS DESIGN COMPLIES WITH:
- PART 9 OF BCBC 2018 , NBC-2019AE
- PART 9 OF OBC 2012 (2019 AMENDMENT)
- CSA 086-14
- TPIC 2014

DESIGN ASSUMPTIONS
-OVERHANG NOT TO BE ALTERED OR CUT OFF.

(55 % OF 48.1 P.S.F. G.S.L. PLUS 8.4 P.S.F. RAIN LOAD) EQUALS 34.8 P.S.F. SPECIFIED ROOF LIVE LOAD

ALLOWABLE DEFL.(TL)= L/360 (0.19")
CALCULATED VERT. DEFL.(TL) = L/ 999 (0.00")

CSI: TC=0.16/1.00 (A-B:1) , BC=0.03/1.00 (E-F:4) , WB=0.01/1.00 (C-E:5) , SSI=0.11/1.00 (B-C:1)

DOL LUMBER=1.00 NAIL=1.00 LS BEND=1.10 COMP=1.10 SHEAR=1.10 TENS= 1.10

COMPANION LIVE LOAD FACTOR = 1.00

AUTOSOLVE RIGHT HEEL ONLY

TRUSS PLATE MANUFACTURER IS NOT RESPONSIBLE FOR QUALITY CONTROL IN THE TRUSS MANUFACTURING PLANT .

NAIL VALUES

PLATE	GRIP(DRY) (PSI) MAX	MIN	SHEAR (PLI) MAX	MIN	SECTION (PLI) MAX	MIN
MT20	650	371	1747	788	1987	1873

PLATE PLACEMENT TOL. = 0.250 inches

PLATE ROTATION TOL. = 5.0 Deg.

JSI GRIP= 0.31 (F) (INPUT = 0.90)
JSI METAL= 0.14 (B) (INPUT = 1.00)

LICENSED PROFESSIONAL ENGINEER
N.A. EL-MASRI
Jul 15, 2023

READ ALL NOTES ON THIS PAGE AND ON THE ENGINEERING NOTES: TRUSSES. THE NOTE PAGE IS AN INTEGRAL PART OF THIS DRAWING AS IT CONTAINS SPECIFICATIONS AND CRITERIA USED IN THE DESIGN OF THIS COMPONENT.

KOTT

JOB NAME	TRUSS NAME	QUANTITY	PLY	JOB DESC.	DRWG NO.
NE0723-089	T15	1	1	TRUSS DESC.	

Version 8.630 S Mar 22 2023 MiTek Industries, Inc. Sat Jul 15 10:29:58 2023 Page 1

ID:cRw3i5hGhkCK_Tpcc0KzbzAMyr-lv_Thr2qZRsBWQWmIxF3SXVX50?J4btVW4JI?yyxsUN

MHP 23034
CORPORATION OF THE CITY OF OSHAWA
TRUE COPY
OF PERMIT PLANS
Nov 14 2023
PER:
CHIEF BUILDING OFFICIAL

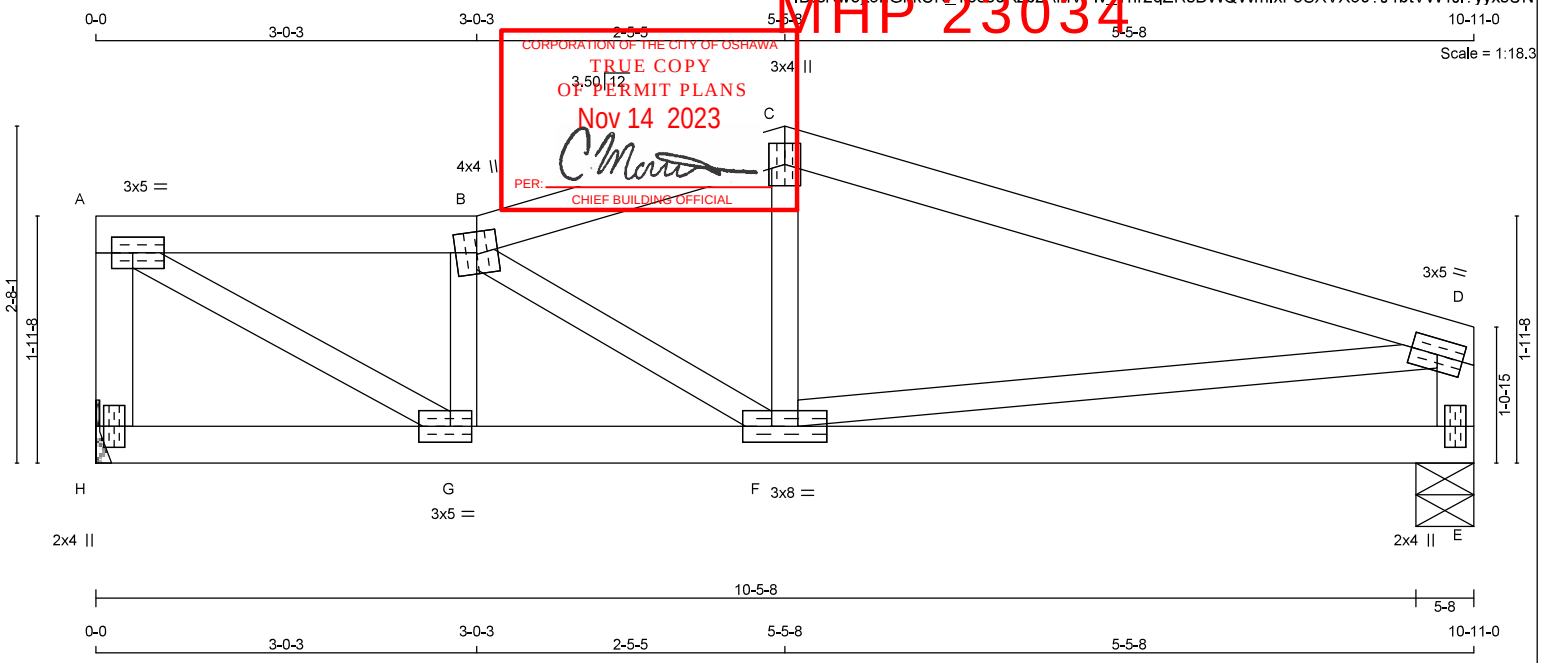

TOTAL WEIGHT = 39 lb

[M][F]

LUMBER

N. L. G. A. RULES

CHORDS	SIZE		LUMBER	DESCR.
H - A	2x4	DRY	No.2	SPF
A - B	2x4	DRY	No.2	SPF
B - C	2x4	DRY	No.2	SPF
C - D	2x4	DRY	No.2	SPF
E - D	2x4	DRY	No.2	SPF
H - E	2x4	DRY	No.2	SPF
ALL WEBS EXCEPT	2x3	DRY	No.2	SPF

DRY: SEASONED LUMBER.

PLATES (table is in inches)

JT	TYPE	PLATES	W	LEN	Y	X
A	TMVW-t	MT20	3.0	5.0	1.50	2.00
B	TTWW+m	MT20	4.0	4.0		
C	TTW+p	MT20	3.0	4.0		
D	TMVW-t	MT20	3.0	5.0		
E	BMV1+p	MT20	2.0	4.0		
F	BMWWW-t	MT20	3.0	8.0		
G	BMWW-t	MT20	3.0	5.0	1.50	2.00
H	BMV1+p	MT20	2.0	4.0		

DIMENSIONS, SUPPORTS AND LOADINGS SPECIFIED BY FABRICATOR TO BE VERIFIED BY BUILDING DESIGNER

BEARINGS

JT	FACTORED GROSS REACTION VERT	HORZ	MAXIMUM FACTORED GROSS REACTION DOWN	HORZ	UPLIFT	INPUT BRG	REQRD BRG
H	751	0	751	0	0	MECHANICAL	
E	751	0	751	0	0	5-8	1-8

A SUITABLE HANGER/MECHANICAL CONNECTION IS REQUIRED AT JOINT H. MINIMUM BEARING LENGTH AT JOINT H = 1-8.

UNFACTORED REACTIONS

JT	1ST LCASE COMBINED	MAX./MIN. COMPONENT REACTIONS SNOW	LIVE	PERM.LIVE	WIND	DEAD	SOIL
H	525	380 / 0	0 / 0	0 / 0	0 / 0	145 / 0	0 / 0
E	525	380 / 0	0 / 0	0 / 0	0 / 0	145 / 0	0 / 0

BEARING MATERIAL TO BE SPF NO.2 OR BETTER AT JOINT(S) E

BRACING

TOP CHORD TO BE SHEATHED OR MAX. PURLIN SPACING = 5.77 FT.
MAX. UNBRACED BOTTOM CHORD LENGTH = 10.00 FT OR RIGID CEILING DIRECTLY APPLIED.

ALL PITCH BREAKS AND PERIMETER CORNER JOINTS MUST BE LATERALLY RESTRAINED.

LOADING

TOTAL LOAD CASES: (4)

CHORDS

MEMB. FR-TO	MAX. FACTORED FORCE (LBS)	FACTORED VERT. LOAD (PLF) FROM	TO	LC1	MAX CSI (LC)	MAX. UNBRAC LENGTH
H- A	-718 / 0	0.0	0.0	0.08 (1)	7.81	
A- B	-942 / 0	-119.4	-119.4	0.15 (1)	6.22	
B- C	-922 / 0	-119.4	-119.4	0.10 (1)	6.25	
C- D	-920 / 0	-119.4	-119.4	0.47 (1)	5.77	
E- D	-708 / 0	0.0	0.0	0.07 (1)	7.81	
H- G	0 / 0	-18.2	-18.2	0.05 (4)	10.00	
G- F	0 / 975	-18.2	-18.2	0.21 (1)	10.00	
F- E	0 / 0	-18.2	-18.2	0.11 (4)	10.00	

WEBS

MEMB. FR-TO	MAX. FACTORED FORCE (LBS)	MAX CSI (LC)
A- G	0 / 1086	0.24 (1)
G- B	-521 / 0	0.08 (1)
B- F	-110 / 0	0.02 (1)
F- C	0 / 83	0.03 (4)
F- D	0 / 892	0.20 (1)

DESIGN CRITERIA

SPECIFIED LOADS:

TOP CH.	LL =	34.8	PSF
	DL =	6.0	PSF
BOT CH.	LL =	0.0	PSF
	DL =	7.3	PSF
TOTAL LOAD	=	48.1	PSF

SPACING = 24.0 IN. C/C

LOADING IN ALL FLAT SECTIONS BASED ON A SLOPE OF 2.00/12 MINIMUM

THIS TRUSS IS DESIGNED FOR RESIDENTIAL OR SMALL BUILDING REQUIREMENTS OF PART 9, NBCC 2015

THIS DESIGN COMPLIES WITH:
- PART 9 OF BCBC 2018 , NBC-2019AE
- PART 9 OF OBC 2012 (2019 AMENDMENT)
- CSA 086-14
- TPIC 2014

(55 % OF 48.1 P.S.F. G.S.L. PLUS 8.4 P.S.F. RAIN LOAD) EQUALS 34.8 P.S.F. SPECIFIED ROOF LIVE LOAD

ALLOWABLE DEFL.(LL)= L/360 (0.36")
CALCULATED VERT. DEFL.(LL) = L/ 999 (0.02")
ALLOWABLE DEFL.(TL)= L/360 (0.36")
CALCULATED VERT. DEFL.(TL) = L/ 999 (0.05")

CSI: TC=0.47/1.00 (C-D:1) , BC=0.21/1.00 (F-G:1) , WB=0.24/1.00 (A-G:1) , SSI=0.24/1.00 (C-D:1)

DOL LUMBER=1.00 NAIL=1.00 LS BEND=1.10 COMP=1.10 SHEAR=1.10 TENS= 1.10

COMPANION LIVE LOAD FACTOR = 1.00

TRUSS PLATE MANUFACTURER IS NOT RESPONSIBLE FOR QUALITY CONTROL IN THE TRUSS MANUFACTURING PLANT .

NAIL VALUES

PLATE	GRIP(DRY) (PSI) MAX	MIN	SHEAR (PLI) MAX	MIN	SECTION (PLI) MAX	MIN
MT20	650	371	1747	788	1987	1873

PLATE PLACEMENT TOL. = 0.250 inches

PLATE ROTATION TOL. = 5.0 Deg.

JSI GRIP= 0.89 (F) (INPUT = 0.90)
JSI METAL= 0.29 (D) (INPUT = 1.00)

LICENSED PROFESSIONAL ENGINEER
N.A. EL-MASRI
Jul 15, 2023

READ ALL NOTES ON THIS PAGE AND ON THE ENGINEERING NOTES: TRUSSES. THE NOTE PAGE IS AN INTEGRAL PART OF THIS DRAWING AS IT CONTAINS SPECIFICATIONS AND CRITERIA USED IN THE DESIGN OF THIS COMPONENT.

KOTT

JOB NAME	TRUSS NAME	QUANTITY	PLY	JOB DESC.	DRWG NO.
NE0723-089	T16	1	1	TRUSS DESC.	

Version 8.630 S Mar 22 2023 MiTek Industries, Inc. Sat Jul 15 10:29:59 2023 Page 1
ID:cRwpit5hGhLcK_7pco0KzbzAMVs-D5YrvB2SKl_27a5zsemI?l1IsQL4p1Afkk2IXOyxsUM

MHP 23034

CORPORATION OF THE CITY OF OSHAWA
TRUE COPY OF PERMIT PLANS
Nov 14 2023
PER:
CHIEF BUILDING OFFICIAL

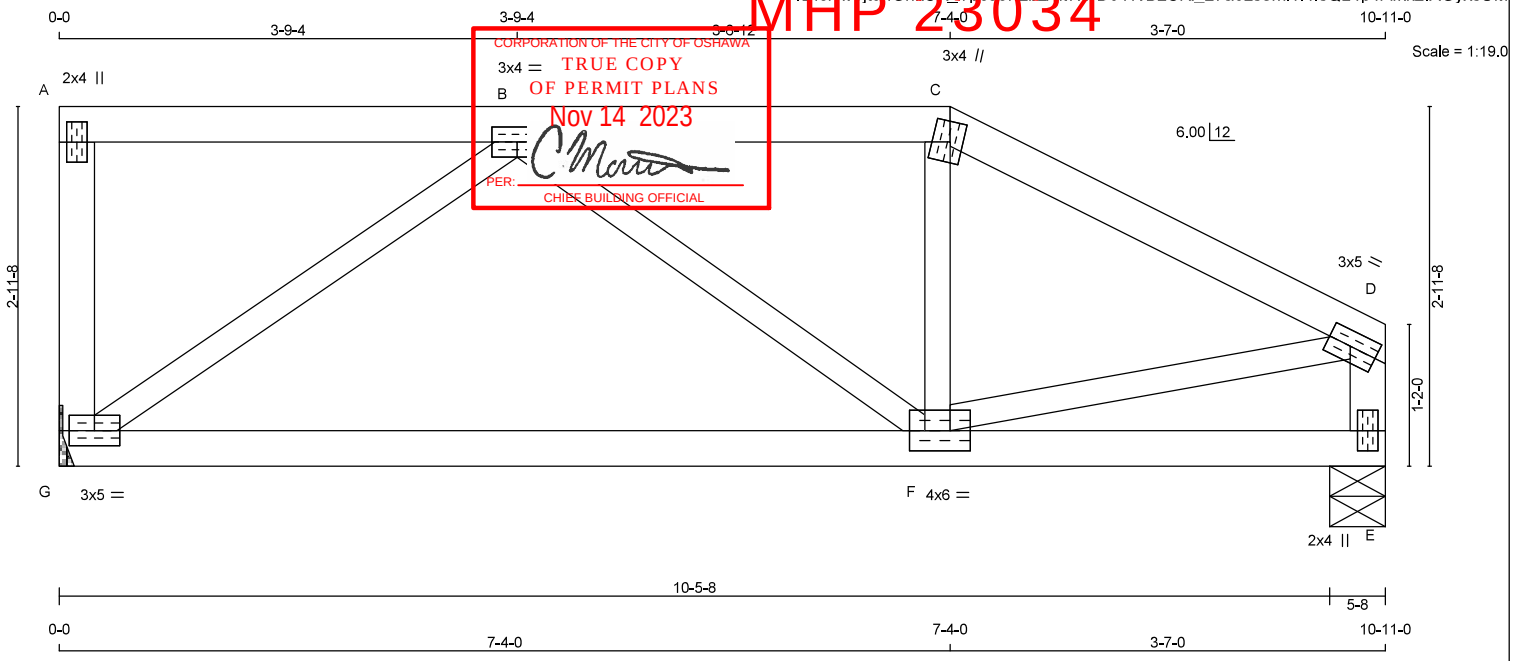

TOTAL WEIGHT = 40 lb
[M]

LUMBER
N. L. G. A. RULES

CHORDS	SIZE		LUMBER	DESCR.
G - A	2x4	DRY	No.2	SPF
A - C	2x4	DRY	No.2	SPF
C - D	2x4	DRY	No.2	SPF
E - D	2x4	DRY	No.2	SPF
G - E	2x4	DRY	No.2	SPF
ALL WEBS EXCEPT	2x3	DRY	No.2	SPF

DRY: SEASONED LUMBER.

PLATES (table is in inches)

JT	TYPE	PLATES	W	LEN	Y	X
A	TMV+p	MT20	2.0	4.0		
B	TMWW-t	MT20	3.0	4.0	1.50	1.50
C	TTW+m	MT20	3.0	4.0	2.00	1.25
D	TMVW-t	MT20	3.0	5.0	1.50	2.25
E	BMV1+p	MT20	2.0	4.0		
F	BMWWW-t	MT20	4.0	6.0	2.00	1.50
G	BMVW1-t	MT20	3.0	5.0		

DIMENSIONS, SUPPORTS AND LOADINGS SPECIFIED BY FABRICATOR TO BE VERIFIED BY BUILDING DESIGNER

BEARINGS

JT	FACTORED GROSS REACTION VERT	HORZ	MAXIMUM FACTORED GROSS REACTION DOWN	HORZ	UPLIFT	INPUT BRG IN-SX	REQRD BRG IN-SX
G	751	0	751	0	0	MECHANICAL	
E	751	0	751	0	0	5-8	1-8

A SUITABLE HANGER/MECHANICAL CONNECTION IS REQUIRED AT JOINT G. MINIMUM BEARING LENGTH AT JOINT G = 1-8.

UNFACTORED REACTIONS

JT	1ST LCASE COMBINED	MAX./MIN. COMPONENT REACTIONS SNOW	LIVE	PERM.LIVE	WIND	DEAD	SOIL
G	525	380 / 0	0 / 0	0 / 0	0 / 0	145 / 0	0 / 0
E	525	380 / 0	0 / 0	0 / 0	0 / 0	145 / 0	0 / 0

BEARING MATERIAL TO BE SPF NO.2 OR BETTER AT JOINT(S) E

BRACING
TOP CHORD TO BE SHEATHED OR MAX. PURLIN SPACING = 6.25 FT.
MAX. UNBRACED BOTTOM CHORD LENGTH = 10.00 FT OR RIGID CEILING DIRECTLY APPLIED.

ALL PITCH BREAKS AND PERIMETER CORNER JOINTS MUST BE LATERALLY RESTRAINED.

LOADING
TOTAL LOAD CASES: (4)

CHORDS

MEMB. FR-TO	MAX. FORCE (LBS)	FACTORED VERT. LOAD (PLF) FROM	TO	LC1 CSI (LC)	MAX UNBRAC LENGTH
G- A	-175 / 0	0.0	0.0	0.03 (1)	7.81
A- B	0 / 0	-119.4	-119.4	0.26 (1)	10.00
B- C	-716 / 0	-119.4	-119.4	0.27 (1)	6.25
C- D	-802 / 0	-119.4	-119.4	0.27 (1)	6.25
E- D	-737 / 0	0.0	0.0	0.07 (1)	7.81
G- F	0 / 737	-18.2	-18.2	0.24 (4)	10.00
F- E	0 / 0	-18.2	-18.2	0.20 (4)	10.00

WEBS

MEMB. FR-TO	MAX. FORCE (LBS)	FACTORED MAX CSI (LC)
G- B	-903 / 0	0.30 (1)
B- F	-28 / 70	0.02 (4)
F- C	-16 / 57	0.02 (4)
F- D	0 / 735	0.17 (1)

DESIGN CRITERIA

SPECIFIED LOADS:

TOP CH.	LL =	34.8	PSF
	DL =	6.0	PSF
BOT CH.	LL =	0.0	PSF
	DL =	7.3	PSF
TOTAL LOAD	=	48.1	PSF

SPACING = 24.0 IN. C/C

LOADING IN FLAT SECTION BASED ON A SLOPE OF 2.00/12 MINIMUM

THIS TRUSS IS DESIGNED FOR RESIDENTIAL OR SMALL BUILDING REQUIREMENTS OF PART 9, NBCC 2015

THIS DESIGN COMPLIES WITH:
- PART 9 OF BCBC 2018 , NBC-2019AE
- PART 9 OF OBC 2012 (2019 AMENDMENT)
- CSA 086-14
- TPIC 2014

(55 % OF 48.1 P.S.F. G.S.L. PLUS 8.4 P.S.F. RAIN LOAD) EQUALS 34.8 P.S.F. SPECIFIED ROOF LIVE LOAD

ALLOWABLE DEFL.(LL)= L/360 (0.36")
CALCULATED VERT. DEFL.(LL) = L/ 999 (0.01")
ALLOWABLE DEFL.(TL)= L/360 (0.36")
CALCULATED VERT. DEFL.(TL) = L/ 999 (0.08")

CSI: TC=0.27/1.00 (C-D:1) , BC=0.24/1.00 (F-G:4) , WB=0.30/1.00 (B-G:1) , SSI=0.21/1.00 (A-B:1)

DOL LUMBER=1.00 NAIL=1.00 LS BEND=1.10 COMP=1.10 SHEAR=1.10 TENS= 1.10

COMPANION LIVE LOAD FACTOR = 1.00

TRUSS PLATE MANUFACTURER IS NOT RESPONSIBLE FOR QUALITY CONTROL IN THE TRUSS MANUFACTURING PLANT .

NAIL VALUES

PLATE	GRIP(DRY) (PSI) MAX	MIN	SHEAR (PLI) MAX	MIN	SECTION (PLI) MAX	MIN
MT20	650	371	1747	788	1987	1873

PLATE PLACEMENT TOL. = 0.250 inches

PLATE ROTATION TOL. = 5.0 Deg.

JSI GRIP= 0.83 (G) (INPUT = 0.90)
JSI METAL= 0.26 (D) (INPUT = 1.00)

LICENSED PROFESSIONAL ENGINEER
N.A. EL-MASRI
Jul 15, 2023

READ ALL NOTES ON THIS PAGE AND ON THE ENGINEERING NOTES: TRUSSES. THE NOTE PAGE IS AN INTEGRAL PART OF THIS DRAWING AS IT CONTAINS SPECIFICATIONS AND CRITERIA USED IN THE DESIGN OF THIS COMPONENT.

KOTT

KOTT TRUSS BEARING CAPACITY TABLE

(INTERNAL USE ONLY)

MHP 23034
TRUE COPY OF PERMIT PLANS
Nov 14 2023
CITY OF SURREY BUILDING OFFICIAL

TRUSS BEARING CAPACITIES [LBS.], BY TRUSS LUMBER TYPE (SUPPORTED ON SPF #2 TOP PLATE) 7-Nov-23

	TYPE 1, NO FLUSH PLATE, B2>=2B1								
NO BEARING ENHANCER	BEARING PLATE (B1)	1-PLY		2-PLY		3-PLY		4-PLY	
		MSR2100	SPF No.2 MSR1950	MSR2100	SPF No.2 MSR1950	MSR2100	SPF No.2 MSR1950	MSR2100	SPF No.2 MSR1950
	1 1/2"	1383		2767		4151		5534	
	2x4	3712	3228	7425	6457	[illegible]	[illegible]	[illegible]	12914
	2x6	5834	5073	11668	10146	[illegible]	[illegible]	[illegible]	20293
	2x8	7690	6687	15381	13375	[illegible]	[illegible]	[illegible]	26750

	TYPE 1, FLUSH PLATE								
FLUSH PLATE	BEARING PLATE (B1)	1-PLY		2-PLY		3-PLY		4-PLY	
		MSR2100	SPF No.2 MSR1950	MSR2100	SPF No.2 MSR1950	MSR2100	SPF No.2 MSR1950	MSR2100	SPF No.2 MSR1950
	1 1/2"	1383		2767		4151		5534	
	2x4	3712		7425		11138		14851	
	2x6	5834		11668		17503		23337	
	2x8	7690		15381		23072		30763	

	TYPE 1, FLUSH PLATE + BEARING ENHANCER								
BEARING ENHANCER	BEARING PLATE (B1)	1-PLY		2-PLY		3-PLY		4-PLY	
		MSR2100	SPF No.2 MSR1950	MSR2100	SPF No.2 MSR1950	MSR2100	SPF No.2 MSR1950	MSR2100	SPF No.2 MSR1950
CPn-4 (Simpson)	2x4	4515		9030		13545		18065	
CPn-6 (Simpson)	2x6	7095		14190		21285		28390	
CP4-9 (KOTT)	2x4	6007	4898	12014	9796	18021	14694	19801	19592
CP6-9 (KOTT)	2x6	8677	7075	17354	14150	26031	21225	31117	28300
SBP4 (MiTek)	2x4	7288		11001		14714		18427	
SBP6 (MiTek)	2x6	11030		16865		22699		28534	
SBP6 (MiTek)	2x8	12886		20578		28269		35960	

TYPE 1 CONFIGURATIONS

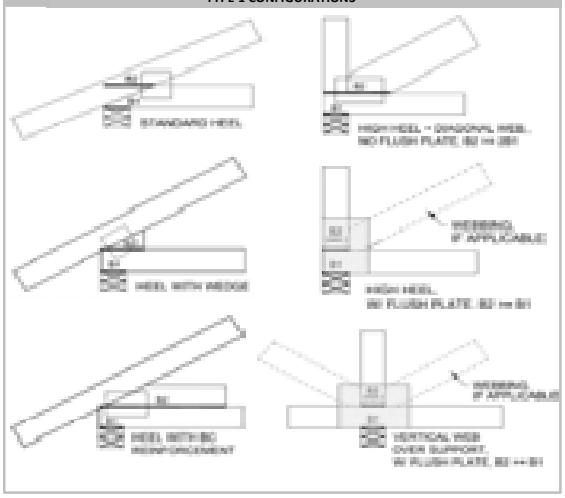

	TYPE 1 (END GRAIN)									
END GRAIN	BEARING PLATE (B1)	POST (B2) ABOVE BEARING	1-PLY		2-PLY		3-PLY		4-PLY	
			MSR2100 (EG)	SPF No.2 (EG)	MSR2100 (EG)	SPF No.2 (EG)	MSR2100 (EG)	SPF No.2 (EG)	MSR2100 (EG)	SPF No.2 (EG)
	2x4	2x4	3712		7425		11138		14851	
	2x6	2x6	5834		11668		17503		23337	
			MSR1950 (EG)	SPF No.2	MSR1950 (EG)	SPF No.2	MSR1950 (EG)	SPF No.2	MSR1950 (EG)	SPF No.2
	2x8	2x8	7690		15381		23072		30763	

	TYPE 1 (END GRAIN), FLUSH PLATE + BEARING ENHANCER									
END GRAIN, BEARING ENHANCER	BEARING PLATE (B1)	POST (B2) ABOVE BEARING	1-PLY		2-PLY		3-PLY		4-PLY	
			MSR2100 (EG)	SPF No.2 (EG)	MSR2100 (EG)	SPF No.2 (EG)	MSR2100 (EG)	SPF No.2 (EG)	MSR2100 (EG)	SPF No.2 (EG)
CPn-4 (Simpson)	2x4	2x4	4515		9030		13545		18065	
CPn-6 (Simpson)	2x6	2x6	7095		14190		21285		28390	
CP4-9 (KOTT)	2x4	2x6	15585	9006	19801	18013	19801		19801	
			MSR1950 (EG)	SPF No.2 (EG)	MSR1950 (EG)	SPF No.2 (EG)	MSR1950 (EG)	SPF No.2 (EG)	MSR1950 (EG)	SPF No.2 (EG)
CP6-9 (KOTT)	2x6	2x8	21834	13009	31117	26019	31117		31117	

TYPE 1 (END GRAIN) CONFIGURATIONS

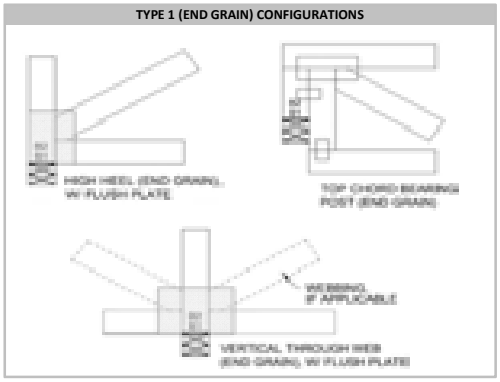

	TYPE 2, NO FLUSH PLATE, B2<2B1									
NO BEARING ENHANCER	BEARING PLATE (B1)	POST (B2) ABOVE BEARING	1-PLY		2-PLY		3-PLY		4-PLY	
			MSR2100	SPF No.2 MSR1950	MSR2100	SPF No.2 MSR1950	MSR2100	SPF No.2 MSR1950	MSR2100	SPF No.2 MSR1950
	2x4	2x4	2639	2152	5279	4304	7919	6457	10588	8609
		2x6	3393	2767	6787	5534	10181	8302	13575	11069
	2x6	2x4	3393	2767	6787	5534	10181	8302	13575	11069
		2x6	4147	3382	8296	6764	12444	10146	16592	13529
		2x8	4808	3920	9616	7840	14424	11761	19232	15681
		2x10	5562	4535	11124	9070	16686	13606	22248	18141
	2x8	2x4	3959	3228	7919	6457	11878	9685	15838	12914
		2x6	4808	3920	9616	7840	14424	11761	19232	15681
		2x8	5467	4458	10935	8916	16403	13375	21871	17833

	TYPE 2, FLUSH PLATE									
FLUSH PLATE	BEARING PLATE (B1)	POST (B2) ABOVE BEARING	1-PLY		2-PLY		3-PLY		4-PLY	
			MSR2100	SPF No.2 MSR1950	MSR2100	SPF No.2 MSR1950	MSR2100	SPF No.2 MSR1950	MSR2100	SPF No.2 MSR1950
	2x4	2x4	TYPE 1 APPLIES							
		2x6								
	2x6	2x4	4672	3809	9344	7619	14016	11429	18689	15238
		2x6	TYPE 1 APPLIES							
		2x8								
		2x10								
	2x8	2x4	4672	3809	9344	7619	14016	11429	18689	15238
		2x6	7342	5986	14684	11973	22026	17959	29368	23946
		2x8	TYPE 1 APPLIES							

TYPE 2 CONFIGURATIONS

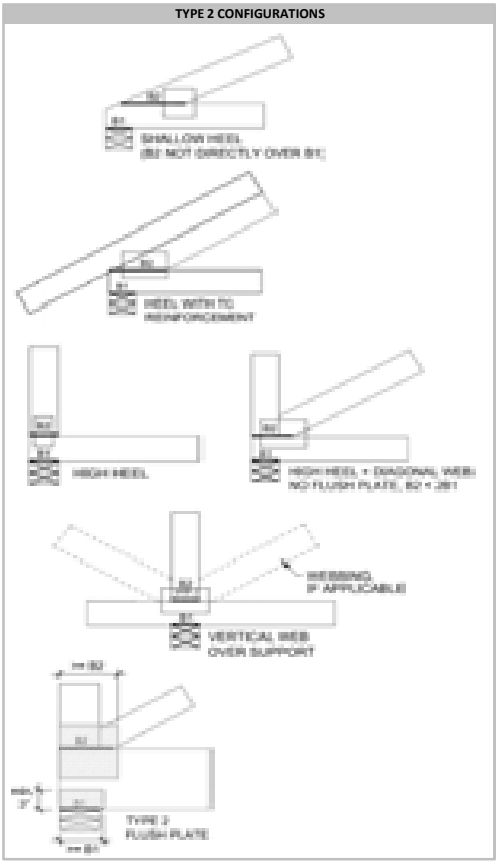

NOTES:

1. Factored truss reaction shall not exceed bearing capacity corresponding to: configuration type, size of bearing surfaces, truss lumber, # of plies, and applicable enhancers.

2a. Values in table are in conformance with CSA O86-14 Cl. 6.5.7 and TPIC 2014-Update 2, and may be used for residential or commercial designs.

2b. Values in table are in conformance with MiTek Canada Detail B37821Q "SPF Bearing Capacities".

2c. Values in table are in conformance with Simpson Catalogue C-C-CAN2020.

3a. Conditions for use of table values include: standard duration (K_D=1), dry lumber (K_{Scp}=1), untreated lumber (K_T=1), length of bearing factor not applied (K_B=1).

3b. Size factor (K_{Zcp}) applied to support material calculation when acceptable. Flush plate factor (K_P) applied to truss material calculation when acceptable (ie. excludes end grain).

3c. Flat roof factor (K_F) must applied for trusses making up a flat roof system; to do so, multiply bearing capacity values by 0.75 for this application.

4. Bearing plate is to be specified by the project engineer; values in table assume a bearing material of SPF #2 (or better).

5. When required, flush plate must not be located further than 1/4" away from bearing surface, and must cover the entire bearing plate length (B1).

6. When required, bearing enhancer must be installed as per manufacturer's guidelines.

7. Type 2 bearing configurations can be converted to use Type 1 table values as outlined in TPIC 2014-Update 1 Cl. 7.5.9.

8. This table is not valid after April 30, 2022.

MiTek®

STANDARD DETAIL **MSD2015-H**

MHP 23034

Issued: MARCH 1, 2022
Expiry: APRIL 30, 2024

CORPORATION OF THE CITY OF OSHAWA
TRUE COPY
OF PERMIT PLANS
Nov 14 2023
PER: C. Marr
CHIEF BUILDING OFFICIAL

TC ACITY DETAILS

LATERAL AND WITHDRAWAL RESISTANCE OF BEARING ANCHORAGE BY TOE-NAILS

NAIL TYPE	Length (in)	Diameter (in)	LATERAL Resistance per nail (Lbs.)		WITHDRAWAL Resistance per nail (Lbs.)	
			SPF	D. FIR	SPF	D. FIR
COMMON WIRE	3.00	0.144	122	139	30	42
	3.25	0.144	127	144	32	45
	3.50	0.160	152	173	38	52
COMMON SPIRAL	3.00	0.122	96	108	26	36
	3.25	0.122	97	108	28	40
	3.50	0.152	142	161	36	50
3.25" Gun nail	3.25	0.120	94	105	28	39

Note: If using truss with D. Fir lumber and SPF bearing plate, use tabulated SPF values in table.

Nail type:	Common wire	Common spiral	Common wire	Common spiral	Gun Nail
Diameter (in.)	0.160	0.152	0.144	0.122	0.120
Length (in.)	3.50	3.50	3.00	3.00	3.25
LUMBER	**MAXIMUM NUMBER OF TOE-NAILS**				
2x4 SPF	2	2	3	3	3
2x6 SPF	4	4	4	5	5
2x4 D. FIR	2	2	2	2	2
2x6 D. FIR	3	3	3	4	4

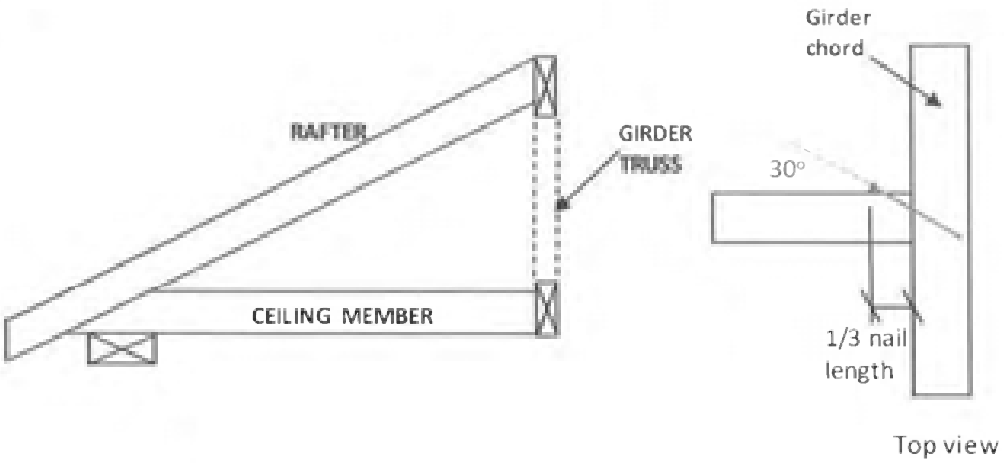

Figure 1: Toe-Nailing Rafter / Ceiling Member to Girder Truss

PEO
Certificate No. 10889485

LICENSED PROFESSIONAL ENGINEER
2022-04-05
C. Cordogiannis
90553736
PROVINCE OF ONTARIO

©2020 MiTek Canada Inc., 240 Stirling Crescent, Bradford, Ontario, L3Z 4L5 | (800) 268-3434, www.mitek.ca

MiTek®

STANDARD DETAIL **MSD2015-H**

MHP 23034

Issued: MARCH 1, 2022
Expiry: APRIL 30, 2024

CORPORATION OF THE CITY OF OSHAWA
TRUE COPY
OF PERMIT PLANS
Nov 14 2023
PER: C. Marr
CHIEF BUILDING OFFICIAL

TOENAIL CAPACITY DETAILS

Figure 2: Toe-Nail Anchorage to Bearing Plate for Uplift

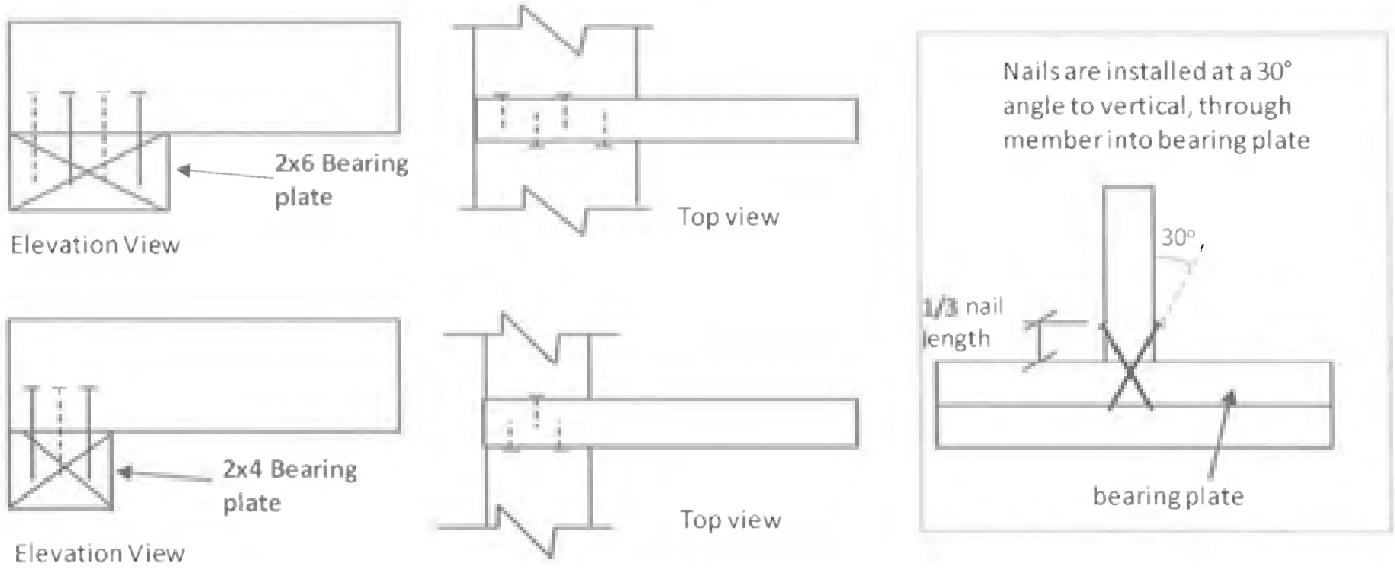

NOTES:

1. Rafter and ceiling members may be connected to top and bottom chords of girder truss by toe-nailing the members into the girder chords (see fig. 1), provided the factored vertical reactions of the supported members do not exceed the lateral resistance of the toe-nails. Mechanical connectors (hangers) are required if factored vertical reactions exceed the toe-nail capacity, or if the connection must resist horizontal loads (loads perpendicular to the face of girder or rafter).

2. Trusses, rafters or ceiling members may be anchored to the bearing plate with toe-nails (see fig. 2), provided that the factored uplift reactions due to **wind or earthquake loads** do not exceed the **withdrawal resistance of the toe-nails.** Mechanical anchors (tie-downs) are required for reactions that exceed the toe-nail withdrawal capacity. Toe-nail anchorage to bearing plates is **NOT** permitted if uplift reactions are generated from gravity loads (snow, floor live, dead).

3. Tabulated toe-nail resistances on page 1 are for **one** toe-nail. Multiply unit values by the number of nails used in the connection. Maximum number of nails in a connection shall not exceed the tabulated limits shown on page 1 for a given lumber size /species.

4. Nail values are based on specific gravity of G = 0.42 (SPF) and G = 0.49 (D. Fir).

5. Toe-nails shall be driven at approximately 1/3 the nail length from the edge of the joist/truss chord and driven at an angle of 30° to the grain of the member.

6. For wind / earthquake loads, tabulated lateral resistances may be multiplied by 1.15 (K_D factor). No increases are permitted for tabulated withdrawal resistances.

7. Lumber must be dry (< 19% moisture content) at the time of nail installation.

8. Nail values in this table comply with CSA O86-19, Clause 12.9.

PEO
Certificate No. 10889485

LICENSED PROFESSIONAL ENGINEER
2022-04-05
C. Cordogiannis
90553736
PROVINCE OF ONTARIO

©2020 MiTek Canada Inc., 240 Stirling Crescent, Bradford, Ontario, L3Z 4L5 | (800) 268-3434, www.mitek.ca

MiTek®

STANDARD DETAIL MSD2015-J

Issued: MARCH 17, 2021
Expiry: APRIL 30, 2023

MHP 23034

CORPORATION OF THE CITY OF OSHAWA
TRUE COPY
OF PERMIT PLANS
Nov 14 2023
PER: C. Marr
CHIEF BUILDING OFFICIAL

STAND END FRAMING

PLAN VIEW

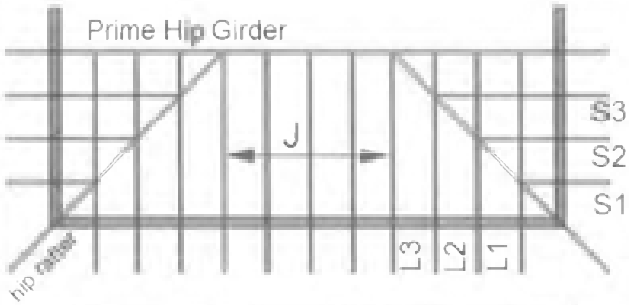

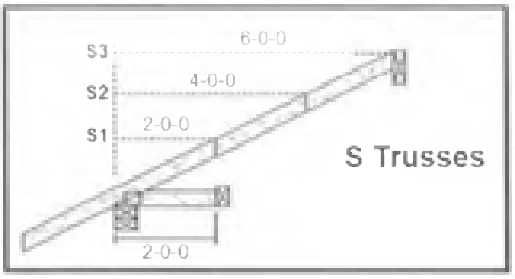

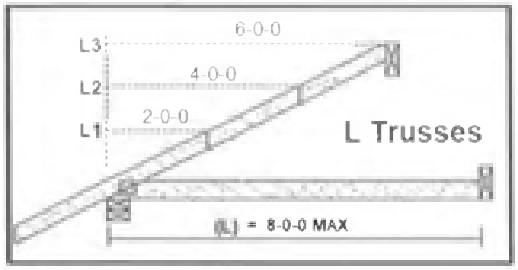

Specified Load Rating:

Top chord Live:	51.0 PSF or less
Top chord Dead:	6.0 PSF or less
Bottom chord Live:	0.0 PSF
Bottom chord Dead:	7.3 PSF or less

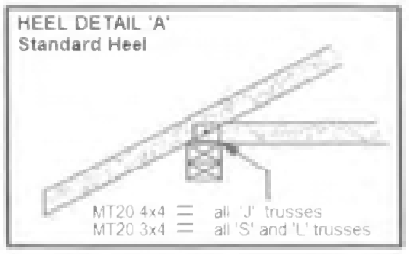

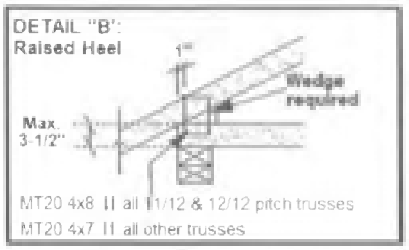

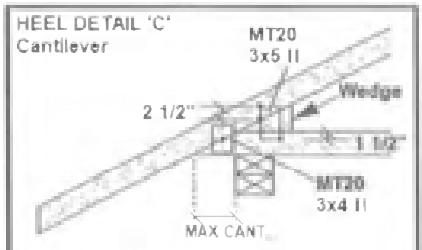

CANTILEVER DETAIL "C"

SLOPE	MAX CANT.	WEDGE PLATE	WEDGE SIZE
3/12	17"	3 X 5	2 X 3
4/12	14"	3 X 5	2 X 3
5/12	12"	3 X 5	2 X 4
6/12	10"	3 X 5	2 X 4
7/12	9"	3 X 5	2 X 6
8/12	8.5"	3 X 5	2 X 6
9/12	8"	3 X 5	2 X 6
10/12	7.5"	3 X 5	2 X 6

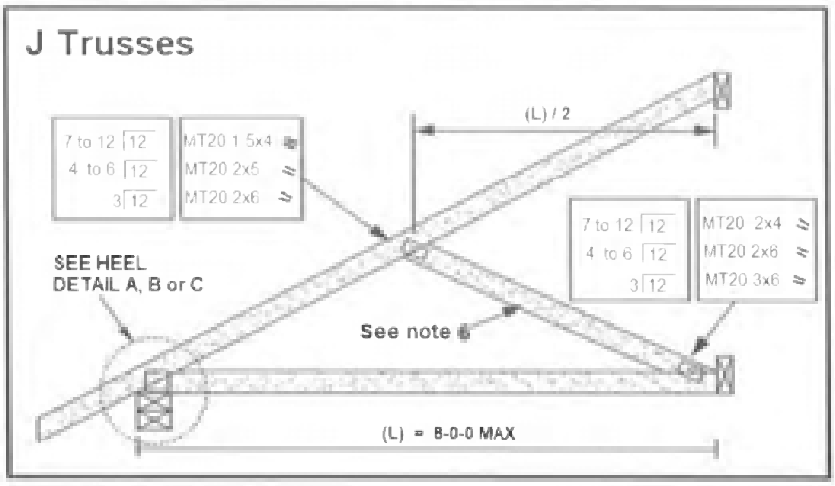

PEO
Certificate No. 10889485

LICENSED PROFESSIONAL ENGINEER
2022-04-27
C. Cordoginnis
90553736
PROVINCE OF ONTARIO

NOTES:

1. This detail is valid only for projects conforming to **PART 9 NBCC 2015** that do not require a wind analysis to be incorporated into the design of the trusses.
2. Overhang length shall not exceed 24 inches.
3. All lumber shall be 2x4 SPF (or D-Fir) DRY No. 2 grade or better.
4. All plates specified are MITEK MT20, pressed into both faces of each truss. Heel plates of all trusses shall conform to heel details 'A', 'B' or 'C'.
5. Diagonal hip rafter design shall conform to section 9.23.14.6 of NBCC 2015.
6. For 6.0 ft. or less span, diagonal web on truss 'J" is optional. Girder design must reflect choice of partial jack ('J' with diagonal web) or open jack ('J' without diagonal web)
7. All truss-to-rafter and truss-to-truss connections shall be specified as per MITEK standard detail *'MSD2015-H: Toe-Nail Capacity Details'*

©2021 MiTek Canada Inc.240 Stirling Cr. Bradford Ontario, L3Z 4L5 (800) 268-3434, www.mitek.ca

MiTek®

STANDARD DETAIL MSD2015-K

Issued: MARCH 1, 2022
Expiry: APRIL 30, 2024

MHP 23034

CORPORATION OF THE CITY OF OSHAWA
TRUE COPY
OF PERMIT PLANS
Nov 14 2023
PER: C. Martin
CHIEF BUILDING OFFICIAL

STANDARD GABLE END DETAIL

Specified Load Rating:

Top chord Live	51.0 PSF
Top chord Dead	6.0 PSF
Bottom chord Live	0.0 PSF
Bottom chord Dead	7.3 PSF

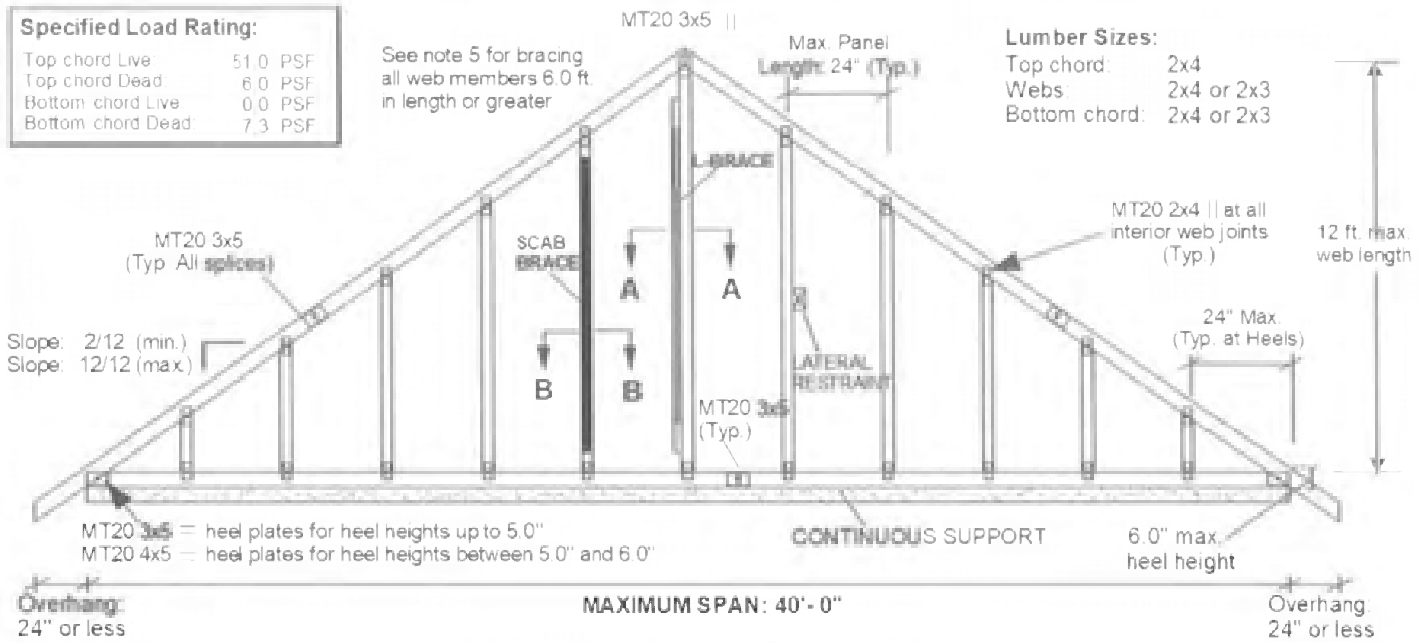

SCAB BRACE DETAIL (Section B-B)

SPF No. 2 DRY Scab, same size as web. Scab brace must cover 90% of web length

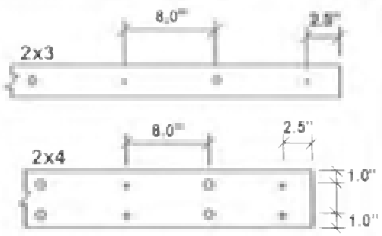

+ 0.122"x3.0" nail driven from front face
o 0.122"x3.0" nail driven from back face

L BRACE DETAIL (Section A-A)

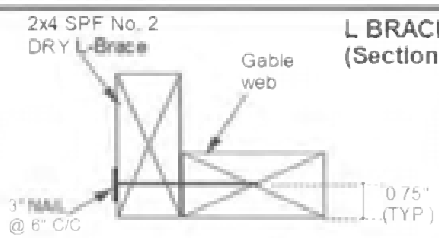

Fasten L-Brace to narrow edge of web with one row of 0.122" x 3.0" nails spaced at 6.0" c/c along entire length of web. Brace must cover 90% of the web length. Respect a 2.5" minimum end distance.

Notes:

1. This detail is only valid for projects conforming to **Part 9, NBCC 2015** that do not require a wind analysis to be incorporated into the design of the truss.
2. This detail is for vertical (gravity) load rating of the truss only. Truss must be continuously supported over the entire length of bottom chord.
3. Maximum web length not to exceed 12.0 ft. Spacing of gable stud webs in the truss not to exceed 24 inches cc.
4. Splice joints shall not be located in the first panel adjacent to the heel joint or peak joint.
5. Lateral restraint required at half-length of all webs over 6.0 ft. long. Alternatively install an L-Brace or scab brace as shown above. Scab braces shall be limited to 10 ft. long webs or less.
6. All plates are MITEK MT20 pressed into both faces of truss.
7. All lumber to be SPF (or D-Fir) DRY and of No.2 grade or better.
8. Additional building bracing is typically installed to brace the face of the end wall assembly. See BCSI Canada *'Building Designer Responsibilities for Gable End Frame Bracing'* for additional information on building bracing for gable-end assemblies.

PEO
Certificate No. 10889485

LICENSED PROFESSIONAL ENGINEER
2022-04-05
C. Cordogiannis
90560736
PROVINCE OF ONTARIO

©2020 MiTek Canada Inc., 240 Stirling Crescent, Bradford, Ontario, L3Z 4L5 | (800) 268-3434, www.mitek.ca

MHP 23034

CORPORATION OF THE CITY OF OSHAWA
TRUE COPY
OF PERMIT PLANS
Nov 14 2023
PER: _____
CHIEF BUILDING OFFICIAL

CANADA B1C — BCSI-B1C SUMMARY SHEET - GUIDE FOR HANDLING, INSTALLING, RESTRAINING AND BRACING OF TRUSSES

Spans over 60' may require complex permanent bracing. Please always consult a registered design professional.

WARNING!

General Notes / Remarques générales

Trusses are not marked in any way to identify the frequency or location of temporary lateral restraint and diagonal bracing. Follow the recommendations for handling, installing and temporary restraining and bracing of trusses. Refer to BCSI CANADA - Guide to Good Practice for Handling, Installing, Restraining & Bracing of Metal Plate Connected Wood Trusses for more detailed information.

Les fermes ne sont pas marquées d'aucune façon pour identifier la fréquence ou l'emplacement de la retenue latérale temporaire et du contreventement diagonal. Respecter les recommandations sur la manipulation, l'installation ainsi que la retenue et le contreventement temporaires des fermes. Reportez-vous au BCSI CANADA - Guide to Good Practice for Handling, Installing, Restraining & Bracing of Metal Plate Connected Wood Trusses (Guide de bonnes pratiques pour la manipulation, l'installation, la retenue et le contreventement des fermes en bois reliées par une plaque métallique) pour obtenir des renseignements plus détaillés.

Truss Design Drawings may specify locations of permanent lateral restraint or reinforcement for individual truss members. Refer to the BCSI-B1C Summary Sheet for more information. All other permanent bracing design is the responsibility of the building designer.

Les dessins de conception de fermes peuvent préciser des emplacements de retenue latérale permanente ou de renforcement pour des membres de fermes individuelles. Reportez-vous à la fiche sommaire BCSI-B1C pour obtenir plus de renseignements. Le concepteur du bâtiment est responsable de toute autre conception de contreventement.

The consequences of improper handling, erecting, installing, restraining and bracing can result in a collapse of the structure, or worse, serious personal injury or death!

Les conséquences d'une manipulation, d'une implantation, d'une installation, d'une retenue et d'un contreventement inappropriés peuvent entraîner l'effondrement de la structure, ou pire, des blessures graves ou la mort.

Exercise care when removing banding and handling trusses to avoid damaging trusses and prevent injury. Wear personal protective equipment for the eyes, feet, hands and head when working with trusses.

Faites attention lorsque vous retirez des sangles et manipulez des fermes pour éviter d'endommager les fermes et prévenir les blessures. Portez de l'équipement de protection individuelle pour les yeux, les pieds, les mains et la tête lorsque vous travaillez avec des fermes.

Use special care in windy weather or near power lines and airports.

Faites preuve d'une attention particulière lors des conditions venteuses ou près des lignes électriques et des aéroports.

Handling — Manipulation

Avoid lateral bending. / Évitez la flexion latérale.

The contractor is responsible for properly receiving, unloading and storing the trusses at the jobsite. Unload trusses to smooth surface to prevent damage.

L'entrepreneur est responsable de la réception, du déchargement et de l'entreposage appropriés des fermes sur le chantier de construction. Déchargez les fermes sur une surface lisse pour éviter tout dommage.

Spread tar or truss paper if equipment is used for the trusses. / Étalez du goudron ou du papier de toiture si l'équipement est utilisé pour les fermes.

Use proper rigging and hoisting equipment. / Utilisez l'équipement de montage et de levage approprié.

Trusses may be unloaded directly on the ground at the time of delivery or stored temporarily in contact with the ground after delivery. If trusses are to be stored for more than one week, place blocking of sufficient height beneath the stack of trusses at 8' (2.4 m) to 10' (3 m) on center (oc).

Les fermes peuvent être déchargées directement sur le sol au moment de la livraison ou rangées temporairement en contact avec le sol après la livraison. Si les fermes seront entreposées pendant plus d'une semaine, placez des blocs d'une hauteur suffisante sous la pile de fermes à une distance de 2.4m (8 pi) à 3m (10 pi) entraxes.

DO NOT store on uneven ground. / N'entreposez PAS sur un sol inégal.

DO NOT store uninstalled bundles upright. / N'entreposez PAS verticalement les lots non contreventés.

Fix trusses stored for more than one week, cover bundles to protect from the environment.

Pour les fermes entreposées pendant plus d'une semaine, couvrez les lots pour les protéger des intempéries.

Refer to BCSI CANADA for more detailed information pertaining to handling and jobsite storage of trusses.

Reportez-vous au BCSI CANADA pour obtenir des renseignements plus détaillés concernant la manipulation et l'entreposage des fermes sur le chantier de construction.

Hoisting and Placement of Truss Bundle / Manutention et pose des paquets de fermes

DO NOT overload the crane. / NE surchargez PAS la grue.

NEVER use banding to lift a bundle. / N'utilisez JAMAIS de feuillards métalliques seuls pour soulever un lot.

A single lift point may be used for bundles of top chord pitch trusses up to 45° (12.7 m) and parallel chord trusses up to 30' (9.1 m).

Utiliser au moins deux lift points for bundles of top chord pitch trusses up to 60° (16.3 m) and parallel chord trusses up to 45' (13.7 m). Use at least three lift points for bundles of top chord pitch trusses >60° (16.3 m) and parallel chord trusses >45' (13.7 m).

Un seul point de levage peut être utilisé pour les lots de fermes en pente à membrure supérieure jusqu'à 12,7m (45 pi) et de fermes à membrure parallèle jusqu'à 9.1m (30 pi). Utilisez au moins trois points de levage pour les lots de fermes à membrure supérieure inclinée >16,3m (60 pi) et fermes à membrure parallèle >13,7m (45 pi).

WARNING: Do not over load supporting structure with truss bundle.

AVERTISSEMENT: Ne surchargez pas la structure d'appui avec un lot de fermes.

Place truss bundles in stable position.

Positionnez les lots de manière stable.

Mechanical Hoisting Recommendations for Single Trusses / Recommandations de levage mecanique pour les fermes uniques

Refer to BCSI-B2C for more information. / Reportez-vous au BCSI-B2C pour obtenir plus de renseignements.

Using a single pick-point at the peak can damage the truss. / Le fait d'utiliser un seul point de prélèvement au faîte peut endommager la ferme.

Hold each truss in position with the erection equipment until top chord temporary lateral restraint is installed and the truss is fastened to the bearing points.

Retenez chaque ferme en position avec l'équipement de montage jusqu'à ce que le dispositif de retenue latérale temporaire de la membrure supérieure soit installé et que la ferme soit fixée aux supports d'appui.

Installation of Single Trusses by Hand / Installation manuelle de fermes individuelles

Trusses 20' (6.1 m) or less support near peak. / Les fermes de 6.1m (20 pi) ou moins doivent être supportées au faîte.

Trusses 30' (9.1 m) or less support at quarter points. / Les fermes de 9.1m (30 pi) ou moins doivent être supportées aux quarts de la longueur.

Temporary Restraint & Bracing / Retenue et contreventement temporaires

Refer to BCSI-B2C for more information. / Reportez-vous au BCSI-B2C pour obtenir plus de renseignements.

Locate ground braces for first truss directly in line with all rows of top chord temporary lateral restraint (see table in the next column).

Localisez les contreventements du sol de la première ferme directement en ligne avec toutes les rangées de la retenue latérale temporaire à la membrure supérieure (consultez le tableau de la colonne suivante).

DO NOT walk on unbraced trusses. / NE marchez PAS sur des fermes non contreventées.

DO NOT stand on truss overhangs until roof sheathing has been applied to the truss and overhangs. / NE VOUS TENEZ PAS sur les surplombs de ferme avant que le revêtement structural ne soit appliqué sur la ferme et les surplombs.

Steps to Setting Trusses / Étapes pour placer les fermes

Restraint/Bracing for All Planes of Trusses / Retenue et contreventement pour tous les plans de fermes

Minimum lumber sizes for lateral restraint and diagonal bracing is 2x4 stress-graded lumber. Attach to each truss with at least 2-3" common spikes (0.122" x 3") 2-3" common nails (0.144" x 3") or 2-3" pneumatic (0.131" x 3") nails.

This restraint and bracing method is for all trusses except 3x2 and 4x2 parallel chord trusses (PCTs). See top of next column for temporary restraint and bracing of PCTs.

Cette méthode de retenue et de renforcement convient à toutes les fermes, sauf les fermes à membrure parallèle de 3x2 ou 4x2 (FMP). Reportez-vous à la partie supérieure de la colonne suivante pour la retenue et le renforcement temporaires des FMP.

1) TOP CHORD — MEMBRURE SUPÉRIEURE

Pitch	Max. Spacing
Up to 30° (Jusqu'à 9.1m)	10' o.c. max (3m c/c max.)
30 to 45° (9.1m à 13.7m)	8' o.c. max (2.4m c/c max.)
45 to 60° (13.7m à 18.3m)	6' o.c. max (1.8m c/c max.)
60 to 80° (18.3m à 24.4m)	4' o.c. max (1.2m c/c max.)

See BCSI-B2C for TCTLR options. Reportez-vous au BCSI-B2C pour connaître les options de CLTMS.

Refer to BCSI-B2C for gable end frame restraint/bracing reinforcement information. Pour obtenir des renseignements sur la retenue et le contreventement et le renforcement des charpentes de pignon, reportez-vous au BCSI-B2C.

Note: Ground braces not shown for clarity. Pour simplifier, le contreventement de sol n'est pas montré.

Repeat diagonal braces for each set of 4 trusses. Répétez le renforcement diagonal pour chaque ensemble de quatre fermes.

2) WEB MEMBER PLANE — PLAN DEMEMBRURE D'AME

Lateral Restraint & Diagonal Bracing Are Very Important

La Retenue Latérale Et Le Contreventement Diagonal Sont Très Importants

3) BOTTOM CHORD — MEMBRURE

Diagonal braces every 10 truss spaces 30' (9.1m). Diagonaux chaque 10 (9.1m).

Installation & Bracing for Gull and Gull Parallel Chord Trusses / Retenue et contreventement pour les fermes à membrure parallèle du gull et du gull

Refer to BCSI-B2C for more information. / Reportez-vous au BCSI-B2C pour obtenir plus de renseignements.

Apply diagonal brace to roof area at eaves and cantilever. / Appliquez une contrefiche diagonale au toit aux avant-toits et au toit des gables.

All lateral restraint and bracing shall be installed as per the truss manufacturer's specifications. Toutes les contraintes latérales et le contreventement doivent être installés selon les spécifications du fabricant de fermes.

Top chord temporary lateral restraint spacing shall be 10' m. max.
L'espacement de la contrainte latérale temporaire des membres supérieures doit être 10' pi (3m) c/c max.

Installing — Installation

Max. Bow	Truss Length
1/8"	10' (3m)
1/4"	20' (6.1m)
3/8"	30' (9.1m)
1/2"	40' (12.2m)
5/8"	50' (15.2m)
3/4"	60' (18.3m)
7/8"	70' (21.3m)
1"	80' (24.4m)
1 1/8"	90' (27.4m)
1 1/4"	100' (30.5m)
1 3/8"	110' (33.5m)
1 1/2"	120' (36.6m)

Plumb line / Ligne d'aplomb

Tolerances for out-of-plumb / Tolerances hors aplomb

Construction Loading / Chargement de construction

DO NOT proceed with construction until all lateral restraint and bracing is securely and properly in place. NE continuez PAS la construction sans que toutes les retenues latérales et tous les contreventements soient bien fixés et adéquatement mis en place.

DO NOT exceed maximum stack heights. Refer to BCSI-B4C for more information. NE dépassez PAS les hauteurs d'empilement maximales. Pour obtenir plus de renseignements, reportez-vous au BCSI-B4C.

NEVER stack materials over a peak, at mid-span, on cantilevers or overhangs. N'EMPILEZ JAMAIS des matériaux près d'un faîte, au milieu, sur des poutres-consoles ou des surplombs.

DO NOT overload small groups or single trusses. NE surchargez PAS de petits groupes ou des fermes uniques.

Place loads over as many trusses as possible. Répartissez la charge sur le plus grand nombre de fermes possible.

Position loads over load bearing walls. Positionnez les chargeurs des murs porteurs.

Alterations — Modifications

Refer to BCSI-B3C. / Reportez-vous au BCSI-B3C.

DO NOT cut, alter, or drill any structural member of a truss unless specifically permitted by the truss design drawing. NE coupez, NE modifiez et NE percez PAS les éléments de structure d'une ferme à moins que cela soit spécifiquement permis par le dessin de conception des fermes.

Trusses that have been overloaded during construction or altered without the truss manufacturer's prior approval may render the truss manufacturer's limited warranty null and void.

La garantie limitée du fabricant des fermes sera annulée si les fermes ont été surchargées pendant la construction ou modifiées sans l'approbation préalable du fabricant des fermes.

Contact the truss manufacturer for more information or consult a registered design professional for assistance.

Contactez le fabricant des fermes pour obtenir de plus amples renseignements ou consulter un professionnel en conception.

SBCA

CANADAB1 B0220

AVERTISSEMENT! GUIDE POUR LA MANIPULATION, L'INSTALLATION, LA RETENUE ET LE CONTREVENTEMENT DES FERMES
Les portées supérieures à 18,3m (60 pi) peuvent exiger un contreventement permanent complexe. Veuillez toujours consulter un professionnel enregistré.

MHP 23034

CORPORATION OF THE CITY OF OSHAWA
TRUE COPY
OF PERMIT PLANS
Nov 14 2023
PER: _____
CHIEF BUILDING OFFICIAL

CANADA B3C

BCSI-B3C SUMMARY SHEET - PERMANENT RESTRAINT/BRACING OF CHORDS & WEB MEMBERS

Truss clear spans of 60' or greater may require complex permanent bracing. Please always consult a registered design professional.

Disregarding permanent restraint/bracing is a major cause of truss field performance problems and has been known to lead to roof or floor system collapse.

Le fait de négliger la retenue et le contreventement permanents est une cause majeure des problèmes relatifs à la performance des fermes sur le chantier et cela est reconnu pour avoir entraîné l'effondrement des systèmes de toit et de plancher.

Trusses with clear spans of 60 feet (18.3 m) or greater may require complex permanent bracing. Please always consult a registered design professional.

Les fermes ayant des portées libres de 18,3m (60 pi) et plus peuvent exiger un contreventement permanent complexe. Veuillez toujours consulter un concepteur professionnel agréé

Bracing & Fasteners
Contreventement et de retenue et de contreventement

Commonly used restraint/bracing materials include wood structural panels, gypsum board sheathing, stress-graded lumber, proprietary metal products, and metal purlins and straps.

Les matériaux de retenue et de contreventement communs incluent les panneaux structuraux de bois, le revêtement de panneaux de gypse, le bois classé par résistance mécanique, les produits métalliques exclusifs, les pannes et les feuillards métalliques.

MINIMUM ATTACHMENT REQUIREMENTS FOR LUMBER RESTRAINT/BRACING* *LES EXIGENCES MINIMUMS DES ATTACHMENTS POUR LA CONTRAINTE/LE CONTREVENTEMENT DU BOIS**		
Lumber Size *Taille de Bois*	Minimum Nail Size *Taille Minimum de Clou*	Minimum Number of
2x4 stress-graded *38mm x 89mm classé par la résistance mécanique*	3" common spiral (0.122 x3") *clous vrillés ordinaires 3" (3mm x 76mm)*	2
	3" common wire @ (.144"x3") *clous vrillés ordinaires 3" (3.7mm x 76mm)*	
2x6 stress-graded *38mm x 140mm classé par la résistance mécanique*	0.131" x 3" pneumatic *fixe pneumatique 0.131"x3"(3.3mm x 76mm)*	3

Use attachment requirements may be specified by the truss designer or building designer. The fasteners and attachment for bracing materials such as wood structural panels, gypsum board sheathing, proprietary metal connecting products, and metal purlins and straps are provided by the bracing designer.

Les autres exigences d'attachement peuvent être spécifiées par le dessinateur de fermes ou le concepteur du bâtiment.

Les clous et attachement pour des matériaux de contreventement comme les panneaux structuraux de bois, le revêtement de panneaux de gypse, les produits métalliques exclusifs pour la contrainte ou le contreventement, et les pannes et les feuillards sont fournis par le concepteur du bâtiment.

Bracing for the Various Planes of a Truss
Contreventement permanent pour les divers plans d'une ferme

Permanent bracing is important because it:
a) prevents out-of-plane buckling of truss members
b) helps maintain proper truss spacing
c) resists and transfers lateral loads from wind and seismic forces

Le contreventement permanent est important parce qu'il :
a) prévient le flambement hors plan des membrures de fermes
b) aide à maintenir l'espacement approprié des fermes
c) résiste aux charges latérales des forces du vent et des forces sismiques et les transfère

Trusses require permanent bracing within ALL of the following planes:
1. Top chord plane
2. Bottom chord plane
3. Web member plane

Les fermes exigent un contreventement permanent dans TOUS les plans suivants :
1. Le plan de la membrure supérieure
2. Le plan de la membrure inférieure
3. Le plan de la membrure d'âme

Simplified: Without permanent bracing, the truss, or a portion of its members, will buckle (i.e. fail) at loads far less than design.

Simplifié : Sans un contreventement permanent, la ferme, ou une partie de ses membrures, flambera (c'est-à-dire fera défaut) à des charges grandement inférieures à celles indiquées dans le conception.

1. Permanent Bracing for the Top Chord Plane
Contreventement permanent pour le plan de membrure supérieure

Use plywood, oriented strand board (OSB), or wood or metal structural purlins that are properly braced. Attach to each truss.

Utilisez du contreplaqué, des panneaux OSB ou des pannes structurales de bois ou de métal correctement contreventées. Fixez à chaque ferme.

The truss design drawing (TDD) provides information on the assumed support for the top chord.

Le dessin de conception de ferme (DCF) fournit des renseignements sur le support prévu pour la membrure supérieure.

Fasteners size and spacing requirements and grade for the sheathing, purlins and bracing are provided in the building code and/or by the building designer.

Le code du bâtiment et /ou le concepteur du bâtiment fournissent les exigences relatives à la taille des attaches, à l'espacement et au classement du revêtement, des pannes et du contreventement.

2. Permanent Bracing for the Bottom Chord Plane
Contreventement permanent pour le plan de membrure inférieure

Use rows of continuous lateral restraint with diagonal bracing (gypsum board sheathing in some other ceiling material capable of functioning as a diaphragm).

Utilisez des rangées de retenues latérales continues avec un contreventement diagonal, un revêtement de panneaux de gypse ou un autre matériau en mesure de fonctionner comme diaphragme.

The TDD provides information on the assumed support for the bottom chord.

Le DCF fournit des renseignements sur le support prévu pour la membrure inférieure.

Install bottom chord permanent lateral restraint at the spacing indicated on the TDD and/or by the building designer with a maximum of 10' (3 m) on center.

Installez la retenue latérale permanente de la membrure inférieure à l'espacement indiqué sur le DCF et /ou par le concepteur du bâtiment avec un maximum de 3m (10 pi) entraxes.

Diagonal bracing: Attach to each truss.
Contreventement en diagonale
Attacher à chaque ferme

Lateral restraint and diagonal bracing used to brace the bottom chord plane.

Diagonal sont utilisés pour contreventer le plan de membrure inférieure

Note: Some chord and web members not shown for clarity.
Pour simplifier, des membrures et des membrures d'âmes ne sont pas montrées

3. Permanent Bracing for the Web Member Plane
Contreventement permanent pour le plan de membrure d'âme

Web member permanent bracing collects and transfers buckling restraint forces and/or lateral loads from wind and seismic forces. The same bracing can often be used for both functions.

Le contreventement permanent de la membrure d'âme recupère et transfère les forces de retenue de flambement et /ou les charges latérales des forces du vent et des forces sismiques. La même contreventement peut souvent être utilisé pour les deux fonctions.

Individual Web Member Permanent Restraint & Bracing:
Retenue et contreventement permanents des membrures d'âme individuelles

Check the TDD to determine which web members (if any) require restraint to resist buckling.

Vérifiez le DCF pour déterminer quelles membrures d'âme (si applicable) nécessitent une retenue pour résister au flambement.

Restrain and brace with:
A. continuous lateral restraint & diagonal bracing
B. individual member web reinforcement

Retenue et contreventement à l'aide :
A. d'une retenue latérale continue et d'un contreventement diagonal
B. d'un renforcement des membrures d'âme individuelles

4. Continuous Lateral Restraint (CLR) & Diagonal Bracing
Retenue latérale continue (RLC) et contreventement diagonal

Install lateral rows of CLR at the intervals indicated on the TDD.

Fixez la RLC aux emplacements indiqués sur le DCF.

Group of 3 trusses
Groupe de 3 fermes

Group of 2 trusses
Groupe de 2 fermes

Lateral restraint and diagonal bracing can also be used with small groups of trusses (i.e. three or less). Attach the lateral restraint and diagonal brace to each web member they cross.

Les retenues latérales et le contreventement diagonal peuvent également être utilisés avec de petits groupes de fermes (p. ex., trois ou moins). Fixez la retenue latérale et le contreventement diagonal à chaque membrure d'âme qu'ils traversent.

ALWAYS DIAGONALLY BRACE THE CONTINUOUS LATERAL RESTRAINT!
CONTREVENTEZ TOUJOURS EN DIAGONAL LA RETENUE LATÉRALE CONTINUE!

8. Individual Web Member Reinforcement
Renforcement des membrures d'âme individuelles

Web Member Plane Permanent Building Stability Bracing to Transfer Wind & Seismic Forces

Lateral restraint and bracing is typically specified by the building designer.

Refer to the TDD for the maximum assumed spacing between rows of lateral restraint (e.g. purlins) attached to the top chord of the supporting truss.

Reportez-vous au DAP pour connaître l'espacement maximal supposé entre les rangées de contrainte latérale (par ex., les pannes) fixées à la membrure supérieure de la ferme de support.

The TDD provides the assumed thickness of the restraint and minimum connection requirements between the cap and the supporting truss or restraint.

Le DCF fournit l'épaisseur prévue de la retenue et les exigences minimales de raccordement entre la ferme chapeau et la ferme portante ou la retenue.

If diagonal bracing is used to restrain the LATERAL, repeat at 10' (3 m) intervals, or as specified in the construction documents.

Si un contreventement diagonal est utilisé pour retenir la ligne RLC, répétez à des intervalles de 3m (10 pi) ou comme le précisent les documents de construction.

Lone endwall permanent diagonal bracing. Locate in the will bottom chord permanent CLR or as specified by the building designer in accordance with the construction documents. Fixez en ligne avec la CLR permanente inférieure ou comme le spécifie par le concepteur du bâtiment.

Bracing is designed to resist the assumed lateral and/or seismic forces from the gable end wall.

Bottom Chords
Membrure inférieure en pente

The gable end frame should always match the profile of the adjacent trusses to permit installation of proper bottom chord plane restraint & bracing unless special bracing is designed to support the end wall.

La ferme du pignon devrait toujours correspondre au profil des fermes adjacentes pour permettre l'installation de la retenue et du contreventement appropriés du plan de membrure inférieure, à moins qu'un contreventement spécial soit conçu pour supporter le mur d'extrémité.

Using a flat gable end frame with adjacent trusses sloped bottom chords is prohibited. Using codes or adequate bracing of this [illegible] is difficult and [illegible] impossible. Special end wall bracing design considerations are required by the building designer if the gable end frame profile does not match the adjacent trusses.

Utiliser un cadre de pignon plat avec des fermes adjacentes qui présentent des membrures inférieures en pente [illegible] n'est pas permis. Certains codes du bâtiment [illegible] la ferme de pignon à [illegible] adjacentes peut être difficile [illegible] impossible. Des considérations spéciales de conception de contreventement de mur d'extrémité sont requises par le concepteur du bâtiment si le profil du cadre de pignon plat ne correspond pas aux fermes adjacentes.

Permanent Bracing for Special Conditions
Contreventement permanent pour des conditions spéciales

Sway Bracing—Entretoise de contreventement

Sway bracing is installed at the discretion of the building designer to help stabilize the truss system and minimize the lateral movement due to wind and seismic loads.

L'entretoise de contreventement est installé à la discrétion du concepteur du bâtiment pour aider à stabiliser le système de fermes et à minimiser le mouvement latéral causé par les charges du vent et des charges sismiques.

Sway bracing installed continuously across the building also serves to distribute gravity loads between trusses of varying stiffness.

L'entretoise de contreventement installée de façon continue le long d'un bâtiment sert également à distribuer les charges de gravité entre les fermes de rigidité variable.

Permanent Restraint/Bracing for the Top Chord in a Piggyback Assembly
Retenue et contreventement permanent pour la membrure supérieure dans un assemblage de fermes chapeaux

Provide lateral restraint and bracing by:
- fastening rows of nominal 2x4 stress-graded lumber CLR and diagonal bracing
- connecting the CLR into the roof diaphragm
- adding structural sheathing or bracing frames
- some other equivalent means

Installez la retenue et le contreventement en :
- clouant des rangées de 38 x 89 et un contreventement diagonal de bois classé par résistance mécanique à au moins 4x2
- liant la RLC au diaphragme du toit
- ajoutant un revêtement structural ou des fermes de contreventement
- utilisant un autre moyen équivalent.

Regular diagonal bracing is at 10' intervals or as specified.
Revêtir le contreventement diagonal régulier aux intervalles de 10 pi (3 m), ou comme spécifié.

Refer to the TDD for the maximum assumed spacing between rows of lateral restraint (e.g. purlins) attached to the top chord of the supporting truss.

Reportez-vous au DAP pour connaître l'espacement maximal supposé entre les rangées de contrainte latérale (par ex., les pannes) fixées à la membrure supérieure de la ferme de support.

The TDD provides the assumed thickness of the restraint and minimum connection requirements between the cap and the supporting truss or restraint.

Le DCF fournit l'épaisseur prévue de la retenue et les exigences minimales de raccordement entre la ferme chapeau et la ferme portante ou la retenue.

If diagonal bracing is used to restrain the LATERAL, repeat at 10' (3 m) intervals, or as specified in the construction documents.

Si un contreventement diagonal est utilisé pour retenir la ligne RLC, répétez à des intervalles de 3m (10 pi) ou comme le précisent les documents de construction.

This documents summarizes the information produced in Section B3C of the 2014 Edition of Building Component Safety Information BCSI CANADA, Guide to Good Practice for Handling, Installing, Restraining & Bracing of Metal Plate Connected Wood Trusses.
Copyright © 2014 Structural Building Components Association and Truss Plate Institute of Canada. All Rights Reserved. This guide or any part thereof may not be reproduced in any form without the written permission of SBCA and TPI.
Reproducing & Bracing of Metal Plate Connected Wood Trusses
BCSI CANADA - Guide to Good Practice for Handling

SBCA
Structural Building Components Association
6300 Enterprise Lane · Madison, WI 53719
608-274-4848 · sbcacentral.com

Truss Plate Institute of Canada
Suite 100
100 Industrial Rd · Brantford, ON L3V 3G7
905.952.2800 · tpi.ca

CANADA B3C 0000

RETENUE ET CONTREVENTEMENT PERMANENTS DES MEMBRURES ET DES MEMBRURES D'ÂME

Les portées de 18,3m (60 pi) et plus peuvent exiger un contreventement permanent complexe. Veuillez toujours consulter un ingénieur professionnel.