JOB NAME	TRUSS NAME	QUANTITY	PLY	JOB DESC.	DRWG NO.
NE0723-137	G01	1	1	TRUSS DESC. GREENPARK - ZADORRA ESTATES - VILLA 12-1	

Version 8.630 S Mar 22 2023 MiTek Industries, Inc. Thu Jul 20 09:02:53 2023 Page 1
ID:VquVgowiAqiumFmAweaWlxz71eJ-QPu0P1toS40neb1WopNNsljLJcfAgQC2GMvlZwywEI0

CORPORATION OF THE CITY OF OSHAWA
TRUE COPY
OF PERMIT PLANS
Nov 14 - 2023
PER: C Morr
CHIEF BUILDING OFFICIAL

MHP 23039

Scale = 1:46.6

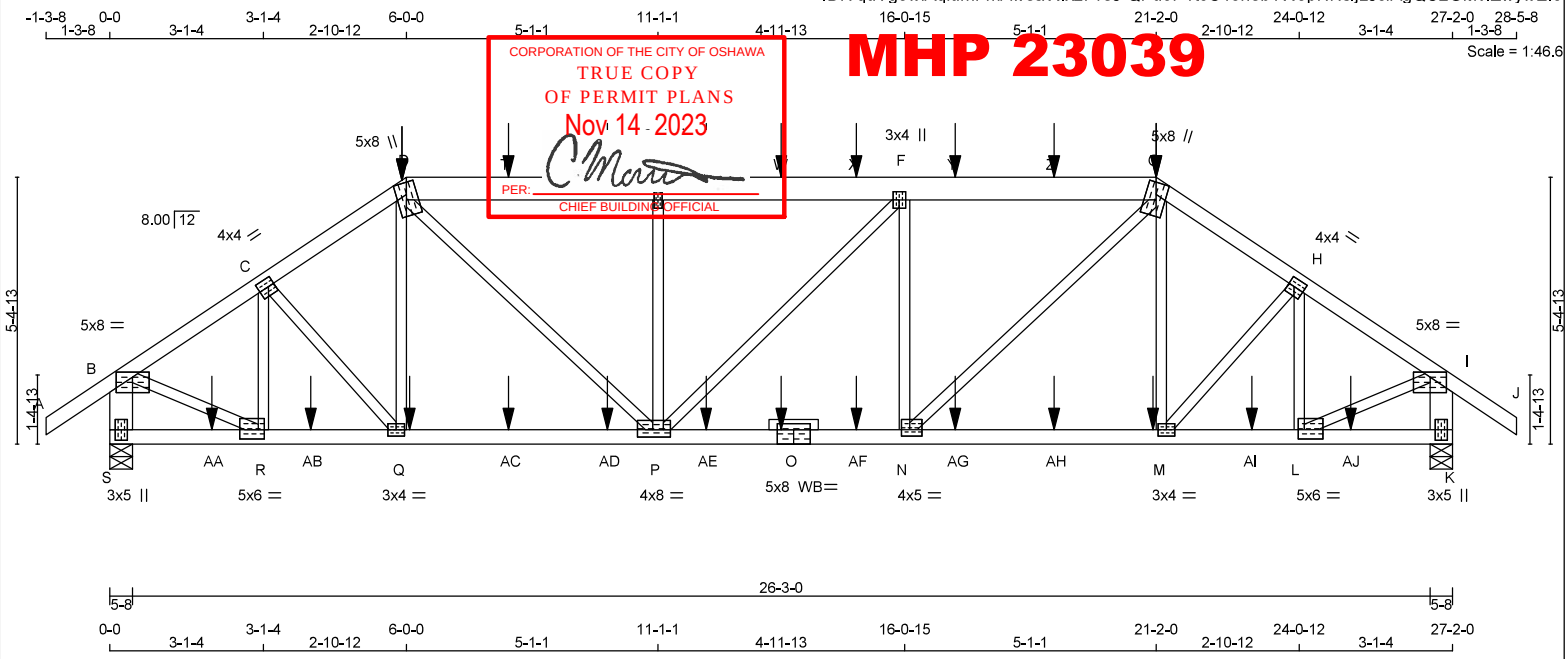

TOTAL WEIGHT = 131 lb [M]

LUMBER
N. L. G. A. RULES

CHORDS	SIZE		LUMBER	DESCR.
A - D	2x4	DRY	No.2	SPF
D - G	2x6	DRY	No.2	SPF
G - J	2x4	DRY	No.2	SPF
S - B	2x6	DRY	No.2	SPF
K - I	2x6	DRY	No.2	SPF
S - O	2x4	DRY	2100F 1.8E	SPF
O - K	2x4	DRY	2100F 1.8E	SPF
ALL WEBS EXCEPT	2x3	DRY	No.2	SPF

DRY: SEASONED LUMBER.

PLATES (table is in inches)

JT	TYPE	PLATES	W	LEN	Y	X
B	TMVW-p	MT20	5.0	8.0	1.25	4.00
C	TMWW-t	MT20	4.0	4.0	2.00	1.50
D	TTWW+m	MT20	5.0	8.0	Edge	
E	TMW+w	MT20	2.0	4.0		
F	TMWW+t	MT20	3.0	4.0		
G	TTWW+m	MT20	5.0	8.0	Edge	
H	TMWW-t	MT20	4.0	4.0	2.00	1.50
I	TMVW-p	MT20	5.0	8.0	1.25	4.00
K	BMV1+p	MT20	3.0	5.0		
L	BMWW-t	MT20	5.0	6.0	2.25	1.50
M	BMWW-t	MT20	3.0	4.0		
N	BMWW-t	MT20	4.0	5.0	1.50	2.00
O	BS-t	MT20	5.0	8.0		
P	BMWWW-t	MT20	4.0	8.0	1.75	3.75
Q	BMWW-t	MT20	3.0	4.0		
R	BMWW-t	MT20	5.0	6.0	2.25	1.50
S	BMV1+p	MT20	3.0	5.0		

Edge - INDICATES REFERENCE CORNER OF PLATE TOUCHES EDGE OF CHORD.

WB - INDICATES BLOCKING REQUIRED

LICENSED PROFESSIONAL ENGINEER
N.A. EL-MASRI
PROVINCE OF ONTARIO
Jul 20, 2023

READ ALL NOTES ON THIS PAGE AND ON THE ENGINEERING NOTES: TRUSSES. THE NOTE PAGE IS AN INTEGRAL PART OF THIS DRAWING AS IT CONTAINS SPECIFICATIONS AND CRITERIA USED IN THE DESIGN OF THIS COMPONENT.

DIMENSIONS, SUPPORTS AND LOADINGS SPECIFIED BY FABRICATOR TO BE VERIFIED BY BUILDING DESIGNER

BEARINGS

JT	FACTORED GROSS REACTION VERT	HORZ	MAXIMUM FACTORED GROSS REACTION DOWN	HORZ	UPLIFT	INPUT BRG IN-SX	REQRD BRG IN-SX
S	3350	0	3350	0	0	5-8	3-6
K	3351	0	3351	0	0	5-8	3-6

UNFACTORED REACTIONS

JT	1ST LCASE COMBINED	MAX./MIN. COMPONENT REACTIONS SNOW	LIVE	PERM.LIVE	WIND	DEAD	SOIL
S	2341	1696 / 0	0 / 0	0 / 0	0 / 0	645 / 0	0 / 0
K	2341	1696 / 0	0 / 0	0 / 0	0 / 0	645 / 0	0 / 0

BEARING MATERIAL TO BE SPF NO.2 OR BETTER AT JOINT(S) S, K
BEARING SIZE FACTOR = 1.15 AT JNT(S) S, K (BASED ON SUPPORT DEPTH = 1-8)

BRACING
TOP CHORD TO BE SHEATHED OR MAX. PURLIN SPACING = 3.17 FT.
MAX. UNBRACED BOTTOM CHORD LENGTH = 10.00 FT OR RIGID CEILING DIRECTLY APPLIED.

ALL PITCH BREAKS AND PERIMETER CORNER JOINTS MUST BE LATERALLY RESTRAINED.

LOADING
TOTAL LOAD CASES: (4)

CHORDS

MEMB. FR-TO	MAX. FACTORED FORCE (LBS)	FACTORED VERT. LOAD (PLF) FROM	TO	LC1	MAX CSI (LC)	MAX. UNBRAC LENGTH
A- B	0 / 45	-119.4	-119.4	0.18 (1)	10.00	
B- C	-3524 / 0	-119.4	-119.4	0.34 (1)	3.39	
C- D	-3930 / 0	-119.4	-119.4	0.38 (1)	3.17	
D- T	-4562 / 0	-119.4	-119.4	0.47 (1)	3.55	
T- U	-4562 / 0	-119.4	-119.4	0.47 (1)	3.55	
U- E	-4562 / 0	-119.4	-119.4	0.47 (1)	3.55	
E- V	-4561 / 0	-119.4	-119.4	0.48 (1)	3.53	
V- W	-4561 / 0	-119.4	-119.4	0.48 (1)	3.53	
W- X	-4561 / 0	-119.4	-119.4	0.48 (1)	3.53	
X- F	-4561 / 0	-119.4	-119.4	0.48 (1)	3.53	
F- Y	-4570 / 0	-119.4	-119.4	0.48 (1)	3.53	
Y- Z	-4570 / 0	-119.4	-119.4	0.48 (1)	3.53	
Z- G	-4570 / 0	-119.4	-119.4	0.48 (1)	3.53	
G- H	-3930 / 0	-119.4	-119.4	0.38 (1)	3.17	
H- I	-3525 / 0	-119.4	-119.4	0.34 (1)	3.39	
I- J	0 / 45	-119.4	-119.4	0.18 (1)	10.00	
S- B	-3307 / 0	0.0	0.0	0.24 (1)	5.71	
K- I	-3308 / 0	0.0	0.0	0.24 (1)	5.71	
S-AA	0 / 0	-18.2	-18.2	0.05 (4)	10.00	
AA- R	0 / 0	-18.2	-18.2	0.05 (4)	10.00	
R-AB	0 / 2948	-18.2	-18.2	0.30 (1)	10.00	
AB- Q	0 / 2948	-18.2	-18.2	0.30 (1)	10.00	
Q-AC	0 / 3272	-18.2	-18.2	0.32 (1)	10.00	
AC-AD	0 / 3272	-18.2	-18.2	0.32 (1)	10.00	
AD- P	0 / 3272	-18.2	-18.2	0.32 (1)	10.00	
P-AE	0 / 4570	-18.2	-18.2	0.44 (1)	10.00	
AE- O	0 / 4570	-18.2	-18.2	0.44 (1)	10.00	
O-AF	0 / 4570	-18.2	-18.2	0.44 (1)	10.00	
AF- N	0 / 4570	-18.2	-18.2	0.44 (1)	10.00	
N-AG	0 / 3272	-18.2	-18.2	0.33 (1)	10.00	
AG-AH	0 / 3272	-18.2	-18.2	0.33 (1)	10.00	
AH- M	0 / 3272	-18.2	-18.2	0.33 (1)	10.00	
M-AI	0 / 2949	-18.2	-18.2	0.29 (1)	10.00	
AI- L	0 / 2949	-18.2	-18.2	0.29 (1)	10.00	
L-AJ	0 / 0	-18.2	-18.2	0.05 (4)	10.00	
AJ- K	0 / 0	-18.2	-18.2	0.05 (4)	10.00	

WEBS

MEMB. FR-TO	MAX. FACTORED FORCE (LBS)	MAX CSI (LC)
R- C	-970 / 0	0.21 (1)
C- Q	0 / 482	0.12 (1)
Q- D	-200 / 69	0.09 (1)
D- P	0 / 1817	0.45 (1)
P- E	-1108 / 0	0.47 (1)
P- F	-12 / 0	0.01 (1)
N- F	-1116 / 0	0.47 (1)
N- G	0 / 1829	0.45 (1)
M- G	-204 / 68	0.09 (1)
M- H	0 / 481	0.12 (1)
L- H	-969 / 0	0.21 (1)
B- R	0 / 3121	0.77 (1)
L- I	0 / 3122	0.77 (1)

SPECIFIED CONCENTRATED LOADS (LBS)

JT	LOC.	LC1	MAX-	MAX+	FACE	DIR.	TYPE	HEEL	CONN.
D	6-0-0	-423	-423	—	FRONT	VERT	TOTAL	—	C1
G	21-2-0	-423	-423	—	FRONT	VERT	TOTAL	—	C1
M	21-1-4	-22	-22	—	FRONT	VERT	TOTAL	—	C1
O	13-7-0	-22	-22	—	FRONT	VERT	TOTAL	—	C1
Q	6-0-12	-22	-22	—	FRONT	VERT	TOTAL	—	C1
T	8-0-12	-102	-102	—	FRONT	VERT	TOTAL	—	C1
U	10-0-12	-102	-102	—	FRONT	VERT	TOTAL	—	C1
V	12-0-12	-102	-102	—	FRONT	VERT	TOTAL	—	C1
W	13-7-0	-102	-102	—	FRONT	VERT	TOTAL	—	C1
X	15-1-4	-102	-102	—	FRONT	VERT	TOTAL	—	C1
Y	17-1-4	-102	-102	—	FRONT	VERT	TOTAL	—	C1

DESIGN CRITERIA

*** SPECIAL LOADS ANALYSIS ***
GEOMETRY AND/OR BASIC LOADS CHANGED BY USER.
LOADS WERE DERIVED FROM USER INPUT
NO FURTHER MODIFICATIONS WERE MADE

SPECIFIED LOADS:

TOP CH.	LL	=	34.8	PSF
	DL	=	6.0	PSF
BOT CH.	LL	=	0.0	PSF
	DL	=	7.3	PSF
TOTAL LOAD		=	48.1	PSF

SPACING = 24.0 IN. C/C

LOADING IN FLAT SECTION BASED ON A SLOPE OF 2.00/12 MINIMUM

*** NON STANDARD GIRDER ***
ADDT'L USER-DEFINED LOADS APPLIED TO ALL LOAD CASES.

THIS TRUSS IS DESIGNED FOR RESIDENTIAL OR SMALL BUILDING REQUIREMENTS OF PART 9, NBCC 2015

THIS DESIGN COMPLIES WITH:
- PART 9 OF BCBC 2018 , NBC-2019AE
- PART 9 OF OBC 2012 (2019 AMENDMENT)
- CSA 086-14
- TPIC 2014

(55 % OF 48.1 P.S.F. G.S.L. PLUS 8.4 P.S.F. RAIN LOAD) EQUALS 34.8 P.S.F. SPECIFIED ROOF LIVE LOAD

ALLOWABLE DEFL.(LL)= L/360 (0.91")
CALCULATED VERT. DEFL.(LL) = L/ 999 (0.15")
ALLOWABLE DEFL.(TL)= L/360 (0.91")
CALCULATED VERT. DEFL.(TL) = L/ 999 (0.27")

CSI: TC=0.48/0.97 (F-G:1) , BC=0.44/0.97 (N-P:1) , WB=0.77/0.97 (I-L:1) , SSI=0.38/1.00 (F-G:1)

DOL LUMBER=1.00 NAIL=1.00 LS BEND=1.00 COMP=1.00 SHEAR=1.00 TENS= 1.00

COMPANION LIVE LOAD FACTOR = 1.00

AUTOSOLVE HEELS OFF

TRUSS PLATE MANUFACTURER IS NOT RESPONSIBLE FOR QUALITY CONTROL IN THE TRUSS MANUFACTURING PLANT .

NAIL VALUES

PLATE	GRIP(DRY) (PSI) MAX	MIN	SHEAR (PLI) MAX	MIN	SECTION (PLI) MAX	MIN
MT20	650	371	1747	788	1987	1873

PLATE PLACEMENT TOL. = 0.250 inches

PLATE ROTATION TOL. = 5.0 Deg.

JSI GRIP= 0.90 (I) (INPUT = 0.90)
JSI METAL= 0.99 (O) (INPUT = 1.00)

CONTINUED ON PAGE 2

KOTT

JOB NAME	TRUSS NAME	QUANTITY	PLY	JOB DESC.	DRWG NO.
NE0723-137	G01	1	1	GREENPARK - ZADORRA ESTATES - VILLA 12-1 (TRUSS DESC.)	

Version 8.630 S Mar 22 2023 MiTek Industries, Inc. Thu Jul 20 09:02:54 2023 Page 2
ID:VquVgowiAqiumFmAweaWxz71eJ-vbSOcNuQDN8eFIciMWucPzGW30?PPtSCV0fr5MywEI?

MHP 23039

CONDITIONAL APPROVAL BY CITY OF OSHAWA
TRUE COPY OF PERMIT PLANS
Nov 14, 2023
CHIEF BUILDING OFFICIAL

SPECIFIED CONCENTRATED LOADS (LBS)

JT	LOC.	LC	MAX-	MAX+	FACE	DIR.	TYPE	E	CON
Z	19-1-4	-102	-102	—	FRONT	VERT	TOTAL	—	C1
AA	2-0-12	-21	-21	—	FRONT	VERT	TOTAL	—	C1
AB	4-0-12	-22	-22	—	FRONT	VERT	TOTAL	—	C1
AC	8-0-12	[illegible]	[illegible]	—	FRONT	VERT	TOTAL	—	C1
AD	10-0-12	[illegible]	[illegible]	[illegible]	FRONT	VERT	TOTAL	—	C1
AE	12-0-12	[illegible]	[illegible]	[illegible]	FRONT	VERT	TOTAL	—	C1
AF	15-1-4	[illegible]	[illegible]	[illegible]	FRONT	VERT	TOTAL	—	C1
AG	17-1-4	[illegible]	[illegible]	[illegible]	FRONT	VERT	TOTAL	—	C1
AH	19-1-4	-22	-22	—	FRONT	VERT	TOTAL	—	C1
AI	23-1-4	-22	-22	—	FRONT	VERT	TOTAL	—	C1
AJ	25-1-4	-21	-21	—	FRONT	VERT	TOTAL	—	C1

CONNECTION REQUIREMENTS

1) **C1:** A SUITABLE HANGER/MECHANICAL CONNECTION IS REQUIRED.

LICENSED PROFESSIONAL ENGINEER
N.A. EL-MASRI
PROVINCE OF ONTARIO
Jul 20, 2023

READ ALL NOTES ON THIS PAGE AND ON THE ENGINEERING NOTES: TRUSSES. THE NOTE PAGE IS AN INTEGRAL PART OF THIS DRAWING AS IT CONTAINS SPECIFICATIONS AND CRITERIA USED IN THE DESIGN OF THIS COMPONENT.

KOTT

JOB NAME	TRUSS NAME	QUANTITY	PLY	JOB DESC.	DRWG NO.
NE0723-137	G02	1	1	TRUSS DESC. GREENPARK - ZADORRA ESTATES - VILLA 12-1	

Version 8.630 S Mar 22 2023 MiTek Industries, Inc. Thu Jul 20 09:02:55 2023 Page 1

ID:VquVgowiAqiumFmAweaWxz71eJ-No0nqjv2_hGVtuBuwEPryApaHPDD8LHLkgOOepywEI_

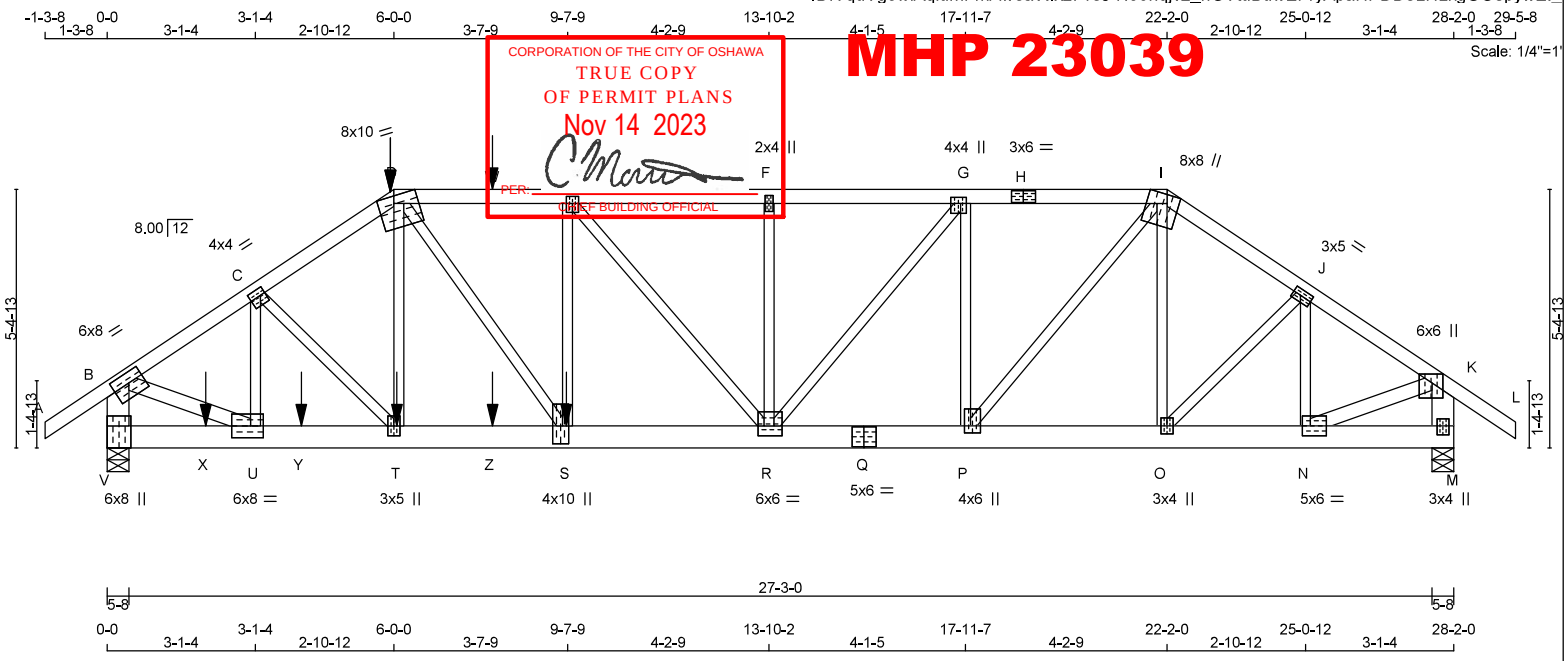

CORPORATION OF THE CITY OF OSHAWA
TRUE COPY
OF PERMIT PLANS
Nov 14 2023
PER:
CHIEF BUILDING OFFICIAL
MHP 23039

TOTAL WEIGHT = 148 lb

LUMBER

N. L. G. A. RULES

CHORDS	SIZE		LUMBER	DESCR.
A - D	2x4	DRY	No.2	SPF
D - H	2x4	DRY	No.2	SPF
H - I	2x4	DRY	No.2	SPF
I - L	2x4	DRY	No.2	SPF
V - B	2x6	DRY	No.2	SPF
M - K	2x6	DRY	No.2	SPF
V - Q	2x6	DRY	No.2	SPF
Q - M	2x6	DRY	No.2	SPF
ALL WEBS	2x3	DRY	No.2	SPF
EXCEPT				
B - U	2x4	DRY	No.2	SPF
N - K	2x4	DRY	No.2	SPF

DRY: SEASONED LUMBER.

PLATES (table is in inches)

JT	TYPE	PLATES	W	LEN	Y	X
B	TMVW-t	MT20	6.0	8.0	2.50	3.75
C	TMWW-t	MT20	4.0	4.0	1.75	1.25
D	TTWW-m	MT20	8.0	10.0	Edge	4.00
E	TMWW+t	MT20	3.0	4.0	1.75	1.50
F	TMW+w	MT20	2.0	4.0		
G	TMWW+t	MT20	4.0	4.0	1.50	1.50
H	TS-t	MT20	3.0	6.0		
I	TTWW+m	MT20	8.0	8.0	Edge	3.00
J	TMWW-t	MT20	3.0	5.0	1.50	2.00
K	TMVW+p	MT20	6.0	6.0	2.25	2.75
M	BMV1+p	MT20	3.0	4.0	2.25	1.50
N	BMWW-t	MT20	5.0	6.0	2.50	2.00
O	BMWW+t	MT20	3.0	4.0		
P	BMWW+t	MT20	4.0	6.0	1.75	1.50
Q	BS-t	MT20	5.0	6.0		
R	BMWWW-t	MT20	6.0	6.0	2.50	1.50
S	BMWW+t	MT20	4.0	10.0	4.50	1.50
T	BMWW+t	MT20	3.0	5.0		
U	BMWW-t	MT20	6.0	8.0	3.00	3.25
V	BMV1+t	MT20	6.0	8.0	5.50	

Edge - INDICATES REFERENCE CORNER OF PLATE TOUCHES EDGE OF CHORD.

DIMENSIONS, SUPPORTS AND LOADINGS SPECIFIED BY FABRICATOR TO BE VERIFIED BY BUILDING DESIGNER

BEARINGS

JT	FACTORED GROSS REACTION VERT	HORZ	MAXIMUM FACTORED GROSS REACTION DOWN	HORZ	UPLIFT	INPUT BRG IN-SX	REQRD BRG IN-SX
V	4300	0	4300	0	0	5-8	5-8
M	3084	0	3084	0	0	5-8	4-8

UNFACTORED REACTIONS

JT	1ST LCASE COMBINED	MAX./MIN. COMPONENT REACTIONS SNOW	LIVE	PERM.LIVE	WIND	DEAD	SOIL
V	3001	2196 / 0	0 / 0	0 / 0	0 / 0	805 / 0	0 / 0
M	2151	1582 / 0	0 / 0	0 / 0	0 / 0	569 / 0	0 / 0

BEARING MATERIAL TO BE SPF NO.2 OR BETTER AT JOINT(S) V, M
BEARING SIZE FACTOR = 1.15 AT JNT(S) V (BASED ON SUPPORT DEPTH = 1-8)

BRACING

TOP CHORD TO BE SHEATHED OR MAX. PURLIN SPACING = 1.81 FT.
MAX. UNBRACED BOTTOM CHORD LENGTH = 10.00 FT OR RIGID CEILING DIRECTLY APPLIED.

ALL PITCH BREAKS AND PERIMETER CORNER JOINTS MUST BE LATERALLY RESTRAINED.

LOADING

TOTAL LOAD CASES: (4)

CHORDS

MEMB. FR-TO	MAX. FORCE (LBS)	FACTORED VERT. LOAD (PLF) FROM	TO	LC1	MAX CSI (LC)	MAX. UNBRAC LENGTH
A- B	0 / 45	-119.4	-119.4	0.18 (1)	10.00	
B- C	-4735 / 0	-119.4	-119.4	0.48 (1)	2.79	
C- D	-5387 / 0	-119.4	-119.4	0.56 (1)	2.50	
D- W	-6071 / 0	-119.4	-119.4	0.90 (1)	1.81	
W- E	-6071 / 0	-119.4	-119.4	0.90 (1)	1.81	
E- F	-5528 / 0	-119.4	-119.4	0.83 (1)	2.14	
F- G	-5528 / 0	-119.4	-119.4	0.81 (1)	2.17	
G- H	-4541 / 0	-119.4	-119.4	0.65 (1)	2.66	
H- I	-4541 / 0	-119.4	-119.4	0.65 (1)	2.66	
I- J	-3658 / 0	-119.4	-119.4	0.36 (1)	3.31	
J- K	-3281 / 0	-119.4	-119.4	0.33 (1)	3.52	
K- L	0 / 45	-119.4	-119.4	0.18 (1)	10.00	
V- B	-4223 / 0	0.0	0.0	0.30 (1)	5.11	
M- K	-3027 / 0	0.0	0.0	0.22 (1)	5.94	
V- X	0 / 0	-18.2	-18.2	0.09 (1)	10.00	
X- U	0 / 0	-18.2	-18.2	0.09 (1)	10.00	
U- Y	0 / 3954	-18.2	-18.2	0.60 (1)	10.00	
Y- T	0 / 3954	-18.2	-18.2	0.60 (1)	10.00	
T- Z	0 / 4451	-18.2	-18.2	0.70 (1)	10.00	
Z- S	0 / 4451	-18.2	-18.2	0.70 (1)	10.00	
S- R	0 / 6072	-18.2	-18.2	0.91 (1)	10.00	
R- Q	0 / 4540	-18.2	-18.2	0.65 (1)	10.00	
Q- P	0 / 4540	-18.2	-18.2	0.65 (1)	10.00	
P- O	0 / 3016	-18.2	-18.2	0.44 (1)	10.00	
O- N	0 / 2746	-18.2	-18.2	0.42 (1)	10.00	
N- M	0 / 0	-18.2	-18.2	0.07 (1)	10.00	

WEBS

MEMB. FR-TO	MAX. FORCE (LBS)	MAX CSI (LC)
U- C	-1295 / 0	0.27 (1)
C- T	0 / 718	0.18 (1)
T- D	-250 / 42	0.10 (1)
D- S	0 / 2763	0.68 (1)
S- E	0 / 78	0.03 (4)
E- R	-846 / 0	0.65 (1)
R- F	-464 / 0	0.20 (1)
R- G	0 / 1561	0.39 (1)
P- G	-1751 / 0	0.74 (1)
P- I	0 / 2368	0.59 (1)
O- I	-141 / 15	0.06 (1)
O- J	0 / 390	0.10 (1)
N- J	-907 / 0	0.19 (1)
B- U	0 / 4153	0.73 (1)
N- K	0 / 2885	0.51 (1)

SPECIFIED CONCENTRATED LOADS (LBS)

JT	LOC.	LC1	MAX-	MAX+	FACE	DIR.	TYPE	HEEL	CONN.
D	6-0-0	-423	-423	—	BACK	VERT	TOTAL	—	C1
S	9-7-4	-1606	-1606	—	BACK	VERT	TOTAL	—	C1
T	6-0-12	-22	-22	—	BACK	VERT	TOTAL	—	C1
W	8-0-12	-102	-102	—	BACK	VERT	TOTAL	—	C1
X	2-0-12	-21	-21	—	BACK	VERT	TOTAL	—	C1
Y	4-0-12	-22	-22	—	BACK	VERT	TOTAL	—	C1
Z	8-0-12	-22	-22	—	BACK	VERT	TOTAL	—	C1

CONNECTION REQUIREMENTS

1) **C1:** A SUITABLE HANGER/MECHANICAL CONNECTION IS REQUIRED.

DESIGN CRITERIA

*** SPECIAL LOADS ANALYSIS ***
GEOMETRY AND/OR BASIC LOADS CHANGED BY USER.
LOADS WERE DERIVED FROM USER INPUT
NO FURTHER MODIFICATIONS WERE MADE

SPECIFIED LOADS:

TOP CH.	LL	=	34.8	PSF
	DL	=	6.0	PSF
BOT CH.	LL	=	0.0	PSF
	DL	=	7.3	PSF
TOTAL LOAD		=	48.1	PSF

SPACING = 24.0 IN. C/C

LOADING IN FLAT SECTION BASED ON A SLOPE OF 2.00/12 MINIMUM

*** NON STANDARD GIRDER ***
ADDT'L USER-DEFINED LOADS APPLIED TO ALL LOAD CASES.

THIS TRUSS IS DESIGNED FOR RESIDENTIAL OR SMALL BUILDING REQUIREMENTS OF PART 9, NBCC 2015

THIS DESIGN COMPLIES WITH:
- PART 9 OF BCBC 2018 , NBC-2019AE
- PART 9 OF OBC 2012 (2019 AMENDMENT)
- CSA 086-14
- TPIC 2014

(55 % OF 48.1 P.S.F. G.S.L. PLUS 8.4 P.S.F. RAIN LOAD) EQUALS 34.8 P.S.F. SPECIFIED ROOF LIVE LOAD

ALLOWABLE DEFL.(LL)= L/360 (0.94")
CALCULATED VERT. DEFL.(LL) = L/ 999 (0.22")
ALLOWABLE DEFL.(TL)= L/360 (0.94")
CALCULATED VERT. DEFL.(TL) = L/ 925 (0.37")

CSI: TC=0.90/0.97 (D-E:1) , BC=0.91/0.97 (R-S:1) , WB=0.74/0.97 (G-P:1) , SSI=0.31/1.00 (D-E:1)

DOL LUMBER=1.00 NAIL=1.00 LS BEND=1.00 COMP=1.00 SHEAR=1.00 TENS= 1.00

COMPANION LIVE LOAD FACTOR = 1.00

AUTOSOLVE HEELS OFF

TRUSS PLATE MANUFACTURER IS NOT RESPONSIBLE FOR QUALITY CONTROL IN THE TRUSS MANUFACTURING PLANT .

NAIL VALUES

PLATE	GRIP(DRY) (PSI) MAX	MIN	SHEAR (PLI) MAX	MIN	SECTION (PLI) MAX	MIN
MT20	650	371	1747	788	1987	1873

PLATE PLACEMENT TOL. = 0.250 inches

PLATE ROTATION TOL. = 5.0 Deg.

JSI GRIP= 0.90 (S) (INPUT = 0.90)
JSI METAL= 0.92 (D) (INPUT = 1.00)

LICENSED PROFESSIONAL ENGINEER
N.A. EL-MASRI
PROVINCE OF ONTARIO
Jul 20, 2023

READ ALL NOTES ON THIS PAGE AND ON THE ENGINEERING NOTES: TRUSSES. THE NOTE PAGE IS AN INTEGRAL PART OF THIS DRAWING AS IT CONTAINS SPECIFICATIONS AND CRITERIA USED IN THE DESIGN OF THIS COMPONENT.

KOTT

JOB NAME	TRUSS NAME	QUANTITY	PLY	JOB DESC.	DRWG NO.
NE0723-137	G03	1	1	TRUSS DESC. GREENPARK - ZADORRA ESTATES - VILLA 12-1	

Version 8.630 S Mar 22 2023 MiTek Industries, Inc. Thu Jul 20 09:02:55 2023 Page 1
ID:VquVgowiAqiumFmAweaWlxz71eJ-No0nqjv2_hGVtuBuwEPryApl6PGP8NkLkgOOepywEl_

CORPORATION OF THE CITY OF OSHAWA
TRUE COPY
OF PERMIT PLANS
Nov 14 2023
PER: CHIEF BUILDING OFFICIAL
MHP 23039

Scale: 3/8"=1'

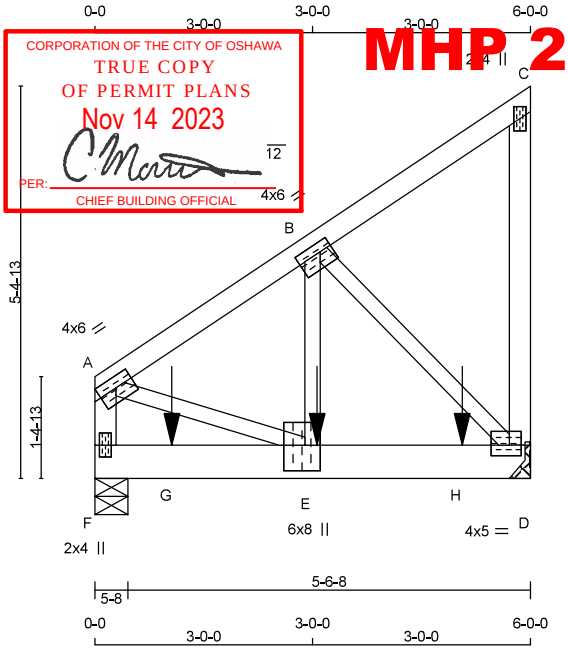

TOTAL WEIGHT = 33 lb [M]

LUMBER
N. L. G. A. RULES

CHORDS	SIZE		LUMBER	DESCR.
A - C	2x4	DRY	No.2	SPF
D - C	2x4	DRY	No.2	SPF
F - A	2x4	DRY	No.2	SPF
F - D	2x6	DRY	No.2	SPF
ALL WEBS EXCEPT	2x3	DRY	No.2	SPF

DRY: SEASONED LUMBER.

PLATES (table is in inches)

JT	TYPE	PLATES	W	LEN	Y	X
A	TMVW-t	MT20	4.0	6.0	1.75	Edge
B	TMWW-t	MT20	4.0	6.0	1.50	2.00
C	TMV+p	MT20	2.0	4.0		
D	BMVW1-t	MT20	4.0	5.0	1.75	2.00
E	BMWW+t	MT20	6.0	8.0	4.25	2.50
F	BMV1+p	MT20	2.0	4.0		

Edge - INDICATES REFERENCE CORNER OF PLATE TOUCHES EDGE OF CHORD.

DIMENSIONS, SUPPORTS AND LOADINGS SPECIFIED BY FABRICATOR TO BE VERIFIED BY BUILDING DESIGNER

BEARINGS

JT	FACTORED GROSS REACTION VERT	HORZ	MAXIMUM FACTORED GROSS REACTION DOWN	HORZ	UPLIFT	INPUT BRG IN-SX	REQRD BRG IN-SX
D	2322	0	2322	0	0	MECHANICAL	
F	2270	0	2270	0	0	5-8	3-14

A SUITABLE HANGER/MECHANICAL CONNECTION IS REQUIRED AT JOINT D. MINIMUM BEARING LENGTH AT JOINT D = 2-8.

UNFACTORED REACTIONS

JT	1ST LCASE COMBINED	SNOW	MAX./MIN. COMPONENT REACTIONS LIVE	PERM.LIVE	WIND	DEAD	SOIL
D	1620	1188 / 0	0 / 0	0 / 0	0 / 0	432 / 0	0 / 0
F	1584	1161 / 0	0 / 0	0 / 0	0 / 0	422 / 0	0 / 0

BEARING MATERIAL TO BE SPF NO.2 OR BETTER AT JOINT(S) F

BRACING
TOP CHORD TO BE SHEATHED OR MAX. PURLIN SPACING = 4.86 FT.
MAX. UNBRACED BOTTOM CHORD LENGTH = 10.00 FT OR RIGID CEILING DIRECTLY APPLIED.

ALL PITCH BREAKS AND PERIMETER CORNER JOINTS MUST BE LATERALLY RESTRAINED.

LOADING
TOTAL LOAD CASES: (4)

CHORDS

MEMB. FR-TO	MAX. FACTORED FORCE (LBS)	VERT. LOAD (PLF) FROM	TO	LC1	MAX CSI (LC)	MAX. UNBRAC LENGTH
A- B	-1673 / 0	-119.4	-119.4	0.21 (1)	4.86	
B- C	-20 / 0	-119.4	-119.4	0.16 (1)	6.25	
D- C	-143 / 0	0.0	0.0	0.07 (1)	7.81	
F- A	-1550 / 0	0.0	0.0	0.17 (1)	6.49	
F- G	0 / 0	-18.2	-18.2	0.55 (1)	10.00	
G- E	0 / 0	-18.2	-18.2	0.55 (1)	10.00	
E- H	0 / 1409	-18.2	-18.2	0.71 (1)	10.00	
H- D	0 / 1409	-18.2	-18.2	0.71 (1)	10.00	

WEBS

MEMB. FR-TO	MAX. FACTORED FORCE (LBS)	MAX CSI (LC)
E- B	0 / 1916	0.47 (1)
B- D	-1991 / 0	0.58 (1)
A- E	0 / 1484	0.37 (1)

SPECIFIED CONCENTRATED LOADS (LBS)

JT	LOC.	LC1	MAX-	MAX+	FACE	DIR.	TYPE	HEEL	CONN.
E	3-0-12	-875	-875	—	BACK	VERT	TOTAL	—	C1
G	1-0-12	-875	-875	—	BACK	VERT	TOTAL	—	C1
H	5-0-12	-876	-876	—	BACK	VERT	TOTAL	—	C1

CONNECTION REQUIREMENTS

1) **C1:** A SUITABLE HANGER/MECHANICAL CONNECTION IS REQUIRED.

DESIGN CRITERIA

*** SPECIAL LOADS ANALYSIS ***
GEOMETRY AND/OR BASIC LOADS CHANGED BY USER.
LOADS WERE DERIVED FROM USER INPUT
NO FURTHER MODIFICATIONS WERE MADE

SPECIFIED LOADS:

TOP CH.	LL	=	34.8	PSF
	DL	=	6.0	PSF
BOT CH.	LL	=	0.0	PSF
	DL	=	7.3	PSF
TOTAL LOAD		=	48.1	PSF

SPACING = 24.0 IN. C/C

*** NON STANDARD GIRDER ***
ADDT'L USER-DEFINED LOADS APPLIED TO ALL LOAD CASES.

THIS TRUSS IS DESIGNED FOR RESIDENTIAL OR SMALL BUILDING REQUIREMENTS OF PART 9, NBCC 2015

THIS DESIGN COMPLIES WITH:
- PART 9 OF BCBC 2018 , NBC-2019AE
- PART 9 OF OBC 2012 (2019 AMENDMENT)
- CSA 086-14
- TPIC 2014

(55 % OF 48.1 P.S.F. G.S.L. PLUS 8.4 P.S.F. RAIN LOAD) EQUALS 34.8 P.S.F. SPECIFIED ROOF LIVE LOAD

ALLOWABLE DEFL.(LL)= L/360 (0.20")
CALCULATED VERT. DEFL.(LL) = L/ 999 (0.02")
ALLOWABLE DEFL.(TL)= L/360 (0.20")
CALCULATED VERT. DEFL.(TL) = L/ 999 (0.04")

CSI: TC=0.21/0.97 (A-B:1) , BC=0.71/0.97 (D-E:1) , WB=0.58/0.97 (B-D:1) , SSI=0.51/1.00 (D-E:1)

DOL LUMBER=1.00 NAIL=1.00 LS BEND=1.00 COMP=1.00 SHEAR=1.00 TENS= 1.00

COMPANION LIVE LOAD FACTOR = 1.00

TRUSS PLATE MANUFACTURER IS NOT RESPONSIBLE FOR QUALITY CONTROL IN THE TRUSS MANUFACTURING PLANT .

NAIL VALUES

PLATE	GRIP(DRY) (PSI) MAX	MIN	SHEAR (PLI) MAX	MIN	SECTION (PLI) MAX	MIN
MT20	650	371	1747	788	1987	1873

PLATE PLACEMENT TOL. = 0.250 inches

PLATE ROTATION TOL. = 5.0 Deg.

JSI GRIP= 0.89 (D) (INPUT = 0.90)
JSI METAL= 0.42 (E) (INPUT = 1.00)

LICENSED PROFESSIONAL ENGINEER
N.A. EL-MASRI
PROVINCE OF ONTARIO
Jul 20, 2023

READ ALL NOTES ON THIS PAGE AND ON THE ENGINEERING NOTES: TRUSSES. THE NOTE PAGE IS AN INTEGRAL PART OF THIS DRAWING AS IT CONTAINS SPECIFICATIONS AND CRITERIA USED IN THE DESIGN OF THIS COMPONENT.

KOTT

JOB NAME	TRUSS NAME	QUANTITY	PLY	JOB DESC.	DRWG NO.
NE0723-137	G04	1	2	GREENPARK - ZADORRA ESTATES - VILLA 12-1 (TRUSS DESC.)	

Version 8.630 S Mar 22 2023 MiTek Industries, Inc. Thu Jul 20 09:02:56 2023 Page 1
ID:VquVgowiAqiumFmAweaWlxz71eJ-r_a913vhI?OMV2m5Uxx4UOLvmpcetosUyJ8y9FywEHz

CORPORATION OF THE CITY OF OSHAWA
TRUE COPY
OF PERMIT PLANS
Nov 14 2023
PER: C Morton
CHIEF BUILDING OFFICIAL

MHP 23039

Scale = 1:34.5

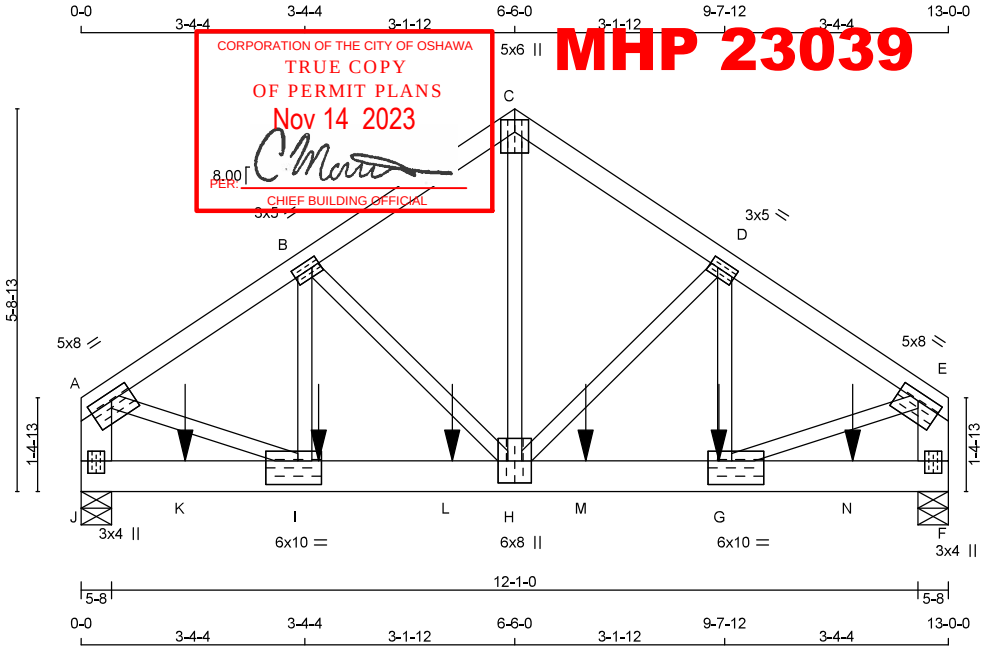

TOTAL WEIGHT = 2 X 65 = 130 lb [M]

LUMBER
N. L. G. A. RULES

CHORDS	SIZE		LUMBER	DESCR.
A - C	2x4	DRY	No.2	SPF
C - E	2x4	DRY	No.2	SPF
J - A	2x6	DRY	No.2	SPF
F - E	2x6	DRY	No.2	SPF
J - F	2x6	DRY	No.2	SPF
ALL WEBS EXCEPT	2x3	DRY	No.2	SPF

DRY: SEASONED LUMBER.

DESIGN CONSISTS OF 2 TRUSSES BUILT SEPARATELY THEN FASTENED TOGETHER AS FOLLOWS:

CHORDS	#ROWS	SURFACE SPACING (IN)	LOAD(PLF)
TOP CHORDS : (0.122"X3") SPIRAL NAILS			
A- C	1	12	TOP
C- E	1	12	TOP
J- A	2	12	TOP
F- E	2	12	TOP
BOTTOM CHORDS : (0.122"X3") SPIRAL NAILS			
J- F	2	12	SIDE(0.0)
WEBS : (0.122"X3") SPIRAL NAILS			
2x3	1	6	

NAILS TO BE DRIVEN FROM ONE SIDE ONLY.

GIRDER NAILING ASSUMES NAILED HANGERS ARE FASTENED WITH MIN. 3-0 INCH NAILS.

TOP - COMPONENTS ARE LOADED FROM THE TOP AND MUST BE PLACED ON TOP EDGE OF ALL PLIES FOR THE LOAD TO BE TRANSFERRED TO EACH PLY.

SIDE - PLF SHOWN IS THE EQUIVALENT UDL APPLIED TO ONE SIDE THAT THE CORRESPONDING NAILING PATTERN SHALL BE CAPABLE OF TRANSFERING. REMAINING PLF MUST BE APPLIED ON THE OPPOSITE SIDE OR ON THE TOP.

PLATES (table is in inches)

JT	TYPE	PLATES	W	LEN	Y	X
A	TMVW-t	MT20	5.0	8.0	1.50	3.75
B	TMWW-t	MT20	3.0	5.0	1.50	1.50
C	TTW+p	MT20	5.0	6.0	2.25	2.50

LICENSED PROFESSIONAL ENGINEER
N.A. EL-MASRI
PROVINCE OF ONTARIO
Jul 20, 2023

READ ALL NOTES ON THIS PAGE AND ON THE ENGINEERING NOTES: TRUSSES. THE NOTE PAGE IS AN INTEGRAL PART OF THIS DRAWING AS IT CONTAINS SPECIFICATIONS AND CRITERIA USED IN THE DESIGN OF THIS COMPONENT.

DIMENSIONS, SUPPORTS AND LOADINGS SPECIFIED BY FABRICATOR TO BE VERIFIED BY BUILDING DESIGNER

BEARINGS

JT	FACTORED GROSS REACTION VERT	HORZ	MAXIMUM FACTORED GROSS REACTION DOWN	HORZ	UPLIFT	INPUT BRG IN-SX	REQRD BRG IN-SX
J	6415	0	6415	0	0	5-8	4-15
F	6486	0	6486	0	0	5-8	5-1

UNFACTORED REACTIONS

JT	1ST LCASE COMBINED	MAX./MIN. COMPONENT REACTIONS SNOW	LIVE	PERM.LIVE	WIND	DEAD	SOIL
J	4477	3271 / 0	0 / 0	0 / 0	0 / 0	1206 / 0	0 / 0
F	4528	3308 / 0	0 / 0	0 / 0	0 / 0	1220 / 0	0 / 0

BEARING MATERIAL TO BE SPF NO.2 OR BETTER AT JOINT(S) J, F

BRACING
TOP CHORD TO BE SHEATHED OR MAX. PURLIN SPACING = 3.57 FT.
MAX. UNBRACED BOTTOM CHORD LENGTH = 10.00 FT OR RIGID CEILING DIRECTLY APPLIED.

ALL PITCH BREAKS AND PERIMETER CORNER JOINTS MUST BE LATERALLY RESTRAINED.

LOADING
TOTAL LOAD CASES: (4)

CHORDS

MEMB. FR-TO	MAX. FACTORED FORCE (LBS)	FACTORED VERT. LOAD (PLF) FROM	TO	LC1	MAX CSI (LC)	MAX. UNBRAC LENGTH
A- B	-6634 / 0	-119.4	-119.4	0.28 (1)	3.58	
B- C	-5165 / 0	-119.4	-119.4	0.19 (1)	4.08	
C- D	-5165 / 0	-119.4	-119.4	0.19 (1)	4.08	
D- E	-6642 / 0	-119.4	-119.4	0.28 (1)	3.57	
J- A	-5512 / 0	0.0	0.0	0.20 (1)	6.17	
F- E	-5518 / 0	0.0	0.0	0.20 (1)	6.17	
J- K	0 / 0	-18.2	-18.2	0.51 (1)	10.00	
K- I	0 / 0	-18.2	-18.2	0.51 (1)	10.00	
I- L	0 / 5527	-18.2	-18.2	0.65 (1)	10.00	
L- H	0 / 5527	-18.2	-18.2	0.65 (1)	10.00	
H- M	0 / 5534	-18.2	-18.2	0.65 (1)	10.00	
M- G	0 / 5534	-18.2	-18.2	0.65 (1)	10.00	
G- N	0 / 0	-18.2	-18.2	0.51 (1)	10.00	
N- F	0 / 0	-18.2	-18.2	0.51 (1)	10.00	

WEBS

MEMB. FR-TO	MAX. FACTORED FORCE (LBS)	MAX CSI (LC)
H- C	0 / 5377	0.67 (1)
H- D	-1784 / 0	0.30 (1)
G- D	0 / 1688	0.21 (1)
B- H	-1775 / 0	0.30 (1)
I- B	0 / 1676	0.21 (1)
A- I	0 / 5766	0.71 (1)
G- E	0 / 5773	0.71 (1)

SPECIFIED CONCENTRATED LOADS (LBS)

JT	LOC.	LC1	MAX-	MAX+	FACE	DIR.	TYPE	HEEL	CONN.
G	9-6-12	-1292	-1292	—	BACK	VERT	TOTAL	—	C1
I	3-6-12	-1292	-1292	—	BACK	VERT	TOTAL	—	C1
K	1-6-12	-1292	-1292	—	BACK	VERT	TOTAL	—	C1
L	5-6-12	-1292	-1292	—	BACK	VERT	TOTAL	—	C1
M	7-6-12	-1292	-1292	—	BACK	VERT	TOTAL	—	C1
N	11-6-12	-1292	-1292	—	BACK	VERT	TOTAL	—	C1

CONNECTION REQUIREMENTS

1) **C1:** A SUITABLE HANGER/MECHANICAL CONNECTION IS REQUIRED.

DESIGN CRITERIA

*** SPECIAL LOADS ANALYSIS ***
GEOMETRY AND/OR BASIC LOADS CHANGED BY USER.
LOADS WERE DERIVED FROM USER INPUT
NO FURTHER MODIFICATIONS WERE MADE

SPECIFIED LOADS:

TOP CH.	LL	=	34.8	PSF
	DL	=	6.0	PSF
BOT CH.	LL	=	0.0	PSF
	DL	=	7.3	PSF
TOTAL LOAD		=	48.1	PSF

SPACING = 24.0 IN. C/C

*** NON STANDARD GIRDER ***
ADDT'L USER-DEFINED LOADS APPLIED TO ALL LOAD CASES.

THIS TRUSS IS DESIGNED FOR RESIDENTIAL OR SMALL BUILDING REQUIREMENTS OF PART 9, NBCC 2015

THIS DESIGN COMPLIES WITH:
- PART 9 OF BCBC 2018 , NBC-2019AE
- PART 9 OF OBC 2012 (2019 AMENDMENT)
- CSA 086-14
- TPIC 2014

(55 % OF 48.1 P.S.F. G.S.L. PLUS 8.4 P.S.F. RAIN LOAD) EQUALS 34.8 P.S.F. SPECIFIED ROOF LIVE LOAD

ALLOWABLE DEFL.(LL)= L/360 (0.43")
CALCULATED VERT. DEFL.(LL) = L/ 999 (0.06")
ALLOWABLE DEFL.(TL)= L/360 (0.43")
CALCULATED VERT. DEFL.(TL) = L/ 999 (0.10")

CSI: TC=0.28/0.97 (D-E:1) , BC=0.65/0.97 (G-H:1) , WB=0.71/0.97 (E-G:1) , SSI=0.48/1.00 (H-I:1)

DOL LUMBER=1.00 NAIL=1.00 LS BEND=1.00 COMP=1.00 SHEAR=1.00 TENS= 1.00

COMPANION LIVE LOAD FACTOR = 1.00

AUTOSOLVE HEELS OFF

TRUSS PLATE MANUFACTURER IS NOT RESPONSIBLE FOR QUALITY CONTROL IN THE TRUSS MANUFACTURING PLANT .

NAIL VALUES

PLATE	GRIP(DRY) (PSI) MAX	MIN	SHEAR (PLI) MAX	MIN	SECTION (PLI) MAX	MIN
MT20	650	371	1747	788	1987	1873

PLATE PLACEMENT TOL. = 0.250 inches

PLATE ROTATION TOL. = 5.0 Deg.

JSI GRIP= 0.90 (G) (INPUT = 0.90)
JSI METAL= 0.60 (E) (INPUT = 1.00)

CONTINUED ON PAGE 2

KOTT

JOB NAME	TRUSS NAME	QUANTITY	PLY	JOB DESC.	DRWG NO.
NE0723-137	G04	1	2	GREENPARK - ZADORRA ESTATES - VILLA 12-1 (TRUSS DESC.)	

Version 8.630 S Mar 22 2023 MiTek Industries, Inc. Thu Jul 20 09:02:56 2023 Page 2
ID:VquVgowiAqiumFmAweaWlxz71eJ-r_a913vhI?OMV2m5Uxx4UOLvmpcetosUyJ8y9FywEHz

PLATES (table is in inches)

JT	TYPE	PLATES	W	LEN	Y	X
D	TMWW-t	MT20	3.0	5.0	1.50	1.50
E	TMVW-t	MT20	5.0	8.0	1.50	3.75
F	BMV1+p	MT20	3.0	4.0	2.25	1.50
G	BMWW-t	MT20	6.0	10.0	4.25	4.25
H	BMWWW+t	MT20	6.0	8.0		
I	BMWW-t	MT20	6.0	10.0	4.25	4.25
J	BMV1+p	MT20	3.0	4.0	2.25	1.50

CORPORATION OF THE CITY OF OSHAWA
TRUE COPY
OF PERMIT PLANS
Nov 14 2023
PER: _____
CHIEF BUILDING OFFICIAL

MHP 23039

LICENSED PROFESSIONAL ENGINEER
N.A. EL-MASRI
PROVINCE OF ONTARIO
Jul 20, 2023

READ ALL NOTES ON THIS PAGE AND ON THE ENGINEERING NOTES: TRUSSES. THE NOTE PAGE IS AN INTEGRAL PART OF THIS DRAWING AS IT CONTAINS SPECIFICATIONS AND CRITERIA USED IN THE DESIGN OF THIS COMPONENT.

KOTT

JOB NAME	TRUSS NAME	QUANTITY	PLY	JOB DESC.	DRWG NO.
NE0723-137	GE01	1	1	TRUSS DESC. GREENPARK - ZADORRA ESTATES - VILLA 12-1	

Version 8.630 S Mar 22 2023 MiTek Industries, Inc. Thu Jul 20 09:02:57 2023 Page 1
ID:VquVgowiAqiumFmAweaWxz71eJ-JA8XFOwJWIWD6CLH1eSJ1bu6KD6lcPTeBzuVhhywEHy

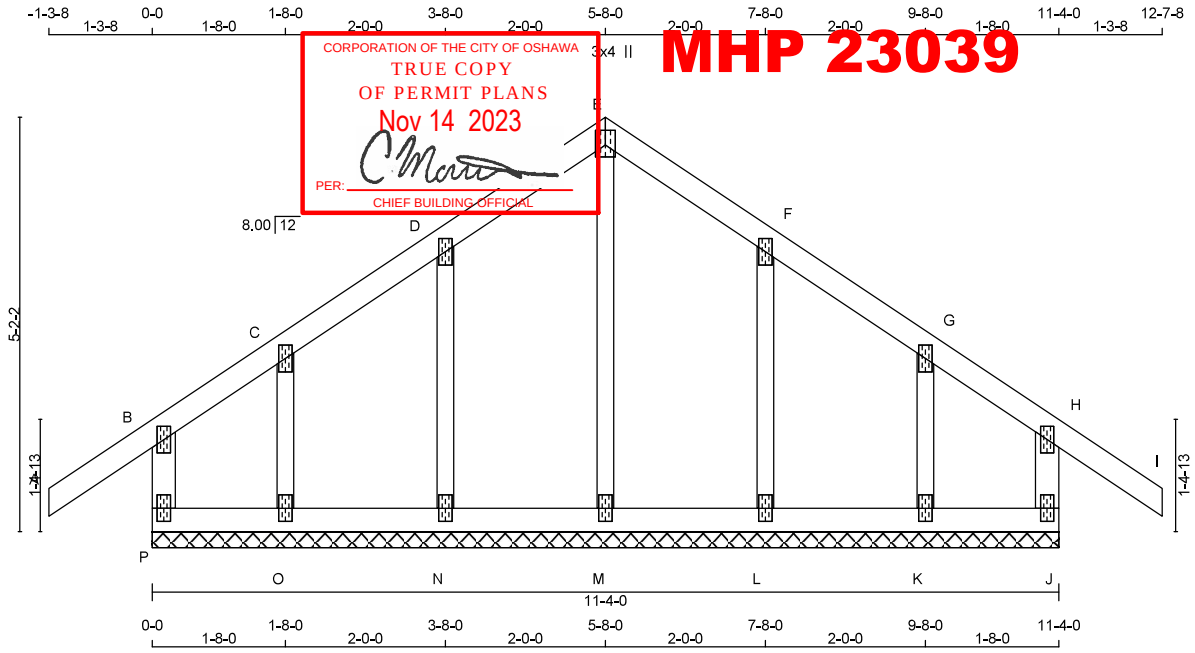

Scale = 1:28.8

MHP 23039
CORPORATION OF THE CITY OF OSHAWA
TRUE COPY
OF PERMIT PLANS
Nov 14 2023
PER:
CHIEF BUILDING OFFICIAL

TOTAL WEIGHT = 47 lb [M]

LUMBER
N. L. G. A. RULES

CHORDS	SIZE		LUMBER	DESCR.
P - B	2x4	DRY	No.2	SPF
A - E	2x4	DRY	No.2	SPF
E - I	2x4	DRY	No.2	SPF
J - H	2x4	DRY	No.2	SPF
P - J	2x4	DRY	No.2	SPF
ALL WEBS	2x3	DRY	No.2	SPF
ALL GABLE WEBS	2x3	DRY	No.2	SPF

DRY: SEASONED LUMBER.

GABLE STUDS SPACED AT 2-0-0 OC.

PLATES (table is in inches)

JT	TYPE	PLATES	W	LEN	Y	X
B	TMV+p	MT20	2.0	4.0		
C, D, F, G						
C	TMW+w	MT20	2.0	4.0		
E	TTW+p	MT20	3.0	4.0	2.25	1.50
H	TMV+p	MT20	2.0	4.0		
J	BMV1+p	MT20	2.0	4.0		
K, L, M, N, O						
K	BMW1+w	MT20	2.0	4.0		
P	BMV1+p	MT20	2.0	4.0		

DIMENSIONS, SUPPORTS AND LOADINGS SPECIFIED BY FABRICATOR TO BE VERIFIED BY BUILDING DESIGNER

BEARINGS

THIS TRUSS DESIGNED FOR CONTINUOUS BEARINGS.

THIS TRUSS REQUIRES RIGID SHEATHING ON EXPOSED FACE.

BEARING MATERIAL TO BE SPF NO.2 OR BETTER AT JOINT(S)

BRACING
TOP CHORD TO BE SHEATHED OR MAX. PURLIN SPACING = 10.00 FT.
MAX. UNBRACED BOTTOM CHORD LENGTH = 6.25 FT OR RIGID CEILING DIRECTLY APPLIED.

ALL PITCH BREAKS AND PERIMETER CORNER JOINTS MUST BE LATERALLY RESTRAINED.

LOADING
TOTAL LOAD CASES: (4)

CHORDS

MEMB. FR-TO	MAX. FORCE (LBS)	FACTORED VERT. LOAD (PLF) FROM	TO	LC1	MAX CSI (LC)	MAX. UNBRAC LENGTH
P- B	-269 / 0	0.0	0.0	0.06 (1)	7.81	
A- B	0 / 45	-119.4	-119.4	0.16 (1)	10.00	
B- C	0 / 21	-119.4	-119.4	0.10 (1)	10.00	
C- D	0 / 53	-119.4	-119.4	0.07 (1)	10.00	
D- E	0 / 50	-119.4	-119.4	0.07 (1)	10.00	
E- F	0 / 50	-119.4	-119.4	0.07 (1)	10.00	
F- G	0 / 53	-119.4	-119.4	0.07 (1)	10.00	
G- H	0 / 21	-119.4	-119.4	0.10 (1)	10.00	
H- I	0 / 45	-119.4	-119.4	0.16 (1)	10.00	
J- H	-269 / 0	0.0	0.0	0.06 (1)	7.81	
P- O	-32 / 0	-18.2	-18.2	0.01 (4)	6.25	
O- N	-38 / 0	-18.2	-18.2	0.01 (4)	6.25	
N- M	-44 / 0	-18.2	-18.2	0.01 (4)	6.25	
M- L	-44 / 0	-18.2	-18.2	0.01 (4)	6.25	
L- K	-38 / 0	-18.2	-18.2	0.01 (4)	6.25	
K- J	-32 / 0	-18.2	-18.2	0.01 (4)	6.25	

WEBS

MEMB. FR-TO	MAX. FORCE (LBS)	MAX CSI (LC)
M- E	-298 / 0	0.12 (1)
N- D	-257 / 0	0.06 (1)
O- C	-166 / 0	0.03 (1)
L- F	-257 / 0	0.06 (1)
K- G	-166 / 0	0.03 (1)

DESIGN CRITERIA

SPECIFIED LOADS:

TOP CH.	LL	=	34.8	PSF
	DL	=	6.0	PSF
BOT CH.	LL	=	0.0	PSF
	DL	=	7.3	PSF
TOTAL LOAD		=	48.1	PSF

SPACING = 24.0 IN. C/C

THIS TRUSS IS DESIGNED FOR RESIDENTIAL OR SMALL BUILDING REQUIREMENTS OF PART 9, NBCC 2015

THIS DESIGN COMPLIES WITH:
- PART 9 OF BCBC 2018 , NBC-2019AE
- PART 9 OF OBC 2012 (2019 AMENDMENT)
- CSA 086-14
- TPIC 2014

DESIGN ASSUMPTIONS
-OVERHANG NOT TO BE ALTERED OR CUT OFF.

(55 % OF 48.1 P.S.F. G.S.L. PLUS 8.4 P.S.F. RAIN LOAD) EQUALS 34.8 P.S.F. SPECIFIED ROOF LIVE LOAD

CSI: TC=0.16/0.97 (H-I:1) , BC=0.01/0.97 (M-N:4) , WB=0.12/0.97 (E-M:1) , SSI=0.11/1.00 (H-I:1)

DOL LUMBER=1.00 NAIL=1.00 LS BEND=1.10 COMP=1.10 SHEAR=1.10 TENS= 1.10

COMPANION LIVE LOAD FACTOR = 1.00

TRUSS PLATE MANUFACTURER IS NOT RESPONSIBLE FOR QUALITY CONTROL IN THE TRUSS MANUFACTURING PLANT .

NAIL VALUES

PLATE	GRIP(DRY) (PSI) MAX	MIN	SHEAR (PLI) MAX	MIN	SECTION (PLI) MAX	MIN
MT20	650	371	1747	788	1987	1873

PLATE PLACEMENT TOL. = 0.250 inches

PLATE ROTATION TOL. = 5.0 Deg.

JSI GRIP= 0.19 (E) (INPUT = 0.90)
JSI METAL= 0.13 (D) (INPUT = 1.00)

LICENSED PROFESSIONAL ENGINEER
N.A. EL-MASRI
PROVINCE OF ONTARIO
Jul 20, 2023

READ ALL NOTES ON THIS PAGE AND ON THE ENGINEERING NOTES: TRUSSES. THE NOTE PAGE IS AN INTEGRAL PART OF THIS DRAWING AS IT CONTAINS SPECIFICATIONS AND CRITERIA USED IN THE DESIGN OF THIS COMPONENT.

KOTT

JOB NAME	TRUSS NAME	QUANTITY	PLY	JOB DESC.	DRWG NO.
NE0723-137	GE02	1	1	GREENPARK - ZADORRA ESTATES - VILLA 12-1 (TRUSS DESC.)	

Version 8.630 S Mar 22 2023 MiTek Industries, Inc. Thu Jul 20 09:02:57 2023 Page 1
ID:VquVgowiAqiumFmAweaWxz71eJ-JA8XFOwJWIWD6CLH1eSJ1bu6KD6ccPVeBzuVhhywEHy

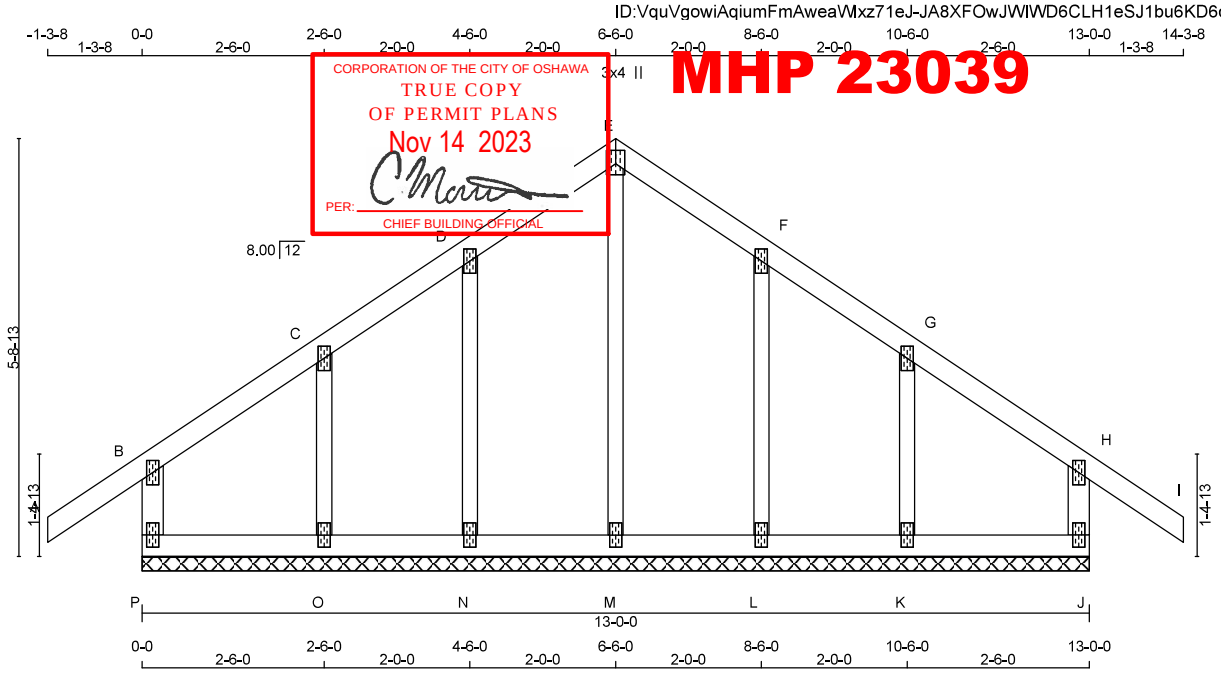

Scale = 1:31.6

MHP 23039

CORPORATION OF THE CITY OF OSHAWA
TRUE COPY
OF PERMIT PLANS
Nov 14 2023
PER:
CHIEF BUILDING OFFICIAL

TOTAL WEIGHT = 53 lb [M]

LUMBER
N. L. G. A. RULES

CHORDS	SIZE		LUMBER	DESCR.
P - B	2x4	DRY	No.2	SPF
A - E	2x4	DRY	No.2	SPF
E - I	2x4	DRY	No.2	SPF
J - H	2x4	DRY	No.2	SPF
P - J	2x4	DRY	No.2	SPF
ALL WEBS	2x3	DRY	No.2	SPF
ALL GABLE WEBS	2x3	DRY	No.2	SPF

DRY: SEASONED LUMBER.

GABLE STUDS SPACED AT 2-0-0 OC.

PLATES (table is in inches)

JT	TYPE	PLATES	W	LEN	Y	X
B	TMV+p	MT20	2.0	4.0		
C, D, F, G						
C	TMW+w	MT20	2.0	4.0		
E	TTW+p	MT20	3.0	4.0	2.25	1.50
H	TMV+p	MT20	2.0	4.0		
J	BMV1+p	MT20	2.0	4.0		
K, L, M, N, O						
K	BMW1+w	MT20	2.0	4.0		
P	BMV1+p	MT20	2.0	4.0		

DIMENSIONS, SUPPORTS AND LOADINGS SPECIFIED BY FABRICATOR TO BE VERIFIED BY BUILDING DESIGNER

BEARINGS

THIS TRUSS DESIGNED FOR CONTINUOUS BEARINGS.

THIS TRUSS REQUIRES RIGID SHEATHING ON EXPOSED FACE.

BEARING MATERIAL TO BE SPF NO.2 OR BETTER AT JOINT(S)

BRACING
TOP CHORD TO BE SHEATHED OR MAX. PURLIN SPACING = 6.25 FT.
MAX. UNBRACED BOTTOM CHORD LENGTH = 10.00 FT OR RIGID CEILING DIRECTLY APPLIED.

ALL PITCH BREAKS AND PERIMETER CORNER JOINTS MUST BE LATERALLY RESTRAINED.

LOADING
TOTAL LOAD CASES: (4)

CHORDS

MEMB. FR-TO	MAX. FORCE (LBS)	FACTORED VERT. LOAD (PLF) FROM	TO	LC1	MAX CSI (LC)	MAX. UNBRAC LENGTH
P- B	-334 / 0	0.0	0.0	0.02 (1)	7.81	
A- B	0 / 45	-119.4	-119.4	0.16 (1)	10.00	
B- C	-37 / 0	-119.4	-119.4	0.09 (1)	6.25	
C- D	-26 / 0	-119.4	-119.4	0.06 (1)	6.25	
D- E	-17 / 0	-119.4	-119.4	0.06 (1)	6.25	
E- F	-17 / 0	-119.4	-119.4	0.06 (1)	6.25	
F- G	-26 / 0	-119.4	-119.4	0.06 (1)	6.25	
G- H	-37 / 0	-119.4	-119.4	0.09 (1)	6.25	
H- I	0 / 45	-119.4	-119.4	0.16 (1)	10.00	
J- H	-334 / 0	0.0	0.0	0.02 (1)	7.81	
P- O	0 / 27	-18.2	-18.2	0.02 (4)	10.00	
O- N	0 / 19	-18.2	-18.2	0.02 (4)	10.00	
N- M	0 / 15	-18.2	-18.2	0.02 (4)	10.00	
M- L	0 / 15	-18.2	-18.2	0.02 (4)	10.00	
L- K	0 / 19	-18.2	-18.2	0.02 (4)	10.00	
K- J	0 / 27	-18.2	-18.2	0.02 (4)	10.00	

WEBS

MEMB. FR-TO	MAX. FORCE (LBS)	MAX CSI (LC)
M- E	-232 / 0	0.11 (1)
N- D	-235 / 0	0.07 (1)
O- C	-256 / 0	0.05 (1)
L- F	-235 / 0	0.07 (1)
K- G	-256 / 0	0.05 (1)

DESIGN CRITERIA

SPECIFIED LOADS:

TOP CH.	LL	=	34.8	PSF
	DL	=	6.0	PSF
BOT CH.	LL	=	0.0	PSF
	DL	=	7.3	PSF
TOTAL LOAD		=	48.1	PSF

SPACING = 24.0 IN. C/C

THIS TRUSS IS DESIGNED FOR RESIDENTIAL OR SMALL BUILDING REQUIREMENTS OF PART 9, NBCC 2015

THIS DESIGN COMPLIES WITH:
- PART 9 OF BCBC 2018 , NBC-2019AE
- PART 9 OF OBC 2012 (2019 AMENDMENT)
- CSA 086-14
- TPIC 2014

DESIGN ASSUMPTIONS
-OVERHANG NOT TO BE ALTERED OR CUT OFF.

(55 % OF 48.1 P.S.F. G.S.L. PLUS 8.4 P.S.F. RAIN LOAD) EQUALS 34.8 P.S.F. SPECIFIED ROOF LIVE LOAD

CSI: TC=0.16/0.97 (A-B:1) , BC=0.02/0.97 (J-K:4) , WB=0.11/0.97 (E-M:1) , SSI=0.11/1.00 (A-B:1)

DOL LUMBER=1.00 NAIL=1.00 LS BEND=1.10 COMP=1.10 SHEAR=1.10 TENS= 1.10

COMPANION LIVE LOAD FACTOR = 1.00

TRUSS PLATE MANUFACTURER IS NOT RESPONSIBLE FOR QUALITY CONTROL IN THE TRUSS MANUFACTURING PLANT .

NAIL VALUES

PLATE	GRIP(DRY) (PSI) MAX	MIN	SHEAR (PLI) MAX	MIN	SECTION (PLI) MAX	MIN
MT20	650	371	1747	788	1987	1873

PLATE PLACEMENT TOL. = 0.250 inches

PLATE ROTATION TOL. = 5.0 Deg.

JSI GRIP= 0.23 (H) (INPUT = 0.90)
JSI METAL= 0.19 (H) (INPUT = 1.00)

LICENSED PROFESSIONAL ENGINEER
N.A. EL-MASRI
PROVINCE OF ONTARIO
Jul 20, 2023

READ ALL NOTES ON THIS PAGE AND ON THE ENGINEERING NOTES: TRUSSES. THE NOTE PAGE IS AN INTEGRAL PART OF THIS DRAWING AS IT CONTAINS SPECIFICATIONS AND CRITERIA USED IN THE DESIGN OF THIS COMPONENT.

KOTT

JOB NAME	TRUSS NAME	QUANTITY	PLY	JOB DESC.	DRWG NO.
NE0723-137	GES01	1	1	GREENPARK - ZADORRA ESTATES - VILLA 12-1 (TRUSS DESC.)	

Version 8.630 S Mar 22 2023 MiTek Industries, Inc. Thu Jul 20 09:02:58 2023 Page 1
ID:VquVgowiAqiumFmAweaWxz71eJ-nNivSkxxHce4kMwTbMzYZpRCRdQRLoxnQdd3D8ywEHx

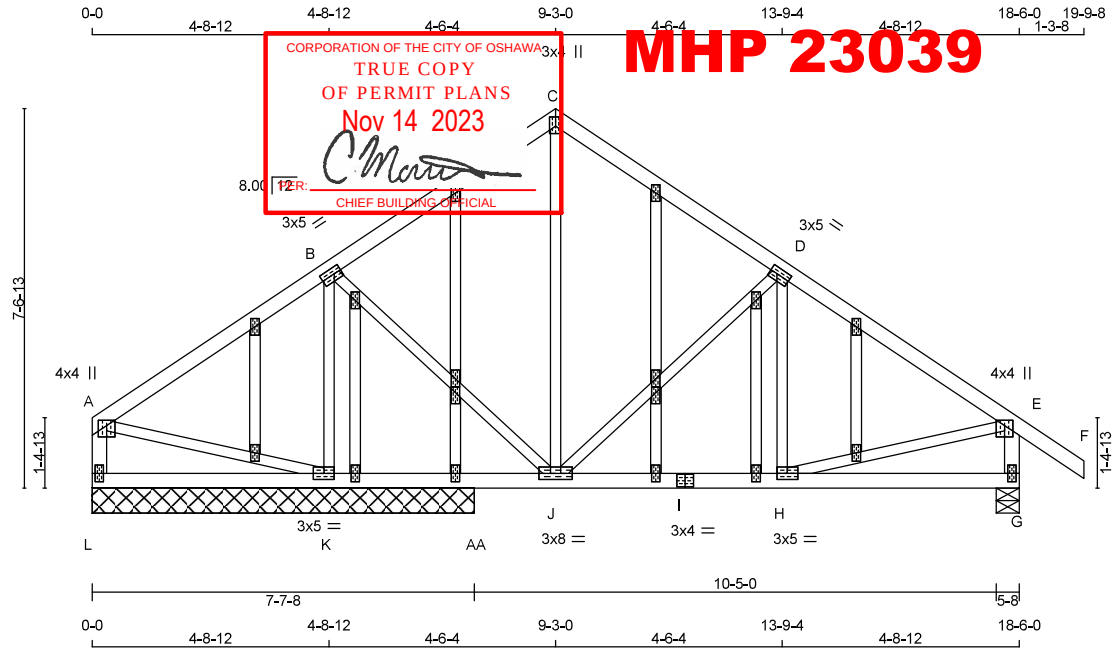

MHP 23039
CORPORATION OF THE CITY OF OSHAWA
TRUE COPY
OF PERMIT PLANS
Nov 14 2023
PER:
CHIEF BUILDING OFFICIAL

TOTAL WEIGHT = 99 lb [M]

LUMBER
N. L. G. A. RULES

CHORDS	SIZE		LUMBER	DESCR.
A - C	2x4	DRY	No.2	SPF
C - F	2x4	DRY	No.2	SPF
L - A	2x4	DRY	No.2	SPF
G - E	2x4	DRY	No.2	SPF
L - I	2x4	DRY	No.2	SPF
I - G	2x4	DRY	No.2	SPF
ALL WEBS EXCEPT	2x3	DRY	No.2	SPF
ALL GABLE WEBS	2x3	DRY	No.2	SPF

DRY: SEASONED LUMBER.

GABLE STUDS SPACED AT 2-0-0 OC.

PLATES (table is in inches)

JT	TYPE	PLATES	W	LEN	Y	X
A	TMVW+p	MT20	4.0	4.0	1.25	2.00
B	TMWW-t	MT20	3.0	5.0	1.50	1.75
C	TTW+p	MT20	3.0	4.0	2.25	1.50
D	TMWW-t	MT20	3.0	5.0	1.50	1.75
E	TMVW+p	MT20	4.0	4.0	1.25	2.00
G	BMV1+p	MT20	2.0	4.0		
H	BMWW-t	MT20	3.0	5.0		
I	BS-t	MT20	3.0	4.0		
J	BMWWW-t	MT20	3.0	8.0		
K	BMWW1-t	MT20	3.0	5.0		
L	BMV1+p	MT20	2.0	4.0		
M	NP+w	MT20	2.0	4.0	1.50	1.00
M, N, O, P, Q, R, S, T, U, V, W, X, Y, Z						
M	NP+w	MT20	2.0	4.0		
V	NP+w	MT20	2.0	4.0	1.50	1.00

DIMENSIONS, SUPPORTS AND LOADINGS SPECIFIED BY FABRICATOR TO BE VERIFIED BY BUILDING DESIGNER

BEARINGS

JT	FACTORED GROSS REACTION VERT	HORZ	MAXIMUM FACTORED GROSS REACTION DOWN	HORZ	UPLIFT	INPUT BRG IN-SX	REQRD BRG IN-SX
L	319	0	319	0	0	7-7-8	1-8
K	1211	0	1211	0	0	7-7-8	1-8
G	1091	0	1091	0	0	5-8	1-8
AA	91	0	91	0	0	7-7-8	1-8

UNFACTORED REACTIONS

JT	1ST LCASE COMBINED	MAX./MIN. COMPONENT REACTIONS SNOW	LIVE	PERM.LIVE	WIND	DEAD	SOIL
L	221	170 / 0	0 / 0	0 / 0	0 / 0	52 / 0	0 / 0
K	847	606 / 0	0 / 0	0 / 0	0 / 0	242 / 0	0 / 0
G	759	568 / 0	0 / 0	0 / 0	0 / 0	190 / 0	0 / 0
AA	65	40 / 0	0 / 0	0 / 0	0 / 0	25 / 0	0 / 0

BEARING MATERIAL TO BE SPF NO.2 OR BETTER AT JOINT(S) L, K, G, AA

BRACING
TOP CHORD TO BE SHEATHED OR MAX. PURLIN SPACING = 5.81 FT.
MAX. UNBRACED BOTTOM CHORD LENGTH = 10.00 FT OR RIGID CEILING DIRECTLY APPLIED.

ALL PITCH BREAKS AND PERIMETER CORNER JOINTS MUST BE LATERALLY RESTRAINED.

LOADING
TOTAL LOAD CASES: (4)

CHORDS

MEMB. FR-TO	MAX. FORCE (LBS)	FACTORED VERT. LOAD (PLF) FROM	TO	LC1	MAX CSI (LC)
A- B	-53 / 2	-119.4	-119.4	0.44 (1)	
B- C	-481 / 0	-119.4	-119.4	0.45 (1)	
C- D	-480 / 0	-119.4	-119.4	0.44 (1)	
D- E	-871 / 0	-119.4	-119.4	0.46 (1)	
E- F	0 / 45	-119.4	-119.4	0.16 (1)	
L- A	-282 / 0	0.0	0.0	0.03 (1)	
G- E	-1056 / 0	0.0	0.0	0.11 (1)	
L- K	0 / 0	-18.2	-18.2	0.09 (4)	
K-AA	0 / 75	-18.2	-18.2	0.09 (4)	
AA- J	0 / 75	-18.2	-18.2	0.08 (1)	
J- I	0 / 755	-18.2	-18.2	0.18 (1)	
I- H	0 / 755	-18.2	-18.2	0.18 (1)	
H- G	0 / 0	-18.2	-18.2	0.10 (4)	

WEBS

MEMB. FR-TO	MAX. UNBRAC LENGTH	MAX. FORCE (LBS)	MAX CSI (LC)
J- C	6.25	0 / 90	0.02 (4)
J- D	6.25	-530 / 0	0.36 (1)
H- D	6.25	-67 / 68	0.02 (4)
B- J	5.81	0 / 401	0.09 (1)
K- B	10.00	-1160 / 0	0.36 (1)
A- K	7.81	0 / 77	0.02 (1)
H- E	7.57	0 / 774	0.17 (1)

DESIGN CRITERIA

SPECIFIED LOADS:

TOP CH.	LL =	34.8	PSF
	DL =	6.0	PSF
BOT CH.	LL =	0.0	PSF
	DL =	7.3	PSF
TOTAL LOAD	=	48.1	PSF

SPACING = 24.0 IN. C/C

THIS TRUSS IS DESIGNED FOR RESIDENTIAL OR SMALL BUILDING REQUIREMENTS OF PART 9, NBCC 2015

THIS DESIGN COMPLIES WITH:
- PART 9 OF BCBC 2018 , NBC-2019AE
- PART 9 OF OBC 2012 (2019 AMENDMENT)
- CSA 086-14
- TPIC 2014

(55 % OF 48.1 P.S.F. G.S.L. PLUS 8.4 P.S.F. RAIN LOAD) EQUALS 34.8 P.S.F. SPECIFIED ROOF LIVE LOAD

ALLOWABLE DEFL.(LL)= L/360 (0.36")
CALCULATED VERT. DEFL.(LL) = L/ 999 (0.02")
ALLOWABLE DEFL.(TL)= L/360 (0.36")
CALCULATED VERT. DEFL.(TL) = L/ 999 (0.04")

CSI: TC=0.46/0.97 (D-E:1) , BC=0.18/0.97 (H-J:1) , WB=0.36/0.97 (D-J:1) , SSI=0.23/1.00 (A-B:1)

DOL LUMBER=1.00 NAIL=1.00 LS BEND=1.10 COMP=1.10 SHEAR=1.10 TENS= 1.10

COMPANION LIVE LOAD FACTOR = 1.00

TRUSS PLATE MANUFACTURER IS NOT RESPONSIBLE FOR QUALITY CONTROL IN THE TRUSS MANUFACTURING PLANT .

NAIL VALUES

PLATE	GRIP(DRY) (PSI) MAX	MIN	SHEAR (PLI) MAX	MIN	SECTION (PLI) MAX	MIN
MT20	650	371	1747	788	1987	1873

PLATE PLACEMENT TOL. = 0.250 inches

PLATE ROTATION TOL. = 5.0 Deg.

JSI GRIP= 0.90 (D) (INPUT = 0.90)
JSI METAL= 0.29 (I) (INPUT = 1.00)

LICENSED PROFESSIONAL ENGINEER
N.A. EL-MASRI
PROVINCE OF ONTARIO
Jul 20, 2023

READ ALL NOTES ON THIS PAGE AND ON THE ENGINEERING NOTES: TRUSSES. THE NOTE PAGE IS AN INTEGRAL PART OF THIS DRAWING AS IT CONTAINS SPECIFICATIONS AND CRITERIA USED IN THE DESIGN OF THIS COMPONENT.

KOTT

JOB NAME	TRUSS NAME	QUANTITY	PLY	JOB DESC.	DRWG NO.
NE0723-137	J01	11	1	TRUSS DESC. GREENPARK - ZADORRA ESTATES - VILLA 12-1	

Version 8.630 S Mar 22 2023 MiTek Industries, Inc. Thu Jul 20 09:02:59 2023 Page 1
ID:VquVgowiAqiumFmAweaWlxz71eJ-FZGHg4yZ2wmwMWUg93Un60zJs1mK4KIxeHNcmaywEHw

CORPORATION OF THE CITY OF OSHAWA
TRUE COPY
OF PERMIT PLANS
Nov 14 2023
PER: C Morr
CHIEF BUILDING OFFICIAL

MHP 23039

Scale = 1:31.0

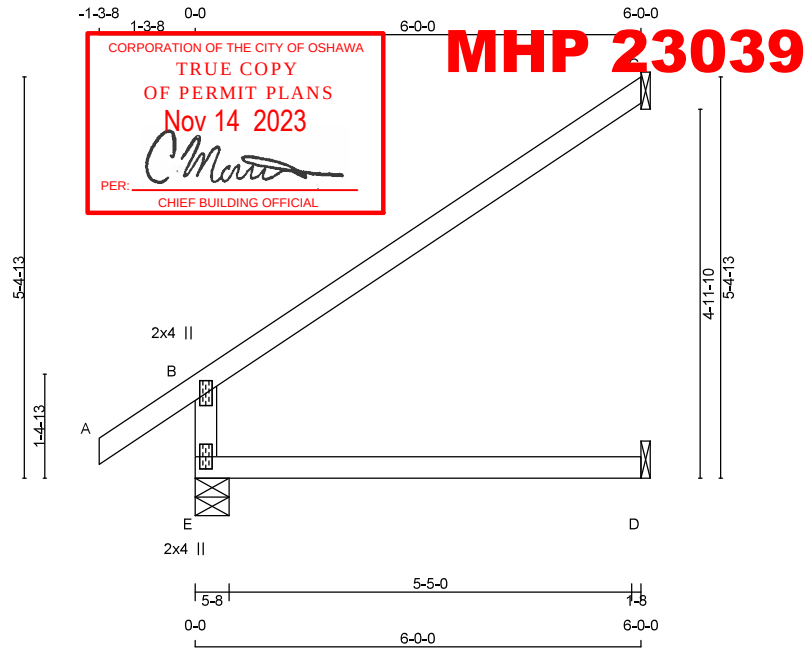

TOTAL WEIGHT = 11 X 18 = 200 lb
[M]

LUMBER
N. L. G. A. RULES

CHORDS	SIZE		LUMBER	DESCR.
E - B	2x4	DRY	No.2	SPF
A - C	2x4	DRY	No.2	SPF
E - D	2x4	DRY	No.2	SPF

DRY: SEASONED LUMBER.

PLATES (table is in inches)

JT	TYPE	PLATES	W	LEN	Y	X
B	TMV+p	MT20	2.0	4.0		
E	BMV1+p	MT20	2.0	4.0		

DIMENSIONS, SUPPORTS AND LOADINGS SPECIFIED BY FABRICATOR TO BE VERIFIED BY BUILDING DESIGNER

BEARINGS

JT	FACTORED GROSS REACTION VERT	HORZ	MAXIMUM FACTORED GROSS REACTION DOWN	HORZ	UPLIFT	INPUT BRG IN-SX	REQRD BRG IN-SX
E	675	0	675	0	0	5-8	1-8
C	269	0	269	0	0	1-8	1-8
D	46	0	51	0	0	1-8	1-8

SEE MITEK STANDARD DETAIL MSD2015-H FOR CONNECTION TO JOINT(S) C , D

UNFACTORED REACTIONS

JT	1ST LCASE COMBINED	MAX./MIN. COMPONENT REACTIONS SNOW	LIVE	PERM.LIVE	WIND	DEAD	SOIL
E	469	357 / 0	0 / 0	0 / 0	0 / 0	112 / 0	0 / 0
C	184	157 / 0	0 / 0	0 / 0	0 / 0	27 / 0	0 / 0
D	37	0 / 0	0 / 0	0 / 0	0 / 0	37 / 0	0 / 0

BEARING MATERIAL TO BE SPF NO.2 OR BETTER AT JOINT(S) E

BRACING
TOP CHORD TO BE SHEATHED OR MAX. PURLIN SPACING = 6.25 FT.
MAX. UNBRACED BOTTOM CHORD LENGTH = 10.00 FT OR RIGID CEILING DIRECTLY APPLIED.

ALL PITCH BREAKS AND PERIMETER CORNER JOINTS MUST BE LATERALLY RESTRAINED.

LOADING
TOTAL LOAD CASES: (4)

CHORDS

MEMB. FR-TO	MAX. FACTORED FORCE (LBS)	VERT. LOAD LC1 (PLF) FROM	TO	MAX CSI (LC)
E- B	-612 / 0	0.0	0.0	0.13 (4)
A- B	0 / 45	-119.4	-119.4	0.16 (1)
B- C	-50 / 0	-119.4	-119.4	0.73 (1)
E- D	0 / 0	-18.2	-18.2	0.14 (4)

WEBS

MEMB. FR-TO	MAX. UNBRAC LENGTH	MAX. FACTORED FORCE (LBS)	MAX CSI (LC)
E- B	7.81		
A- B	10.00		
B- C	6.25		
E- D	10.00		

DESIGN CRITERIA

SPECIFIED LOADS:

TOP CH.	LL =	34.8	PSF
	DL =	6.0	PSF
BOT CH.	LL =	0.0	PSF
	DL =	7.3	PSF
TOTAL LOAD	=	48.1	PSF

SPACING = 24.0 IN. C/C

THIS TRUSS IS DESIGNED FOR RESIDENTIAL OR SMALL BUILDING REQUIREMENTS OF PART 9, NBCC 2015

THIS DESIGN COMPLIES WITH:
- PART 9 OF BCBC 2018 , NBC-2019AE
- PART 9 OF OBC 2012 (2019 AMENDMENT)
- CSA 086-14
- TPIC 2014

DESIGN ASSUMPTIONS
-OVERHANG NOT TO BE ALTERED OR CUT OFF.

(55 % OF 48.1 P.S.F. G.S.L. PLUS 8.4 P.S.F. RAIN LOAD) EQUALS 34.8 P.S.F. SPECIFIED ROOF LIVE LOAD

ALLOWABLE DEFL.(LL)= L/360 (0.20")
CALCULATED VERT. DEFL.(LL) = L/ 999 (0.00")
ALLOWABLE DEFL.(TL)= L/360 (0.20")
CALCULATED VERT. DEFL.(TL) = L/ 999 (0.04")

CSI: TC=0.73/0.97 (B-C:1) , BC=0.14/0.97 (D-E:4) , WB=0.00/0.97 (n/a:0) , SSI=0.29/1.00 (B-C:1)

DOL LUMBER=1.00 NAIL=1.00 LS BEND=1.10 COMP=1.10 SHEAR=1.10 TENS= 1.10

COMPANION LIVE LOAD FACTOR = 1.00

TRUSS PLATE MANUFACTURER IS NOT RESPONSIBLE FOR QUALITY CONTROL IN THE TRUSS MANUFACTURING PLANT .

NAIL VALUES

PLATE	GRIP(DRY) (PSI) MAX	MIN	SHEAR (PLI) MAX	MIN	SECTION (PLI) MAX	MIN
MT20	650	371	1747	788	1987	1873

PLATE PLACEMENT TOL. = 0.250 inches

PLATE ROTATION TOL. = 5.0 Deg.

JSI GRIP= 0.38 (B) (INPUT = 0.90)
JSI METAL= 0.31 (B) (INPUT = 1.00)

LICENSED PROFESSIONAL ENGINEER
N.A. EL-MASRI
PROVINCE OF ONTARIO
Jul 20, 2023

READ ALL NOTES ON THIS PAGE AND ON THE ENGINEERING NOTES: TRUSSES. THE NOTE PAGE IS AN INTEGRAL PART OF THIS DRAWING AS IT CONTAINS SPECIFICATIONS AND CRITERIA USED IN THE DESIGN OF THIS COMPONENT.

KOTT

JOB NAME	TRUSS NAME	QUANTITY	PLY	JOB DESC.	DRWG NO.
NE0723-137	J02	3	1	TRUSS DESC. GREENPARK - ZADORRA ESTATES - VILLA 12-1	

Version 8.630 S Mar 22 2023 MiTek Industries, Inc. Thu Jul 20 09:02:59 2023 Page 1
ID:VquVgowiAqiumFmAweaWlxz71eJ-FZGHg4yZ2wmwMWUg93Un60zQU1mK4KIxeHNcmaywEHw

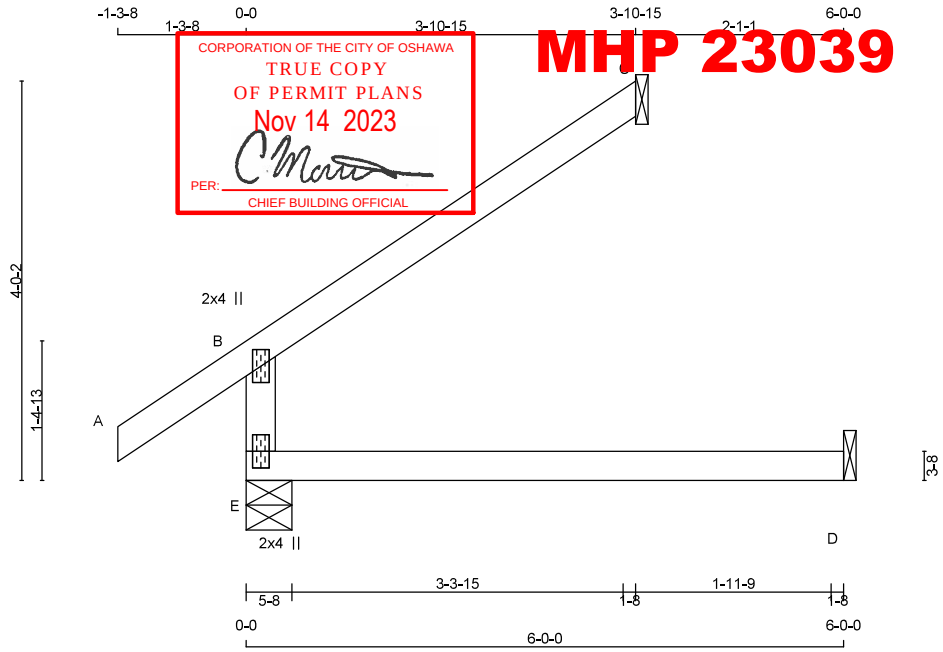

Scale = 1:23.1

CORPORATION OF THE CITY OF OSHAWA
TRUE COPY
OF PERMIT PLANS
Nov 14 2023
PER: C Martin
CHIEF BUILDING OFFICIAL

MHP 23039

TOTAL WEIGHT = 3 X 15 = 46 lb
[M]

LUMBER
N. L. G. A. RULES

CHORDS	SIZE		LUMBER	DESCR.
E - B	2x4	DRY	No.2	SPF
A - C	2x4	DRY	No.2	SPF
E - D	2x4	DRY	No.2	SPF

DRY: SEASONED LUMBER.

PLATES (table is in inches)

JT	TYPE	PLATES	W	LEN	Y	X
B	TMV+p	MT20	2.0	4.0		
E	BMV1+p	MT20	2.0	4.0		

DIMENSIONS, SUPPORTS AND LOADINGS SPECIFIED BY FABRICATOR TO BE VERIFIED BY BUILDING DESIGNER

BEARINGS

JT	FACTORED GROSS REACTION VERT	HORZ	MAXIMUM FACTORED GROSS REACTION DOWN	HORZ	UPLIFT	INPUT BRG IN-SX	REQRD BRG IN-SX
E	519	0	519	0	0	5-8	1-8
C	175	0	175	0	0	1-8	1-8
D	46	0	51	0	0	1-8	1-8

SEE MITEK STANDARD DETAIL MSD2015-H FOR CONNECTION TO JOINT(S) C , D

UNFACTORED REACTIONS

JT	1ST LCASE COMBINED	MAX./MIN. COMPONENT REACTIONS SNOW	LIVE	PERM.LIVE	WIND	DEAD	SOIL
E	362	266 / 0	0 / 0	0 / 0	0 / 0	97 / 0	0 / 0
C	120	102 / 0	0 / 0	0 / 0	0 / 0	18 / 0	0 / 0
D	37	0 / 0	0 / 0	0 / 0	0 / 0	37 / 0	0 / 0

BEARING MATERIAL TO BE SPF NO.2 OR BETTER AT JOINT(S) E, C

BRACING
TOP CHORD TO BE SHEATHED OR MAX. PURLIN SPACING = 6.25 FT.
MAX. UNBRACED BOTTOM CHORD LENGTH = 10.00 FT OR RIGID CEILING DIRECTLY APPLIED.

ALL PITCH BREAKS AND PERIMETER CORNER JOINTS MUST BE LATERALLY RESTRAINED.

LOADING
TOTAL LOAD CASES: (4)

CHORDS MEMB. FR-TO	MAX. FACTORED FORCE (LBS)	VERT. LOAD (PLF) FROM	TO	LC1 MAX CSI (LC)	WEBS MEMB. FR-TO	MAX. UNBRAC LENGTH	MAX. FACTORED FORCE (LBS)	MAX CSI (LC)
E- B	-456 / 0	0.0	0.0	0.13 (4)		7.81		
A- B	0 / 45	-119.4	-119.4	0.16 (1)		10.00		
B- C	-32 / 0	-119.4	-119.4	0.31 (1)		6.25		
E- D	0 / 0	-18.2	-18.2	0.14 (4)		10.00		

DESIGN CRITERIA

SPECIFIED LOADS:

TOP CH.	LL	=	34.8	PSF
	DL	=	6.0	PSF
BOT CH.	LL	=	0.0	PSF
	DL	=	7.3	PSF
TOTAL LOAD		=	48.1	PSF

SPACING = 24.0 IN. C/C

THIS TRUSS IS DESIGNED FOR RESIDENTIAL OR SMALL BUILDING REQUIREMENTS OF PART 9, NBCC 2015

THIS DESIGN COMPLIES WITH:
- PART 9 OF BCBC 2018 , NBC-2019AE
- PART 9 OF OBC 2012 (2019 AMENDMENT)
- CSA 086-14
- TPIC 2014

DESIGN ASSUMPTIONS
-OVERHANG NOT TO BE ALTERED OR CUT OFF.

(55 % OF 48.1 P.S.F. G.S.L. PLUS 8.4 P.S.F. RAIN LOAD) EQUALS 34.8 P.S.F. SPECIFIED ROOF LIVE LOAD

ALLOWABLE DEFL.(LL)= L/360 (0.20")
CALCULATED VERT. DEFL.(LL) = L/ 999 (0.00")
ALLOWABLE DEFL.(TL)= L/360 (0.20")
CALCULATED VERT. DEFL.(TL) = L/ 999 (0.04")

CSI: TC=0.31/0.97 (B-C:1) , BC=0.14/0.97 (D-E:4) , WB=0.00/0.97 (n/a:0) , SSI=0.19/1.00 (B-C:1)

DOL LUMBER=1.00 NAIL=1.00 LS BEND=1.10 COMP=1.10 SHEAR=1.10 TENS= 1.10

COMPANION LIVE LOAD FACTOR = 1.00

TRUSS PLATE MANUFACTURER IS NOT RESPONSIBLE FOR QUALITY CONTROL IN THE TRUSS MANUFACTURING PLANT .

NAIL VALUES

PLATE	GRIP(DRY) (PSI) MAX	MIN	SHEAR (PLI) MAX	MIN	SECTION (PLI) MAX	MIN
MT20	650	371	1747	788	1987	1873

PLATE PLACEMENT TOL. = 0.250 inches

PLATE ROTATION TOL. = 5.0 Deg.

JSI GRIP= 0.28 (B) (INPUT = 0.90)
JSI METAL= 0.23 (B) (INPUT = 1.00)

LICENSED PROFESSIONAL ENGINEER
N.A. EL-MASRI
PROVINCE OF ONTARIO
Jul 20, 2023

READ ALL NOTES ON THIS PAGE AND ON THE ENGINEERING NOTES: TRUSSES. THE NOTE PAGE IS AN INTEGRAL PART OF THIS DRAWING AS IT CONTAINS SPECIFICATIONS AND CRITERIA USED IN THE DESIGN OF THIS COMPONENT.

KOTT

JOB NAME	TRUSS NAME	QUANTITY	PLY	JOB DESC.	DRWG NO.
NE0723-137	J03	3	1	GREENPARK - ZADORRA ESTATES - VILLA 12-1 (TRUSS DESC.)	

Version 8.630 S Mar 22 2023 MiTek Industries, Inc. Thu Jul 20 09:03:00 2023 Page 1
ID:VquVgowiAqiumFmAweaWlxz71eJ-jlpgtQyBpDunzg3sjn?0fEWdaQ6Qpn?4tx69I0ywEHv

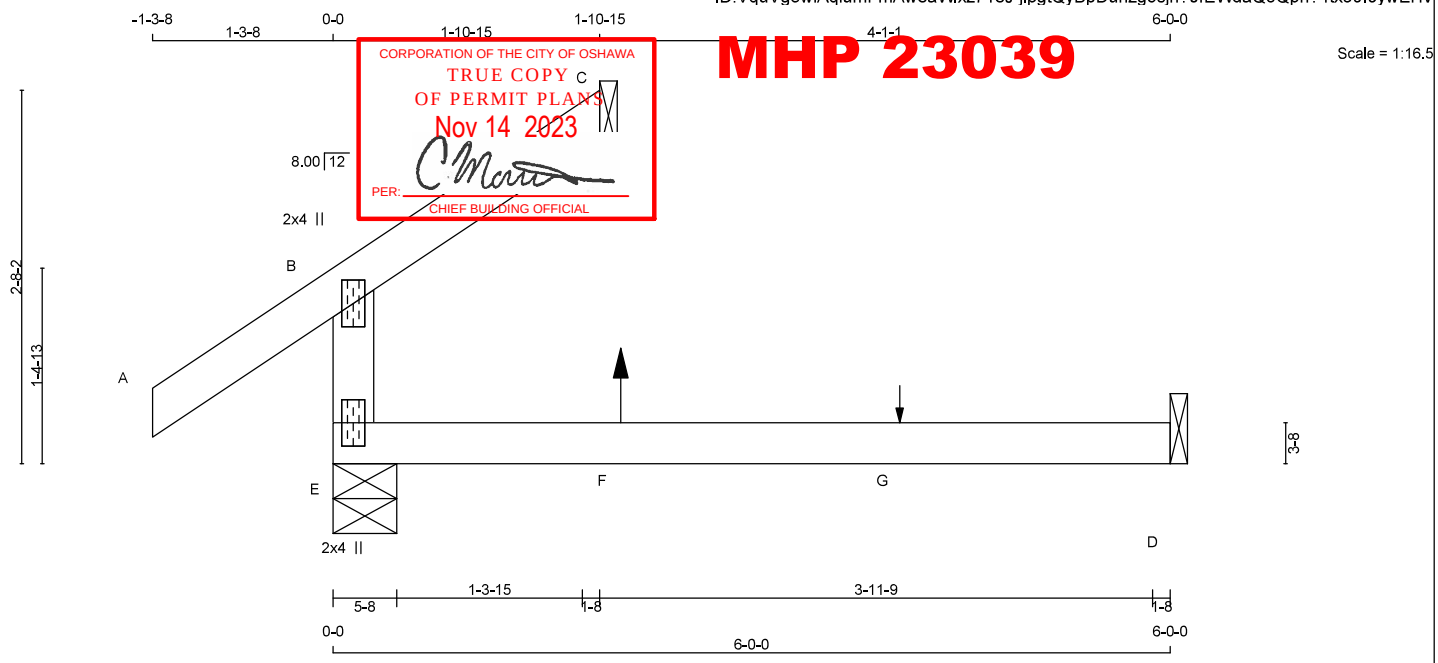

CORPORATION OF THE CITY OF OSHAWA
TRUE COPY
OF PERMIT PLANS
Nov 14 2023
PER:
CHIEF BUILDING OFFICIAL
MHP 23039

TOTAL WEIGHT = 3 X 13 = 38 lb [M]

LUMBER
N. L. G. A. RULES

CHORDS	SIZE		LUMBER	DESCR.
E - B	2x4	DRY	No.2	SPF
A - C	2x4	DRY	No.2	SPF
E - D	2x4	DRY	No.2	SPF

DRY: SEASONED LUMBER.

PLATES (table is in inches)

JT	TYPE	PLATES	W	LEN	Y	X
B	TMV+p	MT20	2.0	4.0		
E	BMV1+p	MT20	2.0	4.0		

DIMENSIONS, SUPPORTS AND LOADINGS SPECIFIED BY FABRICATOR TO BE VERIFIED BY BUILDING DESIGNER

BEARINGS

JT	FACTORED GROSS REACTION VERT	HORZ	MAXIMUM FACTORED GROSS REACTION DOWN	HORZ	UPLIFT	INPUT BRG IN-SX	REQRD BRG IN-SX
E	369	0	369	0	0	5-8	1-8
C	81	0	81	0	0	1-8	1-8
D	44	0	53	0	0	1-8	1-8

SEE MITEK STANDARD DETAIL MSD2015-H FOR CONNECTION TO JOINT(S) C , D

UNFACTORED REACTIONS

JT	1ST LCASE COMBINED	MAX./MIN. COMPONENT REACTIONS SNOW	LIVE	PERM.LIVE	WIND	DEAD	SOIL
E	257	192 / 0	0 / 0	0 / 0	0 / 0	65 / 0	0 / 0
C	58	34 / 0	0 / 0	0 / 0	0 / 0	24 / 0	0 / 0
D	35	0 / -2	0 / 0	0 / 0	0 / 0	38 / 0	0 / 0

BEARING MATERIAL TO BE SPF NO.2 OR BETTER AT JOINT(S) E, C

BRACING
TOP CHORD TO BE SHEATHED OR MAX. PURLIN SPACING = 6.25 FT.
MAX. UNBRACED BOTTOM CHORD LENGTH = 10.00 FT OR RIGID CEILING DIRECTLY APPLIED.

ALL PITCH BREAKS AND PERIMETER CORNER JOINTS MUST BE LATERALLY RESTRAINED.

LOADING
TOTAL LOAD CASES: (4)

CHORDS

MEMB. FR-TO	MAX. FACTORED FORCE (LBS)	VERT. LOAD (PLF) FROM	TO	LC1 CSI (LC)	MAX UNBRAC LENGTH
E- B	-311 / 0	0.0	0.0	0.10 (4)	7.81
A- B	0 / 45	-119.4	-119.4	0.16 (1)	10.00
B- C	-18 / 10	-119.4	-119.4	0.09 (1)	6.25

WEBS

MEMB. FR-TO	MAX. FACTORED FORCE (LBS)	MAX CSI (LC)
E- F	0 / 0	-18.2 -18.2 0.14 (4) 10.00
F- G	0 / 0	-18.2 -18.2 0.14 (4) 10.00
G- D	0 / 0	-18.2 -18.2 0.14 (4) 10.00

SPECIFIED CONCENTRATED LOADS (LBS)

JT	LOC.	LC1	MAX-	MAX+	FACE	DIR.	TYPE	HEEL	CONN.
F	2-0-12	5	1	5	BACK	VERT	TOTAL	—	C1
G	4-0-12	1	1	—	BACK	VERT	TOTAL	—	C1

CONNECTION REQUIREMENTS

1) **C1:** A SUITABLE HANGER/MECHANICAL CONNECTION IS REQUIRED.

DESIGN CRITERIA

*** SPECIAL LOADS ANALYSIS ***
GEOMETRY AND/OR BASIC LOADS CHANGED BY USER.
LOADS WERE DERIVED FROM USER INPUT
NO FURTHER MODIFICATIONS WERE MADE

SPECIFIED LOADS:

TOP CH.	LL	=	34.8	PSF
	DL	=	6.0	PSF
BOT CH.	LL	=	0.0	PSF
	DL	=	7.3	PSF
TOTAL LOAD		=	48.1	PSF

SPACING = 24.0 IN. C/C

*** NON STANDARD GIRDER ***
ADDT'L USER-DEFINED LOADS APPLIED TO ALL LOAD CASES.

THIS TRUSS IS DESIGNED FOR RESIDENTIAL OR SMALL BUILDING REQUIREMENTS OF PART 9, NBCC 2015

THIS DESIGN COMPLIES WITH:
- PART 9 OF BCBC 2018 , NBC-2019AE
- PART 9 OF OBC 2012 (2019 AMENDMENT)
- CSA 086-14
- TPIC 2014

DESIGN ASSUMPTIONS
-OVERHANG NOT TO BE ALTERED OR CUT OFF.

(55 % OF 48.1 P.S.F. G.S.L. PLUS 8.4 P.S.F. RAIN LOAD) EQUALS 34.8 P.S.F. SPECIFIED ROOF LIVE LOAD

ALLOWABLE DEFL.(LL)= L/360 (0.20")
CALCULATED VERT. DEFL.(LL) = L/ 999 (0.01")
ALLOWABLE DEFL.(TL)= L/360 (0.20")
CALCULATED VERT. DEFL.(TL) = L/ 999 (0.04")

CSI: TC=0.16/0.97 (A-B:1) , BC=0.14/0.97 (D-E:4) , WB=0.00/0.97 (n/a:0) , SSI=0.11/1.00 (A-B:1)

DOL LUMBER=1.00 NAIL=1.00 LS BEND=1.10 COMP=1.10 SHEAR=1.10 TENS= 1.10

COMPANION LIVE LOAD FACTOR = 1.00

TRUSS PLATE MANUFACTURER IS NOT RESPONSIBLE FOR QUALITY CONTROL IN THE TRUSS MANUFACTURING PLANT .

NAIL VALUES

PLATE	GRIP(DRY) (PSI) MAX	MIN	SHEAR (PLI) MAX	MIN	SECTION (PLI) MAX	MIN
MT20	650	371	1747	788	1987	1873

PLATE PLACEMENT TOL. = 0.250 inches

PLATE ROTATION TOL. = 5.0 Deg.

JSI GRIP= 0.19 (B) (INPUT = 0.90)
JSI METAL= 0.16 (B) (INPUT = 1.00)

LICENSED PROFESSIONAL ENGINEER
N.A. EL-MASRI
PROVINCE OF ONTARIO
Jul 20, 2023

READ ALL NOTES ON THIS PAGE AND ON THE ENGINEERING NOTES: TRUSSES. THE NOTE PAGE IS AN INTEGRAL PART OF THIS DRAWING AS IT CONTAINS SPECIFICATIONS AND CRITERIA USED IN THE DESIGN OF THIS COMPONENT.

KOTT

JOB NAME	TRUSS NAME	QUANTITY	PLY	JOB DESC.	DRWG NO.
NE0723-137	J04	3	1	GREENPARK - ZADORRA ESTATES - VILLA 12-1 (TRUSS DESC.)	

Version 8.630 S Mar 22 2023 MiTek Industries, Inc. Thu Jul 20 09:03:01 2023 Page 1
ID:VquVgowiAqiumFmAweaWlxz71eJ-ByN24mzpaX0ebqe2GUWFBR2mzqUdYEFD6bsjqSywEHu

CORPORATION OF THE CITY OF OSHAWA
TRUE COPY
OF PERMIT PLANS
Nov 14 2023
PER:
CHIEF BUILDING OFFICIAL
MHP 23039

Scale = 1:23.4

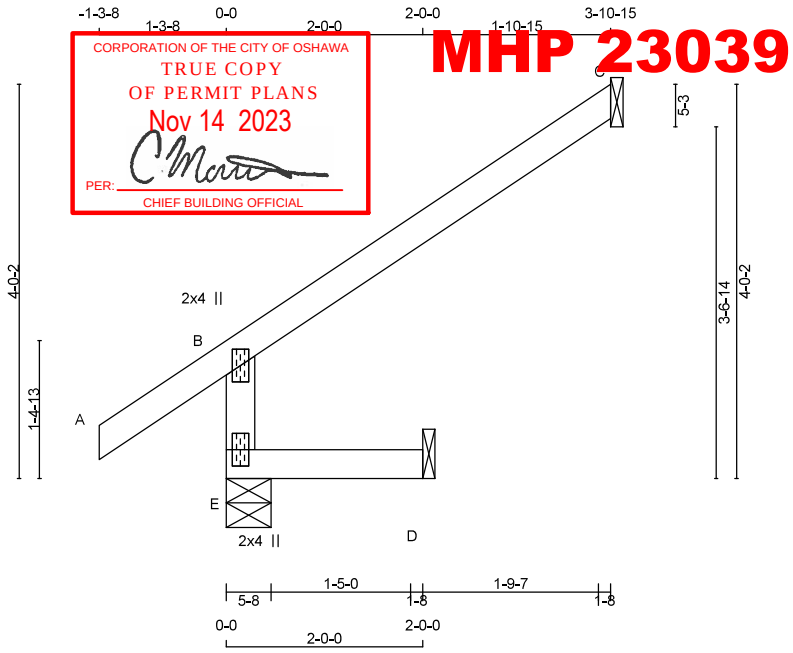

TOTAL WEIGHT = 3 X 11 = 32 lb [M]

LUMBER
N. L. G. A. RULES

CHORDS	SIZE		LUMBER	DESCR.
E - B	2x4	DRY	No.2	SPF
A - C	2x4	DRY	No.2	SPF
E - D	2x4	DRY	No.2	SPF

DRY: SEASONED LUMBER.

PLATES (table is in inches)

JT	TYPE	PLATES	W	LEN	Y	X
B	TMV+p	MT20	2.0	4.0		
E	BMV1+p	MT20	2.0	4.0		

DIMENSIONS, SUPPORTS AND LOADINGS SPECIFIED BY FABRICATOR TO BE VERIFIED BY BUILDING DESIGNER

BEARINGS

JT	FACTORED GROSS REACTION VERT	HORZ	MAXIMUM FACTORED GROSS REACTION DOWN	HORZ	UPLIFT	INPUT BRG IN-SX	REQRD BRG IN-SX
E	476	0	476	0	0	5-8	1-8
C	175	0	175	0	0	1-8	1-8
D	17	0	18	0	0	1-8	1-8

SEE MITEK STANDARD DETAIL MSD2015-H FOR CONNECTION TO JOINT(S) C , D

UNFACTORED REACTIONS

JT	1ST LCASE COMBINED	MAX./MIN. COMPONENT REACTIONS SNOW	LIVE	PERM.LIVE	WIND	DEAD	SOIL
E	327	266 / 0	0 / 0	0 / 0	0 / 0	62 / 0	0 / 0
C	120	102 / 0	0 / 0	0 / 0	0 / 0	18 / 0	0 / 0
D	13	0 / 0	0 / 0	0 / 0	0 / 0	13 / 0	0 / 0

BEARING MATERIAL TO BE SPF NO.2 OR BETTER AT JOINT(S) E

BRACING
TOP CHORD TO BE SHEATHED OR MAX. PURLIN SPACING = 6.25 FT.
MAX. UNBRACED BOTTOM CHORD LENGTH = 10.00 FT OR RIGID CEILING DIRECTLY APPLIED.

ALL PITCH BREAKS AND PERIMETER CORNER JOINTS MUST BE LATERALLY RESTRAINED.

LOADING
TOTAL LOAD CASES: (5)

CHORDS MEMB. FR-TO	MAX. FACTORED FORCE (LBS)	VERT. LOAD (PLF) FROM	TO	LC1 MAX CSI (LC)	WEBS MEMB. FR-TO	MAX. UNBRAC LENGTH	MAX. FACTORED FORCE (LBS)	MAX CSI (LC)
E- B	-456 / 0	0.0	0.0	0.01 (4)		7.81		
A- B	0 / 45	-119.4	-119.4	0.16 (1)		10.00		
B- C	-32 / 0	-119.4	-119.4	0.31 (1)		6.25		
E- D	0 / 0	-18.2	-18.2	0.02 (4)		10.00		

CANTILEVER ANALYSIS HAS BEEN CONSIDERED IN THIS DESIGN

PATTERN-LOADING CHECK APPLIED TO THIS TRUSS.

DESIGN CRITERIA

SPECIFIED LOADS:

TOP CH.	LL	=	34.8	PSF
	DL	=	6.0	PSF
BOT CH.	LL	=	0.0	PSF
	DL	=	7.3	PSF
TOTAL LOAD		=	48.1	PSF

SPACING = 24.0 IN. C/C

THIS TRUSS IS DESIGNED FOR RESIDENTIAL OR SMALL BUILDING REQUIREMENTS OF PART 9, NBCC 2015

THIS DESIGN COMPLIES WITH:
- PART 9 OF BCBC 2018 , NBC-2019AE
- PART 9 OF OBC 2012 (2019 AMENDMENT)
- CSA 086-14
- TPIC 2014

DESIGN ASSUMPTIONS
-OVERHANG NOT TO BE ALTERED OR CUT OFF.

(55 % OF 48.1 P.S.F. G.S.L. PLUS 8.4 P.S.F. RAIN LOAD) EQUALS 34.8 P.S.F. SPECIFIED ROOF LIVE LOAD

ALLOWABLE DEFL.(LL)= L/360 (0.19")
CALCULATED VERT. DEFL.(LL) = L/ 999 (0.00")
ALLOWABLE DEFL.(TL)= L/360 (0.19")
CALCULATED VERT. DEFL.(TL) = L/ 999 (0.00")

CSI: TC=0.31/0.97 (B-C:1) , BC=0.02/0.97 (D-E:4) , WB=0.00/0.97 (n/a:0) , SSI=0.19/1.00 (B-C:1)

DOL LUMBER=1.00 NAIL=1.00 LS BEND=1.10 COMP=1.10 SHEAR=1.10 TENS= 1.10

COMPANION LIVE LOAD FACTOR = 1.00

TRUSS PLATE MANUFACTURER IS NOT RESPONSIBLE FOR QUALITY CONTROL IN THE TRUSS MANUFACTURING PLANT .

NAIL VALUES

PLATE	GRIP(DRY) (PSI) MAX	MIN	SHEAR (PLI) MAX	MIN	SECTION (PLI) MAX	MIN
MT20	650	371	1747	788	1987	1873

PLATE PLACEMENT TOL. = 0.250 inches

PLATE ROTATION TOL. = 5.0 Deg.

JSI GRIP= 0.28 (B) (INPUT = 0.90)
JSI METAL= 0.23 (B) (INPUT = 1.00)

LICENSED PROFESSIONAL ENGINEER
N.A. EL-MASRI
PROVINCE OF ONTARIO
Jul 20, 2023

READ ALL NOTES ON THIS PAGE AND ON THE ENGINEERING NOTES: TRUSSES. THE NOTE PAGE IS AN INTEGRAL PART OF THIS DRAWING AS IT CONTAINS SPECIFICATIONS AND CRITERIA USED IN THE DESIGN OF THIS COMPONENT.

KOTT

JOB NAME	TRUSS NAME	QUANTITY	PLY	JOB DESC.	DRWG NO.
NE0723-137	J05	3	1	GREENPARK - ZADORRA ESTATES - VILLA 12-1 (TRUSS DESC.)	

Version 8.630 S Mar 22 2023 MiTek Industries, Inc. Thu Jul 20 09:03:01 2023 Page 1
ID:VquVgowiAqiumFmAweaWlxz71eJ-ByN24mzpaX0ebqe2GUWFBR2oJqU9YEFD6bsjqSywEHu

CORPORATION OF THE CITY OF OSHAWA
TRUE COPY
OF PERMIT PLANS
Nov 14 2023
PER: CHIEF BUILDING OFFICIAL

MHP 23039

Scale = 1:16.5

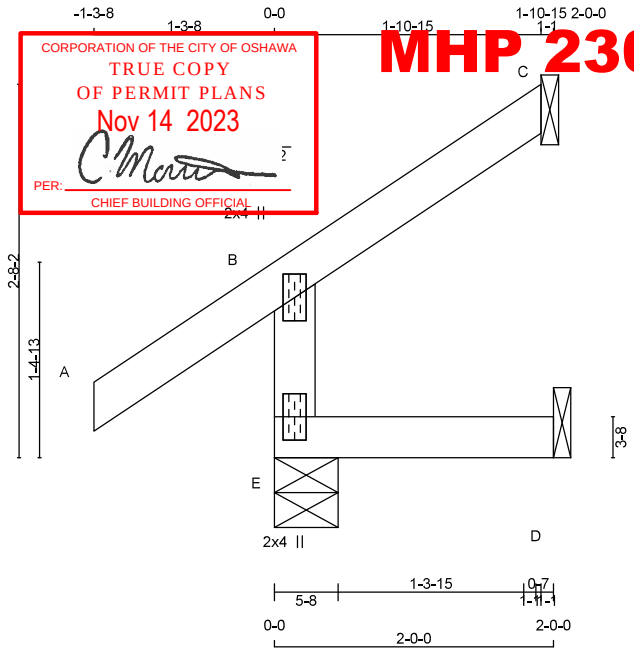

TOTAL WEIGHT = 3 X 8 = 24 lb [M]

LUMBER
N. L. G. A. RULES

CHORDS	SIZE		LUMBER	DESCR.
E - B	2x4	DRY	No.2	SPF
A - C	2x4	DRY	No.2	SPF
E - D	2x4	DRY	No.2	SPF

DRY: SEASONED LUMBER.

PLATES (table is in inches)

JT	TYPE	PLATES	W	LEN	Y	X
B	TMV+p	MT20	2.0	4.0		
E	BMV1+p	MT20	2.0	4.0		

DIMENSIONS, SUPPORTS AND LOADINGS SPECIFIED BY FABRICATOR TO BE VERIFIED BY BUILDING DESIGNER

BEARINGS

JT	FACTORED GROSS REACTION VERT	HORZ	MAXIMUM FACTORED GROSS REACTION DOWN	HORZ	UPLIFT	INPUT BRG IN-SX	REQRD BRG IN-SX
E	355	0	355	0	0	5-8	1-8
C	66	0	66	0	-30	1-8	1-8
D	8	0	18	0	-4	1-8	1-8

SEE MITEK STANDARD DETAIL MSD2015-H FOR CONNECTION TO JOINT(S) C , D

PROVIDE ANCHORAGE AT BEARING JOINT C FOR 150 LBS FACTORED UPLIFT
PROVIDE ANCHORAGE AT BEARING JOINT D FOR 150 LBS FACTORED UPLIFT

UNFACTORED REACTIONS

JT	1ST LCASE COMBINED	MAX./MIN. COMPONENT REACTIONS SNOW	LIVE	PERM.LIVE	WIND	DEAD	SOIL
E	245	196 / 0	0 / 0	0 / 0	0 / 0	48 / 0	0 / 0
C	45	38 / -24	0 / 0	0 / 0	0 / 0	8 / 0	0 / 0
D	7	0 / -10	0 / 0	0 / 0	0 / 0	13 / 0	0 / 0

BEARING MATERIAL TO BE SPF NO.2 OR BETTER AT JOINT(S) E, C

BRACING
TOP CHORD TO BE SHEATHED OR MAX. PURLIN SPACING = 6.25 FT.
MAX. UNBRACED BOTTOM CHORD LENGTH = 10.00 FT OR RIGID CEILING DIRECTLY APPLIED.

ALL PITCH BREAKS AND PERIMETER CORNER JOINTS MUST BE LATERALLY RESTRAINED.

LOADING
TOTAL LOAD CASES: (5)

CHORDS MEMB. FR-TO	MAX. FACTORED FORCE (LBS)	VERT. LOAD (PLF) FROM	TO	LC1 MAX CSI (LC)	WEBS MEMB. MAX. UNBRAC LENGTH FR-TO	MAX. FACTORED FORCE (LBS)	MAX CSI (LC)
E- B	-326 / 0	0.0	0.0	0.05 (5)	7.81		
A- B	0 / 45	-119.4	-119.4	0.16 (1)	10.00		
B- C	-27 / 0	-119.4	-119.4	0.12 (1)	6.25		
E- D	0 / 0	-18.2	-18.2	0.05 (5)	10.00		

CANTILEVER ANALYSIS HAS BEEN CONSIDERED IN THIS DESIGN

PATTERN-LOADING CHECK APPLIED TO THIS TRUSS.

DESIGN CRITERIA

SPECIFIED LOADS:

TOP CH.	LL =	34.8	PSF
	DL =	6.0	PSF
BOT CH.	LL =	0.0	PSF
	DL =	7.3	PSF
TOTAL LOAD	=	48.1	PSF

SPACING = 24.0 IN. C/C

THIS TRUSS IS DESIGNED FOR RESIDENTIAL OR SMALL BUILDING REQUIREMENTS OF PART 9, NBCC 2015

THIS DESIGN COMPLIES WITH:
- PART 9 OF BCBC 2018 , NBC-2019AE
- PART 9 OF OBC 2012 (2019 AMENDMENT)
- CSA 086-14
- TPIC 2014

DESIGN ASSUMPTIONS
-OVERHANG NOT TO BE ALTERED OR CUT OFF.

(55 % OF 48.1 P.S.F. G.S.L. PLUS 8.4 P.S.F. RAIN LOAD) EQUALS 34.8 P.S.F. SPECIFIED ROOF LIVE LOAD

ALLOWABLE DEFL.(LL)= L/360 (0.19")
CALCULATED VERT. DEFL.(LL) = L/ 999 (0.00")
ALLOWABLE DEFL.(TL)= L/360 (0.19")
CALCULATED VERT. DEFL.(TL) = L/ 999 (0.00")

CSI: TC=0.16/0.97 (A-B:1) , BC=0.05/0.97 (D-E:5) , WB=0.00/0.97 (n/a:0) , SSI=0.11/1.00 (A-B:1)

DOL LUMBER=1.00 NAIL=1.00 LS BEND=1.10 COMP=1.10 SHEAR=1.10 TENS= 1.10

COMPANION LIVE LOAD FACTOR = 1.00

TRUSS PLATE MANUFACTURER IS NOT RESPONSIBLE FOR QUALITY CONTROL IN THE TRUSS MANUFACTURING PLANT .

NAIL VALUES

PLATE	GRIP(DRY) (PSI) MAX	MIN	SHEAR (PLI) MAX	MIN	SECTION (PLI) MAX	MIN
MT20	650	371	1747	788	1987	1873

PLATE PLACEMENT TOL. = 0.250 inches

PLATE ROTATION TOL. = 5.0 Deg.

JSI GRIP= 0.20 (B) (INPUT = 0.90)
JSI METAL= 0.17 (B) (INPUT = 1.00)

LICENSED PROFESSIONAL ENGINEER
N.A. EL-MASRI
PROVINCE OF ONTARIO
Jul 20, 2023

READ ALL NOTES ON THIS PAGE AND ON THE ENGINEERING NOTES: TRUSSES. THE NOTE PAGE IS AN INTEGRAL PART OF THIS DRAWING AS IT CONTAINS SPECIFICATIONS AND CRITERIA USED IN THE DESIGN OF THIS COMPONENT.

KOTT

JOB NAME	TRUSS NAME	QUANTITY	PLY	JOB DESC.	DRWG NO.
NE0723-137	T01	1	1	GREENPARK - ZADORRA ESTATES - VILLA 12-1 (TRUSS DESC.)	

Version 8.630 S Mar 22 2023 MiTek Industries, Inc. Thu Jul 20 09:03:02 2023 Page 1
ID:VquVgowiAqiumFmAweaWlxz71eJ-g8xQI6_RLr8VDzDFqC2UkfbtDEkuHYsNLFbGMvywEHt

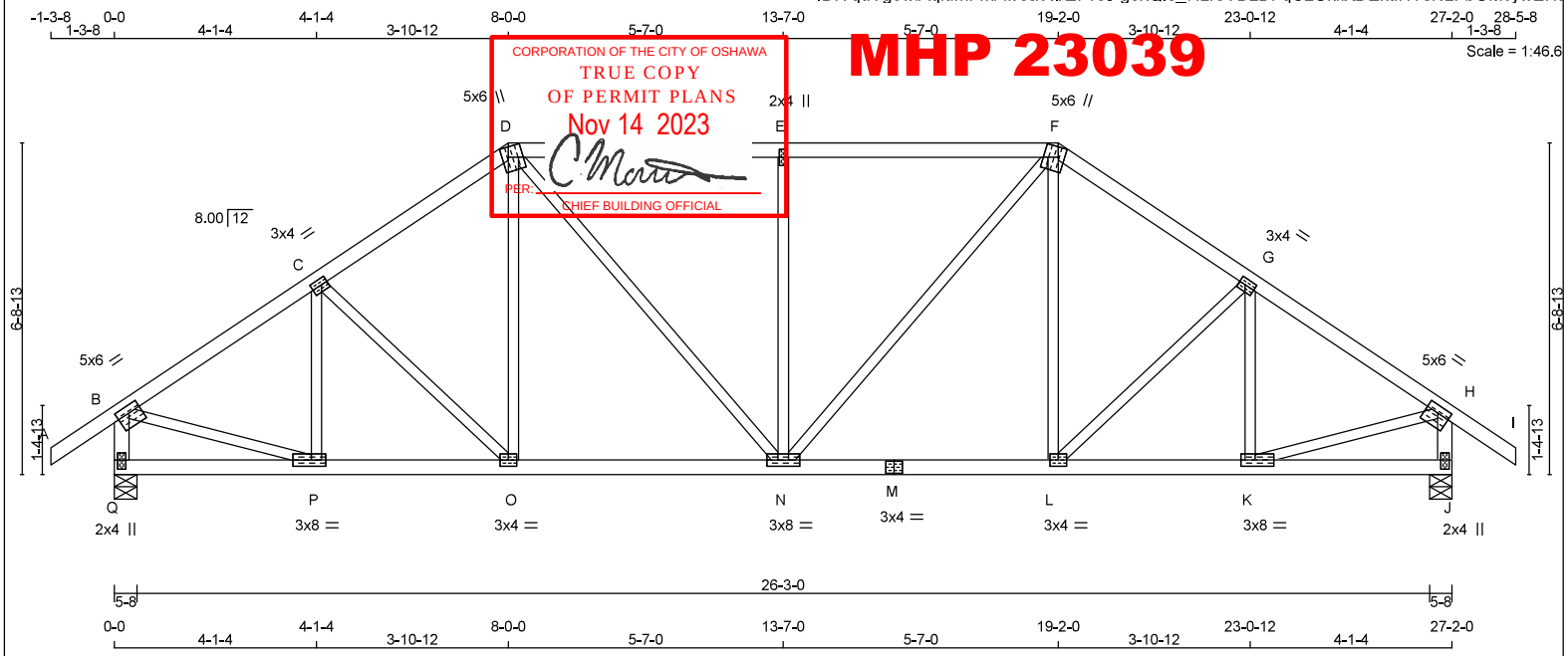

MHP 23039
CORPORATION OF THE CITY OF OSHAWA
TRUE COPY
OF PERMIT PLANS
Nov 14 2023
PER:
CHIEF BUILDING OFFICIAL

TOTAL WEIGHT = 121 lb
[M][F]

LUMBER
N. L. G. A. RULES

CHORDS	SIZE		LUMBER	DESCR.
A - D	2x4	DRY	No.2	SPF
D - F	2x4	DRY	No.2	SPF
F - I	2x4	DRY	No.2	SPF
Q - B	2x4	DRY	No.2	SPF
J - H	2x4	DRY	No.2	SPF
Q - M	2x4	DRY	No.2	SPF
M - J	2x4	DRY	No.2	SPF
ALL WEBS EXCEPT	2x3	DRY	No.2	SPF

DRY: SEASONED LUMBER.

PLATES (table is in inches)

JT	TYPE	PLATES	W	LEN	Y	X
B	TMVW-t	MT20	5.0	6.0	1.75	3.00
C	TMWW-t	MT20	3.0	4.0	1.50	1.50
D	TTWW+m	MT20	5.0	6.0	2.50	1.50
E	TMW+w	MT20	2.0	4.0		
F	TTWW+m	MT20	5.0	6.0	2.50	1.50
G	TMWW-t	MT20	3.0	4.0	1.50	1.50
H	TMVW-t	MT20	5.0	6.0	1.75	3.00
J	BMV1+p	MT20	2.0	4.0	2.25	1.00
K	BMWW-t	MT20	3.0	8.0	1.50	3.50
L	BMWW-t	MT20	3.0	4.0		
M	BS-t	MT20	3.0	4.0		
N	BMWWW-t	MT20	3.0	8.0		
O	BMWW-t	MT20	3.0	4.0		
P	BMWW-t	MT20	3.0	8.0	1.50	3.50
Q	BMV1+p	MT20	2.0	4.0	2.25	1.00

DIMENSIONS, SUPPORTS AND LOADINGS SPECIFIED BY FABRICATOR TO BE VERIFIED BY BUILDING DESIGNER

BEARINGS

JT	FACTORED GROSS REACTION VERT	HORZ	MAXIMUM FACTORED GROSS REACTION DOWN	HORZ	UPLIFT	INPUT BRG IN-SX	REQRD BRG IN-SX
Q	2034	0	2034	0	0	5-8	3-2
J	2034	0	2034	0	0	5-8	3-2

UNFACTORED REACTIONS

JT	1ST LCASE COMBINED	MAX./MIN. COMPONENT REACTIONS SNOW	LIVE	PERM.LIVE	WIND	DEAD	SOIL
Q	1419	1041 / 0	0 / 0	0 / 0	0 / 0	378 / 0	0 / 0
J	1419	1041 / 0	0 / 0	0 / 0	0 / 0	378 / 0	0 / 0

BEARING MATERIAL TO BE SPF NO.2 OR BETTER AT JOINT(S) Q, J

BRACING
TOP CHORD TO BE SHEATHED OR MAX. PURLIN SPACING = 4.06 FT.
MAX. UNBRACED BOTTOM CHORD LENGTH = 10.00 FT OR RIGID CEILING DIRECTLY APPLIED.

ALL PITCH BREAKS AND PERIMETER CORNER JOINTS MUST BE LATERALLY RESTRAINED.

LOADING
TOTAL LOAD CASES: (4)

CHORDS

MEMB. FR-TO	MAX. FACTORED FORCE (LBS)	FACTORED VERT. LOAD (PLF) FROM	TO	LC1	MAX CSI (LC)	MAX. UNBRAC LENGTH
A- B	0 / 45	-119.4	-119.4	0.16 (1)	10.00	
B- C	-2094 / 0	-119.4	-119.4	0.29 (1)	4.39	
C- D	-2012 / 0	-119.4	-119.4	0.28 (1)	4.47	
D- E	-2046 / 0	-119.4	-119.4	0.53 (1)	4.06	
E- F	-2046 / 0	-119.4	-119.4	0.53 (1)	4.06	
F- G	-2012 / 0	-119.4	-119.4	0.28 (1)	4.47	
G- H	-2094 / 0	-119.4	-119.4	0.29 (1)	4.39	
H- I	0 / 45	-119.4	-119.4	0.16 (1)	10.00	
Q- B	-1998 / 0	0.0	0.0	0.21 (1)	5.89	
J- H	-1998 / 0	0.0	0.0	0.21 (1)	5.89	
Q- P	0 / 0	-18.2	-18.2	0.06 (4)	10.00	
P- O	0 / 1767	-18.2	-18.2	0.34 (1)	10.00	
O- N	0 / 1649	-18.2	-18.2	0.32 (1)	10.00	
N- M	0 / 1649	-18.2	-18.2	0.32 (1)	10.00	
M- L	0 / 1649	-18.2	-18.2	0.32 (1)	10.00	
L- K	0 / 1767	-18.2	-18.2	0.34 (1)	10.00	
K- J	0 / 0	-18.2	-18.2	0.06 (4)	10.00	

WEBS

MEMB. FR-TO	MAX. FACTORED FORCE (LBS)	MAX CSI (LC)
P- C	-397 / 0	0.10 (1)
C- O	-168 / 0	0.09 (1)
O- D	0 / 210	0.05 (1)
D- N	0 / 607	0.14 (1)
N- E	-816 / 0	0.62 (1)
N- F	0 / 607	0.14 (1)
L- F	0 / 210	0.05 (1)
L- G	-168 / 0	0.09 (1)
K- G	-397 / 0	0.10 (1)
B- P	0 / 1827	0.41 (1)
K- H	0 / 1827	0.41 (1)

DESIGN CRITERIA

SPECIFIED LOADS:

TOP CH.	LL =	34.8	PSF
	DL =	6.0	PSF
BOT CH.	LL =	0.0	PSF
	DL =	7.3	PSF
TOTAL LOAD	=	48.1	PSF

SPACING = 24.0 IN. C/C

LOADING IN FLAT SECTION BASED ON A SLOPE OF 2.00/12 MINIMUM

THIS TRUSS IS DESIGNED FOR RESIDENTIAL OR SMALL BUILDING REQUIREMENTS OF PART 9, NBCC 2015

THIS DESIGN COMPLIES WITH:
- PART 9 OF BCBC 2018 , NBC-2019AE
- PART 9 OF OBC 2012 (2019 AMENDMENT)
- CSA 086-14
- TPIC 2014

(55 % OF 48.1 P.S.F. G.S.L. PLUS 8.4 P.S.F. RAIN LOAD) EQUALS 34.8 P.S.F. SPECIFIED ROOF LIVE LOAD

ALLOWABLE DEFL.(LL)= L/360 (0.91")
CALCULATED VERT. DEFL.(LL) = L/ 999 (0.08")
ALLOWABLE DEFL.(TL)= L/360 (0.91")
CALCULATED VERT. DEFL.(TL) = L/ 999 (0.14")

CSI: TC=0.53/0.97 (D-E:1) , BC=0.34/0.97 (K-L:1) , WB=0.62/0.97 (E-N:1) , SSI=0.32/1.00 (D-E:1)

DOL LUMBER=1.00 NAIL=1.00 LS BEND=1.10 COMP=1.10 SHEAR=1.10 TENS= 1.10

COMPANION LIVE LOAD FACTOR = 1.00

TRUSS PLATE MANUFACTURER IS NOT RESPONSIBLE FOR QUALITY CONTROL IN THE TRUSS MANUFACTURING PLANT .

NAIL VALUES

PLATE	GRIP(DRY) (PSI) MAX	MIN	SHEAR (PLI) MAX	MIN	SECTION (PLI) MAX	MIN
MT20	650	371	1747	788	1987	1873

PLATE PLACEMENT TOL. = 0.250 inches

PLATE ROTATION TOL. = 5.0 Deg.

JSI GRIP= 0.86 (K) (INPUT = 0.90)
JSI METAL= 0.55 (H) (INPUT = 1.00)

LICENSED PROFESSIONAL ENGINEER
N.A. EL-MASRI
PROVINCE OF ONTARIO
Jul 20, 2023

READ ALL NOTES ON THIS PAGE AND ON THE ENGINEERING NOTES: TRUSSES. THE NOTE PAGE IS AN INTEGRAL PART OF THIS DRAWING AS IT CONTAINS SPECIFICATIONS AND CRITERIA USED IN THE DESIGN OF THIS COMPONENT.

KOTT

JOB NAME	TRUSS NAME	QUANTITY	PLY	JOB DESC.	DRWG NO.
NE0723-137	T02	1	1	TRUSS DESC. GREENPARK - ZADORRA ESTATES - VILLA 12-1	

Version 8.630 S Mar 22 2023 MiTek Industries, Inc. Thu Jul 20 09:03:02 2023 Page 1
ID:VquVgowiAqiumFmAweaWlxz71eJ-g8xQI6_RLr8VDzDFqC2UkfbuTEj7Hb_NLFbGMvywEHt

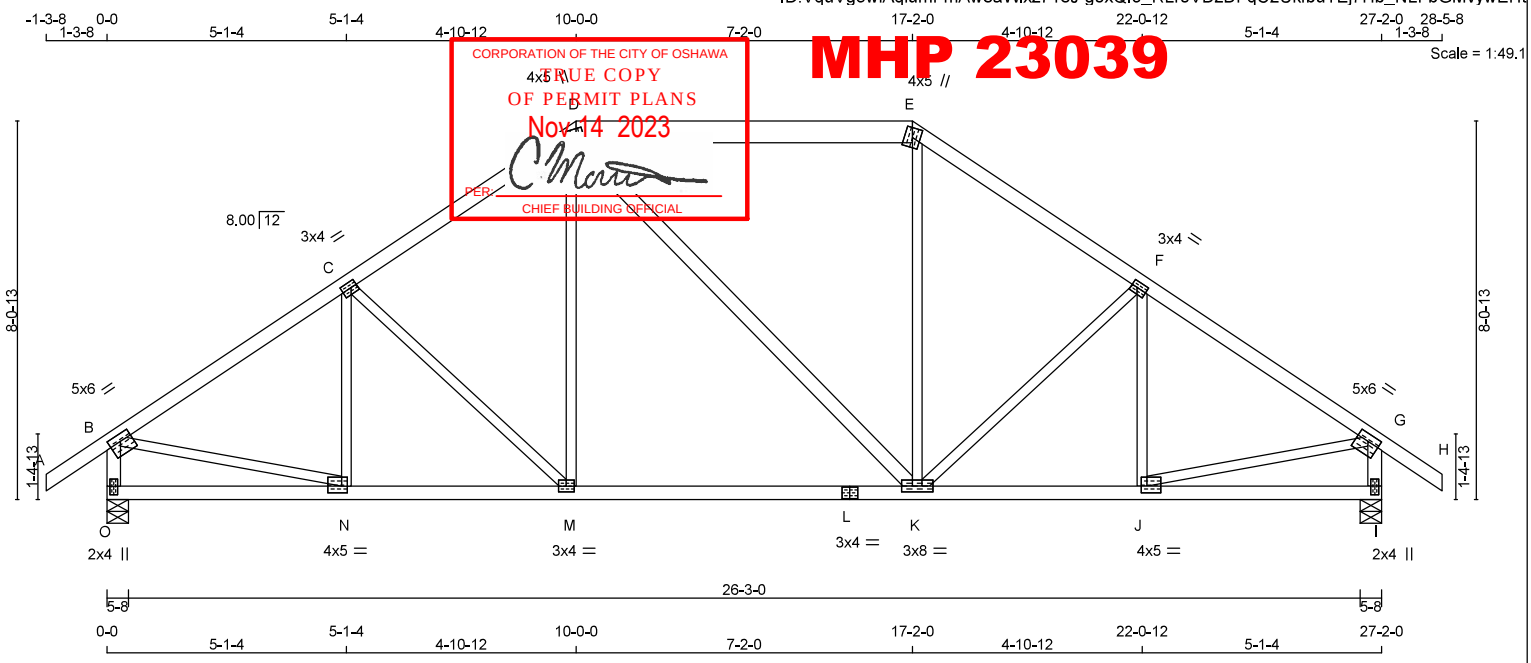

CORPORATION OF THE CITY OF OSHAWA
TRUE COPY
OF PERMIT PLANS
Nov 14 2023
PER
CHIEF BUILDING OFFICIAL
MHP 23039

TOTAL WEIGHT = 126 lb

LUMBER
N. L. G. A. RULES

CHORDS	SIZE		LUMBER	DESCR.
A - D	2x4	DRY	No.2	SPF
D - E	2x6	DRY	No.2	SPF
E - H	2x4	DRY	No.2	SPF
O - B	2x4	DRY	No.2	SPF
I - G	2x4	DRY	No.2	SPF
O - L	2x4	DRY	No.2	SPF
L - I	2x4	DRY	No.2	SPF
ALL WEBS	2x3	DRY	No.2	SPF
EXCEPT				
D - K	2x4	DRY	No.2	SPF

DRY: SEASONED LUMBER.

PLATES (table is in inches)

JT	TYPE	PLATES	W	LEN	Y	X
B	TMVW-t	MT20	5.0	6.0	1.75	3.00
C	TMWW-t	MT20	3.0	4.0	1.50	1.50
D	TTWW+m	MT20	4.0	5.0	2.25	2.00
E	TTW+m	MT20	4.0	5.0		
F	TMWW-t	MT20	3.0	4.0	1.50	1.50
G	TMVW-t	MT20	5.0	6.0	1.75	3.00
I	BMV1+p	MT20	2.0	4.0	2.25	1.00
J	BMWW-t	MT20	4.0	5.0	1.75	1.50
K	BMWWW-t	MT20	3.0	8.0		
L	BS-t	MT20	3.0	4.0		
M	BMWW-t	MT20	3.0	4.0		
N	BMWW-t	MT20	4.0	5.0	1.75	1.50
O	BMV1+p	MT20	2.0	4.0	2.25	1.00

DIMENSIONS, SUPPORTS AND LOADINGS SPECIFIED BY FABRICATOR TO BE VERIFIED BY BUILDING DESIGNER

BEARINGS

JT	FACTORED GROSS REACTION VERT	HORZ	MAXIMUM FACTORED GROSS REACTION DOWN	HORZ	UPLIFT	INPUT BRG IN-SX	REQRD BRG IN-SX
O	2034	0	2034	0	0	5-8	3-2
I	2034	0	2034	0	0	5-8	3-2

UNFACTORED REACTIONS

JT	1ST LCASE COMBINED	MAX./MIN. COMPONENT REACTIONS SNOW	LIVE	PERM.LIVE	WIND	DEAD	SOIL
O	1419	1041 / 0	0 / 0	0 / 0	0 / 0	378 / 0	0 / 0
I	1419	1041 / 0	0 / 0	0 / 0	0 / 0	378 / 0	0 / 0

BEARING MATERIAL TO BE SPF NO.2 OR BETTER AT JOINT(S) O, I

BRACING
TOP CHORD TO BE SHEATHED OR MAX. PURLIN SPACING = 4.15 FT.
MAX. UNBRACED BOTTOM CHORD LENGTH = 10.00 FT OR RIGID CEILING DIRECTLY APPLIED.

ALL PITCH BREAKS AND PERIMETER CORNER JOINTS MUST BE LATERALLY RESTRAINED.

LOADING
TOTAL LOAD CASES: (4)

CHORDS

MEMB. FR-TO	MAX. FACTORED FORCE (LBS)	VERT. LOAD (PLF) FROM	TO	LC1 MAX CSI (LC)	MAX. UNBRAC LENGTH
A- B	0 / 45	-119.4	-119.4	0.16 (1)	10.00
B- C	-2140 / 0	-119.4	-119.4	0.45 (1)	4.15
C- D	-1890 / 0	-119.4	-119.4	0.43 (1)	4.39
D- E	-1539 / 0	-119.4	-119.4	0.40 (1)	5.71
E- F	-1891 / 0	-119.4	-119.4	0.43 (1)	4.38
F- G	-2140 / 0	-119.4	-119.4	0.45 (1)	4.15
G- H	0 / 45	-119.4	-119.4	0.16 (1)	10.00
O- B	-1991 / 0	0.0	0.0	0.21 (1)	5.91
I- G	-1991 / 0	0.0	0.0	0.21 (1)	5.91
O- N	0 / 0	-18.2	-18.2	0.10 (4)	10.00
N- M	0 / 1813	-18.2	-18.2	0.38 (1)	10.00
M- L	0 / 1538	-18.2	-18.2	0.34 (1)	10.00
L- K	0 / 1538	-18.2	-18.2	0.34 (1)	10.00
K- J	0 / 1813	-18.2	-18.2	0.38 (1)	10.00
J- I	0 / 0	-18.2	-18.2	0.10 (4)	10.00

WEBS

MEMB. FR-TO	MAX. FACTORED FORCE (LBS)	MAX CSI (LC)
N- C	-298 / 0	0.10 (1)
C- M	-370 / 0	0.29 (1)
M- D	0 / 372	0.08 (1)
D- K	0 / 0	0.00 (1)
K- E	0 / 373	0.08 (1)
K- F	-368 / 0	0.29 (1)
J- F	-300 / 0	0.10 (1)
B- N	0 / 1853	0.42 (1)
J- G	0 / 1853	0.42 (1)

DESIGN CRITERIA

SPECIFIED LOADS:

TOP CH.	LL =	34.8	PSF
	DL =	6.0	PSF
BOT CH.	LL =	0.0	PSF
	DL =	7.3	PSF
TOTAL LOAD	=	48.1	PSF

SPACING = 24.0 IN. C/C

LOADING IN FLAT SECTION BASED ON A SLOPE OF 2.00/12 MINIMUM

THIS TRUSS IS DESIGNED FOR RESIDENTIAL OR SMALL BUILDING REQUIREMENTS OF PART 9, NBCC 2015

THIS DESIGN COMPLIES WITH:
- PART 9 OF BCBC 2018 , NBC-2019AE
- PART 9 OF OBC 2012 (2019 AMENDMENT)
- CSA 086-14
- TPIC 2014

(55 % OF 48.1 P.S.F. G.S.L. PLUS 8.4 P.S.F. RAIN LOAD) EQUALS 34.8 P.S.F. SPECIFIED ROOF LIVE LOAD

ALLOWABLE DEFL.(LL)= L/360 (0.91")
CALCULATED VERT. DEFL.(LL) = L/ 999 (0.07")
ALLOWABLE DEFL.(TL)= L/360 (0.91")
CALCULATED VERT. DEFL.(TL) = L/ 999 (0.16")

CSI: TC=0.45/0.97 (B-C:1) , BC=0.38/0.97 (J-K:1) , WB=0.42/0.97 (B-N:1) , SSI=0.26/1.00 (D-E:1)

DOL LUMBER=1.00 NAIL=1.00 LS BEND=1.10 COMP=1.10 SHEAR=1.10 TENS= 1.10

COMPANION LIVE LOAD FACTOR = 1.00

TRUSS PLATE MANUFACTURER IS NOT RESPONSIBLE FOR QUALITY CONTROL IN THE TRUSS MANUFACTURING PLANT .

NAIL VALUES

PLATE	GRIP(DRY) (PSI) MAX	MIN	SHEAR (PLI) MAX	MIN	SECTION (PLI) MAX	MIN
MT20	650	371	1747	788	1987	1873

PLATE PLACEMENT TOL. = 0.250 inches

PLATE ROTATION TOL. = 5.0 Deg.

JSI GRIP= 0.85 (O) (INPUT = 0.90)
JSI METAL= 0.57 (B) (INPUT = 1.00)

LICENSED PROFESSIONAL ENGINEER
N.A. EL-MASRI
PROVINCE OF ONTARIO
Jul 20, 2023

READ ALL NOTES ON THIS PAGE AND ON THE ENGINEERING NOTES: TRUSSES. THE NOTE PAGE IS AN INTEGRAL PART OF THIS DRAWING AS IT CONTAINS SPECIFICATIONS AND CRITERIA USED IN THE DESIGN OF THIS COMPONENT.

KOTT

JOB NAME	TRUSS NAME	QUANTITY	PLY	JOB DESC.	DRWG NO.
NE0723-137	T03	1	1	GREENPARK - ZADORRA ESTATES - VILLA 12-1 (TRUSS DESC.)	

Version 8.630 S Mar 22 2023 MiTek Industries, Inc. Thu Jul 20 09:03:03 2023 Page 1
ID:VquVgowiAqiumFmAweaWlxz71eJ-8KVoVS?468HMq7oROvZjGs80ne4X0ycWZvLpvLywEHs

CORPORATION OF THE CITY OF OSHAWA
TRUE COPY
OF PERMIT PLANS
Nov 14 2023
PER:
CHIEF BUILDING OFFICIAL

MHP 23039

Scale = 1:55.7

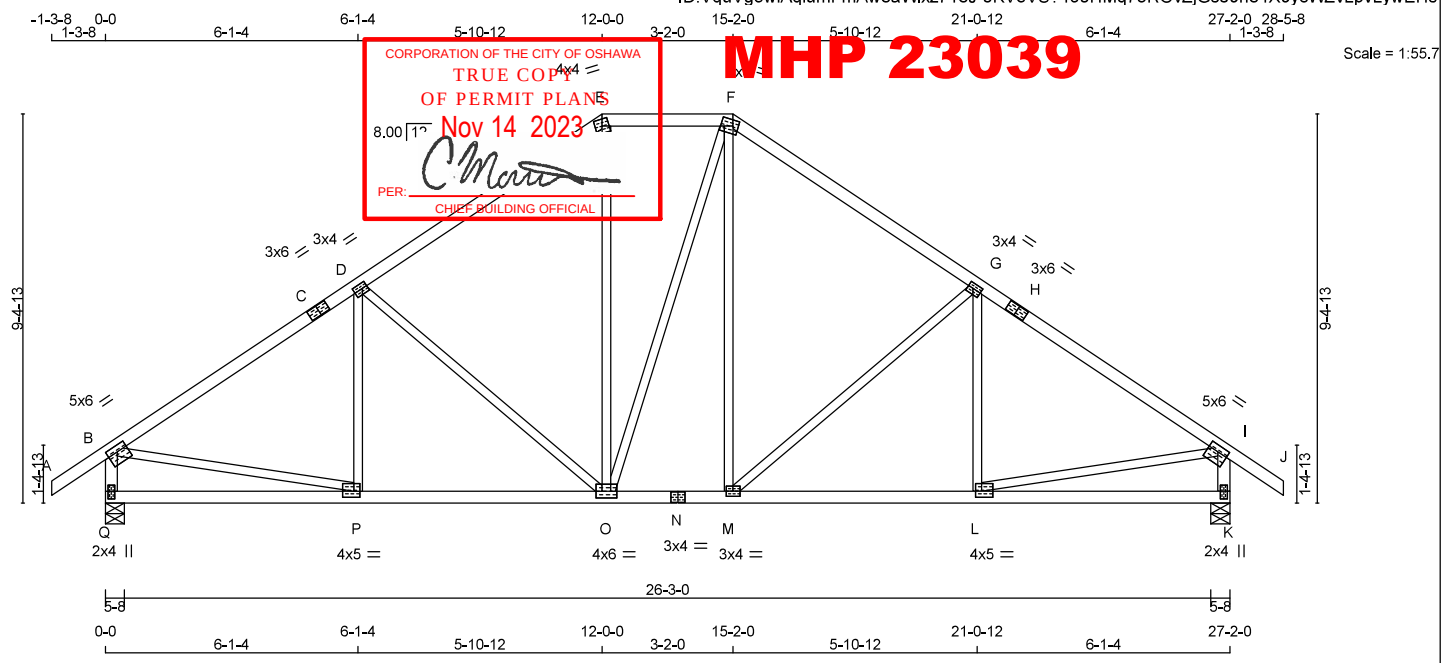

TOTAL WEIGHT = 125 lb
[M][F]

LUMBER
N. L. G. A. RULES

CHORDS	SIZE		LUMBER	DESCR.
A - C	2x4	DRY	No.2	SPF
C - E	2x4	DRY	No.2	SPF
E - F	2x4	DRY	No.2	SPF
F - H	2x4	DRY	No.2	SPF
H - J	2x4	DRY	No.2	SPF
Q - B	2x4	DRY	No.2	SPF
K - I	2x4	DRY	No.2	SPF
Q - N	2x4	DRY	No.2	SPF
N - K	2x4	DRY	No.2	SPF
ALL WEBS EXCEPT	2x3	DRY	No.2	SPF

DRY: SEASONED LUMBER.

PLATES (table is in inches)

JT	TYPE	PLATES	W	LEN	Y	X
B	TMVW-t	MT20	5.0	6.0	1.75	3.00
C	TS-t	MT20	3.0	6.0		
D	TMWW-t	MT20	3.0	4.0	1.50	1.50
E	TTW-m	MT20	4.0	4.0		
F	TTWW-m	MT20	4.0	5.0	1.75	1.50
G	TMWW-t	MT20	3.0	4.0	1.50	1.50
H	TS-t	MT20	3.0	6.0		
I	TMVW-t	MT20	5.0	6.0	1.75	3.00
K	BMV1+p	MT20	2.0	4.0	2.25	1.00
L	BMWW-t	MT20	4.0	5.0	1.75	1.75
M	BMWW-t	MT20	3.0	4.0		
N	BS-t	MT20	3.0	4.0		
O	BMWWW-t	MT20	4.0	6.0		
P	BMWW-t	MT20	4.0	5.0	1.75	1.75
Q	BMV1+p	MT20	2.0	4.0	2.25	1.00

DIMENSIONS, SUPPORTS AND LOADINGS SPECIFIED BY FABRICATOR TO BE VERIFIED BY BUILDING DESIGNER

BEARINGS

JT	FACTORED GROSS REACTION VERT	HORZ	MAXIMUM FACTORED GROSS REACTION DOWN	HORZ	UPLIFT	INPUT BRG IN-SX	REQRD BRG IN-SX
Q	2034	0	2034	0	0	5-8	3-2
K	2034	0	2034	0	0	5-8	3-2

UNFACTORED REACTIONS

JT	1ST LCASE COMBINED	MAX./MIN. COMPONENT REACTIONS SNOW	LIVE	PERM.LIVE	WIND	DEAD	SOIL
Q	1419	1041 / 0	0 / 0	0 / 0	0 / 0	378 / 0	0 / 0
K	1419	1041 / 0	0 / 0	0 / 0	0 / 0	378 / 0	0 / 0

BEARING MATERIAL TO BE SPF NO.2 OR BETTER AT JOINT(S) Q, K

BRACING
TOP CHORD TO BE SHEATHED OR MAX. PURLIN SPACING = 3.79 FT.
MAX. UNBRACED BOTTOM CHORD LENGTH = 10.00 FT OR RIGID CEILING DIRECTLY APPLIED.

ALL PITCH BREAKS AND PERIMETER CORNER JOINTS MUST BE LATERALLY RESTRAINED.

LOADING
TOTAL LOAD CASES: (4)

CHORDS

MEMB. FR-TO	MAX. FACTORED FORCE (LBS)	FACTORED VERT. LOAD (PLF) FROM	TO	LC1 MAX CSI (LC)	MAX. UNBRAC LENGTH
A- B	0 / 45	-119.4	-119.4	0.16 (1)	10.00
B- C	-2153 / 0	-119.4	-119.4	0.67 (1)	3.79
C- D	-2153 / 0	-119.4	-119.4	0.67 (1)	3.79
D- E	-1706 / 0	-119.4	-119.4	0.61 (1)	4.26
E- F	-1382 / 0	-119.4	-119.4	0.17 (1)	5.32
F- G	-1704 / 0	-119.4	-119.4	0.61 (1)	4.26
G- H	-2154 / 0	-119.4	-119.4	0.67 (1)	3.79
H- I	-2154 / 0	-119.4	-119.4	0.67 (1)	3.79
I- J	0 / 45	-119.4	-119.4	0.16 (1)	10.00
Q- B	-1987 / 0	0.0	0.0	0.20 (1)	5.91
K- I	-1988 / 0	0.0	0.0	0.20 (1)	5.91
Q- P	0 / 0	-18.2	-18.2	0.16 (4)	10.00
P- O	0 / 1831	-18.2	-18.2	0.37 (1)	10.00
O- N	0 / 1381	-18.2	-18.2	0.28 (1)	10.00
N- M	0 / 1381	-18.2	-18.2	0.28 (1)	10.00
M- L	0 / 1831	-18.2	-18.2	0.37 (1)	10.00
L- K	0 / 0	-18.2	-18.2	0.17 (4)	10.00

WEBS

MEMB. FR-TO	MAX. FACTORED FORCE (LBS)	MAX CSI (LC)
P- D	-202 / 56	0.09 (1)
D- O	-598 / 0	0.77 (1)
O- E	0 / 469	0.11 (1)
O- F	0 / 4	0.00 (1)
M- F	0 / 463	0.10 (1)
M- G	-601 / 0	0.78 (1)
L- G	-199 / 57	0.09 (1)
B- P	0 / 1859	0.42 (1)
L- I	0 / 1860	0.42 (1)

DESIGN CRITERIA

SPECIFIED LOADS:

TOP CH.	LL =	34.8	PSF
	DL =	6.0	PSF
BOT CH.	LL =	0.0	PSF
	DL =	7.3	PSF
TOTAL LOAD	=	48.1	PSF

SPACING = 24.0 IN. C/C

LOADING IN FLAT SECTION BASED ON A SLOPE OF 2.00/12 MINIMUM

THIS TRUSS IS DESIGNED FOR RESIDENTIAL OR SMALL BUILDING REQUIREMENTS OF PART 9, NBCC 2015

THIS DESIGN COMPLIES WITH:
- PART 9 OF BCBC 2018 , NBC-2019AE
- PART 9 OF OBC 2012 (2019 AMENDMENT)
- CSA 086-14
- TPIC 2014

(55 % OF 48.1 P.S.F. G.S.L. PLUS 8.4 P.S.F. RAIN LOAD) EQUALS 34.8 P.S.F. SPECIFIED ROOF LIVE LOAD

ALLOWABLE DEFL.(LL)= L/360 (0.91")
CALCULATED VERT. DEFL.(LL) = L/ 999 (0.08")
ALLOWABLE DEFL.(TL)= L/360 (0.91")
CALCULATED VERT. DEFL.(TL) = L/ 999 (0.14")

CSI: TC=0.67/0.97 (G-I:1) , BC=0.37/0.97 (L-M:1) , WB=0.78/0.97 (G-M:1) , SSI=0.29/1.00 (G-I:1)

DOL LUMBER=1.00 NAIL=1.00 LS BEND=1.10 COMP=1.10 SHEAR=1.10 TENS= 1.10

COMPANION LIVE LOAD FACTOR = 1.00

TRUSS PLATE MANUFACTURER IS NOT RESPONSIBLE FOR QUALITY CONTROL IN THE TRUSS MANUFACTURING PLANT .

NAIL VALUES

PLATE	GRIP(DRY) (PSI) MAX	MIN	SHEAR (PLI) MAX	MIN	SECTION (PLI) MAX	MIN
MT20	650	371	1747	788	1987	1873

PLATE PLACEMENT TOL. = 0.250 inches

PLATE ROTATION TOL. = 5.0 Deg.

JSI GRIP= 0.88 (M) (INPUT = 0.90)
JSI METAL= 0.58 (I) (INPUT = 1.00)

LICENSED PROFESSIONAL ENGINEER
N.A. EL-MASRI
PROVINCE OF ONTARIO
Jul 20, 2023

READ ALL NOTES ON THIS PAGE AND ON THE ENGINEERING NOTES: TRUSSES. THE NOTE PAGE IS AN INTEGRAL PART OF THIS DRAWING AS IT CONTAINS SPECIFICATIONS AND CRITERIA USED IN THE DESIGN OF THIS COMPONENT.

KOTT

JOB NAME	TRUSS NAME	QUANTITY	PLY	JOB DESC.	DRWG NO.
NE0723-137	T04	1	1	TRUSS DESC. GREENPARK - ZADORRA ESTATES - VILLA 12-1	

Version 8.630 S Mar 22 2023 MiTek Industries, Inc. Thu Jul 20 09:03:04 2023 Page 1
ID:VquVgowiAqiumFmAweaWlxz71eJ-cX3Ajo?isSPDSHNdyc4yp4g892PTIU3goZ4NRnywEHr

CORPORATION OF THE CITY OF OSHAWA
TRUE COPY
OF PERMIT PLANS
Nov 14 2023
PER:
CHIEF BUILDING OFFICIAL

MHP 23039

Scale = 1:61.7

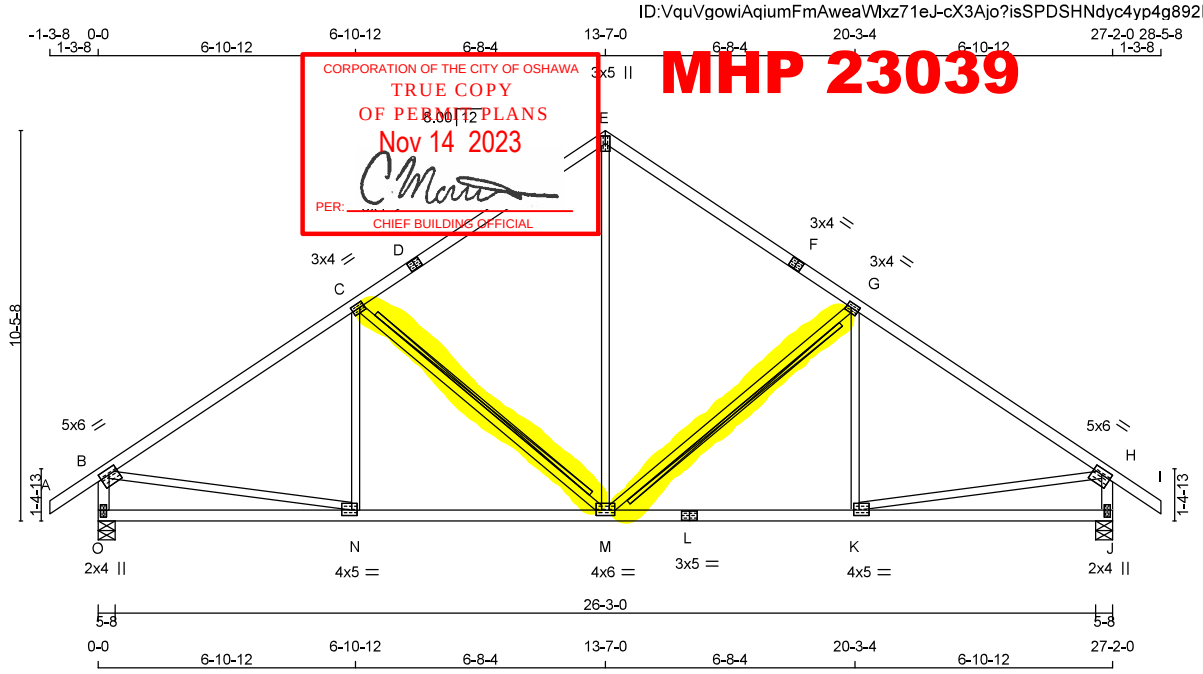

TOTAL WEIGHT = 116 lb
[M][F]

LUMBER
N. L. G. A. RULES

CHORDS	SIZE		LUMBER	DESCR.
A - D	2x4	DRY	No.2	SPF
D - E	2x4	DRY	No.2	SPF
E - F	2x4	DRY	No.2	SPF
F - I	2x4	DRY	No.2	SPF
O - B	2x4	DRY	No.2	SPF
J - H	2x4	DRY	No.2	SPF
O - L	2x4	DRY	No.2	SPF
L - J	2x4	DRY	No.2	SPF
ALL WEBS EXCEPT	2x3	DRY	No.2	SPF

DRY: SEASONED LUMBER.

PLATES (table is in inches)

JT	TYPE	PLATES	W	LEN	Y	X
B	TMVW-t	MT20	5.0	6.0	1.75	3.00
C	TMWW-t	MT20	3.0	4.0	1.50	1.50
D	TS-t	MT20	3.0	4.0		
E	TTW+p	MT20	3.0	5.0		
F	TS-t	MT20	3.0	4.0		
G	TMWW-t	MT20	3.0	4.0	1.50	1.50
H	TMVW-t	MT20	5.0	6.0	1.75	3.00
J	BMV1+p	MT20	2.0	4.0	2.25	1.00
K	BMWW-t	MT20	4.0	5.0	1.75	1.75
L	BS-t	MT20	3.0	5.0		
M	BMWWW-t	MT20	4.0	6.0	1.75	3.00
N	BMWW-t	MT20	4.0	5.0	1.75	1.75
O	BMV1+p	MT20	2.0	4.0	2.25	1.00

DIMENSIONS, SUPPORTS AND LOADINGS SPECIFIED BY FABRICATOR TO BE VERIFIED BY BUILDING DESIGNER

BEARINGS

JT	FACTORED GROSS REACTION VERT	HORZ	MAXIMUM FACTORED GROSS REACTION DOWN	HORZ	UPLIFT	INPUT BRG IN-SX	REQRD BRG IN-SX
O	2034	0	2034	0	0	5-8	3-2
J	2034	0	2034	0	0	5-8	3-2

UNFACTORED REACTIONS

JT	1ST LCASE COMBINED	MAX./MIN. COMPONENT REACTIONS SNOW	LIVE	PERM.LIVE	WIND	DEAD	SOIL
O	1419	1041 / 0	0 / 0	0 / 0	0 / 0	378 / 0	0 / 0
J	1419	1041 / 0	0 / 0	0 / 0	0 / 0	378 / 0	0 / 0

BEARING MATERIAL TO BE SPF NO.2 OR BETTER AT JOINT(S) O, J

BRACING
TOP CHORD TO BE SHEATHED OR MAX. PURLIN SPACING = 3.30 FT.
MAX. UNBRACED BOTTOM CHORD LENGTH = 10.00 FT OR RIGID CEILING DIRECTLY APPLIED.

ALL PITCH BREAKS AND PERIMETER CORNER JOINTS MUST BE LATERALLY RESTRAINED.

2x4 DRY SPF No.2 T-BRACE AT G-M, C-M

FASTEN T AND I-BRACES TO NARROW EDGE OF WEB WITH ONE ROW PER PLY OF 3" COMMON WIRE NAILS @ 6" O.C. WITH 3" MINIMUM END DISTANCE. BRACE MUST COVER 90% OF WEB LENGTH.

END VERTICAL(S) MUST BE SHEATHED OR HAVE BRACES AS INDICATED IN THE MAX. UNBRACED LENGTH COLUMN OF THE TABLE BELOW

LOADING
TOTAL LOAD CASES: (4)

CHORDS

MEMB. FR-TO	MAX. FACTORED FORCE (LBS)	FACTORED VERT. LOAD LC1 (PLF) FROM	TO	MAX CSI (LC)	MAX. UNBRAC LENGTH
A- B	0 / 45	-119.4	-119.4	0.16 (1)	10.00
B- C	-2141 / 0	-119.4	-119.4	0.89 (1)	3.30
C- D	-1569 / 0	-119.4	-119.4	0.79 (1)	3.94
D- E	-1569 / 0	-119.4	-119.4	0.79 (1)	3.94
E- F	-1569 / 0	-119.4	-119.4	0.79 (1)	3.94
F- G	-1569 / 0	-119.4	-119.4	0.79 (1)	3.94
G- H	-2141 / 0	-119.4	-119.4	0.89 (1)	3.30
H- I	0 / 45	-119.4	-119.4	0.16 (1)	10.00
O- B	-1982 / 0	0.0	0.0	0.20 (1)	5.91
J- H	-1982 / 0	0.0	0.0	0.20 (1)	5.91
O- N	0 / 0	-18.2	-18.2	0.20 (4)	10.00
N- M	0 / 1826	-18.2	-18.2	0.39 (1)	10.00
M- L	0 / 1826	-18.2	-18.2	0.39 (1)	10.00
L- K	0 / 1826	-18.2	-18.2	0.39 (1)	10.00
K- J	0 / 0	-18.2	-18.2	0.20 (4)	10.00

WEBS

MEMB. FR-TO	MAX. FACTORED FORCE (LBS)	MAX CSI (LC)
M- E	0 / 1081	0.24 (1)
M- G	-744 / 0	0.44 (1)
K- G	-150 / 81	0.08 (1)
C- M	-744 / 0	0.44 (1)
N- C	-150 / 81	0.08 (1)
B- N	0 / 1848	0.42 (1)
K- H	0 / 1848	0.42 (1)

DESIGN CRITERIA

SPECIFIED LOADS:

TOP CH.	LL =	34.8	PSF
	DL =	6.0	PSF
BOT CH.	LL =	0.0	PSF
	DL =	7.3	PSF
TOTAL LOAD	=	48.1	PSF

SPACING = 24.0 IN. C/C

THIS TRUSS IS DESIGNED FOR RESIDENTIAL OR SMALL BUILDING REQUIREMENTS OF PART 9, NBCC 2015

THIS DESIGN COMPLIES WITH:
- PART 9 OF BCBC 2018 , NBC-2019AE
- PART 9 OF OBC 2012 (2019 AMENDMENT)
- CSA 086-14
- TPIC 2014

(55 % OF 48.1 P.S.F. G.S.L. PLUS 8.4 P.S.F. RAIN LOAD) EQUALS 34.8 P.S.F. SPECIFIED ROOF LIVE LOAD

ALLOWABLE DEFL.(LL)= L/360 (0.91")
CALCULATED VERT. DEFL.(LL) = L/ 999 (0.08")
ALLOWABLE DEFL.(TL)= L/360 (0.91")
CALCULATED VERT. DEFL.(TL) = L/ 999 (0.15")

CSI: TC=0.89/0.97 (B-C:1) , BC=0.39/0.97 (M-N:1) , WB=0.44/0.97 (C-M:1) , SSI=0.33/1.00 (B-C:1)

DOL LUMBER=1.00 NAIL=1.00 LS BEND=1.10 COMP=1.10 SHEAR=1.10 TENS= 1.10

COMPANION LIVE LOAD FACTOR = 1.00

TRUSS PLATE MANUFACTURER IS NOT RESPONSIBLE FOR QUALITY CONTROL IN THE TRUSS MANUFACTURING PLANT .

NAIL VALUES

PLATE	GRIP(DRY) (PSI) MAX	MIN	SHEAR (PLI) MAX	MIN	SECTION (PLI) MAX	MIN
MT20	650	371	1747	788	1987	1873

PLATE PLACEMENT TOL. = 0.250 inches

PLATE ROTATION TOL. = 5.0 Deg.

JSI GRIP= 0.85 (O) (INPUT = 0.90)
JSI METAL= 0.59 (B) (INPUT = 1.00)

LICENSED PROFESSIONAL ENGINEER
N.A. EL-MASRI
PROVINCE OF ONTARIO
Jul 20, 2023

READ ALL NOTES ON THIS PAGE AND ON THE ENGINEERING NOTES: TRUSSES. THE NOTE PAGE IS AN INTEGRAL PART OF THIS DRAWING AS IT CONTAINS SPECIFICATIONS AND CRITERIA USED IN THE DESIGN OF THIS COMPONENT.

KOTT

JOB NAME	TRUSS NAME	QUANTITY	PLY	JOB DESC.	DRWG NO.
NE0723-137	T05	8	1	GREENPARK - ZADORRA ESTATES - VILLA 12-1 (TRUSS DESC.)	

Version 8.630 S Mar 22 2023 MiTek Industries, Inc. Thu Jul 20 09:03:04 2023 Page 1
ID:VquVgowiAqiumFmAweaWlxz71eJ-cX3Ajo?isSPDSHNdyc4yp4g892PTlUWgoZ4NRnywEHr

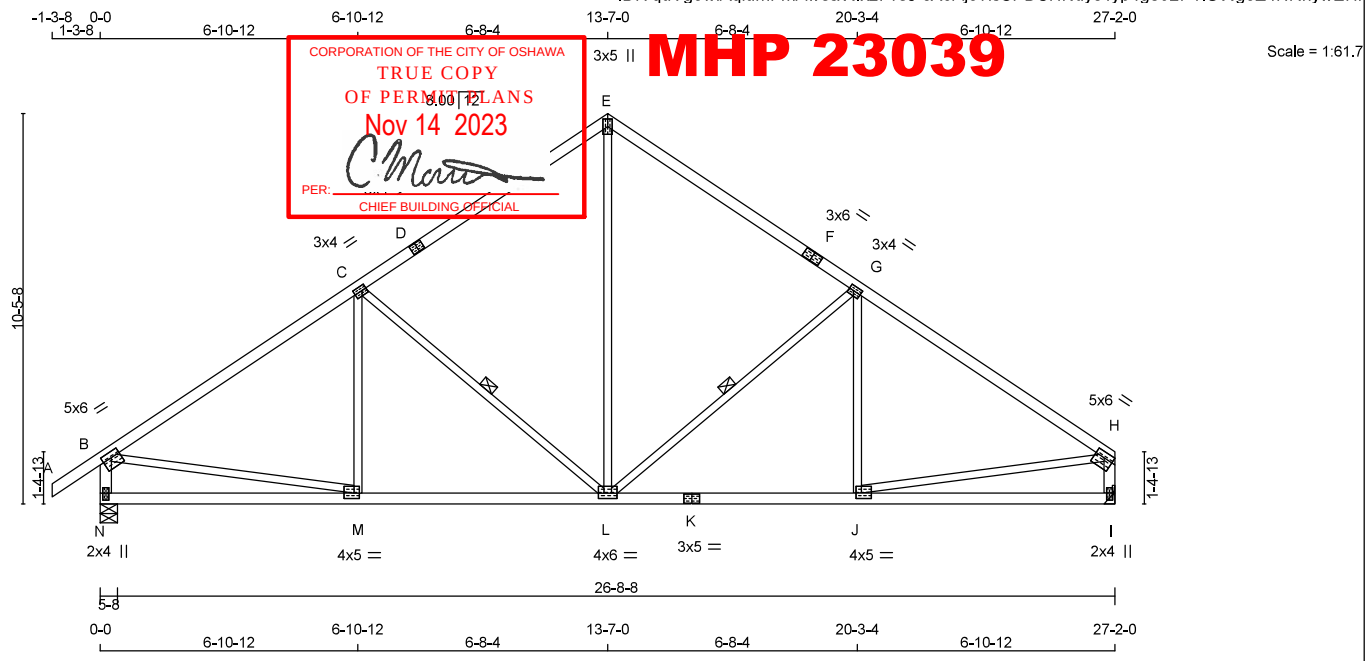

MHP 23039
CORPORATION OF THE CITY OF OSHAWA
TRUE COPY
OF PERMIT PLANS
Nov 14 2023
PER:
CHIEF BUILDING OFFICIAL

TOTAL WEIGHT = 8 X 114 = 911 lb

LUMBER
N. L. G. A. RULES

CHORDS	SIZE		LUMBER	DESCR.
A - D	2x4	DRY	No.2	SPF
D - E	2x4	DRY	No.2	SPF
E - F	2x4	DRY	No.2	SPF
F - H	2x4	DRY	No.2	SPF
N - B	2x4	DRY	No.2	SPF
I - H	2x4	DRY	No.2	SPF
N - K	2x4	DRY	No.2	SPF
K - I	2x4	DRY	No.2	SPF
ALL WEBS EXCEPT	2x3	DRY	No.2	SPF

DRY: SEASONED LUMBER.

PLATES (table is in inches)

JT	TYPE	PLATES	W	LEN	Y	X
B	TMVW-t	MT20	5.0	6.0	1.75	3.00
C	TMWW-t	MT20	3.0	4.0	1.50	1.50
D	TS-t	MT20	3.0	4.0		
E	TTW+p	MT20	3.0	5.0		
F	TS-t	MT20	3.0	6.0		
G	TMWW-t	MT20	3.0	4.0	1.50	1.50
H	TMVW-t	MT20	5.0	6.0	1.75	Edge
I	BMV1+p	MT20	2.0	4.0	2.25	1.00
J	BMWW-t	MT20	4.0	5.0	1.75	1.75
K	BS-t	MT20	3.0	5.0		
L	BMWWW-t	MT20	4.0	6.0	1.75	3.00
M	BMWW-t	MT20	4.0	5.0	1.75	1.75
N	BMV1+p	MT20	2.0	4.0	2.25	1.00

Edge - INDICATES REFERENCE CORNER OF PLATE TOUCHES EDGE OF CHORD.

DIMENSIONS, SUPPORTS AND LOADINGS SPECIFIED BY FABRICATOR TO BE VERIFIED BY BUILDING DESIGNER

BEARINGS

JT	FACTORED GROSS REACTION VERT	HORZ	MAXIMUM FACTORED GROSS REACTION DOWN	HORZ	UPLIFT	INPUT BRG	REQRD BRG
N	2034	0	2034	0	0	5-8	3-2
I	1870	0	1870	0	0	MECHANICAL	

A SUITABLE HANGER/MECHANICAL CONNECTION IS REQUIRED AT JOINT I. MINIMUM BEARING LENGTH AT JOINT I = 2-9.

UNFACTORED REACTIONS

JT	1ST LCASE COMBINED	SNOW	MAX./MIN. COMPONENT REACTIONS LIVE	PERM.LIVE	WIND	DEAD	SOIL
N	1419	1041 / 0	0 / 0	0 / 0	0 / 0	378 / 0	0 / 0
I	1307	946 / 0	0 / 0	0 / 0	0 / 0	361 / 0	0 / 0

BEARING MATERIAL TO BE SPF NO.2 OR BETTER AT JOINT(S) N

BRACING
TOP CHORD TO BE SHEATHED OR MAX. PURLIN SPACING = 3.30 FT.
MAX. UNBRACED BOTTOM CHORD LENGTH = 10.00 FT OR RIGID CEILING DIRECTLY APPLIED.

ALL PITCH BREAKS AND PERIMETER CORNER JOINTS MUST BE LATERALLY RESTRAINED.

1 - 1x4 LATERAL BRACE(S) AT 1/ 2 LENGTH OF G-L, C-L. DBS = 20-0-0 . CBF = 93 LBS.

DBS = DIAGONAL BRACE SPACING (MAX). CBF = CUMULATIVE BRACING FORCE (PER BRACE). FASTEN LATERAL BRACE(S) USING (0.122"X3") SPIRAL NAILS : 1 NAIL FOR 2x3 BRACE(S), 2 FOR 1x4, 2x4, 2x5, 3 FOR 2x6, 4 FOR 2x8, 5 FOR 2x10, AND 6 FOR 2x12.

END VERTICAL(S) MUST BE SHEATHED OR HAVE BRACES AS INDICATED IN THE MAX. UNBRACED LENGTH COLUMN OF THE TABLE BELOW

LOADING
TOTAL LOAD CASES: (4)

CHORDS

MEMB. FR-TO	MAX. FACTORED FORCE (LBS)	FACTORED VERT. LOAD (PLF) FROM	TO	LC1 MAX CSI (LC)	MAX. UNBRAC LENGTH
A- B	0 / 45	-119.4	-119.4	0.16 (1)	10.00
B- C	-2141 / 0	-119.4	-119.4	0.89 (1)	3.30
C- D	-1569 / 0	-119.4	-119.4	0.79 (1)	3.94
D- E	-1569 / 0	-119.4	-119.4	0.79 (1)	3.94
E- F	-1569 / 0	-119.4	-119.4	0.79 (1)	3.94
F- G	-1569 / 0	-119.4	-119.4	0.79 (1)	3.94
G- H	-2141 / 0	-119.4	-119.4	0.89 (1)	3.30
N- B	-1982 / 0	0.0	0.0	0.20 (1)	5.91
I- H	-1818 / 0	0.0	0.0	0.19 (1)	6.13
N- M	0 / 0	-18.2	-18.2	0.20 (4)	10.00
M- L	0 / 1826	-18.2	-18.2	0.39 (1)	10.00
L- K	0 / 1826	-18.2	-18.2	0.39 (1)	10.00
K- J	0 / 1826	-18.2	-18.2	0.39 (1)	10.00
J- I	0 / 0	-18.2	-18.2	0.20 (4)	10.00

WEBS

MEMB. FR-TO	MAX. FACTORED FORCE (LBS)	MAX CSI (LC)
L- E	0 / 1081	0.24 (1)
L- G	-744 / 0	0.39 (1)
J- G	-150 / 81	0.08 (1)
C- L	-744 / 0	0.39 (1)
M- C	-150 / 81	0.08 (1)
B- M	0 / 1848	0.42 (1)
J- H	0 / 1848	0.42 (1)

DESIGN CRITERIA

SPECIFIED LOADS:

TOP CH.	LL =	34.8	PSF
	DL =	6.0	PSF
BOT CH.	LL =	0.0	PSF
	DL =	7.3	PSF
TOTAL LOAD	=	48.1	PSF

SPACING = 24.0 IN. C/C

THIS TRUSS IS DESIGNED FOR RESIDENTIAL OR SMALL BUILDING REQUIREMENTS OF PART 9, NBCC 2015

THIS DESIGN COMPLIES WITH:
- PART 9 OF BCBC 2018 , NBC-2019AE
- PART 9 OF OBC 2012 (2019 AMENDMENT)
- CSA 086-14
- TPIC 2014

(55 % OF 48.1 P.S.F. G.S.L. PLUS 8.4 P.S.F. RAIN LOAD) EQUALS 34.8 P.S.F. SPECIFIED ROOF LIVE LOAD

ALLOWABLE DEFL.(LL)= L/360 (0.91")
CALCULATED VERT. DEFL.(LL) = L/ 999 (0.08")
ALLOWABLE DEFL.(TL)= L/360 (0.91")
CALCULATED VERT. DEFL.(TL) = L/ 999 (0.15")

CSI: TC=0.89/0.97 (G-H:1) , BC=0.39/0.97 (J-L:1) , WB=0.42/0.97 (H-J:1) , SSI=0.33/1.00 (B-C:1)

DOL LUMBER=1.00 NAIL=1.00 LS BEND=1.10 COMP=1.10 SHEAR=1.10 TENS= 1.10

COMPANION LIVE LOAD FACTOR = 1.00

TRUSS PLATE MANUFACTURER IS NOT RESPONSIBLE FOR QUALITY CONTROL IN THE TRUSS MANUFACTURING PLANT .

NAIL VALUES

PLATE	GRIP(DRY) (PSI) MAX	MIN	SHEAR (PLI) MAX	MIN	SECTION (PLI) MAX	MIN
MT20	650	371	1747	788	1987	1873

PLATE PLACEMENT TOL. = 0.250 inches

PLATE ROTATION TOL. = 5.0 Deg.

JSI GRIP= 0.89 (F) (INPUT = 0.90)
JSI METAL= 0.59 (H) (INPUT = 1.00)

LICENSED PROFESSIONAL ENGINEER
N.A. EL-MASRI
PROVINCE OF ONTARIO
Jul 20, 2023

READ ALL NOTES ON THIS PAGE AND ON THE ENGINEERING NOTES: TRUSSES. THE NOTE PAGE IS AN INTEGRAL PART OF THIS DRAWING AS IT CONTAINS SPECIFICATIONS AND CRITERIA USED IN THE DESIGN OF THIS COMPONENT.

KOTT

JOB NAME	TRUSS NAME	QUANTITY	PLY	JOB DESC.	DRWG NO.
NE0723-137	T06	2	1	TRUSS DESC. GREENPARK - ZADORRA ESTATES - VILLA 12-1	

Version 8.630 S Mar 22 2023 MiTek Industries, Inc. Thu Jul 20 09:03:05 2023 Page 1

ID:VquVgowiAqiumFmAweaWxz71eJ-4jdZw70KdmX44RypVKbBMHDHiRIXUwHp1DqwzEywEHc

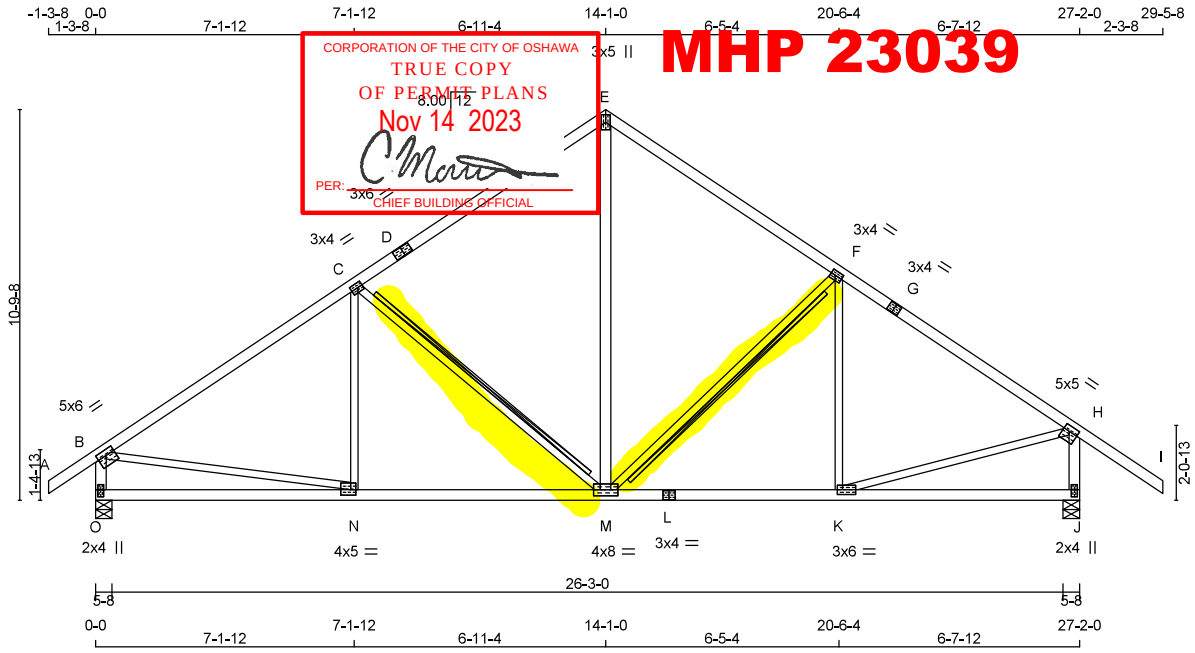

CORPORATION OF THE CITY OF OSHAWA
TRUE COPY
OF PERMIT PLANS
Nov 14 2023
PER:
CHIEF BUILDING OFFICIAL
MHP 23039

TOTAL WEIGHT = 2 X 122 = 245 lb

[M][F]

LUMBER

N. L. G. A. RULES

CHORDS	SIZE		LUMBER	DESCR.
A - D	2x4	DRY	No.2	SPF
D - E	2x4	DRY	No.2	SPF
E - G	2x4	DRY	No.2	SPF
G - I	2x4	DRY	No.2	SPF
O - B	2x4	DRY	No.2	SPF
J - H	2x4	DRY	No.2	SPF
O - L	2x4	DRY	No.2	SPF
L - J	2x4	DRY	No.2	SPF
ALL WEBS EXCEPT	2x3	DRY	No.2	SPF
M - E	2x4	DRY	No.2	SPF

DRY: SEASONED LUMBER.

PLATES (table is in inches)

JT	TYPE	PLATES	W	LEN	Y	X
B	TMVW-t	MT20	5.0	6.0	1.75	3.00
C	TMWW-t	MT20	3.0	4.0	1.50	1.50
D	TS-t	MT20	3.0	6.0		
E	TTW+p	MT20	3.0	5.0		
F	TMWW-t	MT20	3.0	4.0	1.50	1.50
G	TS-t	MT20	3.0	4.0		
H	TMVW-t	MT20	5.0	5.0	1.75	2.00
J	BMV1+p	MT20	2.0	4.0	2.25	1.00
K	BMWW-t	MT20	3.0	6.0	1.50	1.75
L	BS-t	MT20	3.0	4.0		
M	BMWWW-t	MT20	4.0	8.0		
N	BMWW-t	MT20	4.0	5.0	1.75	1.75
O	BMV1+p	MT20	2.0	4.0	2.25	1.00

DIMENSIONS, SUPPORTS AND LOADINGS SPECIFIED BY FABRICATOR TO BE VERIFIED BY BUILDING DESIGNER

BEARINGS

JT	FACTORED GROSS REACTION VERT	HORZ	MAXIMUM FACTORED GROSS REACTION DOWN	HORZ	UPLIFT	INPUT BRG IN-SX	REQRD BRG IN-SX
O	2034	0	2034	0	0	5-8	3-2
J	2153	0	2153	0	0	5-8	3-8

UNFACTORED REACTIONS

JT	1ST LCASE COMBINED	MAX./MIN. COMPONENT REACTIONS SNOW	LIVE	PERM.LIVE	WIND	DEAD	SOIL
O	1419	1041 / 0	0 / 0	0 / 0	0 / 0	378 / 0	0 / 0
J	1501	1111 / 0	0 / 0	0 / 0	0 / 0	390 / 0	0 / 0

BEARING MATERIAL TO BE SPF NO.2 OR BETTER AT JOINT(S) O, J

BRACING

TOP CHORD TO BE SHEATHED OR MAX. PURLIN SPACING = 3.03 FT.
MAX. UNBRACED BOTTOM CHORD LENGTH = 10.00 FT OR RIGID CEILING DIRECTLY APPLIED.

ALL PITCH BREAKS AND PERIMETER CORNER JOINTS MUST BE LATERALLY RESTRAINED.

2x4 DRY SPF No.2 T-BRACE AT C-M, F-M

FASTEN T AND I-BRACES TO NARROW EDGE OF WEB WITH ONE ROW PER PLY OF 3" COMMON WIRE NAILS @ 6" O.C. WITH 3" MINIMUM END DISTANCE. BRACE MUST COVER 90% OF WEB LENGTH.

END VERTICAL(S) MUST BE SHEATHED OR HAVE BRACES AS INDICATED IN THE MAX. UNBRACED LENGTH COLUMN OF THE TABLE BELOW

LOADING

TOTAL LOAD CASES: (4)

CHORDS FR-TO	MAX. FACTORED FORCE (LBS)	FACTORED VERT. LOAD (PLF) FROM	TO	LC1 MAX CSI (LC)	MAX. UNBRAC LENGTH	WEBS MEMB.	MAX. FACTORED FORCE (LBS)	MAX CSI (LC)
A- B	0 / 45	-119.4	-119.4	0.16 (1)	10.00	N- C	-133 / 90	0.08 (1)
B- C	-2135 / 0	-119.4	-119.4	0.97 (1)	3.03	C- M	-792 / 0	0.51 (1)
C- D	-1521 / 0	-119.4	-119.4	0.86 (1)	3.76	M- E	0 / 1026	0.16 (1)
D- E	-1521 / 0	-119.4	-119.4	0.86 (1)	3.76	M- F	-575 / 0	0.35 (1)
E- F	-1517 / 0	-119.4	-119.4	0.73 (1)	4.19	K- F	-298 / 35	0.21 (1)
F- G	-1909 / 0	-119.4	-119.4	0.79 (1)	3.71	B- N	0 / 1844	0.41 (1)
G- H	-1909 / 0	-119.4	-119.4	0.79 (1)	3.71	K- H	0 / 1687	0.38 (1)
H- I	0 / 79	-119.4	-119.4	0.47 (1)	10.00			
O- B	-1980 / 0	0.0	0.0	0.20 (1)	5.91			
J- H	-2103 / 0	0.0	0.0	0.24 (1)	5.77			
O- N	0 / 0	-18.2	-18.2	0.22 (4)	10.00			
N- M	0 / 1823	-18.2	-18.2	0.40 (1)	10.00			
M- L	0 / 1632	-18.2	-18.2	0.36 (1)	10.00			
L- K	0 / 1632	-18.2	-18.2	0.36 (1)	10.00			
K- J	0 / 0	-18.2	-18.2	0.19 (4)	10.00			

DESIGN CRITERIA

SPECIFIED LOADS:

TOP CH.	LL =	34.8	PSF
	DL =	6.0	PSF
BOT CH.	LL =	0.0	PSF
	DL =	7.3	PSF
TOTAL LOAD	=	48.1	PSF

SPACING = 24.0 IN. C/C

THIS TRUSS IS DESIGNED FOR RESIDENTIAL OR SMALL BUILDING REQUIREMENTS OF PART 9, NBCC 2015

THIS DESIGN COMPLIES WITH:
- PART 9 OF BCBC 2018 , NBC-2019AE
- PART 9 OF OBC 2012 (2019 AMENDMENT)
- CSA 086-14
- TPIC 2014

(55 % OF 48.1 P.S.F. G.S.L. PLUS 8.4 P.S.F. RAIN LOAD) EQUALS 34.8 P.S.F. SPECIFIED ROOF LIVE LOAD

ALLOWABLE DEFL.(LL)= L/360 (0.91")
CALCULATED VERT. DEFL.(LL) = L/ 999 (0.08")
ALLOWABLE DEFL.(TL)= L/360 (0.91")
CALCULATED VERT. DEFL.(TL) = L/ 999 (0.15")

CSI: TC=0.97/0.97 (B-C:1) , BC=0.40/0.97 (M-N:1) , WB=0.51/0.97 (C-M:1) , SSI=0.34/1.00 (B-C:1)

DOL LUMBER=1.00 NAIL=1.00 LS BEND=1.10 COMP=1.10 SHEAR=1.10 TENS= 1.10

COMPANION LIVE LOAD FACTOR = 1.00

TRUSS PLATE MANUFACTURER IS NOT RESPONSIBLE FOR QUALITY CONTROL IN THE TRUSS MANUFACTURING PLANT .

NAIL VALUES

PLATE	GRIP(DRY) (PSI) MAX	MIN	SHEAR (PLI) MAX	MIN	SECTION (PLI) MAX	MIN
MT20	650	371	1747	788	1987	1873

PLATE PLACEMENT TOL. = 0.250 inches

PLATE ROTATION TOL. = 5.0 Deg.

JSI GRIP= 0.90 (H) (INPUT = 0.90)
JSI METAL= 0.62 (H) (INPUT = 1.00)

LICENSED PROFESSIONAL ENGINEER
N.A. EL-MASRI
PROVINCE OF ONTARIO
Jul 20, 2023

READ ALL NOTES ON THIS PAGE AND ON THE ENGINEERING NOTES: TRUSSES. THE NOTE PAGE IS AN INTEGRAL PART OF THIS DRAWING AS IT CONTAINS SPECIFICATIONS AND CRITERIA USED IN THE DESIGN OF THIS COMPONENT.

KOTT

JOB NAME	TRUSS NAME	QUANTITY	PLY	JOB DESC. / TRUSS DESC.	DRWG NO.
NE0723-137	T07	1	1	GREENPARK - ZADORRA ESTATES - VILLA 12-1	

Version 8.630 S Mar 22 2023 MiTek Industries, Inc. Thu Jul 20 09:03:06 2023 Page 1

ID:VquVgowiAqiumFmAweaWlxz71eJ-YvBx8T1yO3fxhbX0316QuVmSYr5nDNVzGtZUWgywEHp

Scale: 3/16"=1'

CORPORATION OF THE CITY OF OSHAWA
TRUE COPY
OF PERMIT PLANS
Nov 14 2023
PER: C Morton
CHIEF BUILDING OFFICIAL

MHP 23039

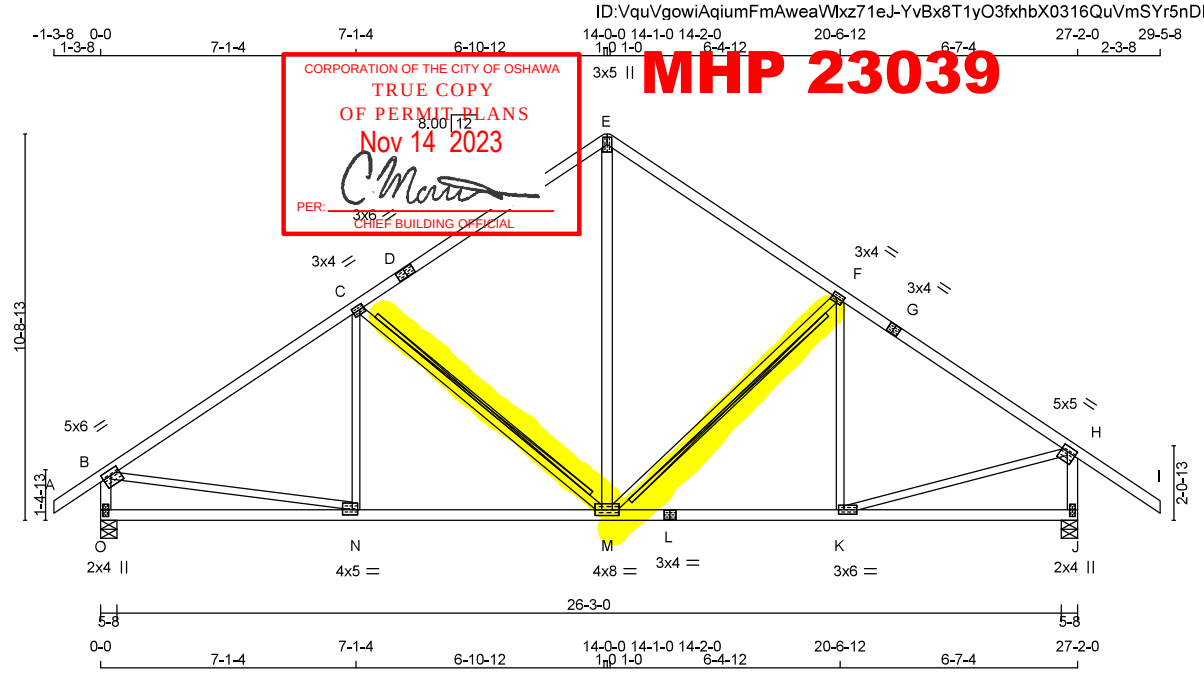

TOTAL WEIGHT = 122 lb

[M][F]

LUMBER

N. L. G. A. RULES

CHORDS	SIZE		LUMBER	DESCR.
A - D	2x4	DRY	No.2	SPF
D - E	2x4	DRY	No.2	SPF
E - G	2x4	DRY	No.2	SPF
G - I	2x4	DRY	No.2	SPF
O - B	2x4	DRY	No.2	SPF
J - H	2x4	DRY	No.2	SPF
O - L	2x4	DRY	No.2	SPF
L - J	2x4	DRY	No.2	SPF
ALL WEBS EXCEPT	2x3	DRY	No.2	SPF
M - E	2x4	DRY	No.2	SPF

DRY: SEASONED LUMBER.

PLATES (table is in inches)

JT	TYPE	PLATES	W	LEN	Y	X
B	TMVW-t	MT20	5.0	6.0	1.75	3.00
C	TMWW-t	MT20	3.0	4.0	1.50	1.50
D	TS-t	MT20	3.0	6.0		
E	TTW+p	MT20	3.0	5.0		
F	TMWW-t	MT20	3.0	4.0	1.50	1.50
G	TS-t	MT20	3.0	4.0		
H	TMVW-t	MT20	5.0	5.0	1.75	2.00
J	BMV1+p	MT20	2.0	4.0	2.25	1.00
K	BMWW-t	MT20	3.0	6.0	1.50	1.75
L	BS-t	MT20	3.0	4.0		
M	BMWWW-t	MT20	4.0	8.0		
N	BMWW-t	MT20	4.0	5.0	1.75	1.75
O	BMV1+p	MT20	2.0	4.0	2.25	1.00

DIMENSIONS, SUPPORTS AND LOADINGS SPECIFIED BY FABRICATOR TO BE VERIFIED BY BUILDING DESIGNER

BEARINGS

JT	FACTORED GROSS REACTION VERT	HORZ	MAXIMUM FACTORED GROSS REACTION DOWN	HORZ	UPLIFT	INPUT BRG	REQRD BRG
O	2034	0	2034	0	0	5-8	3-2
J	2153	0	2153	0	0	5-8	3-8

UNFACTORED REACTIONS

JT	1ST LCASE COMBINED	MAX./MIN. COMPONENT REACTIONS SNOW	LIVE	PERM.LIVE	WIND	DEAD	SOIL
O	1419	1041 / 0	0 / 0	0 / 0	0 / 0	378 / 0	0 / 0
J	1501	1111 / 0	0 / 0	0 / 0	0 / 0	390 / 0	0 / 0

BEARING MATERIAL TO BE SPF NO.2 OR BETTER AT JOINT(S) O, J

BRACING

TOP CHORD TO BE SHEATHED OR MAX. PURLIN SPACING = 3.05 FT.
MAX. UNBRACED BOTTOM CHORD LENGTH = 10.00 FT OR RIGID CEILING DIRECTLY APPLIED.

ALL PITCH BREAKS AND PERIMETER CORNER JOINTS MUST BE LATERALLY RESTRAINED.

2x4 DRY SPF No.2 T-BRACE AT C-M, F-M

FASTEN T AND I-BRACES TO NARROW EDGE OF WEB WITH ONE ROW PER PLY OF 3" COMMON WIRE NAILS @ 6" O.C. WITH 3" MINIMUM END DISTANCE. BRACE MUST COVER 90% OF WEB LENGTH.

END VERTICAL(S) MUST BE SHEATHED OR HAVE BRACES AS INDICATED IN THE MAX. UNBRACED LENGTH COLUMN OF THE TABLE BELOW

LOADING

TOTAL LOAD CASES: (4)

CHORDS

MEMB. FR-TO	MAX. FACTORED FORCE (LBS)	FACTORED VERT. LOAD LC1 (PLF) FROM	TO	MAX CSI (LC)	MAX. UNBRAC LENGTH
A- B	0 / 45	-119.4	-119.4	0.16 (1)	10.00
B- C	-2137 / 0	-119.4	-119.4	0.96 (1)	3.05
C- D	-1521 / 0	-119.4	-119.4	0.86 (1)	3.75
D- E	-1521 / 0	-119.4	-119.4	0.86 (1)	3.75
E- F	-1517 / 0	-119.4	-119.4	0.73 (1)	4.19
F- G	-1910 / 0	-119.4	-119.4	0.78 (1)	3.72
G- H	-1910 / 0	-119.4	-119.4	0.78 (1)	3.72
H- I	0 / 79	-119.4	-119.4	0.47 (1)	10.00
O- B	-1981 / 0	0.0	0.0	0.20 (1)	5.91
J- H	-2103 / 0	0.0	0.0	0.24 (1)	5.77
O- N	0 / 0	-18.2	-18.2	0.22 (4)	10.00
N- M	0 / 1825	-18.2	-18.2	0.40 (1)	10.00
M- L	0 / 1633	-18.2	-18.2	0.35 (1)	10.00
L- K	0 / 1633	-18.2	-18.2	0.35 (1)	10.00
K- J	0 / 0	-18.2	-18.2	0.19 (4)	10.00

WEBS

MEMB. FR-TO	MAX. FACTORED FORCE (LBS)	MAX CSI (LC)
N- C	-135 / 90	0.08 (1)
C- M	-791 / 0	0.51 (1)
M- F	-572 / 0	0.35 (1)
K- F	-301 / 34	0.21 (1)
B- N	0 / 1846	0.42 (1)
K- H	0 / 1689	0.38 (1)
M- E	0 / 1020	0.16 (1)

DESIGN CRITERIA

SPECIFIED LOADS:

TOP CH.	LL	=	34.8	PSF
	DL	=	6.0	PSF
BOT CH.	LL	=	0.0	PSF
	DL	=	7.3	PSF
TOTAL LOAD		=	48.1	PSF

SPACING = 24.0 IN. C/C

THIS TRUSS IS DESIGNED FOR RESIDENTIAL OR SMALL BUILDING REQUIREMENTS OF PART 9, NBCC 2015

THIS DESIGN COMPLIES WITH:
- PART 9 OF BCBC 2018 , NBC-2019AE
- PART 9 OF OBC 2012 (2019 AMENDMENT)
- CSA 086-14
- TPIC 2014

(55 % OF 48.1 P.S.F. G.S.L. PLUS 8.4 P.S.F. RAIN LOAD) EQUALS 34.8 P.S.F. SPECIFIED ROOF LIVE LOAD

ALLOWABLE DEFL.(LL)= L/360 (0.91")
CALCULATED VERT. DEFL.(LL) = L/ 999 (0.08")
ALLOWABLE DEFL.(TL)= L/360 (0.91")
CALCULATED VERT. DEFL.(TL) = L/ 999 (0.15")

CSI: TC=0.96/0.97 (B-C:1) , BC=0.40/0.97 (M-N:1) , WB=0.51/0.97 (C-M:1) , SSI=0.34/1.00 (B-C:1)

DOL LUMBER=1.00 NAIL=1.00 LS BEND=1.10 COMP=1.10 SHEAR=1.10 TENS= 1.10

COMPANION LIVE LOAD FACTOR = 1.00

TRUSS PLATE MANUFACTURER IS NOT RESPONSIBLE FOR QUALITY CONTROL IN THE TRUSS MANUFACTURING PLANT .

NAIL VALUES

PLATE	GRIP(DRY) (PSI) MAX	MIN	SHEAR (PLI) MAX	MIN	SECTION (PLI) MAX	MIN
MT20	650	371	1747	788	1987	1873

PLATE PLACEMENT TOL. = 0.250 inches

PLATE ROTATION TOL. = 5.0 Deg.

JSI GRIP= 0.90 (H) (INPUT = 0.90)
JSI METAL= 0.62 (H) (INPUT = 1.00)

LICENSED PROFESSIONAL ENGINEER
N.A. EL-MASRI
PROVINCE OF ONTARIO
Jul 20, 2023

READ ALL NOTES ON THIS PAGE AND ON THE ENGINEERING NOTES: TRUSSES. THE NOTE PAGE IS AN INTEGRAL PART OF THIS DRAWING AS IT CONTAINS SPECIFICATIONS AND CRITERIA USED IN THE DESIGN OF THIS COMPONENT.

KOTT

JOB NAME	TRUSS NAME	QUANTITY	PLY	JOB DESC.	DRWG NO.
NE0723-137	T08	1	1	GREENPARK - ZADORRA ESTATES - VILLA 12-1 (TRUSS DESC.)	

Version 8.630 S Mar 22 2023 MiTek Industries, Inc. Thu Jul 20 09:03:07 2023 Page 1
ID:VquVgowiAqiumFmAweaWxz71eJ-05lJLp2a9NnoJl6CdIdfRilicFSKyml6UXJ126ywEHo

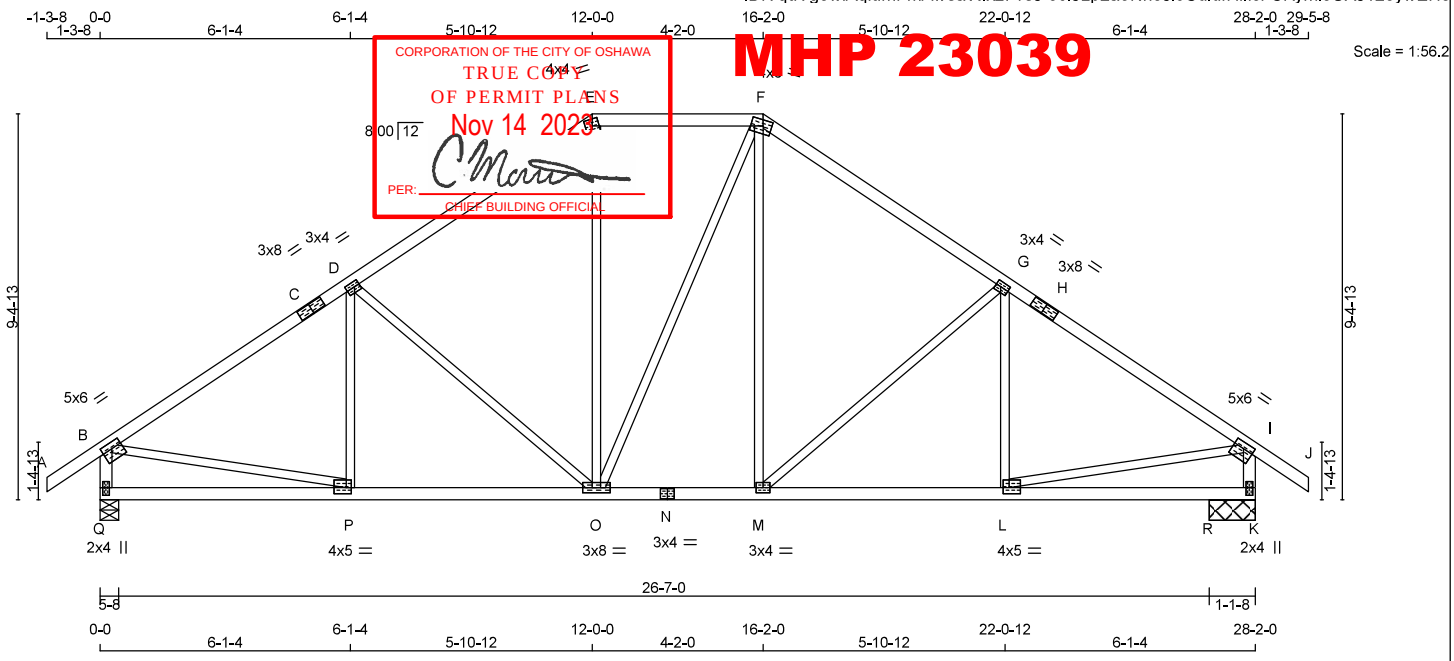

CORPORATION OF THE CITY OF OSHAWA
TRUE COPY
OF PERMIT PLANS
Nov 14 2023
PER:
CHIEF BUILDING OFFICIAL
MHP 23039

TOTAL WEIGHT = 128 lb

LUMBER
N. L. G. A. RULES

CHORDS	SIZE		LUMBER	DESCR.
A - C	2x4	DRY	No.2	SPF
C - E	2x4	DRY	2100F 1.8E	SPF
E - F	2x4	DRY	No.2	SPF
F - H	2x4	DRY	2100F 1.8E	SPF
H - J	2x4	DRY	No.2	SPF
Q - B	2x4	DRY	No.2	SPF
K - I	2x4	DRY	No.2	SPF
Q - N	2x4	DRY	No.2	SPF
N - K	2x4	DRY	No.2	SPF
ALL WEBS EXCEPT	2x3	DRY	No.2	SPF

DRY: SEASONED LUMBER.

PLATES (table is in inches)

JT	TYPE	PLATES	W	LEN	Y	X
B	TMVW-t	MT20	5.0	6.0	1.75	3.00
C	TS-t	MT20	3.0	8.0		
D	TMWW-t	MT20	3.0	4.0	1.50	1.50
E	TTW-m	MT20	4.0	4.0		
F	TTWW-m	MT20	4.0	6.0	1.75	2.50
G	TMWW-t	MT20	3.0	4.0	1.50	1.50
H	TS-t	MT20	3.0	8.0		
I	TMVW-t	MT20	5.0	6.0	1.75	3.00
K	BMV1+p	MT20	2.0	4.0	2.25	1.00
L	BMWW-t	MT20	4.0	5.0	1.75	1.75
M	BMWW-t	MT20	3.0	4.0		
N	BS-t	MT20	3.0	4.0		
O	BMWWW-t	MT20	3.0	8.0		
P	BMWW-t	MT20	4.0	5.0	1.75	1.50
Q	BMV1+p	MT20	2.0	4.0	2.25	1.00

DIMENSIONS, SUPPORTS AND LOADINGS SPECIFIED BY FABRICATOR TO BE VERIFIED BY BUILDING DESIGNER

BEARINGS

JT	FACTORED GROSS REACTION VERT	HORZ	MAXIMUM FACTORED GROSS REACTION DOWN	HORZ	UPLIFT	INPUT BRG IN-SX	REQRD BRG IN-SX
Q	2097	0	2097	0	0	5-8	3-5
K	1951	0	1951	0	0	1-1-8	2-13
R	158	0	158	0	0	1-1-8	2-13

UNFACTORED REACTIONS

JT	1ST LCASE COMBINED	MAX./MIN. COMPONENT REACTIONS SNOW	LIVE	PERM.LIVE	WIND	DEAD	SOIL
Q	1462	1074 / 0	0 / 0	0 / 0	0 / 0	388 / 0	0 / 0
K	1354	1034 / 0	0 / 0	0 / 0	0 / 0	320 / 0	0 / 0
R	118	43 / 0	0 / 0	0 / 0	0 / 0	75 / 0	0 / 0

BEARING MATERIAL TO BE SPF NO.2 OR BETTER AT JOINT(S) Q, K, R

BRACING
TOP CHORD TO BE SHEATHED OR MAX. PURLIN SPACING = 3.87 FT.
MAX. UNBRACED BOTTOM CHORD LENGTH = 10.00 FT OR RIGID CEILING DIRECTLY APPLIED.

ALL PITCH BREAKS AND PERIMETER CORNER JOINTS MUST BE LATERALLY RESTRAINED.

LOADING
TOTAL LOAD CASES: (4)

CHORDS

MEMB. FR-TO	MAX. FACTORED FORCE (LBS)	FROM (PLF)	TO (PLF)	VERT. LOAD LC1 MAX CSI (LC)	MAX. UNBRAC LENGTH
A- B	0 / 45	-119.4	-119.4	0.16 (1)	10.00
B- C	-2245 / 0	-119.4	-119.4	0.69 (1)	3.87
C- D	-2245 / 0	-119.4	-119.4	0.69 (1)	3.87
D- E	-1807 / 0	-119.4	-119.4	0.57 (1)	5.09
E- F	-1465 / 0	-119.4	-119.4	0.40 (1)	4.85
F- G	-1805 / 0	-119.4	-119.4	0.57 (1)	5.09
G- H	-2211 / 0	-119.4	-119.4	0.68 (1)	3.90
H- I	-2211 / 0	-119.4	-119.4	0.68 (1)	3.90
I- J	0 / 45	-119.4	-119.4	0.16 (1)	10.00
Q- B	-2050 / 0	0.0	0.0	0.21 (1)	5.83
K- I	-2026 / 0	0.0	0.0	0.21 (1)	5.86
Q- P	0 / 0	-18.2	-18.2	0.16 (4)	10.00
P- O	0 / 1909	-18.2	-18.2	0.38 (1)	10.00
O- N	0 / 1463	-18.2	-18.2	0.30 (1)	10.00
N- M	0 / 1463	-18.2	-18.2	0.30 (1)	10.00
M- L	0 / 1881	-18.2	-18.2	0.38 (1)	10.00
L- R	0 / 0	-18.2	-18.2	0.13 (1)	10.00
R- K	0 / 0	-18.2	-18.2	0.13 (1)	10.00

WEBS

MEMB. FR-TO	MAX. FACTORED FORCE (LBS)	MAX CSI (LC)
P- D	-215 / 53	0.10 (1)
D- O	-592 / 0	0.77 (1)
O- E	0 / 467	0.11 (1)
O- F	0 / 4	0.00 (1)
M- F	0 / 462	0.10 (1)
M- G	-558 / 0	0.72 (1)
L- G	-256 / 25	0.12 (1)
B- P	0 / 1938	0.44 (1)
L- I	0 / 1910	0.43 (1)

DESIGN CRITERIA

SPECIFIED LOADS:

TOP CH.	LL	=	34.8	PSF
	DL	=	6.0	PSF
BOT CH.	LL	=	0.0	PSF
	DL	=	7.3	PSF
TOTAL LOAD		=	48.1	PSF

SPACING = 24.0 IN. C/C

LOADING IN FLAT SECTION BASED ON A SLOPE OF 2.00/12 MINIMUM

THIS TRUSS IS DESIGNED FOR RESIDENTIAL OR SMALL BUILDING REQUIREMENTS OF PART 9, NBCC 2015

THIS DESIGN COMPLIES WITH:
- PART 9 OF BCBC 2018 , NBC-2019AE
- PART 9 OF OBC 2012 (2019 AMENDMENT)
- CSA 086-14
- TPIC 2014

(55 % OF 48.1 P.S.F. G.S.L. PLUS 8.4 P.S.F. RAIN LOAD) EQUALS 34.8 P.S.F. SPECIFIED ROOF LIVE LOAD

ALLOWABLE DEFL.(LL)= L/360 (0.90")
CALCULATED VERT. DEFL.(LL) = L/ 999 (0.08")
ALLOWABLE DEFL.(TL)= L/360 (0.90")
CALCULATED VERT. DEFL.(TL) = L/ 999 (0.15")

CSI: TC=0.69/0.97 (B-D:1) , BC=0.38/0.97 (O-P:1) , WB=0.77/0.97 (D-O:1) , SSI=0.29/1.00 (G-I:1)

DOL LUMBER=1.00 NAIL=1.00 LS BEND=1.10 COMP=1.10 SHEAR=1.10 TENS= 1.10

COMPANION LIVE LOAD FACTOR = 1.00

TRUSS PLATE MANUFACTURER IS NOT RESPONSIBLE FOR QUALITY CONTROL IN THE TRUSS MANUFACTURING PLANT .

NAIL VALUES

PLATE	GRIP(DRY) (PSI) MAX	MIN	SHEAR (PLI) MAX	MIN	SECTION (PLI) MAX	MIN
MT20	650	371	1747	788	1987	1873

PLATE PLACEMENT TOL. = 0.250 inches

PLATE ROTATION TOL. = 5.0 Deg.

JSI GRIP= 0.89 (L) (INPUT = 0.90)
JSI METAL= 0.60 (B) (INPUT = 1.00)

LICENSED PROFESSIONAL ENGINEER
N.A. EL-MASRI
PROVINCE OF ONTARIO
Jul 20, 2023

READ ALL NOTES ON THIS PAGE AND ON THE ENGINEERING NOTES: TRUSSES. THE NOTE PAGE IS AN INTEGRAL PART OF THIS DRAWING AS IT CONTAINS SPECIFICATIONS AND CRITERIA USED IN THE DESIGN OF THIS COMPONENT.

KOTT

JOB NAME	TRUSS NAME	QUANTITY	PLY	JOB DESC. / TRUSS DESC.	DRWG NO.
NE0723-137	T09	1	1	GREENPARK - ZADORRA ESTATES - VILLA 12-1	

Version 8.630 S Mar 22 2023 MiTek Industries, Inc. Thu Jul 20 09:03:07 2023 Page 1
ID:VquVgowiAqiumFmAweaWxz71eJ-05IJLp2a9NnoJl6CdIdfRiIl6FSuymH6UXJ126ywEHo

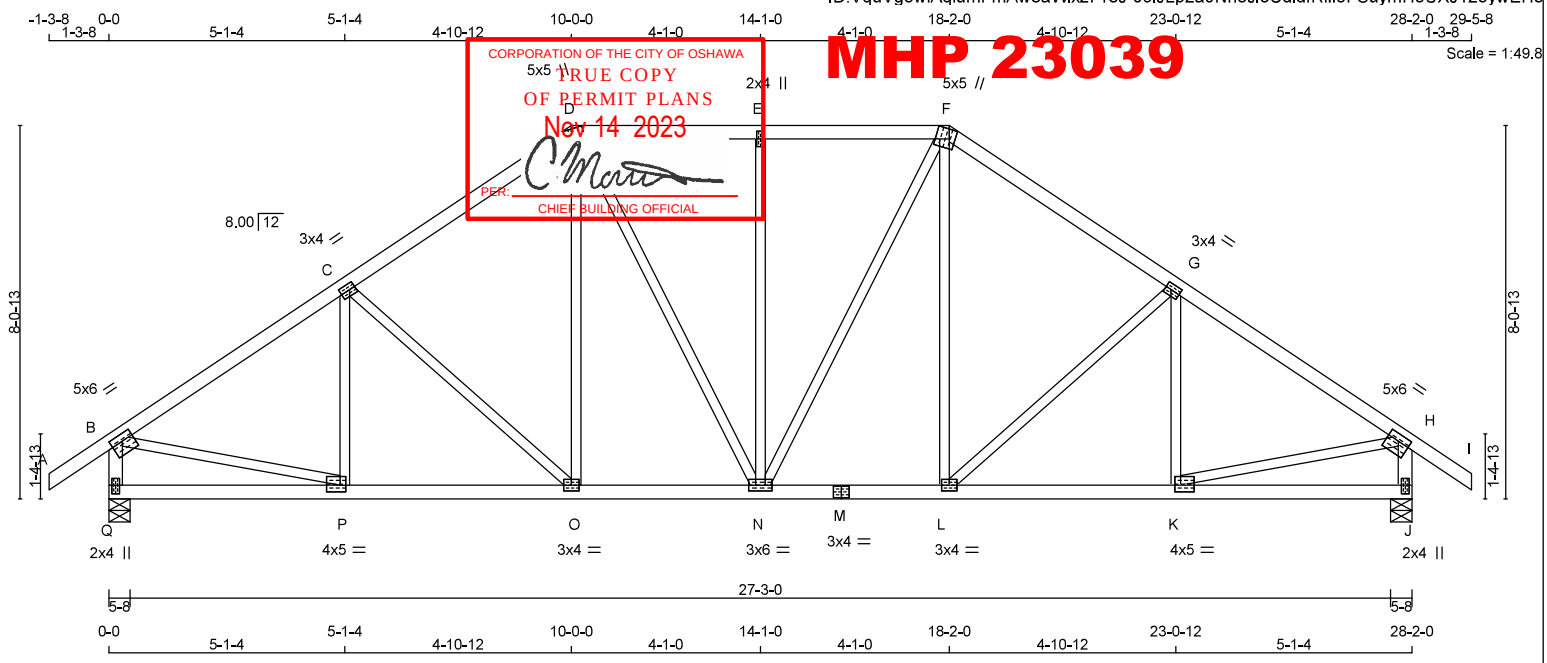

CORPORATION OF THE CITY OF OSHAWA
TRUE COPY
OF PERMIT PLANS
Nov 14 2023
PER:
CHIEF BUILDING OFFICIAL

MHP 23039

TOTAL WEIGHT = 132 lb

LUMBER
N. L. G. A. RULES

CHORDS	SIZE		LUMBER	DESCR.
A - D	2x4	DRY	No.2	SPF
D - F	2x4	DRY	No.2	SPF
F - I	2x4	DRY	No.2	SPF
Q - B	2x4	DRY	No.2	SPF
J - H	2x4	DRY	No.2	SPF
Q - M	2x4	DRY	No.2	SPF
M - J	2x4	DRY	No.2	SPF
ALL WEBS EXCEPT	2x3	DRY	No.2	SPF

DRY: SEASONED LUMBER.

PLATES (table is in inches)

JT	TYPE	PLATES	W	LEN	Y	X
B	TMVW-t	MT20	5.0	6.0	1.75	3.00
C	TMWW-t	MT20	3.0	4.0	1.50	1.50
D	TTWW+m	MT20	5.0	5.0	2.50	1.50
E	TMW+w	MT20	2.0	4.0		
F	TTWW+m	MT20	5.0	5.0	2.50	1.50
G	TMWW-t	MT20	3.0	4.0	1.50	1.50
H	TMVW-t	MT20	5.0	6.0	1.75	3.00
J	BMV1+p	MT20	2.0	4.0	2.25	1.00
K	BMWW-t	MT20	4.0	5.0	1.75	1.50
L	BMWW-t	MT20	3.0	4.0		
M	BS-t	MT20	3.0	4.0		
N	BMWWW-t	MT20	3.0	6.0		
O	BMWW-t	MT20	3.0	4.0		
P	BMWW-t	MT20	4.0	5.0	1.75	1.50
Q	BMV1+p	MT20	2.0	4.0	2.25	1.00

DIMENSIONS, SUPPORTS AND LOADINGS SPECIFIED BY FABRICATOR TO BE VERIFIED BY BUILDING DESIGNER

BEARINGS

JT	FACTORED GROSS REACTION VERT	HORZ	MAXIMUM FACTORED GROSS REACTION DOWN	HORZ	UPLIFT	INPUT BRG IN-SX	REQRD BRG IN-SX
Q	2103	0	2103	0	0	5-8	3-5
J	2103	0	2103	0	0	5-8	3-5

UNFACTORED REACTIONS

JT	1ST LCASE COMBINED	MAX./MIN. COMPONENT REACTIONS SNOW	LIVE	PERM.LIVE	WIND	DEAD	SOIL
Q	1467	1076 / 0	0 / 0	0 / 0	0 / 0	391 / 0	0 / 0
J	1467	1076 / 0	0 / 0	0 / 0	0 / 0	391 / 0	0 / 0

BEARING MATERIAL TO BE SPF NO.2 OR BETTER AT JOINT(S) Q, J

BRACING
TOP CHORD TO BE SHEATHED OR MAX. PURLIN SPACING = 4.06 FT.
MAX. UNBRACED BOTTOM CHORD LENGTH = 10.00 FT OR RIGID CEILING DIRECTLY APPLIED.

ALL PITCH BREAKS AND PERIMETER CORNER JOINTS MUST BE LATERALLY RESTRAINED.

LOADING
TOTAL LOAD CASES: (4)

CHORDS

MEMB. FR-TO	MAX. FACTORED FORCE (LBS)	VERT. LOAD (PLF) FROM	TO	LC1 MAX CSI (LC)	MAX. UNBRAC LENGTH
A- B	0 / 45	-119.4	-119.4	0.16 (1)	10.00
B- C	-2237 / 0	-119.4	-119.4	0.46 (1)	4.06
C- D	-1979 / 0	-119.4	-119.4	0.44 (1)	4.30
D- E	-1787 / 0	-119.4	-119.4	0.28 (1)	4.69
E- F	-1787 / 0	-119.4	-119.4	0.28 (1)	4.69
F- G	-1979 / 0	-119.4	-119.4	0.44 (1)	4.30
G- H	-2237 / 0	-119.4	-119.4	0.46 (1)	4.06
H- I	0 / 45	-119.4	-119.4	0.16 (1)	10.00
Q- B	-2062 / 0	0.0	0.0	0.21 (1)	5.81
J- H	-2062 / 0	0.0	0.0	0.21 (1)	5.81
Q- P	0 / 0	-18.2	-18.2	0.11 (4)	10.00
P- O	0 / 1893	-18.2	-18.2	0.35 (1)	10.00
O- N	0 / 1616	-18.2	-18.2	0.30 (1)	10.00
N- M	0 / 1616	-18.2	-18.2	0.30 (1)	10.00
M- L	0 / 1616	-18.2	-18.2	0.30 (1)	10.00
L- K	0 / 1893	-18.2	-18.2	0.35 (1)	10.00
K- J	0 / 0	-18.2	-18.2	0.11 (4)	10.00

WEBS

MEMB. FR-TO	MAX. FACTORED FORCE (LBS)	MAX CSI (LC)
P- C	-303 / 9	0.10 (1)
C- O	-379 / 0	0.32 (1)
O- D	0 / 339	0.08 (1)
D- N	0 / 368	0.08 (1)
N- E	-587 / 0	0.73 (1)
N- F	0 / 368	0.08 (1)
L- F	0 / 339	0.08 (1)
L- G	-379 / 0	0.32 (1)
K- G	-303 / 9	0.10 (1)
B- P	0 / 1935	0.44 (1)
K- H	0 / 1935	0.44 (1)

DESIGN CRITERIA

SPECIFIED LOADS:

TOP CH.	LL	=	34.8	PSF
	DL	=	6.0	PSF
BOT CH.	LL	=	0.0	PSF
	DL	=	7.3	PSF
TOTAL LOAD		=	48.1	PSF

SPACING = 24.0 IN. C/C

LOADING IN FLAT SECTION BASED ON A SLOPE OF 2.00/12 MINIMUM

THIS TRUSS IS DESIGNED FOR RESIDENTIAL OR SMALL BUILDING REQUIREMENTS OF PART 9, NBCC 2015

THIS DESIGN COMPLIES WITH:
- PART 9 OF BCBC 2018 , NBC-2019AE
- PART 9 OF OBC 2012 (2019 AMENDMENT)
- CSA 086-14
- TPIC 2014

(55 % OF 48.1 P.S.F. G.S.L. PLUS 8.4 P.S.F. RAIN LOAD) EQUALS 34.8 P.S.F. SPECIFIED ROOF LIVE LOAD

ALLOWABLE DEFL.(LL)= L/360 (0.94")
CALCULATED VERT. DEFL.(LL) = L/ 999 (0.08")
ALLOWABLE DEFL.(TL)= L/360 (0.94")
CALCULATED VERT. DEFL.(TL) = L/ 999 (0.13")

CSI: TC=0.46/0.97 (B-C:1) , BC=0.35/0.97 (O-P:1) , WB=0.73/0.97 (E-N:1) , SSI=0.24/1.00 (B-C:1)

DOL LUMBER=1.00 NAIL=1.00 LS BEND=1.10 COMP=1.10 SHEAR=1.10 TENS= 1.10

COMPANION LIVE LOAD FACTOR = 1.00

TRUSS PLATE MANUFACTURER IS NOT RESPONSIBLE FOR QUALITY CONTROL IN THE TRUSS MANUFACTURING PLANT .

NAIL VALUES

PLATE	GRIP(DRY) (PSI) MAX	MIN	SHEAR (PLI) MAX	MIN	SECTION (PLI) MAX	MIN
MT20	650	371	1747	788	1987	1873

PLATE PLACEMENT TOL. = 0.250 inches

PLATE ROTATION TOL. = 5.0 Deg.

JSI GRIP= 0.88 (Q) (INPUT = 0.90)
JSI METAL= 0.59 (H) (INPUT = 1.00)

LICENSED PROFESSIONAL ENGINEER
N.A. EL-MASRI
PROVINCE OF ONTARIO
Jul 20, 2023

READ ALL NOTES ON THIS PAGE AND ON THE ENGINEERING NOTES: TRUSSES. THE NOTE PAGE IS AN INTEGRAL PART OF THIS DRAWING AS IT CONTAINS SPECIFICATIONS AND CRITERIA USED IN THE DESIGN OF THIS COMPONENT.

KOTT

JOB NAME	TRUSS NAME	QUANTITY	PLY	JOB DESC.	DRWG NO.
NE0723-137	T10	1	1	TRUSS DESC. GREENPARK - ZADORRA ESTATES - VILLA 12-1	

Version 8.630 S Mar 22 2023 MiTek Industries, Inc. Thu Jul 20 09:03:08 2023 Page 1
ID:VquVgowiAqiumFmAweaWlxz71eJ-UIIhY93CwhvfxugOBS8uzwrszfo_hETFjB2aaYywEHn

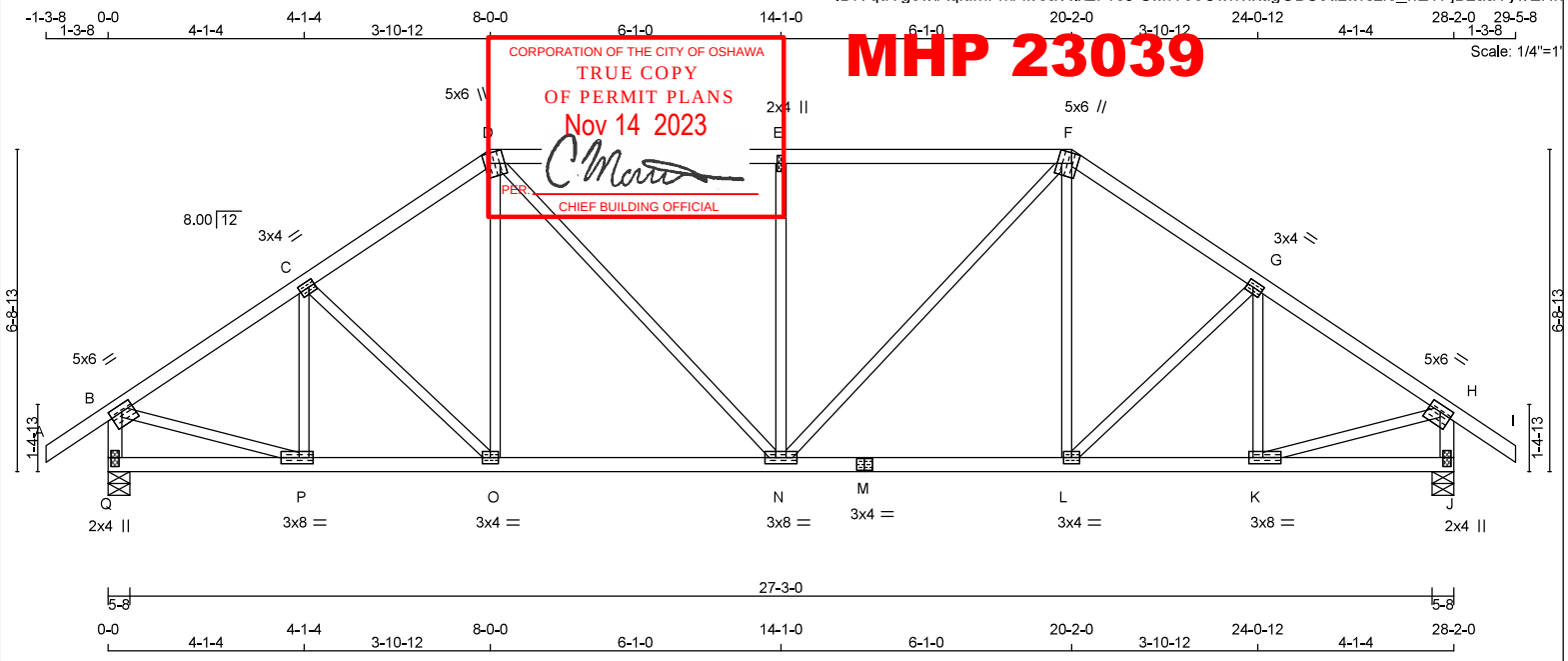

TOTAL WEIGHT = 123 lb
[M][F]

LUMBER
N. L. G. A. RULES

CHORDS	SIZE		LUMBER	DESCR.
A - D	2x4	DRY	No.2	SPF
D - F	2x4	DRY	No.2	SPF
F - I	2x4	DRY	No.2	SPF
Q - B	2x4	DRY	No.2	SPF
J - H	2x4	DRY	No.2	SPF
Q - M	2x4	DRY	No.2	SPF
M - J	2x4	DRY	No.2	SPF
ALL WEBS EXCEPT	2x3	DRY	No.2	SPF

DRY: SEASONED LUMBER.

PLATES (table is in inches)

JT	TYPE	PLATES	W	LEN	Y	X
B	TMVW-t	MT20	5.0	6.0	1.75	3.00
C	TMWW-t	MT20	3.0	4.0	1.50	1.50
D	TTWW+m	MT20	5.0	6.0	2.50	1.50
E	TMW+w	MT20	2.0	4.0		
F	TTWW+m	MT20	5.0	6.0	2.50	1.50
G	TMWW-t	MT20	3.0	4.0	1.50	1.50
H	TMVW-t	MT20	5.0	6.0	1.75	3.00
J	BMV1+p	MT20	2.0	4.0	2.25	1.00
K	BMWW-t	MT20	3.0	8.0	1.50	3.50
L	BMWW-t	MT20	3.0	4.0		
M	BS-t	MT20	3.0	4.0		
N	BMWWW-t	MT20	3.0	8.0		
O	BMWW-t	MT20	3.0	4.0		
P	BMWW-t	MT20	3.0	8.0	1.50	3.50
Q	BMV1+p	MT20	2.0	4.0	2.25	1.00

DIMENSIONS, SUPPORTS AND LOADINGS SPECIFIED BY FABRICATOR TO BE VERIFIED BY BUILDING DESIGNER

BEARINGS

JT	FACTORED GROSS REACTION VERT	HORZ	MAXIMUM FACTORED GROSS REACTION DOWN	HORZ	UPLIFT	INPUT BRG IN-SX	REQRD BRG IN-SX
Q	2103	0	2103	0	0	5-8	3-5
J	2103	0	2103	0	0	5-8	3-5

UNFACTORED REACTIONS

JT	1ST LCASE COMBINED	MAX./MIN. COMPONENT REACTIONS SNOW	LIVE	PERM.LIVE	WIND	DEAD	SOIL
Q	1467	1076 / 0	0 / 0	0 / 0	0 / 0	391 / 0	0 / 0
J	1467	1076 / 0	0 / 0	0 / 0	0 / 0	391 / 0	0 / 0

BEARING MATERIAL TO BE SPF NO.2 OR BETTER AT JOINT(S) Q, J

BRACING
TOP CHORD TO BE SHEATHED OR MAX. PURLIN SPACING = 3.74 FT.
MAX. UNBRACED BOTTOM CHORD LENGTH = 10.00 FT OR RIGID CEILING DIRECTLY APPLIED.

ALL PITCH BREAKS AND PERIMETER CORNER JOINTS MUST BE LATERALLY RESTRAINED.

LOADING
TOTAL LOAD CASES: (4)

CHORDS

MEMB. FR-TO	MAX. FACTORED FORCE (LBS)	VERT. LOAD (PLF) FROM	TO	LC1	MAX CSI (LC)	MAX. UNBRAC LENGTH
A- B	0 / 45	-119.4	-119.4	0.16 (1)	10.00	
B- C	-2182 / 0	-119.4	-119.4	0.29 (1)	4.32	
C- D	-2117 / 0	-119.4	-119.4	0.29 (1)	4.37	
D- E	-2209 / 0	-119.4	-119.4	0.65 (1)	3.74	
E- F	-2209 / 0	-119.4	-119.4	0.65 (1)	3.74	
F- G	-2117 / 0	-119.4	-119.4	0.29 (1)	4.37	
G- H	-2182 / 0	-119.4	-119.4	0.29 (1)	4.32	
H- I	0 / 45	-119.4	-119.4	0.16 (1)	10.00	
Q- B	-2067 / 0	0.0	0.0	0.21 (1)	5.81	
J- H	-2067 / 0	0.0	0.0	0.21 (1)	5.81	
Q- P	0 / 0	-18.2	-18.2	0.07 (4)	10.00	
P- O	0 / 1840	-18.2	-18.2	0.36 (1)	10.00	
O- N	0 / 1735	-18.2	-18.2	0.34 (1)	10.00	
N- M	0 / 1735	-18.2	-18.2	0.34 (1)	10.00	
M- L	0 / 1735	-18.2	-18.2	0.34 (1)	10.00	
L- K	0 / 1840	-18.2	-18.2	0.36 (1)	10.00	
K- J	0 / 0	-18.2	-18.2	0.07 (4)	10.00	

WEBS

MEMB. FR-TO	MAX. FACTORED FORCE (LBS)	MAX CSI (LC)
P- C	-419 / 0	0.11 (1)
C- O	-149 / 0	0.08 (1)
O- D	0 / 203	0.05 (1)
D- N	0 / 689	0.16 (1)
N- E	-891 / 0	0.67 (1)
N- F	0 / 689	0.16 (1)
L- F	0 / 203	0.05 (1)
L- G	-149 / 0	0.08 (1)
K- G	-419 / 0	0.11 (1)
B- P	0 / 1903	0.43 (1)
K- H	0 / 1903	0.43 (1)

DESIGN CRITERIA

SPECIFIED LOADS:

TOP CH.	LL =	34.8	PSF
	DL =	6.0	PSF
BOT CH.	LL =	0.0	PSF
	DL =	7.3	PSF
TOTAL LOAD	=	48.1	PSF

SPACING = 24.0 IN. C/C

LOADING IN FLAT SECTION BASED ON A SLOPE OF 2.00/12 MINIMUM

THIS TRUSS IS DESIGNED FOR RESIDENTIAL OR SMALL BUILDING REQUIREMENTS OF PART 9, NBCC 2015

THIS DESIGN COMPLIES WITH:
- PART 9 OF BCBC 2018 , NBC-2019AE
- PART 9 OF OBC 2012 (2019 AMENDMENT)
- CSA 086-14
- TPIC 2014

(55 % OF 48.1 P.S.F. G.S.L. PLUS 8.4 P.S.F. RAIN LOAD) EQUALS 34.8 P.S.F. SPECIFIED ROOF LIVE LOAD

ALLOWABLE DEFL.(LL)= L/360 (0.94")
CALCULATED VERT. DEFL.(LL) = L/ 999 (0.09")
ALLOWABLE DEFL.(TL)= L/360 (0.94")
CALCULATED VERT. DEFL.(TL) = L/ 999 (0.16")

CSI: TC=0.65/0.97 (D-E:1) , BC=0.36/0.97 (O-P:1) , WB=0.67/0.97 (E-N:1) , SSI=0.35/1.00 (E-F:1)

DOL LUMBER=1.00 NAIL=1.00 LS BEND=1.10 COMP=1.10 SHEAR=1.10 TENS= 1.10

COMPANION LIVE LOAD FACTOR = 1.00

TRUSS PLATE MANUFACTURER IS NOT RESPONSIBLE FOR QUALITY CONTROL IN THE TRUSS MANUFACTURING PLANT .

NAIL VALUES

PLATE	GRIP(DRY) (PSI) MAX	MIN	SHEAR (PLI) MAX	MIN	SECTION (PLI) MAX	MIN
MT20	650	371	1747	788	1987	1873

PLATE PLACEMENT TOL. = 0.250 inches

PLATE ROTATION TOL. = 5.0 Deg.

JSI GRIP= 0.90 (K) (INPUT = 0.90)
JSI METAL= 0.57 (H) (INPUT = 1.00)

LICENSED PROFESSIONAL ENGINEER
N.A. EL-MASRI
PROVINCE OF ONTARIO
Jul 20, 2023

READ ALL NOTES ON THIS PAGE AND ON THE ENGINEERING NOTES: TRUSSES. THE NOTE PAGE IS AN INTEGRAL PART OF THIS DRAWING AS IT CONTAINS SPECIFICATIONS AND CRITERIA USED IN THE DESIGN OF THIS COMPONENT.

KOTT

JOB NAME	TRUSS NAME	QUANTITY	PLY	JOB DESC.	DRWG NO.
NE0723-137	T11	2	1	TRUSS DESC. GREENPARK - ZADORRA ESTATES - VILLA 12-1	

Version 8.630 S Mar 22 2023 MiTek Industries, Inc. Thu Jul 20 09:03:09 2023 Page 1

ID:VquVgowiAqiumFmAweaWxz71eJ-yUs3mV3qh_1WY2FbkAg7W7O6j3A9QqZPyro86?ywEHm

CORPORATION OF THE CITY OF OSHAWA
TRUE COPY
OF PERMIT PLANS
Nov 14 2023
PER:
CHIEF BUILDING OFFICIAL

MHP 23039

Scale = 1:31.4

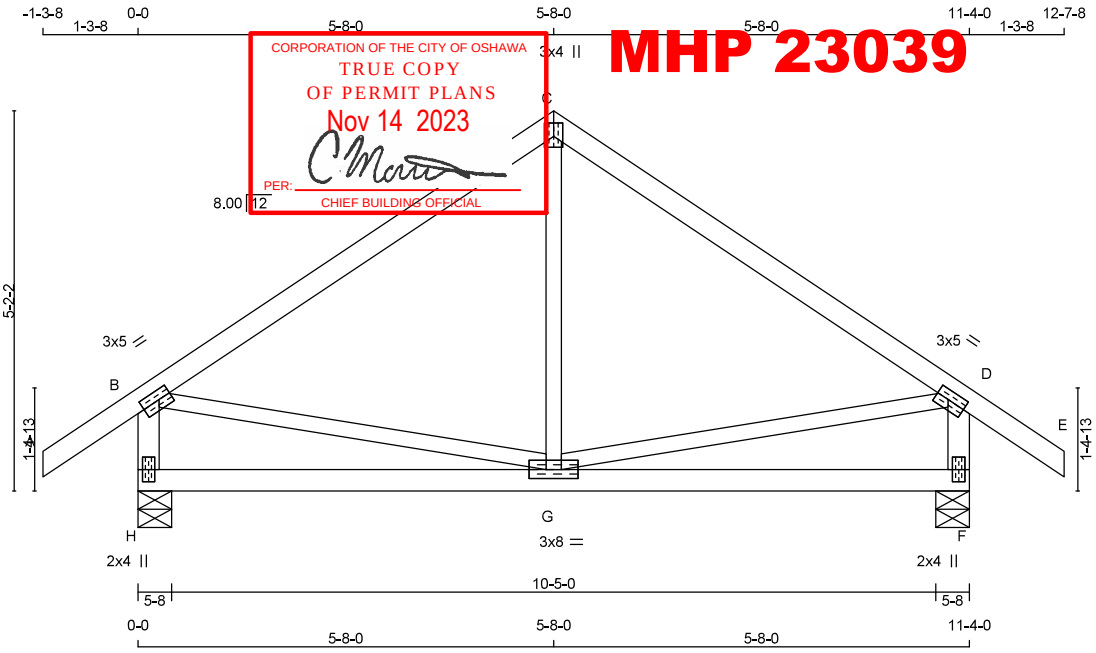

TOTAL WEIGHT = 2 X 47 = 94 lb

[M][F]

LUMBER

N. L. G. A. RULES

CHORDS	SIZE		LUMBER	DESCR.
A - C	2x4	DRY	2100F 1.8E	SPF
C - E	2x4	DRY	2100F 1.8E	SPF
H - B	2x4	DRY	No.2	SPF
F - D	2x4	DRY	No.2	SPF
H - F	2x4	DRY	No.2	SPF
ALL WEBS EXCEPT	2x3	DRY	No.2	SPF

DRY: SEASONED LUMBER.

PLATES (table is in inches)

JT	TYPE	PLATES	W	LEN	Y	X
B	TMVW-t	MT20	3.0	5.0	1.50	2.00
C	TTW+p	MT20	3.0	4.0	2.25	1.50
D	TMVW-t	MT20	3.0	5.0	1.50	2.00
F	BMV1+p	MT20	2.0	4.0		
G	BMWWW-t	MT20	3.0	8.0		
H	BMV1+p	MT20	2.0	4.0		

DIMENSIONS, SUPPORTS AND LOADINGS SPECIFIED BY FABRICATOR TO BE VERIFIED BY BUILDING DESIGNER

BEARINGS

JT	FACTORED GROSS REACTION VERT	HORZ	MAXIMUM FACTORED GROSS REACTION DOWN	HORZ	UPLIFT	INPUT BRG IN-SX	REQRD BRG IN-SX
H	944	0	944	0	0	5-8	1-8
F	944	0	944	0	0	5-8	1-8

UNFACTORED REACTIONS

JT	1ST LCASE COMBINED	MAX./MIN. COMPONENT REACTIONS SNOW	LIVE	PERM.LIVE	WIND	DEAD	SOIL
H	657	490 / 0	0 / 0	0 / 0	0 / 0	167 / 0	0 / 0
F	657	490 / 0	0 / 0	0 / 0	0 / 0	167 / 0	0 / 0

BEARING MATERIAL TO BE SPF NO.2 OR BETTER AT JOINT(S) H, F

BRACING

TOP CHORD TO BE SHEATHED OR MAX. PURLIN SPACING = 6.25 FT.
MAX. UNBRACED BOTTOM CHORD LENGTH = 10.00 FT OR RIGID CEILING DIRECTLY APPLIED.

ALL PITCH BREAKS AND PERIMETER CORNER JOINTS MUST BE LATERALLY RESTRAINED.

LOADING

TOTAL LOAD CASES: (4)

CHORDS

MEMB. FR-TO	MAX. FACTORED FORCE (LBS)	FACTORED VERT. LOAD (PLF) FROM	TO	LC1 MAX CSI (LC)	MAX. UNBRAC LENGTH
A- B	0 / 45	-119.4	-119.4	0.10 (1)	10.00
B- C	-563 / 0	-119.4	-119.4	0.33 (1)	6.25
C- D	-563 / 0	-119.4	-119.4	0.33 (1)	6.25
D- E	0 / 45	-119.4	-119.4	0.10 (1)	10.00
H- B	-904 / 0	0.0	0.0	0.09 (1)	7.81
F- D	-904 / 0	0.0	0.0	0.09 (1)	7.81
H- G	0 / 0	-18.2	-18.2	0.17 (4)	10.00
G- F	0 / 0	-18.2	-18.2	0.17 (4)	10.00

WEBS

MEMB. FR-TO	MAX. FACTORED FORCE (LBS)	MAX CSI (LC)
G- C	-52 / 91	0.03 (4)
B- G	0 / 477	0.11 (1)
G- D	0 / 477	0.11 (1)

DESIGN CRITERIA

SPECIFIED LOADS:

TOP CH.	LL =	34.8	PSF
	DL =	6.0	PSF
BOT CH.	LL =	0.0	PSF
	DL =	7.3	PSF
TOTAL LOAD	=	48.1	PSF

SPACING = 24.0 IN. C/C

THIS TRUSS IS DESIGNED FOR RESIDENTIAL OR SMALL BUILDING REQUIREMENTS OF PART 9, NBCC 2015

THIS DESIGN COMPLIES WITH:
- PART 9 OF BCBC 2018 , NBC-2019AE
- PART 9 OF OBC 2012 (2019 AMENDMENT)
- CSA 086-14
- TPIC 2014

(55 % OF 48.1 P.S.F. G.S.L. PLUS 8.4 P.S.F. RAIN LOAD) EQUALS 34.8 P.S.F. SPECIFIED ROOF LIVE LOAD

ALLOWABLE DEFL.(LL)= L/360 (0.38")
CALCULATED VERT. DEFL.(LL) = L/ 999 (0.01")
ALLOWABLE DEFL.(TL)= L/360 (0.38")
CALCULATED VERT. DEFL.(TL) = L/ 999 (0.03")

CSI: TC=0.33/0.97 (C-D:1) , BC=0.17/0.97 (F-G:4) , WB=0.11/0.97 (B-G:1) , SSI=0.22/1.00 (C-D:1)

DOL LUMBER=1.00 NAIL=1.00 LS BEND=1.10 COMP=1.10 SHEAR=1.10 TENS= 1.10

COMPANION LIVE LOAD FACTOR = 1.00

TRUSS PLATE MANUFACTURER IS NOT RESPONSIBLE FOR QUALITY CONTROL IN THE TRUSS MANUFACTURING PLANT .

NAIL VALUES

PLATE	GRIP(DRY) (PSI) MAX	MIN	SHEAR (PLI) MAX	MIN	SECTION (PLI) MAX	MIN
MT20	650	371	1747	788	1987	1873

PLATE PLACEMENT TOL. = 0.250 inches

PLATE ROTATION TOL. = 5.0 Deg.

JSI GRIP= 0.79 (D) (INPUT = 0.90)
JSI METAL= 0.24 (D) (INPUT = 1.00)

LICENSED PROFESSIONAL ENGINEER
N.A. EL-MASRI
PROVINCE OF ONTARIO
Jul 20, 2023

READ ALL NOTES ON THIS PAGE AND ON THE ENGINEERING NOTES: TRUSSES. THE NOTE PAGE IS AN INTEGRAL PART OF THIS DRAWING AS IT CONTAINS SPECIFICATIONS AND CRITERIA USED IN THE DESIGN OF THIS COMPONENT.

KOTT

JOB NAME	TRUSS NAME	QUANTITY	PLY	JOB DESC.	DRWG NO.
NE0723-137	T12	3	1	GREENPARK - ZADORRA ESTATES - VILLA 12-1 (TRUSS DESC.)	

Version 8.630 S Mar 22 2023 MiTek Industries, Inc. Thu Jul 20 09:03:09 2023 Page 1

ID:VquVgowiAqiumFmAweaWlxz71eJ-yUs3mV3qh_1WY2FbkAg7W7O6N39KQncPyro86?ywEHm

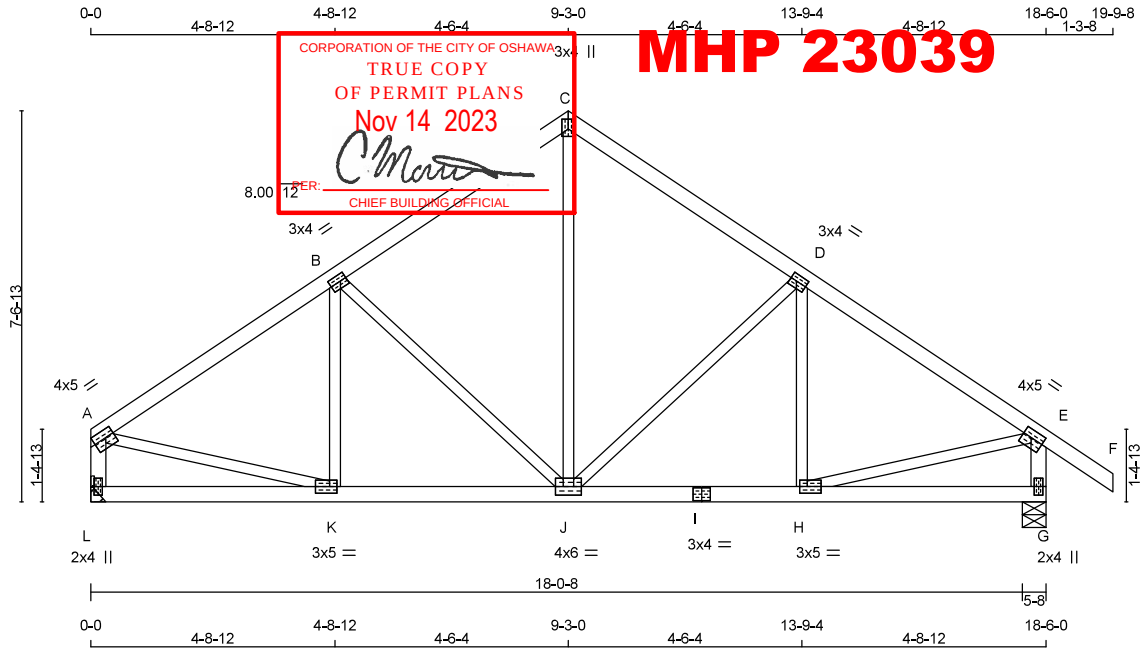

MHP 23039

CORPORATION OF THE CITY OF OSHAWA
TRUE COPY
OF PERMIT PLANS
Nov 14 2023
PER:
CHIEF BUILDING OFFICIAL

TOTAL WEIGHT = 3 X 80 = 239 lb

[M][F]

LUMBER

N. L. G. A. RULES

CHORDS	SIZE		LUMBER	DESCR.
A - C	2x4	DRY	No.2	SPF
C - F	2x4	DRY	No.2	SPF
L - A	2x4	DRY	No.2	SPF
G - E	2x4	DRY	No.2	SPF
L - I	2x4	DRY	No.2	SPF
I - G	2x4	DRY	No.2	SPF
ALL WEBS EXCEPT	2x3	DRY	No.2	SPF

DRY: SEASONED LUMBER.

PLATES (table is in inches)

JT	TYPE	PLATES	W	LEN	Y	X
A	TMVW-t	MT20	4.0	5.0	1.75	Edge
B	TMWW-t	MT20	3.0	4.0	1.50	1.50
C	TTW+p	MT20	3.0	4.0	2.25	1.50
D	TMWW-t	MT20	3.0	4.0	1.50	1.50
E	TMVW-t	MT20	4.0	5.0	1.75	2.00
G	BMV1+p	MT20	2.0	4.0		
H	BMWW-t	MT20	3.0	5.0	1.50	1.75
I	BS-t	MT20	3.0	4.0		
J	BMWWW-t	MT20	4.0	6.0		
K	BMWW-t	MT20	3.0	5.0	1.50	1.75
L	BMV1+p	MT20	2.0	4.0		

Edge - INDICATES REFERENCE CORNER OF PLATE TOUCHES EDGE OF CHORD.

DIMENSIONS, SUPPORTS AND LOADINGS SPECIFIED BY FABRICATOR TO BE VERIFIED BY BUILDING DESIGNER

BEARINGS

JT	FACTORED GROSS REACTION VERT	HORZ	MAXIMUM FACTORED GROSS REACTION DOWN	HORZ	UPLIFT	INPUT BRG IN-SX	REQRD BRG IN-SX
L	1274	0	1274	0	0	MECHANICAL	
G	1437	0	1437	0	0	5-8	1-9

A SUITABLE HANGER/MECHANICAL CONNECTION IS REQUIRED AT JOINT L. MINIMUM BEARING LENGTH AT JOINT L = 1-8.

UNFACTORED REACTIONS

JT	1ST LCASE COMBINED	MAX./MIN. COMPONENT REACTIONS SNOW	LIVE	PERM.LIVE	WIND	DEAD	SOIL
L	890	644 / 0	0 / 0	0 / 0	0 / 0	246 / 0	0 / 0
G	1002	740 / 0	0 / 0	0 / 0	0 / 0	263 / 0	0 / 0

BEARING MATERIAL TO BE SPF NO.2 OR BETTER AT JOINT(S) G

BRACING

TOP CHORD TO BE SHEATHED OR MAX. PURLIN SPACING = 5.16 FT.
MAX. UNBRACED BOTTOM CHORD LENGTH = 10.00 FT OR RIGID CEILING DIRECTLY APPLIED.

ALL PITCH BREAKS AND PERIMETER CORNER JOINTS MUST BE LATERALLY RESTRAINED.

LOADING

TOTAL LOAD CASES: (4)

CHORDS

MEMB. FR-TO	MAX. FACTORED FORCE (LBS)	FACTORED VERT. LOAD LC1 (PLF) FROM	TO	MAX CSI (LC)	MAX. UNBRAC LENGTH
A- B	-1331 / 0	-119.4	-119.4	0.35 (1)	5.16
B- C	-1019 / 0	-119.4	-119.4	0.33 (1)	5.73
C- D	-1019 / 0	-119.4	-119.4	0.33 (1)	5.73
D- E	-1331 / 0	-119.4	-119.4	0.35 (1)	5.16
E- F	0 / 45	-119.4	-119.4	0.16 (1)	10.00
L- A	-1236 / 0	0.0	0.0	0.13 (1)	7.14
G- E	-1400 / 0	0.0	0.0	0.14 (1)	6.81
L- K	0 / 0	-18.2	-18.2	0.09 (4)	10.00
K- J	0 / 1138	-18.2	-18.2	0.22 (1)	10.00
J- I	0 / 1138	-18.2	-18.2	0.22 (1)	10.00
I- H	0 / 1138	-18.2	-18.2	0.22 (1)	10.00
H- G	0 / 0	-18.2	-18.2	0.09 (4)	10.00

WEBS

MEMB. FR-TO	MAX. FACTORED FORCE (LBS)	MAX CSI (LC)
J- C	0 / 684	0.15 (1)
J- D	-440 / 0	0.30 (1)
H- D	-170 / 37	0.05 (1)
B- J	-440 / 0	0.30 (1)
K- B	-170 / 37	0.05 (1)
A- K	0 / 1167	0.26 (1)
H- E	0 / 1167	0.26 (1)

DESIGN CRITERIA

SPECIFIED LOADS:

TOP CH.	LL =	34.8	PSF
	DL =	6.0	PSF
BOT CH.	LL =	0.0	PSF
	DL =	7.3	PSF
TOTAL LOAD	=	48.1	PSF

SPACING = 24.0 IN. C/C

THIS TRUSS IS DESIGNED FOR RESIDENTIAL OR SMALL BUILDING REQUIREMENTS OF PART 9, NBCC 2015

THIS DESIGN COMPLIES WITH:
- PART 9 OF BCBC 2018 , NBC-2019AE
- PART 9 OF OBC 2012 (2019 AMENDMENT)
- CSA 086-14
- TPIC 2014

(55 % OF 48.1 P.S.F. G.S.L. PLUS 8.4 P.S.F. RAIN LOAD) EQUALS 34.8 P.S.F. SPECIFIED ROOF LIVE LOAD

ALLOWABLE DEFL.(LL)= L/360 (0.62")
CALCULATED VERT. DEFL.(LL) = L/ 999 (0.03")
ALLOWABLE DEFL.(TL)= L/360 (0.62")
CALCULATED VERT. DEFL.(TL) = L/ 999 (0.06")

CSI: TC=0.35/0.97 (A-B:1) , BC=0.22/0.97 (J-K:1) , WB=0.30/0.97 (B-J:1) , SSI=0.23/1.00 (A-B:1)

DOL LUMBER=1.00 NAIL=1.00 LS BEND=1.10 COMP=1.10 SHEAR=1.10 TENS= 1.10

COMPANION LIVE LOAD FACTOR = 1.00

TRUSS PLATE MANUFACTURER IS NOT RESPONSIBLE FOR QUALITY CONTROL IN THE TRUSS MANUFACTURING PLANT .

NAIL VALUES

PLATE	GRIP(DRY) (PSI) MAX	MIN	SHEAR (PLI) MAX	MIN	SECTION (PLI) MAX	MIN
MT20	650	371	1747	788	1987	1873

PLATE PLACEMENT TOL. = 0.250 inches

PLATE ROTATION TOL. = 5.0 Deg.

JSI GRIP= 0.88 (C) (INPUT = 0.90)
JSI METAL= 0.45 (A) (INPUT = 1.00)

LICENSED PROFESSIONAL ENGINEER
N.A. EL-MASRI
PROVINCE OF ONTARIO
Jul 20, 2023

READ ALL NOTES ON THIS PAGE AND ON THE ENGINEERING NOTES: TRUSSES. THE NOTE PAGE IS AN INTEGRAL PART OF THIS DRAWING AS IT CONTAINS SPECIFICATIONS AND CRITERIA USED IN THE DESIGN OF THIS COMPONENT.

KOTT

JOB NAME	TRUSS NAME	QUANTITY	PLY	JOB DESC.	DRWG NO.
NE0723-137	T13	5	1	GREENPARK - ZADORRA ESTATES - VILLA 12-1 (TRUSS DESC.)	

Version 8.630 S Mar 22 2023 MiTek Industries, Inc. Thu Jul 20 09:03:10 2023 Page 1
ID:VquVgowiAqiumFmAweaWxz71eJ-RgQSzr4TSI9NACqnItBM3LwIUSVC9IUYAVXhfRywEHI

CORPORATION OF THE CITY OF OSHAWA
TRUE COPY
OF PERMIT PLANS
Nov 14 2023
PER: C Morr
CHIEF BUILDING OFFICIAL

MHP 23039

Scale = 1:17.8

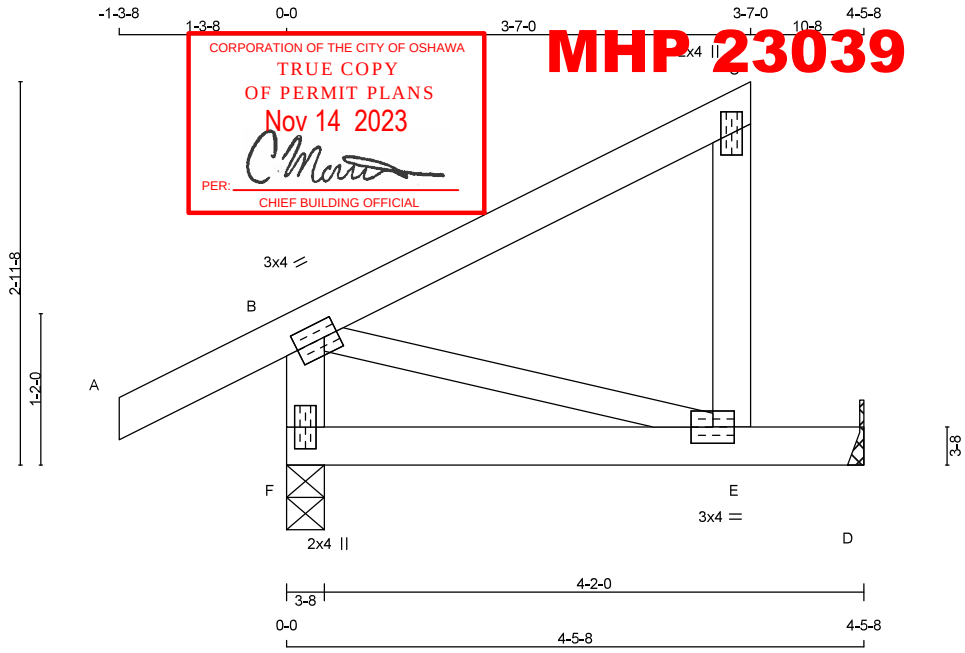

TOTAL WEIGHT = 5 X 17 = 87 lb [M]

LUMBER
N. L. G. A. RULES

CHORDS	SIZE		LUMBER	DESCR.
A - C	2x4	DRY	No.2	SPF
E - C	2x4	DRY	No.2	SPF
F - B	2x4	DRY	No.2	SPF
F - D	2x4	DRY	No.2	SPF
ALL WEBS	2x3	DRY	No.2	SPF

DRY: SEASONED LUMBER.

PLATES (table is in inches)

JT	TYPE	PLATES	W	LEN	Y	X
B	TMVW-t	MT20	3.0	4.0	1.50	1.25
C	TMV+p	MT20	2.0	4.0		
E	BMVW-t	MT20	3.0	4.0		
F	BMV1+p	MT20	2.0	4.0		

DIMENSIONS, SUPPORTS AND LOADINGS SPECIFIED BY FABRICATOR TO BE VERIFIED BY BUILDING DESIGNER

BEARINGS

JT	FACTORED GROSS REACTION VERT	HORZ	MAXIMUM FACTORED GROSS REACTION DOWN	HORZ	UPLIFT	INPUT BRG	REQRD BRG
F	459	0	459	0	0	3-8	1-8
D	213	0	213	0	0	MECHANICAL	

A SUITABLE HANGER/MECHANICAL CONNECTION IS REQUIRED AT JOINT D. MINIMUM BEARING LENGTH AT JOINT D = 1-8.

UNFACTORED REACTIONS

JT	1ST LCASE COMBINED	MAX./MIN. COMPONENT REACTIONS SNOW	LIVE	PERM.LIVE	WIND	DEAD	SOIL
F	318	244 / 0	0 / 0	0 / 0	0 / 0	75 / 0	0 / 0
D	150	100 / 0	0 / 0	0 / 0	0 / 0	50 / 0	0 / 0

BEARING MATERIAL TO BE SPF NO.2 OR BETTER AT JOINT(S) F

BRACING
TOP CHORD TO BE SHEATHED OR MAX. PURLIN SPACING = 10.00 FT.
MAX. UNBRACED BOTTOM CHORD LENGTH = 10.00 FT OR RIGID CEILING DIRECTLY APPLIED.

ALL PITCH BREAKS AND PERIMETER CORNER JOINTS MUST BE LATERALLY RESTRAINED.

LOADING
TOTAL LOAD CASES: (4)

CHORDS

MEMB. FR-TO	MAX. FORCE (LBS)	FACTORED VERT. LOAD LC1 (PLF) FROM	TO	MAX CSI (LC)
A- B	0 / 36	-119.4	-119.4	0.16 (1)
B- C	0 / 0	-119.4	-119.4	0.26 (1)
E- C	-214 / 0	0.0	0.0	0.03 (1)
F- B	-376 / 0	0.0	0.0	0.04 (1)
F- E	0 / 0	-18.2	-18.2	0.24 (1)
E- D	0 / 0	-18.2	-18.2	0.24 (1)

WEBS

MEMB. FR-TO	MAX. UNBRAC LENGTH	MAX. FORCE (LBS)	FACTORED MAX CSI (LC)
B- E	10.00	0 / 0	0.00 (1)

DESIGN CRITERIA

SPECIFIED LOADS:

TOP CH.	LL =	34.8	PSF
	DL =	6.0	PSF
BOT CH.	LL =	0.0	PSF
	DL =	7.3	PSF
TOTAL LOAD	=	48.1	PSF

SPACING = 24.0 IN. C/C

THIS TRUSS IS DESIGNED FOR RESIDENTIAL OR SMALL BUILDING REQUIREMENTS OF PART 9, NBCC 2015

THIS DESIGN COMPLIES WITH:
- PART 9 OF BCBC 2018 , NBC-2019AE
- PART 9 OF OBC 2012 (2019 AMENDMENT)
- CSA 086-14
- TPIC 2014

(55 % OF 48.1 P.S.F. G.S.L. PLUS 8.4 P.S.F. RAIN LOAD) EQUALS 34.8 P.S.F. SPECIFIED ROOF LIVE LOAD

ALLOWABLE DEFL.(LL)= L/360 (0.19")
CALCULATED VERT. DEFL.(LL) = L/ 999 (0.03")
ALLOWABLE DEFL.(TL)= L/360 (0.19")
CALCULATED VERT. DEFL.(TL) = L/ 842 (0.06")

CSI: TC=0.26/0.97 (B-C:1) , BC=0.24/0.97 (E-F:1) , WB=0.00/0.97 (B-E:1) , SSI=0.17/1.00 (D-E:1)

DOL LUMBER=1.00 NAIL=1.00 LS BEND=1.10 COMP=1.10 SHEAR=1.10 TENS= 1.10

COMPANION LIVE LOAD FACTOR = 1.00

TRUSS PLATE MANUFACTURER IS NOT RESPONSIBLE FOR QUALITY CONTROL IN THE TRUSS MANUFACTURING PLANT .

NAIL VALUES

PLATE	GRIP(DRY) (PSI) MAX	MIN	SHEAR (PLI) MAX	MIN	SECTION (PLI) MAX	MIN
MT20	650	371	1747	788	1987	1873

PLATE PLACEMENT TOL. = 0.250 inches

PLATE ROTATION TOL. = 5.0 Deg.

JSI GRIP= 0.33 (B) (INPUT = 0.90)
JSI METAL= 0.09 (C) (INPUT = 1.00)

LICENSED PROFESSIONAL ENGINEER
N.A. EL-MASRI
PROVINCE OF ONTARIO
Jul 20, 2023

READ ALL NOTES ON THIS PAGE AND ON THE ENGINEERING NOTES: TRUSSES. THE NOTE PAGE IS AN INTEGRAL PART OF THIS DRAWING AS IT CONTAINS SPECIFICATIONS AND CRITERIA USED IN THE DESIGN OF THIS COMPONENT.

KOTT

JOB NAME	TRUSS NAME	QUANTITY	PLY	JOB DESC.	DRWG NO.
NE0723-137	T15	4	1	GREENPARK - ZADORRA ESTATES - VILLA 12-1 (TRUSS DESC.)	

Version 8.630 S Mar 22 2023 MiTek Industries, Inc. Thu Jul 20 09:03:10 2023 Page 1
ID:VquVgowiAqiumFmAweaWlxz71eJ-RgQSzr4TSI9NACqnItBM3LwK6SWQ9IUYAVXhfRywEH

CORPORATION OF THE CITY OF OSHAWA
TRUE COPY
OF PERMIT PLANS
Nov 14 2023
PER:
CHIEF BUILDING OFFICIAL

MHP 23039

Scale = 1:15.3

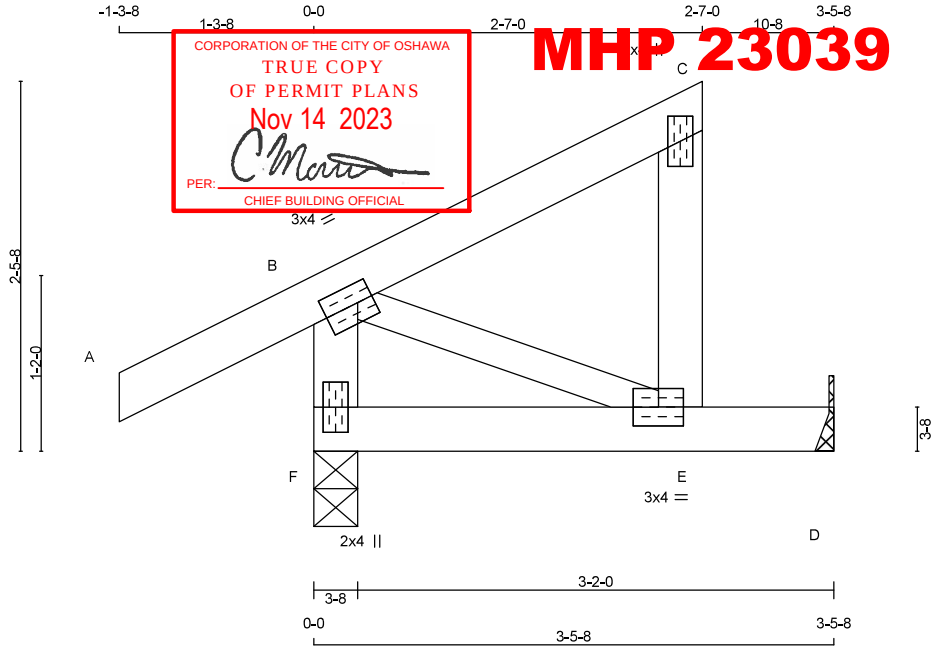

TOTAL WEIGHT = 4 X 14 = 55 lb [M]

LUMBER
N. L. G. A. RULES

CHORDS	SIZE		LUMBER	DESCR.
A - C	2x4	DRY	No.2	SPF
E - C	2x4	DRY	No.2	SPF
F - B	2x4	DRY	No.2	SPF
F - D	2x4	DRY	No.2	SPF
ALL WEBS	2x3	DRY	No.2	SPF

DRY: SEASONED LUMBER.

PLATES (table is in inches)

JT	TYPE	PLATES	W	LEN	Y	X
B	TMVW-t	MT20	3.0	4.0	1.50	1.25
C	TMV+p	MT20	2.0	4.0		
E	BMVW-t	MT20	3.0	4.0		
F	BMV1+p	MT20	2.0	4.0		

DIMENSIONS, SUPPORTS AND LOADINGS SPECIFIED BY FABRICATOR TO BE VERIFIED BY BUILDING DESIGNER

BEARINGS

JT	FACTORED GROSS REACTION VERT	HORZ	MAXIMUM FACTORED GROSS REACTION DOWN	HORZ	UPLIFT	INPUT BRG	REQRD BRG
F	387	0	387	0	0	3-8	1-8
D	147	0	147	0	0	MECHANICAL	

A SUITABLE HANGER/MECHANICAL CONNECTION IS REQUIRED AT JOINT D. MINIMUM BEARING LENGTH AT JOINT D = 1-8.

UNFACTORED REACTIONS

JT	1ST LCASE COMBINED	MAX./MIN. COMPONENT REACTIONS SNOW	LIVE	PERM.LIVE	WIND	DEAD	SOIL
F	268	207 / 0	0 / 0	0 / 0	0 / 0	61 / 0	0 / 0
D	104	67 / 0	0 / 0	0 / 0	0 / 0	37 / 0	0 / 0

BEARING MATERIAL TO BE SPF NO.2 OR BETTER AT JOINT(S) F

BRACING
TOP CHORD TO BE SHEATHED OR MAX. PURLIN SPACING = 10.00 FT.
MAX. UNBRACED BOTTOM CHORD LENGTH = 10.00 FT OR RIGID CEILING DIRECTLY APPLIED.

ALL PITCH BREAKS AND PERIMETER CORNER JOINTS MUST BE LATERALLY RESTRAINED.

LOADING
TOTAL LOAD CASES: (7)

CHORDS

MEMB. FR-TO	MAX. FORCE (LBS)	FACTORED VERT. LOAD LC1 (PLF) FROM	TO	MAX CSI (LC)
A- B	0 / 36	-119.4	-119.4	0.16 (5)
B- C	0 / 0	-119.4	-119.4	0.14 (1)
E- C	-154 / 0	0.0	0.0	0.02 (1)
F- B	-316 / 0	0.0	0.0	0.03 (1)
F- E	0 / 0	-18.2	-18.2	0.17 (1)
E- D	0 / 0	-18.2	-18.2	0.17 (1)

WEBS

MAX. UNBRAC LENGTH	MEMB. FR-TO	MAX. FORCE (LBS)	MAX CSI (LC)
10.00	B- E	0 / 0	0.00 (1)
10.00			
7.81			
7.81			
10.00			
10.00			

CANTILEVER ANALYSIS HAS BEEN CONSIDERED IN THIS DESIGN

PATTERN-LOADING CHECK APPLIED TO THIS TRUSS.

DESIGN CRITERIA

SPECIFIED LOADS:

TOP CH.	LL	=	34.8	PSF
	DL	=	6.0	PSF
BOT CH.	LL	=	0.0	PSF
	DL	=	7.3	PSF
TOTAL LOAD		=	48.1	PSF

SPACING = 24.0 IN. C/C

THIS TRUSS IS DESIGNED FOR RESIDENTIAL OR SMALL BUILDING REQUIREMENTS OF PART 9, NBCC 2015

THIS DESIGN COMPLIES WITH:
- PART 9 OF BCBC 2018 , NBC-2019AE
- PART 9 OF OBC 2012 (2019 AMENDMENT)
- CSA 086-14
- TPIC 2014

(55 % OF 48.1 P.S.F. G.S.L. PLUS 8.4 P.S.F. RAIN LOAD) EQUALS 34.8 P.S.F. SPECIFIED ROOF LIVE LOAD

ALLOWABLE DEFL.(LL)= L/360 (0.19")
CALCULATED VERT. DEFL.(LL) = L/ 999 (0.01")
ALLOWABLE DEFL.(TL)= L/360 (0.19")
CALCULATED VERT. DEFL.(TL) = L/ 999 (0.03")

CSI: TC=0.16/0.97 (A-B:5) , BC=0.17/0.97 (E-F:1) , WB=0.00/0.97 (B-E:1) , SSI=0.11/1.00 (D-E:1)

DOL LUMBER=1.00 NAIL=1.00 LS BEND=1.10 COMP=1.10 SHEAR=1.10 TENS= 1.10

COMPANION LIVE LOAD FACTOR = 1.00

TRUSS PLATE MANUFACTURER IS NOT RESPONSIBLE FOR QUALITY CONTROL IN THE TRUSS MANUFACTURING PLANT .

NAIL VALUES

PLATE	GRIP(DRY) (PSI) MAX	MIN	SHEAR (PLI) MAX	MIN	SECTION (PLI) MAX	MIN
MT20	650	371	1747	788	1987	1873

PLATE PLACEMENT TOL. = 0.250 inches

PLATE ROTATION TOL. = 5.0 Deg.

JSI GRIP= 0.28 (B) (INPUT = 0.90)
JSI METAL= 0.07 (F) (INPUT = 1.00)

LICENSED PROFESSIONAL ENGINEER
N.A. EL-MASRI
PROVINCE OF ONTARIO
Jul 20, 2023

READ ALL NOTES ON THIS PAGE AND ON THE ENGINEERING NOTES: TRUSSES. THE NOTE PAGE IS AN INTEGRAL PART OF THIS DRAWING AS IT CONTAINS SPECIFICATIONS AND CRITERIA USED IN THE DESIGN OF THIS COMPONENT.

KOTT