JOB NAME	TRUSS NAME	QUANTITY	PLY	JOB DESC.	DRWG NO.
NE0723-127	T06	1	1	GREENPARK - ZADORRA ESTATES - VILLA 11-3 (TRUSS DESC.)	

CORPORATION OF THE CITY OF OSHAWA
TRUE COPY
OF PERMIT PLANS
Dec 06 2023
PER
CHIEF BUILDING OFFICIAL

MHP 23038

Version 8.630 S Mar 22 2023 MiTek Industries, Inc. Wed Jul 19 16:54:19 2023 Page 1
ID:a_geEeAITwiPs63VUzyy33z8f4n-_EQXYrawOYGUejLTPqnRYhp_pVQiTGPAzzVAslywSU2

Scale: 1/4"=1'

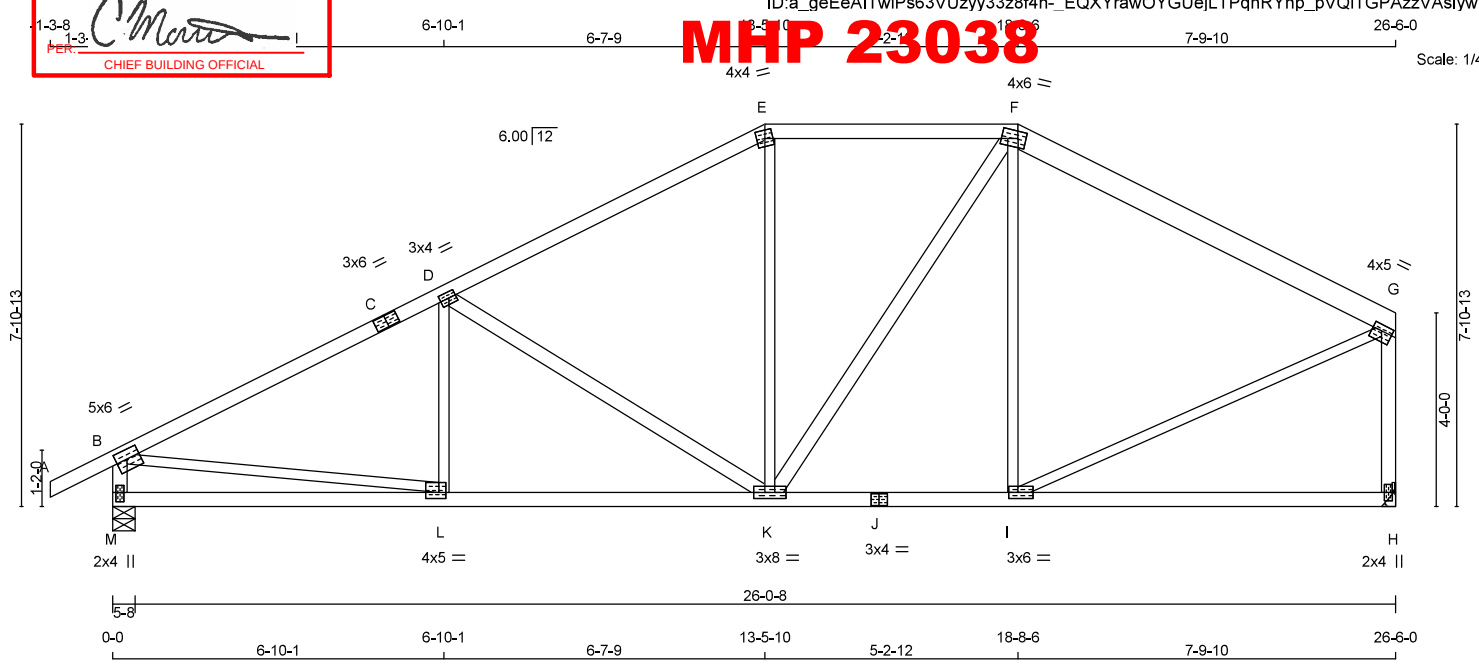

TOTAL WEIGHT = 122 lb
[M][F]

LUMBER
N. L. G. A. RULES

CHORDS	SIZE		LUMBER	DESCR.
A - C	2x4	DRY	No.2	SPF
C - E	2x4	DRY	No.2	SPF
E - F	2x4	DRY	No.2	SPF
F - G	2x6	DRY	No.2	SPF
M - B	2x4	DRY	No.2	SPF
H - G	2x4	DRY	No.2	SPF
M - J	2x4	DRY	No.2	SPF
J - H	2x4	DRY	No.2	SPF
ALL WEBS EXCEPT	2x3	DRY	No.2	SPF
D - K	2x4	DRY	No.2	SPF
K - F	2x4	DRY	No.2	SPF

DRY: SEASONED LUMBER.

PLATES (table is in inches)

JT	TYPE	PLATES	W	LEN	Y	X
B	TMVW-t	MT20	5.0	6.0	2.25	2.75
C	TS-t	MT20	3.0	6.0		
D	TMWW-t	MT20	3.0	4.0	1.50	1.75
E	TTW-m	MT20	4.0	4.0		
F	TTWW-m	MT20	4.0	6.0	1.75	2.00
G	TMVW-t	MT20	4.0	5.0	1.50	2.25
H	BMV1+p	MT20	2.0	4.0		
I	BMWW-t	MT20	3.0	6.0	1.50	2.25
J	BS-t	MT20	3.0	4.0		
K	BMWWW-t	MT20	3.0	8.0		
L	BMWW-t	MT20	4.0	5.0	1.50	1.75
M	BMV1+p	MT20	2.0	4.0	2.25	1.00

DIMENSIONS, SUPPORTS AND LOADINGS SPECIFIED BY FABRICATOR TO BE VERIFIED BY BUILDING DESIGNER

BEARINGS

JT	FACTORED GROSS REACTION VERT	HORZ	MAXIMUM FACTORED GROSS REACTION DOWN	HORZ	UPLIFT	INPUT BRG	REQRD BRG
M	1986	0	1986	0	0	5-8	2-15
H	1824	0	1824	0	0	MECHANICAL	

A SUITABLE HANGER/MECHANICAL CONNECTION IS REQUIRED AT JOINT H. MINIMUM BEARING LENGTH AT JOINT H = 2-7.

UNFACTORED REACTIONS

JT	1ST LCASE COMBINED	MAX./MIN. COMPONENT REACTIONS SNOW	LIVE	PERM.LIVE	WIND	DEAD	SOIL
M	1386	1017 / 0	0 / 0	0 / 0	0 / 0	369 / 0	0 / 0
H	1275	922 / 0	0 / 0	0 / 0	0 / 0	352 / 0	0 / 0

BEARING MATERIAL TO BE SPF NO.2 OR BETTER AT JOINT(S) M

BRACING
TOP CHORD TO BE SHEATHED OR MAX. PURLIN SPACING = 3.04 FT.
MAX. UNBRACED BOTTOM CHORD LENGTH = 10.00 FT OR RIGID CEILING DIRECTLY APPLIED.

ALL PITCH BREAKS AND PERIMETER CORNER JOINTS MUST BE LATERALLY RESTRAINED.

LOADING
TOTAL LOAD CASES: (4)

CHORDS

MEMB. FR-TO	MAX. FACTORED FORCE (LBS)	FACTORED VERT. LOAD LC1 (PLF) FROM	TO	MAX CSI (LC)	MAX. UNBRAC LENGTH
A- B	0 / 36	-119.4	-119.4	0.16 (1)	10.00
B- C	-2566 / 0	-119.4	-119.4	0.89 (1)	3.04
C- D	-2566 / 0	-119.4	-119.4	0.89 (1)	3.04
D- E	-1819 / 0	-119.4	-119.4	0.77 (1)	3.76
E- F	-1590 / 0	-119.4	-119.4	0.45 (1)	4.65
F- G	-1513 / 0	-119.4	-119.4	0.47 (1)	5.60
M- B	-1934 / 0	0.0	0.0	0.20 (1)	5.97
H- G	-1764 / 0	0.0	0.0	0.42 (1)	6.20
M- L	0 / 0	-18.2	-18.2	0.21 (4)	10.00
L- K	0 / 2334	-18.2	-18.2	0.47 (1)	10.00
K- J	0 / 1343	-18.2	-18.2	0.35 (1)	10.00
J- I	0 / 1343	-18.2	-18.2	0.35 (1)	10.00
I- H	0 / 0	-18.2	-18.2	0.24 (4)	10.00

WEBS

MEMB. FR-TO	MAX. FACTORED FORCE (LBS)	MAX CSI (LC)
L- D	-153 / 84	0.05 (1)
D- K	-885 / 0	0.84 (1)
K- E	0 / 200	0.05 (4)
K- F	0 / 439	0.07 (1)
I- F	-472 / 0	0.56 (1)
B- L	0 / 2352	0.53 (1)
I- G	0 / 1483	0.33 (1)

DESIGN CRITERIA

SPECIFIED LOADS:

TOP CH.	LL =	34.8	PSF
	DL =	6.0	PSF
BOT CH.	LL =	0.0	PSF
	DL =	7.3	PSF
TOTAL LOAD	=	48.1	PSF

SPACING = 24.0 IN. C/C

LOADING IN FLAT SECTION BASED ON A SLOPE OF 2.00/12 MINIMUM

THIS TRUSS IS DESIGNED FOR RESIDENTIAL OR SMALL BUILDING REQUIREMENTS OF PART 9, NBCC 2015

THIS DESIGN COMPLIES WITH:
- PART 9 OF BCBC 2018 , NBC-2019AE
- PART 9 OF OBC 2012 (2019 AMENDMENT)
- CSA 086-14
- TPIC 2014

(55 % OF 48.1 P.S.F. G.S.L. PLUS 8.4 P.S.F. RAIN LOAD) EQUALS 34.8 P.S.F. SPECIFIED ROOF LIVE LOAD

ALLOWABLE DEFL.(LL)= L/360 (0.88")
CALCULATED VERT. DEFL.(LL) = L/ 999 (0.09")
ALLOWABLE DEFL.(TL)= L/360 (0.88")
CALCULATED VERT. DEFL.(TL) = L/ 999 (0.18")

CSI: TC=0.89/0.97 (B-D:1) , BC=0.47/0.97 (K-L:1) , WB=0.84/0.97 (D-K:1) , SSI=0.35/1.00 (B-D:1)

DOL LUMBER=1.00 NAIL=1.00 LS BEND=1.10 COMP=1.10 SHEAR=1.10 TENS= 1.10

COMPANION LIVE LOAD FACTOR = 1.00

TRUSS PLATE MANUFACTURER IS NOT RESPONSIBLE FOR QUALITY CONTROL IN THE TRUSS MANUFACTURING PLANT .

NAIL VALUES

PLATE	GRIP(DRY) (PSI) MAX	MIN	SHEAR (PLI) MAX	MIN	SECTION (PLI) MAX	MIN
MT20	650	371	1747	788	1987	1873

PLATE PLACEMENT TOL. = 0.250 inches

PLATE ROTATION TOL. = 5.0 Deg.

JSI GRIP= 0.90 (E) (INPUT = 0.90)
JSI METAL= 0.67 (L) (INPUT = 1.00)

LICENSED PROFESSIONAL ENGINEER
N.A. EL-MASRI
PROVINCE OF ONTARIO
Jul 19, 2023

READ ALL NOTES ON THIS PAGE AND ON THE ENGINEERING NOTES: TRUSSES. THE NOTE PAGE IS AN INTEGRAL PART OF THIS DRAWING AS IT CONTAINS SPECIFICATIONS AND CRITERIA USED IN THE DESIGN OF THIS COMPONENT.

KOTT

JOB NAME	TRUSS NAME	QUANTITY	PLY	JOB DESC.	DRWG NO.
NE0723-127	T07	5	1	GREENPARK - ZADORRA ESTATES - VILLA 11-3 (TRUSS DESC.)	

CORPORATION OF THE CITY OF OSHAWA
TRUE COPY
OF PERMIT PLANS
Dec 06 2023
PER
CHIEF BUILDING OFFICIAL

MHP 23038

Version 8.630 S Mar 22 2023 MiTek Industries, Inc. Wed Jul 19 16:54:19 2023 Page 1
ID:a_geEeAITwiPs63VUzyy33z8f4n-_EQXYrawOYGUejLTPqnRYhp_LVQvTIuAzzVAsIywSU2

Scale = 1:47.2

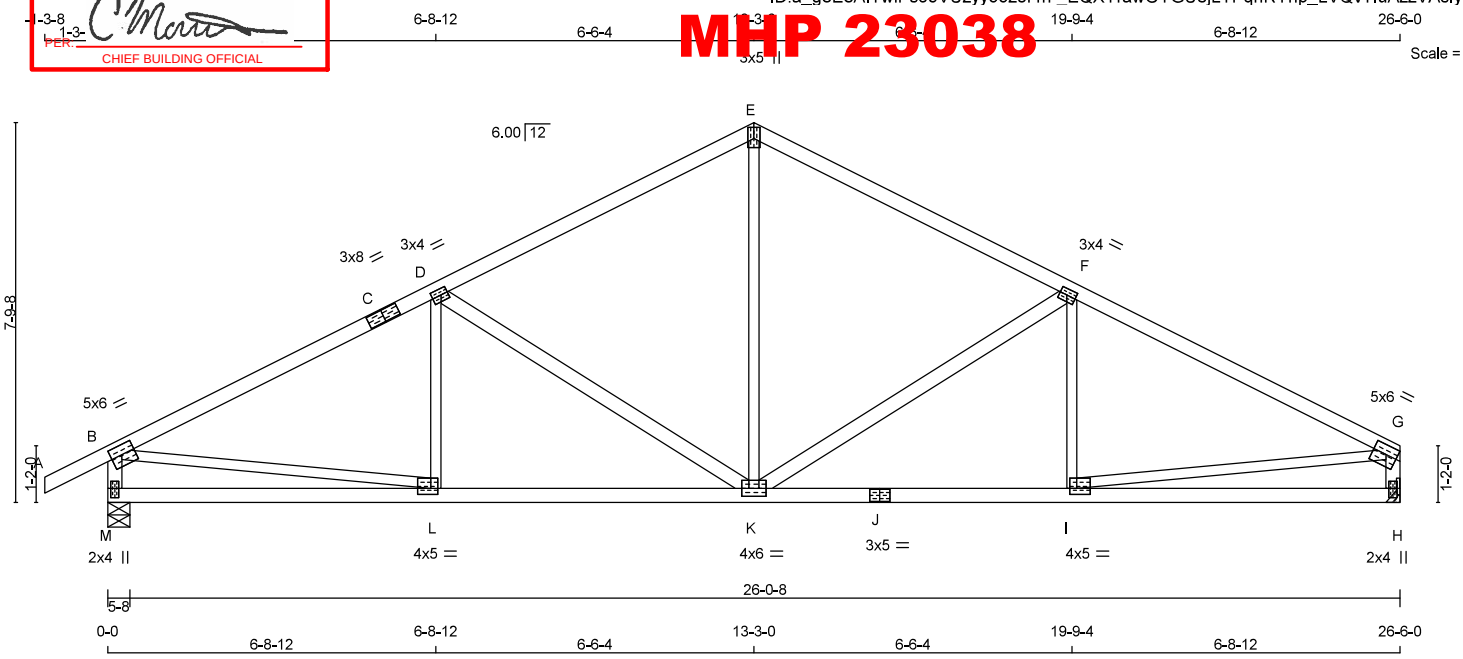

TOTAL WEIGHT = 5 X 107 = 536 lb

[M][F]

LUMBER

N. L. G. A. RULES

CHORDS	SIZE		LUMBER	DESCR.
A - C	2x4	DRY	No.2	SPF
C - E	2x4	DRY	No.2	SPF
E - G	2x4	DRY	No.2	SPF
M - B	2x4	DRY	No.2	SPF
H - G	2x4	DRY	No.2	SPF
M - J	2x4	DRY	No.2	SPF
J - H	2x4	DRY	No.2	SPF
ALL WEBS EXCEPT	2x3	DRY	No.2	SPF
K - F	2x4	DRY	No.2	SPF
D - K	2x4	DRY	No.2	SPF

DRY: SEASONED LUMBER.

PLATES (table is in inches)

JT	TYPE	PLATES	W	LEN	Y	X
B	TMVW-t	MT20	5.0	6.0	2.25	2.75
C	TS-t	MT20	3.0	8.0		
D	TMWW-t	MT20	3.0	4.0	1.50	1.75
E	TTW+p	MT20	3.0	5.0	2.75	1.50
F	TMWW-t	MT20	3.0	4.0	1.50	1.75
G	TMVW-t	MT20	5.0	6.0	2.25	Edge
H	BMV1+p	MT20	2.0	4.0	2.25	1.00
I	BMWW-t	MT20	4.0	5.0	1.50	1.75
J	BS-t	MT20	3.0	5.0		
K	BMWWW-t	MT20	4.0	6.0		
L	BMWW-t	MT20	4.0	5.0	1.50	1.75
M	BMV1+p	MT20	2.0	4.0	2.25	1.00

Edge - INDICATES REFERENCE CORNER OF PLATE TOUCHES EDGE OF CHORD.

DIMENSIONS, SUPPORTS AND LOADINGS SPECIFIED BY FABRICATOR TO BE VERIFIED BY BUILDING DESIGNER

BEARINGS

JT	FACTORED GROSS REACTION VERT	HORZ	MAXIMUM GROSS REACTION DOWN	HORZ	FACTORED UPLIFT	INPUT BRG	REQRD BRG
M	1986	0	1986	0	0	5-8	2-15
H	1824	0	1824	0	0	IN-SX	IN-SX
						MECHANICAL	

A SUITABLE HANGER/MECHANICAL CONNECTION IS REQUIRED AT JOINT H. MINIMUM BEARING LENGTH AT JOINT H = 2-7.

UNFACTORED REACTIONS

JT	1ST LCASE COMBINED	MAX./MIN. COMPONENT REACTIONS SNOW	LIVE	PERM.LIVE	WIND	DEAD	SOIL
M	1386	1017 / 0	0 / 0	0 / 0	0 / 0	369 / 0	0 / 0
H	1275	922 / 0	0 / 0	0 / 0	0 / 0	352 / 0	0 / 0

BEARING MATERIAL TO BE SPF NO.2 OR BETTER AT JOINT(S) M

BRACING

TOP CHORD TO BE SHEATHED OR MAX. PURLIN SPACING = 3.13 FT.
MAX. UNBRACED BOTTOM CHORD LENGTH = 10.00 FT OR RIGID CEILING DIRECTLY APPLIED.

ALL PITCH BREAKS AND PERIMETER CORNER JOINTS MUST BE LATERALLY RESTRAINED.

LOADING

TOTAL LOAD CASES: (4)

CHORDS

MEMB. FR-TO	MAX. FACTORED FORCE (LBS)	FACTORED VERT. LOAD LC1 (PLF) FROM	TO	MAX CSI (LC)	MAX. UNBRAC LENGTH
A- B	0 / 36	-119.4	-119.4	0.16 (1)	10.00
B- C	-2566 / 0	-119.4	-119.4	0.86 (1)	3.13
C- D	-2566 / 0	-119.4	-119.4	0.86 (1)	3.13
D- E	-1858 / 0	-119.4	-119.4	0.75 (1)	3.80
E- F	-1858 / 0	-119.4	-119.4	0.75 (1)	3.80
F- G	-2566 / 0	-119.4	-119.4	0.86 (1)	3.13
M- B	-1934 / 0	0.0	0.0	0.20 (1)	5.97
H- G	-1772 / 0	0.0	0.0	0.18 (1)	6.20
M- L	0 / 0	-18.2	-18.2	0.19 (4)	10.00
L- K	0 / 2333	-18.2	-18.2	0.46 (1)	10.00
K- J	0 / 2333	-18.2	-18.2	0.46 (1)	10.00
J- I	0 / 2333	-18.2	-18.2	0.46 (1)	10.00
I- H	0 / 0	-18.2	-18.2	0.19 (4)	10.00

WEBS

MEMB. FR-TO	MAX. FACTORED FORCE (LBS)	MAX CSI (LC)
K- E	0 / 1038	0.23 (1)
K- F	-845 / 0	0.75 (1)
I- F	-168 / 73	0.05 (1)
D- K	-845 / 0	0.75 (1)
L- D	-168 / 73	0.05 (1)
B- L	0 / 2351	0.53 (1)
I- G	0 / 2351	0.53 (1)

DESIGN CRITERIA

SPECIFIED LOADS:

TOP CH.	LL =	34.8	PSF
	DL =	6.0	PSF
BOT CH.	LL =	0.0	PSF
	DL =	7.3	PSF
TOTAL LOAD	=	48.1	PSF

SPACING = 24.0 IN. C/C

THIS TRUSS IS DESIGNED FOR RESIDENTIAL OR SMALL BUILDING REQUIREMENTS OF PART 9, NBCC 2015

THIS DESIGN COMPLIES WITH:
- PART 9 OF BCBC 2018 , NBC-2019AE
- PART 9 OF OBC 2012 (2019 AMENDMENT)
- CSA 086-14
- TPIC 2014

(55 % OF 48.1 P.S.F. G.S.L. PLUS 8.4 P.S.F. RAIN LOAD) EQUALS 34.8 P.S.F. SPECIFIED ROOF LIVE LOAD

ALLOWABLE DEFL.(LL)= L/360 (0.88")
CALCULATED VERT. DEFL.(LL) = L/ 999 (0.11")
ALLOWABLE DEFL.(TL)= L/360 (0.88")
CALCULATED VERT. DEFL.(TL) = L/ 999 (0.20")

CSI: TC=0.86/0.97 (F-G:1) , BC=0.46/0.97 (I-K:1) , WB=0.75/0.97 (F-K:1) , SSI=0.35/1.00 (F-G:1)

DOL LUMBER=1.00 NAIL=1.00 LS BEND=1.10 COMP=1.10 SHEAR=1.10 TENS= 1.10

COMPANION LIVE LOAD FACTOR = 1.00

TRUSS PLATE MANUFACTURER IS NOT RESPONSIBLE FOR QUALITY CONTROL IN THE TRUSS MANUFACTURING PLANT .

NAIL VALUES

PLATE	GRIP(DRY) (PSI) MAX	MIN	SHEAR (PLI) MAX	MIN	SECTION (PLI) MAX	MIN
MT20	650	371	1747	788	1987	1873

PLATE PLACEMENT TOL. = 0.250 inches

PLATE ROTATION TOL. = 5.0 Deg.

JSI GRIP= 0.89 (E) (INPUT = 0.90)
JSI METAL= 0.74 (J) (INPUT = 1.00)

LICENSED PROFESSIONAL ENGINEER
N.A. EL-MASRI
PROVINCE OF ONTARIO
Jul 19, 2023

READ ALL NOTES ON THIS PAGE AND ON THE ENGINEERING NOTES: TRUSSES. THE NOTE PAGE IS AN INTEGRAL PART OF THIS DRAWING AS IT CONTAINS SPECIFICATIONS AND CRITERIA USED IN THE DESIGN OF THIS COMPONENT.

KOTT

JOB NAME	TRUSS NAME	QUANTITY	PLY	JOB DESC.	DRWG NO.
NE0723-127	T08	2	1	GREENPARK - ZADORRA ESTATES - VILLA 11-3 (TRUSS DESC.)	

CORPORATION OF THE CITY OF OSHAWA
TRUE COPY
OF PERMIT PLANS
Dec 06 2023
PER
CHIEF BUILDING OFFICIAL

MHP 23038

Version 8.630 S Mar 22 2023 MiTek Industries, Inc. Wed Jul 19 16:54:20 2023 Page 1
ID:a_geEeAITwiPs63VUzyy33z8f4n-SQ_vmAbY9sOLGtwfzXIg4uM95vI8CI8KCdEjPkywSU1

Scale: 1/4"=1'

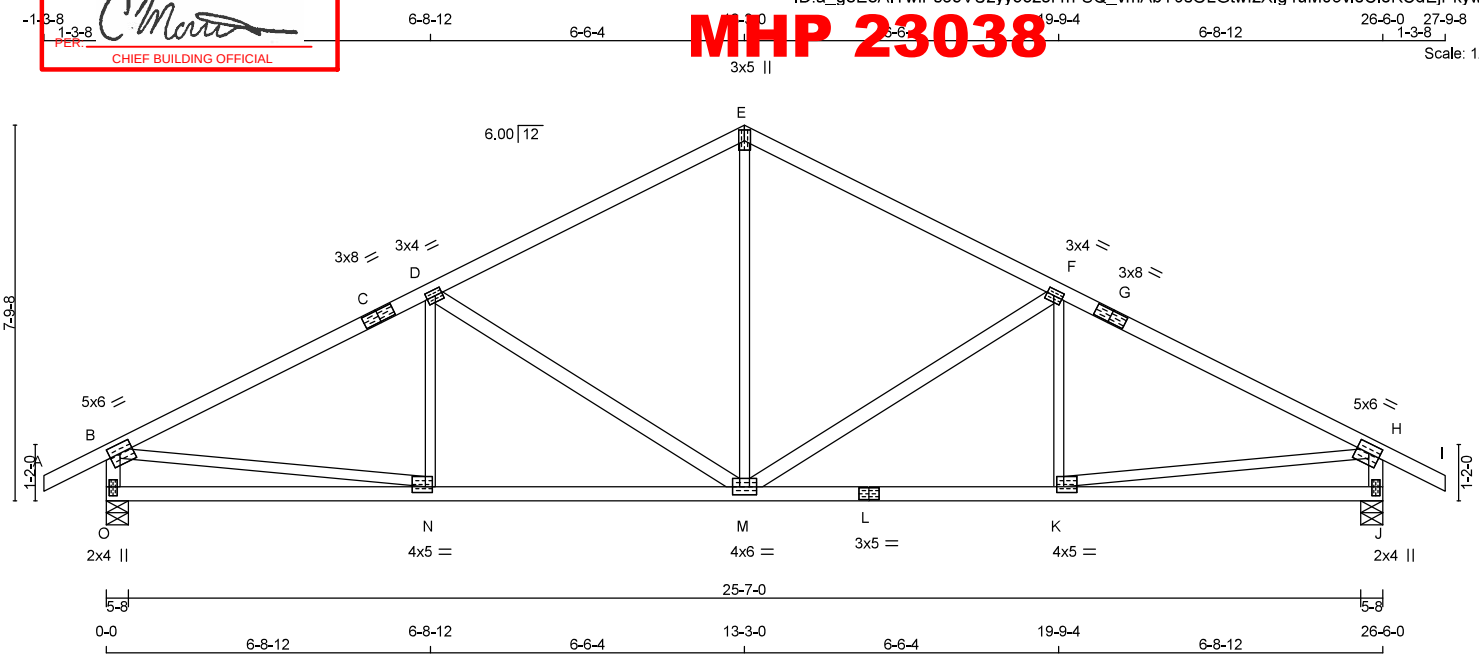

TOTAL WEIGHT = 2 X 109 = 218 lb
[M][F]

LUMBER
N. L. G. A. RULES

CHORDS	SIZE		LUMBER	DESCR.
A - C	2x4	DRY	No.2	SPF
C - E	2x4	DRY	No.2	SPF
E - G	2x4	DRY	No.2	SPF
G - I	2x4	DRY	No.2	SPF
O - B	2x4	DRY	No.2	SPF
J - H	2x4	DRY	No.2	SPF
O - L	2x4	DRY	No.2	SPF
L - J	2x4	DRY	No.2	SPF
ALL WEBS	2x3	DRY	No.2	SPF
EXCEPT				
M - F	2x4	DRY	No.2	SPF
D - M	2x4	DRY	No.2	SPF

DRY: SEASONED LUMBER.

PLATES (table is in inches)

JT	TYPE	PLATES	W	LEN	Y	X
B	TMVW-t	MT20	5.0	6.0	2.25	2.75
C	TS-t	MT20	3.0	8.0		
D	TMWW-t	MT20	3.0	4.0	1.50	1.75
E	TTW+p	MT20	3.0	5.0	2.75	1.50
F	TMWW-t	MT20	3.0	4.0	1.50	1.75
G	TS-t	MT20	3.0	8.0		
H	TMVW-t	MT20	5.0	6.0	2.25	2.75
J	BMV1+p	MT20	2.0	4.0	2.25	1.00
K	BMWW-t	MT20	4.0	5.0	1.50	1.75
L	BS-t	MT20	3.0	5.0		
M	BMWWW-t	MT20	4.0	6.0		
N	BMWW-t	MT20	4.0	5.0	1.50	1.75
O	BMV1+p	MT20	2.0	4.0	2.25	1.00

DIMENSIONS, SUPPORTS AND LOADINGS SPECIFIED BY FABRICATOR TO BE VERIFIED BY BUILDING DESIGNER

BEARINGS

JT	FACTORED GROSS REACTION VERT	HORZ	MAXIMUM FACTORED GROSS REACTION DOWN	HORZ	UPLIFT	INPUT BRG IN-SX	REQRD BRG IN-SX
O	1986	0	1986	0	0	5-8	2-15
J	1986	0	1986	0	0	5-8	2-15

UNFACTORED REACTIONS

JT	1ST LCASE COMBINED	MAX./MIN. COMPONENT REACTIONS SNOW	LIVE	PERM.LIVE	WIND	DEAD	SOIL
O	1386	1017 / 0	0 / 0	0 / 0	0 / 0	369 / 0	0 / 0
J	1386	1017 / 0	0 / 0	0 / 0	0 / 0	369 / 0	0 / 0

BEARING MATERIAL TO BE SPF NO.2 OR BETTER AT JOINT(S) O, J

BRACING
TOP CHORD TO BE SHEATHED OR MAX. PURLIN SPACING = 3.13 FT.
MAX. UNBRACED BOTTOM CHORD LENGTH = 10.00 FT OR RIGID CEILING DIRECTLY APPLIED.

ALL PITCH BREAKS AND PERIMETER CORNER JOINTS MUST BE LATERALLY RESTRAINED.

LOADING
TOTAL LOAD CASES: (4)

CHORDS

MEMB. FR-TO	MAX. FACTORED FORCE (LBS)	FACTORED VERT. LOAD (PLF) FROM	TO	LC1 MAX CSI (LC)	MAX. UNBRAC LENGTH
A- B	0 / 36	-119.4	-119.4	0.16 (1)	10.00
B- C	-2566 / 0	-119.4	-119.4	0.86 (1)	3.13
C- D	-2566 / 0	-119.4	-119.4	0.86 (1)	3.13
D- E	-1858 / 0	-119.4	-119.4	0.75 (1)	3.80
E- F	-1858 / 0	-119.4	-119.4	0.75 (1)	3.80
F- G	-2566 / 0	-119.4	-119.4	0.86 (1)	3.13
G- H	-2566 / 0	-119.4	-119.4	0.86 (1)	3.13
H- I	0 / 36	-119.4	-119.4	0.16 (1)	10.00
O- B	-1934 / 0	0.0	0.0	0.20 (1)	5.97
J- H	-1934 / 0	0.0	0.0	0.20 (1)	5.97
O- N	0 / 0	-18.2	-18.2	0.19 (4)	10.00
N- M	0 / 2333	-18.2	-18.2	0.46 (1)	10.00
M- L	0 / 2333	-18.2	-18.2	0.46 (1)	10.00
L- K	0 / 2333	-18.2	-18.2	0.46 (1)	10.00
K- J	0 / 0	-18.2	-18.2	0.19 (4)	10.00

WEBS

MEMB. FR-TO	MAX. FACTORED FORCE (LBS)	MAX CSI (LC)
M- E	0 / 1038	0.23 (1)
M- F	-845 / 0	0.75 (1)
K- F	-168 / 73	0.05 (1)
D- M	-845 / 0	0.75 (1)
N- D	-168 / 73	0.05 (1)
B- N	0 / 2351	0.53 (1)
K- H	0 / 2351	0.53 (1)

DESIGN CRITERIA

SPECIFIED LOADS:

TOP CH.	LL =	34.8	PSF
	DL =	6.0	PSF
BOT CH.	LL =	0.0	PSF
	DL =	7.3	PSF
TOTAL LOAD	=	48.1	PSF

SPACING = 24.0 IN. C/C

THIS TRUSS IS DESIGNED FOR RESIDENTIAL OR SMALL BUILDING REQUIREMENTS OF PART 9, NBCC 2015

THIS DESIGN COMPLIES WITH:
- PART 9 OF BCBC 2018 , NBC-2019AE
- PART 9 OF OBC 2012 (2019 AMENDMENT)
- CSA 086-14
- TPIC 2014

(55 % OF 48.1 P.S.F. G.S.L. PLUS 8.4 P.S.F. RAIN LOAD) EQUALS 34.8 P.S.F. SPECIFIED ROOF LIVE LOAD

ALLOWABLE DEFL.(LL)= L/360 (0.88")
CALCULATED VERT. DEFL.(LL) = L/ 999 (0.11")
ALLOWABLE DEFL.(TL)= L/360 (0.88")
CALCULATED VERT. DEFL.(TL) = L/ 999 (0.20")

CSI: TC=0.86/0.97 (F-H:1) , BC=0.46/0.97 (M-N:1) , WB=0.75/0.97 (D-M:1) , SSI=0.35/1.00 (F-H:1)

DOL LUMBER=1.00 NAIL=1.00 LS BEND=1.10 COMP=1.10 SHEAR=1.10 TENS= 1.10

COMPANION LIVE LOAD FACTOR = 1.00

TRUSS PLATE MANUFACTURER IS NOT RESPONSIBLE FOR QUALITY CONTROL IN THE TRUSS MANUFACTURING PLANT .

NAIL VALUES

PLATE	GRIP(DRY) (PSI) MAX	MIN	SHEAR (PLI) MAX	MIN	SECTION (PLI) MAX	MIN
MT20	650	371	1747	788	1987	1873

PLATE PLACEMENT TOL. = 0.250 inches

PLATE ROTATION TOL. = 5.0 Deg.

JSI GRIP= 0.89 (E) (INPUT = 0.90)
JSI METAL= 0.74 (L) (INPUT = 1.00)

LICENSED PROFESSIONAL ENGINEER
N.A. EL-MASRI
PROVINCE OF ONTARIO
Jul 19, 2023

READ ALL NOTES ON THIS PAGE AND ON THE ENGINEERING NOTES: TRUSSES. THE NOTE PAGE IS AN INTEGRAL PART OF THIS DRAWING AS IT CONTAINS SPECIFICATIONS AND CRITERIA USED IN THE DESIGN OF THIS COMPONENT.

KOTT

JOB NAME	TRUSS NAME	QUANTITY	PLY	JOB DESC.	DRWG NO.
NE0723-127	T09	1	1	GREENPARK - ZADORRA ESTATES - VILLA 11-3 (TRUSS DESC.)	

CORPORATION OF THE CITY OF OSHAWA
TRUE COPY
OF PERMIT PLANS
Dec 06 2023
PER
CHIEF BUILDING OFFICIAL

MHP 23038

Version 8.630 S Mar 22 2023 MiTek Industries, Inc. Wed Jul 19 16:54:21 2023 Page 1
ID:a_geEeAITwiPs63VUzyy33z8f4n-wcYHzWcBw9WCt0VsXFpvd6vNTJ6fxD6TRG_GxBywSU0

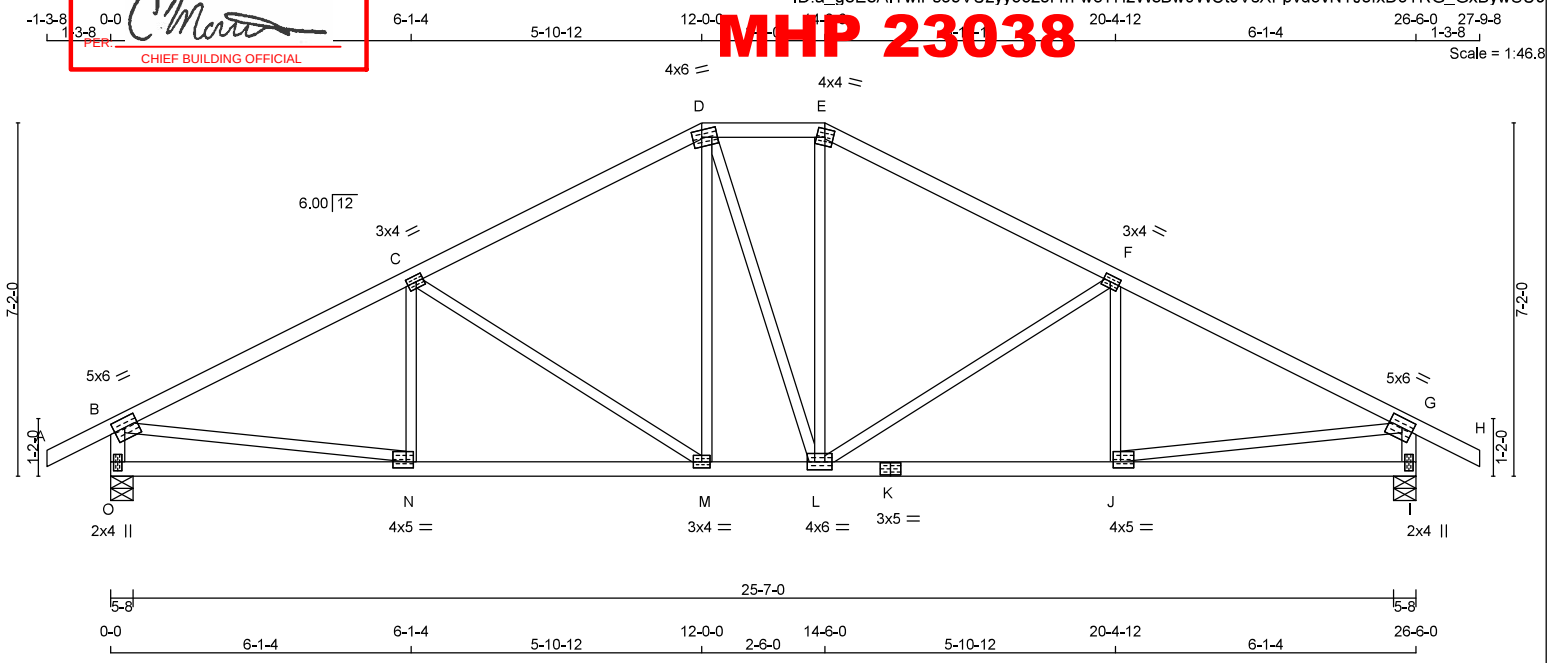

TOTAL WEIGHT = 112 lb
[M][F]

LUMBER
N. L. G. A. RULES

CHORDS	SIZE		LUMBER	DESCR.
A - D	2x4	DRY	No.2	SPF
D - E	2x4	DRY	No.2	SPF
E - H	2x4	DRY	No.2	SPF
O - B	2x4	DRY	No.2	SPF
I - G	2x4	DRY	No.2	SPF
O - K	2x4	DRY	No.2	SPF
K - I	2x4	DRY	No.2	SPF
ALL WEBS EXCEPT	2x3	DRY	No.2	SPF

DRY: SEASONED LUMBER.

PLATES (table is in inches)

JT	TYPE	PLATES	W	LEN	Y	X
B	TMVW-t	MT20	5.0	6.0	2.25	2.75
C	TMWW-t	MT20	3.0	4.0	1.50	1.75
D	TTWW-m	MT20	4.0	6.0	1.75	2.25
E	TTW-m	MT20	4.0	4.0		
F	TMWW-t	MT20	3.0	4.0	1.50	1.75
G	TMVW-t	MT20	5.0	6.0	2.25	2.75
I	BMV1+p	MT20	2.0	4.0	2.25	1.00
J	BMWW-t	MT20	4.0	5.0	1.50	1.75
K	BS-t	MT20	3.0	5.0		
L	BMWWW-t	MT20	4.0	6.0		
M	BMWW-t	MT20	3.0	4.0		
N	BMWW-t	MT20	4.0	5.0	1.50	1.75
O	BMV1+p	MT20	2.0	4.0	2.25	1.00

DIMENSIONS, SUPPORTS AND LOADINGS SPECIFIED BY FABRICATOR TO BE VERIFIED BY BUILDING DESIGNER

BEARINGS

JT	FACTORED GROSS REACTION VERT	HORZ	MAXIMUM FACTORED GROSS REACTION DOWN	HORZ	UPLIFT	INPUT BRG IN-SX	REQRD BRG IN-SX
O	1986	0	1986	0	0	5-8	2-15
I	1986	0	1986	0	0	5-8	2-15

UNFACTORED REACTIONS

JT	1ST LCASE COMBINED	MAX./MIN. COMPONENT REACTIONS SNOW	LIVE	PERM.LIVE	WIND	DEAD	SOIL
O	1386	1017 / 0	0 / 0	0 / 0	0 / 0	369 / 0	0 / 0
I	1386	1017 / 0	0 / 0	0 / 0	0 / 0	369 / 0	0 / 0

BEARING MATERIAL TO BE SPF NO.2 OR BETTER AT JOINT(S) O, I

BRACING
TOP CHORD TO BE SHEATHED OR MAX. PURLIN SPACING = 3.48 FT.
MAX. UNBRACED BOTTOM CHORD LENGTH = 10.00 FT OR RIGID CEILING DIRECTLY APPLIED.

ALL PITCH BREAKS AND PERIMETER CORNER JOINTS MUST BE LATERALLY RESTRAINED.

LOADING
TOTAL LOAD CASES: (4)

CHORDS

MEMB. FR-TO	MAX. FACTORED FORCE (LBS)	FACTORED VERT. LOAD (PLF) FROM	TO	LC1 MAX CSI (LC)	MAX. UNBRAC LENGTH
A- B	0 / 36	-119.4	-119.4	0.16 (1)	10.00
B- C	-2573 / 0	-119.4	-119.4	0.69 (1)	3.48
C- D	-1988 / 0	-119.4	-119.4	0.62 (1)	3.99
D- E	-1751 / 0	-119.4	-119.4	0.13 (1)	4.91
E- F	-1990 / 0	-119.4	-119.4	0.62 (1)	3.99
F- G	-2572 / 0	-119.4	-119.4	0.69 (1)	3.48
G- H	0 / 36	-119.4	-119.4	0.16 (1)	10.00
O- B	-1938 / 0	0.0	0.0	0.20 (1)	5.97
I- G	-1938 / 0	0.0	0.0	0.20 (1)	5.97
O- N	0 / 0	-18.2	-18.2	0.16 (4)	10.00
N- M	0 / 2335	-18.2	-18.2	0.44 (1)	10.00
M- L	0 / 1749	-18.2	-18.2	0.34 (1)	10.00
L- K	0 / 2334	-18.2	-18.2	0.44 (1)	10.00
K- J	0 / 2334	-18.2	-18.2	0.44 (1)	10.00
J- I	0 / 0	-18.2	-18.2	0.16 (4)	10.00

WEBS

MEMB. FR-TO	MAX. FACTORED FORCE (LBS)	MAX CSI (LC)
N- C	-207 / 55	0.06 (1)
C- M	-708 / 0	0.70 (1)
M- D	0 / 454	0.10 (1)
D- L	0 / 6	0.00 (1)
L- E	0 / 460	0.10 (1)
F- L	-705 / 0	0.70 (1)
J- F	-210 / 54	0.06 (1)
B- N	0 / 2358	0.53 (1)
J- G	0 / 2357	0.53 (1)

DESIGN CRITERIA

SPECIFIED LOADS:

TOP CH.	LL	=	34.8	PSF
	DL	=	6.0	PSF
BOT CH.	LL	=	0.0	PSF
	DL	=	7.3	PSF
TOTAL LOAD		=	48.1	PSF

SPACING = 24.0 IN. C/C

LOADING IN FLAT SECTION BASED ON A SLOPE OF 2.00/12 MINIMUM

THIS TRUSS IS DESIGNED FOR RESIDENTIAL OR SMALL BUILDING REQUIREMENTS OF PART 9, NBCC 2015

THIS DESIGN COMPLIES WITH:
- PART 9 OF BCBC 2018 , NBC-2019AE
- PART 9 OF OBC 2012 (2019 AMENDMENT)
- CSA 086-14
- TPIC 2014

(55 % OF 48.1 P.S.F. G.S.L. PLUS 8.4 P.S.F. RAIN LOAD) EQUALS 34.8 P.S.F. SPECIFIED ROOF LIVE LOAD

ALLOWABLE DEFL.(LL)= L/360 (0.88")
CALCULATED VERT. DEFL.(LL) = L/ 999 (0.11")
ALLOWABLE DEFL.(TL)= L/360 (0.88")
CALCULATED VERT. DEFL.(TL) = L/ 999 (0.20")

CSI: TC=0.69/0.97 (B-C:1) , BC=0.44/0.97 (M-N:1) , WB=0.70/0.97 (C-M:1) , SSI=0.31/1.00 (F-G:1)

DOL LUMBER=1.00 NAIL=1.00 LS BEND=1.10 COMP=1.10 SHEAR=1.10 TENS= 1.10

COMPANION LIVE LOAD FACTOR = 1.00

TRUSS PLATE MANUFACTURER IS NOT RESPONSIBLE FOR QUALITY CONTROL IN THE TRUSS MANUFACTURING PLANT .

NAIL VALUES

PLATE	GRIP(DRY) (PSI) MAX	MIN	SHEAR (PLI) MAX	MIN	SECTION (PLI) MAX	MIN
MT20	650	371	1747	788	1987	1873

PLATE PLACEMENT TOL. = 0.250 inches

PLATE ROTATION TOL. = 5.0 Deg.

JSI GRIP= 0.90 (N) (INPUT = 0.90)
JSI METAL= 0.70 (K) (INPUT = 1.00)

LICENSED PROFESSIONAL ENGINEER
N.A. EL-MASRI
PROVINCE OF ONTARIO
Jul 19, 2023

READ ALL NOTES ON THIS PAGE AND ON THE ENGINEERING NOTES: TRUSSES. THE NOTE PAGE IS AN INTEGRAL PART OF THIS DRAWING AS IT CONTAINS SPECIFICATIONS AND CRITERIA USED IN THE DESIGN OF THIS COMPONENT.

KOTT

JOB NAME	TRUSS NAME	QUANTITY	PLY	JOB DESC.	DRWG NO.
NE0723-127	T10	1	1	GREENPARK - ZADORRA ESTATES - VILLA 11-3 (TRUSS DESC.)	

CORPORATION OF THE CITY OF OSHAWA
TRUE COPY
OF PERMIT PLANS
Dec 06 2023
PER
CHIEF BUILDING OFFICIAL

Version 8.630 S Mar 22 2023 MiTek Industries, Inc. Wed Jul 19 16:54:21 2023 Page 1
ID:a_geEeAITwiPs63VUzyy33z8f4n-wcYHzWcBw9WCt0VsXFpvd6vQvJ5VxFpTRG_GxBywSU0

MHP 23038

Scale = 1:45.6

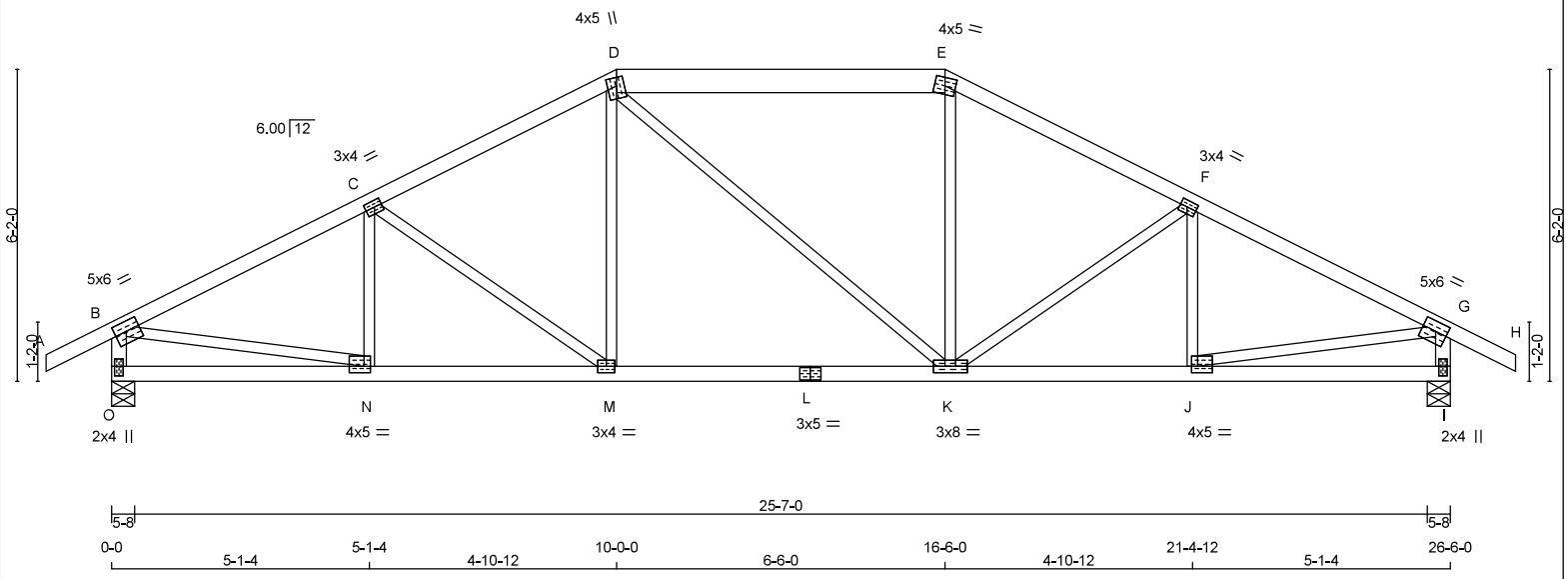

TOTAL WEIGHT = 110 lb

LUMBER
N. L. G. A. RULES

CHORDS	SIZE		LUMBER	DESCR.
A - D	2x4	DRY	No.2	SPF
D - E	2x6	DRY	No.2	SPF
E - H	2x4	DRY	No.2	SPF
O - B	2x4	DRY	No.2	SPF
I - G	2x4	DRY	No.2	SPF
O - L	2x4	DRY	No.2	SPF
L - I	2x4	DRY	No.2	SPF
ALL WEBS EXCEPT	2x3	DRY	No.2	SPF

DRY: SEASONED LUMBER.

PLATES (table is in inches)

JT	TYPE	PLATES	W	LEN	Y	X
B	TMVW-t	MT20	5.0	6.0	2.25	2.75
C	TMWW-t	MT20	3.0	4.0	1.50	1.75
D	TTWW+m	MT20	4.0	5.0	2.00	1.75
E	TTW-m	MT20	4.0	5.0		
F	TMWW-t	MT20	3.0	4.0	1.50	1.75
G	TMVW-t	MT20	5.0	6.0	2.25	2.75
I	BMV1+p	MT20	2.0	4.0	2.25	1.00
J	BMWW-t	MT20	4.0	5.0	1.50	1.50
K	BMWWW-t	MT20	3.0	8.0		
L	BS-t	MT20	3.0	5.0		
M	BMWW-t	MT20	3.0	4.0		
N	BMWW-t	MT20	4.0	5.0	1.50	1.50
O	BMV1+p	MT20	2.0	4.0	2.25	1.00

DIMENSIONS, SUPPORTS AND LOADINGS SPECIFIED BY FABRICATOR TO BE VERIFIED BY BUILDING DESIGNER

BEARINGS

JT	FACTORED GROSS REACTION VERT	HORZ	MAXIMUM FACTORED GROSS REACTION DOWN	HORZ	UPLIFT	INPUT BRG IN-SX	REQRD BRG IN-SX
O	1986	0	1986	0	0	5-8	2-15
I	1986	0	1986	0	0	5-8	2-15

UNFACTORED REACTIONS

JT	1ST LCASE COMBINED	MAX./MIN. COMPONENT REACTIONS SNOW	LIVE	PERM.LIVE	WIND	DEAD	SOIL
O	1386	1017 / 0	0 / 0	0 / 0	0 / 0	369 / 0	0 / 0
I	1386	1017 / 0	0 / 0	0 / 0	0 / 0	369 / 0	0 / 0

BEARING MATERIAL TO BE SPF NO.2 OR BETTER AT JOINT(S) O, I

BRACING
TOP CHORD TO BE SHEATHED OR MAX. PURLIN SPACING = 3.83 FT.
MAX. UNBRACED BOTTOM CHORD LENGTH = 10.00 FT OR RIGID CEILING DIRECTLY APPLIED.

ALL PITCH BREAKS AND PERIMETER CORNER JOINTS MUST BE LATERALLY RESTRAINED.

LOADING
TOTAL LOAD CASES: (4)

CHORDS

MEMB. FR-TO	MAX. FACTORED FORCE (LBS)	FACTORED VERT. LOAD (PLF) FROM	TO	LC1 MAX CSI (LC)	MAX. UNBRAC LENGTH
A- B	0 / 36	-119.4	-119.4	0.16 (1)	10.00
B- C	-2552 / 0	-119.4	-119.4	0.47 (1)	3.83
C- D	-2222 / 0	-119.4	-119.4	0.44 (1)	4.10
D- E	-1959 / 0	-119.4	-119.4	0.34 (1)	5.30
E- F	-2223 / 0	-119.4	-119.4	0.44 (1)	4.09
F- G	-2552 / 0	-119.4	-119.4	0.47 (1)	3.83
G- H	0 / 36	-119.4	-119.4	0.16 (1)	10.00
O- B	-1942 / 0	0.0	0.0	0.20 (1)	5.97
I- G	-1942 / 0	0.0	0.0	0.20 (1)	5.97
O- N	0 / 0	-18.2	-18.2	0.10 (4)	10.00
N- M	0 / 2310	-18.2	-18.2	0.44 (1)	10.00
M- L	0 / 1958	-18.2	-18.2	0.39 (1)	10.00
L- K	0 / 1958	-18.2	-18.2	0.39 (1)	10.00
K- J	0 / 2309	-18.2	-18.2	0.45 (1)	10.00
J- I	0 / 0	-18.2	-18.2	0.10 (4)	10.00

WEBS

MEMB. FR-TO	MAX. FACTORED FORCE (LBS)	MAX CSI (LC)
N- C	-304 / 0	0.07 (1)
C- M	-424 / 0	0.25 (1)
M- D	0 / 358	0.08 (1)
D- K	0 / 1	0.00 (1)
K- E	0 / 360	0.08 (1)
K- F	-422 / 0	0.25 (1)
J- F	-305 / 0	0.07 (1)
B- N	0 / 2342	0.53 (1)
J- G	0 / 2342	0.53 (1)

DESIGN CRITERIA

SPECIFIED LOADS:

TOP CH.	LL	=	34.8	PSF
	DL	=	6.0	PSF
BOT CH.	LL	=	0.0	PSF
	DL	=	7.3	PSF
TOTAL LOAD		=	48.1	PSF

SPACING = 24.0 IN. C/C

LOADING IN FLAT SECTION BASED ON A SLOPE OF 2.00/12 MINIMUM

THIS TRUSS IS DESIGNED FOR RESIDENTIAL OR SMALL BUILDING REQUIREMENTS OF PART 9, NBCC 2015

THIS DESIGN COMPLIES WITH:
- PART 9 OF BCBC 2018 , NBC-2019AE
- PART 9 OF OBC 2012 (2019 AMENDMENT)
- CSA 086-14
- TPIC 2014

(55 % OF 48.1 P.S.F. G.S.L. PLUS 8.4 P.S.F. RAIN LOAD) EQUALS 34.8 P.S.F. SPECIFIED ROOF LIVE LOAD

ALLOWABLE DEFL.(LL)= L/360 (0.88")
CALCULATED VERT. DEFL.(LL) = L/ 999 (0.09")
ALLOWABLE DEFL.(TL)= L/360 (0.88")
CALCULATED VERT. DEFL.(TL) = L/ 999 (0.19")

CSI: TC=0.47/0.97 (B-C:1) , BC=0.45/0.97 (J-K:1) , WB=0.53/0.97 (B-N:1) , SSI=0.26/1.00 (F-G:1)

DOL LUMBER=1.00 NAIL=1.00 LS BEND=1.10 COMP=1.10 SHEAR=1.10 TENS= 1.10

COMPANION LIVE LOAD FACTOR = 1.00

TRUSS PLATE MANUFACTURER IS NOT RESPONSIBLE FOR QUALITY CONTROL IN THE TRUSS MANUFACTURING PLANT .

NAIL VALUES

PLATE	GRIP(DRY) (PSI) MAX	MIN	SHEAR (PLI) MAX	MIN	SECTION (PLI) MAX	MIN
MT20	650	371	1747	788	1987	1873

PLATE PLACEMENT TOL. = 0.250 inches

PLATE ROTATION TOL. = 5.0 Deg.

JSI GRIP= 0.87 (D) (INPUT = 0.90)
JSI METAL= 0.66 (L) (INPUT = 1.00)

LICENSED PROFESSIONAL ENGINEER
N.A. EL-MASRI
PROVINCE OF ONTARIO
Jul 19, 2023

READ ALL NOTES ON THIS PAGE AND ON THE ENGINEERING NOTES: TRUSSES. THE NOTE PAGE IS AN INTEGRAL PART OF THIS DRAWING AS IT CONTAINS SPECIFICATIONS AND CRITERIA USED IN THE DESIGN OF THIS COMPONENT.

KOTT

JOB NAME	TRUSS NAME	QUANTITY	PLY	JOB DESC.	DRWG NO.
NE0723-127	T11	7	1	GREENPARK - ZADORRA ESTATES - VILLA 11-3 (TRUSS DESC.)	

CORPORATION OF THE CITY OF OSHAWA
TRUE COPY
OF PERMIT PLANS
Dec 06 2023
PER: C Martin
CHIEF BUILDING OFFICIAL

MHP 23038

Version 8.630 S Mar 22 2023 MiTek Industries, Inc. Wed Jul 19 16:54:22 2023 Page 1
ID:a_geEeAITwiPs63VUzyy33z8f4n-Op6fBscpgTe2VA425yK8AJRgRiWBgqHdgwjqTdywSU?

Scale = 1:18.8

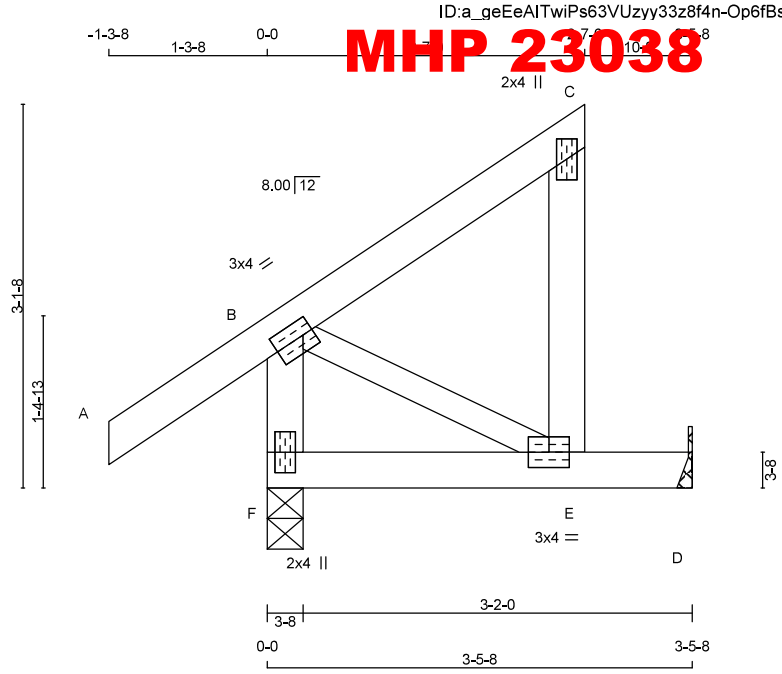

TOTAL WEIGHT = 7 X 15 = 106 lb [M]

LUMBER
N. L. G. A. RULES

CHORDS	SIZE		LUMBER	DESCR.
A - C	2x4	DRY	No.2	SPF
E - C	2x4	DRY	No.2	SPF
F - B	2x4	DRY	No.2	SPF
F - D	2x4	DRY	No.2	SPF
ALL WEBS	2x3	DRY	No.2	SPF

DRY: SEASONED LUMBER.

PLATES (table is in inches)

JT	TYPE	PLATES	W	LEN	Y	X
B	TMVW-t	MT20	3.0	4.0	1.50	1.00
C	TMV+p	MT20	2.0	4.0		
E	BMVW-t	MT20	3.0	4.0		
F	BMV1+p	MT20	2.0	4.0		

DIMENSIONS, SUPPORTS AND LOADINGS SPECIFIED BY FABRICATOR TO BE VERIFIED BY BUILDING DESIGNER

BEARINGS

JT	FACTORED GROSS REACTION VERT	HORZ	MAXIMUM FACTORED GROSS REACTION DOWN	HORZ	UPLIFT	INPUT BRG IN-SX	REQRD BRG IN-SX
F	389	0	389	0	0	3-8	1-8
D	147	0	147	0	0	MECHANICAL	

A SUITABLE HANGER/MECHANICAL CONNECTION IS REQUIRED AT JOINT D. MINIMUM BEARING LENGTH AT JOINT D = 1-8.

UNFACTORED REACTIONS

JT	1ST LCASE COMBINED	MAX./MIN. COMPONENT REACTIONS SNOW	LIVE	PERM.LIVE	WIND	DEAD	SOIL
F	269	208 / 0	0 / 0	0 / 0	0 / 0	61 / 0	0 / 0
D	104	67 / 0	0 / 0	0 / 0	0 / 0	37 / 0	0 / 0

BEARING MATERIAL TO BE SPF NO.2 OR BETTER AT JOINT(S) F

BRACING
TOP CHORD TO BE SHEATHED OR MAX. PURLIN SPACING = 10.00 FT.
MAX. UNBRACED BOTTOM CHORD LENGTH = 10.00 FT OR RIGID CEILING DIRECTLY APPLIED.

ALL PITCH BREAKS AND PERIMETER CORNER JOINTS MUST BE LATERALLY RESTRAINED.

LOADING
TOTAL LOAD CASES: (7)

CHORDS

MEMB. FR-TO	MAX. FACTORED FORCE (LBS)	VERT. LOAD LC1 (PLF) FROM	TO	MAX CSI (LC)	MAX UNBRAC LENGTH
A- B	0 / 45	-119.4	-119.4	0.16 (5)	10.00
B- C	0 / 0	-119.4	-119.4	0.14 (1)	10.00
E- C	-154 / 0	0.0	0.0	0.02 (1)	7.81
F- B	-318 / 0	0.0	0.0	0.03 (1)	7.81
F- E	0 / 0	-18.2	-18.2	0.17 (1)	10.00
E- D	0 / 0	-18.2	-18.2	0.17 (1)	10.00

WEBS

MEMB. FR-TO	MAX. FACTORED FORCE (LBS)	MAX CSI (LC)
B- E	0 / 0	0.00 (1)

CANTILEVER ANALYSIS HAS BEEN CONSIDERED IN THIS DESIGN

PATTERN-LOADING CHECK APPLIED TO THIS TRUSS.

DESIGN CRITERIA

SPECIFIED LOADS:

TOP CH.	LL	=	34.8	PSF
	DL	=	6.0	PSF
BOT CH.	LL	=	0.0	PSF
	DL	=	7.3	PSF
TOTAL LOAD		=	48.1	PSF

SPACING = 24.0 IN. C/C

THIS TRUSS IS DESIGNED FOR RESIDENTIAL OR SMALL BUILDING REQUIREMENTS OF PART 9, NBCC 2015

THIS DESIGN COMPLIES WITH:
- PART 9 OF BCBC 2018 , NBC-2019AE
- PART 9 OF OBC 2012 (2019 AMENDMENT)
- CSA 086-14
- TPIC 2014

(55 % OF 48.1 P.S.F. G.S.L. PLUS 8.4 P.S.F. RAIN LOAD) EQUALS 34.8 P.S.F. SPECIFIED ROOF LIVE LOAD

ALLOWABLE DEFL.(LL)= L/360 (0.19")
CALCULATED VERT. DEFL.(LL) = L/ 999 (0.01")
ALLOWABLE DEFL.(TL)= L/360 (0.19")
CALCULATED VERT. DEFL.(TL) = L/ 999 (0.03")

CSI: TC=0.16/0.97 (A-B:5) , BC=0.17/0.97 (E-F:1) , WB=0.00/0.97 (B-E:1) , SSI=0.11/1.00 (D-E:1)

DOL LUMBER=1.00 NAIL=1.00 LS BEND=1.10 COMP=1.10 SHEAR=1.10 TENS= 1.10

COMPANION LIVE LOAD FACTOR = 1.00

TRUSS PLATE MANUFACTURER IS NOT RESPONSIBLE FOR QUALITY CONTROL IN THE TRUSS MANUFACTURING PLANT .

NAIL VALUES

PLATE	GRIP(DRY) (PSI) MAX	MIN	SHEAR (PLI) MAX	MIN	SECTION (PLI) MAX	MIN
MT20	650	371	1747	788	1987	1873

PLATE PLACEMENT TOL. = 0.250 inches

PLATE ROTATION TOL. = 5.0 Deg.

JSI GRIP= 0.28 (B) (INPUT = 0.90)
JSI METAL= 0.08 (C) (INPUT = 1.00)

LICENSED PROFESSIONAL ENGINEER
N.A. EL-MASRI
PROVINCE OF ONTARIO
Jul 19, 2023

READ ALL NOTES ON THIS PAGE AND ON THE ENGINEERING NOTES: TRUSSES. THE NOTE PAGE IS AN INTEGRAL PART OF THIS DRAWING AS IT CONTAINS SPECIFICATIONS AND CRITERIA USED IN THE DESIGN OF THIS COMPONENT.

KOTT

JOB NAME	TRUSS NAME	QUANTITY	PLY	JOB DESC.	DRWG NO.
NE0723-127	T12	1	1	GREENPARK - ZADORRA ESTATES - VILLA 11-3 (TRUSS DESC.)	

CORPORATION OF THE CITY OF OSHAWA
TRUE COPY
OF PERMIT PLANS
Dec 06 2023
PER
CHIEF BUILDING OFFICIAL

MHP 23038

Version 8.630 S Mar 22 2023 MiTek Industries, Inc. Wed Jul 19 16:54:22 2023 Page 1
ID:a_geEeAITwiPs63VUzyy33z8f4n-Op6fBscpgTe2VA425yK8AJRb4iSNgiDdgwjqTdywSU?

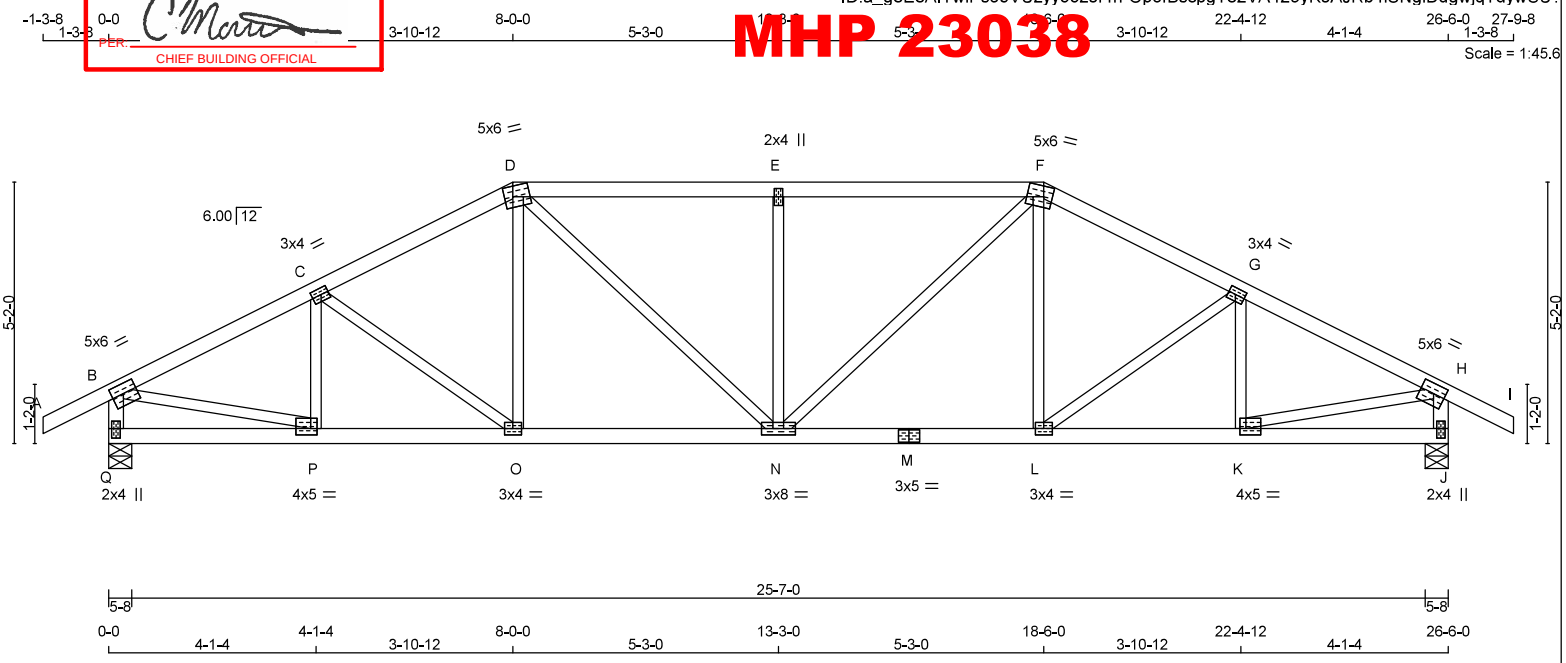

TOTAL WEIGHT = 108 lb
[M][F]

LUMBER
N. L. G. A. RULES

CHORDS	SIZE		LUMBER	DESCR.
A - D	2x4	DRY	No.2	SPF
D - F	2x4	DRY	No.2	SPF
F - I	2x4	DRY	No.2	SPF
Q - B	2x4	DRY	No.2	SPF
J - H	2x4	DRY	No.2	SPF
Q - M	2x4	DRY	No.2	SPF
M - J	2x4	DRY	No.2	SPF
ALL WEBS EXCEPT	2x3	DRY	No.2	SPF

DRY: SEASONED LUMBER.

PLATES (table is in inches)

JT	TYPE	PLATES	W	LEN	Y	X
B	TMVW-t	MT20	5.0	6.0	2.25	2.75
C	TMWW-t	MT20	3.0	4.0	1.50	1.75
D	TTWW-m	MT20	5.0	6.0	2.50	2.00
E	TMW+w	MT20	2.0	4.0		
F	TTWW-m	MT20	5.0	6.0	2.50	2.00
G	TMWW-t	MT20	3.0	4.0	1.50	1.75
H	TMVW-t	MT20	5.0	6.0	2.25	2.75
J	BMV1+p	MT20	2.0	4.0	2.25	1.00
K	BMWW-t	MT20	4.0	5.0	1.50	1.50
L	BMWW-t	MT20	3.0	4.0		
M	BS-t	MT20	3.0	5.0		
N	BMWWW-t	MT20	3.0	8.0		
O	BMWW-t	MT20	3.0	4.0		
P	BMWW-t	MT20	4.0	5.0	1.50	1.50
Q	BMV1+p	MT20	2.0	4.0	2.25	1.00

DIMENSIONS, SUPPORTS AND LOADINGS SPECIFIED BY FABRICATOR TO BE VERIFIED BY BUILDING DESIGNER

BEARINGS

JT	FACTORED GROSS REACTION VERT	HORZ	MAXIMUM GROSS REACTION DOWN	HORZ	FACTORED UPLIFT	INPUT BRG IN-SX	REQRD BRG IN-SX
Q	1986	0	1986	0	0	5-8	2-15
J	1986	0	1986	0	0	5-8	2-15

UNFACTORED REACTIONS

JT	1ST LCASE COMBINED	MAX./MIN. COMPONENT REACTIONS SNOW	LIVE	PERM.LIVE	WIND	DEAD	SOIL
Q	1386	1017 / 0	0 / 0	0 / 0	0 / 0	369 / 0	0 / 0
J	1386	1017 / 0	0 / 0	0 / 0	0 / 0	369 / 0	0 / 0

BEARING MATERIAL TO BE SPF NO.2 OR BETTER AT JOINT(S) Q, J

BRACING
TOP CHORD TO BE SHEATHED OR MAX. PURLIN SPACING = 3.75 FT.
MAX. UNBRACED BOTTOM CHORD LENGTH = 10.00 FT OR RIGID CEILING DIRECTLY APPLIED.

ALL PITCH BREAKS AND PERIMETER CORNER JOINTS MUST BE LATERALLY RESTRAINED.

LOADING
TOTAL LOAD CASES: (4)

CHORDS

MEMB. FR-TO	MAX. FACTORED FORCE (LBS)	FACTORED VERT. LOAD (PLF) FROM	TO	LC1	MAX CSI (LC)	MAX. UNBRAC LENGTH
A- B	0 / 36	-119.4	-119.4	0.16 (1)	10.00	
B- C	-2487 / 0	-119.4	-119.4	0.30 (1)	4.08	
C- D	-2371 / 0	-119.4	-119.4	0.29 (1)	4.17	
D- E	-2564 / 0	-119.4	-119.4	0.50 (1)	3.75	
E- F	-2564 / 0	-119.4	-119.4	0.50 (1)	3.75	
F- G	-2371 / 0	-119.4	-119.4	0.29 (1)	4.17	
G- H	-2487 / 0	-119.4	-119.4	0.30 (1)	4.08	
H- I	0 / 36	-119.4	-119.4	0.16 (1)	10.00	
Q- B	-1948 / 0	0.0	0.0	0.20 (1)	5.95	
J- H	-1948 / 0	0.0	0.0	0.20 (1)	5.95	
Q- P	0 / 0	-18.2	-18.2	0.07 (4)	10.00	
P- O	0 / 2245	-18.2	-18.2	0.41 (1)	10.00	
O- N	0 / 2102	-18.2	-18.2	0.39 (1)	10.00	
N- M	0 / 2102	-18.2	-18.2	0.39 (1)	10.00	
M- L	0 / 2102	-18.2	-18.2	0.39 (1)	10.00	
L- K	0 / 2245	-18.2	-18.2	0.41 (1)	10.00	
K- J	0 / 0	-18.2	-18.2	0.07 (4)	10.00	

WEBS

MEMB. FR-TO	MAX. FACTORED FORCE (LBS)	MAX CSI (LC)
P- C	-406 / 0	0.08 (1)
C- O	-182 / 0	0.07 (1)
O- D	0 / 203	0.05 (1)
D- N	0 / 630	0.14 (1)
N- E	-767 / 0	0.30 (1)
N- F	0 / 630	0.14 (1)
L- F	0 / 203	0.05 (1)
L- G	-182 / 0	0.07 (1)
K- G	-406 / 0	0.08 (1)
B- P	0 / 2293	0.52 (1)
K- H	0 / 2293	0.52 (1)

DESIGN CRITERIA

SPECIFIED LOADS:

TOP CH.	LL	=	34.8	PSF
	DL	=	6.0	PSF
BOT CH.	LL	=	0.0	PSF
	DL	=	7.3	PSF
TOTAL LOAD		=	48.1	PSF

SPACING = 24.0 IN. C/C

LOADING IN FLAT SECTION BASED ON A SLOPE OF 2.00/12 MINIMUM

THIS TRUSS IS DESIGNED FOR RESIDENTIAL OR SMALL BUILDING REQUIREMENTS OF PART 9, NBCC 2015

THIS DESIGN COMPLIES WITH:
- PART 9 OF BCBC 2018 , NBC-2019AE
- PART 9 OF OBC 2012 (2019 AMENDMENT)
- CSA 086-14
- TPIC 2014

(55 % OF 48.1 P.S.F. G.S.L. PLUS 8.4 P.S.F. RAIN LOAD) EQUALS 34.8 P.S.F. SPECIFIED ROOF LIVE LOAD

ALLOWABLE DEFL.(LL)= L/360 (0.88")
CALCULATED VERT. DEFL.(LL) = L/ 999 (0.11")
ALLOWABLE DEFL.(TL)= L/360 (0.88")
CALCULATED VERT. DEFL.(TL) = L/ 999 (0.19")

CSI: TC=0.50/0.97 (D-E:1) , BC=0.41/0.97 (K-L:1) , WB=0.52/0.97 (H-K:1) , SSI=0.30/1.00 (E-F:1)

DOL LUMBER=1.00 NAIL=1.00 LS BEND=1.10 COMP=1.10 SHEAR=1.10 TENS= 1.10

COMPANION LIVE LOAD FACTOR = 1.00

TRUSS PLATE MANUFACTURER IS NOT RESPONSIBLE FOR QUALITY CONTROL IN THE TRUSS MANUFACTURING PLANT .

NAIL VALUES

PLATE	GRIP(DRY) (PSI) MAX	MIN	SHEAR (PLI) MAX	MIN	SECTION (PLI) MAX	MIN
MT20	650	371	1747	788	1987	1873

PLATE PLACEMENT TOL. = 0.250 inches

PLATE ROTATION TOL. = 5.0 Deg.

JSI GRIP= 0.90 (F) (INPUT = 0.90)
JSI METAL= 0.67 (M) (INPUT = 1.00)

LICENSED PROFESSIONAL ENGINEER
N.A. EL-MASRI
PROVINCE OF ONTARIO
Jul 19, 2023

READ ALL NOTES ON THIS PAGE AND ON THE ENGINEERING NOTES: TRUSSES. THE NOTE PAGE IS AN INTEGRAL PART OF THIS DRAWING AS IT CONTAINS SPECIFICATIONS AND CRITERIA USED IN THE DESIGN OF THIS COMPONENT.

KOTT

JOB NAME	TRUSS NAME	QUANTITY	PLY	JOB DESC.	DRWG NO.
NE0723-127	T13	1	1	GREENPARK - ZADORRA ESTATES - VILLA 11-3 (TRUSS DESC.)	

CORPORATION OF THE CITY OF OSHAWA
TRUE COPY
OF PERMIT PLANS
Dec 06 2023
PER
CHIEF BUILDING OFFICIAL

MHP 23038

Version 8.630 S Mar 22 2023 MiTek Industries, Inc. Wed Jul 19 16:54:23 2023 Page 1
ID:a_geEeAITwiPs63VUzyy33z8f4n-t?f2OCdRRnmv7KfEegrNiX_oy6rkPESmuaTN?3ywSU_

Scale = 1:26.5

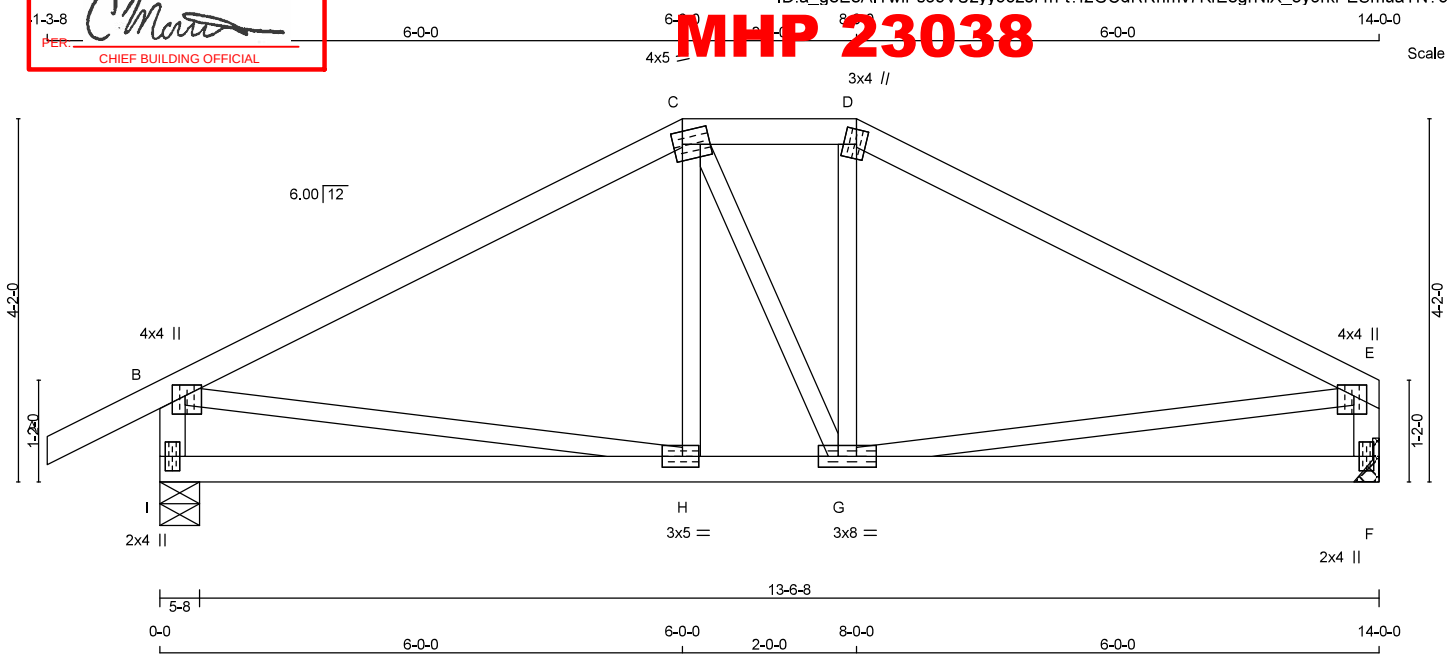

TOTAL WEIGHT = 56 lb
[M][F]

LUMBER
N. L. G. A. RULES

CHORDS	SIZE		LUMBER	DESCR.
A - C	2x4	DRY	2100F 1.8E	SPF
C - D	2x4	DRY	No.2	SPF
D - E	2x4	DRY	2100F 1.8E	SPF
I - B	2x4	DRY	No.2	SPF
F - E	2x4	DRY	No.2	SPF
I - F	2x4	DRY	No.2	SPF
ALL WEBS EXCEPT	2x3	DRY	No.2	SPF

DRY: SEASONED LUMBER.

PLATES (table is in inches)

JT	TYPE	PLATES	W	LEN	Y	X
B	TMVW+p	MT20	4.0	4.0	1.50	1.75
C	TTWW-m	MT20	4.0	5.0	1.75	1.25
D	TTW+m	MT20	3.0	4.0	2.00	1.25
E	TMVW+p	MT20	4.0	4.0	1.50	1.75
F	BMV1+p	MT20	2.0	4.0		
G	BMWWW-t	MT20	3.0	8.0		
H	BMWW-t	MT20	3.0	5.0	1.50	2.25
I	BMV1+p	MT20	2.0	4.0		

DIMENSIONS, SUPPORTS AND LOADINGS SPECIFIED BY FABRICATOR TO BE VERIFIED BY BUILDING DESIGNER

BEARINGS

JT	FACTORED GROSS REACTION VERT	HORZ	MAXIMUM FACTORED GROSS REACTION DOWN	HORZ	UPLIFT	INPUT BRG	REQRD BRG
I	1126	0	1126	0	0	5-8	1-8
F	964	0	964	0	0	MECHANICAL	

A SUITABLE HANGER/MECHANICAL CONNECTION IS REQUIRED AT JOINT F. MINIMUM BEARING LENGTH AT JOINT F = 1-8.

UNFACTORED REACTIONS

JT	1ST LCASE COMBINED	MAX./MIN. COMPONENT REACTIONS SNOW	LIVE	PERM.LIVE	WIND	DEAD	SOIL
I	784	582 / 0	0 / 0	0 / 0	0 / 0	202 / 0	0 / 0
F	674	487 / 0	0 / 0	0 / 0	0 / 0	186 / 0	0 / 0

BEARING MATERIAL TO BE SPF NO.2 OR BETTER AT JOINT(S) I

BRACING
TOP CHORD TO BE SHEATHED OR MAX. PURLIN SPACING = 6.25 FT.
MAX. UNBRACED BOTTOM CHORD LENGTH = 10.00 FT OR RIGID CEILING DIRECTLY APPLIED.

ALL PITCH BREAKS AND PERIMETER CORNER JOINTS MUST BE LATERALLY RESTRAINED.

LOADING
TOTAL LOAD CASES: (4)

CHORDS

MEMB. FR-TO	MAX. FORCE (LBS)	FACTORED VERT. LOAD (PLF) FROM	TO	LC1 MAX CSI (LC)	MAX. UNBRAC LENGTH
A- B	0 / 36	-119.4	-119.4	0.10 (1)	10.00
B- C	-973 / 0	-119.4	-119.4	0.37 (1)	6.25
C- D	-868 / 0	-119.4	-119.4	0.07 (1)	6.25
D- E	-972 / 0	-119.4	-119.4	0.37 (1)	6.25
I- B	-1079 / 0	0.0	0.0	0.11 (1)	7.51
F- E	-916 / 0	0.0	0.0	0.09 (1)	7.81
I- H	0 / 0	-18.2	-18.2	0.14 (4)	10.00
H- G	0 / 868	-18.2	-18.2	0.21 (1)	10.00
G- F	0 / 0	-18.2	-18.2	0.14 (4)	10.00

WEBS

MEMB. FR-TO	MAX. FORCE (LBS)	MAX CSI (LC)
H- C	-41 / 56	0.02 (4)
C- G	0 / 0	0.00 (1)
G- D	-42 / 57	0.02 (4)
B- H	0 / 878	0.20 (1)
G- E	0 / 878	0.20 (1)

DESIGN CRITERIA

SPECIFIED LOADS:

TOP CH.	LL =	34.8	PSF
	DL =	6.0	PSF
BOT CH.	LL =	0.0	PSF
	DL =	7.3	PSF
TOTAL LOAD	=	48.1	PSF

SPACING = 24.0 IN. C/C

LOADING IN FLAT SECTION BASED ON A SLOPE OF 2.00/12 MINIMUM

THIS TRUSS IS DESIGNED FOR RESIDENTIAL OR SMALL BUILDING REQUIREMENTS OF PART 9, NBCC 2015

THIS DESIGN COMPLIES WITH:
- PART 9 OF BCBC 2018 , NBC-2019AE
- PART 9 OF OBC 2012 (2019 AMENDMENT)
- CSA 086-14
- TPIC 2014

(55 % OF 48.1 P.S.F. G.S.L. PLUS 8.4 P.S.F. RAIN LOAD) EQUALS 34.8 P.S.F. SPECIFIED ROOF LIVE LOAD

ALLOWABLE DEFL.(LL)= L/360 (0.47")
CALCULATED VERT. DEFL.(LL) = L/ 999 (0.02")
ALLOWABLE DEFL.(TL)= L/360 (0.47")
CALCULATED VERT. DEFL.(TL) = L/ 999 (0.06")

CSI: TC=0.37/0.97 (B-C:1) , BC=0.21/0.97 (G-H:1) , WB=0.20/0.97 (B-H:1) , SSI=0.25/1.00 (D-E:1)

DOL LUMBER=1.00 NAIL=1.00 LS BEND=1.10 COMP=1.10 SHEAR=1.10 TENS= 1.10

COMPANION LIVE LOAD FACTOR = 1.00

TRUSS PLATE MANUFACTURER IS NOT RESPONSIBLE FOR QUALITY CONTROL IN THE TRUSS MANUFACTURING PLANT .

NAIL VALUES

PLATE	GRIP(DRY) (PSI) MAX	MIN	SHEAR (PLI) MAX	MIN	SECTION (PLI) MAX	MIN
MT20	650	371	1747	788	1987	1873

PLATE PLACEMENT TOL. = 0.250 inches

PLATE ROTATION TOL. = 5.0 Deg.

JSI GRIP= 0.83 (B) (INPUT = 0.90)
JSI METAL= 0.31 (B) (INPUT = 1.00)

LICENSED PROFESSIONAL ENGINEER
N.A. EL-MASRI
PROVINCE OF ONTARIO
Jul 19, 2023

READ ALL NOTES ON THIS PAGE AND ON THE ENGINEERING NOTES: TRUSSES. THE NOTE PAGE IS AN INTEGRAL PART OF THIS DRAWING AS IT CONTAINS SPECIFICATIONS AND CRITERIA USED IN THE DESIGN OF THIS COMPONENT.

KOTT

JOB NAME	TRUSS NAME	QUANTITY	PLY	JOB DESC.	DRWG NO.
NE0723-127	T14	1	1	GREENPARK - ZADORRA ESTATES - VILLA 11-3 (TRUSS DESC.)	

CORPORATION OF THE CITY OF OSHAWA
TRUE COPY
OF PERMIT PLANS
Dec 06 2023
PER: C Martin
CHIEF BUILDING OFFICIAL

MHP 23038

Version 8.630 S Mar 22 2023 MiTek Industries, Inc. Wed Jul 19 16:54:24 2023 Page 1
ID:a_geEeAITwiPs63VUzyy33z8f4n-LBDQbYe3C4umkUEQCNMcFkXzjWBB8iqv7ECxXWywSTz

Scale = 1:31.4

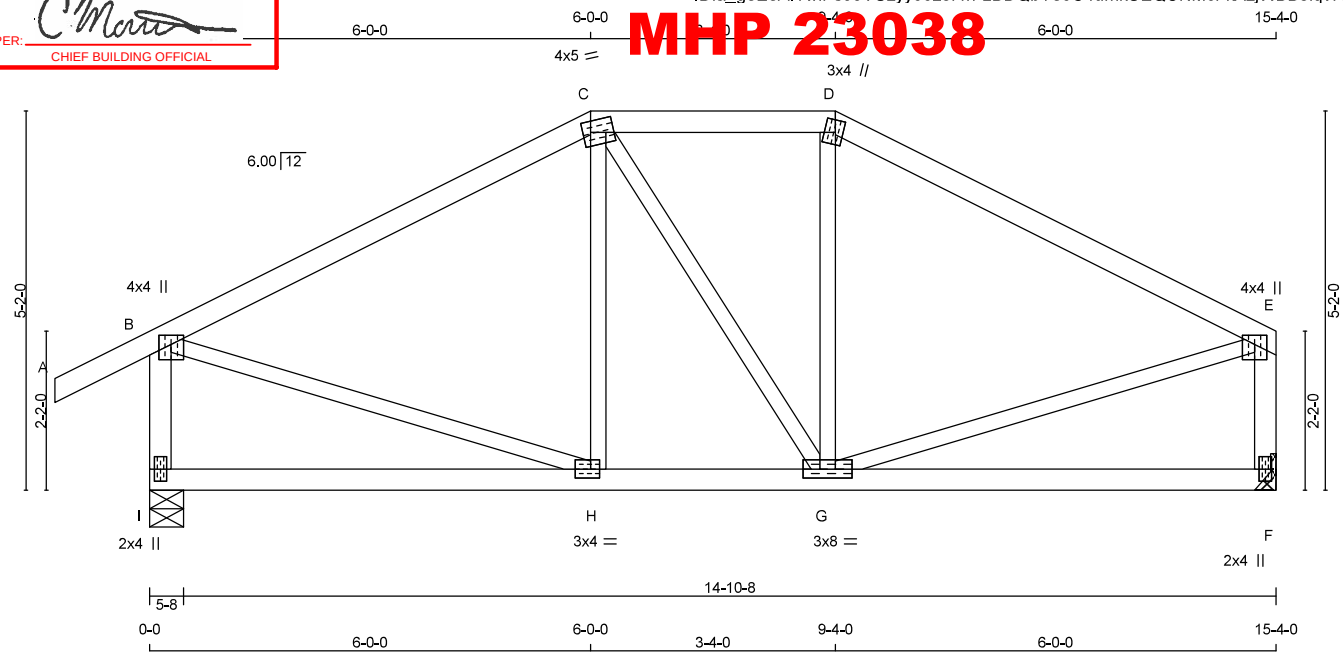

TOTAL WEIGHT = 64 lb
[M][F]

LUMBER
N. L. G. A. RULES

CHORDS	SIZE		LUMBER	DESCR.
A - C	2x4	DRY	2100F 1.8E	SPF
C - D	2x4	DRY	No.2	SPF
D - E	2x4	DRY	2100F 1.8E	SPF
I - B	2x4	DRY	No.2	SPF
F - E	2x4	DRY	No.2	SPF
I - F	2x4	DRY	No.2	SPF
ALL WEBS EXCEPT	2x3	DRY	No.2	SPF

DRY: SEASONED LUMBER.

PLATES (table is in inches)

JT	TYPE	PLATES	W	LEN	Y	X
B	TMVW+p	MT20	4.0	4.0	1.50	2.00
C	TTWW-m	MT20	4.0	5.0	1.75	1.25
D	TTW+m	MT20	3.0	4.0	2.00	1.25
E	TMVW+p	MT20	4.0	4.0	1.50	2.00
F	BMV1+p	MT20	2.0	4.0		
G	BMWWW-t	MT20	3.0	8.0		
H	BMWW-t	MT20	3.0	4.0	1.50	1.50
I	BMV1+p	MT20	2.0	4.0		

DIMENSIONS, SUPPORTS AND LOADINGS SPECIFIED BY FABRICATOR TO BE VERIFIED BY BUILDING DESIGNER

BEARINGS

JT	FACTORED GROSS REACTION VERT	HORZ	MAXIMUM FACTORED GROSS REACTION DOWN	HORZ	UPLIFT	INPUT BRG IN-SX	REQRD BRG IN-SX
I	1218	0	1218	0	0	5-8	1-8
F	1056	0	1056	0	0	MECHANICAL	

A SUITABLE HANGER/MECHANICAL CONNECTION IS REQUIRED AT JOINT F. MINIMUM BEARING LENGTH AT JOINT F = 1-8.

UNFACTORED REACTIONS

JT	1ST LCASE COMBINED	MAX./MIN. COMPONENT REACTIONS SNOW	LIVE	PERM.LIVE	WIND	DEAD	SOIL
I	848	628 / 0	0 / 0	0 / 0	0 / 0	220 / 0	0 / 0
F	738	534 / 0	0 / 0	0 / 0	0 / 0	204 / 0	0 / 0

BEARING MATERIAL TO BE SPF NO.2 OR BETTER AT JOINT(S) I

BRACING
TOP CHORD TO BE SHEATHED OR MAX. PURLIN SPACING = 6.25 FT.
MAX. UNBRACED BOTTOM CHORD LENGTH = 10.00 FT OR RIGID CEILING DIRECTLY APPLIED.

ALL PITCH BREAKS AND PERIMETER CORNER JOINTS MUST BE LATERALLY RESTRAINED.

LOADING
TOTAL LOAD CASES: (4)

CHORDS

MEMB. FR-TO	MAX. FORCE (LBS)	FACTORED VERT. LOAD (PLF) FROM	TO	LC1 MAX CSI (LC)	MAX. UNBRAC LENGTH
A- B	0 / 36	-119.4	-119.4	0.10 (1)	10.00
B- C	-902 / 0	-119.4	-119.4	0.37 (1)	6.25
C- D	-802 / 0	-119.4	-119.4	0.18 (1)	6.25
D- E	-901 / 0	-119.4	-119.4	0.37 (1)	6.25
I- B	-1170 / 0	0.0	0.0	0.14 (1)	7.29
F- E	-1008 / 0	0.0	0.0	0.12 (1)	7.71
I- H	0 / 0	-18.2	-18.2	0.14 (4)	10.00
H- G	0 / 803	-18.2	-18.2	0.20 (1)	10.00
G- F	0 / 0	-18.2	-18.2	0.14 (4)	10.00

WEBS

MEMB. FR-TO	MAX. FORCE (LBS)	MAX CSI (LC)
H- C	-153 / 35	0.06 (1)
C- G	0 / 0	0.00 (1)
G- D	-153 / 35	0.06 (1)
B- H	0 / 843	0.19 (1)
G- E	0 / 842	0.19 (1)

DESIGN CRITERIA

SPECIFIED LOADS:

TOP CH.	LL =	34.8	PSF
	DL =	6.0	PSF
BOT CH.	LL =	0.0	PSF
	DL =	7.3	PSF
TOTAL LOAD	=	48.1	PSF

SPACING = 24.0 IN. C/C

LOADING IN FLAT SECTION BASED ON A SLOPE OF 2.00/12 MINIMUM

THIS TRUSS IS DESIGNED FOR RESIDENTIAL OR SMALL BUILDING REQUIREMENTS OF PART 9, NBCC 2015

THIS DESIGN COMPLIES WITH:
- PART 9 OF BCBC 2018 , NBC-2019AE
- PART 9 OF OBC 2012 (2019 AMENDMENT)
- CSA 086-14
- TPIC 2014

(55 % OF 48.1 P.S.F. G.S.L. PLUS 8.4 P.S.F. RAIN LOAD) EQUALS 34.8 P.S.F. SPECIFIED ROOF LIVE LOAD

ALLOWABLE DEFL.(LL)= L/360 (0.51")
CALCULATED VERT. DEFL.(LL) = L/ 999 (0.02")
ALLOWABLE DEFL.(TL)= L/360 (0.51")
CALCULATED VERT. DEFL.(TL) = L/ 999 (0.06")

CSI: TC=0.37/0.97 (B-C:1) , BC=0.20/0.97 (G-H:1) , WB=0.19/0.97 (B-H:1) , SSI=0.25/1.00 (B-C:1)

DOL LUMBER=1.00 NAIL=1.00 LS BEND=1.10 COMP=1.10 SHEAR=1.10 TENS= 1.10

COMPANION LIVE LOAD FACTOR = 1.00

TRUSS PLATE MANUFACTURER IS NOT RESPONSIBLE FOR QUALITY CONTROL IN THE TRUSS MANUFACTURING PLANT .

NAIL VALUES

PLATE	GRIP(DRY) (PSI) MAX	MIN	SHEAR (PLI) MAX	MIN	SECTION (PLI) MAX	MIN
MT20	650	371	1747	788	1987	1873

PLATE PLACEMENT TOL. = 0.250 inches

PLATE ROTATION TOL. = 5.0 Deg.

JSI GRIP= 0.87 (B) (INPUT = 0.90)
JSI METAL= 0.29 (B) (INPUT = 1.00)

LICENSED PROFESSIONAL ENGINEER
N.A. EL-MASRI
PROVINCE OF ONTARIO
Jul 19, 2023

READ ALL NOTES ON THIS PAGE AND ON THE ENGINEERING NOTES: TRUSSES. THE NOTE PAGE IS AN INTEGRAL PART OF THIS DRAWING AS IT CONTAINS SPECIFICATIONS AND CRITERIA USED IN THE DESIGN OF THIS COMPONENT.

KOTT

JOB NAME	TRUSS NAME	QUANTITY	PLY	JOB DESC.	DRWG NO.
NE0723-127	T15	2	1	GREENPARK - ZADORRA ESTATES - VILLA 11-3 (TRUSS DESC.)	

CORPORATION OF THE CITY OF OSHAWA
TRUE COPY
OF PERMIT PLANS
Dec 06 2023
PER: C Martin
CHIEF BUILDING OFFICIAL

MHP 23038

Version 8.630 S Mar 22 2023 MiTek Industries, Inc. Wed Jul 19 16:54:24 2023 Page 1
ID:a_geEeAITwiPs63VUzyy33z8f4n-LBDQbYe3C4umkUEQCNMcFkX01WEi8kDv7ECxXWywSTz

Scale = 1:13.7

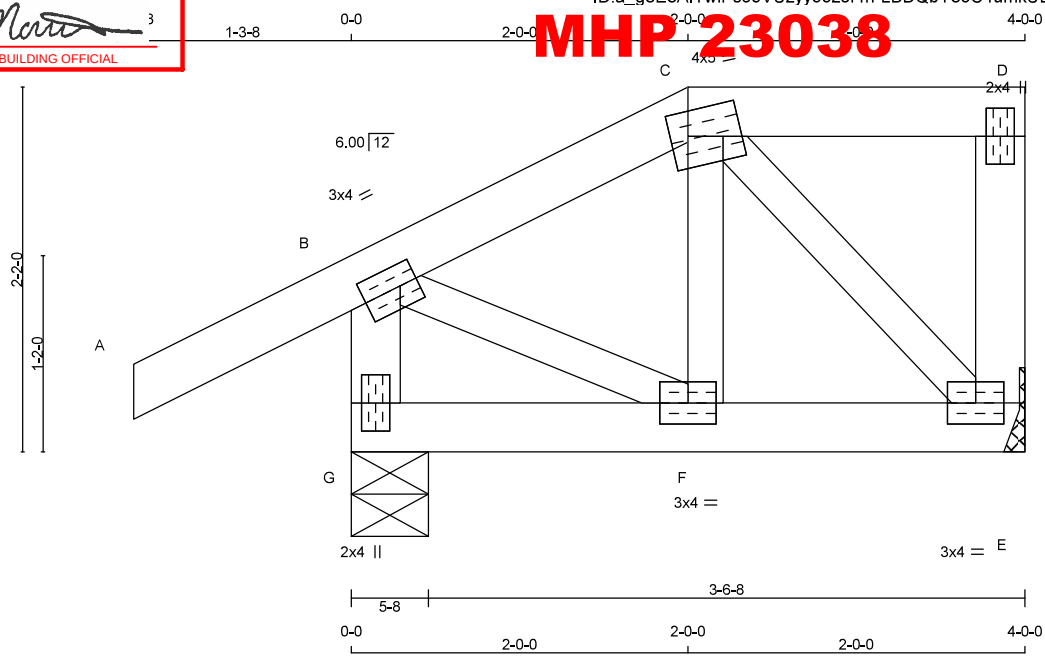

TOTAL WEIGHT = 2 X 18 = 37 lb [M]

LUMBER
N. L. G. A. RULES

CHORDS	SIZE		LUMBER	DESCR.
A - C	2x4	DRY	No.2	SPF
C - D	2x4	DRY	No.2	SPF
E - D	2x4	DRY	No.2	SPF
G - B	2x4	DRY	No.2	SPF
G - E	2x4	DRY	No.2	SPF
ALL WEBS EXCEPT	2x3	DRY	No.2	SPF

DRY: SEASONED LUMBER.

PLATES (table is in inches)

JT	TYPE	PLATES	W	LEN	Y	X
B	TMVW-t	MT20	3.0	4.0	1.50	1.25
C	TTWW-m	MT20	4.0	5.0	1.75	1.25
D	TMV+p	MT20	2.0	4.0		
E	BMVW1-t	MT20	3.0	4.0		
F	BMWW-t	MT20	3.0	4.0		
G	BMV1+p	MT20	2.0	4.0		

DIMENSIONS, SUPPORTS AND LOADINGS SPECIFIED BY FABRICATOR TO BE VERIFIED BY BUILDING DESIGNER

BEARINGS

JT	FACTORED GROSS REACTION VERT	HORZ	MAXIMUM FACTORED GROSS REACTION DOWN	HORZ	UPLIFT	INPUT BRG IN-SX	REQRD BRG IN-SX
E	275	0	275	0	0	MECHANICAL	
G	437	0	437	0	0	5-8	1-8

A SUITABLE HANGER/MECHANICAL CONNECTION IS REQUIRED AT JOINT E. MINIMUM BEARING LENGTH AT JOINT E = 1-8.

UNFACTORED REACTIONS

JT	1ST LCASE COMBINED	MAX./MIN. COMPONENT REACTIONS SNOW	LIVE	PERM.LIVE	WIND	DEAD	SOIL
E	192	139 / 0	0 / 0	0 / 0	0 / 0	53 / 0	0 / 0
G	303	234 / 0	0 / 0	0 / 0	0 / 0	69 / 0	0 / 0

BEARING MATERIAL TO BE SPF NO.2 OR BETTER AT JOINT(S) G

BRACING
TOP CHORD TO BE SHEATHED OR MAX. PURLIN SPACING = 6.25 FT.
MAX. UNBRACED BOTTOM CHORD LENGTH = 10.00 FT OR RIGID CEILING DIRECTLY APPLIED.

ALL PITCH BREAKS AND PERIMETER CORNER JOINTS MUST BE LATERALLY RESTRAINED.

LOADING
TOTAL LOAD CASES: (4)

CHORDS

MEMB. FR-TO	MAX. FACTORED FORCE (LBS)	VERT. LOAD (PLF) FROM	TO	LC1 MAX CSI (LC)	MAX. UNBRAC LENGTH
A- B	0 / 36	-119.4	-119.4	0.16 (1)	10.00
B- C	-169 / 0	-119.4	-119.4	0.08 (1)	6.25
C- D	0 / 0	-119.4	-119.4	0.08 (1)	10.00
E- D	-119 / 0	0.0	0.0	0.01 (1)	7.81
G- B	-419 / 0	0.0	0.0	0.04 (1)	7.81
G- F	0 / 0	-18.2	-18.2	0.02 (4)	10.00
F- E	0 / 150	-18.2	-18.2	0.03 (1)	10.00

WEBS

MEMB. FR-TO	MAX. FACTORED FORCE (LBS)	MAX CSI (LC)
F- C	-23 / 31	0.01 (4)
C- E	-205 / 0	0.03 (1)
B- F	0 / 163	0.04 (1)

DESIGN CRITERIA

SPECIFIED LOADS:

TOP CH.	LL =	34.8	PSF
	DL =	6.0	PSF
BOT CH.	LL =	0.0	PSF
	DL =	7.3	PSF
TOTAL LOAD	=	48.1	PSF

SPACING = 24.0 IN. C/C

LOADING IN FLAT SECTION BASED ON A SLOPE OF 2.00/12 MINIMUM

THIS TRUSS IS DESIGNED FOR RESIDENTIAL OR SMALL BUILDING REQUIREMENTS OF PART 9, NBCC 2015

THIS DESIGN COMPLIES WITH:
- PART 9 OF BCBC 2018 , NBC-2019AE
- PART 9 OF OBC 2012 (2019 AMENDMENT)
- CSA 086-14
- TPIC 2014

(55 % OF 48.1 P.S.F. G.S.L. PLUS 8.4 P.S.F. RAIN LOAD) EQUALS 34.8 P.S.F. SPECIFIED ROOF LIVE LOAD

ALLOWABLE DEFL.(LL)= L/360 (0.19")
CALCULATED VERT. DEFL.(LL) = L/ 999 (0.00")
ALLOWABLE DEFL.(TL)= L/360 (0.19")
CALCULATED VERT. DEFL.(TL) = L/ 999 (0.00")

CSI: TC=0.16/0.97 (A-B:1) , BC=0.03/0.97 (E-F:1) , WB=0.04/0.97 (B-F:1) , SSI=0.11/1.00 (A-B:1)

DOL LUMBER=1.00 NAIL=1.00 LS BEND=1.10 COMP=1.10 SHEAR=1.10 TENS= 1.10

COMPANION LIVE LOAD FACTOR = 1.00

TRUSS PLATE MANUFACTURER IS NOT RESPONSIBLE FOR QUALITY CONTROL IN THE TRUSS MANUFACTURING PLANT .

NAIL VALUES

PLATE	GRIP(DRY) (PSI) MAX	MIN	SHEAR (PLI) MAX	MIN	SECTION (PLI) MAX	MIN
MT20	650	371	1747	788	1987	1873

PLATE PLACEMENT TOL. = 0.250 inches

PLATE ROTATION TOL. = 5.0 Deg.

JSI GRIP= 0.40 (B) (INPUT = 0.90)
JSI METAL= 0.10 (B) (INPUT = 1.00)

LICENSED PROFESSIONAL ENGINEER
N.A. EL-MASRI
PROVINCE OF ONTARIO
Jul 19, 2023

READ ALL NOTES ON THIS PAGE AND ON THE ENGINEERING NOTES: TRUSSES. THE NOTE PAGE IS AN INTEGRAL PART OF THIS DRAWING AS IT CONTAINS SPECIFICATIONS AND CRITERIA USED IN THE DESIGN OF THIS COMPONENT.

KOTT

JOB NAME	TRUSS NAME	QUANTITY	PLY	JOB DESC.	DRWG NO.
NE0723-127	T16	1	1	GREENPARK - ZADORRA ESTATES - VILLA 11-3 (TRUSS DESC.)	

CORPORATION OF THE CITY OF OSHAWA
TRUE COPY
OF PERMIT PLANS
Dec 06 2023
PER: C Martin
CHIEF BUILDING OFFICIAL

MHP 23038

Version 8.630 S Mar 22 2023 MiTek Industries, Inc. Wed Jul 19 16:54:24 2023 Page 1
ID:a_geEeAITwiPs63VUzyy33z8f4n-LBDQbYe3C4umkUEQCNMcFkXzOWDv8knv7ECxXWywSTz

Scale = 1:18.0

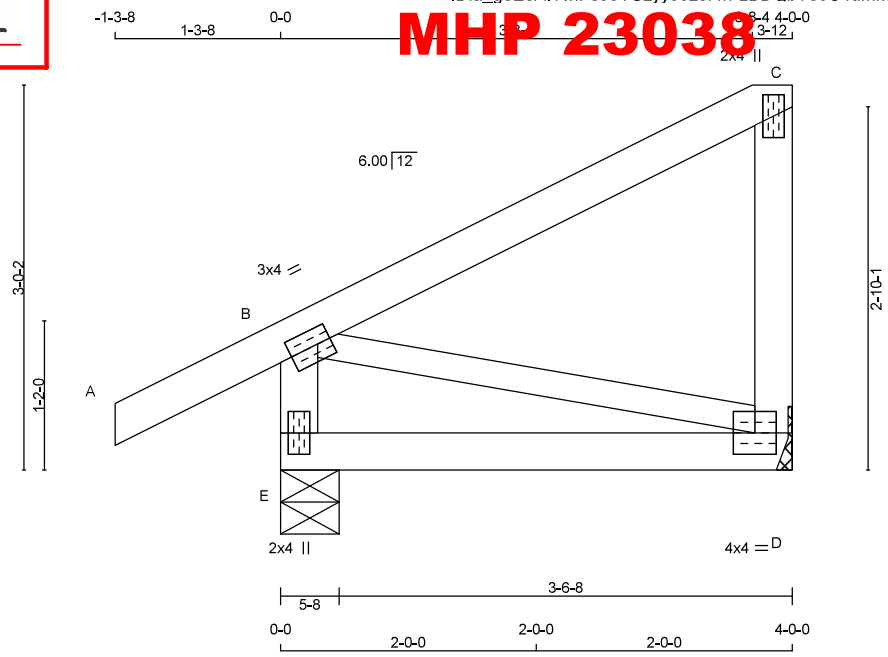

TOTAL WEIGHT = 18 lb [M]

LUMBER
N. L. G. A. RULES

CHORDS	SIZE		LUMBER	DESCR.
A - C	2x4	DRY	No.2	SPF
D - C	2x4	DRY	No.2	SPF
E - B	2x4	DRY	No.2	SPF
E - D	2x4	DRY	No.2	SPF
ALL WEBS	2x3	DRY	No.2	SPF

DRY: SEASONED LUMBER.

PLATES (table is in inches)

JT	TYPE	PLATES	W	LEN	Y	X
B	TMVW-t	MT20	3.0	4.0	1.50	1.25
C	TMV+p	MT20	2.0	4.0		
D	BMVW1-t	MT20	4.0	4.0		
E	BMV1+p	MT20	2.0	4.0		

DIMENSIONS, SUPPORTS AND LOADINGS SPECIFIED BY FABRICATOR TO BE VERIFIED BY BUILDING DESIGNER

BEARINGS

JT	FACTORED GROSS REACTION VERT	HORZ	MAXIMUM FACTORED GROSS REACTION DOWN	HORZ	UPLIFT	INPUT BRG IN-SX	REQRD BRG IN-SX
D	275	0	275	0	0	MECHANICAL	
E	437	0	437	0	0	5-8	1-8

A SUITABLE HANGER/MECHANICAL CONNECTION IS REQUIRED AT JOINT D. MINIMUM BEARING LENGTH AT JOINT D = 1-8.

UNFACTORED REACTIONS

JT	1ST LCASE COMBINED	MAX./MIN. COMPONENT REACTIONS SNOW	LIVE	PERM.LIVE	WIND	DEAD	SOIL
D	192	139 / 0	0 / 0	0 / 0	0 / 0	53 / 0	0 / 0
E	303	234 / 0	0 / 0	0 / 0	0 / 0	69 / 0	0 / 0

BEARING MATERIAL TO BE SPF NO.2 OR BETTER AT JOINT(S) E

BRACING
TOP CHORD TO BE SHEATHED OR MAX. PURLIN SPACING = 10.00 FT.
MAX. UNBRACED BOTTOM CHORD LENGTH = 10.00 FT OR RIGID CEILING DIRECTLY APPLIED.

ALL PITCH BREAKS AND PERIMETER CORNER JOINTS MUST BE LATERALLY RESTRAINED.

LOADING
TOTAL LOAD CASES: (4)

CHORDS

MEMB. FR-TO	MAX. FORCE (LBS)	FACTORED VERT. LOAD LC1 (PLF) FROM	TO	MAX CSI (LC)	MAX. UNBRAC LENGTH
A- B	0 / 36	-119.4	-119.4	0.16 (1)	10.00
B- C	0 / 0	-119.4	-119.4	0.32 (1)	10.00
D- C	-239 / 0	0.0	0.0	0.04 (1)	7.81
E- B	-401 / 0	0.0	0.0	0.04 (1)	7.81
E- D	0 / 0	-18.2	-18.2	0.09 (4)	10.00

WEBS

MEMB. FR-TO	MAX. FORCE (LBS)	MAX CSI (LC)
B- D	0 / 0	0.00 (1)

DESIGN CRITERIA

SPECIFIED LOADS:

TOP CH.	LL =	34.8	PSF
	DL =	6.0	PSF
BOT CH.	LL =	0.0	PSF
	DL =	7.3	PSF
TOTAL LOAD	=	48.1	PSF

SPACING = 24.0 IN. C/C

THIS TRUSS IS DESIGNED FOR RESIDENTIAL OR SMALL BUILDING REQUIREMENTS OF PART 9, NBCC 2015

THIS DESIGN COMPLIES WITH:
- PART 9 OF BCBC 2018 , NBC-2019AE
- PART 9 OF OBC 2012 (2019 AMENDMENT)
- CSA 086-14
- TPIC 2014

(55 % OF 48.1 P.S.F. G.S.L. PLUS 8.4 P.S.F. RAIN LOAD) EQUALS 34.8 P.S.F. SPECIFIED ROOF LIVE LOAD

ALLOWABLE DEFL.(TL)= L/360 (0.19")
CALCULATED VERT. DEFL.(TL) = L/ 999 (0.01")

CSI: TC=0.32/0.97 (B-C:1) , BC=0.09/0.97 (D-E:4) , WB=0.00/0.97 (B-D:1) , SSI=0.17/1.00 (B-C:1)

DOL LUMBER=1.00 NAIL=1.00 LS BEND=1.10 COMP=1.10 SHEAR=1.10 TENS= 1.10

COMPANION LIVE LOAD FACTOR = 1.00

AUTOSOLVE RIGHT HEEL ONLY

TRUSS PLATE MANUFACTURER IS NOT RESPONSIBLE FOR QUALITY CONTROL IN THE TRUSS MANUFACTURING PLANT .

NAIL VALUES

PLATE	GRIP(DRY) (PSI) MAX	MIN	SHEAR (PLI) MAX	MIN	SECTION (PLI) MAX	MIN
MT20	650	371	1747	788	1987	1873

PLATE PLACEMENT TOL. = 0.250 inches

PLATE ROTATION TOL. = 5.0 Deg.

JSI GRIP= 0.35 (B) (INPUT = 0.90)
JSI METAL= 0.10 (C) (INPUT = 1.00)

LICENSED PROFESSIONAL ENGINEER
N.A. EL-MASRI
PROVINCE OF ONTARIO
Jul 19, 2023

READ ALL NOTES ON THIS PAGE AND ON THE ENGINEERING NOTES: TRUSSES. THE NOTE PAGE IS AN INTEGRAL PART OF THIS DRAWING AS IT CONTAINS SPECIFICATIONS AND CRITERIA USED IN THE DESIGN OF THIS COMPONENT.

KOTT

JOB NAME	TRUSS NAME	QUANTITY	PLY	JOB DESC.	DRWG NO.
NE0723-127	T17	1	1	GREENPARK - ZADORRA ESTATES - VILLA 11-3 (TRUSS DESC.)	

CORPORATION OF THE CITY OF OSHAWA
TRUE COPY
OF PERMIT PLANS
Dec 06 2023
PER:
CHIEF BUILDING OFFICIAL

MHP 23038

Version 8.630 S Mar 22 2023 MiTek Industries, Inc. Wed Jul 19 16:54:25 2023 Page 1
ID:a_geEeAITwiPs63VUzyy33z8f4n-pNnopufhzO0dMeodm5trny3BcwadtBB3MuyU3yywSTy

Scale = 1:25.6

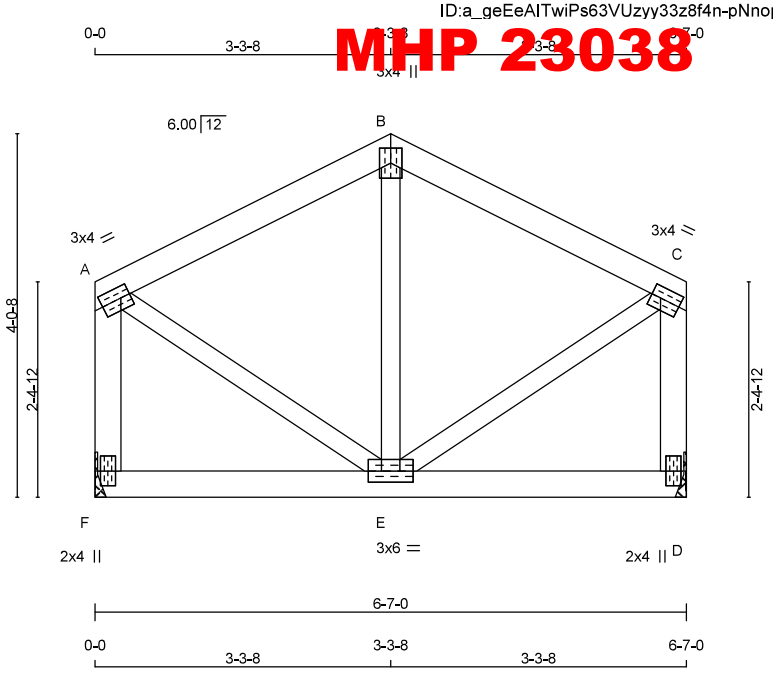

TOTAL WEIGHT = 29 lb

LUMBER
N. L. G. A. RULES

CHORDS	SIZE		LUMBER	DESCR.
A - B	2x4	DRY	No.2	SPF
B - C	2x4	DRY	No.2	SPF
F - A	2x4	DRY	No.2	SPF
D - C	2x4	DRY	No.2	SPF
F - D	2x4	DRY	No.2	SPF
ALL WEBS EXCEPT	2x3	DRY	No.2	SPF

DRY: SEASONED LUMBER.

PLATES (table is in inches)

JT	TYPE	PLATES	W	LEN	Y	X
A	TMVW-t	MT20	3.0	4.0	1.50	1.25
B	TTW+p	MT20	3.0	4.0		
C	TMVW-t	MT20	3.0	4.0	1.50	1.25
D	BMV1+p	MT20	2.0	4.0		
E	BMWWW-t	MT20	3.0	6.0		
F	BMV1+p	MT20	2.0	4.0		

DIMENSIONS, SUPPORTS AND LOADINGS SPECIFIED BY FABRICATOR TO BE VERIFIED BY BUILDING DESIGNER

BEARINGS

JT	FACTORED GROSS REACTION VERT	HORZ	MAXIMUM FACTORED GROSS REACTION DOWN	HORZ	UPLIFT	INPUT BRG IN-SX	REQRD BRG IN-SX
F	453	0	453	0	0	MECHANICAL	
D	453	0	453	0	0	MECHANICAL	

A SUITABLE HANGER/MECHANICAL CONNECTION IS REQUIRED AT JOINT F, D. MINIMUM BEARING LENGTH AT JOINT F = 1-8, JOINT D = 1-8.

UNFACTORED REACTIONS

JT	1ST LCASE COMBINED	MAX./MIN. COMPONENT REACTIONS SNOW	LIVE	PERM.LIVE	WIND	DEAD	SOIL
F	317	229 / 0	0 / 0	0 / 0	0 / 0	88 / 0	0 / 0
D	317	229 / 0	0 / 0	0 / 0	0 / 0	88 / 0	0 / 0

BRACING
TOP CHORD TO BE SHEATHED OR MAX. PURLIN SPACING = 6.25 FT.
MAX. UNBRACED BOTTOM CHORD LENGTH = 10.00 FT OR RIGID CEILING DIRECTLY APPLIED.

ALL PITCH BREAKS AND PERIMETER CORNER JOINTS MUST BE LATERALLY RESTRAINED.

LOADING
TOTAL LOAD CASES: (4)

CHORDS

MEMB. FR-TO	MAX. FACTORED FORCE (LBS)	VERT. LOAD (PLF) FROM	TO	LC1 MAX CSI (LC)	MAX. UNBRAC LENGTH
A- B	-229 / 0	-119.4	-119.4	0.17 (1)	6.25
B- C	-229 / 0	-119.4	-119.4	0.17 (1)	6.25
F- A	-429 / 0	0.0	0.0	0.05 (1)	7.81
D- C	-429 / 0	0.0	0.0	0.05 (1)	7.81
F- E	0 / 0	-18.2	-18.2	0.05 (4)	10.00
E- D	0 / 0	-18.2	-18.2	0.05 (4)	10.00

WEBS

MEMB. FR-TO	MAX. FACTORED FORCE (LBS)	MAX CSI (LC)
E- B	-188 / 6	0.05 (1)
A- E	0 / 243	0.05 (1)
E- C	0 / 243	0.05 (1)

DESIGN CRITERIA

SPECIFIED LOADS:

TOP CH.	LL =	34.8	PSF
	DL =	6.0	PSF
BOT CH.	LL =	0.0	PSF
	DL =	7.3	PSF
TOTAL LOAD	=	48.1	PSF

SPACING = 24.0 IN. C/C

THIS TRUSS IS DESIGNED FOR RESIDENTIAL OR SMALL BUILDING REQUIREMENTS OF PART 9, NBCC 2015

THIS DESIGN COMPLIES WITH:
- PART 9 OF BCBC 2018 , NBC-2019AE
- PART 9 OF OBC 2012 (2019 AMENDMENT)
- CSA 086-14
- TPIC 2014

(55 % OF 48.1 P.S.F. G.S.L. PLUS 8.4 P.S.F. RAIN LOAD) EQUALS 34.8 P.S.F. SPECIFIED ROOF LIVE LOAD

ALLOWABLE DEFL.(LL)= L/360 (0.22")
CALCULATED VERT. DEFL.(LL) = L/ 999 (0.00")
ALLOWABLE DEFL.(TL)= L/360 (0.22")
CALCULATED VERT. DEFL.(TL) = L/ 999 (0.00")

CSI: TC=0.17/0.97 (B-C:1) , BC=0.05/0.97 (D-E:4) , WB=0.05/0.97 (A-E:1) , SSI=0.14/1.00 (B-C:1)

DOL LUMBER=1.00 NAIL=1.00 LS BEND=1.10 COMP=1.10 SHEAR=1.10 TENS= 1.10

COMPANION LIVE LOAD FACTOR = 1.00

TRUSS PLATE MANUFACTURER IS NOT RESPONSIBLE FOR QUALITY CONTROL IN THE TRUSS MANUFACTURING PLANT .

NAIL VALUES

PLATE	GRIP(DRY) (PSI) MAX	MIN	SHEAR (PLI) MAX	MIN	SECTION (PLI) MAX	MIN
MT20	650	371	1747	788	1987	1873

PLATE PLACEMENT TOL. = 0.250 inches

PLATE ROTATION TOL. = 5.0 Deg.

JSI GRIP= 0.61 (C) (INPUT = 0.90)
JSI METAL= 0.11 (A) (INPUT = 1.00)

LICENSED PROFESSIONAL ENGINEER
N.A. EL-MASRI
PROVINCE OF ONTARIO
Jul 19, 2023

READ ALL NOTES ON THIS PAGE AND ON THE ENGINEERING NOTES: TRUSSES. THE NOTE PAGE IS AN INTEGRAL PART OF THIS DRAWING AS IT CONTAINS SPECIFICATIONS AND CRITERIA USED IN THE DESIGN OF THIS COMPONENT.

KOTT

JOB NAME	TRUSS NAME	QUANTITY	PLY	JOB DESC.	DRWG NO.
NE0723-127	T18	5	1	GREENPARK - ZADORRA ESTATES - VILLA 11-3 (TRUSS DESC.)	

CORPORATION OF THE CITY OF OSHAWA
TRUE COPY
OF PERMIT PLANS
Dec 06 2023
PER:
CHIEF BUILDING OFFICIAL

MHP 23038

Version 8.630 S Mar 22 2023 MiTek Industries, Inc. Wed Jul 19 16:54:25 2023 Page 1
ID:a_geEeAITwiPs63VUzyy33z8f4n-pNnopufhzO0dMeodm5trny3BmwawtAy3MuyU3yywSTy

Scale: 1/2"=1'

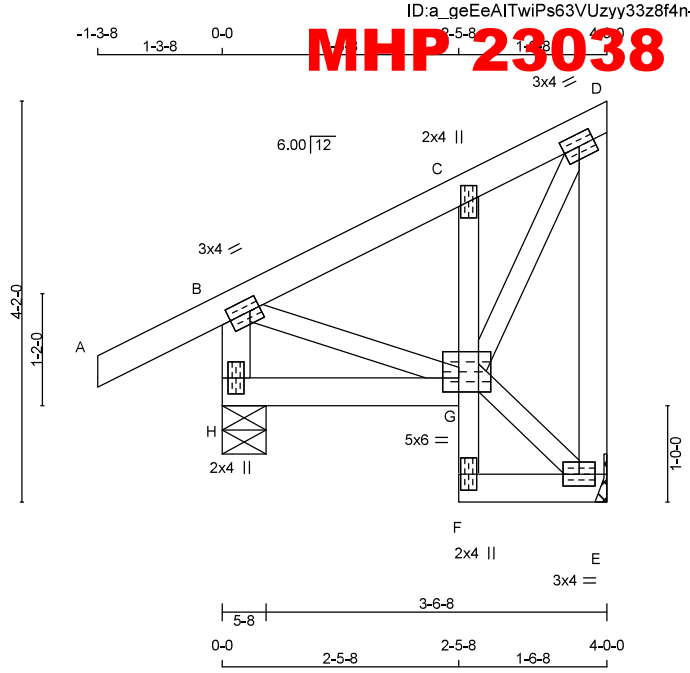

TOTAL WEIGHT = 5 X 24 = 119 lb [M]

LUMBER
N. L. G. A. RULES

CHORDS	SIZE		LUMBER	DESCR.
A - D	2x4	DRY	No.2	SPF
E - D	2x4	DRY	No.2	SPF
H - B	2x4	DRY	No.2	SPF
H - G	2x4	DRY	No.2	SPF
F - C	2x3	DRY	No.2	SPF
F - E	2x4	DRY	No.2	SPF
ALL WEBS EXCEPT	2x3	DRY	No.2	SPF

DRY: SEASONED LUMBER.

PLATES (table is in inches)

JT	TYPE	PLATES	W	LEN	Y	X
B	TMVW-t	MT20	3.0	4.0	1.50	1.25
C	TMV+p	MT20	2.0	4.0		
D	TMVW-t	MT20	3.0	4.0		
E	BMVW1-t	MT20	3.0	4.0		
F	BMV+p	MT20	2.0	4.0		
G	BVMWWW-l	MT20	5.0	6.0	1.75	2.00
H	BMV1+p	MT20	2.0	4.0		

DIMENSIONS, SUPPORTS AND LOADINGS SPECIFIED BY FABRICATOR TO BE VERIFIED BY BUILDING DESIGNER

BEARINGS

JT	FACTORED GROSS REACTION VERT	HORZ	MAXIMUM FACTORED GROSS REACTION DOWN	HORZ	UPLIFT	INPUT BRG IN-SX	REQRD BRG IN-SX
E	275	0	275	0	0	MECHANICAL	
H	437	0	437	0	0	5-8	1-8

A SUITABLE HANGER/MECHANICAL CONNECTION IS REQUIRED AT JOINT E. MINIMUM BEARING LENGTH AT JOINT E = 1-8.

UNFACTORED REACTIONS

JT	1ST LCASE COMBINED	MAX./MIN. COMPONENT REACTIONS SNOW	LIVE	PERM.LIVE	WIND	DEAD	SOIL
E	192	139 / 0	0 / 0	0 / 0	0 / 0	53 / 0	0 / 0
H	303	234 / 0	0 / 0	0 / 0	0 / 0	69 / 0	0 / 0

BEARING MATERIAL TO BE SPF NO.2 OR BETTER AT JOINT(S) H

BRACING
TOP CHORD TO BE SHEATHED OR MAX. PURLIN SPACING = 6.25 FT.
MAX. UNBRACED BOTTOM CHORD LENGTH = 7.81 FT OR RIGID CEILING DIRECTLY APPLIED.

ALL PITCH BREAKS AND PERIMETER CORNER JOINTS MUST BE LATERALLY RESTRAINED.

LOADING
TOTAL LOAD CASES: (4)

CHORDS

MEMB. FR-TO	MAX. FACTORED FORCE (LBS)	FACTORED VERT. LOAD (PLF) FROM	TO	LC1 MAX CSI (LC)	MAX. UNBRAC LENGTH
A- B	0 / 36	-119.4	-119.4	0.16 (1)	10.00
B- C	-158 / 0	-119.4	-119.4	0.09 (1)	6.25
C- D	-172 / 0	-119.4	-119.4	0.08 (1)	6.25
E- D	-258 / 0	0.0	0.0	0.07 (1)	7.81
H- B	-414 / 0	0.0	0.0	0.04 (1)	7.81
H- G	0 / 0	-18.2	-18.2	0.04 (4)	10.00
F- G	0 / 15	0.0	0.0	0.02 (1)	10.00
G- C	-293 / 0	0.0	0.0	0.02 (1)	7.81
F- E	0 / 6	-18.2	-18.2	0.01 (4)	10.00

WEBS

MEMB. FR-TO	MAX. FACTORED FORCE (LBS)	MAX CSI (LC)
G- E	-7 / 0	0.00 (1)
G- D	0 / 308	0.07 (1)
B- G	0 / 159	0.04 (1)

DESIGN CRITERIA

SPECIFIED LOADS:

TOP CH.	LL =	34.8	PSF
	DL =	6.0	PSF
BOT CH.	LL =	0.0	PSF
	DL =	7.3	PSF
TOTAL LOAD	=	48.1	PSF

SPACING = 24.0 IN. C/C

THIS TRUSS IS DESIGNED FOR RESIDENTIAL OR SMALL BUILDING REQUIREMENTS OF PART 9, NBCC 2015

THIS DESIGN COMPLIES WITH:
- PART 9 OF BCBC 2018 , NBC-2019AE
- PART 9 OF OBC 2012 (2019 AMENDMENT)
- CSA 086-14
- TPIC 2014

(55 % OF 48.1 P.S.F. G.S.L. PLUS 8.4 P.S.F. RAIN LOAD) EQUALS 34.8 P.S.F. SPECIFIED ROOF LIVE LOAD

ALLOWABLE DEFL.(LL)= L/360 (0.19")
CALCULATED VERT. DEFL.(LL) = L/ 999 (0.00")
ALLOWABLE DEFL.(TL)= L/360 (0.19")
CALCULATED VERT. DEFL.(TL) = L/ 999 (0.01")

CSI: TC=0.16/0.97 (A-B:1) , BC=0.04/0.97 (G-H:4) , WB=0.07/0.97 (D-G:1) , SSI=0.12/1.00 (B-C:1)

DOL LUMBER=1.00 NAIL=1.00 LS BEND=1.10 COMP=1.10 SHEAR=1.10 TENS= 1.10

COMPANION LIVE LOAD FACTOR = 1.00

AUTOSOLVE RIGHT HEEL ONLY

TRUSS PLATE MANUFACTURER IS NOT RESPONSIBLE FOR QUALITY CONTROL IN THE TRUSS MANUFACTURING PLANT .

NAIL VALUES

PLATE	GRIP(DRY) (PSI) MAX	MIN	SHEAR (PLI) MAX	MIN	SECTION (PLI) MAX	MIN
MT20	650	371	1747	788	1987	1873

PLATE PLACEMENT TOL. = 0.250 inches

PLATE ROTATION TOL. = 5.0 Deg.

JSI GRIP= 0.57 (D) (INPUT = 0.90)
JSI METAL= 0.12 (C) (INPUT = 1.00)

LICENSED PROFESSIONAL ENGINEER
N.A. EL-MASRI
PROVINCE OF ONTARIO
Jul 19, 2023

READ ALL NOTES ON THIS PAGE AND ON THE ENGINEERING NOTES: TRUSSES. THE NOTE PAGE IS AN INTEGRAL PART OF THIS DRAWING AS IT CONTAINS SPECIFICATIONS AND CRITERIA USED IN THE DESIGN OF THIS COMPONENT.

KOTT

CORPORATION OF THE CITY OF OSHAWA
TRUE COPY
OF PERMIT PLANS
Dec 06 2023
PER:
CHIEF BUILDING OFFICIAL

KOTT TRUSS BEARING CAPACITY TABLE

(INTERNAL USE ONLY)

MHP 23038

T ' TRUSS LUMBER TYPE (SUPPORTED ON SPF #2 TOP PLATE) 7-Jun-21

	TYPE 1, NO FLUSH PLATE, B2>=2B1								
NO BEARING ENHANCER	BEARING PLATE (B1)	1-PLY		2-PLY		3-PLY		4-PLY	
		MSR2100	SPF No.2 MSR1950	MSR2100	SPF No.2 MSR1950	MSR2100	SPF No.2 MSR1950	MSR2100	SPF No.2 MSR1950
	1 1/2"	1383		2767		4151		5534	
	2x4	3712	3228	7425	6457	11138	9685	14851	12914
	2x6	5834	5073	11668	10146	17503	15220	23337	20293
	2x8	7690	6687	15381	13375	23072	20063	30763	26750
FLUSH PLATE	TYPE 1, FLUSH PLATE								
	BEARING PLATE (B1)	1-PLY		2-PLY		3-PLY		4-PLY	
		MSR2100	SPF No.2 MSR1950	MSR2100	SPF No.2 MSR1950	MSR2100	SPF No.2 MSR1950	MSR2100	SPF No.2 MSR1950
	1 1/2"	1383		2767		4151		5534	
	2x4	3712		7425		11138		14851	
	2x6	5834		11668		17503		23337	
	2x8	7690		15381		23072		30763	
BEARING ENHANCER	TYPE 1, FLUSH PLATE + BEARING ENHANCER								
	BEARING PLATE (B1)	1-PLY		2-PLY		3-PLY		4-PLY	
		MSR2100	SPF No.2 MSR1950	MSR2100	SPF No.2 MSR1950	MSR2100	SPF No.2 MSR1950	MSR2100	SPF No.2 MSR1950
CPn-4 (Simpson)	2x4	4515		9030		13545		18065	
CPn-6 (Simpson)	2x6	7095		14190		21285		28390	
CP4-9 (KOTT)	2x4	6007	4898	12014	9796	18021	14694	19801	19592
CP6-9 (KOTT)	2x6	8677	7075	17354	14150	26031	21225	31117	28300
SBP4 (MiTek)	2x4	7288		11001		14714		18427	
SBP6 (MiTek)	2x6	11030		16865		22699		28534	
SBP6 (MiTek)	2x8	12886		20578		28269		35960	

TYPE 1 CONFIGURATIONS

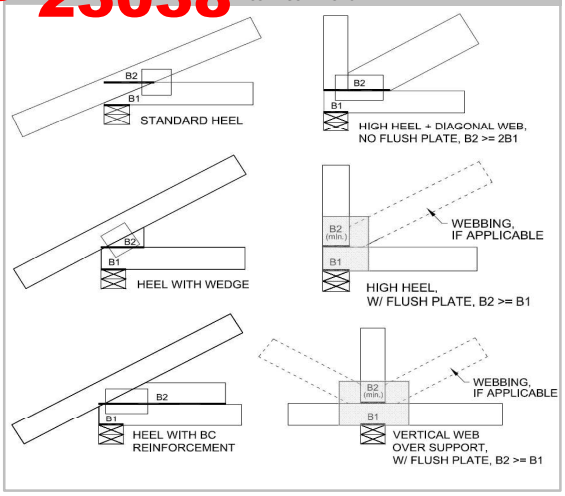

	TYPE 1 (END GRAIN)									
END GRAIN	BEARING PLATE (B1)	POST (B2) ABOVE BEARING	1-PLY		2-PLY		3-PLY		4-PLY	
			MSR2100 (EG)	SPF No.2 (EG)	MSR2100 (EG)	SPF No.2 (EG)	MSR2100 (EG)	SPF No.2 (EG)	MSR2100 (EG)	SPF No.2 (EG)
	2x4	2x4	3712		7425		11138		14851	
	2x6	2x6	5834		11668		17503		23337	
			MSR1950 (EG)	SPF No.2	MSR1950 (EG)	SPF No.2	MSR1950 (EG)	SPF No.2	MSR1950 (EG)	SPF No.2
	2x8	2x8	7690		15381		23072		30763	
END GRAIN, BEARING ENHANCER	TYPE 1 (END GRAIN), FLUSH PLATE + BEARING ENHANCER									
	BEARING PLATE (B1)	POST (B2) ABOVE BEARING	1-PLY		2-PLY		3-PLY		4-PLY	
			MSR2100 (EG)	SPF No.2 (EG)	MSR2100 (EG)	SPF No.2 (EG)	MSR2100 (EG)	SPF No.2 (EG)	MSR2100 (EG)	SPF No.2 (EG)
CPn-4 (Simpson)	2x4	2x4	4515		9030		13545		18065	
CPn-6 (Simpson)	2x6	2x6	7095		14190		21285		28390	
CP4-9 (KOTT)	2x4	2x6	15585	9006	19801	18013	19801		19801	
			MSR1950 (EG)	SPF No.2 (EG)	MSR1950 (EG)	SPF No.2 (EG)	MSR1950 (EG)	SPF No.2 (EG)	MSR1950 (EG)	SPF No.2 (EG)
CP6-9 (KOTT)	2x6	2x8	21834	13009	31117	26019	31117		31117	

TYPE 1 (END GRAIN) CONFIGURATIONS

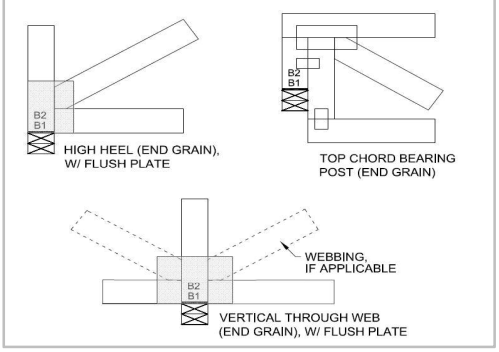

	TYPE 2, NO FLUSH PLATE, B2<2B1									
NO BEARING ENHANCER	BEARING PLATE (B1)	POST (B2) ABOVE BEARING	1-PLY		2-PLY		3-PLY		4-PLY	
			MSR2100	SPF No.2 MSR1950	MSR2100	SPF No.2 MSR1950	MSR2100	SPF No.2 MSR1950	MSR2100	SPF No.2 MSR1950
	2x4	2x4	2639	2152	5279	4304	7919	6457	10588	8609
		2x6	3393	2767	6787	5534	10181	8302	13575	11069
	2x6	2x4	3393	2767	6787	5534	10181	8302	13575	11069
		2x6	4147	3382	8296	6764	12444	10146	16592	13529
		2x8	4808	3920	9616	7840	14424	11761	19232	15681
		2x10	5562	4535	11124	9070	16686	13606	22248	18141
	2x8	2x4	3959	3228	7919	6457	11878	9685	15838	12914
		2x6	4808	3920	9616	7840	14424	11761	19232	15681
		2x8	5467	4458	10935	8916	16403	13375	21871	17833
FLUSH PLATE	TYPE 2, FLUSH PLATE									
	BEARING PLATE (B1)	POST (B2) ABOVE BEARING	1-PLY		2-PLY		3-PLY		4-PLY	
			MSR2100	SPF No.2 MSR1950	MSR2100	SPF No.2 MSR1950	MSR2100	SPF No.2 MSR1950	MSR2100	SPF No.2 MSR1950
	2x4	2x4	TYPE 1 APPLIES							
		2x6								
	2x6	2x4	4672	3809	9344	7619	14016	11429	18689	15238
		2x6	TYPE 1 APPLIES							
		2x8								
		2x10								
	2x8	2x4	4672	3809	9344	7619	14016	11429	18689	15238
		2x6	7342	5986	14684	11973	22026	17959	29368	23946
		2x8	TYPE 1 APPLIES							

TYPE 2 CONFIGURATIONS

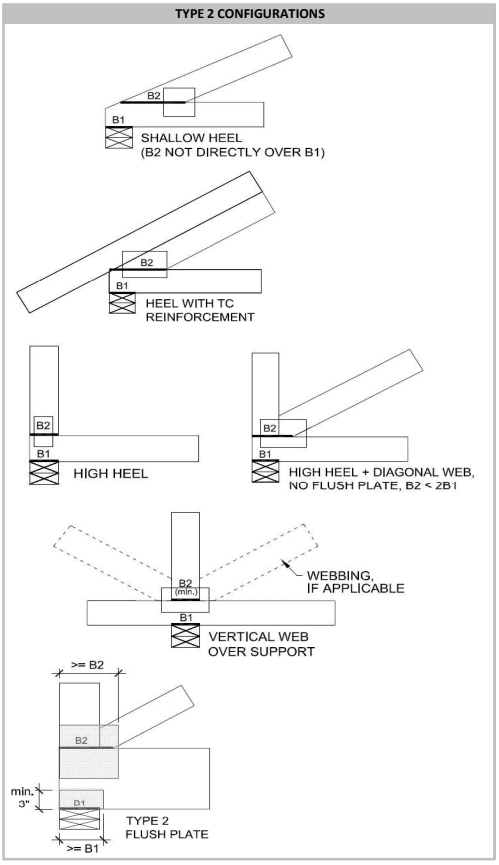

NOTES:

1. Factored truss reaction shall not exceed bearing capacity corresponding to: configuration type, size of bearing surfaces, truss lumber, # of plies, and applicable enhancers.

2a. Values in table are in conformance with CSA O86-14 Cl. 6.5.7 and TPIC 2014-Update 2, and may be used for residential or commercial designs.

2b. Values in table are in conformance with MiTek Canada Detail B37821Q "SPF Bearing Capacities".

2c. Values in table are in conformance with Simpson Catalogue C-C-CAN2020.

3a. Conditions for use of table values include: standard duration (K_D=1), dry lumber (K_{Scp}=1), untreated lumber (K_T=1), length of bearing factor not applied (K_B=1).

3b. Size factor (K_{Zcp}) applied to support material calculation when acceptable. Flush plate factor (K_P) applied to truss material calculation when acceptable (ie. excludes end grain).

3c. Flat roof factor (K_F) must applied for trusses making up a flat roof system; to do so, multiply bearing capacity values by 0.75 for this application.

4. Bearing plate is to be specified by the project engineer; values in table assume a bearing material of SPF #2 (or better).

5. When required, flush plate must not be located further than 1/4" away from bearing surface, and must cover the entire bearing plate length (B1).

6. When required, bearing enhancer must be installed as per manufacturer's guidelines.

7. Type 2 bearing configurations can be converted to use Type 1 table values as outlined in TPIC 2014-Update 1 Cl. 7.5.9.

8. This table is not valid after April 30, 2022.

CORPORATION OF THE CITY OF OSHAWA
TRUE COPY
OF PERMIT PLANS
Dec 06 2023
PER:
CHIEF BUILDING OFFICIAL

STANDARD DETAIL **MSD2015-H**

MHP 23038

Issued: MARCH 1, 2022
Expiry: APRIL 30, 2024

TOE-NAIL CAPACITY DETAILS

LATERAL AND WITHDRAWAL RESISTANCE OF BEARING ANCHORAGE BY TOE-NAILS

NAIL TYPE	Length (in)	Diameter (in)	LATERAL Resistance per nail (Lbs.)		WITHDRAWAL Resistance per nail (Lbs.)	
			SPF	D. FIR	SPF	D. FIR
COMMON WIRE	3.00	0.144	122	139	30	42
	3.25	0.144	127	144	32	45
	3.50	0.160	152	173	38	52
COMMON SPIRAL	3.00	0.122	96	108	26	36
	3.25	0.122	97	108	28	40
	3.50	0.152	142	161	36	50
3.25" Gun nail	3.25	0.120	94	105	28	39

Note: If using truss with D. Fir lumber and SPF bearing plate, use tabulated SPF values in table.

Nail type:	Common wire	Common spiral	Common wire	Common spiral	Gun Nail
Diameter (in.)	0.160	0.152	0.144	0.122	0.120
Length (in.)	3.50	3.50	3.00	3.00	3.25
LUMBER	**MAXIMUM NUMBER OF TOE-NAILS**				
2x4 SPF	2	2	3	3	3
2x6 SPF	4	4	4	5	5
2x4 D. FIR	2	2	2	2	2
2x6 D. FIR	3	3	3	4	4

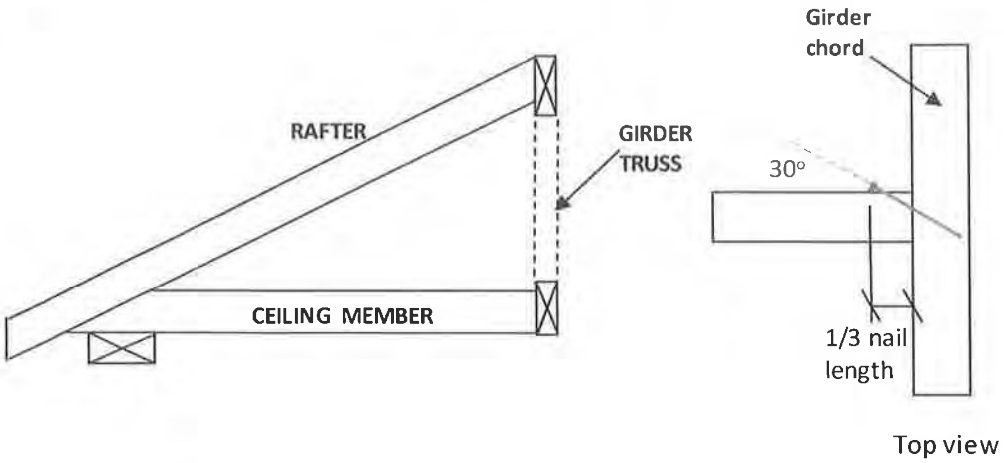

Figure 1: Toe-Nailing Rafter / Ceiling Member to Girder Truss

PEO
Certificate No. 10889485

LICENSED PROFESSIONAL ENGINEER
2022-04-05
C. Cordogiannis
90553736
PROVINCE OF ONTARIO

©2020 MiTek Canada Inc., 240 Stirling Crescent, Bradford, Ontario, L3Z 4L5 | (800) 268-3434, www.mitek.ca

CORPORATION OF THE CITY OF OSHAWA
TRUE COPY
OF PERMIT PLANS
Dec 06 2023
PER:
CHIEF BUILDING OFFICIAL

STANDARD DETAIL **MSD2015-H**

MHP 23038

Issued: MARCH 1, 2022
Expiry: APRIL 30, 2024

TOE-NAIL CAPACITY DETAILS

Figure 2: Toe-Nail Anchorage to Bearing Plate for Uplift

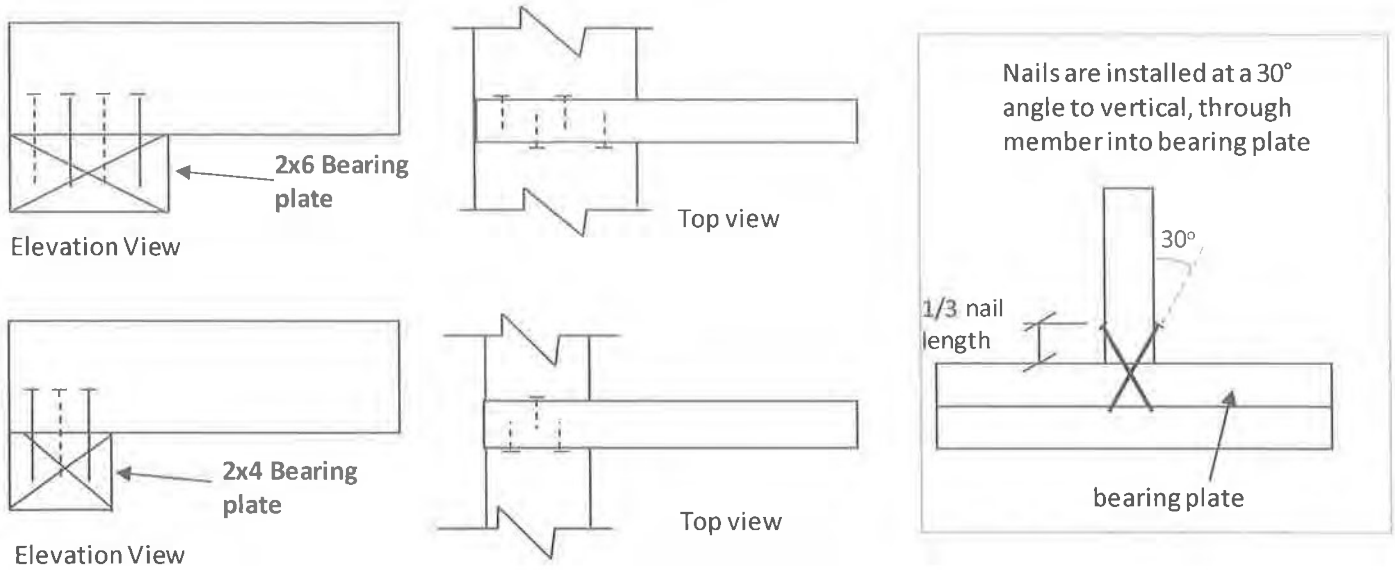

NOTES:

1. Rafter and ceiling members may be connected to top and bottom chords of girder truss by toe-nailing the members into the girder chords (see fig. 1), provided the factored vertical reactions of the supported members do not exceed the lateral resistance of the toe-nails. Mechanical connectors (hangers) are required if factored vertical reactions exceed the toe-nail capacity, or if the connection must resist horizontal loads (loads perpendicular to the face of girder or rafter).

2. Trusses, rafters or ceiling members may be anchored to the bearing plate with toe-nails (see fig. 2), provided that the factored uplift reactions due to **wind or earthquake loads** do not exceed the **withdrawal resistance of the toe-nails.** Mechanical anchors (tie-downs) are required for reactions that exceed the toe-nail withdrawal capacity. Toe-nail anchorage to bearing plates is **NOT** permitted if uplift reactions are generated from gravity loads (snow, floor live, dead).

3. Tabulated toe-nail resistances on page 1 are for **one** toe-nail. Multiply unit values by the number of nails used in the connection. Maximum number of nails in a connection shall not exceed the tabulated limits shown on page 1 for a given lumber size /species.

4. Nail values are based on specific gravity of G = 0.42 (SPF) and G = 0.49 (D. Fir).

5. Toe-nails shall be driven at approximately 1/3 the nail length from the edge of the joist/truss chord and driven at an angle of 30° to the grain of the member.

6. For wind / earthquake loads, tabulated lateral resistances may be multiplied by 1.15 (K_D factor). No increases are permitted for tabulated withdrawal resistances.

7. Lumber must be dry (< 19% moisture content) at the time of nail installation.

8. Nail values in this table comply with CSA O86-19, Clause 12.9.

PEO
Certificate No 10889485

LICENSED PROFESSIONAL ENGINEER
2022-04-05
C. Cordogiannis
90553736
PROVINCE OF ONTARIO

©2020 MiTek Canada Inc., 240 Stirling Crescent, Bradford, Ontario, L3Z 4L5 | (800) 268-3434, www.mitek.ca

CORPORATION OF THE CITY OF OSHAWA
TRUE COPY
OF PERMIT PLANS
Dec 06 2023
PER:
CHIEF BUILDING OFFICIAL

STANDARD DETAIL **MSD2015-J**

MHP 23038

Issued: **MARCH 17, 2021**
Expiry: **APRIL 30, 2023**

STANDARD HIP END FRAMING

PLAN VIEW

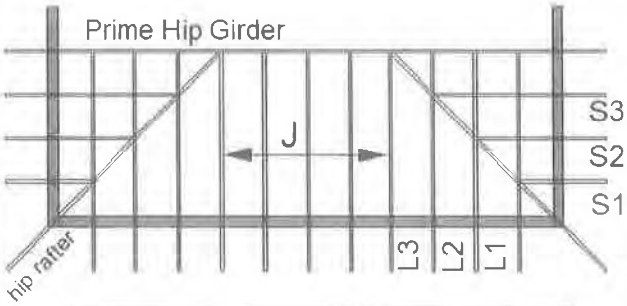

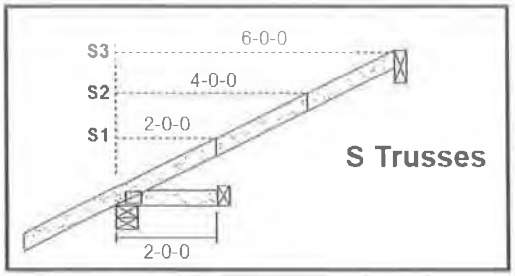

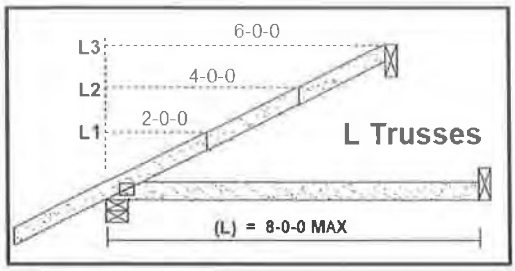

Specified Load Rating:

Top chord Live:	51.0 PSF or less
Top chord Dead:	6.0 PSF or less
Bottom chord Live:	0.0 PSF
Bottom chord Dead:	7.3 PSF or less

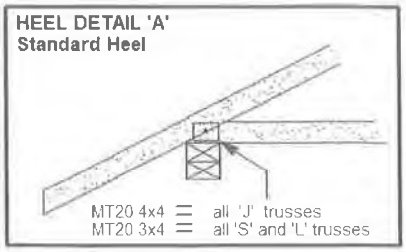

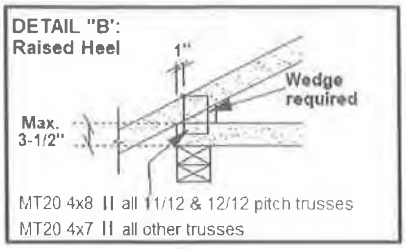

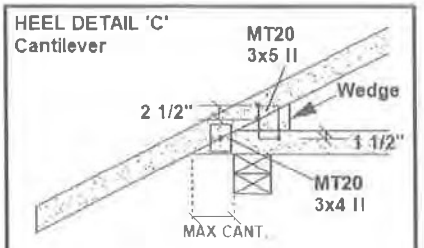

CANTILEVER DETAIL "C"

SLOPE	MAX CANT.	WEDGE PLATE	WEDGE SIZE
3/12	17"	3 X 5	2 X 3
4/12	14"	3 X 5	2 X 3
5/12	12"	3 X 5	2 X 4
6/12	10"	3 X 5	2 X 4
7/12	9"	3 X 5	2 X 6
8/12	8.5"	3 X 5	2 X 6
9/12	8"	3 X 5	2 X 6
10/12	7.5"	3 X 5	2 X 6

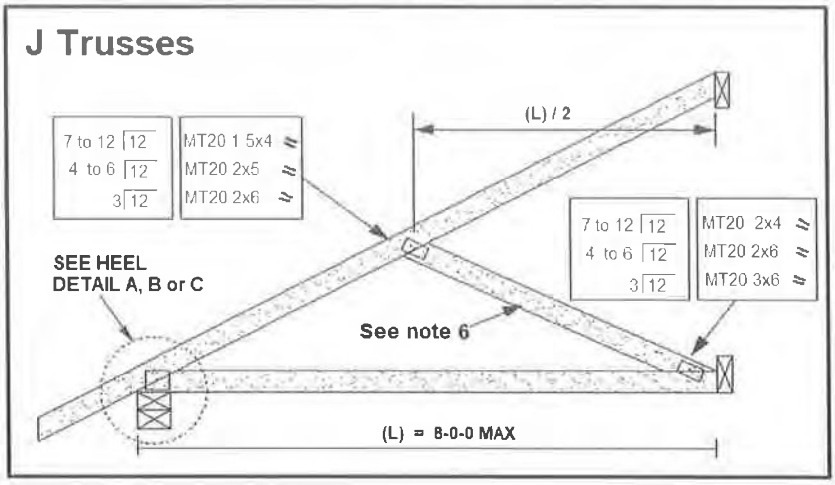

PEO
Certificate No. 10889485

NOTES:

1. This detail is valid only for projects conforming to **PART 9 NBCC 2015** that do not require a wind analysis to be incorporated into the design of the trusses.
2. Overhang length shall not exceed 24 inches.
3. All lumber shall be 2x4 SPF (or D-Fir) DRY No. 2 grade or better.
4. All plates specified are MITEK MT20, pressed into both faces of each truss. Heel plates of all trusses shall conform to heel details 'A', 'B' or 'C'.
5. Diagonal hip rafter design shall conform to section 9.23.14.6 of NBCC 2015.
6. For 6.0 ft. or less span, diagonal web on truss 'J" is optional. Girder design must reflect choice of partial jack ('J' with diagonal web) or open jack ('J' without diagonal web)
7. All truss-to-rafter and truss-to-truss connections shall be specified as per MITEK standard detail *'MSD2015-H: Toe-Nail Capacity Details'*

©2021 MiTek Canada Inc.240 Stirling Cr. Bradford Ontario, L3Z 4L5 (800) 268-3434, www.mitek.ca

CORPORATION OF THE CITY OF OSHAWA
TRUE COPY
OF PERMIT PLANS
Dec 06 2023
PER
CHIEF BUILDING OFFICIAL

STANDARD DETAIL **MSD2015-K**

MHP 23038

Issued: **MARCH 1, 2022**
Expiry: **APRIL 30, 2024**

STANDARD GABLE END DETAIL

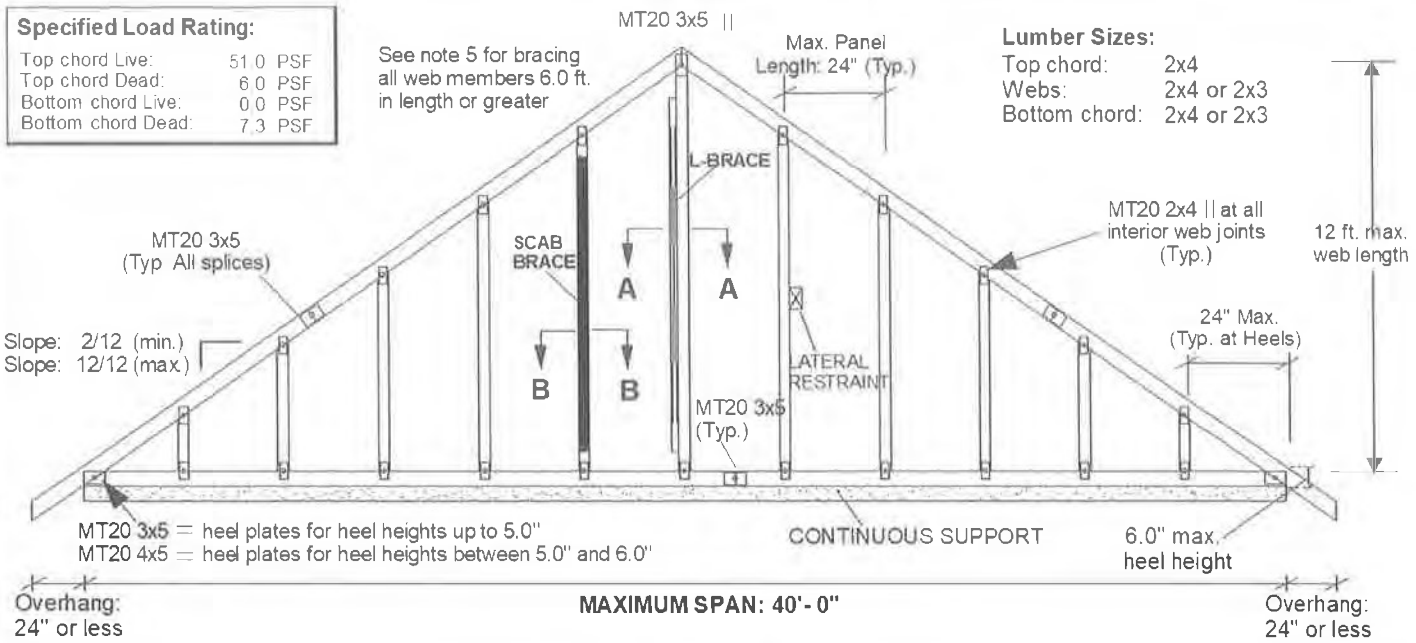

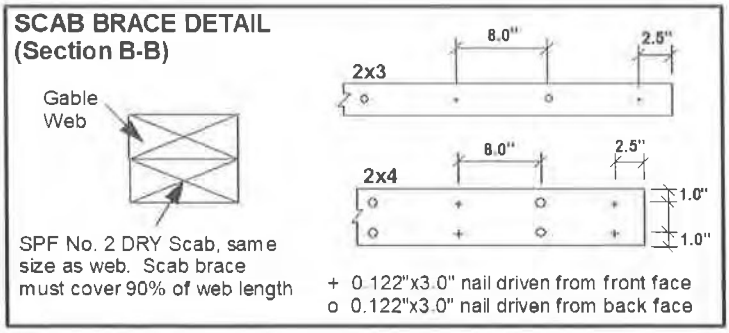

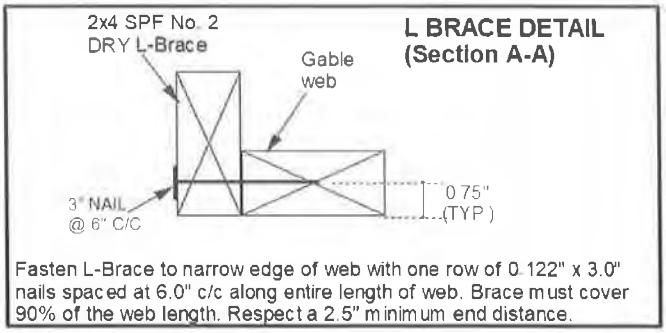

Notes:

1. This detail is only valid for projects conforming to **Part 9, NBCC 2015** that do not require a wind analysis to be incorporated into the design of the truss.
2. This detail is for vertical (gravity) load rating of the truss only. Truss must be continuously supported over the entire length of bottom chord.
3. Maximum web length not to exceed 12.0 ft. Spacing of gable stud webs in the truss not to exceed 24 inches cc.
4. Splice joints shall not be located in the first panel adjacent to the heel joint or peak joint.
5. Lateral restraint required at half-length of all webs over 6.0 ft. long. Alternatively install an L-Brace or scab brace as shown above. Scab braces shall be limited to 10 ft. long webs or less.
6. All plates are MITEK MT20 pressed into both faces of truss.
7. All lumber to be SPF (or D-Fir) DRY and of No.2 grade or better.
8. Additional building bracing is typically installed to brace the face of the end wall assembly. See BCSI Canada '*Building Designer Responsibilities for Gable End Frame Bracing*' for additional information on building bracing for gable-end assemblies.

PEO
Certificate No. 10889485

LICENSED PROFESSIONAL ENGINEER
2022-04-05
C. Cordogiannis
90553736
PROVINCE OF ONTARIO

©2020 MiTek Canada Inc., 240 Stirling Crescent, Bradford, Ontario, L3Z 4L5 | (800) 268-3434, www.mitek.ca

CORPORATION OF THE CITY OF OSHAWA
TRUE COPY
OF PERMIT PLANS
Dec 06 2023
PER:
CHIEF BUILDING OFFICIAL

MHP 23038

CANADA B1C

BCSI-B1C SUMMARY SHEET - GUIDE FOR HANDLING, INSTALLING, RESTRAINING AND BRACING OF TRUSSES

Spans over 60' may require complex permanent bracing. Please always consult a registered design professional.

WARNING!

General Notes

Trusses are not marked in any way to identify the frequency or location of temporary lateral restraint and diagonal bracing. Follow the recommendations for handling, installing and temporary restraining and bracing of trusses. Refer to BCSI CANADA – Guide to Good Practice for Handling, Installing, Restraining & Bracing of Metal Plate Connected Wood Trusses* for more detailed information.

Truss Design Drawings may specify locations of permanent lateral restraint or reinforcement for individual truss members. Refer to the BCSI-B3C Summary Sheet* for more information. All other permanent bracing design is the responsibility of the building designer.

Remarques générales

Les fermes ne sont pas marquées d'aucune façon pour identifier la fréquence ou l'emplacement de la retenue latérale temporaire et du contreventement diagonal. Respectez les recommandations pour la manipulation, l'installation ainsi que la retenue et le contreventement temporaires des fermes. Reportez-vous au BCSI CANADA – Guide to Good Practice for Handling, Installing, Restraining & Bracing of Metal Plate Connected Wood Trusses (Guide de bonnes pratiques pour la manipulation, l'installation, la retenue et le contreventement des fermes en bois reliées par une plaque métallique) pour obtenir des renseignements plus détaillés.*

Les dessins de conception de fermes peuvent préciser des emplacements de retenue latérale permanente ou de renforcement pour des membrures de fermes individuelles. Reportez-vous à la fiche sommaire BCSI-B3C pour obtenir plus de renseignements. Le concepteur du bâtiment est responsable de toute autre conception de contreventement.*

WARNING The consequences of improper handling, erecting, installing, restraining and bracing can result in a collapse of the structure, or worse, serious personal injury or death.

AVERTISSEMENT Les conséquences d'une manipulation, d'une implantation, d'une installation, d'une retenue et d'un contreventement inappropriés peuvent entraîner l'effondrement de la structure, ou pire, des blessures graves ou la mort.

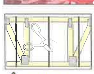

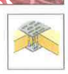

CAUTION Exercise care when removing banding and handling trusses to avoid damaging trusses and prevent injury. Wear personal protective equipment for the eyes, feet, hands and head when working with trusses.

MISE EN GARDE Faites attention lorsque vous retirez des sangles et manipulez des fermes pour éviter d'endommager les fermes et prévenir les blessures. Portez de l'équipement de protection individuelle pour les yeux, les pieds, les mains et la tête lorsque vous travaillez avec des fermes.

CAUTION Use special care in windy weather or near power lines and airports.

MISE EN GARDE Faites preuve d'une attention particulière lors des conditions venteuses ou près des lignes électriques et des aéroports.

Handling – *Manipulation*

NOTICE Avoid lateral bending.

Évitez la flexion latérale.

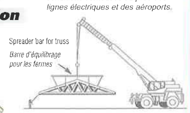

Use proper rigging and hoisting equipment.

Utilisez l'équipement de montage et de levage approprié.

NOTICE The contractor is responsible for properly receiving, unloading and storing the trusses at the jobsite. Unload trusses to smooth surface to prevent damage.

L'entrepreneur est responsable de la réception, du déchargement et de l'entreposage appropriés des fermes sur le chantier de construction. Déchargez les fermes sur une surface lisse pour éviter tout dommage.

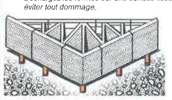

Trusses may be unloaded directly on the ground at the time of delivery or stored temporarily in contact with the ground after delivery. If trusses are to be stored for more than one week, place blocking of sufficient height beneath the stack of trusses at 8' (2.4 m) to 10' (3 m) on center (oc).

Les fermes peuvent être déchargées directement sur le sol au moment de la livraison ou rangées temporairement en contact avec le sol après la livraison. Si les fermes seront entreposées pendant plus d'une semaine, placez des blocs d'une hauteur suffisante sous la pile de fermes à une distance de 2,4m (8 pi) à 3m (10 pi) entraxes.

For trusses stored for more than one week, cover bundles to protect from the environment.

Pour les fermes entreposées pendant plus d'une semaine, couvrez les lots pour les protéger des intempéries.

Refer to BCSI CANADA* for more detailed information pertaining to handling and jobsite storage of trusses.

Reportez-vous au BCSI CANADA pour obtenir des renseignementsplus détaillés concernant la manipulation et l'entreposage des fermes sur le chantier de construction.*

DO NOT store unbraced bundles upright. *N'entreposez PAS verticalement les lots non contreventés.*

DO NOT store on uneven ground. *N'entreposez PAS sur un sol inégal.*

Hoisting and Placement of Truss Bundle
Manutention et mis en place des paquets de ferme

DON'T overload the crane.

NE surchargez PAS la crue.

NEVER use banding to lift a bundle.

N'utilisez JAMAIS de feuillards métalliques seuls pour soulever un lot.

A single lift point may be used for bundles of top chord pitch trusses up to 45' (13.7 m) and parallel chord trusses up to 30' (9.1 m).
Use at least two lift points for bundles of top chord pitch trusses up to 60' (18.3 m) and parallel chord trusses up to 45' (13.7 m). Use at least three lift points for bundles of top chord pitch trusses >60' (18.3 m) and parallel chord trusses >45' (13.7 m).

Un seul point de levage peut être utilisé pour les lots de fermes en pente à membrure supérieure jusqu'à 13,7m (45 pi) et de fermes à membrure parallèle jusqu'à 9,1m (30 pi). Utilisez au moins trois points de levage pour les lots de fermes à membrure supérieure inclinée >18,3m (60 pi) et fermes à membrure parallèle >13,7m (45 pi).

WARNING Do not over load supporting structure with truss bundle.

AVERTISSEMENT Ne surchargez pas la structure d'appui avec un lot de fermes.

Place truss bundles in stable position.

Positionnez les lots de manière stable.

Mechanical Hoisting Recommendations for Single Trusses
Recommandations de levage mécanique pour les fermes uniques

NOTICE Using a single pick-point at the peak can damage the truss.

Le fait d'utiliser un seul point de prélèvement au faîte peut endommager la ferme.

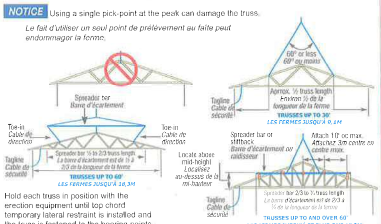

Hold each truss in position with the erection equipment until top chord temporary lateral restraint is installed and the truss is fastened to the bearing points.

Retenez chaque ferme en position avec l'équipement de montage jusqu'à ce que le dispositif de retenue latérale temporaire de la membrure supérieure soit installé et que la ferme soit fixée aux supports d'appui.

Installation of Single Trusses by Hand
Installation manuelle de fermes individuelles

Trusses 20' (6.1 m) or less, support near peak.

Les fermes de 6,1m (20 pi) ou moins doivent être supportées au faîte.

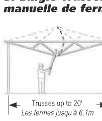

Trusses 30' (9.1 m) or less, support at quarter points.

Les fermes de 9,1m (30 pi) ou moins doivent être supportées aux quarts de la longueur.

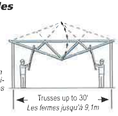

Temporary Restraint & Bracing
Retenue et contreventement temporaires

NOTICE Refer to BCSI-B2C* for more information.

Reportez-vous au BCSI-B2C pour obtenir plus de renseignements.*

Locate ground braces for first truss directly in line with all rows of top chord temporary lateral restraint (see table in the next column).

Localisez les contreventements du sol de la première ferme directement en ligne avec toutes les rangées de la retenue latérale temporaire à la membrure supérieure (consultez le tableau de la colonne suivante).

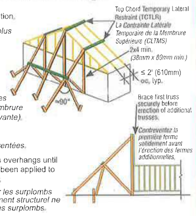

DO NOT walk on unbraced trusses.

NE marchez PAS sur des fermes non contreventées.

DO NOT stand on truss overhangs until structural sheathing has been applied to the truss and overhangs.

NE VOUS TENEZ PAS sur les surplombs de ferme avant que le revêtement structurel ne soit appliqué sur la ferme et les surplombs.

Steps to Setting Trusses
Étapes pour placer les fermes

1) Install ground bracing. 2) Set first truss and attach securely to ground bracing. 3) Set next 4 trusses with short member temporary lateral restraint (see below). 4) Install top chord diagonal bracing (see below). 5) Install web member plane diagonal bracing to stabilize the first five trusses (see below). 6) Install bottom chord temporary lateral restraint and diagonal bracing (see below). 7) Repeat process with groups of four trusses until all trusses are set.

1) Installez le contreventement de sol. 2) Placez la première ferme, puis fixez-la solidement au contreventement de sol. 3) Placez les quatre fermes suivantes avec la retenue latérale temporaire de la membrure courte (ci-dessous). 4) Installez le contreventement diagonal de la membrure supérieure (ci-dessous). 5) Installez le contreventement diagonal du plan de la membrure d'âme pour stabiliser les cinq premières fermes (consultez la deuxième figure dans la colonne). 6) Installez la retenue latérale temporaire de la membrure inférieure et le contreventement diagonal (ci-dessous). 7) Répétez la procédure par tranche de quatre fermes jusqu'à ce que toutes les fermes soient installées.

NOTICE Refer to BCSI-B2C* for more information.

Reportez-vous au BCSI-B2C pour obtenir plus de renseignements.*

Restraint/Bracing for All Planes of Trusses
Retenue et contreventement pour tous les plans de fermes

Minimum lumber used for lateral restraint and diagonal bracing is 2x4 stress-graded lumber. Attach to each truss with at least 2-3" common spiral (0.122" x 3"), 2-3" common wire (0.144" x 3") or 2-3" pneumatic (0.131" x 3") nails.

Le bois utilisé pour les retenues latérales et le contreventement en diagonale doit être minimum en 2x4 classé. Fixez sur chaque ferme avec au moins des clous communs vrillés de 2-3" x 0.122", clous communs 3" x 0.144" ou clous pneumatiques 2-3" (3" x 0.131").

This restraint and bracing method is for all trusses except 3x2 and 4x2 parallel chord trusses (PCTs). See top of next column for temporary restraint and bracing of PCTs.

Cette méthode de retenue et de renforcement convient à toutes les fermes, sauf les fermes à membrure parallèle de 3x2 et 4x2 (FMP). Reportez-vous à la partie supérieure de la colonne suivante pour la retenue et le renforcement temporaires des FMP.

1) TOP CHORD — *MEMBRURE SUPÉRIEURE*

Truss Span *La Portée de la Ferme*	Top Chord Temporary Lateral Restraint (TCTLR) Spacing *L'Espacement de la Contrainte Latérale Temporaire de la Membrure Supérieure (CLTMS)*
Up to 30' *(Jusqu'à 9,1m)*	10' oc max. *(3m c/c max.)*
30' to 45' *(9,1m à 13,7m)*	8' oc max. *(2,4m c/c max.)*
45' to 60' *(13,7m à 18,3mm)*	6' oc max. *(1,8m c/c max.)*
60' to 80'* *(18,3m à 24,4m)*	4' oc max. *(1,2m c/c max.)*

*Consult a registered design professional for trusses longer than 60' (18.3 m).
*Consultez un concepteur professionnel enregistré pour les fermes qui sont plus longues que 60 pi (18,3m).

See BCSI-B2C* for TCTLR options.

Reportez-vous au BCSI-B2C pour connaître les options de CLTMS.*

NOTICE Refer to BCSI-B3C* for gable end frame restraint/bracing/reinforcement information.

Pour obtenir des renseignements sur a retenue, le contreventement et le renforcement des charpentes de pignon, reportez-vous au BCSI-B3C.

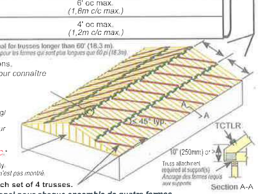

Note: Ground bracing not shown for clarity.
Pour simplifier, le contreventement de sol n'est pas montré.

Repeat diagonal braces for each set of 4 trusses.
Répétez le renforcement diagonal pour chaque ensemble de quatre fermes.

2) WEB MEMBER PLANE — *PLAN DEMEMBRURE D'ÂME*

NOTICE **Lateral Restraint & Diagonal Bracing Are Very Important**

La Retenue Latérale Et Le Contreventement Diagonal Sont Très Importants

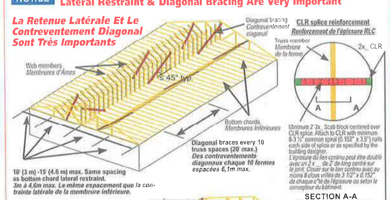

3) BOTTOM CHORD — *MEMBRURE INFÉRIEURE*

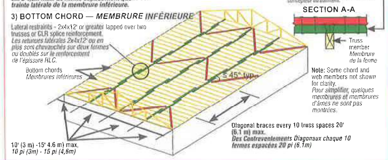

Restraint & Bracing for 3x2 and 4x2 Parallel Chord Trusses
Retenue et contreventement pour les fermes à membrure parallèle de 3x2 et de 4x2

NOTICE Refer to BCSI-B7C Summary Sheet* for more information.

*Pour obtenir plus de renseignements, reportez-vous à la fiche sommaire BCSI-B7C.**

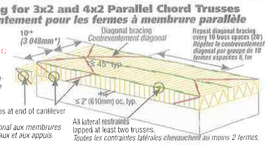

*Top chord temporary lateral restraint spacing shall be 10' oc max.
**L'espacement de la contrainte latérale temporaire des membrures supérieures doit être 10' pi (3m) c/c max.*

Installing — *Installation*

Tolerances for out-of-plane.
Tolérances hors plans.

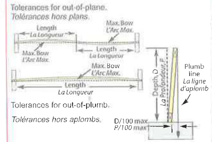

Tolerances for out-of-plumb.
Tolérances hors aplombs.

Out-of-Plumb *Hors d'Aplomb*	
D/100 *P/100*	D (ft.) *P (mm)*
1/8" (3mm)	1' (305mm)
1/4" (6mm)	2' (610mm)
3/8" (10mm)	3' (914mm)
1/2" (13mm)	4' (1,2m)
5/8" (16mm)	5' (1,5m)
3/4" (19mm)	6' (1,8m)
7/8" (22mm)	7' (2,1m)
1" (25mm)	≥8' (2,4m)

Out-of-Plane– *Hors Axe*	
Max. Bow	Truss Length
3/8" (10mm)	12.5' (3,8m)
7/16" (11mm)	14.6' (4,5m)
1/2" (13mm)	16.7' (5,1m)
9/16" (14mm)	18.8' (5,7m)
5/8" (16mm)	20.8' (6,3m)
11/16" (17mm)	22.9' (7m)
3/4" (19mm)	25.0' (7,6m)
7/8" (22mm)	29.2' (8,9m)
1" (25mm)	≥33.3' (≥10,2m)

Construction Loading
Chargement de construction

DO NOT proceed with construction until all lateral restraint and bracing is securely and properly in place.

NE continuez PAS la construction sans que toutes les retenues latérales et tous les contreventements soient bien fixés et adéquatement mis en place.

DO NOT exceed maximum stack heights. Refer to BCSI-B4C* for more information.

*NE dépassez PAS les hauteurs d'empilement maximales. Pour obtenir plus de renseignements, reportez-vous au BCSI-B4C.**

Maximum Stack Height for Material on Trusses[1] *La Hauteur Maximum des Piles de Matériaux sur les Fermes*	
Material *Le Matériel*	Height *La Hauteur*
Gypsum Board *Le Panneau de Gypse*	10" *(250mm)*
Plywood or OSB *Le Contreplaqué ou OSB*	12" *(305mm)*
Asphalt Shingles *Les Bardeaux d'Asphalte*	2 bundles *2 paquets*
Concrete Block *Les Blocs de Béton*	8" *(203mm)*
Clay Tile *Les Tuiles d'Argile*	3-4 tiles high *3 à 4 tuiles d'épaisseur*

1. Table is based on trusses designed with a live load of 40 psf or greater. Contact a registered design professional for other loading conditions.
2. Stack heights assume short-term duration of load. Install stacks of materials as quickly as possible.

NEVER stack materials near a peak, at mid-span, on cantilevers or overhangs.

N'EMPILEZ JAMAIS des matériaux près d'un faîte, au milieu, sur des poutres-consoles ou des surplombs.

DO NOT overload small groups or single trusses.

NE surchargez PAS de petits groupes ou des fermes uniques.

Place loads over as many trusses as possible.

Répartissez la charge sur le plus grand nombre de fermes possible.

Position loads over load bearing walls.

Positionnez les chargessur des murs porteurs.

Alterations — *Modifications*

NOTICE Refer to BCSI-B5C.*

*Reportez-vous au BCSI-B5C.**

DO NOT cut, alter, or drill any structural member of a truss unless specifically permitted by the truss design drawing.

NE coupez, NE modifiez et NE percez PAS les éléments de structure d'une ferme à moins que cela soit spécifiquement permis par le dessin de conception des fermes.

NOTICE Trusses that have been overloaded during construction or altered without the truss manufacturer's prior approval may render the truss manufacturer's limited warranty null and void.

La garantie limitée du fabricant des fermes sera annulée si les fermes ont été surchargées pendant la construction ou modifiées sans l'approbation préalable du fabricant des fermes.

*Contact the component manufacturer for more information or consult a registered design professional for assistance.

**Communiquez avec le fabricant du composant pour obtenir de plus amples renseignements ou consultez un professionnel en conception agréé pour obtenir de l'aide.*

NOTE: The methods, procedures and recommendations set forth herein are intended to ensure that trusses and components are handled, erected and braced SAFELY. These recommendations are based upon the collective experience of personnel involved with truss and component design, manufacture and installation, and are presented only as a GUIDE for use by qualified Building Designers and Contractors. These recommendations are neither intended to supersede the Building Designer's design specifications nor do they preclude the use of other equivalent methods. SBCA and TPIC expressly disclaim any responsibility for damages arising from the use, application or reliance on the recommendations and information contained herein.

REMARQUE: Les méthodes, les procédures et les recommandations décrites dans le présent document sont destinées à s'assurer que toutes les fermes et que tous les composants sont manipulés, érigés et contreventés de manière SÉCURITAIRE. Ces recommandations sont fondées sur l'expérience collective du personnel concerné par la conception des fermes et des composants, la fabrication et l'installation, et elles sont présentées uniquement à titre de LIGNES DIRECTRICES aux fins d'utilisation par les concepteurs et les entrepreneurs enbâtiment qualifiés. Ces recommandations ne sont pas destinées à remplacer les spécifications de conception du concepteur du bâtiment ni à empêcher l'usage d'autres méthodes équivalentes. SBCA et TPIC renoncent expressément à toute responsabilité visant les dommages découlant de l'utilisation, de l'application ou de la fiabilité relative aux recommandations et aux renseignements indiqués dans le présent document.

SBCA
Structural Building Components Association
6300 Enterprise Lane • Madison, WI 53719
608-274-4849 • sbcindustry.com

TPIC
Truss Plate Institute of Canada c/o Mitek Canada
100 Industrial Rd • Bradford, ON L3Z 3G7
905 952-2900 • tpic.ca

CANADAB1 200220

This document summarizes the information provided in Section B1C of the 2014 Edition of Building Component Safety Information BCSI CANADA — Guide to Good Practice for Handling, Installing, Restraining & Bracing of Metal Plate Connected Wood Trusses. Copyright © 2020 Structural Building Components Association, Truss Plate Institute and Truss Plate Institute of Canada. All Rights Reserved. This guide or any part thereof may not be reproduced in any form without the written permission of the publishers. Printed in the United States of America.
Ce document résume les renseignements fournis dans l'article B1C de l'édition 2014 de Building Component Safety Information BCSI CANADA — Guide to Good Practice for Handling, Installing, Restraining & Bracing of Metal Plate Connected Wood Trusses. Droit d'auteur © 2020 Structural Building Components Association, Truss Plate Institute et Truss Plate Institute of Canada. Tous droits réservés. Ce guide et toute partie de ce dernier ne peuvent être reproduits sous aucune forme sans la permission écrite des éditeurs. Imprimé aux États-Unis d'Amérique.

AVERTISSEMENT! **GUIDE POUR LA MANIPULATION, L'INSTALLATION, LA RETENUE ET LE CONTREVENTEMENT DES FERMES**

Les portées supérieures à 18,3m (60 pi) peuvent exiger un contreventement permanent complexe. Veuillez toujours concepteur professionnel enregistré.

CORPORATION OF THE CITY OF OSHAWA
TRUE COPY
OF PERMIT PLANS
Dec 06 2023
PER: CHIEF BUILDING OFFICIAL

MHP 23038

CANADA B3C BCSI-B3C SUMMARY SHEET - PERMANENT RESTRAINT/BRACING OF CHORDS & WEB MEMBERS

Truss clear spans of 60' or greater may require complex permanent bracing. Please always consult a registered design professional.

WARNING Disregarding permanent restraint/bracing is a major cause of truss field performance problems and has been known to lead to roof or floor system collapse.

AVERTISSEMENT Le fait de négliger la retenue et le contreventement permanents est une cause majeure des problèmes visant la performance des fermes sur le chantier et cela est reconnu pour avoir entraîné l'effondrement des systèmes de toit et de plancher.

CAUTION Trusses with clear spans of 60 feet (18.3 m) or greater, may require complex permanent bracing. Please always consult a registered design professional.

MISE EN GARDE Les fermes ayant des portées libres de 18,3m (60 pi) et plus peuvent exiger un contreventement permanent complexe. Veuillez toujours consulter un concepteur professionnel agréé.

Restraint/Bracing Materials & Fasteners
Matériaux et attaches de retenue et de contreventement

Commonly used restraint/bracing materials include wood structural panels, gypsum board sheathing, stress-graded lumber, proprietary metal products, and metal purlins and straps.

Les matériaux de retenue et de contreventement communs incluent les panneaux structuraux de bois, le revêtement de panneaux de gypse, le bois classé par résistance mécanique, les produits métalliques exclusifs, les pannes et les feuillards métalliques.

MINIMUM ATTACHMENT REQUIREMENTS FOR LUMBER RESTRAINT/BRACING[1,2]
LES EXIGENCES MINIMUMS DES ATTACHMENTS POUR LA CONTRAINTE/LE CONTREVENTEMENT DU BOIS[1,2]

Lumber Size *Taille de Bois*	Minimum Nail Size *Taille Minimum de Clou*	Minimum Number of Nails per Connection *Nombre Minimum de Clous par Connexion*
2x4 stress-graded *38mm x 89mm classé par la résistance mécanique*	3" common spiral (0.122"x3") *clous vrillés ordinaires 3" (3mm x 76mm)*	2
	3" common wire (0.144"x3") *clous ronds ordinaire 3" (3.7mm x 76mm)*	
2x6 stress-graded *38mm x 140mm classé par la résistance mécanique*	0.131" x 3" pneumatic *clous pneumatique 0,131"x3"(3.3mm x 76mm)*	3

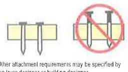

[1] Other attachment requirements may be specified by the truss designer or building designer.
[2] The grade/size and attachment for bracing materials such as wood structural panels, gypsum board sheathing, proprietary metal restraint/bracing products, and metal purlins and straps are provided by the building designer.

[1] Des autres exigences d'attachement peuvent être spécifiées par le dessinateur de ferme ou le concepteur du bâtiment.
[2] La taille et l'attachement pour des matériaux de contreventement comme les panneaux structuraux de bois, le revêtement de panneaux de gypse, les produits métalliques exclusifs pour la contrainte ou le contreventement, et des pannes et des feuillards sont fournis par le concepteur du bâtiment.

Permanent Bracing for the Various Planes of a Truss
Contreventement permanent pour les divers plans d'une ferme

Permanent bracing is important because it:
a) prevents out-of-plane buckling of truss members,
b) helps maintain proper truss spacing,
c) resists and transfers lateral loads from wind and seismic forces.

Le contreventement permanent est important parce qu'il :
a) prévient le flambement hors plan des membrures de fermes.
b) aide à maintenir l'espacement approprié des fermes.
c) résiste aux charges latérales des forces du vent et des forces sismiques et les transfère.

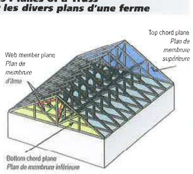

Trusses require permanent bracing within ALL of the following planes:
1. Top chord plane
2. Bottom chord plane
3. Web member plane

Les fermes exigent un contreventement permanentdans TOUS les plans suivants :
1. Le plan de la membrure supérieure
2. Le plan de la membrure inférieure
3. Le plan de la membrure d'âme

CAUTION Without permanent bracing the truss, or a portion of its members, will buckle (i.e., fail) at loads far less than design.

MISE EN GARDE Sans un contreventement permanent, la ferme, ou une partie de ses membrures, flambera (c'est-à-dire fera défaut) à des charges grandement inférieures à celles indiquées dans la conception.

1. Permanent Bracing for the Top Chord Plane
Contreventement permanent pour le plan de membrure supérieure

Use plywood, oriented strand board (OSB), or wood or metal structural purlins that are properly braced. Attach to each truss.

Utilisez du contreplaqué, des panneaux OSB ou des pannes structurales de bois ou de métal correctement contreventés. Fixez à chaque ferme.

The truss design drawing (TDD) provides information on the assumed support for the top chord.

Le dessin de conception de ferme (DCF) fournit des renseignements sur le support prévu pour la membrure supérieure.

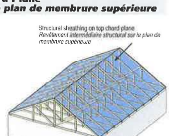

Fastener size and spacing requirements and grade for the sheathing, purlins and bracing are provided in the building code and/or by the building designer.

Le code du bâtiment et (ou) le concepteur du bâtiment fournissent les exigences relatives à la taille des attaches, à l'espacement et au classement du revêtement, des pannes et du contreventement.

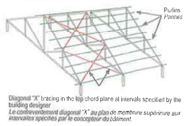

Diagonal "X" bracing in the top chord plane at intervals specified by the building designer
Le contreventement diagonal "X" au plan de membrure supérieure aux intervalles spécifiés par le concepteur du bâtiment.

2. Permanent Bracing for the Bottom Chord Plane
Contreventement permanent pour le plan de membrure inférieure

Use rows of continuous lateral restraint with diagonal bracing, gypsum board sheathing or some other ceiling material capable of functioning as a diaphragm.

Utilisez des rangées de retenues latérales continues avec un contreventement diagonal, un revêtement de panneaux de gypse ou un autre matériau en mesure de fonctionner comme diaphragme.

The TDD provides information on the assumed support for the bottom chord.

Le DCF fournit des renseignements sur le support prévu pour la membrure inférieure.

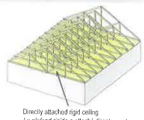

Install bottom chord permanent lateral restraint at the spacing indicated on the TDD and/or by the building designer with a maximum of 10' (3 m) on center.

Installez la retenue latérale permanente de la membrure inférieure à l'espacement indiqué sur le DCF et (ou) par le concepteur du bâtiment avec un maximum de 3m (10 pi) entraxes.

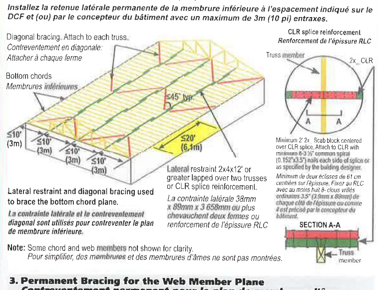

Lateral restraint and diagonal bracing used to brace the bottom chord plane.
La contrainte latérale et le contreventement diagonal sont utilisés pour contreventer le plan de membrure inférieure.

Note: Some chord and web members not shown for clarity.
Pour simplifier, des membrures et des membrures d'âmes ne sont pas montrées.

3. Permanent Bracing for the Web Member Plane
Contreventement permanent pour le plan de membrure d'âme

Web member permanent bracing collects and transfers buckling restraint forces and/or lateral loads from wind and seismic forces. The same bracing can often be used for both functions.

Le contreventement permanent de la membrure d'âme récupère et transfère les forces de retenue de flambement et (ou) les charges latérales des forces du vent et des forces sismiques. Le même contreventement peut souvent être utilisé pour les deux fonctions.

Individual Web Member Permanent Restraint & Bracing
Retenue et contreventement permanents des membrures d'âme individuelles

Check the TDD to determine which web members (if any) require restraint to resist buckling.

Vérifiez le DCF pour déterminer quelles membrures d'âme (si applicable) nécessitent une retenue pour résister au flambement.

Restrain and brace with:
A. continuous lateral restraint & diagonal bracing.
B. individual member web reinforcement.

Retenue et contreventement à l'aide :
A. d'une retenue latérale continue et d'un contreventement diagonal.
B. d'un renforcement des membrures d'âme individuelles.

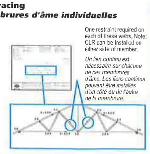

A. Continuous Lateral Restraint (CLR) & Diagonal Bracing
Retenue latérale continue (RLC) et contreventement diagonal

Attach each row of CLR at the locations shown on the TDD.

Fixez la RLC aux emplacements indiqués sur le DCF.

Install the diagonal bracing at an angle of less-than-or-equal-to 45° to the CLR and position so that it crosses the web in close proximity to the CLR. Attach the diagonal brace as close to the top and bottom chords as possible and to each web it crosses. **Repeat every 20' (6.1 m) or less.**

Installez le contreventement diagonal à un angle de 45° ou moins par rapport à la RLC et le positionner de sorte qu'il traverse l'âme à proximité de la RLC. Fixez le contreventement diagonal aussi près que possible des membrures supérieures et inférieures et de chaque âme qu'il croise. ***Répétez à tous les 6,1m (20 pi) ou moins.***

Examples of Diagonal Bracing with Continuous Restraint
Des exemples du contreventement diagonal avec la contrainte latérale continue

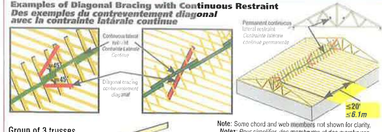

Note: Some chord and web members not shown for clarity.
***Notez:** Pour simplifier, des membrures et des membrures d'âme ne sont pas montrées.*

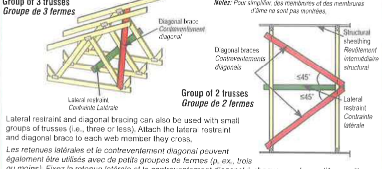

Lateral restraint and diagonal bracing can also be used with small groups of trusses (i.e., three or less). Attach the lateral restraint and diagonal brace to each web member they cross.

Les retenues latérales et le contreventement diagonal peuvent également être utilisés avec de petits groupes de fermes (p. ex., trois ou moins). Fixez la retenue latérale et le contreventement diagonal à chaque membrure d'âme qu'ils traversent.

ALWAYS DIAGONALLY BRACE THE CONTINUOUS LATERAL RESTRAINT!
CONTREVENTEZ TOUJOURS EN DIAGONAL LA RETENUE LATÉRALE CONTINUE!

B. Individual Web Member Reinforcement
Renforcement des membrures d'âme individuelles

T-, L-, Scab, I-, U-Reinforcement and proprietary metal reinforcement provide an alternative for resisting web buckling. Refer to TDD, supplemental document provided by the truss designer or the construction documents prepared by the building designer for the size, grade, span and attachment of the web reinforcement.

Le renforcement en T, en L, en lambourde doublée, en I, en U, le renforcement par produits métalliques exclusifs sont des solutions de rechange pour la résistance au flambement. Référez-vous au TDD, document supplémentaire fourni par le concepteur de poutrelles et ou de ferme de toit ou aux documents de construction préparés par concepteur du bâtiment pour la grosseur, le grade, la portée et la méthode de fixation du d'âme renforcement.

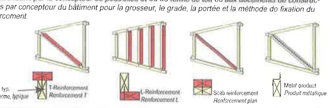

Web Member Plane Permanent Building Stability Bracing to Transfer Wind & Seismic Forces
Contreventement permanent pour assurer la stabilité du bâtiment des plans des membrures d'âme pour transférer les forces du vent et les forces sismiques

The web member restraint or reinforcement specified on a TDD is required to resist buckling due to axial forces caused by the in-plane loads applied to the truss. Additional restraint and bracing within the web member plane may also be required to transfer lateral forces due to wind and/or seismic loads applied perpendicular to the plane of the trusses. This restraint and bracing is typically specified by the building designer.

La contrainte ou le renforcement des membrures d'âme précisé au DAF est requis pour résister au flambement sous des forces axiales causées par les chargements verticaux. Une contrainte ou un renforcement supplémentaire peut être requis dans le plan de la membrure d'âme pour transférer les forces latérales causées par le vent ou les charges sismiques exercées perpendiculairement au plan des fermes. Cette contrainte et ce renforcement sont typiquement précisés par le concepteur du bâtiment.

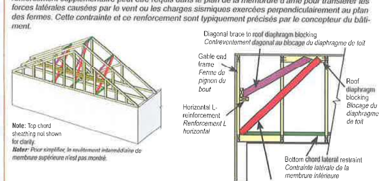

Gable end/wall permanent diagonal bracing. Locate in line with bottom chord permanent CLR or as specified by the building designer.
Le contreventement diagonal permanent du pignon du bout/mur. Placez en ligne avec la CLC permanente de la membrure inférieure ou comme est spécifié par le concepteur du bâtiment.

Some truss designers provide general design tables and details to assist the building designer in determining the bracing required to transfer lateral loads due to wind and/or seismic forces from the gable end frame into the roof and/or ceiling diaphragm.

Certains concepteurs de fermes fournissent des tableaux de conception généraux et des détails pour assister le concepteur du bâtiment à déterminer le contreventement requis pour transférer les charges latérales causées par les forces du vent et (ou) les forces sismiques provenant de la ferme du pignon jusqu'au diaphragme de toit et (ou) de plafond.

Gable End Frames and Sloped Bottom Chords
Ferme du pignon et membrures inférieures en pente

The gable end frame should always match the profile of the adjacent trusses to permit installation of proper bottom chord plane restraint & bracing unless special bracing is designed to support the end wall.

La ferme du pignon devrait toujours correspondre au profil des fermes adjacentes pour permettre l'installation de la retenue et du contreventement appropriés du plan de membrure inférieure, à moins qu'un contreventement spécial soit conçu pour supporter le mur d'extrémité.

CAUTION Using a flat bottom chord gable end frame with adjacent trusses that have sloped bottom chords is prohibited by some building codes as adequate bracing of this condition is difficult and sometimes impossible. Special end wall bracing design considerations are required by the building designer if the gable end frame profile does not match the adjacent trusses.

MISE EN GARDE Il est interdit par certains codes du bâtiment d'utiliser une ferme de pignon à membrure inférieure plate avec des fermes adjacentes qui ont des membrures inférieures en pente, car un contreventement adéquat dans cette condition est difficile, voire parfois impossible. Des considérations spéciales de conception du contreventement des murs d'extrémité sont exigées par le concepteur du bâtiment si le profil de la ferme de pignon ne correspond pas aux fermes adjacentes.

Permanent Bracing for Special Conditions
Contreventement permanent pour des conditions spéciales

Sway Bracing—*Entretoise de contreventement*

Sway bracing is installed at the discretion of the building designer to help stabilize the truss system and minimize the lateral movement due to wind and seismic loads.

L' entretoise de contreventement est installé à la discrétion du concepteur du bâtiment pour aider à stabiliser le système de fermes et à minimiser le mouvement latéral causé par les charges du vent et les charges sismiques.

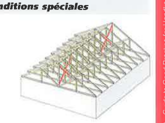

Sway bracing installed continuously across the building also serves to distribute gravity loads between trusses of varying stiffness.

L'entretoise de contreventement installée de façon continue le long d'un bâtiment sert également à distribuer les charges de gravité entre les fermes de rigidité variable.

Permanent Restraint/Bracing for the Top Chord in a Piggyback Assembly
Retenue et contreventement permanents pour la membrure supérieure dans un assemblage de fermes chapeaux

Provide restraint and bracing by:
- using rows of minimum 4x2 stress-graded lumber CLR and diagonal bracing.
- connecting the CLR into the roof diaphragm.
- adding structural sheathing or bracing frames.
- some other equivalent means.

Installez la retenue et le contreventement en :
- *utilisant des rangées de RLC et un contreventement diagonal de bois classé par résistance mécanique d'au moins 4x2.*
- *fixant la RLC au diaphragme du toit.*
- *ajoutant un revêtement structural ou des fermes de contreventement.*
- *utilisant un autre moyen équivalent.*

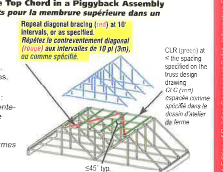

Refer to the TDD for the maximum assumed spacing between rows of lateral restraint (e.g. purlins) attached to the top chord of the supporting truss.

Reportez-vous au DAF pour connaître l'espacement maximal supposé entre les rangées de contrainte latérale (par ex., les pannes) fixées à la membrure supérieure de la ferme de support.

The TDD provides the assumed thickness of the restraint and minimum connection requirements between the cap and the supporting truss or restraint.

Le DCF fournit l'épaisseur prévue de la retenue et les exigences minimales de raccordement entre la ferme chapeau et la ferme portante ou la retenue.

If diagonal bracing is used to restrain the CLR(s), repeat **at 10' (3 m) intervals, or as specified** in the construction documents.

Si un contreventement diagonal est utilisé pour retenir la (les) RLC, répétez ***à des intervalles de 3m (10 pi) ou comme le précisent*** *les documents de construction.*

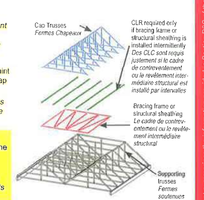

SBCA
Structural Building Components Association
6300 Enterprise Lane • Madison, WI 53719
608-274-4849 • sbcindustry.com

Truss Plate Institute of Canada
c/o MiTek Canada
100 Industrial Rd • Bradford, ON L3Z 3G7
905-952-2900 • tpic.ca

CANADAB3 190301

This document summarizes the information provided in Section B3C of the 2014 Edition of Building Component Safety Information BCSI CANADA - Guide to Good Practice for Handling, Installing, Restraining & Bracing of Metal Plate Connected Wood Trusses
Copyright © 2019 Structural Building Components Association and Truss Plate Institute of Canada. All Rights Reserved. This guide or any part thereof may not be reproduced in any form without the written permission of the publishers. Printed in the United States of America
Ce document résume les renseignements fournis dans l'article B3C de l'édition 2014 de Building Component Safety Information BCSI CANADA – Guide to Good Practice for Handling, Installing, Restraining & Bracing of Metal Plate Connected Wood Trusses

RETENUE ET CONTREVENTEMENT PERMANENTS DES MEMBRURES ET DES MEMBRURES D'ÂME

Les portées de 18,3m (60 pi) et plus peuvent exiger un contreventement permanent complexe. Veuillez toujours consulter un ingénieur professionnel.