CORPORATION OF THE CITY OF OSHAWA
TRUE COPY
OF PERMIT PLANS
Dec 06 2023
PER:
CHIEF BUILDING OFFICIAL

MHP 23038

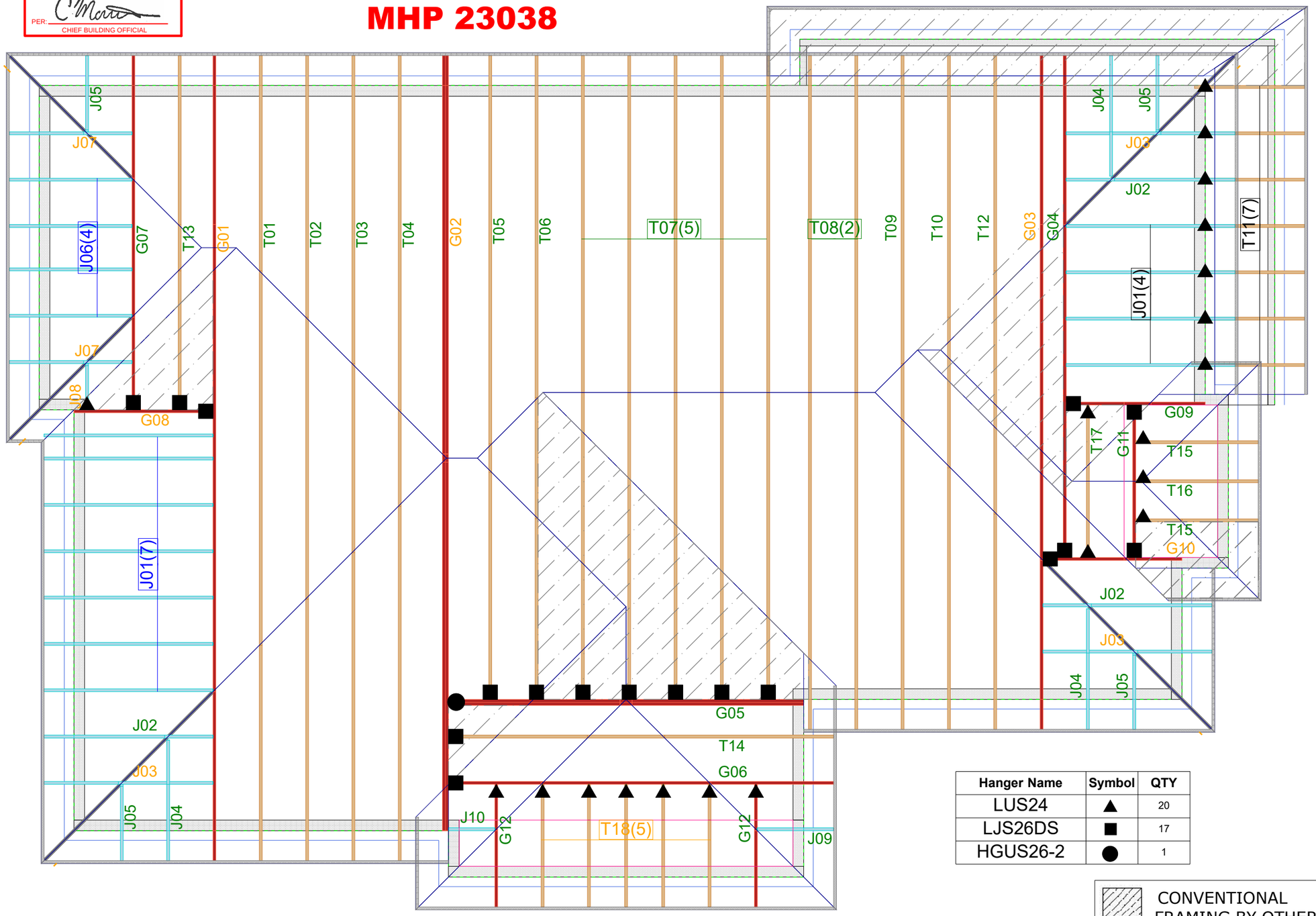

Hanger Name	Symbol	QTY
LUS24	▲	20
LJS26DS	■	17
HGUS26-2	●	1

CONVENTIONAL FRAMING BY OTHERS

ALL CONVENTIONAL FRAMING TO CONFORM WITH PART 9 OF THE OBC. ROOF RAFTERS THAT CROSS OVER TRUSSES TO BE MIN. 2x4 SPF @ 24" C/C WITH A 2x4 VERTICAL POST TO THE TRUSS BELOW. VERTICAL POSTS TO BE LATERALLY BRACED SO THAT UNBRACED LENGTH DOES NOT EXCEED 6'. DESIGN OF CONVENTIONAL FRAMING IS THE RESPONSIBILITY OF THE PROJECT ENGINEER.

JOB INFORMATION

Customer	GREENPARK HOMES
Job #	23-00118R0
Address	ZADORRA ESTATES OSHAWA,ON
Model	VILLA 11-ELEV 3
Sales Rep	RALPH MIRIGELLO
Designer	RB
Date	6/08/23
Path	C:\MITEK\CA\JOBS\GREENPARK\ZADORRA ESTATES\VILLA 11\VILLA 11-ELEV 3\

DESIGN INFORMATION

Code	NBCC 2015
Bldg	Residential - HSB (NBCC Part 9)
TC LL	34.8 lb/ft²
TC DL	6.0 lb/ft²
BC LL	0.0 lb/ft²
BC DL	7.3 lb/ft²
Deflection	LL=L/360 TL=L/360
Spacing	24" O/C unless otherwise noted
Complies With	OBC 2012 (2019 Amendment) CSA O86-14 and TPIC 2014

IMPORTANT INFORMATION

Hangers and Fasteners to be installed as per manufacturer

Refer to truss drawings in the Truss Engineering Package for ply-to-ply attachment notes

For site-framed valleys: top chords of all roof trusses must be laterally supported using 2x4 continuous bracing @24 O/C - all bracing must be anchored at ends as per TPIC Installation Guidelines

Read all notes on this page in addition to those shown on the KOTT Truss Engineering package

Field erection, handling and bracing are not the responsibility of KOTT, or KOTT Engineering

Unless noted otherwise, hurricane ties are to be installed at the bearings of all trusses > 40 ft clear span, and any girder or beam supporting trusses with a clear span >40 ft. See hanger legend for type.

Unless noted otherwise, for Part 9 bldgs, all trusses are to be anchored to the top of supporting walls as follows: trusses with a clear span <40 ft use 3-1/4" nails @ each bearing; trusses with a clear span >40 ft use 3-1/4" nails @ each bearing in addition to the appropriate hurricane tie.

KOTT Inc.
14 Anderson Blvd.
Uxbridge, ON
905.642.4400

CORPORATION OF THE CITY OF OSHAWA
TRUE COPY
OF PERMIT PLANS
Dec 06 2023
CHIEF BUILDING OFFICIAL

NE0723
GREENFIELD AREA - CABURRA
ESTATES - VILLA 11-3

Engineering Notes: Trusses

KOTT

MHP 23038

PLEASE READ ALL NOTES PRIOR TO INSTALLATION OF THE COMPONENT

RESPONSIBILITIES

THE UNDERSIGNED ENGINEER IS ONLY RESPONSIBLE FOR THE STRUCTURAL INTEGRITY OF THIS BUILDING COMPONENT FOR THE CONDITIONS AND LOADS SHOWN ON CALCULATION PAGE. THE STRUCTURAL INTEGRITY OF THE BUILDING AND THE VERIFICATION OF THE DIMENSIONS AND THE DESIGN LOADS USED ARE THE RESPONSIBILITY OF THE BUILDING DESIGNER.
THE UNDERSIGNED ENGINEER DISCLAIMS ANY RESPONSIBILITY FOR DAMAGES AS A RESULT OF FAULTY OR INCORRECT INFORMATION, SPECIFICATION AND/OR DESIGNS FURNISHED TO THE ENGINEER.
IT IS THE RESPONSIBILITY OF KOTT Inc. TO ENSURE THAT TRUSSES ARE MANUFACTURED IN CONFORMANCE WITH THESE DESIGNS AND WITH THE SPECIFICATIONS OUTLINED BELOW. THE UNDERSIGNED ENGINEER IS NOT RESPONSIBLE FOR QUALITY CONTROL IN THE TRUSS MANUFACTURING PLANT.

DESIGN INFORMATION

THIS DESIGN IS FOR AN INDIVIDUAL BUILDING COMPONENT AND HAS BEEN BASED ON INFORMATION PROVIDED BY KOTT DESIGN.

1. THE BUILDING USE AND OCCUPANCY TYPE IS AS INDICATED ON THE DRAWING.
2. GEOMETRY OF THE TRUSS AND DIMENSIONS INDICATED ON THE DRAWING ARE IDENTICAL TO THOSE OF THE INSTALLED TRUSS.
3. THE TRUSS LOADING INTENSITY AND DISTRIBUTION AS WELL AS LOAD TRANSFER MECHANISM IS THAT INDICATED ON THE DRAWING. NO BUILDINGS, TREES, PARAPETS OR OTHER PROJECTIONS HIGHER THAN THE ROOF FOR WHICH THE TRUSSES ARE USED ARE LOCATED WITHIN A DISTANCE LESS THAN TEN (10) TIMES THE DIFFERENCE IN HEIGHT, OR FIVE METERS (16 FT) WHICHEVER IS GREATER, UNLESS THE DRAWING INDICATES THAT THE SNOW DRIFTING HAS BEEN TAKEN INTO ACCOUNT.
4. THE TRUSSES ARE TO BE SUPPORTED AT THE BEARING POINTS INDICATED AND ANCHORED TO THE SUPPORTS WHERE CONSIDERED NECESSARY BY THE DESIGNER OF THE OVERALL STRUCTURE. BEARING SIZES SHOWN ARE THE MINIMUM REQUIRED TO PREVENT CRUSHING OF THE TRUSS MEMBERS AND DO NOT NECESSARILY TAKE INTO ACCOUNT STABILITY OF THE OVERALL BUILDING STRUCTURE. ELEVATION OF BEARINGS MUST BE CAREFULLY CHECKED AND SHIMMED TO ALIGNMENT FOR SOLID BEARINGS. ADEQUATE WOOD TRUSS BEARING IS THE RESPONSIBILITY OF THE BUILDING DESIGNER.

CODE

TRUSSES ARE DESIGNED IN CONFORMANCE WITH THE RELEVANT SECTIONS OF THE NATIONAL BUILDING CODE OF CANADA OR THE CANADIAN CODE FOR FARM BUILDINGS, WHICHEVER APPLIES TO THE BUILDING TYPE INDICATED ON THE DRAWING, THE ONTARIO BUILDING CODE, TPIC AND CANADIAN STANDARDS ASSOCIATION GUIDELINES.

HANDLING, INSTALLATION AND BRACING

1. THE TRUSSES MUST BE HANDLED AND INSTALLED BY A QUALIFIED PROFESSIONAL AS PER THE SUPPLIED DOCUMENT TITLED INFORMATION FOR TRUSS INSTALLERS AND THE BCSI-B1 AND BCSI-B3 SUMMARY SHEETS.
2. THE COMPRESSION CHORDS ARE LATERALLY BRACED BY CONTINUOUS RIGID DIAPHRAGM SHEATHING OR AS SPECIFIED ON THE DRAWING.
3. TEMPORARY AND PERMANENT BRACING MUST BE INSTALLED AS INDICATED ON THE TRUSS DRAWING AND ACCORDING TO THE BCSI-B1 AND BCSI-B3 SUMMARY SHEETS. BRACING FOR THE LATERAL STABILITY OF THE TRUSS IS TO BE PROVIDED BY THE BUILDING DESIGNER.
4. IT IS RECOMMENDED THAT A PROFESSIONAL ENGINEER'S ADVICE BE OBTAINED FOR THE BRACING OF TRUSSES SPANNING MORE THAN 12.37M (40'-7").

JOB NAME	TRUSS NAME	QUANTITY	PLY	JOB DESC.	DRWG NO.
NE0723-127	G01	1	1	GREENPARK - ZADORRA ESTATES - VILLA 11-3 (TRUSS DESC.)	

CORPORATION OF THE CITY OF OSHAWA
TRUE COPY
OF PERMIT PLANS
Dec 06 2023
PER
CHIEF BUILDING OFFICIAL
MHP 23038

Version 8.630 S Mar 22 2023 MiTek Industries, Inc. Wed Jul 19 16:54:02 2023 Page 1
ID:a_geEeAITwiPs63VUzyy33z8f4n-_yu6_0NGOK7u56YCwmzRM6c49eZ?_Zeg3ptmmnywSUJ

Scale = 1:55.2

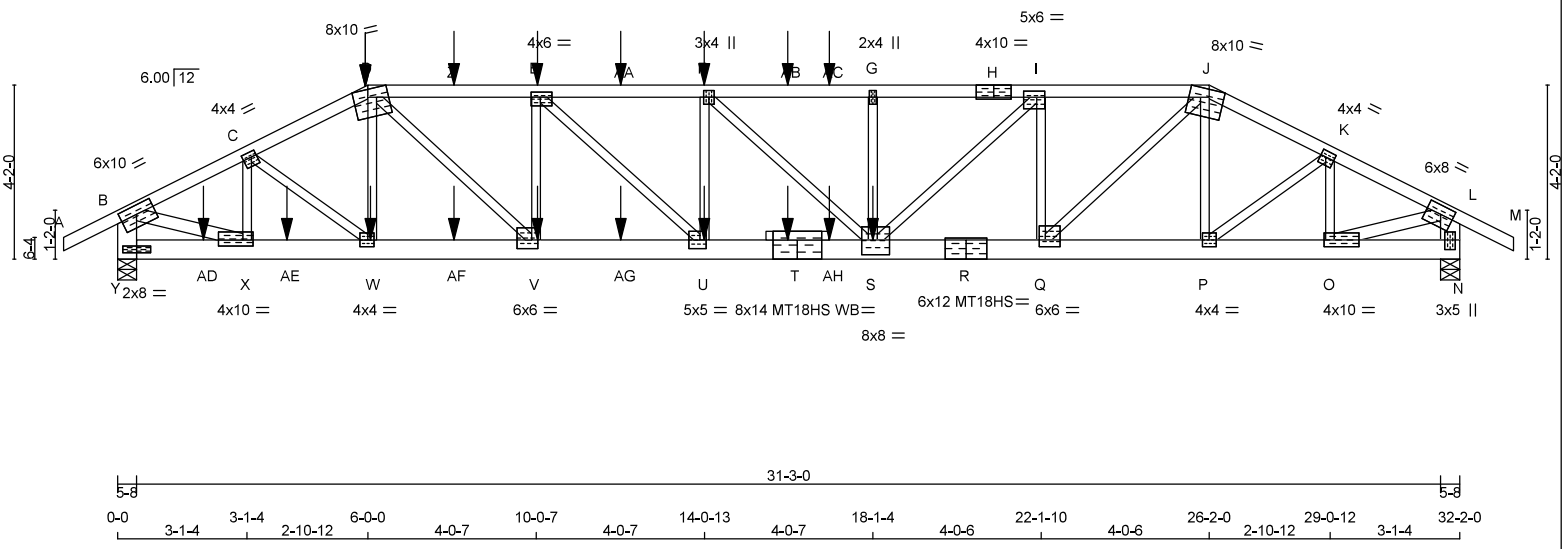

TOTAL WEIGHT = 155 lb [M]

LUMBER
N. L. G. A. RULES

CHORDS	SIZE		LUMBER	DESCR.
A - D	2x4	DRY	No.2	SPF
D - H	2x4	DRY	2100F 1.8E	SPF
H - J	2x4	DRY	2100F 1.8E	SPF
J - M	2x4	DRY	No.2	SPF
Y - B	2x6	DRY	No.2	SPF
N - L	2x6	DRY	No.2	SPF
Y - T	2x6	DRY	2100F 1.8E	SPF
T - R	2x6	DRY	2100F 1.8E	SPF
R - N	2x6	DRY	2100F 1.8E	SPF
ALL WEBS EXCEPT	2x3	DRY	No.2	SPF
B - X	2x4	DRY	No.2	SPF
O - L	2x4	DRY	No.2	SPF

DRY: SEASONED LUMBER.

PLATES (table is in inches)

JT	TYPE	PLATES	W	LEN	Y	X
B	TMVW-t	MT20	6.0	10.0	2.50	4.75
C	TMWW-t	MT20	4.0	4.0	1.50	1.50
D	TTWW-m	MT20	8.0	10.0	Edge	4.25
E	TMWW-t	MT20	4.0	6.0	1.50	2.75
F	TMWW+t	MT20	3.0	4.0		
G	TMW+w	MT20	2.0	4.0		
H	TS-t	MT20	4.0	10.0	Edge	5.00
I	TMWW-t	MT20	5.0	6.0	1.75	2.25
J	TTWW-m	MT20	8.0	10.0	Edge	4.25
K	TMWW-t	MT20	4.0	4.0	1.75	1.50
L	TMVW-t	MT20	6.0	8.0	2.50	3.75
N	BMV1+p	MT20	3.0	5.0	2.75	1.50
O	BMWW-t	MT20	4.0	10.0	2.00	3.00
P	BMWW-t	MT20	4.0	4.0		
Q	BMWW-t	MT20	6.0	6.0	2.00	1.75
R	BS-t	MT18HS	6.0	12.0		
S	BMWWW-t	MT20	8.0	8.0	4.25	2.00
T	BS-t	MT18HS	8.0	14.0		
U	BMWW-t	MT20	5.0	5.0	2.50	1.75
V	BMWW-t	MT20	6.0	6.0	2.50	1.75
W	BMWW-t	MT20	4.0	4.0	2.00	1.75
X	BMWW-t	MT20	4.0	10.0	1.75	3.00
Y	BVM1-l	MT20	2.0	8.0		

DIMENSIONS, SUPPORTS AND LOADINGS SPECIFIED BY FABRICATOR TO BE VERIFIED BY BUILDING DESIGNER

BEARINGS

JT	FACTORED GROSS REACTION VERT	HORZ	MAXIMUM FACTORED GROSS REACTION DOWN	HORZ	UPLIFT	INPUT BRG IN-SX	REQRD BRG IN-SX
Y	4319	0	4319	0	0	5-8	5-8
N	3879	0	3879	0	0	5-8	4-13

UNFACTORED REACTIONS

JT	1ST LCASE COMBINED	MAX./MIN. COMPONENT REACTIONS SNOW	LIVE	PERM.LIVE	WIND	DEAD	SOIL
Y	3015	2198 / 0	0 / 0	0 / 0	0 / 0	817 / 0	0 / 0
N	2707	1985 / 0	0 / 0	0 / 0	0 / 0	722 / 0	0 / 0

BEARING MATERIAL TO BE SPF NO.2 OR BETTER AT JOINT(S) Y, N
BEARING SIZE FACTOR = 1.15 AT JNT(S) Y, N (BASED ON SUPPORT DEPTH = 1-8)

BRACING
TOP CHORD TO BE SHEATHED OR MAX. PURLIN SPACING = 1.95 FT.
MAX. UNBRACED BOTTOM CHORD LENGTH = 10.00 FT OR RIGID CEILING DIRECTLY APPLIED.

ALL PITCH BREAKS AND PERIMETER CORNER JOINTS MUST BE LATERALLY RESTRAINED.

LOADING
TOTAL LOAD CASES: (4)

CHORDS

MEMB. FR-TO	MAX. FACTORED FORCE (LBS)	FACTORED VERT. LOAD (PLF) FROM	TO	LC1	MAX CSI (LC)	MAX. UNBRAC LENGTH
A- B	0 / 36	-119.4	-119.4	0.17 (1)	10.00	
B- C	-5767 / 0	-119.4	-119.4	0.63 (1)	2.31	
C- D	-6654 / 0	-119.4	-119.4	0.74 (1)	1.95	
D- Z	-8338 / 0	-119.4	-119.4	0.69 (1)	2.47	
Z- E	-8338 / 0	-119.4	-119.4	0.69 (1)	2.47	
E-AA	-9799 / 0	-119.4	-119.4	0.81 (1)	2.13	
AA- F	-9799 / 0	-119.4	-119.4	0.81 (1)	2.13	
F-AB	-10153 / 0	-119.4	-119.4	0.89 (1)	1.97	
AB-AC	-10153 / 0	-119.4	-119.4	0.89 (1)	1.97	
AC- G	-10153 / 0	-119.4	-119.4	0.89 (1)	1.97	
G- H	-10153 / 0	-119.4	-119.4	0.74 (1)	2.19	
H- I	-10153 / 0	-119.4	-119.4	0.74 (1)	2.19	
I- J	-8034 / 0	-119.4	-119.4	0.55 (1)	2.70	
J- K	-5921 / 0	-119.4	-119.4	0.61 (1)	2.29	
K- L	-5134 / 0	-119.4	-119.4	0.53 (1)	2.60	
L- M	0 / 36	-119.4	-119.4	0.17 (1)	10.00	
Y- B	-4196 / 0	0.0	0.0	0.31 (1)	5.13	
N- L	-3770 / 0	0.0	0.0	0.27 (1)	5.39	
Y-AD	0 / 0	-18.2	-18.2	0.11 (1)	10.00	
AD- X	0 / 0	-18.2	-18.2	0.11 (1)	10.00	
X-AE	0 / 5169	-18.2	-18.2	0.38 (1)	10.00	
AE- W	0 / 5169	-18.2	-18.2	0.38 (1)	10.00	
W-AF	0 / 5925	-18.2	-18.2	0.36 (1)	10.00	
AF- V	0 / 5925	-18.2	-18.2	0.36 (1)	10.00	
V-AG	0 / 8338	-18.2	-18.2	0.50 (1)	10.00	
AG- U	0 / 8338	-18.2	-18.2	0.50 (1)	10.00	
U- T	0 / 9799	-18.2	-18.2	0.65 (1)	10.00	
T-AH	0 / 9799	-18.2	-18.2	0.65 (1)	10.00	
AH- S	0 / 9799	-18.2	-18.2	0.65 (1)	10.00	
S- R	0 / 8034	-18.2	-18.2	0.55 (1)	10.00	
R- Q	0 / 8034	-18.2	-18.2	0.55 (1)	10.00	
Q- P	0 / 5270	-18.2	-18.2	0.32 (1)	10.00	
P- O	0 / 4603	-18.2	-18.2	0.34 (1)	10.00	
O- N	0 / 0	-18.2	-18.2	0.10 (1)	10.00	

WEBS

MEMB. FR-TO	MAX. FACTORED FORCE (LBS)	MAX CSI (LC)
X- C	-1405 / 0	0.25 (1)
C- W	0 / 968	0.24 (1)
W- D	-305 / 28	0.08 (1)
D- V	0 / 3307	0.82 (1)
V- E	-2200 / 0	0.57 (1)
E- U	0 / 2004	0.50 (1)
U- F	-1168 / 0	0.30 (1)
F- S	0 / 486	0.12 (1)
S- G	-651 / 0	0.17 (1)
S- I	0 / 2908	0.72 (1)
Q- I	-2492 / 0	0.65 (1)
Q- J	0 / 3791	0.94 (1)
P- J	-304 / 0	0.08 (1)
P- K	0 / 854	0.21 (1)
O- K	-1291 / 0	0.23 (1)
B- X	0 / 5327	0.94 (1)
O- L	0 / 4744	0.84 (1)

SPECIFIED CONCENTRATED LOADS (LBS)

JT	LOC.	LC1	MAX-	MAX+	FACE	DIR.	TYPE	HEEL	CONN.
D	6-0-0	-418	-418	—	BACK	VERT	TOTAL	—	C1
E	10-0-12	-102	-102	—	BACK	VERT	TOTAL	—	C1
F	14-0-12	-102	-102	—	BACK	VERT	TOTAL	—	C1
S	18-1-4	-1181	-1181	—	BACK	VERT	TOTAL	—	C1
T	16-0-12	-22	-22	—	BACK	VERT	TOTAL	—	C1
U	14-0-12	-22	-22	—	BACK	VERT	TOTAL	—	C1
V	10-0-12	-22	-22	—	BACK	VERT	TOTAL	—	C1
W	6-0-12	-22	-22	—	BACK	VERT	TOTAL	—	C1
Z	8-0-12	-102	-102	—	BACK	VERT	TOTAL	—	C1
AA	12-0-12	-102	-102	—	BACK	VERT	TOTAL	—	C1
AB	16-0-12	-102	-102	—	BACK	VERT	TOTAL	—	C1
AC	17-0-12	-102	-102	—	BACK	VERT	TOTAL	—	C1
AD	2-0-12	-22	-22	—	BACK	VERT	TOTAL	—	C1

DESIGN CRITERIA

*** SPECIAL LOADS ANALYSIS ***
GEOMETRY AND/OR BASIC LOADS CHANGED BY USER.
LOADS WERE DERIVED FROM USER INPUT
NO FURTHER MODIFICATIONS WERE MADE

SPECIFIED LOADS:

TOP CH.	LL	=	34.8	PSF
	DL	=	6.0	PSF
BOT CH.	LL	=	0.0	PSF
	DL	=	7.3	PSF
TOTAL LOAD		=	48.1	PSF

SPACING = 24.0 IN. C/C

LOADING IN FLAT SECTION BASED ON A SLOPE OF 2.00/12 MINIMUM

*** NON STANDARD GIRDER ***
ADDT'L USER-DEFINED LOADS APPLIED TO ALL LOAD CASES.

THIS TRUSS IS DESIGNED FOR RESIDENTIAL OR SMALL BUILDING REQUIREMENTS OF PART 9, NBCC 2015

THIS DESIGN COMPLIES WITH:
- PART 9 OF BCBC 2018 , NBC-2019AE
- PART 9 OF OBC 2012 (2019 AMENDMENT)
- CSA 086-14
- TPIC 2014

(55 % OF 48.1 P.S.F. G.S.L. PLUS 8.4 P.S.F. RAIN LOAD) EQUALS 34.8 P.S.F. SPECIFIED ROOF LIVE LOAD

ALLOWABLE DEFL.(LL)= L/360 (1.07")
CALCULATED VERT. DEFL.(LL) = L/ 858 (0.45")
ALLOWABLE DEFL.(TL)= L/360 (1.07")
CALCULATED VERT. DEFL.(TL) = L/ 503 (0.77")

CSI: TC=0.89/0.97 (F-G:1) , BC=0.65/0.97 (S-U:1) , WB=0.94/0.97 (B-X:1) , SSI=0.35/1.00 (F-G:1)

DOL LUMBER=1.00 NAIL=1.00 LS BEND=1.00 COMP=1.00 SHEAR=1.00 TENS= 1.00

COMPANION LIVE LOAD FACTOR = 1.00

AUTOSOLVE HEELS OFF

TRUSS PLATE MANUFACTURER IS NOT RESPONSIBLE FOR QUALITY CONTROL IN THE TRUSS MANUFACTURING PLANT .

NAIL VALUES

PLATE	GRIP(DRY) (PSI) MAX	MIN	SHEAR (PLI) MAX	MIN	SECTION (PLI) MAX	MIN
MT20	650	371	1747	788	1987	1873
MT18HS	586	403	2455	1382	3163	3004

PLATE PLACEMENT TOL. = 0.250 inches

PLATE ROTATION TOL. = 5.0 Deg.

JSI GRIP= 0.90 (Q) (INPUT = 0.90)
JSI METAL= 0.96 (D) (INPUT = 1.00)

CONTINUED ON PAGE 2

LICENSED PROFESSIONAL ENGINEER
N.A. EL-MASRI
PROVINCE OF ONTARIO
Jul 19, 2023

READ ALL NOTES ON THIS PAGE AND ON THE ENGINEERING NOTES: TRUSSES. THE NOTE PAGE IS AN INTEGRAL PART OF THIS DRAWING AS IT CONTAINS SPECIFICATIONS AND CRITERIA USED IN THE DESIGN OF THIS COMPONENT.

KOTT

JOB NAME	TRUSS NAME	QUANTITY	PLY	JOB DESC.	DRWG NO.
NE0723-127	G01	1	1	GREENPARK - ZADORRA ESTATES - VILLA 11-3 (TRUSS DESC.)	

CORPORATION OF THE CITY OF OSHAWA
TRUE COPY
OF PERMIT PLANS
Dec 06 2023
PER: CHIEF BUILDING OFFICIAL

Version 8.630 S Mar 22 2023 MiTek Industries, Inc. Wed Jul 19 16:54:02 2023 Page 2
ID:a_geEeAITwiPs63VUzyy33z8f4n-_yu6_0NGOK7u56YCwmzRM6c49eZ?_Zeg3ptmmnywSUJ

MHP 23038

Edge - INDICATES REFERENCE CORNER OF PLATE TOUCHES EDGE OF CHORD.

WB - INDICATES BLOCKING REQUIRED

SPECIFIED CONCENTRATED LOADS (LBS)

JT	LOC.	LC1	MAX-	MAX+	FACE	DIR.	TYPE	HEEL	CONN.
AE	4-0-12	-22	-22	—	BACK	VERT	TOTAL	—	C1
AF	8-0-12	-22	-22	—	BACK	VERT	TOTAL	—	C1
AG	12-0-12	-22	-22	—	BACK	VERT	TOTAL	—	C1
AH	17-0-12	-22	-22	—	BACK	VERT	TOTAL	—	C1

CONNECTION REQUIREMENTS

1) **C1:** A SUITABLE HANGER/MECHANICAL CONNECTION IS REQUIRED.

LICENSED PROFESSIONAL ENGINEER
N.A. EL-MASRI
PROVINCE OF ONTARIO
Jul 19, 2023

READ ALL NOTES ON THIS PAGE AND ON THE ENGINEERING NOTES: TRUSSES. THE NOTE PAGE IS AN INTEGRAL PART OF THIS DRAWING AS IT CONTAINS SPECIFICATIONS AND CRITERIA USED IN THE DESIGN OF THIS COMPONENT.

KOTT

JOB NAME	TRUSS NAME	QUANTITY	PLY	JOB DESC.	DRWG NO.
NE0723-127	G02	1	2	GREENPARK - ZADORRA ESTATES - VILLA 11-3 (TRUSS DESC.)	

CORPORATION OF THE CITY OF OSHAWA
TRUE COPY
OF PERMIT PLANS
Dec 06 2023
PER: C Martin
CHIEF BUILDING OFFICIAL

MHP 23038

Version 8.630 S Mar 22 2023 MiTek Industries, Inc. Wed Jul 19 16:54:03 2023 Page 1
ID:a_geEeAITwiPs63VUzyy33z8f4n-S9SUBMOu9dFIjF7OTTUguJ9Gg2xUj2kqITdJIEywSUI

Scale = 1:60.6

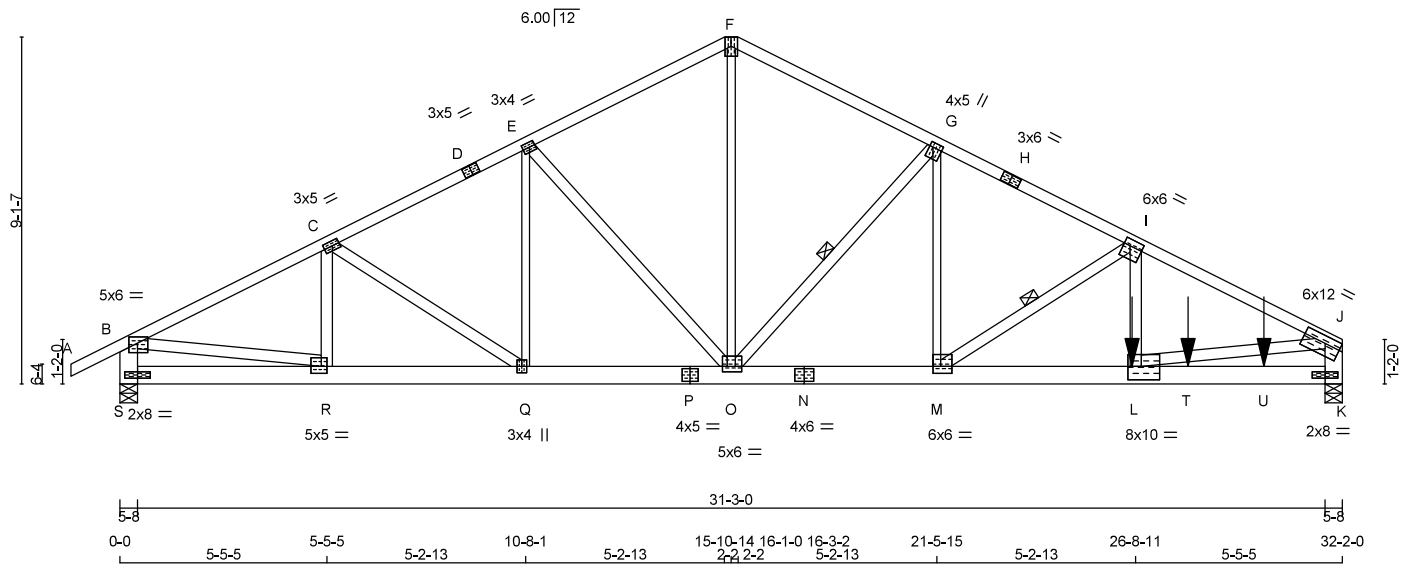

TOTAL WEIGHT = 2 X 169 = 337 lb [M]

LUMBER
N. L. G. A. RULES

CHORDS	SIZE		LUMBER	DESCR.
A - D	2x4	DRY	No.2	SPF
D - F	2x4	DRY	No.2	SPF
F - H	2x4	DRY	No.2	SPF
H - J	2x4	DRY	2100F 1.8E	SPF
S - B	2x6	DRY	No.2	SPF
K - J	2x6	DRY	No.2	SPF
S - P	2x6	DRY	No.2	SPF
P - N	2x6	DRY	No.2	SPF
N - K	2x6	DRY	2100F 1.8E	SPF
ALL WEBS EXCEPT	2x4	DRY	No.2	SPF
Q - E	2x3	DRY	No.2	SPF
M - G	2x3	DRY	No.2	SPF
B - R	2x4	DRY	2100F 1.8E	SPF
L - J	2x4	DRY	2100F 1.8E	SPF
O - F	2x3	DRY	No.2	SPF

DRY: SEASONED LUMBER.

DESIGN CONSISTS OF 2 TRUSSES BUILT SEPARATELY THEN FASTENED TOGETHER AS FOLLOWS:

CHORDS	#ROWS	SURFACE SPACING (IN)	LOAD(PLF)
TOP CHORDS : (0.122"X3") SPIRAL NAILS			
A-D	1	12	TOP
D-F	1	12	TOP
F-H	1	12	TOP
H-J	1	12	TOP
S-B	2	12	TOP
K-J	2	12	TOP
BOTTOM CHORDS : (0.122"X3") SPIRAL NAILS			
S-P	2	12	TOP
P-N	2	12	TOP
N-K	2	12	SIDE(0.0)
WEBS : (0.122"X3") SPIRAL NAILS			
2x3	1	6	
2x4	1	6	

NAILS TO BE DRIVEN FROM ONE SIDE ONLY.

GIRDER NAILING ASSUMES NAILED HANGERS ARE FASTENED WITH MIN. 3-0 INCH NAILS.

LICENSED PROFESSIONAL ENGINEER
N.A. EL-MASRI
PROVINCE OF ONTARIO
Jul 19, 2023

READ ALL NOTES ON THIS PAGE AND ON THE ENGINEERING NOTES: TRUSSES. THE NOTE PAGE IS AN INTEGRAL PART OF THIS DRAWING AS IT CONTAINS SPECIFICATIONS AND CRITERIA USED IN THE DESIGN OF THIS COMPONENT.

DIMENSIONS, SUPPORTS AND LOADINGS SPECIFIED BY FABRICATOR TO BE VERIFIED BY BUILDING DESIGNER

BEARINGS

JT	FACTORED GROSS REACTION VERT	HORZ	MAXIMUM FACTORED GROSS REACTION DOWN	HORZ	UPLIFT	INPUT BRG IN-SX	REQRD BRG IN-SX
S	3866	0	3866	0	0	5-8	5-8
K	10997	0	10997	0	0	5-8	5-8

UNFACTORED REACTIONS

JT	1ST LCASE COMBINED	MAX./MIN. COMPONENT REACTIONS SNOW	LIVE	PERM.LIVE	WIND	DEAD	SOIL
S	2697	1978 / 0	0 / 0	0 / 0	0 / 0	719 / 0	0 / 0
K	7669	5640 / 0	0 / 0	0 / 0	0 / 0	2029 / 0	0 / 0

BEARING MATERIAL TO BE SPF NO.2 OR BETTER AT JOINT(S) S, K
BEARING SIZE FACTOR = 1.15 AT JNT(S) S, K (BASED ON SUPPORT DEPTH = 1-8)

BRACING
TOP CHORD TO BE SHEATHED OR MAX. PURLIN SPACING = 2.68 FT.
MAX. UNBRACED BOTTOM CHORD LENGTH = 10.00 FT OR RIGID CEILING DIRECTLY APPLIED.

ALL PITCH BREAKS AND PERIMETER CORNER JOINTS MUST BE LATERALLY RESTRAINED.

1 - 1x4 LATERAL BRACE(S) AT 1/ 2 LENGTH OF G-O. DBS = 6-0-0 . CBF = 174 LBS.
1 - 1x4 LATERAL BRACE(S) AT 1/ 2 LENGTH OF I-M. DBS = 4-0-0 . CBF = 201 LBS.

DBS = DIAGONAL BRACE SPACING (MAX). CBF = CUMULATIVE BRACING FORCE (PER BRACE). FASTEN LATERAL BRACE(S) TO EACH PLY USING (0.122"X3") SPIRAL NAILS : 1 NAIL FOR 2x3 BRACE(S), 2 FOR 1x4, 2x4, 2x5, 3 FOR 2x6, 4 FOR 2x8, 5 FOR 2x10, AND 6 FOR 2x12.

END VERTICAL(S) MUST BE SHEATHED OR HAVE BRACES AS INDICATED IN THE MAX. UNBRACED LENGTH COLUMN OF THE TABLE BELOW

LOADING
TOTAL LOAD CASES: (4)

CHORDS

MEMB. FR-TO	MAX. FORCE (LBS)	FACTORED VERT. LOAD (PLF) FROM	TO	LC1 CSI (LC)	MAX UNBRAC LENGTH
A- B	0 / 36	-119.4	-119.4	0.09 (1)	10.00
B- C	-5836 / 0	-119.4	-119.4	0.47 (1)	3.66
C- D	-5848 / 0	-119.4	-119.4	0.46 (1)	3.64
D- E	-5848 / 0	-119.4	-119.4	0.46 (1)	3.64
E- F	-5339 / 0	-119.4	-119.4	0.44 (1)	3.83
F- G	-5342 / 0	-119.4	-119.4	0.47 (1)	3.78
G- H	-8738 / 0	-119.4	-119.4	0.75 (1)	2.79
H- I	-8738 / 0	-119.4	-119.4	0.75 (1)	2.79
I- J	-16196 / 0	-119.4	-119.4	0.77 (1)	2.68
S- B	-3798 / 0	0.0	0.0	0.14 (1)	7.16
K- J	-9606 / 0	0.0	0.0	0.35 (1)	4.79
S- R	0 / 0	-18.2	-18.2	0.05 (1)	10.00
R- Q	0 / 5242	-18.2	-18.2	0.39 (1)	10.00
Q- P	0 / 5231	-18.2	-18.2	0.39 (1)	10.00
P- O	0 / 5231	-18.2	-18.2	0.39 (1)	10.00
O- N	0 / 7829	-18.2	-18.2	0.56 (1)	10.00
N- M	0 / 7829	-18.2	-18.2	0.56 (1)	10.00
M- L	0 / 14498	-18.2	-18.2	0.52 (1)	10.00
L- T	0 / 0	-18.2	-18.2	0.57 (1)	10.00
T- U	0 / 0	-18.2	-18.2	0.57 (1)	10.00
U- K	0 / 0	-18.2	-18.2	0.57 (1)	10.00

WEBS

MEMB. FR-TO	MAX. FORCE (LBS)	MAX CSI (LC)
R- C	-680 / 0	0.06 (1)
C- Q	-14 / 0	0.00 (1)
Q- E	0 / 106	0.02 (4)
E- O	-721 / 0	0.36 (1)
O- G	-4641 / 0	0.76 (1)
M- G	0 / 4280	0.53 (1)
M- I	-8021 / 0	0.82 (1)
L- I	0 / 7155	0.63 (1)
B- R	0 / 5295	0.22 (1)
L- J	0 / 14644	0.60 (1)
O- F	0 / 4228	0.52 (1)

SPECIFIED CONCENTRATED LOADS (LBS)

JT	LOC.	LC1	MAX-	MAX+	FACE	DIR.	TYPE	HEEL	CONN.
L	26-7-9	-5090	-5090	—	BACK	VERT	TOTAL	—	C1
T	28-1-4	-723	-723	—	BACK	VERT	TOTAL	—	C1
U	30-1-4	-1348	-1348	—	BACK	VERT	TOTAL	—	C1

CONNECTION REQUIREMENTS

1) **C1:** A SUITABLE HANGER/MECHANICAL CONNECTION IS REQUIRED.

DESIGN CRITERIA

*** SPECIAL LOADS ANALYSIS ***
GEOMETRY AND/OR BASIC LOADS CHANGED BY USER.
LOADS WERE DERIVED FROM USER INPUT
NO FURTHER MODIFICATIONS WERE MADE

SPECIFIED LOADS:

TOP CH.	LL	=	34.8	PSF
	DL	=	6.0	PSF
BOT CH.	LL	=	0.0	PSF
	DL	=	7.3	PSF
TOTAL LOAD		=	48.1	PSF

SPACING = 24.0 IN. C/C

*** NON STANDARD GIRDER ***
ADDT'L USER-DEFINED LOADS APPLIED TO ALL LOAD CASES.

THIS TRUSS IS DESIGNED FOR RESIDENTIAL OR SMALL BUILDING REQUIREMENTS OF PART 9, NBCC 2015

THIS DESIGN COMPLIES WITH:
- PART 9 OF BCBC 2018 , NBC-2019AE
- PART 9 OF OBC 2012 (2019 AMENDMENT)
- CSA 086-14
- TPIC 2014

(55 % OF 48.1 P.S.F. G.S.L. PLUS 8.4 P.S.F. RAIN LOAD) EQUALS 34.8 P.S.F. SPECIFIED ROOF LIVE LOAD

ALLOWABLE DEFL.(LL)= L/360 (1.07")
CALCULATED VERT. DEFL.(LL) = L/ 999 (0.20")
ALLOWABLE DEFL.(TL)= L/360 (1.07")
CALCULATED VERT. DEFL.(TL) = L/ 999 (0.35")

CSI: TC=0.77/0.97 (I-J:1) , BC=0.57/0.97 (K-L:1) , WB=0.82/0.97 (I-M:1) , SSI=0.56/1.00 (K-L:1)

DOL LUMBER=1.00 NAIL=1.00 LS BEND=1.00 COMP=1.00 SHEAR=1.00 TENS= 1.00

COMPANION LIVE LOAD FACTOR = 1.00

AUTOSOLVE HEELS OFF

TRUSS PLATE MANUFACTURER IS NOT RESPONSIBLE FOR QUALITY CONTROL IN THE TRUSS MANUFACTURING PLANT .

NAIL VALUES

PLATE	GRIP(DRY) (PSI) MAX	MIN	SHEAR (PLI) MAX	MIN	SECTION (PLI) MAX	MIN
MT20	650	371	1747	788	1987	1873

PLATE PLACEMENT TOL. = 0.250 inches

PLATE ROTATION TOL. = 5.0 Deg.

JSI GRIP= 0.90 (O) (INPUT = 0.90)
JSI METAL= 1.00 (J) (INPUT = 1.00)

CONTINUED ON PAGE 2

KOTT

JOB NAME	TRUSS NAME	QUANTITY	PLY	JOB DESC.	DRWG NO.
NE0723-127	G02	1	2	GREENPARK - ZADORRA ESTATES - VILLA 11-3 (TRUSS DESC.)	

CORPORATION OF THE CITY OF OSHAWA
TRUE COPY
OF PERMIT PLANS
Dec 06 2023
PER: C Martin
CHIEF BUILDING OFFICIAL

Version 8.630 S Mar 22 2023 MiTek Industries, Inc. Wed Jul 19 16:54:03 2023 Page 2
ID:a_geEeAITwiPs63VUzyy33z8f4n-S9SUBMOu9dFIjF7OTTUguJ9Gg2xUj2kqITdJIEywSUI

MHP 23038

PLATES (table is in inches)

JT	TYPE	PLATES	W	LEN	Y	X
B	TMVW-p	MT20	5.0	6.0	2.00	2.75
C	TMWW-t	MT20	3.0	5.0	1.50	2.25
D	TS-t	MT20	3.0	5.0		
E	TMWW-t	MT20	3.0	4.0	1.50	1.75
F	TTW+p	MT20	4.0	6.0	Edge	
G	TMWW+t	MT20	4.0	5.0	1.50	1.00
H	TS-t	MT20	3.0	6.0		
I	TMWW-t	MT20	6.0	6.0	2.00	2.00
J	TMVW-t	MT20	6.0	12.0	2.25	Edge
K	BVM1-I	MT20	2.0	8.0		
L	BMWW-t	MT20	8.0	10.0	4.25	4.25
M	BMWW-t	MT20	6.0	6.0	2.25	2.50
N	BS-t	MT20	4.0	6.0		
O	BMWWW-t	MT20	5.0	6.0	1.75	1.50
P	BS-t	MT20	4.0	5.0		
Q	BMWW+t	MT20	3.0	4.0		
R	BMWW-t	MT20	5.0	5.0	2.25	1.75
S	BVM1-I	MT20	2.0	8.0		

Edge - INDICATES REFERENCE CORNER OF PLATE TOUCHES EDGE OF CHORD.

LICENSED PROFESSIONAL ENGINEER
N.A. EL-MASRI
PROVINCE OF ONTARIO
Jul 19, 2023

READ ALL NOTES ON THIS PAGE AND ON THE ENGINEERING NOTES: TRUSSES. THE NOTE PAGE IS AN INTEGRAL PART OF THIS DRAWING AS IT CONTAINS SPECIFICATIONS AND CRITERIA USED IN THE DESIGN OF THIS COMPONENT.

KOTT

JOB NAME	TRUSS NAME	QUANTITY	PLY	JOB DESC.	DRWG NO.
NE0723-127	G03	1	1	GREENPARK - ZADORRA ESTATES - VILLA 11-3 (TRUSS DESC.)	

CORPORATION OF THE CITY OF OSHAWA
TRUE COPY
OF PERMIT PLANS
Dec 06 2023
PER
CHIEF BUILDING OFFICIAL

MHP 23038

Version 8.630 S Mar 22 2023 MiTek Industries, Inc. Wed Jul 19 16:54:04 2023 Page 1
ID:a_geEeAITwiPs63VUzyy33z8f4n-wL0sPiOWwxNcLPia1A?vRXiPDSDKSXfzX7MtqgywSUH

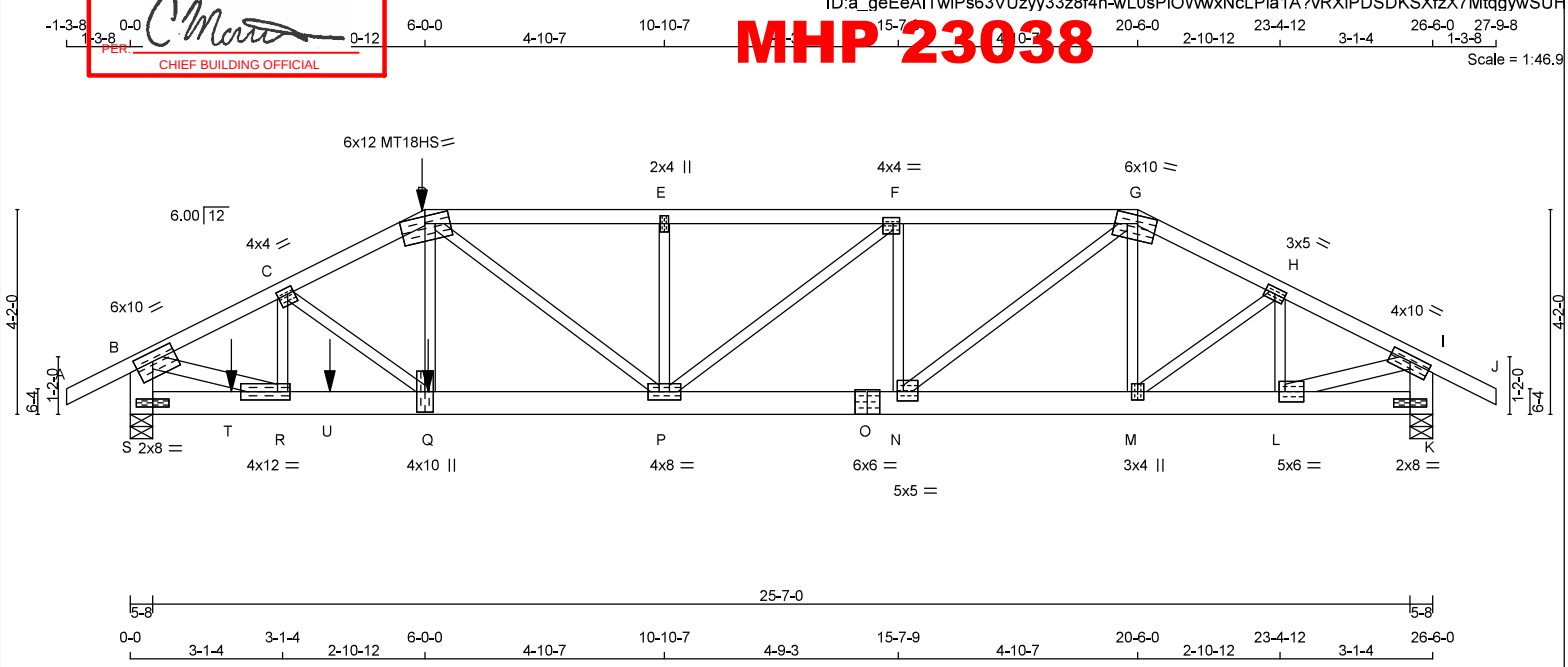

TOTAL WEIGHT = 125 lb [M]

LUMBER
N. L. G. A. RULES

CHORDS	SIZE		LUMBER	DESCR.
A - D	2x4	DRY	No.2	SPF
D - G	2x4	DRY	2100F 1.8E	SPF
G - J	2x4	DRY	No.2	SPF
S - B	2x6	DRY	No.2	SPF
K - I	2x6	DRY	No.2	SPF
S - O	2x6	DRY	2100F 1.8E	SPF
O - K	2x6	DRY	No.2	SPF
ALL WEBS	2x3	DRY	No.2	SPF
EXCEPT				
B - R	2x4	DRY	2100F 1.8E	SPF
L - I	2x4	DRY	2100F 1.8E	SPF

DRY: SEASONED LUMBER.

PLATES (table is in inches)

JT	TYPE	PLATES	W	LEN	Y	X
B	TMVW-t	MT20	6.0	10.0	2.25	4.25
C	TMWW-t	MT20	4.0	4.0	1.50	1.50
D	TTWW-m	MT18HS	6.0	12.0	Edge	
E	TMW+w	MT20	2.0	4.0		
F	TMWW-t	MT20	4.0	4.0	1.50	1.50
G	TTWW-m	MT20	6.0	10.0	2.00	4.50
H	TMWW-t	MT20	3.0	5.0		
I	TMVW-t	MT20	4.0	10.0	1.50	5.00
K	BVM1-I	MT20	2.0	8.0		
L	BMWW-t	MT20	5.0	6.0	2.50	1.50
M	BMWW+t	MT20	3.0	4.0		
N	BMWW-t	MT20	5.0	5.0	2.25	1.50
O	BS-t	MT20	6.0	6.0		
P	BMWWW-t	MT20	4.0	8.0		
Q	BMWW+t	MT20	4.0	10.0		
R	BMWW-t	MT20	4.0	12.0	2.00	3.00
S	BVM1-I	MT20	2.0	8.0		

Edge - INDICATES REFERENCE CORNER OF PLATE TOUCHES EDGE OF CHORD.

DIMENSIONS, SUPPORTS AND LOADINGS SPECIFIED BY FABRICATOR TO BE VERIFIED BY BUILDING DESIGNER

BEARINGS

JT	FACTORED GROSS REACTION VERT	HORZ	MAXIMUM FACTORED GROSS REACTION DOWN	HORZ	UPLIFT	INPUT BRG IN-SX	REQRD BRG IN-SX
S	4847	0	4847	0	0	5-8	5-8
K	2832	0	2832	0	0	5-8	5-8

UNFACTORED REACTIONS

JT	1ST LCASE COMBINED	MAX./MIN. COMPONENT REACTIONS SNOW	LIVE	PERM.LIVE	WIND	DEAD	SOIL
S	3377	2503 / 0	0 / 0	0 / 0	0 / 0	874 / 0	0 / 0
K	1974	1460 / 0	0 / 0	0 / 0	0 / 0	513 / 0	0 / 0

BEARING MATERIAL TO BE SPF NO.2 OR BETTER AT JOINT(S) S, K
BEARING SIZE FACTOR = 1.15 AT JNT(S) S, K (BASED ON SUPPORT DEPTH = 1-8)

BRACING
TOP CHORD TO BE SHEATHED OR MAX. PURLIN SPACING = 1.44 FT.
MAX. UNBRACED BOTTOM CHORD LENGTH = 10.00 FT OR RIGID CEILING DIRECTLY APPLIED.

ALL PITCH BREAKS AND PERIMETER CORNER JOINTS MUST BE LATERALLY RESTRAINED.

LOADING
TOTAL LOAD CASES: (4)

CHORDS

MEMB. FR-TO	MAX. FACTORED FORCE (LBS)	FACTORED VERT. LOAD (PLF) FROM	TO	LC1	MAX CSI (LC)	MAX. UNBRAC LENGTH
A- B	0 / 36	-119.4	-119.4	0.17 (1)	10.00	
B- C	-6575 / 0	-119.4	-119.4	0.78 (1)	1.90	
C- D	-7512 / 0	-119.4	-119.4	0.91 (1)	1.44	
D- E	-6618 / 0	-119.4	-119.4	0.54 (1)	2.99	
E- F	-6618 / 0	-119.4	-119.4	0.54 (1)	2.98	
F- G	-5559 / 0	-119.4	-119.4	0.47 (1)	3.33	
G- H	-4049 / 0	-119.4	-119.4	0.38 (1)	3.12	
H- I	-3634 / 0	-119.4	-119.4	0.34 (1)	3.34	
I- J	0 / 36	-119.4	-119.4	0.17 (1)	10.00	
S- B	-4742 / 0	0.0	0.0	0.34 (1)	4.82	
K- I	-2761 / 0	0.0	0.0	0.20 (1)	6.16	
S- T	0 / 0	-18.2	-18.2	0.08 (1)	10.00	
T- R	0 / 0	-18.2	-18.2	0.08 (1)	10.00	
R- U	0 / 5889	-18.2	-18.2	0.40 (1)	10.00	
U- Q	0 / 5889	-18.2	-18.2	0.40 (1)	10.00	
Q- P	0 / 6775	-18.2	-18.2	0.43 (1)	10.00	
P- O	0 / 5559	-18.2	-18.2	0.78 (1)	10.00	
O- N	0 / 5559	-18.2	-18.2	0.78 (1)	10.00	
N- M	0 / 3601	-18.2	-18.2	0.52 (1)	10.00	
M- L	0 / 3263	-18.2	-18.2	0.52 (1)	10.00	
L- K	0 / 0	-18.2	-18.2	0.10 (1)	10.00	

WEBS

MEMB. FR-TO	MAX. FACTORED FORCE (LBS)	MAX CSI (LC)
R- C	-1456 / 0	0.25 (1)
C- Q	0 / 1030	0.25 (1)
Q- D	0 / 2633	0.65 (1)
D- P	-199 / 0	0.13 (1)
P- E	-608 / 0	0.16 (1)
P- F	0 / 1354	0.34 (1)
N- F	-1463 / 0	0.38 (1)
N- G	0 / 2480	0.61 (1)
M- G	-97 / 34	0.03 (1)
M- H	0 / 431	0.11 (1)
L- H	-869 / 0	0.15 (1)
B- R	0 / 6069	0.50 (1)
L- I	0 / 3363	0.28 (1)

SPECIFIED CONCENTRATED LOADS (LBS)

JT	LOC.	LC1	MAX-	MAX+	FACE	DIR.	TYPE	HEEL	CONN.
D	6-0-0	-311	-311	—	FRONT	VERT	TOTAL	—	C1
Q	6-0-12	-2226	-2226	—	FRONT	VERT	TOTAL	—	C1
T	2-0-12	-22	-22	—	FRONT	VERT	TOTAL	—	C1
U	4-0-12	-22	-22	—	FRONT	VERT	TOTAL	—	C1

CONNECTION REQUIREMENTS

1) **C1:** A SUITABLE HANGER/MECHANICAL CONNECTION IS REQUIRED.

DESIGN CRITERIA

*** SPECIAL LOADS ANALYSIS ***
GEOMETRY AND/OR BASIC LOADS CHANGED BY USER.
LOADS WERE DERIVED FROM USER INPUT
NO FURTHER MODIFICATIONS WERE MADE

SPECIFIED LOADS:

TOP CH.	LL	=	34.8	PSF
	DL	=	6.0	PSF
BOT CH.	LL	=	0.0	PSF
	DL	=	7.3	PSF
TOTAL LOAD		=	48.1	PSF

SPACING = 24.0 IN. C/C

LOADING IN FLAT SECTION BASED ON A SLOPE OF 2.00/12 MINIMUM

*** NON STANDARD GIRDER ***
ADDT'L USER-DEFINED LOADS APPLIED TO ALL LOAD CASES.

THIS TRUSS IS DESIGNED FOR RESIDENTIAL OR SMALL BUILDING REQUIREMENTS OF PART 9, NBCC 2015

THIS DESIGN COMPLIES WITH:
- PART 9 OF BCBC 2018 , NBC-2019AE
- PART 9 OF OBC 2012 (2019 AMENDMENT)
- CSA 086-14
- TPIC 2014

(55 % OF 48.1 P.S.F. G.S.L. PLUS 8.4 P.S.F. RAIN LOAD) EQUALS 34.8 P.S.F. SPECIFIED ROOF LIVE LOAD

ALLOWABLE DEFL.(LL)= L/360 (0.88")
CALCULATED VERT. DEFL.(LL) = L/ 999 (0.22")
ALLOWABLE DEFL.(TL)= L/360 (0.88")
CALCULATED VERT. DEFL.(TL) = L/ 846 (0.38")

CSI: TC=0.91/0.97 (C-D:1) , BC=0.78/0.97 (N-P:1) , WB=0.65/0.97 (D-Q:1) , SSI=0.29/1.00 (F-G:1)

DOL LUMBER=1.00 NAIL=1.00 LS BEND=1.00 COMP=1.00 SHEAR=1.00 TENS= 1.00

COMPANION LIVE LOAD FACTOR = 1.00

AUTOSOLVE HEELS OFF

TRUSS PLATE MANUFACTURER IS NOT RESPONSIBLE FOR QUALITY CONTROL IN THE TRUSS MANUFACTURING PLANT .

NAIL VALUES

PLATE	GRIP(DRY) (PSI) MAX	MIN	SHEAR (PLI) MAX	MIN	SECTION (PLI) MAX	MIN
MT18HS	586	403	2455	1382	3163	3004
MT20	650	371	1747	788	1987	1873

PLATE PLACEMENT TOL. = 0.250 inches

PLATE ROTATION TOL. = 5.0 Deg.

JSI GRIP= 0.90 (N) (INPUT = 0.90)
JSI METAL= 0.97 (D) (INPUT = 1.00)

LICENSED PROFESSIONAL ENGINEER
N.A. EL-MASRI
PROVINCE OF ONTARIO
Jul 19, 2023

READ ALL NOTES ON THIS PAGE AND ON THE ENGINEERING NOTES: TRUSSES. THE NOTE PAGE IS AN INTEGRAL PART OF THIS DRAWING AS IT CONTAINS SPECIFICATIONS AND CRITERIA USED IN THE DESIGN OF THIS COMPONENT.

KOTT

JOB NAME	TRUSS NAME	QUANTITY	PLY	JOB DESC.	DRWG NO.
NE0723-127	G04	1	1	GREENPARK - ZADORRA ESTATES - VILLA 11-3 (TRUSS DESC.)	

CORPORATION OF THE CITY OF OSHAWA
TRUE COPY
OF PERMIT PLANS
Dec 06 2023
PER
CHIEF BUILDING OFFICIAL

MHP 23038

Version 8.630 S Mar 22 2023 MiTek Industries, Inc. Wed Jul 19 16:54:05 2023 Page 1
ID:a_geEeAITwiPs63VUzyy33z8f4n-OXaEc2P8hFVTyZHnbuW8_kEeuscCByn6In6QN6ywSUG

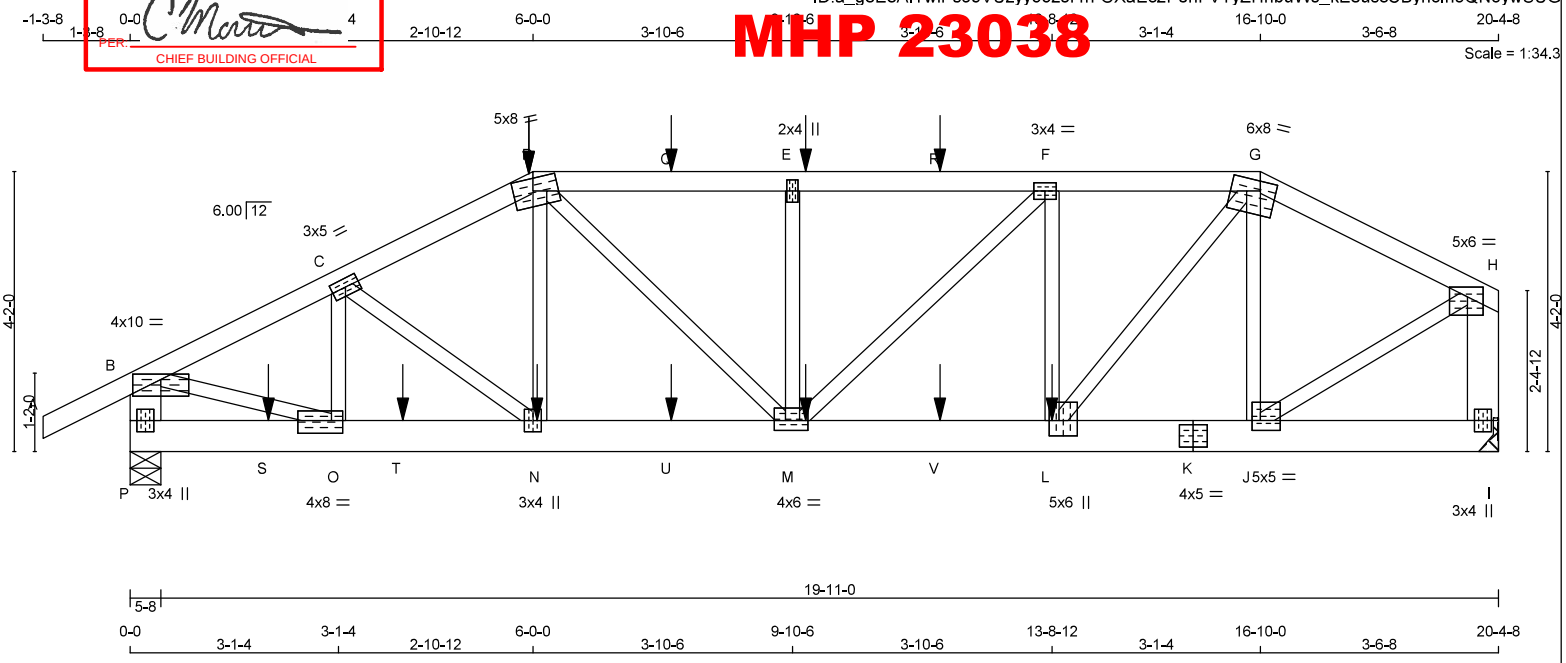

TOTAL WEIGHT = 100 lb [M]

LUMBER
N. L. G. A. RULES

CHORDS	SIZE		LUMBER	DESCR.
A - D	2x4	DRY	No.2	SPF
D - G	2x4	DRY	No.2	SPF
G - H	2x4	DRY	No.2	SPF
P - B	2x6	DRY	No.2	SPF
I - H	2x6	DRY	No.2	SPF
P - K	2x6	DRY	No.2	SPF
K - I	2x6	DRY	No.2	SPF
ALL WEBS EXCEPT	2x3	DRY	No.2	SPF

DRY: SEASONED LUMBER.

PLATES (table is in inches)

JT	TYPE	PLATES	W	LEN	Y	X
B	TMVW-p	MT20	4.0	10.0	1.00	5.00
C	TMWW-t	MT20	3.0	5.0		
D	TTWW-m	MT20	5.0	8.0	2.25	3.50
E	TMW+w	MT20	2.0	4.0		
F	TMWW-t	MT20	3.0	4.0		
G	TTWW-m	MT20	6.0	8.0	1.75	2.75
H	TMVW-p	MT20	5.0	6.0	1.75	2.75
I	BMV1+p	MT20	3.0	4.0		
J	BMWW-t	MT20	5.0	5.0	1.75	1.50
K	BS-t	MT20	4.0	5.0		
L	BMWW+t	MT20	5.0	6.0	2.75	1.75
M	BMWWW-t	MT20	4.0	6.0	1.75	2.00
N	BMWW+t	MT20	3.0	4.0		
O	BMWW-t	MT20	4.0	8.0	2.25	2.00
P	BMV1+p	MT20	3.0	4.0		

DIMENSIONS, SUPPORTS AND LOADINGS SPECIFIED BY FABRICATOR TO BE VERIFIED BY BUILDING DESIGNER

BEARINGS

JT	FACTORED GROSS REACTION VERT	HORZ	MAXIMUM FACTORED GROSS REACTION DOWN	HORZ	UPLIFT	INPUT BRG IN-SX	REQRD BRG IN-SX
P	2716	0	2716	0	0	5-8	3-5
I	2655	0	2655	0	0	MECHANICAL	

A SUITABLE HANGER/MECHANICAL CONNECTION IS REQUIRED AT JOINT I. MINIMUM BEARING LENGTH AT JOINT I = 3-2.

UNFACTORED REACTIONS

JT	1ST LCASE COMBINED	MAX./MIN. COMPONENT REACTIONS SNOW	LIVE	PERM.LIVE	WIND	DEAD	SOIL
P	1895	1389 / 0	0 / 0	0 / 0	0 / 0	505 / 0	0 / 0
I	1852	1363 / 0	0 / 0	0 / 0	0 / 0	489 / 0	0 / 0

BEARING MATERIAL TO BE SPF NO.2 OR BETTER AT JOINT(S) P

BRACING
TOP CHORD TO BE SHEATHED OR MAX. PURLIN SPACING = 2.71 FT.
MAX. UNBRACED BOTTOM CHORD LENGTH = 10.00 FT OR RIGID CEILING DIRECTLY APPLIED.

ALL PITCH BREAKS AND PERIMETER CORNER JOINTS MUST BE LATERALLY RESTRAINED.

LOADING
TOTAL LOAD CASES: (4)

CHORDS

MEMB. FR-TO	FORCE (LBS)	FACTORED VERT. LOAD LC1 (PLF) FROM	TO	MAX CSI (LC)	MAX UNBRAC LENGTH
A- B	0 / 36	-119.4	-119.4	0.17 (1)	10.00
B- C	-3438 / 0	-119.4	-119.4	0.32 (1)	3.44
C- D	-3784 / 0	-119.4	-119.4	0.34 (1)	3.28
D- Q	-4094 / 0	-119.4	-119.4	0.66 (1)	2.71
Q- E	-4094 / 0	-119.4	-119.4	0.66 (1)	2.71
E- R	-4094 / 0	-119.4	-119.4	0.66 (1)	2.71
R- F	-4094 / 0	-119.4	-119.4	0.66 (1)	2.71
F- G	-3861 / 0	-119.4	-119.4	0.42 (1)	3.13
G- H	-2581 / 0	-119.4	-119.4	0.40 (1)	3.81
P- B	-2632 / 0	0.0	0.0	0.19 (1)	6.29
I- H	-2638 / 0	0.0	0.0	0.22 (1)	6.29
P- S	0 / 0	-18.2	-18.2	0.11 (1)	10.00
S- O	0 / 0	-18.2	-18.2	0.11 (1)	10.00
O- T	0 / 3087	-18.2	-18.2	0.51 (1)	10.00
T- N	0 / 3087	-18.2	-18.2	0.51 (1)	10.00
N- U	0 / 3367	-18.2	-18.2	0.50 (1)	10.00
U- M	0 / 3367	-18.2	-18.2	0.50 (1)	10.00
M- V	0 / 3861	-18.2	-18.2	0.61 (1)	10.00
V- L	0 / 3861	-18.2	-18.2	0.61 (1)	10.00
L- K	0 / 2275	-18.2	-18.2	0.38 (1)	10.00
K- J	0 / 2275	-18.2	-18.2	0.38 (1)	10.00
J- I	0 / 0	-18.2	-18.2	0.04 (1)	10.00

WEBS

MEMB. FR-TO	FORCE (LBS)	MAX. FACTORED CSI (LC)
O- C	-787 / 0	0.14 (1)
C- N	0 / 355	0.09 (1)
N- D	-14 / 104	0.04 (4)
D- M	0 / 1018	0.25 (1)
M- E	-840 / 0	0.22 (1)
M- F	0 / 327	0.08 (1)
L- F	-737 / 0	0.19 (1)
L- G	0 / 2500	0.62 (1)
J- G	-1136 / 0	0.29 (1)
B- O	0 / 3182	0.79 (1)
J- H	0 / 2632	0.65 (1)

SPECIFIED CONCENTRATED LOADS (LBS)

JT	LOC.	LC1	MAX-	MAX+	FACE	DIR.	TYPE	HEEL	CONN.
D	6-0-0	-418	-418	—	BACK	VERT	TOTAL	—	C1
E	10-0-12	-102	-102	—	BACK	VERT	TOTAL	—	C1
L	13-8-12	-821	-821	—	BACK	VERT	TOTAL	—	C1
M	10-0-12	-22	-22	—	BACK	VERT	TOTAL	—	C1
N	6-0-12	-22	-22	—	BACK	VERT	TOTAL	—	C1
Q	8-0-12	-102	-102	—	BACK	VERT	TOTAL	—	C1
R	12-0-12	-102	-102	—	BACK	VERT	TOTAL	—	C1
S	2-0-12	-22	-22	—	BACK	VERT	TOTAL	—	C1
T	4-0-12	-22	-22	—	BACK	VERT	TOTAL	—	C1
U	8-0-12	-22	-22	—	BACK	VERT	TOTAL	—	C1
V	12-0-12	-22	-22	—	BACK	VERT	TOTAL	—	C1

CONNECTION REQUIREMENTS

1) **C1:** A SUITABLE HANGER/MECHANICAL CONNECTION IS REQUIRED.

DESIGN CRITERIA

*** SPECIAL LOADS ANALYSIS ***
GEOMETRY AND/OR BASIC LOADS CHANGED BY USER.
LOADS WERE DERIVED FROM USER INPUT
NO FURTHER MODIFICATIONS WERE MADE

SPECIFIED LOADS:

TOP CH.	LL	=	34.8	PSF
	DL	=	6.0	PSF
BOT CH.	LL	=	0.0	PSF
	DL	=	7.3	PSF
TOTAL LOAD		=	48.1	PSF

SPACING = 24.0 IN. C/C

LOADING IN FLAT SECTION BASED ON A SLOPE OF 2.00/12 MINIMUM

*** NON STANDARD GIRDER ***
ADDT'L USER-DEFINED LOADS APPLIED TO ALL LOAD CASES.

THIS TRUSS IS DESIGNED FOR RESIDENTIAL OR SMALL BUILDING REQUIREMENTS OF PART 9, NBCC 2015

THIS DESIGN COMPLIES WITH:
- PART 9 OF BCBC 2018 , NBC-2019AE
- PART 9 OF OBC 2012 (2019 AMENDMENT)
- CSA 086-14
- TPIC 2014

(55 % OF 48.1 P.S.F. G.S.L. PLUS 8.4 P.S.F. RAIN LOAD) EQUALS 34.8 P.S.F. SPECIFIED ROOF LIVE LOAD

ALLOWABLE DEFL.(LL)= L/360 (0.68")
CALCULATED VERT. DEFL.(LL) = L/ 999 (0.12")
ALLOWABLE DEFL.(TL)= L/360 (0.68")
CALCULATED VERT. DEFL.(TL) = L/ 999 (0.21")

CSI: TC=0.66/0.97 (E-F:1) , BC=0.61/0.97 (L-M:1) , WB=0.79/0.97 (B-O:1) , SSI=0.32/1.00 (D-E:1)

DOL LUMBER=1.00 NAIL=1.00 LS BEND=1.00 COMP=1.00 SHEAR=1.00 TENS= 1.00

COMPANION LIVE LOAD FACTOR = 1.00

AUTOSOLVE HEELS OFF

TRUSS PLATE MANUFACTURER IS NOT RESPONSIBLE FOR QUALITY CONTROL IN THE TRUSS MANUFACTURING PLANT .

NAIL VALUES

PLATE	GRIP(DRY) (PSI) MAX	MIN	SHEAR (PLI) MAX	MIN	SECTION (PLI) MAX	MIN
MT20	650	371	1747	788	1987	1873

PLATE PLACEMENT TOL. = 0.250 inches

PLATE ROTATION TOL. = 5.0 Deg.

JSI GRIP= 0.90 (H) (INPUT = 0.90)
JSI METAL= 0.62 (J) (INPUT = 1.00)

LICENSED PROFESSIONAL ENGINEER
N.A. EL-MASRI
PROVINCE OF ONTARIO
Jul 19, 2023

READ ALL NOTES ON THIS PAGE AND ON THE ENGINEERING NOTES: TRUSSES. THE NOTE PAGE IS AN INTEGRAL PART OF THIS DRAWING AS IT CONTAINS SPECIFICATIONS AND CRITERIA USED IN THE DESIGN OF THIS COMPONENT.

KOTT

JOB NAME	TRUSS NAME	QUANTITY	PLY	JOB DESC.	DRWG NO.
NE0723-127	G05	1	2	GREENPARK - ZADORRA ESTATES - VILLA 11-3 (TRUSS DESC.)	

CORPORATION OF THE CITY OF OSHAWA
TRUE COPY
OF PERMIT PLANS
Dec 06 2023
PER:
CHIEF BUILDING OFFICIAL

MHP 23038

Version 8.630 S Mar 22 2023 MiTek Industries, Inc. Wed Jul 19 16:54:05 2023 Page 1
ID:a_geEeAITwiPs63VUzyy33z8f4n-OXaEc2P8hFVTyZHnbuW8_kEj2sZSBx66In6QN6ywSUG

Scale = 1:35.4

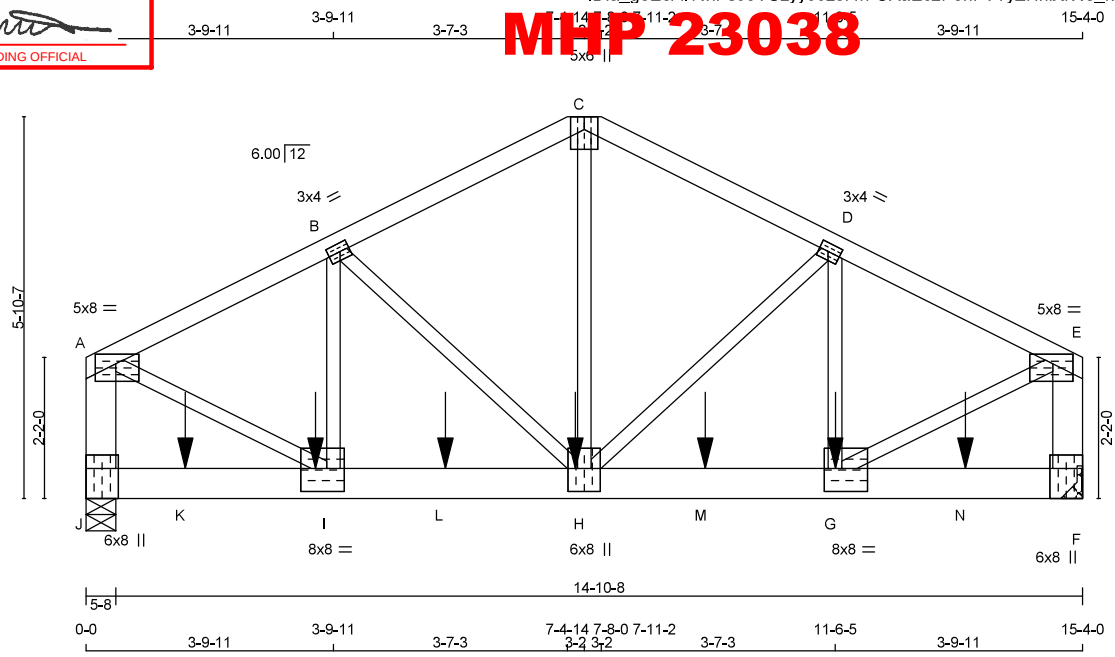

TOTAL WEIGHT = 2 X 77 = 153 lb [M]

LUMBER

N. L. G. A. RULES

CHORDS	SIZE		LUMBER	DESCR.
A - C	2x4	DRY	No.2	SPF
C - E	2x4	DRY	No.2	SPF
J - A	2x6	DRY	No.2	SPF
F - E	2x6	DRY	No.2	SPF
J - F	2x6	DRY	No.2	SPF
ALL WEBS EXCEPT	2x3	DRY	No.2	SPF

DRY: SEASONED LUMBER.

DESIGN CONSISTS OF 2 TRUSSES BUILT SEPARATELY THEN FASTENED TOGETHER AS FOLLOWS:

CHORDS #ROWS	SURFACE SPACING (IN)	LOAD(PLF)
TOP CHORDS : (0.122"X3") SPIRAL NAILS		
A- C 1	12	TOP
C- E 1	12	TOP
J- A 2	12	TOP
F- E 2	12	TOP
BOTTOM CHORDS : (0.122"X3") SPIRAL NAILS		
J- F 2	12	SIDE(0.0)
WEBS : (0.122"X3") SPIRAL NAILS		
2x3 1	6	

NAILS TO BE DRIVEN FROM ONE SIDE ONLY.

GIRDER NAILING ASSUMES NAILED HANGERS ARE FASTENED WITH MIN. 3-0 INCH NAILS.

TOP - COMPONENTS ARE LOADED FROM THE TOP AND MUST BE PLACED ON TOP EDGE OF ALL PLIES FOR THE LOAD TO BE TRANSFERRED TO EACH PLY.

SIDE - PLF SHOWN IS THE EQUIVALENT UDL APPLIED TO ONE SIDE THAT THE CORRESPONDING NAILING PATTERN SHALL BE CAPABLE OF TRANSFERING. REMAINING PLF MUST BE APPLIED ON THE OPPOSITE SIDE OR ON THE TOP.

PLATES (table is in inches)

JT	TYPE	PLATES	W	LEN	Y	X
A	TMVW-p	MT20	5.0	8.0	1.75	3.75
B	TMWW-t	MT20	3.0	4.0	1.50	1.75
C	TTW+p	MT20	5.0	6.0	Edge	

LICENSED PROFESSIONAL ENGINEER
N.A. EL-MASRI
PROVINCE OF ONTARIO
Jul 19, 2023

READ ALL NOTES ON THIS PAGE AND ON THE ENGINEERING NOTES: TRUSSES. THE NOTE PAGE IS AN INTEGRAL PART OF THIS DRAWING AS IT CONTAINS SPECIFICATIONS AND CRITERIA USED IN THE DESIGN OF THIS COMPONENT.

DIMENSIONS, SUPPORTS AND LOADINGS SPECIFIED BY FABRICATOR TO BE VERIFIED BY BUILDING DESIGNER

BEARINGS

JT	FACTORED GROSS REACTION VERT	HORZ	MAXIMUM FACTORED GROSS REACTION DOWN	HORZ	UPLIFT	INPUT BRG IN-SX	REQRD BRG IN-SX
J	7440	0	7440	0	0	5-8	5-8
F	7313	0	7313	0	0	MECHANICAL	

A SUITABLE HANGER/MECHANICAL CONNECTION IS REQUIRED AT JOINT F. MINIMUM BEARING LENGTH AT JOINT F = 4-0.

UNFACTORED REACTIONS

JT	1ST LCASE COMBINED	MAX./MIN. COMPONENT REACTIONS SNOW	LIVE	PERM.LIVE	WIND	DEAD	SOIL
J	5193	3795 / 0	0 / 0	0 / 0	0 / 0	1398 / 0	0 / 0
F	5104	3730 / 0	0 / 0	0 / 0	0 / 0	1374 / 0	0 / 0

BEARING MATERIAL TO BE SPF NO.2 OR BETTER AT JOINT(S) J
BEARING SIZE FACTOR = 1.15 AT JNT(S) J (BASED ON SUPPORT DEPTH = 1-8)

BRACING

TOP CHORD TO BE SHEATHED OR MAX. PURLIN SPACING = 3.37 FT.
MAX. UNBRACED BOTTOM CHORD LENGTH = 10.00 FT OR RIGID CEILING DIRECTLY APPLIED.

ALL PITCH BREAKS AND PERIMETER CORNER JOINTS MUST BE LATERALLY RESTRAINED.

LOADING

TOTAL LOAD CASES: (4)

CHORDS

MEMB. FR-TO	MAX. FACTORED FORCE (LBS)	FACTORED VERT. LOAD (PLF) FROM	TO	LC1	MAX CSI (LC)	MAX. UNBRAC LENGTH
A- B	-7299 / 0	-119.4	-119.4	0.33 (1)	3.37	
B- C	-6376 / 0	-119.4	-119.4	0.29 (1)	3.63	
C- D	-6376 / 0	-119.4	-119.4	0.29 (1)	3.63	
D- E	-7308 / 0	-119.4	-119.4	0.33 (1)	3.37	
J- A	-6514 / 0	0.0	0.0	0.26 (1)	5.75	
F- E	-6522 / 0	0.0	0.0	0.26 (1)	5.74	
J- K	0 / 0	-18.2	-18.2	0.51 (1)	10.00	
K- I	0 / 0	-18.2	-18.2	0.51 (1)	10.00	
I- L	0 / 6541	-18.2	-18.2	0.79 (1)	10.00	
L- H	0 / 6541	-18.2	-18.2	0.79 (1)	10.00	
H- M	0 / 6549	-18.2	-18.2	0.79 (1)	10.00	
M- G	0 / 6549	-18.2	-18.2	0.79 (1)	10.00	
G- N	0 / 0	-18.2	-18.2	0.51 (1)	10.00	
N- F	0 / 0	-18.2	-18.2	0.51 (1)	10.00	

WEBS

MEMB. FR-TO	MAX. FACTORED FORCE (LBS)	MAX CSI (LC)
I- B	0 / 715	0.09 (1)
H- D	-1175 / 0	0.28 (1)
G- D	-1186 / 0	0.28 (1)
A- I	0 / 727	0.09 (1)
G- E	0 / 7216	0.89 (1)
H- C	0 / 7225	0.89 (1)
	0 / 5292	0.65 (1)

SPECIFIED CONCENTRATED LOADS (LBS)

JT	LOC.	LC1	MAX-	MAX+	FACE	DIR.	TYPE	HEEL	CONN.
G	11-6-6	-1260	-1260	—	FRONT	VERT	TOTAL	—	C1
H	7-6-6	-1260	-1260	—	FRONT	VERT	TOTAL	—	C1
I	3-6-6	-1260	-1260	—	FRONT	VERT	TOTAL	—	C1
K	1-6-6	-1260	-1260	—	FRONT	VERT	TOTAL	—	C1
L	5-6-6	-1260	-1260	—	FRONT	VERT	TOTAL	—	C1
M	9-6-6	-1260	-1260	—	FRONT	VERT	TOTAL	—	C1
N	13-6-6	-1260	-1260	—	FRONT	VERT	TOTAL	—	C1

CONNECTION REQUIREMENTS

1) **C1:** A SUITABLE HANGER/MECHANICAL CONNECTION IS REQUIRED.

DESIGN CRITERIA

*** SPECIAL LOADS ANALYSIS ***
GEOMETRY AND/OR BASIC LOADS CHANGED BY USER.
LOADS WERE DERIVED FROM USER INPUT
NO FURTHER MODIFICATIONS WERE MADE

SPECIFIED LOADS:

TOP CH.	LL	=	34.8	PSF
	DL	=	6.0	PSF
BOT CH.	LL	=	0.0	PSF
	DL	=	7.3	PSF
TOTAL LOAD		=	48.1	PSF

SPACING = 24.0 IN. C/C

*** NON STANDARD GIRDER ***
ADDT'L USER-DEFINED LOADS APPLIED TO ALL LOAD CASES.

THIS TRUSS IS DESIGNED FOR RESIDENTIAL OR SMALL BUILDING REQUIREMENTS OF PART 9, NBCC 2015

THIS DESIGN COMPLIES WITH:
- PART 9 OF BCBC 2018 , NBC-2019AE
- PART 9 OF OBC 2012 (2019 AMENDMENT)
- CSA 086-14
- TPIC 2014

(55 % OF 48.1 P.S.F. G.S.L. PLUS 8.4 P.S.F. RAIN LOAD) EQUALS 34.8 P.S.F. SPECIFIED ROOF LIVE LOAD

ALLOWABLE DEFL.(LL)= L/360 (0.51")
CALCULATED VERT. DEFL.(LL) = L/ 999 (0.08")
ALLOWABLE DEFL.(TL)= L/360 (0.51")
CALCULATED VERT. DEFL.(TL) = L/ 999 (0.14")

CSI: TC=0.33/0.97 (D-E:1) , BC=0.79/0.97 (H-I:1) , WB=0.89/0.97 (E-G:1) , SSI=0.36/1.00 (F-G:1)

DOL LUMBER=1.00 NAIL=1.00 LS BEND=1.00 COMP=1.00 SHEAR=1.00 TENS= 1.00

COMPANION LIVE LOAD FACTOR = 1.00

AUTOSOLVE HEELS OFF

TRUSS PLATE MANUFACTURER IS NOT RESPONSIBLE FOR QUALITY CONTROL IN THE TRUSS MANUFACTURING PLANT .

NAIL VALUES

PLATE	GRIP(DRY) (PSI) MAX	MIN	SHEAR (PLI) MAX	MIN	SECTION (PLI) MAX	MIN
MT20	650	371	1747	788	1987	1873

PLATE PLACEMENT TOL. = 0.250 inches

PLATE ROTATION TOL. = 5.0 Deg.

JSI GRIP= 0.90 (A) (INPUT = 0.90)
JSI METAL= 0.57 (I) (INPUT = 1.00)

CONTINUED ON PAGE 2

KOTT

JOB NAME	TRUSS NAME	QUANTITY	PLY	JOB DESC.	DRWG NO.
NE0723-127	G05	1	2	GREENPARK - ZADORRA ESTATES - VILLA 11-3 (TRUSS DESC.)	

CORPORATION OF THE CITY OF OSHAWA
TRUE COPY
OF PERMIT PLANS
Dec 06 2023
CHIEF BUILDING OFFICIAL

Version 8.630 S Mar 22 2023 MiTek Industries, Inc. Wed Jul 19 16:54:06 2023 Page 2
ID:a_geEeAITwiPs63VUzyy33z8f4n-sk8cqOQmSYdKajrz9b2NWynuoGvhwOMG_Rr_vYywSUF

MHP 23038

PLATES (table is in inches)

JT	TYPE	PLATES	W	L	EN	X
D	TMWW-t	MT20	3.0	4.0	1.50	1.75
E	TMVW-p	MT20	5.0	8.0	1.75	3.75
F	BMV1+t	MT20	6.0	8.0	Edge	0.50
G	BMWW-t	MT20	8.0	8.0	4.25	3.25
H	BMWWW+t	MT20	6.0	8.0	4.25	3.00
I	BMWW-t	MT20	8.0	8.0	4.25	3.25
J	BMV1+t	MT20	6.0	8.0	5.50	

Edge - INDICATES REFERENCE CORNER OF PLATE TOUCHES EDGE OF CHORD.

LICENSED PROFESSIONAL ENGINEER
N.A. EL-MASRI
PROVINCE OF ONTARIO
Jul 19, 2023

READ ALL NOTES ON THIS PAGE AND ON THE ENGINEERING NOTES: TRUSSES. THE NOTE PAGE IS AN INTEGRAL PART OF THIS DRAWING AS IT CONTAINS SPECIFICATIONS AND CRITERIA USED IN THE DESIGN OF THIS COMPONENT.

KOTT

JOB NAME	TRUSS NAME	QUANTITY	PLY	JOB DESC.	DRWG NO.
NE0723-127	G06	1	1	TRUSS DESC. GREENPARK - ZADORRA ESTATES - VILLA 11-3	

CORPORATION OF THE CITY OF OSHAWA
TRUE COPY
OF PERMIT PLANS
Dec 06 2023
PER
CHIEF BUILDING OFFICIAL

MHP 23038

Version 8.630 S Mar 22 2023 MiTek Industries, Inc. Wed Jul 19 16:54:06 2023 Page 1
ID:a_geEeAITwiPs63VUzyy33z8f4n-sk8cqOQmSYdKajrz9b2NWynt9GzAwUEG_Rr_vYywSUF

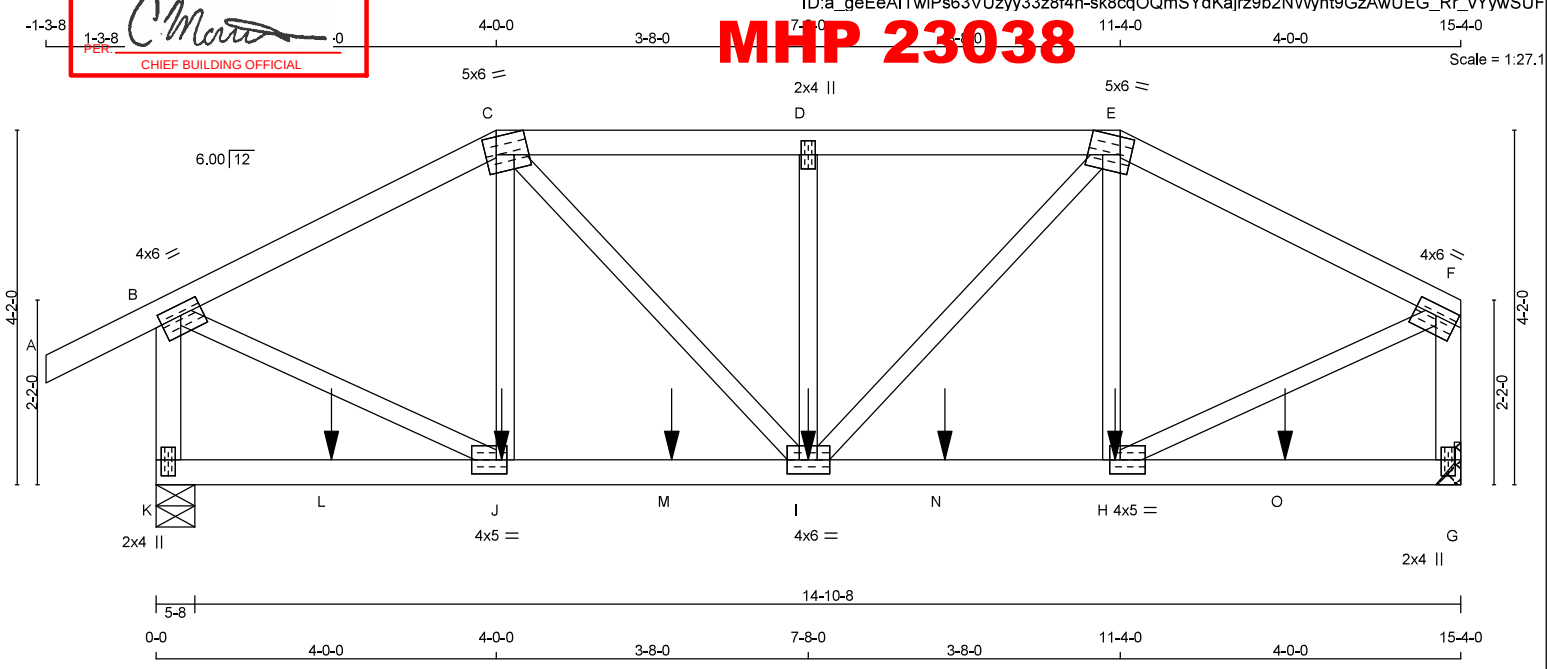

TOTAL WEIGHT = 65 lb [M]

LUMBER
N. L. G. A. RULES

CHORDS	SIZE		LUMBER	DESCR.
A - C	2x4	DRY	No.2	SPF
C - E	2x4	DRY	No.2	SPF
E - F	2x4	DRY	No.2	SPF
K - B	2x4	DRY	No.2	SPF
G - F	2x4	DRY	No.2	SPF
K - G	2x4	DRY	No.2	SPF
ALL WEBS EXCEPT	2x3	DRY	No.2	SPF

DRY: SEASONED LUMBER.

PLATES (table is in inches)

JT	TYPE	PLATES	W	LEN	Y	X
B	TMVW-t	MT20	4.0	6.0	1.50	3.00
C	TTWW-m	MT20	5.0	6.0	Edge	4.50
D	TMW+w	MT20	2.0	4.0		
E	TTWW-m	MT20	5.0	6.0	Edge	4.50
F	TMVW-t	MT20	4.0	6.0	1.50	3.00
G	BMV1+p	MT20	2.0	4.0	2.25	1.00
H	BMWW-t	MT20	4.0	5.0	2.00	1.50
I	BMWWW-t	MT20	4.0	6.0		
J	BMWW-t	MT20	4.0	5.0	2.00	1.50
K	BMV1+p	MT20	2.0	4.0	2.25	1.00

Edge - INDICATES REFERENCE CORNER OF PLATE TOUCHES EDGE OF CHORD.

DIMENSIONS, SUPPORTS AND LOADINGS SPECIFIED BY FABRICATOR TO BE VERIFIED BY BUILDING DESIGNER

BEARINGS

JT	FACTORED GROSS REACTION VERT	HORZ	MAXIMUM FACTORED GROSS REACTION DOWN	HORZ	UPLIFT	INPUT BRG IN-SX	REQRD BRG IN-SX
K	2120	0	2120	0	0	5-8	3-6
G	1958	0	1958	0	0	MECHANICAL	

A SUITABLE HANGER/MECHANICAL CONNECTION IS REQUIRED AT JOINT G. MINIMUM BEARING LENGTH AT JOINT G = 2-14.

UNFACTORED REACTIONS

JT	1ST LCASE COMBINED	SNOW	MAX./MIN. COMPONENT REACTIONS LIVE	PERM.LIVE	WIND	DEAD	SOIL
K	1473	1116 / 0	0 / 0	0 / 0	0 / 0	358 / 0	0 / 0
G	1362	1021 / 0	0 / 0	0 / 0	0 / 0	341 / 0	0 / 0

BEARING MATERIAL TO BE SPF NO.2 OR BETTER AT JOINT(S) K

BRACING
TOP CHORD TO BE SHEATHED OR MAX. PURLIN SPACING = 4.19 FT.
MAX. UNBRACED BOTTOM CHORD LENGTH = 10.00 FT OR RIGID CEILING DIRECTLY APPLIED.

ALL PITCH BREAKS AND PERIMETER CORNER JOINTS MUST BE LATERALLY RESTRAINED.

LOADING
TOTAL LOAD CASES: (4)

CHORDS

MEMB. FR-TO	MAX. FORCE (LBS)	FACTORED VERT. LOAD (PLF) FROM	TO	LC1	MAX CSI (LC)	MAX. UNBRAC LENGTH
A- B	0 / 36	-119.4	-119.4	0.17 (1)	10.00	
B- C	-1871 / 0	-119.4	-119.4	0.44 (1)	4.32	
C- D	-2179 / 0	-119.4	-119.4	0.34 (1)	4.19	
D- E	-2179 / 0	-119.4	-119.4	0.34 (1)	4.19	
E- F	-1872 / 0	-119.4	-119.4	0.44 (1)	4.32	
K- B	-1998 / 0	0.0	0.0	0.26 (1)	5.84	
G- F	-1836 / 0	0.0	0.0	0.23 (1)	6.06	
K- L	0 / 0	-18.2	-18.2	0.32 (1)	10.00	
L- J	0 / 0	-18.2	-18.2	0.32 (1)	10.00	
J- M	0 / 1669	-18.2	-18.2	0.57 (1)	10.00	
M- I	0 / 1669	-18.2	-18.2	0.57 (1)	10.00	
I- N	0 / 1669	-18.2	-18.2	0.57 (1)	10.00	
N- H	0 / 1669	-18.2	-18.2	0.57 (1)	10.00	
H- O	0 / 0	-18.2	-18.2	0.32 (1)	10.00	
O- G	0 / 0	-18.2	-18.2	0.32 (1)	10.00	

WEBS

MEMB. FR-TO	MAX. FORCE (LBS)	MAX CSI (LC)
J- C	-113 / 27	0.03 (1)
C- I	0 / 740	0.18 (1)
I- D	-522 / 0	0.14 (1)
I- E	0 / 740	0.18 (1)
H- E	-113 / 27	0.03 (1)
B- J	0 / 1836	0.45 (1)
H- F	0 / 1836	0.45 (1)

SPECIFIED CONCENTRATED LOADS (LBS)

JT	LOC.	LC1	MAX-	MAX+	FACE	DIR.	TYPE	HEEL	CONN.
H	11-3-4	-178	-178	—	BACK	VERT	TOTAL	—	C1
I	7-8-0	-178	-178	—	BACK	VERT	TOTAL	—	C1
J	4-0-12	-178	-178	—	BACK	VERT	TOTAL	—	C1
L	2-0-12	-180	-180	—	BACK	VERT	TOTAL	—	C1
M	6-0-12	-178	-178	—	BACK	VERT	TOTAL	—	C1
N	9-3-4	-178	-178	—	BACK	VERT	TOTAL	—	C1
O	13-3-4	-180	-180	—	BACK	VERT	TOTAL	—	C1

CONNECTION REQUIREMENTS

1) **C1:** A SUITABLE HANGER/MECHANICAL CONNECTION IS REQUIRED.

DESIGN CRITERIA

*** SPECIAL LOADS ANALYSIS ***
GEOMETRY AND/OR BASIC LOADS CHANGED BY USER.
LOADS WERE DERIVED FROM USER INPUT
NO FURTHER MODIFICATIONS WERE MADE

SPECIFIED LOADS:

TOP CH.	LL	=	34.8	PSF
	DL	=	6.0	PSF
BOT CH.	LL	=	0.0	PSF
	DL	=	7.3	PSF
TOTAL LOAD		=	48.1	PSF

SPACING = 24.0 IN. C/C

LOADING IN FLAT SECTION BASED ON A SLOPE OF 2.00/12 MINIMUM

*** NON STANDARD GIRDER ***
ADDT'L USER-DEFINED LOADS APPLIED TO ALL LOAD CASES.

THIS TRUSS IS DESIGNED FOR RESIDENTIAL OR SMALL BUILDING REQUIREMENTS OF PART 9, NBCC 2015

THIS DESIGN COMPLIES WITH:
- PART 9 OF BCBC 2018 , NBC-2019AE
- PART 9 OF OBC 2012 (2019 AMENDMENT)
- CSA 086-14
- TPIC 2014

(55 % OF 48.1 P.S.F. G.S.L. PLUS 8.4 P.S.F. RAIN LOAD) EQUALS 34.8 P.S.F. SPECIFIED ROOF LIVE LOAD

ALLOWABLE DEFL.(LL)= L/360 (0.51")
CALCULATED VERT. DEFL.(LL) = L/ 999 (0.05")
ALLOWABLE DEFL.(TL)= L/360 (0.51")
CALCULATED VERT. DEFL.(TL) = L/ 999 (0.09")

CSI: TC=0.44/0.97 (E-F:1) , BC=0.57/0.97 (H-I:1) , WB=0.45/0.97 (F-H:1) , SSI=0.23/1.00 (C-D:1)

DOL LUMBER=1.00 NAIL=1.00 LS BEND=1.00 COMP=1.00 SHEAR=1.00 TENS= 1.00

COMPANION LIVE LOAD FACTOR = 1.00

TRUSS PLATE MANUFACTURER IS NOT RESPONSIBLE FOR QUALITY CONTROL IN THE TRUSS MANUFACTURING PLANT .

NAIL VALUES

PLATE	GRIP(DRY) (PSI) MAX	MIN	SHEAR (PLI) MAX	MIN	SECTION (PLI) MAX	MIN
MT20	650	371	1747	788	1987	1873

PLATE PLACEMENT TOL. = 0.250 inches

PLATE ROTATION TOL. = 5.0 Deg.

JSI GRIP= 0.88 (I) (INPUT = 0.90)
JSI METAL= 0.49 (F) (INPUT = 1.00)

LICENSED PROFESSIONAL ENGINEER
N.A. EL-MASRI
PROVINCE OF ONTARIO
Jul 19, 2023

READ ALL NOTES ON THIS PAGE AND ON THE ENGINEERING NOTES: TRUSSES. THE NOTE PAGE IS AN INTEGRAL PART OF THIS DRAWING AS IT CONTAINS SPECIFICATIONS AND CRITERIA USED IN THE DESIGN OF THIS COMPONENT.

KOTT

JOB NAME	TRUSS NAME	QUANTITY	PLY	JOB DESC.	DRWG NO.
NE0723-127	G07	1	1	GREENPARK - ZADORRA ESTATES - VILLA 11-3 (TRUSS DESC.)	

CORPORATION OF THE CITY OF OSHAWA
TRUE COPY
OF PERMIT PLANS
Dec 06 2023
PER
CHIEF BUILDING OFFICIAL

MHP 23038

Version 8.630 S Mar 22 2023 MiTek Industries, Inc. Wed Jul 19 16:54:07 2023 Page 1
ID:a_geEeAITwiPs63VUzyy33z8f4n-Lwi?1kRPDsIBCtQ9iJZc39J25fMXfzbPD5bXR?ywSUE

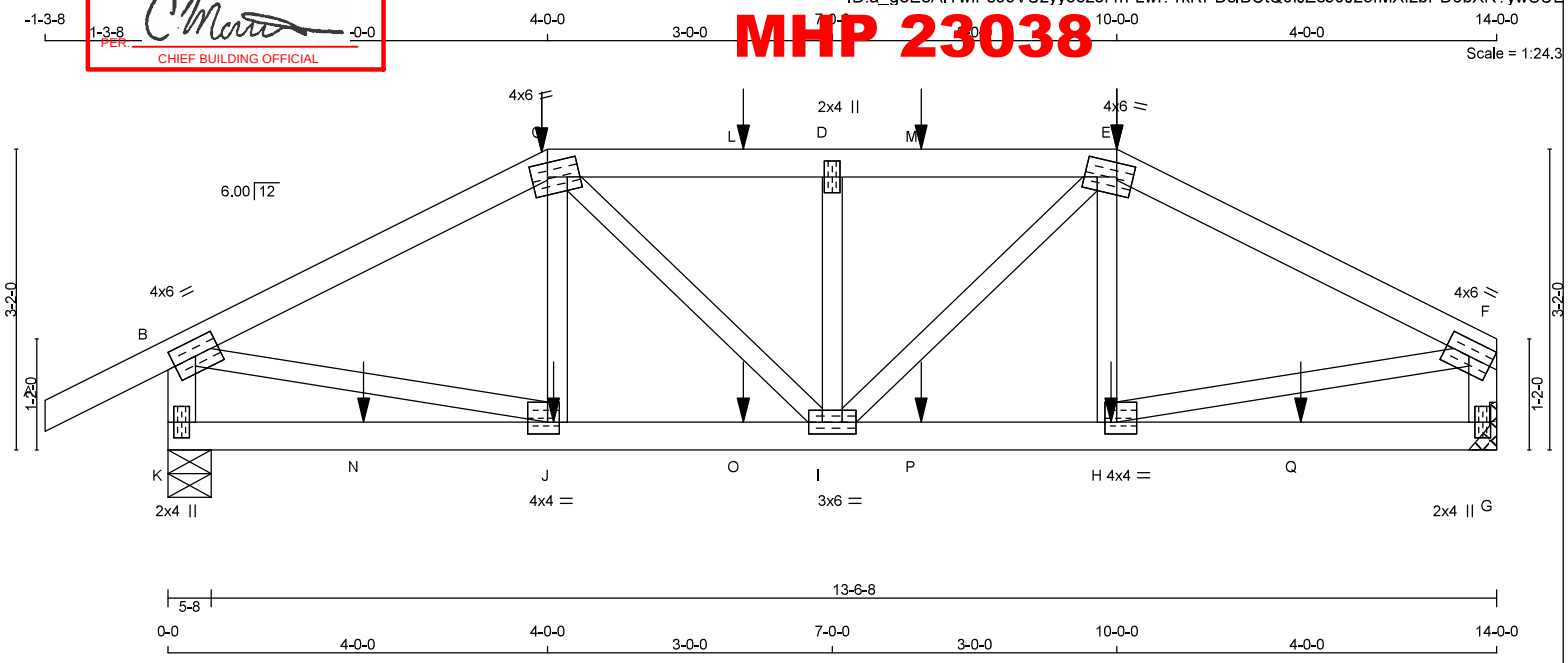

TOTAL WEIGHT = 55 lb [M]

LUMBER
N. L. G. A. RULES

CHORDS	SIZE		LUMBER	DESCR.
A - C	2x4	DRY	No.2	SPF
C - E	2x4	DRY	No.2	SPF
E - F	2x4	DRY	No.2	SPF
K - B	2x4	DRY	No.2	SPF
G - F	2x4	DRY	No.2	SPF
K - G	2x4	DRY	No.2	SPF
ALL WEBS EXCEPT	2x3	DRY	No.2	SPF

DRY: SEASONED LUMBER.

PLATES (table is in inches)

JT	TYPE	PLATES	W	LEN	Y	X
B	TMVW-t	MT20	4.0	6.0	2.00	3.00
C	TTWW-m	MT20	4.0	6.0	1.75	2.00
D	TMW+w	MT20	2.0	4.0		
E	TTWW-m	MT20	4.0	6.0	1.75	2.00
F	TMVW-t	MT20	4.0	6.0		Edge
G	BMV1+p	MT20	2.0	4.0		
H	BMWW-t	MT20	4.0	4.0	1.50	1.50
I	BMWWW-t	MT20	3.0	6.0		
J	BMWW-t	MT20	4.0	4.0	1.50	1.50
K	BMV1+p	MT20	2.0	4.0		

Edge - INDICATES REFERENCE CORNER OF PLATE TOUCHES EDGE OF CHORD.

DIMENSIONS, SUPPORTS AND LOADINGS SPECIFIED BY FABRICATOR TO BE VERIFIED BY BUILDING DESIGNER

BEARINGS

JT	FACTORED GROSS REACTION VERT	HORZ	MAXIMUM FACTORED GROSS REACTION DOWN	HORZ	UPLIFT	INPUT BRG IN-SX	REQRD BRG IN-SX
K	1518	0	1518	0	0	5-8	1-10
G	1356	0	1356	0	0	MECHANICAL	

A SUITABLE HANGER/MECHANICAL CONNECTION IS REQUIRED AT JOINT G. MINIMUM BEARING LENGTH AT JOINT G = 1-8.

UNFACTORED REACTIONS

JT	1ST LCASE COMBINED	MAX./MIN. COMPONENT REACTIONS SNOW	LIVE	PERM.LIVE	WIND	DEAD	SOIL
K	1058	784 / 0	0 / 0	0 / 0	0 / 0	273 / 0	0 / 0
G	947	690 / 0	0 / 0	0 / 0	0 / 0	257 / 0	0 / 0

BEARING MATERIAL TO BE SPF NO.2 OR BETTER AT JOINT(S) K

BRACING
TOP CHORD TO BE SHEATHED OR MAX. PURLIN SPACING = 4.51 FT.
MAX. UNBRACED BOTTOM CHORD LENGTH = 10.00 FT OR RIGID CEILING DIRECTLY APPLIED.

ALL PITCH BREAKS AND PERIMETER CORNER JOINTS MUST BE LATERALLY RESTRAINED.

LOADING
TOTAL LOAD CASES: (4)

CHORDS

MEMB. FR-TO	MAX. FORCE (LBS)	FACTORED VERT. LOAD (PLF) FROM	TO	LC1	MAX CSI (LC)	MAX. UNBRAC LENGTH
A- B	0 / 36	-119.4	-119.4	0.17 (1)	10.00	
B- C	-1697 / 0	-119.4	-119.4	0.43 (1)	4.51	
C- L	-1809 / 0	-119.4	-119.4	0.26 (1)	4.63	
L- D	-1809 / 0	-119.4	-119.4	0.26 (1)	4.63	
D- M	-1809 / 0	-119.4	-119.4	0.26 (1)	4.63	
M- E	-1809 / 0	-119.4	-119.4	0.26 (1)	4.63	
E- F	-1697 / 0	-119.4	-119.4	0.43 (1)	4.51	
K- B	-1480 / 0	0.0	0.0	0.16 (1)	6.61	
G- F	-1318 / 0	0.0	0.0	0.15 (1)	6.93	
K- N	0 / 0	-18.2	-18.2	0.09 (4)	10.00	
N- J	0 / 0	-18.2	-18.2	0.09 (4)	10.00	
J- O	0 / 1509	-18.2	-18.2	0.30 (1)	10.00	
O- I	0 / 1509	-18.2	-18.2	0.30 (1)	10.00	
I- P	0 / 1509	-18.2	-18.2	0.30 (1)	10.00	
P- H	0 / 1509	-18.2	-18.2	0.30 (1)	10.00	
H- Q	0 / 0	-18.2	-18.2	0.09 (4)	10.00	
Q- G	0 / 0	-18.2	-18.2	0.09 (4)	10.00	

WEBS

MEMB. FR-TO	MAX. FORCE (LBS)	MAX CSI (LC)
J- C	-215 / 33	0.04 (1)
C- I	0 / 415	0.10 (1)
I- D	-524 / 0	0.10 (1)
I- E	0 / 415	0.10 (1)
H- E	-215 / 33	0.04 (1)
B- J	0 / 1550	0.38 (1)
H- F	0 / 1550	0.38 (1)

SPECIFIED CONCENTRATED LOADS (LBS)

JT	LOC.	LC1	MAX-	MAX+	FACE	DIR.	TYPE	HEEL	CONN.
C	4-0-0	-202	-202	—	FRONT	VERT	TOTAL	—	C1
E	10-0-0	-202	-202	—	FRONT	VERT	TOTAL	—	C1
H	9-11-4	-10	-10	—	FRONT	VERT	TOTAL	—	C1
J	4-0-12	-10	-10	—	FRONT	VERT	TOTAL	—	C1
L	6-0-12	-41	-41	—	FRONT	VERT	TOTAL	—	C1
M	7-11-4	-41	-41	—	FRONT	VERT	TOTAL	—	C1
N	2-0-12	-10	-10	—	FRONT	VERT	TOTAL	—	C1
O	6-0-12	-10	-10	—	FRONT	VERT	TOTAL	—	C1
P	7-11-4	-10	-10	—	FRONT	VERT	TOTAL	—	C1
Q	11-11-4	-10	-10	—	FRONT	VERT	TOTAL	—	C1

CONNECTION REQUIREMENTS

1) **C1:** A SUITABLE HANGER/MECHANICAL CONNECTION IS REQUIRED.

DESIGN CRITERIA

*** SPECIAL LOADS ANALYSIS ***
GEOMETRY AND/OR BASIC LOADS CHANGED BY USER.
LOADS WERE DERIVED FROM USER INPUT
NO FURTHER MODIFICATIONS WERE MADE

SPECIFIED LOADS:

TOP CH.	LL	=	34.8	PSF
	DL	=	6.0	PSF
BOT CH.	LL	=	0.0	PSF
	DL	=	7.3	PSF
TOTAL LOAD		=	48.1	PSF

SPACING = 24.0 IN. C/C

LOADING IN FLAT SECTION BASED ON A SLOPE OF 2.00/12 MINIMUM

*** NON STANDARD GIRDER ***
ADDT'L USER-DEFINED LOADS APPLIED TO ALL LOAD CASES.

THIS TRUSS IS DESIGNED FOR RESIDENTIAL OR SMALL BUILDING REQUIREMENTS OF PART 9, NBCC 2015

THIS DESIGN COMPLIES WITH:
- PART 9 OF BCBC 2018 , NBC-2019AE
- PART 9 OF OBC 2012 (2019 AMENDMENT)
- CSA 086-14
- TPIC 2014

(55 % OF 48.1 P.S.F. G.S.L. PLUS 8.4 P.S.F. RAIN LOAD) EQUALS 34.8 P.S.F. SPECIFIED ROOF LIVE LOAD

ALLOWABLE DEFL.(LL)= L/360 (0.47")
CALCULATED VERT. DEFL.(LL) = L/ 999 (0.04")
ALLOWABLE DEFL.(TL)= L/360 (0.47")
CALCULATED VERT. DEFL.(TL) = L/ 999 (0.07")

CSI: TC=0.43/0.97 (E-F:1) , BC=0.30/0.97 (I-J:1) , WB=0.38/0.97 (F-H:1) , SSI=0.23/1.00 (C-D:1)

DOL LUMBER=1.00 NAIL=1.00 LS BEND=1.00 COMP=1.00 SHEAR=1.00 TENS= 1.00

COMPANION LIVE LOAD FACTOR = 1.00

TRUSS PLATE MANUFACTURER IS NOT RESPONSIBLE FOR QUALITY CONTROL IN THE TRUSS MANUFACTURING PLANT .

NAIL VALUES

PLATE	GRIP(DRY) (PSI) MAX	MIN	SHEAR (PLI) MAX	MIN	SECTION (PLI) MAX	MIN
MT20	650	371	1747	788	1987	1873

PLATE PLACEMENT TOL. = 0.250 inches

PLATE ROTATION TOL. = 5.0 Deg.

JSI GRIP= 0.87 (J) (INPUT = 0.90)
JSI METAL= 0.51 (H) (INPUT = 1.00)

LICENSED PROFESSIONAL ENGINEER
N.A. EL-MASRI
PROVINCE OF ONTARIO
Jul 19, 2023

READ ALL NOTES ON THIS PAGE AND ON THE ENGINEERING NOTES: TRUSSES. THE NOTE PAGE IS AN INTEGRAL PART OF THIS DRAWING AS IT CONTAINS SPECIFICATIONS AND CRITERIA USED IN THE DESIGN OF THIS COMPONENT.

KOTT

JOB NAME	TRUSS NAME	QUANTITY	PLY	JOB DESC.	DRWG NO.
NE0723-127	G08	1	1	GREENPARK - ZADORRA ESTATES - VILLA 11-3 (TRUSS DESC.)	

CORPORATION OF THE CITY OF OSHAWA
TRUE COPY
OF PERMIT PLANS
Dec 06 2023
PER:
CHIEF BUILDING OFFICIAL

MHP 23038

Version 8.630 S Mar 22 2023 MiTek Industries, Inc. Wed Jul 19 16:54:07 2023 Page 1
ID:a_geEeAITwiPs63VUzyy33z8f4n-Lwi?1kRPDsIBCtQ9iJZc39J6IfHXfxIPD5bXR?ywSUE

Scale = 1:24.3

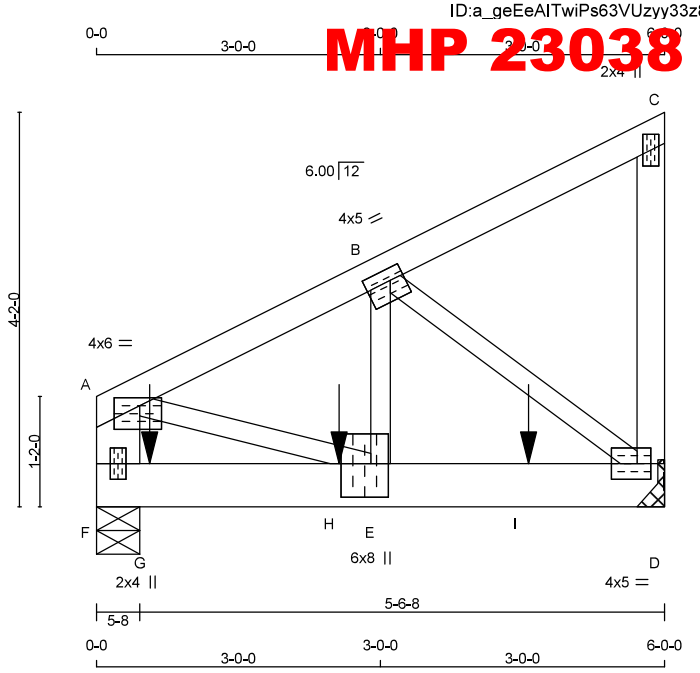

TOTAL WEIGHT = 30 lb [M]

LUMBER
N. L. G. A. RULES

CHORDS	SIZE		LUMBER	DESCR.
A - C	2x4	DRY	No.2	SPF
D - C	2x4	DRY	No.2	SPF
F - A	2x6	DRY	No.2	SPF
F - D	2x6	DRY	No.2	SPF
ALL WEBS EXCEPT	2x3	DRY	No.2	SPF

DRY: SEASONED LUMBER.

PLATES (table is in inches)

JT	TYPE	PLATES	W	LEN	Y	X
A	TMVW-p	MT20	4.0	6.0	1.00	3.25
B	TMWW-t	MT20	4.0	5.0	1.50	1.75
C	TMV+p	MT20	2.0	4.0		
D	BMVW1-t	MT20	4.0	5.0	2.00	1.75
E	BMWW+t	MT20	6.0	8.0	4.25	2.25
F	BMV1+p	MT20	2.0	4.0		

DIMENSIONS, SUPPORTS AND LOADINGS SPECIFIED BY FABRICATOR TO BE VERIFIED BY BUILDING DESIGNER

BEARINGS

JT	FACTORED GROSS REACTION VERT	HORZ	MAXIMUM GROSS REACTION DOWN	HORZ	UPLIFT	INPUT BRG IN-SX	REQRD BRG IN-SX
D	1715	0	1715	0	0	MECHANICAL	
F	1514	0	1514	0	0	5-8	1-10

A SUITABLE HANGER/MECHANICAL CONNECTION IS REQUIRED AT JOINT D. MINIMUM BEARING LENGTH AT JOINT D = 1-14.

UNFACTORED REACTIONS

JT	1ST LCASE COMBINED	MAX./MIN. COMPONENT REACTIONS SNOW	LIVE	PERM.LIVE	WIND	DEAD	SOIL
D	1196	880 / 0	0 / 0	0 / 0	0 / 0	315 / 0	0 / 0
F	1055	781 / 0	0 / 0	0 / 0	0 / 0	274 / 0	0 / 0

BEARING MATERIAL TO BE SPF NO.2 OR BETTER AT JOINT(S) F

BRACING
TOP CHORD TO BE SHEATHED OR MAX. PURLIN SPACING = 4.86 FT.
MAX. UNBRACED BOTTOM CHORD LENGTH = 10.00 FT OR RIGID CEILING DIRECTLY APPLIED.

ALL PITCH BREAKS AND PERIMETER CORNER JOINTS MUST BE LATERALLY RESTRAINED.

LOADING
TOTAL LOAD CASES: (4)

CHORDS

MEMB. FR-TO	MAX. FORCE (LBS)	FACTORED VERT. LOAD (PLF) FROM	TO	LC1	MAX CSI (LC)	MAX. UNBRAC LENGTH
A- B	-1687 / 0	-119.4	-119.4	0.19 (1)	4.86	
B- C	-15 / 0	-119.4	-119.4	0.15 (1)	6.25	
D- C	-146 / 0	0.0	0.0	0.04 (1)	7.81	
F- A	-1300 / 0	0.0	0.0	0.09 (1)	7.81	
F- G	0 / 0	-18.2	-18.2	0.23 (1)	10.00	
G- H	0 / 0	-18.2	-18.2	0.23 (1)	10.00	
H- E	0 / 0	-18.2	-18.2	0.23 (1)	10.00	
E- I	0 / 1522	-18.2	-18.2	0.62 (1)	10.00	
I- D	0 / 1522	-18.2	-18.2	0.62 (1)	10.00	

WEBS

MEMB. FR-TO	MAX. FORCE (LBS)	MAX CSI (LC)
E- B	0 / 1491	0.37 (1)
B- D	-1910 / 0	0.47 (1)
A- E	0 / 1572	0.39 (1)

SPECIFIED CONCENTRATED LOADS (LBS)

JT	LOC.	LC1	MAX-	MAX+	FACE	DIR.	TYPE	HEEL	CONN.
G	6-12	-82	-82	—	BACK	VERT	TOTAL	—	C1
H	2-6-12	-932	-932	—	BACK	VERT	TOTAL	—	C1
I	4-6-12	-659	-659	—	BACK	VERT	TOTAL	—	C1

CONNECTION REQUIREMENTS

1) **C1:** A SUITABLE HANGER/MECHANICAL CONNECTION IS REQUIRED.

DESIGN CRITERIA

*** SPECIAL LOADS ANALYSIS ***
GEOMETRY AND/OR BASIC LOADS CHANGED BY USER.
LOADS WERE DERIVED FROM USER INPUT
NO FURTHER MODIFICATIONS WERE MADE

SPECIFIED LOADS:

TOP CH.	LL	=	34.8	PSF
	DL	=	6.0	PSF
BOT CH.	LL	=	0.0	PSF
	DL	=	7.3	PSF
TOTAL LOAD		=	48.1	PSF

SPACING = 24.0 IN. C/C

*** NON STANDARD GIRDER ***
ADDT'L USER-DEFINED LOADS APPLIED TO ALL LOAD CASES.

THIS TRUSS IS DESIGNED FOR RESIDENTIAL OR SMALL BUILDING REQUIREMENTS OF PART 9, NBCC 2015

THIS DESIGN COMPLIES WITH:
- PART 9 OF BCBC 2018 , NBC-2019AE
- PART 9 OF OBC 2012 (2019 AMENDMENT)
- CSA 086-14
- TPIC 2014

(55 % OF 48.1 P.S.F. G.S.L. PLUS 8.4 P.S.F. RAIN LOAD) EQUALS 34.8 P.S.F. SPECIFIED ROOF LIVE LOAD

ALLOWABLE DEFL.(LL)= L/360 (0.20")
CALCULATED VERT. DEFL.(LL) = L/ 999 (0.02")
ALLOWABLE DEFL.(TL)= L/360 (0.20")
CALCULATED VERT. DEFL.(TL) = L/ 999 (0.04")

CSI: TC=0.19/0.97 (A-B:1) , BC=0.62/0.97 (D-E:1) , WB=0.47/0.97 (B-D:1) , SSI=0.86/1.00 (E-F:1)

DOL LUMBER=1.00 NAIL=1.00 LS BEND=1.00 COMP=1.00 SHEAR=1.00 TENS= 1.00

COMPANION LIVE LOAD FACTOR = 1.00

AUTOSOLVE RIGHT HEEL ONLY

TRUSS PLATE MANUFACTURER IS NOT RESPONSIBLE FOR QUALITY CONTROL IN THE TRUSS MANUFACTURING PLANT .

NAIL VALUES

PLATE	GRIP(DRY) (PSI) MAX	MIN	SHEAR (PLI) MAX	MIN	SECTION (PLI) MAX	MIN
MT20	650	371	1747	788	1987	1873

PLATE PLACEMENT TOL. = 0.250 inches

PLATE ROTATION TOL. = 5.0 Deg.

JSI GRIP= 0.90 (D) (INPUT = 0.90)
JSI METAL= 0.46 (E) (INPUT = 1.00)

LICENSED PROFESSIONAL ENGINEER
N.A. EL-MASRI
PROVINCE OF ONTARIO
Jul 19, 2023

READ ALL NOTES ON THIS PAGE AND ON THE ENGINEERING NOTES: TRUSSES. THE NOTE PAGE IS AN INTEGRAL PART OF THIS DRAWING AS IT CONTAINS SPECIFICATIONS AND CRITERIA USED IN THE DESIGN OF THIS COMPONENT.

KOTT

JOB NAME	TRUSS NAME	QUANTITY	PLY	JOB DESC.	DRWG NO.
NE0723-127	G09	1	1	TRUSS DESC. GREENPARK - ZADORRA ESTATES - VILLA 11-3	

CORPORATION OF THE CITY OF OSHAWA
TRUE COPY
OF PERMIT PLANS
Dec 06 2023
PER:
CHIEF BUILDING OFFICIAL

MHP 23038

Version 8.630 S Mar 22 2023 MiTek Industries, Inc. Wed Jul 19 16:54:08 2023 Page 1
ID:a_geEeAITwiPs63VUzyy33z8f4n-p6FNF4S1zAt2q1?MG04rbNsGd3fHOP2ZSIK4zRywSUD

Scale = 1:23.7

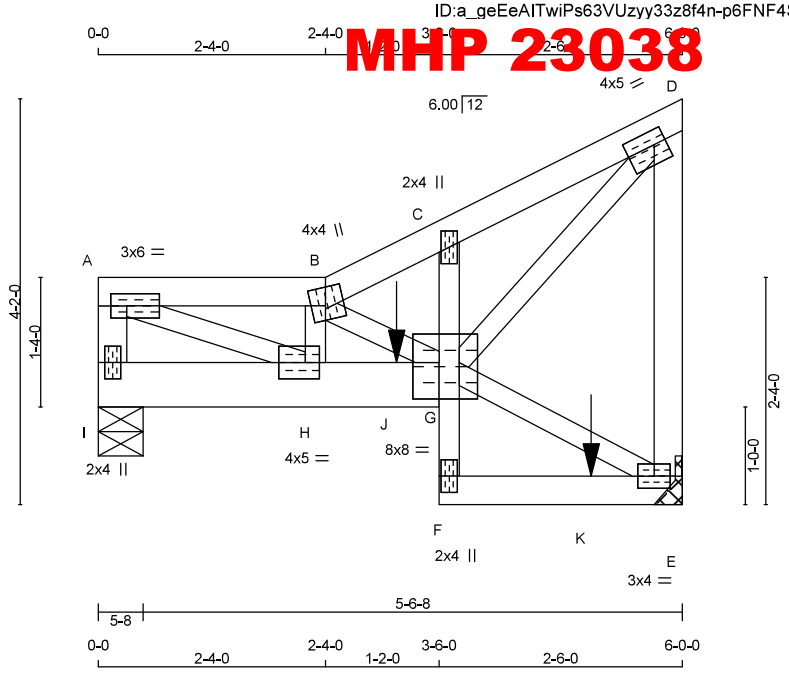

TOTAL WEIGHT = 31 lb
[M]

LUMBER
N. L. G. A. RULES

CHORDS	SIZE		LUMBER	DESCR.
I - A	2x4	DRY	No.2	SPF
A - B	2x4	DRY	No.2	SPF
B - D	2x4	DRY	No.2	SPF
E - D	2x4	DRY	No.2	SPF
I - G	2x6	DRY	No.2	SPF
F - C	2x3	DRY	No.2	SPF
F - E	2x4	DRY	No.2	SPF
ALL WEBS	2x3	DRY	No.2	SPF

DRY: SEASONED LUMBER.

PLATES (table is in inches)

JT	TYPE	PLATES	W	LEN	Y	X
A	TMVW-t	MT20	3.0	6.0	1.50	2.00
B	TTWW+m	MT20	4.0	4.0	2.25	1.75
C	TMV+p	MT20	2.0	4.0		
D	TMVW-t	MT20	4.0	5.0	1.75	1.50
E	BMVW1-t	MT20	3.0	4.0		
F	BMV+p	MT20	2.0	4.0		
G	BVMWWW-l	MT20	8.0	8.0	4.50	3.25
H	BMWW-t	MT20	4.0	5.0	2.00	1.75
I	BMV1+p	MT20	2.0	4.0		

DIMENSIONS, SUPPORTS AND LOADINGS SPECIFIED BY FABRICATOR TO BE VERIFIED BY BUILDING DESIGNER

BEARINGS

JT	FACTORED GROSS REACTION VERT	HORZ	MAXIMUM FACTORED GROSS REACTION DOWN	HORZ	UPLIFT	INPUT BRG IN-SX	REQRD BRG IN-SX
I	885	0	885	0	0	5-8	1-8
E	1202	0	1202	0	0	MECHANICAL	

A SUITABLE HANGER/MECHANICAL CONNECTION IS REQUIRED AT JOINT E. MINIMUM BEARING LENGTH AT JOINT E = 1-8.

UNFACTORED REACTIONS

JT	1ST LCASE COMBINED	MAX./MIN. COMPONENT REACTIONS SNOW	LIVE	PERM.LIVE	WIND	DEAD	SOIL
I	616	459 / 0	0 / 0	0 / 0	0 / 0	157 / 0	0 / 0
E	836	626 / 0	0 / 0	0 / 0	0 / 0	210 / 0	0 / 0

BEARING MATERIAL TO BE SPF NO.2 OR BETTER AT JOINT(S) I

BRACING
TOP CHORD TO BE SHEATHED OR MAX. PURLIN SPACING = 5.15 FT.
MAX. UNBRACED BOTTOM CHORD LENGTH = 7.81 FT OR RIGID CEILING DIRECTLY APPLIED.

ALL PITCH BREAKS AND PERIMETER CORNER JOINTS MUST BE LATERALLY RESTRAINED.

LOADING
TOTAL LOAD CASES: (4)

CHORDS

MEMB. FR-TO	MAX. FACTORED FORCE (LBS)	FACTORED VERT. LOAD (PLF) FROM	TO	LC1	MAX CSI (LC)
I- A	-774 / 0	0.0	0.0	0.09 (1)	
A- B	-1489 / 0	-119.4	-119.4	0.15 (1)	
B- C	-1313 / 0	-119.4	-119.4	0.05 (1)	
C- D	-1283 / 0	-119.4	-119.4	0.15 (1)	
E- D	-899 / 0	0.0	0.0	0.25 (1)	
I- H	0 / 0	-18.2	-18.2	0.15 (1)	
H- J	0 / 1546	-18.2	-18.2	0.46 (1)	
J- G	0 / 1546	-18.2	-18.2	0.46 (1)	
F- G	0 / 192	0.0	0.0	0.16 (1)	
G- C	-219 / 0	0.0	0.0	0.11 (1)	
F- K	0 / 34	-18.2	-18.2	0.40 (1)	
K- E	0 / 34	-18.2	-18.2	0.40 (1)	

WEBS

MEMB. FR-TO	MAX. UNBRAC LENGTH	MAX. FACTORED FORCE (LBS)	MAX CSI (LC)
A- H	7.81	0 / 1621	0.40 (1)
H- B	5.15	-523 / 0	0.08 (1)
B- G	5.55	-457 / 0	0.07 (1)
G- E	5.46	-38 / 0	0.01 (1)
G- D	7.81	0 / 1754	0.43 (1)
I- H	10.00		
H- J	10.00		
J- G	10.00		
F- G	10.00		
G- C	7.81		
F- K	10.00		
K- E	10.00		

SPECIFIED CONCENTRATED LOADS (LBS)

JT	LOC.	LC1	MAX-	MAX+	FACE	DIR.	TYPE	HEEL	CONN.
J	3-0-12	-572	-572	—	BACK	VERT	TOTAL	—	C1
K	5-0-12	-303	-303	—	BACK	VERT	TOTAL	—	C1

CONNECTION REQUIREMENTS

1) **C1:** A SUITABLE HANGER/MECHANICAL CONNECTION IS REQUIRED.

DESIGN CRITERIA

*** SPECIAL LOADS ANALYSIS ***
GEOMETRY AND/OR BASIC LOADS CHANGED BY USER.
LOADS WERE DERIVED FROM USER INPUT
NO FURTHER MODIFICATIONS WERE MADE

SPECIFIED LOADS:

TOP CH.	LL	=	34.8	PSF
	DL	=	6.0	PSF
BOT CH.	LL	=	0.0	PSF
	DL	=	7.3	PSF
TOTAL LOAD		=	48.1	PSF

SPACING = 24.0 IN. C/C

LOADING IN ALL FLAT SECTIONS BASED ON A SLOPE OF 2.00/12 MINIMUM

*** NON STANDARD GIRDER ***
ADDT'L USER-DEFINED LOADS APPLIED TO ALL LOAD CASES.

THIS TRUSS IS DESIGNED FOR RESIDENTIAL OR SMALL BUILDING REQUIREMENTS OF PART 9, NBCC 2015

THIS DESIGN COMPLIES WITH:
- PART 9 OF BCBC 2018 , NBC-2019AE
- PART 9 OF OBC 2012 (2019 AMENDMENT)
- CSA 086-14
- TPIC 2014

(55 % OF 48.1 P.S.F. G.S.L. PLUS 8.4 P.S.F. RAIN LOAD) EQUALS 34.8 P.S.F. SPECIFIED ROOF LIVE LOAD

ALLOWABLE DEFL.(LL)= L/360 (0.20")
CALCULATED VERT. DEFL.(LL) = L/ 999 (0.03")
ALLOWABLE DEFL.(TL)= L/360 (0.20")
CALCULATED VERT. DEFL.(TL) = L/ 999 (0.05")

CSI: TC=0.25/0.97 (D-E:1) , BC=0.46/0.97 (G-H:1) , WB=0.43/0.97 (D-G:1) , SSI=0.44/1.00 (G-H:1)

DOL LUMBER=1.00 NAIL=1.00 LS BEND=1.00 COMP=1.00 SHEAR=1.00 TENS= 1.00

COMPANION LIVE LOAD FACTOR = 1.00

TRUSS PLATE MANUFACTURER IS NOT RESPONSIBLE FOR QUALITY CONTROL IN THE TRUSS MANUFACTURING PLANT .

NAIL VALUES

PLATE	GRIP(DRY) (PSI) MAX	MIN	SHEAR (PLI) MAX	MIN	SECTION (PLI) MAX	MIN
MT20	650	371	1747	788	1987	1873

PLATE PLACEMENT TOL. = 0.250 inches

PLATE ROTATION TOL. = 5.0 Deg.

JSI GRIP= 0.88 (A) (INPUT = 0.90)
JSI METAL= 0.42 (H) (INPUT = 1.00)

LICENSED PROFESSIONAL ENGINEER
N.A. EL-MASRI
PROVINCE OF ONTARIO
Jul 19, 2023

READ ALL NOTES ON THIS PAGE AND ON THE ENGINEERING NOTES: TRUSSES. THE NOTE PAGE IS AN INTEGRAL PART OF THIS DRAWING AS IT CONTAINS SPECIFICATIONS AND CRITERIA USED IN THE DESIGN OF THIS COMPONENT.

KOTT

JOB NAME	TRUSS NAME	QUANTITY	PLY	JOB DESC.	DRWG NO.
NE0723-127	G10	1	1	GREENPARK - ZADORRA ESTATES - VILLA 11-3 (TRUSS DESC.)	

CORPORATION OF THE CITY OF OSHAWA
TRUE COPY
OF PERMIT PLANS
Dec 06 2023
PER:
CHIEF BUILDING OFFICIAL

MHP 23038

Version 8.630 S Mar 22 2023 MiTek Industries, Inc. Wed Jul 19 16:54:09 2023 Page 1
ID:a_geEeAITwiPs63VUzyy33z8f4n-HIplSQSfkT?vRAaYqkb48aPRZTxW7m8igP4eWtywSUC

Scale = 1:25.1

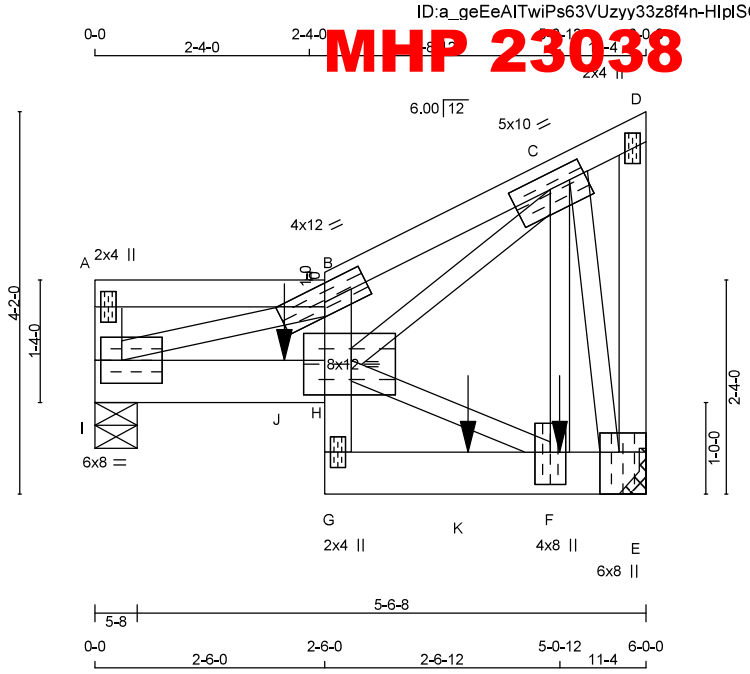

TOTAL WEIGHT = 36 lb
[M][F]

LUMBER
N. L. G. A. RULES

CHORDS	SIZE		LUMBER	DESCR.
I - A	2x4	DRY	No.2	SPF
A - B	2x4	DRY	No.2	SPF
B - D	2x4	DRY	No.2	SPF
E - D	2x4	DRY	No.2	SPF
I - H	2x6	DRY	No.2	SPF
G - B	2x4	DRY	No.2	SPF
G - E	2x6	DRY	No.2	SPF
ALL WEBS	2x3	DRY	No.2	SPF

DRY: SEASONED LUMBER.

PLATES (table is in inches)

JT	TYPE	PLATES	W	LEN	Y	X
A	TMV+p	MT20	2.0	4.0		
B	TTVW-h	MT20	4.0	12.0	2.25	6.00
C	TMWWW-t	MT20	5.0	10.0	2.00	5.00
D	TMV+p	MT20	2.0	4.0		
E	BMVW1+t	MT20	6.0	8.0	Edge	2.50
F	BMWW+t	MT20	4.0	8.0	4.25	2.00
G	BMV+p	MT20	2.0	4.0		
H	BVMWW-l	MT20	8.0	12.0	4.50	6.25
I	BMVW1-t	MT20	6.0	8.0	3.00	2.75

Edge - INDICATES REFERENCE CORNER OF PLATE TOUCHES EDGE OF CHORD.

DIMENSIONS, SUPPORTS AND LOADINGS SPECIFIED BY FABRICATOR TO BE VERIFIED BY BUILDING DESIGNER

BEARINGS

JT	FACTORED GROSS REACTION VERT	HORZ	MAXIMUM FACTORED GROSS REACTION DOWN	HORZ	UPLIFT	INPUT BRG IN-SX	REQRD BRG IN-SX
I	1507	0	1507	0	0	5-8	1-10
E	3216	0	3216	0	0	MECHANICAL	

A SUITABLE HANGER/MECHANICAL CONNECTION IS REQUIRED AT JOINT E. MINIMUM BEARING LENGTH AT JOINT E = 3-8.

UNFACTORED REACTIONS

JT	1ST LCASE COMBINED	MAX./MIN. COMPONENT REACTIONS SNOW	LIVE	PERM.LIVE	WIND	DEAD	SOIL
I	1049	783 / 0	0 / 0	0 / 0	0 / 0	265 / 0	0 / 0
E	2240	1664 / 0	0 / 0	0 / 0	0 / 0	576 / 0	0 / 0

BEARING MATERIAL TO BE SPF NO.2 OR BETTER AT JOINT(S) I

BRACING
TOP CHORD TO BE SHEATHED OR MAX. PURLIN SPACING = 3.42 FT.
MAX. UNBRACED BOTTOM CHORD LENGTH = 7.77 FT OR RIGID CEILING DIRECTLY APPLIED.

ALL PITCH BREAKS AND PERIMETER CORNER JOINTS MUST BE LATERALLY RESTRAINED.

LOADING
TOTAL LOAD CASES: (4)

CHORDS

MEMB. FR-TO	MAX. FORCE (LBS)	FACTORED VERT. LOAD (PLF) FROM	TO	LC1	MAX CSI (LC)	MAX. UNBRAC LENGTH
I- A	-158 / 0	0.0	0.0	0.02 (1)	7.81	
A- B	0 / 0	-119.4	-119.4	0.14 (1)	10.00	
B- C	-3804 / 0	-119.4	-119.4	0.24 (1)	3.42	
C- D	-16 / 0	-119.4	-119.4	0.04 (1)	6.25	
E- D	-22 / 0	0.0	0.0	0.01 (1)	7.81	
I- J	0 / 3890	-18.2	-18.2	0.72 (1)	10.00	
J- H	0 / 3890	-18.2	-18.2	0.72 (1)	10.00	
G- H	0 / 369	0.0	0.0	0.63 (1)	10.00	
H- B	-743 / 0	0.0	0.0	0.45 (1)	7.77	
G- K	0 / 358	-18.2	-18.2	0.38 (1)	10.00	
K- F	0 / 358	-18.2	-18.2	0.38 (1)	10.00	
F- E	0 / 800	-18.2	-18.2	0.37 (1)	10.00	

WEBS

MEMB. FR-TO	MAX. FORCE (LBS)	MAX CSI (LC)
I- B	-4112 / 0	0.70 (1)
H- F	0 / 477	0.11 (1)
H- C	0 / 3391	0.76 (1)
F- C	0 / 2115	0.48 (1)
C- E	-2868 / 0	0.62 (1)

SPECIFIED CONCENTRATED LOADS (LBS)

JT	LOC.	LC1	MAX-	MAX+	FACE	DIR.	TYPE	HEEL	CONN.
F	5-0-12	-1838	-1838	—	FRONT	VERT	TOTAL	—	C1
J	2-0-12	-572	-572	—	FRONT	VERT	TOTAL	—	C1
K	4-0-12	-302	-302	—	FRONT	VERT	TOTAL	—	C1

CONNECTION REQUIREMENTS

1) **C1:** A SUITABLE HANGER/MECHANICAL CONNECTION IS REQUIRED.

DESIGN CRITERIA

*** SPECIAL LOADS ANALYSIS ***
GEOMETRY AND/OR BASIC LOADS CHANGED BY USER.
LOADS WERE DERIVED FROM USER INPUT
NO FURTHER MODIFICATIONS WERE MADE

SPECIFIED LOADS:

TOP CH.	LL	=	34.8	PSF
	DL	=	6.0	PSF
BOT CH.	LL	=	0.0	PSF
	DL	=	7.3	PSF
TOTAL LOAD		=	48.1	PSF

SPACING = 24.0 IN. C/C

LOADING IN ALL FLAT SECTIONS BASED ON A SLOPE OF 2.00/12 MINIMUM

*** NON STANDARD GIRDER ***
ADDT'L USER-DEFINED LOADS APPLIED TO ALL LOAD CASES.

THIS TRUSS IS DESIGNED FOR RESIDENTIAL OR SMALL BUILDING REQUIREMENTS OF PART 9, NBCC 2015

THIS DESIGN COMPLIES WITH:
- PART 9 OF BCBC 2018 , NBC-2019AE
- PART 9 OF OBC 2012 (2019 AMENDMENT)
- CSA 086-14
- TPIC 2014

(55 % OF 48.1 P.S.F. G.S.L. PLUS 8.4 P.S.F. RAIN LOAD) EQUALS 34.8 P.S.F. SPECIFIED ROOF LIVE LOAD

ALLOWABLE DEFL.(LL)= L/360 (0.20")
CALCULATED VERT. DEFL.(LL) = L/ 757 (0.10")
ALLOWABLE DEFL.(TL)= L/360 (0.20")
CALCULATED VERT. DEFL.(TL) = L/ 453 (0.16")

CSI: TC=0.24/0.97 (B-C:1) , BC=0.72/0.97 (H-I:1) , WB=0.76/0.97 (C-H:1) , SSI=0.42/1.00 (B-H:1)

DOL LUMBER=1.00 NAIL=1.00 LS BEND=1.10 COMP=1.10 SHEAR=1.10 TENS= 1.10

COMPANION LIVE LOAD FACTOR = 1.00

TRUSS PLATE MANUFACTURER IS NOT RESPONSIBLE FOR QUALITY CONTROL IN THE TRUSS MANUFACTURING PLANT .

NAIL VALUES

PLATE	GRIP(DRY) (PSI) MAX	MIN	SHEAR (PLI) MAX	MIN	SECTION (PLI) MAX	MIN
MT20	650	371	1747	788	1987	1873

PLATE PLACEMENT TOL. = 0.250 inches

PLATE ROTATION TOL. = 5.0 Deg.

JSI GRIP= 0.89 (C) (INPUT = 0.90)
JSI METAL= 0.79 (B) (INPUT = 1.00)

LICENSED PROFESSIONAL ENGINEER
N.A. EL-MASRI
PROVINCE OF ONTARIO
Jul 19, 2023

READ ALL NOTES ON THIS PAGE AND ON THE ENGINEERING NOTES: TRUSSES. THE NOTE PAGE IS AN INTEGRAL PART OF THIS DRAWING AS IT CONTAINS SPECIFICATIONS AND CRITERIA USED IN THE DESIGN OF THIS COMPONENT.

KOTT

JOB NAME	TRUSS NAME	QUANTITY	PLY	JOB DESC.	DRWG NO.
NE0723-127	G11	1	1	GREENPARK - ZADORRA ESTATES - VILLA 11-3 (TRUSS DESC.)	

CORPORATION OF THE CITY OF OSHAWA
TRUE COPY
OF PERMIT PLANS
Dec 06 2023
PER:
CHIEF BUILDING OFFICIAL

MHP 23038

Version 8.630 S Mar 22 2023 MiTek Industries, Inc. Wed Jul 19 16:54:10 2023 Page 1
ID:a_geEeAITwiPs63VUzyy33z8f4n-IVN7fmTHVn7I3K9kOR6Jhnxc1tP7sMjrv3pB2KywSUB

Scale = 1:20.2

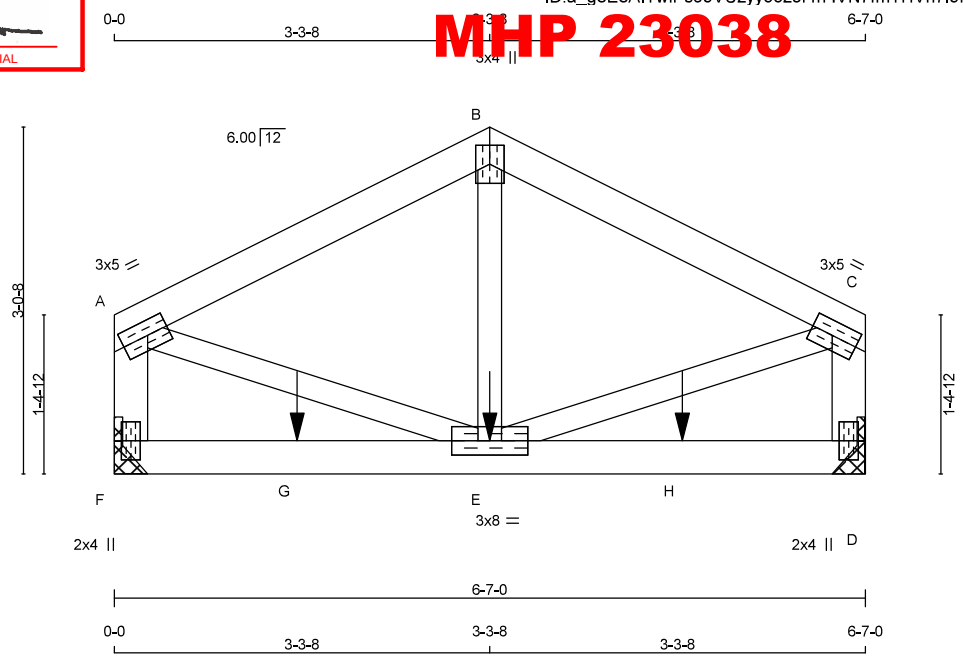

TOTAL WEIGHT = 25 lb [M]

LUMBER
N. L. G. A. RULES

CHORDS	SIZE		LUMBER	DESCR.
A - B	2x4	DRY	No.2	SPF
B - C	2x4	DRY	No.2	SPF
F - A	2x4	DRY	No.2	SPF
D - C	2x4	DRY	No.2	SPF
F - D	2x4	DRY	No.2	SPF
ALL WEBS EXCEPT	2x3	DRY	No.2	SPF

DRY: SEASONED LUMBER.

PLATES (table is in inches)

JT	TYPE	PLATES	W	LEN	Y	X
A	TMVW-t	MT20	3.0	5.0	1.50	2.25
B	TTW+p	MT20	3.0	4.0		
C	TMVW-t	MT20	3.0	5.0	1.50	2.25
D	BMV1+p	MT20	2.0	4.0		
E	BMWWW-t	MT20	3.0	8.0		
F	BMV1+p	MT20	2.0	4.0		

DIMENSIONS, SUPPORTS AND LOADINGS SPECIFIED BY FABRICATOR TO BE VERIFIED BY BUILDING DESIGNER

BEARINGS

JT	FACTORED GROSS REACTION VERT	HORZ	MAXIMUM FACTORED GROSS REACTION DOWN	HORZ	UPLIFT	INPUT BRG IN-SX	REQRD BRG IN-SX
F	839	0	839	0	0	MECHANICAL	
D	839	0	839	0	0	MECHANICAL	

A SUITABLE HANGER/MECHANICAL CONNECTION IS REQUIRED AT JOINT F, D. MINIMUM BEARING LENGTH AT JOINT F = 1-8, JOINT D = 1-8.

UNFACTORED REACTIONS

JT	1ST LCASE COMBINED	MAX./MIN. COMPONENT REACTIONS SNOW	LIVE	PERM.LIVE	WIND	DEAD	SOIL
F	583	438 / 0	0 / 0	0 / 0	0 / 0	145 / 0	0 / 0
D	583	438 / 0	0 / 0	0 / 0	0 / 0	145 / 0	0 / 0

BRACING
TOP CHORD TO BE SHEATHED OR MAX. PURLIN SPACING = 6.25 FT.
MAX. UNBRACED BOTTOM CHORD LENGTH = 10.00 FT OR RIGID CEILING DIRECTLY APPLIED.

ALL PITCH BREAKS AND PERIMETER CORNER JOINTS MUST BE LATERALLY RESTRAINED.

LOADING
TOTAL LOAD CASES: (4)

CHORDS

MEMB. FR-TO	MAX. FACTORED FORCE (LBS)	FACTORED VERT. LOAD (PLF) FROM	TO	LC1 CSI (LC)	MAX UNBRAC LENGTH
A- B	-714 / 0	-119.4	-119.4	0.25 (1)	6.25
B- C	-714 / 0	-119.4	-119.4	0.25 (1)	6.25
F- A	-727 / 0	0.0	0.0	0.08 (1)	7.81
D- C	-727 / 0	0.0	0.0	0.08 (1)	7.81
F- G	0 / 0	-18.2	-18.2	0.25 (1)	10.00
G- E	0 / 0	-18.2	-18.2	0.25 (1)	10.00
E- H	0 / 0	-18.2	-18.2	0.25 (1)	10.00
H- D	0 / 0	-18.2	-18.2	0.25 (1)	10.00

WEBS

MEMB. FR-TO	MAX. FACTORED FORCE (LBS)	MAX CSI (LC)
E- B	0 / 246	0.06 (1)
A- E	0 / 673	0.17 (1)
E- C	0 / 673	0.17 (1)

SPECIFIED CONCENTRATED LOADS (LBS)

JT	LOC.	LC1	MAX-	MAX+	FACE	DIR.	TYPE	HEEL	CONN.
E	3-3-8	-178	-178	—	BACK	VERT	TOTAL	—	C1
G	1-7-4	-178	-178	—	BACK	VERT	TOTAL	—	C1
H	4-11-12	-178	-178	—	BACK	VERT	TOTAL	—	C1

CONNECTION REQUIREMENTS

1) **C1:** A SUITABLE HANGER/MECHANICAL CONNECTION IS REQUIRED.

DESIGN CRITERIA

*** SPECIAL LOADS ANALYSIS ***
GEOMETRY AND/OR BASIC LOADS CHANGED BY USER.
LOADS WERE DERIVED FROM USER INPUT
NO FURTHER MODIFICATIONS WERE MADE

SPECIFIED LOADS:

TOP CH.	LL	=	34.8	PSF
	DL	=	6.0	PSF
BOT CH.	LL	=	0.0	PSF
	DL	=	7.3	PSF
TOTAL LOAD		=	48.1	PSF

SPACING = 24.0 IN. C/C

*** NON STANDARD GIRDER ***
ADDT'L USER-DEFINED LOADS APPLIED TO ALL LOAD CASES.

THIS TRUSS IS DESIGNED FOR RESIDENTIAL OR SMALL BUILDING REQUIREMENTS OF PART 9, NBCC 2015

THIS DESIGN COMPLIES WITH:
- PART 9 OF BCBC 2018 , NBC-2019AE
- PART 9 OF OBC 2012 (2019 AMENDMENT)
- CSA 086-14
- TPIC 2014

(55 % OF 48.1 P.S.F. G.S.L. PLUS 8.4 P.S.F. RAIN LOAD) EQUALS 34.8 P.S.F. SPECIFIED ROOF LIVE LOAD

ALLOWABLE DEFL.(LL)= L/360 (0.22")
CALCULATED VERT. DEFL.(LL) = L/ 999 (0.02")
ALLOWABLE DEFL.(TL)= L/360 (0.22")
CALCULATED VERT. DEFL.(TL) = L/ 999 (0.03")

CSI: TC=0.25/0.97 (B-C:1) , BC=0.25/0.97 (E-F:1) , WB=0.17/0.97 (A-E:1) , SSI=0.18/1.00 (D-E:1)

DOL LUMBER=1.00 NAIL=1.00 LS BEND=1.00 COMP=1.00 SHEAR=1.00 TENS= 1.00

COMPANION LIVE LOAD FACTOR = 1.00

TRUSS PLATE MANUFACTURER IS NOT RESPONSIBLE FOR QUALITY CONTROL IN THE TRUSS MANUFACTURING PLANT .

NAIL VALUES

PLATE	GRIP(DRY) (PSI) MAX	MIN	SHEAR (PLI) MAX	MIN	SECTION (PLI) MAX	MIN
MT20	650	371	1747	788	1987	1873

PLATE PLACEMENT TOL. = 0.250 inches

PLATE ROTATION TOL. = 5.0 Deg.

JSI GRIP= 0.77 (C) (INPUT = 0.90)
JSI METAL= 0.23 (C) (INPUT = 1.00)

LICENSED PROFESSIONAL ENGINEER
N.A. EL-MASRI
PROVINCE OF ONTARIO
Jul 19, 2023

READ ALL NOTES ON THIS PAGE AND ON THE ENGINEERING NOTES: TRUSSES. THE NOTE PAGE IS AN INTEGRAL PART OF THIS DRAWING AS IT CONTAINS SPECIFICATIONS AND CRITERIA USED IN THE DESIGN OF THIS COMPONENT.

KOTT

JOB NAME	TRUSS NAME	QUANTITY	PLY	JOB DESC.	DRWG NO.
NE0723-127	G12	2	1	GREENPARK - ZADORRA ESTATES - VILLA 11-3 (TRUSS DESC.)	

CORPORATION OF THE CITY OF OSHAWA
TRUE COPY
OF PERMIT PLANS
Dec 06 2023
PER:
CHIEF BUILDING OFFICIAL

MHP 23038

Version 8.630 S Mar 22 2023 MiTek Industries, Inc. Wed Jul 19 16:54:10 2023 Page 1
ID:a_geEeAITwiPs63VUzyy33z8f4n-IVN7fmTHVn7I3K9kOR6JhnxdKtSKsOQrv3pB2KywSUB

Scale = 1:18.8

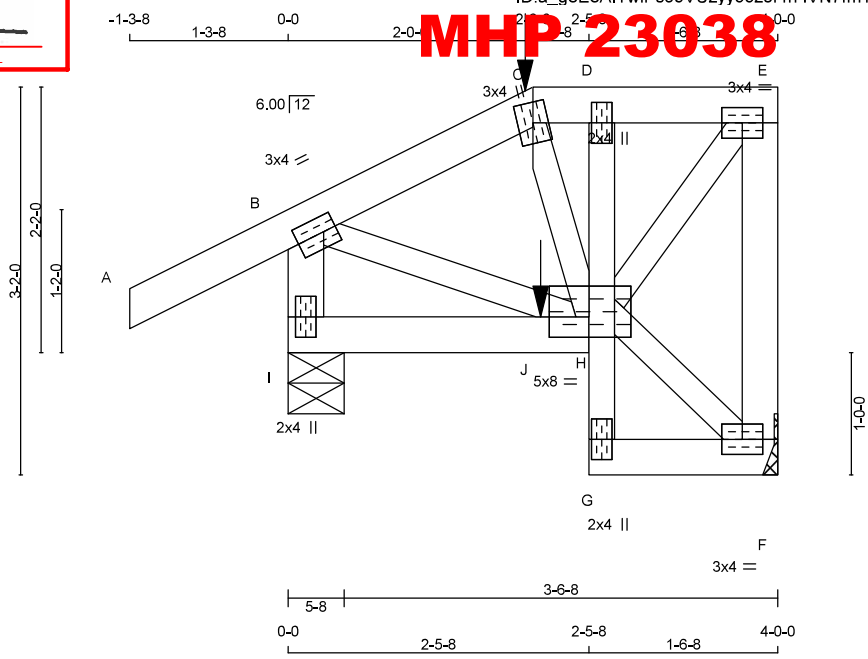

TOTAL WEIGHT = 2 X 23 = 46 lb [M]

LUMBER
N. L. G. A. RULES

CHORDS	SIZE		LUMBER	DESCR.
A - C	2x4	DRY	No.2	SPF
C - E	2x4	DRY	No.2	SPF
F - E	2x4	DRY	No.2	SPF
I - B	2x4	DRY	No.2	SPF
I - H	2x4	DRY	No.2	SPF
G - D	2x3	DRY	No.2	SPF
G - F	2x4	DRY	No.2	SPF
ALL WEBS EXCEPT	2x3	DRY	No.2	SPF

DRY: SEASONED LUMBER.

PLATES (table is in inches)

JT	TYPE	PLATES	W	LEN	Y	X
B	TMVW-t	MT20	3.0	4.0	1.50	1.25
C	TTW+m	MT20	3.0	4.0		
D	TMV+p	MT20	2.0	4.0		
E	TMVW-t	MT20	3.0	4.0		
F	BMVW1-t	MT20	3.0	4.0		
G	BMV+p	MT20	2.0	4.0		
H	BVMWWWW-t	MT20	5.0	8.0	2.00	2.50
I	BMV1+p	MT20	2.0	4.0		

DIMENSIONS, SUPPORTS AND LOADINGS SPECIFIED BY FABRICATOR TO BE VERIFIED BY BUILDING DESIGNER

BEARINGS

JT	FACTORED GROSS REACTION VERT	HORZ	MAXIMUM FACTORED GROSS REACTION DOWN	HORZ	UPLIFT	INPUT BRG IN-SX	REQRD BRG IN-SX
F	278	0	278	0	0	MECHANICAL	
I	440	0	440	0	0	5-8	1-8

A SUITABLE HANGER/MECHANICAL CONNECTION IS REQUIRED AT JOINT F. MINIMUM BEARING LENGTH AT JOINT F = 1-8.

UNFACTORED REACTIONS

JT	1ST LCASE COMBINED	MAX./MIN. COMPONENT REACTIONS SNOW	LIVE	PERM.LIVE	WIND	DEAD	SOIL
F	195	139 / 0	0 / 0	0 / 0	0 / 0	56 / 0	0 / 0
I	306	234 / 0	0 / 0	0 / 0	0 / 0	72 / 0	0 / 0

BEARING MATERIAL TO BE SPF NO.2 OR BETTER AT JOINT(S) I

BRACING
TOP CHORD TO BE SHEATHED OR MAX. PURLIN SPACING = 6.25 FT.
MAX. UNBRACED BOTTOM CHORD LENGTH = 7.81 FT OR RIGID CEILING DIRECTLY APPLIED.

ALL PITCH BREAKS AND PERIMETER CORNER JOINTS MUST BE LATERALLY RESTRAINED.

LOADING
TOTAL LOAD CASES: (4)

CHORDS

MEMB. FR-TO	MAX. FORCE (LBS)	FACTORED VERT. LOAD (PLF) FROM	TO	LC1	MAX CSI (LC)
A- B	0 / 36	-119.4	-119.4	0.17 (1)	
B- C	-180 / 0	-119.4	-119.4	0.09 (1)	
C- D	-142 / 0	-119.4	-119.4	0.01 (1)	
D- E	-140 / 0	-119.4	-119.4	0.04 (1)	
F- E	-263 / 0	0.0	0.0	0.05 (1)	
I- B	-416 / 0	0.0	0.0	0.05 (1)	
I- J	0 / 0	-18.2	-18.2	0.04 (4)	
J- H	0 / 0	-18.2	-18.2	0.04 (4)	
G- H	0 / 15	0.0	0.0	0.01 (1)	
H- D	-139 / 0	0.0	0.0	0.01 (1)	
G- F	0 / 3	-18.2	-18.2	0.01 (4)	

WEBS

MEMB. FR-TO	MAX. FORCE (LBS)	MAX CSI (LC)
C- H	-65 / 0	0.01 (1)
H- F	-4 / 0	0.00 (1)
H- E	0 / 231	0.06 (1)
B- H	0 / 170	0.04 (1)

MAX UNBRAC LENGTH
10.00
6.25
6.25
6.25
7.81
7.81
10.00
10.00
10.00
7.81
10.00

SPECIFIED CONCENTRATED LOADS (LBS)

JT	LOC.	LC1	MAX-	MAX+	FACE	DIR.	TYPE	HEEL	CONN.
C	2-0-0	-3	-3	—	FRONT	VERT	TOTAL	—	C1
J	2-0-12	-2	-2	—	FRONT	VERT	TOTAL	—	C1

CONNECTION REQUIREMENTS

1) **C1:** A SUITABLE HANGER/MECHANICAL CONNECTION IS REQUIRED.

DESIGN CRITERIA

*** SPECIAL LOADS ANALYSIS ***
GEOMETRY AND/OR BASIC LOADS CHANGED BY USER.
LOADS WERE DERIVED FROM USER INPUT
NO FURTHER MODIFICATIONS WERE MADE

SPECIFIED LOADS:

TOP CH.	LL	=	34.8	PSF
	DL	=	6.0	PSF
BOT CH.	LL	=	0.0	PSF
	DL	=	7.3	PSF
TOTAL LOAD		=	48.1	PSF

SPACING = 24.0 IN. C/C

LOADING IN FLAT SECTION BASED ON A SLOPE OF 2.00/12 MINIMUM

*** NON STANDARD GIRDER ***
ADDT'L USER-DEFINED LOADS APPLIED TO ALL LOAD CASES.

THIS TRUSS IS DESIGNED FOR RESIDENTIAL OR SMALL BUILDING REQUIREMENTS OF PART 9, NBCC 2015

THIS DESIGN COMPLIES WITH:
- PART 9 OF BCBC 2018 , NBC-2019AE
- PART 9 OF OBC 2012 (2019 AMENDMENT)
- CSA 086-14
- TPIC 2014

(55 % OF 48.1 P.S.F. G.S.L. PLUS 8.4 P.S.F. RAIN LOAD) EQUALS 34.8 P.S.F. SPECIFIED ROOF LIVE LOAD

ALLOWABLE DEFL.(LL)= L/360 (0.19")
CALCULATED VERT. DEFL.(LL) = L/ 999 (0.00")
ALLOWABLE DEFL.(TL)= L/360 (0.19")
CALCULATED VERT. DEFL.(TL) = L/ 999 (0.00")

CSI: TC=0.17/0.97 (A-B:1) , BC=0.04/0.97 (H-I:4) , WB=0.06/0.97 (E-H:1) , SSI=0.12/1.00 (A-B:1)

DOL LUMBER=1.00 NAIL=1.00 LS BEND=1.00 COMP=1.00 SHEAR=1.00 TENS= 1.00

COMPANION LIVE LOAD FACTOR = 1.00

TRUSS PLATE MANUFACTURER IS NOT RESPONSIBLE FOR QUALITY CONTROL IN THE TRUSS MANUFACTURING PLANT .

NAIL VALUES

PLATE	GRIP(DRY) (PSI) MAX	MIN	SHEAR (PLI) MAX	MIN	SECTION (PLI) MAX	MIN
MT20	650	371	1747	788	1987	1873

PLATE PLACEMENT TOL. = 0.250 inches

PLATE ROTATION TOL. = 5.0 Deg.

JSI GRIP= 0.42 (H) (INPUT = 0.90)
JSI METAL= 0.10 (B) (INPUT = 1.00)

LICENSED PROFESSIONAL ENGINEER
N.A. EL-MASRI
PROVINCE OF ONTARIO
Jul 19, 2023

READ ALL NOTES ON THIS PAGE AND ON THE ENGINEERING NOTES: TRUSSES. THE NOTE PAGE IS AN INTEGRAL PART OF THIS DRAWING AS IT CONTAINS SPECIFICATIONS AND CRITERIA USED IN THE DESIGN OF THIS COMPONENT.

KOTT

JOB NAME	TRUSS NAME	QUANTITY	PLY	JOB DESC.	DRWG NO.
NE0723-127	J01	11	1	GREENPARK - ZADORRA ESTATES - VILLA 11-3 (TRUSS DESC.)	

CORPORATION OF THE CITY OF OSHAWA
TRUE COPY
OF PERMIT PLANS
Dec 06 2023
PER:
CHIEF BUILDING OFFICIAL

MHP 23038

Version 8.630 S Mar 22 2023 MiTek Industries, Inc. Wed Jul 19 16:54:11 2023 Page 1
ID:a_geEeAITwiPs63VUzyy33z8f4n-DhxVt5UvG5FchUkxx8dYD?UfGHm5brZ?8jZlamywSUA

Scale = 1:23.6

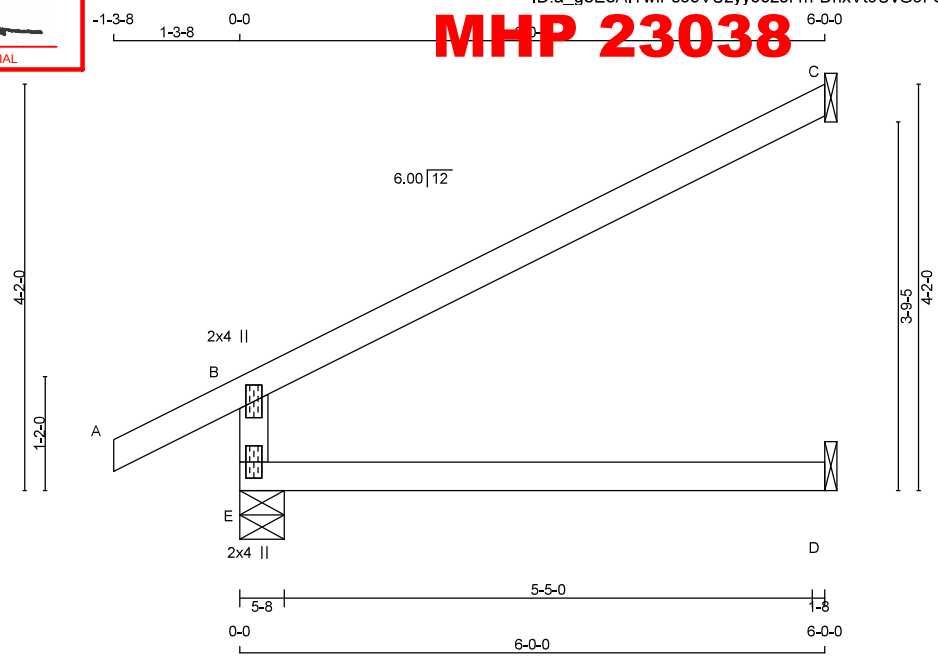

TOTAL WEIGHT = 11 X 17 = 188 lb [M]

LUMBER
N. L. G. A. RULES

CHORDS	SIZE		LUMBER	DESCR.
E - B	2x4	DRY	No.2	SPF
A - C	2x4	DRY	No.2	SPF
E - D	2x4	DRY	No.2	SPF

DRY: SEASONED LUMBER.

PLATES (table is in inches)

JT	TYPE	PLATES	W	LEN	Y	X
B	TMV+p	MT20	2.0	4.0		
E	BMV1+p	MT20	2.0	4.0		

DIMENSIONS, SUPPORTS AND LOADINGS SPECIFIED BY FABRICATOR TO BE VERIFIED BY BUILDING DESIGNER

BEARINGS

JT	FACTORED GROSS REACTION VERT	HORZ	MAXIMUM FACTORED GROSS REACTION DOWN	HORZ	UPLIFT	INPUT BRG IN-SX	REQRD BRG IN-SX
E	674	0	674	0	0	5-8	1-8
C	269	0	269	0	0	1-8	1-8
D	45	0	51	0	0	1-8	1-8

SEE MITEK STANDARD DETAIL MSD2015-H FOR CONNECTION TO JOINT(S) C , D

UNFACTORED REACTIONS

JT	1ST LCASE COMBINED	MAX./MIN. COMPONENT REACTIONS SNOW	LIVE	PERM.LIVE	WIND	DEAD	SOIL
E	468	355 / 0	0 / 0	0 / 0	0 / 0	113 / 0	0 / 0
C	184	157 / 0	0 / 0	0 / 0	0 / 0	27 / 0	0 / 0
D	36	0 / 0	0 / 0	0 / 0	0 / 0	36 / 0	0 / 0

BEARING MATERIAL TO BE SPF NO.2 OR BETTER AT JOINT(S) E

BRACING
TOP CHORD TO BE SHEATHED OR MAX. PURLIN SPACING = 6.25 FT.
MAX. UNBRACED BOTTOM CHORD LENGTH = 10.00 FT OR RIGID CEILING DIRECTLY APPLIED.

ALL PITCH BREAKS AND PERIMETER CORNER JOINTS MUST BE LATERALLY RESTRAINED.

LOADING
TOTAL LOAD CASES: (4)

CHORDS MEMB. FR-TO	MAX. FACTORED FORCE (LBS)	FACTORED VERT. LOAD (PLF) FROM	TO	LC1 MAX CSI (LC)	MAX UNBRAC LENGTH	WEBS MEMB. FR-TO	MAX. FACTORED FORCE (LBS)	MAX CSI (LC)
E- B	-610 / 0	0.0	0.0	0.13 (4)	7.81			
A- B	0 / 36	-119.4	-119.4	0.16 (1)	10.00			
B- C	-40 / 0	-119.4	-119.4	0.73 (1)	6.25			
E- D	0 / 0	-18.2	-18.2	0.13 (4)	10.00			

DESIGN CRITERIA

SPECIFIED LOADS:

TOP CH.	LL	=	34.8	PSF
	DL	=	6.0	PSF
BOT CH.	LL	=	0.0	PSF
	DL	=	7.3	PSF
TOTAL LOAD		=	48.1	PSF

SPACING = 24.0 IN. C/C

THIS TRUSS IS DESIGNED FOR RESIDENTIAL OR SMALL BUILDING REQUIREMENTS OF PART 9, NBCC 2015

THIS DESIGN COMPLIES WITH:
- PART 9 OF BCBC 2018 , NBC-2019AE
- PART 9 OF OBC 2012 (2019 AMENDMENT)
- CSA 086-14
- TPIC 2014

DESIGN ASSUMPTIONS
-OVERHANG NOT TO BE ALTERED OR CUT OFF.

(55 % OF 48.1 P.S.F. G.S.L. PLUS 8.4 P.S.F. RAIN LOAD) EQUALS 34.8 P.S.F. SPECIFIED ROOF LIVE LOAD

ALLOWABLE DEFL.(TL)= L/360 (0.20")
CALCULATED VERT. DEFL.(TL) = L/ 999 (0.03")

CSI: TC=0.73/0.97 (B-C:1) , BC=0.13/0.97 (D-E:4) , WB=0.00/0.97 (n/a:0) , SSI=0.31/1.00 (B-C:1)

DOL LUMBER=1.00 NAIL=1.00 LS BEND=1.10 COMP=1.10 SHEAR=1.10 TENS= 1.10

COMPANION LIVE LOAD FACTOR = 1.00

TRUSS PLATE MANUFACTURER IS NOT RESPONSIBLE FOR QUALITY CONTROL IN THE TRUSS MANUFACTURING PLANT .

NAIL VALUES

PLATE	GRIP(DRY) (PSI) MAX	MIN	SHEAR (PLI) MAX	MIN	SECTION (PLI) MAX	MIN
MT20	650	371	1747	788	1987	1873

PLATE PLACEMENT TOL. = 0.250 inches

PLATE ROTATION TOL. = 5.0 Deg.

JSI GRIP= 0.34 (B) (INPUT = 0.90)
JSI METAL= 0.25 (B) (INPUT = 1.00)

LICENSED PROFESSIONAL ENGINEER
N.A. EL-MASRI
PROVINCE OF ONTARIO
Jul 19, 2023

READ ALL NOTES ON THIS PAGE AND ON THE ENGINEERING NOTES: TRUSSES. THE NOTE PAGE IS AN INTEGRAL PART OF THIS DRAWING AS IT CONTAINS SPECIFICATIONS AND CRITERIA USED IN THE DESIGN OF THIS COMPONENT.

KOTT

JOB NAME	TRUSS NAME	QUANTITY	PLY	JOB DESC.	DRWG NO.
NE0723-127	J02	3	1	GREENPARK - ZADORRA ESTATES - VILLA 11-3 (TRUSS DESC.)	

CORPORATION OF THE CITY OF OSHAWA
TRUE COPY
OF PERMIT PLANS
Dec 06 2023
PER: C Mar
CHIEF BUILDING OFFICIAL

MHP 23038

Version 8.630 S Mar 22 2023 MiTek Industries, Inc. Wed Jul 19 16:54:11 2023 Page 1
ID:a_geEeAITwiPs63VUzyy33z8f4n-DhxVt5UvG5FchUkxx8dYD?UmtHm5brZ?8jZlamywSUA

Scale = 1:18.6

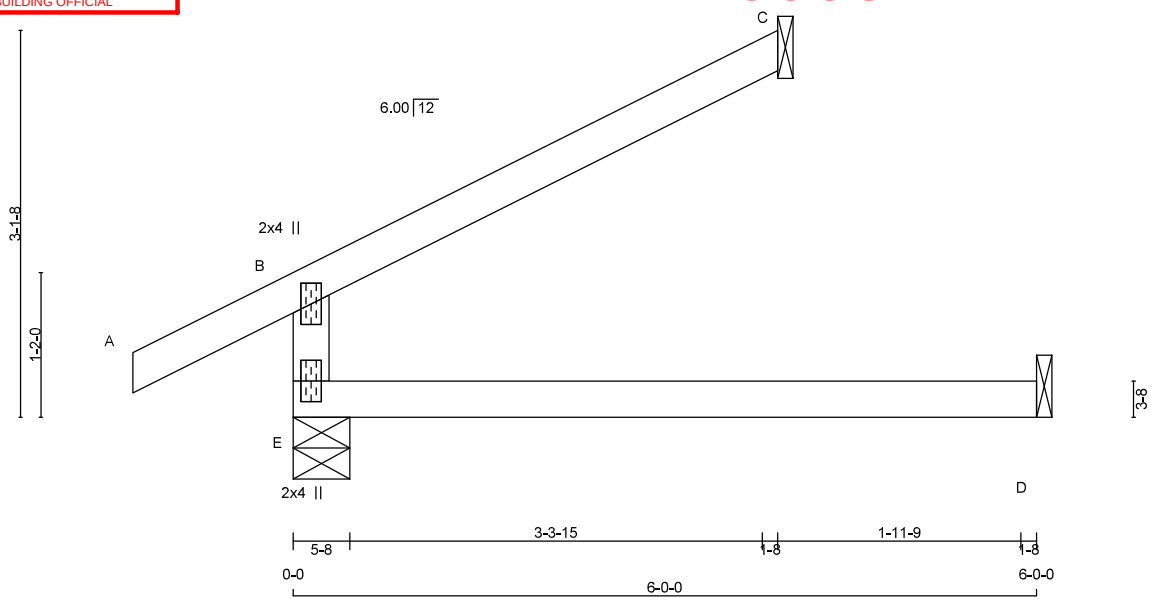

TOTAL WEIGHT = 3 X 14 = 43 lb [M]

LUMBER
N. L. G. A. RULES

CHORDS	SIZE		LUMBER	DESCR.
E - B	2x4	DRY	No.2	SPF
A - C	2x4	DRY	No.2	SPF
E - D	2x4	DRY	No.2	SPF

DRY: SEASONED LUMBER.

PLATES (table is in inches)

JT	TYPE	PLATES	W	LEN	Y	X
B	TMV+p	MT20	2.0	4.0		
E	BMV1+p	MT20	2.0	4.0		

DIMENSIONS, SUPPORTS AND LOADINGS SPECIFIED BY FABRICATOR TO BE VERIFIED BY BUILDING DESIGNER

BEARINGS

JT	FACTORED GROSS REACTION VERT	HORZ	MAXIMUM FACTORED GROSS REACTION DOWN	HORZ	UPLIFT	INPUT BRG IN-SX	REQRD BRG IN-SX
E	518	0	518	0	0	5-8	1-8
C	175	0	175	0	0	1-8	1-8
D	45	0	51	0	0	1-8	1-8

SEE MITEK STANDARD DETAIL MSD2015-H FOR CONNECTION TO JOINT(S) C , D

UNFACTORED REACTIONS

JT	1ST LCASE COMBINED	MAX./MIN. COMPONENT REACTIONS SNOW	LIVE	PERM.LIVE	WIND	DEAD	SOIL
E	362	265 / 0	0 / 0	0 / 0	0 / 0	97 / 0	0 / 0
C	120	102 / 0	0 / 0	0 / 0	0 / 0	18 / 0	0 / 0
D	36	0 / 0	0 / 0	0 / 0	0 / 0	36 / 0	0 / 0

BEARING MATERIAL TO BE SPF NO.2 OR BETTER AT JOINT(S) E, C

BRACING
TOP CHORD TO BE SHEATHED OR MAX. PURLIN SPACING = 6.25 FT.
MAX. UNBRACED BOTTOM CHORD LENGTH = 10.00 FT OR RIGID CEILING DIRECTLY APPLIED.

ALL PITCH BREAKS AND PERIMETER CORNER JOINTS MUST BE LATERALLY RESTRAINED.

LOADING
TOTAL LOAD CASES: (4)

CHORDS MEMB. FR-TO	MAX. FACTORED FORCE (LBS)	FACTORED VERT. LOAD LC1 (PLF) FROM	TO	MAX CSI (LC)	WEBS MAX. UNBRAC LENGTH	MEMB. FR-TO	MAX. FACTORED FORCE (LBS)	MAX CSI (LC)
E- B	-454 / 0	0.0	0.0	0.13 (4)	7.81			
A- B	0 / 36	-119.4	-119.4	0.16 (1)	10.00			
B- C	-26 / 0	-119.4	-119.4	0.31 (1)	6.25			
E- D	0 / 0	-18.2	-18.2	0.13 (4)	10.00			

DESIGN CRITERIA

SPECIFIED LOADS:

TOP CH.	LL	=	34.8	PSF
	DL	=	6.0	PSF
BOT CH.	LL	=	0.0	PSF
	DL	=	7.3	PSF
TOTAL LOAD		=	48.1	PSF

SPACING = 24.0 IN. C/C

THIS TRUSS IS DESIGNED FOR RESIDENTIAL OR SMALL BUILDING REQUIREMENTS OF PART 9, NBCC 2015

THIS DESIGN COMPLIES WITH:
- PART 9 OF BCBC 2018 , NBC-2019AE
- PART 9 OF OBC 2012 (2019 AMENDMENT)
- CSA 086-14
- TPIC 2014

DESIGN ASSUMPTIONS
-OVERHANG NOT TO BE ALTERED OR CUT OFF.

(55 % OF 48.1 P.S.F. G.S.L. PLUS 8.4 P.S.F. RAIN LOAD) EQUALS 34.8 P.S.F. SPECIFIED ROOF LIVE LOAD

ALLOWABLE DEFL.(LL)= L/360 (0.20")
CALCULATED VERT. DEFL.(LL) = L/ 999 (0.00")
ALLOWABLE DEFL.(TL)= L/360 (0.20")
CALCULATED VERT. DEFL.(TL) = L/ 999 (0.03")

CSI: TC=0.31/0.97 (B-C:1) , BC=0.13/0.97 (D-E:4) , WB=0.00/0.97 (n/a:0) , SSI=0.20/1.00 (B-C:1)

DOL LUMBER=1.00 NAIL=1.00 LS BEND=1.10 COMP=1.10 SHEAR=1.10 TENS= 1.10

COMPANION LIVE LOAD FACTOR = 1.00

TRUSS PLATE MANUFACTURER IS NOT RESPONSIBLE FOR QUALITY CONTROL IN THE TRUSS MANUFACTURING PLANT .

NAIL VALUES

PLATE	GRIP(DRY) (PSI) MAX	MIN	SHEAR (PLI) MAX	MIN	SECTION (PLI) MAX	MIN
MT20	650	371	1747	788	1987	1873

PLATE PLACEMENT TOL. = 0.250 inches

PLATE ROTATION TOL. = 5.0 Deg.

JSI GRIP= 0.25 (B) (INPUT = 0.90)
JSI METAL= 0.19 (B) (INPUT = 1.00)

LICENSED PROFESSIONAL ENGINEER
N.A. EL-MASRI
PROVINCE OF ONTARIO
Jul 19, 2023

READ ALL NOTES ON THIS PAGE AND ON THE ENGINEERING NOTES: TRUSSES. THE NOTE PAGE IS AN INTEGRAL PART OF THIS DRAWING AS IT CONTAINS SPECIFICATIONS AND CRITERIA USED IN THE DESIGN OF THIS COMPONENT.

KOTT

JOB NAME	TRUSS NAME	QUANTITY	PLY	JOB DESC.	DRWG NO.
NE0723-127	J03	3	1	TRUSS DESC. GREENPARK - ZADORRA ESTATES - VILLA 11-3	

CORPORATION OF THE CITY OF OSHAWA
TRUE COPY
OF PERMIT PLANS
Dec 06 2023
PER:
CHIEF BUILDING OFFICIAL

MHP 23038

Version 8.630 S Mar 22 2023 MiTek Industries, Inc. Wed Jul 19 16:54:12 2023 Page 1
ID:a_geEeAITwiPs63VUzyy33z8f4n-htVt4RVX1ONTIeJ7Vs9nmC1z2g6KKIp8MNII6CywSU9

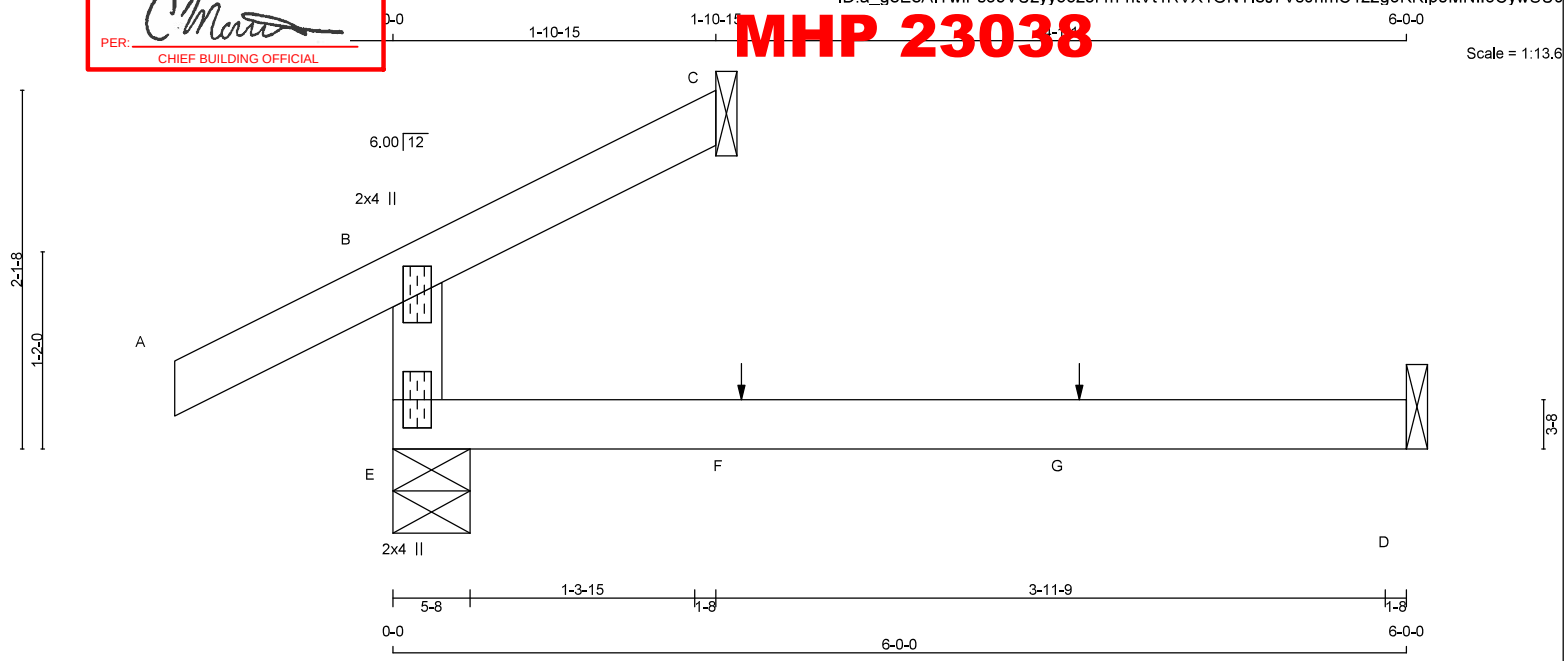

TOTAL WEIGHT = 3 X 12 = 36 lb [M]

LUMBER
N. L. G. A. RULES

CHORDS	SIZE		LUMBER	DESCR.
E - B	2x4	DRY	No.2	SPF
A - C	2x4	DRY	No.2	SPF
E - D	2x4	DRY	No.2	SPF

DRY: SEASONED LUMBER.

PLATES (table is in inches)

JT	TYPE	PLATES	W	LEN	Y	X
B	TMV+p	MT20	2.0	4.0		
E	BMV1+p	MT20	2.0	4.0		

DIMENSIONS, SUPPORTS AND LOADINGS SPECIFIED BY FABRICATOR TO BE VERIFIED BY BUILDING DESIGNER

BEARINGS

JT	FACTORED GROSS REACTION VERT	HORZ	MAXIMUM FACTORED GROSS REACTION DOWN	HORZ	UPLIFT	INPUT BRG IN-SX	REQRD BRG IN-SX
E	368	0	368	0	0	5-8	1-8
C	86	0	86	0	0	1-8	1-8
D	45	0	51	0	0	1-8	1-8

SEE MITEK STANDARD DETAIL MSD2015-H FOR CONNECTION TO JOINT(S) C , D

UNFACTORED REACTIONS

JT	1ST LCASE COMBINED	MAX./MIN. COMPONENT REACTIONS SNOW	LIVE	PERM.LIVE	WIND	DEAD	SOIL
E	259	177 / 0	0 / 0	0 / 0	0 / 0	82 / 0	0 / 0
C	59	50 / 0	0 / 0	0 / 0	0 / 0	9 / 0	0 / 0
D	36	0 / 0	0 / 0	0 / 0	0 / 0	36 / 0	0 / 0

BEARING MATERIAL TO BE SPF NO.2 OR BETTER AT JOINT(S) E, C

BRACING
TOP CHORD TO BE SHEATHED OR MAX. PURLIN SPACING = 6.25 FT.
MAX. UNBRACED BOTTOM CHORD LENGTH = 10.00 FT OR RIGID CEILING DIRECTLY APPLIED.

ALL PITCH BREAKS AND PERIMETER CORNER JOINTS MUST BE LATERALLY RESTRAINED.

LOADING
TOTAL LOAD CASES: (4)

CHORDS MEMB. FR-TO	MAX. FACTORED FORCE (LBS)	FACTORED VERT. LOAD (PLF) FROM	TO	LC1 CSI (LC)	MAX	WEBS MEMB. FR-TO	MAX. FACTORED FORCE (LBS)	MAX CSI (LC) UNBRAC LENGTH
E- B	-304 / 0	0.0	0.0	0.13 (4)	7.81			
A- B	0 / 36	-119.4	-119.4	0.16 (1)	10.00			
B- C	-12 / 0	-119.4	-119.4	0.07 (1)	6.25			
E- F	0 / 0	-18.2	-18.2	0.13 (4)	10.00			
F- G	0 / 0	-18.2	-18.2	0.13 (4)	10.00			
G- D	0 / 0	-18.2	-18.2	0.13 (4)	10.00			

SPECIFIED CONCENTRATED LOADS (LBS)

JT	LOC.	LC1	MAX-	MAX+	FACE	DIR.	TYPE	HEEL	CONN.
F	2-0-12	1	1	—	FRONT	VERT	TOTAL	—	C1
G	4-0-12	1	1	—	FRONT	VERT	TOTAL	—	C1

CONNECTION REQUIREMENTS

1) **C1:** A SUITABLE HANGER/MECHANICAL CONNECTION IS REQUIRED.

DESIGN CRITERIA

*** SPECIAL LOADS ANALYSIS ***
GEOMETRY AND/OR BASIC LOADS CHANGED BY USER.
LOADS WERE DERIVED FROM USER INPUT
NO FURTHER MODIFICATIONS WERE MADE

SPECIFIED LOADS:

TOP CH.	LL	=	34.8	PSF
	DL	=	6.0	PSF
BOT CH.	LL	=	0.0	PSF
	DL	=	7.3	PSF
TOTAL LOAD		=	48.1	PSF

SPACING = 24.0 IN. C/C

*** NON STANDARD GIRDER ***
ADDT'L USER-DEFINED LOADS APPLIED TO ALL LOAD CASES.

THIS TRUSS IS DESIGNED FOR RESIDENTIAL OR SMALL BUILDING REQUIREMENTS OF PART 9, NBCC 2015

THIS DESIGN COMPLIES WITH:
- PART 9 OF BCBC 2018 , NBC-2019AE
- PART 9 OF OBC 2012 (2019 AMENDMENT)
- CSA 086-14
- TPIC 2014

DESIGN ASSUMPTIONS
-OVERHANG NOT TO BE ALTERED OR CUT OFF.

(55 % OF 48.1 P.S.F. G.S.L. PLUS 8.4 P.S.F. RAIN LOAD) EQUALS 34.8 P.S.F. SPECIFIED ROOF LIVE LOAD

ALLOWABLE DEFL.(LL)= L/360 (0.20")
CALCULATED VERT. DEFL.(LL) = L/ 999 (0.00")
ALLOWABLE DEFL.(TL)= L/360 (0.20")
CALCULATED VERT. DEFL.(TL) = L/ 999 (0.03")

CSI: TC=0.16/0.97 (A-B:1) , BC=0.13/0.97 (D-E:4) , WB=0.00/0.97 (n/a:0) , SSI=0.11/1.00 (A-B:1)

DOL LUMBER=1.00 NAIL=1.00 LS BEND=1.10 COMP=1.10 SHEAR=1.10 TENS= 1.10

COMPANION LIVE LOAD FACTOR = 1.00

TRUSS PLATE MANUFACTURER IS NOT RESPONSIBLE FOR QUALITY CONTROL IN THE TRUSS MANUFACTURING PLANT .

NAIL VALUES

PLATE	GRIP(DRY) (PSI) MAX	MIN	SHEAR (PLI) MAX	MIN	SECTION (PLI) MAX	MIN
MT20	650	371	1747	788	1987	1873

PLATE PLACEMENT TOL. = 0.250 inches

PLATE ROTATION TOL. = 5.0 Deg.

JSI GRIP= 0.17 (B) (INPUT = 0.90)
JSI METAL= 0.13 (B) (INPUT = 1.00)

LICENSED PROFESSIONAL ENGINEER
N.A. EL-MASRI
PROVINCE OF ONTARIO
Jul 19, 2023

READ ALL NOTES ON THIS PAGE AND ON THE ENGINEERING NOTES: TRUSSES. THE NOTE PAGE IS AN INTEGRAL PART OF THIS DRAWING AS IT CONTAINS SPECIFICATIONS AND CRITERIA USED IN THE DESIGN OF THIS COMPONENT.

KOTT

JOB NAME	TRUSS NAME	QUANTITY	PLY	JOB DESC.	DRWG NO.
NE0723-127	J04	3	1	GREENPARK - ZADORRA ESTATES - VILLA 11-3 (TRUSS DESC.)	

CORPORATION OF THE CITY OF OSHAWA
TRUE COPY
OF PERMIT PLANS
Dec 06 2023
PER:
CHIEF BUILDING OFFICIAL

MHP 23038

Version 8.630 S Mar 22 2023 MiTek Industries, Inc. Wed Jul 19 16:54:12 2023 Page 1
ID:a_geEeAITwiPs63VUzyy33z8f4n-htVt4RVX1ONTIeJ7Vs9nmC1xdg8AKIp8MNII6CywSU9

Scale = 1:18.8

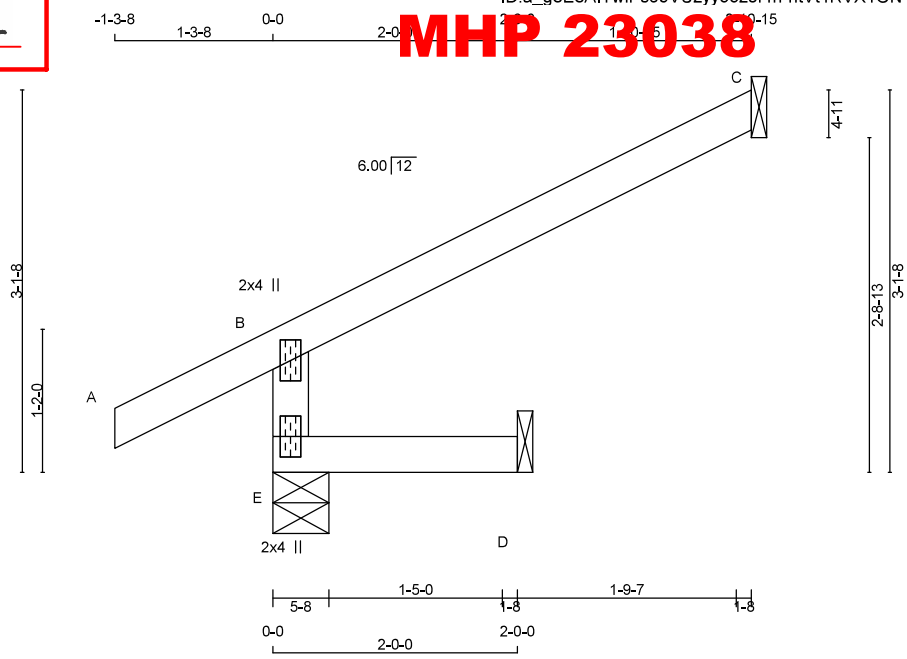

TOTAL WEIGHT = 3 X 10 = 30 lb [M]

LUMBER
N. L. G. A. RULES

CHORDS	SIZE		LUMBER	DESCR.
E - B	2x4	DRY	No.2	SPF
A - C	2x4	DRY	No.2	SPF
E - D	2x4	DRY	No.2	SPF

DRY: SEASONED LUMBER.

PLATES (table is in inches)

JT	TYPE	PLATES	W	LEN	Y	X
B	TMV+p	MT20	2.0	4.0		
E	BMV1+p	MT20	2.0	4.0		

DIMENSIONS, SUPPORTS AND LOADINGS SPECIFIED BY FABRICATOR TO BE VERIFIED BY BUILDING DESIGNER

BEARINGS

JT	FACTORED GROSS REACTION VERT	HORZ	MAXIMUM FACTORED GROSS REACTION DOWN	HORZ	UPLIFT	INPUT BRG IN-SX	REQRD BRG IN-SX
E	474	0	474	0	0	5-8	1-8
C	175	0	175	0	0	1-8	1-8
D	16	0	18	0	0	1-8	1-8

SEE MITEK STANDARD DETAIL MSD2015-H FOR CONNECTION TO JOINT(S) C , D

UNFACTORED REACTIONS

JT	1ST LCASE COMBINED	MAX./MIN. COMPONENT REACTIONS SNOW	LIVE	PERM.LIVE	WIND	DEAD	SOIL
E	326	265 / 0	0 / 0	0 / 0	0 / 0	62 / 0	0 / 0
C	120	102 / 0	0 / 0	0 / 0	0 / 0	18 / 0	0 / 0
D	13	0 / 0	0 / 0	0 / 0	0 / 0	13 / 0	0 / 0

BEARING MATERIAL TO BE SPF NO.2 OR BETTER AT JOINT(S) E

BRACING
TOP CHORD TO BE SHEATHED OR MAX. PURLIN SPACING = 6.25 FT.
MAX. UNBRACED BOTTOM CHORD LENGTH = 10.00 FT OR RIGID CEILING DIRECTLY APPLIED.

ALL PITCH BREAKS AND PERIMETER CORNER JOINTS MUST BE LATERALLY RESTRAINED.

LOADING
TOTAL LOAD CASES: (5)

CHORDS

MEMB. FR-TO	MAX. FACTORED FORCE (LBS)	FACTORED VERT. LOAD (PLF) FROM	TO	LC1 MAX CSI (LC)	MAX UNBRAC LENGTH
E- B	-454 / 0	0.0	0.0	0.01 (4)	7.81
A- B	0 / 36	-119.4	-119.4	0.16 (1)	10.00
B- C	-26 / 0	-119.4	-119.4	0.31 (1)	6.25
E- D	0 / 0	-18.2	-18.2	0.02 (4)	10.00

WEBS

MEMB. FR-TO	MAX. FACTORED FORCE (LBS)	MAX CSI (LC)

CANTILEVER ANALYSIS HAS BEEN CONSIDERED IN THIS DESIGN

PATTERN-LOADING CHECK APPLIED TO THIS TRUSS.

DESIGN CRITERIA

SPECIFIED LOADS:

TOP CH.	LL	=	34.8	PSF
	DL	=	6.0	PSF
BOT CH.	LL	=	0.0	PSF
	DL	=	7.3	PSF
TOTAL LOAD		=	48.1	PSF

SPACING = 24.0 IN. C/C

THIS TRUSS IS DESIGNED FOR RESIDENTIAL OR SMALL BUILDING REQUIREMENTS OF PART 9, NBCC 2015

THIS DESIGN COMPLIES WITH:
- PART 9 OF BCBC 2018 , NBC-2019AE
- PART 9 OF OBC 2012 (2019 AMENDMENT)
- CSA 086-14
- TPIC 2014

DESIGN ASSUMPTIONS
-OVERHANG NOT TO BE ALTERED OR CUT OFF.

(55 % OF 48.1 P.S.F. G.S.L. PLUS 8.4 P.S.F. RAIN LOAD) EQUALS 34.8 P.S.F. SPECIFIED ROOF LIVE LOAD

ALLOWABLE DEFL.(LL)= L/360 (0.19")
CALCULATED VERT. DEFL.(LL) = L/ 999 (0.00")
ALLOWABLE DEFL.(TL)= L/360 (0.19")
CALCULATED VERT. DEFL.(TL) = L/ 999 (0.00")

CSI: TC=0.31/0.97 (B-C:1) , BC=0.02/0.97 (D-E:4) , WB=0.00/0.97 (n/a:0) , SSI=0.20/1.00 (B-C:1)

DOL LUMBER=1.00 NAIL=1.00 LS BEND=1.10 COMP=1.10 SHEAR=1.10 TENS= 1.10

COMPANION LIVE LOAD FACTOR = 1.00

TRUSS PLATE MANUFACTURER IS NOT RESPONSIBLE FOR QUALITY CONTROL IN THE TRUSS MANUFACTURING PLANT .

NAIL VALUES

PLATE	GRIP(DRY) (PSI) MAX	MIN	SHEAR (PLI) MAX	MIN	SECTION (PLI) MAX	MIN
MT20	650	371	1747	788	1987	1873

PLATE PLACEMENT TOL. = 0.250 inches

PLATE ROTATION TOL. = 5.0 Deg.

JSI GRIP= 0.25 (B) (INPUT = 0.90)
JSI METAL= 0.19 (B) (INPUT = 1.00)

LICENSED PROFESSIONAL ENGINEER
N.A. EL-MASRI
PROVINCE OF ONTARIO
Jul 19, 2023

READ ALL NOTES ON THIS PAGE AND ON THE ENGINEERING NOTES: TRUSSES. THE NOTE PAGE IS AN INTEGRAL PART OF THIS DRAWING AS IT CONTAINS SPECIFICATIONS AND CRITERIA USED IN THE DESIGN OF THIS COMPONENT.

KOTT

JOB NAME	TRUSS NAME	QUANTITY	PLY	JOB DESC.	DRWG NO.
NE0723-127	J05	4	1	GREENPARK - ZADORRA ESTATES - VILLA 11-3 (TRUSS DESC.)	

CORPORATION OF THE CITY OF OSHAWA
TRUE COPY
OF PERMIT PLANS
Dec 06 2023
PER: C Martin
CHIEF BUILDING OFFICIAL

MHP 23038

Version 8.630 S Mar 22 2023 MiTek Industries, Inc. Wed Jul 19 16:54:13 2023 Page 1
ID:a_geEeAITwiPs63VUzyy33z8f4n-943GInV9oiVKwouJ3Zg0IQZ8o4TP3I3Ib12rfeywSU8

Scale = 1:13.6

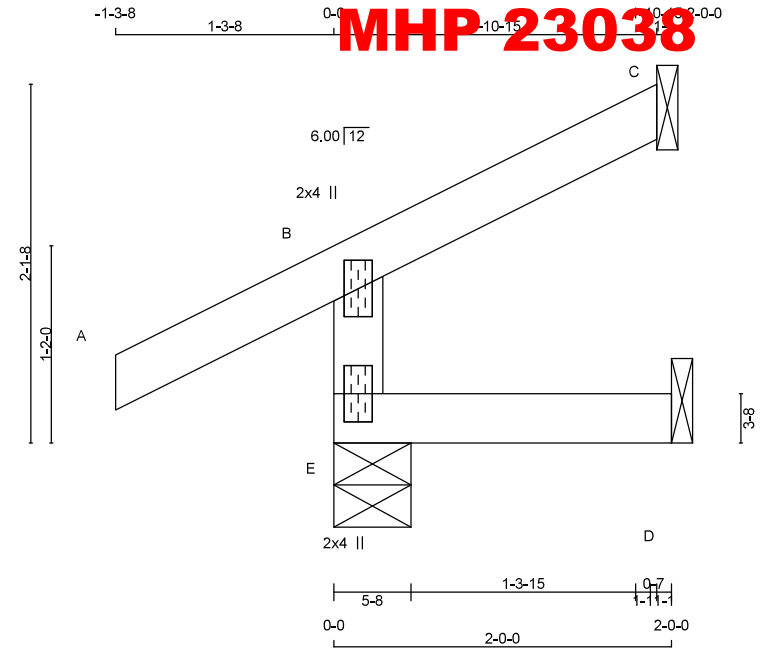

TOTAL WEIGHT = 4 X 7 = 29 lb [M]

LUMBER
N. L. G. A. RULES

CHORDS	SIZE		LUMBER	DESCR.
E - B	2x4	DRY	No.2	SPF
A - C	2x4	DRY	No.2	SPF
E - D	2x4	DRY	No.2	SPF

DRY: SEASONED LUMBER.

PLATES (table is in inches)

JT	TYPE	PLATES	W	LEN	Y	X
B	TMV+p	MT20	2.0	4.0		
E	BMV1+p	MT20	2.0	4.0		

DIMENSIONS, SUPPORTS AND LOADINGS SPECIFIED BY FABRICATOR TO BE VERIFIED BY BUILDING DESIGNER

BEARINGS

JT	FACTORED GROSS REACTION VERT	HORZ	MAXIMUM FACTORED GROSS REACTION DOWN	HORZ	UPLIFT	INPUT BRG IN-SX	REQRD BRG IN-SX
E	324	0	324	0	0	5-8	1-8
C	86	0	86	0	0	1-8	1-8
D	16	0	18	0	0	1-8	1-8

SEE MITEK STANDARD DETAIL MSD2015-H FOR CONNECTION TO JOINT(S) C , D

UNFACTORED REACTIONS

JT	1ST LCASE COMBINED	MAX./MIN. COMPONENT REACTIONS SNOW	LIVE	PERM.LIVE	WIND	DEAD	SOIL
E	224	177 / 0	0 / 0	0 / 0	0 / 0	47 / 0	0 / 0
C	59	50 / 0	0 / 0	0 / 0	0 / 0	9 / 0	0 / 0
D	13	0 / 0	0 / 0	0 / 0	0 / 0	13 / 0	0 / 0

BEARING MATERIAL TO BE SPF NO.2 OR BETTER AT JOINT(S) E, C

BRACING
TOP CHORD TO BE SHEATHED OR MAX. PURLIN SPACING = 6.25 FT.
MAX. UNBRACED BOTTOM CHORD LENGTH = 10.00 FT OR RIGID CEILING DIRECTLY APPLIED.

ALL PITCH BREAKS AND PERIMETER CORNER JOINTS MUST BE LATERALLY RESTRAINED.

LOADING
TOTAL LOAD CASES: (5)

CHORDS

MEMB. FR-TO	MAX. FACTORED FORCE (LBS)	FACTORED VERT. LOAD (PLF) FROM	TO	LC1 MAX CSI (LC)	UNBRAC LENGTH
E- B	-304 / 0	0.0	0.0	0.01 (4)	7.81
A- B	0 / 36	-119.4	-119.4	0.16 (1)	10.00
B- C	-12 / 0	-119.4	-119.4	0.07 (1)	6.25
E- D	0 / 0	-18.2	-18.2	0.02 (4)	10.00

WEBS

MEMB. FR-TO	MAX. FACTORED FORCE (LBS)	MAX CSI (LC)

CANTILEVER ANALYSIS HAS BEEN CONSIDERED IN THIS DESIGN

PATTERN-LOADING CHECK APPLIED TO THIS TRUSS.

DESIGN CRITERIA

SPECIFIED LOADS:

TOP CH.	LL	=	34.8	PSF
	DL	=	6.0	PSF
BOT CH.	LL	=	0.0	PSF
	DL	=	7.3	PSF
TOTAL LOAD		=	48.1	PSF

SPACING = 24.0 IN. C/C

THIS TRUSS IS DESIGNED FOR RESIDENTIAL OR SMALL BUILDING REQUIREMENTS OF PART 9, NBCC 2015

THIS DESIGN COMPLIES WITH:
- PART 9 OF BCBC 2018 , NBC-2019AE
- PART 9 OF OBC 2012 (2019 AMENDMENT)
- CSA 086-14
- TPIC 2014

DESIGN ASSUMPTIONS
-OVERHANG NOT TO BE ALTERED OR CUT OFF.

(55 % OF 48.1 P.S.F. G.S.L. PLUS 8.4 P.S.F. RAIN LOAD) EQUALS 34.8 P.S.F. SPECIFIED ROOF LIVE LOAD

ALLOWABLE DEFL.(LL)= L/360 (0.19")
CALCULATED VERT. DEFL.(LL) = L/ 999 (0.00")
ALLOWABLE DEFL.(TL)= L/360 (0.19")
CALCULATED VERT. DEFL.(TL) = L/ 999 (0.00")

CSI: TC=0.16/0.97 (A-B:1) , BC=0.02/0.97 (D-E:4) , WB=0.00/0.97 (n/a:0) , SSI=0.11/1.00 (A-B:1)

DOL LUMBER=1.00 NAIL=1.00 LS BEND=1.10 COMP=1.10 SHEAR=1.10 TENS= 1.10

COMPANION LIVE LOAD FACTOR = 1.00

TRUSS PLATE MANUFACTURER IS NOT RESPONSIBLE FOR QUALITY CONTROL IN THE TRUSS MANUFACTURING PLANT .

NAIL VALUES

PLATE	GRIP(DRY) (PSI) MAX	MIN	SHEAR (PLI) MAX	MIN	SECTION (PLI) MAX	MIN
MT20	650	371	1747	788	1987	1873

PLATE PLACEMENT TOL. = 0.250 inches

PLATE ROTATION TOL. = 5.0 Deg.

JSI GRIP= 0.17 (B) (INPUT = 0.90)
JSI METAL= 0.13 (B) (INPUT = 1.00)

LICENSED PROFESSIONAL ENGINEER
N.A. EL-MASRI
PROVINCE OF ONTARIO
Jul 19, 2023

READ ALL NOTES ON THIS PAGE AND ON THE ENGINEERING NOTES: TRUSSES. THE NOTE PAGE IS AN INTEGRAL PART OF THIS DRAWING AS IT CONTAINS SPECIFICATIONS AND CRITERIA USED IN THE DESIGN OF THIS COMPONENT.

KOTT

JOB NAME	TRUSS NAME	QUANTITY	PLY	JOB DESC.	DRWG NO.
NE0723-127	J06	4	1	GREENPARK - ZADORRA ESTATES - VILLA 11-3 (TRUSS DESC.)	

CORPORATION OF THE CITY OF OSHAWA
TRUE COPY
OF PERMIT PLANS
Dec 06 2023
PER:
CHIEF BUILDING OFFICIAL

MHP 23038

Version 8.630 S Mar 22 2023 MiTek Industries, Inc. Wed Jul 19 16:54:13 2023 Page 1
ID:a_geEeAITwiPs63VUzyy33z8f4n-943GInV9oiVKwouJ3Zg0IQZ594Ti3I3Ib12rfeywSU8

Scale = 1:18.8

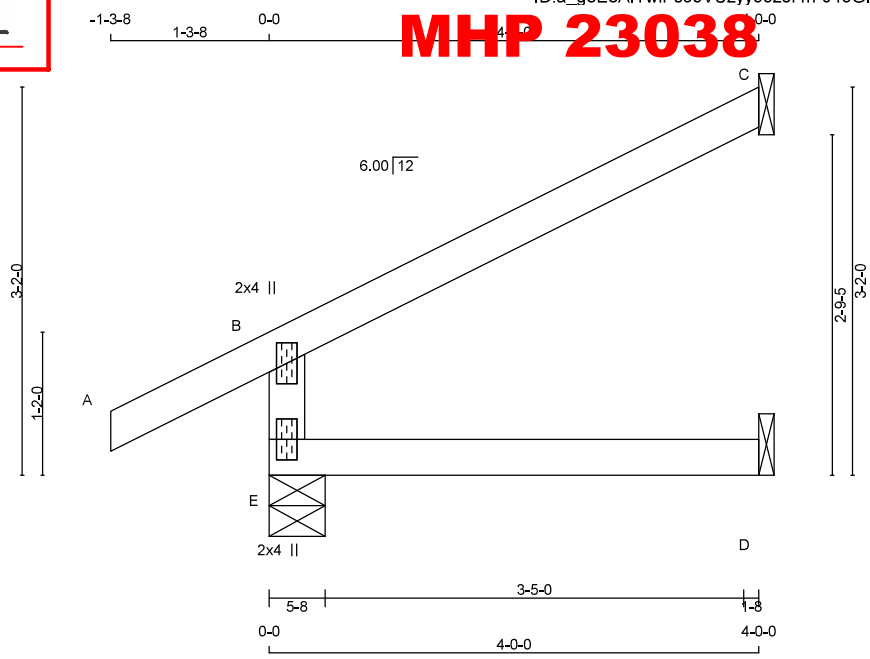

TOTAL WEIGHT = 4 X 12 = 49 lb [M]

LUMBER
N. L. G. A. RULES

CHORDS	SIZE		LUMBER	DESCR.
E - B	2x4	DRY	No.2	SPF
A - C	2x4	DRY	No.2	SPF
E - D	2x4	DRY	No.2	SPF

DRY: SEASONED LUMBER.

PLATES (table is in inches)

JT	TYPE	PLATES	W	LEN	Y	X
B	TMV+p	MT20	2.0	4.0		
E	BMV1+p	MT20	2.0	4.0		

DIMENSIONS, SUPPORTS AND LOADINGS SPECIFIED BY FABRICATOR TO BE VERIFIED BY BUILDING DESIGNER

BEARINGS

JT	FACTORED GROSS REACTION VERT	HORZ	MAXIMUM FACTORED GROSS REACTION DOWN	HORZ	UPLIFT	INPUT BRG IN-SX	REQRD BRG IN-SX
E	503	0	503	0	0	5-8	1-8
C	179	0	179	0	0	1-8	1-8
D	31	0	35	0	0	1-8	1-8

SEE MITEK STANDARD DETAIL MSD2015-H FOR CONNECTION TO JOINT(S) C , D

UNFACTORED REACTIONS

JT	1ST LCASE COMBINED	MAX./MIN. COMPONENT REACTIONS SNOW	LIVE	PERM.LIVE	WIND	DEAD	SOIL
E	348	268 / 0	0 / 0	0 / 0	0 / 0	80 / 0	0 / 0
C	123	105 / 0	0 / 0	0 / 0	0 / 0	18 / 0	0 / 0
D	25	0 / 0	0 / 0	0 / 0	0 / 0	25 / 0	0 / 0

BEARING MATERIAL TO BE SPF NO.2 OR BETTER AT JOINT(S) E

BRACING
TOP CHORD TO BE SHEATHED OR MAX. PURLIN SPACING = 6.25 FT.
MAX. UNBRACED BOTTOM CHORD LENGTH = 10.00 FT OR RIGID CEILING DIRECTLY APPLIED.

ALL PITCH BREAKS AND PERIMETER CORNER JOINTS MUST BE LATERALLY RESTRAINED.

LOADING
TOTAL LOAD CASES: (4)

CHORDS

MEMB. FR-TO	MAX. FACTORED FORCE (LBS)	VERT. LOAD LC1 (PLF) FROM	TO	MAX CSI (LC)	MAX UNBRAC LENGTH
E- B	-460 / 0	0.0	0.0	0.05 (4)	7.81
A- B	0 / 36	-119.4	-119.4	0.16 (1)	10.00
B- C	-27 / 0	-119.4	-119.4	0.32 (1)	6.25
E- D	0 / 0	-18.2	-18.2	0.06 (4)	10.00

WEBS

MEMB. FR-TO	MAX. FACTORED FORCE (LBS)	MAX CSI (LC)

DESIGN CRITERIA

SPECIFIED LOADS:

TOP CH.	LL =	34.8	PSF
	DL =	6.0	PSF
BOT CH.	LL =	0.0	PSF
	DL =	7.3	PSF
TOTAL LOAD	=	48.1	PSF

SPACING = 24.0 IN. C/C

THIS TRUSS IS DESIGNED FOR RESIDENTIAL OR SMALL BUILDING REQUIREMENTS OF PART 9, NBCC 2015

THIS DESIGN COMPLIES WITH:
- PART 9 OF BCBC 2018 , NBC-2019AE
- PART 9 OF OBC 2012 (2019 AMENDMENT)
- CSA 086-14
- TPIC 2014

DESIGN ASSUMPTIONS
-OVERHANG NOT TO BE ALTERED OR CUT OFF.

(55 % OF 48.1 P.S.F. G.S.L. PLUS 8.4 P.S.F. RAIN LOAD) EQUALS 34.8 P.S.F. SPECIFIED ROOF LIVE LOAD

ALLOWABLE DEFL.(LL)= L/360 (0.19")
CALCULATED VERT. DEFL.(LL) = L/ 999 (0.00")
ALLOWABLE DEFL.(TL)= L/360 (0.19")
CALCULATED VERT. DEFL.(TL) = L/ 999 (0.01")

CSI: TC=0.32/0.97 (B-C:1) , BC=0.06/0.97 (D-E:4) , WB=0.00/0.97 (n/a:0) , SSI=0.21/1.00 (B-C:1)

DOL LUMBER=1.00 NAIL=1.00 LS BEND=1.10 COMP=1.10 SHEAR=1.10 TENS= 1.10

COMPANION LIVE LOAD FACTOR = 1.00

TRUSS PLATE MANUFACTURER IS NOT RESPONSIBLE FOR QUALITY CONTROL IN THE TRUSS MANUFACTURING PLANT .

NAIL VALUES

PLATE	GRIP(DRY) (PSI) MAX	MIN	SHEAR (PLI) MAX	MIN	SECTION (PLI) MAX	MIN
MT20	650	371	1747	788	1987	1873

PLATE PLACEMENT TOL. = 0.250 inches

PLATE ROTATION TOL. = 5.0 Deg.

JSI GRIP= 0.26 (B) (INPUT = 0.90)
JSI METAL= 0.19 (B) (INPUT = 1.00)

LICENSED PROFESSIONAL ENGINEER
N.A. EL-MASRI
PROVINCE OF ONTARIO
Jul 19, 2023

READ ALL NOTES ON THIS PAGE AND ON THE ENGINEERING NOTES: TRUSSES. THE NOTE PAGE IS AN INTEGRAL PART OF THIS DRAWING AS IT CONTAINS SPECIFICATIONS AND CRITERIA USED IN THE DESIGN OF THIS COMPONENT.

KOTT

JOB NAME	TRUSS NAME	QUANTITY	PLY	JOB DESC.	DRWG NO.
NE0723-127	J07	2	1	GREENPARK - ZADORRA ESTATES - VILLA 11-3 (TRUSS DESC.)	

CORPORATION OF THE CITY OF OSHAWA
TRUE COPY
OF PERMIT PLANS
Dec 06 2023
PER: C Martin
CHIEF BUILDING OFFICIAL

MHP 23038

Version 8.630 S Mar 22 2023 MiTek Industries, Inc. Wed Jul 19 16:54:13 2023 Page 1
ID:a_geEeAITwiPs63VUzyy33z8f4n-943GInV9oiVKwouJ3Zg0IQZ8o4Ti3I3Ib12rfeywSU8

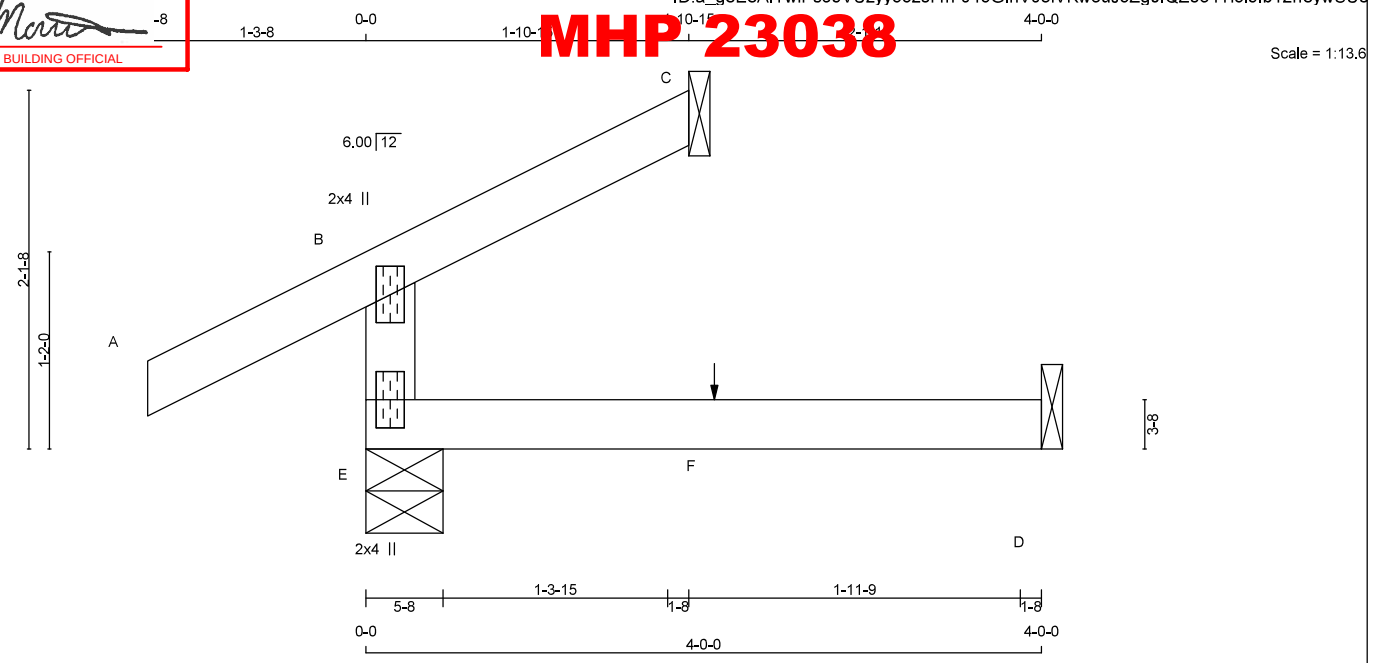

TOTAL WEIGHT = 2 X 10 = 19 lb [M]

LUMBER
N. L. G. A. RULES

CHORDS	SIZE		LUMBER	DESCR.
E - B	2x4	DRY	No.2	SPF
A - C	2x4	DRY	No.2	SPF
E - D	2x4	DRY	No.2	SPF

DRY: SEASONED LUMBER.

PLATES (table is in inches)

JT	TYPE	PLATES	W	LEN Y	X
B	TMV+p	MT20	2.0	4.0	
E	BMV1+p	MT20	2.0	4.0	

DIMENSIONS, SUPPORTS AND LOADINGS SPECIFIED BY FABRICATOR TO BE VERIFIED BY BUILDING DESIGNER

BEARINGS

JT	FACTORED GROSS REACTION VERT	HORZ	MAXIMUM FACTORED GROSS REACTION DOWN	HORZ	UPLIFT	INPUT BRG IN-SX	REQRD BRG IN-SX
E	346	0	346	0	0	5-8	1-8
C	86	0	86	0	0	1-8	1-8
D	31	0	35	0	0	1-8	1-8

SEE MITEK STANDARD DETAIL MSD2015-H FOR CONNECTION TO JOINT(S) C , D

UNFACTORED REACTIONS

JT	1ST LCASE COMBINED	MAX./MIN. COMPONENT REACTIONS SNOW	LIVE	PERM.LIVE	WIND	DEAD	SOIL
E	241	177 / 0	0 / 0	0 / 0	0 / 0	64 / 0	0 / 0
C	59	50 / 0	0 / 0	0 / 0	0 / 0	9 / 0	0 / 0
D	25	0 / 0	0 / 0	0 / 0	0 / 0	25 / 0	0 / 0

BEARING MATERIAL TO BE SPF NO.2 OR BETTER AT JOINT(S) E, C

BRACING
TOP CHORD TO BE SHEATHED OR MAX. PURLIN SPACING = 6.25 FT.
MAX. UNBRACED BOTTOM CHORD LENGTH = 10.00 FT OR RIGID CEILING DIRECTLY APPLIED.

ALL PITCH BREAKS AND PERIMETER CORNER JOINTS MUST BE LATERALLY RESTRAINED.

LOADING
TOTAL LOAD CASES: (4)

CHORDS MEMB. FR-TO	MAX. FACTORED FORCE (LBS)	VERT. LOAD (PLF) FROM	TO	LC1 CSI (LC)	MAX UNBRAC LENGTH	WEBS MEMB. FR-TO	MAX. FACTORED FORCE (LBS)	MAX CSI (LC)
E- B	-304 / 0	0.0	0.0	0.05 (4)	7.81			
A- B	0 / 36	-119.4	-119.4	0.16 (1)	10.00			
B- C	-12 / 0	-119.4	-119.4	0.07 (1)	6.25			
E- F	0 / 0	-18.2	-18.2	0.06 (4)	10.00			
F- D	0 / 0	-18.2	-18.2	0.06 (4)	10.00			

SPECIFIED CONCENTRATED LOADS (LBS)

JT	LOC.	LC1	MAX-	MAX+	FACE	DIR.	TYPE	HEEL	CONN.
F	2-0-12	1	1	—	BACK	VERT	TOTAL	—	C1

CONNECTION REQUIREMENTS

1) **C1:** A SUITABLE HANGER/MECHANICAL CONNECTION IS REQUIRED.

DESIGN CRITERIA

*** SPECIAL LOADS ANALYSIS ***
GEOMETRY AND/OR BASIC LOADS CHANGED BY USER.
LOADS WERE DERIVED FROM USER INPUT
NO FURTHER MODIFICATIONS WERE MADE

SPECIFIED LOADS:

TOP CH.	LL =	34.8	PSF
	DL =	6.0	PSF
BOT CH.	LL =	0.0	PSF
	DL =	7.3	PSF
TOTAL LOAD	=	48.1	PSF

SPACING = 24.0 IN. C/C

*** NON STANDARD GIRDER ***
ADDT'L USER-DEFINED LOADS APPLIED TO ALL LOAD CASES.

THIS TRUSS IS DESIGNED FOR RESIDENTIAL OR SMALL BUILDING REQUIREMENTS OF PART 9, NBCC 2015

THIS DESIGN COMPLIES WITH:
- PART 9 OF BCBC 2018 , NBC-2019AE
- PART 9 OF OBC 2012 (2019 AMENDMENT)
- CSA 086-14
- TPIC 2014

DESIGN ASSUMPTIONS
-OVERHANG NOT TO BE ALTERED OR CUT OFF.

(55 % OF 48.1 P.S.F. G.S.L. PLUS 8.4 P.S.F. RAIN LOAD) EQUALS 34.8 P.S.F. SPECIFIED ROOF LIVE LOAD

ALLOWABLE DEFL.(LL)= L/360 (0.19")
CALCULATED VERT. DEFL.(LL) = L/ 999 (0.00")
ALLOWABLE DEFL.(TL)= L/360 (0.19")
CALCULATED VERT. DEFL.(TL) = L/ 999 (0.01")

CSI: TC=0.16/0.97 (A-B:1) , BC=0.06/0.97 (D-E:4) , WB=0.00/0.97 (n/a:0) , SSI=0.11/1.00 (A-B:1)

DOL LUMBER=1.00 NAIL=1.00 LS BEND=1.10 COMP=1.10 SHEAR=1.10 TENS= 1.10

COMPANION LIVE LOAD FACTOR = 1.00

TRUSS PLATE MANUFACTURER IS NOT RESPONSIBLE FOR QUALITY CONTROL IN THE TRUSS MANUFACTURING PLANT .

NAIL VALUES

PLATE	GRIP(DRY) (PSI) MAX	MIN	SHEAR (PLI) MAX	MIN	SECTION (PLI) MAX	MIN
MT20	650	371	1747	788	1987	1873

PLATE PLACEMENT TOL. = 0.250 inches

PLATE ROTATION TOL. = 5.0 Deg.

JSI GRIP= 0.17 (B) (INPUT = 0.90)
JSI METAL= 0.13 (B) (INPUT = 1.00)

LICENSED PROFESSIONAL ENGINEER
N.A. EL-MASRI
PROVINCE OF ONTARIO
Jul 19, 2023

READ ALL NOTES ON THIS PAGE AND ON THE ENGINEERING NOTES: TRUSSES. THE NOTE PAGE IS AN INTEGRAL PART OF THIS DRAWING AS IT CONTAINS SPECIFICATIONS AND CRITERIA USED IN THE DESIGN OF THIS COMPONENT.

KOTT

JOB NAME	TRUSS NAME	QUANTITY	PLY	JOB DESC.	DRWG NO.
NE0723-127	J08	1	1	GREENPARK - ZADORRA ESTATES - VILLA 11-3 (TRUSS DESC.)	

CORPORATION OF THE CITY OF OSHAWA
TRUE COPY
OF PERMIT PLANS
Dec 06 2023
PER: C Martin
CHIEF BUILDING OFFICIAL

Version 8.630 S Mar 22 2023 MiTek Industries, Inc. Wed Jul 19 16:54:14 2023 Page 1
ID:a_geEeAITwiPs63VUzyy33z8f4n-dGdeV7WoZ0dBYyTVdHBFrd6K8UpWoCJRqhnPB5ywSU7

MHP 23038

Scale = 1:13.6

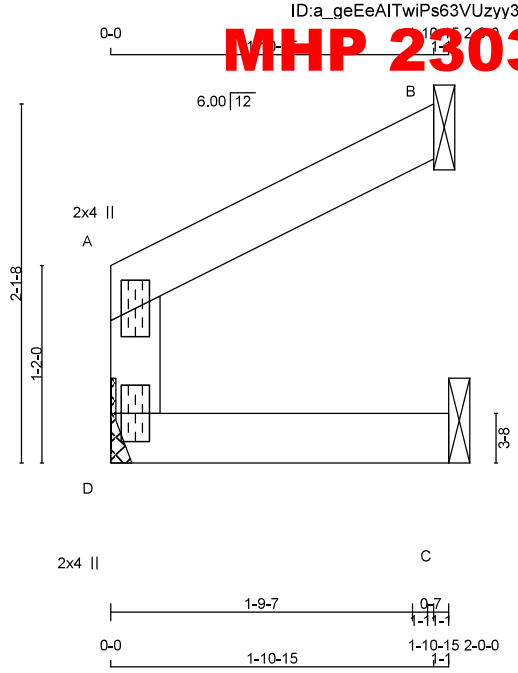

TOTAL WEIGHT = 6 lb
[M][F]

LUMBER
N. L. G. A. RULES

CHORDS	SIZE		LUMBER	DESCR.
D - A	2x4	DRY	No.2	SPF
A - B	2x4	DRY	No.2	SPF
D - C	2x4	DRY	No.2	SPF

DRY: SEASONED LUMBER.

PLATES (table is in inches)

JT	TYPE	PLATES	W	LEN	Y	X
A	TMV+p	MT20	2.0	4.0		
D	BMV1+p	MT20	2.0	4.0		

DIMENSIONS, SUPPORTS AND LOADINGS SPECIFIED BY FABRICATOR TO BE VERIFIED BY BUILDING DESIGNER

BEARINGS

JT	FACTORED GROSS REACTION VERT	HORZ	MAXIMUM FACTORED GROSS REACTION DOWN	HORZ	UPLIFT	INPUT BRG IN-SX	REQRD BRG IN-SX
D	133	0	133	0	0	MECHANICAL	
B	107	0	107	0	0	1-8	1-8
C	25	0	25	0	0	1-8	1-8

A SUITABLE HANGER/MECHANICAL CONNECTION IS REQUIRED AT JOINT D. MINIMUM BEARING LENGTH AT JOINT D = 1-8.

SEE MITEK STANDARD DETAIL MSD2015-H FOR CONNECTION TO JOINT(S) B , C

UNFACTORED REACTIONS

JT	1ST LCASE COMBINED	MAX./MIN. COMPONENT REACTIONS SNOW	LIVE	PERM.LIVE	WIND	DEAD	SOIL
D	93	67 / 0	0 / 0	0 / 0	0 / 0	26 / 0	0 / 0
B	73	61 / 0	0 / 0	0 / 0	0 / 0	12 / 0	0 / 0
C	19	5 / 0	0 / 0	0 / 0	0 / 0	14 / 0	0 / 0

BRACING
TOP CHORD TO BE SHEATHED OR MAX. PURLIN SPACING = 10.00 FT.
MAX. UNBRACED BOTTOM CHORD LENGTH = 10.00 FT OR RIGID CEILING DIRECTLY APPLIED.

ALL PITCH BREAKS AND PERIMETER CORNER JOINTS MUST BE LATERALLY RESTRAINED.

LOADING
TOTAL LOAD CASES: (4)

CHORDS MEMB. FR-TO	MAX. FACTORED FORCE (LBS)	VERT. LOAD (PLF) FROM	TO	LC1 MAX CSI (LC)	WEBS MEMB. FR-TO	MAX. UNBRAC LENGTH	MAX. FACTORED FORCE (LBS)	MAX CSI (LC)
D- A	-122 / 0	0.0	0.0	0.02 (1)		7.81		
A- B	-3 / 0	-119.4	-119.4	0.05 (1)		10.00		
D- C	0 / 0	-18.2	-18.2	0.02 (1)		10.00		

DESIGN CRITERIA

SPECIFIED LOADS:

TOP CH.	LL =	34.8	PSF
	DL =	6.0	PSF
BOT CH.	LL =	0.0	PSF
	DL =	7.3	PSF
TOTAL LOAD	=	48.1	PSF

SPACING = 24.0 IN. C/C

THIS TRUSS IS DESIGNED FOR RESIDENTIAL OR SMALL BUILDING REQUIREMENTS OF PART 9, NBCC 2015

THIS DESIGN COMPLIES WITH:
- PART 9 OF BCBC 2018 , NBC-2019AE
- PART 9 OF OBC 2012 (2019 AMENDMENT)
- CSA 086-14
- TPIC 2014

(55 % OF 48.1 P.S.F. G.S.L. PLUS 8.4 P.S.F. RAIN LOAD) EQUALS 34.8 P.S.F. SPECIFIED ROOF LIVE LOAD

ALLOWABLE DEFL.(LL)= L/360 (0.19")
CALCULATED VERT. DEFL.(LL) = L/ 999 (0.00")
ALLOWABLE DEFL.(TL)= L/360 (0.19")
CALCULATED VERT. DEFL.(TL) = L/ 999 (0.00")

CSI: TC=0.05/0.97 (A-B:1) , BC=0.02/0.97 (C-D:1) , WB=0.00/0.97 (n/a:0) , SSI=0.08/1.00 (A-B:1)

DOL LUMBER=1.00 NAIL=1.00 LS BEND=1.10 COMP=1.10 SHEAR=1.10 TENS= 1.10

COMPANION LIVE LOAD FACTOR = 1.00

TRUSS PLATE MANUFACTURER IS NOT RESPONSIBLE FOR QUALITY CONTROL IN THE TRUSS MANUFACTURING PLANT .

NAIL VALUES

PLATE	GRIP(DRY) (PSI) MAX	MIN	SHEAR (PLI) MAX	MIN	SECTION (PLI) MAX	MIN
MT20	650	371	1747	788	1987	1873

PLATE PLACEMENT TOL. = 0.250 inches

PLATE ROTATION TOL. = 5.0 Deg.

JSI GRIP= 0.07 (A) (INPUT = 0.90)
JSI METAL= 0.05 (A) (INPUT = 1.00)

LICENSED PROFESSIONAL ENGINEER
N.A. EL-MASRI
PROVINCE OF ONTARIO
Jul 19, 2023

READ ALL NOTES ON THIS PAGE AND ON THE ENGINEERING NOTES: TRUSSES. THE NOTE PAGE IS AN INTEGRAL PART OF THIS DRAWING AS IT CONTAINS SPECIFICATIONS AND CRITERIA USED IN THE DESIGN OF THIS COMPONENT.

KOTT

JOB NAME	TRUSS NAME	QUANTITY	PLY	JOB DESC.	DRWG NO.
NE0723-127	J09	1	1	GREENPARK - ZADORRA ESTATES - VILLA 11-3 (TRUSS DESC.)	

CORPORATION OF THE CITY OF OSHAWA
TRUE COPY
OF PERMIT PLANS
Dec 06 2023
PER: C Martin
CHIEF BUILDING OFFICIAL

MHP 23038

Version 8.630 S Mar 22 2023 MiTek Industries, Inc. Wed Jul 19 16:54:14 2023 Page 1
ID:a_geEeAITwiPs63VUzyy33z8f4n-dGdeV7WoZ0dBYyTVdHBFrd6IYUpeoCJRqhnPB5ywSU7

Scale = 1:13.9

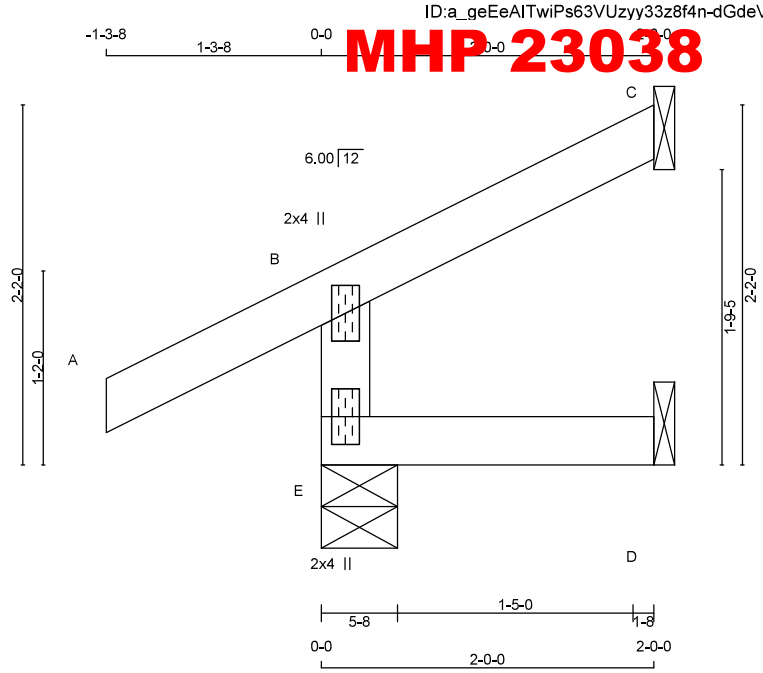

TOTAL WEIGHT = 7 lb [M]

LUMBER
N. L. G. A. RULES

CHORDS	SIZE		LUMBER	DESCR.
E - B	2x4	DRY	No.2	SPF
A - C	2x4	DRY	No.2	SPF
E - D	2x4	DRY	No.2	SPF

DRY: SEASONED LUMBER.

PLATES (table is in inches)

JT	TYPE	PLATES	W	LEN	Y	X
B	TMV+p	MT20	2.0	4.0		
E	BMV1+p	MT20	2.0	4.0		

DIMENSIONS, SUPPORTS AND LOADINGS SPECIFIED BY FABRICATOR TO BE VERIFIED BY BUILDING DESIGNER

BEARINGS

JT	FACTORED GROSS REACTION VERT	HORZ	MAXIMUM FACTORED GROSS REACTION DOWN	HORZ	UPLIFT	INPUT BRG IN-SX	REQRD BRG IN-SX
E	331	0	331	0	0	5-8	1-8
C	90	0	90	0	0	1-8	1-8
D	16	0	18	0	0	1-8	1-8

SEE MITEK STANDARD DETAIL MSD2015-H FOR CONNECTION TO JOINT(S) C , D

UNFACTORED REACTIONS

JT	1ST LCASE COMBINED	MAX./MIN. COMPONENT REACTIONS SNOW	LIVE	PERM.LIVE	WIND	DEAD	SOIL
E	229	181 / 0	0 / 0	0 / 0	0 / 0	47 / 0	0 / 0
C	62	53 / 0	0 / 0	0 / 0	0 / 0	9 / 0	0 / 0
D	13	0 / 0	0 / 0	0 / 0	0 / 0	13 / 0	0 / 0

BEARING MATERIAL TO BE SPF NO.2 OR BETTER AT JOINT(S) E

BRACING
TOP CHORD TO BE SHEATHED OR MAX. PURLIN SPACING = 6.25 FT.
MAX. UNBRACED BOTTOM CHORD LENGTH = 10.00 FT OR RIGID CEILING DIRECTLY APPLIED.

ALL PITCH BREAKS AND PERIMETER CORNER JOINTS MUST BE LATERALLY RESTRAINED.

LOADING
TOTAL LOAD CASES: (5)

CHORDS MEMB. FR-TO	MAX. FACTORED FORCE (LBS)	FACTORED VERT. LOAD LC1 (PLF) FROM	TO	MAX CSI (LC)	WEBS MEMB. FR-TO	MAX. UNBRAC LENGTH	MAX. FACTORED FORCE (LBS)	MAX CSI (LC)
E- B	-311 / 0	0.0	0.0	0.01 (4)		7.81		
A- B	0 / 36	-119.4	-119.4	0.16 (1)		10.00		
B- C	-13 / 0	-119.4	-119.4	0.08 (1)		6.25		
E- D	0 / 0	-18.2	-18.2	0.02 (4)		10.00		

CANTILEVER ANALYSIS HAS BEEN CONSIDERED IN THIS DESIGN

PATTERN-LOADING CHECK APPLIED TO THIS TRUSS.

DESIGN CRITERIA

SPECIFIED LOADS:

TOP CH.	LL	=	34.8	PSF
	DL	=	6.0	PSF
BOT CH.	LL	=	0.0	PSF
	DL	=	7.3	PSF
TOTAL LOAD		=	48.1	PSF

SPACING = 24.0 IN. C/C

THIS TRUSS IS DESIGNED FOR RESIDENTIAL OR SMALL BUILDING REQUIREMENTS OF PART 9, NBCC 2015

THIS DESIGN COMPLIES WITH:
- PART 9 OF BCBC 2018 , NBC-2019AE
- PART 9 OF OBC 2012 (2019 AMENDMENT)
- CSA 086-14
- TPIC 2014

DESIGN ASSUMPTIONS
-OVERHANG NOT TO BE ALTERED OR CUT OFF.

(55 % OF 48.1 P.S.F. G.S.L. PLUS 8.4 P.S.F. RAIN LOAD) EQUALS 34.8 P.S.F. SPECIFIED ROOF LIVE LOAD

ALLOWABLE DEFL.(LL)= L/360 (0.19")
CALCULATED VERT. DEFL.(LL) = L/ 999 (0.00")
ALLOWABLE DEFL.(TL)= L/360 (0.19")
CALCULATED VERT. DEFL.(TL) = L/ 999 (0.00")

CSI: TC=0.16/0.97 (A-B:1) , BC=0.02/0.97 (D-E:4) , WB=0.00/0.97 (n/a:0) , SSI=0.11/1.00 (A-B:1)

DOL LUMBER=1.00 NAIL=1.00 LS BEND=1.10 COMP=1.10 SHEAR=1.10 TENS= 1.10

COMPANION LIVE LOAD FACTOR = 1.00

TRUSS PLATE MANUFACTURER IS NOT RESPONSIBLE FOR QUALITY CONTROL IN THE TRUSS MANUFACTURING PLANT .

NAIL VALUES

PLATE	GRIP(DRY) (PSI) MAX	MIN	SHEAR (PLI) MAX	MIN	SECTION (PLI) MAX	MIN
MT20	650	371	1747	788	1987	1873

PLATE PLACEMENT TOL. = 0.250 inches

PLATE ROTATION TOL. = 5.0 Deg.

JSI GRIP= 0.17 (B) (INPUT = 0.90)
JSI METAL= 0.13 (B) (INPUT = 1.00)

LICENSED PROFESSIONAL ENGINEER
N.A. EL-MASRI
PROVINCE OF ONTARIO
Jul 19, 2023

READ ALL NOTES ON THIS PAGE AND ON THE ENGINEERING NOTES: TRUSSES. THE NOTE PAGE IS AN INTEGRAL PART OF THIS DRAWING AS IT CONTAINS SPECIFICATIONS AND CRITERIA USED IN THE DESIGN OF THIS COMPONENT.

KOTT

JOB NAME	TRUSS NAME	QUANTITY	PLY	JOB DESC.	DRWG NO.
NE0723-127	J10	1	1	GREENPARK - ZADORRA ESTATES - VILLA 11-3 (TRUSS DESC.)	

CORPORATION OF THE CITY OF OSHAWA
TRUE COPY
OF PERMIT PLANS
Dec 06 2023
PER: C Martin
CHIEF BUILDING OFFICIAL

Version 8.630 S Mar 22 2023 MiTek Industries, Inc. Wed Jul 19 16:54:15 2023 Page 1
ID:a_geEeAITwiPs63VUzyy33z8f4n-6SB0jTXQKJm2952iA_iUNrfVou9jXfZb3LXyjXywSU6

MHP 23038

Scale = 1:13.9

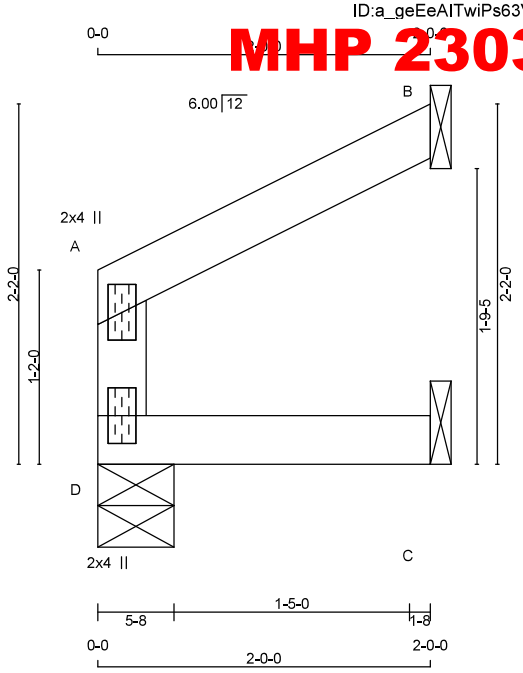

TOTAL WEIGHT = 6 lb
[M][F]

LUMBER
N. L. G. A. RULES

CHORDS	SIZE		LUMBER	DESCR.
D - A	2x4	DRY	No.2	SPF
A - B	2x4	DRY	No.2	SPF
D - C	2x4	DRY	No.2	SPF

DRY: SEASONED LUMBER.

PLATES (table is in inches)

JT	TYPE	PLATES	W	LEN	Y	X
A	TMV+p	MT20	2.0	4.0		
D	BMV1+p	MT20	2.0	4.0		

DIMENSIONS, SUPPORTS AND LOADINGS SPECIFIED BY FABRICATOR TO BE VERIFIED BY BUILDING DESIGNER

BEARINGS

JT	FACTORED GROSS REACTION VERT	HORZ	MAXIMUM FACTORED GROSS REACTION DOWN	HORZ	UPLIFT	INPUT BRG IN-SX	REQRD BRG IN-SX
D	138	0	138	0	0	5-8	1-8
B	111	0	111	0	0	1-8	1-8
C	27	0	27	0	0	1-8	1-8

SEE MITEK STANDARD DETAIL MSD2015-H FOR CONNECTION TO JOINT(S) B , C

UNFACTORED REACTIONS

JT	1ST LCASE COMBINED	MAX./MIN. COMPONENT REACTIONS SNOW	LIVE	PERM.LIVE	WIND	DEAD	SOIL
D	96	70 / 0	0 / 0	0 / 0	0 / 0	27 / 0	0 / 0
B	76	64 / 0	0 / 0	0 / 0	0 / 0	12 / 0	0 / 0
C	20	6 / 0	0 / 0	0 / 0	0 / 0	15 / 0	0 / 0

BEARING MATERIAL TO BE SPF NO.2 OR BETTER AT JOINT(S) D

BRACING
TOP CHORD TO BE SHEATHED OR MAX. PURLIN SPACING = 10.00 FT.
MAX. UNBRACED BOTTOM CHORD LENGTH = 10.00 FT OR RIGID CEILING DIRECTLY APPLIED.

ALL PITCH BREAKS AND PERIMETER CORNER JOINTS MUST BE LATERALLY RESTRAINED.

LOADING
TOTAL LOAD CASES: (4)

CHORDS MEMB. FR-TO	MAX. FACTORED FORCE (LBS)	FACTORED VERT. LOAD (PLF) FROM	TO	LC1 MAX CSI (LC)	WEBS MEMB. FR-TO	MAX. UNBRAC LENGTH	MAX. FACTORED FORCE (LBS)	MAX CSI (LC)
D- A	-128 / 0	0.0	0.0	0.02 (1)		7.81		
A- B	-4 / 0	-119.4	-119.4	0.06 (1)		10.00		
D- C	0 / 0	-18.2	-18.2	0.03 (1)		10.00		

DESIGN CRITERIA

SPECIFIED LOADS:

TOP CH.	LL	=	34.8	PSF
	DL	=	6.0	PSF
BOT CH.	LL	=	0.0	PSF
	DL	=	7.3	PSF
TOTAL LOAD		=	48.1	PSF

SPACING = 24.0 IN. C/C

THIS TRUSS IS DESIGNED FOR RESIDENTIAL OR SMALL BUILDING REQUIREMENTS OF PART 9, NBCC 2015

THIS DESIGN COMPLIES WITH:
- PART 9 OF BCBC 2018 , NBC-2019AE
- PART 9 OF OBC 2012 (2019 AMENDMENT)
- CSA 086-14
- TPIC 2014

(55 % OF 48.1 P.S.F. G.S.L. PLUS 8.4 P.S.F. RAIN LOAD) EQUALS 34.8 P.S.F. SPECIFIED ROOF LIVE LOAD

ALLOWABLE DEFL.(LL)= L/360 (0.19")
CALCULATED VERT. DEFL.(LL) = L/ 999 (0.00")
ALLOWABLE DEFL.(TL)= L/360 (0.19")
CALCULATED VERT. DEFL.(TL) = L/ 999 (0.00")

CSI: TC=0.06/0.97 (A-B:1) , BC=0.03/0.97 (C-D:1) , WB=0.00/0.97 (n/a:0) , SSI=0.09/1.00 (A-B:1)

DOL LUMBER=1.00 NAIL=1.00 LS BEND=1.10 COMP=1.10 SHEAR=1.10 TENS= 1.10

COMPANION LIVE LOAD FACTOR = 1.00

TRUSS PLATE MANUFACTURER IS NOT RESPONSIBLE FOR QUALITY CONTROL IN THE TRUSS MANUFACTURING PLANT .

NAIL VALUES

PLATE	GRIP(DRY) (PSI) MAX	MIN	SHEAR (PLI) MAX	MIN	SECTION (PLI) MAX	MIN
MT20	650	371	1747	788	1987	1873

PLATE PLACEMENT TOL. = 0.250 inches

PLATE ROTATION TOL. = 5.0 Deg.

JSI GRIP= 0.07 (A) (INPUT = 0.90)
JSI METAL= 0.05 (A) (INPUT = 1.00)

LICENSED PROFESSIONAL ENGINEER
N.A. EL-MASRI
PROVINCE OF ONTARIO
Jul 19, 2023

READ ALL NOTES ON THIS PAGE AND ON THE ENGINEERING NOTES: TRUSSES. THE NOTE PAGE IS AN INTEGRAL PART OF THIS DRAWING AS IT CONTAINS SPECIFICATIONS AND CRITERIA USED IN THE DESIGN OF THIS COMPONENT.

KOTT

JOB NAME	TRUSS NAME	QUANTITY	PLY	JOB DESC.	DRWG NO.
NE0723-127	T01	1	1	GREENPARK - ZADORRA ESTATES - VILLA 11-3 (TRUSS DESC.)	

CORPORATION OF THE CITY OF OSHAWA
TRUE COPY
OF PERMIT PLANS
Dec 06 2023
PER
CHIEF BUILDING OFFICIAL

MHP 23038

Version 8.630 S Mar 22 2023 MiTek Industries, Inc. Wed Jul 19 16:54:15 2023 Page 1
ID:a_geEeAITwiPs63VUzyy33z8f4n-6SB0jTXQKJm2952iA_iUNrfKtu0CXVYb3LXyjXywSU6

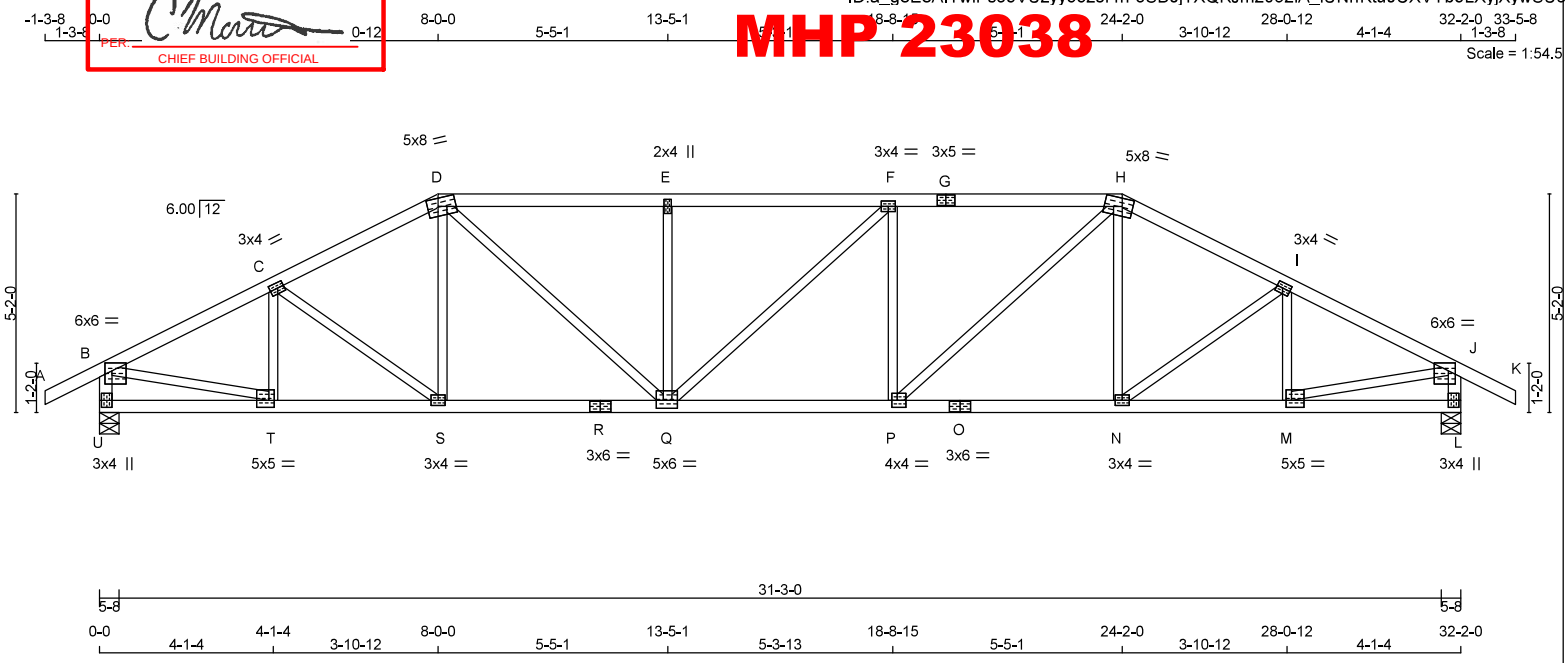

TOTAL WEIGHT = 130 lb [M]

LUMBER
N. L. G. A. RULES

CHORDS	SIZE		LUMBER	DESCR.
A - D	2x4	DRY	No.2	SPF
D - G	2x4	DRY	No.2	SPF
G - H	2x4	DRY	No.2	SPF
H - K	2x4	DRY	No.2	SPF
U - B	2x4	DRY	No.2	SPF
L - J	2x4	DRY	No.2	SPF
U - R	2x4	DRY	No.2	SPF
R - O	2x4	DRY	No.2	SPF
O - L	2x4	DRY	No.2	SPF
ALL WEBS EXCEPT	2x3	DRY	No.2	SPF

DRY: SEASONED LUMBER.

PLATES (table is in inches)

JT	TYPE	PLATES	W	LEN	Y	X
B	TMVW-p	MT20	6.0	6.0	2.25	2.00
C	TMWW-t	MT20	3.0	4.0	1.50	1.75
D	TTWW-m	MT20	5.0	8.0	2.25	3.00
E	TMW+w	MT20	2.0	4.0		
F	TMWW-t	MT20	3.0	4.0		
G	TS-t	MT20	3.0	5.0		
H	TTWW-m	MT20	5.0	8.0	2.25	3.00
I	TMWW-t	MT20	3.0	4.0	1.50	1.75
J	TMVW-p	MT20	6.0	6.0	2.25	2.00
L	BMV1+p	MT20	3.0	4.0	2.00	
M	BMWW-t	MT20	5.0	5.0	2.00	1.50
N	BMWW-t	MT20	3.0	4.0		
O	BS-t	MT20	3.0	6.0		
P	BMWW-t	MT20	4.0	4.0	2.00	1.50
Q	BMWWW-t	MT20	5.0	6.0	2.25	2.00
R	BS-t	MT20	3.0	6.0		
S	BMWW-t	MT20	3.0	4.0		
T	BMWW-t	MT20	5.0	5.0	2.00	1.50
U	BMV1+p	MT20	3.0	4.0	2.00	0.50

DIMENSIONS, SUPPORTS AND LOADINGS SPECIFIED BY FABRICATOR TO BE VERIFIED BY BUILDING DESIGNER

BEARINGS

JT	FACTORED GROSS REACTION VERT	HORZ	MAXIMUM FACTORED GROSS REACTION DOWN	HORZ	UPLIFT	INPUT BRG IN-SX	REQRD BRG IN-SX
U	2376	0	2376	0	0	5-8	4-4
L	2376	0	2376	0	0	5-8	4-4

UNFACTORED REACTIONS

JT	1ST LCASE COMBINED	SNOW	MAX./MIN. COMPONENT REACTIONS LIVE	PERM.LIVE	WIND	DEAD	SOIL
U	1658	1214 / 0	0 / 0	0 / 0	0 / 0	444 / 0	0 / 0
L	1658	1214 / 0	0 / 0	0 / 0	0 / 0	444 / 0	0 / 0

BEARING MATERIAL TO BE SPF NO.2 OR BETTER AT JOINT(S) U, L

BRACING
TOP CHORD TO BE SHEATHED OR MAX. PURLIN SPACING = 2.94 FT.
MAX. UNBRACED BOTTOM CHORD LENGTH = 10.00 FT OR RIGID CEILING DIRECTLY APPLIED.

ALL PITCH BREAKS AND PERIMETER CORNER JOINTS MUST BE LATERALLY RESTRAINED.

LOADING
TOTAL LOAD CASES: (4)

CHORDS

MEMB. FR-TO	MAX. FACTORED FORCE (LBS)	FACTORED VERT. LOAD LC1 (PLF) FROM	TO	MAX CSI (LC)	MAX. UNBRAC LENGTH
A- B	0 / 36	-119.4	-119.4	0.16 (1)	10.00
B- C	-3097 / 0	-119.4	-119.4	0.44 (1)	3.54
C- D	-3091 / 0	-119.4	-119.4	0.43 (1)	3.55
D- E	-3624 / 0	-119.4	-119.4	0.76 (1)	2.94
E- F	-3624 / 0	-119.4	-119.4	0.75 (1)	2.94
F- G	-3626 / 0	-119.4	-119.4	0.76 (1)	2.94
G- H	-3626 / 0	-119.4	-119.4	0.76 (1)	2.94
H- I	-3091 / 0	-119.4	-119.4	0.43 (1)	3.55
I- J	-3098 / 0	-119.4	-119.4	0.44 (1)	3.54
J- K	0 / 36	-119.4	-119.4	0.16 (1)	10.00
U- B	-2336 / 0	0.0	0.0	0.24 (1)	5.51
L- J	-2336 / 0	0.0	0.0	0.24 (1)	5.51
U- T	0 / 0	-18.2	-18.2	0.07 (4)	10.00
T- S	0 / 2790	-18.2	-18.2	0.50 (1)	10.00
S- R	0 / 2744	-18.2	-18.2	0.50 (1)	10.00
R- Q	0 / 2744	-18.2	-18.2	0.50 (1)	10.00
Q- P	0 / 3625	-18.2	-18.2	0.64 (1)	10.00
P- O	0 / 2744	-18.2	-18.2	0.49 (1)	10.00
O- N	0 / 2744	-18.2	-18.2	0.49 (1)	10.00
N- M	0 / 2790	-18.2	-18.2	0.50 (1)	10.00
M- L	0 / 0	-18.2	-18.2	0.07 (4)	10.00

WEBS

MEMB. FR-TO	MAX. FACTORED FORCE (LBS)	MAX CSI (LC)
T- C	-525 / 0	0.10 (1)
C- S	-60 / 0	0.02 (1)
S- D	0 / 137	0.04 (4)
D- Q	0 / 1182	0.27 (1)
Q- E	-696 / 0	0.27 (1)
Q- F	-2 / 0	0.00 (1)
P- F	-695 / 0	0.27 (1)
P- H	0 / 1184	0.27 (1)
N- H	0 / 135	0.04 (4)
N- I	-61 / 0	0.02 (1)
M- I	-525 / 0	0.10 (1)
B- T	0 / 2850	0.64 (1)
M- J	0 / 2850	0.64 (1)

DESIGN CRITERIA

SPECIFIED LOADS:

TOP CH.	LL	=	34.8	PSF
	DL	=	6.0	PSF
BOT CH.	LL	=	0.0	PSF
	DL	=	7.3	PSF
TOTAL LOAD		=	48.1	PSF

SPACING = 24.0 IN. C/C

LOADING IN FLAT SECTION BASED ON A SLOPE OF 2.00/12 MINIMUM

THIS TRUSS IS DESIGNED FOR RESIDENTIAL OR SMALL BUILDING REQUIREMENTS OF PART 9, NBCC 2015

THIS DESIGN COMPLIES WITH:
- PART 9 OF BCBC 2018 , NBC-2019AE
- PART 9 OF OBC 2012 (2019 AMENDMENT)
- CSA 086-14
- TPIC 2014

(55 % OF 48.1 P.S.F. G.S.L. PLUS 8.4 P.S.F. RAIN LOAD) EQUALS 34.8 P.S.F. SPECIFIED ROOF LIVE LOAD

ALLOWABLE DEFL.(LL)= L/360 (1.07")
CALCULATED VERT. DEFL.(LL) = L/ 999 (0.21")
ALLOWABLE DEFL.(TL)= L/360 (1.07")
CALCULATED VERT. DEFL.(TL) = L/ 999 (0.36")

CSI: TC=0.76/0.97 (F-H:1) , BC=0.64/0.97 (P-Q:1) , WB=0.64/0.97 (J-M:1) , SSI=0.30/1.00 (D-E:1)

DOL LUMBER=1.00 NAIL=1.00 LS BEND=1.10 COMP=1.10 SHEAR=1.10 TENS= 1.10

COMPANION LIVE LOAD FACTOR = 1.00

TRUSS PLATE MANUFACTURER IS NOT RESPONSIBLE FOR QUALITY CONTROL IN THE TRUSS MANUFACTURING PLANT .

NAIL VALUES

PLATE	GRIP(DRY) (PSI) MAX	MIN	SHEAR (PLI) MAX	MIN	SECTION (PLI) MAX	MIN
MT20	650	371	1747	788	1987	1873

PLATE PLACEMENT TOL. = 0.250 inches

PLATE ROTATION TOL. = 5.0 Deg.

JSI GRIP= 0.89 (J) (INPUT = 0.90)
JSI METAL= 0.84 (R) (INPUT = 1.00)

LICENSED PROFESSIONAL ENGINEER
N.A. EL-MASRI
PROVINCE OF ONTARIO
Jul 19, 2023

READ ALL NOTES ON THIS PAGE AND ON THE ENGINEERING NOTES: TRUSSES. THE NOTE PAGE IS AN INTEGRAL PART OF THIS DRAWING AS IT CONTAINS SPECIFICATIONS AND CRITERIA USED IN THE DESIGN OF THIS COMPONENT.

KOTT

JOB NAME	TRUSS NAME	QUANTITY	PLY	JOB DESC.	DRWG NO.
NE0723-127	T02	1	1	GREENPARK - ZADORRA ESTATES - VILLA 11-3 (TRUSS DESC.)	

CORPORATION OF THE CITY OF OSHAWA
TRUE COPY
OF PERMIT PLANS
Dec 06 2023
PER
CHIEF BUILDING OFFICIAL

MHP 23038

Version 8.630 S Mar 22 2023 MiTek Industries, Inc. Wed Jul 19 16:54:16 2023 Page 1
ID:a_geEeAlTwiPs63VUzyy33z8f4n-afkOwpY25duvnFcukiDjw2BV5IN3GyVkH?GVFzywSU5

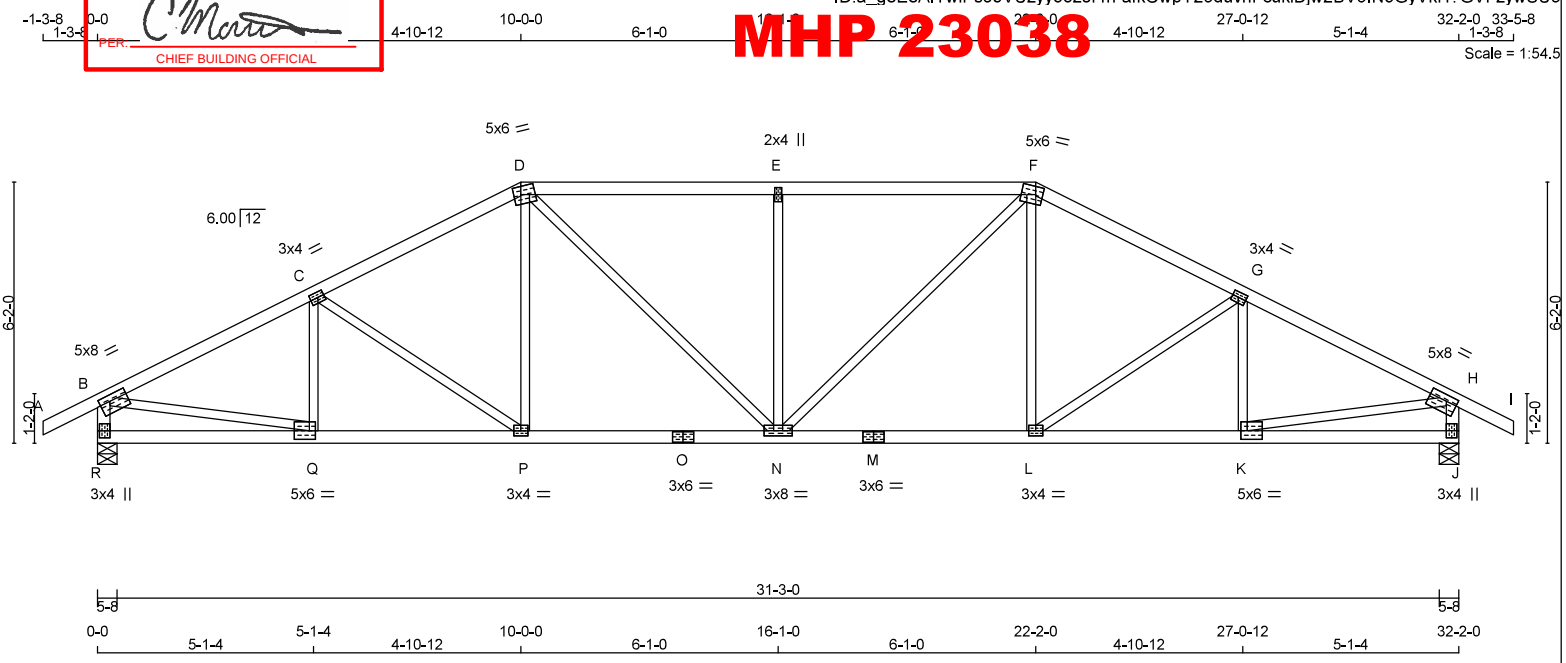

TOTAL WEIGHT = 130 lb
[M][F]

LUMBER
N. L. G. A. RULES

CHORDS	SIZE		LUMBER	DESCR.
A - D	2x4	DRY	No.2	SPF
D - F	2x4	DRY	No.2	SPF
F - I	2x4	DRY	No.2	SPF
R - B	2x4	DRY	No.2	SPF
J - H	2x4	DRY	No.2	SPF
R - O	2x4	DRY	No.2	SPF
O - M	2x4	DRY	No.2	SPF
M - J	2x4	DRY	No.2	SPF
ALL WEBS EXCEPT	2x3	DRY	No.2	SPF

DRY: SEASONED LUMBER.

PLATES (table is in inches)

JT	TYPE	PLATES	W	LEN	Y	X
B	TMVW-t	MT20	5.0	8.0	1.75	3.00
C	TMWW-t	MT20	3.0	4.0	1.50	1.75
D	TTWW-m	MT20	5.0	6.0	2.25	2.00
E	TMW+w	MT20	2.0	4.0		
F	TTWW-m	MT20	5.0	6.0	2.25	2.00
G	TMWW-t	MT20	3.0	4.0	1.50	1.75
H	TMVW-t	MT20	5.0	8.0	1.75	3.00
J	BMV1+p	MT20	3.0	4.0	2.00	
K	BMWW-t	MT20	5.0	6.0	2.50	1.75
L	BMWW-t	MT20	3.0	4.0		
M	BS-t	MT20	3.0	6.0		
N	BMWWW-t	MT20	3.0	8.0		
O	BS-t	MT20	3.0	6.0		
P	BMWW-t	MT20	3.0	4.0		
Q	BMWW-t	MT20	5.0	6.0	2.50	1.75
R	BMV1+p	MT20	3.0	4.0	2.00	0.50

DIMENSIONS, SUPPORTS AND LOADINGS SPECIFIED BY FABRICATOR TO BE VERIFIED BY BUILDING DESIGNER

BEARINGS

JT	FACTORED GROSS REACTION VERT	HORZ	MAXIMUM FACTORED GROSS REACTION DOWN	HORZ	UPLIFT	INPUT BRG IN-SX	REQRD BRG IN-SX
R	2376	0	2376	0	0	5-8	4-4
J	2376	0	2376	0	0	5-8	4-4

UNFACTORED REACTIONS

JT	1ST LCASE COMBINED	MAX./MIN. COMPONENT REACTIONS SNOW	LIVE	PERM.LIVE	WIND	DEAD	SOIL
R	1658	1214 / 0	0 / 0	0 / 0	0 / 0	444 / 0	0 / 0
J	1658	1214 / 0	0 / 0	0 / 0	0 / 0	444 / 0	0 / 0

BEARING MATERIAL TO BE SPF NO.2 OR BETTER AT JOINT(S) R, J

BRACING
TOP CHORD TO BE SHEATHED OR MAX. PURLIN SPACING = 3.08 FT.
MAX. UNBRACED BOTTOM CHORD LENGTH = 10.00 FT OR RIGID CEILING DIRECTLY APPLIED.

ALL PITCH BREAKS AND PERIMETER CORNER JOINTS MUST BE LATERALLY RESTRAINED.

LOADING
TOTAL LOAD CASES: (4)

CHORDS

MEMB. FR-TO	MAX. FACTORED FORCE (LBS)	VERT. LOAD (PLF) FROM	TO	LC1 MAX CSI (LC)	MAX. UNBRAC LENGTH
A- B	0 / 36	-119.4	-119.4	0.16 (1)	10.00
B- C	-3202 / 0	-119.4	-119.4	0.52 (1)	3.41
C- D	-2946 / 0	-119.4	-119.4	0.49 (1)	3.57
D- E	-3128 / 0	-119.4	-119.4	0.73 (1)	3.08
E- F	-3128 / 0	-119.4	-119.4	0.73 (1)	3.08
F- G	-2946 / 0	-119.4	-119.4	0.49 (1)	3.57
G- H	-3202 / 0	-119.4	-119.4	0.52 (1)	3.41
H- I	0 / 36	-119.4	-119.4	0.16 (1)	10.00
R- B	-2332 / 0	0.0	0.0	0.24 (1)	5.52
J- H	-2332 / 0	0.0	0.0	0.24 (1)	5.52
R- Q	0 / 0	-18.2	-18.2	0.10 (4)	10.00
Q- P	0 / 2891	-18.2	-18.2	0.53 (1)	10.00
P- O	0 / 2611	-18.2	-18.2	0.49 (1)	10.00
O- N	0 / 2611	-18.2	-18.2	0.49 (1)	10.00
N- M	0 / 2611	-18.2	-18.2	0.49 (1)	10.00
M- L	0 / 2611	-18.2	-18.2	0.49 (1)	10.00
L- K	0 / 2891	-18.2	-18.2	0.53 (1)	10.00
K- J	0 / 0	-18.2	-18.2	0.10 (4)	10.00

WEBS

MEMB. FR-TO	MAX. FACTORED FORCE (LBS)	MAX CSI (LC)
Q- C	-400 / 0	0.09 (1)
C- P	-346 / 0	0.22 (1)
P- D	0 / 305	0.07 (1)
D- N	0 / 719	0.16 (1)
N- E	-892 / 0	0.54 (1)
N- F	0 / 719	0.16 (1)
L- F	0 / 305	0.07 (1)
L- G	-346 / 0	0.22 (1)
K- G	-400 / 0	0.09 (1)
B- Q	0 / 2931	0.66 (1)
K- H	0 / 2931	0.66 (1)

DESIGN CRITERIA

SPECIFIED LOADS:

TOP CH.	LL	=	34.8	PSF
	DL	=	6.0	PSF
BOT CH.	LL	=	0.0	PSF
	DL	=	7.3	PSF
TOTAL LOAD		=	48.1	PSF

SPACING = 24.0 IN. C/C

LOADING IN FLAT SECTION BASED ON A SLOPE OF 2.00/12 MINIMUM

THIS TRUSS IS DESIGNED FOR RESIDENTIAL OR SMALL BUILDING REQUIREMENTS OF PART 9, NBCC 2015

THIS DESIGN COMPLIES WITH:
- PART 9 OF BCBC 2018 , NBC-2019AE
- PART 9 OF OBC 2012 (2019 AMENDMENT)
- CSA 086-14
- TPIC 2014

(55 % OF 48.1 P.S.F. G.S.L. PLUS 8.4 P.S.F. RAIN LOAD) EQUALS 34.8 P.S.F. SPECIFIED ROOF LIVE LOAD

ALLOWABLE DEFL.(LL)= L/360 (1.07")
CALCULATED VERT. DEFL.(LL) = L/ 999 (0.17")
ALLOWABLE DEFL.(TL)= L/360 (1.07")
CALCULATED VERT. DEFL.(TL) = L/ 999 (0.30")

CSI: TC=0.73/0.97 (D-E:1) , BC=0.53/0.97 (K-L:1) , WB=0.66/0.97 (H-K:1) , SSI=0.35/1.00 (D-E:1)

DOL LUMBER=1.00 NAIL=1.00 LS BEND=1.10 COMP=1.10 SHEAR=1.10 TENS= 1.10

COMPANION LIVE LOAD FACTOR = 1.00

TRUSS PLATE MANUFACTURER IS NOT RESPONSIBLE FOR QUALITY CONTROL IN THE TRUSS MANUFACTURING PLANT .

NAIL VALUES

PLATE	GRIP(DRY) (PSI) MAX	MIN	SHEAR (PLI) MAX	MIN	SECTION (PLI) MAX	MIN
MT20	650	371	1747	788	1987	1873

PLATE PLACEMENT TOL. = 0.250 inches

PLATE ROTATION TOL. = 5.0 Deg.

JSI GRIP= 0.90 (F) (INPUT = 0.90)
JSI METAL= 0.82 (O) (INPUT = 1.00)

LICENSED PROFESSIONAL ENGINEER
N.A. EL-MASRI
PROVINCE OF ONTARIO
Jul 19, 2023

READ ALL NOTES ON THIS PAGE AND ON THE ENGINEERING NOTES: TRUSSES. THE NOTE PAGE IS AN INTEGRAL PART OF THIS DRAWING AS IT CONTAINS SPECIFICATIONS AND CRITERIA USED IN THE DESIGN OF THIS COMPONENT.

KOTT

JOB NAME	TRUSS NAME	QUANTITY	PLY	JOB DESC.	DRWG NO.
NE0723-127	T03	1	1	GREENPARK - ZADORRA ESTATES - VILLA 11-3 (TRUSS DESC.)	

CORPORATION OF THE CITY OF OSHAWA
TRUE COPY
OF PERMIT PLANS
Dec 06 2023
PER
CHIEF BUILDING OFFICIAL

MHP 23038

Version 8.630 S Mar 22 2023 MiTek Industries, Inc. Wed Jul 19 16:54:17 2023 Page 1
ID:a_geEeAlTwiPs63VUzyy33z8f4n-2rIm79Ygsx0mPPB4IPkyTGkfChjI?PctWf03oQywSU4

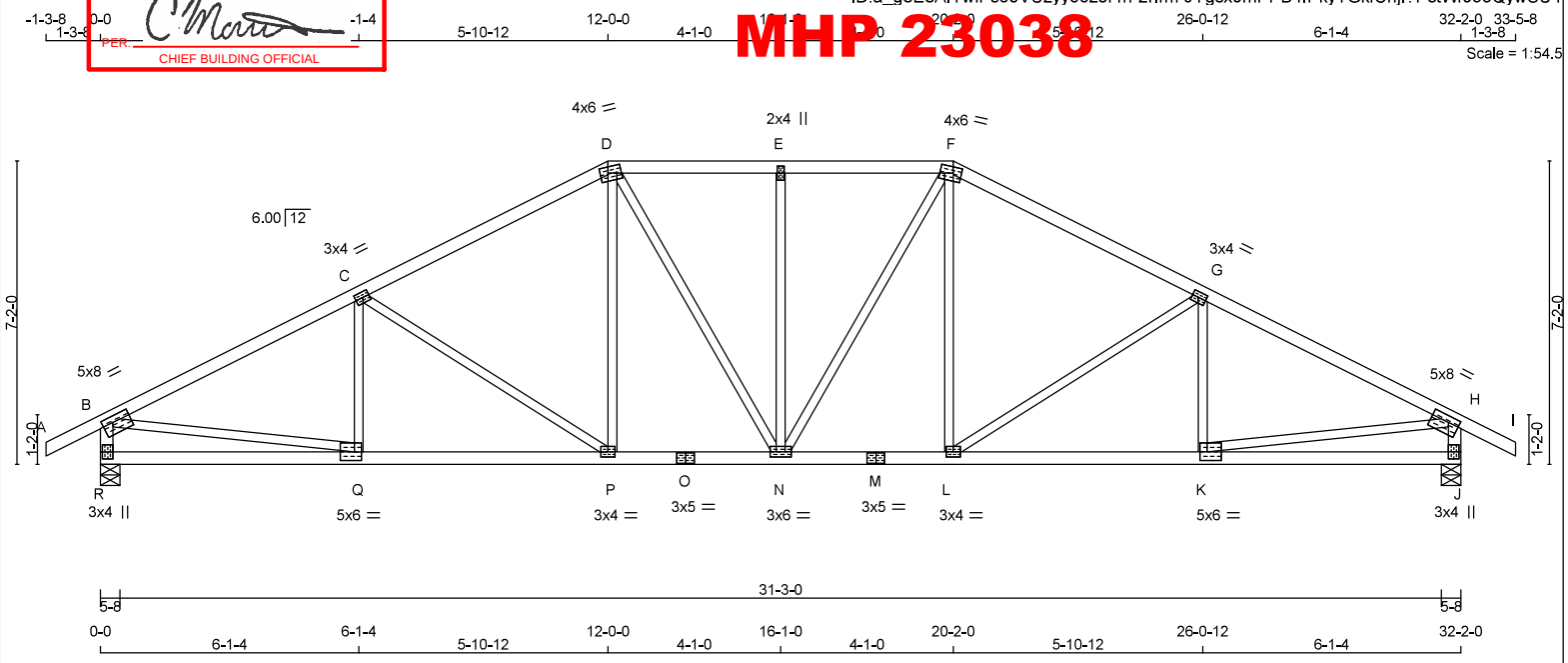

TOTAL WEIGHT = 137 lb
[M][F]

LUMBER
N. L. G. A. RULES

CHORDS	SIZE		LUMBER	DESCR.
A - D	2x4	DRY	No.2	SPF
D - F	2x4	DRY	No.2	SPF
F - I	2x4	DRY	No.2	SPF
R - B	2x4	DRY	No.2	SPF
J - H	2x4	DRY	No.2	SPF
R - O	2x4	DRY	No.2	SPF
O - M	2x4	DRY	No.2	SPF
M - J	2x4	DRY	No.2	SPF
ALL WEBS EXCEPT	2x3	DRY	No.2	SPF

DRY: SEASONED LUMBER.

PLATES (table is in inches)

JT	TYPE	PLATES	W	LEN	Y	X
B	TMVW-t	MT20	5.0	8.0	1.75	3.00
C	TMWW-t	MT20	3.0	4.0	1.50	1.75
D	TTWW-m	MT20	4.0	6.0	1.75	2.25
E	TMW+w	MT20	2.0	4.0		
F	TTWW-m	MT20	4.0	6.0	1.75	2.25
G	TMWW-t	MT20	3.0	4.0	1.50	1.75
H	TMVW-t	MT20	5.0	8.0	1.75	3.00
J	BMV1+p	MT20	3.0	4.0	2.00	
K	BMWW-t	MT20	5.0	6.0	2.50	2.00
L	BMWW-t	MT20	3.0	4.0		
M	BS-t	MT20	3.0	5.0		
N	BMWWW-t	MT20	3.0	6.0		
O	BS-t	MT20	3.0	5.0		
P	BMWW-t	MT20	3.0	4.0		
Q	BMWW-t	MT20	5.0	6.0	2.50	2.00
R	BMV1+p	MT20	3.0	4.0	2.00	0.50

DIMENSIONS, SUPPORTS AND LOADINGS SPECIFIED BY FABRICATOR TO BE VERIFIED BY BUILDING DESIGNER

BEARINGS

JT	FACTORED GROSS REACTION VERT	HORZ	MAXIMUM FACTORED GROSS REACTION DOWN	HORZ	UPLIFT	INPUT BRG IN-SX	REQRD BRG IN-SX
R	2376	0	2376	0	0	5-8	4-4
J	2376	0	2376	0	0	5-8	4-4

UNFACTORED REACTIONS

JT	1ST LCASE COMBINED	MAX./MIN. COMPONENT REACTIONS SNOW	LIVE	PERM.LIVE	WIND	DEAD	SOIL
R	1658	1214 / 0	0 / 0	0 / 0	0 / 0	444 / 0	0 / 0
J	1658	1214 / 0	0 / 0	0 / 0	0 / 0	444 / 0	0 / 0

BEARING MATERIAL TO BE SPF NO.2 OR BETTER AT JOINT(S) R, J

BRACING
TOP CHORD TO BE SHEATHED OR MAX. PURLIN SPACING = 3.04 FT.
MAX. UNBRACED BOTTOM CHORD LENGTH = 10.00 FT OR RIGID CEILING DIRECTLY APPLIED.

ALL PITCH BREAKS AND PERIMETER CORNER JOINTS MUST BE LATERALLY RESTRAINED.

LOADING
TOTAL LOAD CASES: (4)

CHORDS

MEMB. FR-TO	MAX. FACTORED FORCE (LBS)	VERT. LOAD (PLF) FROM	TO	LC1 MAX CSI (LC)	MAX. UNBRAC LENGTH
A- B	0 / 36	-119.4	-119.4	0.16 (1)	10.00
B- C	-3251 / 0	-119.4	-119.4	0.77 (1)	3.04
C- D	-2753 / 0	-119.4	-119.4	0.68 (1)	3.38
D- E	-2624 / 0	-119.4	-119.4	0.32 (1)	3.95
E- F	-2624 / 0	-119.4	-119.4	0.32 (1)	3.95
F- G	-2753 / 0	-119.4	-119.4	0.68 (1)	3.38
G- H	-3251 / 0	-119.4	-119.4	0.77 (1)	3.04
H- I	0 / 36	-119.4	-119.4	0.16 (1)	10.00
R- B	-2327 / 0	0.0	0.0	0.24 (1)	5.52
J- H	-2327 / 0	0.0	0.0	0.24 (1)	5.52
R- Q	0 / 0	-18.2	-18.2	0.15 (4)	10.00
Q- P	0 / 2941	-18.2	-18.2	0.53 (1)	10.00
P- O	0 / 2433	-18.2	-18.2	0.45 (1)	10.00
O- N	0 / 2433	-18.2	-18.2	0.45 (1)	10.00
N- M	0 / 2433	-18.2	-18.2	0.45 (1)	10.00
M- L	0 / 2433	-18.2	-18.2	0.45 (1)	10.00
L- K	0 / 2941	-18.2	-18.2	0.53 (1)	10.00
K- J	0 / 0	-18.2	-18.2	0.15 (4)	10.00

WEBS

MEMB. FR-TO	MAX. FACTORED FORCE (LBS)	MAX CSI (LC)
Q- C	-297 / 29	0.08 (1)
C- P	-614 / 0	0.61 (1)
P- D	0 / 436	0.10 (1)
D- N	0 / 373	0.08 (1)
N- E	-588 / 0	0.53 (1)
N- F	0 / 373	0.08 (1)
L- F	0 / 436	0.10 (1)
L- G	-614 / 0	0.61 (1)
K- G	-297 / 29	0.08 (1)
B- Q	0 / 2969	0.67 (1)
K- H	0 / 2969	0.67 (1)

DESIGN CRITERIA

SPECIFIED LOADS:

TOP CH.	LL	=	34.8	PSF
	DL	=	6.0	PSF
BOT CH.	LL	=	0.0	PSF
	DL	=	7.3	PSF
TOTAL LOAD		=	48.1	PSF

SPACING = 24.0 IN. C/C

LOADING IN FLAT SECTION BASED ON A SLOPE OF 2.00/12 MINIMUM

THIS TRUSS IS DESIGNED FOR RESIDENTIAL OR SMALL BUILDING REQUIREMENTS OF PART 9, NBCC 2015

THIS DESIGN COMPLIES WITH:
- PART 9 OF BCBC 2018 , NBC-2019AE
- PART 9 OF OBC 2012 (2019 AMENDMENT)
- CSA 086-14
- TPIC 2014

(55 % OF 48.1 P.S.F. G.S.L. PLUS 8.4 P.S.F. RAIN LOAD) EQUALS 34.8 P.S.F. SPECIFIED ROOF LIVE LOAD

ALLOWABLE DEFL.(LL)= L/360 (1.07")
CALCULATED VERT. DEFL.(LL) = L/ 999 (0.16")
ALLOWABLE DEFL.(TL)= L/360 (1.07")
CALCULATED VERT. DEFL.(TL) = L/ 999 (0.27")

CSI: TC=0.77/0.97 (G-H:1) , BC=0.53/0.97 (K-L:1) , WB=0.67/0.97 (H-K:1) , SSI=0.31/1.00 (G-H:1)

DOL LUMBER=1.00 NAIL=1.00 LS BEND=1.10 COMP=1.10 SHEAR=1.10 TENS= 1.10

COMPANION LIVE LOAD FACTOR = 1.00

TRUSS PLATE MANUFACTURER IS NOT RESPONSIBLE FOR QUALITY CONTROL IN THE TRUSS MANUFACTURING PLANT .

NAIL VALUES

PLATE	GRIP(DRY) (PSI) MAX	MIN	SHEAR (PLI) MAX	MIN	SECTION (PLI) MAX	MIN
MT20	650	371	1747	788	1987	1873

PLATE PLACEMENT TOL. = 0.250 inches

PLATE ROTATION TOL. = 5.0 Deg.

JSI GRIP= 0.89 (D) (INPUT = 0.90)
JSI METAL= 0.70 (O) (INPUT = 1.00)

LICENSED PROFESSIONAL ENGINEER
N.A. EL-MASRI
PROVINCE OF ONTARIO
Jul 19, 2023

READ ALL NOTES ON THIS PAGE AND ON THE ENGINEERING NOTES: TRUSSES. THE NOTE PAGE IS AN INTEGRAL PART OF THIS DRAWING AS IT CONTAINS SPECIFICATIONS AND CRITERIA USED IN THE DESIGN OF THIS COMPONENT.

KOTT

JOB NAME	TRUSS NAME	QUANTITY	PLY	JOB DESC.	DRWG NO.
NE0723-127	T04	1	1	GREENPARK - ZADORRA ESTATES - VILLA 11-3 (TRUSS DESC.)	

CORPORATION OF THE CITY OF OSHAWA
TRUE COPY
OF PERMIT PLANS
Dec 06 2023
PER
CHIEF BUILDING OFFICIAL

MHP 23038

Version 8.630 S Mar 22 2023 MiTek Industries, Inc. Wed Jul 19 16:54:17 2023 Page 1
ID:a_geEeAITwiPs63VUzyy33z8f4n-2rIm79Ygsx0mPPB4IPkyTGkdKhib?PZtWf03oQywSU4

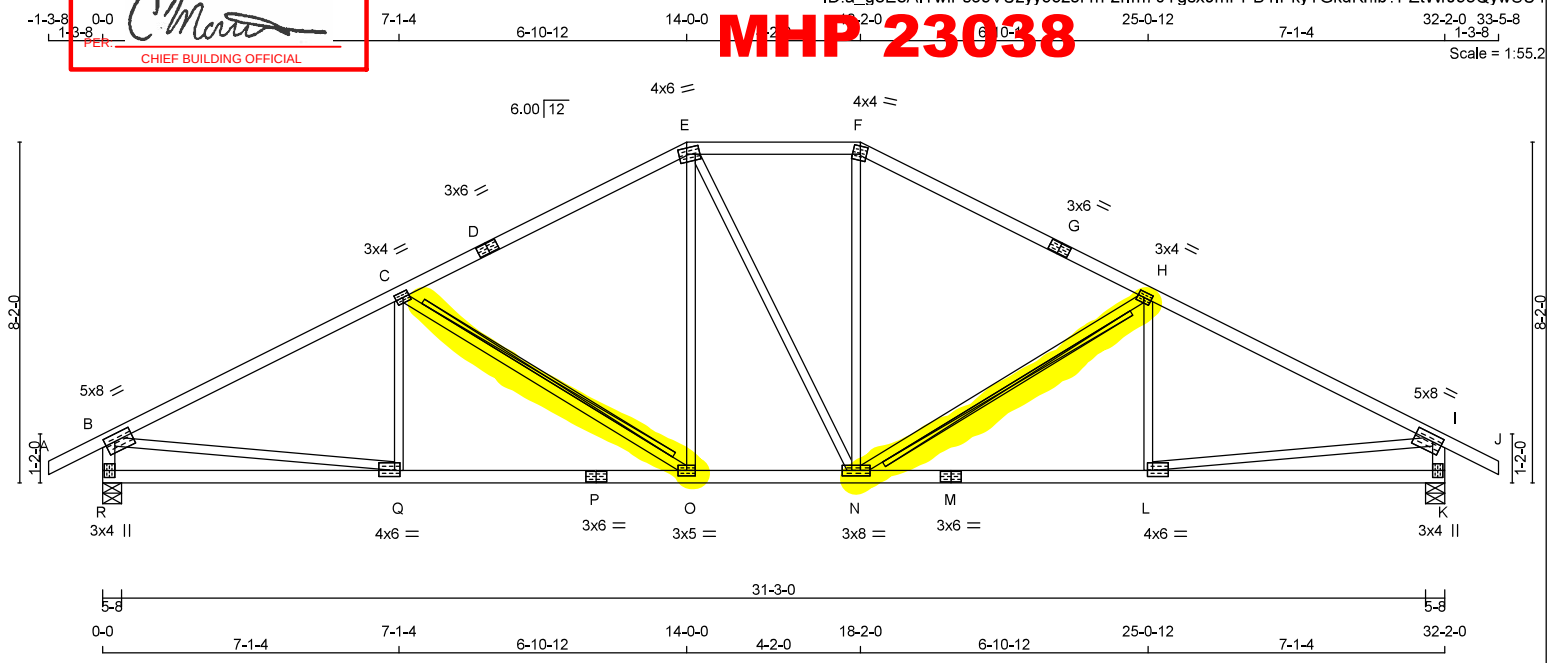

TOTAL WEIGHT = 132 lb
[M][F]

LUMBER
N. L. G. A. RULES

CHORDS	SIZE		LUMBER	DESCR.
A - D	2x4	DRY	2100F 1.8E	SPF
D - E	2x4	DRY	No.2	SPF
E - F	2x4	DRY	No.2	SPF
F - G	2x4	DRY	No.2	SPF
G - J	2x4	DRY	2100F 1.8E	SPF
R - B	2x4	DRY	No.2	SPF
K - I	2x4	DRY	No.2	SPF
R - P	2x4	DRY	No.2	SPF
P - M	2x4	DRY	No.2	SPF
M - K	2x4	DRY	No.2	SPF
ALL WEBS EXCEPT	2x3	DRY	No.2	SPF

DRY: SEASONED LUMBER.

PLATES (table is in inches)

JT	TYPE	PLATES	W	LEN	Y	X
B	TMVW-t	MT20	5.0	8.0	2.00	2.75
C	TMWW-t	MT20	3.0	4.0	1.50	1.75
D	TS-t	MT20	3.0	6.0		
E	TTWW-m	MT20	4.0	6.0	1.75	2.25
F	TTW-m	MT20	4.0	4.0	2.25	1.75
G	TS-t	MT20	3.0	6.0		
H	TMWW-t	MT20	3.0	4.0	1.50	1.75
I	TMVW-t	MT20	5.0	8.0	2.00	2.75
K	BMV1+p	MT20	3.0	4.0	2.00	
L	BMWW-t	MT20	4.0	6.0	1.75	1.50
M	BS-t	MT20	3.0	6.0		
N	BMWWW-t	MT20	3.0	8.0		
O	BMWW-t	MT20	3.0	5.0		
P	BS-t	MT20	3.0	6.0		
Q	BMWW-t	MT20	4.0	6.0	1.75	1.50
R	BMV1+p	MT20	3.0	4.0	2.00	0.50

DIMENSIONS, SUPPORTS AND LOADINGS SPECIFIED BY FABRICATOR TO BE VERIFIED BY BUILDING DESIGNER

BEARINGS

JT	FACTORED GROSS REACTION VERT	HORZ	MAXIMUM FACTORED GROSS REACTION DOWN	HORZ	UPLIFT	INPUT BRG IN-SX	REQRD BRG IN-SX
R	2376	0	2376	0	0	5-8	4-4
K	2376	0	2376	0	0	5-8	4-4

UNFACTORED REACTIONS

JT	1ST LCASE COMBINED	MAX./MIN. COMPONENT REACTIONS SNOW	LIVE	PERM.LIVE	WIND	DEAD	SOIL
R	1658	1214 / 0	0 / 0	0 / 0	0 / 0	444 / 0	0 / 0
K	1658	1214 / 0	0 / 0	0 / 0	0 / 0	444 / 0	0 / 0

BEARING MATERIAL TO BE SPF NO.2 OR BETTER AT JOINT(S) R, K

BRACING
TOP CHORD TO BE SHEATHED OR MAX. PURLIN SPACING = 2.78 FT.
MAX. UNBRACED BOTTOM CHORD LENGTH = 10.00 FT OR RIGID CEILING DIRECTLY APPLIED.

ALL PITCH BREAKS AND PERIMETER CORNER JOINTS MUST BE LATERALLY RESTRAINED.

2x4 DRY SPF No.2 T-BRACE AT C-O, H-N

FASTEN T AND I-BRACES TO NARROW EDGE OF WEB WITH ONE ROW PER PLY OF 3" COMMON WIRE NAILS @ 6" O.C. WITH 3" MINIMUM END DISTANCE. BRACE MUST COVER 90% OF WEB LENGTH.

END VERTICAL(S) MUST BE SHEATHED OR HAVE BRACES AS INDICATED IN THE MAX. UNBRACED LENGTH COLUMN OF THE TABLE BELOW

LOADING
TOTAL LOAD CASES: (4)

CHORDS MEMB. FR-TO	MAX. FACTORED FORCE (LBS)	FACTORED VERT. LOAD LC1 (PLF) FROM	TO	MAX CSI (LC)	MAX. UNBRAC LENGTH	WEBS MEMB. FR-TO	MAX. FACTORED FORCE (LBS)	MAX CSI (LC)
A- B	0 / 36	-119.4	-119.4	0.10 (1)	10.00	Q- C	-214 / 71	0.07 (1)
B- C	-3265 / 0	-119.4	-119.4	0.64 (1)	3.99	C- O	-872 / 0	0.46 (1)
C- D	-2535 / 0	-119.4	-119.4	0.95 (1)	2.78	O- E	0 / 558	0.13 (1)
D- E	-2535 / 0	-119.4	-119.4	0.95 (1)	2.78	E- N	0 / 2	0.00 (1)
E- F	-2233 / 0	-119.4	-119.4	0.33 (1)	4.22	N- F	0 / 561	0.13 (1)
F- G	-2536 / 0	-119.4	-119.4	0.95 (1)	2.78	N- H	-870 / 0	0.46 (1)
G- H	-2536 / 0	-119.4	-119.4	0.95 (1)	2.78	L- H	-216 / 71	0.07 (1)
H- I	-3265 / 0	-119.4	-119.4	0.64 (1)	3.99	B- Q	0 / 2983	0.67 (1)
I- J	0 / 36	-119.4	-119.4	0.10 (1)	10.00	L- I	0 / 2983	0.67 (1)
R- B	-2322 / 0	0.0	0.0	0.23 (1)	5.52			
K- I	-2322 / 0	0.0	0.0	0.23 (1)	5.52			
R- Q	0 / 0	-18.2	-18.2	0.22 (4)	10.00			
Q- P	0 / 2962	-18.2	-18.2	0.58 (1)	10.00			
P- O	0 / 2962	-18.2	-18.2	0.58 (1)	10.00			
O- N	0 / 2232	-18.2	-18.2	0.43 (1)	10.00			
N- M	0 / 2961	-18.2	-18.2	0.57 (1)	10.00			
M- L	0 / 2961	-18.2	-18.2	0.57 (1)	10.00			
L- K	0 / 0	-18.2	-18.2	0.22 (4)	10.00			

DESIGN CRITERIA

SPECIFIED LOADS:

TOP CH.	LL =	34.8	PSF
	DL =	6.0	PSF
BOT CH.	LL =	0.0	PSF
	DL =	7.3	PSF
TOTAL LOAD	=	48.1	PSF

SPACING = 24.0 IN. C/C

LOADING IN FLAT SECTION BASED ON A SLOPE OF 2.00/12 MINIMUM

THIS TRUSS IS DESIGNED FOR RESIDENTIAL OR SMALL BUILDING REQUIREMENTS OF PART 9, NBCC 2015

THIS DESIGN COMPLIES WITH:
- PART 9 OF BCBC 2018 , NBC-2019AE
- PART 9 OF OBC 2012 (2019 AMENDMENT)
- CSA 086-14
- TPIC 2014

(55 % OF 48.1 P.S.F. G.S.L. PLUS 8.4 P.S.F. RAIN LOAD) EQUALS 34.8 P.S.F. SPECIFIED ROOF LIVE LOAD

ALLOWABLE DEFL.(LL)= L/360 (1.07")
CALCULATED VERT. DEFL.(LL) = L/ 999 (0.15")
ALLOWABLE DEFL.(TL)= L/360 (1.07")
CALCULATED VERT. DEFL.(TL) = L/ 999 (0.28")

CSI: TC=0.95/0.97 (F-H:1) , BC=0.58/0.97 (O-Q:1) , WB=0.67/0.97 (B-Q:1) , SSI=0.37/1.00 (H-I:1)

DOL LUMBER=1.00 NAIL=1.00 LS BEND=1.10 COMP=1.10 SHEAR=1.10 TENS= 1.10

COMPANION LIVE LOAD FACTOR = 1.00

TRUSS PLATE MANUFACTURER IS NOT RESPONSIBLE FOR QUALITY CONTROL IN THE TRUSS MANUFACTURING PLANT .

NAIL VALUES

PLATE	GRIP(DRY) (PSI) MAX	MIN	SHEAR (PLI) MAX	MIN	SECTION (PLI) MAX	MIN
MT20	650	371	1747	788	1987	1873

PLATE PLACEMENT TOL. = 0.250 inches

PLATE ROTATION TOL. = 5.0 Deg.

JSI GRIP= 0.90 (B) (INPUT = 0.90)
JSI METAL= 0.95 (P) (INPUT = 1.00)

LICENSED PROFESSIONAL ENGINEER
N.A. EL-MASRI
PROVINCE OF ONTARIO
Jul 19, 2023

READ ALL NOTES ON THIS PAGE AND ON THE ENGINEERING NOTES: TRUSSES. THE NOTE PAGE IS AN INTEGRAL PART OF THIS DRAWING AS IT CONTAINS SPECIFICATIONS AND CRITERIA USED IN THE DESIGN OF THIS COMPONENT.

KOTT

JOB NAME	TRUSS NAME	QUANTITY	PLY	JOB DESC.	DRWG NO.
NE0723-127	T05	1	1	GREENPARK - ZADORRA ESTATES - VILLA 11-3 (TRUSS DESC.)	

CORPORATION OF THE CITY OF OSHAWA
TRUE COPY
OF PERMIT PLANS
Dec 06 2023
PER:
CHIEF BUILDING OFFICIAL

MHP 23038

Version 8.630 S Mar 22 2023 MiTek Industries, Inc. Wed Jul 19 16:54:18 2023 Page 1
ID:a_geEeAITwiPs63VUzyy33z8f4n-W1s9LVZIdE8d0ZmHs7FB?THrd53okrv1IJIcKsywSU3

Scale = 1:58.3

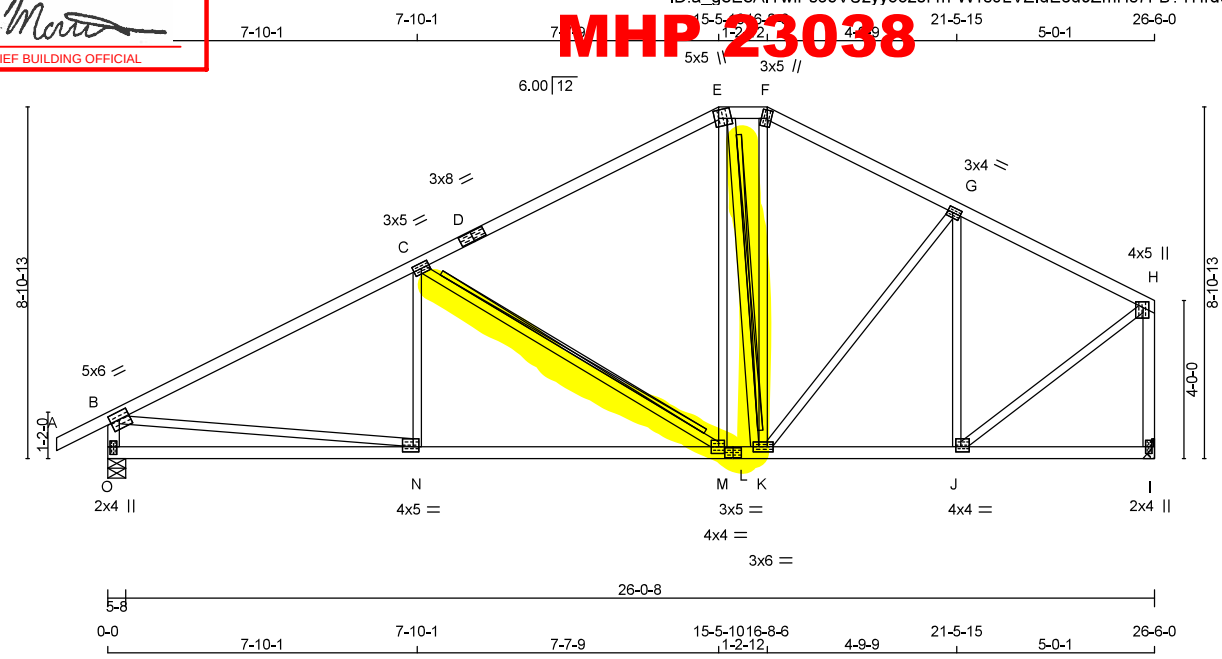

TOTAL WEIGHT = 124 lb
[M][F]

LUMBER
N. L. G. A. RULES

CHORDS	SIZE		LUMBER	DESCR.
A - D	2x4	DRY	2100F 1.8E	SPF
D - E	2x4	DRY	2100F 1.8E	SPF
E - F	2x4	DRY	No.2	SPF
F - H	2x4	DRY	No.2	SPF
O - B	2x4	DRY	No.2	SPF
I - H	2x4	DRY	No.2	SPF
O - L	2x4	DRY	No.2	SPF
L - I	2x4	DRY	No.2	SPF
ALL WEBS EXCEPT	2x3	DRY	No.2	SPF

DRY: SEASONED LUMBER.

PLATES (table is in inches)

JT	TYPE	PLATES	W	LEN	Y	X
B	TMVW-t	MT20	5.0	6.0	2.25	2.75
C	TMWW-t	MT20	3.0	5.0		
D	TS-t	MT20	3.0	8.0		
E	TTWW+m	MT20	5.0	5.0	2.50	1.25
F	TTW+m	MT20	3.0	5.0	2.50	1.25
G	TMWW-t	MT20	3.0	4.0	1.50	1.50
H	TMVW+p	MT20	4.0	5.0	1.75	1.75
I	BMV1+p	MT20	2.0	4.0		
J	BMWW-t	MT20	4.0	4.0	1.50	1.50
K	BMWWW-t	MT20	3.0	6.0		
L	BS-t	MT20	3.0	5.0		
M	BMWW-t	MT20	4.0	4.0	2.00	1.75
N	BMWW-t	MT20	4.0	5.0	1.50	1.75
O	BMV1+p	MT20	2.0	4.0	2.25	1.00

DIMENSIONS, SUPPORTS AND LOADINGS SPECIFIED BY FABRICATOR TO BE VERIFIED BY BUILDING DESIGNER

BEARINGS

JT	FACTORED GROSS REACTION VERT	HORZ	MAXIMUM FACTORED GROSS REACTION DOWN	HORZ	UPLIFT	INPUT BRG IN-SX	REQRD BRG IN-SX
O	1986	0	1986	0	0	5-8	2-15
I	1824	0	1824	0	0	MECHANICAL	

A SUITABLE HANGER/MECHANICAL CONNECTION IS REQUIRED AT JOINT I. MINIMUM BEARING LENGTH AT JOINT I = 2-7.

UNFACTORED REACTIONS

JT	1ST LCASE COMBINED	SNOW	MAX./MIN. COMPONENT REACTIONS LIVE	PERM.LIVE	WIND	DEAD	SOIL
O	1386	1017 / 0	0 / 0	0 / 0	0 / 0	369 / 0	0 / 0
I	1275	922 / 0	0 / 0	0 / 0	0 / 0	352 / 0	0 / 0

BEARING MATERIAL TO BE SPF NO.2 OR BETTER AT JOINT(S) O

BRACING
TOP CHORD TO BE SHEATHED OR MAX. PURLIN SPACING = 4.20 FT.
MAX. UNBRACED BOTTOM CHORD LENGTH = 10.00 FT OR RIGID CEILING DIRECTLY APPLIED.

ALL PITCH BREAKS AND PERIMETER CORNER JOINTS MUST BE LATERALLY RESTRAINED.

2x4 DRY SPF No.2 T-BRACE AT C-M, E-K

FASTEN T AND I-BRACES TO NARROW EDGE OF WEB WITH ONE ROW PER PLY OF 3" COMMON WIRE NAILS @ 6" O.C. WITH 3" MINIMUM END DISTANCE. BRACE MUST COVER 90% OF WEB LENGTH.

END VERTICAL(S) MUST BE SHEATHED OR HAVE BRACES AS INDICATED IN THE MAX. UNBRACED LENGTH COLUMN OF THE TABLE BELOW

LOADING
TOTAL LOAD CASES: (4)

CHORDS

MEMB. FR-TO	MAX. FACTORED FORCE (LBS)	FACTORED VERT. LOAD (PLF) FROM	TO	LC1	MAX CSI (LC)	MAX. UNBRAC LENGTH
A- B	0 / 36	-119.4	-119.4	0.10 (1)	10.00	
B- C	-2535 / 0	-119.4	-119.4	0.73 (1)	4.20	
C- D	-1575 / 0	-119.4	-119.4	0.65 (1)	5.16	
D- E	-1575 / 0	-119.4	-119.4	0.65 (1)	5.16	
E- F	-1322 / 0	-119.4	-119.4	0.04 (1)	5.57	
F- G	-1506 / 0	-119.4	-119.4	0.40 (1)	4.85	
G- H	-1374 / 0	-119.4	-119.4	0.39 (1)	5.03	
O- B	-1928 / 0	0.0	0.0	0.19 (1)	5.98	
I- H	-1785 / 0	0.0	0.0	0.47 (1)	6.17	
O- N	0 / 0	-18.2	-18.2	0.28 (4)	10.00	
N- M	0 / 2311	-18.2	-18.2	0.51 (1)	10.00	
M- L	0 / 1370	-18.2	-18.2	0.30 (1)	10.00	
L- K	0 / 1370	-18.2	-18.2	0.30 (1)	10.00	
K- J	0 / 1257	-18.2	-18.2	0.28 (1)	10.00	
J- I	0 / 0	-18.2	-18.2	0.11 (4)	10.00	

WEBS

MEMB. FR-TO	MAX. FACTORED FORCE (LBS)	MAX CSI (LC)
N- C	-89 / 117	0.04 (4)
C- M	-1115 / 0	0.73 (1)
M- E	0 / 639	0.14 (1)
E- K	-374 / 0	0.22 (1)
K- F	0 / 373	0.08 (1)
K- G	0 / 98	0.02 (1)
J- G	-836 / 0	0.58 (1)
B- N	0 / 2325	0.52 (1)
J- H	0 / 1562	0.35 (1)

DESIGN CRITERIA

SPECIFIED LOADS:

TOP CH.	LL	=	34.8	PSF
	DL	=	6.0	PSF
BOT CH.	LL	=	0.0	PSF
	DL	=	7.3	PSF
TOTAL LOAD		=	48.1	PSF

SPACING = 24.0 IN. C/C

LOADING IN FLAT SECTION BASED ON A SLOPE OF 2.00/12 MINIMUM

THIS TRUSS IS DESIGNED FOR RESIDENTIAL OR SMALL BUILDING REQUIREMENTS OF PART 9, NBCC 2015

THIS DESIGN COMPLIES WITH:
- PART 9 OF BCBC 2018 , NBC-2019AE
- PART 9 OF OBC 2012 (2019 AMENDMENT)
- CSA 086-14
- TPIC 2014

(55 % OF 48.1 P.S.F. G.S.L. PLUS 8.4 P.S.F. RAIN LOAD) EQUALS 34.8 P.S.F. SPECIFIED ROOF LIVE LOAD

ALLOWABLE DEFL.(LL)= L/360 (0.88")
CALCULATED VERT. DEFL.(LL) = L/ 999 (0.10")
ALLOWABLE DEFL.(TL)= L/360 (0.88")
CALCULATED VERT. DEFL.(TL) = L/ 999 (0.21")

CSI: TC=0.73/0.97 (B-C:1) , BC=0.51/0.97 (M-N:1) , WB=0.73/0.97 (C-M:1) , SSI=0.40/1.00 (B-C:1)

DOL LUMBER=1.00 NAIL=1.00 LS BEND=1.10 COMP=1.10 SHEAR=1.10 TENS= 1.10

COMPANION LIVE LOAD FACTOR = 1.00

TRUSS PLATE MANUFACTURER IS NOT RESPONSIBLE FOR QUALITY CONTROL IN THE TRUSS MANUFACTURING PLANT .

NAIL VALUES

PLATE	GRIP(DRY) (PSI) MAX	MIN	SHEAR (PLI) MAX	MIN	SECTION (PLI) MAX	MIN
MT20	650	371	1747	788	1987	1873

PLATE PLACEMENT TOL. = 0.250 inches

PLATE ROTATION TOL. = 5.0 Deg.

JSI GRIP= 0.90 (G) (INPUT = 0.90)
JSI METAL= 0.66 (N) (INPUT = 1.00)

LICENSED PROFESSIONAL ENGINEER
N.A. EL-MASRI
PROVINCE OF ONTARIO
Jul 19, 2023

READ ALL NOTES ON THIS PAGE AND ON THE ENGINEERING NOTES: TRUSSES. THE NOTE PAGE IS AN INTEGRAL PART OF THIS DRAWING AS IT CONTAINS SPECIFICATIONS AND CRITERIA USED IN THE DESIGN OF THIS COMPONENT.

KOTT