| JOB NAME | TRUSS NAME | QUANTITY | PLY | JOB DESC. | DRWG NO. |
|---|---|---|---|---|---|
| NE0723-072 | G01 | 1 | 1 | TRUSS DESC. | |

CORPORATION OF THE CITY OF OSHAWA
TRUE COPY
OF PERMIT PLANS
Nov 21 2023
PER: C Martin
CHIEF BUILDING OFFICIAL

MHP 23033

Version 8.630 S Mar 22 2023 MiTek Industries, Inc. Thu Jul 13 19:55:42 2023 Page 1
ID:vGgVNALLxpgFINJM6FviHszAhox-PImAsAcKMxTEpEHmyh4pjcVy8JUgtBx6dq65OFyyOO?

Scale = 1:46.5

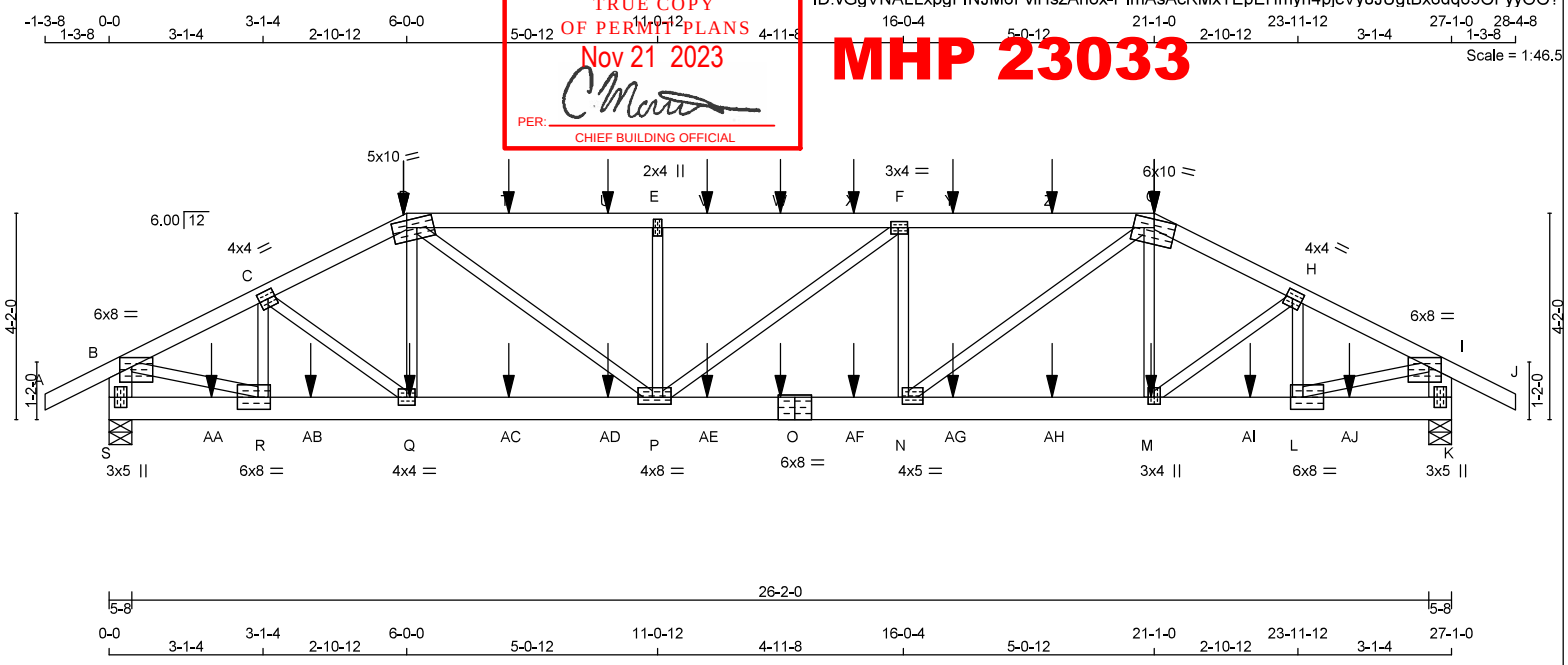


TOTAL WEIGHT = 125 lb [M]

**LUMBER**
N. L. G. A. RULES

| CHORDS | SIZE | | LUMBER | DESCR. |
|---|---|---|---|---|
| A - D | 2x4 | DRY | No.2 | SPF |
| D - G | 2x4 | DRY | 2100F 1.8E | SPF |
| G - J | 2x4 | DRY | No.2 | SPF |
| S - B | 2x6 | DRY | No.2 | SPF |
| K - I | 2x6 | DRY | No.2 | SPF |
| S - O | 2x6 | DRY | No.2 | SPF |
| O - K | 2x6 | DRY | No.2 | SPF |
| ALL WEBS EXCEPT | 2x3 | DRY | No.2 | SPF |

DRY: SEASONED LUMBER.

**PLATES (table is in inches)**

| JT | TYPE | PLATES | W | LEN | Y | X |
|---|---|---|---|---|---|---|
| B | TMVW-p | MT20 | 6.0 | 8.0 | 2.25 | 3.00 |
| C | TMWW-t | MT20 | 4.0 | 4.0 | 2.00 | 1.75 |
| D | TTWW-m | MT20 | 5.0 | 10.0 | 1.75 | 3.50 |
| E | TMW+w | MT20 | 2.0 | 4.0 | | |
| F | TMWW-t | MT20 | 3.0 | 4.0 | 1.50 | 1.75 |
| G | TTWW-m | MT20 | 6.0 | 10.0 | Edge | |
| H | TMWW-t | MT20 | 4.0 | 4.0 | 2.00 | 1.75 |
| I | TMVW-p | MT20 | 6.0 | 8.0 | 2.25 | 3.00 |
| K | BMV1+p | MT20 | 3.0 | 5.0 | | |
| L | BMWW-t | MT20 | 6.0 | 8.0 | 3.00 | 3.00 |
| M | BMWW+t | MT20 | 3.0 | 4.0 | 1.75 | 1.50 |
| N | BMWW-t | MT20 | 4.0 | 5.0 | 1.75 | 1.50 |
| O | BS-t | MT20 | 6.0 | 8.0 | | |
| P | BMWWW-t | MT20 | 4.0 | 8.0 | 1.75 | 3.50 |
| Q | BMWW-t | MT20 | 4.0 | 4.0 | | |
| R | BMWW-t | MT20 | 6.0 | 8.0 | 3.00 | 3.00 |
| S | BMV1+p | MT20 | 3.0 | 5.0 | | |

Edge - INDICATES REFERENCE CORNER OF PLATE TOUCHES EDGE OF CHORD.

LICENSED PROFESSIONAL ENGINEER
N.A. EL-MASRI
PROVINCE OF ONTARIO
Jul 13, 2023

**READ ALL NOTES ON THIS PAGE AND ON THE ENGINEERING NOTES: TRUSSES. THE NOTE PAGE IS AN INTEGRAL PART OF THIS DRAWING AS IT CONTAINS SPECIFICATIONS AND CRITERIA USED IN THE DESIGN OF THIS COMPONENT.**

**DIMENSIONS, SUPPORTS AND LOADINGS SPECIFIED BY FABRICATOR TO BE VERIFIED BY BUILDING DESIGNER**

**BEARINGS**

| JT | FACTORED GROSS REACTION VERT | HORZ | MAXIMUM FACTORED GROSS REACTION DOWN | HORZ | UPLIFT | INPUT BRG IN-SX | REQRD BRG IN-SX |
|---|---|---|---|---|---|---|---|
| S | 3335 | 0 | 3335 | 0 | 0 | 5-8 | 5-5 |
| K | 3335 | 0 | 3335 | 0 | 0 | 5-8 | 5-5 |

**UNFACTORED REACTIONS**

| JT | 1ST LCASE COMBINED | MAX./MIN. COMPONENT REACTIONS SNOW | LIVE | PERM.LIVE | WIND | DEAD | SOIL |
|---|---|---|---|---|---|---|---|
| S | 2329 | 1694 / 0 | 0 / 0 | 0 / 0 | 0 / 0 | 635 / 0 | 0 / 0 |
| K | 2329 | 1694 / 0 | 0 / 0 | 0 / 0 | 0 / 0 | 636 / 0 | 0 / 0 |

BEARING MATERIAL TO BE SPF NO.2 OR BETTER AT JOINT(S) S, K

**BRACING**
TOP CHORD TO BE SHEATHED OR MAX. PURLIN SPACING = 2.78 FT.
MAX. UNBRACED BOTTOM CHORD LENGTH = 10.00 FT OR RIGID CEILING DIRECTLY APPLIED.

ALL PITCH BREAKS AND PERIMETER CORNER JOINTS MUST BE LATERALLY RESTRAINED.

**LOADING**
TOTAL LOAD CASES: (4)

CHORDS

| MEMB. FR-TO | MAX. FACTORED FORCE (LBS) | FACTORED VERT. LOAD (PLF) FROM | TO | LC1 | MAX CSI (LC) | MAX. UNBRAC LENGTH |
|---|---|---|---|---|---|---|
| A- B | 0 / 36 | -119.4 | -119.4 | 0.17 (1) | 10.00 | |
| B- C | -4336 / 0 | -119.4 | -119.4 | 0.43 (1) | 3.00 | |
| C- D | -4898 / 0 | -119.4 | -119.4 | 0.46 (1) | 2.78 | |
| D- T | -5991 / 0 | -119.4 | -119.4 | 0.78 (1) | 2.83 | |
| T- U | -5991 / 0 | -119.4 | -119.4 | 0.78 (1) | 2.83 | |
| U- E | -5991 / 0 | -119.4 | -119.4 | 0.78 (1) | 2.83 | |
| E- V | -5991 / 0 | -119.4 | -119.4 | 0.79 (1) | 2.81 | |
| V- W | -5991 / 0 | -119.4 | -119.4 | 0.79 (1) | 2.81 | |
| W- X | -5991 / 0 | -119.4 | -119.4 | 0.79 (1) | 2.81 | |
| X- F | -5991 / 0 | -119.4 | -119.4 | 0.79 (1) | 2.81 | |
| F- Y | -6006 / 0 | -119.4 | -119.4 | 0.80 (1) | 2.80 | |
| Y- Z | -6006 / 0 | -119.4 | -119.4 | 0.80 (1) | 2.80 | |
| Z- G | -6006 / 0 | -119.4 | -119.4 | 0.80 (1) | 2.80 | |
| G- H | -4895 / 0 | -119.4 | -119.4 | 0.46 (1) | 2.78 | |
| H- I | -4338 / 0 | -119.4 | -119.4 | 0.43 (1) | 3.00 | |
| I- J | 0 / 36 | -119.4 | -119.4 | 0.17 (1) | 10.00 | |
| S- B | -3236 / 0 | 0.0 | 0.0 | 0.23 (1) | 5.84 | |
| K- I | -3237 / 0 | 0.0 | 0.0 | 0.23 (1) | 5.84 | |
| S-AA | 0 / 0 | -18.2 | -18.2 | 0.14 (1) | 10.00 | |
| AA- R | 0 / 0 | -18.2 | -18.2 | 0.14 (1) | 10.00 | |
| R-AB | 0 / 3889 | -18.2 | -18.2 | 0.65 (1) | 10.00 | |
| AB- Q | 0 / 3889 | -18.2 | -18.2 | 0.65 (1) | 10.00 | |
| Q-AC | 0 / 4361 | -18.2 | -18.2 | 0.64 (1) | 10.00 | |
| AC-AD | 0 / 4361 | -18.2 | -18.2 | 0.64 (1) | 10.00 | |
| AD- P | 0 / 4361 | -18.2 | -18.2 | 0.64 (1) | 10.00 | |
| P-AE | 0 / 6006 | -18.2 | -18.2 | 0.90 (1) | 10.00 | |
| AE- O | 0 / 6006 | -18.2 | -18.2 | 0.90 (1) | 10.00 | |
| O-AF | 0 / 6006 | -18.2 | -18.2 | 0.90 (1) | 10.00 | |
| AF- N | 0 / 6006 | -18.2 | -18.2 | 0.90 (1) | 10.00 | |
| N-AG | 0 / 4358 | -18.2 | -18.2 | 0.63 (1) | 10.00 | |
| AG-AH | 0 / 4358 | -18.2 | -18.2 | 0.63 (1) | 10.00 | |
| AH- M | 0 / 4358 | -18.2 | -18.2 | 0.63 (1) | 10.00 | |
| M-AI | 0 / 3890 | -18.2 | -18.2 | 0.64 (1) | 10.00 | |
| AI- L | 0 / 3890 | -18.2 | -18.2 | 0.64 (1) | 10.00 | |
| L-AJ | 0 / 0 | -18.2 | -18.2 | 0.14 (1) | 10.00 | |
| AJ- K | 0 / 0 | -18.2 | -18.2 | 0.14 (1) | 10.00 | |

WEBS

| MEMB. FR-TO | MAX. FACTORED FORCE (LBS) | MAX CSI (LC) |
|---|---|---|
| R- C | -1032 / 0 | 0.18 (1) |
| C- Q | 0 / 602 | 0.15 (1) |
| Q- D | -116 / 90 | 0.03 (4) |
| D- P | 0 / 2035 | 0.50 (1) |
| P- E | -1084 / 0 | 0.28 (1) |
| P- F | -19 / 0 | 0.01 (1) |
| N- F | -1080 / 0 | 0.28 (1) |
| N- G | 0 / 2057 | 0.51 (1) |
| M- G | -128 / 88 | 0.03 (4) |
| M- H | 0 / 597 | 0.15 (1) |
| L- H | -1027 / 0 | 0.18 (1) |
| B- R | 0 / 4008 | 0.99 (1) |
| L- I | 0 / 4010 | 0.99 (1) |

SPECIFIED CONCENTRATED LOADS (LBS)

| JT | LOC. | LC1 | MAX- | MAX+ | FACE | DIR. | TYPE | HEEL | CONN. |
|---|---|---|---|---|---|---|---|---|---|
| D | 6-0-0 | -418 | -418 | — | FRONT | VERT | TOTAL | — | C1 |
| G | 21-1-0 | -418 | -418 | — | FRONT | VERT | TOTAL | — | C1 |
| M | 21-0-4 | -22 | -22 | — | FRONT | VERT | TOTAL | — | C1 |
| O | 13-6-8 | -22 | -22 | — | FRONT | VERT | TOTAL | — | C1 |
| Q | 6-0-12 | -22 | -22 | — | FRONT | VERT | TOTAL | — | C1 |
| T | 8-0-12 | -102 | -102 | — | FRONT | VERT | TOTAL | — | C1 |
| U | 10-0-12 | -102 | -102 | — | FRONT | VERT | TOTAL | — | C1 |
| V | 12-0-12 | -102 | -102 | — | FRONT | VERT | TOTAL | — | C1 |
| W | 13-6-8 | -102 | -102 | — | FRONT | VERT | TOTAL | — | C1 |
| X | 15-0-4 | -102 | -102 | — | FRONT | VERT | TOTAL | — | C1 |
| Y | 17-0-4 | -102 | -102 | — | FRONT | VERT | TOTAL | — | C1 |
| Z | 19-0-4 | -102 | -102 | — | FRONT | VERT | TOTAL | — | C1 |

**DESIGN CRITERIA**

*** SPECIAL LOADS ANALYSIS ***
GEOMETRY AND/OR BASIC LOADS CHANGED BY USER.
LOADS WERE DERIVED FROM USER INPUT
NO FURTHER MODIFICATIONS WERE MADE

SPECIFIED LOADS:

| | | | | |
|---|---|---|---|---|
| TOP CH. | LL | = | 34.8 | PSF |
| | DL | = | 6.0 | PSF |
| BOT CH. | LL | = | 0.0 | PSF |
| | DL | = | 7.3 | PSF |
| TOTAL LOAD | | = | 48.1 | PSF |

**SPACING = 24.0 IN. C/C**

LOADING IN FLAT SECTION BASED ON A SLOPE OF 2.00/12 MINIMUM

*** NON STANDARD GIRDER ***
ADDT'L USER-DEFINED LOADS APPLIED TO ALL LOAD CASES.

THIS TRUSS IS DESIGNED FOR RESIDENTIAL OR SMALL BUILDING REQUIREMENTS OF PART 9, NBCC 2015

THIS DESIGN COMPLIES WITH:
- PART 9 OF BCBC 2018 , NBC-2019AE
- PART 9 OF OBC 2012 (2019 AMENDMENT)
- CSA 086-14
- TPIC 2014

(55 % OF 48.1 P.S.F. G.S.L. PLUS 8.4 P.S.F. RAIN LOAD) EQUALS 34.8 P.S.F. SPECIFIED ROOF LIVE LOAD

ALLOWABLE DEFL.(LL)= L/360 (0.90")
CALCULATED VERT. DEFL.(LL) = L/ 999 (0.24")
ALLOWABLE DEFL.(TL)= L/360 (0.90")
CALCULATED VERT. DEFL.(TL) = L/ 790 (0.41")

CSI: TC=0.80/1.00 (F-G:1) , BC=0.90/1.00 (N-P:1) , WB=0.99/1.00 (I-L:1) , SSI=0.50/1.00 (F-G:1)

DOL LUMBER=1.00 NAIL=1.00 LS BEND=1.00 COMP=1.00 SHEAR=1.00 TENS= 1.00

COMPANION LIVE LOAD FACTOR = 1.00

AUTOSOLVE HEELS OFF

TRUSS PLATE MANUFACTURER IS NOT RESPONSIBLE FOR QUALITY CONTROL IN THE TRUSS MANUFACTURING PLANT .

NAIL VALUES

| PLATE | GRIP(DRY) (PSI) MAX | MIN | SHEAR (PLI) MAX | MIN | SECTION (PLI) MAX | MIN |
|---|---|---|---|---|---|---|
| MT20 | 650 | 371 | 1747 | 788 | 1987 | 1873 |

PLATE PLACEMENT TOL. = 0.250 inches

PLATE ROTATION TOL. = 5.0 Deg.

JSI GRIP= 0.90 (M) (INPUT = 0.90 )
JSI METAL= 0.96 (O) (INPUT = 1.00 )

CONTINUED ON PAGE 2

KOTT

| JOB NAME | TRUSS NAME | QUANTITY | PLY | JOB DESC. | DRWG NO. |
|---|---|---|---|---|---|
| NE0723-072 | G01 | 1 | 1 | TRUSS DESC. | |

Version 8.630 S Mar 22 2023 MiTek Industries, Inc. Thu Jul 13 19:55:43 2023 Page 2
ID:vGgVNALLxpgFINJM6FviHszAhox-tUKY3Vcy7Eb5ROsyWPb2Fq27ujqvceBGrUrfxiyyOO_

CORPORATION OF THE CITY OF OSHAWA
TRUE COPY
OF PERMIT PLANS
Nov 21, 2023
CHIEF BUILDING OFFICIAL

MHP 23033

SPECIFIED CONCENTRATED LOADS (LBS)

| JT | LOC. | | | | E | DIR. | TYPE | HEL | C |
|---|---|---|---|---|---|---|---|---|---|
| AA | 1-0-12 | | | | IT | VERT | TOTAL | — | C1 |
| AB | 1-0-12 | | | | IT | VERT | TOTAL | — | C1 |
| AC | 1-0-12 | | | | IT | VERT | TOTAL | — | C1 |
| AD | 11-0-12 | -22 | -22 | — | FRONT | VERT | TOTAL | — | C1 |
| AE | 13-0-12 | -22 | -22 | — | FRONT | VERT | TOTAL | — | C1 |
| AF | 15-0-4 | -22 | -22 | — | FRONT | VERT | TOTAL | — | C1 |
| AG | 17-0-4 | -22 | -22 | — | FRONT | VERT | TOTAL | — | C1 |
| AH | 19-0-4 | -22 | -22 | — | FRONT | VERT | TOTAL | — | C1 |
| AI | 23-0-4 | -22 | -22 | — | FRONT | VERT | TOTAL | — | C1 |
| AJ | 25-0-4 | -22 | -22 | — | FRONT | VERT | TOTAL | — | C1 |

**CONNECTION REQUIREMENTS**

1) **C1:** A SUITABLE HANGER/MECHANICAL CONNECTION IS REQUIRED.

LICENSED PROFESSIONAL ENGINEER
N.A. EL-MASRI
PROVINCE OF ONTARIO
Jul 13, 2023

**READ ALL NOTES ON THIS PAGE AND ON THE ENGINEERING NOTES: TRUSSES. THE NOTE PAGE IS AN INTEGRAL PART OF THIS DRAWING AS IT CONTAINS SPECIFICATIONS AND CRITERIA USED IN THE DESIGN OF THIS COMPONENT.**

KOTT

| JOB NAME | TRUSS NAME | QUANTITY | PLY | JOB DESC. | DRWG NO. |
|---|---|---|---|---|---|
| NE0723-072 | G02 | 1 | 1 | TRUSS DESC. | |

CORPORATION OF THE CITY OF OSHAWA
TRUE COPY
OF PERMIT PLANS
Nov 21 2023
PER: _____
CHIEF BUILDING OFFICIAL

MHP 23033

Version 8.630 S Mar 22 2023 MiTek Industries, Inc. Thu Jul 13 19:55:43 2023 Page 1
ID:vGgVNALLxpgFINJM6FviHszAhox-tUKY3Vcy7Eb5ROsyWPb2Fq25gjujcjQGrUrfxiyyOO_

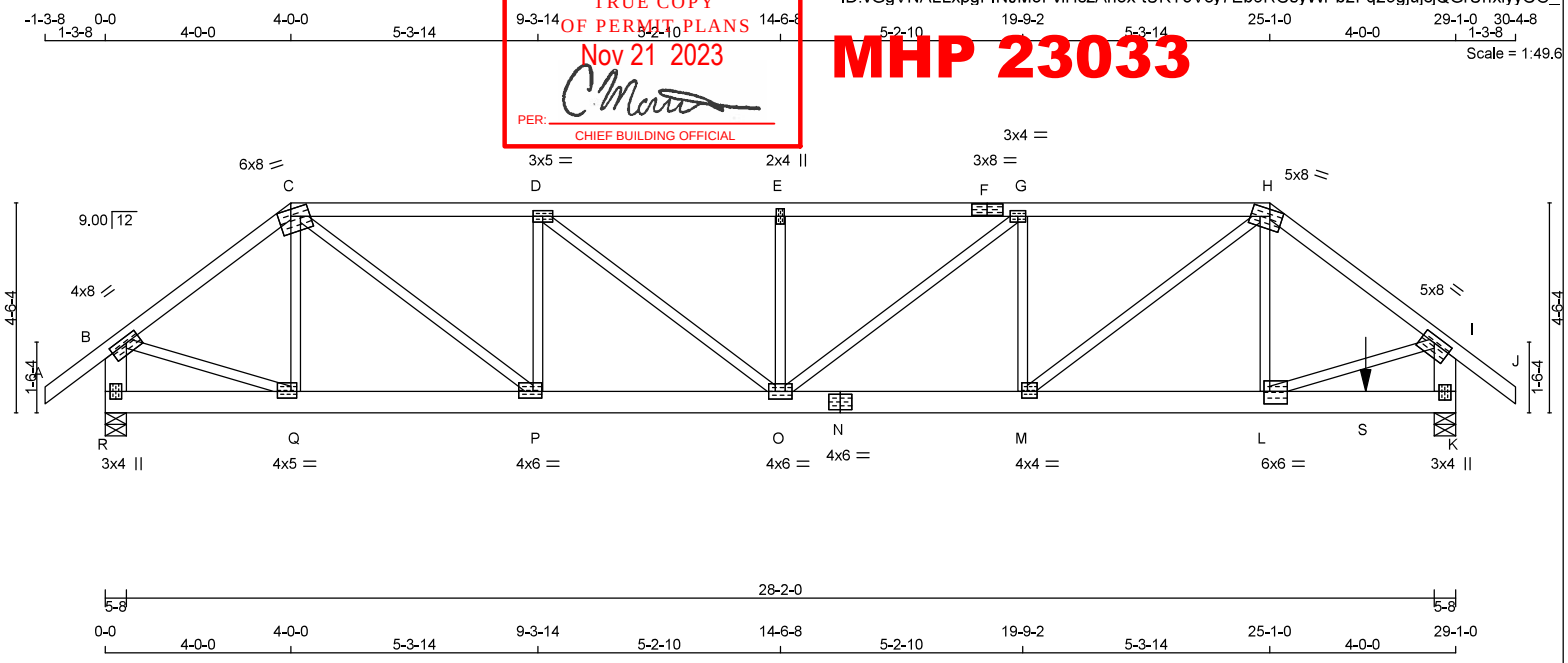


TOTAL WEIGHT = 137 lb [M]

**LUMBER**
N. L. G. A. RULES

| CHORDS | SIZE | | LUMBER | DESCR. |
|---|---|---|---|---|
| A - C | 2x4 | DRY | No.2 | SPF |
| C - F | 2x4 | DRY | No.2 | SPF |
| F - H | 2x4 | DRY | No.2 | SPF |
| H - J | 2x4 | DRY | No.2 | SPF |
| R - B | 2x6 | DRY | No.2 | SPF |
| K - I | 2x6 | DRY | No.2 | SPF |
| R - N | 2x6 | DRY | No.2 | SPF |
| N - K | 2x6 | DRY | 2100F 1.8E | SPF |
| ALL WEBS EXCEPT | 2x3 | DRY | No.2 | SPF |

DRY: SEASONED LUMBER.

**PLATES (table is in inches)**

| JT | TYPE | PLATES | W | LEN | Y | X |
|---|---|---|---|---|---|---|
| B | TMVW-t | MT20 | 4.0 | 8.0 | 1.50 | 3.50 |
| C | TTWW-m | MT20 | 6.0 | 8.0 | 1.75 | 3.25 |
| D | TMWW-t | MT20 | 3.0 | 5.0 | | |
| E | TMW+w | MT20 | 2.0 | 4.0 | | |
| F | TS-t | MT20 | 3.0 | 8.0 | | |
| G | TMWW-t | MT20 | 3.0 | 4.0 | | |
| H | TTWW-m | MT20 | 5.0 | 8.0 | 1.75 | 3.25 |
| I | TMVW-t | MT20 | 5.0 | 8.0 | 1.75 | 3.50 |
| K | BMV1+p | MT20 | 3.0 | 4.0 | 2.25 | 1.50 |
| L | BMWW-t | MT20 | 6.0 | 6.0 | 3.25 | 1.50 |
| M | BMWW-t | MT20 | 4.0 | 4.0 | 1.75 | 1.50 |
| N | BS-t | MT20 | 4.0 | 6.0 | | |
| O | BMWWW-t | MT20 | 4.0 | 6.0 | | |
| P | BMWW-t | MT20 | 4.0 | 6.0 | 1.75 | 2.25 |
| Q | BMWW-t | MT20 | 4.0 | 5.0 | 1.75 | 1.50 |
| R | BMV1+p | MT20 | 3.0 | 4.0 | | |

**DIMENSIONS, SUPPORTS AND LOADINGS SPECIFIED BY FABRICATOR TO BE VERIFIED BY BUILDING DESIGNER**

**BEARINGS**

| JT | FACTORED GROSS REACTION VERT | HORZ | MAXIMUM FACTORED GROSS REACTION DOWN | HORZ | UPLIFT | INPUT BRG IN-SX | REQRD BRG IN-SX |
|---|---|---|---|---|---|---|---|
| R | 2290 | 0 | 2290 | 0 | 0 | 5-8 | 2-8 |
| K | 3897 | 0 | 3897 | 0 | 0 | 5-8 | 4-13 |

**UNFACTORED REACTIONS**

| JT | 1ST LCASE COMBINED | MAX./MIN. COMPONENT REACTIONS SNOW | LIVE | PERM.LIVE | WIND | DEAD | SOIL |
|---|---|---|---|---|---|---|---|
| R | 1598 | 1172 / 0 | 0 / 0 | 0 / 0 | 0 / 0 | 426 / 0 | 0 / 0 |
| K | 2718 | 1999 / 0 | 0 / 0 | 0 / 0 | 0 / 0 | 719 / 0 | 0 / 0 |

BEARING MATERIAL TO BE SPF NO.2 OR BETTER AT JOINT(S) R, K
BEARING SIZE FACTOR = 1.15 AT JNT(S) K ( BASED ON SUPPORT DEPTH = 1-8 )

**BRACING**
TOP CHORD TO BE SHEATHED OR MAX. PURLIN SPACING = 2.52 FT.
MAX. UNBRACED BOTTOM CHORD LENGTH = 10.00 FT OR RIGID CEILING DIRECTLY APPLIED.

ALL PITCH BREAKS AND PERIMETER CORNER JOINTS MUST BE LATERALLY RESTRAINED.

**LOADING**
TOTAL LOAD CASES: (4)

CHORDS

| MEMB. FR-TO | MAX. FACTORED FORCE (LBS) | FACTORED VERT. LOAD (PLF) FROM | TO | LC1 | MAX CSI (LC) | MAX. UNBRAC LENGTH |
|---|---|---|---|---|---|---|
| A- B | 0 / 49 | -119.4 | -119.4 | 0.18 (1) | 10.00 | |
| B- C | -2274 / 0 | -119.4 | -119.4 | 0.49 (1) | 3.98 | |
| C- D | -3413 / 0 | -119.4 | -119.4 | 0.84 (1) | 2.87 | |
| D- E | -3987 / 0 | -119.4 | -119.4 | 0.94 (1) | 2.53 | |
| E- F | -3987 / 0 | -119.4 | -119.4 | 0.94 (1) | 2.52 | |
| F- G | -3987 / 0 | -119.4 | -119.4 | 0.94 (1) | 2.52 | |
| G- H | -3688 / 0 | -119.4 | -119.4 | 0.90 (1) | 2.70 | |
| H- I | -3214 / 0 | -119.4 | -119.4 | 0.59 (1) | 3.30 | |
| I- J | 0 / 49 | -119.4 | -119.4 | 0.18 (1) | 10.00 | |
| R- B | -2264 / 0 | 0.0 | 0.0 | 0.16 (1) | 6.77 | |
| K- I | -3033 / 0 | 0.0 | 0.0 | 0.22 (1) | 6.00 | |
| R- Q | 0 / 0 | -18.2 | -18.2 | 0.05 (4) | 10.00 | |
| Q- P | 0 / 1806 | -18.2 | -18.2 | 0.27 (1) | 10.00 | |
| P- O | 0 / 3413 | -18.2 | -18.2 | 0.51 (1) | 10.00 | |
| O- N | 0 / 3688 | -18.2 | -18.2 | 0.56 (1) | 10.00 | |
| N- M | 0 / 3688 | -18.2 | -18.2 | 0.56 (1) | 10.00 | |
| M- L | 0 / 2580 | -18.2 | -18.2 | 0.38 (1) | 10.00 | |
| L- S | 0 / 0 | -18.2 | -18.2 | 0.66 (1) | 10.00 | |
| S- K | 0 / 0 | -18.2 | -18.2 | 0.66 (1) | 10.00 | |

WEBS

| MEMB. FR-TO | MAX. FACTORED FORCE (LBS) | MAX CSI (LC) |
|---|---|---|
| Q- C | -381 / 0 | 0.11 (1) |
| C- P | 0 / 2034 | 0.50 (1) |
| P- D | -1164 / 0 | 0.34 (1) |
| D- O | 0 / 733 | 0.18 (1) |
| O- E | -571 / 0 | 0.17 (1) |
| O- G | 0 / 382 | 0.09 (1) |
| M- G | -945 / 0 | 0.28 (1) |
| M- H | 0 / 1403 | 0.35 (1) |
| L- H | 0 / 571 | 0.14 (1) |
| B- Q | 0 / 1881 | 0.47 (1) |
| L- I | 0 / 2657 | 0.66 (1) |

SPECIFIED CONCENTRATED LOADS (LBS)

| JT | LOC. | LC1 | MAX- | MAX+ | FACE | DIR. | TYPE | HEEL | CONN. |
|---|---|---|---|---|---|---|---|---|---|
| S | 27-1-12 | -1292 | -1292 | — | BACK | VERT | TOTAL | — | C1 |

**CONNECTION REQUIREMENTS**

1) **C1:** A SUITABLE HANGER/MECHANICAL CONNECTION IS REQUIRED.

**DESIGN CRITERIA**

*** SPECIAL LOADS ANALYSIS ***
GEOMETRY AND/OR BASIC LOADS CHANGED BY USER.
LOADS WERE DERIVED FROM USER INPUT
NO FURTHER MODIFICATIONS WERE MADE

SPECIFIED LOADS:

| | | | | |
|---|---|---|---|---|
| TOP CH. | LL | = | 34.8 | PSF |
| | DL | = | 6.0 | PSF |
| BOT CH. | LL | = | 0.0 | PSF |
| | DL | = | 7.3 | PSF |
| TOTAL LOAD | | = | 48.1 | PSF |

**SPACING = 24.0 IN. C/C**

LOADING IN FLAT SECTION BASED ON A SLOPE OF 2.00/12 MINIMUM

*** NON STANDARD GIRDER ***
ADDT'L USER-DEFINED LOADS APPLIED TO ALL LOAD CASES.

THIS TRUSS IS DESIGNED FOR RESIDENTIAL OR SMALL BUILDING REQUIREMENTS OF PART 9, NBCC 2015

THIS DESIGN COMPLIES WITH:
- PART 9 OF BCBC 2018 , NBC-2019AE
- PART 9 OF OBC 2012 (2019 AMENDMENT)
- CSA 086-14
- TPIC 2014

(55 % OF 48.1 P.S.F. G.S.L. PLUS 8.4 P.S.F. RAIN LOAD) EQUALS 34.8 P.S.F. SPECIFIED ROOF LIVE LOAD

ALLOWABLE DEFL.(LL)= L/360 (0.97")
CALCULATED VERT. DEFL.(LL) = L/ 999 (0.18")
ALLOWABLE DEFL.(TL)= L/360 (0.97")
CALCULATED VERT. DEFL.(TL) = L/ 999 (0.32")

CSI: TC=0.94/1.00 (E-G:1) , BC=0.66/1.00 (K-L:1) , WB=0.66/1.00 (I-L:1) , SSI=0.71/1.00 (K-L:1)

DOL LUMBER=1.00 NAIL=1.00 LS BEND=1.00 COMP=1.00 SHEAR=1.00 TENS= 1.00

COMPANION LIVE LOAD FACTOR = 1.00

AUTOSOLVE HEELS OFF

TRUSS PLATE MANUFACTURER IS NOT RESPONSIBLE FOR QUALITY CONTROL IN THE TRUSS MANUFACTURING PLANT .

NAIL VALUES

| PLATE | GRIP(DRY) (PSI) MAX | MIN | SHEAR (PLI) MAX | MIN | SECTION (PLI) MAX | MIN |
|---|---|---|---|---|---|---|
| MT20 | 650 | 371 | 1747 | 788 | 1987 | 1873 |

PLATE PLACEMENT TOL. = 0.250 inches

PLATE ROTATION TOL. = 5.0 Deg.

JSI GRIP= 0.90 (Q) (INPUT = 0.90 )
JSI METAL= 0.94 (N) (INPUT = 1.00 )

LICENSED PROFESSIONAL ENGINEER
N.A. EL-MASRI
PROVINCE OF ONTARIO
Jul 13, 2023

**READ ALL NOTES ON THIS PAGE AND ON THE ENGINEERING NOTES: TRUSSES. THE NOTE PAGE IS AN INTEGRAL PART OF THIS DRAWING AS IT CONTAINS SPECIFICATIONS AND CRITERIA USED IN THE DESIGN OF THIS COMPONENT.**

KOTT

| JOB NAME | TRUSS NAME | QUANTITY | PLY | JOB DESC. | DRWG NO. |
|---|---|---|---|---|---|
| NE0723-072 | G03 | 1 | 1 | TRUSS DESC. | |

Version 8.630 S Mar 22 2023 MiTek Industries, Inc. Thu Jul 13 19:55:44 2023 Page 1
ID:vGgVNALLxpgFINJM6FviHszAhox-LguwHrdatYjy3XR8367Ho1aJg7ARL5tP48bCS8yyONz

CORPORATION OF THE CITY OF OSHAWA
TRUE COPY
OF PERMIT PLANS
Nov 21 2023
PER: C Marr
CHIEF BUILDING OFFICIAL

MHP 23033

Scale = 1:49.6

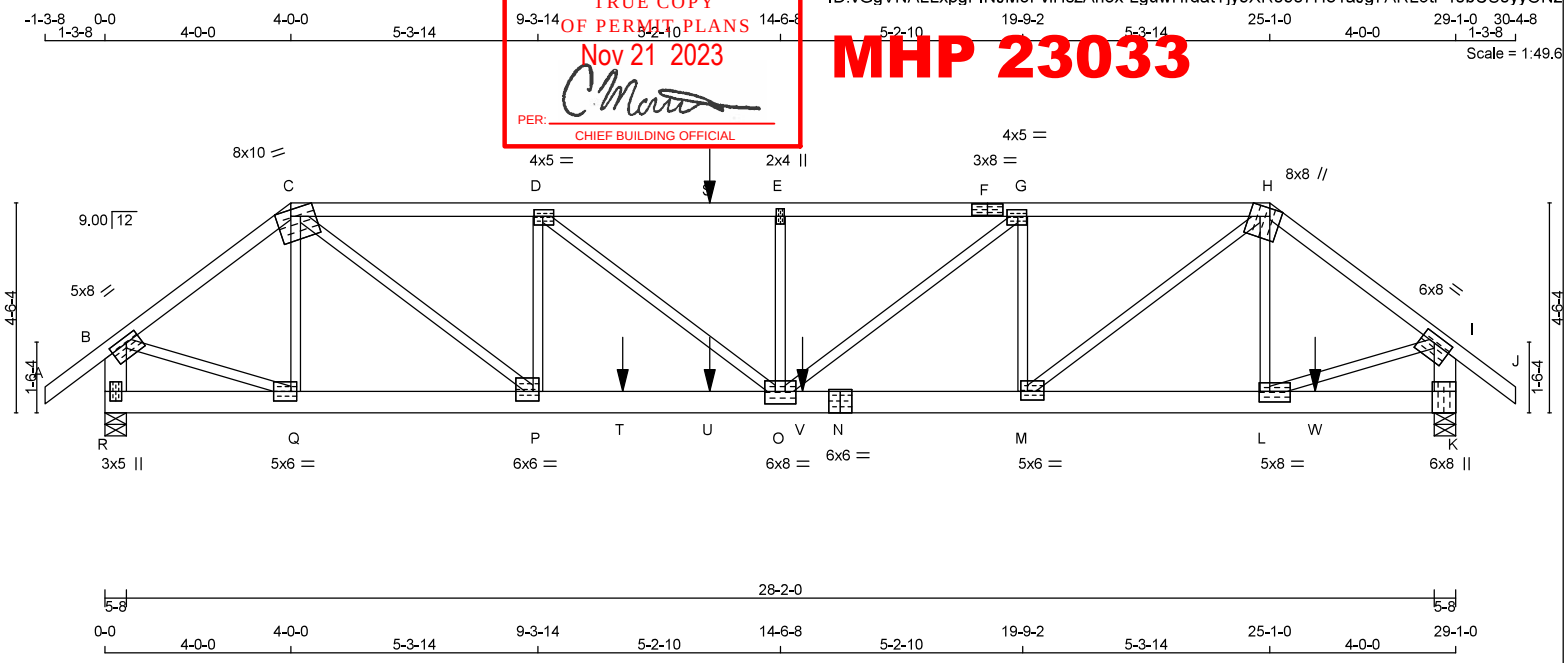





TOTAL WEIGHT = 137 lb [M]

**LUMBER**
N. L. G. A. RULES

| CHORDS | SIZE | | LUMBER | DESCR. |
|---|---|---|---|---|
| A - C | 2x4 | DRY | No.2 | SPF |
| C - F | 2x4 | DRY | 2100F 1.8E | SPF |
| F - H | 2x4 | DRY | 2100F 1.8E | SPF |
| H - J | 2x4 | DRY | No.2 | SPF |
| R - B | 2x6 | DRY | No.2 | SPF |
| K - I | 2x6 | DRY | No.2 | SPF |
| R - N | 2x6 | DRY | 2100F 1.8E | SPF |
| N - K | 2x6 | DRY | No.2 | SPF |
| ALL WEBS EXCEPT | 2x3 | DRY | No.2 | SPF |

DRY: SEASONED LUMBER.

**PLATES (table is in inches)**

| JT | TYPE | PLATES | W | LEN | Y | X |
|---|---|---|---|---|---|---|
| B | TMVW-t | MT20 | 5.0 | 8.0 | 1.50 | 3.50 |
| C | TTWW-m | MT20 | 8.0 | 10.0 | Edge | 4.00 |
| D | TMWW-t | MT20 | 4.0 | 5.0 | 1.75 | 2.25 |
| E | TMW+w | MT20 | 2.0 | 4.0 | | |
| F | TS-t | MT20 | 3.0 | 8.0 | | |
| G | TMWW-t | MT20 | 4.0 | 5.0 | 1.75 | 2.25 |
| H | TTWW+m | MT20 | 8.0 | 8.0 | Edge | 3.00 |
| I | TMVW-t | MT20 | 6.0 | 8.0 | 2.00 | 3.50 |
| K | BMV1+t | MT20 | 6.0 | 8.0 | Edge | 0.50 |
| L | BMWW-t | MT20 | 5.0 | 8.0 | 2.75 | 2.75 |
| M | BMWW-t | MT20 | 5.0 | 6.0 | 2.25 | 1.75 |
| N | BS-t | MT20 | 6.0 | 6.0 | | |
| O | BMWWW-t | MT20 | 6.0 | 8.0 | 3.25 | 4.00 |
| P | BMWW-t | MT20 | 6.0 | 6.0 | 2.50 | 1.50 |
| Q | BMWW-t | MT20 | 5.0 | 6.0 | 2.50 | 1.50 |
| R | BMV1+p | MT20 | 3.0 | 5.0 | | |

Edge - INDICATES REFERENCE CORNER OF PLATE TOUCHES EDGE OF CHORD.

**DIMENSIONS, SUPPORTS AND LOADINGS SPECIFIED BY FABRICATOR TO BE VERIFIED BY BUILDING DESIGNER**

**BEARINGS**

| JT | FACTORED GROSS REACTION VERT | HORZ | MAXIMUM FACTORED GROSS REACTION DOWN | HORZ | UPLIFT | INPUT BRG IN-SX | REQRD BRG IN-SX |
|---|---|---|---|---|---|---|---|
| R | 3233 | 0 | 3233 | 0 | 0 | 5-8 | 3-1 |
| K | 4029 | 0 | 4029 | 0 | 0 | 5-8 | 5-8 |

**UNFACTORED REACTIONS**

| JT | 1ST LCASE COMBINED | MAX./MIN. COMPONENT REACTIONS SNOW | LIVE | PERM.LIVE | WIND | DEAD | SOIL |
|---|---|---|---|---|---|---|---|
| R | 2253 | 1667 / 0 | 0 / 0 | 0 / 0 | 0 / 0 | 587 / 0 | 0 / 0 |
| K | 2806 | 2084 / 0 | 0 / 0 | 0 / 0 | 0 / 0 | 722 / 0 | 0 / 0 |

BEARING MATERIAL TO BE SPF NO.2 OR BETTER AT JOINT(S) R, K
BEARING SIZE FACTOR = 1.15 AT JNT(S) R, K ( BASED ON SUPPORT DEPTH = 1-8 )

**BRACING**
TOP CHORD TO BE SHEATHED OR MAX. PURLIN SPACING = 2.79 FT.
MAX. UNBRACED BOTTOM CHORD LENGTH = 10.00 FT OR RIGID CEILING DIRECTLY APPLIED.

ALL PITCH BREAKS AND PERIMETER CORNER JOINTS MUST BE LATERALLY RESTRAINED.

**LOADING**
TOTAL LOAD CASES: (4)

CHORDS

| MEMB. FR-TO | MAX. FACTORED FORCE (LBS) | FACTORED VERT. LOAD (PLF) FROM | TO | LC1 | MAX CSI (LC) | MAX. UNBRAC LENGTH |
|---|---|---|---|---|---|---|
| A- B | 0 / 49 | -119.4 | -119.4 | 0.18 (1) | 10.00 | |
| B- C | -3416 / 0 | -119.4 | -119.4 | 0.62 (1) | 3.18 | |
| C- D | -5583 / 0 | -119.4 | -119.4 | 0.62 (1) | 3.22 | |
| D- S | -6791 / 0 | -119.4 | -119.4 | 0.73 (1) | 2.83 | |
| S- E | -6791 / 0 | -119.4 | -119.4 | 0.73 (1) | 2.83 | |
| E- F | -6791 / 0 | -119.4 | -119.4 | 0.71 (1) | 2.86 | |
| F- G | -6791 / 0 | -119.4 | -119.4 | 0.71 (1) | 2.86 | |
| G- H | -5530 / 0 | -119.4 | -119.4 | 0.60 (1) | 3.26 | |
| H- I | -4118 / 0 | -119.4 | -119.4 | 0.72 (1) | 2.79 | |
| I- J | 0 / 49 | -119.4 | -119.4 | 0.18 (1) | 10.00 | |
| R- B | -3198 / 0 | 0.0 | 0.0 | 0.23 (1) | 5.87 | |
| K- I | -3772 / 0 | 0.0 | 0.0 | 0.27 (1) | 5.46 | |
| R- Q | 0 / 0 | -18.2 | -18.2 | 0.02 (4) | 10.00 | |
| Q- P | 0 / 2710 | -18.2 | -18.2 | 0.21 (1) | 10.00 | |
| P- T | 0 / 5583 | -18.2 | -18.2 | 0.55 (1) | 10.00 | |
| T- U | 0 / 5583 | -18.2 | -18.2 | 0.55 (1) | 10.00 | |
| U- O | 0 / 5583 | -18.2 | -18.2 | 0.55 (1) | 10.00 | |
| O- V | 0 / 5530 | -18.2 | -18.2 | 0.88 (1) | 10.00 | |
| V- N | 0 / 5530 | -18.2 | -18.2 | 0.88 (1) | 10.00 | |
| N- M | 0 / 5530 | -18.2 | -18.2 | 0.88 (1) | 10.00 | |
| M- L | 0 / 3293 | -18.2 | -18.2 | 0.70 (1) | 10.00 | |
| L- W | 0 / 0 | -18.2 | -18.2 | 0.51 (1) | 10.00 | |
| W- K | 0 / 0 | -18.2 | -18.2 | 0.51 (1) | 10.00 | |

WEBS

| MEMB. FR-TO | MAX. FACTORED FORCE (LBS) | MAX CSI (LC) |
|---|---|---|
| Q- C | -682 / 0 | 0.20 (1) |
| C- P | 0 / 3636 | 0.90 (1) |
| P- D | -1678 / 0 | 0.50 (1) |
| D- O | 0 / 1542 | 0.38 (1) |
| O- E | -616 / 0 | 0.18 (1) |
| O- G | 0 / 1610 | 0.40 (1) |
| M- G | -1697 / 0 | 0.50 (1) |
| M- H | 0 / 2831 | 0.70 (1) |
| L- H | 0 / 231 | 0.06 (1) |
| B- Q | 0 / 2825 | 0.70 (1) |
| L- I | 0 / 3405 | 0.84 (1) |

SPECIFIED CONCENTRATED LOADS (LBS)

| JT | LOC. | LC1 | MAX- | MAX+ | FACE | DIR. | TYPE | HEEL | CONN. |
|---|---|---|---|---|---|---|---|---|---|
| S | 13-0-4 | -41 | -41 | — | FRONT | VERT | TOTAL | — | C1 |
| T | 11-1-12 | -467 | -467 | — | FRONT | VERT | TOTAL | — | C1 |
| U | 13-0-4 | -11 | -11 | — | FRONT | VERT | TOTAL | — | C1 |
| V | 15-0-4 | -705 | -705 | — | FRONT | VERT | TOTAL | — | C1 |
| W | 26-0-12 | -813 | -813 | — | FRONT | VERT | TOTAL | — | C1 |

**CONNECTION REQUIREMENTS**

1) **C1:** A SUITABLE HANGER/MECHANICAL CONNECTION IS REQUIRED.

**DESIGN CRITERIA**

*** SPECIAL LOADS ANALYSIS ***
GEOMETRY AND/OR BASIC LOADS CHANGED BY USER.
LOADS WERE DERIVED FROM USER INPUT
NO FURTHER MODIFICATIONS WERE MADE

SPECIFIED LOADS:

| | | | | |
|---|---|---|---|---|
| TOP CH. | LL | = | 34.8 | PSF |
| | DL | = | 6.0 | PSF |
| BOT CH. | LL | = | 0.0 | PSF |
| | DL | = | 7.3 | PSF |
| TOTAL LOAD | | = | 48.1 | PSF |

**SPACING = 24.0 IN. C/C**

LOADING IN FLAT SECTION BASED ON A SLOPE OF 2.00/12 MINIMUM

*** NON STANDARD GIRDER ***
ADDT'L USER-DEFINED LOADS APPLIED TO ALL LOAD CASES.

THIS TRUSS IS DESIGNED FOR RESIDENTIAL OR SMALL BUILDING REQUIREMENTS OF PART 9, NBCC 2015

THIS DESIGN COMPLIES WITH:
- PART 9 OF BCBC 2018 , NBC-2019AE
- PART 9 OF OBC 2012 (2019 AMENDMENT)
- CSA 086-14
- TPIC 2014

(55 % OF 48.1 P.S.F. G.S.L. PLUS 8.4 P.S.F. RAIN LOAD) EQUALS 34.8 P.S.F. SPECIFIED ROOF LIVE LOAD

ALLOWABLE DEFL.(LL)= L/360 (0.97")
CALCULATED VERT. DEFL.(LL) = L/ 999 (0.27")
ALLOWABLE DEFL.(TL)= L/360 (0.97")
CALCULATED VERT. DEFL.(TL) = L/ 757 (0.46")

CSI: TC=0.73/1.00 (D-E:1) , BC=0.88/1.00 (M-O:1) , WB=0.90/1.00 (C-P:1) , SSI=0.69/1.00 (M-O:1)

DOL LUMBER=1.00 NAIL=1.00 LS BEND=1.00 COMP=1.00 SHEAR=1.00 TENS= 1.00

COMPANION LIVE LOAD FACTOR = 1.00

AUTOSOLVE HEELS OFF

TRUSS PLATE MANUFACTURER IS NOT RESPONSIBLE FOR QUALITY CONTROL IN THE TRUSS MANUFACTURING PLANT .

NAIL VALUES

| PLATE | GRIP(DRY) (PSI) MAX | MIN | SHEAR (PLI) MAX | MIN | SECTION (PLI) MAX | MIN |
|---|---|---|---|---|---|---|
| MT20 | 650 | 371 | 1747 | 788 | 1987 | 1873 |

PLATE PLACEMENT TOL. = 0.250 inches

PLATE ROTATION TOL. = 5.0 Deg.

JSI GRIP= 0.90 (L) (INPUT = 0.90 )
JSI METAL= 0.93 (N) (INPUT = 1.00 )

LICENSED PROFESSIONAL ENGINEER
N.A. EL-MASRI
PROVINCE OF ONTARIO
Jul 13, 2023

**READ ALL NOTES ON THIS PAGE AND ON THE ENGINEERING NOTES: TRUSSES. THE NOTE PAGE IS AN INTEGRAL PART OF THIS DRAWING AS IT CONTAINS SPECIFICATIONS AND CRITERIA USED IN THE DESIGN OF THIS COMPONENT.**

KOTT

| JOB NAME | TRUSS NAME | QUANTITY | PLY | JOB DESC. | DRWG NO. |
|---|---|---|---|---|---|
| NE0723-072 | G04 | 1 | 1 | TRUSS DESC. | |

CORPORATION OF THE CITY OF OSHAWA
TRUE COPY
OF PERMIT PLANS
Nov 21 2023
PER: C Martin
CHIEF BUILDING OFFICIAL

MHP 23033

Version 8.630 S Mar 22 2023 MiTek Industries, Inc. Thu Jul 13 19:55:45 2023 Page 1
ID:vGgVNALLxpgFINJM6FviHszAhox-ptSIUBeCesrogh0LdqeWLF7aHWYX4mAZJoKI_ayyONy

Scale = 1:25.8

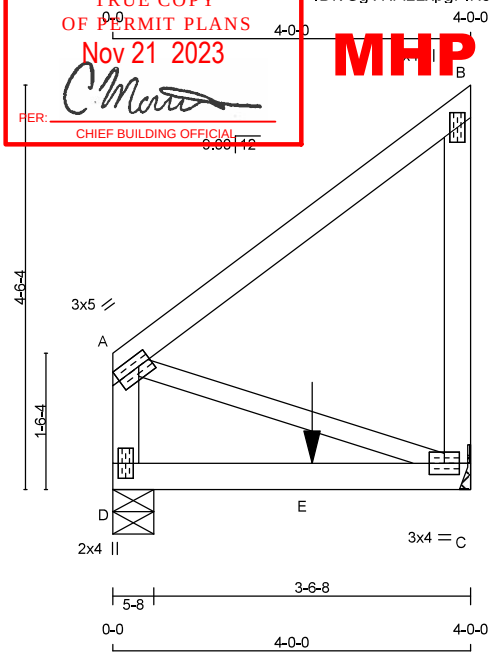


TOTAL WEIGHT = 19 lb
[M]

**LUMBER**
N. L. G. A. RULES

| CHORDS | SIZE | | LUMBER | DESCR. |
|---|---|---|---|---|
| A - B | 2x4 | DRY | No.2 | SPF |
| C - B | 2x4 | DRY | No.2 | SPF |
| D - A | 2x4 | DRY | No.2 | SPF |
| D - C | 2x4 | DRY | 2100F 1.8E | SPF |
| ALL WEBS | 2x3 | DRY | No.2 | SPF |

DRY: SEASONED LUMBER.

**PLATES (table is in inches)**

| JT | TYPE | PLATES | W | LEN | Y | X |
|---|---|---|---|---|---|---|
| A | TMVW-t | MT20 | 3.0 | 5.0 | 1.50 | Edge |
| B | TMV+p | MT20 | 2.0 | 4.0 | | |
| C | BMVW1-t | MT20 | 3.0 | 4.0 | | |
| D | BMV1+p | MT20 | 2.0 | 4.0 | | |

Edge - INDICATES REFERENCE CORNER OF PLATE TOUCHES EDGE OF CHORD.

**DIMENSIONS, SUPPORTS AND LOADINGS SPECIFIED BY FABRICATOR TO BE VERIFIED BY BUILDING DESIGNER**

**BEARINGS**

| JT | FACTORED GROSS REACTION VERT | HORZ | MAXIMUM FACTORED GROSS REACTION DOWN | HORZ | UPLIFT | INPUT BRG IN-SX | REQRD BRG IN-SX |
|---|---|---|---|---|---|---|---|
| C | 690 | 0 | 690 | 0 | 0 | MECHANICAL | |
| D | 605 | 0 | 605 | 0 | 0 | 5-8 | 1-8 |

A SUITABLE HANGER/MECHANICAL CONNECTION IS REQUIRED AT JOINT C. MINIMUM BEARING LENGTH AT JOINT C = 1-8.

**UNFACTORED REACTIONS**

| JT | 1ST LCASE COMBINED | MAX./MIN. COMPONENT REACTIONS SNOW | LIVE | PERM.LIVE | WIND | DEAD | SOIL |
|---|---|---|---|---|---|---|---|
| C | 481 | 354 / 0 | 0 / 0 | 0 / 0 | 0 / 0 | 127 / 0 | 0 / 0 |
| D | 422 | 310 / 0 | 0 / 0 | 0 / 0 | 0 / 0 | 112 / 0 | 0 / 0 |

BEARING MATERIAL TO BE SPF NO.2 OR BETTER AT JOINT(S) D
BEARING SIZE FACTOR = 1.15 AT JNT(S) D ( BASED ON SUPPORT DEPTH = 1-8 )

**BRACING**
TOP CHORD TO BE SHEATHED OR MAX. PURLIN SPACING = 10.00 FT.
MAX. UNBRACED BOTTOM CHORD LENGTH = 10.00 FT OR RIGID CEILING DIRECTLY APPLIED.

ALL PITCH BREAKS AND PERIMETER CORNER JOINTS MUST BE LATERALLY RESTRAINED.

**LOADING**
TOTAL LOAD CASES: (4)

CHORDS

| MEMB. FR-TO | MAX. FACTORED FORCE (LBS) | FACTORED VERT. LOAD (PLF) FROM | TO | LC1 CSI (LC) | MAX UNBRAC LENGTH |
|---|---|---|---|---|---|
| A- B | 0 / 0 | -119.4 | -119.4 | 0.36 (1) | 10.00 |
| C- B | -239 / 0 | 0.0 | 0.0 | 0.08 (1) | 7.81 |
| D- A | -239 / 0 | 0.0 | 0.0 | 0.03 (1) | 7.81 |
| D- E | 0 / 0 | -18.2 | -18.2 | 0.76 (1) | 10.00 |
| E- C | 0 / 0 | -18.2 | -18.2 | 0.76 (1) | 10.00 |

WEBS

| MEMB. FR-TO | MAX. FACTORED FORCE (LBS) | MAX CSI (LC) |
|---|---|---|
| A- C | 0 / 0 | 0.00 (1) |

SPECIFIED CONCENTRATED LOADS (LBS)

| JT | LOC. | LC1 | MAX- | MAX+ | FACE | DIR. | TYPE | HEEL | CONN. |
|---|---|---|---|---|---|---|---|---|---|
| E | 2-2-12 | -519 | -519 | — | BACK | VERT | TOTAL | — | C1 |

**CONNECTION REQUIREMENTS**

1) **C1:** A SUITABLE HANGER/MECHANICAL CONNECTION IS REQUIRED.

**DESIGN CRITERIA**

*** SPECIAL LOADS ANALYSIS ***
GEOMETRY AND/OR BASIC LOADS CHANGED BY USER.
LOADS WERE DERIVED FROM USER INPUT
NO FURTHER MODIFICATIONS WERE MADE

SPECIFIED LOADS:

| | | | | |
|---|---|---|---|---|
| TOP CH. | LL | = | 34.8 | PSF |
| | DL | = | 6.0 | PSF |
| BOT CH. | LL | = | 0.0 | PSF |
| | DL | = | 7.3 | PSF |
| TOTAL LOAD | | = | 48.1 | PSF |

**SPACING = 24.0 IN. C/C**

*** NON STANDARD GIRDER ***
ADDT'L USER-DEFINED LOADS APPLIED TO ALL LOAD CASES.

THIS TRUSS IS DESIGNED FOR RESIDENTIAL OR SMALL BUILDING REQUIREMENTS OF PART 9, NBCC 2015

THIS DESIGN COMPLIES WITH:
- PART 9 OF BCBC 2018 , NBC-2019AE
- PART 9 OF OBC 2012 (2019 AMENDMENT)
- CSA 086-14
- TPIC 2014

(55 % OF 48.1 P.S.F. G.S.L. PLUS 8.4 P.S.F. RAIN LOAD) EQUALS 34.8 P.S.F. SPECIFIED ROOF LIVE LOAD

ALLOWABLE DEFL.(LL)= L/360 (0.19")
CALCULATED VERT. DEFL.(LL) = L/ 530 (0.09")
ALLOWABLE DEFL.(TL)= L/360 (0.19")
CALCULATED VERT. DEFL.(TL) = L/ 360 (0.16")

CSI: TC=0.36/1.00 (A-B:1) , BC=0.76/1.00 (C-D:1) , WB=0.00/1.00 (A-C:1) , SSI=0.39/1.00 (C-D:1)

DOL LUMBER=1.00 NAIL=1.00 LS BEND=1.00 COMP=1.00 SHEAR=1.00 TENS= 1.00

COMPANION LIVE LOAD FACTOR = 1.00

TRUSS PLATE MANUFACTURER IS NOT RESPONSIBLE FOR QUALITY CONTROL IN THE TRUSS MANUFACTURING PLANT .

NAIL VALUES

| PLATE | GRIP(DRY) (PSI) MAX | MIN | SHEAR (PLI) MAX | MIN | SECTION (PLI) MAX | MIN |
|---|---|---|---|---|---|---|
| MT20 | 650 | 371 | 1747 | 788 | 1987 | 1873 |

PLATE PLACEMENT TOL. = 0.250 inches

PLATE ROTATION TOL. = 5.0 Deg.

JSI GRIP= 0.23 (C) (INPUT = 0.90 )
JSI METAL= 0.13 (B) (INPUT = 1.00 )

LICENSED PROFESSIONAL ENGINEER
N.A. EL-MASRI
PROVINCE OF ONTARIO
Jul 13, 2023

**READ ALL NOTES ON THIS PAGE AND ON THE ENGINEERING NOTES: TRUSSES. THE NOTE PAGE IS AN INTEGRAL PART OF THIS DRAWING AS IT CONTAINS SPECIFICATIONS AND CRITERIA USED IN THE DESIGN OF THIS COMPONENT.**

KOTT

| JOB NAME | TRUSS NAME | QUANTITY | PLY | JOB DESC. | DRWG NO. |
|---|---|---|---|---|---|
| NE0723-072 | G05 | 1 | 1 | TRUSS DESC. | |

CORPORATION OF THE CITY OF OSHAWA
TRUE COPY
OF PERMIT PLANS
Nov 21 2023
PER: C Martin
CHIEF BUILDING OFFICIAL

MHP 23033

Version 8.630 S Mar 22 2023 MiTek Industries, Inc. Thu Jul 13 19:55:45 2023 Page 1
ID:vGgVNALLxpgFINJM6FviHszAhox-ptSIUBeCesrogh0LdqeWLF7aHWaQ4mAZJoKI_ayyONy

Scale = 1:25.8

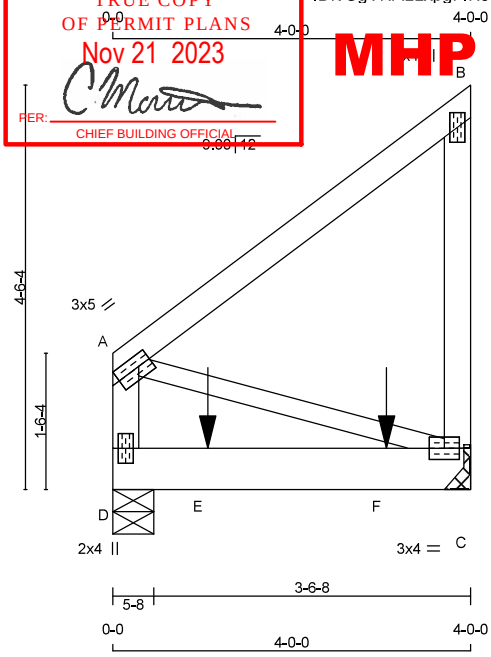


TOTAL WEIGHT = 21 lb [M]

**LUMBER**
N. L. G. A. RULES

| CHORDS | SIZE | | LUMBER | DESCR. |
|---|---|---|---|---|
| A - B | 2x4 | DRY | No.2 | SPF |
| C - B | 2x4 | DRY | No.2 | SPF |
| D - A | 2x4 | DRY | No.2 | SPF |
| D - C | 2x6 | DRY | No.2 | SPF |
| ALL WEBS | 2x3 | DRY | No.2 | SPF |

DRY: SEASONED LUMBER.

**PLATES (table is in inches)**

| JT | TYPE | PLATES | W | LEN | Y | X |
|---|---|---|---|---|---|---|
| A | TMVW-t | MT20 | 3.0 | 5.0 | 1.50 | Edge |
| B | TMV+p | MT20 | 2.0 | 4.0 | | |
| C | BMVW1-t | MT20 | 3.0 | 4.0 | | |
| D | BMV1+p | MT20 | 2.0 | 4.0 | | |

Edge - INDICATES REFERENCE CORNER OF PLATE TOUCHES EDGE OF CHORD.

**DIMENSIONS, SUPPORTS AND LOADINGS SPECIFIED BY FABRICATOR TO BE VERIFIED BY BUILDING DESIGNER**

**BEARINGS**

| JT | FACTORED GROSS REACTION VERT | HORZ | MAXIMUM GROSS REACTION DOWN | HORZ | UPLIFT | INPUT BRG IN-SX | REQRD BRG IN-SX |
|---|---|---|---|---|---|---|---|
| C | 1032 | 0 | 1032 | 0 | 0 | MECHANICAL | |
| D | 986 | 0 | 986 | 0 | 0 | 5-8 | 1-8 |

A SUITABLE HANGER/MECHANICAL CONNECTION IS REQUIRED AT JOINT C. MINIMUM BEARING LENGTH AT JOINT C = 1-8.

**UNFACTORED REACTIONS**

| JT | 1ST LCASE COMBINED | MAX./MIN. COMPONENT REACTIONS SNOW | LIVE | PERM.LIVE | WIND | DEAD | SOIL |
|---|---|---|---|---|---|---|---|
| C | 719 | 531 / 0 | 0 / 0 | 0 / 0 | 0 / 0 | 188 / 0 | 0 / 0 |
| D | 687 | 507 / 0 | 0 / 0 | 0 / 0 | 0 / 0 | 180 / 0 | 0 / 0 |

BEARING MATERIAL TO BE SPF NO.2 OR BETTER AT JOINT(S) D

**BRACING**
TOP CHORD TO BE SHEATHED OR MAX. PURLIN SPACING = 10.00 FT.
MAX. UNBRACED BOTTOM CHORD LENGTH = 10.00 FT OR RIGID CEILING DIRECTLY APPLIED.

ALL PITCH BREAKS AND PERIMETER CORNER JOINTS MUST BE LATERALLY RESTRAINED.

**LOADING**
TOTAL LOAD CASES: (4)

CHORDS

| MEMB. FR-TO | FORCE (LBS) | FACTORED VERT. LOAD (PLF) FROM | TO | LC1 | MAX CSI (LC) | MAX. UNBRAC LENGTH |
|---|---|---|---|---|---|---|
| A- B | 0 / 0 | -119.4 | -119.4 | 0.36 (1) | 10.00 | |
| C- B | -239 / 0 | 0.0 | 0.0 | 0.07 (1) | 7.81 | |
| D- A | -239 / 0 | 0.0 | 0.0 | 0.03 (1) | 7.81 | |
| D- E | 0 / 0 | -18.2 | -18.2 | 0.58 (1) | 10.00 | |
| E- F | 0 / 0 | -18.2 | -18.2 | 0.58 (1) | 10.00 | |
| F- C | 0 / 0 | -18.2 | -18.2 | 0.58 (1) | 10.00 | |

WEBS

| MEMB. FR-TO | FORCE (LBS) | MAX. FACTORED CSI (LC) |
|---|---|---|
| A- C | 0 / 0 | 0.00 (1) |

SPECIFIED CONCENTRATED LOADS (LBS)

| JT | LOC. | LC1 | MAX- | MAX+ | FACE | DIR. | TYPE | HEEL | CONN. |
|---|---|---|---|---|---|---|---|---|---|
| E | 1-0-12 | -511 | -511 | — | FRONT | VERT | TOTAL | — | C1 |
| F | 3-0-12 | -511 | -511 | — | FRONT | VERT | TOTAL | — | C1 |

**CONNECTION REQUIREMENTS**

1) **C1:** A SUITABLE HANGER/MECHANICAL CONNECTION IS REQUIRED.

**DESIGN CRITERIA**

*** SPECIAL LOADS ANALYSIS ***
GEOMETRY AND/OR BASIC LOADS CHANGED BY USER.
LOADS WERE DERIVED FROM USER INPUT
NO FURTHER MODIFICATIONS WERE MADE

SPECIFIED LOADS:

| | | | | |
|---|---|---|---|---|
| TOP CH. | LL | = | 34.8 | PSF |
| | DL | = | 6.0 | PSF |
| BOT CH. | LL | = | 0.0 | PSF |
| | DL | = | 7.3 | PSF |
| TOTAL LOAD | | = | 48.1 | PSF |

**SPACING = 24.0 IN. C/C**

*** NON STANDARD GIRDER ***
ADDT'L USER-DEFINED LOADS APPLIED TO ALL LOAD CASES.

THIS TRUSS IS DESIGNED FOR RESIDENTIAL OR SMALL BUILDING REQUIREMENTS OF PART 9, NBCC 2015

THIS DESIGN COMPLIES WITH:
- PART 9 OF BCBC 2018 , NBC-2019AE
- PART 9 OF OBC 2012 (2019 AMENDMENT)
- CSA 086-14
- TPIC 2014

(55 % OF 48.1 P.S.F. G.S.L. PLUS 8.4 P.S.F. RAIN LOAD) EQUALS 34.8 P.S.F. SPECIFIED ROOF LIVE LOAD

ALLOWABLE DEFL.(LL)= L/360 (0.19")
CALCULATED VERT. DEFL.(LL) = L/ 999 (0.04")
ALLOWABLE DEFL.(TL)= L/360 (0.19")
CALCULATED VERT. DEFL.(TL) = L/ 654 (0.07")

CSI: TC=0.36/1.00 (A-B:1) , BC=0.58/1.00 (C-D:1) , WB=0.00/1.00 (A-C:1) , SSI=0.53/1.00 (C-D:1)

DOL LUMBER=1.00 NAIL=1.00 LS BEND=1.00 COMP=1.00 SHEAR=1.00 TENS= 1.00

COMPANION LIVE LOAD FACTOR = 1.00

TRUSS PLATE MANUFACTURER IS NOT RESPONSIBLE FOR QUALITY CONTROL IN THE TRUSS MANUFACTURING PLANT .

NAIL VALUES

| PLATE | GRIP(DRY) (PSI) MAX | MIN | SHEAR (PLI) MAX | MIN | SECTION (PLI) MAX | MIN |
|---|---|---|---|---|---|---|
| MT20 | 650 | 371 | 1747 | 788 | 1987 | 1873 |

PLATE PLACEMENT TOL. = 0.250 inches

PLATE ROTATION TOL. = 5.0 Deg.

JSI GRIP= 0.23 (C) (INPUT = 0.90 )
JSI METAL= 0.13 (B) (INPUT = 1.00 )

LICENSED PROFESSIONAL ENGINEER
N.A. EL-MASRI
PROVINCE OF ONTARIO
Jul 13, 2023

**READ ALL NOTES ON THIS PAGE AND ON THE ENGINEERING NOTES: TRUSSES. THE NOTE PAGE IS AN INTEGRAL PART OF THIS DRAWING AS IT CONTAINS SPECIFICATIONS AND CRITERIA USED IN THE DESIGN OF THIS COMPONENT.**

KOTT

| JOB NAME | TRUSS NAME | QUANTITY | PLY | JOB DESC. | DRWG NO. |
|---|---|---|---|---|---|
| NE0723-072 | G06 | 1 | 1 | TRUSS DESC. | |

CORPORATION OF THE CITY OF OSHAWA
TRUE COPY
OF PERMIT PLANS
Nov 21 2023
PER: C Marr
CHIEF BUILDING OFFICIAL

MHP 23033

Version 8.630 S Mar 22 2023 MiTek Industries, Inc. Thu Jul 13 19:55:46 2023 Page 1
ID:vGgVNALLxpgFINJM6FviHszAhox-I30giXfrP9zflrbXBX9ltSgnUwvup8FiYS4JW0yyONx

Scale = 1:21.8

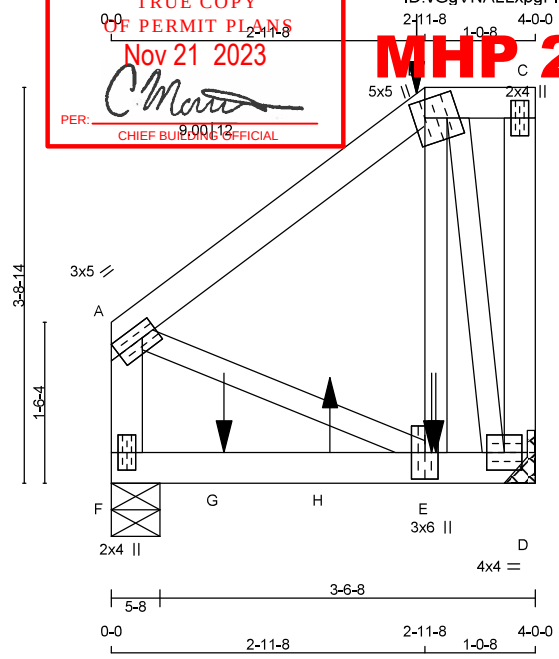


TOTAL WEIGHT = 23 lb [M]

**LUMBER**
N. L. G. A. RULES

| CHORDS | SIZE | | LUMBER | DESCR. |
|---|---|---|---|---|
| A - B | 2x4 | DRY | No.2 | SPF |
| B - C | 2x4 | DRY | No.2 | SPF |
| D - C | 2x4 | DRY | No.2 | SPF |
| F - A | 2x4 | DRY | No.2 | SPF |
| F - D | 2x4 | DRY | No.2 | SPF |
| ALL WEBS EXCEPT | 2x3 | DRY | No.2 | SPF |

DRY: SEASONED LUMBER.

**PLATES (table is in inches)**

| JT | TYPE | PLATES | W | LEN | Y | X |
|---|---|---|---|---|---|---|
| A | TMVW+t | MT20 | 3.0 | 5.0 | 1.50 | Edge |
| B | TTWW+m | MT20 | 5.0 | 5.0 | 2.00 | 1.25 |
| C | TMV+p | MT20 | 2.0 | 4.0 | | |
| D | BMVW1+t | MT20 | 4.0 | 4.0 | | |
| E | BMWW+t | MT20 | 3.0 | 6.0 | | |
| F | BMV1+p | MT20 | 2.0 | 4.0 | | |

Edge - INDICATES REFERENCE CORNER OF PLATE TOUCHES EDGE OF CHORD.

**DIMENSIONS, SUPPORTS AND LOADINGS SPECIFIED BY FABRICATOR TO BE VERIFIED BY BUILDING DESIGNER**

**BEARINGS**

| JT | FACTORED GROSS REACTION VERT | HORZ | MAXIMUM FACTORED GROSS REACTION DOWN | HORZ | UPLIFT | INPUT BRG IN-SX | REQRD BRG IN-SX |
|---|---|---|---|---|---|---|---|
| D | 1188 | 0 | 1188 | 0 | 0 | MECHANICAL | |
| F | 1039 | 0 | 1039 | 0 | 0 | 5-8 | 1-8 |

A SUITABLE HANGER/MECHANICAL CONNECTION IS REQUIRED AT JOINT D. MINIMUM BEARING LENGTH AT JOINT D = 1-8.

**UNFACTORED REACTIONS**

| JT | 1ST LCASE COMBINED | MAX./MIN. COMPONENT REACTIONS SNOW | LIVE | PERM.LIVE | WIND | DEAD | SOIL |
|---|---|---|---|---|---|---|---|
| D | 827 | 614 / 0 | 0 / 0 | 0 / 0 | 0 / 0 | 213 / 0 | 0 / 0 |
| F | 725 | 535 / 0 | 0 / 0 | 0 / 0 | 0 / 0 | 190 / 0 | 0 / 0 |

BEARING MATERIAL TO BE SPF NO.2 OR BETTER AT JOINT(S) F

**BRACING**
TOP CHORD TO BE SHEATHED OR MAX. PURLIN SPACING = 6.25 FT.
MAX. UNBRACED BOTTOM CHORD LENGTH = 10.00 FT OR RIGID CEILING DIRECTLY APPLIED.

ALL PITCH BREAKS AND PERIMETER CORNER JOINTS MUST BE LATERALLY RESTRAINED.

**LOADING**
TOTAL LOAD CASES: (4)

CHORDS

| MEMB. FR-TO | MAX. FORCE (LBS) | FACTORED VERT. LOAD (PLF) FROM | TO | LC1 | MAX CSI (LC) | MAX. UNBRAC LENGTH |
|---|---|---|---|---|---|---|
| A- B | -459 / 0 | -119.4 | -119.4 | 0.20 (1) | 6.25 | |
| B- C | 0 / 0 | -119.4 | -119.4 | 0.02 (1) | 10.00 | |
| D- C | -62 / 0 | 0.0 | 0.0 | 0.01 (1) | 7.81 | |
| F- A | -596 / 0 | 0.0 | 0.0 | 0.07 (1) | 7.81 | |
| F- G | 0 / 0 | -18.2 | -18.2 | 0.69 (1) | 10.00 | |
| G- H | 0 / 0 | -18.2 | -18.2 | 0.69 (1) | 10.00 | |
| H- E | 0 / 0 | -18.2 | -18.2 | 0.69 (1) | 10.00 | |
| E- D | 0 / 401 | -18.2 | -18.2 | 0.36 (1) | 10.00 | |

WEBS

| MEMB. FR-TO | MAX. FORCE (LBS) | MAX CSI (LC) |
|---|---|---|
| E- B | 0 / 1153 | 0.29 (1) |
| B- D | -1380 / 0 | 0.33 (1) |
| A- E | 0 / 393 | 0.10 (1) |

SPECIFIED CONCENTRATED LOADS (LBS)

| JT | LOC. | LC1 | MAX- | MAX+ | FACE | DIR. | TYPE | HEEL | CONN. |
|---|---|---|---|---|---|---|---|---|---|
| B | 2-11-8 | -142 | -142 | — | FRONT | VERT | TOTAL | — | C1 |
| E | 3-0-4 | -5 | -5 | — | FRONT | VERT | TOTAL | — | C1 |
| E | 3-0-12 | -511 | -511 | — | BACK | VERT | TOTAL | — | C1 |
| G | 1-0-12 | -511 | -511 | — | BACK | VERT | TOTAL | — | C1 |
| H | 2-0-12 | 1 | 1 | 1 | FRONT | VERT | TOTAL | — | C1 |

**CONNECTION REQUIREMENTS**

1) **C1:** A SUITABLE HANGER/MECHANICAL CONNECTION IS REQUIRED.

**DESIGN CRITERIA**

*** SPECIAL LOADS ANALYSIS ***
GEOMETRY AND/OR BASIC LOADS CHANGED BY USER.
LOADS WERE DERIVED FROM USER INPUT
NO FURTHER MODIFICATIONS WERE MADE

SPECIFIED LOADS:

| | | | | |
|---|---|---|---|---|
| TOP CH. | LL | = | 34.8 | PSF |
| | DL | = | 6.0 | PSF |
| BOT CH. | LL | = | 0.0 | PSF |
| | DL | = | 7.3 | PSF |
| TOTAL LOAD | | = | 48.1 | PSF |

**SPACING = 24.0 IN. C/C**

LOADING IN FLAT SECTION BASED ON A SLOPE OF 2.00/12 MINIMUM

*** NON STANDARD GIRDER ***
ADDT'L USER-DEFINED LOADS APPLIED TO ALL LOAD CASES.

THIS TRUSS IS DESIGNED FOR RESIDENTIAL OR SMALL BUILDING REQUIREMENTS OF PART 9, NBCC 2015

THIS DESIGN COMPLIES WITH:
- PART 9 OF BCBC 2018 , NBC-2019AE
- PART 9 OF OBC 2012 (2019 AMENDMENT)
- CSA 086-14
- TPIC 2014

(55 % OF 48.1 P.S.F. G.S.L. PLUS 8.4 P.S.F. RAIN LOAD) EQUALS 34.8 P.S.F. SPECIFIED ROOF LIVE LOAD

ALLOWABLE DEFL.(LL)= L/360 (0.19")
CALCULATED VERT. DEFL.(LL) = L/ 999 (0.04")
ALLOWABLE DEFL.(TL)= L/360 (0.19")
CALCULATED VERT. DEFL.(TL) = L/ 705 (0.07")

CSI: TC=0.20/1.00 (A-B:1) , BC=0.69/1.00 (E-F:1) , WB=0.33/1.00 (B-D:1) , SSI=0.38/1.00 (E-F:1)

DOL LUMBER=1.00 NAIL=1.00 LS BEND=1.00 COMP=1.00 SHEAR=1.00 TENS= 1.00

COMPANION LIVE LOAD FACTOR = 1.00

TRUSS PLATE MANUFACTURER IS NOT RESPONSIBLE FOR QUALITY CONTROL IN THE TRUSS MANUFACTURING PLANT .

NAIL VALUES

| PLATE | GRIP(DRY) (PSI) MAX | MIN | SHEAR (PLI) MAX | MIN | SECTION (PLI) MAX | MIN |
|---|---|---|---|---|---|---|
| MT20 | 650 | 371 | 1747 | 788 | 1987 | 1873 |

PLATE PLACEMENT TOL. = 0.250 inches

PLATE ROTATION TOL. = 5.0 Deg.

JSI GRIP= 0.88 (E) (INPUT = 0.90 )
JSI METAL= 0.36 (E) (INPUT = 1.00 )

LICENSED PROFESSIONAL ENGINEER
N.A. EL-MASRI
PROVINCE OF ONTARIO
Jul 13, 2023

**READ ALL NOTES ON THIS PAGE AND ON THE ENGINEERING NOTES: TRUSSES. THE NOTE PAGE IS AN INTEGRAL PART OF THIS DRAWING AS IT CONTAINS SPECIFICATIONS AND CRITERIA USED IN THE DESIGN OF THIS COMPONENT.**

KOTT

| JOB NAME | TRUSS NAME | QUANTITY | PLY | JOB DESC. | DRWG NO. |
|---|---|---|---|---|---|
| NE0723-072 | G07 | 1 | 1 | TRUSS DESC. | |

CORPORATION OF THE CITY OF OSHAWA
TRUE COPY
OF PERMIT PLANS
Nov 21 2023
PER:
CHIEF BUILDING OFFICIAL

MHP 23033

Version 8.630 S Mar 22 2023 MiTek Industries, Inc. Thu Jul 13 19:55:46 2023 Page 1
ID:vGgVNALLxpgFINJM6FviHszAhox-I30giXfrP9zflrbXBX9ItSgoCww9p7oiYS4JW0yyONx

Scale = 1:17.6

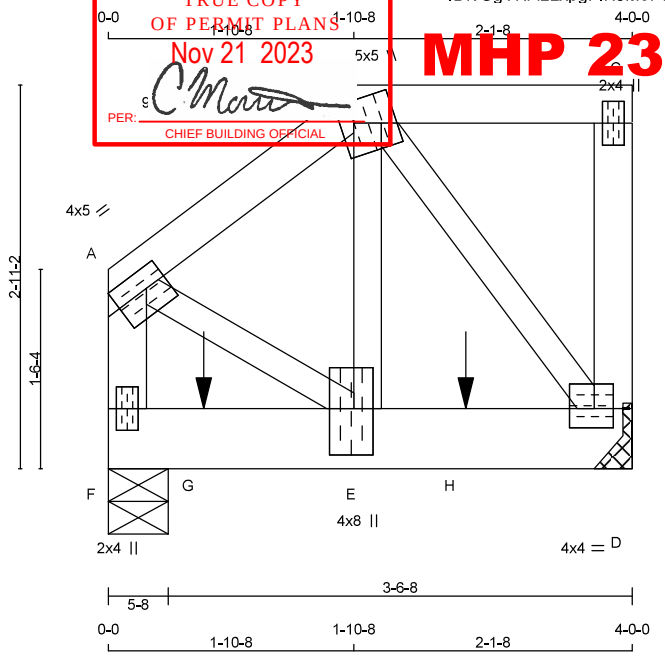


TOTAL WEIGHT = 22 lb [M]

**LUMBER**
N. L. G. A. RULES

| CHORDS | SIZE | | LUMBER | DESCR. |
|---|---|---|---|---|
| A - B | 2x4 | DRY | No.2 | SPF |
| B - C | 2x4 | DRY | No.2 | SPF |
| D - C | 2x4 | DRY | No.2 | SPF |
| F - A | 2x4 | DRY | No.2 | SPF |
| F - D | 2x6 | DRY | No.2 | SPF |
| ALL WEBS EXCEPT | 2x3 | DRY | No.2 | SPF |

DRY: SEASONED LUMBER.

**PLATES (table is in inches)**

| JT | TYPE | PLATES | W | LEN | Y | X |
|---|---|---|---|---|---|---|
| A | TMVW+t | MT20 | 4.0 | 5.0 | 1.75 | Edge |
| B | TTWW+m | MT20 | 5.0 | 5.0 | 2.00 | 1.25 |
| C | TMV+p | MT20 | 2.0 | 4.0 | | |
| D | BMVW1+t | MT20 | 4.0 | 4.0 | 1.75 | 1.75 |
| E | BMWW+t | MT20 | 4.0 | 8.0 | 4.25 | 1.75 |
| F | BMV1+p | MT20 | 2.0 | 4.0 | | |

Edge - INDICATES REFERENCE CORNER OF PLATE TOUCHES EDGE OF CHORD.

**DIMENSIONS, SUPPORTS AND LOADINGS SPECIFIED BY FABRICATOR TO BE VERIFIED BY BUILDING DESIGNER**

**BEARINGS**

| JT | FACTORED GROSS REACTION VERT | HORZ | MAXIMUM FACTORED GROSS REACTION DOWN | HORZ | UPLIFT | INPUT BRG IN-SX | REQRD BRG IN-SX |
|---|---|---|---|---|---|---|---|
| D | 1872 | 0 | 1872 | 0 | 0 | MECHANICAL | |
| F | 2374 | 0 | 2374 | 0 | 0 | 5-8 | 4-3 |

A SUITABLE HANGER/MECHANICAL CONNECTION IS REQUIRED AT JOINT D. MINIMUM BEARING LENGTH AT JOINT D = 2-0.

**UNFACTORED REACTIONS**

| JT | 1ST LCASE COMBINED | SNOW | MAX./MIN. COMPONENT REACTIONS LIVE | PERM.LIVE | WIND | DEAD | SOIL |
|---|---|---|---|---|---|---|---|
| D | 1307 | 954 / 0 | 0 / 0 | 0 / 0 | 0 / 0 | 352 / 0 | 0 / 0 |
| F | 1657 | 1210 / 0 | 0 / 0 | 0 / 0 | 0 / 0 | 447 / 0 | 0 / 0 |

BEARING MATERIAL TO BE SPF NO.2 OR BETTER AT JOINT(S) F

**BRACING**
TOP CHORD TO BE SHEATHED OR MAX. PURLIN SPACING = 5.71 FT.
MAX. UNBRACED BOTTOM CHORD LENGTH = 10.00 FT OR RIGID CEILING DIRECTLY APPLIED.

ALL PITCH BREAKS AND PERIMETER CORNER JOINTS MUST BE LATERALLY RESTRAINED.

**LOADING**
TOTAL LOAD CASES: (4)

CHORDS

| MEMB. FR-TO | MAX. FORCE (LBS) | FACTORED VERT. LOAD (PLF) FROM | TO | LC1 | MAX CSI (LC) |
|---|---|---|---|---|---|
| A- B | -1202 / 0 | -119.4 | -119.4 | 0.10 (1) | |
| B- C | 0 / 0 | -119.4 | -119.4 | 0.10 (1) | |
| D- C | -127 / 0 | 0.0 | 0.0 | 0.02 (1) | |
| F- A | -1376 / 0 | 0.0 | 0.0 | 0.15 (1) | |
| F- G | 0 / 0 | -18.2 | -18.2 | 0.53 (1) | |
| G- E | 0 / 0 | -18.2 | -18.2 | 0.53 (1) | |
| E- H | 0 / 1027 | -18.2 | -18.2 | 0.61 (1) | |
| H- D | 0 / 1027 | -18.2 | -18.2 | 0.61 (1) | |

WEBS

| MEMB. FR-TO | MAX. FORCE (LBS) | MAX CSI (LC) |
|---|---|---|
| E- B | 0 / 1715 | 0.42 (1) |
| B- D | -1599 / 0 | 0.33 (1) |
| A- E | 0 / 1097 | 0.27 (1) |

MAX. UNBRAC LENGTH: A-B 5.71, B-C 10.00, D-C 7.81, F-A 6.90, F-G 10.00, G-E 10.00, E-H 10.00, H-D 10.00

SPECIFIED CONCENTRATED LOADS (LBS)

| JT | LOC. | LC1 | MAX- | MAX+ | FACE | DIR. | TYPE | HEEL | CONN. |
|---|---|---|---|---|---|---|---|---|---|
| G | 8-12 | -1290 | -1290 | — | FRONT | VERT | TOTAL | — | C1 |
| H | 2-8-12 | -1288 | -1288 | — | FRONT | VERT | TOTAL | — | C1 |

**CONNECTION REQUIREMENTS**

1) **C1:** A SUITABLE HANGER/MECHANICAL CONNECTION IS REQUIRED.

**DESIGN CRITERIA**

*** SPECIAL LOADS ANALYSIS ***
GEOMETRY AND/OR BASIC LOADS CHANGED BY USER.
LOADS WERE DERIVED FROM USER INPUT
NO FURTHER MODIFICATIONS WERE MADE

SPECIFIED LOADS:

| | | | | |
|---|---|---|---|---|
| TOP CH. | LL | = | 34.8 | PSF |
| | DL | = | 6.0 | PSF |
| BOT CH. | LL | = | 0.0 | PSF |
| | DL | = | 7.3 | PSF |
| TOTAL LOAD | | = | 48.1 | PSF |

**SPACING = 24.0 IN. C/C**

LOADING IN FLAT SECTION BASED ON A SLOPE OF 2.00/12 MINIMUM

*** NON STANDARD GIRDER ***
ADDT'L USER-DEFINED LOADS APPLIED TO ALL LOAD CASES.

THIS TRUSS IS DESIGNED FOR RESIDENTIAL OR SMALL BUILDING REQUIREMENTS OF PART 9, NBCC 2015

THIS DESIGN COMPLIES WITH:
- PART 9 OF BCBC 2018 , NBC-2019AE
- PART 9 OF OBC 2012 (2019 AMENDMENT)
- CSA 086-14
- TPIC 2014

(55 % OF 48.1 P.S.F. G.S.L. PLUS 8.4 P.S.F. RAIN LOAD) EQUALS 34.8 P.S.F. SPECIFIED ROOF LIVE LOAD

ALLOWABLE DEFL.(LL)= L/360 (0.19")
CALCULATED VERT. DEFL.(LL) = L/ 999 (0.01")
ALLOWABLE DEFL.(TL)= L/360 (0.19")
CALCULATED VERT. DEFL.(TL) = L/ 999 (0.02")

CSI: TC=0.15/1.00 (A-F:1) , BC=0.61/1.00 (D-E:1) , WB=0.42/1.00 (B-E:1) , SSI=0.90/1.00 (D-E:1)

DOL LUMBER=1.00 NAIL=1.00 LS BEND=1.00 COMP=1.00 SHEAR=1.00 TENS= 1.00

COMPANION LIVE LOAD FACTOR = 1.00

TRUSS PLATE MANUFACTURER IS NOT RESPONSIBLE FOR QUALITY CONTROL IN THE TRUSS MANUFACTURING PLANT .

NAIL VALUES

| PLATE | GRIP(DRY) (PSI) MAX | MIN | SHEAR (PLI) MAX | MIN | SECTION (PLI) MAX | MIN |
|---|---|---|---|---|---|---|
| MT20 | 650 | 371 | 1747 | 788 | 1987 | 1873 |

PLATE PLACEMENT TOL. = 0.250 inches

PLATE ROTATION TOL. = 5.0 Deg.

JSI GRIP= 0.88 (D) (INPUT = 0.90 )
JSI METAL= 0.47 (E) (INPUT = 1.00 )

LICENSED PROFESSIONAL ENGINEER
N.A. EL-MASRI
PROVINCE OF ONTARIO
Jul 13, 2023

**READ ALL NOTES ON THIS PAGE AND ON THE ENGINEERING NOTES: TRUSSES. THE NOTE PAGE IS AN INTEGRAL PART OF THIS DRAWING AS IT CONTAINS SPECIFICATIONS AND CRITERIA USED IN THE DESIGN OF THIS COMPONENT.**

KOTT

| JOB NAME | TRUSS NAME | QUANTITY | PLY | JOB DESC. | DRWG NO. |
|---|---|---|---|---|---|
| NE0723-072 | GE01 | 1 | 1 | TRUSS DESC. | |

Version 8.630 S Mar 22 2023 MiTek Industries, Inc. Thu Jul 13 19:55:47 2023 Page 1
ID:vGgVNALLxpgFINJM6FviHszAhox-mFZ3vtfTAT5Ww?AjlEg_QgCzqKPgYeRrm6ps3TyyONw

CORPORATION OF THE CITY OF OSHAWA
TRUE COPY
OF PERMIT PLANS
Nov 21 2023
PER: _____
CHIEF BUILDING OFFICIAL

MHP 23033

Scale = 1:31.5

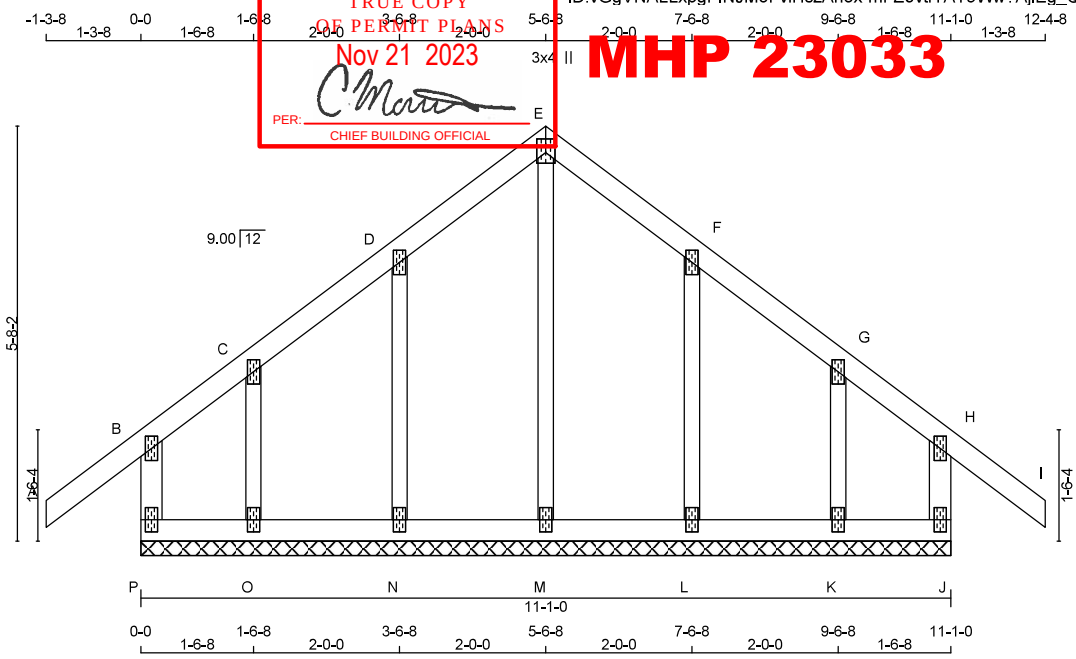


TOTAL WEIGHT = 48 lb
[M]

**LUMBER**
N. L. G. A. RULES

| CHORDS | SIZE | | LUMBER | DESCR. |
|---|---|---|---|---|
| P - B | 2x4 | DRY | No.2 | SPF |
| A - E | 2x4 | DRY | No.2 | SPF |
| E - I | 2x4 | DRY | No.2 | SPF |
| J - H | 2x4 | DRY | No.2 | SPF |
| P - J | 2x4 | DRY | No.2 | SPF |
| ALL WEBS | 2x3 | DRY | No.2 | SPF |
| ALL GABLE WEBS | 2x3 | DRY | No.2 | SPF |

DRY: SEASONED LUMBER.

GABLE STUDS SPACED AT 2-0-0 OC.

**PLATES (table is in inches)**

| JT | TYPE | PLATES | W | LEN | Y | X |
|---|---|---|---|---|---|---|
| B | TMV+p | MT20 | 2.0 | 4.0 | | |
| C, D, F, G | | | | | | |
| C | TMW+w | MT20 | 2.0 | 4.0 | | |
| E | TTW+p | MT20 | 3.0 | 4.0 | 2.25 | 1.50 |
| H | TMV+p | MT20 | 2.0 | 4.0 | | |
| J | BMV1+p | MT20 | 2.0 | 4.0 | | |
| K, L, M, N, O | | | | | | |
| K | BMW1+w | MT20 | 2.0 | 4.0 | | |
| P | BMV1+p | MT20 | 2.0 | 4.0 | | |

**DIMENSIONS, SUPPORTS AND LOADINGS SPECIFIED BY FABRICATOR TO BE VERIFIED BY BUILDING DESIGNER**

**BEARINGS**

THIS TRUSS DESIGNED FOR CONTINUOUS BEARINGS.

THIS TRUSS REQUIRES RIGID SHEATHING ON EXPOSED FACE.

BEARING MATERIAL TO BE SPF NO.2 OR BETTER AT JOINT(S)

**BRACING**
TOP CHORD TO BE SHEATHED OR MAX. PURLIN SPACING = 10.00 FT.
MAX. UNBRACED BOTTOM CHORD LENGTH = 6.25 FT OR RIGID CEILING DIRECTLY APPLIED.

ALL PITCH BREAKS AND PERIMETER CORNER JOINTS MUST BE LATERALLY RESTRAINED.

**LOADING**
TOTAL LOAD CASES: (4)

CHORDS

| MEMB. FR-TO | MAX. FACTORED FORCE (LBS) | FACTORED VERT. LOAD (PLF) FROM | TO | LC1 CSI (LC) | MAX UNBRAC LENGTH |
|---|---|---|---|---|---|
| P- B | -265 / 0 | 0.0 | 0.0 | 0.06 (1) | 7.81 |
| A- B | 0 / 49 | -119.4 | -119.4 | 0.16 (1) | 10.00 |
| B- C | 0 / 15 | -119.4 | -119.4 | 0.10 (1) | 10.00 |
| C- D | 0 / 53 | -119.4 | -119.4 | 0.07 (1) | 10.00 |
| D- E | 0 / 49 | -119.4 | -119.4 | 0.07 (1) | 10.00 |
| E- F | 0 / 49 | -119.4 | -119.4 | 0.07 (1) | 10.00 |
| F- G | 0 / 53 | -119.4 | -119.4 | 0.07 (1) | 10.00 |
| G- H | 0 / 15 | -119.4 | -119.4 | 0.10 (1) | 10.00 |
| H- I | 0 / 49 | -119.4 | -119.4 | 0.16 (1) | 10.00 |
| J- H | -265 / 0 | 0.0 | 0.0 | 0.06 (1) | 7.81 |
| P- O | -30 / 0 | -18.2 | -18.2 | 0.01 (4) | 6.25 |
| O- N | -35 / 0 | -18.2 | -18.2 | 0.01 (4) | 6.25 |
| N- M | -41 / 0 | -18.2 | -18.2 | 0.01 (4) | 6.25 |
| M- L | -41 / 0 | -18.2 | -18.2 | 0.01 (4) | 6.25 |
| L- K | -35 / 0 | -18.2 | -18.2 | 0.01 (4) | 6.25 |
| K- J | -30 / 0 | -18.2 | -18.2 | 0.01 (4) | 6.25 |

WEBS

| MEMB. FR-TO | MAX. FACTORED FORCE (LBS) | MAX CSI (LC) |
|---|---|---|
| M- E | -301 / 0 | 0.14 (1) |
| N- D | -259 / 0 | 0.07 (1) |
| O- C | -152 / 0 | 0.03 (1) |
| L- F | -259 / 0 | 0.07 (1) |
| K- G | -152 / 0 | 0.03 (1) |

**DESIGN CRITERIA**

SPECIFIED LOADS:

| | | | | |
|---|---|---|---|---|
| TOP CH. | LL = | 34.8 | PSF |
| | DL = | 6.0 | PSF |
| BOT CH. | LL = | 0.0 | PSF |
| | DL = | 7.3 | PSF |
| TOTAL LOAD | = | 48.1 | PSF |

**SPACING = 24.0 IN. C/C**

THIS TRUSS IS DESIGNED FOR RESIDENTIAL OR SMALL BUILDING REQUIREMENTS OF PART 9, NBCC 2015

THIS DESIGN COMPLIES WITH:
- PART 9 OF BCBC 2018 , NBC-2019AE
- PART 9 OF OBC 2012 (2019 AMENDMENT)
- CSA 086-14
- TPIC 2014

DESIGN ASSUMPTIONS
-OVERHANG NOT TO BE ALTERED OR CUT OFF.

(55 % OF 48.1 P.S.F. G.S.L. PLUS 8.4 P.S.F. RAIN LOAD) EQUALS 34.8 P.S.F. SPECIFIED ROOF LIVE LOAD

CSI: TC=0.16/1.00 (A-B:1) , BC=0.01/1.00 (M-N:4) , WB=0.14/1.00 (E-M:1) , SSI=0.10/1.00 (A-B:1)

DOL LUMBER=1.00 NAIL=1.00 LS BEND=1.10 COMP=1.10 SHEAR=1.10 TENS= 1.10

COMPANION LIVE LOAD FACTOR = 1.00

TRUSS PLATE MANUFACTURER IS NOT RESPONSIBLE FOR QUALITY CONTROL IN THE TRUSS MANUFACTURING PLANT .

NAIL VALUES

| PLATE | GRIP(DRY) (PSI) MAX | MIN | SHEAR (PLI) MAX | MIN | SECTION (PLI) MAX | MIN |
|---|---|---|---|---|---|---|
| MT20 | 650 | 371 | 1747 | 788 | 1987 | 1873 |

PLATE PLACEMENT TOL. = 0.250 inches

PLATE ROTATION TOL. = 5.0 Deg.

JSI GRIP= 0.21 (E) (INPUT = 0.90 )
JSI METAL= 0.14 (F) (INPUT = 1.00 )

LICENSED PROFESSIONAL ENGINEER
N.A. EL-MASRI
PROVINCE OF ONTARIO
Jul 13, 2023

**READ ALL NOTES ON THIS PAGE AND ON THE ENGINEERING NOTES: TRUSSES. THE NOTE PAGE IS AN INTEGRAL PART OF THIS DRAWING AS IT CONTAINS SPECIFICATIONS AND CRITERIA USED IN THE DESIGN OF THIS COMPONENT.**

KOTT

| JOB NAME | TRUSS NAME | QUANTITY | PLY | JOB DESC. | DRWG NO. |
|---|---|---|---|---|---|
| NE0723-072 | GE02 | 1 | 1 | TRUSS DESC. | |

CORPORATION OF THE CITY OF OSHAWA
TRUE COPY
OF PERMIT PLANS
Nov 21 2023
PER: _____
CHIEF BUILDING OFFICIAL

MHP 23033

Version 8.630 S Mar 22 2023 MiTek Industries, Inc. Thu Jul 13 19:55:48 2023 Page 1
ID:vGgVNALLxpgFINJM6FviHszAhox-ES7R7Dg5xnDNX9IvIyBDytl8ZkIvH5I??mZQbvyyONv

Scale = 1:31.2

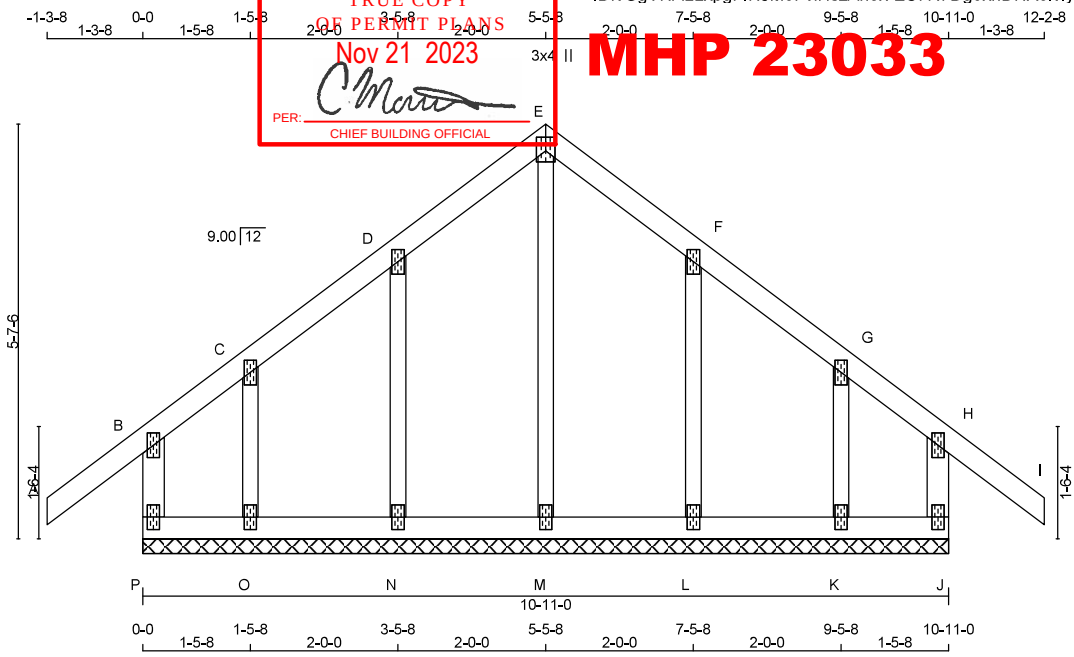


TOTAL WEIGHT = 48 lb
[M]

**LUMBER**
N. L. G. A. RULES

| CHORDS | SIZE | | LUMBER | DESCR. |
|---|---|---|---|---|
| P - B | 2x4 | DRY | No.2 | SPF |
| A - E | 2x4 | DRY | No.2 | SPF |
| E - I | 2x4 | DRY | No.2 | SPF |
| J - H | 2x4 | DRY | No.2 | SPF |
| P - J | 2x4 | DRY | No.2 | SPF |
| ALL WEBS | 2x3 | DRY | No.2 | SPF |
| ALL GABLE WEBS | 2x3 | DRY | No.2 | SPF |

DRY: SEASONED LUMBER.

GABLE STUDS SPACED AT 2-0-0 OC.

**PLATES (table is in inches)**

| JT | TYPE | PLATES | W | LEN | Y | X |
|---|---|---|---|---|---|---|
| B | TMV+p | MT20 | 2.0 | 4.0 | | |
| C, D, F, G | | | | | | |
| C | TMW+w | MT20 | 2.0 | 4.0 | | |
| E | TTW+p | MT20 | 3.0 | 4.0 | 2.25 | 1.50 |
| H | TMV+p | MT20 | 2.0 | 4.0 | | |
| J | BMV1+p | MT20 | 2.0 | 4.0 | | |
| K, L, M, N, O | | | | | | |
| K | BMW1+w | MT20 | 2.0 | 4.0 | | |
| P | BMV1+p | MT20 | 2.0 | 4.0 | | |

**DIMENSIONS, SUPPORTS AND LOADINGS SPECIFIED BY FABRICATOR TO BE VERIFIED BY BUILDING DESIGNER**

**BEARINGS**

THIS TRUSS DESIGNED FOR CONTINUOUS BEARINGS.

THIS TRUSS REQUIRES RIGID SHEATHING ON EXPOSED FACE.

BEARING MATERIAL TO BE SPF NO.2 OR BETTER AT JOINT(S)

**BRACING**
TOP CHORD TO BE SHEATHED OR MAX. PURLIN SPACING = 10.00 FT.
MAX. UNBRACED BOTTOM CHORD LENGTH = 6.25 FT OR RIGID CEILING DIRECTLY APPLIED.

ALL PITCH BREAKS AND PERIMETER CORNER JOINTS MUST BE LATERALLY RESTRAINED.

**LOADING**
TOTAL LOAD CASES: (4)

CHORDS

| MEMB. FR-TO | MAX. FACTORED FORCE (LBS) | FACTORED VERT. LOAD (PLF) FROM | TO | LC1 CSI (LC) | MAX UNBRAC LENGTH |
|---|---|---|---|---|---|
| P- B | -262 / 0 | 0.0 | 0.0 | 0.06 (1) | 7.81 |
| A- B | 0 / 49 | -119.4 | -119.4 | 0.16 (1) | 10.00 |
| B- C | 0 / 15 | -119.4 | -119.4 | 0.10 (1) | 10.00 |
| C- D | 0 / 53 | -119.4 | -119.4 | 0.07 (1) | 10.00 |
| D- E | 0 / 49 | -119.4 | -119.4 | 0.07 (1) | 10.00 |
| E- F | 0 / 49 | -119.4 | -119.4 | 0.07 (1) | 10.00 |
| F- G | 0 / 53 | -119.4 | -119.4 | 0.07 (1) | 10.00 |
| G- H | 0 / 15 | -119.4 | -119.4 | 0.10 (1) | 10.00 |
| H- I | 0 / 49 | -119.4 | -119.4 | 0.16 (1) | 10.00 |
| J- H | -262 / 0 | 0.0 | 0.0 | 0.06 (1) | 7.81 |
| P- O | -30 / 0 | -18.2 | -18.2 | 0.01 (4) | 6.25 |
| O- N | -36 / 0 | -18.2 | -18.2 | 0.01 (4) | 6.25 |
| N- M | -42 / 0 | -18.2 | -18.2 | 0.01 (4) | 6.25 |
| M- L | -42 / 0 | -18.2 | -18.2 | 0.01 (4) | 6.25 |
| L- K | -36 / 0 | -18.2 | -18.2 | 0.01 (4) | 6.25 |
| K- J | -30 / 0 | -18.2 | -18.2 | 0.01 (4) | 6.25 |

WEBS

| MEMB. FR-TO | MAX. FACTORED FORCE (LBS) | MAX CSI (LC) |
|---|---|---|
| M- E | -302 / 0 | 0.14 (1) |
| N- D | -259 / 0 | 0.07 (1) |
| O- C | -144 / 0 | 0.02 (1) |
| L- F | -259 / 0 | 0.07 (1) |
| K- G | -144 / 0 | 0.02 (1) |

**DESIGN CRITERIA**

SPECIFIED LOADS:

| | | | | |
|---|---|---|---|---|
| TOP CH. | LL | = | 34.8 | PSF |
| | DL | = | 6.0 | PSF |
| BOT CH. | LL | = | 0.0 | PSF |
| | DL | = | 7.3 | PSF |
| TOTAL LOAD | | = | 48.1 | PSF |

**SPACING = 24.0 IN. C/C**

THIS TRUSS IS DESIGNED FOR RESIDENTIAL OR SMALL BUILDING REQUIREMENTS OF PART 9, NBCC 2015

THIS DESIGN COMPLIES WITH:
- PART 9 OF BCBC 2018 , NBC-2019AE
- PART 9 OF OBC 2012 (2019 AMENDMENT)
- CSA 086-14
- TPIC 2014

DESIGN ASSUMPTIONS
-OVERHANG NOT TO BE ALTERED OR CUT OFF.

(55 % OF 48.1 P.S.F. G.S.L. PLUS 8.4 P.S.F. RAIN LOAD) EQUALS 34.8 P.S.F. SPECIFIED ROOF LIVE LOAD

CSI: TC=0.16/1.00 (H-I:1) , BC=0.01/1.00 (L-M:4) , WB=0.14/1.00 (E-M:1) , SSI=0.10/1.00 (H-I:1)

DOL LUMBER=1.00 NAIL=1.00 LS BEND=1.10 COMP=1.10 SHEAR=1.10 TENS= 1.10

COMPANION LIVE LOAD FACTOR = 1.00

TRUSS PLATE MANUFACTURER IS NOT RESPONSIBLE FOR QUALITY CONTROL IN THE TRUSS MANUFACTURING PLANT .

NAIL VALUES

| PLATE | GRIP(DRY) (PSI) MAX | MIN | SHEAR (PLI) MAX | MIN | SECTION (PLI) MAX | MIN |
|---|---|---|---|---|---|---|
| MT20 | 650 | 371 | 1747 | 788 | 1987 | 1873 |

PLATE PLACEMENT TOL. = 0.250 inches

PLATE ROTATION TOL. = 5.0 Deg.

JSI GRIP= 0.21 (E) (INPUT = 0.90 )
JSI METAL= 0.14 (F) (INPUT = 1.00 )

**READ ALL NOTES ON THIS PAGE AND ON THE ENGINEERING NOTES: TRUSSES. THE NOTE PAGE IS AN INTEGRAL PART OF THIS DRAWING AS IT CONTAINS SPECIFICATIONS AND CRITERIA USED IN THE DESIGN OF THIS COMPONENT.**

KOTT

| JOB NAME | TRUSS NAME | QUANTITY | PLY | JOB DESC. | DRWG NO. |
|---|---|---|---|---|---|
| NE0723-072 | J01 | 9 | 1 | TRUSS DESC. | |

CORPORATION OF THE CITY OF OSHAWA
TRUE COPY
OF PERMIT PLANS
Nov 21 2023
PER:
CHIEF BUILDING OFFICIAL
MHP 23033

Version 8.630 S Mar 22 2023 MiTek Industries, Inc. Thu Jul 13 19:55:49 2023 Page 1
ID:vGgVNALLxpgFINJM6FviHszAhox-iehpKZhji4LE9JK6sfiSV5HAO83G0aA8EQIz7LyyONu

Scale = 1:23.6

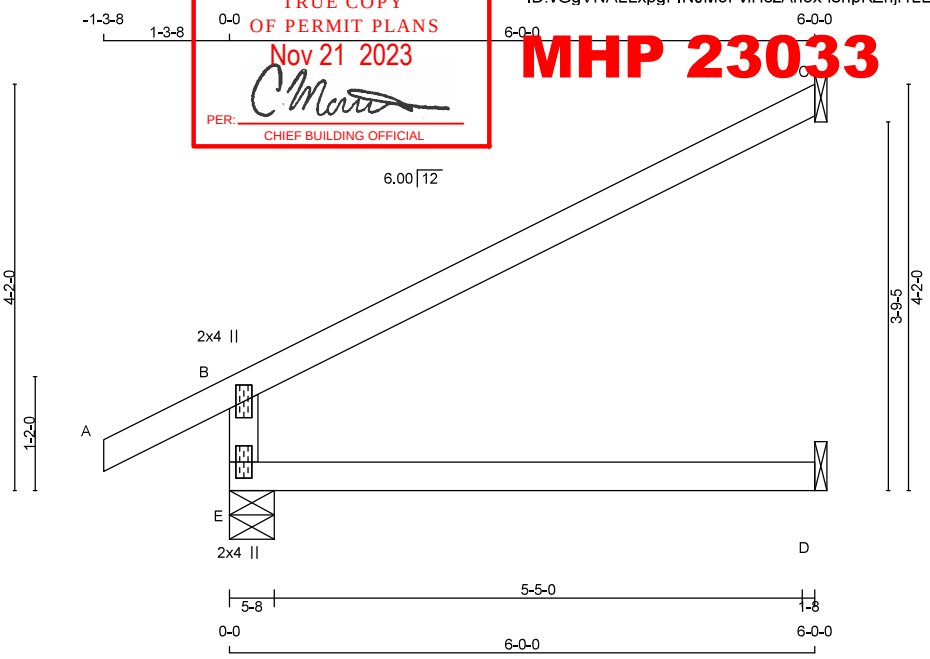


TOTAL WEIGHT = 9 X 17 = 154 lb [M]

**LUMBER**
N. L. G. A. RULES

| CHORDS | SIZE | | LUMBER | DESCR. |
|---|---|---|---|---|
| E - B | 2x4 | DRY | No.2 | SPF |
| A - C | 2x4 | DRY | No.2 | SPF |
| E - D | 2x4 | DRY | No.2 | SPF |

DRY: SEASONED LUMBER.

**PLATES (table is in inches)**

| JT | TYPE | PLATES | W | LEN | Y | X |
|---|---|---|---|---|---|---|
| B | TMV+p | MT20 | 2.0 | 4.0 | | |
| E | BMV1+p | MT20 | 2.0 | 4.0 | | |

**DIMENSIONS, SUPPORTS AND LOADINGS SPECIFIED BY FABRICATOR TO BE VERIFIED BY BUILDING DESIGNER**

**BEARINGS**

| JT | FACTORED GROSS REACTION VERT | HORZ | MAXIMUM FACTORED GROSS REACTION DOWN | HORZ | UPLIFT | INPUT BRG IN-SX | REQRD BRG IN-SX |
|---|---|---|---|---|---|---|---|
| E | 674 | 0 | 674 | 0 | 0 | 5-8 | 1-8 |
| C | 269 | 0 | 269 | 0 | 0 | 1-8 | 1-8 |
| D | 45 | 0 | 51 | 0 | 0 | 1-8 | 1-8 |

SEE MITEK STANDARD DETAIL MSD2015-H FOR CONNECTION TO JOINT(S) C , D

**UNFACTORED REACTIONS**

| JT | 1ST LCASE COMBINED | MAX./MIN. COMPONENT REACTIONS SNOW | LIVE | PERM.LIVE | WIND | DEAD | SOIL |
|---|---|---|---|---|---|---|---|
| E | 468 | 355 / 0 | 0 / 0 | 0 / 0 | 0 / 0 | 113 / 0 | 0 / 0 |
| C | 184 | 157 / 0 | 0 / 0 | 0 / 0 | 0 / 0 | 27 / 0 | 0 / 0 |
| D | 36 | 0 / 0 | 0 / 0 | 0 / 0 | 0 / 0 | 36 / 0 | 0 / 0 |

BEARING MATERIAL TO BE SPF NO.2 OR BETTER AT JOINT(S) E

**BRACING**
TOP CHORD TO BE SHEATHED OR MAX. PURLIN SPACING = 6.25 FT.
MAX. UNBRACED BOTTOM CHORD LENGTH = 10.00 FT OR RIGID CEILING DIRECTLY APPLIED.

ALL PITCH BREAKS AND PERIMETER CORNER JOINTS MUST BE LATERALLY RESTRAINED.

**LOADING**
TOTAL LOAD CASES: (4)

| CHORDS MEMB. FR-TO | MAX. FACTORED FORCE (LBS) | FACTORED VERT. LOAD (PLF) FROM | TO | LC1 CSI (LC) | MAX UNBRAC LENGTH | WEBS MEMB. FR-TO | MAX. FACTORED FORCE (LBS) | MAX CSI (LC) |
|---|---|---|---|---|---|---|---|---|
| E- B | -610 / 0 | 0.0 | 0.0 | 0.13 (4) | 7.81 | | | |
| A- B | 0 / 36 | -119.4 | -119.4 | 0.16 (1) | 10.00 | | | |
| B- C | -40 / 0 | -119.4 | -119.4 | 0.73 (1) | 6.25 | | | |
| E- D | 0 / 0 | -18.2 | -18.2 | 0.13 (4) | 10.00 | | | |

**DESIGN CRITERIA**

SPECIFIED LOADS:

| | | | | |
|---|---|---|---|---|
| TOP CH. | LL | = | 34.8 | PSF |
| | DL | = | 6.0 | PSF |
| BOT CH. | LL | = | 0.0 | PSF |
| | DL | = | 7.3 | PSF |
| TOTAL LOAD | | = | 48.1 | PSF |

**SPACING = 24.0 IN. C/C**

THIS TRUSS IS DESIGNED FOR RESIDENTIAL OR SMALL BUILDING REQUIREMENTS OF PART 9, NBCC 2015

THIS DESIGN COMPLIES WITH:
- PART 9 OF BCBC 2018 , NBC-2019AE
- PART 9 OF OBC 2012 (2019 AMENDMENT)
- CSA 086-14
- TPIC 2014

DESIGN ASSUMPTIONS
-OVERHANG NOT TO BE ALTERED OR CUT OFF.

(55 % OF 48.1 P.S.F. G.S.L. PLUS 8.4 P.S.F. RAIN LOAD) EQUALS 34.8 P.S.F. SPECIFIED ROOF LIVE LOAD

ALLOWABLE DEFL.(LL)= L/360 (0.20")
CALCULATED VERT. DEFL.(LL) = L/ 999 (0.00")
ALLOWABLE DEFL.(TL)= L/360 (0.20")
CALCULATED VERT. DEFL.(TL) = L/ 999 (0.03")

CSI: TC=0.73/1.00 (B-C:1) , BC=0.13/1.00 (D-E:4) , WB=0.00/1.00 (n/a:0) , SSI=0.31/1.00 (B-C:1)

DOL LUMBER=1.00 NAIL=1.00 LS BEND=1.10 COMP=1.10 SHEAR=1.10 TENS= 1.10

COMPANION LIVE LOAD FACTOR = 1.00

TRUSS PLATE MANUFACTURER IS NOT RESPONSIBLE FOR QUALITY CONTROL IN THE TRUSS MANUFACTURING PLANT .

NAIL VALUES

| PLATE | GRIP(DRY) (PSI) MAX | MIN | SHEAR (PLI) MAX | MIN | SECTION (PLI) MAX | MIN |
|---|---|---|---|---|---|---|
| MT20 | 650 | 371 | 1747 | 788 | 1987 | 1873 |

PLATE PLACEMENT TOL. = 0.250 inches

PLATE ROTATION TOL. = 5.0 Deg.

JSI GRIP= 0.34 (B) (INPUT = 0.90 )
JSI METAL= 0.25 (B) (INPUT = 1.00 )

LICENSED PROFESSIONAL ENGINEER
N.A. EL-MASRI
PROVINCE OF ONTARIO
Jul 13, 2023

**READ ALL NOTES ON THIS PAGE AND ON THE ENGINEERING NOTES: TRUSSES. THE NOTE PAGE IS AN INTEGRAL PART OF THIS DRAWING AS IT CONTAINS SPECIFICATIONS AND CRITERIA USED IN THE DESIGN OF THIS COMPONENT.**

KOTT

| JOB NAME | TRUSS NAME | QUANTITY | PLY | JOB DESC. | DRWG NO. |
|---|---|---|---|---|---|
| NE0723-072 | J02 | 2 | 1 | TRUSS DESC. | |

CORPORATION OF THE CITY OF OSHAWA
TRUE COPY
OF PERMIT PLANS
Nov 21 2023
PER:
CHIEF BUILDING OFFICIAL
MHP 23033

Version 8.630 S Mar 22 2023 MiTek Industries, Inc. Thu Jul 13 19:55:49 2023 Page 1
ID:vGgVNALLxpgFINJM6FviHszAhox-iehpKZhji4LE9JK6sfiSV5HH?83G0aA8EQIz7LyyONu

Scale = 1:18.6

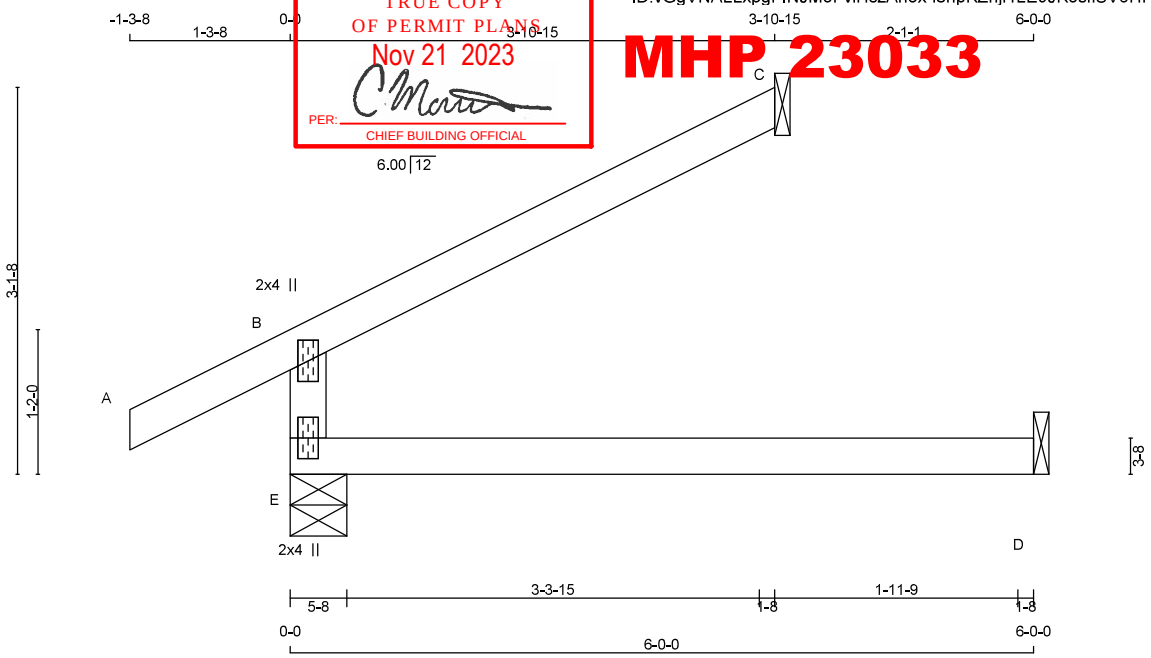


TOTAL WEIGHT = 2 X 14 = 29 lb [M]

**LUMBER**
N. L. G. A. RULES

| CHORDS | SIZE | | LUMBER | DESCR. |
|---|---|---|---|---|
| E - B | 2x4 | DRY | No.2 | SPF |
| A - C | 2x4 | DRY | No.2 | SPF |
| E - D | 2x4 | DRY | No.2 | SPF |

DRY: SEASONED LUMBER.

**PLATES (table is in inches)**

| JT | TYPE | PLATES | W | LEN | Y | X |
|---|---|---|---|---|---|---|
| B | TMV+p | MT20 | 2.0 | 4.0 | | |
| E | BMV1+p | MT20 | 2.0 | 4.0 | | |

**DIMENSIONS, SUPPORTS AND LOADINGS SPECIFIED BY FABRICATOR TO BE VERIFIED BY BUILDING DESIGNER**

**BEARINGS**

| JT | FACTORED GROSS REACTION VERT | HORZ | MAXIMUM FACTORED GROSS REACTION DOWN | HORZ | UPLIFT | INPUT BRG IN-SX | REQRD BRG IN-SX |
|---|---|---|---|---|---|---|---|
| E | 518 | 0 | 518 | 0 | 0 | 5-8 | 1-8 |
| C | 175 | 0 | 175 | 0 | 0 | 1-8 | 1-8 |
| D | 45 | 0 | 51 | 0 | 0 | 1-8 | 1-8 |

SEE MITEK STANDARD DETAIL MSD2015-H FOR CONNECTION TO JOINT(S) C , D

**UNFACTORED REACTIONS**

| JT | 1ST LCASE COMBINED | MAX./MIN. COMPONENT REACTIONS SNOW | LIVE | PERM.LIVE | WIND | DEAD | SOIL |
|---|---|---|---|---|---|---|---|
| E | 362 | 265 / 0 | 0 / 0 | 0 / 0 | 0 / 0 | 97 / 0 | 0 / 0 |
| C | 120 | 102 / 0 | 0 / 0 | 0 / 0 | 0 / 0 | 18 / 0 | 0 / 0 |
| D | 36 | 0 / 0 | 0 / 0 | 0 / 0 | 0 / 0 | 36 / 0 | 0 / 0 |

BEARING MATERIAL TO BE SPF NO.2 OR BETTER AT JOINT(S) E, C

**BRACING**
TOP CHORD TO BE SHEATHED OR MAX. PURLIN SPACING = 6.25 FT.
MAX. UNBRACED BOTTOM CHORD LENGTH = 10.00 FT OR RIGID CEILING DIRECTLY APPLIED.

ALL PITCH BREAKS AND PERIMETER CORNER JOINTS MUST BE LATERALLY RESTRAINED.

**LOADING**
TOTAL LOAD CASES: (4)

CHORDS

| MEMB. FR-TO | MAX. FACTORED FORCE (LBS) | VERT. LOAD LC1 FROM (PLF) | TO | MAX CSI (LC) |
|---|---|---|---|---|
| E- B | -454 / 0 | 0.0 | 0.0 | 0.13 (4) |
| A- B | 0 / 36 | -119.4 | -119.4 | 0.16 (1) |
| B- C | -26 / 0 | -119.4 | -119.4 | 0.31 (1) |
| E- D | 0 / 0 | -18.2 | -18.2 | 0.13 (4) |

WEBS

| MEMB. FR-TO | MAX. UNBRAC LENGTH | MAX. FACTORED FORCE (LBS) | MAX CSI (LC) |
|---|---|---|---|
| E- B | 7.81 | | |
| A- B | 10.00 | | |
| B- C | 6.25 | | |
| E- D | 10.00 | | |

**DESIGN CRITERIA**

SPECIFIED LOADS:

| | | | | |
|---|---|---|---|---|
| TOP CH. | LL = | 34.8 | PSF |
| | DL = | 6.0 | PSF |
| BOT CH. | LL = | 0.0 | PSF |
| | DL = | 7.3 | PSF |
| TOTAL LOAD | = | 48.1 | PSF |

**SPACING = 24.0 IN. C/C**

THIS TRUSS IS DESIGNED FOR RESIDENTIAL OR SMALL BUILDING REQUIREMENTS OF PART 9, NBCC 2015

THIS DESIGN COMPLIES WITH:
- PART 9 OF BCBC 2018 , NBC-2019AE
- PART 9 OF OBC 2012 (2019 AMENDMENT)
- CSA 086-14
- TPIC 2014

DESIGN ASSUMPTIONS
-OVERHANG NOT TO BE ALTERED OR CUT OFF.

(55 % OF 48.1 P.S.F. G.S.L. PLUS 8.4 P.S.F. RAIN LOAD) EQUALS 34.8 P.S.F. SPECIFIED ROOF LIVE LOAD

ALLOWABLE DEFL.(LL)= L/360 (0.20")
CALCULATED VERT. DEFL.(LL) = L/ 999 (0.00")
ALLOWABLE DEFL.(TL)= L/360 (0.20")
CALCULATED VERT. DEFL.(TL) = L/ 999 (0.03")

CSI: TC=0.31/1.00 (B-C:1) , BC=0.13/1.00 (D-E:4) , WB=0.00/1.00 (n/a:0) , SSI=0.20/1.00 (B-C:1)

DOL LUMBER=1.00 NAIL=1.00 LS BEND=1.10 COMP=1.10 SHEAR=1.10 TENS= 1.10

COMPANION LIVE LOAD FACTOR = 1.00

TRUSS PLATE MANUFACTURER IS NOT RESPONSIBLE FOR QUALITY CONTROL IN THE TRUSS MANUFACTURING PLANT .

NAIL VALUES

| PLATE | GRIP(DRY) (PSI) MAX | MIN | SHEAR (PLI) MAX | MIN | SECTION (PLI) MAX | MIN |
|---|---|---|---|---|---|---|
| MT20 | 650 | 371 | 1747 | 788 | 1987 | 1873 |

PLATE PLACEMENT TOL. = 0.250 inches

PLATE ROTATION TOL. = 5.0 Deg.

JSI GRIP= 0.25 (B) (INPUT = 0.90 )
JSI METAL= 0.19 (B) (INPUT = 1.00 )

LICENSED PROFESSIONAL ENGINEER
N.A. EL-MASRI
PROVINCE OF ONTARIO
Jul 13, 2023

**READ ALL NOTES ON THIS PAGE AND ON THE ENGINEERING NOTES: TRUSSES. THE NOTE PAGE IS AN INTEGRAL PART OF THIS DRAWING AS IT CONTAINS SPECIFICATIONS AND CRITERIA USED IN THE DESIGN OF THIS COMPONENT.**

KOTT

| JOB NAME | TRUSS NAME | QUANTITY | PLY | JOB DESC. | DRWG NO. |
|---|---|---|---|---|---|
| NE0723-072 | J03 | 2 | 1 | TRUSS DESC. | |

CORPORATION OF THE CITY OF OSHAWA
TRUE COPY
OF PERMIT PLANS
Nov 21 2023
PER: C Martin
CHIEF BUILDING OFFICIAL

MHP 23033

Version 8.630 S Mar 22 2023 MiTek Industries, Inc. Thu Jul 13 19:55:50 2023 Page 1
ID:vGgVNALLxpgFINJM6FviHszAhox-AqFBXviLTOT5nSuIQNDh2IqUAXPVI1QIS42WfoyyONt

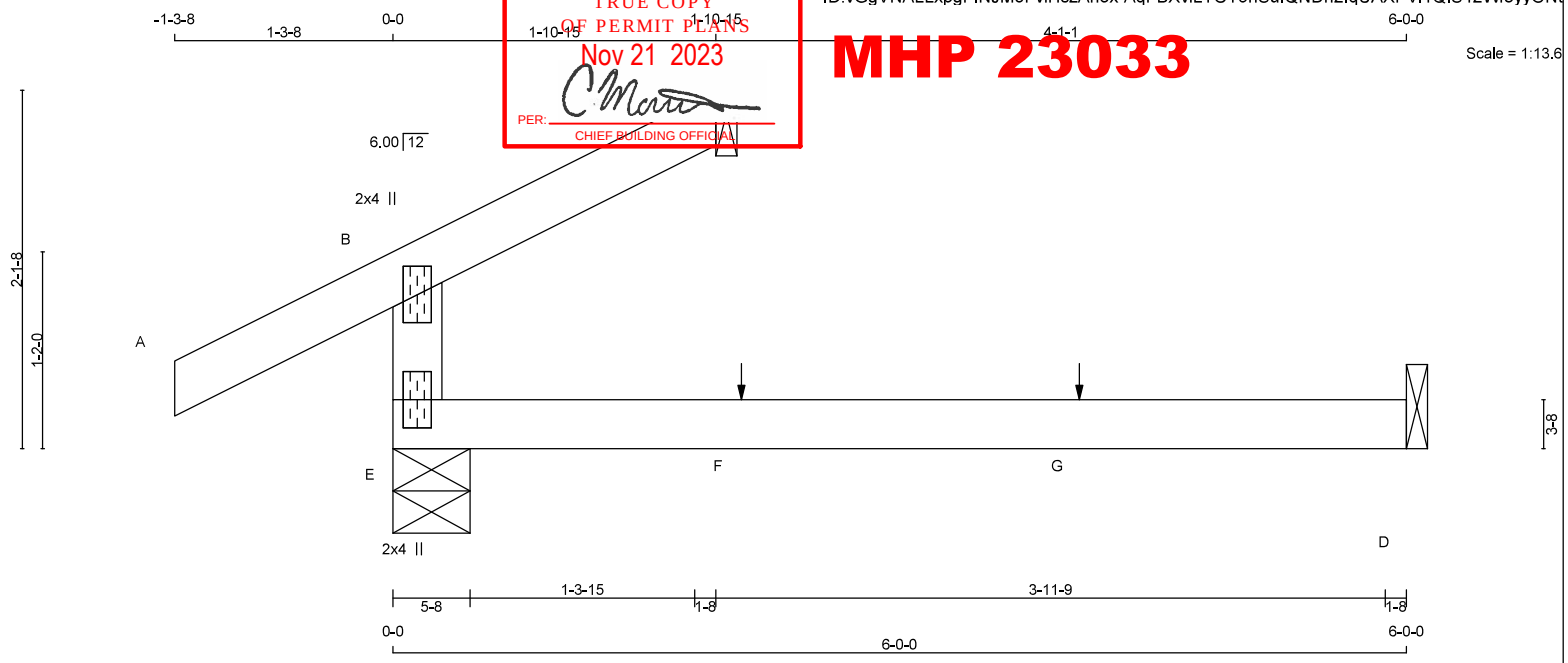


TOTAL WEIGHT = 2 X 12 = 24 lb [M]

**LUMBER**
N. L. G. A. RULES

| CHORDS | SIZE | | LUMBER | DESCR. |
|---|---|---|---|---|
| E - B | 2x4 | DRY | No.2 | SPF |
| A - C | 2x4 | DRY | No.2 | SPF |
| E - D | 2x4 | DRY | No.2 | SPF |

DRY: SEASONED LUMBER.

**PLATES (table is in inches)**

| JT | TYPE | PLATES | W | LEN | Y | X |
|---|---|---|---|---|---|---|
| B | TMV+p | MT20 | 2.0 | 4.0 | | |
| E | BMV1+p | MT20 | 2.0 | 4.0 | | |

**DIMENSIONS, SUPPORTS AND LOADINGS SPECIFIED BY FABRICATOR TO BE VERIFIED BY BUILDING DESIGNER**

**BEARINGS**

| JT | FACTORED GROSS REACTION VERT | HORZ | MAXIMUM FACTORED GROSS REACTION DOWN | HORZ | UPLIFT | INPUT BRG IN-SX | REQRD BRG IN-SX |
|---|---|---|---|---|---|---|---|
| E | 368 | 0 | 368 | 0 | 0 | 5-8 | 1-8 |
| C | 86 | 0 | 86 | 0 | 0 | 1-8 | 1-8 |
| D | 45 | 0 | 51 | 0 | 0 | 1-8 | 1-8 |

SEE MITEK STANDARD DETAIL MSD2015-H FOR CONNECTION TO JOINT(S) C , D

**UNFACTORED REACTIONS**

| JT | 1ST LCASE COMBINED | MAX./MIN. COMPONENT REACTIONS SNOW | LIVE | PERM.LIVE | WIND | DEAD | SOIL |
|---|---|---|---|---|---|---|---|
| E | 259 | 177 / 0 | 0 / 0 | 0 / 0 | 0 / 0 | 82 / 0 | 0 / 0 |
| C | 59 | 50 / 0 | 0 / 0 | 0 / 0 | 0 / 0 | 9 / 0 | 0 / 0 |
| D | 36 | 0 / 0 | 0 / 0 | 0 / 0 | 0 / 0 | 36 / 0 | 0 / 0 |

BEARING MATERIAL TO BE SPF NO.2 OR BETTER AT JOINT(S) E, C

**BRACING**
TOP CHORD TO BE SHEATHED OR MAX. PURLIN SPACING = 6.25 FT.
MAX. UNBRACED BOTTOM CHORD LENGTH = 10.00 FT OR RIGID CEILING DIRECTLY APPLIED.

ALL PITCH BREAKS AND PERIMETER CORNER JOINTS MUST BE LATERALLY RESTRAINED.

**LOADING**
TOTAL LOAD CASES: (4)

| CHORDS MEMB. FR-TO | MAX. FACTORED FORCE (LBS) | FACTORED VERT. LOAD (PLF) FROM | TO | LC1 CSI (LC) | MAX UNBRAC LENGTH | WEBS MEMB. FR-TO | MAX. FACTORED FORCE (LBS) | MAX CSI (LC) |
|---|---|---|---|---|---|---|---|---|
| E- B | -304 / 0 | 0.0 | 0.0 | 0.13 (4) | 7.81 | | | |
| A- B | 0 / 36 | -119.4 | -119.4 | 0.16 (1) | 10.00 | | | |
| B- C | -12 / 0 | -119.4 | -119.4 | 0.07 (1) | 6.25 | | | |
| E- F | 0 / 0 | -18.2 | -18.2 | 0.13 (4) | 10.00 | | | |
| F- G | 0 / 0 | -18.2 | -18.2 | 0.13 (4) | 10.00 | | | |
| G- D | 0 / 0 | -18.2 | -18.2 | 0.13 (4) | 10.00 | | | |

SPECIFIED CONCENTRATED LOADS (LBS)

| JT | LOC. | LC1 | MAX- | MAX+ | FACE | DIR. | TYPE | HEEL | CONN. |
|---|---|---|---|---|---|---|---|---|---|
| F | 2-0-12 | 1 | 1 | — | FRONT | VERT | TOTAL | — | C1 |
| G | 4-0-12 | 1 | 1 | — | FRONT | VERT | TOTAL | — | C1 |

**CONNECTION REQUIREMENTS**

1) **C1:** A SUITABLE HANGER/MECHANICAL CONNECTION IS REQUIRED.

**DESIGN CRITERIA**

*** SPECIAL LOADS ANALYSIS ***
GEOMETRY AND/OR BASIC LOADS CHANGED BY USER.
LOADS WERE DERIVED FROM USER INPUT
NO FURTHER MODIFICATIONS WERE MADE

SPECIFIED LOADS:

| | | | | |
|---|---|---|---|---|
| TOP CH. | LL | = | 34.8 | PSF |
| | DL | = | 6.0 | PSF |
| BOT CH. | LL | = | 0.0 | PSF |
| | DL | = | 7.3 | PSF |
| TOTAL LOAD | | = | 48.1 | PSF |

**SPACING = 24.0 IN. C/C**

*** NON STANDARD GIRDER ***
ADDT'L USER-DEFINED LOADS APPLIED TO ALL LOAD CASES.

THIS TRUSS IS DESIGNED FOR RESIDENTIAL OR SMALL BUILDING REQUIREMENTS OF PART 9, NBCC 2015

THIS DESIGN COMPLIES WITH:
- PART 9 OF BCBC 2018 , NBC-2019AE
- PART 9 OF OBC 2012 (2019 AMENDMENT)
- CSA 086-14
- TPIC 2014

DESIGN ASSUMPTIONS
-OVERHANG NOT TO BE ALTERED OR CUT OFF.

(55 % OF 48.1 P.S.F. G.S.L. PLUS 8.4 P.S.F. RAIN LOAD) EQUALS 34.8 P.S.F. SPECIFIED ROOF LIVE LOAD

ALLOWABLE DEFL.(LL)= L/360 (0.20")
CALCULATED VERT. DEFL.(LL) = L/ 999 (0.00")
ALLOWABLE DEFL.(TL)= L/360 (0.20")
CALCULATED VERT. DEFL.(TL) = L/ 999 (0.03")

CSI: TC=0.16/1.00 (A-B:1) , BC=0.13/1.00 (D-E:4) , WB=0.00/1.00 (n/a:0) , SSI=0.11/1.00 (A-B:1)

DOL LUMBER=1.00 NAIL=1.00 LS BEND=1.10 COMP=1.10 SHEAR=1.10 TENS= 1.10

COMPANION LIVE LOAD FACTOR = 1.00

TRUSS PLATE MANUFACTURER IS NOT RESPONSIBLE FOR QUALITY CONTROL IN THE TRUSS MANUFACTURING PLANT .

NAIL VALUES

| PLATE | GRIP(DRY) (PSI) MAX | MIN | SHEAR (PLI) MAX | MIN | SECTION (PLI) MAX | MIN |
|---|---|---|---|---|---|---|
| MT20 | 650 | 371 | 1747 | 788 | 1987 | 1873 |

PLATE PLACEMENT TOL. = 0.250 inches

PLATE ROTATION TOL. = 5.0 Deg.

JSI GRIP= 0.17 (B) (INPUT = 0.90 )
JSI METAL= 0.13 (B) (INPUT = 1.00 )

LICENSED PROFESSIONAL ENGINEER
N.A. EL-MASRI
PROVINCE OF ONTARIO
Jul 13, 2023

**READ ALL NOTES ON THIS PAGE AND ON THE ENGINEERING NOTES: TRUSSES. THE NOTE PAGE IS AN INTEGRAL PART OF THIS DRAWING AS IT CONTAINS SPECIFICATIONS AND CRITERIA USED IN THE DESIGN OF THIS COMPONENT.**

KOTT

| JOB NAME | TRUSS NAME | QUANTITY | PLY | JOB DESC. | DRWG NO. |
|---|---|---|---|---|---|
| NE0723-072 | J04 | 2 | 1 | TRUSS DESC. | |

CORPORATION OF THE CITY OF OSHAWA
TRUE COPY
OF PERMIT PLANS
Nov 21 2023
PER: C Martin
CHIEF BUILDING OFFICIAL
MHP 23033

Version 8.630 S Mar 22 2023 MiTek Industries, Inc. Thu Jul 13 19:55:50 2023 Page 1
ID:vGgVNALLxpgFINJM6FviHszAhox-AqFBXviLTOT5nSuIQNDh2IqSIXRLI1QIS42WfoyyONt

Scale = 1:18.8

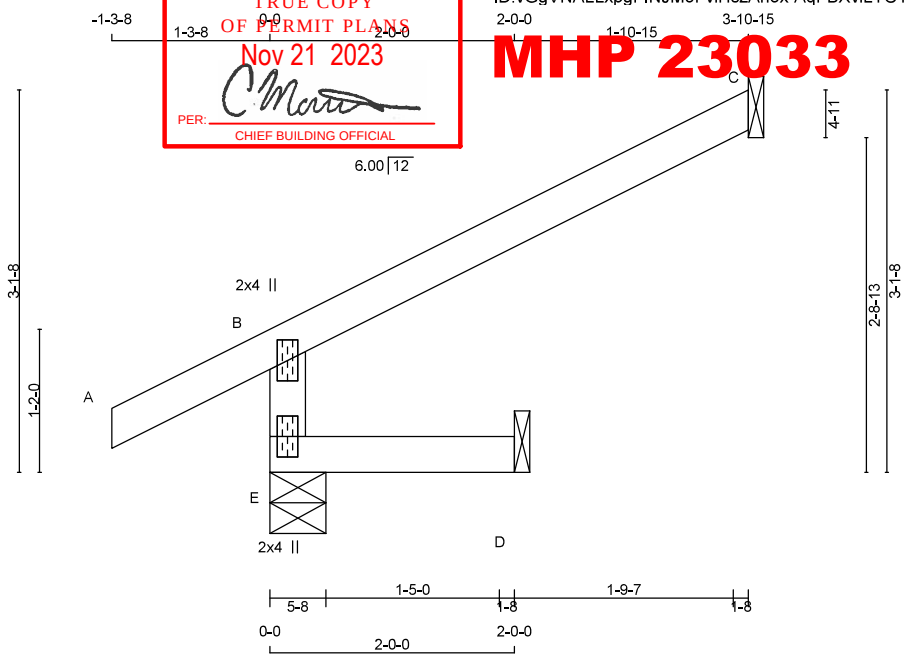


TOTAL WEIGHT = 2 X 10 = 20 lb

**LUMBER**
N. L. G. A. RULES

| CHORDS | SIZE | | LUMBER | DESCR. |
|---|---|---|---|---|
| E - B | 2x4 | DRY | No.2 | SPF |
| A - C | 2x4 | DRY | No.2 | SPF |
| E - D | 2x4 | DRY | No.2 | SPF |

DRY: SEASONED LUMBER.

**PLATES (table is in inches)**

| JT | TYPE | PLATES | W | LEN | Y | X |
|---|---|---|---|---|---|---|
| B | TMV+p | MT20 | 2.0 | 4.0 | | |
| E | BMV1+p | MT20 | 2.0 | 4.0 | | |

**DIMENSIONS, SUPPORTS AND LOADINGS SPECIFIED BY FABRICATOR TO BE VERIFIED BY BUILDING DESIGNER**

**BEARINGS**

| JT | FACTORED GROSS REACTION VERT | HORZ | MAXIMUM FACTORED GROSS REACTION DOWN | HORZ | UPLIFT | INPUT BRG IN-SX | REQRD BRG IN-SX |
|---|---|---|---|---|---|---|---|
| E | 474 | 0 | 474 | 0 | 0 | 5-8 | 1-8 |
| C | 175 | 0 | 175 | 0 | 0 | 1-8 | 1-8 |
| D | 16 | 0 | 18 | 0 | 0 | 1-8 | 1-8 |

SEE MITEK STANDARD DETAIL MSD2015-H FOR CONNECTION TO JOINT(S) C , D

**UNFACTORED REACTIONS**

| JT | 1ST LCASE COMBINED | MAX./MIN. COMPONENT REACTIONS SNOW | LIVE | PERM.LIVE | WIND | DEAD | SOIL |
|---|---|---|---|---|---|---|---|
| E | 326 | 265 / 0 | 0 / 0 | 0 / 0 | 0 / 0 | 62 / 0 | 0 / 0 |
| C | 120 | 102 / 0 | 0 / 0 | 0 / 0 | 0 / 0 | 18 / 0 | 0 / 0 |
| D | 13 | 0 / 0 | 0 / 0 | 0 / 0 | 0 / 0 | 13 / 0 | 0 / 0 |

BEARING MATERIAL TO BE SPF NO.2 OR BETTER AT JOINT(S) E

**BRACING**
TOP CHORD TO BE SHEATHED OR MAX. PURLIN SPACING = 6.25 FT.
MAX. UNBRACED BOTTOM CHORD LENGTH = 10.00 FT OR RIGID CEILING DIRECTLY APPLIED.

ALL PITCH BREAKS AND PERIMETER CORNER JOINTS MUST BE LATERALLY RESTRAINED.

**LOADING**
TOTAL LOAD CASES: (5)

CHORDS

| MEMB. FR-TO | MAX. FACTORED FORCE (LBS) | FACTORED VERT. LOAD LC1 (PLF) FROM | TO | MAX CSI (LC) |
|---|---|---|---|---|
| E- B | -454 / 0 | 0.0 | 0.0 | 0.01 (4) |
| A- B | 0 / 36 | -119.4 | -119.4 | 0.16 (1) |
| B- C | -26 / 0 | -119.4 | -119.4 | 0.31 (1) |
| E- D | 0 / 0 | -18.2 | -18.2 | 0.02 (4) |

WEBS

| MEMB. FR-TO | MAX. FACTORED FORCE (LBS) | MAX CSI (LC) | MAX UNBRAC LENGTH |
|---|---|---|---|
| E- B | 7.81 | | |
| A- B | 10.00 | | |
| B- C | 6.25 | | |
| E- D | 10.00 | | |

CANTILEVER ANALYSIS HAS BEEN CONSIDERED IN THIS DESIGN

PATTERN-LOADING CHECK APPLIED TO THIS TRUSS.

**DESIGN CRITERIA**

SPECIFIED LOADS:

| | | | | |
|---|---|---|---|---|
| TOP CH. | LL | = | 34.8 | PSF |
| | DL | = | 6.0 | PSF |
| BOT CH. | LL | = | 0.0 | PSF |
| | DL | = | 7.3 | PSF |
| TOTAL LOAD | | = | 48.1 | PSF |

**SPACING = 24.0 IN. C/C**

THIS TRUSS IS DESIGNED FOR RESIDENTIAL OR SMALL BUILDING REQUIREMENTS OF PART 9, NBCC 2015

THIS DESIGN COMPLIES WITH:
- PART 9 OF BCBC 2018 , NBC-2019AE
- PART 9 OF OBC 2012 (2019 AMENDMENT)
- CSA 086-14
- TPIC 2014

DESIGN ASSUMPTIONS
-OVERHANG NOT TO BE ALTERED OR CUT OFF.

(55 % OF 48.1 P.S.F. G.S.L. PLUS 8.4 P.S.F. RAIN LOAD) EQUALS 34.8 P.S.F. SPECIFIED ROOF LIVE LOAD

ALLOWABLE DEFL.(LL)= L/360 (0.19")
CALCULATED VERT. DEFL.(LL) = L/ 999 (0.00")
ALLOWABLE DEFL.(TL)= L/360 (0.19")
CALCULATED VERT. DEFL.(TL) = L/ 999 (0.00")

CSI: TC=0.31/1.00 (B-C:1) , BC=0.02/1.00 (D-E:4) , WB=0.00/1.00 (n/a:0) , SSI=0.20/1.00 (B-C:1)

DOL LUMBER=1.00 NAIL=1.00 LS BEND=1.10 COMP=1.10 SHEAR=1.10 TENS= 1.10

COMPANION LIVE LOAD FACTOR = 1.00

TRUSS PLATE MANUFACTURER IS NOT RESPONSIBLE FOR QUALITY CONTROL IN THE TRUSS MANUFACTURING PLANT .

NAIL VALUES

| PLATE | GRIP(DRY) (PSI) MAX | MIN | SHEAR (PLI) MAX | MIN | SECTION (PLI) MAX | MIN |
|---|---|---|---|---|---|---|
| MT20 | 650 | 371 | 1747 | 788 | 1987 | 1873 |

PLATE PLACEMENT TOL. = 0.250 inches

PLATE ROTATION TOL. = 5.0 Deg.

JSI GRIP= 0.25 (B) (INPUT = 0.90 )
JSI METAL= 0.19 (B) (INPUT = 1.00 )

LICENSED PROFESSIONAL ENGINEER
N.A. EL-MASRI
PROVINCE OF ONTARIO
Jul 13, 2023

**READ ALL NOTES ON THIS PAGE AND ON THE ENGINEERING NOTES: TRUSSES. THE NOTE PAGE IS AN INTEGRAL PART OF THIS DRAWING AS IT CONTAINS SPECIFICATIONS AND CRITERIA USED IN THE DESIGN OF THIS COMPONENT.**

KOTT

| JOB NAME | TRUSS NAME | QUANTITY | PLY | JOB DESC. | DRWG NO. |
|---|---|---|---|---|---|
| NE0723-072 | J05 | 2 | 1 | TRUSS DESC. | |

CORPORATION OF THE CITY OF OSHAWA
TRUE COPY
OF PERMIT PLANS
Nov 21 2023
PER: C Martin
CHIEF BUILDING OFFICIAL

MHP 23033

Version 8.630 S Mar 22 2023 MiTek Industries, Inc. Thu Jul 13 19:55:51 2023 Page 1
ID:vGgVNALLxpgFINJM6FviHszAhox-e1pZIEjzEhcyOcTU_4IwaWNfwxmaUUfRhkn4CEyyONs

Scale = 1:13.6

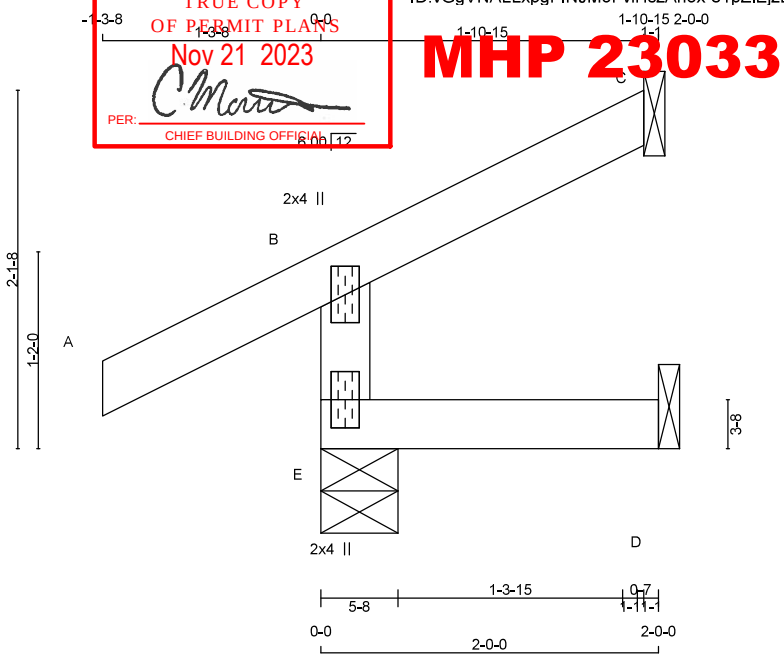


TOTAL WEIGHT = 2 X 7 = 15 lb
[M]

**LUMBER**
N. L. G. A. RULES

| CHORDS | SIZE | | LUMBER | DESCR. |
|---|---|---|---|---|
| E - B | 2x4 | DRY | No.2 | SPF |
| A - C | 2x4 | DRY | No.2 | SPF |
| E - D | 2x4 | DRY | No.2 | SPF |

DRY: SEASONED LUMBER.

**PLATES (table is in inches)**

| JT | TYPE | PLATES | W | LEN | Y | X |
|---|---|---|---|---|---|---|
| B | TMV+p | MT20 | 2.0 | 4.0 | | |
| E | BMV1+p | MT20 | 2.0 | 4.0 | | |

**DIMENSIONS, SUPPORTS AND LOADINGS SPECIFIED BY FABRICATOR TO BE VERIFIED BY BUILDING DESIGNER**

**BEARINGS**

| JT | FACTORED GROSS REACTION VERT | HORZ | MAXIMUM FACTORED GROSS REACTION DOWN | HORZ | UPLIFT | INPUT BRG IN-SX | REQRD BRG IN-SX |
|---|---|---|---|---|---|---|---|
| E | 324 | 0 | 324 | 0 | 0 | 5-8 | 1-8 |
| C | 86 | 0 | 86 | 0 | 0 | 1-8 | 1-8 |
| D | 16 | 0 | 18 | 0 | 0 | 1-8 | 1-8 |

SEE MITEK STANDARD DETAIL MSD2015-H FOR CONNECTION TO JOINT(S) C , D

**UNFACTORED REACTIONS**

| JT | 1ST LCASE COMBINED | MAX./MIN. COMPONENT REACTIONS SNOW | LIVE | PERM.LIVE | WIND | DEAD | SOIL |
|---|---|---|---|---|---|---|---|
| E | 224 | 177 / 0 | 0 / 0 | 0 / 0 | 0 / 0 | 47 / 0 | 0 / 0 |
| C | 59 | 50 / 0 | 0 / 0 | 0 / 0 | 0 / 0 | 9 / 0 | 0 / 0 |
| D | 13 | 0 / 0 | 0 / 0 | 0 / 0 | 0 / 0 | 13 / 0 | 0 / 0 |

BEARING MATERIAL TO BE SPF NO.2 OR BETTER AT JOINT(S) E, C

**BRACING**
TOP CHORD TO BE SHEATHED OR MAX. PURLIN SPACING = 6.25 FT.
MAX. UNBRACED BOTTOM CHORD LENGTH = 10.00 FT OR RIGID CEILING DIRECTLY APPLIED.

ALL PITCH BREAKS AND PERIMETER CORNER JOINTS MUST BE LATERALLY RESTRAINED.

**LOADING**
TOTAL LOAD CASES: (5)

CHORDS

| MEMB. FR-TO | MAX. FACTORED FORCE (LBS) | VERT. LOAD LC1 (PLF) FROM | TO | MAX CSI (LC) |
|---|---|---|---|---|
| E- B | -304 / 0 | 0.0 | 0.0 | 0.01 (4) |
| A- B | 0 / 36 | -119.4 | -119.4 | 0.16 (1) |
| B- C | -12 / 0 | -119.4 | -119.4 | 0.07 (1) |
| E- D | 0 / 0 | -18.2 | -18.2 | 0.02 (4) |

WEBS

| MEMB. FR-TO | MAX. UNBRAC LENGTH | MAX. FACTORED FORCE (LBS) | MAX CSI (LC) |
|---|---|---|---|
| E- B | 7.81 | | |
| A- B | 10.00 | | |
| B- C | 6.25 | | |
| E- D | 10.00 | | |

CANTILEVER ANALYSIS HAS BEEN CONSIDERED IN THIS DESIGN

PATTERN-LOADING CHECK APPLIED TO THIS TRUSS.

**DESIGN CRITERIA**

SPECIFIED LOADS:

| | | | | |
|---|---|---|---|---|
| TOP CH. | LL | = | 34.8 | PSF |
| | DL | = | 6.0 | PSF |
| BOT CH. | LL | = | 0.0 | PSF |
| | DL | = | 7.3 | PSF |
| TOTAL LOAD | | = | 48.1 | PSF |

**SPACING = 24.0 IN. C/C**

THIS TRUSS IS DESIGNED FOR RESIDENTIAL OR SMALL BUILDING REQUIREMENTS OF PART 9, NBCC 2015

THIS DESIGN COMPLIES WITH:
- PART 9 OF BCBC 2018 , NBC-2019AE
- PART 9 OF OBC 2012 (2019 AMENDMENT)
- CSA 086-14
- TPIC 2014

DESIGN ASSUMPTIONS
-OVERHANG NOT TO BE ALTERED OR CUT OFF.

(55 % OF 48.1 P.S.F. G.S.L. PLUS 8.4 P.S.F. RAIN LOAD) EQUALS 34.8 P.S.F. SPECIFIED ROOF LIVE LOAD

ALLOWABLE DEFL.(LL)= L/360 (0.19")
CALCULATED VERT. DEFL.(LL) = L/ 999 (0.00")
ALLOWABLE DEFL.(TL)= L/360 (0.19")
CALCULATED VERT. DEFL.(TL) = L/ 999 (0.00")

CSI: TC=0.16/1.00 (A-B:1) , BC=0.02/1.00 (D-E:4) , WB=0.00/1.00 (n/a:0) , SSI=0.11/1.00 (A-B:1)

DOL LUMBER=1.00 NAIL=1.00 LS BEND=1.10 COMP=1.10 SHEAR=1.10 TENS= 1.10

COMPANION LIVE LOAD FACTOR = 1.00

TRUSS PLATE MANUFACTURER IS NOT RESPONSIBLE FOR QUALITY CONTROL IN THE TRUSS MANUFACTURING PLANT .

NAIL VALUES

| PLATE | GRIP(DRY) (PSI) MAX | MIN | SHEAR (PLI) MAX | MIN | SECTION (PLI) MAX | MIN |
|---|---|---|---|---|---|---|
| MT20 | 650 | 371 | 1747 | 788 | 1987 | 1873 |

PLATE PLACEMENT TOL. = 0.250 inches

PLATE ROTATION TOL. = 5.0 Deg.

JSI GRIP= 0.17 (B) (INPUT = 0.90 )
JSI METAL= 0.13 (B) (INPUT = 1.00 )

LICENSED PROFESSIONAL ENGINEER
N.A. EL-MASRI
PROVINCE OF ONTARIO
Jul 13, 2023

**READ ALL NOTES ON THIS PAGE AND ON THE ENGINEERING NOTES: TRUSSES. THE NOTE PAGE IS AN INTEGRAL PART OF THIS DRAWING AS IT CONTAINS SPECIFICATIONS AND CRITERIA USED IN THE DESIGN OF THIS COMPONENT.**

KOTT

| JOB NAME | TRUSS NAME | QUANTITY | PLY | JOB DESC. | DRWG NO. |
|---|---|---|---|---|---|
| NE0723-072 | J06 | 1 | 1 | TRUSS DESC. | |

CORPORATION OF THE CITY OF OSHAWA
TRUE COPY
OF PERMIT PLANS
Nov 21 2023
PER:
CHIEF BUILDING OFFICIAL

MHP 23033

Version 8.630 S Mar 22 2023 MiTek Industries, Inc. Thu Jul 13 19:55:51 2023 Page 1
ID:vGgVNALLxpgFINJM6FviHszAhox-e1pZIEjzEhcyOcTU_4IwaWNfbxmGUUfRhkn4CEyyONs

Scale = 1:21.9

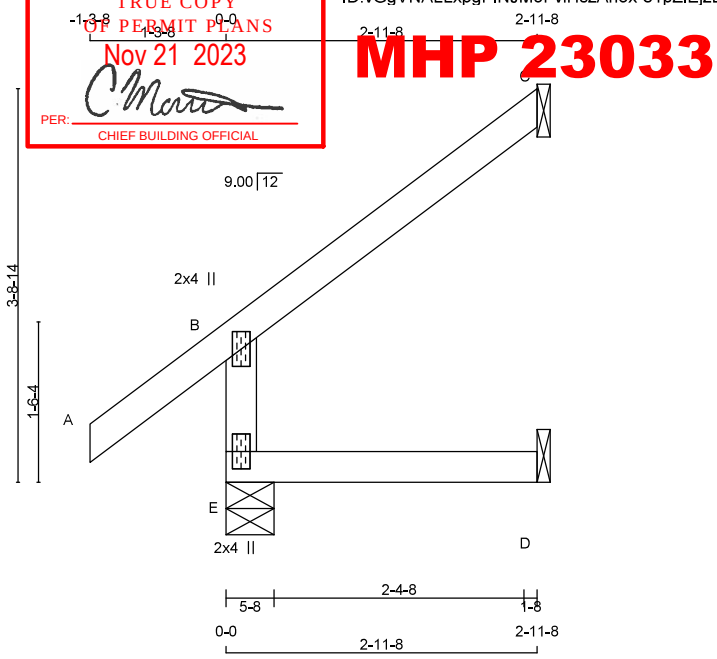


TOTAL WEIGHT = 11 lb
[M]

**LUMBER**
N. L. G. A. RULES

| CHORDS | SIZE | | LUMBER | DESCR. |
|---|---|---|---|---|
| E - B | 2x4 | DRY | No.2 | SPF |
| A - C | 2x4 | DRY | No.2 | SPF |
| E - D | 2x4 | DRY | No.2 | SPF |

DRY: SEASONED LUMBER.

**PLATES (table is in inches)**

| JT | TYPE | PLATES | W | LEN | Y | X |
|---|---|---|---|---|---|---|
| B | TMV+p | MT20 | 2.0 | 4.0 | | |
| E | BMV1+p | MT20 | 2.0 | 4.0 | | |

**DIMENSIONS, SUPPORTS AND LOADINGS SPECIFIED BY FABRICATOR TO BE VERIFIED BY BUILDING DESIGNER**

**BEARINGS**

| JT | FACTORED GROSS REACTION VERT | HORZ | MAXIMUM FACTORED GROSS REACTION DOWN | HORZ | UPLIFT | INPUT BRG IN-SX | REQRD BRG IN-SX |
|---|---|---|---|---|---|---|---|
| E | 415 | 0 | 415 | 0 | 0 | 5-8 | 1-8 |
| C | 133 | 0 | 133 | 0 | 0 | 1-8 | 1-8 |
| D | 24 | 0 | 27 | 0 | 0 | 1-8 | 1-8 |

SEE MITEK STANDARD DETAIL MSD2015-H FOR CONNECTION TO JOINT(S) C , D

**UNFACTORED REACTIONS**

| JT | 1ST LCASE COMBINED | MAX./MIN. COMPONENT REACTIONS SNOW | LIVE | PERM.LIVE | WIND | DEAD | SOIL |
|---|---|---|---|---|---|---|---|
| E | 287 | 225 / 0 | 0 / 0 | 0 / 0 | 0 / 0 | 63 / 0 | 0 / 0 |
| C | 91 | 77 / 0 | 0 / 0 | 0 / 0 | 0 / 0 | 13 / 0 | 0 / 0 |
| D | 19 | 0 / 0 | 0 / 0 | 0 / 0 | 0 / 0 | 19 / 0 | 0 / 0 |

BEARING MATERIAL TO BE SPF NO.2 OR BETTER AT JOINT(S) E, C

**BRACING**
TOP CHORD TO BE SHEATHED OR MAX. PURLIN SPACING = 6.25 FT.
MAX. UNBRACED BOTTOM CHORD LENGTH = 10.00 FT OR RIGID CEILING DIRECTLY APPLIED.

ALL PITCH BREAKS AND PERIMETER CORNER JOINTS MUST BE LATERALLY RESTRAINED.

**LOADING**
TOTAL LOAD CASES: (7)

CHORDS

| MEMB. FR-TO | MAX. FORCE (LBS) | FACTORED VERT. LOAD (PLF) FROM | TO | LC1 MAX CSI (LC) |
|---|---|---|---|---|
| E- B | -385 / 0 | 0.0 | 0.0 | 0.02 (4) |
| A- B | 0 / 49 | -119.4 | -119.4 | 0.16 (1) |
| B- C | -26 / 0 | -119.4 | -119.4 | 0.18 (6) |
| E- D | 0 / 0 | -18.2 | -18.2 | 0.04 (4) |

WEBS

| MEMB. FR-TO | MAX. UNBRAC LENGTH | MAX. FORCE (LBS) | FACTORED MAX CSI (LC) |
|---|---|---|---|
| E- B | 7.81 | | |
| A- B | 10.00 | | |
| B- C | 6.25 | | |
| E- D | 10.00 | | |

CANTILEVER ANALYSIS HAS BEEN CONSIDERED IN THIS DESIGN

PATTERN-LOADING CHECK APPLIED TO THIS TRUSS.

**DESIGN CRITERIA**

SPECIFIED LOADS:

| | | | | |
|---|---|---|---|---|
| TOP CH. | LL | = | 34.8 | PSF |
| | DL | = | 6.0 | PSF |
| BOT CH. | LL | = | 0.0 | PSF |
| | DL | = | 7.3 | PSF |
| TOTAL LOAD | | = | 48.1 | PSF |

**SPACING = 24.0 IN. C/C**

THIS TRUSS IS DESIGNED FOR RESIDENTIAL OR SMALL BUILDING REQUIREMENTS OF PART 9, NBCC 2015

THIS DESIGN COMPLIES WITH:
- PART 9 OF BCBC 2018 , NBC-2019AE
- PART 9 OF OBC 2012 (2019 AMENDMENT)
- CSA 086-14
- TPIC 2014

DESIGN ASSUMPTIONS
-OVERHANG NOT TO BE ALTERED OR CUT OFF.

(55 % OF 48.1 P.S.F. G.S.L. PLUS 8.4 P.S.F. RAIN LOAD) EQUALS 34.8 P.S.F. SPECIFIED ROOF LIVE LOAD

ALLOWABLE DEFL.(LL)= L/360 (0.19")
CALCULATED VERT. DEFL.(LL) = L/ 999 (0.00")
ALLOWABLE DEFL.(TL)= L/360 (0.19")
CALCULATED VERT. DEFL.(TL) = L/ 999 (0.00")

CSI: TC=0.18/1.00 (B-C:6) , BC=0.04/1.00 (D-E:4) , WB=0.00/1.00 (n/a:0) , SSI=0.14/1.00 (B-C:6)

DOL LUMBER=1.00 NAIL=1.00 LS BEND=1.10 COMP=1.10 SHEAR=1.10 TENS= 1.10

COMPANION LIVE LOAD FACTOR = 1.00

TRUSS PLATE MANUFACTURER IS NOT RESPONSIBLE FOR QUALITY CONTROL IN THE TRUSS MANUFACTURING PLANT .

NAIL VALUES

| PLATE | GRIP(DRY) (PSI) MAX | MIN | SHEAR (PLI) MAX | MIN | SECTION (PLI) MAX | MIN |
|---|---|---|---|---|---|---|
| MT20 | 650 | 371 | 1747 | 788 | 1987 | 1873 |

PLATE PLACEMENT TOL. = 0.250 inches

PLATE ROTATION TOL. = 5.0 Deg.

JSI GRIP= 0.25 (B) (INPUT = 0.90 )
JSI METAL= 0.20 (B) (INPUT = 1.00 )

LICENSED PROFESSIONAL ENGINEER
N.A. EL-MASRI
PROVINCE OF ONTARIO
Jul 13, 2023

**READ ALL NOTES ON THIS PAGE AND ON THE ENGINEERING NOTES: TRUSSES. THE NOTE PAGE IS AN INTEGRAL PART OF THIS DRAWING AS IT CONTAINS SPECIFICATIONS AND CRITERIA USED IN THE DESIGN OF THIS COMPONENT.**

KOTT

| JOB NAME | TRUSS NAME | QUANTITY | PLY | JOB DESC. | DRWG NO. |
|---|---|---|---|---|---|
| NE0723-072 | J07 | 1 | 1 | TRUSS DESC. | |

CORPORATION OF THE CITY OF OSHAWA
TRUE COPY
OF PERMIT PLANS
Nov 21 2023
PER:
CHIEF BUILDING OFFICIAL

MHP 23033

Version 8.630 S Mar 22 2023 MiTek Industries, Inc. Thu Jul 13 19:55:51 2023 Page 1
ID:vGgVNALLxpgFINJM6FviHszAhox-e1pZIEjzEhcyOcTU_4IwaWNfkxm5UUfRhkn4CEyyONs

Scale = 1:18.0

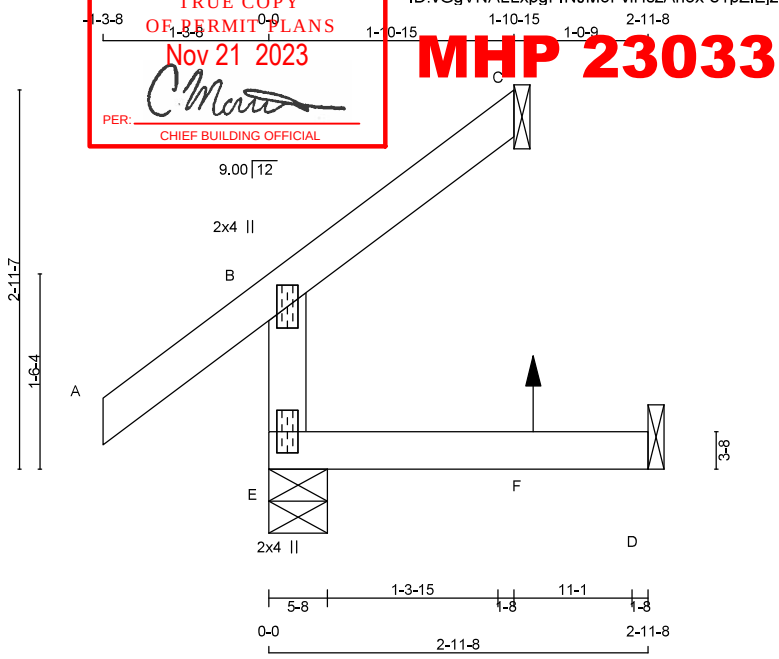


TOTAL WEIGHT = 9 lb [M]

**LUMBER**
N. L. G. A. RULES

| CHORDS | SIZE | | LUMBER | DESCR. |
|---|---|---|---|---|
| E - B | 2x4 | DRY | No.2 | SPF |
| A - C | 2x4 | DRY | No.2 | SPF |
| E - D | 2x4 | DRY | No.2 | SPF |

DRY: SEASONED LUMBER.

**PLATES (table is in inches)**

| JT | TYPE | PLATES | W | LEN | Y | X |
|---|---|---|---|---|---|---|
| B | TMV+p | MT20 | 2.0 | 4.0 | | |
| E | BMV1+p | MT20 | 2.0 | 4.0 | | |

**DIMENSIONS, SUPPORTS AND LOADINGS SPECIFIED BY FABRICATOR TO BE VERIFIED BY BUILDING DESIGNER**

**BEARINGS**

| JT | FACTORED GROSS REACTION VERT | HORZ | MAXIMUM FACTORED GROSS REACTION DOWN | HORZ | UPLIFT | INPUT BRG IN-SX | REQRD BRG IN-SX |
|---|---|---|---|---|---|---|---|
| E | 359 | 0 | 359 | 0 | 0 | 5-8 | 1-8 |
| C | 66 | 0 | 66 | 0 | -31 | 1-8 | 1-8 |
| D | 14 | 0 | 27 | 0 | 0 | 1-8 | 1-8 |

SEE MITEK STANDARD DETAIL MSD2015-H FOR CONNECTION TO JOINT(S) C , D

PROVIDE ANCHORAGE AT BEARING JOINT C FOR 150 LBS FACTORED UPLIFT

**UNFACTORED REACTIONS**

| JT | 1ST LCASE COMBINED | MAX./MIN. COMPONENT REACTIONS SNOW | LIVE | PERM.LIVE | WIND | DEAD | SOIL |
|---|---|---|---|---|---|---|---|
| E | 248 | 194 / 0 | 0 / 0 | 0 / 0 | 0 / 0 | 54 / 0 | 0 / 0 |
| C | 46 | 37 / -25 | 0 / 0 | 0 / 0 | 0 / 0 | 9 / 0 | 0 / 0 |
| D | 13 | 0 / -7 | 0 / 0 | 0 / 0 | 0 / 0 | 19 / 0 | 0 / 0 |

BEARING MATERIAL TO BE SPF NO.2 OR BETTER AT JOINT(S) E, C

**BRACING**
TOP CHORD TO BE SHEATHED OR MAX. PURLIN SPACING = 6.25 FT.
MAX. UNBRACED BOTTOM CHORD LENGTH = 10.00 FT OR RIGID CEILING DIRECTLY APPLIED.

ALL PITCH BREAKS AND PERIMETER CORNER JOINTS MUST BE LATERALLY RESTRAINED.

**LOADING**
TOTAL LOAD CASES: (5)

CHORDS

| MEMB. FR-TO | MAX. FACTORED FORCE (LBS) | FACTORED VERT. LOAD (PLF) FROM | TO | LC1 | MAX CSI (LC) |
|---|---|---|---|---|---|
| E- B | -327 / 0 | 0.0 | 0.0 | 0.05 (5) | |
| A- B | 0 / 49 | -119.4 | -119.4 | 0.17 (5) | |
| B- C | -29 / 0 | -119.4 | -119.4 | 0.12 (1) | |
| E- F | 0 / 0 | -18.2 | -18.2 | 0.05 (5) | |
| F- D | 0 / 0 | -18.2 | -18.2 | 0.05 (5) | |

WEBS

| MEMB. | MAX. FACTORED FORCE (LBS) | MAX CSI (LC) |
|---|---|---|
| UNBRAC LENGTH | | |
| 7.81 | | |
| 10.00 | | |
| 6.25 | | |
| 10.00 | | |
| 10.00 | | |

SPECIFIED CONCENTRATED LOADS (LBS)

| JT | LOC. | LC1 | MAX- | MAX+ | FACE | DIR. | TYPE | HEEL | CONN. |
|---|---|---|---|---|---|---|---|---|---|
| F | 2-0-12 | 5 | 1 | 5 | BACK | VERT | TOTAL | — | C1 |

**CONNECTION REQUIREMENTS**

1) **C1:** A SUITABLE HANGER/MECHANICAL CONNECTION IS REQUIRED.

CANTILEVER ANALYSIS HAS BEEN CONSIDERED IN THIS DESIGN

PATTERN-LOADING CHECK APPLIED TO THIS TRUSS.

**DESIGN CRITERIA**

*** SPECIAL LOADS ANALYSIS ***
GEOMETRY AND/OR BASIC LOADS CHANGED BY USER.
LOADS WERE DERIVED FROM USER INPUT
NO FURTHER MODIFICATIONS WERE MADE

SPECIFIED LOADS:

| | | | | |
|---|---|---|---|---|
| TOP CH. | LL | = | 34.8 | PSF |
| | DL | = | 6.0 | PSF |
| BOT CH. | LL | = | 0.0 | PSF |
| | DL | = | 7.3 | PSF |
| TOTAL LOAD | | = | 48.1 | PSF |

**SPACING = 24.0 IN. C/C**

*** NON STANDARD GIRDER ***
ADDT'L USER-DEFINED LOADS APPLIED TO ALL LOAD CASES.

THIS TRUSS IS DESIGNED FOR RESIDENTIAL OR SMALL BUILDING REQUIREMENTS OF PART 9, NBCC 2015

THIS DESIGN COMPLIES WITH:
- PART 9 OF BCBC 2018 , NBC-2019AE
- PART 9 OF OBC 2012 (2019 AMENDMENT)
- CSA 086-14
- TPIC 2014

DESIGN ASSUMPTIONS
-OVERHANG NOT TO BE ALTERED OR CUT OFF.

(55 % OF 48.1 P.S.F. G.S.L. PLUS 8.4 P.S.F. RAIN LOAD) EQUALS 34.8 P.S.F. SPECIFIED ROOF LIVE LOAD

ALLOWABLE DEFL.(LL)= L/360 (0.19")
CALCULATED VERT. DEFL.(LL) = L/ 999 (0.00")
ALLOWABLE DEFL.(TL)= L/360 (0.19")
CALCULATED VERT. DEFL.(TL) = L/ 999 (0.00")

CSI: TC=0.17/1.00 (A-B:5) , BC=0.05/1.00 (D-E:5) , WB=0.00/1.00 (n/a:0) , SSI=0.11/1.00 (A-B:5)

DOL LUMBER=1.00 NAIL=1.00 LS BEND=1.10 COMP=1.10 SHEAR=1.10 TENS= 1.10

COMPANION LIVE LOAD FACTOR = 1.00

TRUSS PLATE MANUFACTURER IS NOT RESPONSIBLE FOR QUALITY CONTROL IN THE TRUSS MANUFACTURING PLANT .

NAIL VALUES

| PLATE | GRIP(DRY) (PSI) MAX | MIN | SHEAR (PLI) MAX | MIN | SECTION (PLI) MAX | MIN |
|---|---|---|---|---|---|---|
| MT20 | 650 | 371 | 1747 | 788 | 1987 | 1873 |

PLATE PLACEMENT TOL. = 0.250 inches

PLATE ROTATION TOL. = 5.0 Deg.

JSI GRIP= 0.21 (B) (INPUT = 0.90 )
JSI METAL= 0.17 (B) (INPUT = 1.00 )

LICENSED PROFESSIONAL ENGINEER
N.A. EL-MASRI
PROVINCE OF ONTARIO
Jul 13, 2023

**READ ALL NOTES ON THIS PAGE AND ON THE ENGINEERING NOTES: TRUSSES. THE NOTE PAGE IS AN INTEGRAL PART OF THIS DRAWING AS IT CONTAINS SPECIFICATIONS AND CRITERIA USED IN THE DESIGN OF THIS COMPONENT.**

KOTT

| JOB NAME | TRUSS NAME | QUANTITY | PLY | JOB DESC. | DRWG NO. |
|---|---|---|---|---|---|
| NE0723-072 | J08 | 1 | 1 | TRUSS DESC. | |

CORPORATION OF THE CITY OF OSHAWA
TRUE COPY
OF PERMIT PLANS
Nov 21 2023
PER:
CHIEF BUILDING OFFICIAL

MHP 23033

Version 8.630 S Mar 22 2023 MiTek Industries, Inc. Thu Jul 13 19:55:52 2023 Page 1
ID:vGgVNALLxpgFINJM6FviHszAhox-6DNxyajb??kp0m2hXoG97jvqZL6KDxvbwOXdkgyyONr

Scale = 1:18.0

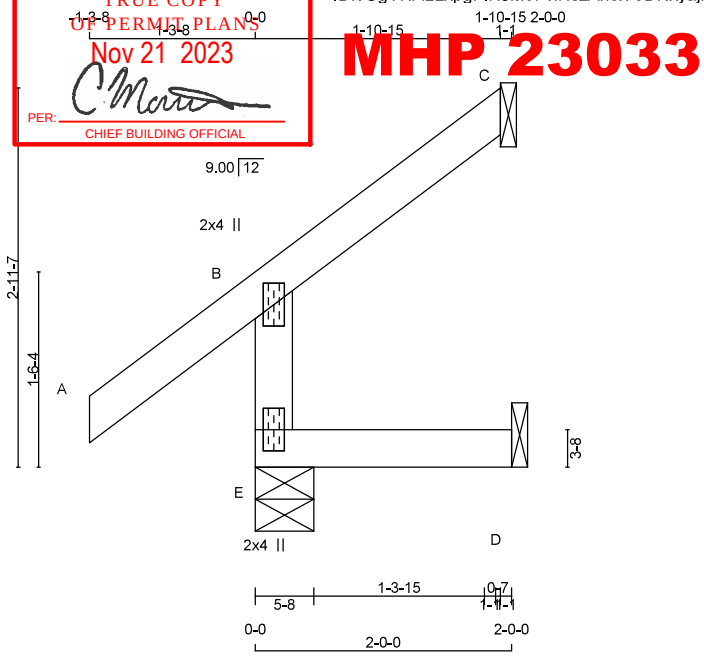


TOTAL WEIGHT = 8 lb
[M]

**LUMBER**
N. L. G. A. RULES

| CHORDS | SIZE | | LUMBER | DESCR. |
|---|---|---|---|---|
| E - B | 2x4 | DRY | No.2 | SPF |
| A - C | 2x4 | DRY | No.2 | SPF |
| E - D | 2x4 | DRY | No.2 | SPF |

DRY: SEASONED LUMBER.

**PLATES (table is in inches)**

| JT | TYPE | PLATES | W | LEN | Y | X |
|---|---|---|---|---|---|---|
| B | TMV+p | MT20 | 2.0 | 4.0 | | |
| E | BMV1+p | MT20 | 2.0 | 4.0 | | |

**DIMENSIONS, SUPPORTS AND LOADINGS SPECIFIED BY FABRICATOR TO BE VERIFIED BY BUILDING DESIGNER**

**BEARINGS**

| JT | FACTORED GROSS REACTION VERT | HORZ | MAXIMUM FACTORED GROSS REACTION DOWN | HORZ | UPLIFT | INPUT BRG IN-SX | REQRD BRG IN-SX |
|---|---|---|---|---|---|---|---|
| E | 356 | 0 | 356 | 0 | 0 | 5-8 | 1-8 |
| C | 66 | 0 | 66 | 0 | -31 | 1-8 | 1-8 |
| D | 8 | 0 | 18 | 0 | -4 | 1-8 | 1-8 |

SEE MITEK STANDARD DETAIL MSD2015-H FOR CONNECTION TO JOINT(S) C , D

PROVIDE ANCHORAGE AT BEARING JOINT C FOR 150 LBS FACTORED UPLIFT
PROVIDE ANCHORAGE AT BEARING JOINT D FOR 150 LBS FACTORED UPLIFT

**UNFACTORED REACTIONS**

| JT | 1ST LCASE COMBINED | MAX./MIN. COMPONENT REACTIONS SNOW | LIVE | PERM.LIVE | WIND | DEAD | SOIL |
|---|---|---|---|---|---|---|---|
| E | 245 | 197 / 0 | 0 / 0 | 0 / 0 | 0 / 0 | 49 / 0 | 0 / 0 |
| C | 45 | 37 / -24 | 0 / 0 | 0 / 0 | 0 / 0 | 7 / 0 | 0 / 0 |
| D | 7 | 0 / -10 | 0 / 0 | 0 / 0 | 0 / 0 | 13 / 0 | 0 / 0 |

BEARING MATERIAL TO BE SPF NO.2 OR BETTER AT JOINT(S) E, C

**BRACING**
TOP CHORD TO BE SHEATHED OR MAX. PURLIN SPACING = 6.25 FT.
MAX. UNBRACED BOTTOM CHORD LENGTH = 10.00 FT OR RIGID CEILING DIRECTLY APPLIED.

ALL PITCH BREAKS AND PERIMETER CORNER JOINTS MUST BE LATERALLY RESTRAINED.

**LOADING**
TOTAL LOAD CASES: (5)

CHORDS

| MEMB. FR-TO | MAX. FACTORED FORCE (LBS) | VERT. LOAD (PLF) FROM | TO | LC1 MAX CSI (LC) | UNBRAC LENGTH |
|---|---|---|---|---|---|
| E- B | -328 / 0 | 0.0 | 0.0 | 0.05 (5) | 7.81 |
| A- B | 0 / 49 | -119.4 | -119.4 | 0.16 (1) | 10.00 |
| B- C | -29 / 0 | -119.4 | -119.4 | 0.13 (1) | 6.25 |
| E- D | 0 / 0 | -18.2 | -18.2 | 0.05 (5) | 10.00 |

WEBS

| MEMB. FR-TO | MAX. FACTORED FORCE (LBS) | MAX CSI (LC) |
|---|---|---|

CANTILEVER ANALYSIS HAS BEEN CONSIDERED IN THIS DESIGN

PATTERN-LOADING CHECK APPLIED TO THIS TRUSS.

**DESIGN CRITERIA**

SPECIFIED LOADS:

| | | | | |
|---|---|---|---|---|
| TOP CH. | LL | = | 34.8 | PSF |
| | DL | = | 6.0 | PSF |
| BOT CH. | LL | = | 0.0 | PSF |
| | DL | = | 7.3 | PSF |
| TOTAL LOAD | | = | 48.1 | PSF |

**SPACING = 24.0 IN. C/C**

THIS TRUSS IS DESIGNED FOR RESIDENTIAL OR SMALL BUILDING REQUIREMENTS OF PART 9, NBCC 2015

THIS DESIGN COMPLIES WITH:
- PART 9 OF BCBC 2018 , NBC-2019AE
- PART 9 OF OBC 2012 (2019 AMENDMENT)
- CSA 086-14
- TPIC 2014

DESIGN ASSUMPTIONS
-OVERHANG NOT TO BE ALTERED OR CUT OFF.

(55 % OF 48.1 P.S.F. G.S.L. PLUS 8.4 P.S.F. RAIN LOAD) EQUALS 34.8 P.S.F. SPECIFIED ROOF LIVE LOAD

ALLOWABLE DEFL.(LL)= L/360 (0.19")
CALCULATED VERT. DEFL.(LL) = L/ 999 (0.00")
ALLOWABLE DEFL.(TL)= L/360 (0.19")
CALCULATED VERT. DEFL.(TL) = L/ 999 (0.00")

CSI: TC=0.16/1.00 (A-B:1) , BC=0.05/1.00 (D-E:5) , WB=0.00/1.00 (n/a:0) , SSI=0.10/1.00 (A-B:1)

DOL LUMBER=1.00 NAIL=1.00 LS BEND=1.10 COMP=1.10 SHEAR=1.10 TENS= 1.10

COMPANION LIVE LOAD FACTOR = 1.00

TRUSS PLATE MANUFACTURER IS NOT RESPONSIBLE FOR QUALITY CONTROL IN THE TRUSS MANUFACTURING PLANT .

NAIL VALUES

| PLATE | GRIP(DRY) (PSI) MAX | MIN | SHEAR (PLI) MAX | MIN | SECTION (PLI) MAX | MIN |
|---|---|---|---|---|---|---|
| MT20 | 650 | 371 | 1747 | 788 | 1987 | 1873 |

PLATE PLACEMENT TOL. = 0.250 inches

PLATE ROTATION TOL. = 5.0 Deg.

JSI GRIP= 0.21 (B) (INPUT = 0.90 )
JSI METAL= 0.17 (B) (INPUT = 1.00 )

LICENSED PROFESSIONAL ENGINEER
N.A. EL-MASRI
PROVINCE OF ONTARIO
Jul 13, 2023

**READ ALL NOTES ON THIS PAGE AND ON THE ENGINEERING NOTES: TRUSSES. THE NOTE PAGE IS AN INTEGRAL PART OF THIS DRAWING AS IT CONTAINS SPECIFICATIONS AND CRITERIA USED IN THE DESIGN OF THIS COMPONENT.**

KOTT

| JOB NAME | TRUSS NAME | QUANTITY | PLY | JOB DESC. | DRWG NO. |
|---|---|---|---|---|---|
| NE0723-072 | J09 | 1 | 1 | TRUSS DESC. | |

CORPORATION OF THE CITY OF OSHAWA
TRUE COPY
OF PERMIT PLANS
Nov 21 2023
PER:
CHIEF BUILDING OFFICIAL

MHP 23033

Version 8.630 S Mar 22 2023 MiTek Industries, Inc. Thu Jul 13 19:55:52 2023 Page 1
ID:vGgVNALLxpgFINJM6FviHszAhox-6DNxyajb??kp0m2hXoG97jvn1L53DxvbwOXdkgyyONr

Scale = 1:25.8

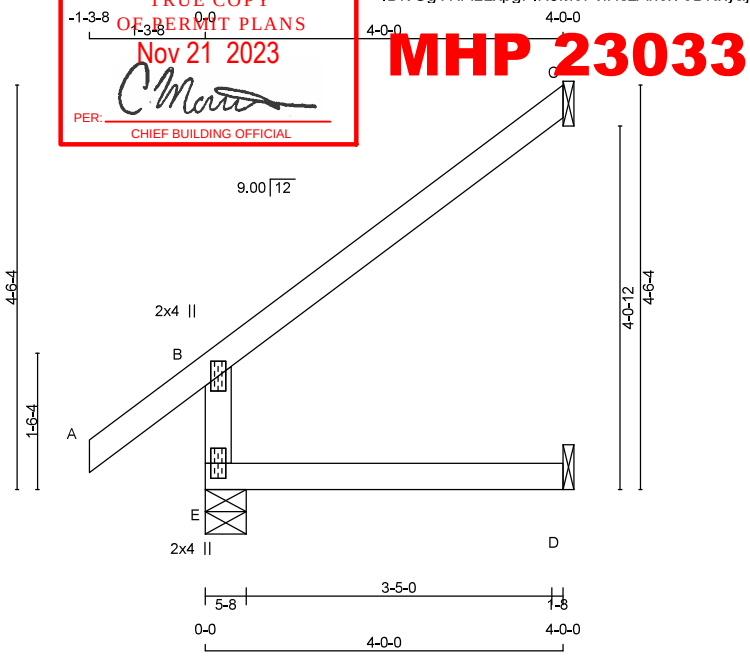


TOTAL WEIGHT = 14 lb [M]

**LUMBER**
N. L. G. A. RULES

| CHORDS | SIZE | | LUMBER | DESCR. |
|---|---|---|---|---|
| E - B | 2x4 | DRY | No.2 | SPF |
| A - C | 2x4 | DRY | No.2 | SPF |
| E - D | 2x4 | DRY | No.2 | SPF |

DRY: SEASONED LUMBER.

**PLATES (table is in inches)**

| JT | TYPE | PLATES | W | LEN | Y | X |
|---|---|---|---|---|---|---|
| B | TMV+p | MT20 | 2.0 | 4.0 | | |
| E | BMV1+p | MT20 | 2.0 | 4.0 | | |

**DIMENSIONS, SUPPORTS AND LOADINGS SPECIFIED BY FABRICATOR TO BE VERIFIED BY BUILDING DESIGNER**

**BEARINGS**

| JT | FACTORED GROSS REACTION VERT | HORZ | MAXIMUM FACTORED GROSS REACTION DOWN | HORZ | UPLIFT | INPUT BRG IN-SX | REQRD BRG IN-SX |
|---|---|---|---|---|---|---|---|
| E | 504 | 0 | 504 | 0 | 0 | 5-8 | 1-8 |
| C | 179 | 0 | 179 | 0 | 0 | 1-8 | 1-8 |
| D | 32 | 0 | 35 | 0 | 0 | 1-8 | 1-8 |

SEE MITEK STANDARD DETAIL MSD2015-H FOR CONNECTION TO JOINT(S) C , D

**UNFACTORED REACTIONS**

| JT | 1ST LCASE COMBINED | MAX./MIN. COMPONENT REACTIONS SNOW | LIVE | PERM.LIVE | WIND | DEAD | SOIL |
|---|---|---|---|---|---|---|---|
| E | 350 | 270 / 0 | 0 / 0 | 0 / 0 | 0 / 0 | 80 / 0 | 0 / 0 |
| C | 123 | 105 / 0 | 0 / 0 | 0 / 0 | 0 / 0 | 18 / 0 | 0 / 0 |
| D | 25 | 0 / 0 | 0 / 0 | 0 / 0 | 0 / 0 | 25 / 0 | 0 / 0 |

BEARING MATERIAL TO BE SPF NO.2 OR BETTER AT JOINT(S) E

**BRACING**
TOP CHORD TO BE SHEATHED OR MAX. PURLIN SPACING = 6.25 FT.
MAX. UNBRACED BOTTOM CHORD LENGTH = 10.00 FT OR RIGID CEILING DIRECTLY APPLIED.

ALL PITCH BREAKS AND PERIMETER CORNER JOINTS MUST BE LATERALLY RESTRAINED.

**LOADING**
TOTAL LOAD CASES: (4)

CHORDS

| MEMB. FR-TO | MAX. FACTORED FORCE (LBS) | FACTORED VERT. LOAD LC1 (PLF) FROM | TO | MAX CSI (LC) |
|---|---|---|---|---|
| E- B | -463 / 0 | 0.0 | 0.0 | 0.05 (4) |
| A- B | 0 / 49 | -119.4 | -119.4 | 0.16 (1) |
| B- C | -36 / 0 | -119.4 | -119.4 | 0.32 (1) |
| E- D | 0 / 0 | -18.2 | -18.2 | 0.06 (4) |

WEBS

| MEMB. FR-TO | MAX. UNBRAC LENGTH | MAX. FACTORED FORCE (LBS) | MAX CSI (LC) |
|---|---|---|---|
| E- B | 7.81 | | |
| A- B | 10.00 | | |
| B- C | 6.25 | | |
| E- D | 10.00 | | |

**DESIGN CRITERIA**

SPECIFIED LOADS:

| | | | | |
|---|---|---|---|---|
| TOP CH. | LL = | 34.8 | PSF |
| | DL = | 6.0 | PSF |
| BOT CH. | LL = | 0.0 | PSF |
| | DL = | 7.3 | PSF |
| TOTAL LOAD | = | 48.1 | PSF |

**SPACING = 24.0 IN. C/C**

THIS TRUSS IS DESIGNED FOR RESIDENTIAL OR SMALL BUILDING REQUIREMENTS OF PART 9, NBCC 2015

THIS DESIGN COMPLIES WITH:
- PART 9 OF BCBC 2018 , NBC-2019AE
- PART 9 OF OBC 2012 (2019 AMENDMENT)
- CSA 086-14
- TPIC 2014

DESIGN ASSUMPTIONS
-OVERHANG NOT TO BE ALTERED OR CUT OFF.

(55 % OF 48.1 P.S.F. G.S.L. PLUS 8.4 P.S.F. RAIN LOAD) EQUALS 34.8 P.S.F. SPECIFIED ROOF LIVE LOAD

ALLOWABLE DEFL.(LL)= L/360 (0.19")
CALCULATED VERT. DEFL.(LL) = L/ 999 (0.00")
ALLOWABLE DEFL.(TL)= L/360 (0.19")
CALCULATED VERT. DEFL.(TL) = L/ 999 (0.01")

CSI: TC=0.32/1.00 (B-C:1) , BC=0.06/1.00 (D-E:4) , WB=0.00/1.00 (n/a:0) , SSI=0.19/1.00 (B-C:1)

DOL LUMBER=1.00 NAIL=1.00 LS BEND=1.10 COMP=1.10 SHEAR=1.10 TENS= 1.10

COMPANION LIVE LOAD FACTOR = 1.00

TRUSS PLATE MANUFACTURER IS NOT RESPONSIBLE FOR QUALITY CONTROL IN THE TRUSS MANUFACTURING PLANT .

NAIL VALUES

| PLATE | GRIP(DRY) (PSI) MAX | MIN | SHEAR (PLI) MAX | MIN | SECTION (PLI) MAX | MIN |
|---|---|---|---|---|---|---|
| MT20 | 650 | 371 | 1747 | 788 | 1987 | 1873 |

PLATE PLACEMENT TOL. = 0.250 inches

PLATE ROTATION TOL. = 5.0 Deg.

JSI GRIP= 0.30 (B) (INPUT = 0.90 )
JSI METAL= 0.25 (B) (INPUT = 1.00 )

LICENSED PROFESSIONAL ENGINEER
N.A. EL-MASRI
PROVINCE OF ONTARIO
Jul 13, 2023

**READ ALL NOTES ON THIS PAGE AND ON THE ENGINEERING NOTES: TRUSSES. THE NOTE PAGE IS AN INTEGRAL PART OF THIS DRAWING AS IT CONTAINS SPECIFICATIONS AND CRITERIA USED IN THE DESIGN OF THIS COMPONENT.**

KOTT

| JOB NAME | TRUSS NAME | QUANTITY | PLY | JOB DESC. | DRWG NO. |
|---|---|---|---|---|---|
| NE0723-072 | T01 | 3 | 1 | TRUSS DESC. | |

CORPORATION OF THE CITY OF OSHAWA
TRUE COPY
OF PERMIT PLANS
Nov 21 2023
PER: C Marr
CHIEF BUILDING OFFICIAL

MHP 23033

Version 8.630 S Mar 22 2023 MiTek Industries, Inc. Thu Jul 13 19:55:53 2023 Page 1
ID:vGgVNALLxpgFINJM6FviHszAhox-aPxKAwkEmJsgewdt5VnOfxSpglLuyGhk92GBG7yyONq

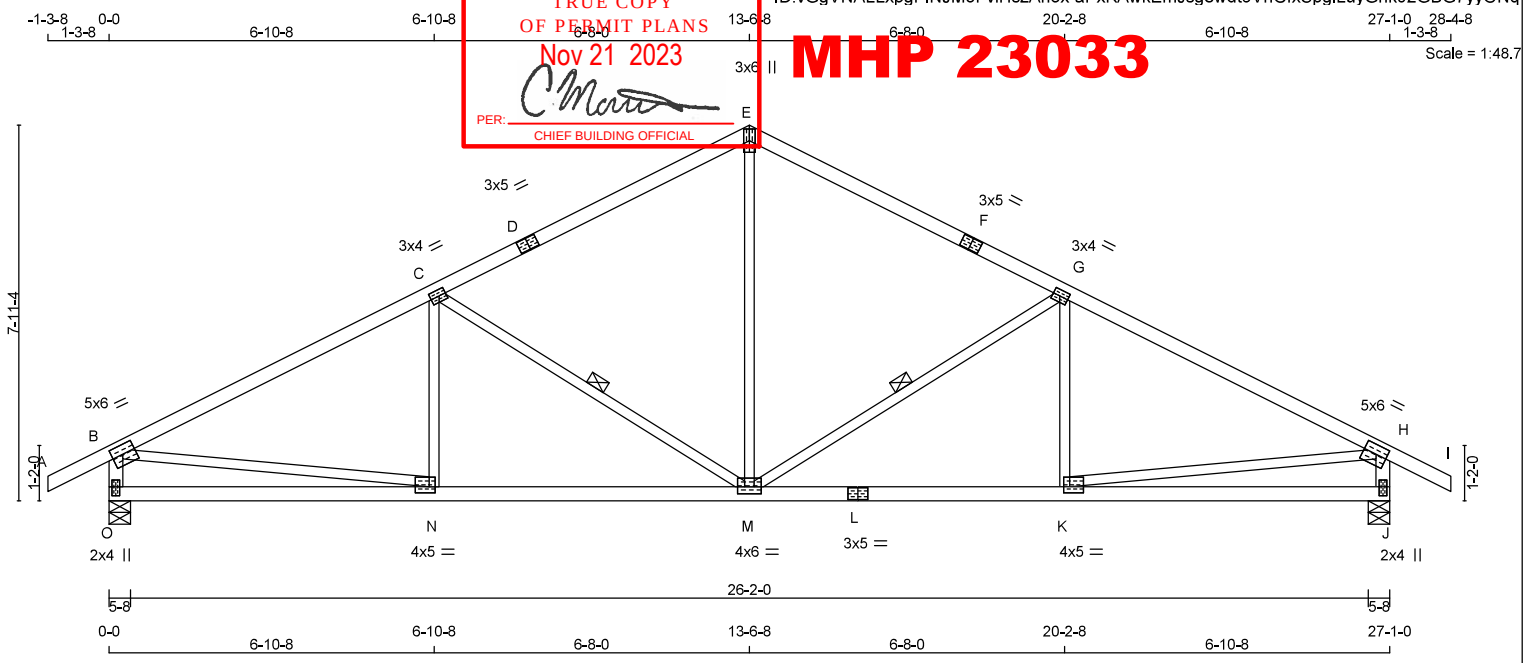


TOTAL WEIGHT = 3 X 106 = 319 lb
[M][F]

**LUMBER**
N. L. G. A. RULES

| CHORDS | SIZE | | LUMBER | DESCR. |
|---|---|---|---|---|
| A - D | 2x4 | DRY | No.2 | SPF |
| D - E | 2x4 | DRY | No.2 | SPF |
| E - F | 2x4 | DRY | No.2 | SPF |
| F - I | 2x4 | DRY | No.2 | SPF |
| O - B | 2x4 | DRY | No.2 | SPF |
| J - H | 2x4 | DRY | No.2 | SPF |
| O - L | 2x4 | DRY | No.2 | SPF |
| L - J | 2x4 | DRY | No.2 | SPF |
| ALL WEBS EXCEPT | 2x3 | DRY | No.2 | SPF |

DRY: SEASONED LUMBER.

**PLATES (table is in inches)**

| JT | TYPE | PLATES | W | LEN | Y | X |
|---|---|---|---|---|---|---|
| B | TMVW-t | MT20 | 5.0 | 6.0 | 2.25 | 2.75 |
| C | TMWW-t | MT20 | 3.0 | 4.0 | 1.50 | 1.75 |
| D | TS-t | MT20 | 3.0 | 5.0 | | |
| E | TTW+p | MT20 | 3.0 | 6.0 | | |
| F | TS-t | MT20 | 3.0 | 5.0 | | |
| G | TMWW-t | MT20 | 3.0 | 4.0 | 1.50 | 1.75 |
| H | TMVW-t | MT20 | 5.0 | 6.0 | 2.25 | 2.75 |
| J | BMV1+p | MT20 | 2.0 | 4.0 | 2.25 | 1.00 |
| K | BMWW-t | MT20 | 4.0 | 5.0 | 1.50 | 1.50 |
| L | BS-t | MT20 | 3.0 | 5.0 | | |
| M | BMWWW-t | MT20 | 4.0 | 6.0 | 1.75 | 3.00 |
| N | BMWW-t | MT20 | 4.0 | 5.0 | 1.50 | 1.50 |
| O | BMV1+p | MT20 | 2.0 | 4.0 | 2.25 | 1.00 |

**DIMENSIONS, SUPPORTS AND LOADINGS SPECIFIED BY FABRICATOR TO BE VERIFIED BY BUILDING DESIGNER**

**BEARINGS**

| JT | FACTORED GROSS REACTION VERT | HORZ | MAXIMUM FACTORED GROSS REACTION DOWN | HORZ | UPLIFT | INPUT BRG IN-SX | REQRD BRG IN-SX |
|---|---|---|---|---|---|---|---|
| O | 2026 | 0 | 2026 | 0 | 0 | 5-8 | 3-1 |
| J | 2026 | 0 | 2026 | 0 | 0 | 5-8 | 3-1 |

**UNFACTORED REACTIONS**

| JT | 1ST LCASE COMBINED | MAX./MIN. COMPONENT REACTIONS SNOW | LIVE | PERM.LIVE | WIND | DEAD | SOIL |
|---|---|---|---|---|---|---|---|
| O | 1414 | 1037 / 0 | 0 / 0 | 0 / 0 | 0 / 0 | 376 / 0 | 0 / 0 |
| J | 1414 | 1037 / 0 | 0 / 0 | 0 / 0 | 0 / 0 | 376 / 0 | 0 / 0 |

BEARING MATERIAL TO BE SPF NO.2 OR BETTER AT JOINT(S) O, J

**BRACING**
TOP CHORD TO BE SHEATHED OR MAX. PURLIN SPACING = 3.08 FT.
MAX. UNBRACED BOTTOM CHORD LENGTH = 10.00 FT OR RIGID CEILING DIRECTLY APPLIED.

ALL PITCH BREAKS AND PERIMETER CORNER JOINTS MUST BE LATERALLY RESTRAINED.

1 - 1x4 LATERAL BRACE(S) AT 1/ 2 LENGTH OF G-M, C-M. DBS = 20-0-0 . CBF = 109 LBS.

DBS = DIAGONAL BRACE SPACING (MAX). CBF = CUMULATIVE BRACING FORCE (PER BRACE). FASTEN LATERAL BRACE(S) USING (0.122"X3") SPIRAL NAILS : 1 NAIL FOR 2x3 BRACE(S), 2 FOR 1x4, 2x4, 2x5, 3 FOR 2x6, 4 FOR 2x8, 5 FOR 2x10, AND 6 FOR 2x12.

END VERTICAL(S) MUST BE SHEATHED OR HAVE BRACES AS INDICATED IN THE MAX. UNBRACED LENGTH COLUMN OF THE TABLE BELOW

**LOADING**
TOTAL LOAD CASES: (4)

CHORDS

| MEMB. FR-TO | MAX. FACTORED FORCE (LBS) | FACTORED VERT. LOAD LC1 (PLF) FROM | TO | MAX CSI (LC) | MAX. UNBRAC LENGTH |
|---|---|---|---|---|---|
| A- B | 0 / 36 | -119.4 | -119.4 | 0.16 (1) | 10.00 |
| B- C | -2634 / 0 | -119.4 | -119.4 | 0.91 (1) | 3.08 |
| C- D | -1904 / 0 | -119.4 | -119.4 | 0.79 (1) | 3.75 |
| D- E | -1904 / 0 | -119.4 | -119.4 | 0.79 (1) | 3.75 |
| E- F | -1904 / 0 | -119.4 | -119.4 | 0.79 (1) | 3.75 |
| F- G | -1904 / 0 | -119.4 | -119.4 | 0.79 (1) | 3.75 |
| G- H | -2634 / 0 | -119.4 | -119.4 | 0.91 (1) | 3.08 |
| H- I | 0 / 36 | -119.4 | -119.4 | 0.16 (1) | 10.00 |
| O- B | -1973 / 0 | 0.0 | 0.0 | 0.20 (1) | 6.00 |
| J- H | -1973 / 0 | 0.0 | 0.0 | 0.20 (1) | 6.00 |
| O- N | 0 / 0 | -18.2 | -18.2 | 0.20 (4) | 10.00 |
| N- M | 0 / 2394 | -18.2 | -18.2 | 0.47 (1) | 10.00 |
| M- L | 0 / 2394 | -18.2 | -18.2 | 0.47 (1) | 10.00 |
| L- K | 0 / 2394 | -18.2 | -18.2 | 0.47 (1) | 10.00 |
| K- J | 0 / 0 | -18.2 | -18.2 | 0.20 (4) | 10.00 |

WEBS

| MEMB. FR-TO | MAX. FACTORED FORCE (LBS) | MAX CSI (LC) |
|---|---|---|
| M- E | 0 / 1065 | 0.24 (1) |
| M- G | -870 / 0 | 0.37 (1) |
| K- G | -167 / 76 | 0.05 (1) |
| C- M | -870 / 0 | 0.37 (1) |
| N- C | -167 / 76 | 0.05 (1) |
| B- N | 0 / 2413 | 0.54 (1) |
| K- H | 0 / 2413 | 0.54 (1) |

**DESIGN CRITERIA**

SPECIFIED LOADS:

| | | | | |
|---|---|---|---|---|
| TOP CH. | LL = | 34.8 | PSF |
| | DL = | 6.0 | PSF |
| BOT CH. | LL = | 0.0 | PSF |
| | DL = | 7.3 | PSF |
| TOTAL LOAD | = | 48.1 | PSF |

**SPACING = 24.0 IN. C/C**

THIS TRUSS IS DESIGNED FOR RESIDENTIAL OR SMALL BUILDING REQUIREMENTS OF PART 9, NBCC 2015

THIS DESIGN COMPLIES WITH:
- PART 9 OF BCBC 2018 , NBC-2019AE
- PART 9 OF OBC 2012 (2019 AMENDMENT)
- CSA 086-14
- TPIC 2014

(55 % OF 48.1 P.S.F. G.S.L. PLUS 8.4 P.S.F. RAIN LOAD) EQUALS 34.8 P.S.F. SPECIFIED ROOF LIVE LOAD

ALLOWABLE DEFL.(LL)= L/360 (0.90")
CALCULATED VERT. DEFL.(LL) = L/ 999 (0.12")
ALLOWABLE DEFL.(TL)= L/360 (0.90")
CALCULATED VERT. DEFL.(TL) = L/ 999 (0.21")

CSI: TC=0.91/1.00 (G-H:1) , BC=0.47/1.00 (K-M:1) , WB=0.54/1.00 (H-K:1) , SSI=0.35/1.00 (B-C:1)

DOL LUMBER=1.00 NAIL=1.00 LS BEND=1.10 COMP=1.10 SHEAR=1.10 TENS= 1.10

COMPANION LIVE LOAD FACTOR = 1.00

TRUSS PLATE MANUFACTURER IS NOT RESPONSIBLE FOR QUALITY CONTROL IN THE TRUSS MANUFACTURING PLANT .

NAIL VALUES

| PLATE | GRIP(DRY) (PSI) MAX | MIN | SHEAR (PLI) MAX | MIN | SECTION (PLI) MAX | MIN |
|---|---|---|---|---|---|---|
| MT20 | 650 | 371 | 1747 | 788 | 1987 | 1873 |

PLATE PLACEMENT TOL. = 0.250 inches

PLATE ROTATION TOL. = 5.0 Deg.

JSI GRIP= 0.89 (B) (INPUT = 0.90 )
JSI METAL= 0.74 (L) (INPUT = 1.00 )

LICENSED PROFESSIONAL ENGINEER
N.A. EL-MASRI
PROVINCE OF ONTARIO
Jul 13, 2023

**READ ALL NOTES ON THIS PAGE AND ON THE ENGINEERING NOTES: TRUSSES. THE NOTE PAGE IS AN INTEGRAL PART OF THIS DRAWING AS IT CONTAINS SPECIFICATIONS AND CRITERIA USED IN THE DESIGN OF THIS COMPONENT.**

KOTT

| JOB NAME | TRUSS NAME | QUANTITY | PLY | JOB DESC. | DRWG NO. |
|---|---|---|---|---|---|
| NE0723-072 | T02 | 2 | 1 | TRUSS DESC. | |

CORPORATION OF THE CITY OF OSHAWA
TRUE COPY
OF PERMIT PLANS
Nov 21 2023
PER: C Martin
CHIEF BUILDING OFFICIAL

MHP 23033

Version 8.630 S Mar 22 2023 MiTek Industries, Inc. Thu Jul 13 19:55:54 2023 Page 1
ID:vGgVNALLxpgFINJM6FviHszAhox-3bUiNGIsXc_XG4C3fCIdC8?zQ9h7hjxtNi0koZyyONp

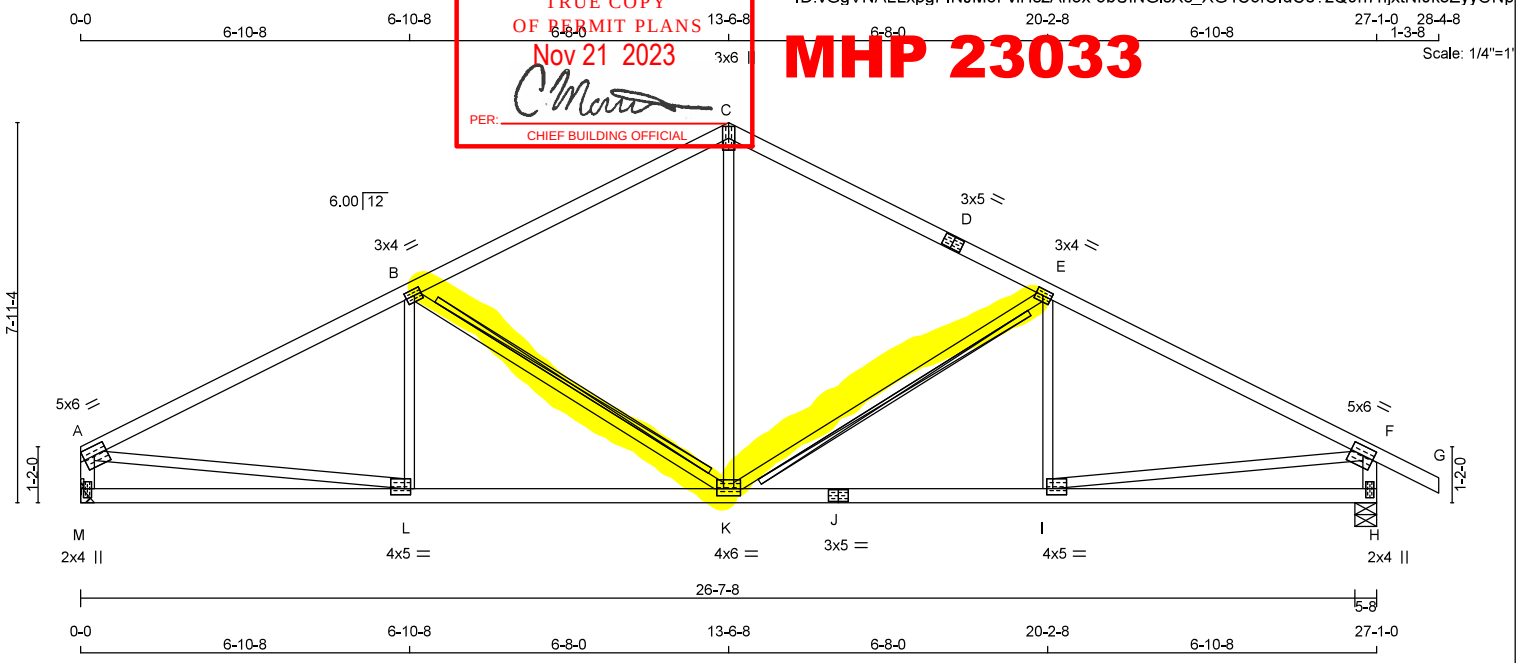


TOTAL WEIGHT = 2 X 105 = 209 lb
[M][F]

**LUMBER**
N. L. G. A. RULES

| CHORDS | SIZE | | LUMBER | DESCR. |
|---|---|---|---|---|
| A - C | 2x4 | DRY | No.2 | SPF |
| C - D | 2x4 | DRY | No.2 | SPF |
| D - G | 2x4 | DRY | No.2 | SPF |
| M - A | 2x4 | DRY | No.2 | SPF |
| H - F | 2x4 | DRY | No.2 | SPF |
| M - J | 2x4 | DRY | No.2 | SPF |
| J - H | 2x4 | DRY | No.2 | SPF |
| ALL WEBS EXCEPT | 2x3 | DRY | No.2 | SPF |

DRY: SEASONED LUMBER.

**PLATES (table is in inches)**

| JT | TYPE | PLATES | W | LEN | Y | X |
|---|---|---|---|---|---|---|
| A | TMVW-t | MT20 | 5.0 | 6.0 | 2.25 | Edge |
| B | TMWW-t | MT20 | 3.0 | 4.0 | 1.50 | 1.75 |
| C | TTW+p | MT20 | 3.0 | 6.0 | | |
| D | TS-t | MT20 | 3.0 | 5.0 | | |
| E | TMWW-t | MT20 | 3.0 | 4.0 | 1.50 | 1.75 |
| F | TMVW-t | MT20 | 5.0 | 6.0 | 2.25 | 2.75 |
| H | BMV1+p | MT20 | 2.0 | 4.0 | 2.25 | 1.00 |
| I | BMWW-t | MT20 | 4.0 | 5.0 | 1.50 | 1.50 |
| J | BS-t | MT20 | 3.0 | 5.0 | | |
| K | BMWWW-t | MT20 | 4.0 | 6.0 | 1.75 | 3.00 |
| L | BMWW-t | MT20 | 4.0 | 5.0 | 1.50 | 1.50 |
| M | BMV1+p | MT20 | 2.0 | 4.0 | 2.25 | 1.00 |

Edge - INDICATES REFERENCE CORNER OF PLATE TOUCHES EDGE OF CHORD.

**DIMENSIONS, SUPPORTS AND LOADINGS SPECIFIED BY FABRICATOR TO BE VERIFIED BY BUILDING DESIGNER**

**BEARINGS**

| JT | FACTORED GROSS REACTION VERT | HORZ | MAXIMUM FACTORED GROSS REACTION DOWN | HORZ | UPLIFT | INPUT BRG | REQRD BRG |
|---|---|---|---|---|---|---|---|
| M | 1864 | 0 | 1864 | 0 | 0 | MECHANICAL | |
| H | 2026 | 0 | 2026 | 0 | 0 | 5-8 | 3-1 |

A SUITABLE HANGER/MECHANICAL CONNECTION IS REQUIRED AT JOINT M. MINIMUM BEARING LENGTH AT JOINT M = 2-9.

**UNFACTORED REACTIONS**

| JT | 1ST LCASE COMBINED | MAX./MIN. COMPONENT REACTIONS SNOW | LIVE | PERM.LIVE | WIND | DEAD | SOIL |
|---|---|---|---|---|---|---|---|
| M | 1303 | 943 / 0 | 0 / 0 | 0 / 0 | 0 / 0 | 360 / 0 | 0 / 0 |
| H | 1414 | 1037 / 0 | 0 / 0 | 0 / 0 | 0 / 0 | 376 / 0 | 0 / 0 |

BEARING MATERIAL TO BE SPF NO.2 OR BETTER AT JOINT(S) H

**BRACING**
TOP CHORD TO BE SHEATHED OR MAX. PURLIN SPACING = 3.08 FT.
MAX. UNBRACED BOTTOM CHORD LENGTH = 10.00 FT OR RIGID CEILING DIRECTLY APPLIED.

ALL PITCH BREAKS AND PERIMETER CORNER JOINTS MUST BE LATERALLY RESTRAINED.

2x4 DRY SPF No.2 T-BRACE AT E-K, B-K

FASTEN T AND I-BRACES TO NARROW EDGE OF WEB WITH ONE ROW PER PLY OF 3" COMMON WIRE NAILS @ 6" O.C. WITH 3" MINIMUM END DISTANCE. BRACE MUST COVER 90% OF WEB LENGTH.

END VERTICAL(S) MUST BE SHEATHED OR HAVE BRACES AS INDICATED IN THE MAX. UNBRACED LENGTH COLUMN OF THE TABLE BELOW

**LOADING**
TOTAL LOAD CASES: (4)

CHORDS

| MEMB. FR-TO | MAX. FACTORED FORCE (LBS) | FACTORED VERT. LOAD (PLF) FROM | TO | LC1 | MAX CSI (LC) | MAX. UNBRAC LENGTH |
|---|---|---|---|---|---|---|
| A- B | -2634 / 0 | -119.4 | -119.4 | 0.91 (1) | 3.08 | |
| B- C | -1904 / 0 | -119.4 | -119.4 | 0.79 (1) | 3.75 | |
| C- D | -1904 / 0 | -119.4 | -119.4 | 0.79 (1) | 3.75 | |
| D- E | -1904 / 0 | -119.4 | -119.4 | 0.79 (1) | 3.75 | |
| E- F | -2634 / 0 | -119.4 | -119.4 | 0.91 (1) | 3.08 | |
| F- G | 0 / 36 | -119.4 | -119.4 | 0.16 (1) | 10.00 | |
| M- A | -1811 / 0 | 0.0 | 0.0 | 0.18 (1) | 6.21 | |
| H- F | -1973 / 0 | 0.0 | 0.0 | 0.20 (1) | 6.00 | |
| M- L | 0 / 0 | -18.2 | -18.2 | 0.20 (4) | 10.00 | |
| L- K | 0 / 2394 | -18.2 | -18.2 | 0.47 (1) | 10.00 | |
| K- J | 0 / 2394 | -18.2 | -18.2 | 0.47 (1) | 10.00 | |
| J- I | 0 / 2394 | -18.2 | -18.2 | 0.47 (1) | 10.00 | |
| I- H | 0 / 0 | -18.2 | -18.2 | 0.20 (4) | 10.00 | |

WEBS

| MEMB. FR-TO | MAX. FACTORED FORCE (LBS) | MAX CSI (LC) |
|---|---|---|
| K- C | 0 / 1065 | 0.24 (1) |
| I- E | -870 / 0 | 0.41 (1) |
| B- K | -167 / 76 | 0.05 (1) |
| L- B | -870 / 0 | 0.41 (1) |
| A- L | 0 / 2413 | 0.54 (1) |
| I- F | 0 / 2413 | 0.54 (1) |

**DESIGN CRITERIA**

SPECIFIED LOADS:

| | | | | |
|---|---|---|---|---|
| TOP CH. | LL | = | 34.8 | PSF |
| | DL | = | 6.0 | PSF |
| BOT CH. | LL | = | 0.0 | PSF |
| | DL | = | 7.3 | PSF |
| TOTAL LOAD | | = | 48.1 | PSF |

**SPACING = 24.0 IN. C/C**

THIS TRUSS IS DESIGNED FOR RESIDENTIAL OR SMALL BUILDING REQUIREMENTS OF PART 9, NBCC 2015

THIS DESIGN COMPLIES WITH:
- PART 9 OF BCBC 2018 , NBC-2019AE
- PART 9 OF OBC 2012 (2019 AMENDMENT)
- CSA 086-14
- TPIC 2014

(55 % OF 48.1 P.S.F. G.S.L. PLUS 8.4 P.S.F. RAIN LOAD) EQUALS 34.8 P.S.F. SPECIFIED ROOF LIVE LOAD

ALLOWABLE DEFL.(LL)= L/360 (0.90")
CALCULATED VERT. DEFL.(LL) = L/ 999 (0.12")
ALLOWABLE DEFL.(TL)= L/360 (0.90")
CALCULATED VERT. DEFL.(TL) = L/ 999 (0.21")

CSI: TC=0.91/1.00 (A-B:1) , BC=0.47/1.00 (K-L:1) , WB=0.54/1.00 (A-L:1) , SSI=0.35/1.00 (A-B:1)

DOL LUMBER=1.00 NAIL=1.00 LS BEND=1.10 COMP=1.10 SHEAR=1.10 TENS= 1.10

COMPANION LIVE LOAD FACTOR = 1.00

TRUSS PLATE MANUFACTURER IS NOT RESPONSIBLE FOR QUALITY CONTROL IN THE TRUSS MANUFACTURING PLANT .

NAIL VALUES

| PLATE | GRIP(DRY) (PSI) MAX | MIN | SHEAR (PLI) MAX | MIN | SECTION (PLI) MAX | MIN |
|---|---|---|---|---|---|---|
| MT20 | 650 | 371 | 1747 | 788 | 1987 | 1873 |

PLATE PLACEMENT TOL. = 0.250 inches

PLATE ROTATION TOL. = 5.0 Deg.

JSI GRIP= 0.89 (A) (INPUT = 0.90 )
JSI METAL= 0.74 (J) (INPUT = 1.00 )

LICENSED PROFESSIONAL ENGINEER
N.A. EL-MASRI
PROVINCE OF ONTARIO
Jul 13, 2023

**READ ALL NOTES ON THIS PAGE AND ON THE ENGINEERING NOTES: TRUSSES. THE NOTE PAGE IS AN INTEGRAL PART OF THIS DRAWING AS IT CONTAINS SPECIFICATIONS AND CRITERIA USED IN THE DESIGN OF THIS COMPONENT.**

KOTT

| JOB NAME | TRUSS NAME | QUANTITY | PLY | JOB DESC. | DRWG NO. |
|---|---|---|---|---|---|
| NE0723-072 | T03 | 1 | 1 | TRUSS DESC. | |

CORPORATION OF THE CITY OF OSHAWA
TRUE COPY
OF PERMIT PLANS
Nov 21 2023
PER: C Martin
CHIEF BUILDING OFFICIAL

MHP 23033

Version 8.630 S Mar 22 2023 MiTek Industries, Inc. Thu Jul 13 19:55:54 2023 Page 1
ID:vGgVNALLxpgFINJM6FviHszAhox-3bUiNGIsXc_XG4C3fCIdC8?1I9hWhhctNi0koZyyONp

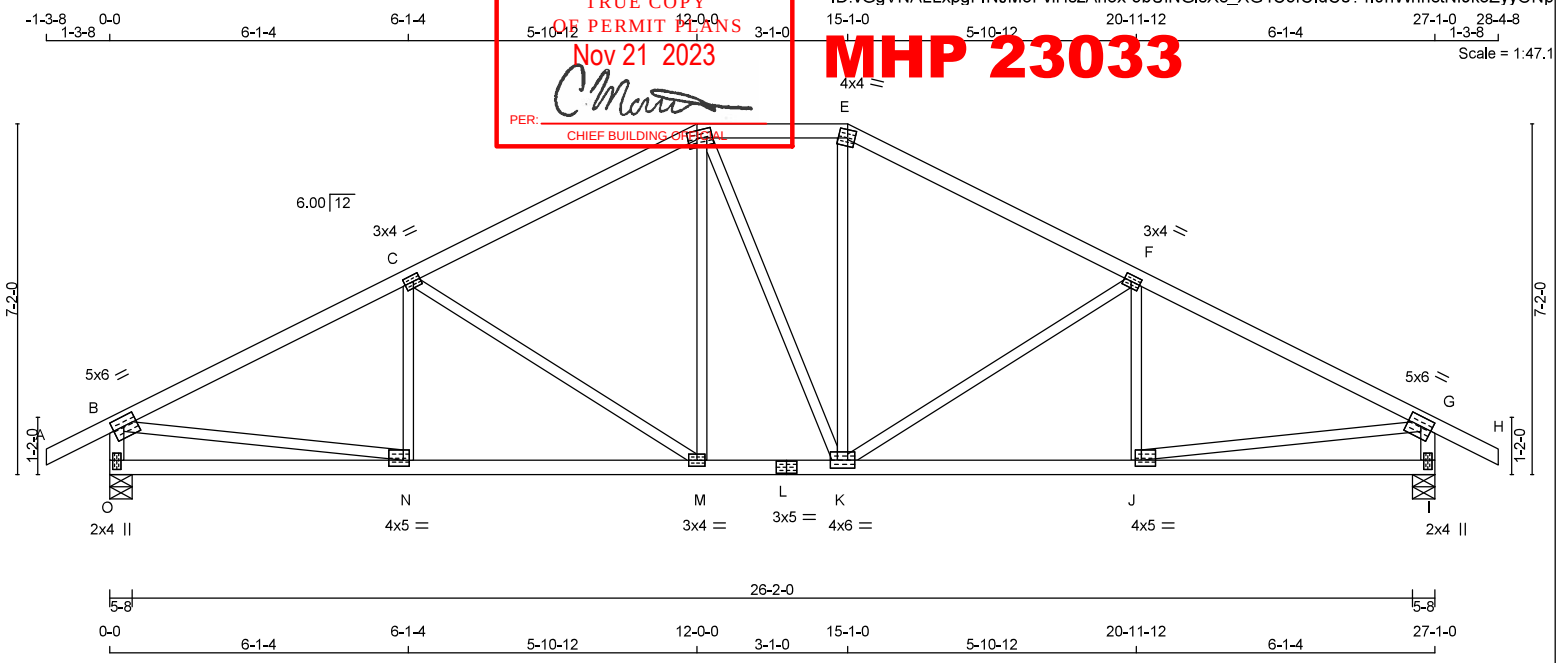


TOTAL WEIGHT = 113 lb

**LUMBER**
N. L. G. A. RULES

| CHORDS | SIZE | | LUMBER | DESCR. |
|---|---|---|---|---|
| A - D | 2x4 | DRY | No.2 | SPF |
| D - E | 2x4 | DRY | No.2 | SPF |
| E - H | 2x4 | DRY | No.2 | SPF |
| O - B | 2x4 | DRY | No.2 | SPF |
| I - G | 2x4 | DRY | No.2 | SPF |
| O - L | 2x4 | DRY | No.2 | SPF |
| L - I | 2x4 | DRY | No.2 | SPF |
| ALL WEBS EXCEPT | 2x3 | DRY | No.2 | SPF |

DRY: SEASONED LUMBER.

**PLATES (table is in inches)**

| JT | TYPE | PLATES | W | LEN | Y | X |
|---|---|---|---|---|---|---|
| B | TMVW-t | MT20 | 5.0 | 6.0 | 2.25 | 2.75 |
| C | TMWW-t | MT20 | 3.0 | 4.0 | 1.50 | 1.75 |
| D | TTWW-m | MT20 | 4.0 | 6.0 | 1.75 | 2.25 |
| E | TTW-m | MT20 | 4.0 | 4.0 | 2.00 | 1.75 |
| F | TMWW-t | MT20 | 3.0 | 4.0 | 1.50 | 1.75 |
| G | TMVW-t | MT20 | 5.0 | 6.0 | 2.25 | 2.75 |
| I | BMV1+p | MT20 | 2.0 | 4.0 | 2.25 | 1.00 |
| J | BMWW-t | MT20 | 4.0 | 5.0 | 1.50 | 1.50 |
| K | BMWWW-t | MT20 | 4.0 | 6.0 | | |
| L | BS-t | MT20 | 3.0 | 5.0 | | |
| M | BMWW-t | MT20 | 3.0 | 4.0 | | |
| N | BMWW-t | MT20 | 4.0 | 5.0 | 1.50 | 1.50 |
| O | BMV1+p | MT20 | 2.0 | 4.0 | 2.25 | 1.00 |

**DIMENSIONS, SUPPORTS AND LOADINGS SPECIFIED BY FABRICATOR TO BE VERIFIED BY BUILDING DESIGNER**

**BEARINGS**

| JT | FACTORED GROSS REACTION VERT | HORZ | MAXIMUM FACTORED GROSS REACTION DOWN | HORZ | UPLIFT | INPUT BRG IN-SX | REQRD BRG IN-SX |
|---|---|---|---|---|---|---|---|
| O | 2026 | 0 | 2026 | 0 | 0 | 5-8 | 3-1 |
| I | 2026 | 0 | 2026 | 0 | 0 | 5-8 | 3-1 |

**UNFACTORED REACTIONS**

| JT | 1ST LCASE COMBINED | MAX./MIN. COMPONENT REACTIONS SNOW | LIVE | PERM.LIVE | WIND | DEAD | SOIL |
|---|---|---|---|---|---|---|---|
| O | 1414 | 1037 / 0 | 0 / 0 | 0 / 0 | 0 / 0 | 376 / 0 | 0 / 0 |
| I | 1414 | 1037 / 0 | 0 / 0 | 0 / 0 | 0 / 0 | 376 / 0 | 0 / 0 |

BEARING MATERIAL TO BE SPF NO.2 OR BETTER AT JOINT(S) O, I

**BRACING**
TOP CHORD TO BE SHEATHED OR MAX. PURLIN SPACING = 3.50 FT.
MAX. UNBRACED BOTTOM CHORD LENGTH = 10.00 FT OR RIGID CEILING DIRECTLY APPLIED.

ALL PITCH BREAKS AND PERIMETER CORNER JOINTS MUST BE LATERALLY RESTRAINED.

**LOADING**
TOTAL LOAD CASES: (4)

CHORDS

| MEMB. FR-TO | MAX. FACTORED FORCE (LBS) | FACTORED VERT. LOAD LC1 (PLF) FROM | TO | MAX CSI (LC) | MAX. UNBRAC LENGTH |
|---|---|---|---|---|---|
| A- B | 0 / 36 | -119.4 | -119.4 | 0.16 (1) | 10.00 |
| B- C | -2643 / 0 | -119.4 | -119.4 | 0.69 (1) | 3.50 |
| C- D | -2066 / 0 | -119.4 | -119.4 | 0.62 (1) | 3.98 |
| D- E | -1821 / 0 | -119.4 | -119.4 | 0.18 (1) | 4.80 |
| E- F | -2068 / 0 | -119.4 | -119.4 | 0.62 (1) | 3.98 |
| F- G | -2642 / 0 | -119.4 | -119.4 | 0.69 (1) | 3.50 |
| G- H | 0 / 36 | -119.4 | -119.4 | 0.16 (1) | 10.00 |
| O- B | -1979 / 0 | 0.0 | 0.0 | 0.20 (1) | 6.00 |
| I- G | -1978 / 0 | 0.0 | 0.0 | 0.20 (1) | 6.00 |
| O- N | 0 / 0 | -18.2 | -18.2 | 0.16 (4) | 10.00 |
| N- M | 0 / 2398 | -18.2 | -18.2 | 0.45 (1) | 10.00 |
| M- L | 0 / 1819 | -18.2 | -18.2 | 0.35 (1) | 10.00 |
| L- K | 0 / 1819 | -18.2 | -18.2 | 0.35 (1) | 10.00 |
| K- J | 0 / 2397 | -18.2 | -18.2 | 0.45 (1) | 10.00 |
| J- I | 0 / 0 | -18.2 | -18.2 | 0.16 (4) | 10.00 |

WEBS

| MEMB. FR-TO | MAX. FACTORED FORCE (LBS) | MAX CSI (LC) |
|---|---|---|
| N- C | -216 / 53 | 0.06 (1) |
| C- M | -698 / 0 | 0.69 (1) |
| M- D | 0 / 456 | 0.10 (1) |
| D- K | 0 / 4 | 0.00 (1) |
| K- E | 0 / 460 | 0.10 (1) |
| K- F | -696 / 0 | 0.69 (1) |
| J- F | -218 / 52 | 0.06 (1) |
| B- N | 0 / 2421 | 0.54 (1) |
| J- G | 0 / 2421 | 0.54 (1) |

**DESIGN CRITERIA**

SPECIFIED LOADS:

| | | | | |
|---|---|---|---|---|
| TOP CH. | LL | = | 34.8 | PSF |
| | DL | = | 6.0 | PSF |
| BOT CH. | LL | = | 0.0 | PSF |
| | DL | = | 7.3 | PSF |
| TOTAL LOAD | | = | 48.1 | PSF |

**SPACING = 24.0 IN. C/C**

LOADING IN FLAT SECTION BASED ON A SLOPE OF 2.00/12 MINIMUM

THIS TRUSS IS DESIGNED FOR RESIDENTIAL OR SMALL BUILDING REQUIREMENTS OF PART 9, NBCC 2015

THIS DESIGN COMPLIES WITH:
- PART 9 OF BCBC 2018 , NBC-2019AE
- PART 9 OF OBC 2012 (2019 AMENDMENT)
- CSA 086-14
- TPIC 2014

(55 % OF 48.1 P.S.F. G.S.L. PLUS 8.4 P.S.F. RAIN LOAD) EQUALS 34.8 P.S.F. SPECIFIED ROOF LIVE LOAD

ALLOWABLE DEFL.(LL)= L/360 (0.90")
CALCULATED VERT. DEFL.(LL) = L/ 999 (0.11")
ALLOWABLE DEFL.(TL)= L/360 (0.90")
CALCULATED VERT. DEFL.(TL) = L/ 999 (0.20")

CSI: TC=0.69/1.00 (B-C:1) , BC=0.45/1.00 (M-N:1) , WB=0.69/1.00 (C-M:1) , SSI=0.31/1.00 (F-G:1)

DOL LUMBER=1.00 NAIL=1.00 LS BEND=1.10 COMP=1.10 SHEAR=1.10 TENS= 1.10

COMPANION LIVE LOAD FACTOR = 1.00

TRUSS PLATE MANUFACTURER IS NOT RESPONSIBLE FOR QUALITY CONTROL IN THE TRUSS MANUFACTURING PLANT .

NAIL VALUES

| PLATE | GRIP(DRY) (PSI) MAX | MIN | SHEAR (PLI) MAX | MIN | SECTION (PLI) MAX | MIN |
|---|---|---|---|---|---|---|
| MT20 | 650 | 371 | 1747 | 788 | 1987 | 1873 |

PLATE PLACEMENT TOL. = 0.250 inches

PLATE ROTATION TOL. = 5.0 Deg.

JSI GRIP= 0.89 (B) (INPUT = 0.90 )
JSI METAL= 0.68 (N) (INPUT = 1.00 )

LICENSED PROFESSIONAL ENGINEER
N.A. EL-MASRI
PROVINCE OF ONTARIO
Jul 13, 2023

**READ ALL NOTES ON THIS PAGE AND ON THE ENGINEERING NOTES: TRUSSES. THE NOTE PAGE IS AN INTEGRAL PART OF THIS DRAWING AS IT CONTAINS SPECIFICATIONS AND CRITERIA USED IN THE DESIGN OF THIS COMPONENT.**

KOTT

| JOB NAME | TRUSS NAME | QUANTITY | PLY | JOB DESC. | DRWG NO. |
|---|---|---|---|---|---|
| NE0723-072 | T04 | 1 | 1 | TRUSS DESC. | |

CORPORATION OF THE CITY OF OSHAWA
TRUE COPY
OF PERMIT PLANS
Nov 21 2023
PER: C Martin
CHIEF BUILDING OFFICIAL

MHP 23033

Version 8.630 S Mar 22 2023 MiTek Industries, Inc. Thu Jul 13 19:55:55 2023 Page 1
ID:vGgVNALLxpgFINJM6FviHszAhox-Xo24bcmUIw6OtEnGDwpsIMXFyY1OQAD1cMIHL?yyONo

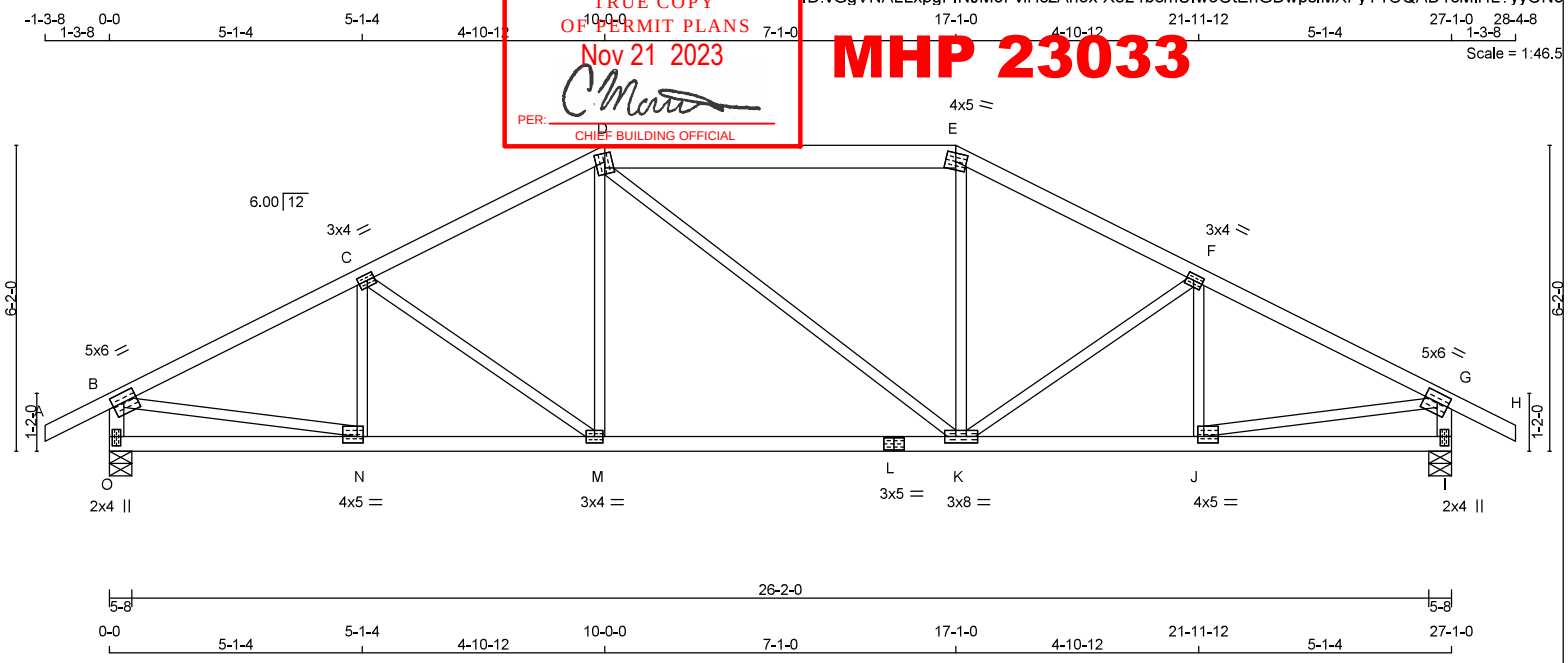


TOTAL WEIGHT = 113 lb
[M][F]

**LUMBER**
N. L. G. A. RULES

| CHORDS | SIZE | | LUMBER | DESCR. |
|---|---|---|---|---|
| A - D | 2x4 | DRY | No.2 | SPF |
| D - E | 2x6 | DRY | No.2 | SPF |
| E - H | 2x4 | DRY | No.2 | SPF |
| O - B | 2x4 | DRY | No.2 | SPF |
| I - G | 2x4 | DRY | No.2 | SPF |
| O - L | 2x4 | DRY | No.2 | SPF |
| L - I | 2x4 | DRY | No.2 | SPF |
| ALL WEBS EXCEPT | 2x3 | DRY | No.2 | SPF |

DRY: SEASONED LUMBER.

**PLATES (table is in inches)**

| JT | TYPE | PLATES | W | LEN | Y | X |
|---|---|---|---|---|---|---|
| B | TMVW-t | MT20 | 5.0 | 6.0 | 2.25 | 2.75 |
| C | TMWW-t | MT20 | 3.0 | 4.0 | 1.50 | 1.75 |
| D | TTWW+m | MT20 | 4.0 | 5.0 | 2.00 | 1.75 |
| E | TTW-m | MT20 | 4.0 | 5.0 | | |
| F | TMWW-t | MT20 | 3.0 | 4.0 | 1.50 | 1.75 |
| G | TMVW-t | MT20 | 5.0 | 6.0 | 2.25 | 2.75 |
| I | BMV1+p | MT20 | 2.0 | 4.0 | 2.25 | 1.00 |
| J | BMWW-t | MT20 | 4.0 | 5.0 | 1.50 | 1.50 |
| K | BMWWW-t | MT20 | 3.0 | 8.0 | | |
| L | BS-t | MT20 | 3.0 | 5.0 | | |
| M | BMWW-t | MT20 | 3.0 | 4.0 | | |
| N | BMWW-t | MT20 | 4.0 | 5.0 | 1.50 | 1.50 |
| O | BMV1+p | MT20 | 2.0 | 4.0 | 2.25 | 1.00 |

**DIMENSIONS, SUPPORTS AND LOADINGS SPECIFIED BY FABRICATOR TO BE VERIFIED BY BUILDING DESIGNER**

**BEARINGS**

| JT | FACTORED GROSS REACTION VERT | HORZ | MAXIMUM FACTORED GROSS REACTION DOWN | HORZ | UPLIFT | INPUT BRG IN-SX | REQRD BRG IN-SX |
|---|---|---|---|---|---|---|---|
| O | 2026 | 0 | 2026 | 0 | 0 | 5-8 | 3-1 |
| I | 2026 | 0 | 2026 | 0 | 0 | 5-8 | 3-1 |

**UNFACTORED REACTIONS**

| JT | 1ST LCASE COMBINED | MAX./MIN. COMPONENT REACTIONS SNOW | LIVE | PERM.LIVE | WIND | DEAD | SOIL |
|---|---|---|---|---|---|---|---|
| O | 1414 | 1037 / 0 | 0 / 0 | 0 / 0 | 0 / 0 | 376 / 0 | 0 / 0 |
| I | 1414 | 1037 / 0 | 0 / 0 | 0 / 0 | 0 / 0 | 376 / 0 | 0 / 0 |

BEARING MATERIAL TO BE SPF NO.2 OR BETTER AT JOINT(S) O, I

**BRACING**
TOP CHORD TO BE SHEATHED OR MAX. PURLIN SPACING = 3.83 FT.
MAX. UNBRACED BOTTOM CHORD LENGTH = 10.00 FT OR RIGID CEILING DIRECTLY APPLIED.

ALL PITCH BREAKS AND PERIMETER CORNER JOINTS MUST BE LATERALLY RESTRAINED.

**LOADING**
TOTAL LOAD CASES: (4)

CHORDS

| MEMB. FR-TO | MAX. FACTORED FORCE (LBS) | FACTORED VERT. LOAD (PLF) FROM | TO | LC1 MAX CSI (LC) | MAX. UNBRAC LENGTH |
|---|---|---|---|---|---|
| A- B | 0 / 36 | -119.4 | -119.4 | 0.16 (1) | 10.00 |
| B- C | -2618 / 0 | -119.4 | -119.4 | 0.47 (1) | 3.83 |
| C- D | -2300 / 0 | -119.4 | -119.4 | 0.44 (1) | 4.07 |
| D- E | -2029 / 0 | -119.4 | -119.4 | 0.40 (1) | 5.19 |
| E- F | -2301 / 0 | -119.4 | -119.4 | 0.44 (1) | 4.07 |
| F- G | -2618 / 0 | -119.4 | -119.4 | 0.47 (1) | 3.83 |
| G- H | 0 / 36 | -119.4 | -119.4 | 0.16 (1) | 10.00 |
| O- B | -1982 / 0 | 0.0 | 0.0 | 0.20 (1) | 5.99 |
| I- G | -1982 / 0 | 0.0 | 0.0 | 0.20 (1) | 5.99 |
| O- N | 0 / 0 | -18.2 | -18.2 | 0.10 (4) | 10.00 |
| N- M | 0 / 2369 | -18.2 | -18.2 | 0.47 (1) | 10.00 |
| M- L | 0 / 2029 | -18.2 | -18.2 | 0.42 (1) | 10.00 |
| L- K | 0 / 2029 | -18.2 | -18.2 | 0.42 (1) | 10.00 |
| K- J | 0 / 2369 | -18.2 | -18.2 | 0.47 (1) | 10.00 |
| J- I | 0 / 0 | -18.2 | -18.2 | 0.10 (4) | 10.00 |

WEBS

| MEMB. FR-TO | MAX. FACTORED FORCE (LBS) | MAX CSI (LC) |
|---|---|---|
| N- C | -317 / 0 | 0.07 (1) |
| C- M | -410 / 0 | 0.24 (1) |
| M- D | 0 / 358 | 0.08 (1) |
| D- K | 0 / 0 | 0.00 (1) |
| K- E | 0 / 359 | 0.08 (1) |
| K- F | -408 / 0 | 0.24 (1) |
| J- F | -318 / 0 | 0.07 (1) |
| B- N | 0 / 2402 | 0.54 (1) |
| J- G | 0 / 2402 | 0.54 (1) |

**DESIGN CRITERIA**

SPECIFIED LOADS:

| | | | | |
|---|---|---|---|---|
| TOP CH. | LL | = | 34.8 | PSF |
| | DL | = | 6.0 | PSF |
| BOT CH. | LL | = | 0.0 | PSF |
| | DL | = | 7.3 | PSF |
| TOTAL LOAD | | = | 48.1 | PSF |

**SPACING = 24.0 IN. C/C**

LOADING IN FLAT SECTION BASED ON A SLOPE OF 2.00/12 MINIMUM

THIS TRUSS IS DESIGNED FOR RESIDENTIAL OR SMALL BUILDING REQUIREMENTS OF PART 9, NBCC 2015

THIS DESIGN COMPLIES WITH:
- PART 9 OF BCBC 2018 , NBC-2019AE
- PART 9 OF OBC 2012 (2019 AMENDMENT)
- CSA 086-14
- TPIC 2014

(55 % OF 48.1 P.S.F. G.S.L. PLUS 8.4 P.S.F. RAIN LOAD) EQUALS 34.8 P.S.F. SPECIFIED ROOF LIVE LOAD

ALLOWABLE DEFL.(LL)= L/360 (0.90")
CALCULATED VERT. DEFL.(LL) = L/ 999 (0.10")
ALLOWABLE DEFL.(TL)= L/360 (0.90")
CALCULATED VERT. DEFL.(TL) = L/ 999 (0.21")

CSI: TC=0.47/1.00 (B-C:1) , BC=0.47/1.00 (J-K:1) , WB=0.54/1.00 (B-N:1) , SSI=0.26/1.00 (F-G:1)

DOL LUMBER=1.00 NAIL=1.00 LS BEND=1.10 COMP=1.10 SHEAR=1.10 TENS= 1.10

COMPANION LIVE LOAD FACTOR = 1.00

TRUSS PLATE MANUFACTURER IS NOT RESPONSIBLE FOR QUALITY CONTROL IN THE TRUSS MANUFACTURING PLANT .

NAIL VALUES

| PLATE | GRIP(DRY) (PSI) MAX | MIN | SHEAR (PLI) MAX | MIN | SECTION (PLI) MAX | MIN |
|---|---|---|---|---|---|---|
| MT20 | 650 | 371 | 1747 | 788 | 1987 | 1873 |

PLATE PLACEMENT TOL. = 0.250 inches

PLATE ROTATION TOL. = 5.0 Deg.

JSI GRIP= 0.90 (D) (INPUT = 0.90 )
JSI METAL= 0.68 (N) (INPUT = 1.00 )

LICENSED PROFESSIONAL ENGINEER
N.A. EL-MASRI
PROVINCE OF ONTARIO
Jul 13, 2023

**READ ALL NOTES ON THIS PAGE AND ON THE ENGINEERING NOTES: TRUSSES. THE NOTE PAGE IS AN INTEGRAL PART OF THIS DRAWING AS IT CONTAINS SPECIFICATIONS AND CRITERIA USED IN THE DESIGN OF THIS COMPONENT.**

KOTT

| JOB NAME | TRUSS NAME | QUANTITY | PLY | JOB DESC. | DRWG NO. |
|---|---|---|---|---|---|
| NE0723-072 | T05 | 1 | 1 | TRUSS DESC. | |

CORPORATION OF THE CITY OF OSHAWA
TRUE COPY
OF PERMIT PLANS
Nov 21 2023
PER:
CHIEF BUILDING OFFICIAL

MHP 23033

Version 8.630 S Mar 22 2023 MiTek Industries, Inc. Thu Jul 13 19:55:56 2023 Page 1
D:vGgVNALLxpgFINJM6FviHszAhox-?_cSoym63EEFVNMSmdK5HZ4PCyOO9dfAr0VrtRyyONn

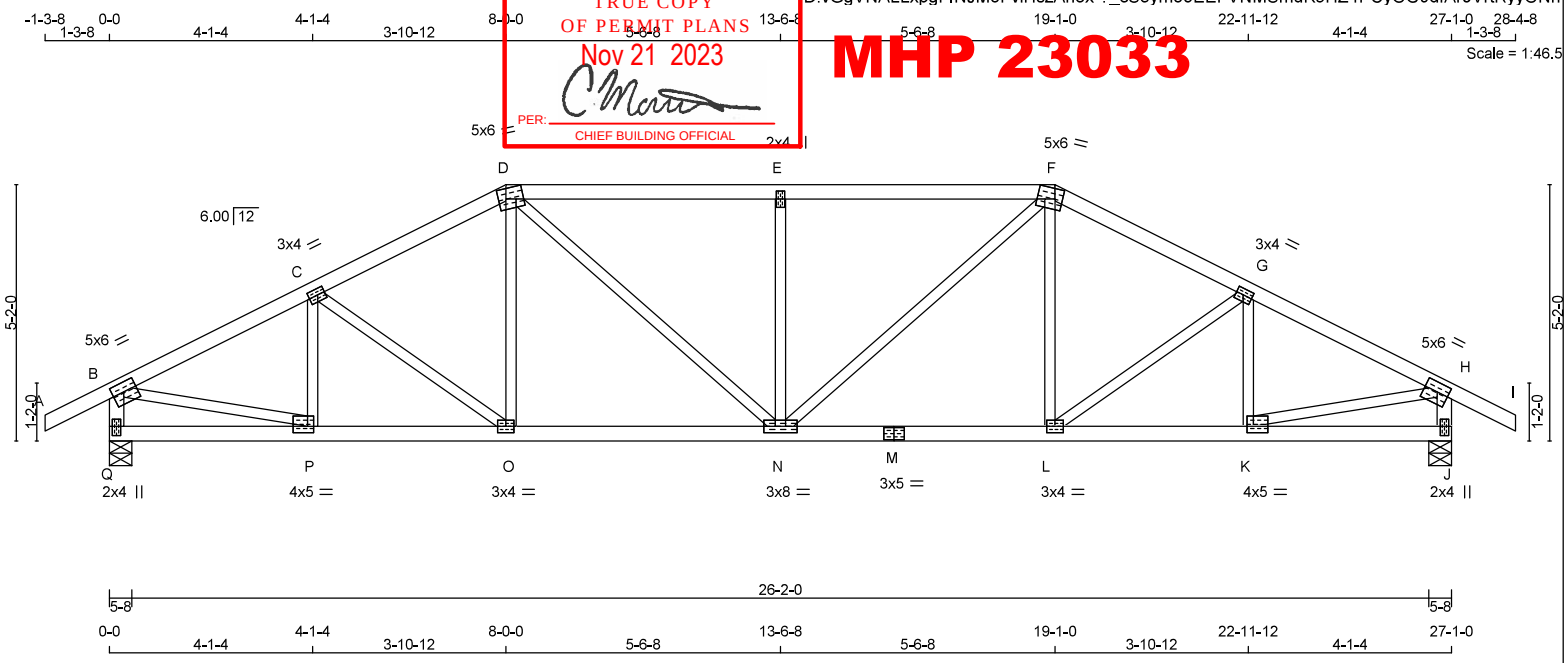


TOTAL WEIGHT = 110 lb
[M][F]

**LUMBER**
N. L. G. A. RULES

| CHORDS | SIZE | | LUMBER | DESCR. |
|---|---|---|---|---|
| A - D | 2x4 | DRY | No.2 | SPF |
| D - F | 2x4 | DRY | No.2 | SPF |
| F - I | 2x4 | DRY | No.2 | SPF |
| Q - B | 2x4 | DRY | No.2 | SPF |
| J - H | 2x4 | DRY | No.2 | SPF |
| Q - M | 2x4 | DRY | No.2 | SPF |
| M - J | 2x4 | DRY | No.2 | SPF |
| ALL WEBS EXCEPT | 2x3 | DRY | No.2 | SPF |

DRY: SEASONED LUMBER.

**PLATES (table is in inches)**

| JT | TYPE | PLATES | W | LEN | Y | X |
|---|---|---|---|---|---|---|
| B | TMVW-t | MT20 | 5.0 | 6.0 | 2.25 | 2.75 |
| C | TMWW-t | MT20 | 3.0 | 4.0 | 1.50 | 1.75 |
| D | TTWW-m | MT20 | 5.0 | 6.0 | 2.50 | 1.75 |
| E | TMW+w | MT20 | 2.0 | 4.0 | | |
| F | TTWW-m | MT20 | 5.0 | 6.0 | 2.50 | 1.75 |
| G | TMWW-t | MT20 | 3.0 | 4.0 | 1.50 | 1.75 |
| H | TMVW-t | MT20 | 5.0 | 6.0 | 2.25 | 2.75 |
| J | BMV1+p | MT20 | 2.0 | 4.0 | 2.25 | 1.00 |
| K | BMWW-t | MT20 | 4.0 | 5.0 | 1.50 | 1.50 |
| L | BMWW-t | MT20 | 3.0 | 4.0 | | |
| M | BS-t | MT20 | 3.0 | 5.0 | | |
| N | BMWWW-t | MT20 | 3.0 | 8.0 | | |
| O | BMWW-t | MT20 | 3.0 | 4.0 | | |
| P | BMWW-t | MT20 | 4.0 | 5.0 | 1.50 | 1.50 |
| Q | BMV1+p | MT20 | 2.0 | 4.0 | 2.25 | 1.00 |

**DIMENSIONS, SUPPORTS AND LOADINGS SPECIFIED BY FABRICATOR TO BE VERIFIED BY BUILDING DESIGNER**

**BEARINGS**

| JT | FACTORED GROSS REACTION VERT | HORZ | MAXIMUM FACTORED GROSS REACTION DOWN | HORZ | UPLIFT | INPUT BRG IN-SX | REQRD BRG IN-SX |
|---|---|---|---|---|---|---|---|
| Q | 2026 | 0 | 2026 | 0 | 0 | 5-8 | 3-1 |
| J | 2026 | 0 | 2026 | 0 | 0 | 5-8 | 3-1 |

**UNFACTORED REACTIONS**

| JT | 1ST LCASE COMBINED | MAX./MIN. COMPONENT REACTIONS SNOW | LIVE | PERM.LIVE | WIND | DEAD | SOIL |
|---|---|---|---|---|---|---|---|
| Q | 1414 | 1037 / 0 | 0 / 0 | 0 / 0 | 0 / 0 | 376 / 0 | 0 / 0 |
| J | 1414 | 1037 / 0 | 0 / 0 | 0 / 0 | 0 / 0 | 376 / 0 | 0 / 0 |

BEARING MATERIAL TO BE SPF NO.2 OR BETTER AT JOINT(S) Q, J

**BRACING**
TOP CHORD TO BE SHEATHED OR MAX. PURLIN SPACING = 3.63 FT.
MAX. UNBRACED BOTTOM CHORD LENGTH = 10.00 FT OR RIGID CEILING DIRECTLY APPLIED.

ALL PITCH BREAKS AND PERIMETER CORNER JOINTS MUST BE LATERALLY RESTRAINED.

**LOADING**
TOTAL LOAD CASES: (4)

CHORDS

| MEMB. FR-TO | MAX. FACTORED FORCE (LBS) | FACTORED VERT. LOAD (PLF) FROM | TO | LC1 MAX CSI (LC) | MAX. UNBRAC LENGTH |
|---|---|---|---|---|---|
| A- B | 0 / 36 | -119.4 | -119.4 | 0.16 (1) | 10.00 |
| B- C | -2549 / 0 | -119.4 | -119.4 | 0.30 (1) | 4.06 |
| C- D | -2446 / 0 | -119.4 | -119.4 | 0.29 (1) | 4.14 |
| D- E | -2685 / 0 | -119.4 | -119.4 | 0.57 (1) | 3.63 |
| E- F | -2685 / 0 | -119.4 | -119.4 | 0.57 (1) | 3.63 |
| F- G | -2446 / 0 | -119.4 | -119.4 | 0.29 (1) | 4.14 |
| G- H | -2549 / 0 | -119.4 | -119.4 | 0.30 (1) | 4.06 |
| H- I | 0 / 36 | -119.4 | -119.4 | 0.16 (1) | 10.00 |
| Q- B | -1988 / 0 | 0.0 | 0.0 | 0.20 (1) | 5.98 |
| J- H | -1988 / 0 | 0.0 | 0.0 | 0.20 (1) | 5.98 |
| Q- P | 0 / 0 | -18.2 | -18.2 | 0.07 (4) | 10.00 |
| P- O | 0 / 2301 | -18.2 | -18.2 | 0.42 (1) | 10.00 |
| O- N | 0 / 2169 | -18.2 | -18.2 | 0.40 (1) | 10.00 |
| N- M | 0 / 2169 | -18.2 | -18.2 | 0.40 (1) | 10.00 |
| M- L | 0 / 2169 | -18.2 | -18.2 | 0.40 (1) | 10.00 |
| L- K | 0 / 2301 | -18.2 | -18.2 | 0.42 (1) | 10.00 |
| K- J | 0 / 0 | -18.2 | -18.2 | 0.07 (4) | 10.00 |

WEBS

| MEMB. FR-TO | MAX. FACTORED FORCE (LBS) | MAX CSI (LC) |
|---|---|---|
| P- C | -419 / 0 | 0.08 (1) |
| C- O | -168 / 0 | 0.07 (1) |
| O- D | 0 / 198 | 0.04 (1) |
| D- N | 0 / 687 | 0.15 (1) |
| N- E | -811 / 0 | 0.32 (1) |
| N- F | 0 / 687 | 0.15 (1) |
| L- F | 0 / 198 | 0.04 (1) |
| L- G | -168 / 0 | 0.07 (1) |
| K- G | -419 / 0 | 0.08 (1) |
| B- P | 0 / 2350 | 0.53 (1) |
| K- H | 0 / 2350 | 0.53 (1) |

**DESIGN CRITERIA**

SPECIFIED LOADS:

| | | | | |
|---|---|---|---|---|
| TOP CH. | LL | = | 34.8 | PSF |
| | DL | = | 6.0 | PSF |
| BOT CH. | LL | = | 0.0 | PSF |
| | DL | = | 7.3 | PSF |
| TOTAL LOAD | | = | 48.1 | PSF |

**SPACING = 24.0 IN. C/C**

LOADING IN FLAT SECTION BASED ON A SLOPE OF 2.00/12 MINIMUM

THIS TRUSS IS DESIGNED FOR RESIDENTIAL OR SMALL BUILDING REQUIREMENTS OF PART 9, NBCC 2015

THIS DESIGN COMPLIES WITH:
- PART 9 OF BCBC 2018 , NBC-2019AE
- PART 9 OF OBC 2012 (2019 AMENDMENT)
- CSA 086-14
- TPIC 2014

(55 % OF 48.1 P.S.F. G.S.L. PLUS 8.4 P.S.F. RAIN LOAD) EQUALS 34.8 P.S.F. SPECIFIED ROOF LIVE LOAD

ALLOWABLE DEFL.(LL)= L/360 (0.90")
CALCULATED VERT. DEFL.(LL) = L/ 999 (0.12")
ALLOWABLE DEFL.(TL)= L/360 (0.90")
CALCULATED VERT. DEFL.(TL) = L/ 999 (0.21")

CSI: TC=0.57/1.00 (D-E:1) , BC=0.42/1.00 (O-P:1) , WB=0.53/1.00 (B-P:1) , SSI=0.32/1.00 (D-E:1)

DOL LUMBER=1.00 NAIL=1.00 LS BEND=1.10 COMP=1.10 SHEAR=1.10 TENS= 1.10

COMPANION LIVE LOAD FACTOR = 1.00

TRUSS PLATE MANUFACTURER IS NOT RESPONSIBLE FOR QUALITY CONTROL IN THE TRUSS MANUFACTURING PLANT .

NAIL VALUES

| PLATE | GRIP(DRY) (PSI) MAX | MIN | SHEAR (PLI) MAX | MIN | SECTION (PLI) MAX | MIN |
|---|---|---|---|---|---|---|
| MT20 | 650 | 371 | 1747 | 788 | 1987 | 1873 |

PLATE PLACEMENT TOL. = 0.250 inches

PLATE ROTATION TOL. = 5.0 Deg.

JSI GRIP= 0.88 (K) (INPUT = 0.90 )
JSI METAL= 0.69 (M) (INPUT = 1.00 )

LICENSED PROFESSIONAL ENGINEER
N.A. EL-MASRI
PROVINCE OF ONTARIO
Jul 13, 2023

**READ ALL NOTES ON THIS PAGE AND ON THE ENGINEERING NOTES: TRUSSES. THE NOTE PAGE IS AN INTEGRAL PART OF THIS DRAWING AS IT CONTAINS SPECIFICATIONS AND CRITERIA USED IN THE DESIGN OF THIS COMPONENT.**

KOTT

| JOB NAME | TRUSS NAME | QUANTITY | PLY | JOB DESC. | DRWG NO. |
|---|---|---|---|---|---|
| NE0723-072 | T06 | 2 | 1 | TRUSS DESC. | |

Version 8.630 S Mar 22 2023 MiTek Industries, Inc. Thu Jul 13 19:55:56 2023 Page 1
ID:vGgVNALLxpgFINJM6FviHszAhox-?_cSoym63EEFVNMSmdK5HZ4QqyPv9faAr0VrtRyyONn

CORPORATION OF THE CITY OF OSHAWA
TRUE COPY
OF PERMIT PLANS
Nov 21 2023
PER: C Martin
CHIEF BUILDING OFFICIAL
MHP 23033

Scale = 1:57.4

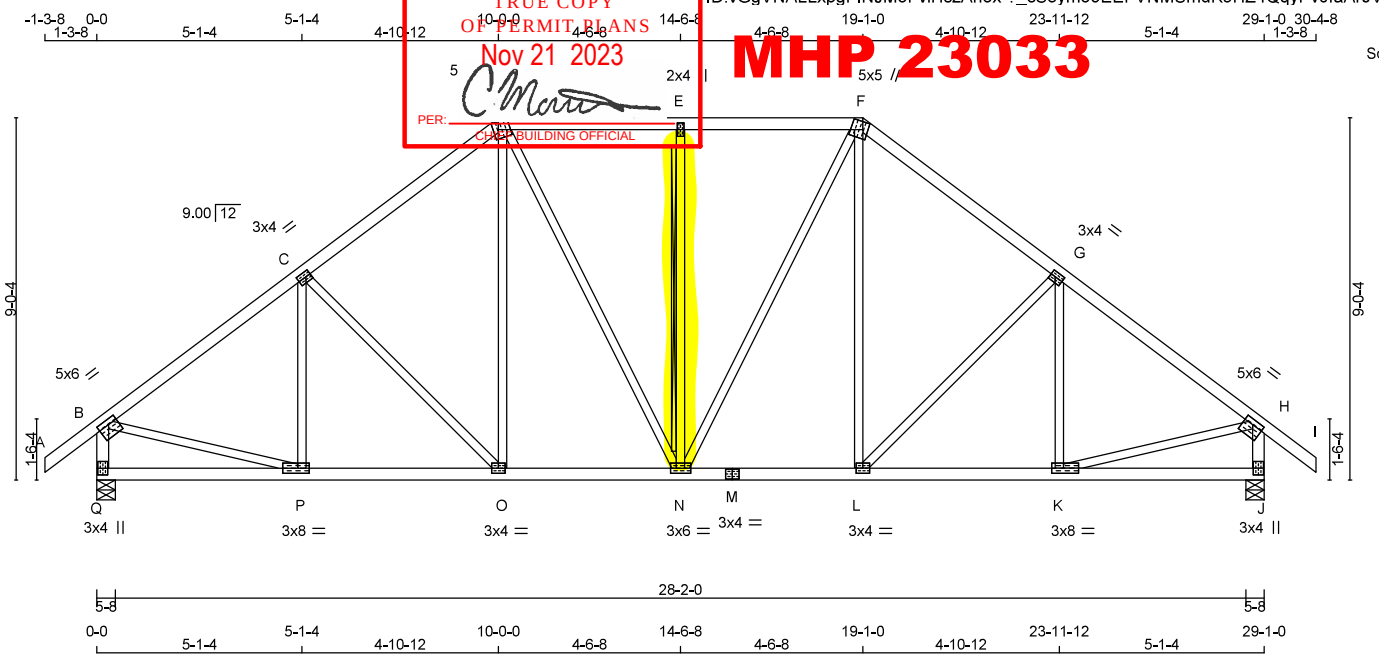


TOTAL WEIGHT = 2 X 141 = 283 lb
[M][F]

**LUMBER**
N. L. G. A. RULES

| CHORDS | SIZE | | LUMBER | DESCR. |
|---|---|---|---|---|
| A - D | 2x4 | DRY | No.2 | SPF |
| D - F | 2x4 | DRY | No.2 | SPF |
| F - I | 2x4 | DRY | No.2 | SPF |
| Q - B | 2x4 | DRY | No.2 | SPF |
| J - H | 2x4 | DRY | No.2 | SPF |
| Q - M | 2x4 | DRY | No.2 | SPF |
| M - J | 2x4 | DRY | No.2 | SPF |
| ALL WEBS EXCEPT | 2x3 | DRY | No.2 | SPF |

DRY: SEASONED LUMBER.

**PLATES (table is in inches)**

| JT | TYPE | PLATES | W | LEN | Y | X |
|---|---|---|---|---|---|---|
| B | TMVW-t | MT20 | 5.0 | 6.0 | 1.50 | 2.75 |
| C | TMWW-t | MT20 | 3.0 | 4.0 | 1.50 | 1.50 |
| D | TTWW+m | MT20 | 5.0 | 5.0 | 2.25 | 1.50 |
| E | TMW+w | MT20 | 2.0 | 4.0 | | |
| F | TTWW+m | MT20 | 5.0 | 5.0 | 2.25 | 1.50 |
| G | TMWW-t | MT20 | 3.0 | 4.0 | 1.50 | 1.50 |
| H | TMVW-t | MT20 | 5.0 | 6.0 | 1.50 | 2.75 |
| J | BMV1+p | MT20 | 3.0 | 4.0 | | |
| K | BMWW-t | MT20 | 3.0 | 8.0 | 1.50 | 3.50 |
| L | BMWW-t | MT20 | 3.0 | 4.0 | | |
| M | BS-t | MT20 | 3.0 | 4.0 | | |
| N | BMWWW-t | MT20 | 3.0 | 6.0 | | |
| O | BMWW-t | MT20 | 3.0 | 4.0 | | |
| P | BMWW-t | MT20 | 3.0 | 8.0 | 1.50 | 3.50 |
| Q | BMV1+p | MT20 | 3.0 | 4.0 | | |

**DIMENSIONS, SUPPORTS AND LOADINGS SPECIFIED BY FABRICATOR TO BE VERIFIED BY BUILDING DESIGNER**

**BEARINGS**

| JT | FACTORED GROSS REACTION VERT | HORZ | MAXIMUM FACTORED GROSS REACTION DOWN | HORZ | UPLIFT | INPUT BRG IN-SX | REQRD BRG IN-SX |
|---|---|---|---|---|---|---|---|
| Q | 2167 | 0 | 2167 | 0 | 0 | 5-8 | 3-9 |
| J | 2167 | 0 | 2167 | 0 | 0 | 5-8 | 3-9 |

**UNFACTORED REACTIONS**

| JT | 1ST LCASE COMBINED | MAX./MIN. COMPONENT REACTIONS SNOW | LIVE | PERM.LIVE | WIND | DEAD | SOIL |
|---|---|---|---|---|---|---|---|
| Q | 1512 | 1108 / 0 | 0 / 0 | 0 / 0 | 0 / 0 | 403 / 0 | 0 / 0 |
| J | 1512 | 1108 / 0 | 0 / 0 | 0 / 0 | 0 / 0 | 403 / 0 | 0 / 0 |

BEARING MATERIAL TO BE SPF NO.2 OR BETTER AT JOINT(S) Q, J

**BRACING**
TOP CHORD TO BE SHEATHED OR MAX. PURLIN SPACING = 4.17 FT.
MAX. UNBRACED BOTTOM CHORD LENGTH = 10.00 FT OR RIGID CEILING DIRECTLY APPLIED.

ALL PITCH BREAKS AND PERIMETER CORNER JOINTS MUST BE LATERALLY RESTRAINED.

2x4 DRY SPF No.2 T-BRACE AT E-N

FASTEN T AND I-BRACES TO NARROW EDGE OF WEB WITH ONE ROW PER PLY OF 3" COMMON WIRE NAILS @ 6" O.C. WITH 3" MINIMUM END DISTANCE. BRACE MUST COVER 90% OF WEB LENGTH.

END VERTICAL(S) MUST BE SHEATHED OR HAVE BRACES AS INDICATED IN THE MAX. UNBRACED LENGTH COLUMN OF THE TABLE BELOW

**LOADING**
TOTAL LOAD CASES: (4)

CHORDS

| MEMB. FR-TO | MAX. FACTORED FORCE (LBS) | FACTORED VERT. LOAD LC1 (PLF) FROM | TO | MAX CSI (LC) | MAX. UNBRAC LENGTH |
|---|---|---|---|---|---|
| A- B | 0 / 49 | -119.4 | -119.4 | 0.16 (1) | 10.00 |
| B- C | -2153 / 0 | -119.4 | -119.4 | 0.46 (1) | 4.17 |
| C- D | -1933 / 0 | -119.4 | -119.4 | 0.44 (1) | 4.39 |
| D- E | -1703 / 0 | -119.4 | -119.4 | 0.34 (1) | 4.74 |
| E- F | -1703 / 0 | -119.4 | -119.4 | 0.34 (1) | 4.74 |
| F- G | -1933 / 0 | -119.4 | -119.4 | 0.44 (1) | 4.39 |
| G- H | -2153 / 0 | -119.4 | -119.4 | 0.46 (1) | 4.17 |
| H- I | 0 / 49 | -119.4 | -119.4 | 0.16 (1) | 10.00 |
| Q- B | -2126 / 0 | 0.0 | 0.0 | 0.22 (1) | 5.81 |
| J- H | -2126 / 0 | 0.0 | 0.0 | 0.22 (1) | 5.81 |
| Q- P | 0 / 0 | -18.2 | -18.2 | 0.11 (4) | 10.00 |
| P- O | 0 / 1756 | -18.2 | -18.2 | 0.33 (1) | 10.00 |
| O- N | 0 / 1512 | -18.2 | -18.2 | 0.29 (1) | 10.00 |
| N- M | 0 / 1512 | -18.2 | -18.2 | 0.29 (1) | 10.00 |
| M- L | 0 / 1512 | -18.2 | -18.2 | 0.29 (1) | 10.00 |
| L- K | 0 / 1756 | -18.2 | -18.2 | 0.33 (1) | 10.00 |
| K- J | 0 / 0 | -18.2 | -18.2 | 0.11 (4) | 10.00 |

WEBS

| MEMB. FR-TO | MAX. FACTORED FORCE (LBS) | MAX CSI (LC) |
|---|---|---|
| P- C | -312 / 6 | 0.13 (1) |
| C- O | -351 / 0 | 0.34 (1) |
| O- D | 0 / 337 | 0.08 (1) |
| D- N | 0 / 413 | 0.09 (1) |
| N- E | -656 / 0 | 0.39 (1) |
| N- F | 0 / 413 | 0.09 (1) |
| L- F | 0 / 337 | 0.08 (1) |
| L- G | -351 / 0 | 0.34 (1) |
| K- G | -312 / 6 | 0.13 (1) |
| B- P | 0 / 1803 | 0.41 (1) |
| K- H | 0 / 1803 | 0.41 (1) |

**DESIGN CRITERIA**

SPECIFIED LOADS:

| | | | | |
|---|---|---|---|---|
| TOP CH. | LL | = | 34.8 | PSF |
| | DL | = | 6.0 | PSF |
| BOT CH. | LL | = | 0.0 | PSF |
| | DL | = | 7.3 | PSF |
| TOTAL LOAD | | = | 48.1 | PSF |

**SPACING = 24.0 IN. C/C**

LOADING IN FLAT SECTION BASED ON A SLOPE OF 2.00/12 MINIMUM

THIS TRUSS IS DESIGNED FOR RESIDENTIAL OR SMALL BUILDING REQUIREMENTS OF PART 9, NBCC 2015

THIS DESIGN COMPLIES WITH:
- PART 9 OF BCBC 2018 , NBC-2019AE
- PART 9 OF OBC 2012 (2019 AMENDMENT)
- CSA 086-14
- TPIC 2014

(55 % OF 48.1 P.S.F. G.S.L. PLUS 8.4 P.S.F. RAIN LOAD) EQUALS 34.8 P.S.F. SPECIFIED ROOF LIVE LOAD

ALLOWABLE DEFL.(LL)= L/360 (0.97")
CALCULATED VERT. DEFL.(LL) = L/ 999 (0.07")
ALLOWABLE DEFL.(TL)= L/360 (0.97")
CALCULATED VERT. DEFL.(TL) = L/ 999 (0.12")

CSI: TC=0.46/1.00 (G-H:1) , BC=0.33/1.00 (O-P:1) , WB=0.41/1.00 (B-P:1) , SSI=0.26/1.00 (D-E:1)

DOL LUMBER=1.00 NAIL=1.00 LS BEND=1.10 COMP=1.10 SHEAR=1.10 TENS= 1.10

COMPANION LIVE LOAD FACTOR = 1.00

TRUSS PLATE MANUFACTURER IS NOT RESPONSIBLE FOR QUALITY CONTROL IN THE TRUSS MANUFACTURING PLANT .

NAIL VALUES

| PLATE | GRIP(DRY) (PSI) MAX | MIN | SHEAR (PLI) MAX | MIN | SECTION (PLI) MAX | MIN |
|---|---|---|---|---|---|---|
| MT20 | 650 | 371 | 1747 | 788 | 1987 | 1873 |

PLATE PLACEMENT TOL. = 0.250 inches

PLATE ROTATION TOL. = 5.0 Deg.

JSI GRIP= 0.87 (N) (INPUT = 0.90 )
JSI METAL= 0.58 (H) (INPUT = 1.00 )

LICENSED PROFESSIONAL ENGINEER
N.A. EL-MASRI
PROVINCE OF ONTARIO
Jul 13, 2023

**READ ALL NOTES ON THIS PAGE AND ON THE ENGINEERING NOTES: TRUSSES. THE NOTE PAGE IS AN INTEGRAL PART OF THIS DRAWING AS IT CONTAINS SPECIFICATIONS AND CRITERIA USED IN THE DESIGN OF THIS COMPONENT.**

KOTT

| JOB NAME | TRUSS NAME | QUANTITY | PLY | JOB DESC. | DRWG NO. |
|---|---|---|---|---|---|
| NE0723-072 | T07 | 2 | 1 | TRUSS DESC. | |

Version 8.630 S Mar 22 2023 MiTek Industries, Inc. Thu Jul 13 19:55:57 2023 Page 1
D:vGgVNALLxpgFINJM6FviHszAhox-TAAq0InkqXM57XxeKLsKqndXHMkwuzoK3gEOPuyyONm

CORPORATION OF THE CITY OF OSHAWA
TRUE COPY
OF PERMIT PLANS
Nov 21 2023
PER: C Marr
CHIEF BUILDING OFFICIAL

MHP 23033

Scale = 1:50.2

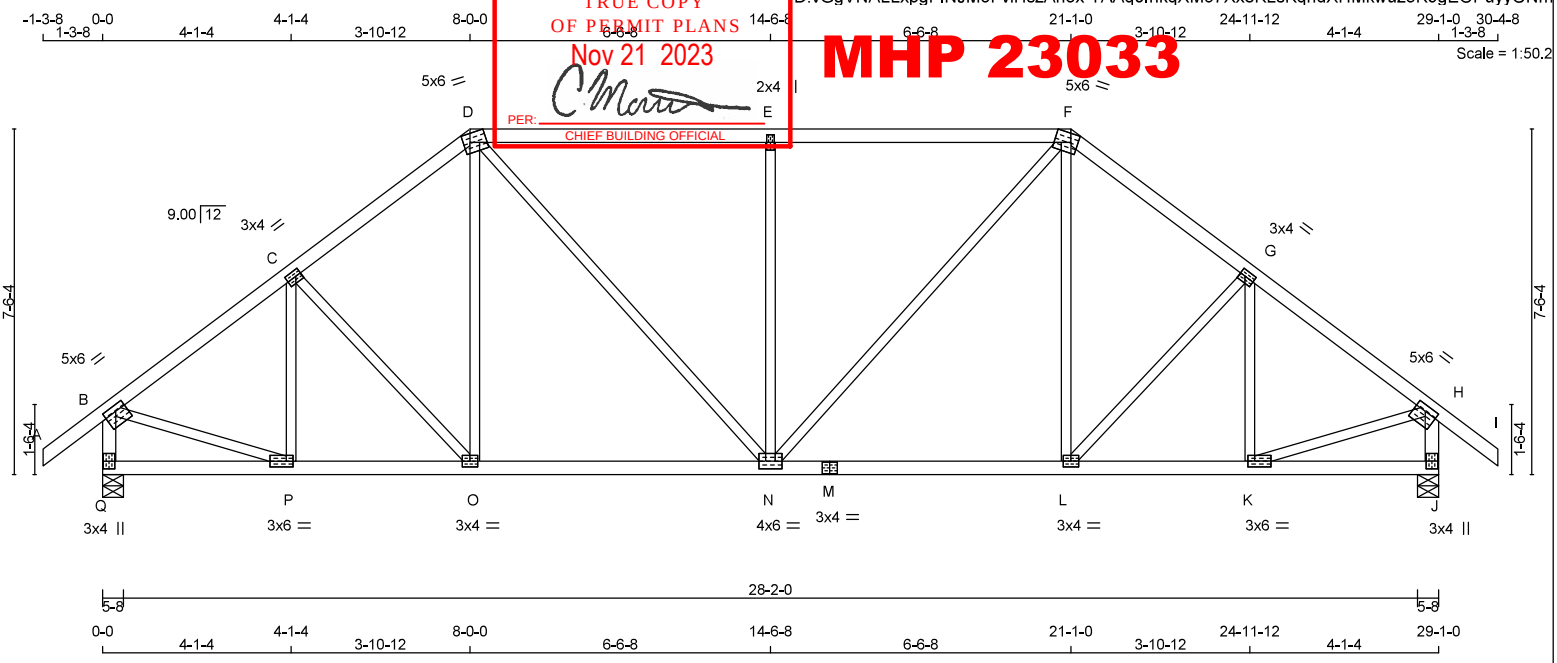


TOTAL WEIGHT = 2 X 132 = 263 lb
[M][F]

**LUMBER**
N. L. G. A. RULES

| CHORDS | SIZE | | LUMBER | DESCR. |
|---|---|---|---|---|
| A - D | 2x4 | DRY | No.2 | SPF |
| D - F | 2x4 | DRY | No.2 | SPF |
| F - I | 2x4 | DRY | No.2 | SPF |
| Q - B | 2x4 | DRY | No.2 | SPF |
| J - H | 2x4 | DRY | No.2 | SPF |
| Q - M | 2x4 | DRY | No.2 | SPF |
| M - J | 2x4 | DRY | No.2 | SPF |
| ALL WEBS EXCEPT | 2x3 | DRY | No.2 | SPF |

DRY: SEASONED LUMBER.

**PLATES (table is in inches)**

| JT | TYPE | PLATES | W | LEN | Y | X |
|---|---|---|---|---|---|---|
| B | TMVW-t | MT20 | 5.0 | 6.0 | 1.50 | 2.75 |
| C | TMWW-t | MT20 | 3.0 | 4.0 | 1.50 | 1.50 |
| D | TTWW-m | MT20 | 5.0 | 6.0 | Edge | 4.25 |
| E | TMW+w | MT20 | 2.0 | 4.0 | | |
| F | TTWW-m | MT20 | 5.0 | 6.0 | Edge | 4.25 |
| G | TMWW-t | MT20 | 3.0 | 4.0 | 1.50 | 1.50 |
| H | TMVW-t | MT20 | 5.0 | 6.0 | 1.50 | 2.75 |
| J | BMV1+p | MT20 | 3.0 | 4.0 | | |
| K | BMWW-t | MT20 | 3.0 | 6.0 | 1.50 | 1.75 |
| L | BMWW-t | MT20 | 3.0 | 4.0 | | |
| M | BS-t | MT20 | 3.0 | 4.0 | | |
| N | BMWWW-t | MT20 | 4.0 | 6.0 | | |
| O | BMWW-t | MT20 | 3.0 | 4.0 | | |
| P | BMWW-t | MT20 | 3.0 | 6.0 | 1.50 | 1.75 |
| Q | BMV1+p | MT20 | 3.0 | 4.0 | | |

Edge - INDICATES REFERENCE CORNER OF PLATE TOUCHES EDGE OF CHORD.

**DIMENSIONS, SUPPORTS AND LOADINGS SPECIFIED BY FABRICATOR TO BE VERIFIED BY BUILDING DESIGNER**

**BEARINGS**

| JT | FACTORED GROSS REACTION VERT | HORZ | MAXIMUM FACTORED GROSS REACTION DOWN | HORZ | UPLIFT | INPUT BRG IN-SX | REQRD BRG IN-SX |
|---|---|---|---|---|---|---|---|
| Q | 2167 | 0 | 2167 | 0 | 0 | 5-8 | 3-9 |
| J | 2167 | 0 | 2167 | 0 | 0 | 5-8 | 3-9 |

**UNFACTORED REACTIONS**

| JT | 1ST LCASE COMBINED | MAX./MIN. COMPONENT REACTIONS SNOW | LIVE | PERM.LIVE | WIND | DEAD | SOIL |
|---|---|---|---|---|---|---|---|
| Q | 1512 | 1108 / 0 | 0 / 0 | 0 / 0 | 0 / 0 | 403 / 0 | 0 / 0 |
| J | 1512 | 1108 / 0 | 0 / 0 | 0 / 0 | 0 / 0 | 403 / 0 | 0 / 0 |

BEARING MATERIAL TO BE SPF NO.2 OR BETTER AT JOINT(S) Q, J

**BRACING**
TOP CHORD TO BE SHEATHED OR MAX. PURLIN SPACING = 3.67 FT.
MAX. UNBRACED BOTTOM CHORD LENGTH = 10.00 FT OR RIGID CEILING DIRECTLY APPLIED.

ALL PITCH BREAKS AND PERIMETER CORNER JOINTS MUST BE LATERALLY RESTRAINED.

**LOADING**
TOTAL LOAD CASES: (4)

CHORDS

| MEMB. FR-TO | MAX. FACTORED FORCE (LBS) | VERT. LOAD (PLF) FROM | TO | LC1 MAX CSI (LC) | MAX. UNBRAC LENGTH |
|---|---|---|---|---|---|
| A- B | 0 / 49 | -119.4 | -119.4 | 0.16 (1) | 10.00 |
| B- C | -2100 / 0 | -119.4 | -119.4 | 0.30 (1) | 4.42 |
| C- D | -2057 / 0 | -119.4 | -119.4 | 0.29 (1) | 4.46 |
| D- E | -2107 / 0 | -119.4 | -119.4 | 0.74 (1) | 3.67 |
| E- F | -2107 / 0 | -119.4 | -119.4 | 0.74 (1) | 3.67 |
| F- G | -2057 / 0 | -119.4 | -119.4 | 0.29 (1) | 4.46 |
| G- H | -2100 / 0 | -119.4 | -119.4 | 0.30 (1) | 4.42 |
| H- I | 0 / 49 | -119.4 | -119.4 | 0.16 (1) | 10.00 |
| Q- B | -2131 / 0 | 0.0 | 0.0 | 0.22 (1) | 5.81 |
| J- H | -2131 / 0 | 0.0 | 0.0 | 0.22 (1) | 5.81 |
| Q- P | 0 / 0 | -18.2 | -18.2 | 0.07 (4) | 10.00 |
| P- O | 0 / 1706 | -18.2 | -18.2 | 0.34 (1) | 10.00 |
| O- N | 0 / 1618 | -18.2 | -18.2 | 0.34 (1) | 10.00 |
| N- M | 0 / 1618 | -18.2 | -18.2 | 0.34 (1) | 10.00 |
| M- L | 0 / 1618 | -18.2 | -18.2 | 0.34 (1) | 10.00 |
| L- K | 0 / 1706 | -18.2 | -18.2 | 0.34 (1) | 10.00 |
| K- J | 0 / 0 | -18.2 | -18.2 | 0.07 (4) | 10.00 |

WEBS

| MEMB. FR-TO | MAX. FACTORED FORCE (LBS) | MAX CSI (LC) |
|---|---|---|
| P- C | -431 / 0 | 0.13 (1) |
| C- O | -133 / 0 | 0.08 (1) |
| O- D | 0 / 202 | 0.05 (1) |
| D- N | 0 / 729 | 0.16 (1) |
| N- E | -959 / 0 | 0.98 (1) |
| N- F | 0 / 729 | 0.16 (1) |
| L- F | 0 / 202 | 0.05 (1) |
| L- G | -133 / 0 | 0.08 (1) |
| K- G | -431 / 0 | 0.13 (1) |
| B- P | 0 / 1776 | 0.40 (1) |
| K- H | 0 / 1776 | 0.40 (1) |

**DESIGN CRITERIA**

SPECIFIED LOADS:

| | | | | |
|---|---|---|---|---|
| TOP CH. | LL | = | 34.8 | PSF |
| | DL | = | 6.0 | PSF |
| BOT CH. | LL | = | 0.0 | PSF |
| | DL | = | 7.3 | PSF |
| TOTAL LOAD | | = | 48.1 | PSF |

**SPACING = 24.0 IN. C/C**

LOADING IN FLAT SECTION BASED ON A SLOPE OF 2.00/12 MINIMUM

THIS TRUSS IS DESIGNED FOR RESIDENTIAL OR SMALL BUILDING REQUIREMENTS OF PART 9, NBCC 2015

THIS DESIGN COMPLIES WITH:
- PART 9 OF BCBC 2018 , NBC-2019AE
- PART 9 OF OBC 2012 (2019 AMENDMENT)
- CSA 086-14
- TPIC 2014

(55 % OF 48.1 P.S.F. G.S.L. PLUS 8.4 P.S.F. RAIN LOAD) EQUALS 34.8 P.S.F. SPECIFIED ROOF LIVE LOAD

ALLOWABLE DEFL.(LL)= L/360 (0.97")
CALCULATED VERT. DEFL.(LL) = L/ 999 (0.08")
ALLOWABLE DEFL.(TL)= L/360 (0.97")
CALCULATED VERT. DEFL.(TL) = L/ 999 (0.15")

CSI: TC=0.74/1.00 (D-E:1) , BC=0.34/1.00 (O-P:1) , WB=0.98/1.00 (E-N:1) , SSI=0.38/1.00 (D-E:1)

DOL LUMBER=1.00 NAIL=1.00 LS BEND=1.10 COMP=1.10 SHEAR=1.10 TENS= 1.10

COMPANION LIVE LOAD FACTOR = 1.00

TRUSS PLATE MANUFACTURER IS NOT RESPONSIBLE FOR QUALITY CONTROL IN THE TRUSS MANUFACTURING PLANT .

NAIL VALUES

| PLATE | GRIP(DRY) (PSI) MAX | MIN | SHEAR (PLI) MAX | MIN | SECTION (PLI) MAX | MIN |
|---|---|---|---|---|---|---|
| MT20 | 650 | 371 | 1747 | 788 | 1987 | 1873 |

PLATE PLACEMENT TOL. = 0.250 inches

PLATE ROTATION TOL. = 5.0 Deg.

JSI GRIP= 0.90 (K) (INPUT = 0.90 )
JSI METAL= 0.56 (H) (INPUT = 1.00 )

LICENSED PROFESSIONAL ENGINEER
N.A. EL-MASRI
PROVINCE OF ONTARIO
Jul 13, 2023

**READ ALL NOTES ON THIS PAGE AND ON THE ENGINEERING NOTES: TRUSSES. THE NOTE PAGE IS AN INTEGRAL PART OF THIS DRAWING AS IT CONTAINS SPECIFICATIONS AND CRITERIA USED IN THE DESIGN OF THIS COMPONENT.**

KOTT

| JOB NAME | TRUSS NAME | QUANTITY | PLY | JOB DESC. | DRWG NO. |
|---|---|---|---|---|---|
| NE0723-072 | T08 | 2 | 1 | TRUSS DESC. | |

CORPORATION OF THE CITY OF OSHAWA
TRUE COPY
OF PERMIT PLANS
Nov 21 2023
PER: C Martin
CHIEF BUILDING OFFICIAL

MHP 23033

Version 8.630 S Mar 22 2023 MiTek Industries, Inc. Thu Jul 13 19:55:58 2023 Page 1
ID:vGgVNALLxpgFINJM6FviHszAhox-xNkDDeoMarUykhWqu2NZM_9jbm2IdZvTIK_xyKyyONI

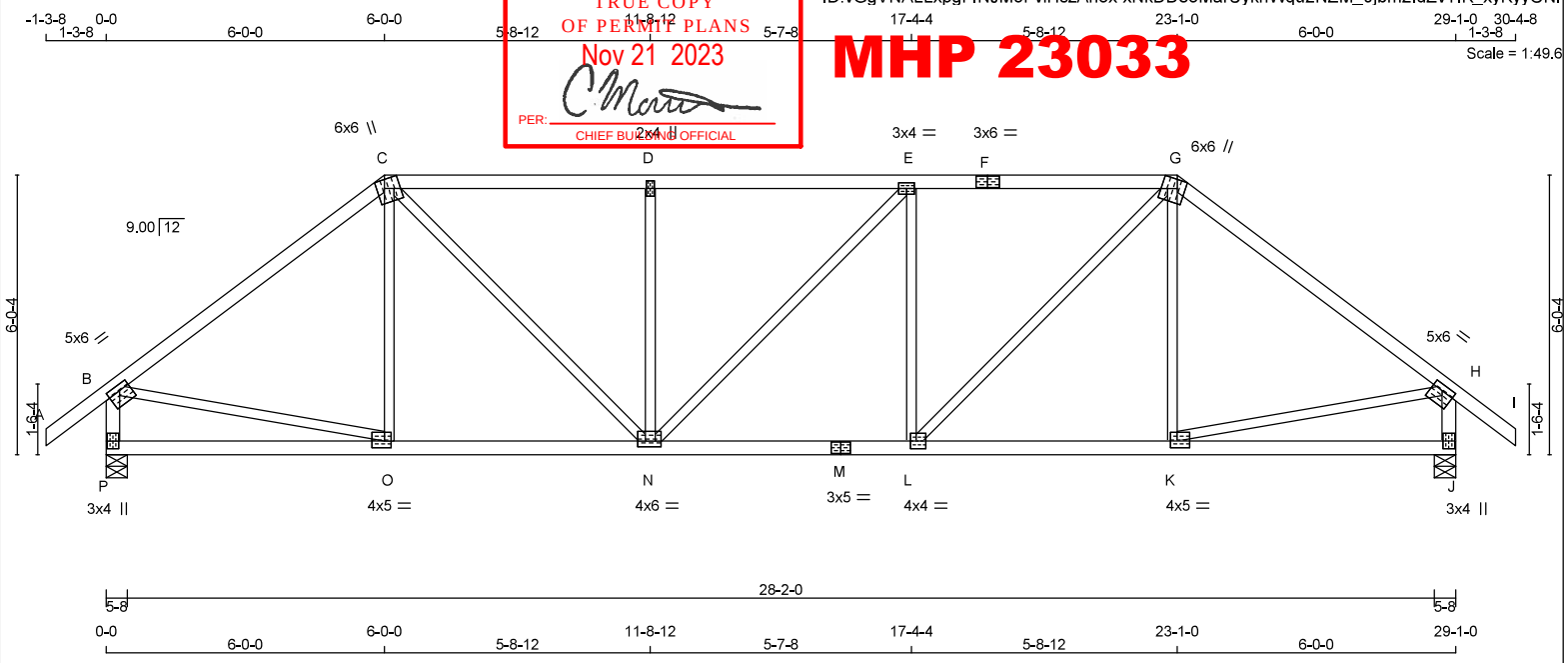


28-2-0
5-8 5-8
0-0 6-0-0 6-0-0 5-8-12 11-8-12 5-7-8 17-4-4 5-8-12 23-1-0 6-0-0 29-1-0

TOTAL WEIGHT = 2 X 122 = 245 lb [M]

**LUMBER**
N. L. G. A. RULES

| CHORDS | SIZE | | LUMBER | DESCR. |
|---|---|---|---|---|
| A - C | 2x4 | DRY | 2100F 1.8E | SPF |
| C - F | 2x4 | DRY | No.2 | SPF |
| F - G | 2x4 | DRY | No.2 | SPF |
| G - I | 2x4 | DRY | 2100F 1.8E | SPF |
| P - B | 2x4 | DRY | No.2 | SPF |
| J - H | 2x4 | DRY | No.2 | SPF |
| P - M | 2x4 | DRY | No.2 | SPF |
| M - J | 2x4 | DRY | No.2 | SPF |
| ALL WEBS EXCEPT | 2x3 | DRY | No.2 | SPF |

DRY: SEASONED LUMBER.

**PLATES (table is in inches)**

| JT | TYPE | PLATES | W | LEN | Y | X |
|---|---|---|---|---|---|---|
| B | TMVW-t | MT20 | 5.0 | 6.0 | 1.50 | 2.75 |
| C | TTWW+m | MT20 | 6.0 | 6.0 | Edge | 2.00 |
| D | TMW+w | MT20 | 2.0 | 4.0 | | |
| E | TMWW-t | MT20 | 3.0 | 4.0 | | |
| F | TS-t | MT20 | 3.0 | 6.0 | | |
| G | TTWW+m | MT20 | 6.0 | 6.0 | Edge | 2.00 |
| H | TMVW-t | MT20 | 5.0 | 6.0 | 1.50 | 2.75 |
| J | BMV1+p | MT20 | 3.0 | 4.0 | | |
| K | BMWW-t | MT20 | 4.0 | 5.0 | 1.75 | 1.75 |
| L | BMWW-t | MT20 | 4.0 | 4.0 | 2.00 | 1.50 |
| M | BS-t | MT20 | 3.0 | 5.0 | | |
| N | BMWWW-t | MT20 | 4.0 | 6.0 | 1.50 | 2.00 |
| O | BMWW-t | MT20 | 4.0 | 5.0 | 1.75 | 1.75 |
| P | BMV1+p | MT20 | 3.0 | 4.0 | | |

Edge - INDICATES REFERENCE CORNER OF PLATE TOUCHES EDGE OF CHORD.

**DIMENSIONS, SUPPORTS AND LOADINGS SPECIFIED BY FABRICATOR TO BE VERIFIED BY BUILDING DESIGNER**

**BEARINGS**

| JT | FACTORED GROSS REACTION VERT | HORZ | MAXIMUM FACTORED GROSS REACTION DOWN | HORZ | UPLIFT | INPUT BRG IN-SX | REQRD BRG IN-SX |
|---|---|---|---|---|---|---|---|
| P | 2167 | 0 | 2167 | 0 | 0 | 5-8 | 3-9 |
| J | 2167 | 0 | 2167 | 0 | 0 | 5-8 | 3-9 |

**UNFACTORED REACTIONS**

| JT | 1ST LCASE COMBINED | MAX./MIN. COMPONENT REACTIONS SNOW | LIVE | PERM.LIVE | WIND | DEAD | SOIL |
|---|---|---|---|---|---|---|---|
| P | 1512 | 1108 / 0 | 0 / 0 | 0 / 0 | 0 / 0 | 403 / 0 | 0 / 0 |
| J | 1512 | 1108 / 0 | 0 / 0 | 0 / 0 | 0 / 0 | 403 / 0 | 0 / 0 |

BEARING MATERIAL TO BE SPF NO.2 OR BETTER AT JOINT(S) P, J

**BRACING**
TOP CHORD TO BE SHEATHED OR MAX. PURLIN SPACING = 3.56 FT.
MAX. UNBRACED BOTTOM CHORD LENGTH = 10.00 FT OR RIGID CEILING DIRECTLY APPLIED.

ALL PITCH BREAKS AND PERIMETER CORNER JOINTS MUST BE LATERALLY RESTRAINED.

**LOADING**
TOTAL LOAD CASES: (4)

CHORDS

| MEMB. FR-TO | MAX. FACTORED FORCE (LBS) | FACTORED VERT. LOAD (PLF) FROM | TO | LC1 | MAX CSI (LC) | MAX. UNBRAC LENGTH |
|---|---|---|---|---|---|---|
| A- B | 0 / 49 | -119.4 | -119.4 | 0.11 (1) | 10.00 | |
| B- C | -2110 / 0 | -119.4 | -119.4 | 0.60 (1) | 4.85 | |
| C- D | -2515 / 0 | -119.4 | -119.4 | 0.70 (1) | 3.56 | |
| D- E | -2515 / 0 | -119.4 | -119.4 | 0.70 (1) | 3.56 | |
| E- F | -2517 / 0 | -119.4 | -119.4 | 0.70 (1) | 3.57 | |
| F- G | -2517 / 0 | -119.4 | -119.4 | 0.70 (1) | 3.57 | |
| G- H | -2110 / 0 | -119.4 | -119.4 | 0.60 (1) | 4.85 | |
| H- I | 0 / 49 | -119.4 | -119.4 | 0.11 (1) | 10.00 | |
| P- B | -2122 / 0 | 0.0 | 0.0 | 0.22 (1) | 5.82 | |
| J- H | -2122 / 0 | 0.0 | 0.0 | 0.22 (1) | 5.82 | |
| P- O | 0 / 0 | -18.2 | -18.2 | 0.16 (4) | 10.00 | |
| O- N | 0 / 1682 | -18.2 | -18.2 | 0.36 (1) | 10.00 | |
| N- M | 0 / 2516 | -18.2 | -18.2 | 0.46 (1) | 10.00 | |
| M- L | 0 / 2516 | -18.2 | -18.2 | 0.46 (1) | 10.00 | |
| L- K | 0 / 1682 | -18.2 | -18.2 | 0.36 (1) | 10.00 | |
| K- J | 0 / 0 | -18.2 | -18.2 | 0.16 (4) | 10.00 | |

WEBS

| MEMB. FR-TO | MAX. FACTORED FORCE (LBS) | MAX CSI (LC) |
|---|---|---|
| O- C | -205 / 46 | 0.12 (1) |
| C- N | 0 / 1177 | 0.26 (1) |
| N- D | -735 / 0 | 0.42 (1) |
| N- E | 0 / 0 | 0.00 (1) |
| L- E | -733 / 0 | 0.41 (1) |
| L- G | 0 / 1178 | 0.27 (1) |
| K- G | -207 / 46 | 0.12 (1) |
| B- O | 0 / 1718 | 0.39 (1) |
| K- H | 0 / 1717 | 0.39 (1) |

**DESIGN CRITERIA**

SPECIFIED LOADS:

| | | | | |
|---|---|---|---|---|
| TOP CH. | LL = | 34.8 | PSF |
| | DL = | 6.0 | PSF |
| BOT CH. | LL = | 0.0 | PSF |
| | DL = | 7.3 | PSF |
| TOTAL LOAD | = | 48.1 | PSF |

**SPACING = 24.0 IN. C/C**

LOADING IN FLAT SECTION BASED ON A SLOPE OF 2.00/12 MINIMUM

THIS TRUSS IS DESIGNED FOR RESIDENTIAL OR SMALL BUILDING REQUIREMENTS OF PART 9, NBCC 2015

THIS DESIGN COMPLIES WITH:
- PART 9 OF BCBC 2018 , NBC-2019AE
- PART 9 OF OBC 2012 (2019 AMENDMENT)
- CSA 086-14
- TPIC 2014

(55 % OF 48.1 P.S.F. G.S.L. PLUS 8.4 P.S.F. RAIN LOAD) EQUALS 34.8 P.S.F. SPECIFIED ROOF LIVE LOAD

ALLOWABLE DEFL.(LL)= L/360 (0.97")
CALCULATED VERT. DEFL.(LL) = L/ 999 (0.11")
ALLOWABLE DEFL.(TL)= L/360 (0.97")
CALCULATED VERT. DEFL.(TL) = L/ 999 (0.20")

CSI: TC=0.70/1.00 (C-D:1) , BC=0.46/1.00 (L-N:1) , WB=0.42/1.00 (D-N:1) , SSI=0.32/1.00 (C-D:1)

DOL LUMBER=1.00 NAIL=1.00 LS BEND=1.10 COMP=1.10 SHEAR=1.10 TENS= 1.10

COMPANION LIVE LOAD FACTOR = 1.00

TRUSS PLATE MANUFACTURER IS NOT RESPONSIBLE FOR QUALITY CONTROL IN THE TRUSS MANUFACTURING PLANT .

NAIL VALUES

| PLATE | GRIP(DRY) (PSI) MAX | MIN | SHEAR (PLI) MAX | MIN | SECTION (PLI) MAX | MIN |
|---|---|---|---|---|---|---|
| MT20 | 650 | 371 | 1747 | 788 | 1987 | 1873 |

PLATE PLACEMENT TOL. = 0.250 inches

PLATE ROTATION TOL. = 5.0 Deg.

JSI GRIP= 0.90 (M) (INPUT = 0.90 )
JSI METAL= 0.77 (M) (INPUT = 1.00 )

LICENSED PROFESSIONAL ENGINEER
N.A. EL-MASRI
PROVINCE OF ONTARIO
Jul 13, 2023

**READ ALL NOTES ON THIS PAGE AND ON THE ENGINEERING NOTES: TRUSSES. THE NOTE PAGE IS AN INTEGRAL PART OF THIS DRAWING AS IT CONTAINS SPECIFICATIONS AND CRITERIA USED IN THE DESIGN OF THIS COMPONENT.**

KOTT

| JOB NAME | TRUSS NAME | QUANTITY | PLY | JOB DESC. | DRWG NO. |
|---|---|---|---|---|---|
| NE0723-072 | T09 | 2 | 1 | TRUSS DESC. | |

Version 8.630 S Mar 22 2023 MiTek Industries, Inc. Thu Jul 13 19:55:59 2023 Page 1
ID:vGgVNALLxpgFINJM6FviHszAhox-PZIbQ_p?L9cpMr41SmuovCi_UATCM5BcXzkVUmyyONk

CORPORATION OF THE CITY OF OSHAWA
TRUE COPY
OF PERMIT PLANS
Nov 21 2023
PER: C Martin
CHIEF BUILDING OFFICIAL

MHP 23033

Scale = 1:34.4

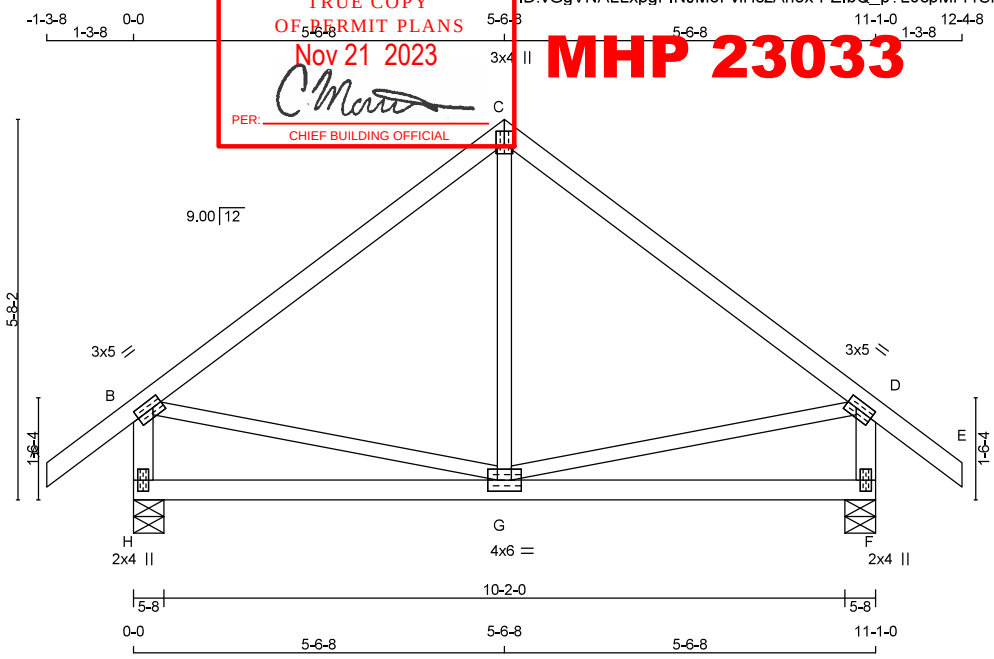


TOTAL WEIGHT = 2 X 48 = 95 lb

**LUMBER**
N. L. G. A. RULES

| CHORDS | SIZE | | LUMBER | DESCR. |
|---|---|---|---|---|
| A - C | 2x4 | DRY | 2100F 1.8E | SPF |
| C - E | 2x4 | DRY | 2100F 1.8E | SPF |
| H - B | 2x4 | DRY | No.2 | SPF |
| F - D | 2x4 | DRY | No.2 | SPF |
| H - F | 2x4 | DRY | No.2 | SPF |
| ALL WEBS EXCEPT | 2x3 | DRY | No.2 | SPF |

DRY: SEASONED LUMBER.

**PLATES (table is in inches)**

| JT | TYPE | PLATES | W | LEN | Y | X |
|---|---|---|---|---|---|---|
| B | TMVW-t | MT20 | 3.0 | 5.0 | 1.50 | 1.75 |
| C | TTW+p | MT20 | 3.0 | 4.0 | 2.25 | 1.50 |
| D | TMVW-t | MT20 | 3.0 | 5.0 | 1.50 | 1.75 |
| F | BMV1+p | MT20 | 2.0 | 4.0 | | |
| G | BMWWW-t | MT20 | 4.0 | 6.0 | | |
| H | BMV1+p | MT20 | 2.0 | 4.0 | | |

**DIMENSIONS, SUPPORTS AND LOADINGS SPECIFIED BY FABRICATOR TO BE VERIFIED BY BUILDING DESIGNER**

**BEARINGS**

| JT | FACTORED GROSS REACTION VERT | HORZ | MAXIMUM FACTORED GROSS REACTION DOWN | HORZ | UPLIFT | INPUT BRG IN-SX | REQRD BRG IN-SX |
|---|---|---|---|---|---|---|---|
| H | 928 | 0 | 928 | 0 | 0 | 5-8 | 1-8 |
| F | 928 | 0 | 928 | 0 | 0 | 5-8 | 1-8 |

**UNFACTORED REACTIONS**

| JT | 1ST LCASE COMBINED | MAX./MIN. COMPONENT REACTIONS SNOW | LIVE | PERM.LIVE | WIND | DEAD | SOIL |
|---|---|---|---|---|---|---|---|
| H | 646 | 482 / 0 | 0 / 0 | 0 / 0 | 0 / 0 | 164 / 0 | 0 / 0 |
| F | 646 | 482 / 0 | 0 / 0 | 0 / 0 | 0 / 0 | 164 / 0 | 0 / 0 |

BEARING MATERIAL TO BE SPF NO.2 OR BETTER AT JOINT(S) H, F

**BRACING**
TOP CHORD TO BE SHEATHED OR MAX. PURLIN SPACING = 6.25 FT.
MAX. UNBRACED BOTTOM CHORD LENGTH = 10.00 FT OR RIGID CEILING DIRECTLY APPLIED.

ALL PITCH BREAKS AND PERIMETER CORNER JOINTS MUST BE LATERALLY RESTRAINED.

**LOADING**
TOTAL LOAD CASES: (4)

CHORDS

| MEMB. FR-TO | MAX. FACTORED FORCE (LBS) | FACTORED VERT. LOAD (PLF) FROM | TO | LC1 MAX CSI (LC) | MAX. UNBRAC LENGTH |
|---|---|---|---|---|---|
| A- B | 0 / 49 | -119.4 | -119.4 | 0.11 (1) | 10.00 |
| B- C | -509 / 0 | -119.4 | -119.4 | 0.31 (1) | 6.25 |
| C- D | -509 / 0 | -119.4 | -119.4 | 0.31 (1) | 6.25 |
| D- E | 0 / 49 | -119.4 | -119.4 | 0.11 (1) | 10.00 |
| H- B | -889 / 0 | 0.0 | 0.0 | 0.09 (1) | 7.81 |
| F- D | -889 / 0 | 0.0 | 0.0 | 0.09 (1) | 7.81 |
| H- G | 0 / 0 | -18.2 | -18.2 | 0.16 (4) | 10.00 |
| G- F | 0 / 0 | -18.2 | -18.2 | 0.16 (4) | 10.00 |

WEBS

| MEMB. FR-TO | MAX. FACTORED FORCE (LBS) | MAX CSI (LC) |
|---|---|---|
| G- C | -51 / 89 | 0.03 (4) |
| B- G | 0 / 417 | 0.09 (1) |
| G- D | 0 / 417 | 0.09 (1) |

**DESIGN CRITERIA**

SPECIFIED LOADS:

| | | | | |
|---|---|---|---|---|
| TOP CH. | LL = | 34.8 | PSF |
| | DL = | 6.0 | PSF |
| BOT CH. | LL = | 0.0 | PSF |
| | DL = | 7.3 | PSF |
| TOTAL LOAD | = | 48.1 | PSF |

**SPACING = 24.0 IN. C/C**

THIS TRUSS IS DESIGNED FOR RESIDENTIAL OR SMALL BUILDING REQUIREMENTS OF PART 9, NBCC 2015

THIS DESIGN COMPLIES WITH:
- PART 9 OF BCBC 2018 , NBC-2019AE
- PART 9 OF OBC 2012 (2019 AMENDMENT)
- CSA 086-14
- TPIC 2014

(55 % OF 48.1 P.S.F. G.S.L. PLUS 8.4 P.S.F. RAIN LOAD) EQUALS 34.8 P.S.F. SPECIFIED ROOF LIVE LOAD

ALLOWABLE DEFL.(LL)= L/360 (0.37")
CALCULATED VERT. DEFL.(LL) = L/ 999 (0.01")
ALLOWABLE DEFL.(TL)= L/360 (0.37")
CALCULATED VERT. DEFL.(TL) = L/ 999 (0.02")

CSI: TC=0.31/1.00 (B-C:1) , BC=0.16/1.00 (G-H:4) , WB=0.09/1.00 (B-G:1) , SSI=0.21/1.00 (B-C:1)

DOL LUMBER=1.00 NAIL=1.00 LS BEND=1.10 COMP=1.10 SHEAR=1.10 TENS= 1.10

COMPANION LIVE LOAD FACTOR = 1.00

TRUSS PLATE MANUFACTURER IS NOT RESPONSIBLE FOR QUALITY CONTROL IN THE TRUSS MANUFACTURING PLANT .

NAIL VALUES

| PLATE | GRIP(DRY) (PSI) MAX | MIN | SHEAR (PLI) MAX | MIN | SECTION (PLI) MAX | MIN |
|---|---|---|---|---|---|---|
| MT20 | 650 | 371 | 1747 | 788 | 1987 | 1873 |

PLATE PLACEMENT TOL. = 0.250 inches

PLATE ROTATION TOL. = 5.0 Deg.

JSI GRIP= 0.72 (B) (INPUT = 0.90 )
JSI METAL= 0.23 (B) (INPUT = 1.00 )

LICENSED PROFESSIONAL ENGINEER
N.A. EL-MASRI
PROVINCE OF ONTARIO
Jul 13, 2023

**READ ALL NOTES ON THIS PAGE AND ON THE ENGINEERING NOTES: TRUSSES. THE NOTE PAGE IS AN INTEGRAL PART OF THIS DRAWING AS IT CONTAINS SPECIFICATIONS AND CRITERIA USED IN THE DESIGN OF THIS COMPONENT.**

KOTT

| JOB NAME | TRUSS NAME | QUANTITY | PLY | JOB DESC. | DRWG NO. |
|---|---|---|---|---|---|
| NE0723-072 | T10 | 2 | 1 | TRUSS DESC. | |

CORPORATION OF THE CITY OF OSHAWA
TRUE COPY
OF PERMIT PLANS
Nov 21 2023
PER: C Martin
CHIEF BUILDING OFFICIAL
MHP 23033

Version 8.630 S Mar 22 2023 MiTek Industries, Inc. Thu Jul 13 19:55:59 2023 Page 1
ID:vGgVNALLxpgFINJM6FviHszAhox-PZIbQ_p?L9cpMr41SmuovCi_UATCM5BcXzkVUmyyONk

Scale = 1:34.4

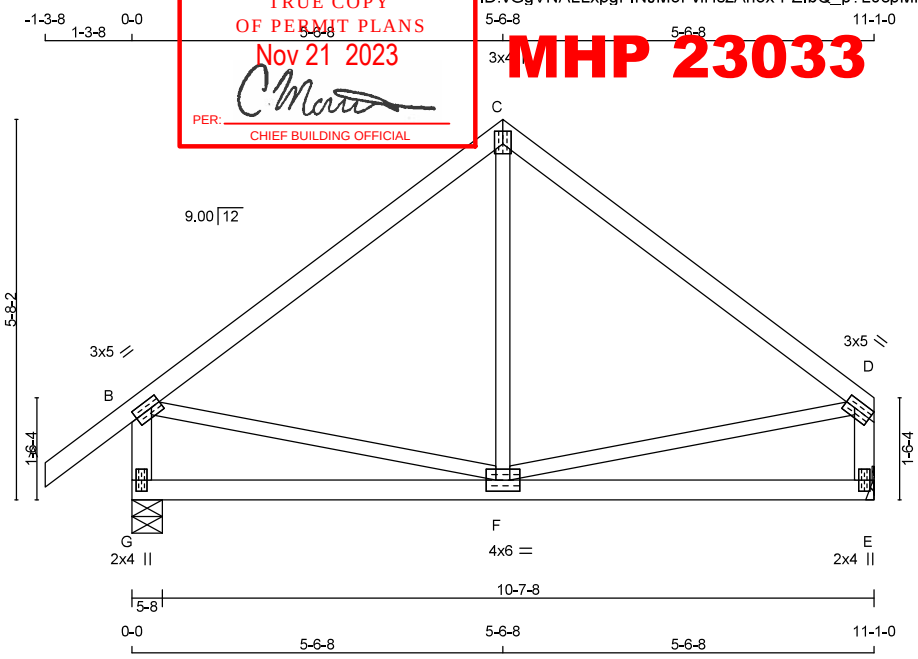


TOTAL WEIGHT = 2 X 46 = 92 lb
[M][F]

**LUMBER**
N. L. G. A. RULES

| CHORDS | SIZE | | LUMBER | DESCR. |
|---|---|---|---|---|
| A - C | 2x4 | DRY | 2100F 1.8E | SPF |
| C - D | 2x4 | DRY | 2100F 1.8E | SPF |
| G - B | 2x4 | DRY | No.2 | SPF |
| E - D | 2x4 | DRY | No.2 | SPF |
| G - E | 2x4 | DRY | No.2 | SPF |
| ALL WEBS EXCEPT | 2x3 | DRY | No.2 | SPF |

DRY: SEASONED LUMBER.

**PLATES (table is in inches)**

| JT | TYPE | PLATES | W | LEN | Y | X |
|---|---|---|---|---|---|---|
| B | TMVW-t | MT20 | 3.0 | 5.0 | 1.50 | 1.75 |
| C | TTW+p | MT20 | 3.0 | 4.0 | 2.25 | 1.50 |
| D | TMVW-t | MT20 | 3.0 | 5.0 | 1.50 | Edge |
| E | BMV1+p | MT20 | 2.0 | 4.0 | | |
| F | BMWWW-t | MT20 | 4.0 | 6.0 | | |
| G | BMV1+p | MT20 | 2.0 | 4.0 | | |

Edge - INDICATES REFERENCE CORNER OF PLATE TOUCHES EDGE OF CHORD.

**DIMENSIONS, SUPPORTS AND LOADINGS SPECIFIED BY FABRICATOR TO BE VERIFIED BY BUILDING DESIGNER**

**BEARINGS**

| JT | FACTORED GROSS REACTION VERT | HORZ | MAXIMUM FACTORED GROSS REACTION DOWN | HORZ | UPLIFT | INPUT BRG | REQRD BRG |
|---|---|---|---|---|---|---|---|
| G | 928 | 0 | 928 | 0 | 0 | 5-8 | 1-8 |
| E | 763 | 0 | 763 | 0 | 0 | MECHANICAL | |

A SUITABLE HANGER/MECHANICAL CONNECTION IS REQUIRED AT JOINT E. MINIMUM BEARING LENGTH AT JOINT E = 1-8.

**UNFACTORED REACTIONS**

| JT | 1ST LCASE COMBINED | MAX./MIN. COMPONENT REACTIONS SNOW | LIVE | PERM.LIVE | WIND | DEAD | SOIL |
|---|---|---|---|---|---|---|---|
| G | 646 | 482 / 0 | 0 / 0 | 0 / 0 | 0 / 0 | 164 / 0 | 0 / 0 |
| E | 533 | 386 / 0 | 0 / 0 | 0 / 0 | 0 / 0 | 147 / 0 | 0 / 0 |

BEARING MATERIAL TO BE SPF NO.2 OR BETTER AT JOINT(S) G

**BRACING**
TOP CHORD TO BE SHEATHED OR MAX. PURLIN SPACING = 6.25 FT.
MAX. UNBRACED BOTTOM CHORD LENGTH = 10.00 FT OR RIGID CEILING DIRECTLY APPLIED.

ALL PITCH BREAKS AND PERIMETER CORNER JOINTS MUST BE LATERALLY RESTRAINED.

**LOADING**
TOTAL LOAD CASES: (4)

CHORDS

| MEMB. FR-TO | MAX. FACTORED FORCE (LBS) | FACTORED VERT. LOAD LC1 (PLF) FROM | TO | MAX CSI (LC) | MAX. UNBRAC LENGTH |
|---|---|---|---|---|---|
| A- B | 0 / 49 | -119.4 | -119.4 | 0.11 (1) | 10.00 |
| B- C | -509 / 0 | -119.4 | -119.4 | 0.31 (1) | 6.25 |
| C- D | -509 / 0 | -119.4 | -119.4 | 0.31 (1) | 6.25 |
| G- B | -889 / 0 | 0.0 | 0.0 | 0.09 (1) | 7.81 |
| E- D | -724 / 0 | 0.0 | 0.0 | 0.08 (1) | 7.81 |
| G- F | 0 / 0 | -18.2 | -18.2 | 0.16 (4) | 10.00 |
| F- E | 0 / 0 | -18.2 | -18.2 | 0.16 (4) | 10.00 |

WEBS

| MEMB. FR-TO | MAX. FACTORED FORCE (LBS) | MAX CSI (LC) |
|---|---|---|
| F- C | -51 / 89 | 0.03 (4) |
| B- F | 0 / 417 | 0.09 (1) |
| F- D | 0 / 417 | 0.09 (1) |

**DESIGN CRITERIA**

SPECIFIED LOADS:

| | | | | |
|---|---|---|---|---|
| TOP CH. | LL | = | 34.8 | PSF |
| | DL | = | 6.0 | PSF |
| BOT CH. | LL | = | 0.0 | PSF |
| | DL | = | 7.3 | PSF |
| TOTAL LOAD | | = | 48.1 | PSF |

**SPACING = 24.0 IN. C/C**

THIS TRUSS IS DESIGNED FOR RESIDENTIAL OR SMALL BUILDING REQUIREMENTS OF PART 9, NBCC 2015

THIS DESIGN COMPLIES WITH:
- PART 9 OF BCBC 2018 , NBC-2019AE
- PART 9 OF OBC 2012 (2019 AMENDMENT)
- CSA 086-14
- TPIC 2014

(55 % OF 48.1 P.S.F. G.S.L. PLUS 8.4 P.S.F. RAIN LOAD) EQUALS 34.8 P.S.F. SPECIFIED ROOF LIVE LOAD

ALLOWABLE DEFL.(LL)= L/360 (0.37")
CALCULATED VERT. DEFL.(LL) = L/ 999 (0.01")
ALLOWABLE DEFL.(TL)= L/360 (0.37")
CALCULATED VERT. DEFL.(TL) = L/ 999 (0.02")

CSI: TC=0.31/1.00 (B-C:1) , BC=0.16/1.00 (E-F:4) , WB=0.09/1.00 (B-F:1) , SSI=0.21/1.00 (B-C:1)

DOL LUMBER=1.00 NAIL=1.00 LS BEND=1.10 COMP=1.10 SHEAR=1.10 TENS= 1.10

COMPANION LIVE LOAD FACTOR = 1.00

TRUSS PLATE MANUFACTURER IS NOT RESPONSIBLE FOR QUALITY CONTROL IN THE TRUSS MANUFACTURING PLANT .

NAIL VALUES

| PLATE | GRIP(DRY) (PSI) MAX | MIN | SHEAR (PLI) MAX | MIN | SECTION (PLI) MAX | MIN |
|---|---|---|---|---|---|---|
| MT20 | 650 | 371 | 1747 | 788 | 1987 | 1873 |

PLATE PLACEMENT TOL. = 0.250 inches

PLATE ROTATION TOL. = 5.0 Deg.

JSI GRIP= 0.72 (B) (INPUT = 0.90 )
JSI METAL= 0.23 (D) (INPUT = 1.00 )

LICENSED PROFESSIONAL ENGINEER
N.A. EL-MASRI
PROVINCE OF ONTARIO
Jul 13, 2023

**READ ALL NOTES ON THIS PAGE AND ON THE ENGINEERING NOTES: TRUSSES. THE NOTE PAGE IS AN INTEGRAL PART OF THIS DRAWING AS IT CONTAINS SPECIFICATIONS AND CRITERIA USED IN THE DESIGN OF THIS COMPONENT.**

KOTT

| JOB NAME | TRUSS NAME | QUANTITY | PLY | JOB DESC. | DRWG NO. |
|---|---|---|---|---|---|
| NE0723-072 | T11 | 2 | 1 | TRUSS DESC. | |

CORPORATION OF THE CITY OF OSHAWA
TRUE COPY
OF PERMIT PLANS
Nov 21 2023
PER: C Marr
CHIEF BUILDING OFFICIAL

MHP 23033

Version 8.630 S Mar 22 2023 MiTek Industries, Inc. Thu Jul 13 19:56:00 2023 Page 1
ID:vGgVNALLxpgFINJM6FviHszAhox-tlszeJqd6Skg_?fD?TP1SPF47ZpX5YSmmdT20DyyONj

Scale = 1:36.3

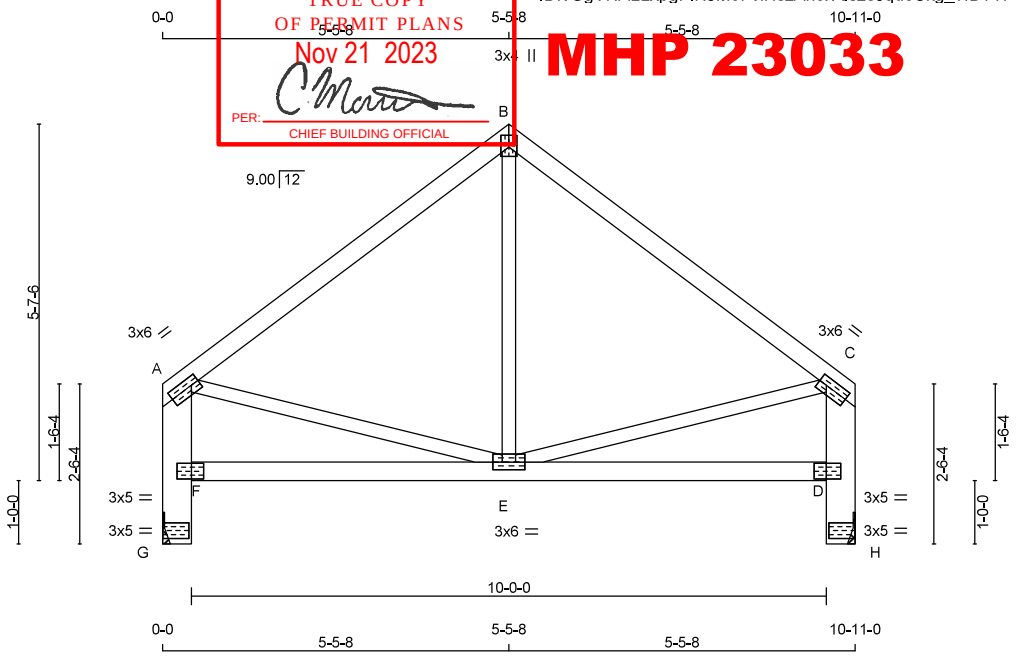


TOTAL WEIGHT = 2 X 49 = 97 lb [M]

**LUMBER**
N. L. G. A. RULES

| CHORDS | SIZE | | LUMBER | DESCR. |
|---|---|---|---|---|
| A - B | 2x4 | DRY | No.2 | SPF |
| B - C | 2x4 | DRY | No.2 | SPF |
| G - A | 2x6 | DRY | No.2 | SPF |
| H - C | 2x6 | DRY | No.2 | SPF |
| F - D | 2x4 | DRY | No.2 | SPF |
| ALL WEBS EXCEPT | 2x3 | DRY | No.2 | SPF |

DRY: SEASONED LUMBER.

**PLATES (table is in inches)**

| JT | TYPE | PLATES | W | LEN | Y | X |
|---|---|---|---|---|---|---|
| A | TMVW-t | MT20 | 3.0 | 6.0 | 1.50 | 1.50 |
| B | TTW+p | MT20 | 3.0 | 4.0 | 2.25 | 1.50 |
| C | TMVW-t | MT20 | 3.0 | 6.0 | 1.50 | 1.50 |
| D | BVM-l | MT20 | 3.0 | 5.0 | 1.50 | 2.25 |
| E | BMWWW-t | MT20 | 3.0 | 6.0 | | |
| F | BVM-l | MT20 | 3.0 | 5.0 | 1.50 | 2.25 |
| G | EBSP+t | MT20 | 3.0 | 5.0 | | 1.00 |
| H | EBSP+t | MT20 | 3.0 | 5.0 | | 1.00 |

**DIMENSIONS, SUPPORTS AND LOADINGS SPECIFIED BY FABRICATOR TO BE VERIFIED BY BUILDING DESIGNER**

**BEARINGS**

| JT | FACTORED GROSS REACTION VERT | HORZ | MAXIMUM FACTORED GROSS REACTION DOWN | HORZ | UPLIFT | INPUT BRG IN-SX | REQRD BRG IN-SX |
|---|---|---|---|---|---|---|---|
| G | 751 | 0 | 751 | 0 | 0 | MECHANICAL | |
| H | 751 | 0 | 751 | 0 | 0 | MECHANICAL | |

A SUITABLE HANGER/MECHANICAL CONNECTION IS REQUIRED AT JOINT G, H. MINIMUM BEARING LENGTH AT JOINT G = 1-8, JOINT H = 1-8.

**UNFACTORED REACTIONS**

| JT | 1ST LCASE COMBINED | MAX./MIN. COMPONENT REACTIONS SNOW | LIVE | PERM.LIVE | WIND | DEAD | SOIL |
|---|---|---|---|---|---|---|---|
| G | 525 | 380 / 0 | 0 / 0 | 0 / 0 | 0 / 0 | 145 / 0 | 0 / 0 |
| H | 525 | 380 / 0 | 0 / 0 | 0 / 0 | 0 / 0 | 145 / 0 | 0 / 0 |

**BRACING**
TOP CHORD TO BE SHEATHED OR MAX. PURLIN SPACING = 6.25 FT.
MAX. UNBRACED BOTTOM CHORD LENGTH = 10.00 FT OR RIGID CEILING DIRECTLY APPLIED.

ALL PITCH BREAKS AND PERIMETER CORNER JOINTS MUST BE LATERALLY RESTRAINED.

**LOADING**
TOTAL LOAD CASES: (4)

CHORDS

| MEMB. FR-TO | MAX. FACTORED FORCE (LBS) | VERT. LOAD (PLF) FROM | TO | LC1 CSI (LC) | MAX UNBRAC LENGTH |
|---|---|---|---|---|---|
| A- B | -500 / 0 | -119.4 | -119.4 | 0.64 (1) | 6.25 |
| B- C | -500 / 0 | -119.4 | -119.4 | 0.64 (1) | 6.25 |
| G- F | -751 / 0 | 0.0 | 0.0 | 0.05 (1) | 7.81 |
| F- A | -713 / 0 | 0.0 | 0.0 | 0.05 (1) | 7.81 |
| H- D | -751 / 0 | 0.0 | 0.0 | 0.05 (1) | 7.81 |
| D- C | -713 / 0 | 0.0 | 0.0 | 0.05 (1) | 7.81 |
| F- E | 0 / 0 | -18.2 | -18.2 | 0.15 (4) | 10.00 |
| E- D | 0 / 0 | -18.2 | -18.2 | 0.15 (4) | 10.00 |

WEBS

| MEMB. FR-TO | MAX. FACTORED FORCE (LBS) | MAX CSI (LC) |
|---|---|---|
| E- B | -52 / 87 | 0.03 (4) |
| A- E | 0 / 409 | 0.09 (1) |
| E- C | 0 / 409 | 0.09 (1) |

**DESIGN CRITERIA**

SPECIFIED LOADS:

| | | | | |
|---|---|---|---|---|
| TOP CH. | LL = | 34.8 | PSF |
| | DL = | 6.0 | PSF |
| BOT CH. | LL = | 0.0 | PSF |
| | DL = | 7.3 | PSF |
| TOTAL LOAD | = | 48.1 | PSF |

**SPACING = 24.0 IN. C/C**

THIS TRUSS IS DESIGNED FOR RESIDENTIAL OR SMALL BUILDING REQUIREMENTS OF PART 9, NBCC 2015

THIS DESIGN COMPLIES WITH:
- PART 9 OF BCBC 2018 , NBC-2019AE
- PART 9 OF OBC 2012 (2019 AMENDMENT)
- CSA 086-14
- TPIC 2014

(55 % OF 48.1 P.S.F. G.S.L. PLUS 8.4 P.S.F. RAIN LOAD) EQUALS 34.8 P.S.F. SPECIFIED ROOF LIVE LOAD

ALLOWABLE DEFL.(LL)= L/360 (0.36")
CALCULATED VERT. DEFL.(LL) = L/ 999 (0.01")
ALLOWABLE DEFL.(TL)= L/360 (0.36")
CALCULATED VERT. DEFL.(TL) = L/ 999 (0.02")

CSI: TC=0.64/1.00 (A-B:1) , BC=0.15/1.00 (E-F:4) , WB=0.09/1.00 (A-E:1) , SSI=0.20/1.00 (A-B:1)

DOL LUMBER=1.00 NAIL=1.00 LS BEND=1.10 COMP=1.10 SHEAR=1.10 TENS= 1.10

COMPANION LIVE LOAD FACTOR = 1.00

AUTOSOLVE HEELS OFF

TRUSS PLATE MANUFACTURER IS NOT RESPONSIBLE FOR QUALITY CONTROL IN THE TRUSS MANUFACTURING PLANT .

NAIL VALUES

| PLATE | GRIP(DRY) (PSI) MAX | MIN | SHEAR (PLI) MAX | MIN | SECTION (PLI) MAX | MIN |
|---|---|---|---|---|---|---|
| MT20 | 650 | 371 | 1747 | 788 | 1987 | 1873 |

PLATE PLACEMENT TOL. = 0.250 inches

PLATE ROTATION TOL. = 5.0 Deg.

JSI GRIP= 0.73 (C) (INPUT = 0.90 )
JSI METAL= 0.17 (A) (INPUT = 1.00 )

LICENSED PROFESSIONAL ENGINEER
N.A. EL-MASRI
PROVINCE OF ONTARIO
Jul 13, 2023

**READ ALL NOTES ON THIS PAGE AND ON THE ENGINEERING NOTES: TRUSSES. THE NOTE PAGE IS AN INTEGRAL PART OF THIS DRAWING AS IT CONTAINS SPECIFICATIONS AND CRITERIA USED IN THE DESIGN OF THIS COMPONENT.**

KOTT

| JOB NAME | TRUSS NAME | QUANTITY | PLY | JOB DESC. | DRWG NO. |
|---|---|---|---|---|---|
| NE0723-072 | T12 | 6 | 1 | TRUSS DESC. | |

CORPORATION OF THE CITY OF OSHAWA
TRUE COPY
OF PERMIT PLANS
Nov 21 2023
PER: C Martin
CHIEF BUILDING OFFICIAL

MHP 23033

Version 8.630 S Mar 22 2023 MiTek Industries, Inc. Thu Jul 13 19:56:00 2023 Page 1
ID:vGgVNALLxpgFINJM6FviHszAhox-tlszeJqd6Skg_?fD?TP1SPF7uZn55ZummdT20DyyONj

Scale = 1:17.3

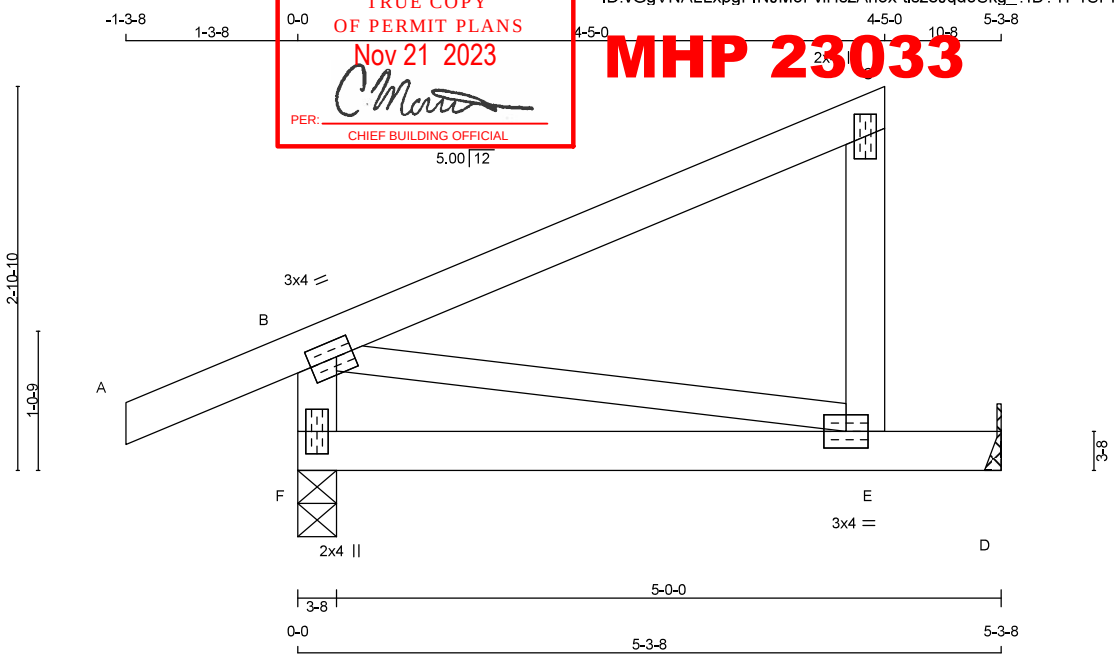


TOTAL WEIGHT = 6 X 20 = 118 lb [M]

**LUMBER**
N. L. G. A. RULES

| CHORDS | SIZE | | LUMBER | DESCR. |
|---|---|---|---|---|
| A - C | 2x4 | DRY | No.2 | SPF |
| E - C | 2x4 | DRY | No.2 | SPF |
| F - B | 2x4 | DRY | No.2 | SPF |
| F - D | 2x4 | DRY | No.2 | SPF |
| ALL WEBS | 2x3 | DRY | No.2 | SPF |

DRY: SEASONED LUMBER.

**PLATES (table is in inches)**

| JT | TYPE | PLATES | W | LEN | Y | X |
|---|---|---|---|---|---|---|
| B | TMVW-t | MT20 | 3.0 | 4.0 | 1.50 | 1.50 |
| C | TMV+p | MT20 | 2.0 | 4.0 | | |
| E | BMVW-t | MT20 | 3.0 | 4.0 | | |
| F | BMV1+p | MT20 | 2.0 | 4.0 | | |

**DIMENSIONS, SUPPORTS AND LOADINGS SPECIFIED BY FABRICATOR TO BE VERIFIED BY BUILDING DESIGNER**

**BEARINGS**

| JT | FACTORED GROSS REACTION VERT | HORZ | MAXIMUM FACTORED GROSS REACTION DOWN | HORZ | UPLIFT | INPUT BRG IN-SX | REQRD BRG IN-SX |
|---|---|---|---|---|---|---|---|
| F | 517 | 0 | 517 | 0 | 0 | 3-8 | 1-8 |
| D | 268 | 0 | 268 | 0 | 0 | MECHANICAL | |

A SUITABLE HANGER/MECHANICAL CONNECTION IS REQUIRED AT JOINT D. MINIMUM BEARING LENGTH AT JOINT D = 1-8.

**UNFACTORED REACTIONS**

| JT | 1ST LCASE COMBINED | MAX./MIN. COMPONENT REACTIONS SNOW | LIVE | PERM.LIVE | WIND | DEAD | SOIL |
|---|---|---|---|---|---|---|---|
| F | 359 | 273 / 0 | 0 / 0 | 0 / 0 | 0 / 0 | 86 / 0 | 0 / 0 |
| D | 189 | 128 / 0 | 0 / 0 | 0 / 0 | 0 / 0 | 61 / 0 | 0 / 0 |

BEARING MATERIAL TO BE SPF NO.2 OR BETTER AT JOINT(S) F

**BRACING**
TOP CHORD TO BE SHEATHED OR MAX. PURLIN SPACING = 10.00 FT.
MAX. UNBRACED BOTTOM CHORD LENGTH = 10.00 FT OR RIGID CEILING DIRECTLY APPLIED.

ALL PITCH BREAKS AND PERIMETER CORNER JOINTS MUST BE LATERALLY RESTRAINED.

**LOADING**
TOTAL LOAD CASES: (4)

CHORDS

| MEMB. FR-TO | MAX. FORCE (LBS) | FACTORED VERT. LOAD (PLF) FROM | TO | LC1 | MAX CSI (LC) | MAX. UNBRAC LENGTH |
|---|---|---|---|---|---|---|
| A- B | 0 / 31 | -119.4 | -119.4 | 0.15 (1) | 10.00 | |
| B- C | 0 / 0 | -119.4 | -119.4 | 0.40 (1) | 10.00 | |
| E- C | -264 / 0 | 0.0 | 0.0 | 0.04 (1) | 7.81 | |
| F- B | -425 / 0 | 0.0 | 0.0 | 0.04 (1) | 7.81 | |
| F- E | 0 / 0 | -18.2 | -18.2 | 0.31 (1) | 10.00 | |
| E- D | 0 / 0 | -18.2 | -18.2 | 0.31 (1) | 10.00 | |

WEBS

| MEMB. FR-TO | MAX. FORCE (LBS) | MAX CSI (LC) |
|---|---|---|
| B- E | 0 / 0 | 0.00 (1) |

**DESIGN CRITERIA**

SPECIFIED LOADS:

| | | | | |
|---|---|---|---|---|
| TOP CH. | LL = | 34.8 | PSF |
| | DL = | 6.0 | PSF |
| BOT CH. | LL = | 0.0 | PSF |
| | DL = | 7.3 | PSF |
| TOTAL LOAD | = | 48.1 | PSF |

**SPACING = 24.0 IN. C/C**

THIS TRUSS IS DESIGNED FOR RESIDENTIAL OR SMALL BUILDING REQUIREMENTS OF PART 9, NBCC 2015

THIS DESIGN COMPLIES WITH:
- PART 9 OF BCBC 2018 , NBC-2019AE
- PART 9 OF OBC 2012 (2019 AMENDMENT)
- CSA 086-14
- TPIC 2014

(55 % OF 48.1 P.S.F. G.S.L. PLUS 8.4 P.S.F. RAIN LOAD) EQUALS 34.8 P.S.F. SPECIFIED ROOF LIVE LOAD

ALLOWABLE DEFL.(LL)= L/360 (0.19")
CALCULATED VERT. DEFL.(LL) = L/ 999 (0.05")
ALLOWABLE DEFL.(TL)= L/360 (0.19")
CALCULATED VERT. DEFL.(TL) = L/ 548 (0.12")

CSI: TC=0.40/1.00 (B-C:1) , BC=0.31/1.00 (D-E:1) , WB=0.00/1.00 (B-E:1) , SSI=0.21/1.00 (D-E:1)

DOL LUMBER=1.00 NAIL=1.00 LS BEND=1.10 COMP=1.10 SHEAR=1.10 TENS= 1.10

COMPANION LIVE LOAD FACTOR = 1.00

TRUSS PLATE MANUFACTURER IS NOT RESPONSIBLE FOR QUALITY CONTROL IN THE TRUSS MANUFACTURING PLANT .

NAIL VALUES

| PLATE | GRIP(DRY) (PSI) MAX | MIN | SHEAR (PLI) MAX | MIN | SECTION (PLI) MAX | MIN |
|---|---|---|---|---|---|---|
| MT20 | 650 | 371 | 1747 | 788 | 1987 | 1873 |

PLATE PLACEMENT TOL. = 0.250 inches

PLATE ROTATION TOL. = 5.0 Deg.

JSI GRIP= 0.40 (B) (INPUT = 0.90 )
JSI METAL= 0.09 (C) (INPUT = 1.00 )

LICENSED PROFESSIONAL ENGINEER
N.A. EL-MASRI
PROVINCE OF ONTARIO
Jul 13, 2023

**READ ALL NOTES ON THIS PAGE AND ON THE ENGINEERING NOTES: TRUSSES. THE NOTE PAGE IS AN INTEGRAL PART OF THIS DRAWING AS IT CONTAINS SPECIFICATIONS AND CRITERIA USED IN THE DESIGN OF THIS COMPONENT.**

KOTT

| JOB NAME | TRUSS NAME | QUANTITY | PLY | JOB DESC. | DRWG NO. |
|---|---|---|---|---|---|
| NE0723-072 | T13 | 3 | 1 | TRUSS DESC. | |

CORPORATION OF THE CITY OF OSHAWA
TRUE COPY
OF PERMIT PLANS
Nov 21 2023
PER:
CHIEF BUILDING OFFICIAL
MHP 23033

Version 8.630 S Mar 22 2023 MiTek Industries, Inc. Thu Jul 13 19:56:00 2023 Page 1
ID:vGgVNALLxpgFINJM6FviHszAhox-tlszeJqd6Skg_?fD?TP1SPFBiZna5YmmmdT20DyyONj

Scale = 1:19.8

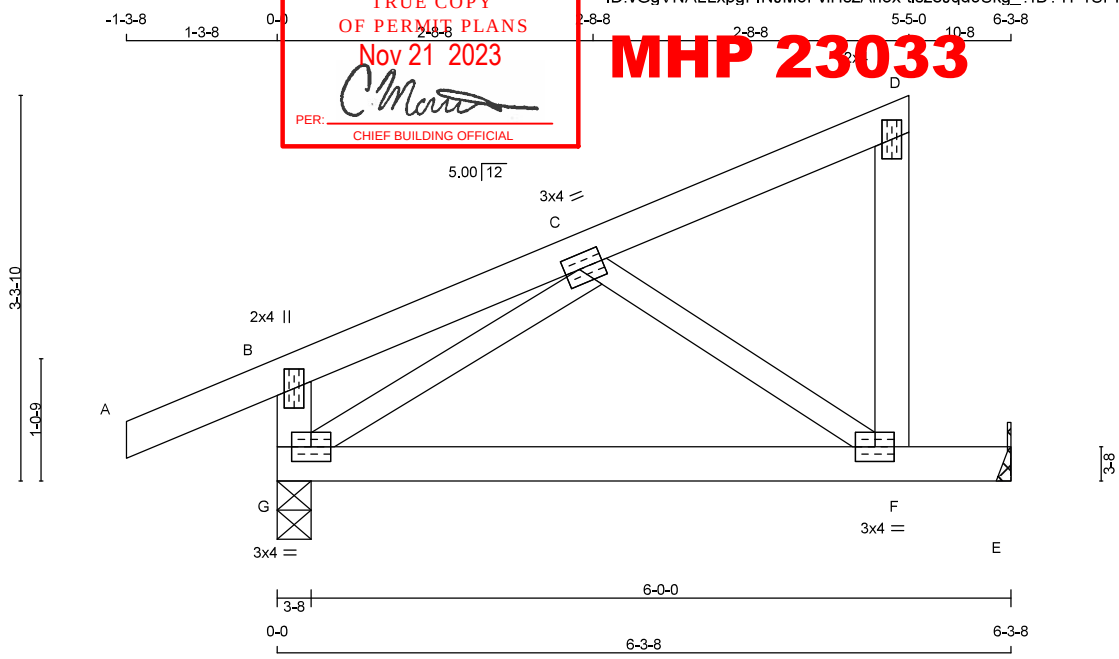


TOTAL WEIGHT = 3 X 24 = 72 lb
[M][F]

**LUMBER**
N. L. G. A. RULES

| CHORDS | SIZE | | LUMBER | DESCR. |
|---|---|---|---|---|
| A - D | 2x4 | DRY | No.2 | SPF |
| F - D | 2x4 | DRY | No.2 | SPF |
| G - B | 2x4 | DRY | No.2 | SPF |
| G - E | 2x4 | DRY | 2100F 1.8E | SPF |
| ALL WEBS EXCEPT | 2x3 | DRY | No.2 | SPF |

DRY: SEASONED LUMBER.

**PLATES (table is in inches)**

| JT | TYPE | PLATES | W | LEN | Y | X |
|---|---|---|---|---|---|---|
| B | TMV+p | MT20 | 2.0 | 4.0 | | |
| C | TMWW-t | MT20 | 3.0 | 4.0 | 1.50 | 1.50 |
| D | TMV+p | MT20 | 2.0 | 4.0 | | |
| F | BMVW-t | MT20 | 3.0 | 4.0 | | |
| G | BMVW1-t | MT20 | 3.0 | 4.0 | | |

**DIMENSIONS, SUPPORTS AND LOADINGS SPECIFIED BY FABRICATOR TO BE VERIFIED BY BUILDING DESIGNER**

**BEARINGS**

| JT | FACTORED GROSS REACTION VERT | HORZ | MAXIMUM FACTORED GROSS REACTION DOWN | HORZ | UPLIFT | INPUT BRG IN-SX | REQRD BRG IN-SX |
|---|---|---|---|---|---|---|---|
| E | 336 | 0 | 336 | 0 | 0 | MECHANICAL | |
| G | 587 | 0 | 587 | 0 | 0 | 3-8 | 1-8 |

A SUITABLE HANGER/MECHANICAL CONNECTION IS REQUIRED AT JOINT E. MINIMUM BEARING LENGTH AT JOINT E = 1-8.

**UNFACTORED REACTIONS**

| JT | 1ST LCASE COMBINED | MAX./MIN. COMPONENT REACTIONS SNOW | LIVE | PERM.LIVE | WIND | DEAD | SOIL |
|---|---|---|---|---|---|---|---|
| E | 236 | 162 / 0 | 0 / 0 | 0 / 0 | 0 / 0 | 74 / 0 | 0 / 0 |
| G | 408 | 309 / 0 | 0 / 0 | 0 / 0 | 0 / 0 | 99 / 0 | 0 / 0 |

BEARING MATERIAL TO BE SPF NO.2 OR BETTER AT JOINT(S) G
BEARING SIZE FACTOR = 1.15 AT JNT(S) G ( BASED ON SUPPORT DEPTH = 1-8 )

**BRACING**
TOP CHORD TO BE SHEATHED OR MAX. PURLIN SPACING = 6.25 FT.
MAX. UNBRACED BOTTOM CHORD LENGTH = 10.00 FT OR RIGID CEILING DIRECTLY APPLIED.

ALL PITCH BREAKS AND PERIMETER CORNER JOINTS MUST BE LATERALLY RESTRAINED.

**LOADING**
TOTAL LOAD CASES: (4)

CHORDS

| MEMB. FR-TO | MAX. FACTORED FORCE (LBS) | FACTORED VERT. LOAD (PLF) FROM | TO | LC1 CSI (LC) | MAX UNBRAC LENGTH |
|---|---|---|---|---|---|
| A- B | 0 / 31 | -119.4 | -119.4 | 0.15 (1) | 10.00 |
| B- C | 0 / 15 | -119.4 | -119.4 | 0.14 (1) | 10.00 |
| C- D | -14 / 0 | -119.4 | -119.4 | 0.11 (1) | 6.25 |
| F- D | -130 / 0 | 0.0 | 0.0 | 0.02 (1) | 7.81 |
| G- B | -280 / 0 | 0.0 | 0.0 | 0.03 (1) | 7.81 |
| G- F | 0 / 293 | -18.2 | -18.2 | 0.28 (1) | 10.00 |
| F- E | 0 / 0 | -18.2 | -18.2 | 0.26 (1) | 10.00 |

WEBS

| MEMB. FR-TO | MAX. FACTORED FORCE (LBS) | MAX CSI (LC) |
|---|---|---|
| C- F | -351 / 0 | 0.07 (1) |
| G- C | -357 / 0 | 0.07 (1) |

**DESIGN CRITERIA**

SPECIFIED LOADS:

| | | | | |
|---|---|---|---|---|
| TOP CH. | LL = | 34.8 | PSF |
| | DL = | 6.0 | PSF |
| BOT CH. | LL = | 0.0 | PSF |
| | DL = | 7.3 | PSF |
| TOTAL LOAD | = | 48.1 | PSF |

**SPACING = 24.0 IN. C/C**

THIS TRUSS IS DESIGNED FOR RESIDENTIAL OR SMALL BUILDING REQUIREMENTS OF PART 9, NBCC 2015

THIS DESIGN COMPLIES WITH:
- PART 9 OF BCBC 2018 , NBC-2019AE
- PART 9 OF OBC 2012 (2019 AMENDMENT)
- CSA 086-14
- TPIC 2014

(55 % OF 48.1 P.S.F. G.S.L. PLUS 8.4 P.S.F. RAIN LOAD) EQUALS 34.8 P.S.F. SPECIFIED ROOF LIVE LOAD

ALLOWABLE DEFL.(LL)= L/360 (0.21")
CALCULATED VERT. DEFL.(LL) = L/ 999 (0.07")
ALLOWABLE DEFL.(TL)= L/360 (0.21")
CALCULATED VERT. DEFL.(TL) = L/ 465 (0.16")

CSI: TC=0.15/1.00 (A-B:1) , BC=0.28/1.00 (F-G:1) , WB=0.07/1.00 (C-F:1) , SSI=0.26/1.00 (E-F:1)

DOL LUMBER=1.00 NAIL=1.00 LS BEND=1.10 COMP=1.10 SHEAR=1.10 TENS= 1.10

COMPANION LIVE LOAD FACTOR = 1.00

TRUSS PLATE MANUFACTURER IS NOT RESPONSIBLE FOR QUALITY CONTROL IN THE TRUSS MANUFACTURING PLANT .

NAIL VALUES

| PLATE | GRIP(DRY) (PSI) MAX | MIN | SHEAR (PLI) MAX | MIN | SECTION (PLI) MAX | MIN |
|---|---|---|---|---|---|---|
| MT20 | 650 | 371 | 1747 | 788 | 1987 | 1873 |

PLATE PLACEMENT TOL. = 0.250 inches

PLATE ROTATION TOL. = 5.0 Deg.

JSI GRIP= 0.45 (G) (INPUT = 0.90 )
JSI METAL= 0.10 (G) (INPUT = 1.00 )

LICENSED PROFESSIONAL ENGINEER
N.A. EL-MASRI
PROVINCE OF ONTARIO
Jul 13, 2023

**READ ALL NOTES ON THIS PAGE AND ON THE ENGINEERING NOTES: TRUSSES. THE NOTE PAGE IS AN INTEGRAL PART OF THIS DRAWING AS IT CONTAINS SPECIFICATIONS AND CRITERIA USED IN THE DESIGN OF THIS COMPONENT.**

KOTT

| JOB NAME | TRUSS NAME | QUANTITY | PLY | JOB DESC. | DRWG NO. |
|---|---|---|---|---|---|
| NE0723-072 | T14 | 6 | 1 | TRUSS DESC. | |

CORPORATION OF THE CITY OF OSHAWA
TRUE COPY
OF PERMIT PLANS
Nov 21 2023
PER: C Marr
CHIEF BUILDING OFFICIAL
MHP 23033

Version 8.630 S Mar 22 2023 MiTek Industries, Inc. Thu Jul 13 19:56:01 2023 Page 1
ID:vGgVNALLxpgFINJM6FviHszAhox-LyQLrfqFtmsXb9EPZBwG_dnMlz3qq_?v_HDcYfyyONi

Scale = 1:18.8

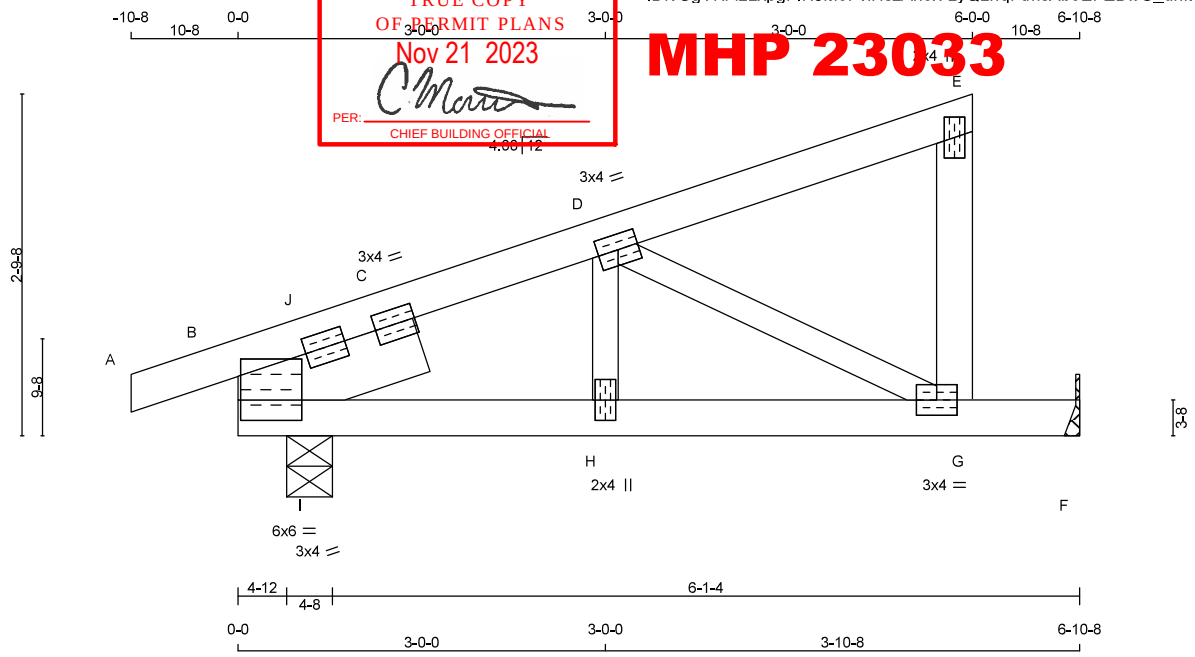


TOTAL WEIGHT = 6 X 25 = 149 lb

**LUMBER**
N. L. G. A. RULES

| CHORDS | SIZE | | LUMBER | DESCR. |
|---|---|---|---|---|
| A - E | 2x4 | DRY | No.2 | SPF |
| G - E | 2x4 | DRY | No.2 | SPF |
| B - F | 2x4 | DRY | No.2 | SPF |
| REINFORCING MEMBERS | | | | |
| HW1 | 2x6 | DRY | No.2 | SPF |
| ALL WEBS | 2x3 | DRY | No.2 | SPF |

DRY: SEASONED LUMBER.

**PLATES (table is in inches)**

| JT | TYPE | PLATES | W | LEN | Y | X |
|---|---|---|---|---|---|---|
| B | TMBMR1-I | MT20 | 6.0 | 6.0 | 4.25 | 0.25 |
| B | RT-t | MT20 | 3.0 | 4.0 | | |
| B | RT-t | MT20 | 3.0 | 4.0 | | |
| D | TMWW-t | MT20 | 3.0 | 4.0 | | |
| E | TMV+p | MT20 | 2.0 | 4.0 | | |
| G | BMVW-t | MT20 | 3.0 | 4.0 | | |
| H | BMW+w | MT20 | 2.0 | 4.0 | | |

**DIMENSIONS, SUPPORTS AND LOADINGS SPECIFIED BY FABRICATOR TO BE VERIFIED BY BUILDING DESIGNER**

**BEARINGS**

| JT | FACTORED GROSS REACTION VERT | HORZ | MAXIMUM FACTORED GROSS REACTION DOWN | HORZ | UPLIFT | INPUT BRG | REQRD BRG |
|---|---|---|---|---|---|---|---|
| B | 577 | 0 | 577 | 0 | 0 | 4-8 | 1-8 |
| F | 375 | 0 | 375 | 0 | 0 | MECHANICAL | |

A SUITABLE HANGER/MECHANICAL CONNECTION IS REQUIRED AT JOINT F. MINIMUM BEARING LENGTH AT JOINT F = 1-8.

**UNFACTORED REACTIONS**

| JT | 1ST LCASE COMBINED | MAX./MIN. COMPONENT REACTIONS SNOW | LIVE | PERM.LIVE | WIND | DEAD | SOIL |
|---|---|---|---|---|---|---|---|
| B | 401 | 300 / 0 | 0 / 0 | 0 / 0 | 0 / 0 | 102 / 0 | 0 / 0 |
| F | 264 | 182 / 0 | 0 / 0 | 0 / 0 | 0 / 0 | 82 / 0 | 0 / 0 |

BEARING MATERIAL TO BE SPF NO.2 OR BETTER AT JOINT(S) B

**BRACING**
TOP CHORD TO BE SHEATHED OR MAX. PURLIN SPACING = 6.25 FT.
MAX. UNBRACED BOTTOM CHORD LENGTH = 10.00 FT OR RIGID CEILING DIRECTLY APPLIED.

ALL PITCH BREAKS AND PERIMETER CORNER JOINTS MUST BE LATERALLY RESTRAINED.

**LOADING**
TOTAL LOAD CASES: (4)

CHORDS

| MEMB. FR-TO | MAX. FACTORED FORCE (LBS) | FACTORED VERT. LOAD (PLF) FROM | TO | LC1 | MAX CSI (LC) | MAX. UNBRAC LENGTH |
|---|---|---|---|---|---|---|
| A- B | -11 / 0 | -119.4 | -119.4 | 0.05 (1) | 6.25 | |
| B- J | -575 / 0 | -119.4 | -119.4 | 0.02 (1) | 6.25 | |
| J- C | -493 / 0 | -119.4 | -119.4 | 0.09 (1) | 6.25 | |
| C- D | -493 / 0 | -119.4 | -119.4 | 0.09 (1) | 6.25 | |
| D- E | -5 / 0 | -119.4 | -119.4 | 0.13 (1) | 10.00 | |
| G- E | -162 / 0 | 0.0 | 0.0 | 0.02 (1) | 7.81 | |
| B- I | 0 / 384 | -18.2 | -18.2 | 0.07 (1) | 10.00 | |
| I- H | 0 / 607 | -18.2 | -18.2 | 0.20 (1) | 10.00 | |
| H- G | 0 / 607 | -18.2 | -18.2 | 0.53 (1) | 10.00 | |
| G- F | 0 / 0 | -18.2 | -18.2 | 0.44 (1) | 10.00 | |

WEBS

| MEMB. FR-TO | MAX. FACTORED FORCE (LBS) | MAX CSI (LC) |
|---|---|---|
| H- D | 0 / 210 | 0.05 (1) |
| D- G | -678 / 0 | 0.14 (1) |
| I- J | 0 / 350 | 0.00 (1) |
| I- C | -411 / 0 | 0.03 (1) |

**DESIGN CRITERIA**

SPECIFIED LOADS:

| | | | | |
|---|---|---|---|---|
| TOP CH. | LL = | 34.8 | PSF |
| | DL = | 6.0 | PSF |
| BOT CH. | LL = | 0.0 | PSF |
| | DL = | 7.3 | PSF |
| TOTAL LOAD | = | 48.1 | PSF |

**SPACING = 24.0 IN. C/C**

THIS TRUSS IS DESIGNED FOR RESIDENTIAL OR SMALL BUILDING REQUIREMENTS OF PART 9, NBCC 2015

THIS DESIGN COMPLIES WITH:
- PART 9 OF BCBC 2018 , NBC-2019AE
- PART 9 OF OBC 2012 (2019 AMENDMENT)
- CSA 086-14
- TPIC 2014

(55 % OF 48.1 P.S.F. G.S.L. PLUS 8.4 P.S.F. RAIN LOAD) EQUALS 34.8 P.S.F. SPECIFIED ROOF LIVE LOAD

ALLOWABLE DEFL.(LL)= L/360 (0.23")
CALCULATED VERT. DEFL.(LL) = L/ 999 (0.05")
ALLOWABLE DEFL.(TL)= L/360 (0.23")
CALCULATED VERT. DEFL.(TL) = L/ 886 (0.09")

CSI: TC=0.13/1.00 (D-E:1) , BC=0.53/1.00 (G-H:1) , WB=0.14/1.00 (D-G:1) , SSI=0.29/1.00 (F-G:1)

DOL LUMBER=1.00 NAIL=1.00 LS BEND=1.10 COMP=1.10 SHEAR=1.10 TENS= 1.10

COMPANION LIVE LOAD FACTOR = 1.00

TRUSS PLATE MANUFACTURER IS NOT RESPONSIBLE FOR QUALITY CONTROL IN THE TRUSS MANUFACTURING PLANT .

NAIL VALUES

| PLATE | GRIP(DRY) (PSI) MAX | MIN | SHEAR (PLI) MAX | MIN | SECTION (PLI) MAX | MIN |
|---|---|---|---|---|---|---|
| MT20 | 650 | 371 | 1747 | 788 | 1987 | 1873 |

PLATE PLACEMENT TOL. = 0.250 inches

PLATE ROTATION TOL. = 5.0 Deg.

JSI GRIP= 0.88 (G) (INPUT = 0.90 )
JSI METAL= 0.21 (G) (INPUT = 1.00 )

LICENSED PROFESSIONAL ENGINEER
N.A. EL-MASRI
PROVINCE OF ONTARIO
Jul 13, 2023

**READ ALL NOTES ON THIS PAGE AND ON THE ENGINEERING NOTES: TRUSSES. THE NOTE PAGE IS AN INTEGRAL PART OF THIS DRAWING AS IT CONTAINS SPECIFICATIONS AND CRITERIA USED IN THE DESIGN OF THIS COMPONENT.**

KOTT