CONSTRUCTION NOTES (UNLESS OTHERWISE NOTED)

ALL CONSTRUCTION TO ADHERE TO THESE PLANS AND SPEC'S AND TO CONFORM TO THE ONTARIO BUILDING CODE AND ALL OTHER APPLICABE CODES AND AUTHORITIES HAVING JURISDICTION. THESE REQUIREMENTS ARE TO BE TAKEN AS MINIMUM SPECIFICATIONS. ONT. REG. 332/12 – 2012 OBC.

1 ROOF CONSTRUCTION (*SEE OBC 9.19.)

NO. 210 (10.25kg/m2) ASHPHALT SHINGLES. 10mm (3/8") PLYWOOD SHEATHING WITH "H" CLIPS. APPROVED WOOD TRUSSES @600mm 24" o.c. MAX. APPROVED EAVE PROTECTION TO EXTEND 900mm (3'–0") FROM EDGE OF ROOF AND MIN. 300mm (12") BEYOND INNER FACE OF EXTERIOR WALL, 38x89 (2"x4") TRUSS BRACING @ 1830mm (6'–0") o.c. AT BOTTOM CHORD. PREFIN. ALUM. EAVESTROUGH, FASCIA, RWL & VENTED SOFFIT. PROVIDE ICE & WATER SHIELD TO ALL ROOF / WALL SURFACES SUSCEPTIBLE TO DAMMING. ROOF SHEATHING TO BE FASTENED 150 (6") c.c. ALONG EDGES & INTERMEDIATE SUPPORTS WHEN TRUSSES SPACED GREATER THAN 406 (16"). ATTIC VENTILATION 1:300 OF INSULATED CEILING AREA WITH 50% AT EAVES.

2 FRAME WALL CONSTRUCTION (2"X6")

SIDING, HARDIE BOARD, STUCCATO BOARD OR EQUAL AS PER ELEVATION, 19X64 (1"x3") VERTICAL WOOD FURRING, APPROVED SHEATHING PAPER, 7/16" O.S.B. EXTERIOR SHEATHING OR OBC COMPLIANT EQUIVALENT. 38X140 (2"X6") STUDS @ 400MM (16") O.C. W/APPROVED DIAGONAL WALL BRACING, RSI 3.87 (R22) INSULATION AND APPROVED VAPOUR BARRIER AND APPROVED CONT. AIR BARRIER, 13mm (1/2") INT. DRYWALL FINISH.

3 BRICK VENEER CONSTRUCTION (2"X6")

90mm (4") FACE BRICK 25mm (1") AIR SPACE, 22x180x0.76mm (7/8"x7"x0.03") GALV. METAL TIES @ 400mm (16") o.c. HORIZONTAL 600mm (24") o.c. VERTICAL. APPROVED SHEATHING PAPER, 7/16" O.S.B. EXTERIOR SHEATHING OR OBC COMPLIANT EQUIVALENT. 38x140 (2"x6") STUDS @ 400mm (16") o.c. W/APPROVED DIAGONAL WALL BRACING, RSI 3.87 (R22) INSUL. APPROVED VAPOUR BARRIER AND APPROVED CONT. AIR BARRIER, 13mm (1/2") INT. DRYWALL FINISH. PROVIDE WEEP HOLES @ 800mm (32") o.c. BOTTOM COURSE AND OVER OPENINGS. PROVIDE BASE FLASHING UP MIN. 150mm (6") BEHIND BUILDING PAPER.

3A STUCCO WALL CONSTRUCTION (2"X6")

STUCCO CLADDING SYSTEM CONFIRMING TO OBC9.27.1.1.(2) & 9.28 THAT EMPLOY A MINIMUM 6mm (1/4") DRAINAGE CAVITY BEHIND THE CLADDING WITH POSITIVE DRAINAGE TO THE EXTERIOR AND APPLIED AS PER MANUFACTURERS SPECIFICATION ON 25mm (1") MINIMUM EXTRUDED OR EXPANDED RIGID INSULATION, APPROVED SHEATHING PAPER, 7/16" O.S.B. EXTERIOR SHEATHING OR OBC COMPLIANT EQUIVALENT. 38x140 (2"x6") STUDS @ 400mm (16") o.c. W/APPROVED DIAGONAL WALL BRACING, RSI 3.87 (R22) INSUL. APPROVED VAPOUR BARRIER AND APPROVED CONT. AIR BARRIER, 13mm (1/2") INT. DRYWALL FINISH. STUCCO TO BE MIN.200mm (8") ABOVE FINISH GRADE.

4 INTERIOR STUD PARTITIONS

(*SEE OBC 9.23.10.&9.23.11.)

BEARING PARTITION 38x89 (2"x4") @ 400mm (16") o.c. FOR 2 STOREYS AND 300mm (12") o.c. FOR 3 STOREYS. NON–BEARING PARTITIONS 38x89 (2"x4") @ 600mm (24") o.c.. PROVIDE 38x89 (2"x4") BOTTOM PLATE AND 2/38x89 (2–2"x4") TOP PLATE. 13mm (1/2") INTERIOR DRYWALL BOTH SIDES OF STUD, PROVIDE 38x140 (2"x6") STUDS/PLATES WHERE NOTED.

5 FOUNDATION WALL/FOOTINGS:

(*SEE OBC 9.15.3 & 9.15.4.)

MIN. 200mm (8") POURED CONC. FDTN. WALL 15MPa (2200psi) WITH BITUMENOUS DAMPROOFING AND DRAINAGE LAYER. MIN. 480x155 (19"x6") CONTIN. KEYED CONC. FTG. BRACE FOUNDATION WALL PRIOR TO BACKFILLING. ALL FOOTINGS SHALL REST ON NATURAL UNDISTURBED SOIL WITH MINIMUM BEARING CAPACITY OF 120kPa (17.4 psi) OR GREATER, **shall be verified by a soil engineer report**

STRUDET INC.

REGISTERED PROFESSIONAL ENGINEER
B. MARINKOVIC
May 10,2023
PROVINCE OF ONTARIO

FOR STRUCTURE ONLY

6 WEEPING TILE (* SEE OBC 9.14.3.)

100mm (4") DIA. WEEPING TILE 150mm (6") CRUSHED STONE OVER AND AROUND WEEPING TILES.

7 BASEMENT SLAB (*SEE OBC 9.16.-)

80mm (3") MIN. 25MPa (3600psi) CONC. SLAB ON 100mm (4") COARSE GRANULAR FILL, OR 15MPa (2200psi) CONC. WITH DAMPROOFING BELOW SLAB.

8 WOOD SUBFLOORS (*SEE OBC 9.23.14. & 9.30.2.)

19mm (3/4") T&G SUBFLOOR UNDER GROUND FLOOR FINISH FLOOR. 16mm (5/8") T&G SUBFLOOR UNDER SECOND FLOOR FINISH FLOOR. 16mm (5/8") PANEL–TYPE UNDERLAY FOR CERAMIC TILE APPLICATION. 6mm (1/4") PANEL–TYPE UNDERLAY UNDER RESILIENT & PARQUET FLOORING.

9 ROOF INSULATION (*SEE SB12 - 2.1.1.2.A & 2.1.1.7)

RSI 10.57 (R60) ROOF INSULATION AND APPROVED VAPOUR BARRIER, 16mm (5/8") INT. DRYWALL FINISH OR APPROVED EQUAL.

10 ALL STAIRS/EXTERIOR STAIRS (*SEE OBC 9.8.-)

MAX. RISE	=200	(7–7/8")
MIN. RUN	=210	(8–1/4")
MIN. TREAD	=255	(10")
MAX. NOSING	=25	(1")
MIN. HEADROOM	=1950	(6'–5")
RAIL @ LANDING	=900	(2'–11")
RAIL @ STAIR	=865	(2'–10") TO 965 (3'–2")
MIN. STAIR WIDTH	=860	(2'–10")

FOR CURVED STAIRS

MIN. AVG. RUN	= 200	(8")
MIN. RUN	= 150	(6")

11 RAILING (*SEE OBC 9.8.8.)

FINISHED RAILING ON PICKETS SPACED MAXIMUM 100mm (4") BETWEEN PICKETS.

INTERIOR GUARDS:	= 900mm (2'–11") MIN.
EXTERIOR GUARDS:	= 1070mm (3'–6") MIN.

12 SILL PLATE (*SEE OBC 9.23.6 & 9.23.7.)

38x89 (2"x4") SILL PLATE WITH 13mm (1/2") DIA. ANCHOR BOLTS 200mm (8") LONG, EMBEDDED MIN. 100mm (4") INTO CONC. @ 2400mm (7'–10") o.c. CAULKING OR 25 (1") MIN. MINERAL WOOL BETWEEN PLATE AND TOP OF FDTN. WALL. USE MORTAR TO LEVEL SILL PLATE WHEN REQUIRED.

13 BASEMENT INSULATION (*SEE OBC 12.3.)

FOUNDATION WALLS ENCLOSING HEATED SPACE SHALL BE INSULATED FROM THE UNDERSIDE OF THE SUBFLOOR TO NOT MORE THAN 152mm (6") ABOVE THE FINISHED FLOOR OF THE BASEMENT AND NOT LESS THAN 50mm (2") TO THE SLAB.
FOUNDATION WALL **continuous** INSULATION SHALL BE MINIMUM RSI. 3.52 (R20) BLANKET INSULATION, APPROVED VAPOUR BARRIER.

14 BASEMENT BEARING STUD PARTITION

(*SEE OBC 9.23.10.)

38x89 (2"x4") STUDS @400mm (16") o.c. 38x89 (2"x4") SILL PLATE ON DAMPROOFING MATERIAL, 13mm (1/2") DIA. ANCHOR BOLTS 200mm (8") LONG, EMBEDDED MIN. 100mm (4") INTO CONC. @ 2400mm (7'–10") o.c. (4") HIGH CONC. CURB ON 305x155 (12"x6") CONC. FOOTING. ADD HORIZ. BLOCKING AT MID–HEIGHT IF WALL IS UNFINISHED.

15 STEEL BASEMENT COLUMN (* SEE OBC 9.17.3.)

90mm (3–1/2") DIA. x 4.78mm (.188) STL. COL. WITH 150x150x9.5mm (6"x6"x3/8") STL. TOP & BOTTOM PLATE.

15A STEEL COLUMN (* SEE OBC 9.17.3.)

90mm (3–1/2") DIA. x 4.78mm (.188) STL. COLUMN WITH 100x100x6.4mm (4"x4"x1/4") STEEL TOP & BOTTOM PLATE. FIELD WELD BOTTOM PLATE TO 250x100x12.5mm (10"x4"x1/2") BASE PLATE C/W 2–13mm (1/2") DIA. x 300mm (12") LONG x 50mm (2") HOOK ANCHORS.

16 NIB WALLS (* SEE OBC 9.23.8.)

BEAM POCKET OR 200x200 (8"x8") POURED CONCRETE NIB WALLS. MINIMUM BEARING 90mm (3–1/2")

17 STEEL BEAM STRAPPING (* SEE OBC 9.23.4.3.(3)(c))

19x38 (1"x2") CONTINUOUS WOOD STRAPPING BOTH SIDES OF STEEL BEAM.

18 GARAGE SLAB (*SEE OBC 9.16.-)

100mm (4") 32MPa (4640psi) CONC. SLAB WITH 5–8% AIR ENTRAINMENT ON OPT. 100 (4") COARSE GRANULAR FILL WITH COMPACTED SUB–BASE OR COMPACTED NATIVE FILL. SLOPE TO FRONT 1% MIN.

19 INTERIOR GARAGE WALLS & CEILING

(*SEE OBC 9.10.9.16.)

13mm (1/2") GYPSUM BOARD ON WALL AND CEILING BETWEEN HOUSE AND GARAGE, RSI 3.87 (R22) IN WALLS, RSI 5.46 (R31) IN CEILING. TAPE AND SEAL ALL JOINTS GAS TIGHT.

20 GARAGE DOOR GASPROOFING

(*SEE OBC 9.10.13.15.)

DOOR AND FRAME GASPROOFING. DOOR EQUIPPED WITH SELF CLOSING DEVICE AND WEATHER STRIPPING.

21 EXTERIOR STEP

(*SEE OBC 9.8.9.2, 9.8.9.3 & 9.8.10.) **Maximum 2 risers for**

PRECAST CONCRETE STEP OR WD. STEP WHERE NOT EXPOSED TO WEATHER MAX. RISE 200mm (7–7/8"); MINIMUM TREAD 250mm (9–1/2")

22 DRYER VENT (*SEE OBC 6.2.3.8.(7))

CAPPED DRYER EXHAUST VENTED TO EXTERIOR. USE 1000mm (4") DIA. SMOOTH WALL VENT PIPE.

23 ATTIC ACCESS (*SEE OBC 9.19.2.)

ATTIC ACCESS HATCH 545x700 (22"x28") WITH WEATHERSTRIPPING. RSI 5.46 (R31) RIGID INSULATION BACKING.

24 FIREPLACE CHIMNEYS (*OBC 9.21.-)

TOP OF FIREPLACE CHIMNEY SHALL BE 915mm (3–0") ABOVE THE HIGHEST POINT AT WHICH IT COMES IN CONTACT WITH THE ROOF AND 610mm (2'–0") ABOVE THE ROOF SURFACE WITHIN A HORIZ. DISTANCE OF 3050mm (10'–0") FROM THE CHIMNEY.

25 LINEN CLOSET

4 SHELVES MIN. 350mm (14") DEEP.

26 MECHANICAL EXHAUST

(*SEE OBC 9.32.3.5, 9.32.3.10.)

MECHANICAL EXHAUST FAN VENTED TO EXTERIOR.

27 STEEL BEARING PLATE FOR MASONRY WALLS

280x280x16 (11"x11"x5/8") STL. PLATE FOR STL BEAMS AND 280x280x12 (11"x11"x1/2") STL. PLATE FOR WOOD BEAMS BEARING ON CONC. BLOCK PARTYWALL, ANCHORED W/ 2–19mm (3/4") x200mm (8") LONG GALV. ANCHORS WITHIN SOLID BLOCK COURSE. LEVEL WITH NON–SHRINK GROUT.

28 CLASS "B" VENT

U.L.C. RATED CLASS "B" VENT 610mm (2'–0") ABOVE THE POINT IN CONTACT WITH THE ROOF FOR SLOPES UP TO 9/12, REFER TO THE ONTARIO GAS UTILIZATION CODE.

29 WOOD BASEMENT POST (*OBC 9.17.4.)

3–38x140 (3–2"x6") BUILT–UP POST ON METAL BASE SHOE ANCHORED TO CONC. WITH 12.7 (1/2") DIA. BOLT ON 406x406x203 (16"x16"x8") CONC. FOOTING.

30 STEP FOOTINGS (*OBC 9.15.3.9.)

MIN. HORIZ. STEP = 610mm (24"). MAX. VERT. STEP = 610mm (24")

31 SLAB ON GRADE (*SEE OBC 9.16.-)

100mm (4") 32MPa (4640psi) CONC. SLAB WITH 5–8% AIR ENTRAINMENT ON OPT. 100 (4") COARSE GRANULAR FILL WITH COMPACTED SUB–BASE OR COMPACTED NATIVE FILL. REINFORCED W/ 6x6–W2.9xW2.9 MESH PLACED NEAR MID–DEPTH OF SLAB.

32 DIRECT VENT FURNACE ●

DIRECT VENT FURNACE TERMINAL MIN. 900mm (36") FROM A GAS REGULATOR. MIN 300mm (12") ABOVE FIN. GRADE, FROM ALL OPENINGS, EXHAUST & INTAKE VENTS. HRV INTAKE TO BE A MIN. OF 1830mm (6'–0") FROM ALL EXHAUST TERMINALS. REFER TO GAS UTILIZATION CODE. ALL AIR INTAKES SHALL BE LOCATED SO THAT THEY ARE SEPARATED FROM KITCHEN EXHAUST BY 3.0m IN COMPLIANCE WITH O.B.C. DIV.–B TABLE 6.2.3.12..

33 DIRECT VENT GAS FIREPLACE

DIRECT VENT GAS FIREPLACE. VENT TO BE A MINIMUM 300mm (12") FROM ANY OPENING AND ABOVE FIN. GRADE. REFER TO GAS UTILIZATION CODE

34 JOIST STRAPPING & BRIDGING (*SEE OBC 23.9.4.)

ALL FLOOR JOISTS TO BE BRIDGED WITH 38x38 (2"x2") CROSS BRACING OR SOLID BLOCKING @2100mm (6'–11") o.c. MAX. 19x64 (1"x3") @2100mm (6'–11") o.c. UNLESS A PANEL TYPE CEILING FINISH IS APPLIED.

35 EXPOSED BUILDING FACE (* SEE OBC 9.10.15.)

EXTERIOR WALLS TO HAVE A FIRE RESISTANCE RATING OF NOT LESS THAN 45min. WHERE LIMITING DISTANCE IS LESS THAN 1.2M (3'–11") WHERE THE LIMITING DISTANCE IS LESS THAN 600mm (1'–11") THE EXPOSING FACE SHALL BE CLAD IN NON–COMBUSTABLE MATERIAL.

36 COLD CELLAR PORCH SLAB (* SEE OBC 9.40.)

FOR MAX. 2500mm (8'–2") PORCH DEPTH, 125mm (5") 32Mpa (4640 psi) CONC. SLAB WITH 5–8% AIR ENTRAINMENT. REINF. WITH 10M BARS @200mm (8") o.c. EACH WAY IN BOTTOM THIRD OF SLAB, ANCHORED IN PERIMETER FDTN. WALLS W/ 610x610 (24"x24") 10M @600mm (24") o.c. DOWELS. SLOPE SLAB MIN. 1.0% FROM DOOR. SLAB TO HAVE A MIN. 75mm (3") BEARING ON FDTN. WALLS. PROVIDE (WL1) LINTELS OVER CELLAR DOOR.

37 FDTN. WALL REDUCTION IN THICKNESS

(*SEE OBC 9.15.4.7.)

FDTN. WALL SHALL NOT BE REDUCED TO LESS THAN 90mm (3–1/2") THICK TO A MAX. DEPTH OF 660mm (26") FOR 8" FDTN. WALL. 10" FDTN. WALL WHEN REDUCTION IN THICNESS IS GREATER THAN 26". FDTN. WALL SHALL BE TIED TO THE FACING MATERIAL WITH METAL TIES SPACED 200mm (8")o.c. VERTICALLY AND 900mm (36")o.c. HORIZONTALLY. FILL SPACE BETWEEN WALL AND FACING SOLID WITH MORTAR.

38 CONVENTIONAL ROOF FRAMING

(*SEE OBC 9.23.4.2.(1))

FOR MAX. 2240mm (7'–4") SPAN, 38x89 (2"x4") RAFTERS @400mm (16") o.c.. FOR MAX. 3530mm (11'–7") SPAN, 38x140 (2"x6") RAFTERS @400mm (16") o.c.. RIDGE BOARD TO BE 51mm (2") DEEPER. 38x39 (2"x4") COLLAR TIES AT MIDSPANS. CEILING JOISTS TO BE 38x89 (2"x4") @400mm (16") o.c. FOR MAX. 2830mm (9'–3") SPAN & 38x140 (2"x6") @ 400 (16") o.c. FOR MAX. 4450mm (14'–7") SPAN. RAFTERS FOR BUILT–UP ROOF TO BE 38x89 (2"x4") @600mm (24") o.c. WITH A 38x89 (2"x4") CENTER POST TO THE TRUSS BELOW, LATERALLY BRACED @1800mm (6'–0") o.c. VERTICALLY.

39 TWO STOREY VOLUME SPACES

FOR A MAXIMUM 5490mm (18'–0") HEIGHT, PROVIDE 2–38x140 (2–2"x6") CONTINUOUS STUDS @300mm (12") o.c. FOR BRICK AND 400mm (16") o.c. FOR SIDING. PROVIDE SOLID WOOD BLOCKING BETWEEN STUDS @1220mm (4'–0") o.c. VERT. 7/16" EXT. PLYWOOD.

40 EXPOSED FLOOR TO EXTERIOR (*SB12 - 2.1.1.2.A)

PROVIDE RSI 5.46 (R31) INSULATION, APPROVED VAPOUR BARRIER AND CONTINUOUS AIR BARRIER, FINISHED SOFFIT.

41 PARTYWALLS

TYPICAL 1 HOUR RATED PARTYWALL. REFER TO DETAILS FOR TYPE AND SPECIFICATIONS.

42 EXTERIOR WALLS FOR WALK-OUT CONDITION

THE EXTERIOR BASEMENT STUD WALL TO BE 38x140mm (2"x6") STUDS @400mm (16") o.c. MATCH FLOOR JOIST SPACING WHEN PARALEL WITH FLOOR JOISTS.

43 SMOKE ALARM ● (*OBC 9.10.19)

PROVIDE 1 PER FLOOR, NEAR THE STAIRS CONNECTING THE FLOOR LEVEL AND ALSO 1 IN EACH BEDROOM NEAR HALL DOOR. ALARMS TO BE CONNECTED TO AN ELECTRICAL CIRCUIT AND INTERCONNECTED TO ACTIVATE ALL ALARMS IF ONE SOUNDS. BATTERY BACK–UP REQUIRED. SMOKE ALARMS TO INCORPORATE VISUAL SIGNALLING COMPONENT. (9.10.19.3.(3)).

44 CARBON MONOXIDE ALARM ● (*OBC 9.33.4.)

WHERE A FUEL–BURNING APPLIANCE IS INSTALLED IN A DWELLING UNIT, A BARBON MONOXIDE DETECTOR CONFORMING TO CAN./CGA–6.19, CSA 6.19 OR UL2034 SHALL BE INSTALLED ADJACENT TO EACH SLEEPING AREA. CARBON MONOXIDE DETECTOR(S) SHALL BE PERMANENTLY WIRED SO THAT IT IS ACTIVATION WILL ACTIVATE ALL CARBON MONOXIDE DETECTORS AND BE EQUIPPED WITH AN ALARM THAT IS AUDIBLE WITHIN BEDROOMS WHEN THE INTERVENING DOORS ARE CLOSED

45 SOIL GAS CONTROL (*OBC 9.13.4.)

PROVIDE CONSTRUCTION TO PREVENT LEAKAGE OF SOIL GAS INTO THE BUILDING AS REQUIRED.

CITY OF RICHMOND HILL
BUILDING DIVISION
05/01/2024
RECEIVED
Per: joshua.nabua

2012 CODE
COMPLIANCE PACKAGE "A1"

5.		
4.		
3.		
2.		
1.	ISSUED FOR PERMIT	JUL 30, 2018

REVISIONS

The undersigned has reviewed and takes responsibility for this design, and has the qualifications and meets the requirements set out in the Ontario Building Code to be a designer.
QUALIFICATION INFORMATION
Required unless design is exemp — 3.2.5 of the building code

VIKAS GAJJAR — NAME
28770 — BCIN

REGION DESIGN INC.
8700 DUFFERIN ST.
CONCORD, ONTARIO
L4K 4S6
P (416) 736–4096
F (905) 660–0746
REGION DESIGN INC.

SHEET TITLE: GENERAL NOTES
SCALE: N.T.S.
DATE: MAY 2023

CONTRACTOR SHALL CHECK ALL DIMENSIONS AND ELEVATIONS BEFORE COMMENCING WITH WORK AND REPORT ANY DISCREPANCIES TO THE DESIGNER. PRINTS ARE NOT TO BE SCALED.

PAGE No. 1

Greenpark™
PROJECT NAME: TRINIGROUP

WINDOWS - CANADA ZONE C

(1) MINIMUM BEDROOM WINDOW (*OBC 9.9.10.1.)

AT LEAST ONE BEDROOM WINDOW ON A GIVEN FLOOR IS TO HAVE MIN. 0.35m2 (3.8 SQ.FT.) UNOBSTRUCTED GLAZED OPENABLE AREA WITH MIN. CLEAR WIDTH OF 380mm (1'-3")

GLASS AREA NOT MORE THAN 17% OF GROSS PERIPHERAL WALL AREA.
MAXIMUM U-VALUE 0.28

(2) WINDOW GUARDS (*OBC 9.8.8.1(6))

A GUARD IS REQUIRED WHERE THE TOP OF THE WINDOW SILL IS LOCATED LESS THAN 480mm (1'-6") ABOVE FIN. FLOOR AND THE DISTANCE FROM THE FIN. FLOOR TO THE ADJACENT GRADE IS GREATER THAN 1800mm (5'-11")

GENERAL:

(1) MECHANICAL VENTILATION

MECHANICAL VENTILATION IS REQUIRED TO PROVIDE 0.3 AIR CHANGES PER HOUR AVERAGED OVER 24 HOURS. SEE MECHANICAL DRAWINGS.

(2) OUTDOOR AIR INTAKE ●

ALL OUTDOOR AIR INTAKES SHALL BE LOCATED SO THAT THEY ARE SEPARATED FROM SOURCES OF CONTAMINATION (EXHAUST VENTS) IN COMPLIANCE WITH O.B.C. DIV.-B 6.2.3.12. AND TABLE 6.2.3.12.

(3) RAINFORCEMENT FOR GRAB BARS (*OBC 9.5.2.3.) ●

RAINFORCEMENT OF STUD WALLS SHALL BE INSTALLED ADJACENT TO WATER CLOSETS AND SHOWER OR BATHTUB IN MAIN BATHROOM. REFER TO O.B.C. 9.5.2.3, 3.8.3.8.(3)(a), 3.8.3.8.(3)(c), 3.8.3.13.(2)(g) & 3.8.3.13.(4)(e). SEE DETAIL ON PAGE 11.

LUMBER:

1.) ALL LUMBER SHALL BE SPRUCE-PINE-FIR No.1&2 GRADE, UNLESS NOTED OTHERWISE.

2.) LUMBER EXPOSED TO THE EXTERIOR TO BE SPRUCE-PINE-FIR No.1&2 GRADE PRESSURE TREATED OR CEDAR, UNLESS NOTED OTHERWISE.

3.) ALL BEAMS, GIRDER TRUSSES, AND METAL HANGER CONNECTIONS SUPPORTING ROOF FRAMING TO BE DESIGNED & CERTIFIED BY TRUSS MANUFACTURER.

4.) LVL BEAMS SHALL BE 2.0E (Fb=2800psi MIN.). NAIL EACH PLY OF LVL WITH 89mm (3-1/2") LONG COMMON WIRE NAILS @300mm (12") o.c. STAGGERED IN 2 ROWS FOR 184, 240, & 300mm (7-1/4",9-1/2",11-7/8") DEPTHS AND STAGGERED IN 3 ROWS FOR GREATER DEPTHS AND FOR 4 PLY MEMBERS ADD 1/2" (13mm) DIA. GALVANIZED BOLTS BOLTED AT MID-DEPTH OF BEAM @ 915mm (3'-0")o.c.

5.) PROVIDE TOP MOUNT BEAM HANGERS FOR ALL LVL BEAM TO BEAM CONNECTIONS UNLESS NOTED OTHERWISE.

6.) PROVIDE METAL JOIST HANGERS FOR ALL JOISTS AND BULIT-UP WOOD MEMBERS INTERSECTING FLUSH BUILT-UP WOOD MEMBERS.

7.) WOOD FRAMING NOT TREATED WITH A WOOD PRESERVATIVE, IN CONTACT WITH CONCRETE, SHALL BE SEPARATED FROM THE CONC. BY AT LEAST 2mll. POLYETHYLENE FILM, No.50 (45lbs) ROLL ROOFING OR OTHER DAMPROOFING MATERIAL, EXCEPT WHERE THE WOOD MEMBER IS AT LEAST 150mm (6") ABOVE THE GROUND.

STEEL:

STRUCTURAL STEEL AND HOLLOW STRUCTURAL SECTIONS SHALL CONFORM TO CAN/CSA-G40-21 GRADE 350W.

REINFORCING STEEL SHALL CONFORM TO CSA-G30-18M GRADE 400R.

REVISION:

● ONT. REG. 332/12-2012 OBC AMENDMENT O. REG. 88/19 JAN. 01, 2020

STABILITY OF NARROW (20'-25') & TALL (±30') HOUSES

BUILDER TO PROVIDE SUFFICIENT TEMPORARY BRACING TO RESIST WIND LOADING WHEN UNDER CONSTRUCTION. FURTHER RECOMMENDATIONS:

1.) REDUCE THE FOUNDATION WALL SILL PLATE ANCHOR BOLT SPACING FROM 2400mm o.c. (7'-10") TO 1220mm o.c. (4'-0") FOR STANDARD CONDITIONS.

2.) USE 9.5mm (3/8") THICK PLYWOOD OR WAFERBOARD FOR THE EXTERIOR WALL SHEATHING.

3.) TO STIFFEN THE STRUCTURE IN TRANSVERSE DIRECTION USE 9.5mm (3/8") THICK PLYWOOD NAILED TO THE INTERIOR PARTITIONS ON EACH FLOOR FOR A MINIMUM 2 INTERIOR PARTITION WALLS ON BOTH SIDES AND PERPENDICULAR TO THE LONG WALLS.

BRICK VENEER LINTELS

WL1 = 3-1/2"x3-1/2"x1/4"L (90x90x6.0L) + 2-2"x8" SPR. No.2
WL2 = 4"x3-1/2"x5/16"L (100x90x8.0L) + 2-2"x8" SPR. No.2
WL3 = 5"x3-1/2"x5/16"L (125x90x8.0L) + 2-2"x10" SPR. No.2
WL4 = 6"x3-1/2"x3/8"L (150x90x10.0L) + 2-2"x12" SPR. No.2
WL5 = 6"x4"x3/8"L (150x100x10.0L) + 2-2"x12" SPR. No.2
WL6 = 5"x3-1/2"x5/16"L (125x90x8.0L) + 2-2"x12" SPR. No.2
WL7 = 5"x3-1/2"x5/16"L (125x90x8.0L) + 3-2"x10" SPR. No.2
WL8 = 5"x3-1/2"x5/16"L (125x90x8.0L) + 3-2"x12" SPR. No.2
WL9 = 6"x4"x3/8"L (150x100x10.0L) + 3-2"x12" SPR. No.2

WOOD LINTELS AND BEAMS

WB1 = 2-2"x8" SPR. No.2 (2-38x184 SPR. No.2)
WB2 = 3-2"x8" SPR. No.2 (3-38x184 SPR. No.2)
WB3 = 2-2"x10" SPR. No.2 (2-38x235 SPR. No.2)
WB4 = 3-2"x10" SPR. No.2 (3-38x235 SPR. No.2)
WB5 = 2-2"x12" SPR. No.2 (2-38x286 SPR. No.2)
WB6 = 3-2"x12" SPR. No.2 (3-38x286 SPR. No.2)
WB7 = 5-2"x12" SPR. No.2 (5-38x286 SPR. No.2)
WB11 = 4-2"x10" SPR. No.2 (4-38x235 SPR. No.2)
WB12= 4-2"x12" SPR. No.2 (4-38x286 SPR. No.2)

LOOSE STEEL LINTELS

L1 = 3-1/2"x3-1/2"x1/4"L (90x90x6.0L)
L2 = 4"x3-1/2"x5/16"L (100x90x8.0L)
L3 = 5"x3-1/2"x5/16"L (125x90x8.0L)
L4 = 6"x3-1/2"x3/8"L (150x90x10.0L)
L5 = 6"x4"x3/8"L (150x100x10.0L)
L6 = 7"x4"x3/8"L (175x100x10.0L)

LAMINATED VENEER LUMBER (LVL) BEAMS

LVL1A = 1-1 3/4" x 7 1/4" (1-45x184)
LVL1 = 2-1 3/4" x 7 1/4" (2-45x184)
LVL2 = 3-1 3/4" x 7 1/4" (3-45x184)
LVL3 = 4-1 3/4" x 7 1/4" (4-45x184)
LVL4A = 1-1 3/4" x 9 1/2" (1-45x240)
LVL4 = 2-1 3/4" x 9 1/2" (2-45x240)
LVL5 = 3-1 3/4" x 9 1/2" (3-45x240)
LVL5A = 4-1 3/4" x 9 1/2" (4-45x240)
LVL6A = 1-1 3/4" x 11 7/8" (1-45x300)
LVL6 = 2-1 3/4" x 11 7/8" (2-45x300)
LVL7 = 3-1 3/4" x 11 7/8" (3-45x300)
LVL7A = 4-1 3/4" x 11 7/8" (4-45x300)
LVL8 = 2-1 3/4" x 14" (2-45x356)
LVL9 = 3-1 3/4" x 14" (3-45x356)
LVL10 = 2-1 3/4" x 18" (2-45x456)

GLUE LAMINATED LUMBER BEAMS

GLU1 = 3 1/8" x 11 7/8" (80x300)
GLU2 = 5 1/8" x 11 7/8" (130x300)

DOOR SCHEDULE

1 = 2'-10" x 6'-8" (865x2033) - INSULATED ENTRANCE DOOR
1a = 2'-8" x 6'-8" (815x2033) - INSULATED FRONT DOORS
2 = 2'-8" x 6'-8" (815x2033) - WOOD & GLASS DOOR
3 = 2'-8" x 6'-8 x 1-3/4" (815x2033x45) - EXTERIOR SLAB DOOR
4 = 2'-8" x 6'-8" x 1-3/8" (815x2033x35 - INTERIOR SLAB DOOR
5 = 2'-6" x 6'-8" x 1-3/8" (760x2033x35) - INTERIOR SLAB DOOR
6 = 2'-2" x 6'-8" x 1-3/8" (660x2033x35) - INTERIOR SLAB DOOR
7 = 1'-6" x 6'-8" x 1-3/8" (460x2033x35) - INTERIOR SLAB DOOR

LEGEND

DJ	DOUBLE JOIST
TJ	TRIPLE JOIST
GT	GIRDER TRUSS
2V / 8B	POINT LOAD
	SOLID WOOD BEARING. SOLID BEARING TO BE WIDE AT LEAST AS SUPPORTED MEMBER. MIN. 3 PIECES.
	LOAD-BEARING WALL
	TWO-STOREY WALL. SEE NOTE 39
	FLAT ARCH
F.D.	FLOOR DRAIN
SA	SMOKE ALARM. SEE NOTE 43
SA / CMA	SMOKE ALARM & CARBON MONOXIDE ALARM. SEE NOTE 44

STRUDET INC.

REGISTERED PROFESSIONAL ENGINEER
B. MARINKOVIC
May 10, 2023
PROVINCE OF ONTARIO

FOR STRUCTURE ONLY

CITY OF RICHMOND HILL
BUILDING DIVISION
05/01/2024
RECEIVED
Per: joshua.nabua

2012 CODE
COMPLIANCE PACKAGE "A1"

5.		
4.		
3.		
2.		
1.	ISSUED FOR PERMIT	JAN 31, 2015

REVISIONS

The undersigned has reviewed and takes responsibility for this design, and has the qualifications and meets the requirements set out in the Ontario Building Code to be a designer.
QUALIFICATION INFORMATION
Required unless design is exempt under Division C, Subsection 3.2.5 of the building code

NAME	SIGNATURE	BCIN
VIKAS GAJJAR		28770

REGION DESIGN INC.
8700 DUFFERIN ST.
CONCORD, ONTARIO
L4K 4S6
P (416) 736-4096
F (905) 660-0746

REGION DESIGN INC.

SHEET TITLE: GENERAL NOTES

SCALE: N.T.S.

DATE: MAY 2023

CONTRACTOR SHALL CHECK ALL DIMENSIONS AND ELEVATIONS BEFORE COMMENCING WITH WORK AND REPORT ANY DISCREPANCIES TO THE DESIGNER. PRINTS ARE NOT TO BE SCALED.

PAGE No. 2

Greenpark™

PROJECT NAME: TRINIGROUP

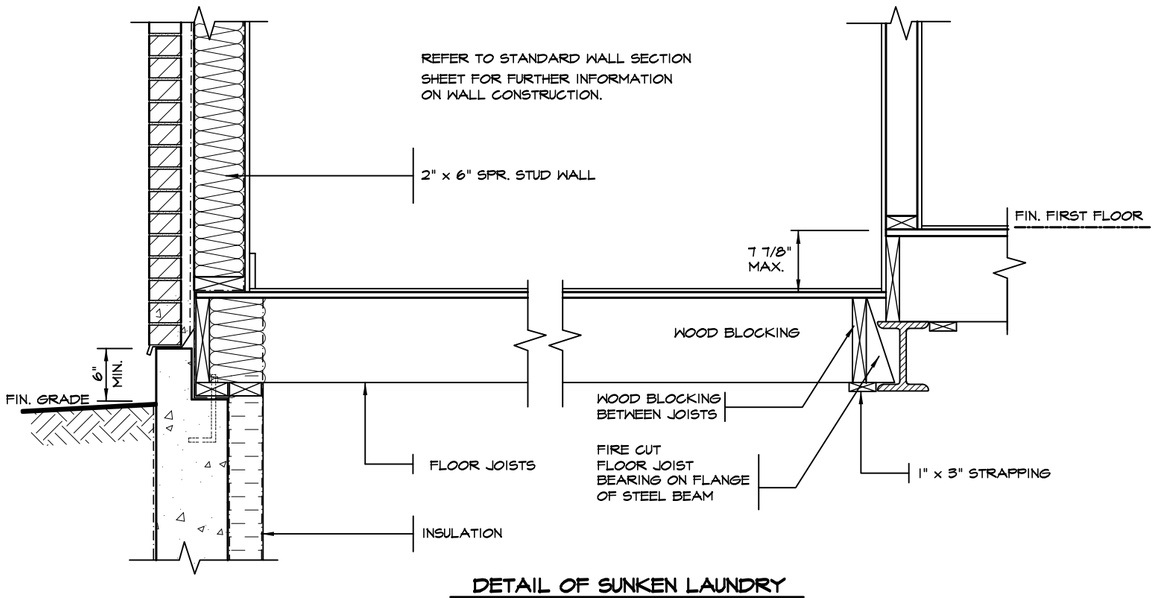

DETAIL OF SUNKEN LAUNDRY
(ONE RISER)

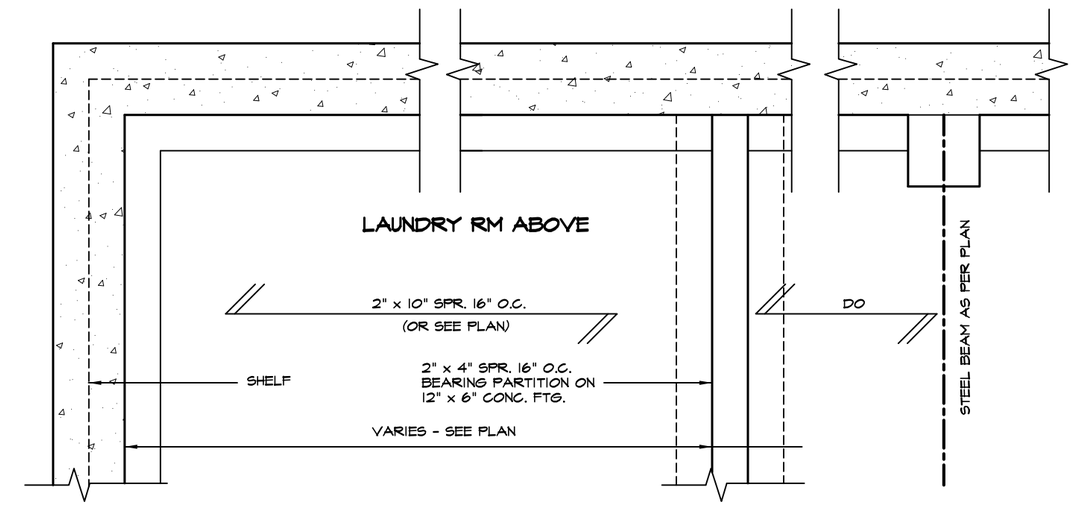

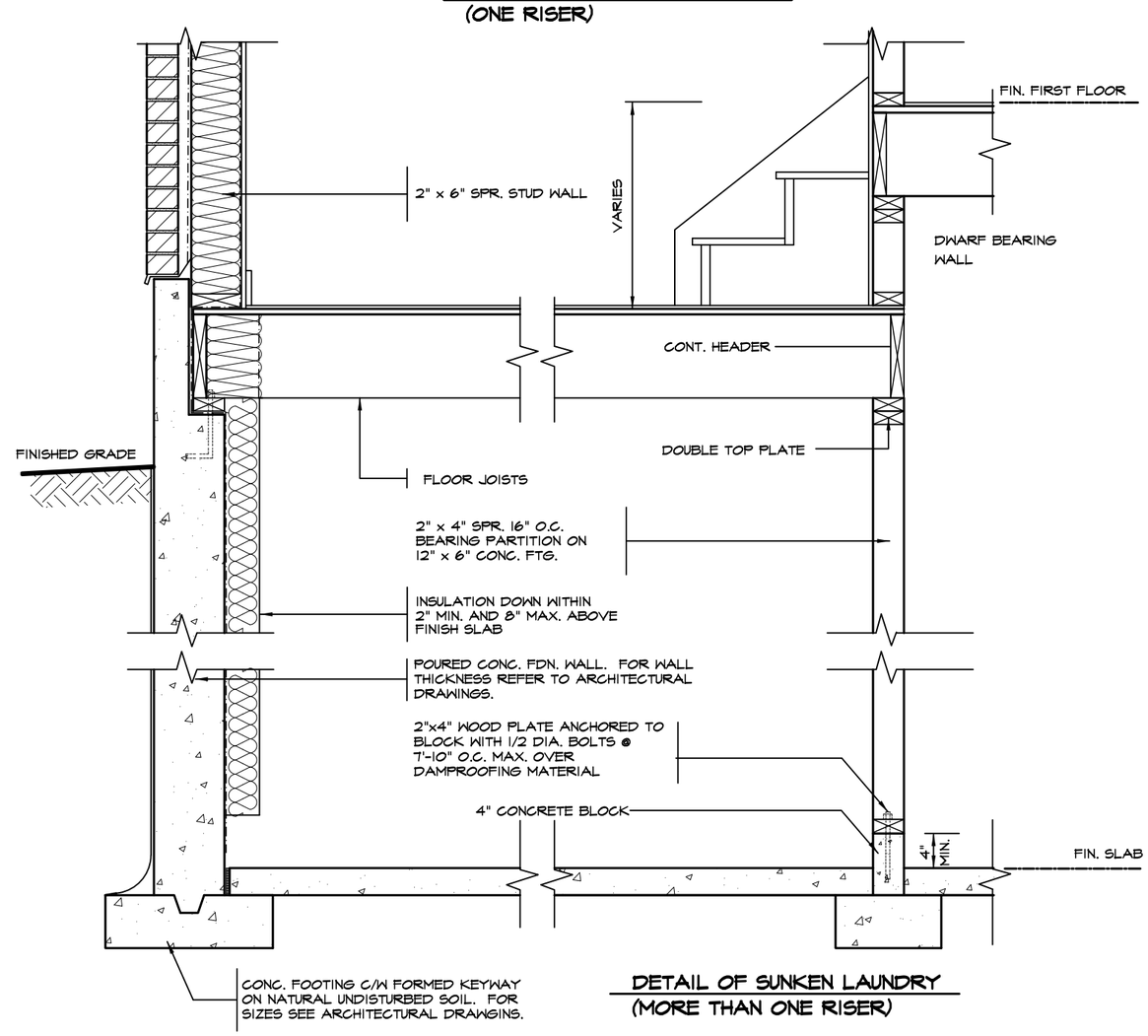

DETAIL OF SUNKEN LAUNDRY
(MORE THAN ONE RISER)

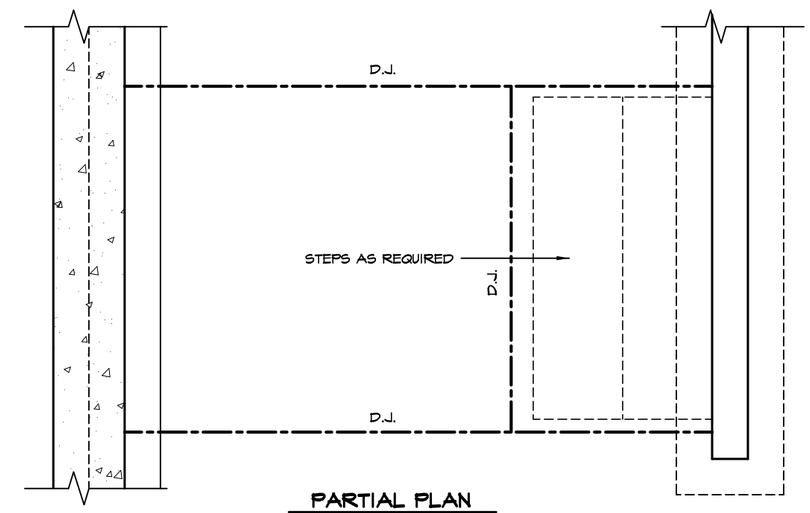

PARTIAL PLAN

STRUDET INC.

REGISTERED PROFESSIONAL ENGINEER
B. MARINKOVIC
PROVINCE OF ONTARIO
May 10, 2023

FOR STRUCTURE ONLY

2012 CODE
COMPLIANCE PACKAGE "A1

5.		
4.		
3.		
2.		
1.	ISSUED FOR PERMIT	JUL 30, 2018

REVISIONS

The undersigned has reviewed and takes responsibility for this design, and has the qualifications and meets the requirements set out in the Ontario Building Code to be a designer.
QUALIFICATION INFORMATION
Required unless design is exempt under Division C, Subsection 3.2.5 of the building code

NAME	SIGNATURE	BCIN
VIKAS GAJJAR		28770

REGION DESIGN INC.
8700 DUFFERIN ST.
CONCORD, ONTARIO
L4K 4S6
P (416) 736-4096
F (905) 660-0746

REGION DESIGN INC.

SHEET TITLE
LAUNDRY DETAILS
SUNKEN

SCALE 3/4"=1'-0"

DATE MAY 2023

CONTRACTOR SHALL CHECK ALL DIMENSIONS AND ELEVATIONS BEFORE COMMENCING WITH WORK AND REPORT ANY DISCREPANCIES TO THE DESIGNER. PRINTS ARE NOT TO BE SCALED.

PAGE No. 5

Greenpark™

PROJECT NAME
TRINIGROUP

CITY OF RICHMOND HILL
BUILDING DIVISION
05/01/2024
RECEIVED
Per: joshua.nabua

May 9, 2023 10:08:15 AM M:\STANDARD DETAILS\P E R M I T S E T\2023\A1 PACKAGE - TRINIGROUP\P 5 - SUNKEN LAUNDRY ROOM PACKAGE A1.DWG

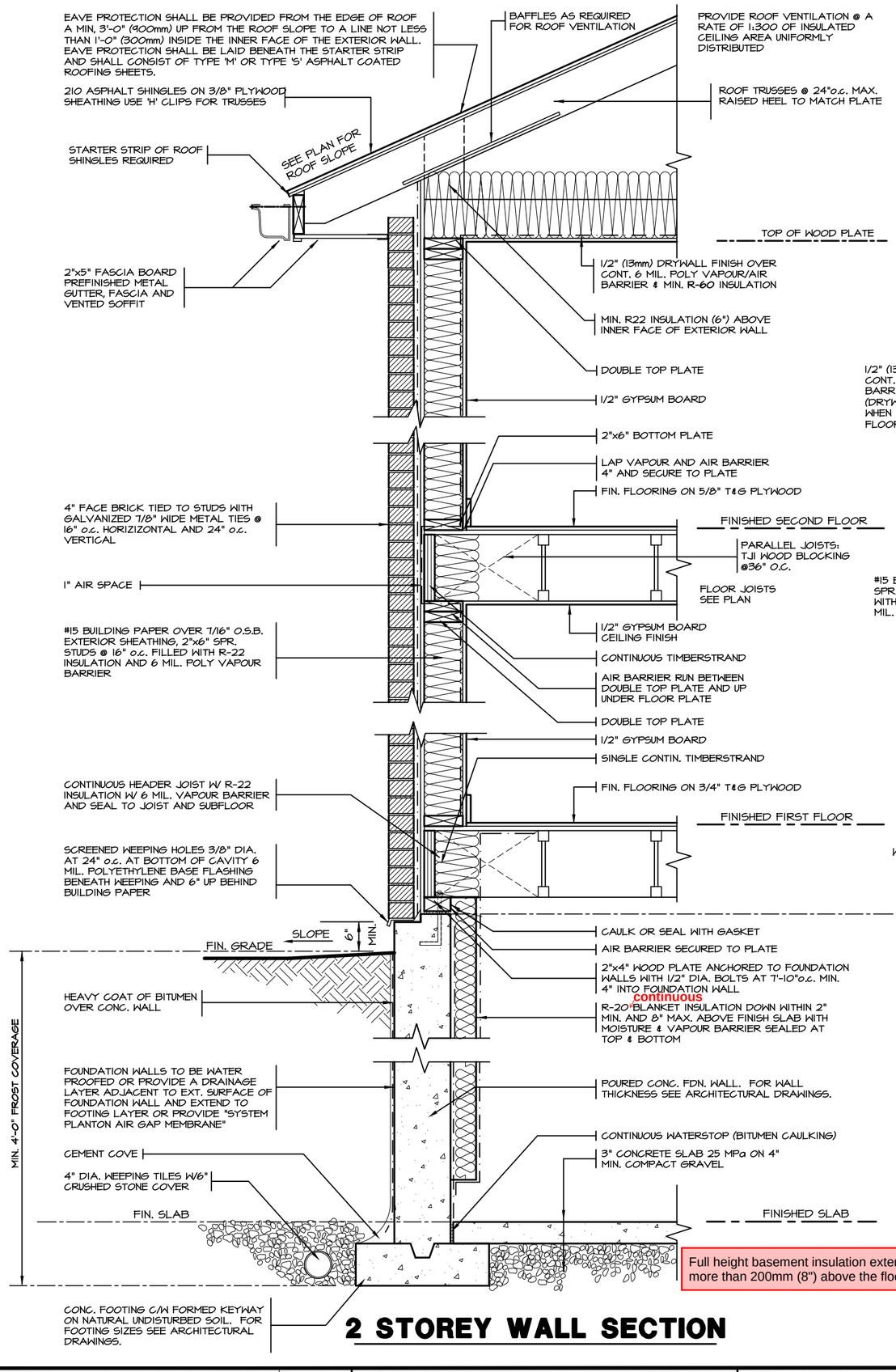

2 STOREY WALL SECTION

Full height basement insulation extending to not more than 200mm (8") above the floor is required

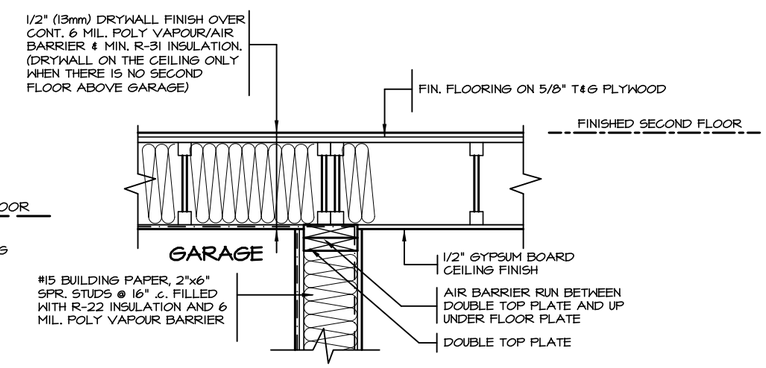

DETAIL FOR INTERIOR GARAGE WALLS & CEILINGS

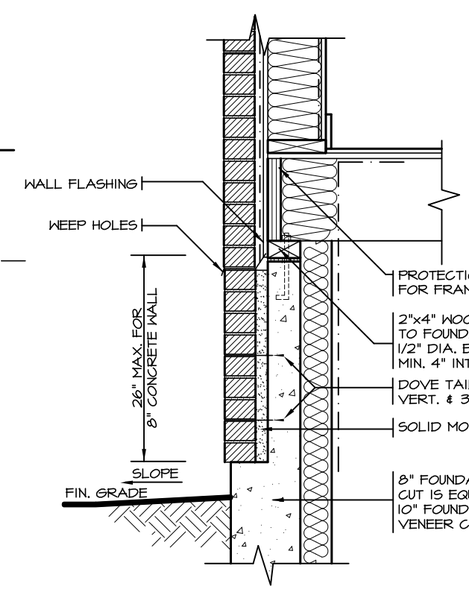

DETAIL FOR CONCRETE VENEER DROPPED GRADE

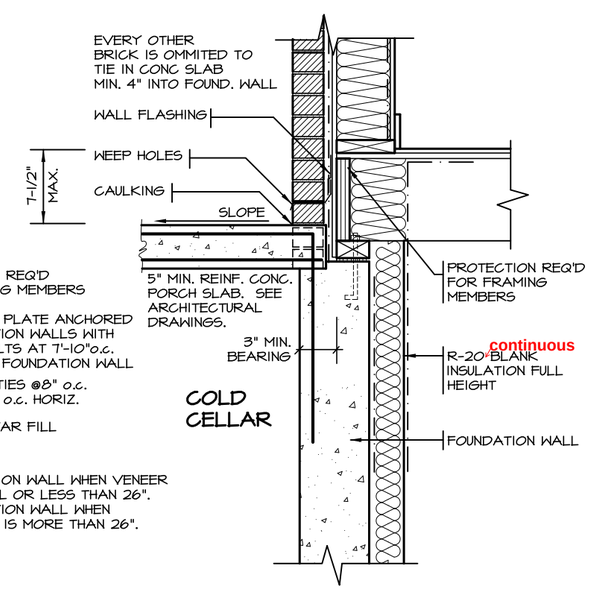

DETAIL FOR COLD CELLAR PORCH SLAB

STRUDET INC.

REGISTERED PROFESSIONAL ENGINEER
B. MARINKOVIC
May 10, 2023
PROVINCE OF ONTARIO

FOR STRUCTURE ONLY

CITY OF RICHMOND HILL BUILDING DIVISION
05/01/2024
RECEIVED
Per: joshua.nabua

2012 CODE COMPLIANCE PACKAGE "A1"

5.		
4.		
3.		
2.		
1.	ISSUED FOR PERMIT	JUL 30, 2018

REVISIONS

The undersigned has reviewed and takes responsibility for this design, and has the qualifications and meets the requirements set out in the Ontario Building Code to be a designer.

QUALIFICATION INFORMATION

Required unless design is exempt under Division C, Subsection 3.2.5 of the building code

NAME	SIGNATURE	BCIN
VIKAS GAJJAR		28770

REGION DESIGN INC.
8700 DUFFERIN ST.
CONCORD, ONTARIO
L4K 4S6
P (416) 736-4096
F (905) 660-0746

REGION DESIGN INC.

SHEET TITLE
2"X6" BRICK VENEER
2 STOREY SECTION

SCALE 3/4"=1'-0"

DATE MAY 2023

CONTRACTOR SHALL CHECK ALL DIMENSIONS AND ELEVATIONS BEFORE COMMENCING WITH WORK AND REPORT ANY DISCREPANCIES TO THE DESIGNER. PRINTS ARE NOT TO BE SCALED.

PAGE No. 6

Greenpark™

PROJECT NAME
TRINIGROUP

May 9, 2023 10:08:56 AM M:\STANDARD DETAILS\P E R M I T S E T\2023\A1 PACKAGE - TRINIGROUP\P 6 - 2 STOREY SECTION 2X6 PACKAGE A1.DWG

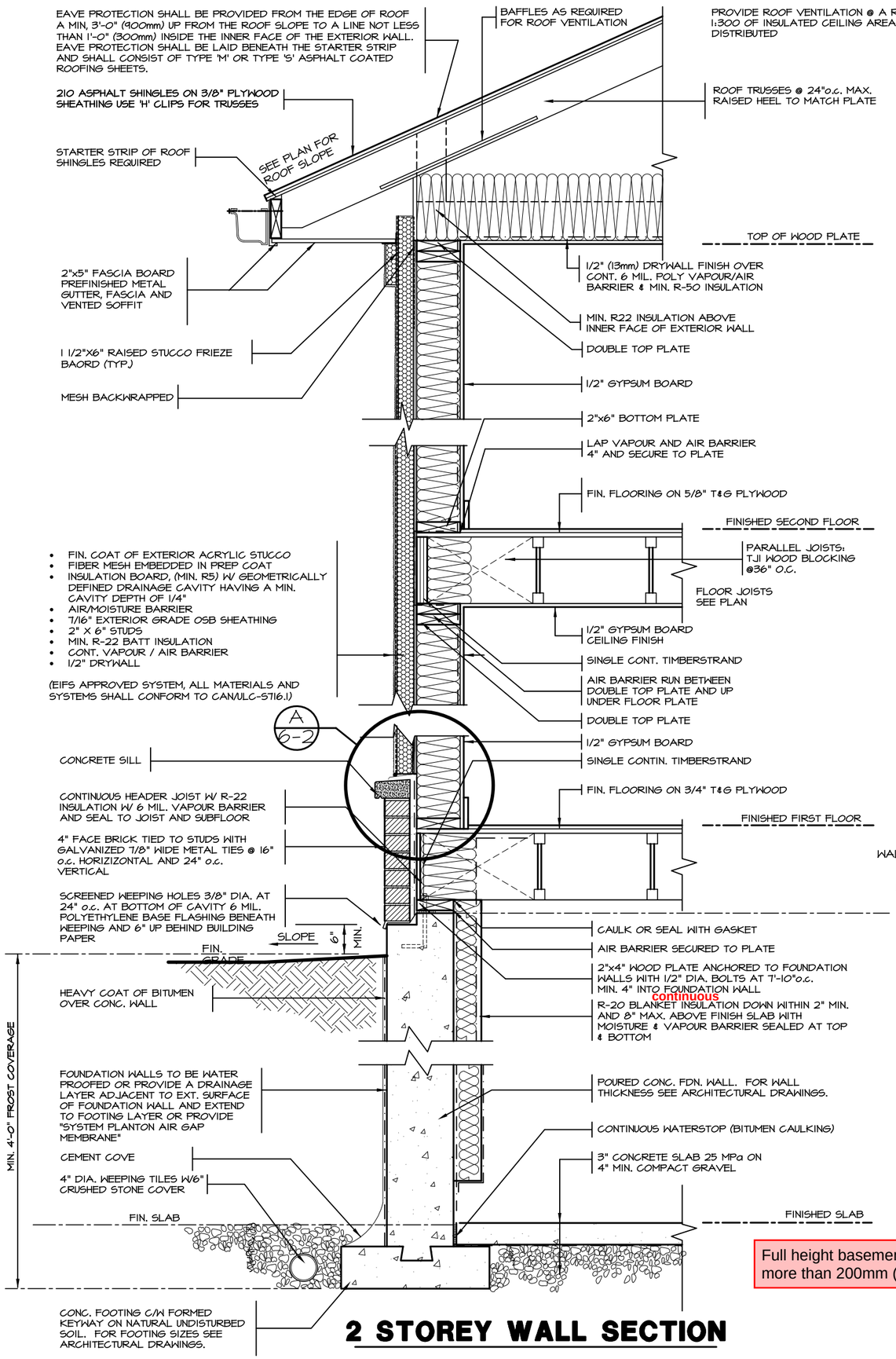

2 STOREY WALL SECTION

STRUDET INC.

REGISTERED PROFESSIONAL ENGINEER
B. MARINKOVIC
May 09, 2023
PROVINCE OF ONTARIO

FOR STRUCTURE ONLY

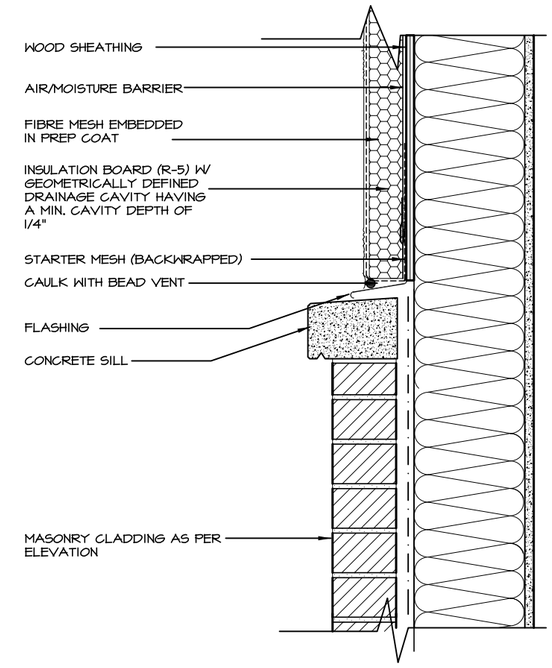

A. TERMINATION AT MASONRY CLADDING WITH SEALANT

1 1/2"=1'0"

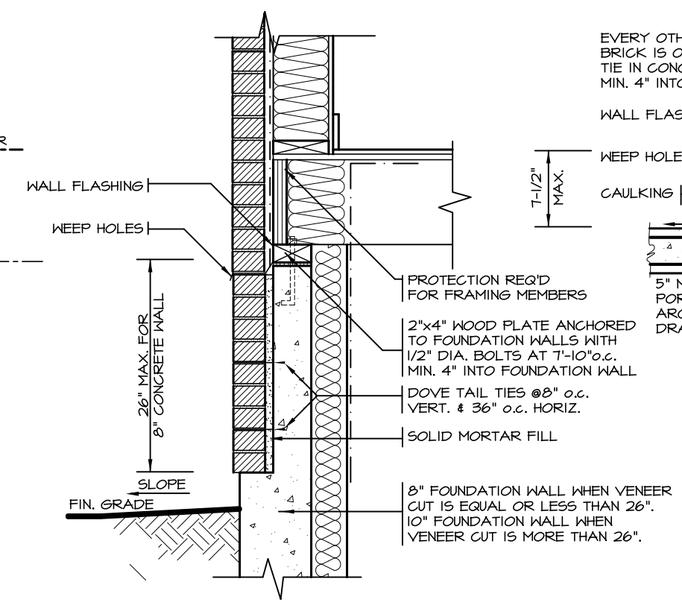

DETAIL FOR CONCRETE VENEER DROPPED GRADE

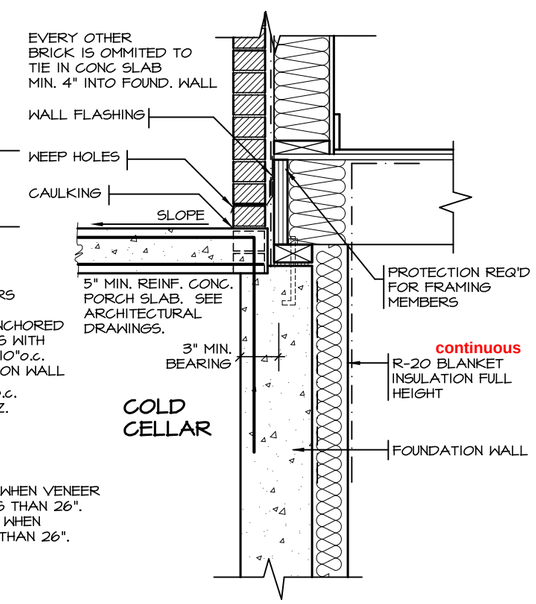

DETAIL FOR COLD CELLAR PORCH SLAB

Full height basement insulation extending to not more than 200mm (8") above the floor is required

2012 CODE
COMPLIANCE PACKAGE "A1"

5.		
4.		
3.		
2.		
1.	ISSUED FOR PERMIT	JUL 30, 2018

REVISIONS

The undersigned has reviewed and takes responsibility for this design, and has the qualifications and meets the requirements set out in the Ontario Building Code to be a designer.
QUALIFICATION INFORMATION
Required unless design is exempt under Division C, Subsection 3.2.5 of the building code

NAME	SIGNATURE	BCIN
VIKAS GAJJAR		28770

REGION DESIGN INC.
8700 DUFFERIN ST.
CONCORD, ONTARIO
L4K 4S6
P (416) 736-4096
F (905) 660-0746

REGION DESIGN INC.

SHEET TITLE: 2"X6" STUCCO WALL
2 STOREY SECTION

SCALE: AS NOTED

DATE: MAY 2023

CONTRACTOR SHALL CHECK ALL DIMENSIONS AND ELEVATIONS BEFORE COMMENCING WITH WORK AND REPORT ANY DISCREPANCIES TO THE DESIGNER. PRINTS ARE NOT TO BE SCALED.

PAGE No. 6-2

Greenpark™

PROJECT NAME: TRINIGROUP

CITY OF RICHMOND HILL
BUILDING DIVISION
05/01/2024
RECEIVED
Per: joshua.nabua

May 9, 2023 10:09:45 AM M:\STANDARD DETAILS\P E R M I T S E T\2023\A1 PACKAGE - TRINIGROUP\P 6-2 - 2 STOREY SECTION 2X6- STUCCO PACKAGE A1.DWG

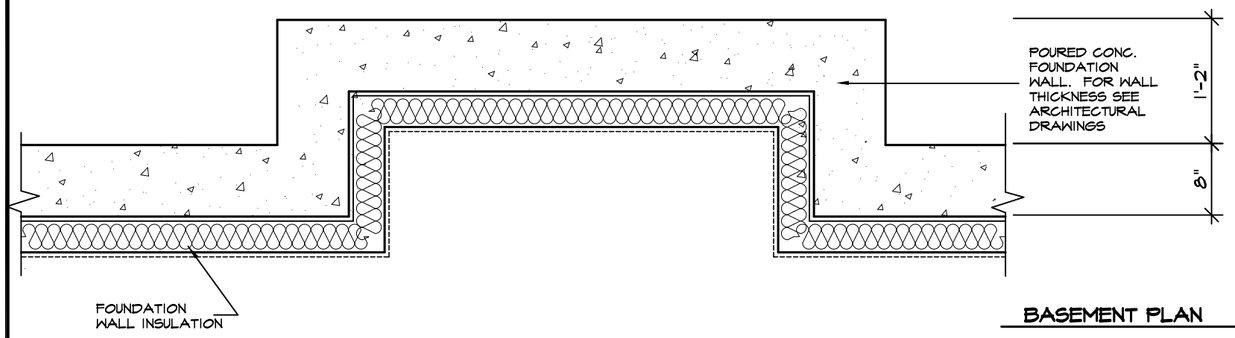

BASEMENT PLAN

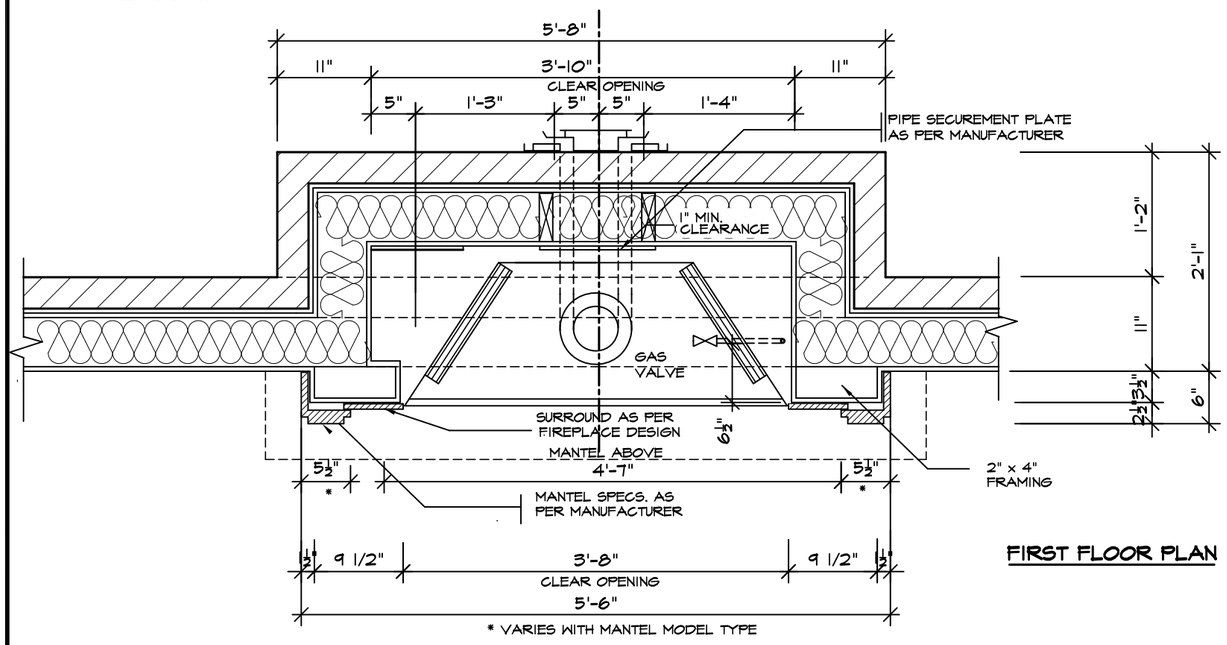

FIRST FLOOR PLAN

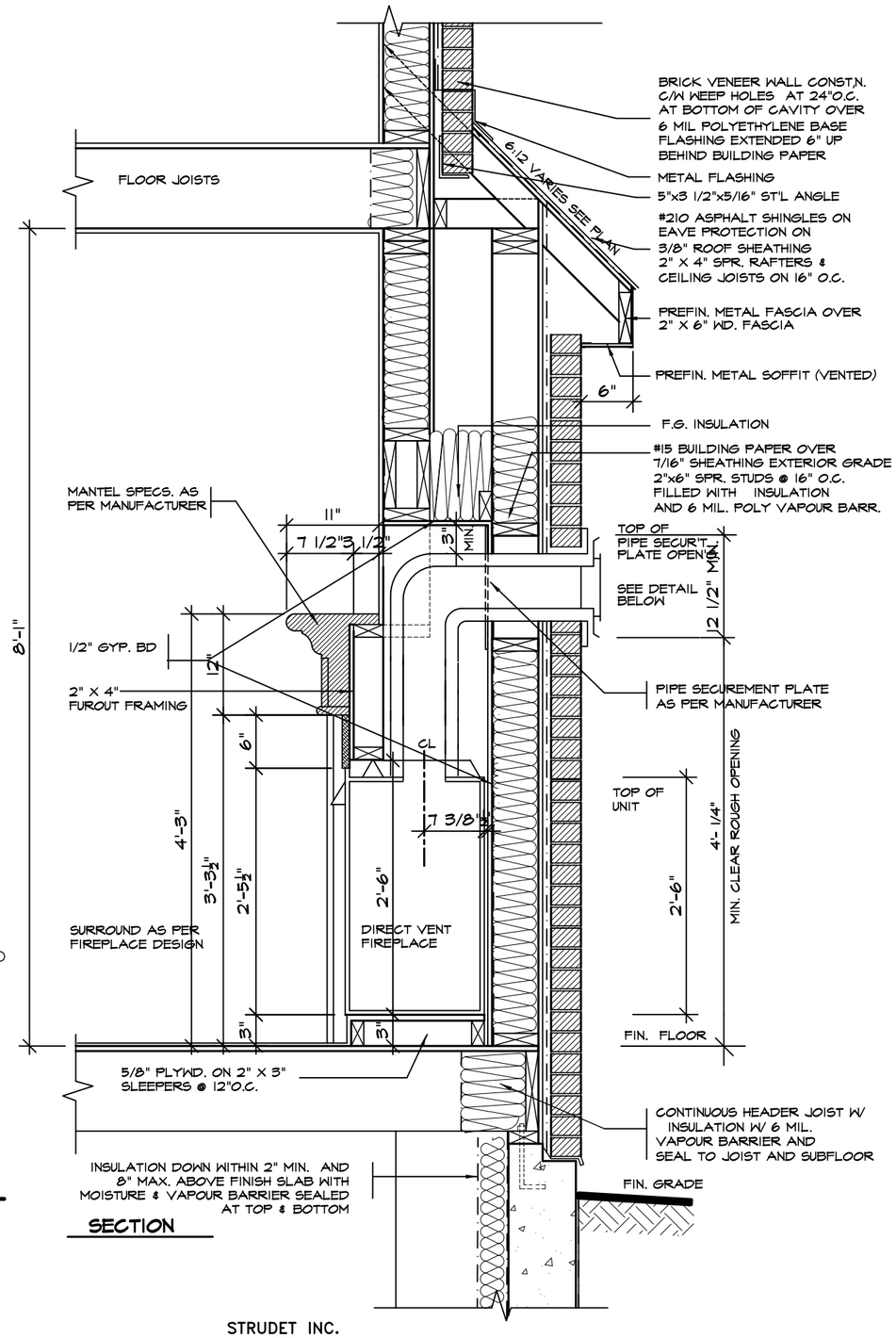

SECTION

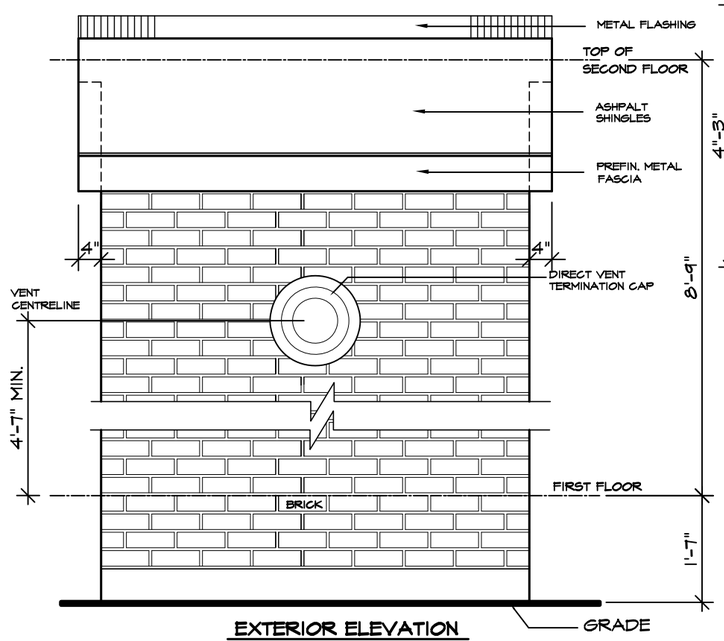

EXTERIOR ELEVATION

NOT TO SCALE

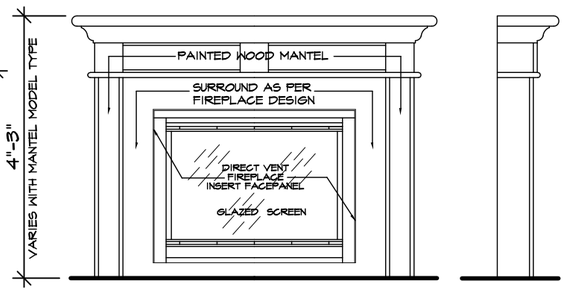

FRONT/SIDE ELEVATION

NOT TO SCALE

GENERAL INSTALLATION NOTES

1.0 UNIT INSTALLATION TO STRICTLY CONFORM TO MANUFACTURERS INSTALLATION MANUAL AND ALL APPLICABLE CODES OF LOCAL AUTHORTIES HAVING JURISDICTION INCLUDING CAN/OGA-B149.1 & 2.

2.0 INSTALL WITH THE FOLLOWING MINIMUM CLEARANCES TO COMBUSTIBLES:
- -FROM TOP OF UNIT 0"
- -FROM BACK OF UNIT 1/2"
- -FROM SIDES OF UNIT 1/2"
- -FROM TOP OF HORIZ.VENT 3"
- -FROM SIDES TO VENT 1"

3.0 THE DIRECT VENT UNIT ILLUSTRATED IS THE GC150 MODEL AS MANUFACTURED BY HEATILATOR.

4.0 THE MANTEL ILLUSTRATED IS THE S-2 GB AS SUPPLIED BY GREATER TORONTO FIREPLACE.

STRUDET INC.

REGISTERED PROFESSIONAL ENGINEER
B. MARINKOVIC
PROVINCE OF ONTARIO
May 10, 2023

FOR STRUCTURE ONLY

2012 CODE
COMPLIANCE PACKAGE "A1"

5.		
4.		
3.		
2.		
1.	ISSUED FOR PERMIT	JULY 30, 2018

REVISIONS

The undersigned has reviewed and takes responsibility for this design, and has the qualifications and meets the requirements set out in the Ontario Building Code to be a designer.

QUALIFICATION INFORMATION

Required unless design is exempt under Division C, Subsection 3.2.5 of the building code

NAME	SIGNATURE	BCIN
VIKAS GAJJAR		28770

REGION DESIGN INC.
8700 DUFFERIN ST.
CONCORD, ONTARIO
L4K 4S6
P (416) 736-4096
F (905) 660-0746

REGION DESIGN INC.

SHEET TITLE: VENT FIREPLACE DIRECT

SCALE: 3/4"=1'-0"

DATE: MAY 2023

CONTRACTOR SHALL CHECK ALL DIMENSIONS AND ELEVATIONS BEFORE COMMENCING WITH WORK AND REPORT ANY DISCREPANCIES TO THE DESIGNER. PRINTS ARE NOT TO BE SCALED.

PAGE No. 7

Greenpark™

PROJECT NAME: TRINIGROUP

CITY OF BRAMPTON - HILL BUILDING DIVISION
05/01/2024
RECEIVED
Per: joshua.nabua

May 9, 2023 10:10:25 AM M:\STANDARD DETAILS\P E R M I T S E T\2023\A1 PACKAGE - TRINIGROUP\P 7 - DIRECT VENT FIRE PLACE PACKAGE A1.DWG

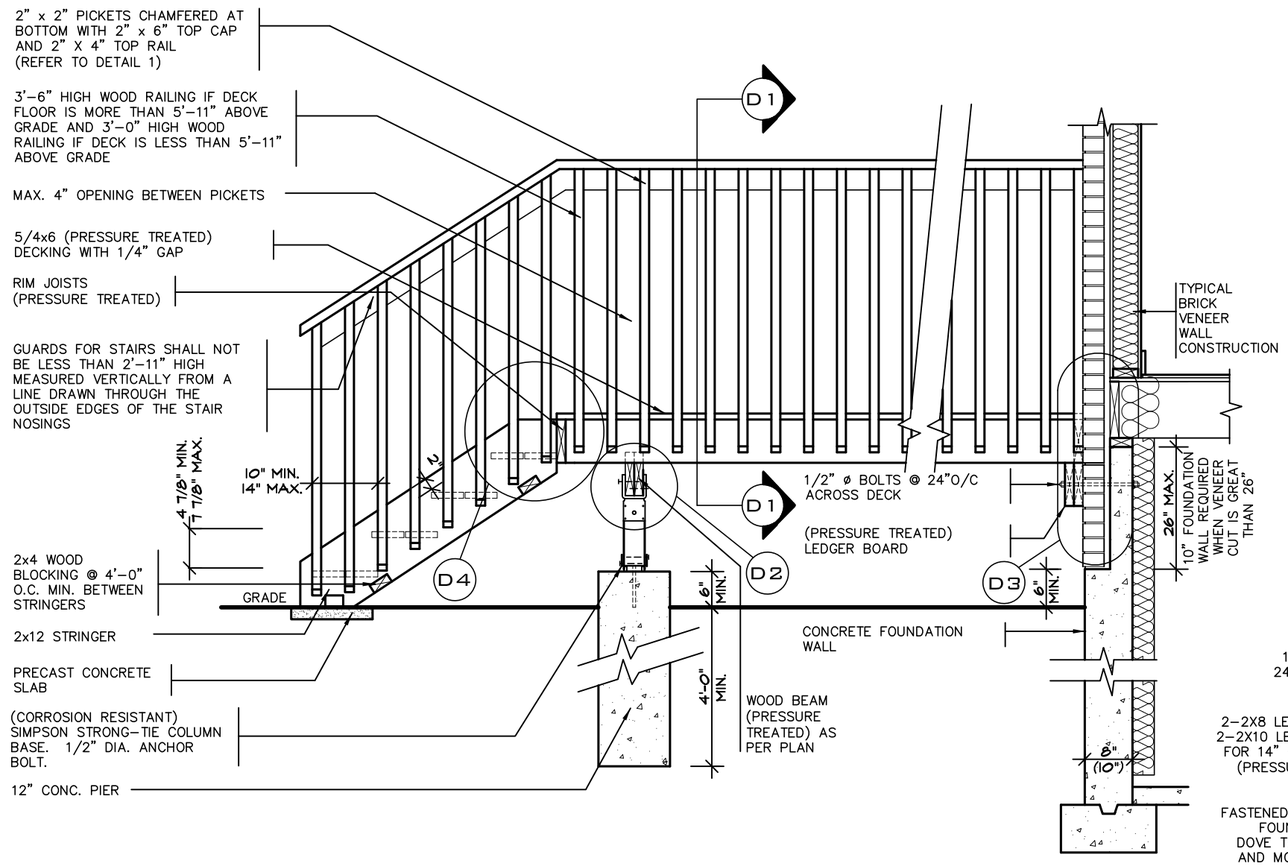

DECK SECTION WITH BRICK VENEER

SCALE: 1/2"=1'-0"

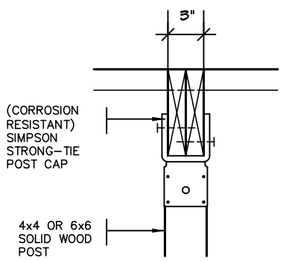

DETAIL 2 - BEAM-TO-POST

SCALE: 1" = 1'-0"

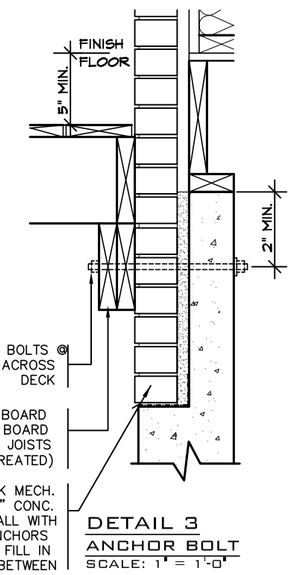

DETAIL 3 ANCHOR BOLT

SCALE: 1" = 1'-0"

DETAIL 1
CANTILEVERED PICKET SCREWED TO RIM JOIST AND DECK

GUARD PARALLEL TO FLOOR JOISTS

SCALE: 1" = 1'-0"

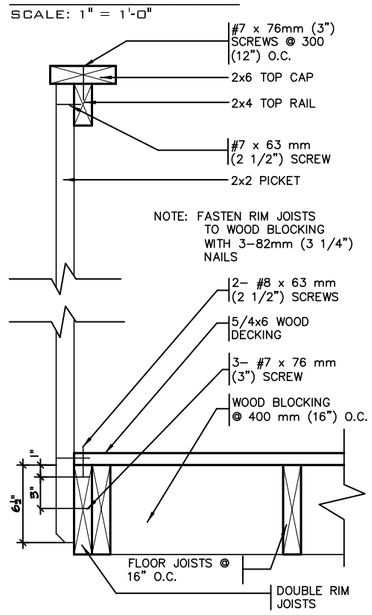

GUARD PERPENDICULAR TO FLOOR JOISTS

SCALE: 1" = 1'-0"

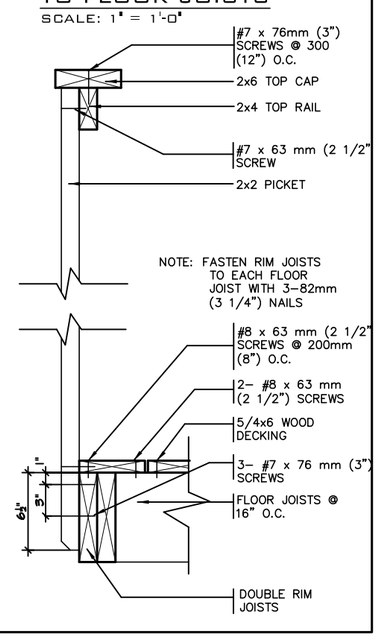

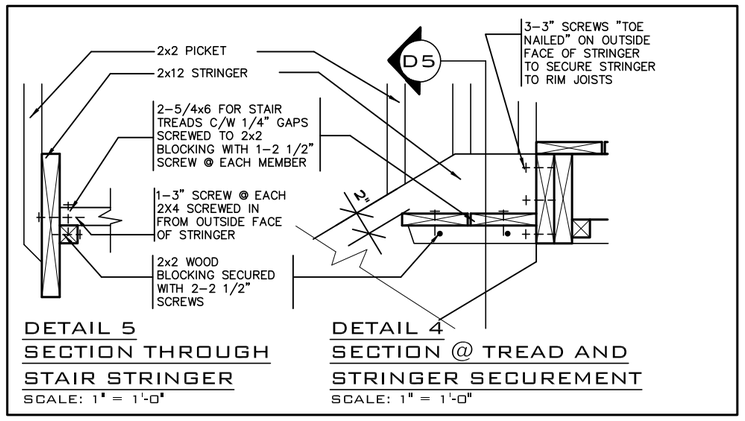

DETAIL 5 SECTION THROUGH STAIR STRINGER

SCALE: 1" = 1'-0"

DETAIL 4 SECTION @ TREAD AND STRINGER SECUREMENT

SCALE: 1" = 1'-0"

GENERAL NOTES

1. BRICK TO BE COMPRESSIVE STRENGTH OF 15mPa (2200 p.s.i.) MIN. UNITS TO BE LAID WITH FULL HEAD AND BED JOINTS.
2. MORTAR TO BE TYPE S WITH JOINT THICKNESS OF 10mm (3 /8") MIN. AND 20mm (3 /4") MAX.
3. ALL NAILS AND SCREWS TO BE GALVANIZED.
4. WOOD FOR CANTILEVERED PICKETS PICKETS SHALL BE DOUGLAS FIR-LARCH, SPRUCE-PINE-FIR, OR HEM-FIR SPECIES.
5. THE DECK HAS BEEN DESIGNED TO SAFELY SUPPORT A SUPERIMPOSED LOAD OF 1.9kPa [40psf].
6. CONCRETE SHALL HAVE COMPRESSIVE STRENGTH OF 20MPa AT 28 DAYS AND 5-8% AIR ENTRAINED.
7. FOOTING TO BE PLACED ON UNDISTURBED SOIL WITH MIN. BEARING PRESSURE OF 150kPa [3130psf].

STRUDET INC.

REGISTERED PROFESSIONAL ENGINEER
B. MARINKOVIC
May 10,2023
PROVINCE OF ONTARIO

FOR STRUCTURE ONLY

2012 CODE

COMPLIANCE PACKAGE "A1"

5.		
4.		
3.		
2.		
1.	REVISED FOR STARTIME	NOV 16

REVISIONS

The undersigned has reviewed and takes responsibility for this design, and has the qualifications and meets the requirements set out in the Ontario Building Code to be a designer.

QUALIFICATION INFORMATION

Required unless design is exempt under Division C, Subsection 3.2.5 of the building code

NAME	SIGNATURE	BCIN
VIKAS GAJJAR		28770

REGION DESIGN INC.
8700 DUFFERIN ST.
CONCORD, ONTARIO
L4K 4S6
P (416) 736-4096
F (905) 660-0746

REGION DESIGN INC.

SHEET TITLE: WOOD DECK DETAIL

CONTRACTOR SHALL CHECK ALL DIMENSIONS AND ELEVATIONS BEFORE COMMENCING WITH WORK AND REPORT ANY DISCREPANCIES TO THE DESIGNER. PRINTS ARE NOT TO BE SCALED.

SCALE	BY	AREA	PAGE No.
AS SHOWN			8
DATE: MAY 2023	TYPE	PROJECT: 00-00-00	

Greenpark™

PROJECT NAME: TRINIGROUP

CITY OF RICHMOND HILL
BUILDING DIVISION
05/01/2024
RECEIVED
Per: joshua.nabua

November 17, 2023 3:53:13 PM M:\STANDARD DETAILS\P E R M I T S E T\2023\A1 PACKAGE - TRINIGROUP\P 8 - DECK DETAIL PACKAGE A1.DWG

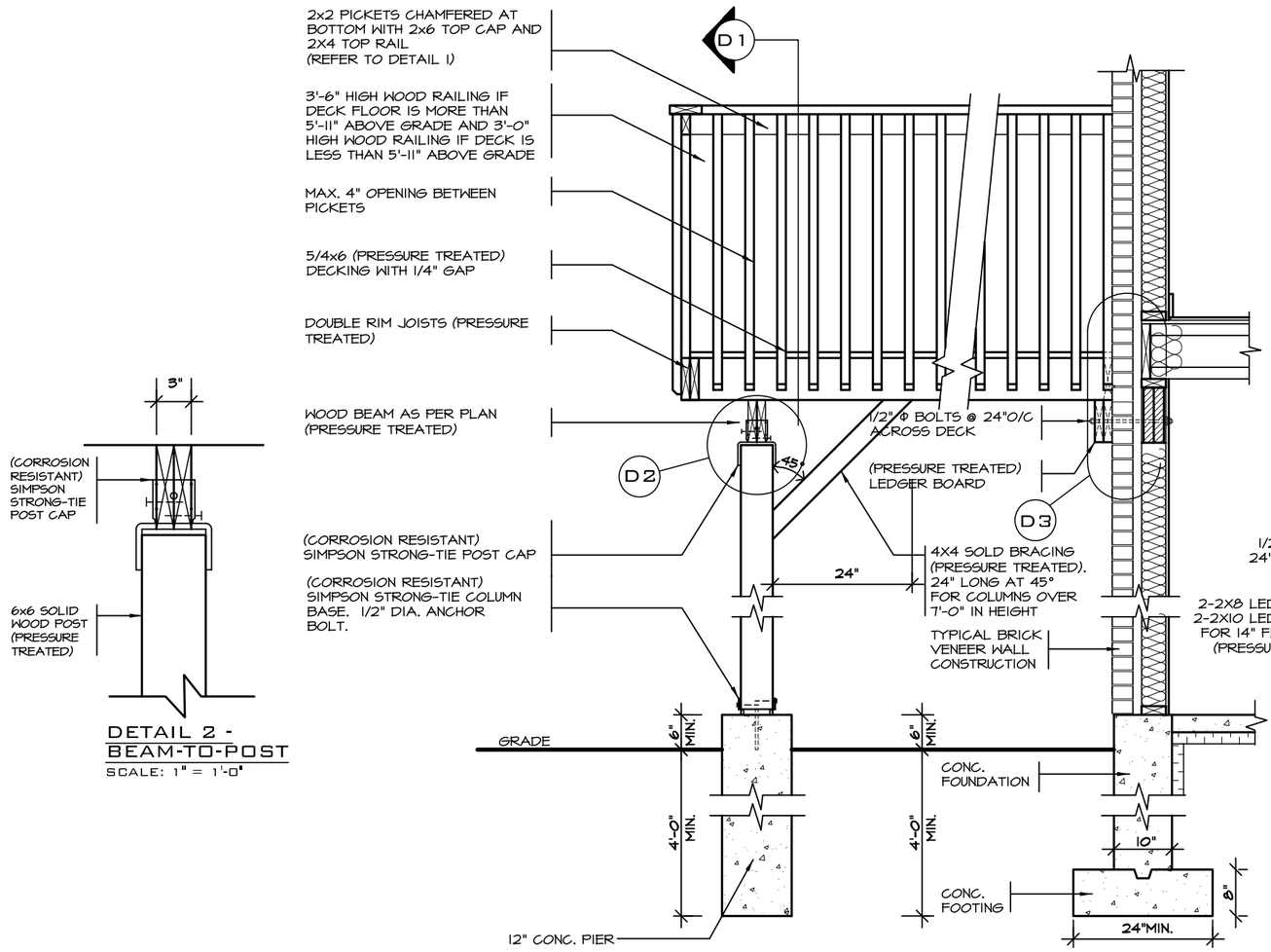

DETAIL 2 -
BEAM-TO-POST
SCALE: 1" = 1'-0"

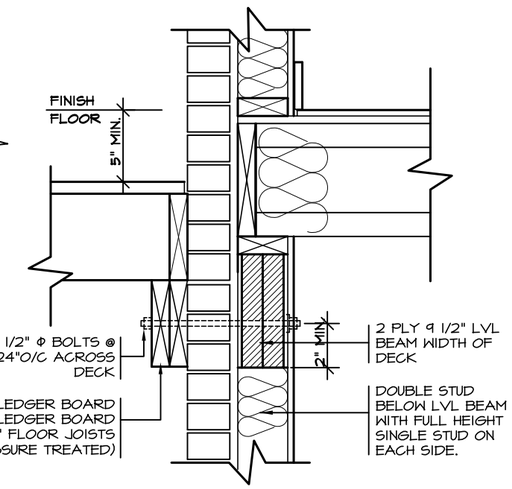

DETAIL 3
BEAM-TO-STUD WALL
SCALE: 1" = 1'-0"

DECK SECTION WITH BRICK VENEER

SCALE: 1/2"=1'-0"

DETAIL 1
CANTILEVERED PICKET SCREWED TO RIM JOIST AND DECK

GUARD PARALLEL TO FLOOR JOISTS

SCALE: 1" = 1'-0"

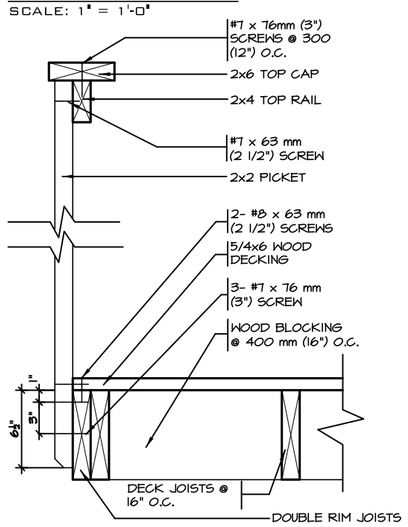

GUARD PERPENDICULAR TO FLOOR JOISTS

SCALE: 1" = 1'-0"

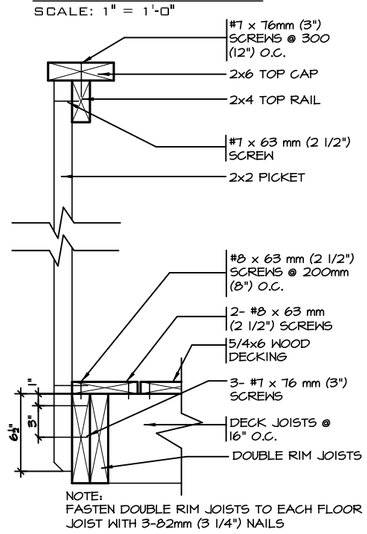

NOTE:
FASTEN DOUBLE RIM JOISTS TO EACH FLOOR JOIST WITH 3-82mm (3 1/4") NAILS

GENERAL NOTES

1. THE DECK HAS BEEN DESIGNED TO SAFELY SUPPORT A SUPERIMPOSED LOAD OF 1.9kPa [40psf]
2. ALL NAILS AND SCREWS TO BE GALVANIZED
3. WOOD FOR CANTILEVERED PICKETS PICKETS SHALL BE DOUGLAS FIR-LARCH, SPRUCE-PINE-FIR, OR HEM-FIR SPECIES
4. CONCRETE SHALL HAVE COMPRESSIVE STRENGTH OF 20MPa AT 28 DAYS AND 5-8% AIR ENTRAINED
5. FOOTING TO BE PLACED ON UNDISTURBED SOIL WITH MIN. BEARING PRESSURE OF 150kPa [3130psf]

STRUDET INC.
REGISTERED PROFESSIONAL ENGINEER
B. MARINKOVIC
PROVINCE OF ONTARIO
May 10, 2023

FOR STRUCTURE ONLY
2012 CODE
COMPLIANCE PACKAGE "A1"

5.		
4.		
3.		
2.		
1.	REVISED FOR RUSSELL GARDENS	MAR 2018

REVISIONS

The undersigned has reviewed and takes responsibility for this design, and has the qualifications and meets the requirements set out in the Ontario Building Code to be a designer.
QUALIFICATION INFORMATION
Required unless design is exempt under Division C, Subsection 3.2.5 of the building code

NAME	SIGNATURE	BCIN
VIKAS GAJJAR		28770

REGION DESIGN INC.
8700 DUFFERIN ST.
CONCORD, ONTARIO
L4K 4S6
P (416) 736-4096
F (905) 660-0746

REGION DESIGN INC.

SHEET TITLE: WALK-OUT DECK DETAILS

CONTRACTOR SHALL CHECK ALL DIMENSIONS AND ELEVATIONS BEFORE COMMENCING WITH WORK AND REPORT ANY DISCREPANCIES TO THE DESIGNER. PRINTS ARE NOT TO BE SCALED.

SCALE	BY	AREA	PAGE No.
AS SHOWN			8-2
DATE: MAY 2023	TYPE	PROJECT: 00-00-00	

Greenpark™
PROJECT NAME: TRINIGROUP

CITY OF RICHMOND HILL
BUILDING DIVISION
05/01/2024
RECEIVED
Per: joshua.nabua

May 9, 2023 11:24:42 AM M:\STANDARD DETAILS\P E R M I T S E T\2023\A1 PACKAGE - TRINIGROUP\P 8-2 - WALK-OUT DECK DETAIL PACKAGE A1 -NEW VERSION.DWG

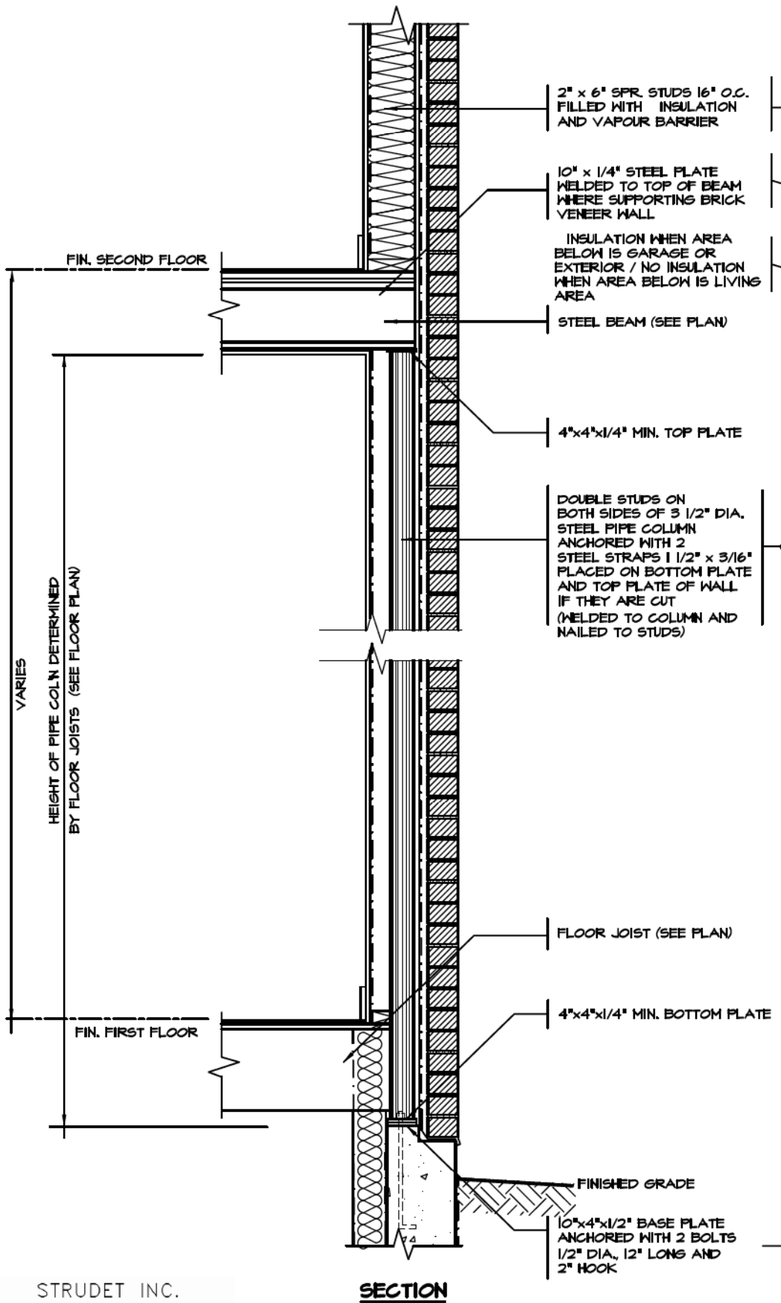

SECTION

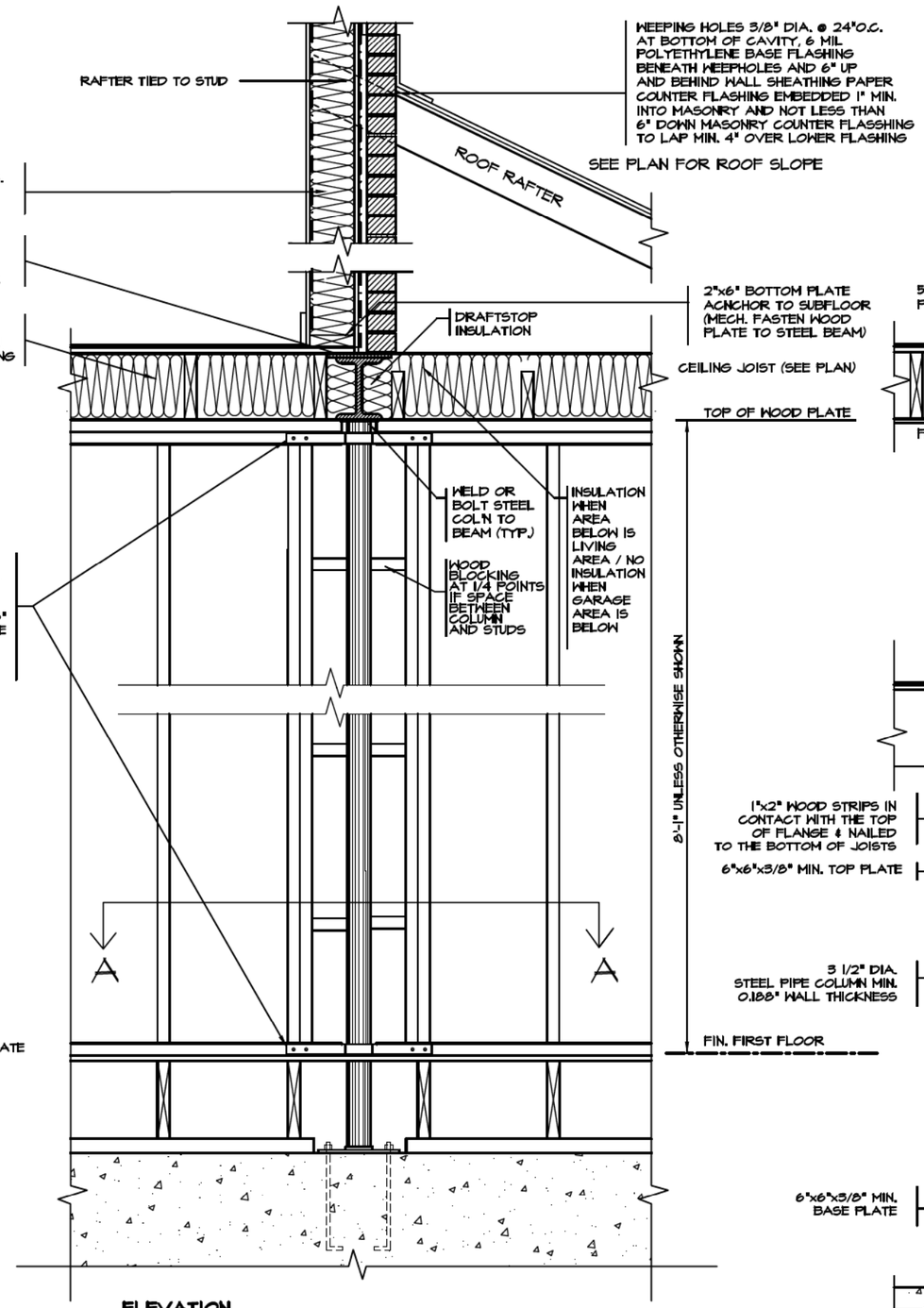

ELEVATION

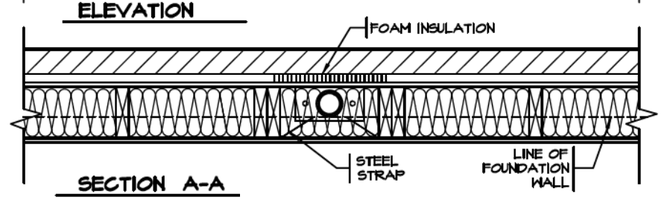

SECTION A-A

SECTION THROUGH STEEL BEAM SUPPORTING MASONRY & BEARING STUD PARTITION

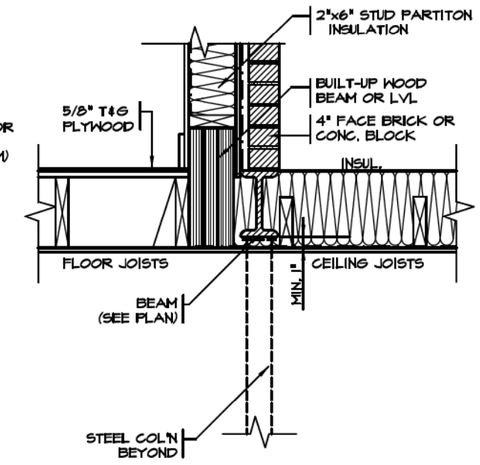

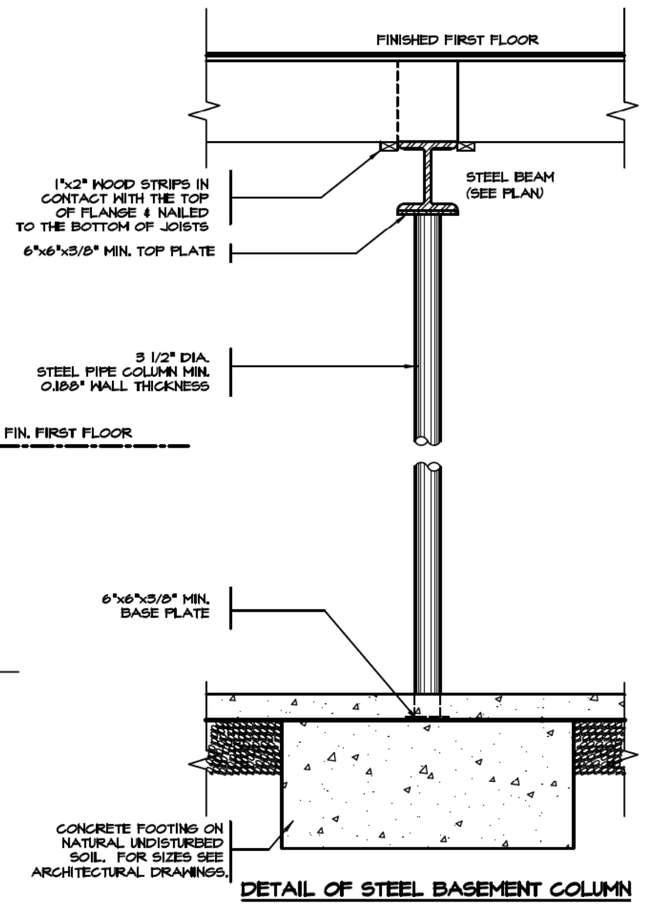

DETAIL OF STEEL BASEMENT COLUMN

STRUDET INC.

REGISTERED PROFESSIONAL ENGINEER
B. MARINKOVIC
May 11,2023
PROVINCE OF ONTARIO

FOR STRUCTURE ONLY

2012 CODE
COMPLIANCE PACKAGE "A1"

5.		
4.		
3.		
2.		
1.	ISSUED FOR PERMIT	JUL 30, 2018

REVISIONS

The undersigned has reviewed and takes responsibility for this design, and has the qualifications and meets the requirements set out in the Ontario Building Code to be a designer.

QUALIFICATION INFORMATION

Required unless design is exempt under Division C, Subsection 3.2.5 of the building code

NAME	SIGNATURE	BCIN
VIKAS GAJJAR		28770

REGION DESIGN INC.
8700 DUFFERIN ST.
CONCORD, ONTARIO
L4K 4S6
P (416) 736-4096
F (905) 660-0746

REGION DESIGN INC.

SHEET TITLE: COLUMN DETAILS STEEL

SCALE: 3/4"=1'-0"

DATE: MAY 2023

CONTRACTOR SHALL CHECK ALL DIMENSIONS AND ELEVATIONS BEFORE COMMENCING WITH WORK AND REPORT ANY DISCREPANCIES TO THE DESIGNER. PRINTS ARE NOT TO BE SCALED.

PAGE No. 9

Greenpark™

PROJECT NAME: TRINIGROUP

CITY OF RICHMOND HILL BUILDING DIVISION
05/01/2024
RECEIVED
Per: joshua.nabua

May 10, 2023 4:36:54 PM M:\STANDARD DETAILS\P E R M I T S E T\2023\A1 PACKAGE - TRINIGROUP\P 9 - STEEL COLUMN DETAILS PACKAGE A1.DWG

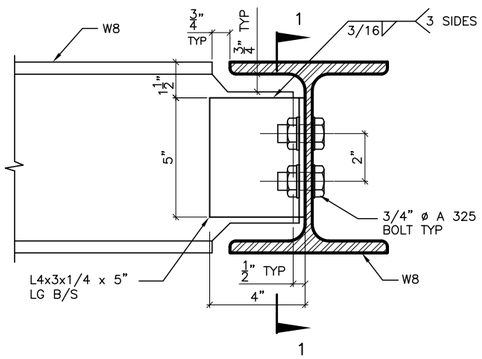

DETAIL 1.

W8
TO
W8
CONNECTION

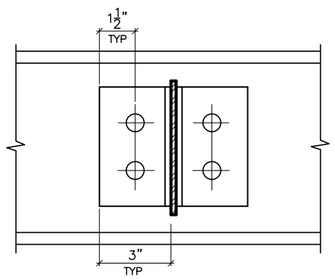

SECTION 1–1

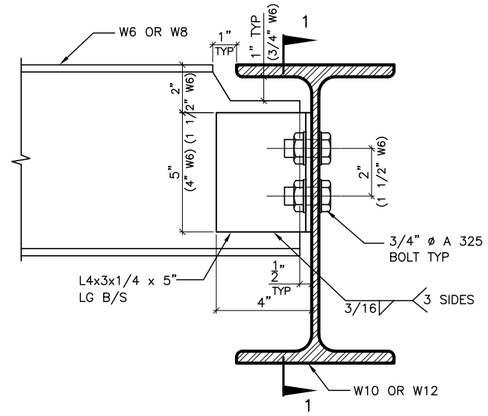

DETAIL 2.

W6(W8)
TO
W10(W12)
CONNECTION

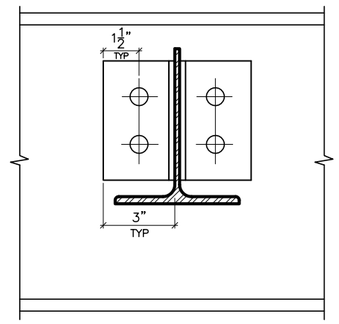

SECTION 1–1

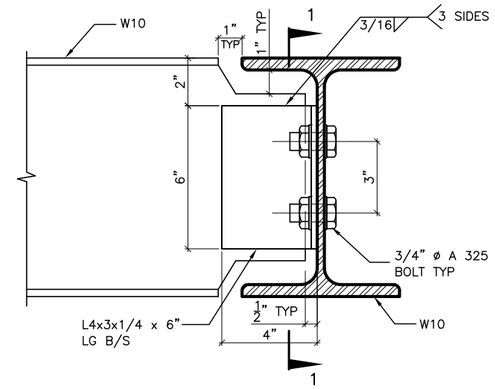

DETAIL 3.

W10
TO
W10
CONNECTION

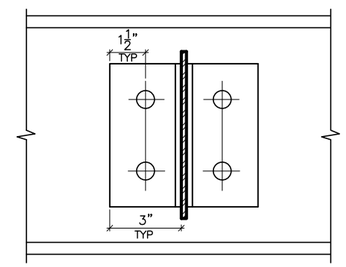

SECTION 1–1

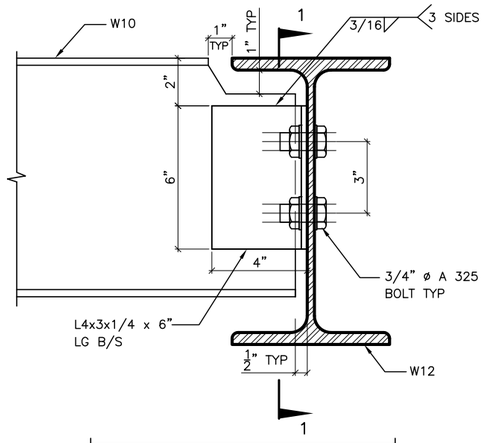

DETAIL 4.

W10
TO
W12
CONNECTION

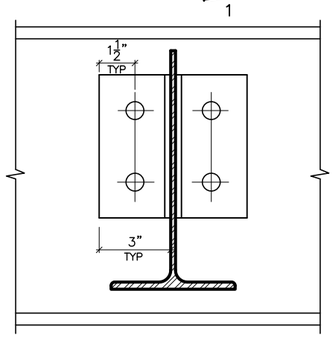

SECTION 1–1

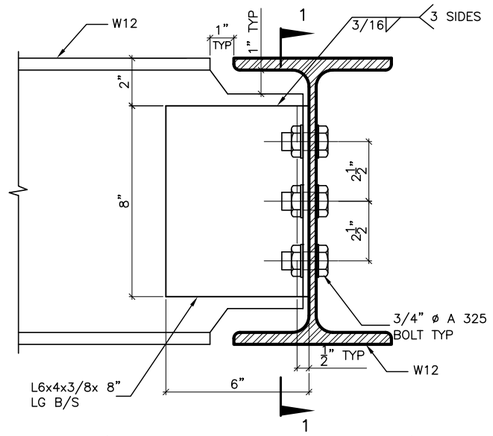

DETAIL 5.

W12
TO
W12
CONNECTION

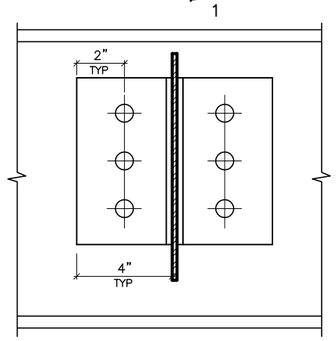

SECTION 1–1

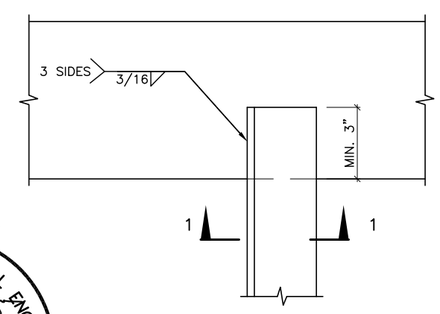

PLAN VIEW

STRUDET INC.

REGISTERED PROFESSIONAL ENGINEER
B. MARINKOVIC
May 10, 2023
PROVINCE OF ONTARIO

FOR STRUCTURE ONLY

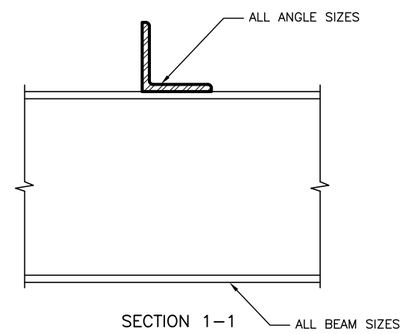

SECTION 1–1

DETAIL 6.

ANGLE
TO
BEAM
CONNECTION

2012 CODE COMPLIANCE PACKAGE "A1"

5.		
4.		
3.		
2.		
1.	ISSUED FOR PERMIT	JULY 30, 2018

REVISIONS

The undersigned has reviewed and takes responsibility for this design, and has the qualifications and meets the requirements set out in the Ontario Building Code to be a designer.
QUALIFICATION INFORMATION
Required unless design is exempt under Division C, Subsection 3.2.5 of the building code

NAME	SIGNATURE	BCIN
VIKAS GAJJAR		28770

REGION DESIGN INC.
8700 DUFFERIN ST.
CONCORD, ONTARIO
L4K 4S6
P (416) 736-4096
F (905) 660-0746

REGION DESIGN INC.

SHEET TITLE
BEAM DETAILS
STEEL

SCALE
N.T.S.

DATE
MAY 2023

CONTRACTOR SHALL CHECK ALL DIMENSIONS AND ELEVATIONS BEFORE COMMENCING WITH WORK AND REPORT ANY DISCREPANCIES TO THE DESIGNER. PRINTS ARE NOT TO BE SCALED.

PAGE No.
10

Greenpark™

PROJECT NAME
TRINIGROUP

CITY OF BRAMPTON HILL
BUILDING DIVISION
05/01/2024
RECEIVED
Per: joshua.nabua

May 9, 2023 11:26:14 AM M:\STANDARD DETAILS\P E R M I T S E T\2023\A1 PACKAGE - TRINIGROUP\P 10 - BEAM CONNECTIONS PACKAGE A1.DWG

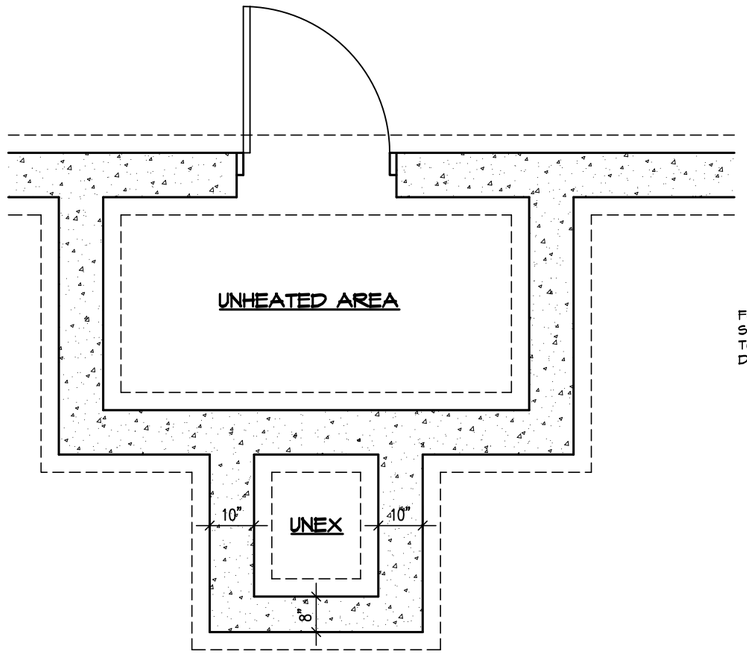

FOUNDATION PLAN

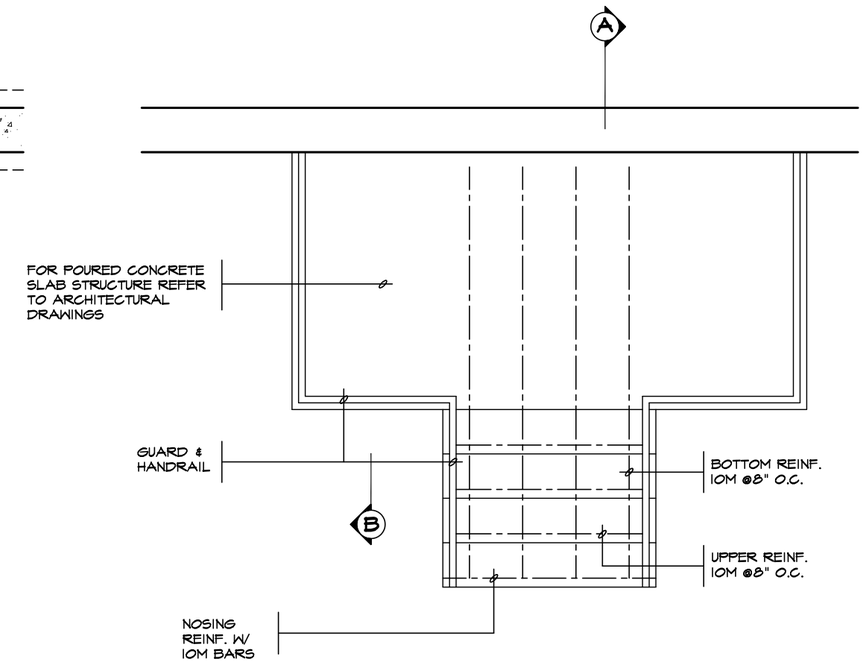

GROUND FLOOR PLAN

GENERAL NOTES

1. EXTERIOR STAIRS

   7 7/8" RISE MAXIMUM
   8 1/4" RUN MINIMUM
   10" TREAD MINIMUM

2. MASONRY TIES

   WHEN BRICK FACING IS USED ABOVE GROUND LEVEL, PROVIDE 3/16" DIA. CORROSION RESISTANT METAL TIES @ 36" HORIZONTAL & 8" VERTICAL

3. GUARDS

   ARE REQUIRED AROUND CONCRETE SLAB IF MORE THAN 2'-0" ABOVE GRADE & ON BOTH SIDES OF STAIRS CONTAINING MORE THAN 6 RISERS. MINIMUM 31" HIGH FOR STAIRS MINIMUM 35" HIGH FOR PORCHES UP TO 5'-11" ABOVE GRADE. MINIMUM 42" HIGH FOR GREATER HTS.

4. HANDRAIL

   ARE REQUIRED WHERE STEPS HAVE MORE THAN 3 RISERS . HANDRAIL HEIGHT 31" - 38".

5. FOUNDATION WALLS

   THICKNESS OF FOUNDATION WALLS IS DEPENDANT UPON VENEER CUT 8" FOR UP TO 26" VENEER CUT HEIGHT 10" FOR VENEER CUT OVER 26" HIGH

6. CONCRETE

   MINIMUM CONCRETE STRENGTH SHALL BE 4650 PSI [32MPa] W/ 5%-8% AIR ENTRAINMENT MINIMUM CONCRETE SLAB THICKNESS 5"

7. CONCRETE COVER

   PROVIDE MINIMUM 3/4" CLEAR CONCRETE COVER TO REINFORCING BARS

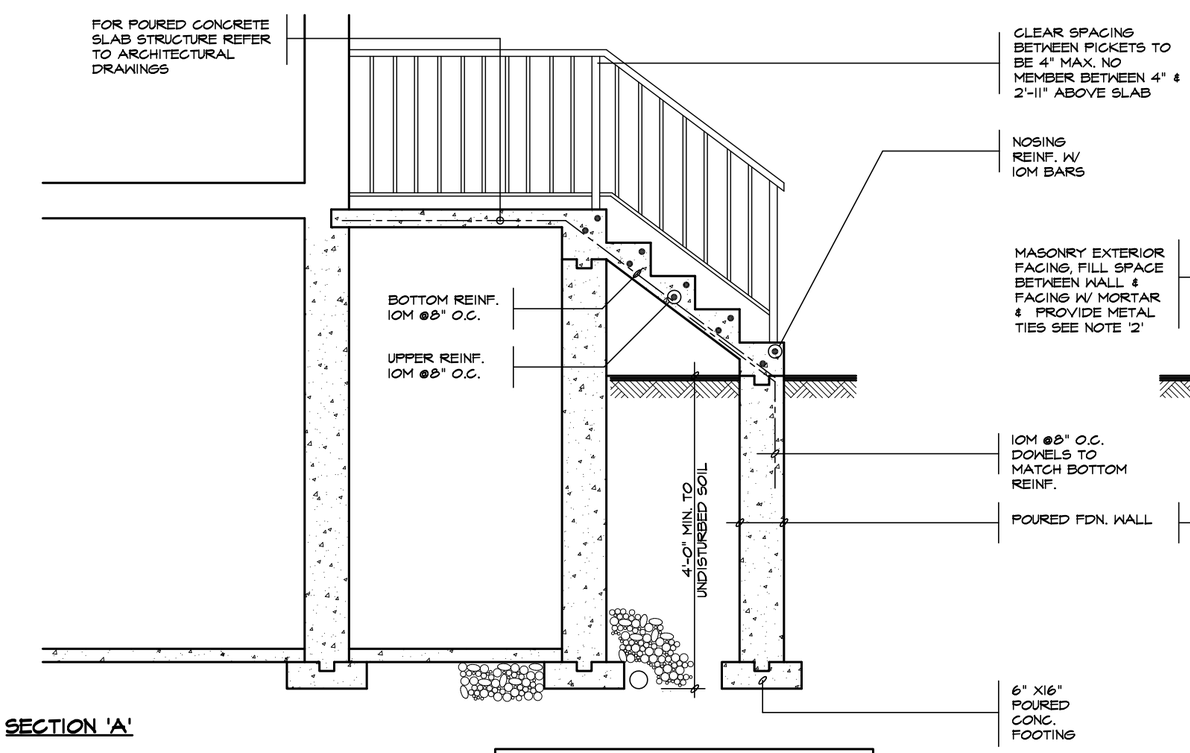

SECTION 'A'

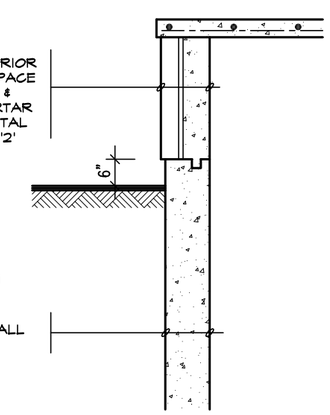

SECTION 'B'

NOTE: FOR MORE THAN 8 RISERS

STRUDET INC.

REGISTERED PROFESSIONAL ENGINEER
B. MARINKOVIC
May 10,2023
PROVINCE OF ONTARIO

FOR STRUCTURE ONLY

2012 CODE
COMPLIANCE PACKAGE "A1"

5.		
4.		
3.		
2.		
1.	ISSUED FOR PERMIT	JUL 30, 2018

REVISIONS

The undersigned has reviewed and takes responsibility for this design, and has the qualifications and meets the requirements set out in the Ontario Building Code to be a designer.
QUALIFICATION INFORMATION
Required unless design is exempt under Division C, Subsection 3.2.5 of the building code

NAME	SIGNATURE	BCIN
VIKAS GAJJAR		28770

REGION DESIGN INC.
8700 DUFFERIN ST.
CONCORD, ONTARIO
P (416) 736-4096
F (905) 660-0746
REGION DESIGN INC.

SHEET TITLE: POURED CONCRETE STAIRS

SCALE: 3/8"=1'-0"

DATE: MAY 2023

CONTRACTOR SHALL CHECK ALL DIMENSIONS AND ELEVATIONS BEFORE COMMENCING WITH WORK AND REPORT ANY DISCREPANCIES TO THE DESIGNER. PRINTS ARE NOT TO BE SCALED.

PAGE No. 14

Greenpark™

PROJECT NAME: TRINIGROUP

CITY OF RICHMOND HILL
BUILDING DIVISION
05/01/2024
RECEIVED
Per: joshua.nabua

November 17, 2023 3:55:58 PM M:\STANDARD DETAILS\P E R M I T S E T\2023\A1 PACKAGE - TRINIGROUP\P14 - POURED CONCRETE STAIRS.DWG

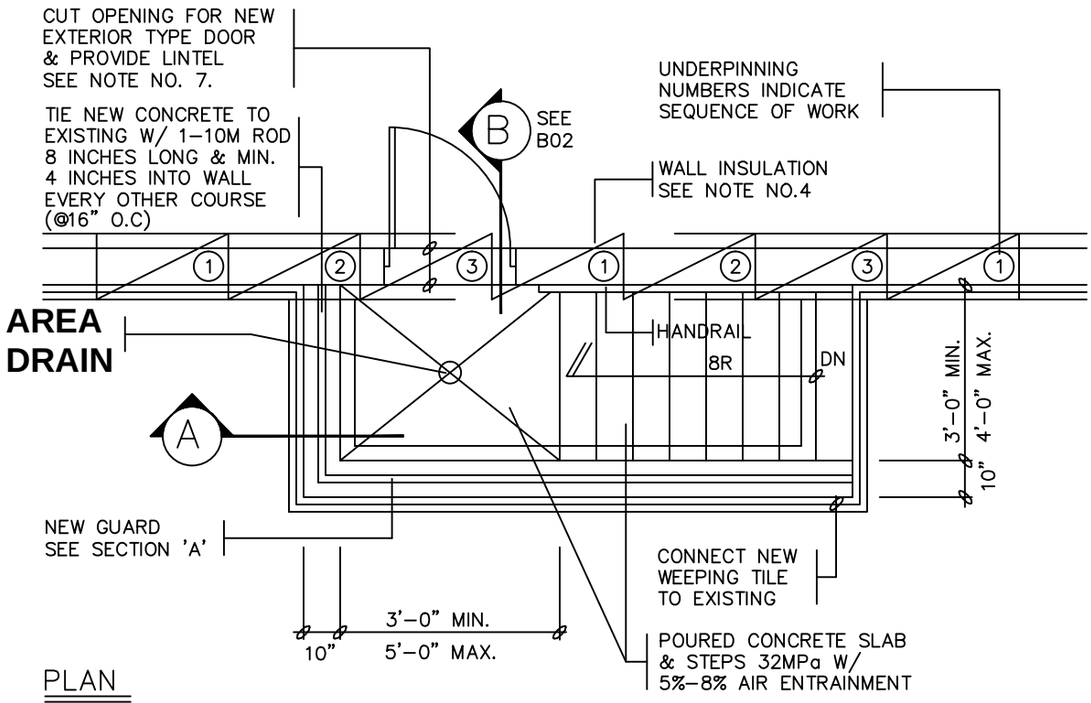

PLAN

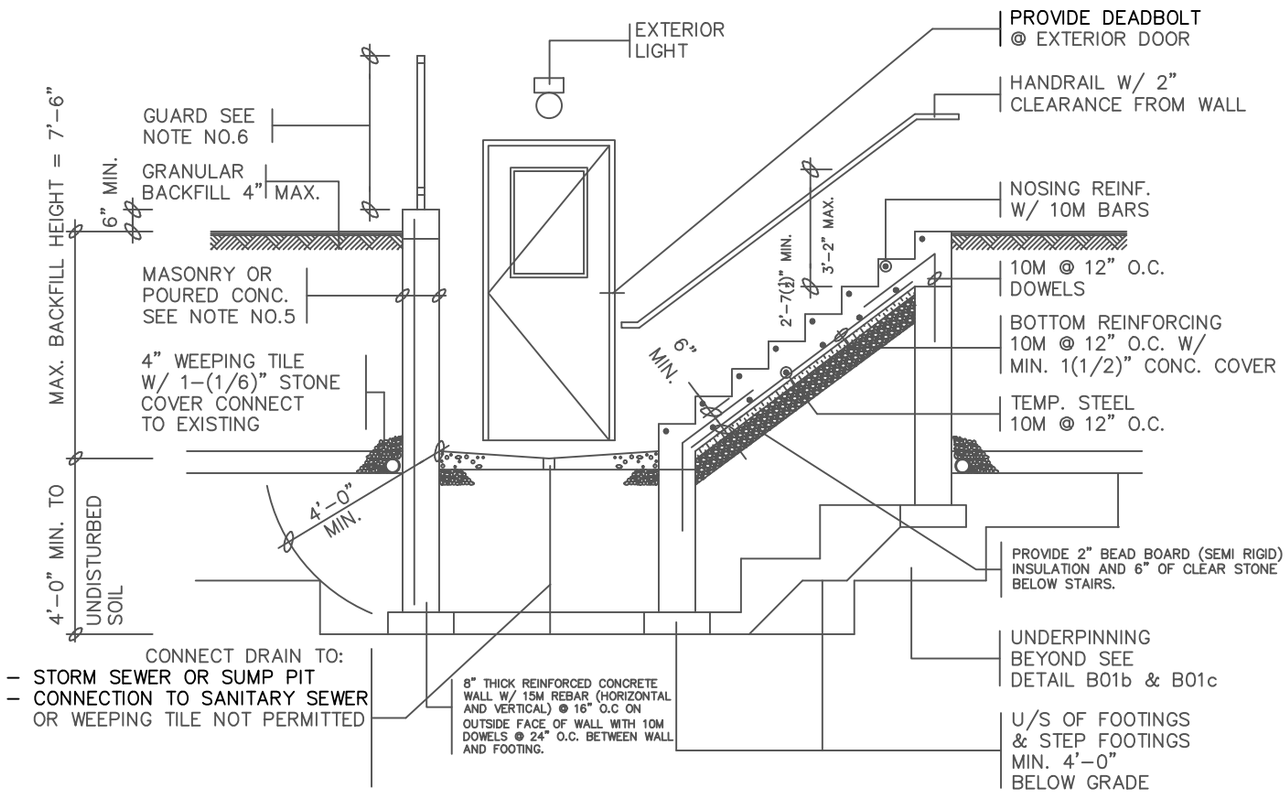

SECTION 'A'

GENERAL NOTES:

1. FOOTINGS:

16"x6" POURED CONC. FOOTING
ALL FOOTINGS SHALL REST ON NATURAL UNDISTURBED SOIL OR COMPACTED GRANULAR FILL.

2. CONCRETE:

MINIMUM COMPRESSIVE STRENGTH OF 32 MPA @ 28 DAYS W/ 5% TO 8% AIR ENTRAINMENT.

3. EXTERIOR STAIRS:

NOTE: stairs shall comply with attached general note #18

RISER: 4(7/8)"MIN. | 7(7/8)"MAX.
RUN: ~~8(1/4)~~"MIN 10" | 14"MAX.
TREAD: 9(1/4)"MIN. | 14"MAX.

4. INSULATION:

MINIMUM R20c.i. INSULATION W/ VAPOUR BARRIER ON THE INSIDE FACE OF THE EXPOSED FOUNDATION WALL.

5. RETAINING WALL:

REINFORCING STEEL IN SIDE WALLS TO BE LOCATED ON OUTSIDE FACE OF WALLS WITH 1(1/2)" CONCRETE COVER.

6. GUARDS:

3'–6" HEIGHT WHERE DISTANCE FROM GRADE TO BOTTOM OF WALKOUT EXCEEDS 5'–11"; 2'–11" FOR LESSER HEIGHTS. MAXIMUM 4" BETWEEN VERTICAL PICKETS. GUARDS SHALL BE NON–CLIMBALE AND IN CONFORMANCE WITH OBC 2012 DIV.B 9.8.8 AND SB–7

7. LINTELS:

– SOLID MASONRY/CONCRETE: 2–3(1/2)"x3(1/2)"x(1/4)" STEEL ANGLES
– BRICK VENEER: 1–3(1/2)"x3(1/2)"x(1/4)"L + 2–2"x8"
– WOOD FRAME/SIDING: 2–2"x8"

8. UNDERPINNING:

UNDERPINNING, OR EXTRA DEPTH FOOTING TO A LEVEL 4 FT. BELOW THE WALKOUT SLAB, IS REQUIRED FOR ALL FOOTINGS WITHIN A 4 FT. RADIUS OF ANY POINT OF THE WALKOUT SLAB.

Richmond Hill

TITLE

BASEMENT WALKOUT

PLAN & SECTIONS

DWG. NO.

B01RH

2020

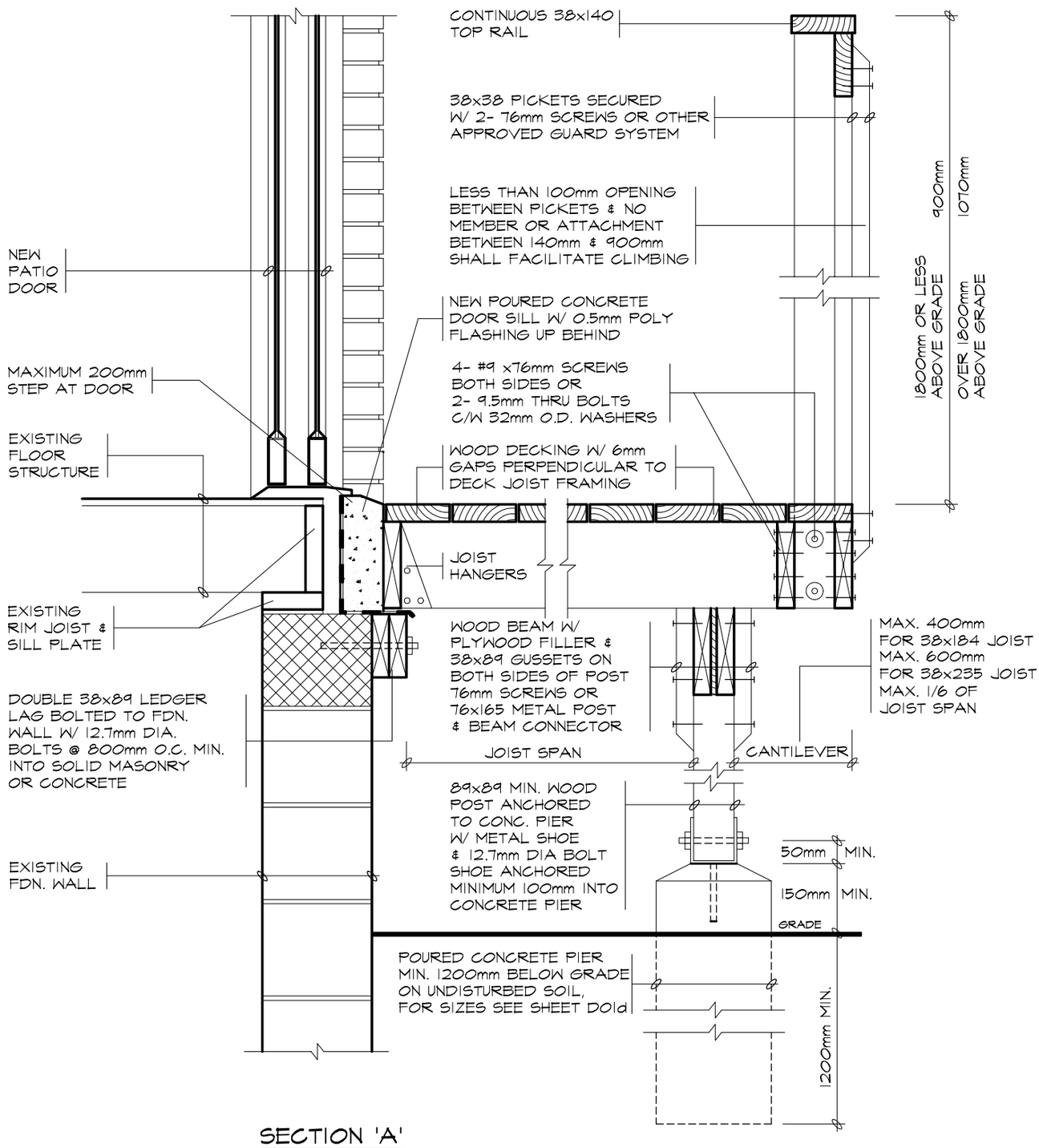

SECTION 'A'

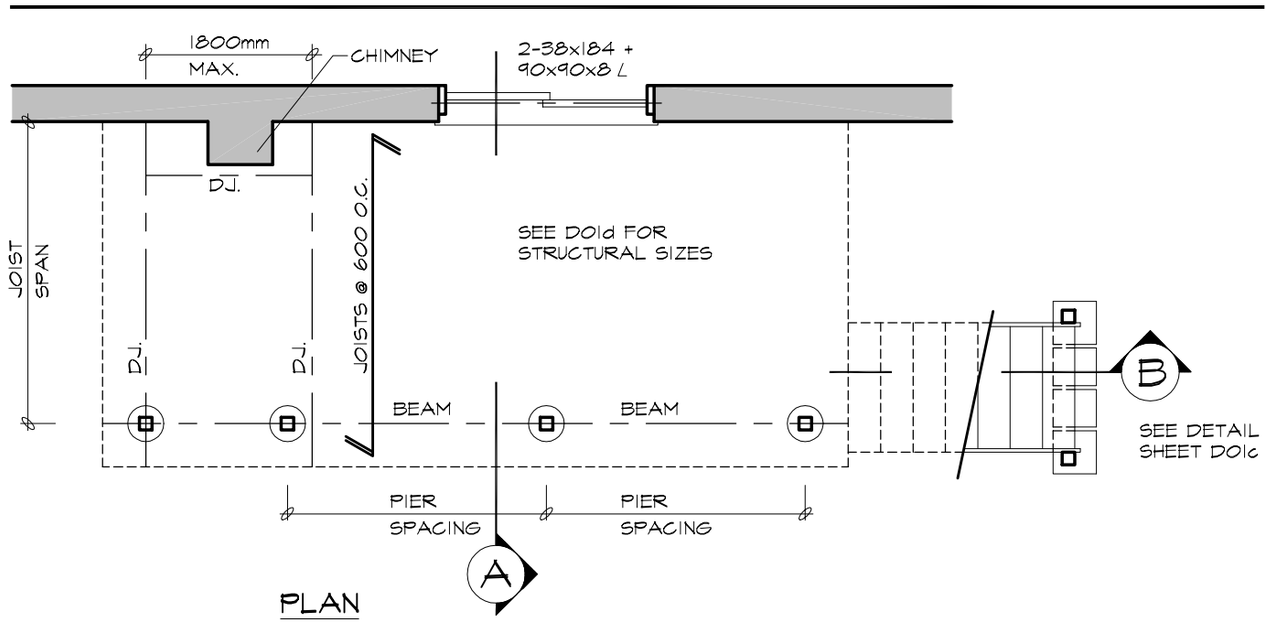

PLAN

LMCBO STANDARD DETAILS

TITLE WOOD DECK FIXED TO SOLID MASONRY FOUNDATION WALL PLAN & SECTION

DWG. NO. D01a

2012

NOTE: UNDER THE BUILDING CODE ACT, THE LOCAL MUNICIPALITY IS THE AUTHORITY HAVING JURISDICTION FOR ENFORCING THE ACT AND IT'S REGULATIONS. IT IS THE RESPONSIBILITY OF THE OWNER/DESIGNER TO ENSURE THAT ALL DESIGNS SUBMITTED FOR A PERMIT ARE IN ACCORDANCE WITH THE BUILDING CODE ACT, BUILDING CODE AND ANY OTHER APPLICABLE LAW.

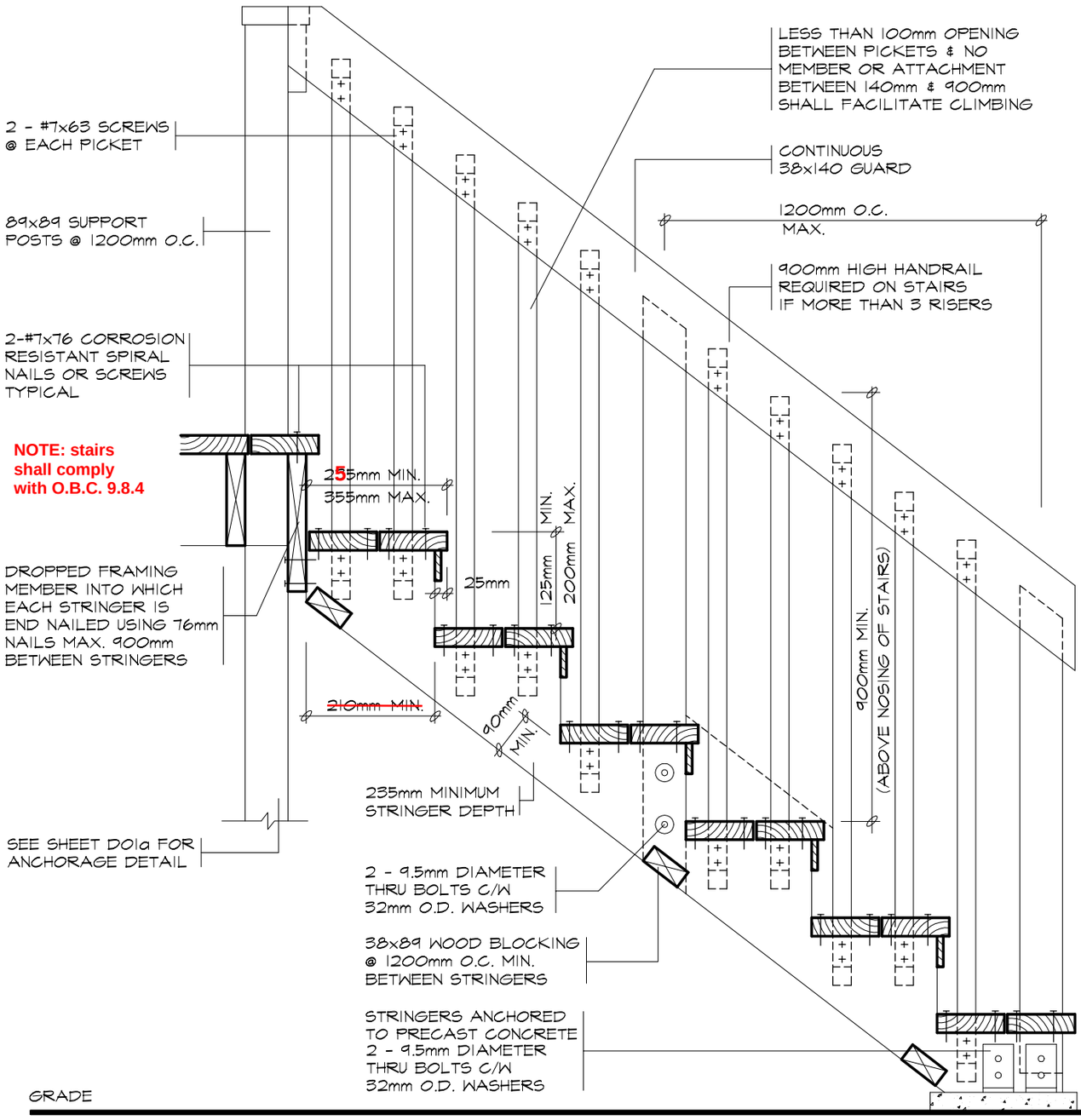

SECTION 'B'

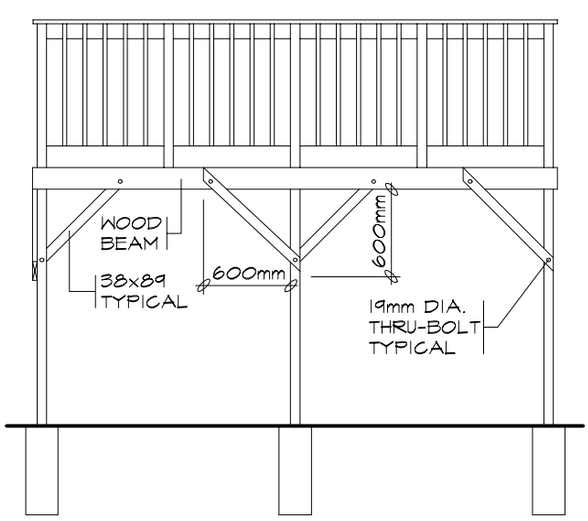

BRACING PARALLEL TO BEAM

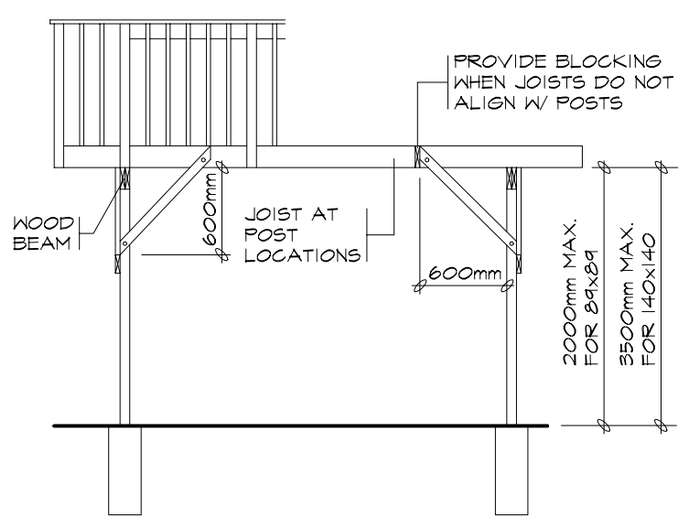

BRACING PERPENDICULAR TO BEAM

[redacted] DECKS GREATER THAN 600mm ABOVE GRADE SHALL RESIST LATERAL LOADING & MOVEMENT. ALL POSTS MUST BE BRACED WHERE THE SUPPORTED AREA EXCEEDS THOSE LISTED IN THE TABLE ON D01d

LMCBO STANDARD DETAILS

TITLE WOOD DECK STAIR SECTION
LATERAL SUPPORT FOR [redacted] DECKS

DWG. NO. D01c

2012

NOTE: UNDER THE BUILDING CODE ACT, THE LOCAL MUNICIPALITY IS THE AUTHORITY HAVING JURISDICTION FOR ENFORCING THE ACT AND IT'S REGULATIONS. IT IS THE RESPONSIBILITY OF THE OWNER/DESIGNER TO ENSURE THAT ALL DESIGNS SUBMITTED FOR A PERMIT ARE IN ACCORDANCE WITH THE BUILDING CODE ACT, BUILDING CODE AND ANY OTHER APPLICABLE LAW.

BEAM SIZING TABLE

SUPPORTED JOIST LENGTH (mm)	LIVE LOAD 1.9 kPa			LIVE LOAD 2.5 kPa			LIVE LOAD 3.0 kPa		
	PIER SPACING (mm)			PIER SPACING (mm)			PIER SPACING (mm)		
	2000	3000	4000	2000	3000	4000	2000	3000	4000
1500	2/38x140	2/38x184	3/38x235	2/38x140	3/38x184	3/38x235	3/38x140	2/38x235	2/38x286
2000	2/38x140	3/38x184	3/38x235	2/38x184	2/38x235	3/38x286	2/38x184	2/38x235	3/38x286
2500	2/38x184	2/38x235	3/38x286	2/38x184	3/38x235	3/38x286	2/38x184	3/38x235	4/38x286
3000	2/38x184	2/38x235	3/38x286	2/38x184	3/38x235	4/38x286	2/38x184	3/38x235	4/38x286
3500	2/38x184	3/38x235	3/38x286	2/38x184	3/38x235	4/38x286	3/38x184	3/38x286	N/A
4000	2/38x184	3/38x235	4/38x286	2/38x184	3/38x286	N/A	3/38x184	3/38x286	N/A

JOIST SIZING TABLE

JOIST SPAN (mm)	LIVE LOAD 1.9 kPa			LIVE LOAD 2.5 kPa			LIVE LOAD 3.0 kPa		
	JOIST SPACING (mm)			JOIST SPACING (mm)			JOIST SPACING (mm)		
	305	406	610	305	406	610	305	406	610
2000	38x140	38x140	38x140	38x140	38x140	38x140	38x140	38x140	38x140
2500	38x140	38x140	38x184	38x140	38x140	38x184	38x140	38x184	38x184
3000	38x140	38x184	38x184	38x184	38x184	38x235	38x184	38x184	38x235
3500	38x184	38x184	38x235	38x184	38x235	38x235	38x235	38x235	38x235
4000	38x235	38x235	38x286	38x235	38x235	38x286	38x235	38x235	38x286

FOOTING SIZES

SOIL BEARING CAPACITIES (kPa)

SOIL TYPE	BEARING PRESSURE (kPa)
SOFT CLAY	40
LOOSE SAND OR GRAVEL	50
FIRM CLAY	75
DENSE OR COMPACT SILT	100
STIFF CLAY	150
DENSE COMPACT SAND OR GRAVEL	150
TILL	200
CLAY SHALE	300
SOUND ROCK	500

PIER SIZES

DIAMETER (mm)	M^2
200	0.03
250	0.05
300	0.08
350	0.10
400	0.13
500	0.20
600	0.30

POST SIZING TABLE

POST SIZE (mm)	MAXIMUM HEIGHT (M)	MAX. SUPPORTED DECK AREA (M2) LIVE LOAD (kPa)		
		1.9	2.5	3.0
89x89	1.0	10.86	8.71	7.48
	1.5	5.93	4.76	4.09
	2.0	3.15	2.53	2.17
140x140	2.0	13.67	10.98	9.43
	2.5	9.32	7.48	6.43
	3.0	6.35	5.10	4.38
	3.5	4.41	3.54	3.04

EXAMPLE PLAN

PIERS	SUPPORTED DECK AREA
P1	2 x 1.7 = 3.4m^2
P2	2 x 2.6 = 5.2m^2
P3	2 x 1.7 = 3.4m^2
P4	1.4 x 1.7 = 2.4m^2
P5	1.4 x 2.6 = 3.6m^2
P6	1.4 x 1.7 = 2.4m^2
BEAMS	**SUPPORTED JOIST LENGTH**
B1	2000mm
B2	2000mm
B3	1400mm
B4	1400mm
BEAM SPAN =	2600mm
JOIST SPAN =	2000mm

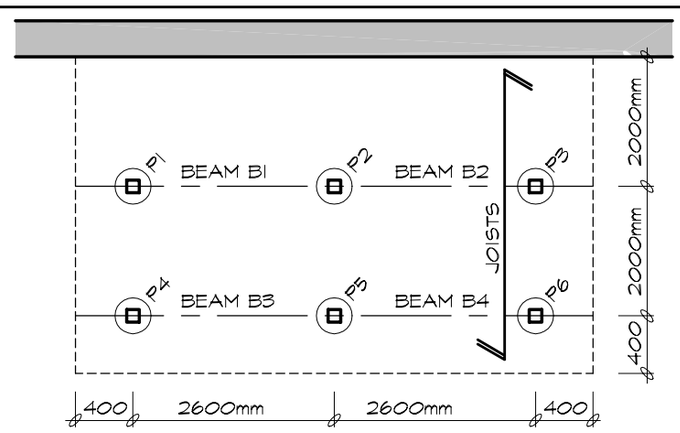

PIER SIZE (M2) = SUPPORTED DECK AREA (M2) x MIN. 1.9 (kpa) LIVE LOAD / SOIL BEARING CAPACITY (kpa)

GENERAL NOTES

1. A MINIMUM LIVE LOAD OF 1.9 (kPa) SHALL BE APPLIED IN ALL LOCATIONS.
2. THE PRESCRIBED SNOW LOAD FOR 225 SELECTED ONTARIO LOCATIONS IS INDICATED IN COLUMN 12 OF TABLE 1.2 IN SUPPLEMENTARY GUIDELINE SB-1 OF THE ONTARIO BUILDING CODE. THE SNOW LOAD SHALL BE APPLIED AS THE MINIMUM LIVE LOAD WHERE IT IS GREATER THAN 1.9 (kPa)
3. A SITE PLAN OR SURVEY IS REQUIRED SHOWING ALL LOT LINES & DIMENSIONS, SIZE & LOCATION OF ALL EXISTING BUILDINGS & DECKS.
4. LUMBER NO. 2 SPF OR BETTER WOOD POSTS MIN. 89x89 (SOLID). USE CORROSION RESISTANT SPIRAL NAILS OR SCREWS.
5. A DECK IS NOT PERMITTED TO BE SUPPORTED ON BRICK VENEER.
6. CANTILEVERED JOISTS AND BEAMS ARE LIMITED TO 1/6 THE MEMBERS LENGTH.
7. CONCRETE PIERS SHALL BEAR ON UNDISTURBED SOIL. THE BEARING CAPACITY OF THE SOIL SHALL BE DETERMINED PRIOR TO CONSTRUCTION.
8. MAXIMUM HEIGHT REFERS TO THE HEIGHT OF THE POST FROM THE TOP OF THE PIER TO THE DECK SURFACE.
9. BEAMS WITH MORE THAN 2 MEMBERS MUST BE SUPPORTED BY 140x140 POSTS.
10. THE ALLOWABLE SOIL BEARING PRESSURE SHALL BE REDUCED BY 50% WHILE THE WATER IS AT OR NEAR THE BOTTOM OF THE FOOTING EXCAVATION.
11. CONTACT YOUR LOCAL BUILDING DEPARTMENT FOR FURTHER INFORMATION ABOUT LOCAL SOIL BEARING CAPACITIES.
12. JOISTS SPANNING MORE THAN 2100mm ARE TO HAVE BRIDGING AT LEAST EVERY 2100mm O.C..

LMCBO STANDARD DETAILS

TITLE

WOOD DECK STRUCTURAL SIZING TABLES

NOTE: UNDER THE BUILDING CODE ACT, THE LOCAL MUNICIPALITY IS THE AUTHORITY HAVING JURISDICTION FOR ENFORCING THE ACT AND IT'S REGULATIONS. IT IS THE RESPONSIBILITY OF THE OWNER/DESIGNER TO ENSURE THAT ALL DESIGNS SUBMITTED FOR A PERMIT ARE IN ACCORDANCE WITH THE BUILDING CODE ACT, BUILDING CODE AND ANY OTHER APPLICABLE LAW.

DWG. NO.

D01d

2012