CITY OF RICHMOND HILL
BUILDING DIVISION
05/01/2024
RECEIVED
Per: joshua.nabua

ALL ROOF SLOPES ARE 10/12 UNLESS OTHERWISE NOTED

7'-10" TOP OF PLATE FRM. FIN. GRD. FLR.
7'-10" U/S OF SOFFIT

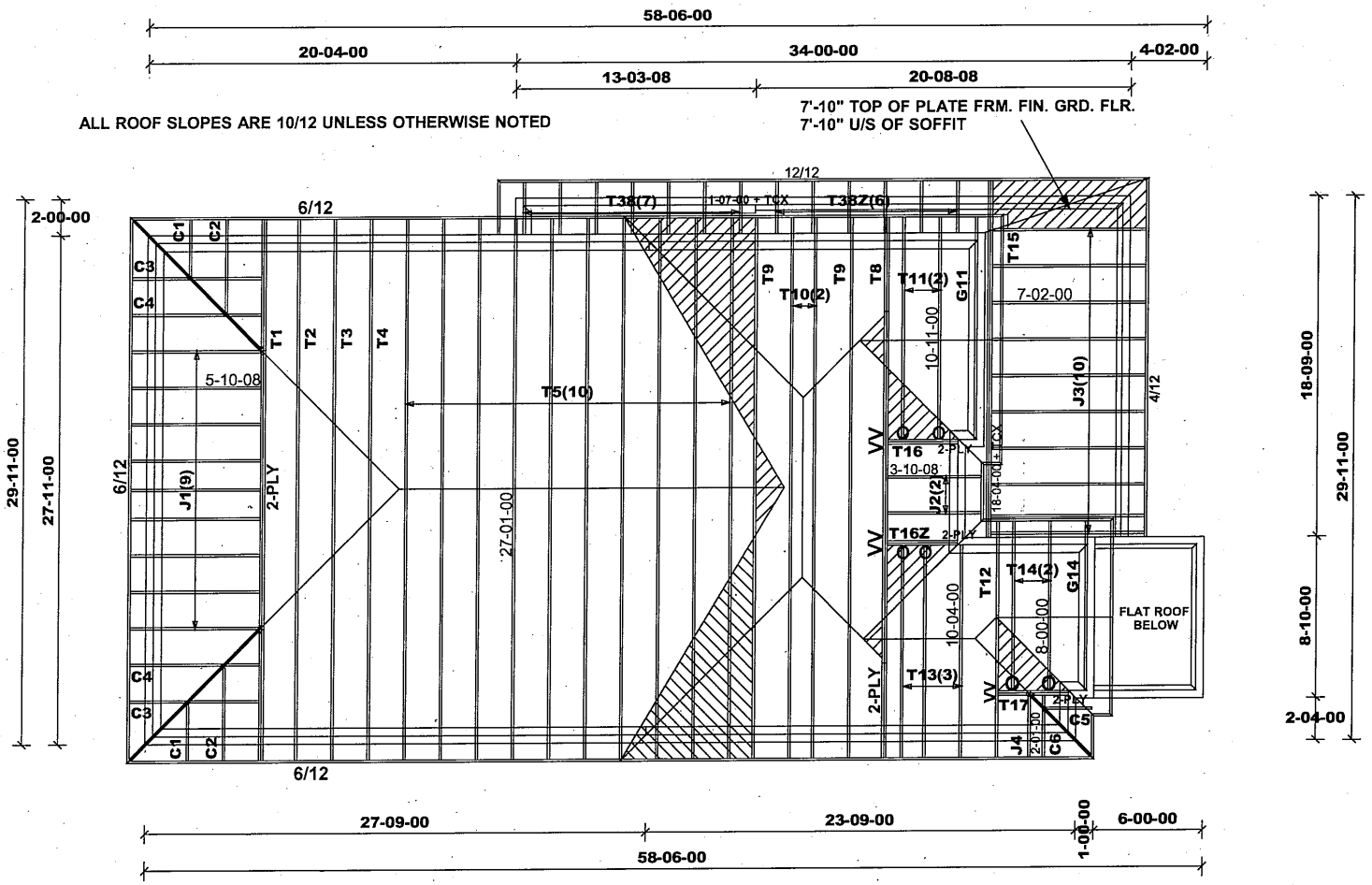

ASPHALT SHINGLES
FINISHED OVERHANG: 12"
2x6 EXTERIOR WALLS
2x6 FASCIA BOARD
HEEL: R.T.M.C.

All conventional framing to conform with Part 9 of O.B.C. 2012. Roof rafters that cross over or meet trusses to be min. 2x4 SPF #2 @ 24" o/c with a vertical post to the truss at each cross point. Vertical posts longer than 6' to have lateral bracing so that the distance between the post end points and lateral bracing does not exceed 6'.

DESIGN CONFORMS WITH OBC 2012(2019 AMENDMENT)
OCCUPANCY: RESIDENTIAL | PART: 9
Ss = 31.32 psf | Sr = 8.4 psf

DESIGN LOADS:
TCSL = 25.6 psf
TCDL = 6.0 psf
BCLL = 0.0 psf
BCDL = 7.4 psf

DENOTES:
CONVENTIONAL FRAMING

HARDWARE:
LUS24 - (O)
LJS26DS - (V)
LUS26-2 - (VV)

rear upgrade - no change to trs

M15683

TAMARACK ROOF TRUSSES INC.	Job Track: **53256**	Builder / Location: **GREENPARK HOMES / RICHMOND HILL**	Model / Elevation: **VILLA 2 / 1 & 1 - REAR UPG**
	Plan Log: **207571**	Project: **TRINIGROUP DEVELOPMENTS**	THESE DRAWINGS CONSTITUTE THE PROPERTY OF TAMARACK ROOF TRUSSES INC., SHALL NOT BE REPRODUCED, PUBLISHED, OR REDISTRIBUTED IN ANY MANNER OR UTILIZED FOR ANY PURPOSE OTHER THAN THE MANUFACTURE OF TRUSSES BY TAMARACK ROOF TRUSSES INC AND WILL BE RETRACTED BY TAMARACK ROOF TRUSSES INC IF UTLILZED FOR ANY OTHER PURPOSE.
	Layout ID: **434950**	Date: 2023-09-25 Sales: Rick DiCiano Designer: JC	Mitek ver 8.6.3.353

CITY OF RICHMOND HILL
BUILDING DIVISION
05/01/2024
RECEIVED
Per: joshua.nabua

ALL ROOF SLOPES ARE 10/12 UNLESS OTHERWISE NOTED

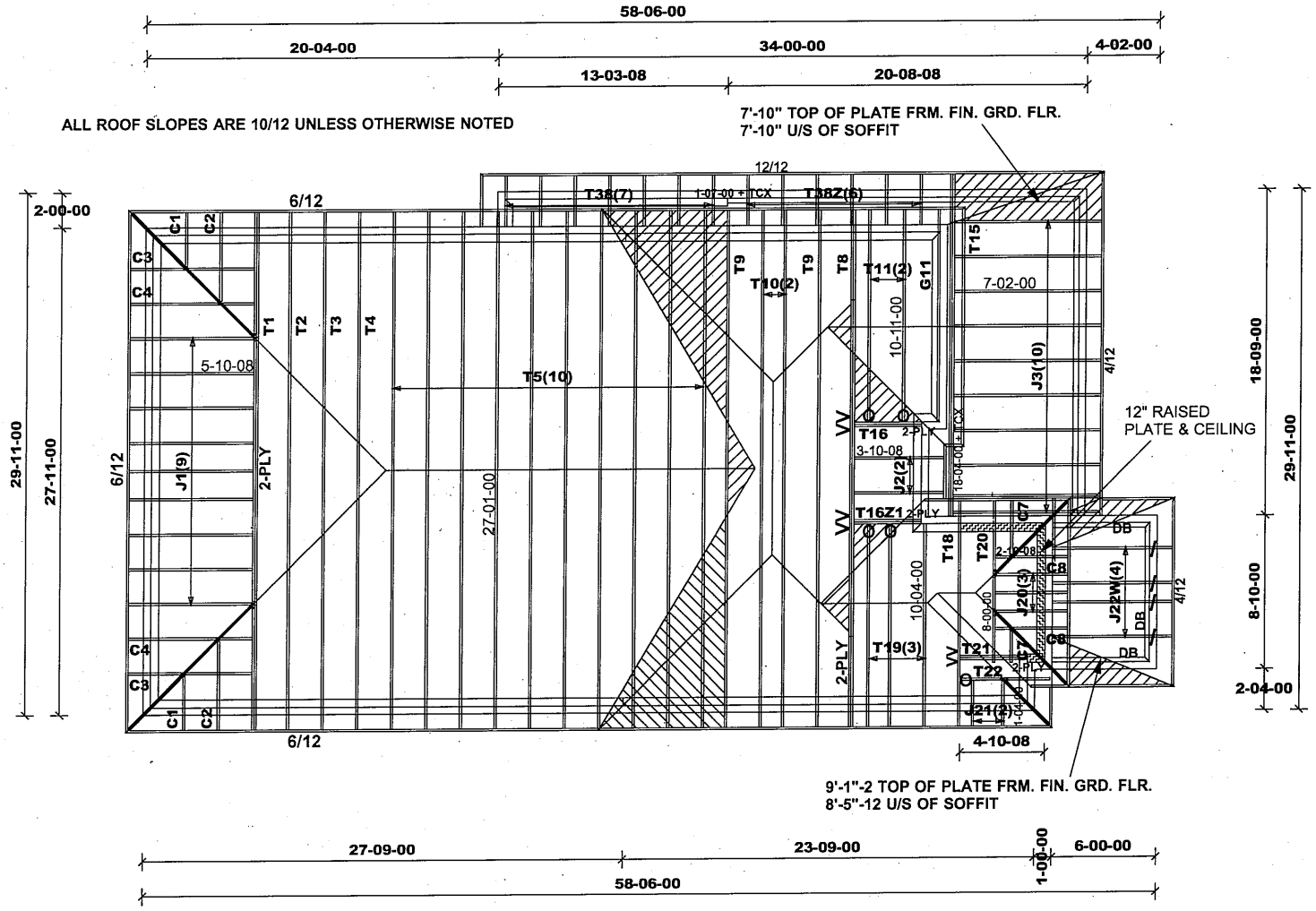

ASPHALT SHINGLES
FINISHED OVERHANG: 12"
2x6 EXTERIOR WALLS
2x6 FASCIA BOARD
HEEL: R.T.M.C.

All conventional framing to conform with Part 9 of O.B.C. 2012. Roof rafters that cross over or meet trusses to be min. 2x4 SPF #2 @ 24" o/c with a vertical post to the truss at each cross point. Vertical posts longer than 6' to have lateral bracing so that the distance between the post end points and lateral bracing does not exceed 6'.

DESIGN CONFORMS WITH OBC 2012(2019 AMENDMENT)
OCCUPANCY: RESIDENTIAL | PART: 9
Ss = 31.32 psf | Sr = 8.4 psf

DESIGN LOADS:
TCSL = 25.6 psf
TCDL = 6.0 psf
BCLL = 0.0 psf
BCDL = 7.4 psf

DENOTES:
CONVENTIONAL FRAMING

HARDWARE:
LUS24 - (**O**)
LUS26-2 - (**VV**)
H2.5T - (**/**)

DB - DROPPED BEAMS BY OTHERS

M15683

TAMARACK ROOF TRUSSES INC.	Job Track: **53256**	Builder / Location: **GREENPARK HOMES / RICHMOND HILL**	Model / Elevation: **VILLA 2 / 2**
	Plan Log: **207571**	Project: **TRINIGROUP DEVELOPMENTS**	
	Layout ID: **434951**	Date: 2023-09-25 Sales: Rick DiCiano Designer: JC	

THESE DRAWINGS CONSTITUTE THE PROPERTY OF TAMARACK ROOF TRUSSES INC., SHALL NOT BE REPRODUCED, PUBLISHED, OR REDISTRIBUTED IN ANY MANNER OR UTILIZED FOR ANY PURPOSE OTHER THAN THE MANUFACTURE OF TRUSSES BY TAMARACK ROOF TRUSSES INC AND WILL BE RETRACTED BY TAMARACK ROOF TRUSSES INC IF UTLILZED FOR ANY OTHER PURPOSE.

Mitek ver 8.6.3.353

CITY OF RICHMOND HILL
BUILDING DIVISION
05/01/2024
RECEIVED
Per: joshua.nabua

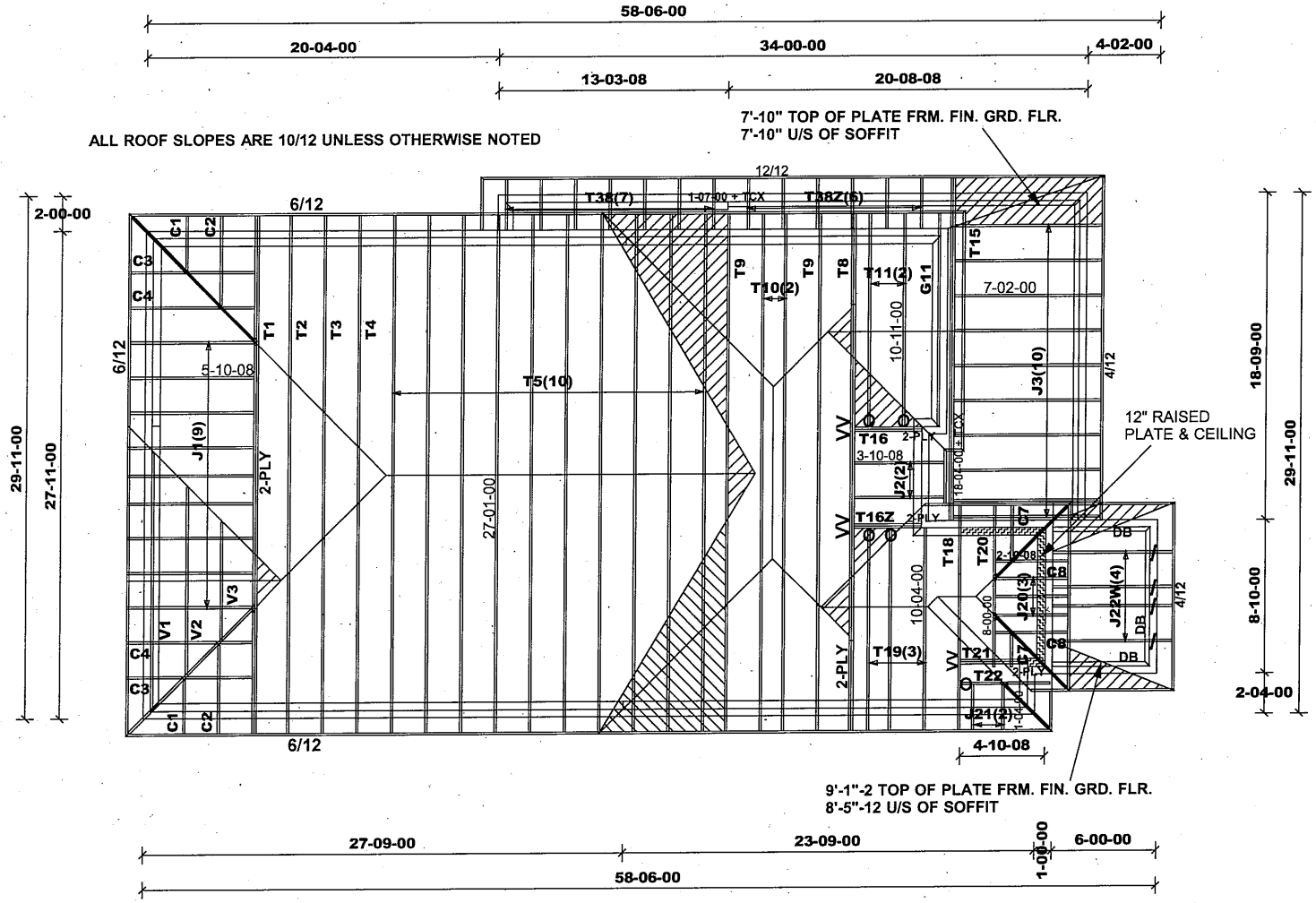

ASPHALT SHINGLES
FINISHED OVERHANG: 12"
2x6 EXTERIOR WALLS
2x6 FASCIA BOARD
HEEL: R.T.M.C.

All conventional framing to conform with Part 9 of O.B.C. 2012. Roof rafters that cross over or meet trusses to be min. 2x4 SPF #2 @ 24" o/c with a vertical post to the truss at each cross point. Vertical posts longer than 6' to have lateral bracing so that the distance between the post end points and lateral bracing does not exceed 6'.

DESIGN CONFORMS WITH OBC 2012(2019 AMENDMENT)
OCCUPANCY: RESIDENTIAL | PART: 9
Ss = 31.32 psf | Sr = 8.4 psf

DESIGN LOADS:
TCSL = 25.6 psf
TCDL = 6.0 psf
BCLL = 0.0 psf
BCDL = 7.4 psf

DENOTES:
CONVENTIONAL FRAMING

HARDWARE:
LUS24 - (**O**)
LUS26-2 - (**VV**)
H2.5T - (/)

DB - DROPPED BEAMS BY OTHERS

M15683

TAMARACK ROOF TRUSSES INC.	Job Track: **53256**	Builder / Location: **GREENPARK HOMES / RICHMOND HILL**	Model / Elevation: **VILLA 2 / 2 - REAR UPG**
	Plan Log: **207571**	Project: **TRINIGROUP DEVELOPMENTS**	
	Layout ID: **435081**	Date: 2023-09-25 Sales: Rick DiCiano Designer: JC	

THESE DRAWINGS CONSTITUTE THE PROPERTY OF TAMARACK ROOF TRUSSES INC., SHALL NOT BE REPRODUCED, PUBLISHED, OR REDISTRIBUTED IN ANY MANNER OR UTILIZED FOR ANY PURPOSE OTHER THAN THE MANUFACTURE OF TRUSSES BY TAMARACK ROOF TRUSSES INC AND WILL BE RETRACTED BY TAMARACK ROOF TRUSSES INC IF UTLILZED FOR ANY OTHER PURPOSE.

Mitek ver 8.6.3.353

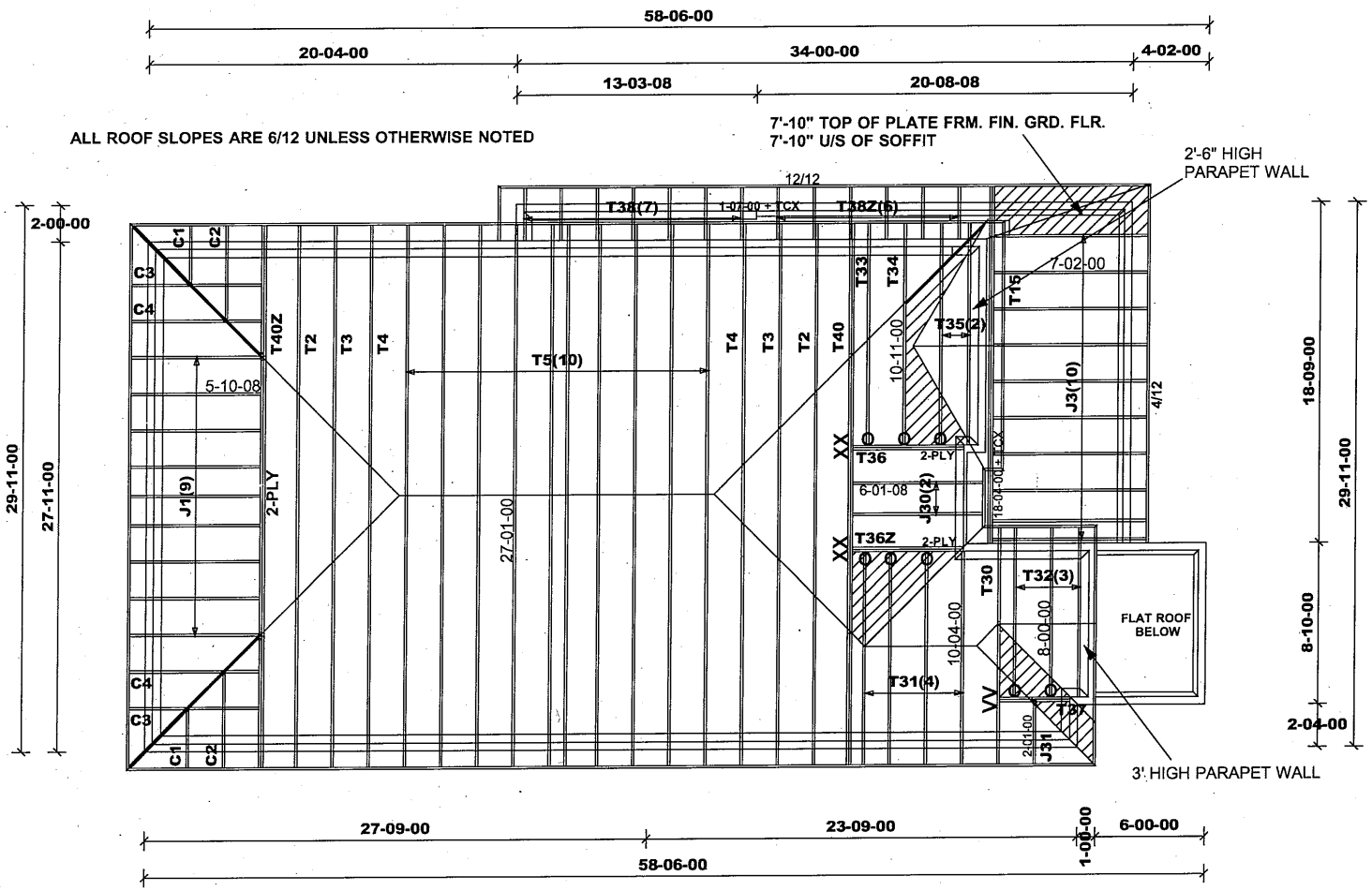

ASPHALT SHINGLES
FINISHED OVERHANG: 12"
2x6 EXTERIOR WALLS
2x6 FASCIA BOARD
HEEL: R.T.M.C.

All conventional framing to conform with Part 9 of O.B.C. 2012. Roof rafters that cross over or meet trusses to be min. 2x4 SPF #2 @ 24" o/c with a vertical post to the truss at each cross point. Vertical posts longer than 6' to have lateral bracing so that the distance between the post end points and lateral bracing does not exceed 6'.

DESIGN CONFORMS WITH OBC 2012(2019 AMENDMENT)
OCCUPANCY: RESIDENTIAL | PART: 9
Ss = 31.32 psf | Sr = 8.4 psf

DESIGN LOADS:
TCSL = 25.6 psf
TCDL = 6.0 psf
BCLL = 0.0 psf
BCDL = 7.4 psf

DENOTES:
CONVENTIONAL FRAMING

HARDWARE:
LUS24 - (O)
LUS26-2 - (VV)
HGUS26-2 - (XX)

rear upgrade - no change to trs

CITY OF RICHMOND HILL
BUILDING DIVISION
05/01/2024
RECEIVED
Per: joshua.nabua

M15683

TAMARACK ROOF TRUSSES INC.	Job Track: **53256**	Builder / Location: **GREENPARK HOMES / RICHMOND HILL**	Model / Elevation: **VILLA 2 / 3 & 3 - REAR UPG**
	Plan Log: **207571**	Project: **TRINIGROUP DEVELOPMENTS**	THESE DRAWINGS CONSTITUTE THE PROPERTY OF TAMARACK ROOF TRUSSES INC., SHALL NOT BE REPRODUCED, PUBLISHED, OR REDISTRIBUTED IN ANY MANNER OR UTILIZED FOR ANY PURPOSE OTHER THAN THE MANUFACTURE OF TRUSSES BY TAMARACK ROOF TRUSSES INC AND WILL BE RETRACTED BY TAMARACK ROOF TRUSSES INC IF UTLILZED FOR ANY OTHER PURPOSE.
	Layout ID: **434952**	Date: 2023-09-25 Sales: Rick DiCiano Designer: JC	Mitek ver 8.6.3.353

DELIVERY SHIPLIST

TAMARACK ROOF TRUSSES INC.
ALPA LUMBER GROUP

Lumber Yard:	TAMARACK LUMBER	Job Track:	53256
Builder:	GREENPARK HOMES	PlanLog:	207571
Project:	TRINIGROUP DEVELOPMENTS	Layout ID:	434950
Location:	RICHMOND HILL	Ref #	
Model:	VILLA 2	Page:	1 of 3
Lot #:		Date:	09-25-2023
Elevation:	1 & 1 - REAR UPG	Designer:	
		Sales Rep:	Rick DiCiano

Roof Trusses

PROFILE	QTY PLY	MARK TYPE	PITCH	SPAN	HEIGHT	LUMBER	OVERHANG LEFT RIGHT	HEEL HEIGHT LEFT RIGHT	LBS. BFT.	BUNDLE # STACK #	LOAD BY REMARKS
	1 2-ply	T1 Hip Girder	6 /12	**27-01-00**	4-01-04	2 x 4 2 x 6	1-03-08 1-03-08	1-02-00 1-02-00	249.09 155.33		
	1	T2 Hip	6 /12	**27-01-00**	5-01-04	2 x 4	1-03-08 1-03-08	1-02-00 1-02-00	106.53 68.17		
	1	T3 Hip	6 /12	**27-01-00**	6-01-04	2 x 4	1-03-08 1-03-08	1-02-00 1-02-00	111.21 70.67		
	1	T4 Hip	6 /12	**27-01-00**	7-01-04	2 x 4	1-03-08 1-03-08	1-02-00 1-02-00	112.82 70.67		
	10	T5 Common	6 /12	**27-01-00**	7-11-04	2 x 4	1-03-08 1-03-08	1-02-00 1-02-00	1108.69 696.67		
	1 2-ply	T8 Hip Girder	10 /12	**27-01-00**	4-10-07	2 x 4 2 x 6	1-03-08 1-03-08	1-07-11 1-07-11	271.58 173.00		
	2	T9 Hip	10 /12	**27-01-00**	6-06-07	2 x 4	1-03-08 1-03-08	1-07-11 1-07-11	240.8 150.67		
	2	T10 Hip	10 /12	**27-01-00**	8-02-07	2 x 4	1-03-08 1-03-08	1-07-11 1-07-11	253.47 161.33		
	2	T11 Common	10 /12	**10-11-00**	6-02-04	2 x 4	1-03-08 1-03-08	1-07-11 1-07-11	97.56 64.67		
	1	G11 GABLE	10 /12	**10-11-00**	6-02-04	2 x 4	1-03-08 1-03-08	1-07-11 1-07-11	50.42 33.33		
	1	T12 Hip Girder	10 /12	**10-04-00**	4-10-07	2 x 4 2 x 6	1-03-08 1-03-08	1-07-11 1-07-11	57.99 38.83		
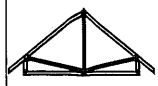	3	T13 Common	10 /12	**10-04-00**	5-11-06	2 x 4	1-03-08 1-03-08	1-07-11 1-07-11	139.76 90.00		
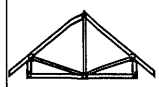	2	T14 Common	10 /12	**8-00-00**	4-11-11	2 x 4	1-03-08 1-03-08	1-07-11 1-07-11	75.7 50.33		
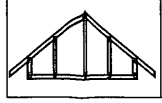	1	G14 GABLE	10 /12	**8-00-00**	4-11-11	2 x 4	1-03-08 1-03-08	1-07-11 1-07-11	36.09 24.17		

CITY OF RICHMOND HILL
BUILDING DIVISION
05/01/2024
RECEIVED
Per: joshua.nabua

DELIVERY SHIPLIST

TAMARACK ROOF TRUSSES INC.
ALPA LUMBER GROUP

Lumber Yard:	TAMARACK LUMBER	Job Track:	53256
Builder:	GREENPARK HOMES	PlanLog:	207571
Project:	TRINIGROUP DEVELOPMENTS	Layout ID:	434950
Location:	RICHMOND HILL	Ref #	
Model:	VILLA 2	Page:	2 of 3
Lot #:		Date:	09-25-2023
Elevation:	1 & 1 - REAR UPG	Designer:	
		Sales Rep:	Rick DiCiano

Roof Trusses

PROFILE	QTY PLY	MARK TYPE	PITCH	SPAN	HEIGHT	LUMBER	OVERHANG LEFT RIGHT	HEEL HEIGHT LEFT RIGHT	LBS. BFT.	BUNDLE # STACK #	LOAD BY REMARKS
	1 2-ply	T15 Half Hip Girder	12 /12	**18-04-00**	3-04-10	2 x 6 2 x 4	1-03-08	1-10-08 3-03-13	181.54 113.33		
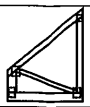	1 2-ply	T16 Monopitch Girder	10 /12	**3-10-08**	4-10-07	2 x 4 2 x 6		1-07-11 4-10-07	44.83 30.67		
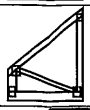	1 2-ply	T16Z Monopitch Girder	10 /12	**3-10-08**	4-10-07	2 x 4 2 x 6		1-07-11 4-10-07	44.83 30.67		
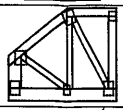	1 2-ply	T17 Monopitch Girder	10 /12	**3-10-08**	3-04-08	2 x 4 2 x 6		1-07-11 3-04-08	47.27 31.67		
	7	T38 Monopitch	12 /12	**1-07-00**	4-02-12	2 x 4	1-03-08	1-10-08 3-05-08	122.99 91.00		
	6	T38Z Monopitch	12 /12	**1-07-00**	4-02-12	2 x 4	1-03-08	1-10-08 3-05-08	105.42 78.00		
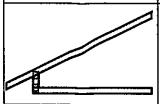	9	J1 Jack-Open	6 /12	**5-10-08**	4-01-04	2 x 4	1-03-08	1-02-00 4-01-04	151.15 96.00		
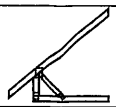	2	J2 Jack-Open	10 /12	**3-10-08**	4-10-07	2 x 4	1-03-08	1-07-11 4-10-07	30.28 19.33		
	10	J3 Jack-Open	4 /12	**7-02-00**	3-03-13	2 x 4	1-03-08	11-03 3-03-13	189.39 126.67		
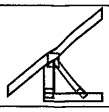	1	J4 Jack-Open	10 /12	**2-01-00**	3-04-08	2 x 4	1-03-08	1-07-11 3-04-08	10.44 7.67		
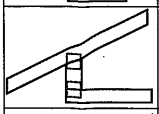	2	C1 Jack-Open	6 /12	**1-09-07**	2-00-12	2 x 4	1-03-08 1-01	1-02-00 2-00-12	14.04 9.33		
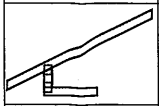	2	C2 Jack-Open	6 /12	**1-10-08**	3-00-12	2 x 4	1-03-08 1-10-15	1-02-00 2-01-04	19.14 12.00		
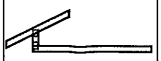	2	C3 Jack-Open	6 /12	**1-09-07**	2-00-12	2 x 4	1-03-08 4-01-01	1-02-00 2-00-12	23.16 14.67		
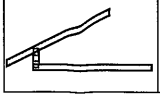	2	C4 Jack-Open	6 /12	**3-09-07**	3-00-12	2 x 4	1-03-08 2-01-01	1-02-00 3-00-12	28.26 17.33		

CITY OF RICHMOND HILL
BUILDING DIVISION
05/01/2024
RECEIVED
Per: joshua.nabua

DELIVERY SHIPLIST

TAMARACK ROOF TRUSSES INC.
ALPA LUMBER GROUP

Lumber Yard:	TAMARACK LUMBER	Job Track:	53256
Builder:	GREENPARK HOMES	PlanLog:	207571
Project:	TRINIGROUP DEVELOPMENTS	Layout ID:	434950
Location:	RICHMOND HILL	Ref #	
Model:	VILLA 2	Page:	3 of 3
Lot #:		Date:	09-25-2023
Elevation:	1 & 1 - REAR UPG	Designer:	
		Sales Rep:	Rick DiCiano

Roof Trusses

PROFILE	QTY PLY	MARK TYPE	PITCH	SPAN	HEIGHT	LUMBER	OVERHANG LEFT RIGHT	HEEL HEIGHT LEFT RIGHT	LBS. BFT.	BUNDLE # STACK #	LOAD BY REMARKS
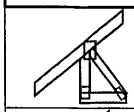	1	C5 Jack-Open	10 /12	1-02-07	2-07-12	2 x 4	1-03-08 1-01	1-07-11 2-07-12	8.12 6.33		
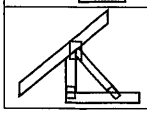	1	C6 Jack-Open	10 /12	1-02-07	2-07-12	2 x 4	1-03-08 10-09	1-07-11 2-07-12	9.13 7.00		

TOTAL # TRUSS= **84** TOTAL BFT OF ALL TRUSSES= **2539.51** BFT. TOTAL WEIGHT OF ALL TRSSES **3941.69** LBS

HARDWARE

QTY	TYPE	MODEL	LENGTH
6	Hardware	LUS24	
3	Hardware	LUS26-2	

TOTAL NUMBER OF ITEMS= **9**

CITY OF RICHMOND HILL
BUILDING DIVISION
05/01/2024
RECEIVED
Per: joshua.nabua

DELIVERY SHIPLIST

TAMARACK ROOF TRUSSES INC.
ALPA LUMBER GROUP

Lumber Yard:	TAMARACK LUMBER	Job Track:	53256
Builder:	GREENPARK HOMES	PlanLog:	207571
Project:	TRINIGROUP DEVELOPMENTS	Layout ID:	434951
Location:	RICHMOND HILL	Ref #	
Model:	VILLA 2	Page:	1 of 3
Lot #:		Date:	09-25-2023
Elevation:	2	Designer:	
		Sales Rep:	Rick DiCiano

Roof Trusses

PROFILE	QTY PLY	MARK TYPE	PITCH	SPAN	HEIGHT	LUMBER	OVERHANG LEFT RIGHT	HEEL HEIGHT LEFT RIGHT	LBS. BFT.	BUNDLE # STACK #	LOAD BY REMARKS
	1 2-ply	T1 Hip Girder	6 /12	**27-01-00**	4-01-04	2 x 4 2 x 6	1-03-08 1-03-08	1-02-00 1-02-00	249.09 155.33		
	1	T2 Hip	6 /12	**27-01-00**	5-01-04	2 x 4	1-03-08 1-03-08	1-02-00 1-02-00	106.53 68.17		
	1	T3 Hip	6 /12	**27-01-00**	6-01-04	2 x 4	1-03-08 1-03-08	1-02-00 1-02-00	111.21 70.67		
	1	T4 Hip	6 /12	**27-01-00**	7-01-04	2 x 4	1-03-08 1-03-08	1-02-00 1-02-00	112.82 70.67		
	10	T5 Common	6 /12	**27-01-00**	7-11-04	2 x 4	1-03-08 1-03-08	1-02-00 1-02-00	1108.69 696.67		
	1 2-ply	T8 Hip Girder	10 /12	**27-01-00**	4-10-07	2 x 4 2 x 6	1-03-08 1-03-08	1-07-11 1-07-11	271.58 173.00		
	2	T9 Hip	10 /12	**27-01-00**	6-06-07	2 x 4	1-03-08 1-03-08	1-07-11 1-07-11	240.8 150.67		
	2	T10 Hip	10 /12	**27-01-00**	8-02-07	2 x 4	1-03-08 1-03-08	1-07-11 1-07-11	253.47 161.33		
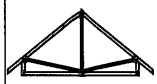	2	T11 Common	10 /12	**10-11-00**	6-02-04	2 x 4	1-03-08 1-03-08	1-07-11 1-07-11	97.56 64.67		
	1	G11 GABLE	10 /12	**10-11-00**	6-02-04	2 x 4	1-03-08 1-03-08	1-07-11 1-07-11	50.42 33.33		
	1 2-ply	T15 Half Hip Girder	12 /12	**18-04-00**	3-04-10	2 x 6 2 x 4	1-03-08	1-10-08 3-03-13	181.54 113.33		
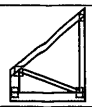	1 2-ply	T16 Monopitch Girder	10 /12	**3-10-08**	4-10-07	2 x 4 2 x 6		1-07-11 4-10-07	44.83 30.67		
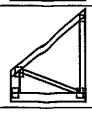	1 2-ply	T16Z1 Monopitch Girder	10 /12	**3-10-08**	4-10-07	2 x 4 2 x 6		1-07-11 4-10-07	44.83 30.67		
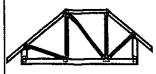	1	T18 Hip Girder	10 /12	**10-04-00**	4-10-07	2 x 4 2 x 6	1-03-08 1-03-08	1-07-11 2-07-11	59.5 40.33		

CITY OF RICHMOND HILL
BUILDING DIVISION
05/01/2024
RECEIVED
Per: joshua.nabua

DELIVERY SHIPLIST

TAMARACK ROOF TRUSSES INC.
ALPA LUMBER GROUP

Lumber Yard:	TAMARACK LUMBER	Job Track:	53256
Builder:	GREENPARK HOMES	PlanLog:	207571
Project:	TRINIGROUP DEVELOPMENTS	Layout ID:	434951
Location:	RICHMOND HILL	Ref #	
Model:	VILLA 2	Page:	2 of 3
Lot #:		Date:	09-25-2023
Elevation:	2	Designer:	
		Sales Rep:	Rick DiCiano

Roof Trusses

PROFILE	QTY PLY	MARK TYPE	PITCH	SPAN	HEIGHT	LUMBER	OVERHANG LEFT RIGHT	HEEL HEIGHT LEFT RIGHT	LBS. BFT.	BUNDLE # STACK #	LOAD BY REMARKS
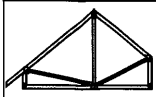	3	T19 Common	10 /12	**10-04-00**	6-05-06	2 x 4	1-03-08	1-07-11 2-07-11	139.59 91.50		
	1	T20 Hip Girder	10 /12	**8-00-00**	4-00-07	2 x 4	1-03-08 1-03-08	1-07-11 1-07-11	42.77 28.33		
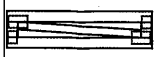	1 2-ply	T21 Monopitch Girder	0 /12	**3-10-08**	1-00-00	2 x 4		1-00-00 1-00-00	24.97 17.33		
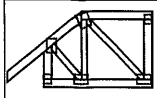	1	T22 Half Hip Girder	10 /12	**3-10-08**	2-09-00	2 x 4	1-03-08	1-07-11 2-09-00	20.84 14.67		
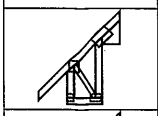	7	T38 Monopitch	12 /12	**1-07-00**	4-02-12	2 x 4	1-03-08	1-10-08 3-05-08	122.99 91.00		
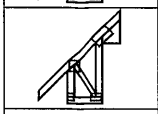	6	T38Z Monopitch	12 /12	**1-07-00**	4-02-12	2 x 4	1-03-08	1-10-08 3-05-08	105.42 78.00		
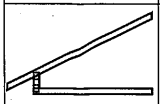	9	J1 Jack-Open	6 /12	**5-10-08**	4-01-04	2 x 4	1-03-08	1-02-00 4-01-04	151.15 96.00		
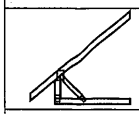	2	J2 Jack-Open	10 /12	**3-10-08**	4-10-07	2 x 4	1-03-08	1-07-11 4-10-07	30.28 19.33		
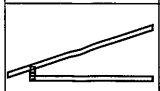	10	J3 Jack-Open	4 /12	**7-02-00**	3-03-14	2 x 4	1-03-08	11-03 3-03-14	189.41 126.67		
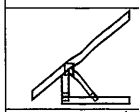	3	J20 Jack-Open	10 /12	**2-10-08**	4-00-07	2 x 4	1-03-08	1-07-11 4-00-07	37.54 25.00		
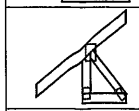	2	J21 Jack-Open	10 /12	**1-04-00**	2-09-00	2 x 4	1-03-08	1-07-11 2-09-00	16.76 12.67		
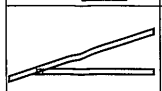	4	J22W Jack-Open	4 /12	**5-07-00**	2-10-08	2 x 4	1-03-08	3-15 2-02-04	66.77 42.67		
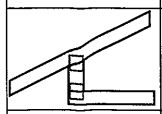	2	C1 Jack-Open	6 /12	**1-09-07**	2-00-12	2 x 4	1-03-08 1-01	1-02-00 2-00-12	14.04 9.33		
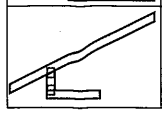	2	C2 Jack-Open	6 /12	**1-10-08**	3-00-12	2 x 4	1-03-08 1-10-15	1-02-00 2-01-04	19.14 12.00		

CITY OF RICHMOND HILL
BUILDING DIVISION
05/01/2024
RECEIVED
Per: joshua.nabua

DELIVERY SHIPLIST

TAMARACK ROOF TRUSSES INC.
ALPA LUMBER GROUP

Lumber Yard:	TAMARACK LUMBER	Job Track:	53256
Builder:	GREENPARK HOMES	PlanLog:	207571
Project:	TRINIGROUP DEVELOPMENTS	Layout ID:	434951
Location:	RICHMOND HILL	Ref #	
Model:	VILLA 2	Page:	3 of 3
Lot #:		Date:	09-25-2023
Elevation:	2	Designer:	
		Sales Rep:	Rick DiCiano

Roof Trusses

PROFILE	QTY / PLY	MARK / TYPE	PITCH	SPAN	HEIGHT	LUMBER	OVERHANG LEFT / RIGHT	HEEL HEIGHT LEFT / RIGHT	LBS. / BFT.	BUNDLE # / STACK #	LOAD BY / REMARKS
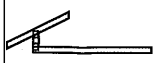	2	C3 Jack-Open	6 /12	**1-09-07**	2-00-12	2 x 4	1-03-08 4-01-01	1-02-00 2-00-12	23.16 14.67		
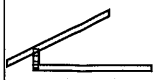	2	C4 Jack-Open	6 /12	**3-09-07**	3-00-12	2 x 4	1-03-08 2-01-01	1-02-00 3-00-12	28.26 17.33		
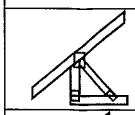	2	C7 Jack-Open	10 /12	**1-09-07**	3-01-09	2 x 4	1-03-08 1-01	1-07-11 3-01-09	19.52 14.00		
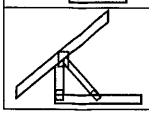	2	C8 Jack-Open	10 /12	**1-09-07**	3-01-09	2 x 4	1-03-08 1-01-01	1-07-11 3-01-09	21.8 15.33		

TOTAL # TRUSS= **93** TOTAL BFT OF ALL TRUSSES= **2585.34** BFT. TOTAL WEIGHT OF ALL TRSSES **4007.28** LBS

HARDWARE

QTY	TYPE	MODEL	LENGTH
5	Hardware	LUS24	
2	Hardware	LUS26-2	
4	Hardware	H2.5T	

TOTAL NUMBER OF ITEMS= **11**

CITY OF RICHMOND HILL
BUILDING DIVISION
05/01/2024
RECEIVED
Per: joshua.nabua

TAMARACK ROOF TRUSSES INC.
ALPA LUMBER GROUP

DELIVERY SHIPLIST

Lumber Yard:	TAMARACK LUMBER	Job Track:	53256
Builder:	GREENPARK HOMES	PlanLog:	207571
Project:	TRINIGROUP DEVELOPMENTS	Layout ID:	434952
Location:	RICHMOND HILL	Ref #	
Model:	VILLA 2	Page:	1 of 3
Lot #:		Date:	09-25-2023
Elevation:	3 & 3 - REAR UPG	Designer:	
		Sales Rep:	Rick DiCiano

Roof Trusses

PROFILE	QTY PLY	MARK TYPE	PITCH	SPAN	HEIGHT	LUMBER	OVERHANG LEFT RIGHT	HEEL HEIGHT LEFT RIGHT	LBS. BFT.	BUNDLE # STACK #	LOAD BY REMARKS
	1 2-ply	T40 Hip Girder	6 /12	**27-01-00**	4-01-04	2 x 4 2 x 6	1-03-08 1-03-08	1-02-00 1-02-00	252.97 159.33		
	1 2-ply	T40Z Hip Girder	6 /12	**27-01-00**	4-01-04	2 x 4 2 x 6	1-03-08 1-03-08	1-02-00 1-02-00	252.97 159.33		
	2	T2 Hip	6 /12	**27-01-00**	5-01-04	2 x 4	1-03-08 1-03-08	1-02-00 1-02-00	213.05 136.33		
	2	T3 Hip	6 /12	**27-01-00**	6-01-04	2 x 4	1-03-08 1-03-08	1-02-00 1-02-00	222.41 141.33		
	2	T4 Hip	6 /12	**27-01-00**	7-01-04	2 x 4	1-03-08 1-03-08	1-02-00 1-02-00	225.64 141.33		
	10	T5 Common	6 /12	**27-01-00**	7-11-04	2 x 4	1-03-08 1-03-08	1-02-00 1-02-00	1142.37 716.67		
	1 2-ply	T15 Half Hip Girder	12 /12	**18-04-00**	3-04-10	2 x 6 2 x 4	1-03-08	1-10-08 3-03-13	181.54 113.33		
	1	T30 Hip Girder	6 /12	**10-04-00**	3-01-04	2 x 4 2 x 6	1-03-08 1-03-08	1-02-00 1-02-00	49.25 33.00		
	4	T31 Common	6 /12	**10-04-00**	3-09-00	2 x 4	1-03-08 1-03-08	1-02-00 1-02-00	162.28 105.33		
	3	T32 Common	6 /12	**8-00-00**	3-02-00	2 x 4	1-03-08 1-03-08	1-02-00 1-02-00	97.76 64.50		
	1	T33 Half Hip	6 /12	**10-11-00**	3-08-00	2 x 4	1-03-08	1-02-00 3-08-00	43.15 28.00		
	1	T34 Half Hip	6 /12	**10-11-00**	2-08-00	2 x 4	1-03-08	1-02-00 2-08-00	41.18 26.67		
	2	T35 Common	3.5 /12	**10-11-00**	2-05-09	2 x 4	1-03-08 1-03-08	10-07 10-07	79.34 52.00		
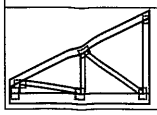	1 2-ply	T36 Monopitch Girder	6 /12	**6-01-08**	4-01-04	2 x 4 2 x 6		1-00-08 4-01-04	59.64 39.67		

CITY OF RICHMOND HILL
BUILDING DIVISION
05/01/2024
RECEIVED
Per: joshua.nabua

DELIVERY SHIPLIST

TAMARACK ROOF TRUSSES INC.
ALPA LUMBER GROUP

Lumber Yard:	TAMARACK LUMBER	Job Track:	53256
Builder:	GREENPARK HOMES	PlanLog:	207571
Project:	TRINIGROUP DEVELOPMENTS	Layout ID:	434952
Location:	RICHMOND HILL	Ref #	
Model:	VILLA 2	Page:	2 of 3
Lot #:		Date:	09-25-2023
Elevation:	3 & 3 - REAR UPG	Designer:	
		Sales Rep:	Rick DiCiano

Roof Trusses

PROFILE	QTY PLY	MARK TYPE	PITCH	SPAN	HEIGHT	LUMBER	OVERHANG LEFT RIGHT	HEEL HEIGHT LEFT RIGHT	LBS. BFT.	BUNDLE # STACK #	LOAD BY REMARKS
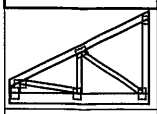	1 2-ply	T36Z Monopitch Girder	6 /12	**6-01-08**	4-01-04	2 x 4 2 x 6		1-00-08 4-01-04	59.64 39.67		
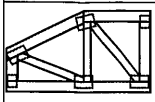	1 2-ply	T37 Half Hip Girder	6 /12	**3-10-08**	2-02-08	2 x 4		1-02-00 2-02-08	33.02 23.00		
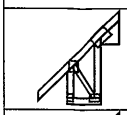	7	T38 Monopitch	12 /12	**1-07-00**	4-02-12	2 x 4	1-03-08	1-10-08 3-05-08	122.99 91.00		
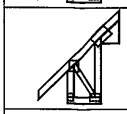	6	T38Z Monopitch	12 /12	**1-07-00**	4-02-12	2 x 4	1-03-08	1-10-08 3-05-08	105.42 78.00		
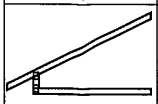	9	J1 Jack-Open	6 /12	**5-10-08**	4-01-04	2 x 4	1-03-08	1-02-00 4-01-04	151.15 96.00		
	10	J3 Jack-Open	4 /12	**7-02-00**	3-03-14	2 x 4	1-03-08	11-03 3-03-14	189.41 126.67		
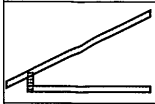	2	J30 Jack-Open	6 /12	**6-01-08**	4-01-04	2 x 4	1-00-08	1-00-08 4-01-04	33.87 22.67		
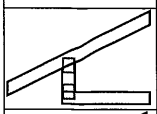	1	J31 Jack-Open	6 /12	**2-01-00**	2-02-08	2 x 4	1-03-08	1-02-00 2-02-08	7.64 5.33		
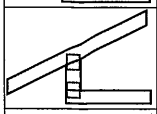	2	C1 Jack-Open	6 /12	**1-09-07**	2-00-12	2 x 4	1-03-08 1-01	1-02-00 2-00-12	14.04 9.33		
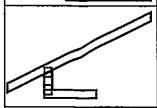	2	C2 Jack-Open	6 /12	**1-10-08**	3-00-12	2 x 4	1-03-08 1-10-15	1-02-00 2-01-04	19.14 12.00		
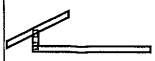	2	C3 Jack-Open	6 /12	**1-09-07**	2-00-12	2 x 4	1-03-08 4-01-01	1-02-00 2-00-12	23.16 14.67		
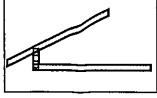	2	C4 Jack-Open	6 /12	**3-09-07**	3-00-12	2 x 4	1-03-08 2-01-01	1-02-00 3-00-12	28.26 17.33		

TOTAL # TRUSS= **83** TOTAL BFT OF ALL TRUSSES= **2452.49** BFT. TOTAL WEIGHT OF ALL TRSSES **3811.3** LBS

HARDWARE

QTY	TYPE	MODEL	LENGTH
8	Hardware	LUS24	
1	Hardware	LUS26-2	

CITY OF RICHMOND HILL
BUILDING DIVISION
05/01/2024
RECEIVED
Per: joshua.nabua

DELIVERY SHIPLIST

TAMARACK ROOF TRUSSES INC.
ALPA LUMBER GROUP

Lumber Yard:	TAMARACK LUMBER	Job Track:	53256
Builder:	GREENPARK HOMES	PlanLog:	207571
Project:	TRINIGROUP DEVELOPMENTS	Layout ID:	434952
Location:	RICHMOND HILL	Ref #	
Model:	VILLA 2	Page:	3 of 3
Lot #:		Date:	09-25-2023
Elevation:	3 & 3 - REAR UPG	Designer:	
		Sales Rep:	Rick DiCiano

HARDWARE

QTY	TYPE	MODEL	LENGTH
2	Hardware	HGUS26-2	

TOTAL NUMBER OF ITEMS= **11**

CITY OF RICHMOND HILL
BUILDING DIVISION
05/01/2024
RECEIVED
Per: joshua.nabua

DELIVERY SHIPLIST

TAMARACK ROOF TRUSSES INC.
ALPA LUMBER GROUP

Lumber Yard:	TAMARACK LUMBER	Job Track:	53256
Builder:	GREENPARK HOMES	PlanLog:	207571
Project:	TRINIGROUP DEVELOPMENTS	Layout ID:	435081
Location:	RICHMOND HILL	Ref #	
Model:	VILLA 2	Page:	1 of 3
Lot #:		Date:	09-25-2023
Elevation:	2 - REAR UPG	Designer:	
		Sales Rep:	Rick DiCiano

Roof Trusses

PROFILE	QTY PLY	MARK TYPE	PITCH	SPAN	HEIGHT	LUMBER	OVERHANG LEFT RIGHT	HEEL HEIGHT LEFT RIGHT	LBS. BFT.	BUNDLE # STACK #	LOAD BY REMARKS
	1 2-ply	T1 Hip Girder	6 /12	**27-01-00**	4-01-04	2 x 4 2 x 6	1-03-08 1-03-08	1-02-00 1-02-00	249.09 155.33		
	1	T2 Hip	6 /12	**27-01-00**	5-01-04	2 x 4	1-03-08 1-03-08	1-02-00 1-02-00	106.53 68.17		
	1	T3 Hip	6 /12	**27-01-00**	6-01-04	2 x 4	1-03-08 1-03-08	1-02-00 1-02-00	111.21 70.67		
	1	T4 Hip	6 /12	**27-01-00**	7-01-04	2 x 4	1-03-08 1-03-08	1-02-00 1-02-00	112.82 70.67		
	10	T5 Common	6 /12	**27-01-00**	7-11-04	2 x 4	1-03-08 1-03-08	1-02-00 1-02-00	1108.69 696.67		
	1 2-ply	T8 Hip Girder	10 /12	**27-01-00**	4-10-07	2 x 4 2 x 6	1-03-08 1-03-08	1-07-11 1-07-11	271.58 173.00		
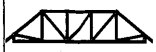	2	T9 Hip	10 /12	**27-01-00**	6-06-07	2 x 4	1-03-08 1-03-08	1-07-11 1-07-11	240.8 150.67		
	2	T10 Hip	10 /12	**27-01-00**	8-02-07	2 x 4	1-03-08 1-03-08	1-07-11 1-07-11	253.47 161.33		
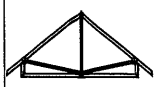	2	T11 Common	10 /12	**10-11-00**	6-02-04	2 x 4	1-03-08 1-03-08	1-07-11 1-07-11	97.56 64.67		
	1	G11 GABLE	10 /12	**10-11-00**	6-02-04	2 x 4	1-03-08 1-03-08	1-07-11 1-07-11	50.42 33.33		
	1 2-ply	T15 Half Hip Girder	12 /12	**18-04-00**	3-04-10	2 x 6 2 x 4	1-03-08	1-10-08 3-03-13	181.54 113.33		
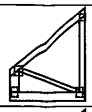	1 2-ply	T16 Monopitch Girder	10 /12	**3-10-08**	4-10-07	2 x 4 2 x 6		1-07-11 4-10-07	44.83 30.67		
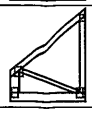	1 2-ply	T16Z Monopitch Girder	10 /12	**3-10-08**	4-10-07	2 x 4 2 x 6		1-07-11 4-10-07	44.83 30.67		
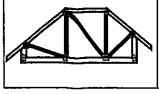	1	T18 Hip Girder	10 /12	**10-04-00**	4-10-07	2 x 4 2 x 6	1-03-08 1-03-08	1-07-11 2-07-11	59.5 40.33		

CITY OF RICHMOND HILL
BUILDING DIVISION
05/01/2024
RECEIVED
Per: joshua.nabua

DELIVERY SHIPLIST

TAMARACK ROOF TRUSSES INC.
ALPA LUMBER GROUP

Lumber Yard:	TAMARACK LUMBER	Job Track:	53256
Builder:	GREENPARK HOMES	PlanLog:	207571
Project:	TRINIGROUP DEVELOPMENTS	Layout ID:	435081
Location:	RICHMOND HILL	Ref #	
Model:	VILLA 2	Page:	2 of 3
Lot #:		Date:	09-25-2023
Elevation:	2 - REAR UPG	Designer:	
		Sales Rep:	Rick DiCiano

Roof Trusses

PROFILE	QTY PLY	MARK TYPE	PITCH	SPAN	HEIGHT	LUMBER	OVERHANG LEFT RIGHT	HEEL HEIGHT LEFT RIGHT	LBS. BFT.	BUNDLE # STACK #	LOAD BY REMARKS
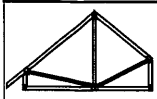	3	T19 Common	10 /12	**10-04-00**	6-05-06	2 x 4	1-03-08	1-07-11 2-07-11	139.59 91.50		
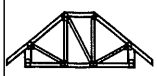	1	T20 Hip Girder	10 /12	**8-00-00**	4-00-07	2 x 4	1-03-08 1-03-08	1-07-11 1-07-11	42.77 28.33		
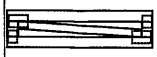	1 2-ply	T21 Monopitch Girder	0 /12	**3-10-08**	1-00-00	2 x 4		1-00-00 1-00-00	24.97 17.33		
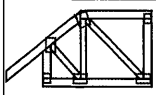	1	T22 Half Hip Girder	10 /12	**3-10-08**	2-09-00	2 x 4	1-03-08	1-07-11 2-09-00	20.84 14.67		
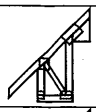	7	T38 Monopitch	12 /12	**1-07-00**	4-02-12	2 x 4	1-03-08	1-10-08 3-05-08	122.99 91.00		
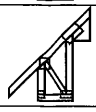	6	T38Z Monopitch	12 /12	**1-07-00**	4-02-12	2 x 4	1-03-08	1-10-08 3-05-08	105.42 78.00		
	1	V1 Valley	6 /12	**14-09-00**	3-08-04	2 x 4			41.73 27.67		
	1	V2 Valley	6 /12	**10-09-00**	2-08-04	2 x 4			27.8 18.83		
	1	V3 Valley	6 /12	**6-09-00**	1-08-04	2 x 4			15.5 11.00		
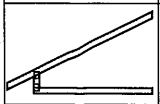	9	J1 Jack-Open	6 /12	**5-10-08**	4-01-04	2 x 4	1-03-08	1-02-00 4-01-04	151.15 96.00		
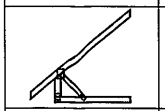	2	J2 Jack-Open	10 /12	**3-10-08**	4-10-07	2 x 4	1-03-08	1-07-11 4-10-07	30.28 19.33		
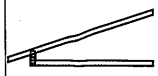	10	J3 Jack-Open	4 /12	**7-02-00**	3-03-14	2 x 4	1-03-08	11-03 3-03-14	189.41 126.67		
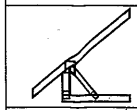	3	J20 Jack-Open	10 /12	**2-10-08**	4-00-07	2 x 4	1-03-08	1-07-11 4-00-07	37.54 25.00		
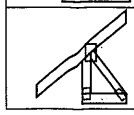	2	J21 Jack-Open	10 /12	**1-04-00**	2-09-00	2 x 4	1-03-08	1-07-11 2-09-00	16.76 12.67		

CITY OF RICHMOND HILL
BUILDING DIVISION
05/01/2024
RECEIVED
Per: joshua.nabua

DELIVERY SHIPLIST

TAMARACK ROOF TRUSSES INC.
ALPA LUMBER GROUP

Lumber Yard:	TAMARACK LUMBER	Job Track:	53256
Builder:	GREENPARK HOMES	PlanLog:	207571
Project:	TRINIGROUP DEVELOPMENTS	Layout ID:	435081
Location:	RICHMOND HILL	Ref #	
Model:	VILLA 2	Page:	3 of 3
Lot #:		Date:	09-25-2023
Elevation:	2 - REAR UPG	Designer:	
		Sales Rep:	Rick DiCiano

Roof Trusses

PROFILE	QTY PLY	MARK TYPE	PITCH	SPAN	HEIGHT	LUMBER	OVERHANG LEFT RIGHT	HEEL HEIGHT LEFT RIGHT	LBS. BFT.	BUNDLE # STACK #	LOAD BY REMARKS
	4	J22W Jack-Open	4 /12	**5-07-00**	2-10-08	2 x 4	1-03-08	3-15 2-02-04	66.77 42.67		
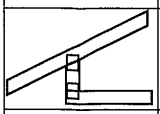	2	C1 Jack-Open	6 /12	**1-09-07**	2-00-12	2 x 4	1-03-08 1-01	1-02-00 2-00-12	14.04 9.33		
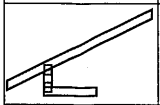	2	C2 Jack-Open	6 /12	**1-10-08**	3-00-12	2 x 4	1-03-08 1-10-15	1-02-00 2-01-04	19.14 12.00		
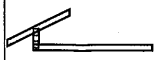	2	C3 Jack-Open	6 /12	**1-09-07**	2-00-12	2 x 4	1-03-08 4-01-01	1-02-00 2-00-12	23.16 14.67		
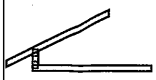	2	C4 Jack-Open	6 /12	**3-09-07**	3-00-12	2 x 4	1-03-08 2-01-01	1-02-00 3-00-12	28.26 17.33		
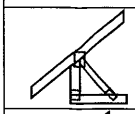	2	C7 Jack-Open	10 /12	**1-09-07**	3-01-09	2 x 4	1-03-08 1-01	1-07-11 3-01-09	19.52 14.00		
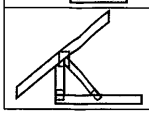	2	C8 Jack-Open	10 /12	**1-09-07**	3-01-09	2 x 4	1-03-08 1-01-01	1-07-11 3-01-09	21.8 15.33		

TOTAL # TRUSS= **96** TOTAL BFT OF ALL TRUSSES= **2642.84** BFT. TOTAL WEIGHT OF ALL TRSSES **4092.3** LBS

HARDWARE

QTY	TYPE	MODEL	LENGTH
5	Hardware	LUS24	
2	Hardware	LUS26-2	
4	Hardware	H2.5T	

TOTAL NUMBER OF ITEMS= **11**

CITY OF RICHMOND HILL
BUILDING DIVISION
05/01/2024
RECEIVED
Per: joshua.nabua

JOB NAME	TRUSS NAME	QUANTITY	PLY	JOB DESC.	DRWG NO.
434950	T1	1	2	GREENPARK HOMES TRUSS DESC.	

Tamarack Roof Truss, Burlington

Version 8.630 S Aug 30 2023 MiTek Industries, Inc. Fri Sep 22 10:15:51 2023 Page 1

ID:??smMffSHcbvu6uGxGPN4oyih5x-RTKY978HtPQdqTbA2tQBnrLsRmQL3aHBZ6U5b9yb7Dc

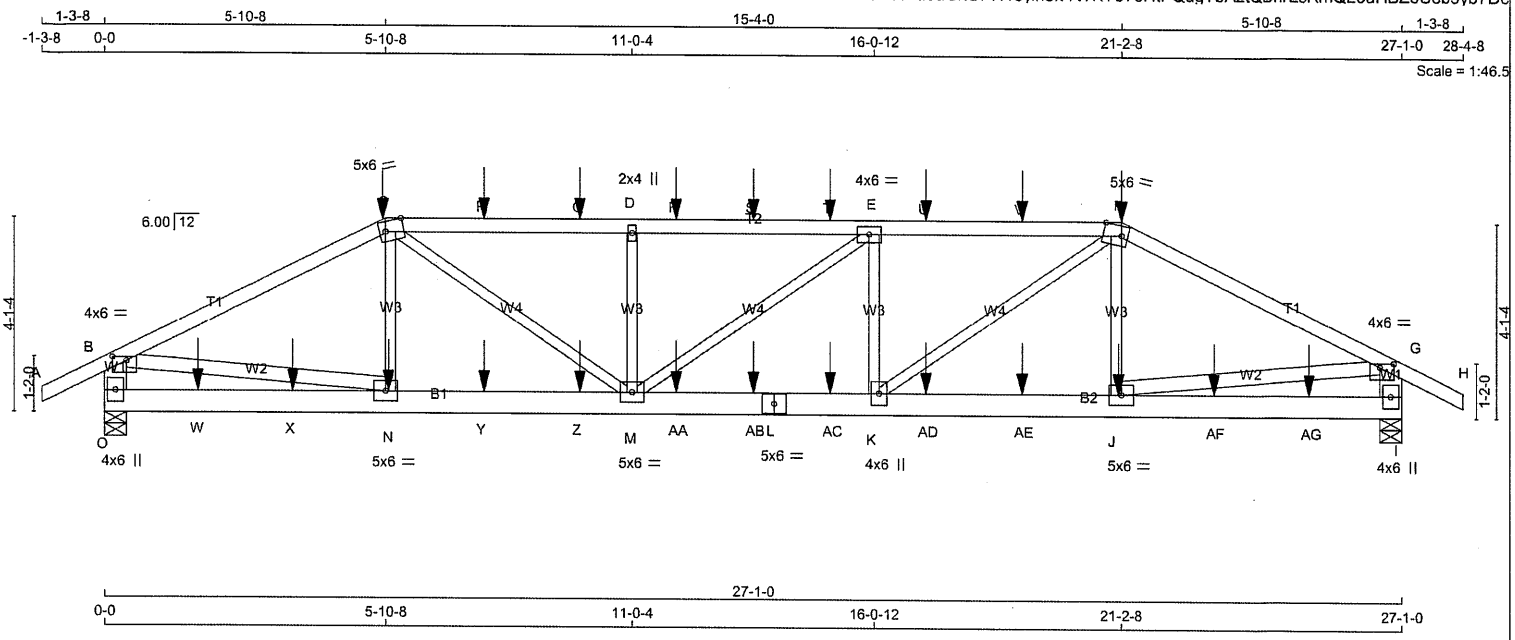

TOTAL WEIGHT = 2 X 125 = 249 lb

[M]

LUMBER

N. L. G. A. RULES

CHORDS	SIZE		LUMBER	DESCR.
A - C	2x4	DRY	No.2	SPF
C - F	2x4	DRY	No.2	SPF
F - H	2x4	DRY	No.2	SPF
O - B	2x6	DRY	No.2	SPF
I - G	2x6	DRY	No.2	SPF
O - L	2x6	DRY	No.2	SPF
L - I	2x6	DRY	No.2	SPF
ALL WEBS EXCEPT	2x3	DRY	No.2	SPF
B - N	2x4	DRY	No.2	SPF
J - G	2x4	DRY	No.2	SPF

DRY: SEASONED LUMBER.

DESIGN CONSISTS OF 2 TRUSSES BUILT SEPARATELY THEN FASTENED TOGETHER AS FOLLOWS:

CHORDS	#ROWS	SURFACE SPACING (IN)	LOAD(PLF)
TOP CHORDS : (0.122"X3") SPIRAL NAILS			
A- C	1	12	SIDE(61.0)
C- F	1	12	SIDE(61.0)
F- H	1	12	SIDE(61.0)
O- B	2	12	TOP
I- G	2	12	TOP
BOTTOM CHORDS : (0.122"X3") SPIRAL NAILS			
O- L	2	12	SIDE(183.1)
L- I	2	12	SIDE(183.1)
WEBS : (0.122"X3") SPIRAL NAILS			
2x3	1	6	
2x4	1	6	

NAILS TO BE DRIVEN FROM ONE SIDE ONLY.

GIRDER NAILING ASSUMES NAILED HANGERS ARE FASTENED WITH MIN. 3-0 INCH NAILS.

TOP - COMPONENTS ARE LOADED FROM THE TOP AND MUST BE PLACED ON TOP EDGE OF ALL PLIES FOR THE LOAD TO BE TRANSFERRED TO EACH PLY.

LICENSED PROFESSIONAL ENGINEER
9/25/23
C. M. HEYENS
100505065
PROVINCE OF ONTARIO

STRUCTURAL COMPONENT ONLY
DWG # TR23091784

DIMENSIONS, SUPPORTS AND LOADINGS SPECIFIED BY FABRICATOR TO BE VERIFIED BY BUILDING DESIGNER

BEARINGS

JT	FACTORED GROSS REACTION VERT	HORZ	MAXIMUM FACTORED GROSS REACTION DOWN	HORZ	UPLIFT	INPUT BRG IN-SX	REQRD BRG IN-SX
O	2634	0	2634	0	0	5-8	1-8
I	2634	0	2634	0	0	5-8	1-8

UNFACTORED REACTIONS

JT	1ST LCASE COMBINED	MAX./MIN. COMPONENT REACTIONS SNOW	LIVE	PERM.LIVE	WIND	DEAD	SOIL
O	1862	1226 / 0	0 / 0	0 / 0	0 / 0	636 / 0	0 / 0
I	1862	1226 / 0	0 / 0	0 / 0	0 / 0	636 / 0	0 / 0

BEARING MATERIAL TO BE SPF NO.2 OR BETTER AT JOINT(S) O, I

BRACING

TOP CHORD TO BE SHEATHED OR MAX. PURLIN SPACING = 4.00 FT.
MAX. UNBRACED BOTTOM CHORD LENGTH = 10.00 FT OR RIGID CEILING DIRECTLY APPLIED.

ALL PITCH BREAKS AND PERIMETER CORNER JOINTS MUST BE LATERALLY RESTRAINED.

LOADING

TOTAL LOAD CASES: (4)

CHORDS MEMB. FR-TO	MAX. FACTORED FORCE (LBS)	FACTORED VERT. LOAD LC1 (PLF) FROM	TO	MAX CSI (LC)	MAX. UNBRAC LENGTH
A- B	0 / 28	-91.8	-91.8	0.07 (1)	10.00
B- C	-3841 / 0	-91.8	-91.8	0.44 (1)	4.41
C- P	-4769 / 0	-91.8	-91.8	0.41 (1)	4.02
P- Q	-4769 / 0	-91.8	-91.8	0.41 (1)	4.02
Q- D	-4769 / 0	-91.8	-91.8	0.41 (1)	4.02
D- R	-4770 / 0	-91.8	-91.8	0.42 (1)	4.01
R- S	-4770 / 0	-91.8	-91.8	0.42 (1)	4.01
S- T	-4770 / 0	-91.8	-91.8	0.42 (1)	4.01
T- E	-4770 / 0	-91.8	-91.8	0.42 (1)	4.01
E- U	-4784 / 0	-91.8	-91.8	0.42 (1)	4.00
U- V	-4784 / 0	-91.8	-91.8	0.42 (1)	4.00
V- F	-4784 / 0	-91.8	-91.8	0.42 (1)	4.00
F- G	-3839 / 0	-91.8	-91.8	0.44 (1)	4.42
G- H	0 / 28	-91.8	-91.8	0.07 (1)	10.00
O- B	-2561 / 0	0.0	0.0	0.09 (1)	7.81
I- G	-2559 / 0	0.0	0.0	0.09 (1)	7.81
O- W	0 / 0	-18.5	-18.5	0.06 (4)	10.00
W- X	0 / 0	-18.5	-18.5	0.06 (4)	10.00
X- N	0 / 0	-18.5	-18.5	0.06 (4)	10.00
N- Y	0 / 3427	-18.5	-18.5	0.26 (1)	10.00
Y- Z	0 / 3427	-18.5	-18.5	0.26 (1)	10.00
Z- M	0 / 3427	-18.5	-18.5	0.26 (1)	10.00
M-AA	0 / 4784	-18.5	-18.5	0.37 (1)	10.00
AA-AB	0 / 4784	-18.5	-18.5	0.37 (1)	10.00
AB- L	0 / 4784	-18.5	-18.5	0.37 (1)	10.00
L-AC	0 / 4784	-18.5	-18.5	0.37 (1)	10.00
AC- K	0 / 4784	-18.5	-18.5	0.37 (1)	10.00
K-AD	0 / 3424	-18.5	-18.5	0.25 (1)	10.00
AD-AE	0 / 3424	-18.5	-18.5	0.25 (1)	10.00
AE- J	0 / 3424	-18.5	-18.5	0.25 (1)	10.00
J-AF	0 / 0	-18.5	-18.5	0.06 (4)	10.00
AF-AG	0 / 0	-18.5	-18.5	0.06 (4)	10.00
AG- I	0 / 0	-18.5	-18.5	0.06 (4)	10.00

WEBS MEMB. FR-TO	MAX. FACTORED FORCE (LBS)	MAX CSI (LC)
N- C	-240 / 73	0.03 (1)
C- M	0 / 1657	0.21 (1)
M- D	-826 / 0	0.10 (1)
M- E	-19 / 0	0.01 (1)
K- E	-821 / 0	0.10 (1)
K- F	0 / 1679	0.21 (1)
J- F	-252 / 70	0.03 (1)
B- N	0 / 3462	0.31 (1)
J- G	0 / 3460	0.31 (1)

SPECIFIED CONCENTRATED LOADS (LBS)

JT	LOC.	LC1	MAX-	MAX+	FACE	DIR.	TYPE	HEEL	CONN.
C	5-10-8	-318	-318	---	FRONT	VERT	TOTAL	---	C1
F	21-2-8	-318	-318	---	FRONT	VERT	TOTAL	---	C1
J	21-1-12	-21	-21	---	FRONT	VERT	TOTAL	---	C1
N	5-11-4	-21	-21	---	FRONT	VERT	TOTAL	---	C1
P	7-11-4	-76	-76	---	FRONT	VERT	TOTAL	---	C1

DESIGN CRITERIA

SPECIFIED LOADS:

TOP CH.	LL	=	25.6	PSF
	DL	=	6.0	PSF
BOT CH.	LL	=	0.0	PSF
	DL	=	7.4	PSF
TOTAL LOAD		=	39.0	PSF

SPACING = 24.0 IN. C/C

LOADING IN FLAT SECTION BASED ON A SLOPE OF 2.00/12 MINIMUM

THIS TRUSS IS DESIGNED FOR RESIDENTIAL OR SMALL BUILDING REQUIREMENTS OF PART 9, NBCC 2015

THIS DESIGN COMPLIES WITH:
- PART 9 OF BCBC 2018 , NBC-2019AE
- PART 9 OF OBC 2012 (2019 AMENDMENT)
- CSA 086-14
- TPIC 2014

(55 % OF 31.3 P.S.F. G.S.L. PLUS 8.4 P.S.F. RAIN LOAD) EQUALS 25.6 P.S.F. SPECIFIED ROOF LIVE LOAD

ALLOWABLE DEFL.(LL)= L/360 (0.90")
CALCULATED VERT. DEFL.(LL) = L/ 999 (0.10")
ALLOWABLE DEFL.(TL)= L/360 (0.90")
CALCULATED VERT. DEFL.(TL) = L/ 999 (0.19")

CSI: TC=0.44/1.00 (B-C:1) , BC=0.37/1.00 (K-M:1) , WB=0.31/1.00 (B-N:1) , SSI=0.19/1.00 (E-F:1)

DOL LUMBER=1.00 NAIL=1.00 LS BEND=1.00 COMP=1.00 SHEAR=1.00 TENS= 1.00

COMPANION LIVE LOAD FACTOR = 1.00

AUTOSOLVE HEELS OFF

TRUSS PLATE MANUFACTURER IS NOT RESPONSIBLE FOR QUALITY CONTROL IN THE TRUSS MANUFACTURING PLANT .

NAIL VALUES

PLATE	GRIP(DRY) (PSI) MAX	MIN	SHEAR (PLI) MAX	MIN	SECTION (PLI) MAX	MIN
MT20	650	371	1747	788	1987	1873

PLATE PLACEMENT TOL. = 0.250 inches

PLATE ROTATION TOL. = 5.0 Deg.

JSI GRIP= 0.88 (M) (INPUT = 0.90)
JSI METAL= 0.47 (L) (INPUT = 0.95)

CITY OF RICHMOND HILL
BUILDING DIVISION
05/01/2024
RECEIVED
Per: joshua.nabua

CONTINUED ON PAGE 2

JOB NAME	TRUSS NAME	QUANTITY	PLY	JOB DESC.	DRWG NO.
434950	T1	1	2	GREENPARK HOMES TRUSS DESC.	

Tamarack Roof Truss, Burlington

ID:??smMffSHcbvu6uGxGPN4oyih5x-RTKY978HtPQdgTbA2tQBnrLsRmQL3aHBZ6U5b9yb7Dc

PLATES (table is in inches)

JT	TYPE	PLATES	W	LEN	Y	X
B	TMVW-p	MT20	4.0	6.0	1.00	3.50
C	TTWW-m	MT20	5.0	6.0	Edge	4.50
D	TMW+w	MT20	2.0	4.0		
E	TMWW-t	MT20	4.0	6.0		
F	TTWW-m	MT20	5.0	6.0	Edge	4.50
G	TMVW-p	MT20	4.0	6.0	1.00	3.50
I	BMV1+p	MT20	4.0	6.0		
J	BMWW-t	MT20	5.0	6.0		
K	BMWW+t	MT20	4.0	6.0		
L	BS-t	MT20	5.0	6.0		
M	BMWWW-t	MT20	5.0	6.0		
N	BMWW-t	MT20	5.0	6.0		
O	BMV1+p	MT20	4.0	6.0		

Edge - INDICATES REFERENCE CORNER OF PLATE TOUCHES EDGE OF CHORD.

NOTES- (1)

1) Lateral braces to be a minimum of 2X4 SPF #2.

SPECIFIED CONCENTRATED LOADS (LBS)

JT	LOC.	LC1	MAX-	MAX+	FACE	DIR.	TYPE	HEEL	CONN.
Q	9-11-4	-76	-76	---	FRONT	VERT	TOTAL	---	C1
R	11-11-4	-76	-76	---	FRONT	VERT	TOTAL	---	C1
S	13-6-8	-76	-76	---	FRONT	VERT	TOTAL	---	C1
T	15-1-12	-76	-76	---	FRONT	VERT	TOTAL	---	C1
U	17-1-12	-76	-76	---	FRONT	VERT	TOTAL	---	C1
V	19-1-12	-76	-76	---	FRONT	VERT	TOTAL	---	C1
W	1-11-4	-20	-20	---	FRONT	VERT	TOTAL	---	C1
X	3-11-4	-21	-21	---	FRONT	VERT	TOTAL	---	C1
Y	7-11-4	-21	-21	---	FRONT	VERT	TOTAL	---	C1
Z	9-11-4	-21	-21	---	FRONT	VERT	TOTAL	---	C1
AA	11-11-4	-21	-21	---	FRONT	VERT	TOTAL	---	C1
AB	13-6-8	-21	-21	---	FRONT	VERT	TOTAL	---	C1
AC	15-1-12	-21	-21	---	FRONT	VERT	TOTAL	---	C1
AD	17-1-12	-21	-21	---	FRONT	VERT	TOTAL	---	C1
AE	19-1-12	-21	-21	---	FRONT	VERT	TOTAL	---	C1
AF	23-1-12	-21	-21	---	FRONT	VERT	TOTAL	---	C1
AG	25-1-12	-20	-20	---	FRONT	VERT	TOTAL	---	C1

CONNECTION REQUIREMENTS

1) **C1:** A SUITABLE HANGER/MECHANICAL CONNECTION IS REQUIRED.

LICENSED PROFESSIONAL ENGINEER
9/25/23
C. M. HEYENS
100505065
PROVINCE OF ONTARIO

STRUCTURAL COMPONENT ONLY
DWG # TR23091784

CITY OF RICHMOND HILL
BUILDING DIVISION
05/01/2024
RECEIVED
Per: joshua.nabua

JOB NAME	TRUSS NAME	QUANTITY	PLY	JOB DESC.	DRWG NO.
434950	T2	1	1	GREENPARK HOMES TRUSS DESC.	

Tamarack Roof Truss, Burlington

Version 8.630 S Aug 30 2023 MiTek Industries, Inc. Fri Sep 22 10:15:52 2023 Page 1
ID:?7smMffSHcbvu6uGxGPN4oyih5x-vfuwNT9wejYTldANcbxQK2u149leot4LnmEe8cyb7Db

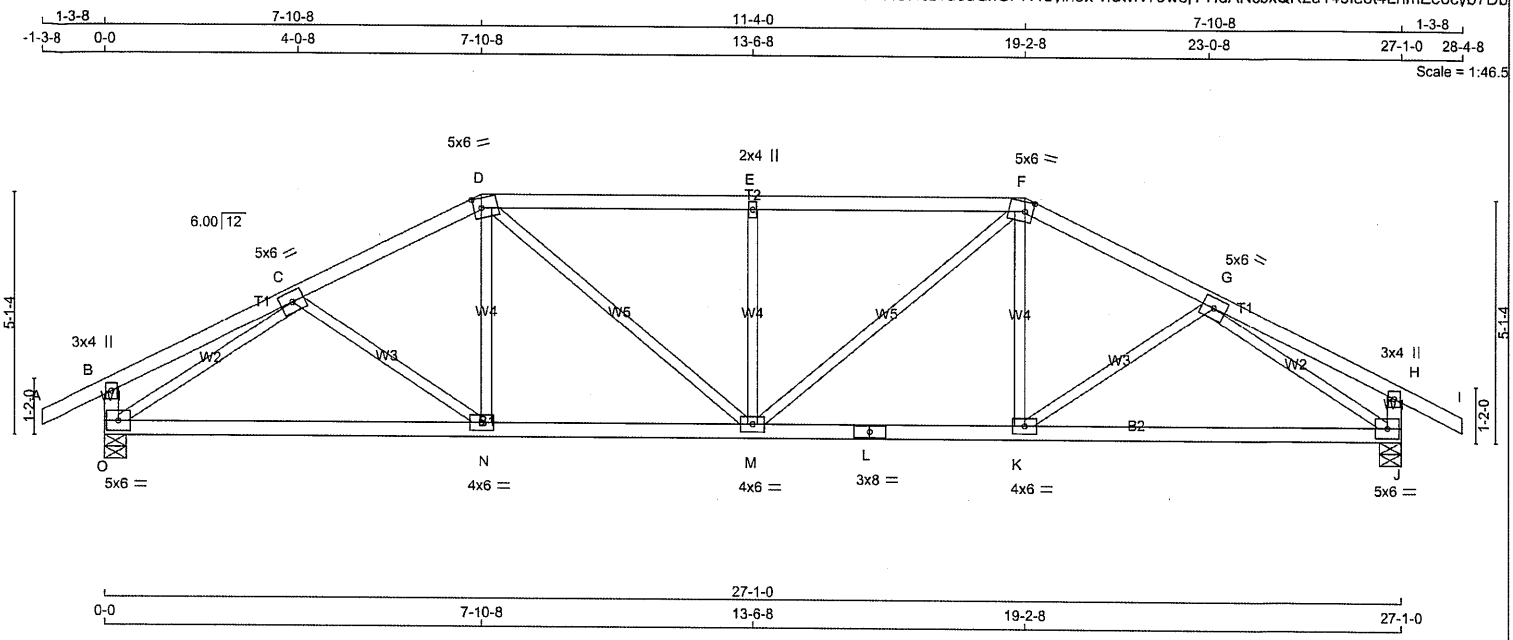

TOTAL WEIGHT = 107 lb
[M][F]

LUMBER
N. L. G. A. RULES

CHORDS	SIZE		LUMBER	DESCR.
A - D	2x4	DRY	No.2	SPF
D - F	2x4	DRY	No.2	SPF
F - I	2x4	DRY	No.2	SPF
O - B	2x4	DRY	No.2	SPF
J - H	2x4	DRY	No.2	SPF
O - L	2x4	DRY	No.2	SPF
L - J	2x4	DRY	No.2	SPF
ALL WEBS EXCEPT	2x3	DRY	No.2	SPF

DRY: SEASONED LUMBER.

PLATES (table is in Inches)

JT	TYPE	PLATES	W	LEN	Y	X
B	TMV+p	MT20	3.0	4.0		
C	TMWW-t	MT20	5.0	6.0		
D	TTWW-m	MT20	5.0	6.0	2.50	2.00
E	TMW+w	MT20	2.0	4.0		
F	TTWW-m	MT20	5.0	6.0	2.50	2.00
G	TMWW-t	MT20	5.0	6.0		
H	TMV+p	MT20	3.0	4.0		
J	BMW1-t	MT20	5.0	6.0		
K	BMWW-t	MT20	4.0	6.0		
L	BS-t	MT20	3.0	8.0		
M	BMWWW-t	MT20	4.0	6.0		
N	BMWW-t	MT20	4.0	6.0		
O	BMW1-t	MT20	5.0	6.0		

NOTES- (1)
1) Lateral braces to be a minimum of 2X4 SPF #2.

DIMENSIONS, SUPPORTS AND LOADINGS SPECIFIED BY FABRICATOR TO BE VERIFIED BY BUILDING DESIGNER

BEARINGS

JT	FACTORED GROSS REACTION VERT	HORZ	MAXIMUM FACTORED GROSS REACTION DOWN	HORZ	UPLIFT	INPUT BRG IN-SX	REQRD BRG IN-SX
O	1618	0	1618	0	0	5-8	1-12
J	1618	0	1618	0	0	5-8	1-12

UNFACTORED REACTIONS

JT	1ST LCASE COMBINED	MAX./MIN. COMPONENT REACTIONS SNOW	LIVE	PERM.LIVE	WIND	DEAD	SOIL
O	1142	762 / 0	0 / 0	0 / 0	0 / 0	379 / 0	0 / 0
J	1142	762 / 0	0 / 0	0 / 0	0 / 0	379 / 0	0 / 0

BEARING MATERIAL TO BE SPF NO.2 OR BETTER AT JOINT(S) O, J

BRACING
TOP CHORD TO BE SHEATHED OR MAX. PURLIN SPACING = 4.17 FT.
MAX. UNBRACED BOTTOM CHORD LENGTH = 10.00 FT OR RIGID CEILING DIRECTLY APPLIED.

ALL PITCH BREAKS AND PERIMETER CORNER JOINTS MUST BE LATERALLY RESTRAINED.

LOADING
TOTAL LOAD CASES: (4)

CHORDS

MEMB. FR-TO	MAX. FACTORED FORCE (LBS)	FACTORED VERT. LOAD LC1 (PLF) FROM	TO	MAX CSI (LC)	MAX. UNBRAC LENGTH
A- B	0 / 28	-91.8	-91.8	0.12 (1)	10.00
B- C	0 / 17	-91.8	-91.8	0.20 (1)	10.00
C- D	-1980 / 0	-91.8	-91.8	0.20 (1)	4.63
D- E	-2174 / 0	-91.8	-91.8	0.44 (1)	4.17
E- F	-2174 / 0	-91.8	-91.8	0.44 (1)	4.17
F- G	-1980 / 0	-91.8	-91.8	0.20 (1)	4.63
G- H	0 / 17	-91.8	-91.8	0.20 (1)	10.00
H- I	0 / 28	-91.8	-91.8	0.12 (1)	10.00
O- B	-269 / 0	0.0	0.0	0.03 (1)	7.81
J- H	-269 / 0	0.0	0.0	0.03 (1)	7.81
O- N	0 / 1796	-18.5	-18.5	0.43 (1)	10.00
N- M	0 / 1758	-18.5	-18.5	0.42 (1)	10.00
M- L	0 / 1758	-18.5	-18.5	0.42 (1)	10.00
L- K	0 / 1758	-18.5	-18.5	0.42 (1)	10.00
K- J	0 / 1796	-18.5	-18.5	0.43 (1)	10.00

WEBS

MEMB. FR-TO	MAX. FACTORED FORCE (LBS)	MAX CSI (LC)
C- N	-51 / 47	0.02 (1)
N- D	0 / 184	0.05 (4)
D- M	0 / 545	0.12 (1)
M- E	-637 / 0	0.24 (1)
M- F	0 / 545	0.12 (1)
K- F	0 / 184	0.05 (4)
K- G	-51 / 47	0.02 (1)
O- C	-2210 / 0	0.85 (1)
G- J	-2210 / 0	0.85 (1)

DESIGN CRITERIA

SPECIFIED LOADS:

TOP CH.	LL	=	25.6	PSF
	DL	=	6.0	PSF
BOT CH.	LL	=	0.0	PSF
	DL	=	7.4	PSF
TOTAL LOAD		=	39.0	PSF

SPACING = 24.0 IN. C/C

LOADING IN FLAT SECTION BASED ON A SLOPE OF 2.00/12 MINIMUM

THIS TRUSS IS DESIGNED FOR RESIDENTIAL OR SMALL BUILDING REQUIREMENTS OF PART 9, NBCC 2015

THIS DESIGN COMPLIES WITH:
- PART 9 OF BCBC 2018 , NBC-2019AE
- PART 9 OF OBC 2012 (2019 AMENDMENT)
- CSA 086-14
- TPIC 2014

(55 % OF 31.3 P.S.F. G.S.L. PLUS 8.4 P.S.F. RAIN LOAD) EQUALS 25.6 P.S.F. SPECIFIED ROOF LIVE LOAD

ALLOWABLE DEFL.(LL)= L/360 (0.90")
CALCULATED VERT. DEFL.(LL) = L/ 999 (0.09")
ALLOWABLE DEFL.(TL)= L/360 (0.90")
CALCULATED VERT. DEFL.(TL) = L/ 999 (0.18")

CSI: TC=0.44/1.00 (D-E:1) , BC=0.43/1.00 (N-O:1) , WB=0.85/1.00 (C-O:1) , SSI=0.25/1.00 (D-E:1)

DOL LUMBER=1.00 NAIL=1.00 LS BEND=1.10 COMP=1.10 SHEAR=1.10 TENS= 1.10

COMPANION LIVE LOAD FACTOR = 1.00

TRUSS PLATE MANUFACTURER IS NOT RESPONSIBLE FOR QUALITY CONTROL IN THE TRUSS MANUFACTURING PLANT .

NAIL VALUES

PLATE	GRIP(DRY) (PSI) MAX	MIN	SHEAR (PLI) MAX	MIN	SECTION (PLI) MAX	MIN
MT20	650	371	1747	788	1987	1873

PLATE PLACEMENT TOL. = 0.250 inches

PLATE ROTATION TOL. = 5.0 Deg.

JSI GRIP= 0.89 (J) (INPUT = 0.90)
JSI METAL= 0.55 (L) (INPUT = 0.95)

LICENSED PROFESSIONAL ENGINEER
9/25/23
C. M. HEYENS
100505065
PROVINCE OF ONTARIO

STRUCTURAL COMPONENT ONLY
DWG # TR23091785

CITY OF RICHMOND HILL
BUILDING DIVISION
05/01/2024
RECEIVED
Per: joshua.nabua

JOB NAME	TRUSS NAME	QUANTITY	PLY	JOB DESC.	DRWG NO.
434950	T3	1	1	GREENPARK HOMES TRUSS DESC.	

Tamarack Roof Truss, Burlington

Version 8.630 S Aug 30 2023 MiTek Industries, Inc. Fri Sep 22 10:15:53 2023 Page 1

ID:?7smMffSHcbvu6uGxGPN4oyih5x-NsRIapAYP1gKwnlZAISftGQCSZ5RXRpU0QzCq2yb7Da

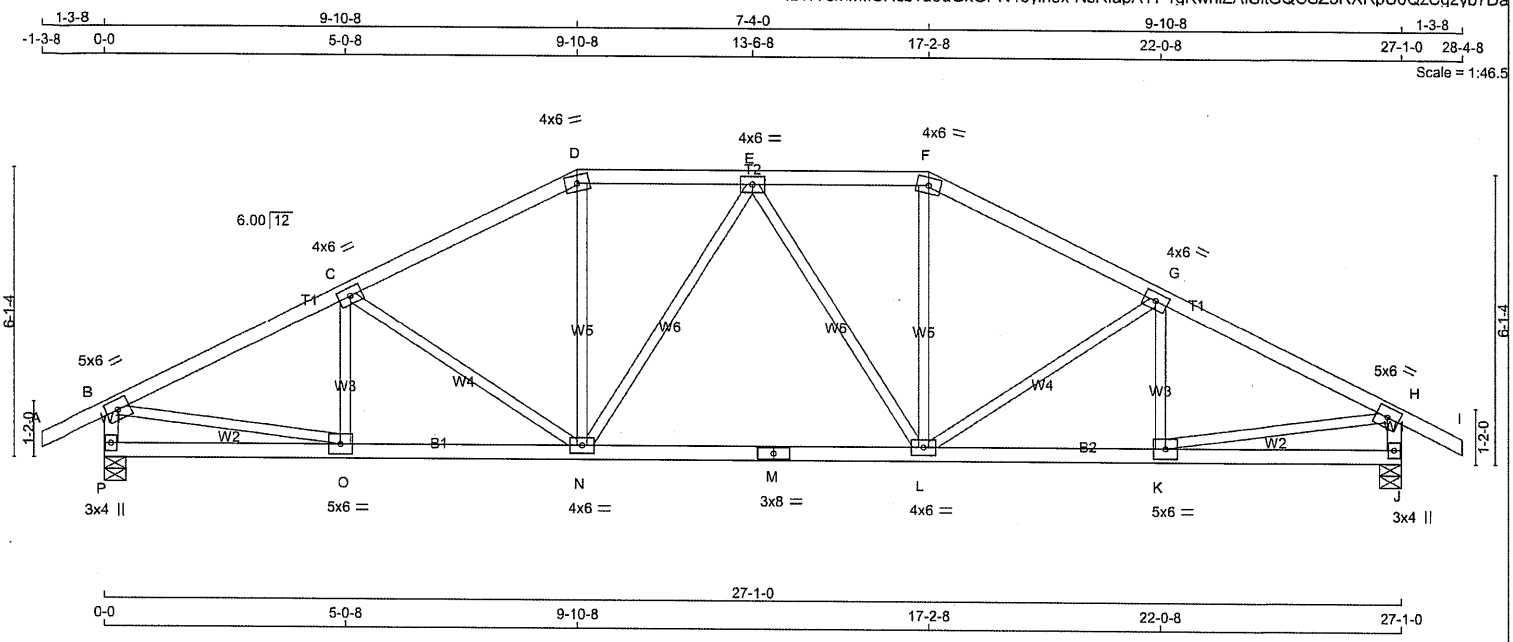

TOTAL WEIGHT = 111 lb

[M][F]

LUMBER

N. L. G. A. RULES

CHORDS	SIZE		LUMBER	DESCR.
A - D	2x4	DRY	No.2	SPF
D - F	2x4	DRY	No.2	SPF
F - I	2x4	DRY	No.2	SPF
P - B	2x4	DRY	No.2	SPF
J - H	2x4	DRY	No.2	SPF
P - M	2x4	DRY	No.2	SPF
M - J	2x4	DRY	No.2	SPF
ALL WEBS EXCEPT	2x3	DRY	No.2	SPF

DRY: SEASONED LUMBER.

PLATES (table is in Inches)

JT	TYPE	PLATES	W	LEN	Y	X
B	TMVW-t	MT20	5.0	6.0		
C, E, G						
C	TMWW-t	MT20	4.0	6.0		
D	TTW-m	MT20	4.0	6.0		
F	TTW-m	MT20	4.0	6.0		
H	TMVW-t	MT20	5.0	6.0		
J	BMV1+p	MT20	3.0	4.0		
K	BMWW-t	MT20	5.0	6.0		
L	BMWWW-t	MT20	4.0	6.0		
M	BS-t	MT20	3.0	8.0		
N	BMWWW-t	MT20	4.0	6.0		
O	BMWW-t	MT20	5.0	6.0		
P	BMV1+p	MT20	3.0	4.0		

NOTES- (1)

1) Lateral braces to be a minimum of 2X4 SPF #2.

DIMENSIONS, SUPPORTS AND LOADINGS SPECIFIED BY FABRICATOR TO BE VERIFIED BY BUILDING DESIGNER

BEARINGS

JT	FACTORED GROSS REACTION VERT	HORZ	MAXIMUM FACTORED GROSS REACTION DOWN	HORZ	UPLIFT	INPUT BRG IN-SX	REQRD BRG IN-SX
P	1618	0	1618	0	0	5-8	1-12
J	1618	0	1618	0	0	5-8	1-12

UNFACTORED REACTIONS

JT	1ST LCASE COMBINED	MAX./MIN. COMPONENT REACTIONS SNOW	LIVE	PERM.LIVE	WIND	DEAD	SOIL
P	1142	762 / 0	0 / 0	0 / 0	0 / 0	379 / 0	0 / 0
J	1142	762 / 0	0 / 0	0 / 0	0 / 0	379 / 0	0 / 0

BEARING MATERIAL TO BE SPF NO.2 OR BETTER AT JOINT(S) P, J

BRACING

TOP CHORD TO BE SHEATHED OR MAX. PURLIN SPACING = 4.38 FT.

MAX. UNBRACED BOTTOM CHORD LENGTH = 10.00 FT OR RIGID CEILING DIRECTLY APPLIED.

ALL PITCH BREAKS AND PERIMETER CORNER JOINTS MUST BE LATERALLY RESTRAINED.

LOADING

TOTAL LOAD CASES: (4)

CHORDS MEMB. FR-TO	MAX. FACTORED FORCE (LBS)	FACTORED VERT. LOAD (PLF) FROM	TO	LC1	MAX CSI (LC)	MAX. UNBRAC LENGTH	WEBS MEMB. FR-TO	MAX. FACTORED FORCE (LBS)	MAX CSI (LC)
A- B	0 / 28	-91.8	-91.8	0.12 (1)	10.00		O- C	-236 / 0	0.05 (1)
B- C	-2095 / 0	-91.8	-91.8	0.34 (1)	4.38		C- N	-331 / 0	0.21 (1)
C- D	-1837 / 0	-91.8	-91.8	0.32 (1)	4.64		N- D	0 / 510	0.11 (1)
D- E	-1630 / 0	-91.8	-91.8	0.17 (1)	5.03		N- E	-237 / 0	0.21 (1)
E- F	-1630 / 0	-91.8	-91.8	0.17 (1)	5.03		E- L	-237 / 0	0.21 (1)
F- G	-1837 / 0	-91.8	-91.8	0.32 (1)	4.64		L- F	0 / 510	0.11 (1)
G- H	-2095 / 0	-91.8	-91.8	0.34 (1)	4.38		L- G	-331 / 0	0.21 (1)
H- I	0 / 28	-91.8	-91.8	0.12 (1)	10.00		K- G	-236 / 0	0.05 (1)
P- B	-1574 / 0	0.0	0.0	0.16 (1)	6.58		B- O	0 / 1921	0.43 (1)
J- H	-1574 / 0	0.0	0.0	0.16 (1)	6.58		K- H	0 / 1921	0.43 (1)
P- O	0 / 0	-18.5	-18.5	0.10 (4)	10.00				
O- N	0 / 1894	-18.5	-18.5	0.39 (1)	10.00				
N- M	0 / 1753	-18.5	-18.5	0.37 (1)	10.00				
M- L	0 / 1753	-18.5	-18.5	0.37 (1)	10.00				
L- K	0 / 1894	-18.5	-18.5	0.39 (1)	10.00				
K- J	0 / 0	-18.5	-18.5	0.10 (4)	10.00				

DESIGN CRITERIA

SPECIFIED LOADS:

TOP	CH.	LL	=	25.6	PSF
		DL	=	6.0	PSF
BOT	CH.	LL	=	0.0	PSF
		DL	=	7.4	PSF
TOTAL	LOAD		=	39.0	PSF

SPACING = 24.0 IN. C/C

LOADING IN FLAT SECTION BASED ON A SLOPE OF 2.00/12 MINIMUM

THIS TRUSS IS DESIGNED FOR RESIDENTIAL OR SMALL BUILDING REQUIREMENTS OF PART 9, NBCC 2015

THIS DESIGN COMPLIES WITH:
- PART 9 OF BCBC 2018 , NBC-2019AE
- PART 9 OF OBC 2012 (2019 AMENDMENT)
- CSA 086-14
- TPIC 2014

(55 % OF 31.3 P.S.F. G.S.L. PLUS 8.4 P.S.F. RAIN LOAD) EQUALS 25.6 P.S.F. SPECIFIED ROOF LIVE LOAD

ALLOWABLE DEFL.(LL)= L/360 (0.90")
CALCULATED VERT. DEFL.(LL) = L/ 999 (0.08")
ALLOWABLE DEFL.(TL)= L/360 (0.90")
CALCULATED VERT. DEFL.(TL) = L/ 999 (0.18")

CSI: TC=0.34/1.00 (B-C:1) , BC=0.39/1.00 (N-O:1) , WB=0.43/1.00 (B-O:1) , SSI=0.20/1.00 (B-C:1)

DOL LUMBER=1.00 NAIL=1.00 LS BEND=1.10 COMP=1.10 SHEAR=1.10 TENS= 1.10

COMPANION LIVE LOAD FACTOR = 1.00

TRUSS PLATE MANUFACTURER IS NOT RESPONSIBLE FOR QUALITY CONTROL IN THE TRUSS MANUFACTURING PLANT .

NAIL VALUES

PLATE	GRIP(DRY) (PSI) MAX	MIN	SHEAR (PLI) MAX	MIN	SECTION (PLI) MAX	MIN
MT20	650	371	1747	788	1987	1873

PLATE PLACEMENT TOL. = 0.250 inches

PLATE ROTATION TOL. = 5.0 Deg.

JSI GRIP= 0.83 (K) (INPUT = 0.90)
JSI METAL= 0.63 (M) (INPUT = 0.95)

LICENSED PROFESSIONAL ENGINEER
9/25/23
C. M. HEYENS
100505065
PROVINCE OF ONTARIO

STRUCTURAL COMPONENT ONLY
DWG # TR23091786

CITY OF RICHMOND HILL
BUILDING DIVISION
05/01/2024
RECEIVED
Per: joshua.nabua

JOB NAME	TRUSS NAME	QUANTITY	PLY	JOB DESC.	DRWG NO.
434950	T4	1	1	GREENPARK HOMES TRUSS DESC.	

Tamarack Roof Truss, Burlington

Version 8.630 S Aug 30 2023 MiTek Industries, Inc. Fri Sep 22 10:15:54 2023 Page 1
ID:?7smMffSHcbvu6uGxGPN4oyih5x-s2?ho8AAAKoBXxKlj?zuPTzLezRrGsbdF4jlCUyb7DZ

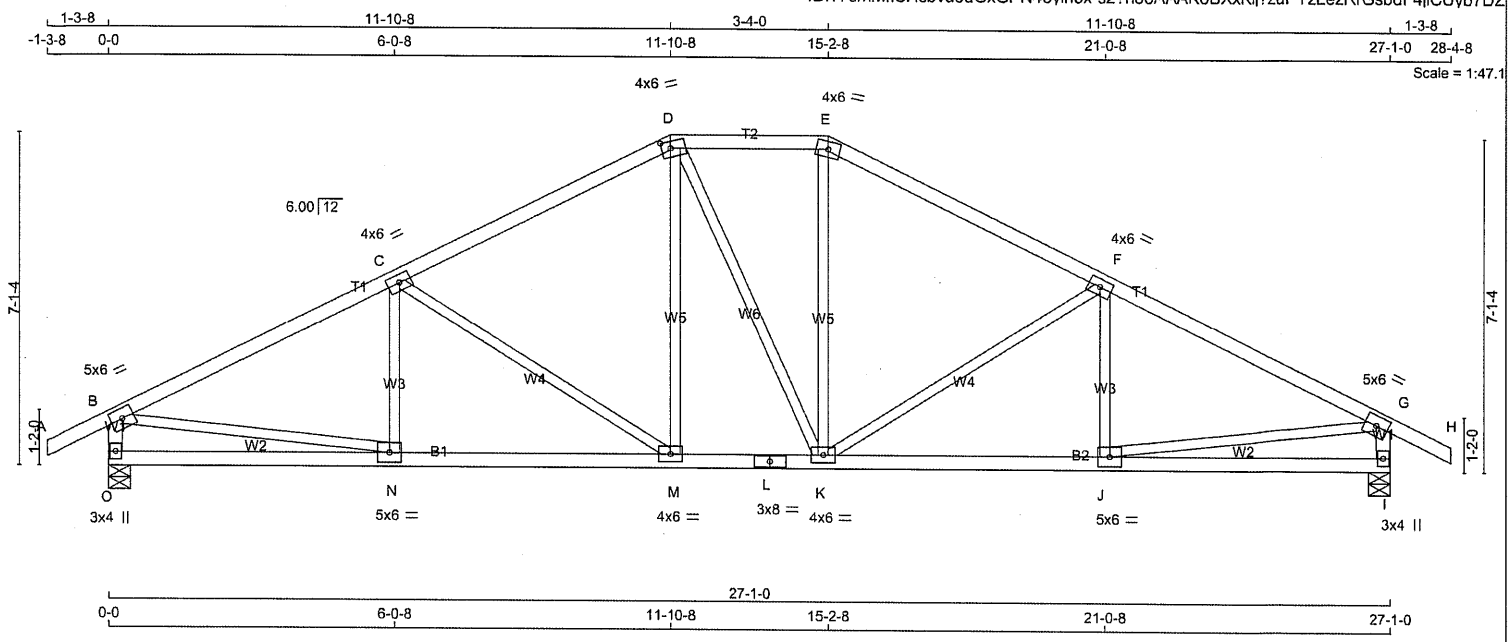

TOTAL WEIGHT = 113 lb
[M][F]

LUMBER
N. L. G. A. RULES

CHORDS	SIZE		LUMBER	DESCR.
A - D	2x4	DRY	No.2	SPF
D - E	2x4	DRY	No.2	SPF
E - H	2x4	DRY	No.2	SPF
O - B	2x4	DRY	No.2	SPF
I - G	2x4	DRY	No.2	SPF
O - L	2x4	DRY	No.2	SPF
L - I	2x4	DRY	No.2	SPF
ALL WEBS EXCEPT	2x3	DRY	No.2	SPF

DRY: SEASONED LUMBER.

PLATES (table is in Inches)

JT	TYPE	PLATES	W	LEN	Y	X
B	TMVW-t	MT20	5.0	6.0		
C	TMWW-t	MT20	4.0	6.0		
D	TTWW-m	MT20	4.0	6.0	1.75	2.25
E	TTW-m	MT20	4.0	6.0		
F	TMWW-t	MT20	4.0	6.0		
G	TMVW-t	MT20	5.0	6.0		
I	BMV1+p	MT20	3.0	4.0		
J	BMWW-t	MT20	5.0	6.0		
K	BMWWW-t	MT20	4.0	6.0		
L	BS-t	MT20	3.0	8.0		
M	BMWW-t	MT20	4.0	6.0		
N	BMWW-t	MT20	5.0	6.0		
O	BMV1+p	MT20	3.0	4.0		

NOTES- (1)
1) Lateral braces to be a minimum of 2X4 SPF #2.

DIMENSIONS, SUPPORTS AND LOADINGS SPECIFIED BY FABRICATOR TO BE VERIFIED BY BUILDING DESIGNER

BEARINGS

JT	FACTORED GROSS REACTION VERT	HORZ	MAXIMUM FACTORED GROSS REACTION DOWN	HORZ	UPLIFT	INPUT BRG IN-SX	REQRD BRG IN-SX
O	1618	0	1618	0	0	5-8	1-12
I	1618	0	1618	0	0	5-8	1-12

UNFACTORED REACTIONS

JT	1ST LCASE COMBINED	MAX./MIN. COMPONENT REACTIONS SNOW	LIVE	PERM.LIVE	WIND	DEAD	SOIL
O	1142	762 / 0	0 / 0	0 / 0	0 / 0	379 / 0	0 / 0
I	1142	762 / 0	0 / 0	0 / 0	0 / 0	379 / 0	0 / 0

BEARING MATERIAL TO BE SPF NO.2 OR BETTER AT JOINT(S) O, I

BRACING
TOP CHORD TO BE SHEATHED OR MAX. PURLIN SPACING = 4.16 FT.
MAX. UNBRACED BOTTOM CHORD LENGTH = 10.00 FT OR RIGID CEILING DIRECTLY APPLIED.

ALL PITCH BREAKS AND PERIMETER CORNER JOINTS MUST BE LATERALLY RESTRAINED.

LOADING
TOTAL LOAD CASES: (4)

CHORDS MEMB. FR-TO	MAX. FACTORED FORCE (LBS)	FACTORED VERT. LOAD (PLF) FROM	TO	LC1 CSI (LC)	MAX UNBRAC LENGTH	WEBS MEMB. FR-TO	MAX. FACTORED FORCE (LBS)	MAX CSI (LC)
A- B	0 / 28	-91.8	-91.8	0.12 (1)	10.00	N- C	-149 / 51	0.04 (1)
B- C	-2117 / 0	-91.8	-91.8	0.50 (1)	4.16	C- M	-546 / 0	0.53 (1)
C- D	-1665 / 0	-91.8	-91.8	0.46 (1)	4.63	M- D	0 / 376	0.08 (1)
D- E	-1469 / 0	-91.8	-91.8	0.15 (1)	5.26	D- K	0 / 3	0.00 (1)
E- F	-1667 / 0	-91.8	-91.8	0.46 (1)	4.63	K- E	0 / 379	0.09 (1)
F- G	-2117 / 0	-91.8	-91.8	0.50 (1)	4.16	K- F	-544 / 0	0.52 (1)
G- H	0 / 28	-91.8	-91.8	0.12 (1)	10.00	J- F	-151 / 50	0.04 (1)
O- B	-1570 / 0	0.0	0.0	0.16 (1)	6.58	B- N	0 / 1938	0.44 (1)
I- G	-1570 / 0	0.0	0.0	0.16 (1)	6.58	J- G	0 / 1938	0.44 (1)
O- N	0 / 0	-18.5	-18.5	0.16 (4)	10.00			
N- M	0 / 1919	-18.5	-18.5	0.38 (1)	10.00			
M- L	0 / 1468	-18.5	-18.5	0.29 (1)	10.00			
L- K	0 / 1468	-18.5	-18.5	0.29 (1)	10.00			
K- J	0 / 1919	-18.5	-18.5	0.38 (1)	10.00			
J- I	0 / 0	-18.5	-18.5	0.16 (4)	10.00			

DESIGN CRITERIA

SPECIFIED LOADS:

TOP CH.	LL	=	25.6	PSF
	DL	=	6.0	PSF
BOT CH.	LL	=	0.0	PSF
	DL	=	7.4	PSF
TOTAL LOAD		=	39.0	PSF

SPACING = 24.0 IN. C/C

LOADING IN FLAT SECTION BASED ON A SLOPE OF 2.00/12 MINIMUM

THIS TRUSS IS DESIGNED FOR RESIDENTIAL OR SMALL BUILDING REQUIREMENTS OF PART 9, NBCC 2015

THIS DESIGN COMPLIES WITH:
- PART 9 OF BCBC 2018 , NBC-2019AE
- PART 9 OF OBC 2012 (2019 AMENDMENT)
- CSA 086-14
- TPIC 2014

(55 % OF 31.3 P.S.F. G.S.L. PLUS 8.4 P.S.F. RAIN LOAD) EQUALS 25.6 P.S.F. SPECIFIED ROOF LIVE LOAD

ALLOWABLE DEFL.(LL)= L/360 (0.90")
CALCULATED VERT. DEFL.(LL) = L/ 999 (0.08")
ALLOWABLE DEFL.(TL)= L/360 (0.90")
CALCULATED VERT. DEFL.(TL) = L/ 999 (0.16")

CSI: TC=0.50/1.00 (B-C:1) , BC=0.38/1.00 (M-N:1) , WB=0.53/1.00 (C-M:1) , SSI=0.24/1.00 (F-G:1)

DOL LUMBER=1.00 NAIL=1.00 LS BEND=1.10 COMP=1.10 SHEAR=1.10 TENS= 1.10

COMPANION LIVE LOAD FACTOR = 1.00

TRUSS PLATE MANUFACTURER IS NOT RESPONSIBLE FOR QUALITY CONTROL IN THE TRUSS MANUFACTURING PLANT .

NAIL VALUES

PLATE	GRIP(DRY) (PSI) MAX	MIN	SHEAR (PLI) MAX	MIN	SECTION (PLI) MAX	MIN
MT20	650	371	1747	788	1987	1873

PLATE PLACEMENT TOL. = 0.250 inches

PLATE ROTATION TOL. = 5.0 Deg.

JSI GRIP= 0.83 (B) (INPUT = 0.90)
JSI METAL= 0.52 (B) (INPUT = 0.95)

LICENSED PROFESSIONAL ENGINEER
9/25/23
C. M. HEYENS
100505065
PROVINCE OF ONTARIO

STRUCTURAL COMPONENT ONLY
DWG # TR23091787

CITY OF RICHMOND HILL
BUILDING DIVISION
05/01/2024
RECEIVED
Per: joshua.nabua

JOB NAME	TRUSS NAME	QUANTITY	PLY	JOB DESC.	DRWG NO.
434950	T5	10	1	GREENPARK HOMES TRUSS DESC.	

Tamarack Roof Truss, Burlington

Version 8.630 S Aug 30 2023 MiTek Industries, Inc. Fri Sep 22 10:15:55 2023 Page 1
ID:?7smMffSHcbvu6uGxGPN4oyih5x-KEZ3?UBowex294vxHjV7yhWaSNmm?FZnTkSIkxyb7DY

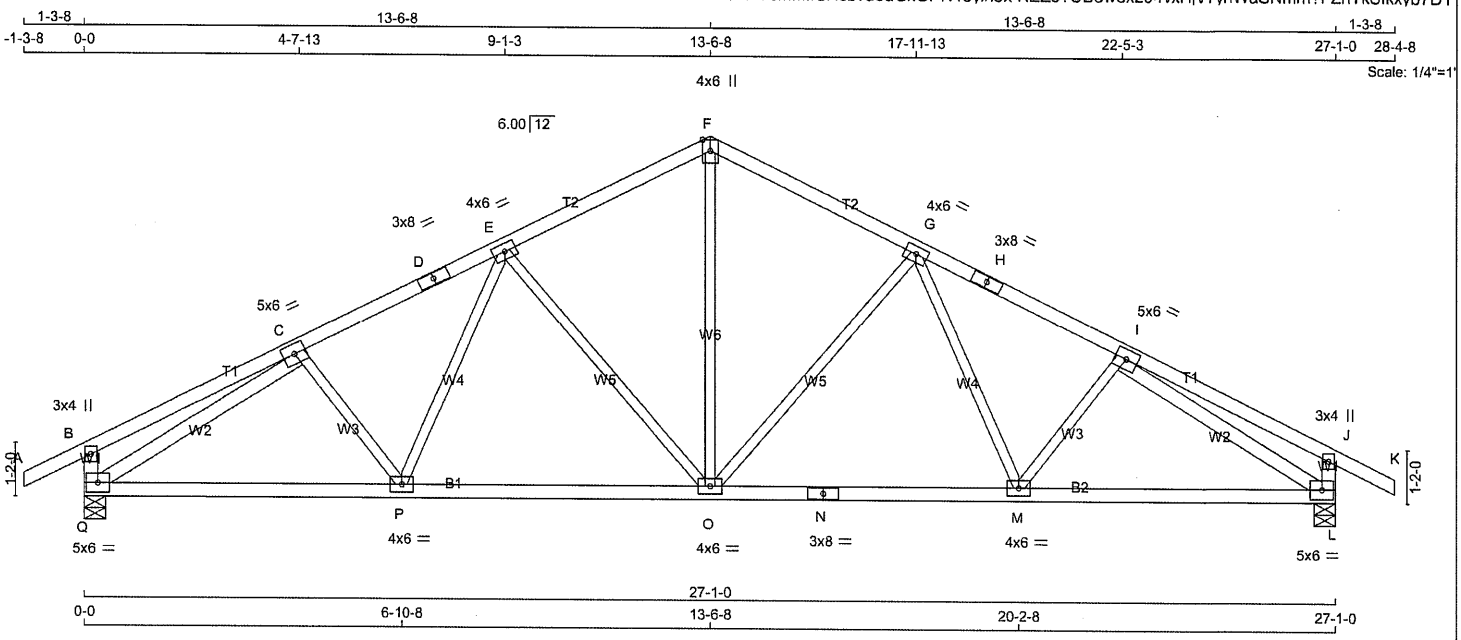

TOTAL WEIGHT = 10 X 114 = 1142 lb
[M][F]

LUMBER
N. L. G. A. RULES

CHORDS	SIZE		LUMBER	DESCR.
A - D	2x4	DRY	No.2	SPF
D - F	2x4	DRY	No.2	SPF
F - H	2x4	DRY	No.2	SPF
H - K	2x4	DRY	No.2	SPF
Q - B	2x4	DRY	No.2	SPF
L - J	2x4	DRY	No.2	SPF
Q - N	2x4	DRY	No.2	SPF
N - L	2x4	DRY	No.2	SPF
ALL WEBS EXCEPT	2x3	DRY	No.2	SPF
Q - C	2x4	DRY	No.2	SPF
I - L	2x4	DRY	No.2	SPF

DRY: SEASONED LUMBER.

PLATES (table is in inches)

JT	TYPE	PLATES	W	LEN	Y	X
B	TMV+p	MT20	3.0	4.0		
C	TMWW-t	MT20	5.0	6.0		
D	TS-t	MT20	3.0	8.0		
E	TMWW-t	MT20	4.0	6.0		
F	TTW+p	MT20	4.0	6.0	Edge	
G	TMWW-t	MT20	4.0	6.0		
H	TS-t	MT20	3.0	8.0		
I	TMWW-t	MT20	5.0	6.0		
J	TMV+p	MT20	3.0	4.0		
L	BMVW1-t	MT20	5.0	6.0		
M	BMWW-t	MT20	4.0	6.0		
N	BS-t	MT20	3.0	8.0		
O	BMWWW-t	MT20	4.0	6.0		
P	BMWW-t	MT20	4.0	6.0		
Q	BMVW1-t	MT20	5.0	6.0		

Edge - INDICATES REFERENCE CORNER OF PLATE TOUCHES EDGE OF CHORD.

NOTES- (1)
1) Lateral braces to be a minimum of 2X4 SPF #2.

LICENSED PROFESSIONAL ENGINEER
9/25/23
C. M. HEYENS
100505065
PROVINCE OF ONTARIO

STRUCTURAL COMPONENT ONLY
DWG # TR23091788

DIMENSIONS, SUPPORTS AND LOADINGS SPECIFIED BY FABRICATOR TO BE VERIFIED BY BUILDING DESIGNER

BEARINGS

JT	FACTORED GROSS REACTION VERT	HORZ	MAXIMUM FACTORED GROSS REACTION DOWN	HORZ	UPLIFT	INPUT BRG	REQRD BRG
Q	1618	0	1618	0	0	5-8	1-12
L	1618	0	1618	0	0	5-8	1-12

UNFACTORED REACTIONS

JT	1ST LCASE COMBINED	MAX./MIN. COMPONENT REACTIONS SNOW	LIVE	PERM.LIVE	WIND	DEAD	SOIL
Q	1142	762 / 0	0 / 0	0 / 0	0 / 0	379 / 0	0 / 0
L	1142	762 / 0	0 / 0	0 / 0	0 / 0	379 / 0	0 / 0

BEARING MATERIAL TO BE SPF NO.2 OR BETTER AT JOINT(S) Q, L

BRACING
TOP CHORD TO BE SHEATHED OR MAX. PURLIN SPACING = 4.58 FT.
MAX. UNBRACED BOTTOM CHORD LENGTH = 10.00 FT OR RIGID CEILING DIRECTLY APPLIED.

ALL PITCH BREAKS AND PERIMETER CORNER JOINTS MUST BE LATERALLY RESTRAINED.

LOADING
TOTAL LOAD CASES: (4)

CHORDS MEMB. FR-TO	MAX. FACTORED FORCE (LBS)	FACTORED VERT. LOAD (PLF) FROM	TO	LC1 MAX CSI (LC)	MAX. UNBRAC LENGTH	WEBS MEMB. FR-TO	MAX. FACTORED FORCE (LBS)	MAX CSI (LC)
A- B	0 / 28	-91.8	-91.8	0.12 (1)	10.00	O- F	0 / 1004	0.23 (1)
B- C	0 / 17	-91.8	-91.8	0.23 (1)	10.00	O- G	-572 / 0	0.53 (1)
C- D	-1995 / 0	-91.8	-91.8	0.24 (1)	4.58	G- M	0 / 232	0.05 (1)
D- E	-1995 / 0	-91.8	-91.8	0.24 (1)	4.58	M- I	-96 / 30	0.03 (1)
E- F	-1508 / 0	-91.8	-91.8	0.23 (1)	5.13	E- O	-572 / 0	0.53 (1)
F- G	-1508 / 0	-91.8	-91.8	0.23 (1)	5.13	P- E	0 / 232	0.05 (1)
G- H	-1995 / 0	-91.8	-91.8	0.24 (1)	4.58	C- P	-96 / 30	0.03 (1)
H- I	-1995 / 0	-91.8	-91.8	0.24 (1)	4.58	Q- C	-2237 / 0	0.80 (1)
I- J	0 / 17	-91.8	-91.8	0.23 (1)	10.00	I- L	-2237 / 0	0.80 (1)
J- K	0 / 28	-91.8	-91.8	0.12 (1)	10.00			
Q- B	-296 / 0	0.0	0.0	0.03 (1)	7.81			
L- J	-296 / 0	0.0	0.0	0.03 (1)	7.81			
Q- P	0 / 1842	-18.5	-18.5	0.40 (1)	10.00			
P- O	0 / 1697	-18.5	-18.5	0.37 (1)	10.00			
O- N	0 / 1697	-18.5	-18.5	0.37 (1)	10.00			
N- M	0 / 1697	-18.5	-18.5	0.37 (1)	10.00			
M- L	0 / 1842	-18.5	-18.5	0.40 (1)	10.00			

DESIGN CRITERIA

SPECIFIED LOADS:

TOP	CH.	LL	=	25.6	PSF
		DL	=	6.0	PSF
BOT	CH.	LL	=	0.0	PSF
		DL	=	7.4	PSF
TOTAL	LOAD		=	39.0	PSF

SPACING = 24.0 IN. C/C

THIS TRUSS IS DESIGNED FOR RESIDENTIAL OR SMALL BUILDING REQUIREMENTS OF PART 9, NBCC 2015

THIS DESIGN COMPLIES WITH:
- PART 9 OF BCBC 2018 , NBC-2019AE
- PART 9 OF OBC 2012 (2019 AMENDMENT)
- CSA 086-14
- TPIC 2014

(55 % OF 31.3 P.S.F. G.S.L. PLUS 8.4 P.S.F. RAIN LOAD) EQUALS 25.6 P.S.F. SPECIFIED ROOF LIVE LOAD

ALLOWABLE DEFL.(LL)= L/360 (0.90")
CALCULATED VERT. DEFL.(LL) = L/ 999 (0.08")
ALLOWABLE DEFL.(TL)= L/360 (0.90")
CALCULATED VERT. DEFL.(TL) = L/ 999 (0.16")

CSI: TC=0.24/1.00 (G-I:1) , BC=0.40/1.00 (P-Q:1) , WB=0.80/1.00 (C-Q:1) , SSI=0.17/1.00 (B-C:1)

DOL LUMBER=1.00 NAIL=1.00 LS BEND=1.10 COMP=1.10 SHEAR=1.10 TENS= 1.10

COMPANION LIVE LOAD FACTOR = 1.00

AUTOSOLVE HEELS OFF

TRUSS PLATE MANUFACTURER IS NOT RESPONSIBLE FOR QUALITY CONTROL IN THE TRUSS MANUFACTURING PLANT .

NAIL VALUES

PLATE	GRIP(DRY) (PSI) MAX	MIN	SHEAR (PLI) MAX	MIN	SECTION (PLI) MAX	MIN
MT20	650	371	1747	788	1987	1873

PLATE PLACEMENT TOL. = 0.250 inches

PLATE ROTATION TOL. = 5.0 Deg.

JSI GRIP= 0.85 (O) (INPUT = 0.90)
JSI METAL= 0.55 (N) (INPUT = 0.95)

CITY OF RICHMOND HILL
BUILDING DIVISION
05/01/2024
RECEIVED
Per: joshua.nabua

JOB NAME	TRUSS NAME	QUANTITY	PLY	JOB DESC.	DRWG NO.
434950	T8	1	2	GREENPARK HOMES TRUSS DESC.	

Tamarack Roof Truss, Burlington

Version 8.630 S Aug 30 2023 MiTek Industries, Inc. Fri Sep 22 10:15:56 2023 Page 1

ID:?7smMffSHcbvu6uGxGPN4oyih5x-oR7RCqCQhy3vnEU8rQ0MUu2kJn3EkpXwiOCsHNyb7DX

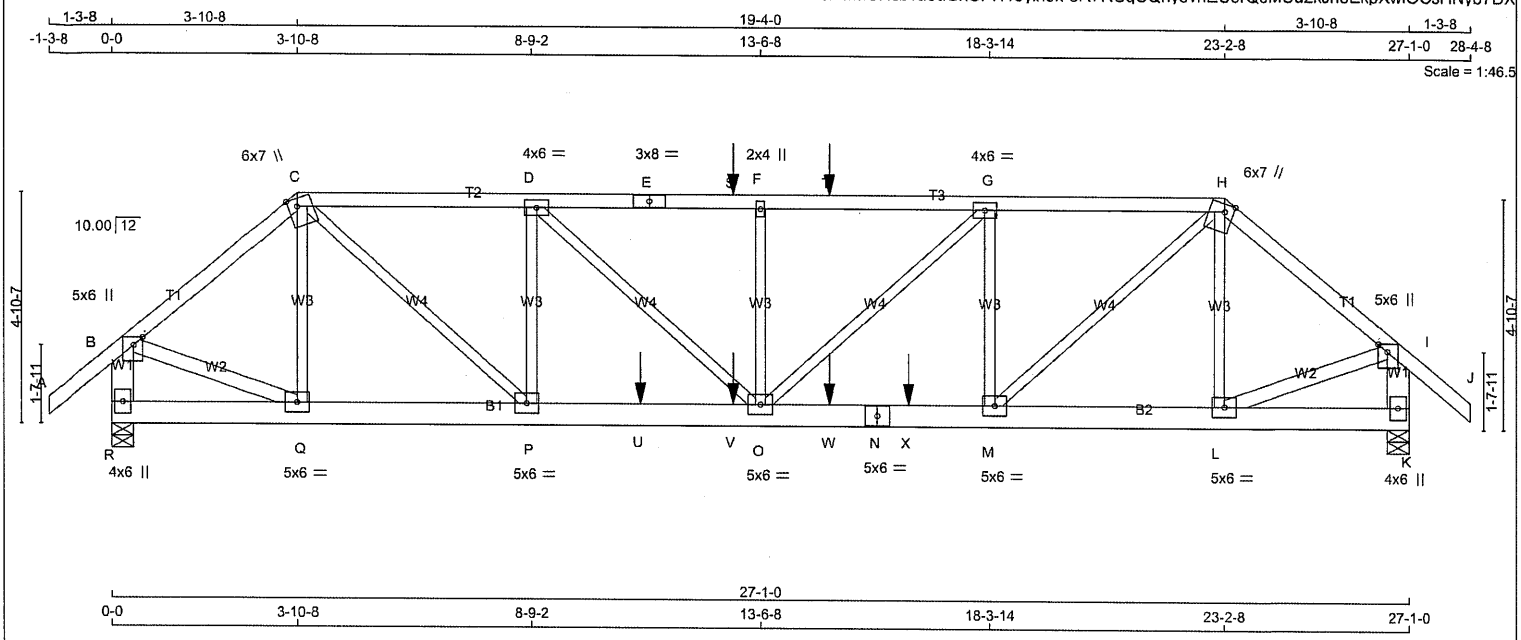

TOTAL WEIGHT = 2 X 136 = 272 lb

[M]

LUMBER

N. L. G. A. RULES

CHORDS	SIZE		LUMBER	DESCR.
A - C	2x4	DRY	No.2	SPF
C - E	2x4	DRY	No.2	SPF
E - H	2x4	DRY	No.2	SPF
H - J	2x4	DRY	No.2	SPF
R - B	2x6	DRY	No.2	SPF
K - I	2x6	DRY	No.2	SPF
R - N	2x6	DRY	No.2	SPF
N - K	2x6	DRY	No.2	SPF
ALL WEBS EXCEPT	2x3	DRY	No.2	SPF
B - Q	2x4	DRY	No.2	SPF
L - I	2x4	DRY	No.2	SPF

DRY: SEASONED LUMBER.

DESIGN CONSISTS OF 2 TRUSSES BUILT SEPARATELY THEN FASTENED TOGETHER AS FOLLOWS:

CHORDS	#ROWS	SURFACE SPACING (IN)	LOAD(PLF)
TOP CHORDS : (0.122"X3") SPIRAL NAILS			
A- C	1	12	TOP
C- E	1	12	TOP
E- H	1	12	SIDE(0.0)
H- J	1	12	TOP
R- B	2	12	TOP
K- I	2	12	TOP
BOTTOM CHORDS : (0.122"X3") SPIRAL NAILS			
R- N	2	12	SIDE(0.0)
N- K	2	12	SIDE(0.0)
WEBS : (0.122"X3") SPIRAL NAILS			
2x3	1	6	
2x4	1	6	

NAILS TO BE DRIVEN FROM ONE SIDE ONLY.

GIRDER NAILING ASSUMES NAILED HANGERS ARE FASTENED WITH MIN. 3-0 INCH NAILS.

TOP - COMPONENTS ARE LOADED FROM THE TOP AND MUST BE PLACED ON TOP EDGE OF ALL PLIES FOR THE LOAD TO BE TRANSFERRED TO EACH PLY.

LICENSED PROFESSIONAL ENGINEER
9/25/23
C. M. HEYENS
100505065
PROVINCE OF ONTARIO

STRUCTURAL COMPONENT ONLY
DWG # TR23091789

DIMENSIONS, SUPPORTS AND LOADINGS SPECIFIED BY FABRICATOR TO BE VERIFIED BY BUILDING DESIGNER

BEARINGS

JT	FACTORED GROSS REACTION VERT	HORZ	MAXIMUM FACTORED GROSS REACTION DOWN	HORZ	UPLIFT	INPUT BRG IN-SX	REQRD BRG IN-SX
R	2684	0	2684	0	0	5-8	1-8
K	2750	0	2750	0	0	5-8	1-8

UNFACTORED REACTIONS

JT	1ST LCASE COMBINED	MAX./MIN. COMPONENT REACTIONS SNOW	LIVE	PERM.LIVE	WIND	DEAD	SOIL
R	1890	1288 / 0	0 / 0	0 / 0	0 / 0	601 / 0	0 / 0
K	1936	1321 / 0	0 / 0	0 / 0	0 / 0	615 / 0	0 / 0

BEARING MATERIAL TO BE SPF NO.2 OR BETTER AT JOINT(S) R, K

BRACING

TOP CHORD TO BE SHEATHED OR MAX. PURLIN SPACING = 4.05 FT.
MAX. UNBRACED BOTTOM CHORD LENGTH = 10.00 FT OR RIGID CEILING DIRECTLY APPLIED.

ALL PITCH BREAKS AND PERIMETER CORNER JOINTS MUST BE LATERALLY RESTRAINED.

LOADING

TOTAL LOAD CASES: (4)

CHORDS MEMB. FR-TO	MAX. FACTORED FORCE (LBS)	FACTORED VERT. LOAD (PLF) FROM	TO	LC1	MAX CSI (LC)	MAX. UNBRAC LENGTH	WEBS MEMB. FR-TO	MAX. FACTORED FORCE (LBS)	MAX CSI (LC)
A- B	0 / 41	-91.8	-91.8	0.07 (1)	10.00		Q- C	-603 / 0	0.10 (1)
B- C	-2666 / 0	-91.8	-91.8	0.17 (1)	5.41		C- P	0 / 2871	0.36 (1)
C- D	-4146 / 0	-91.8	-91.8	0.25 (1)	4.47		P- D	-1357 / 0	0.23 (1)
D- E	-5072 / 0	-91.8	-91.8	0.29 (1)	4.07		D- O	0 / 1271	0.16 (1)
E- S	-5072 / 0	-91.8	-91.8	0.29 (1)	4.07		O- F	-555 / 0	0.09 (1)
S- F	-5072 / 0	-91.8	-91.8	0.29 (1)	4.07		O- G	0 / 1080	0.13 (1)
F- T	-5072 / 0	-91.8	-91.8	0.30 (1)	4.05		M- G	-1248 / 0	0.21 (1)
T- G	-5072 / 0	-91.8	-91.8	0.30 (1)	4.05		M- H	0 / 2983	0.37 (1)
G- H	-4285 / 0	-91.8	-91.8	0.27 (1)	4.39		L- H	-629 / 0	0.11 (1)
H- I	-2740 / 0	-91.8	-91.8	0.17 (1)	5.35		B- Q	0 / 2136	0.19 (1)
I- J	0 / 41	-91.8	-91.8	0.07 (1)	10.00		L- I	0 / 2196	0.19 (1)
R- B	-2645 / 0	0.0	0.0	0.10 (1)	7.81				
K- I	-2710 / 0	0.0	0.0	0.10 (1)	7.81				
R- Q	0 / 0	-18.5	-18.5	0.02 (4)	10.00				
Q- P	0 / 2028	-18.5	-18.5	0.23 (1)	10.00				
P- U	0 / 4146	-18.5	-18.5	0.56 (1)	10.00				
U- V	0 / 4146	-18.5	-18.5	0.56 (1)	10.00				
V- O	0 / 4146	-18.5	-18.5	0.56 (1)	10.00				
O- W	0 / 4285	-18.5	-18.5	0.58 (1)	10.00				
W- N	0 / 4285	-18.5	-18.5	0.58 (1)	10.00				
N- X	0 / 4285	-18.5	-18.5	0.58 (1)	10.00				
X- M	0 / 4285	-18.5	-18.5	0.58 (1)	10.00				
M- L	0 / 2084	-18.5	-18.5	0.24 (1)	10.00				
L- K	0 / 0	-18.5	-18.5	0.02 (4)	10.00				

SPECIFIED CONCENTRATED LOADS (LBS)

JT	LOC.	LC1	MAX-	MAX+	FACE	DIR.	TYPE	HEEL	CONN.
S	12-11-12	-59	-59	---	BACK	VERT	TOTAL	---	C1
T	14-11-12	-59	-59	---	BACK	VERT	TOTAL	---	C1
U	11-0-8	-668	-668	---	BACK	VERT	TOTAL	---	C1
V	12-11-12	-14	-14	---	BACK	VERT	TOTAL	---	C1
W	14-11-12	-14	-14	---	BACK	VERT	TOTAL	---	C1
X	16-7-8	-725	-725	---	BACK	VERT	TOTAL	---	C1

CONNECTION REQUIREMENTS

1) **C1:** A SUITABLE HANGER/MECHANICAL CONNECTION IS REQUIRED.

DESIGN CRITERIA

SPECIFIED LOADS:

TOP CH.	LL	=	25.6	PSF
	DL	=	6.0	PSF
BOT CH.	LL	=	0.0	PSF
	DL	=	7.4	PSF
TOTAL LOAD		=	39.0	PSF

SPACING = 24.0 IN. C/C

LOADING IN FLAT SECTION BASED ON A SLOPE OF 2.00/12 MINIMUM

THIS TRUSS IS DESIGNED FOR RESIDENTIAL OR SMALL BUILDING REQUIREMENTS OF PART 9, NBCC 2015

THIS DESIGN COMPLIES WITH:
- PART 9 OF BCBC 2018 , NBC-2019AE
- PART 9 OF OBC 2012 (2019 AMENDMENT)
- CSA 086-14
- TPIC 2014

(55 % OF 31.3 P.S.F. G.S.L. PLUS 8.4 P.S.F. RAIN LOAD) EQUALS 25.6 P.S.F. SPECIFIED ROOF LIVE LOAD

ALLOWABLE DEFL.(LL)= L/360 (0.90")
CALCULATED VERT. DEFL.(LL) = L/ 999 (0.10")
ALLOWABLE DEFL.(TL)= L/360 (0.90")
CALCULATED VERT. DEFL.(TL) = L/ 999 (0.18")

CSI: TC=0.30/1.00 (F-G:1) , BC=0.58/1.00 (M-O:1) , WB=0.37/1.00 (H-M:1) , SSI=0.22/1.00 (M-O:1)

DOL LUMBER=1.00 NAIL=1.00 LS BEND=1.00 COMP=1.00 SHEAR=1.00 TENS= 1.00

COMPANION LIVE LOAD FACTOR = 1.00

AUTOSOLVE HEELS OFF

TRUSS PLATE MANUFACTURER IS NOT RESPONSIBLE FOR QUALITY CONTROL IN THE TRUSS MANUFACTURING PLANT .

NAIL VALUES

PLATE	GRIP(DRY) (PSI) MAX	MIN	SHEAR (PLI) MAX	MIN	SECTION (PLI) MAX	MIN
MT20	650	371	1747	788	1987	1873

PLATE PLACEMENT TOL. = 0.250 inches

PLATE ROTATION TOL. = 5.0 Deg.

JSI GRIP= 0.90 (C) (INPUT = 0.90)
JSI METAL= 0.71 (N) (INPUT = 0.95)

CITY OF RICHMOND HILL
BUILDING DIVISION
05/01/2024
RECEIVED
Per: joshua.nabua

CONTINUED ON PAGE 2

JOB NAME	TRUSS NAME	QUANTITY	PLY	JOB DESC. GREENPARK HOMES	DRWG NO.
434950	T8	1	2	TRUSS DESC.	

Tamarack Roof Truss, Burlington

Version 8.630 S Aug 30 2023 MiTek Industries, Inc. Fri Sep 22 10:15:56 2023 Page 2

ID:?7smMffSHcbvu6uGxGPN4oyih5x-oR7RCqCQhy3vnEU8rQ0MUu2kJn3EkpXwiOCsHNyb7DX

PLATES (table is in inches)

JT	TYPE	PLATES	W	LEN	Y	X
B	TMVW+p	MT20	5.0	6.0	2.00	2.25
C	TTWW+m	MT20	6.0	7.0	2.00	2.25
D	TMWW-t	MT20	4.0	6.0		
E	TS-t	MT20	3.0	8.0		
F	TMW+w	MT20	2.0	4.0		
G	TMWW-t	MT20	4.0	6.0		
H	TTWW+m	MT20	6.0	7.0	2.00	2.25
I	TMVW+p	MT20	5.0	6.0	2.00	2.25
K	BMV1+p	MT20	4.0	6.0		
L, M, P, Q						
L	BMWW-t	MT20	5.0	6.0		
N	BS-t	MT20	5.0	6.0		
O	BMWWW-t	MT20	5.0	6.0		
R	BMV1+p	MT20	4.0	6.0		

NOTES- (1)

1) Lateral braces to be a minimum of 2X4 SPF #2.

LICENSED PROFESSIONAL ENGINEER
9/25/23
C. M. HEYENS
100505065
PROVINCE OF ONTARIO

STRUCTURAL COMPONENT ONLY
DWG # TR23091789

CITY OF RICHMOND HILL
BUILDING DIVISION
05/01/2024
RECEIVED
Per: joshua.nabua

JOB NAME	TRUSS NAME	QUANTITY	PLY	JOB DESC.	DRWG NO.
434950	T9	2	1	GREENPARK HOMES TRUSS DESC.	

Tamarack Roof Truss, Burlington

Version 8.630 S Aug 30 2023 MiTek Industries, Inc. Fri Sep 22 10:15:57 2023 Page 1

ID:?7smMffSHcbvu6uGxGPN4oyih5x-GdhpQAD2SFBmOO3KP8Xb16bpoAUlTG24x2xPppyb7DW

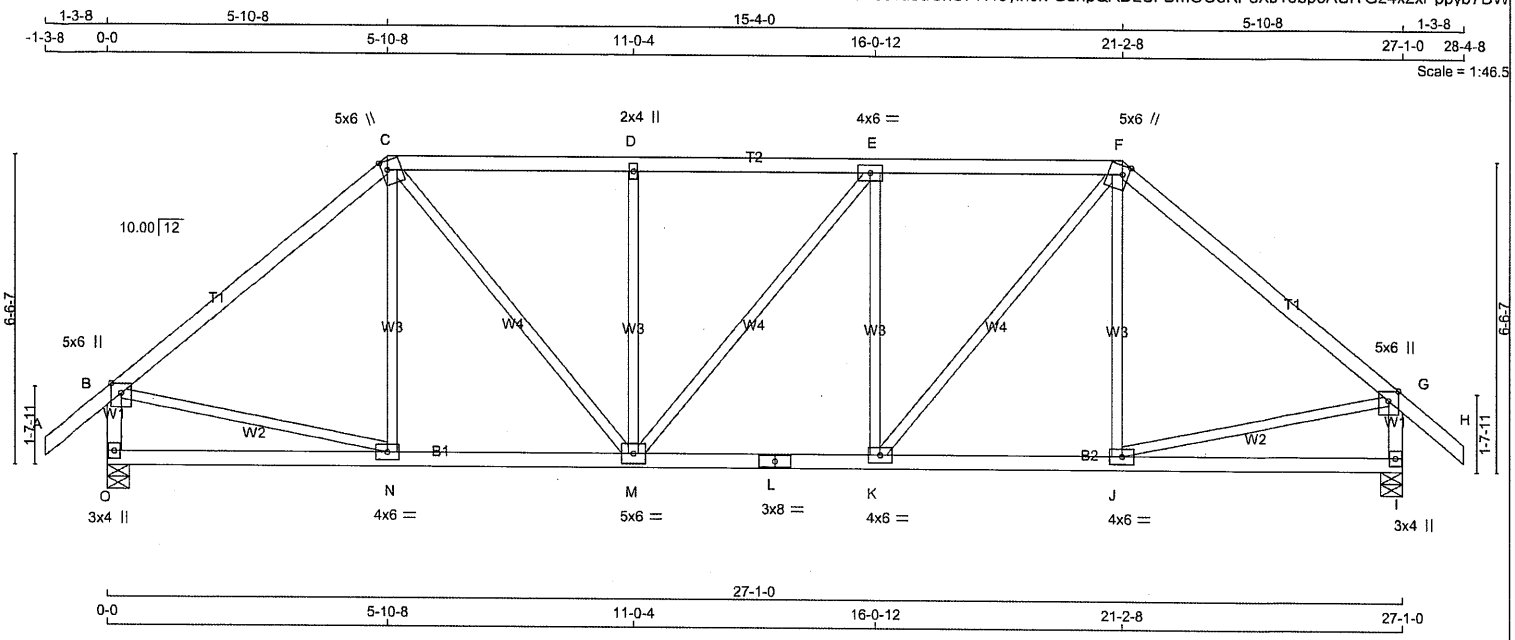

TOTAL WEIGHT = 2 X 120 = 241 lb [M]

LUMBER

N. L. G. A. RULES

CHORDS	SIZE		LUMBER	DESCR.
A - C	2x4	DRY	No.2	SPF
C - F	2x4	DRY	No.2	SPF
F - H	2x4	DRY	No.2	SPF
O - B	2x4	DRY	No.2	SPF
I - G	2x4	DRY	No.2	SPF
O - L	2x4	DRY	No.2	SPF
L - I	2x4	DRY	No.2	SPF
ALL WEBS EXCEPT	2x3	DRY	No.2	SPF

DRY: SEASONED LUMBER.

PLATES (table is in inches)

JT	TYPE	PLATES	W	LEN	Y	X
B	TMVW+p	MT20	5.0	6.0	Edge	
C	TTWW+m	MT20	5.0	6.0	2.25	1.50
D	TMW+w	MT20	2.0	4.0		
E	TMWW-t	MT20	4.0	6.0		
F	TTWW+m	MT20	5.0	6.0	2.25	1.50
G	TMVW+p	MT20	5.0	6.0	Edge	
I	BMV1+p	MT20	3.0	4.0		
J, K, N						
J	BMWW-t	MT20	4.0	6.0		
L	BS-t	MT20	3.0	8.0		
M	BMWWW-t	MT20	5.0	6.0		
O	BMV1+p	MT20	3.0	4.0		

Edge - INDICATES REFERENCE CORNER OF PLATE TOUCHES EDGE OF CHORD.

NOTES- (1)

1) Lateral braces to be a minimum of 2X4 SPF #2.

DIMENSIONS, SUPPORTS AND LOADINGS SPECIFIED BY FABRICATOR TO BE VERIFIED BY BUILDING DESIGNER

BEARINGS

JT	FACTORED GROSS REACTION VERT	HORZ	MAXIMUM FACTORED GROSS REACTION DOWN	HORZ	UPLIFT	INPUT BRG IN-SX	REQRD BRG IN-SX
O	1620	0	1620	0	0	5-8	1-12
I	1620	0	1620	0	0	5-8	1-12

UNFACTORED REACTIONS

JT	1ST LCASE COMBINED	MAX./MIN. COMPONENT REACTIONS SNOW	LIVE	PERM.LIVE	WIND	DEAD	SOIL
O	1143	764 / 0	0 / 0	0 / 0	0 / 0	380 / 0	0 / 0
I	1143	764 / 0	0 / 0	0 / 0	0 / 0	380 / 0	0 / 0

BEARING MATERIAL TO BE SPF NO.2 OR BETTER AT JOINT(S) O, I

BRACING

TOP CHORD TO BE SHEATHED OR MAX. PURLIN SPACING = 4.53 FT.

MAX. UNBRACED BOTTOM CHORD LENGTH = 10.00 FT OR RIGID CEILING DIRECTLY APPLIED.

ALL PITCH BREAKS AND PERIMETER CORNER JOINTS MUST BE LATERALLY RESTRAINED.

LOADING

TOTAL LOAD CASES: (4)

CHORDS

MEMB. FR-TO	MAX. FACTORED FORCE (LBS)	FACTORED VERT. LOAD (PLF) FROM	TO	LC1 CSI (LC)	MAX UNBRAC LENGTH
A- B	0 / 41	-91.8	-91.8	0.13 (1)	10.00
B- C	-1456 / 0	-91.8	-91.8	0.70 (1)	4.53
C- D	-1603 / 0	-91.8	-91.8	0.37 (1)	4.80
D- E	-1603 / 0	-91.8	-91.8	0.38 (1)	4.79
E- F	-1604 / 0	-91.8	-91.8	0.38 (1)	4.79
F- G	-1456 / 0	-91.8	-91.8	0.70 (1)	4.53
G- H	0 / 41	-91.8	-91.8	0.13 (1)	10.00
O- B	-1575 / 0	0.0	0.0	0.17 (1)	6.58
I- G	-1575 / 0	0.0	0.0	0.17 (1)	6.58
O- N	0 / 0	-18.5	-18.5	0.15 (4)	10.00
N- M	0 / 1115	-18.5	-18.5	0.26 (1)	10.00
M- L	0 / 1604	-18.5	-18.5	0.30 (1)	10.00
L- K	0 / 1604	-18.5	-18.5	0.30 (1)	10.00
K- J	0 / 1114	-18.5	-18.5	0.26 (1)	10.00
J- I	0 / 0	-18.5	-18.5	0.15 (4)	10.00

WEBS

MEMB. FR-TO	MAX. FACTORED FORCE (LBS)	MAX CSI (LC)
N- C	-124 / 48	0.09 (1)
C- M	0 / 766	0.17 (1)
M- D	-504 / 0	0.35 (1)
M- E	-3 / 0	0.00 (1)
K- E	-504 / 0	0.35 (1)
K- F	0 / 769	0.17 (1)
J- F	-125 / 48	0.09 (1)
B- N	0 / 1143	0.26 (1)
J- G	0 / 1143	0.26 (1)

DESIGN CRITERIA

SPECIFIED LOADS:

TOP CH.	LL	=	25.6	PSF
	DL	=	6.0	PSF
BOT CH.	LL	=	0.0	PSF
	DL	=	7.4	PSF
TOTAL LOAD		=	39.0	PSF

SPACING = 24.0 IN. C/C

LOADING IN FLAT SECTION BASED ON A SLOPE OF 2.00/12 MINIMUM

THIS TRUSS IS DESIGNED FOR RESIDENTIAL OR SMALL BUILDING REQUIREMENTS OF PART 9, NBCC 2015

THIS DESIGN COMPLIES WITH:
- PART 9 OF BCBC 2018 , NBC-2019AE
- PART 9 OF OBC 2012 (2019 AMENDMENT)
- CSA 086-14
- TPIC 2014

(55 % OF 31.3 P.S.F. G.S.L. PLUS 8.4 P.S.F. RAIN LOAD) EQUALS 25.6 P.S.F. SPECIFIED ROOF LIVE LOAD

ALLOWABLE DEFL.(LL)= L/360 (0.90")
CALCULATED VERT. DEFL.(LL) = L/ 999 (0.06")
ALLOWABLE DEFL.(TL)= L/360 (0.90")
CALCULATED VERT. DEFL.(TL) = L/ 999 (0.12")

CSI: TC=0.70/1.00 (B-C:1) , BC=0.30/1.00 (K-M:1) , WB=0.35/1.00 (E-K:1) , SSI=0.22/1.00 (E-F:1)

DOL LUMBER=1.00 NAIL=1.00 LS BEND=1.10 COMP=1.10 SHEAR=1.10 TENS= 1.10

COMPANION LIVE LOAD FACTOR = 1.00

TRUSS PLATE MANUFACTURER IS NOT RESPONSIBLE FOR QUALITY CONTROL IN THE TRUSS MANUFACTURING PLANT .

NAIL VALUES

PLATE	GRIP(DRY) (PSI) MAX	MIN	SHEAR (PLI) MAX	MIN	SECTION (PLI) MAX	MIN
MT20	650	371	1747	788	1987	1873

PLATE PLACEMENT TOL. = 0.250 inches

PLATE ROTATION TOL. = 5.0 Deg.

JSI GRIP= 0.77 (B) (INPUT = 0.90)
JSI METAL= 0.57 (B) (INPUT = 0.95)

LICENSED PROFESSIONAL ENGINEER
9/25/23
C. M. HEYENS
100505065
PROVINCE OF ONTARIO

STRUCTURAL COMPONENT ONLY
DWG # TR23091790

CITY OF RICHMOND HILL
BUILDING DIVISION
05/01/2024
RECEIVED
Per: joshua.nabua

JOB NAME	TRUSS NAME	QUANTITY	PLY	JOB DESC.	DRWG NO.
434950	T10	2	1	GREENPARK HOMES TRUSS DESC.	

Tamarack Roof Truss, Burlington

Version 8.630 S Aug 30 2023 MiTek Industries, Inc. Fri Sep 22 10:15:58 2023 Page 1
ID:?7smMffSHcbvu6uGxGPN4oyih5x-kpFBdWEhDZJd0YeWyr2qaJ82DapCCboDAihzLFyb7DV

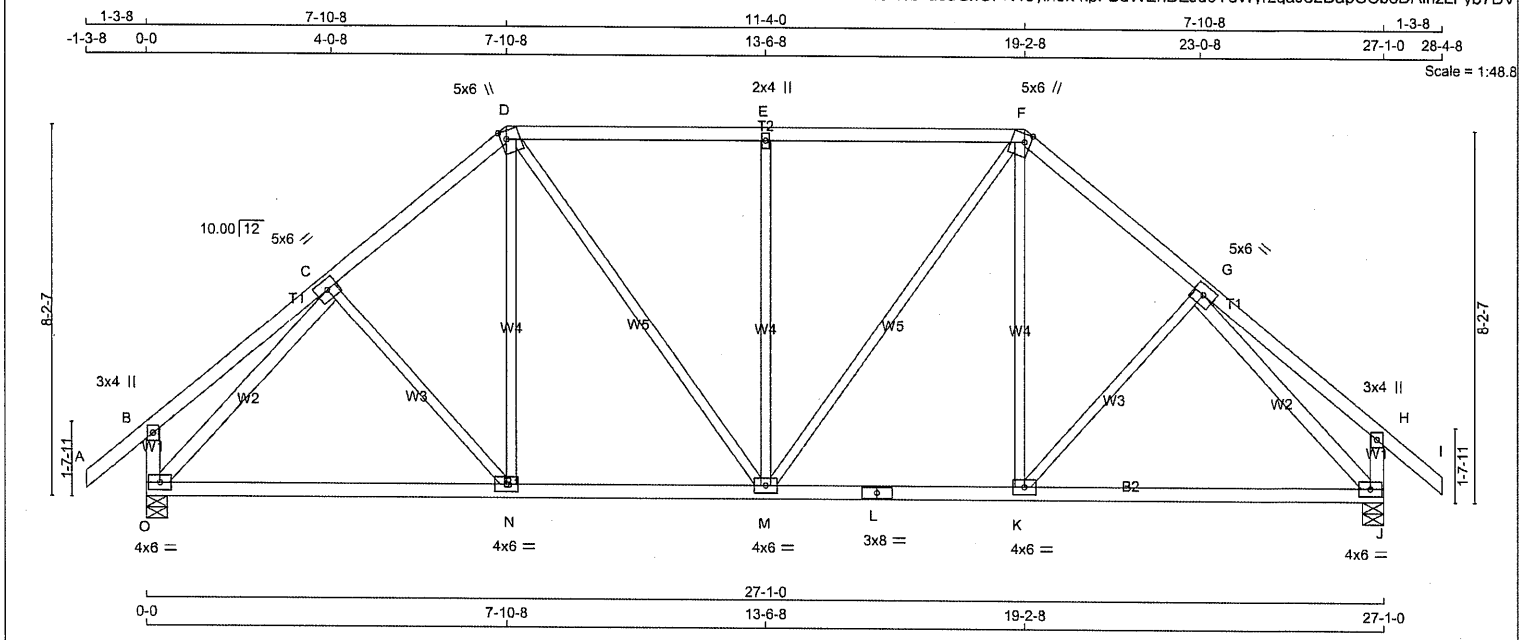

TOTAL WEIGHT = 2 X 130 = 261 lb

[M][F]

LUMBER

N. L. G. A. RULES

CHORDS	SIZE		LUMBER	DESCR.
A - D	2x4	DRY	No.2	SPF
D - F	2x4	DRY	No.2	SPF
F - I	2x4	DRY	No.2	SPF
O - B	2x4	DRY	No.2	SPF
J - H	2x4	DRY	No.2	SPF
O - L	2x4	DRY	No.2	SPF
L - J	2x4	DRY	No.2	SPF
ALL WEBS	2x3	DRY	No.2	SPF
EXCEPT				
O - C	2x4	DRY	No.2	SPF
G - J	2x4	DRY	No.2	SPF

DRY: SEASONED LUMBER.

PLATES (table is in inches)

JT	TYPE	PLATES	W	LEN	Y	X
B	TMV+p	MT20	3.0	4.0		
C	TMWW-t	MT20	5.0	6.0		
D	TTWW+m	MT20	5.0	6.0	2.25	1.50
E	TMW+w	MT20	2.0	4.0		
F	TTWW+m	MT20	5.0	6.0	2.25	1.50
G	TMWW-t	MT20	5.0	6.0		
H	TMV+p	MT20	3.0	4.0		
J	BMVW1-t	MT20	4.0	6.0		
K	BMWW-t	MT20	4.0	6.0		
L	BS-t	MT20	3.0	8.0		
M	BMWWW-t	MT20	4.0	6.0		
N	BMWW-t	MT20	4.0	6.0		
O	BMVW1-t	MT20	4.0	6.0		

NOTES- (1)
1) Lateral braces to be a minimum of 2X4 SPF #2.

DIMENSIONS, SUPPORTS AND LOADINGS SPECIFIED BY FABRICATOR TO BE VERIFIED BY BUILDING DESIGNER

BEARINGS

JT	FACTORED GROSS REACTION VERT	HORZ	MAXIMUM FACTORED GROSS REACTION DOWN	HORZ	UPLIFT	INPUT BRG IN-SX	REQRD BRG IN-SX
O	1620	0	1620	0	0	5-8	1-12
J	1620	0	1620	0	0	5-8	1-12

UNFACTORED REACTIONS

JT	1ST LCASE COMBINED	MAX./MIN. COMPONENT REACTIONS SNOW	LIVE	PERM.LIVE	WIND	DEAD	SOIL
O	1143	764 / 0	0 / 0	0 / 0	0 / 0	380 / 0	0 / 0
J	1143	764 / 0	0 / 0	0 / 0	0 / 0	380 / 0	0 / 0

BEARING MATERIAL TO BE SPF NO.2 OR BETTER AT JOINT(S) O, J

BRACING

.TOP CHORD TO BE SHEATHED OR MAX. PURLIN SPACING = 5.14 FT.
MAX. UNBRACED BOTTOM CHORD LENGTH = 10.00 FT OR RIGID CEILING DIRECTLY APPLIED.

ALL PITCH BREAKS AND PERIMETER CORNER JOINTS MUST BE LATERALLY RESTRAINED.

LOADING

TOTAL LOAD CASES: (4)

CHORDS

MEMB. FR-TO	MAX. FACTORED FORCE (LBS)	FACTORED VERT. LOAD LC1 (PLF) FROM	TO	MAX CSI (LC)	MAX. UNBRAC LENGTH
A- B	0 / 41	-91.8	-91.8	0.13 (1)	10.00
B- C	0 / 27	-91.8	-91.8	0.23 (1)	10.00
C- D	-1422 / 0	-91.8	-91.8	0.20 (1)	5.28
D- E	-1324 / 0	-91.8	-91.8	0.40 (1)	5.14
E- F	-1324 / 0	-91.8	-91.8	0.40 (1)	5.14
F- G	-1422 / 0	-91.8	-91.8	0.20 (1)	5.28
G- H	0 / 27	-91.8	-91.8	0.23 (1)	10.00
H- I	0 / 41	-91.8	-91.8	0.13 (1)	10.00
O- B	-264 / 0	0.0	0.0	0.03 (1)	7.81
J- H	-264 / 0	0.0	0.0	0.03 (1)	7.81
O- N	0 / 1109	-18.5	-18.5	0.35 (4)	10.00
N- M	0 / 1072	-18.5	-18.5	0.35 (4)	10.00
M- L	0 / 1072	-18.5	-18.5	0.35 (4)	10.00
L- K	0 / 1072	-18.5	-18.5	0.35 (4)	10.00
K- J	0 / 1109	-18.5	-18.5	0.35 (4)	10.00

WEBS

MEMB. FR-TO	MAX. FACTORED FORCE (LBS)	MAX CSI (LC)
C- N	-61 / 28	0.04 (1)
D- M	0 / 202	0.05 (4)
D- M	0 / 433	0.10 (1)
M- E	-635 / 0	0.83 (1)
M- F	0 / 433	0.10 (1)
K- F	0 / 202	0.05 (4)
K- G	-61 / 28	0.04 (1)
O- C	-1705 / 0	0.75 (1)
G- J	-1705 / 0	0.75 (1)

DESIGN CRITERIA

SPECIFIED LOADS:

TOP CH.	LL	=	25.6	PSF
	DL	=	6.0	PSF
BOT CH.	LL	=	0.0	PSF
	DL	=	7.4	PSF
TOTAL LOAD		=	39.0	PSF

SPACING = 24.0 IN. C/C

LOADING IN FLAT SECTION BASED ON A SLOPE OF 2.00/12 MINIMUM

THIS TRUSS IS DESIGNED FOR RESIDENTIAL OR SMALL BUILDING REQUIREMENTS OF PART 9, NBCC 2015

THIS DESIGN COMPLIES WITH:
- PART 9 OF BCBC 2018 , NBC-2019AE
- PART 9 OF OBC 2012 (2019 AMENDMENT)
- CSA 086-14
- TPIC 2014

(55 % OF 31.3 P.S.F. G.S.L. PLUS 8.4 P.S.F. RAIN LOAD) EQUALS 25.6 P.S.F. SPECIFIED ROOF LIVE LOAD

ALLOWABLE DEFL.(LL)= L/360 (0.90")
CALCULATED VERT. DEFL.(LL) = L/ 999 (0.04")
ALLOWABLE DEFL.(TL)= L/360 (0.90")
CALCULATED VERT. DEFL.(TL) = L/ 999 (0.14")

CSI: TC=0.40/1.00 (D-E:1) , BC=0.35/1.00 (M-N:4) , WB=0.83/1.00 (E-M:1) , SSI=0.25/1.00 (D-E:1)

DOL LUMBER=1.00 NAIL=1.00 LS BEND=1.10 COMP=1.10 SHEAR=1.10 TENS= 1.10

COMPANION LIVE LOAD FACTOR = 1.00

AUTOSOLVE HEELS OFF

TRUSS PLATE MANUFACTURER IS NOT RESPONSIBLE FOR QUALITY CONTROL IN THE TRUSS MANUFACTURING PLANT .

NAIL VALUES

PLATE	GRIP(DRY) (PSI) MAX	MIN	SHEAR (PLI) MAX	MIN	SECTION (PLI) MAX	MIN
MT20	650	371	1747	788	1987	1873

PLATE PLACEMENT TOL. = 0.250 inches

PLATE ROTATION TOL. = 5.0 Deg.

JSI GRIP= 0.78 (J) (INPUT = 0.90)
JSI METAL= 0.38 (C) (INPUT = 0.95)

LICENSED PROFESSIONAL ENGINEER
9/25/23
C. M. HEYENS
100505065
PROVINCE OF ONTARIO

STRUCTURAL COMPONENT ONLY
DWG # TR23091791

CITY OF RICHMOND HILL
BUILDING DIVISION
05/01/2024
RECEIVED
Per: joshua.nabua

JOB NAME	TRUSS NAME	QUANTITY	PLY	JOB DESC.	DRWG NO.
434950	T11	2	1	GREENPARK HOMES TRUSS DESC.	

Tamarack Roof Truss, Burlington

Version 8.630 S Aug 30 2023 MiTek Industries, Inc. Fri Sep 22 10:15:59 2023 Page 1
ID:?7smMffSHcbvu6uGxGPN4oyih5x-C0pZrsEJ tRUeiCjWZZ36XqEj CUxE?MOMQWuiyb7DU

Scale = 1:37.0

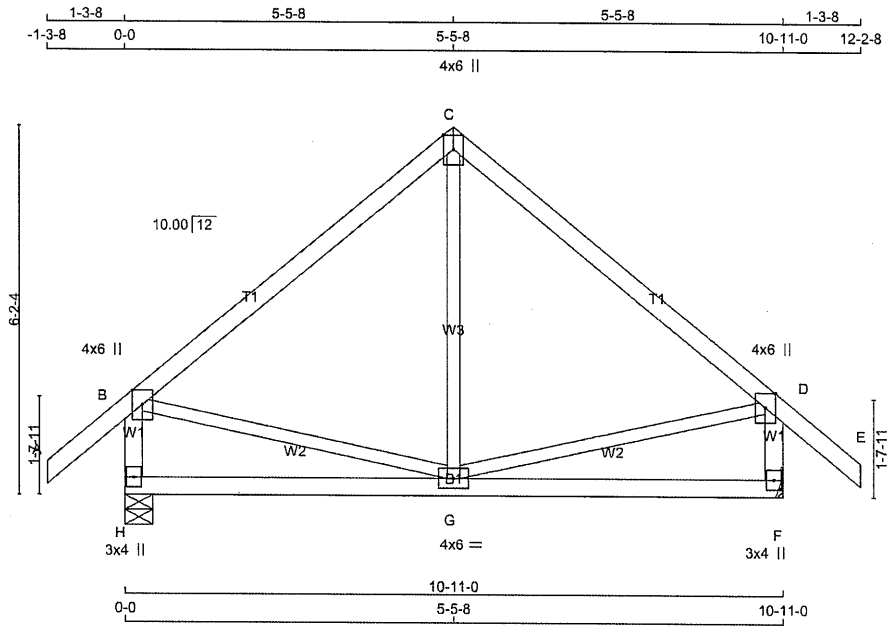

TOTAL WEIGHT = 2 X 49 = 98 lb

LUMBER
N. L. G. A. RULES

CHORDS	SIZE		LUMBER	DESCR.
A - C	2x4	DRY	No.2	SPF
C - E	2x4	DRY	No.2	SPF
H - B	2x4	DRY	No.2	SPF
F - D	2x4	DRY	No.2	SPF
H - F	2x4	DRY	No.2	SPF
ALL WEBS EXCEPT	2x3	DRY	No.2	SPF

DRY: SEASONED LUMBER.

PLATES (table is in inches)

JT	TYPE	PLATES	W	LEN	Y	X
B	TMVW+p	MT20	4.0	6.0	Edge	
C	TTW+p	MT20	4.0	6.0	Edge	
D	TMVW+p	MT20	4.0	6.0	Edge	
F	BMV1+p	MT20	3.0	4.0		
G	BMWWW-t	MT20	4.0	6.0		
H	BMV1+p	MT20	3.0	4.0		

Edge - INDICATES REFERENCE CORNER OF PLATE TOUCHES EDGE OF CHORD.

NOTES- (1)
1) Lateral braces to be a minimum of 2X4 SPF #2.

DIMENSIONS, SUPPORTS AND LOADINGS SPECIFIED BY FABRICATOR TO BE VERIFIED BY BUILDING DESIGNER

BEARINGS

JT	FACTORED GROSS REACTION VERT	HORZ	MAXIMUM FACTORED GROSS REACTION DOWN	HORZ	UPLIFT	INPUT BRG IN-SX	REQRD BRG IN-SX
H	729	0	729	0	0	5-8	1-8
F	729	0	729	0	0	MECHANICAL	

A SUITABLE HANGER/MECHANICAL CONNECTION IS REQUIRED AT JOINT F. MINIMUM BEARING LENGTH AT JOINT F = 1-8.

UNFACTORED REACTIONS

JT	1ST LCASE COMBINED	MAX./MIN. COMPONENT REACTIONS SNOW	LIVE	PERM.LIVE	WIND	DEAD	SOIL
H	513	350 / 0	0 / 0	0 / 0	0 / 0	163 / 0	0 / 0
F	513	350 / 0	0 / 0	0 / 0	0 / 0	163 / 0	0 / 0

BEARING MATERIAL TO BE SPF NO.2 OR BETTER AT JOINT(S) H

BRACING
TOP CHORD TO BE SHEATHED OR MAX. PURLIN SPACING = 6.25 FT.
MAX. UNBRACED BOTTOM CHORD LENGTH = 10.00 FT OR RIGID CEILING DIRECTLY APPLIED.

ALL PITCH BREAKS AND PERIMETER CORNER JOINTS MUST BE LATERALLY RESTRAINED.

LOADING
TOTAL LOAD CASES: (4)

CHORDS

MEMB. FR-TO	MAX. FACTORED FORCE (LBS)	FACTORED VERT. LOAD LC1 (PLF) FROM	TO	MAX CSI (LC)	MAX. UNBRAC LENGTH
A- B	0 / 41	-91.8	-91.8	0.13 (1)	10.00
B- C	-380 / 0	-91.8	-91.8	0.35 (1)	6.25
C- D	-380 / 0	-91.8	-91.8	0.35 (1)	6.25
D- E	0 / 41	-91.8	-91.8	0.13 (1)	10.00
H- B	-690 / 0	0.0	0.0	0.07 (1)	7.81
F- D	-690 / 0	0.0	0.0	0.07 (1)	7.81
H- G	0 / 0	-18.5	-18.5	0.16 (4)	10.00
G- F	0 / 0	-18.5	-18.5	0.16 (4)	10.00

WEBS

MEMB. FR-TO	MAX. FACTORED FORCE (LBS)	MAX CSI (LC)
G- C	-15 / 89	0.03 (4)
B- G	0 / 300	0.07 (1)
G- D	0 / 300	0.07 (1)

DESIGN CRITERIA [M][F]

SPECIFIED LOADS:

TOP CH.	LL	=	25.6	PSF
	DL	=	6.0	PSF
BOT CH.	LL	=	0.0	PSF
	DL	=	7.4	PSF
TOTAL LOAD		=	39.0	PSF

SPACING = 24.0 IN. C/C

THIS TRUSS IS DESIGNED FOR RESIDENTIAL OR SMALL BUILDING REQUIREMENTS OF PART 9, NBCC 2015

THIS DESIGN COMPLIES WITH:
- PART 9 OF BCBC 2018 , NBC-2019AE
- PART 9 OF OBC 2012 (2019 AMENDMENT)
- CSA 086-14
- TPIC 2014

(55 % OF 31.3 P.S.F. G.S.L. PLUS 8.4 P.S.F. RAIN LOAD) EQUALS 25.6 P.S.F. SPECIFIED ROOF LIVE LOAD

ALLOWABLE DEFL.(LL)= L/360 (0.36")
CALCULATED VERT. DEFL.(LL) = L/ 999 (0.00")
ALLOWABLE DEFL.(TL)= L/360 (0.36")
CALCULATED VERT. DEFL.(TL) = L/ 999 (0.02")

CSI: TC=0.35/1.00 (B-C:1) , BC=0.16/1.00 (G-H:4) , WB=0.07/1.00 (D-G:1) , SSI=0.15/1.00 (B-C:1)

DOL LUMBER=1.00 NAIL=1.00 LS BEND=1.10 COMP=1.10 SHEAR=1.10 TENS= 1.10

COMPANION LIVE LOAD FACTOR = 1.00

TRUSS PLATE MANUFACTURER IS NOT RESPONSIBLE FOR QUALITY CONTROL IN THE TRUSS MANUFACTURING PLANT .

NAIL VALUES

PLATE	GRIP(DRY) (PSI) MAX	MIN	SHEAR (PLI) MAX	MIN	SECTION (PLI) MAX	MIN
MT20	650	371	1747	788	1987	1873

PLATE PLACEMENT TOL. = 0.250 inches

PLATE ROTATION TOL. = 5.0 Deg.

JSI GRIP= 0.43 (B) (INPUT = 0.90)
JSI METAL= 0.26 (B) (INPUT = 0.95)

LICENSED PROFESSIONAL ENGINEER
9/25/23
C. M. HEYENS
100505065
PROVINCE OF ONTARIO

STRUCTURAL COMPONENT ONLY
DWG # TR23091792

CITY OF RICHMOND HILL
BUILDING DIVISION
05/01/2024
RECEIVED
Per: joshua.nabua

JOB NAME	TRUSS NAME	QUANTITY	PLY	JOB DESC.	DRWG NO.
434950	G11	1	1	GREENPARK HOMES TRUSS DESC.	

Tamarack Roof Truss, Burlington

Version 8.630 S Aug 30 2023 MiTek Industries, Inc. Fri Sep 22 10:15:45 2023 Page 1

ID:?7smMffSHcbvu6uGxGPN4oyih5x-cJzHv34XHZqTyY80icJnYa5vnLSQfvJJAA1nOWyb7Di

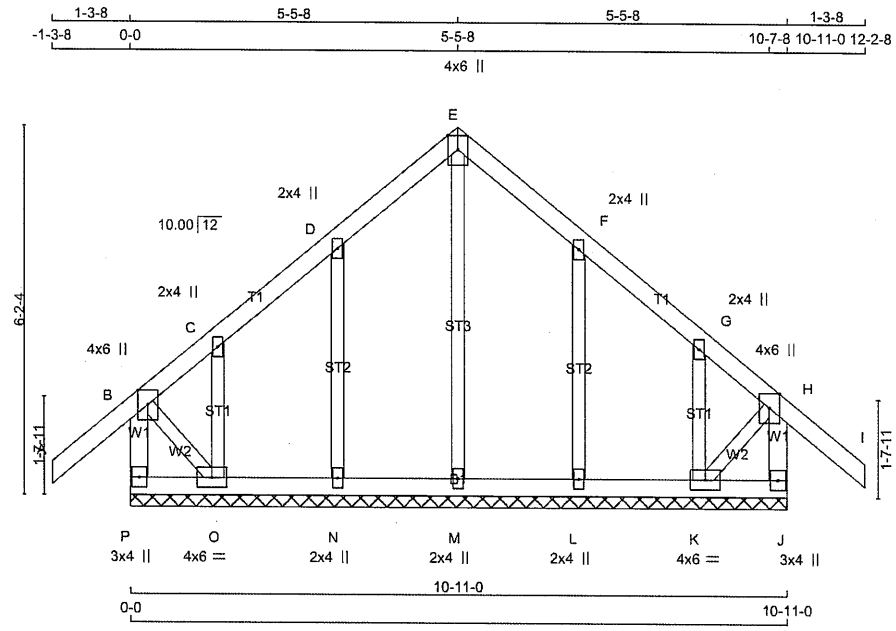

TOTAL WEIGHT = 53 lb

[M]

LUMBER

N. L. G. A. RULES

CHORDS	SIZE		LUMBER	DESCR.
P - B	2x4	DRY	No.2	SPF
A - E	2x4	DRY	No.2	SPF
E - I	2x4	DRY	No.2	SPF
J - H	2x4	DRY	No.2	SPF
P - J	2x4	DRY	No.2	SPF
ALL WEBS	2x3	DRY	No.2	SPF
ALL GABLE WEBS	2x3	DRY	No.2	SPF

DRY: SEASONED LUMBER.

GABLE STUDS SPACED AT 2-0-0 OC.

PLATES (table is in inches)

JT	TYPE	PLATES	W	LEN	Y	X
B	TMVW+p	MT20	4.0	6.0	Edge	
C, D, F, G						
C	TMW+w	MT20	2.0	4.0		
E	TTW+p	MT20	4.0	6.0	Edge	
H	TMVW+p	MT20	4.0	6.0	Edge	
J	BMV1+p	MT20	3.0	4.0		
K	BMWW1-t	MT20	4.0	6.0		
L, M, N						
L	BMW1+w	MT20	2.0	4.0		
O	BMWW1-t	MT20	4.0	6.0		
P	BMV1+p	MT20	3.0	4.0		

Edge - INDICATES REFERENCE CORNER OF PLATE TOUCHES EDGE OF CHORD.

NOTES- (1)

1) Lateral braces to be a minimum of 2X4 SPF #2.

DIMENSIONS, SUPPORTS AND LOADINGS SPECIFIED BY FABRICATOR TO BE VERIFIED BY BUILDING DESIGNER

BEARINGS

THIS TRUSS DESIGNED FOR CONTINUOUS BEARINGS.

THIS TRUSS REQUIRES RIGID SHEATHING ON EXPOSED FACE.

BEARING MATERIAL TO BE SPF NO.2 OR BETTER AT JOINT(S)

BRACING

TOP CHORD TO BE SHEATHED OR MAX. PURLIN SPACING = 6.25 FT.
MAX. UNBRACED BOTTOM CHORD LENGTH = 10.00 FT OR RIGID CEILING DIRECTLY APPLIED.

ALL PITCH BREAKS AND PERIMETER CORNER JOINTS MUST BE LATERALLY RESTRAINED.

LOADING

TOTAL LOAD CASES: (4)

CHORDS

MEMB. FR-TO	MAX. FACTORED FORCE (LBS)	FACTORED VERT. LOAD (PLF) FROM	TO	LC1 MAX CSI (LC)	MAX. UNBRAC LENGTH
P- B	-274 / 0	0.0	0.0	0.03 (1)	7.81
A- B	0 / 41	-91.8	-91.8	0.13 (1)	10.00
B- C	-57 / 0	-91.8	-91.8	0.12 (1)	6.25
C- D	-4 / 0	-91.8	-91.8	0.06 (1)	10.00
D- E	-22 / 0	-91.8	-91.8	0.06 (1)	6.25
E- F	-22 / 0	-91.8	-91.8	0.06 (1)	6.25
F- G	-4 / 0	-91.8	-91.8	0.06 (1)	10.00
G- H	-57 / 0	-91.8	-91.8	0.12 (1)	6.25
H- I	0 / 41	-91.8	-91.8	0.13 (1)	10.00
J- H	-274 / 0	0.0	0.0	0.03 (1)	7.81
P- O	0 / 0	-18.5	-18.5	0.01 (4)	10.00
O- N	0 / 12	-18.5	-18.5	0.02 (4)	10.00
N- M	0 / 7	-18.5	-18.5	0.02 (4)	10.00
M- L	0 / 7	-18.5	-18.5	0.02 (4)	10.00
L- K	0 / 12	-18.5	-18.5	0.02 (4)	10.00
K- J	0 / 0	-18.5	-18.5	0.01 (4)	10.00

WEBS

MEMB. FR-TO	MAX. FACTORED FORCE (LBS)	MAX CSI (LC)
M- E	-139 / 0	0.08 (1)
N- D	-223 / 0	0.07 (1)
O- C	-75 / 0	0.01 (1)
L- F	-223 / 0	0.07 (1)
K- G	-75 / 0	0.01 (1)
B- O	0 / 20	0.00 (1)
K- H	0 / 20	0.00 (1)

DESIGN CRITERIA

SPECIFIED LOADS:

TOP CH.	LL	=	25.6	PSF	
	DL	=	6.0	PSF	
BOT CH.	LL	=	0.0	PSF	
	DL	=	7.4	PSF	
TOTAL LOAD		=	39.0	PSF	

SPACING = 24.0 IN. C/C

THIS TRUSS IS DESIGNED FOR RESIDENTIAL OR SMALL BUILDING REQUIREMENTS OF PART 9, NBCC 2015

THIS DESIGN COMPLIES WITH:
- PART 9 OF BCBC 2018 , NBC-2019AE
- PART 9 OF OBC 2012 (2019 AMENDMENT)
- CSA 086-14
- TPIC 2014

DESIGN ASSUMPTIONS
-OVERHANG NOT TO BE ALTERED OR CUT OFF.

(55 % OF 31.3 P.S.F. G.S.L. PLUS 8.4 P.S.F. RAIN LOAD) EQUALS 25.6 P.S.F. SPECIFIED ROOF LIVE LOAD

CSI: TC=0.13/1.00 (A-B:1) , BC=0.02/1.00 (K-L:4) , WB=0.08/1.00 (E-M:1) , SSI=0.08/1.00 (H-I:1)

DOL LUMBER=1.00 NAIL=1.00 LS BEND=1.10 COMP=1.10 SHEAR=1.10 TENS= 1.10

COMPANION LIVE LOAD FACTOR = 1.00

TRUSS PLATE MANUFACTURER IS NOT RESPONSIBLE FOR QUALITY CONTROL IN THE TRUSS MANUFACTURING PLANT .

NAIL VALUES

PLATE	GRIP(DRY) (PSI) MAX	MIN	SHEAR (PLI) MAX	MIN	SECTION (PLI) MAX	MIN
MT20	650	371	1747	788	1987	1873

PLATE PLACEMENT TOL. = 0.250 inches

PLATE ROTATION TOL. = 5.0 Deg.

JSI GRIP= 0.17 (B) (INPUT = 0.90)
JSI METAL= 0.12 (D) (INPUT = 0.95)

LICENSED PROFESSIONAL ENGINEER
9/25/23
C. M. HEYENS
100505065
PROVINCE OF ONTARIO

STRUCTURAL COMPONENT ONLY
DWG # TR23091778

CITY OF RICHMOND HILL
BUILDING DIVISION
05/01/2024
RECEIVED
Per: joshua.nabua

JOB NAME	TRUSS NAME	QUANTITY	PLY	JOB DESC.	DRWG NO.
434950	T12	1	1	GREENPARK HOMES TRUSS DESC.	

Tamarack Roof Truss, Burlington

Version 8.630 S Aug 30 2023 MiTek Industries, Inc. Fri Sep 22 10:16:00 2023 Page 1
ID:?7smMffSHcbvu6uGxGPN4oyih5x-gCNy2CFxIAZLGsnv4G4IfkDQcOSgqglWd0A3Q8yb7DT

Scale = 1:28.2

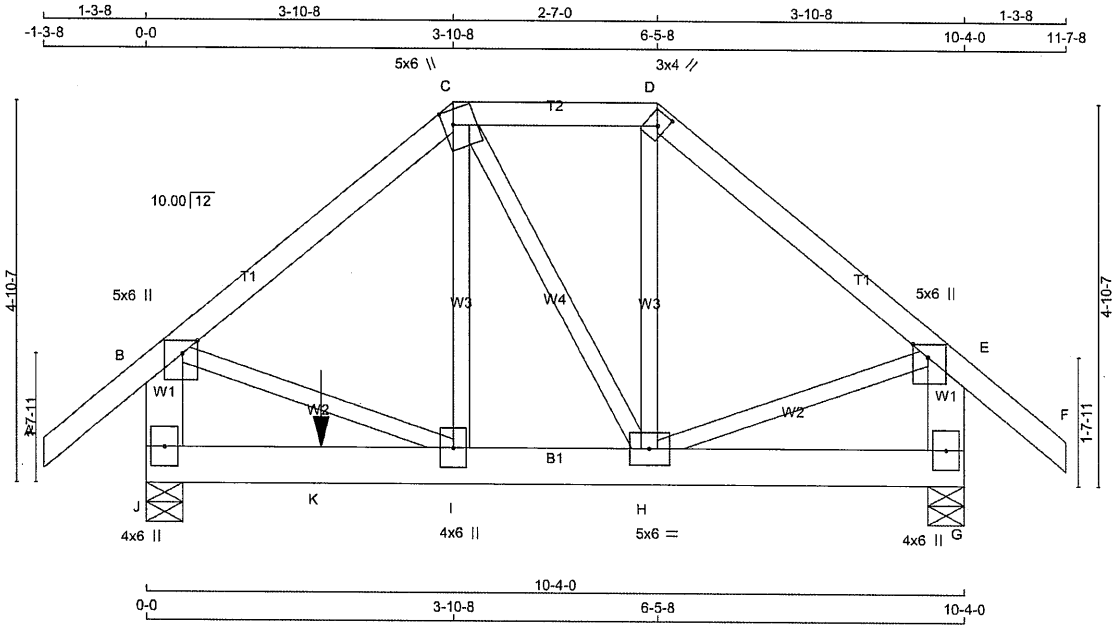

TOTAL WEIGHT = 58 lb [M]

LUMBER
N. L. G. A. RULES

CHORDS	SIZE		LUMBER	DESCR.
A - C	2x4	DRY	No.2	SPF
C - D	2x4	DRY	No.2	SPF
D - F	2x4	DRY	No.2	SPF
J - B	2x6	DRY	No.2	SPF
G - E	2x6	DRY	No.2	SPF
J - G	2x6	DRY	No.2	SPF
ALL WEBS EXCEPT	2x3	DRY	No.2	SPF

DRY: SEASONED LUMBER.

PLATES (table is in inches)

JT	TYPE	PLATES	W	LEN	Y	X
B	TMVW+p	MT20	5.0	6.0	2.00	2.25
C	TTWW+m	MT20	5.0	6.0	2.25	1.50
D	TTW+h	MT20	3.0	4.0	2.00	1.25
E	TMVW+p	MT20	5.0	6.0	2.00	2.25
G	BMV1+p	MT20	4.0	6.0		
H	BMWWW-t	MT20	5.0	6.0		
I	BMWW+t	MT20	4.0	6.0		
J	BMV1+p	MT20	4.0	6.0		

NOTES- (1)
1) Lateral braces to be a minimum of 2X4 SPF #2.

DIMENSIONS, SUPPORTS AND LOADINGS SPECIFIED BY FABRICATOR TO BE VERIFIED BY BUILDING DESIGNER

BEARINGS

JT	FACTORED GROSS REACTION VERT	HORZ	MAXIMUM FACTORED GROSS REACTION DOWN	HORZ	UPLIFT	INPUT BRG IN-SX	REQRD BRG IN-SX
J	1346	0	1346	0	0	5-8	1-8
G	873	0	873	0	0	5-8	1-8

UNFACTORED REACTIONS

JT	1ST LCASE COMBINED	MAX./MIN. COMPONENT REACTIONS SNOW	LIVE	PERM.LIVE	WIND	DEAD	SOIL
J	944	664 / 0	0 / 0	0 / 0	0 / 0	279 / 0	0 / 0
G	614	425 / 0	0 / 0	0 / 0	0 / 0	189 / 0	0 / 0

BEARING MATERIAL TO BE SPF NO.2 OR BETTER AT JOINT(S) J, G

BRACING
TOP CHORD TO BE SHEATHED OR MAX. PURLIN SPACING = 6.25 FT.
MAX. UNBRACED BOTTOM CHORD LENGTH = 10.00 FT OR RIGID CEILING DIRECTLY APPLIED.

ALL PITCH BREAKS AND PERIMETER CORNER JOINTS MUST BE LATERALLY RESTRAINED.

LOADING
TOTAL LOAD CASES: (4)

CHORDS

MEMB. FR-TO	MAX. FACTORED FORCE (LBS)	FACTORED VERT. LOAD (PLF) FROM	TO	LC1 CSI (LC)	MAX UNBRAC LENGTH
A- B	0 / 41	-91.8	-91.8	0.14 (1)	10.00
B- C	-826 / 0	-91.8	-91.8	0.28 (1)	6.25
C- D	-460 / 0	-91.8	-91.8	0.12 (1)	6.25
D- E	-598 / 0	-91.8	-91.8	0.27 (1)	6.25
E- F	0 / 41	-91.8	-91.8	0.14 (1)	10.00
J- B	-1030 / 0	0.0	0.0	0.08 (1)	7.81
G- E	-829 / 0	0.0	0.0	0.06 (1)	7.81
J- K	0 / 0	-18.5	-18.5	0.48 (1)	10.00
K- I	0 / 0	-18.5	-18.5	0.48 (1)	10.00
I- H	0 / 646	-18.5	-18.5	0.34 (1)	10.00
H- G	0 / 0	-18.5	-18.5	0.04 (4)	10.00

WEBS

MEMB. FR-TO	MAX. FACTORED FORCE (LBS)	MAX CSI (LC)
I- C	0 / 570	0.14 (1)
C- H	-383 / 0	0.16 (1)
H- D	0 / 88	0.03 (4)
B- I	0 / 662	0.16 (1)
H- E	0 / 479	0.12 (1)

SPECIFIED CONCENTRATED LOADS (LBS)

JT	LOC.	LC1	MAX-	MAX+	FACE	DIR.	TYPE	HEEL	CONN.
K	2-2-8	-577	-577	—	FRONT	VERT	TOTAL	---	C1

CONNECTION REQUIREMENTS

1) **C1:** A SUITABLE HANGER/MECHANICAL CONNECTION IS REQUIRED.

DESIGN CRITERIA

SPECIFIED LOADS:

TOP CH.	LL =	25.6	PSF
	DL =	6.0	PSF
BOT CH.	LL =	0.0	PSF
	DL =	7.4	PSF
TOTAL LOAD	=	39.0	PSF

SPACING = 24.0 IN. C/C

LOADING IN FLAT SECTION BASED ON A SLOPE OF 2.00/12 MINIMUM

THIS TRUSS IS DESIGNED FOR RESIDENTIAL OR SMALL BUILDING REQUIREMENTS OF PART 9, NBCC 2015

THIS DESIGN COMPLIES WITH:
- PART 9 OF BCBC 2018 , NBC-2019AE
- PART 9 OF OBC 2012 (2019 AMENDMENT)
- CSA 086-14
- TPIC 2014

(55 % OF 31.3 P.S.F. G.S.L. PLUS 8.4 P.S.F. RAIN LOAD) EQUALS 25.6 P.S.F. SPECIFIED ROOF LIVE LOAD

ALLOWABLE DEFL.(LL)= L/360 (0.34")
CALCULATED VERT. DEFL.(LL) = L/ 999 (0.03")
ALLOWABLE DEFL.(TL)= L/360 (0.34")
CALCULATED VERT. DEFL.(TL) = L/ 999 (0.05")

CSI: TC=0.28/1.00 (B-C:1) , BC=0.48/1.00 (I-J:1) , WB=0.16/1.00 (B-I:1) , SSI=0.39/1.00 (I-J:1)

DOL LUMBER=1.00 NAIL=1.00 LS BEND=1.00 COMP=1.00 SHEAR=1.00 TENS= 1.00

COMPANION LIVE LOAD FACTOR = 1.00

AUTOSOLVE HEELS OFF

TRUSS PLATE MANUFACTURER IS NOT RESPONSIBLE FOR QUALITY CONTROL IN THE TRUSS MANUFACTURING PLANT .

NAIL VALUES

PLATE	GRIP(DRY) (PSI) MAX	MIN	SHEAR (PLI) MAX	MIN	SECTION (PLI) MAX	MIN
MT20	650	371	1747	788	1987	1873

PLATE PLACEMENT TOL. = 0.250 inches

PLATE ROTATION TOL. = 5.0 Deg.

JSI GRIP= 0.88 (I) (INPUT = 0.90)
JSI METAL= 0.29 (I) (INPUT = 0.95)

LICENSED PROFESSIONAL ENGINEER
9/25/23
C. M. HEYENS
100505065
PROVINCE OF ONTARIO

STRUCTURAL COMPONENT ONLY
DWG # TR23091793

CITY OF RICHMOND HILL
BUILDING DIVISION
05/01/2024
RECEIVED
Per: joshua.nabua

JOB NAME	TRUSS NAME	QUANTITY	PLY	JOB DESC.	DRWG NO.
434950	T13	3	1	GREENPARK HOMES TRUSS DESC.	

Tamarack Roof Truss, Burlington

Version 8.630 S Aug 30 2023 MiTek Industries, Inc. Fri Sep 22 10:16:01 2023 Page 1
ID:?7smMffSHcbvu6uGxGPN4oyih5x-8OwKGYGZWUhCt?M5ezcXBylbnotDP9Yfsqvdyayb7DS

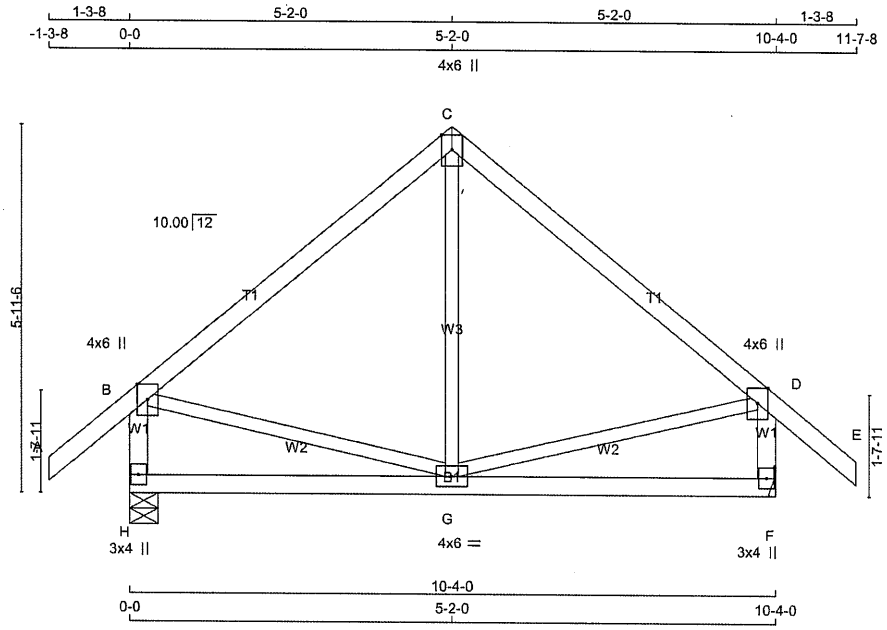

TOTAL WEIGHT = 3 X 47 = 140 lb
[M][F]

LUMBER
N. L. G. A. RULES

CHORDS	SIZE		LUMBER	DESCR.
A - C	2x4	DRY	No.2	SPF
C - E	2x4	DRY	No.2	SPF
H - B	2x4	DRY	No.2	SPF
F - D	2x4	DRY	No.2	SPF
H - F	2x4	DRY	No.2	SPF
ALL WEBS EXCEPT	2x3	DRY	No.2	SPF

DRY: SEASONED LUMBER.

PLATES (table is in inches)

JT	TYPE	PLATES	W	LEN	Y	X
B	TMVW+p	MT20	4.0	6.0	Edge	
C	TTW+p	MT20	4.0	6.0	Edge	
D	TMVW+p	MT20	4.0	6.0	Edge	
F	BMV1+p	MT20	3.0	4.0		
G	BMWWW-t	MT20	4.0	6.0		
H	BMV1+p	MT20	3.0	4.0		

Edge - INDICATES REFERENCE CORNER OF PLATE TOUCHES EDGE OF CHORD.

NOTES- (1)
1) Lateral braces to be a minimum of 2X4 SPF #2.

DIMENSIONS, SUPPORTS AND LOADINGS SPECIFIED BY FABRICATOR TO BE VERIFIED BY BUILDING DESIGNER

BEARINGS

JT	FACTORED GROSS REACTION VERT	HORZ	MAXIMUM FACTORED GROSS REACTION DOWN	HORZ	UPLIFT	INPUT BRG	REQRD BRG
H	697	0	697	0	0	5-8	1-8
F	697	0	697	0	0	MECHANICAL	

A SUITABLE HANGER/MECHANICAL CONNECTION IS REQUIRED AT JOINT F. MINIMUM BEARING LENGTH AT JOINT F = 1-8.

UNFACTORED REACTIONS

JT	1ST LCASE COMBINED	MAX./MIN. COMPONENT REACTIONS SNOW	LIVE	PERM.LIVE	WIND	DEAD	SOIL
H	490	335 / 0	0 / 0	0 / 0	0 / 0	155 / 0	0 / 0
F	490	335 / 0	0 / 0	0 / 0	0 / 0	155 / 0	0 / 0

BEARING MATERIAL TO BE SPF NO.2 OR BETTER AT JOINT(S) H

BRACING
TOP CHORD TO BE SHEATHED OR MAX. PURLIN SPACING = 6.25 FT.
MAX. UNBRACED BOTTOM CHORD LENGTH = 10.00 FT OR RIGID CEILING DIRECTLY APPLIED.

ALL PITCH BREAKS AND PERIMETER CORNER JOINTS MUST BE LATERALLY RESTRAINED.

LOADING
TOTAL LOAD CASES: (4)

CHORDS

MEMB. FR-TO	MAX. FACTORED FORCE (LBS)	FACTORED VERT. LOAD (PLF) FROM	TO	LC1 MAX CSI (LC)	MAX. UNBRAC LENGTH
A- B	0 / 41	-91.8	-91.8	0.13 (1)	10.00
B- C	-355 / 0	-91.8	-91.8	0.32 (1)	6.25
C- D	-355 / 0	-91.8	-91.8	0.32 (1)	6.25
D- E	0 / 41	-91.8	-91.8	0.13 (1)	10.00
H- B	-660 / 0	0.0	0.0	0.07 (1)	7.81
F- D	-660 / 0	0.0	0.0	0.07 (1)	7.81
H- G	0 / 0	-18.5	-18.5	0.14 (4)	10.00
G- F	0 / 0	-18.5	-18.5	0.14 (4)	10.00

WEBS

MEMB. FR-TO	MAX. FACTORED FORCE (LBS)	MAX CSI (LC)
G- C	-20 / 82	0.03 (4)
B- G	0 / 281	0.06 (1)
G- D	0 / 281	0.06 (1)

DESIGN CRITERIA

SPECIFIED LOADS:

TOP	CH.	LL	=	25.6	PSF
		DL	=	6.0	PSF
BOT	CH.	LL	=	0.0	PSF
		DL	=	7.4	PSF
TOTAL	LOAD		=	39.0	PSF

SPACING = 24.0 IN. C/C

THIS TRUSS IS DESIGNED FOR RESIDENTIAL OR SMALL BUILDING REQUIREMENTS OF PART 9, NBCC 2015

THIS DESIGN COMPLIES WITH:
- PART 9 OF BCBC 2018 , NBC-2019AE
- PART 9 OF OBC 2012 (2019 AMENDMENT)
- CSA 086-14
- TPIC 2014

(55 % OF 31.3 P.S.F. G.S.L. PLUS 8.4 P.S.F. RAIN LOAD) EQUALS 25.6 P.S.F. SPECIFIED ROOF LIVE LOAD

ALLOWABLE DEFL.(LL)= L/360 (0.34")
CALCULATED VERT. DEFL.(LL) = L/ 999 (0.00")
ALLOWABLE DEFL.(TL)= L/360 (0.34")
CALCULATED VERT. DEFL.(TL) = L/ 999 (0.02")

CSI: TC=0.32/1.00 (B-C:1) , BC=0.14/1.00 (G-H:4) , WB=0.06/1.00 (B-G:1) , SSI=0.14/1.00 (B-C:1)

DOL LUMBER=1.00 NAIL=1.00 LS BEND=1.10 COMP=1.10 SHEAR=1.10 TENS= 1.10

COMPANION LIVE LOAD FACTOR = 1.00

TRUSS PLATE MANUFACTURER IS NOT RESPONSIBLE FOR QUALITY CONTROL IN THE TRUSS MANUFACTURING PLANT .

NAIL VALUES

PLATE	GRIP(DRY) (PSI) MAX	MIN	SHEAR (PLI) MAX	MIN	SECTION (PLI) MAX	MIN
MT20	650	371	1747	788	1987	1873

PLATE PLACEMENT TOL. = 0.250 inches

PLATE ROTATION TOL. = 5.0 Deg.

JSI GRIP= 0.41 (D) (INPUT = 0.90)
JSI METAL= 0.24 (D) (INPUT = 0.95)

LICENSED PROFESSIONAL ENGINEER
9/25/23
C. M. HEYENS
100505065
PROVINCE OF ONTARIO

STRUCTURAL COMPONENT ONLY
DWG # TR23091794

CITY OF RICHMOND HILL
BUILDING DIVISION
05/01/2024
RECEIVED
Per: joshua.nabua

JOB NAME	TRUSS NAME	QUANTITY	PLY	JOB DESC.	DRWG NO.
434950	T14	2	1	GREENPARK HOMES TRUSS DESC.	

Tamarack Roof Truss, Burlington

Version 8.630 S Aug 30 2023 MiTek Industries, Inc. Fri Sep 22 10:16:02 2023 Page 1
ID:?7smMffSHcbvu6uGxGPN4oyih5x-daUiTuHBHop3V9xIBh7mk9IoWBEM8c3p4KfAU1yb7DR

Scale = 1:31.3

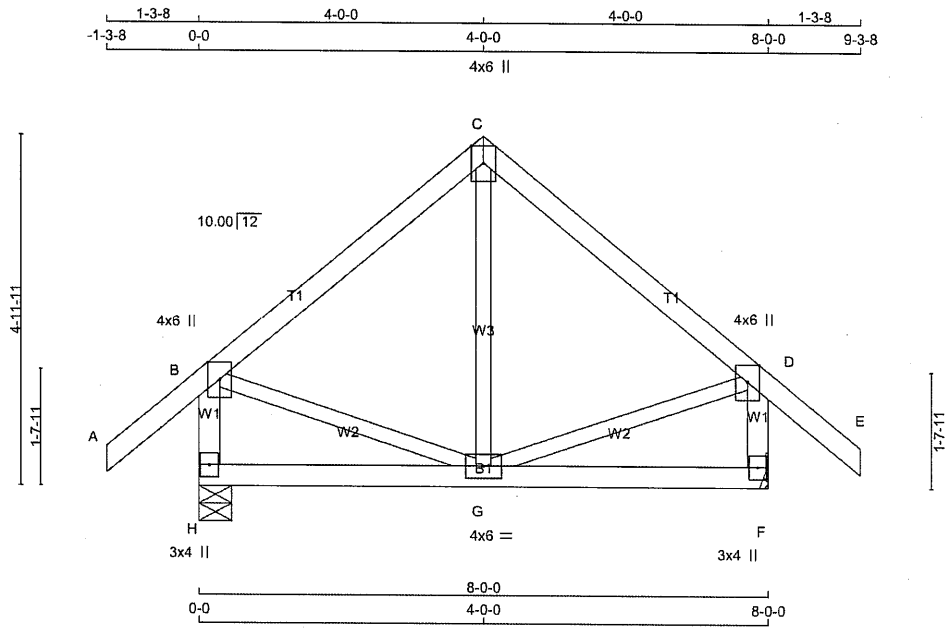

TOTAL WEIGHT = 2 X 38 = 76 lb

LUMBER
N. L. G. A. RULES

CHORDS	SIZE		LUMBER	DESCR.
A - C	2x4	DRY	No.2	SPF
C - E	2x4	DRY	No.2	SPF
H - B	2x4	DRY	No.2	SPF
F - D	2x4	DRY	No.2	SPF
H - F	2x4	DRY	No.2	SPF
ALL WEBS EXCEPT	2x3	DRY	No.2	SPF

DRY: SEASONED LUMBER.

PLATES (table is in inches)

JT	TYPE	PLATES	W	LEN	Y	X
B	TMVW+p	MT20	4.0	6.0	Edge	
C	TTW+p	MT20	4.0	6.0	Edge	
D	TMVW+p	MT20	4.0	6.0	Edge	
F	BMV1+p	MT20	3.0	4.0		
G	BMWWW-t	MT20	4.0	6.0		
H	BMV1+p	MT20	3.0	4.0		

Edge - INDICATES REFERENCE CORNER OF PLATE TOUCHES EDGE OF CHORD.

NOTES- (1)
1) Lateral braces to be a minimum of 2X4 SPF #2.

DIMENSIONS, SUPPORTS AND LOADINGS SPECIFIED BY FABRICATOR TO BE VERIFIED BY BUILDING DESIGNER

BEARINGS

JT	FACTORED GROSS REACTION VERT	HORZ	MAXIMUM FACTORED GROSS REACTION DOWN	HORZ	UPLIFT	INPUT BRG IN-SX	REQRD BRG IN-SX
H	568	0	568	0	0	5-8	1-8
F	568	0	568	0	0	MECHANICAL	

A SUITABLE HANGER/MECHANICAL CONNECTION IS REQUIRED AT JOINT F. MINIMUM BEARING LENGTH AT JOINT F = 1-8.

UNFACTORED REACTIONS

JT	1ST LCASE COMBINED	MAX./MIN. COMPONENT REACTIONS SNOW	LIVE	PERM.LIVE	WIND	DEAD	SOIL
H	399	276 / 0	0 / 0	0 / 0	0 / 0	124 / 0	0 / 0
F	399	276 / 0	0 / 0	0 / 0	0 / 0	124 / 0	0 / 0

BEARING MATERIAL TO BE SPF NO.2 OR BETTER AT JOINT(S) H

BRACING
TOP CHORD TO BE SHEATHED OR MAX. PURLIN SPACING = 6.25 FT.
MAX. UNBRACED BOTTOM CHORD LENGTH = 10.00 FT OR RIGID CEILING DIRECTLY APPLIED.

ALL PITCH BREAKS AND PERIMETER CORNER JOINTS MUST BE LATERALLY RESTRAINED.

LOADING
TOTAL LOAD CASES: (4)

CHORDS

MEMB. FR-TO	MAX. FACTORED FORCE (LBS)	FACTORED VERT. LOAD LC1 (PLF) FROM	TO	MAX CSI (LC)	MAX. UNBRAC LENGTH
A- B	0 / 41	-91.8	-91.8	0.13 (1)	10.00
B- C	-257 / 0	-91.8	-91.8	0.19 (1)	6.25
C- D	-257 / 0	-91.8	-91.8	0.19 (1)	6.25
D- E	0 / 41	-91.8	-91.8	0.13 (1)	10.00
H- B	-539 / 0	0.0	0.0	0.06 (1)	7.81
F- D	-539 / 0	0.0	0.0	0.06 (1)	7.81
H- G	0 / 0	-18.5	-18.5	0.08 (4)	10.00
G- F	0 / 0	-18.5	-18.5	0.08 (4)	10.00

WEBS

MEMB. FR-TO	MAX. FACTORED FORCE (LBS)	MAX CSI (LC)
G- C	-38 / 55	0.02 (4)
B- G	0 / 207	0.05 (1)
G- D	0 / 207	0.05 (1)

DESIGN CRITERIA [M][F]

SPECIFIED LOADS:

TOP CH.	LL	=	25.6	PSF
	DL	=	6.0	PSF
BOT CH.	LL	=	0.0	PSF
	DL	=	7.4	PSF
TOTAL LOAD		=	39.0	PSF

SPACING = 24.0 IN. C/C

THIS TRUSS IS DESIGNED FOR RESIDENTIAL OR SMALL BUILDING REQUIREMENTS OF PART 9, NBCC 2015

THIS DESIGN COMPLIES WITH:
- PART 9 OF BCBC 2018 , NBC-2019AE
- PART 9 OF OBC 2012 (2019 AMENDMENT)
- CSA 086-14
- TPIC 2014

(55 % OF 31.3 P.S.F. G.S.L. PLUS 8.4 P.S.F. RAIN LOAD) EQUALS 25.6 P.S.F. SPECIFIED ROOF LIVE LOAD

ALLOWABLE DEFL.(LL)= L/360 (0.27")
CALCULATED VERT. DEFL.(LL) = L/ 999 (0.00")
ALLOWABLE DEFL.(TL)= L/360 (0.27")
CALCULATED VERT. DEFL.(TL) = L/ 999 (0.01")

CSI: TC=0.19/1.00 (C-D:1) , BC=0.08/1.00 (F-G:4) , WB=0.05/1.00 (B-G:1) , SSI=0.11/1.00 (C-D:1)

DOL LUMBER=1.00 NAIL=1.00 LS BEND=1.10 COMP=1.10 SHEAR=1.10 TENS= 1.10

COMPANION LIVE LOAD FACTOR = 1.00

TRUSS PLATE MANUFACTURER IS NOT RESPONSIBLE FOR QUALITY CONTROL IN THE TRUSS MANUFACTURING PLANT .

NAIL VALUES

PLATE	GRIP(DRY) (PSI) MAX	MIN	SHEAR (PLI) MAX	MIN	SECTION (PLI) MAX	MIN
MT20	650	371	1747	788	1987	1873

PLATE PLACEMENT TOL. = 0.250 inches

PLATE ROTATION TOL. = 5.0 Deg.

JSI GRIP= 0.34 (B) (INPUT = 0.90)
JSI METAL= 0.19 (D) (INPUT = 0.95)

LICENSED PROFESSIONAL ENGINEER
9/25/23
C. M. HEYENS
100505065
PROVINCE OF ONTARIO

STRUCTURAL COMPONENT ONLY
DWG # TR23091795

CITY OF RICHMOND HILL
BUILDING DIVISION
05/01/2024
RECEIVED
Per: joshua.nabua

JOB NAME	TRUSS NAME	QUANTITY	PLY	JOB DESC.	DRWG NO.
434950	G14	1	1	GREENPARK HOMES TRUSS DESC.	

Tamarack Roof Truss, Burlington

Version 8.630 S Aug 30 2023 MiTek Industries, Inc. Fri Sep 22 10:15:46 2023 Page 1
ID:?7smMffSHcbvu6uGxGPN4oyih5x-5VWf6P492toKaijDFKq04oe4XlobON?SPqnKwyyb7Dh

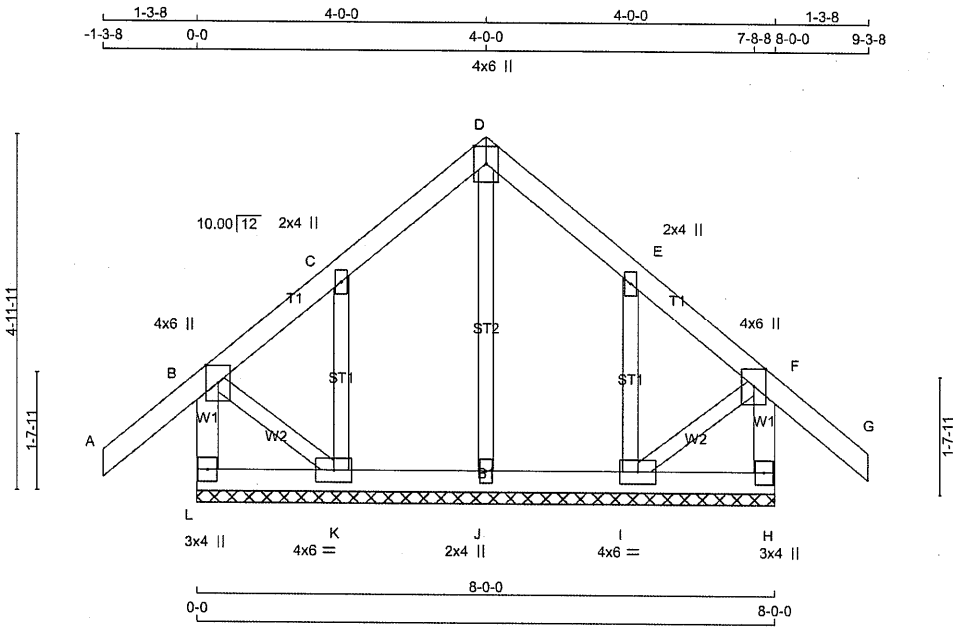

TOTAL WEIGHT = 39 lb

LUMBER
N. L. G. A. RULES

CHORDS	SIZE		LUMBER	DESCR.
L - B	2x4	DRY	No.2	SPF
A - D	2x4	DRY	No.2	SPF
D - G	2x4	DRY	No.2	SPF
H - F	2x4	DRY	No.2	SPF
L - H	2x4	DRY	No.2	SPF
ALL WEBS	2x3	DRY	No.2	SPF
ALL GABLE WEBS	2x3	DRY	No.2	SPF

DRY: SEASONED LUMBER.

GABLE STUDS SPACED AT 2-0-0 OC.

PLATES (table is in Inches)

JT	TYPE	PLATES	W	LEN	Y	X
B	TMVW+p	MT20	4.0	6.0	Edge	
C	TMW+w	MT20	2.0	4.0		
D	TTW+p	MT20	4.0	6.0	Edge	
E	TMW+w	MT20	2.0	4.0		
F	TMVW+p	MT20	4.0	6.0	Edge	
H	BMV1+p	MT20	3.0	4.0		
I	BMWW1-t	MT20	4.0	6.0		
J	BMW1+w	MT20	2.0	4.0		
K	BMWW1-t	MT20	4.0	6.0		
L	BMV1+p	MT20	3.0	4.0		

Edge - INDICATES REFERENCE CORNER OF PLATE TOUCHES EDGE OF CHORD.

NOTES- (1)
1) Lateral braces to be a minimum of 2X4 SPF #2.

DIMENSIONS, SUPPORTS AND LOADINGS SPECIFIED BY FABRICATOR TO BE VERIFIED BY BUILDING DESIGNER

BEARINGS

THIS TRUSS DESIGNED FOR CONTINUOUS BEARINGS.

THIS TRUSS REQUIRES RIGID SHEATHING ON EXPOSED FACE.

BEARING MATERIAL TO BE SPF NO.2 OR BETTER AT JOINT(S)

BRACING
TOP CHORD TO BE SHEATHED OR MAX. PURLIN SPACING = 6.25 FT.
MAX. UNBRACED BOTTOM CHORD LENGTH = 10.00 FT OR RIGID CEILING DIRECTLY APPLIED.

ALL PITCH BREAKS AND PERIMETER CORNER JOINTS MUST BE LATERALLY RESTRAINED.

LOADING
TOTAL LOAD CASES: (4)

CHORDS

MEMB. FR-TO	MAX. FACTORED FORCE (LBS)	FACTORED VERT. LOAD LC1 (PLF) FROM	TO	MAX CSI (LC)	MAX. UNBRAC LENGTH
L- B	-270 / 0	0.0	0.0	0.03 (1)	7.81
A- B	0 / 41	-91.8	-91.8	0.13 (1)	10.00
B- C	-41 / 0	-91.8	-91.8	0.12 (1)	6.25
C- D	-21 / 0	-91.8	-91.8	0.05 (1)	6.25
D- E	-21 / 0	-91.8	-91.8	0.05 (1)	6.25
E- F	-41 / 0	-91.8	-91.8	0.12 (1)	6.25
F- G	0 / 41	-91.8	-91.8	0.13 (1)	10.00
H- F	-270 / 0	0.0	0.0	0.03 (1)	7.81
L- K	0 / 0	-18.5	-18.5	0.02 (4)	10.00
K- J	0 / 10	-18.5	-18.5	0.02 (4)	10.00
J- I	0 / 10	-18.5	-18.5	0.02 (4)	10.00
I- H	0 / 0	-18.5	-18.5	0.02 (4)	10.00

WEBS

MEMB. FR-TO	MAX. FACTORED FORCE (LBS)	MAX CSI (LC)
J- D	-151 / 0	0.05 (1)
K- C	-159 / 0	0.03 (1)
I- E	-159 / 0	0.03 (1)
B- K	0 / 18	0.00 (1)
I- F	0 / 18	0.00 (1)

[M]

DESIGN CRITERIA

SPECIFIED LOADS:

TOP CH.	LL	=	25.6	PSF
	DL	=	6.0	PSF
BOT CH.	LL	=	0.0	PSF
	DL	=	7.4	PSF
TOTAL LOAD		=	39.0	PSF

SPACING = 24.0 IN. C/C

THIS TRUSS IS DESIGNED FOR RESIDENTIAL OR SMALL BUILDING REQUIREMENTS OF PART 9, NBCC 2015

THIS DESIGN COMPLIES WITH:
- PART 9 OF BCBC 2018 , NBC-2019AE
- PART 9 OF OBC 2012 (2019 AMENDMENT)
- CSA 086-14
- TPIC 2014

DESIGN ASSUMPTIONS
-OVERHANG NOT TO BE ALTERED OR CUT OFF.

(55 % OF 31.3 P.S.F. G.S.L. PLUS 8.4 P.S.F. RAIN LOAD) EQUALS 25.6 P.S.F. SPECIFIED ROOF LIVE LOAD

CSI: TC=0.13/1.00 (F-G:1) , BC=0.02/1.00 (I-J:4) , WB=0.05/1.00 (D-J:1) , SSI=0.08/1.00 (F-G:1)

DOL LUMBER=1.00 NAIL=1.00 LS BEND=1.10 COMP=1.10 SHEAR=1.10 TENS= 1.10

COMPANION LIVE LOAD FACTOR = 1.00

TRUSS PLATE MANUFACTURER IS NOT RESPONSIBLE FOR QUALITY CONTROL IN THE TRUSS MANUFACTURING PLANT .

NAIL VALUES

PLATE	GRIP(DRY) (PSI) MAX	MIN	SHEAR (PLI) MAX	MIN	SECTION (PLI) MAX	MIN
MT20	650	371	1747	788	1987	1873

PLATE PLACEMENT TOL. = 0.250 inches

PLATE ROTATION TOL. = 5.0 Deg.

JSI GRIP= 0.17 (F) (INPUT = 0.90)
JSI METAL= 0.08 (C) (INPUT = 0.95)

LICENSED PROFESSIONAL ENGINEER
9/25/23
C. M. HEYENS
100505065
PROVINCE OF ONTARIO

STRUCTURAL COMPONENT ONLY
DWG # TR23091779

CITY OF RICHMOND HILL
BUILDING DIVISION
05/01/2024
RECEIVED
Per: joshua.nabua

JOB NAME	TRUSS NAME	QUANTITY	PLY	JOB DESC.	DRWG NO.
434950	T15	1	2	GREENPARK HOMES TRUSS DESC.	

Tamarack Roof Truss, Burlington

Version 8.630 S Aug 30 2023 MiTek Industries, Inc. Fri Sep 22 10:16:03 2023 Page 1
ID:?7smMffSHcbvu6uGxGPN4oyih5x-5n24qDHp25xw7JWUlOe?GNrrCbXPtzVyJ Oj1Tyb7DQ

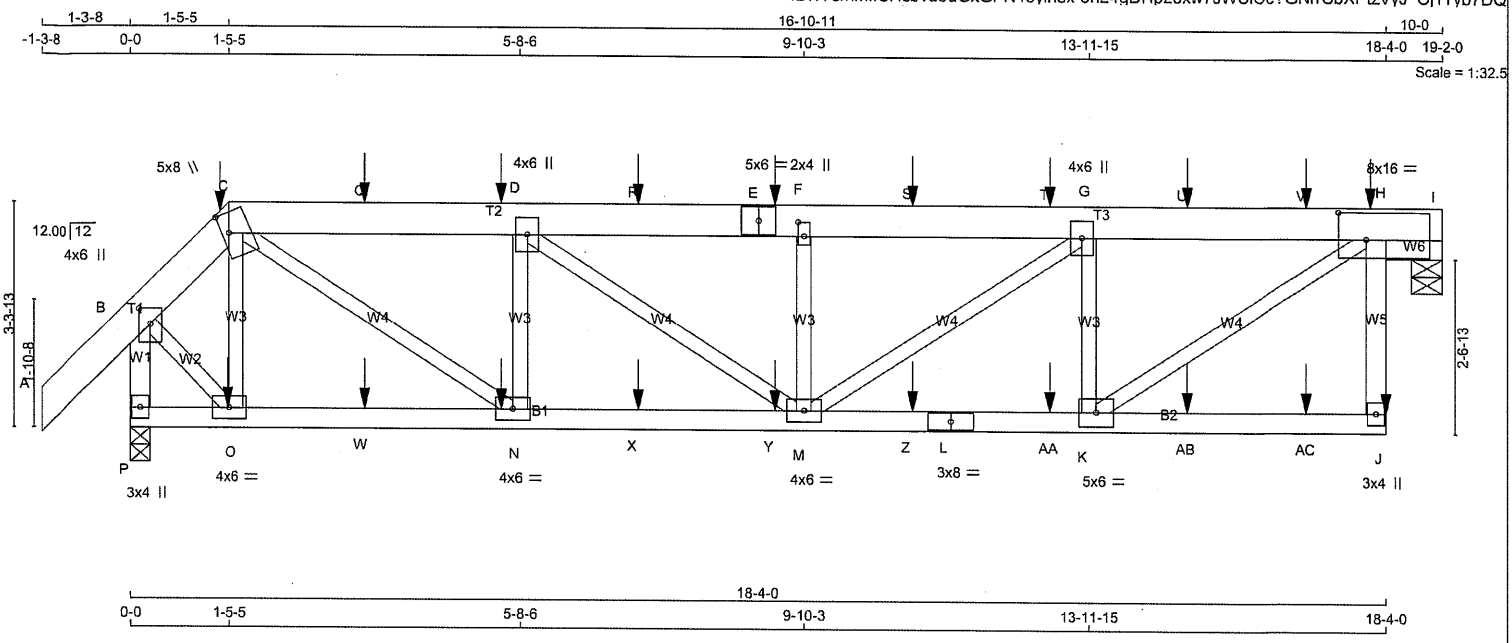

TOTAL WEIGHT = 2 X 91 = 182 lb [M]

LUMBER
N. L. G. A. RULES

CHORDS	SIZE		LUMBER	DESCR.
A - C	2x6	DRY	No.2	SPF
C - E	2x6	DRY	No.2	SPF
E - I	2x6	DRY	No.2	SPF
H - I	2x4	DRY	No.2	SPF
J - H	2x4	DRY	No.2	SPF
P - B	2x4	DRY	No.2	SPF
P - L	2x4	DRY	No.2	SPF
L - J	2x4	DRY	No.2	SPF
ALL WEBS EXCEPT	2x3	DRY	No.2	SPF

DRY: SEASONED LUMBER.

DESIGN CONSISTS OF 2 TRUSSES BUILT SEPARATELY THEN FASTENED TOGETHER AS FOLLOWS:

CHORDS #ROWS		SURFACE SPACING (IN)	LOAD(PLF)
TOP CHORDS : (0.122"X3") SPIRAL NAILS			
A- C	2	12	SIDE(122.0)
C- E	2	12	SIDE(183.1)
E- I	2	12	SIDE(183.1)
H- J	1	12	TOP
P- B	1	12	TOP
BOTTOM CHORDS : (0.122"X3") SPIRAL NAILS			
P- L	1	12	SIDE(61.0)
L- J	1	12	SIDE(61.0)
WEBS : (0.122"X3") SPIRAL NAILS			
2x3	1	6	
2x4	1	6	

NAILS TO BE DRIVEN FROM ONE SIDE ONLY.

GIRDER NAILING ASSUMES NAILED HANGERS ARE FASTENED WITH MIN. 3-0 INCH NAILS.

TOP - COMPONENTS ARE LOADED FROM THE TOP AND MUST BE PLACED ON TOP EDGE OF ALL PLIES FOR THE LOAD TO BE TRANSFERRED TO EACH PLY.

LICENSED PROFESSIONAL ENGINEER
9/25/23
C. M. HEYENS
100505065
PROVINCE OF ONTARIO

STRUCTURAL COMPONENT ONLY
DWG # TR23091796

DIMENSIONS, SUPPORTS AND LOADINGS SPECIFIED BY FABRICATOR TO BE VERIFIED BY BUILDING DESIGNER

BEARINGS

JT	FACTORED GROSS REACTION VERT	HORZ	MAXIMUM FACTORED GROSS REACTION DOWN	HORZ	UPLIFT	INPUT BRG IN-SX	REQRD BRG IN-SX
P	2078	0	2078	0	0	3-8	1-8
I	2063	0	2063	0	0	5-8	1-8

BEVELED PLATE OR SHIM REQUIRED TO PROVIDE FULL BEARING SURFACE WITH TRUSS CHORD AT JT(S): I

UNFACTORED REACTIONS

JT	1ST LCASE COMBINED	MAX./MIN. COMPONENT REACTIONS SNOW	LIVE	PERM.LIVE	WIND	DEAD	SOIL
P	1469	967 / 0	0 / 0	0 / 0	0 / 0	502 / 0	0 / 0
I	1460	952 / 0	0 / 0	0 / 0	0 / 0	508 / 0	0 / 0

BEARING MATERIAL TO BE SPF NO.2 OR BETTER AT JOINT(S) P, I

BRACING
TOP CHORD TO BE SHEATHED OR MAX. PURLIN SPACING = 5.36 FT.
MAX. UNBRACED BOTTOM CHORD LENGTH = 10.00 FT OR RIGID CEILING DIRECTLY APPLIED.

ALL PITCH BREAKS AND PERIMETER CORNER JOINTS MUST BE LATERALLY RESTRAINED.

LOADING
TOTAL LOAD CASES: (4)

CHORDS

MEMB. FR-TO	MAX. FACTORED FORCE (LBS)	FACTORED VERT. LOAD (PLF) FROM	TO	LC1	MAX CSI (LC)	MAX. UNBRAC LENGTH
A- B	0 / 47	-91.8	-91.8	0.04 (1)	10.00	
B- C	-1405 / 0	-91.8	-91.8	0.04 (1)	6.25	
C- Q	-2774 / 0	-91.8	-91.8	0.11 (1)	6.25	
Q- D	-2774 / 0	-91.8	-91.8	0.11 (1)	6.25	
D- R	-3248 / 0	-91.8	-91.8	0.11 (1)	6.04	
R- E	-3248 / 0	-91.8	-91.8	0.11 (1)	6.04	
E- F	-3248 / 0	-91.8	-91.8	0.11 (1)	6.04	
F- S	-3248 / 0	-91.8	-91.8	0.26 (1)	5.83	
S- T	-3248 / 0	-91.8	-91.8	0.26 (1)	5.83	
T- G	-3248 / 0	-91.8	-91.8	0.26 (1)	5.83	
G- U	-2798 / 0	-91.8	-91.8	0.64 (1)	5.36	
U- V	-2798 / 0	-91.8	-91.8	0.64 (1)	5.36	
V- H	-2798 / 0	-91.8	-91.8	0.64 (1)	5.36	
H- I	-831 / 0	-91.8	-91.8	0.39 (1)	6.25	
J- H	0 / 117	0.0	0.0	0.02 (4)	10.00	
P- B	-2098 / 0	0.0	0.0	0.12 (1)	7.64	
P- O	0 / 0	-18.5	-18.5	0.05 (4)	10.00	
O- W	0 / 919	-18.5	-18.5	0.12 (1)	10.00	
W- N	0 / 919	-18.5	-18.5	0.12 (1)	10.00	
N- X	0 / 2775	-18.5	-18.5	0.29 (1)	10.00	
X- Y	0 / 2775	-18.5	-18.5	0.29 (1)	10.00	
Y- M	0 / 2775	-18.5	-18.5	0.29 (1)	10.00	
M- Z	0 / 2798	-18.5	-18.5	0.28 (1)	10.00	
Z- L	0 / 2798	-18.5	-18.5	0.28 (1)	10.00	
L-AA	0 / 2798	-18.5	-18.5	0.28 (1)	10.00	
AA- K	0 / 2798	-18.5	-18.5	0.28 (1)	10.00	
K-AB	0 / 0	-18.5	-18.5	0.08 (4)	10.00	
AB-AC	0 / 0	-18.5	-18.5	0.08 (4)	10.00	
AC- J	0 / 0	-18.5	-18.5	0.08 (4)	10.00	

WEBS

MEMB. FR-TO	MAX. FACTORED FORCE (LBS)	MAX CSI (LC)
O- C	-708 / 0	0.07 (1)
C- N	0 / 2246	0.28 (1)
N- D	-1123 / 0	0.11 (1)
D- M	0 / 581	0.07 (1)
M- F	-508 / 0	0.05 (1)
M- G	0 / 552	0.07 (1)
K- G	-1732 / 0	0.17 (1)
K- H	0 / 3382	0.42 (1)
B- O	0 / 1275	0.16 (1)

SPECIFIED CONCENTRATED LOADS (LBS)

JT	LOC.	LC1	MAX-	MAX+	FACE	DIR.	TYPE	HEEL	CONN.
C	1-5-5	-112	-112	---	BACK	VERT	TOTAL	---	C1
D	5-5-2	-107	-107	---	BACK	VERT	TOTAL	---	C1
E	9-5-2	-107	-107	---	BACK	VERT	TOTAL	---	C1
H	18-1-4	-107	-107	---	BACK	VERT	TOTAL	---	C1
J	18-4-0	-33	-33	---	BACK	VERT	TOTAL	---	C1
N	5-5-2	-28	-28	---	BACK	VERT	TOTAL	---	C1

DESIGN CRITERIA

SPECIFIED LOADS:

TOP	CH.	LL	=	25.6	PSF
		DL	=	6.0	PSF
BOT	CH.	LL	=	0.0	PSF
		DL	=	7.4	PSF
TOTAL	LOAD		=	39.0	PSF

SPACING = 24.0 IN. C/C

LOADING IN FLAT SECTION BASED ON A SLOPE OF 2.00/12 MINIMUM

THIS TRUSS IS DESIGNED FOR RESIDENTIAL OR SMALL BUILDING REQUIREMENTS OF PART 9, NBCC 2015

THIS DESIGN COMPLIES WITH:
- PART 9 OF BCBC 2018 , NBC-2019AE
- PART 9 OF OBC 2012 (2019 AMENDMENT)
- CSA 086-14
- TPIC 2014

DESIGN ASSUMPTIONS
-OVERHANG NOT TO BE ALTERED OR CUT OFF.

(55 % OF 31.3 P.S.F. G.S.L. PLUS 8.4 P.S.F. RAIN LOAD) EQUALS 25.6 P.S.F. SPECIFIED ROOF LIVE LOAD

ALLOWABLE DEFL.(LL)= L/360 (0.61")
CALCULATED VERT. DEFL.(LL) = L/ 999 (0.07")
ALLOWABLE DEFL.(TL)= L/360 (0.61")
CALCULATED VERT. DEFL.(TL) = L/ 999 (0.12")

CSI: TC=0.64/1.00 (G-H:1) , BC=0.29/1.00 (M-N:1) , WB=0.42/1.00 (H-K:1) , SSI=0.38/1.00 (H-I:1)

DOL LUMBER=1.00 NAIL=1.00 LS BEND=1.00 COMP=1.00 SHEAR=1.00 TENS= 1.00

COMPANION LIVE LOAD FACTOR = 1.00

TRUSS PLATE MANUFACTURER IS NOT RESPONSIBLE FOR QUALITY CONTROL IN THE TRUSS MANUFACTURING PLANT .

NAIL VALUES

PLATE	GRIP(DRY) (PSI) MAX	MIN	SHEAR (PLI) MAX	MIN	SECTION (PLI) MAX	MIN
MT20	650	371	1747	788	1987	1873

PLATE PLACEMENT TOL. = 0.250 inches

PLATE ROTATION TOL. = 5.0 Deg.

JSI GRIP= 0.86 (C) (INPUT = 0.90)
JSI METAL= 0.44 (L) (INPUT = 0.95)

CITY OF RICHMOND HILL
BUILDING DIVISION
05/01/2024
RECEIVED
Per: joshua.nabua

CONTINUED ON PAGE 2

JOB NAME	TRUSS NAME	QUANTITY	PLY	JOB DESC.	DRWG NO.
434950	T15	1	2	GREENPARK HOMES TRUSS DESC.	

Tamarack Roof Truss, Burlington

ID:?7smMffSHcbvu6uGxGPN4oyih5x-5n24gDHp25xw7JWUlOe?GNrrCbXPtzVyJ_Oj1Tyb7DQ

PLATES (table is in inches)

JT	TYPE	PLATES	W	LEN	Y	X
B	TMVW+p	MT20	4.0	6.0	2.75	2.00
C	TTWW+m	MT20	5.0	8.0	3.50	1.25
D	TMWW+t	MT20	4.0	6.0		
E	TS-t	MT20	5.0	6.0		
F	TMW+w	MT20	2.0	4.0	2.50	1.00
G	TMWW+t	MT20	4.0	6.0		
H	TMVWW-t	MT20	8.0	16.0	4.75	4.75
J	BMV+p	MT20	3.0	4.0		
K	BMWW-t	MT20	5.0	6.0		
L	BS-t	MT20	3.0	8.0		
M	BMWWW-t	MT20	4.0	6.0		
N	BMWW-t	MT20	4.0	6.0		
O	BMWW-t	MT20	4.0	6.0		
P	BMV1+p	MT20	3.0	4.0		

NOTES- (1)
1) Lateral braces to be a minimum of 2X4 SPF #2.

SPECIFIED CONCENTRATED LOADS (LBS)

JT	LOC.	LC1	MAX-	MAX+	FACE	DIR.	TYPE	HEEL	CONN.
O	1-5-2	-28	-28	---	BACK	VERT	TOTAL	---	C1
Q	3-5-2	-107	-107	---	BACK	VERT	TOTAL	---	C1
R	7-5-2	-107	-107	---	BACK	VERT	TOTAL	---	C1
S	11-5-2	-107	-107	---	BACK	VERT	TOTAL	---	C1
T	13-5-2	-107	-107	---	BACK	VERT	TOTAL	---	C1
U	15-5-2	-107	-107	---	BACK	VERT	TOTAL	---	C1
V	17-2-2	-107	-107	---	BACK	VERT	TOTAL	---	C1
W	3-5-2	-28	-28	---	BACK	VERT	TOTAL	---	C1
X	7-5-2	-28	-28	---	BACK	VERT	TOTAL	---	C1
Y	9-5-2	-28	-28	---	BACK	VERT	TOTAL	---	C1
Z	11-5-2	-28	-28	---	BACK	VERT	TOTAL	---	C1
AA	13-5-2	-28	-28	---	BACK	VERT	TOTAL	---	C1
AB	15-5-2	-28	-28	---	BACK	VERT	TOTAL	---	C1
AC	17-2-2	-28	-28	---	BACK	VERT	TOTAL	---	C1

CONNECTION REQUIREMENTS

1) **C1:** A SUITABLE HANGER/MECHANICAL CONNECTION IS REQUIRED.

LICENSED PROFESSIONAL ENGINEER
9/25/23
C. M. HEYENS
100505065
PROVINCE OF ONTARIO

STRUCTURAL COMPONENT ONLY
DWG # TR23091796

CITY OF RICHMOND HILL
BUILDING DIVISION
05/01/2024
RECEIVED
Per: joshua.nabua

JOB NAME	TRUSS NAME	QUANTITY	PLY	JOB DESC.	DRWG NO.
434950	T16	1	2	GREENPARK HOMES TRUSS DESC.	

Tamarack Roof Truss, Burlington

Version 8.630 S Aug 30 2023 MiTek Industries, Inc. Fri Sep 22 10:16:04 2023 Page 1
ID:?7smMffSHcbvu6uGxGPN4oyih5x-ZzcSuZlRpP3mkT5qJ69EpaN97?uHcWH6Ye8HZvyb7DP

Scale = 1:27.3

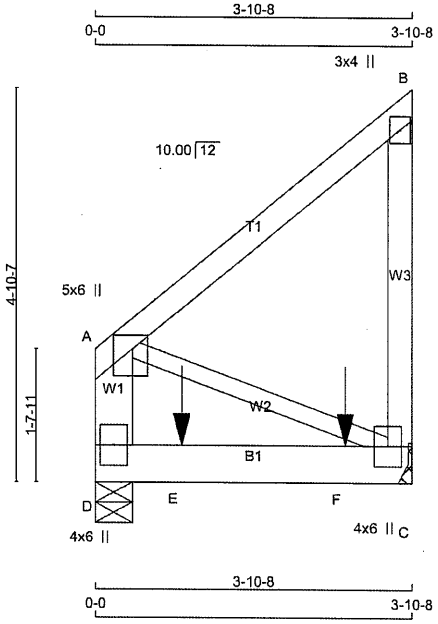

TOTAL WEIGHT = 2 X 22 = 45 lb
[M][F]

LUMBER
N. L. G. A. RULES

CHORDS	SIZE		LUMBER	DESCR.
A - B	2x4	DRY	No.2	SPF
C - B	2x4	DRY	No.2	SPF
D - A	2x6	DRY	No.2	SPF
D - C	2x6	DRY	No.2	SPF
ALL WEBS	2x3	DRY	No.2	SPF

DRY: SEASONED LUMBER.

DESIGN CONSISTS OF 2 TRUSSES BUILT SEPARATELY THEN FASTENED TOGETHER AS FOLLOWS:

CHORDS	#ROWS	SURFACE SPACING (IN)	LOAD(PLF)
TOP CHORDS : (0.122"X3") SPIRAL NAILS			
A- B	1	12	TOP
B- C	1	12	TOP
D- A	2	12	TOP
BOTTOM CHORDS : (0.122"X3") SPIRAL NAILS			
D- C	2	12	SIDE(0.0)
WEBS : (0.122"X3") SPIRAL NAILS			
2x3	1	6	

NAILS TO BE DRIVEN FROM ONE SIDE ONLY.

GIRDER NAILING ASSUMES NAILED HANGERS ARE FASTENED WITH MIN. 3-0 INCH NAILS.

TOP - COMPONENTS ARE LOADED FROM THE TOP AND MUST BE PLACED ON TOP EDGE OF ALL PLIES FOR THE LOAD TO BE TRANSFERRED TO EACH PLY.

SIDE - PLF SHOWN IS THE EQUIVALENT UDL APPLIED TO ONE SIDE THAT THE CORRESPONDING NAILING PATTERN SHALL BE CAPABLE OF TRANSFERING. REMAINING PLF MUST BE APPLIED ON THE OPPOSITE SIDE OR ON THE TOP.

PLATES (table is in inches)

JT	TYPE	PLATES	W	LEN	Y	X
A	TMVW+p	MT20	5.0	6.0	2.00	2.25
B	TMV+p	MT20	3.0	4.0		
C	BMVW1+p	MT20	4.0	6.0		
D	BMV1+p	MT20	4.0	6.0		

LICENSED PROFESSIONAL ENGINEER
9/25/23
C. M. HEYENS
100505065
PROVINCE OF ONTARIO

STRUCTURAL COMPONENT ONLY
DWG # TR23091797

DIMENSIONS, SUPPORTS AND LOADINGS SPECIFIED BY FABRICATOR TO BE VERIFIED BY BUILDING DESIGNER

BEARINGS

JT	FACTORED GROSS REACTION VERT	HORZ	MAXIMUM FACTORED GROSS REACTION DOWN	HORZ	UPLIFT	INPUT BRG IN-SX	REQRD BRG IN-SX
C	971	0	971	0	0	MECHANICAL	
D	879	0	879	0	0	5-8	1-8

A SUITABLE HANGER/MECHANICAL CONNECTION IS REQUIRED AT JOINT C. MINIMUM BEARING LENGTH AT JOINT C = 1-8.

UNFACTORED REACTIONS

MAX./MIN. COMPONENT REACTIONS

JT	1ST LCASE COMBINED	SNOW	LIVE	PERM.LIVE	WIND	DEAD	SOIL
C	682	472 / 0	0 / 0	0 / 0	0 / 0	211 / 0	0 / 0
D	618	427 / 0	0 / 0	0 / 0	0 / 0	191 / 0	0 / 0

BEARING MATERIAL TO BE SPF NO.2 OR BETTER AT JOINT(S) D

BRACING
TOP CHORD TO BE SHEATHED OR MAX. PURLIN SPACING = 10.00 FT.
MAX. UNBRACED BOTTOM CHORD LENGTH = 10.00 FT OR RIGID CEILING DIRECTLY APPLIED.

ALL PITCH BREAKS AND PERIMETER CORNER JOINTS MUST BE LATERALLY RESTRAINED.

LOADING
TOTAL LOAD CASES: (4)

CHORDS

MEMB. FR-TO	MAX. FORCE (LBS)	FACTORED VERT. LOAD (PLF) FROM	TO	LC1 CSI (LC)	MAX UNBRAC LENGTH
A- B	0 / 0	-91.8	-91.8	0.12 (1)	10.00
C- B	-178 / 0	0.0	0.0	0.03 (1)	7.81
D- A	-178 / 0	0.0	0.0	0.01 (1)	7.81
D- E	0 / 0	-18.5	-18.5	0.25 (1)	10.00
E- F	0 / 0	-18.5	-18.5	0.25 (1)	10.00
F- C	0 / 0	-18.5	-18.5	0.25 (1)	10.00

WEBS

MEMB. FR-TO	MAX. FORCE (LBS)	MAX CSI (LC)
A- C	0 / 0	0.00 (1)

SPECIFIED CONCENTRATED LOADS (LBS)

JT	LOC.	LC1	MAX-	MAX+	FACE	DIR.	TYPE	HEEL	CONN.
E	1-0-12	-498	-498	---	FRONT	VERT	TOTAL	---	C1
F	3-0-12	-500	-500	---	FRONT	VERT	TOTAL	---	C1

CONNECTION REQUIREMENTS

1) **C1:** A SUITABLE HANGER/MECHANICAL CONNECTION IS REQUIRED.

DESIGN CRITERIA

SPECIFIED LOADS:

TOP	CH.	LL =	25.6	PSF
		DL =	6.0	PSF
BOT	CH.	LL =	0.0	PSF
		DL =	7.4	PSF
TOTAL	LOAD	=	39.0	PSF

SPACING = 24.0 IN. C/C

THIS TRUSS IS DESIGNED FOR RESIDENTIAL OR SMALL BUILDING REQUIREMENTS OF PART 9, NBCC 2015

THIS DESIGN COMPLIES WITH:
- PART 9 OF BCBC 2018 , NBC-2019AE
- PART 9 OF OBC 2012 (2019 AMENDMENT)
- CSA 086-14
- TPIC 2014

(55 % OF 31.3 P.S.F. G.S.L. PLUS 8.4 P.S.F. RAIN LOAD) EQUALS 25.6 P.S.F. SPECIFIED ROOF LIVE LOAD

ALLOWABLE DEFL.(LL)= L/360 (0.19")
CALCULATED VERT. DEFL.(LL) = L/ 999 (0.02")
ALLOWABLE DEFL.(TL)= L/360 (0.19")
CALCULATED VERT. DEFL.(TL) = L/ 999 (0.03")

CSI: TC=0.12/1.00 (A-B:1) , BC=0.25/1.00 (C-D:1) , WB=0.00/1.00 (A-C:1) , SSI=0.24/1.00 (C-D:1)

DOL LUMBER=1.00 NAIL=1.00 LS BEND=1.10 COMP=1.10 SHEAR=1.10 TENS= 1.10

COMPANION LIVE LOAD FACTOR = 1.00

AUTOSOLVE RIGHT HEEL ONLY

TRUSS PLATE MANUFACTURER IS NOT RESPONSIBLE FOR QUALITY CONTROL IN THE TRUSS MANUFACTURING PLANT .

NAIL VALUES

PLATE	GRIP(DRY) (PSI) MAX	MIN	SHEAR (PLI) MAX	MIN	SECTION (PLI) MAX	MIN
MT20	650	371	1747	788	1987	1873

PLATE PLACEMENT TOL. = 0.250 inches

PLATE ROTATION TOL. = 5.0 Deg.

JSI GRIP= 0.04 (B) (INPUT = 0.90)
JSI METAL= 0.03 (B) (INPUT = 0.95)

CITY OF RICHMOND HILL
BUILDING DIVISION
05/01/2024
RECEIVED
Per: joshua.nabua

CONTINUED ON PAGE 2

JOB NAME	TRUSS NAME	QUANTITY	PLY	JOB DESC. GREENPARK HOMES	DRWG NO.
434950	T16	1	2	TRUSS DESC.	

Tamarack Roof Truss, Burlington

Version 8.630 S Aug 30 2023 MiTek Industries, Inc. Fri Sep 22 10:16:04 2023 Page 2

ID:??smMffSHcbvu6uGxGPN4oyih5x-ZzcSuZIRpP3mkT5gJ69EpaN97?uHcWH6Ye8HZvyb7DP

NOTES- (1)

1) Lateral braces to be a minimum of 2X4 SPF #2.

LICENSED PROFESSIONAL ENGINEER

9/25/23

C. M. HEYENS

100505065

PROVINCE OF ONTARIO

STRUCTURAL COMPONENT ONLY

DWG # TR23091797

CITY OF RICHMOND HILL

BUILDING DIVISION

05/01/2024

RECEIVED

Per: joshua.nabua

JOB NAME	TRUSS NAME	QUANTITY	PLY	JOB DESC.	DRWG NO.
434950	T16Z	1	2	GREENPARK HOMES TRUSS DESC.	

Tamarack Roof Truss, Burlington

Version 8.630 S Aug 30 2023 MiTek Industries, Inc. Fri Sep 22 10:16:05 2023 Page 1
ID:?7smMffSHcbvu6uGxGPN4oyih5x-19Ar5vJ4ajBdMdqstpqTMowJiPCtLzXFnHtq5Lyb7DO

Scale = 1:27.3

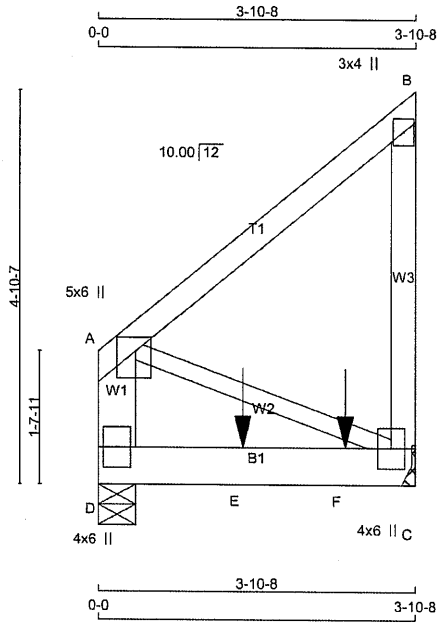

TOTAL WEIGHT = 2 X 22 = 45 lb

[M]

LUMBER

N. L. G. A. RULES

CHORDS	SIZE		LUMBER	DESCR.
A - B	2x4	DRY	No.2	SPF
C - B	2x4	DRY	No.2	SPF
D - A	2x6	DRY	No.2	SPF
D - C	2x6	DRY	No.2	SPF
ALL WEBS	2x3	DRY	No.2	SPF

DRY: SEASONED LUMBER.

DESIGN CONSISTS OF 2 TRUSSES BUILT SEPARATELY THEN FASTENED TOGETHER AS FOLLOWS:

CHORDS	#ROWS	SURFACE SPACING (IN)	LOAD(PLF)
TOP CHORDS : (0.122"X3") SPIRAL NAILS			
A- B	1	12	TOP
B- C	1	12	TOP
D- A	2	12	TOP
BOTTOM CHORDS : (0.122"X3") SPIRAL NAILS			
D- C	2	12	SIDE(0.0)
WEBS : (0.122"X3") SPIRAL NAILS			
2x3	1	6	

NAILS TO BE DRIVEN FROM ONE SIDE ONLY.

GIRDER NAILING ASSUMES NAILED HANGERS ARE FASTENED WITH MIN. 3-0 INCH NAILS.

TOP - COMPONENTS ARE LOADED FROM THE TOP AND MUST BE PLACED ON TOP EDGE OF ALL PLIES FOR THE LOAD TO BE TRANSFERRED TO EACH PLY.

SIDE - PLF SHOWN IS THE EQUIVALENT UDL APPLIED TO ONE SIDE THAT THE CORRESPONDING NAILING PATTERN SHALL BE CAPABLE OF TRANSFERING. REMAINING PLF MUST BE APPLIED ON THE OPPOSITE SIDE OR ON THE TOP.

PLATES (table is in inches)

JT	TYPE	PLATES	W	LEN	Y	X
A	TMVW+p	MT20	5.0	6.0	2.00	2.25
B	TMV+p	MT20	3.0	4.0		
C	BMVW1+p	MT20	4.0	6.0		
D	BMV1+p	MT20	4.0	6.0		

LICENSED PROFESSIONAL ENGINEER
9/25/23
C. M. HEYENS
100505065
PROVINCE OF ONTARIO

STRUCTURAL COMPONENT ONLY
DWG # TR23091798

DIMENSIONS, SUPPORTS AND LOADINGS SPECIFIED BY FABRICATOR TO BE VERIFIED BY BUILDING DESIGNER

BEARINGS

JT	FACTORED GROSS REACTION VERT	HORZ	MAXIMUM FACTORED GROSS REACTION DOWN	HORZ	UPLIFT	INPUT BRG IN-SX	REQRD BRG IN-SX
C	1053	0	1053	0	0	MECHANICAL	
D	732	0	732	0	0	5-8	1-8

A SUITABLE HANGER/MECHANICAL CONNECTION IS REQUIRED AT JOINT C. MINIMUM BEARING LENGTH AT JOINT C = 1-8.

UNFACTORED REACTIONS

MAX./MIN. COMPONENT REACTIONS

JT	1ST LCASE COMBINED	SNOW	LIVE	PERM.LIVE	WIND	DEAD	SOIL
C	740	514 / 0	0 / 0	0 / 0	0 / 0	226 / 0	0 / 0
D	514	355 / 0	0 / 0	0 / 0	0 / 0	159 / 0	0 / 0

BEARING MATERIAL TO BE SPF NO.2 OR BETTER AT JOINT(S) D

BRACING

TOP CHORD TO BE SHEATHED OR MAX. PURLIN SPACING = 10.00 FT.
MAX. UNBRACED BOTTOM CHORD LENGTH = 10.00 FT OR RIGID CEILING DIRECTLY APPLIED.

ALL PITCH BREAKS AND PERIMETER CORNER JOINTS MUST BE LATERALLY RESTRAINED.

LOADING

TOTAL LOAD CASES: (4)

CHORDS

MEMB. FR-TO	MAX. FACTORED FORCE (LBS)	FACTORED VERT. LOAD (PLF)	LC1 FROM	LC1 TO	MAX CSI (LC)	MAX. UNBRAC LENGTH
A- B	0 / 0	-91.8	-91.8	0.13 (1)	10.00	
C- B	-178 / 0	0.0	0.0	0.03 (1)	7.81	
D- A	-178 / 0	0.0	0.0	0.01 (1)	7.81	
D- E	0 / 0	-18.5	-18.5	0.35 (1)	10.00	
E- F	0 / 0	-18.5	-18.5	0.35 (1)	10.00	
F- C	0 / 0	-18.5	-18.5	0.35 (1)	10.00	

WEBS

MEMB. FR-TO	MAX. FACTORED FORCE (LBS)	MAX CSI (LC)
A- C	0 / 0	0.00 (1)

SPECIFIED CONCENTRATED LOADS (LBS)

JT	LOC.	LC1	MAX-	MAX+	FACE	DIR.	TYPE	HEEL	CONN.
E	1-9-4	-476	-476	---	BACK	VERT	TOTAL	---	C1
F	3-0-4	-477	-477	---	BACK	VERT	TOTAL	---	C1

CONNECTION REQUIREMENTS

1) **C1:** A SUITABLE HANGER/MECHANICAL CONNECTION IS REQUIRED.

DESIGN CRITERIA

SPECIFIED LOADS:

TOP CH.	LL	=	25.6	PSF
	DL	=	6.0	PSF
BOT CH.	LL	=	0.0	PSF
	DL	=	7.4	PSF
TOTAL LOAD		=	39.0	PSF

SPACING = 24.0 IN. C/C

THIS TRUSS IS DESIGNED FOR RESIDENTIAL OR SMALL BUILDING REQUIREMENTS OF PART 9, NBCC 2015

THIS DESIGN COMPLIES WITH:
- PART 9 OF BCBC 2018 , NBC-2019AE
- PART 9 OF OBC 2012 (2019 AMENDMENT)
- CSA 086-14
- TPIC 2014

(55 % OF 31.3 P.S.F. G.S.L. PLUS 8.4 P.S.F. RAIN LOAD) EQUALS 25.6 P.S.F. SPECIFIED ROOF LIVE LOAD

ALLOWABLE DEFL.(LL)= L/360 (0.19")
CALCULATED VERT. DEFL.(LL) = L/ 999 (0.02")
ALLOWABLE DEFL.(TL)= L/360 (0.19")
CALCULATED VERT. DEFL.(TL) = L/ 999 (0.04")

CSI: TC=0.13/1.00 (A-B:1) , BC=0.35/1.00 (C-D:1) , WB=0.00/1.00 (A-C:1) , SSI=0.29/1.00 (C-D:1)

DOL LUMBER=1.00 NAIL=1.00 LS BEND=1.00 COMP=1.00 SHEAR=1.00 TENS= 1.00

COMPANION LIVE LOAD FACTOR = 1.00

AUTOSOLVE RIGHT HEEL ONLY

TRUSS PLATE MANUFACTURER IS NOT RESPONSIBLE FOR QUALITY CONTROL IN THE TRUSS MANUFACTURING PLANT .

NAIL VALUES

PLATE	GRIP(DRY) (PSI) MAX	MIN	SHEAR (PLI) MAX	MIN	SECTION (PLI) MAX	MIN
MT20	650	371	1747	788	1987	1873

PLATE PLACEMENT TOL. = 0.250 inches

PLATE ROTATION TOL. = 5.0 Deg.

JSI GRIP= 0.04 (B) (INPUT = 0.90)
JSI METAL= 0.03 (B) (INPUT = 0.95)

CITY OF RICHMOND HILL
BUILDING DIVISION
05/01/2024
RECEIVED
Per: joshua.nabua

CONTINUED ON PAGE 2

JOB NAME	TRUSS NAME	QUANTITY	PLY	JOB DESC. GREENPARK HOMES	DRWG NO.
434950	T16Z	1	2	TRUSS DESC.	

Tamarack Roof Truss, Burlington

Version 8.630 S Aug 30 2023 MiTek Industries, Inc. Fri Sep 22 10:16:05 2023 Page 2
ID:?7smMffSHcbvu6uGxGPN4oyih5x-19Ar5vJ4ajBdMdgstpgTMowJiPCtLzXFnHtq5Lyb7DO

NOTES- (1)
1) Lateral braces to be a minimum of 2X4 SPF #2.

LICENSED PROFESSIONAL ENGINEER
9/25/23
C. M. HEYENS
100505065
PROVINCE OF ONTARIO

STRUCTURAL COMPONENT ONLY
DWG # TR23091798

CITY OF RICHMOND HILL
BUILDING DIVISION
05/01/2024
RECEIVED
Per: joshua.nabua

JOB NAME	TRUSS NAME	QUANTITY	PLY	JOB DESC.	DRWG NO.
434951	T16Z1	1	2	GREENPARK HOMES TRUSS DESC.	

Tamarack Roof Truss, Burlington

Version 8.630 S Aug 30 2023 MiTek Industries, Inc. Fri Sep 22 10:21:57 2023 Page 1
ID:?7smMffSHcbvu6uGxGPN4oyih5x-jtRvzGatgsXhbjaWUI 0d1VTtILCp9q3j29SRyyb77u

Scale = 1:27.3

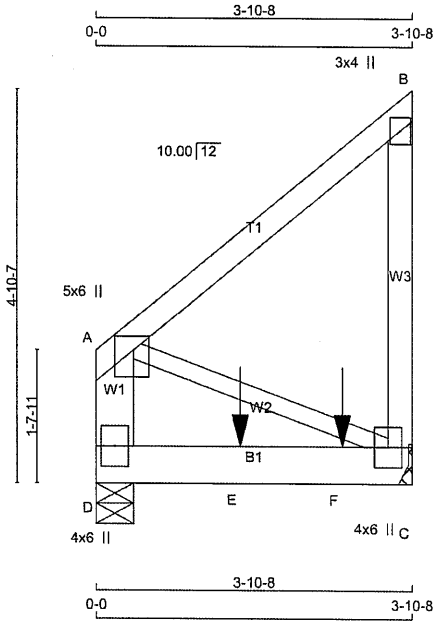

TOTAL WEIGHT = 2 X 22 = 45 lb

[M]

LUMBER

N. L. G. A. RULES

CHORDS	SIZE		LUMBER	DESCR.
A - B	2x4	DRY	No.2	SPF
C - B	2x4	DRY	No.2	SPF
D - A	2x6	DRY	No.2	SPF
D - C	2x6	DRY	No.2	SPF
ALL WEBS	2x3	DRY	No.2	SPF

DRY: SEASONED LUMBER.

DESIGN CONSISTS OF 2 TRUSSES BUILT SEPARATELY THEN FASTENED TOGETHER AS FOLLOWS:

CHORDS	#ROWS	SURFACE SPACING (IN)	LOAD(PLF)
TOP CHORDS : (0.122"X3") SPIRAL NAILS			
A- B	1	12	TOP
B- C	1	12	TOP
D- A	2	12	TOP
BOTTOM CHORDS : (0.122"X3") SPIRAL NAILS			
D- C	2	12	SIDE(0.0)
WEBS : (0.122"X3") SPIRAL NAILS			
2x3	1	6	

NAILS TO BE DRIVEN FROM ONE SIDE ONLY.

GIRDER NAILING ASSUMES NAILED HANGERS ARE FASTENED WITH MIN. 3-0 INCH NAILS.

TOP - COMPONENTS ARE LOADED FROM THE TOP AND MUST BE PLACED ON TOP EDGE OF ALL PLIES FOR THE LOAD TO BE TRANSFERRED TO EACH PLY.

SIDE - PLF SHOWN IS THE EQUIVALENT UDL APPLIED TO ONE SIDE THAT THE CORRESPONDING NAILING PATTERN SHALL BE CAPABLE OF TRANSFERING. REMAINING PLF MUST BE APPLIED ON THE OPPOSITE SIDE OR ON THE TOP.

PLATES (table is in inches)

JT	TYPE	PLATES	W	LEN	Y	X
A	TMVW+p	MT20	5.0	6.0	2.00	2.25
B	TMV+p	MT20	3.0	4.0		
C	BMVW1+p	MT20	4.0	6.0		
D	BMV1+p	MT20	4.0	6.0		

LICENSED PROFESSIONAL ENGINEER
9/25/23
C. M. HEYENS
100505065
PROVINCE OF ONTARIO

STRUCTURAL COMPONENT ONLY
DWG # TR23091807

DIMENSIONS, SUPPORTS AND LOADINGS SPECIFIED BY FABRICATOR TO BE VERIFIED BY BUILDING DESIGNER

BEARINGS

JT	FACTORED GROSS REACTION VERT	HORZ	MAXIMUM FACTORED GROSS REACTION DOWN	HORZ	UPLIFT	INPUT BRG IN-SX	REQRD BRG IN-SX
C	896	0	896	0	0	MECHANICAL	
D	635	0	635	0	0	5-8	1-8

A SUITABLE HANGER/MECHANICAL CONNECTION IS REQUIRED AT JOINT C. MINIMUM BEARING LENGTH AT JOINT C = 1-8.

UNFACTORED REACTIONS

MAX./MIN. COMPONENT REACTIONS

JT	1ST LCASE COMBINED	SNOW	LIVE	PERM.LIVE	WIND	DEAD	SOIL
C	632	426 / 0	0 / 0	0 / 0	0 / 0	206 / 0	0 / 0
D	448	301 / 0	0 / 0	0 / 0	0 / 0	147 / 0	0 / 0

BEARING MATERIAL TO BE SPF NO.2 OR BETTER AT JOINT(S) D

BRACING

TOP CHORD TO BE SHEATHED OR MAX. PURLIN SPACING = 10.00 FT.
MAX. UNBRACED BOTTOM CHORD LENGTH = 10.00 FT OR RIGID CEILING DIRECTLY APPLIED.

ALL PITCH BREAKS AND PERIMETER CORNER JOINTS MUST BE LATERALLY RESTRAINED.

LOADING

TOTAL LOAD CASES: (4)

CHORDS

MEMB. FR-TO	MAX. FORCE (LBS)	FACTORED VERT. LOAD (PLF) FROM	TO	LC1	MAX CSI (LC)	MAX. UNBRAC LENGTH
A- B	0 / 0	-91.8	-91.8	0.13 (1)	10.00	
C- B	-178 / 0	0.0	0.0	0.03 (1)	7.81	
D- A	-178 / 0	0.0	0.0	0.01 (1)	7.81	
D- E	0 / 0	-18.5	-18.5	0.29 (1)	10.00	
E- F	0 / 0	-18.5	-18.5	0.29 (1)	10.00	
F- C	0 / 0	-18.5	-18.5	0.29 (1)	10.00	

WEBS

MEMB. FR-TO	MAX. FORCE (LBS)	MAX CSI (LC)
A- C	0 / 0	0.00 (1)

SPECIFIED CONCENTRATED LOADS (LBS)

JT	LOC.	LC1	MAX-	MAX+	FACE	DIR.	TYPE	HEEL	CONN.
E	1-9-4	-388	-388	---	BACK	VERT	TOTAL	---	C1
F	3-0-4	-389	-389	---	BACK	VERT	TOTAL	---	C1

CONNECTION REQUIREMENTS

1) **C1:** A SUITABLE HANGER/MECHANICAL CONNECTION IS REQUIRED.

DESIGN CRITERIA

SPECIFIED LOADS:

TOP	CH.	LL	=	25.6	PSF
		DL	=	6.0	PSF
BOT	CH.	LL	=	0.0	PSF
		DL	=	7.4	PSF
TOTAL	LOAD		=	39.0	PSF

SPACING = 24.0 IN. C/C

THIS TRUSS IS DESIGNED FOR RESIDENTIAL OR SMALL BUILDING REQUIREMENTS OF PART 9, NBCC 2015

THIS DESIGN COMPLIES WITH:
- PART 9 OF BCBC 2018 , NBC-2019AE
- PART 9 OF OBC 2012 (2019 AMENDMENT)
- CSA 086-14
- TPIC 2014

(55 % OF 31.3 P.S.F. G.S.L. PLUS 8.4 P.S.F. RAIN LOAD) EQUALS 25.6 P.S.F. SPECIFIED ROOF LIVE LOAD

ALLOWABLE DEFL.(LL)= L/360 (0.19")
CALCULATED VERT. DEFL.(LL) = L/ 999 (0.02")
ALLOWABLE DEFL.(TL)= L/360 (0.19")
CALCULATED VERT. DEFL.(TL) = L/ 999 (0.03")

CSI: TC=0.13/1.00 (A-B:1) , BC=0.29/1.00 (C-D:1) , WB=0.00/1.00 (A-C:1) , SSI=0.24/1.00 (C-D:1)

DOL LUMBER=1.00 NAIL=1.00 LS BEND=1.00 COMP=1.00 SHEAR=1.00 TENS= 1.00

COMPANION LIVE LOAD FACTOR = 1.00

AUTOSOLVE RIGHT HEEL ONLY

TRUSS PLATE MANUFACTURER IS NOT RESPONSIBLE FOR QUALITY CONTROL IN THE TRUSS MANUFACTURING PLANT .

NAIL VALUES

PLATE	GRIP(DRY) (PSI) MAX	MIN	SHEAR (PLI) MAX	MIN	SECTION (PLI) MAX	MIN
MT20	650	371	1747	788	1987	1873

PLATE PLACEMENT TOL. = 0.250 inches

PLATE ROTATION TOL. = 5.0 Deg.

JSI GRIP= 0.04 (B) (INPUT = 0.90)
JSI METAL= 0.03 (B) (INPUT = 0.95)

CITY OF RICHMOND HILL
BUILDING DIVISION
05/01/2024
RECEIVED
Per: joshua.nabua

CONTINUED ON PAGE 2

JOB NAME	TRUSS NAME	QUANTITY	PLY	JOB DESC. GREENPARK HOMES	DRWG NO.
434951	T16Z1	1	2	TRUSS DESC.	

Tamarack Roof Truss, Burlington

Version 8.630 S Aug 30 2023 MiTek Industries, Inc. Fri Sep 22 10:21:57 2023 Page 2
ID:?7smMffSHcbvu6uGxGPN4oyih5x-jtRvzGatgsXhbjaWUI_0d1VTtILCp9g3j29SRyyb77u

NOTES- (1)
1) Lateral braces to be a minimum of 2X4 SPF #2.

LICENSED PROFESSIONAL ENGINEER
9/25/23
C. M. HEYENS
100505065
PROVINCE OF ONTARIO

STRUCTURAL COMPONENT ONLY
DWG # TR23091807

CITY OF RICHMOND HILL
BUILDING DIVISION
05/01/2024
RECEIVED
Per: joshua.nabua

JOB NAME	TRUSS NAME	QUANTITY	PLY	JOB DESC.	DRWG NO.
434950	T17	1	2	GREENPARK HOMES TRUSS DESC.	

Tamarack Roof Truss, Burlington

Version 8.630 S Aug 30 2023 MiTek Industries, Inc. Fri Sep 22 10:16:06 2023 Page 1
ID:?7smMffSHcbvu6uGxGPN4oyih5x-VMkDJFKiL0JU nF3QXBiu?TW3pcD4QpO?xdOdoyb7DN

Scale = 1:19.7

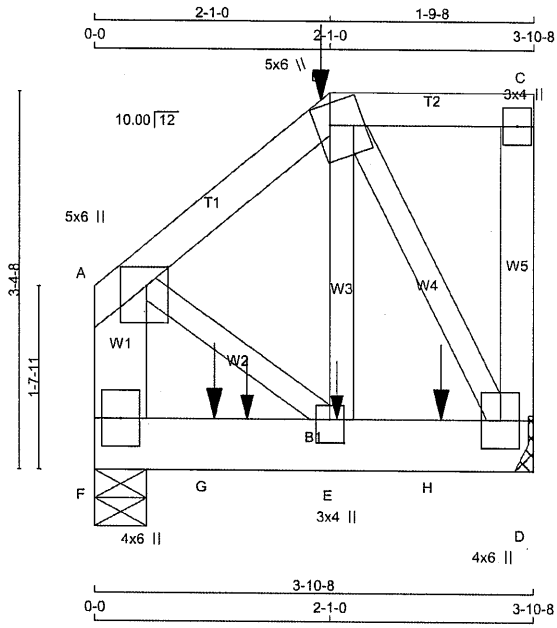

TOTAL WEIGHT = 2 X 24 = 47 lb

[M][F]

LUMBER

N. L. G. A. RULES

CHORDS	SIZE		LUMBER	DESCR.
A - B	2x4	DRY	No.2	SPF
B - C	2x4	DRY	No.2	SPF
D - C	2x4	DRY	No.2	SPF
F - A	2x6	DRY	No.2	SPF
F - D	2x6	DRY	No.2	SPF
ALL WEBS EXCEPT	2x3	DRY	No.2	SPF

DRY: SEASONED LUMBER.

DESIGN CONSISTS OF 2 TRUSSES BUILT SEPARATELY THEN FASTENED TOGETHER AS FOLLOWS:

CHORDS	#ROWS	SURFACE SPACING (IN)	LOAD(PLF)
TOP CHORDS : (0.122"X3") SPIRAL NAILS			
A- B	1	12	SIDE(61.0)
B- C	1	12	SIDE(61.0)
C- D	1	12	TOP
F- A	2	12	TOP
BOTTOM CHORDS : (0.122"X3") SPIRAL NAILS			
F- D	2	12	SIDE(0.0)
WEBS : (0.122"X3") SPIRAL NAILS			
2x3	1	6	

NAILS TO BE DRIVEN FROM ONE SIDE ONLY.

GIRDER NAILING ASSUMES NAILED HANGERS ARE FASTENED WITH MIN. 3-0 INCH NAILS.

TOP - COMPONENTS ARE LOADED FROM THE TOP AND MUST BE PLACED ON TOP EDGE OF ALL PLIES FOR THE LOAD TO BE TRANSFERRED TO EACH PLY.

SIDE - PLF SHOWN IS THE EQUIVALENT UDL APPLIED TO ONE SIDE THAT THE CORRESPONDING NAILING PATTERN SHALL BE CAPABLE OF TRANSFERING. REMAINING PLF MUST BE APPLIED ON THE OPPOSITE SIDE OR ON THE TOP.

PLATES (table is in inches)

JT	TYPE	PLATES	W	LEN	Y	X
A	TMVW+p	MT20	5.0	6.0	2.00	2.25

LICENSED PROFESSIONAL ENGINEER
9/25/23
C. M. HEYENS
100505065
PROVINCE OF ONTARIO

STRUCTURAL COMPONENT ONLY
DWG # TR23091799

DIMENSIONS, SUPPORTS AND LOADINGS SPECIFIED BY FABRICATOR TO BE VERIFIED BY BUILDING DESIGNER

BEARINGS

JT	FACTORED GROSS REACTION VERT	HORZ	MAXIMUM FACTORED GROSS REACTION DOWN	HORZ	UPLIFT	INPUT BRG IN-SX	REQRD BRG IN-SX
D	844	0	844	0	0	MECHANICAL	
F	766	0	766	0	0	5-8	1-8

A SUITABLE HANGER/MECHANICAL CONNECTION IS REQUIRED AT JOINT D. MINIMUM BEARING LENGTH AT JOINT D = 1-8.

UNFACTORED REACTIONS

1ST LCASE MAX./MIN. COMPONENT REACTIONS

JT	COMBINED	SNOW	LIVE	PERM.LIVE	WIND	DEAD	SOIL
D	592	419 / 0	0 / 0	0 / 0	0 / 0	173 / 0	0 / 0
F	537	379 / 0	0 / 0	0 / 0	0 / 0	158 / 0	0 / 0

BEARING MATERIAL TO BE SPF NO.2 OR BETTER AT JOINT(S) F

BRACING

TOP CHORD TO BE SHEATHED OR MAX. PURLIN SPACING = 6.25 FT.
MAX. UNBRACED BOTTOM CHORD LENGTH = 10.00 FT OR RIGID CEILING DIRECTLY APPLIED.

ALL PITCH BREAKS AND PERIMETER CORNER JOINTS MUST BE LATERALLY RESTRAINED.

LOADING

TOTAL LOAD CASES: (7)

CHORDS

MEMB. FR-TO	MAX. FACTORED FORCE (LBS)	FACTORED VERT. LOAD (PLF) FROM	TO	LC1 MAX CSI (LC)	MAX. UNBRAC LENGTH
A- B	-386 / 0	-91.8	-91.8	0.03 (1)	6.25
B- C	0 / 0	-91.8	-91.8	0.03 (1)	10.00
D- C	-82 / 0	0.0	0.0	0.01 (1)	7.81
F- A	-510 / 0	0.0	0.0	0.02 (1)	7.81
F- G	0 / 0	-18.5	-18.5	0.09 (1)	10.00
G- E	0 / 0	-18.5	-18.5	0.09 (1)	10.00
E- H	0 / 313	-18.5	-18.5	0.08 (1)	10.00
H- D	0 / 313	-18.5	-18.5	0.08 (1)	10.00

WEBS

MEMB. FR-TO	MAX. FACTORED FORCE (LBS)	MAX CSI (LC)
E- B	0 / 512	0.06 (1)
B- D	-608 / 0	0.06 (1)
A- E	0 / 338	0.04 (1)

SPECIFIED CONCENTRATED LOADS (LBS)

JT	LOC.	LC1	MAX-	MAX+	FACE	DIR.	TYPE	HEEL	CONN.
B	2-1-0	-55	-55	114	BACK	VERT	TOTAL	---	C1
E	2-1-12	-1	-1	---	BACK	VERT	TOTAL	---	C1
G	1-0-12	-385	-385	---	FRONT	VERT	TOTAL	---	C1
G	1-4-4	-1	-1	---	BACK	VERT	TOTAL	---	C1
H	3-0-12	-386	-386	---	FRONT	VERT	TOTAL	---	C1

CONNECTION REQUIREMENTS

1) **C1:** A SUITABLE HANGER/MECHANICAL CONNECTION IS REQUIRED.

DESIGN CRITERIA

SPECIFIED LOADS:

TOP CH.	LL	=	25.6	PSF
	DL	=	6.0	PSF
BOT CH.	LL	=	0.0	PSF
	DL	=	7.4	PSF
TOTAL LOAD		=	39.0	PSF

SPACING = 24.0 IN. C/C

LOADING IN FLAT SECTION BASED ON A SLOPE OF 2.00/12 MINIMUM

THIS TRUSS IS DESIGNED FOR RESIDENTIAL OR SMALL BUILDING REQUIREMENTS OF PART 9, NBCC 2015

THIS DESIGN COMPLIES WITH:
- PART 9 OF BCBC 2018 , NBC-2019AE
- PART 9 OF OBC 2012 (2019 AMENDMENT)
- CSA 086-14
- TPIC 2014

(55 % OF 31.3 P.S.F. G.S.L. PLUS 8.4 P.S.F. RAIN LOAD) EQUALS 25.6 P.S.F. SPECIFIED ROOF LIVE LOAD

ALLOWABLE DEFL.(LL)= L/360 (0.19")
CALCULATED VERT. DEFL.(LL) = L/ 999 (0.00")
ALLOWABLE DEFL.(TL)= L/360 (0.19")
CALCULATED VERT. DEFL.(TL) = L/ 999 (0.00")

CSI: TC=0.03/1.00 (A-B:1) , BC=0.09/1.00 (E-F:1) , WB=0.06/1.00 (B-D:1) , SSI=0.10/1.00 (D-E:1)

DOL LUMBER=1.00 NAIL=1.00 LS BEND=1.10 COMP=1.10 SHEAR=1.10 TENS= 1.10

COMPANION LIVE LOAD FACTOR = 1.00

AUTOSOLVE RIGHT HEEL ONLY

TRUSS PLATE MANUFACTURER IS NOT RESPONSIBLE FOR QUALITY CONTROL IN THE TRUSS MANUFACTURING PLANT .

NAIL VALUES

PLATE	GRIP(DRY) (PSI) MAX	MIN	SHEAR (PLI) MAX	MIN	SECTION (PLI) MAX	MIN
MT20	650	371	1747	788	1987	1873

PLATE PLACEMENT TOL. = 0.250 inches

PLATE ROTATION TOL. = 5.0 Deg.

JSI GRIP= 0.58 (E) (INPUT = 0.90)
JSI METAL= 0.09 (E) (INPUT = 0.95)

CITY OF RICHMOND HILL
BUILDING DIVISION
05/01/2024
RECEIVED
Per: joshua.nabua

CONTINUED ON PAGE 2

JOB NAME	TRUSS NAME	QUANTITY	PLY	JOB DESC.	DRWG NO.
434950	T17	1	2	GREENPARK HOMES TRUSS DESC.	

Tamarack Roof Truss, Burlington

Version 8.630 S Aug 30 2023 MiTek Industries, Inc. Fri Sep 22 10:16:06 2023 Page 2
ID:?7smMffSHcbvu6uGxGPN4oyih5x-VMkDJFKiL0JU_nF3QXBiu?TW3pcD4QpO?xdOdoyb7DN

PLATES (table is in inches)

JT	TYPE	PLATES	W	LEN	Y	X
B	TTWW+m	MT20	5.0	6.0	2.25	1.50
C	TMV+p	MT20	3.0	4.0		
D	BMVW1+p	MT20	4.0	6.0		
E	BMWW+t	MT20	3.0	4.0	2.50	1.50
F	BMV1+p	MT20	4.0	6.0		

NOTES- (1)
1) Lateral braces to be a minimum of 2X4 SPF #2.

LICENSED PROFESSIONAL ENGINEER
9/25/23
C. M. HEYENS
100505065
PROVINCE OF ONTARIO

STRUCTURAL COMPONENT ONLY
DWG # TR23091799

CITY OF RICHMOND HILL
BUILDING DIVISION
05/01/2024
RECEIVED
Per: joshua.nabua

JOB NAME	TRUSS NAME	QUANTITY	PLY	JOB DESC.	DRWG NO.
434951	T18	1	1	GREENPARK HOMES TRUSS DESC.	

Tamarack Roof Truss, Burlington

Version 8.630 S Aug 30 2023 MiTek Industries, Inc. Fri Sep 22 10:21:58 2023 Page 1
ID:?7smMffSHcbvu6uGxGPN4oyih5x-B4?HBcaVRAqYCt9i2SVF9E2bGiqbYZECyiu0_Oyb77t

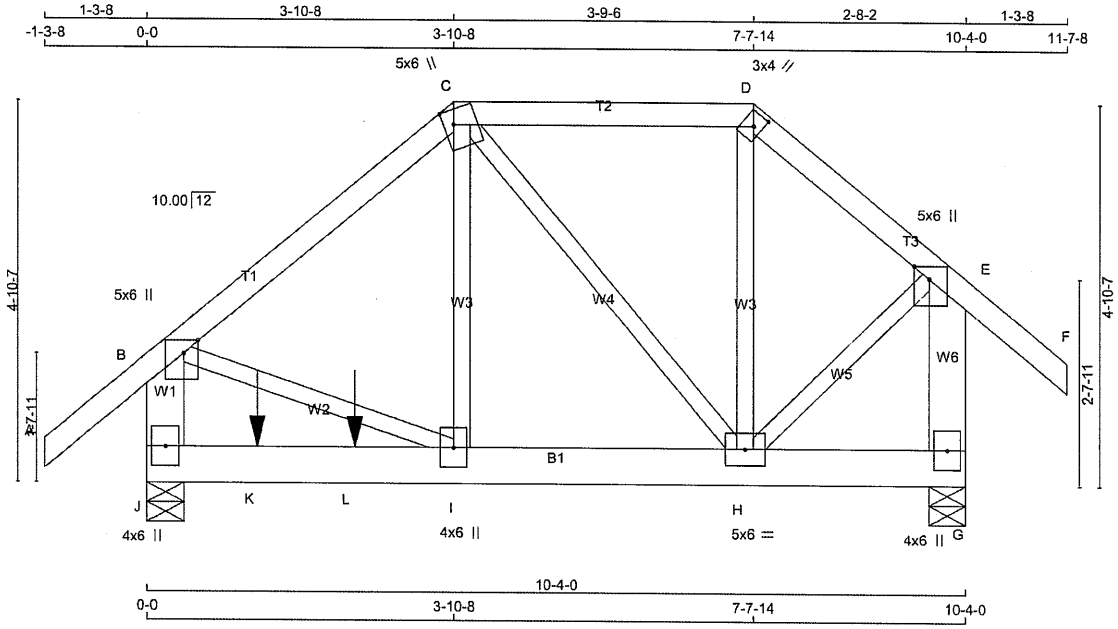

TOTAL WEIGHT = 60 lb
[M]

LUMBER
N. L. G. A. RULES

CHORDS	SIZE		LUMBER	DESCR.
A - C	2x4	DRY	No.2	SPF
C - D	2x4	DRY	No.2	SPF
D - F	2x4	DRY	No.2	SPF
J - B	2x6	DRY	No.2	SPF
G - E	2x6	DRY	No.2	SPF
J - G	2x6	DRY	No.2	SPF
ALL WEBS EXCEPT	2x3	DRY	No.2	SPF

DRY: SEASONED LUMBER.

PLATES (table is in inches)

JT	TYPE	PLATES	W	LEN	Y	X
B	TMVW+p	MT20	5.0	6.0	2.00	2.25
C	TTWW+m	MT20	5.0	6.0	2.25	1.50
D	TTW+h	MT20	3.0	4.0	2.00	1.25
E	TMVW+p	MT20	5.0	6.0	2.00	2.25
G	BMV1+p	MT20	4.0	6.0		
H	BMWWW-t	MT20	5.0	6.0		
I	BMWW+t	MT20	4.0	6.0		
J	BMV1+p	MT20	4.0	6.0		

NOTES- (1)
1) Lateral braces to be a minimum of 2X4 SPF #2.

DIMENSIONS, SUPPORTS AND LOADINGS SPECIFIED BY FABRICATOR TO BE VERIFIED BY BUILDING DESIGNER

BEARINGS

JT	FACTORED GROSS REACTION VERT	HORZ	MAXIMUM FACTORED GROSS REACTION DOWN	HORZ	UPLIFT	INPUT BRG IN-SX	REQRD BRG IN-SX
J	1288	0	1288	0	0	5-8	1-8
G	871	0	871	0	0	5-8	1-8

UNFACTORED REACTIONS

JT	1ST LCASE COMBINED	MAX./MIN. COMPONENT REACTIONS SNOW	LIVE	PERM.LIVE	WIND	DEAD	SOIL
J	904	634 / 0	0 / 0	0 / 0	0 / 0	270 / 0	0 / 0
G	612	422 / 0	0 / 0	0 / 0	0 / 0	190 / 0	0 / 0

BEARING MATERIAL TO BE SPF NO.2 OR BETTER AT JOINT(S) J, G

BRACING
TOP CHORD TO BE SHEATHED OR MAX. PURLIN SPACING = 6.25 FT.
MAX. UNBRACED BOTTOM CHORD LENGTH = 10.00 FT OR RIGID CEILING DIRECTLY APPLIED.

ALL PITCH BREAKS AND PERIMETER CORNER JOINTS MUST BE LATERALLY RESTRAINED.

LOADING
TOTAL LOAD CASES: (4)

CHORDS

MEMB. FR-TO	MAX. FACTORED FORCE (LBS)	FACTORED VERT. LOAD (PLF) FROM	TO	LC1	MAX CSI (LC)	MAX. UNBRAC LENGTH
A- B	0 / 41	-91.8	-91.8	0.14 (1)	10.00	
B- C	-800 / 0	-91.8	-91.8	0.28 (1)	6.25	
C- D	-352 / 0	-91.8	-91.8	0.25 (1)	6.25	
D- E	-460 / 0	-91.8	-91.8	0.13 (1)	6.25	
E- F	0 / 41	-91.8	-91.8	0.14 (1)	10.00	
J- B	-1007 / 0	0.0	0.0	0.07 (1)	7.81	
G- E	-828 / 0	0.0	0.0	0.08 (1)	7.81	
J- K	0 / 0	-18.5	-18.5	0.34 (1)	10.00	
K- L	0 / 0	-18.5	-18.5	0.34 (1)	10.00	
L- I	0 / 0	-18.5	-18.5	0.34 (1)	10.00	
I- H	0 / 624	-18.5	-18.5	0.28 (1)	10.00	
H- G	0 / 0	-18.5	-18.5	0.04 (1)	10.00	

WEBS

MEMB. FR-TO	MAX. FACTORED FORCE (LBS)	MAX CSI (LC)
I- C	0 / 494	0.12 (1)
C- H	-428 / 0	0.24 (1)
H- D	0 / 44	0.02 (4)
B- I	0 / 641	0.16 (1)
H- E	0 / 451	0.11 (1)

SPECIFIED CONCENTRATED LOADS (LBS)

JT	LOC.	LC1	MAX-	MAX+	FACE	DIR.	TYPE	HEEL	CONN.
K	1-4-12	-118	-118	---	FRONT	VERT	TOTAL	---	C1
L	2-7-8	-417	-417	---	FRONT	VERT	TOTAL	---	C1

CONNECTION REQUIREMENTS

1) **C1:** A SUITABLE HANGER/MECHANICAL CONNECTION IS REQUIRED.

DESIGN CRITERIA

SPECIFIED LOADS:

TOP CH.	LL	=	25.6	PSF
	DL	=	6.0	PSF
BOT CH.	LL	=	0.0	PSF
	DL	=	7.4	PSF
TOTAL LOAD		=	39.0	PSF

SPACING = 24.0 IN. C/C

LOADING IN FLAT SECTION BASED ON A SLOPE OF 2.00/12 MINIMUM

THIS TRUSS IS DESIGNED FOR RESIDENTIAL OR SMALL BUILDING REQUIREMENTS OF PART 9, NBCC 2015

THIS DESIGN COMPLIES WITH:
- PART 9 OF BCBC 2018 , NBC-2019AE
- PART 9 OF OBC 2012 (2019 AMENDMENT)
- CSA 086-14
- TPIC 2014

(55 % OF 31.3 P.S.F. G.S.L. PLUS 8.4 P.S.F. RAIN LOAD) EQUALS 25.6 P.S.F. SPECIFIED ROOF LIVE LOAD

ALLOWABLE DEFL.(LL)= L/360 (0.34")
CALCULATED VERT. DEFL.(LL) = L/ 999 (0.02")
ALLOWABLE DEFL.(TL)= L/360 (0.34")
CALCULATED VERT. DEFL.(TL) = L/ 999 (0.04")

CSI: TC=0.28/1.00 (B-C:1) , BC=0.34/1.00 (I-J:1) , WB=0.24/1.00 (C-H:1) , SSI=0.37/1.00 (I-J:1)

DOL LUMBER=1.00 NAIL=1.00 LS BEND=1.00 COMP=1.00 SHEAR=1.00 TENS= 1.00

COMPANION LIVE LOAD FACTOR = 1.00

AUTOSOLVE HEELS OFF

TRUSS PLATE MANUFACTURER IS NOT RESPONSIBLE FOR QUALITY CONTROL IN THE TRUSS MANUFACTURING PLANT .

NAIL VALUES

PLATE	GRIP(DRY) (PSI) MAX	MIN	SHEAR (PLI) MAX	MIN	SECTION (PLI) MAX	MIN
MT20	650	371	1747	788	1987	1873

PLATE PLACEMENT TOL. = 0.250 inches

PLATE ROTATION TOL. = 5.0 Deg.

JSI GRIP= 0.85 (I) (INPUT = 0.90)
JSI METAL= 0.28 (I) (INPUT = 0.95)

LICENSED PROFESSIONAL ENGINEER
9/25/23
C. M. HEYENS
100505065
PROVINCE OF ONTARIO

STRUCTURAL COMPONENT ONLY
DWG # TR23091808

CITY OF RICHMOND HILL
BUILDING DIVISION
05/01/2024
RECEIVED
Per: joshua.nabua

JOB NAME	TRUSS NAME	QUANTITY	PLY	JOB DESC.	DRWG NO.
434951	T19	3	1	GREENPARK HOMES TRUSS DESC.	

Tamarack Roof Truss, Burlington

Version 8.630 S Aug 30 2023 MiTek Industries, Inc. Fri Sep 22 10:21:59 2023 Page 1
ID:?7smMffSHcbvu6uGxGPN4oyih5x-gGZqOyb7CUoPq0kvc91UiSakF63qH3CMAMeZWqyb77s

Scale = 1:38.5

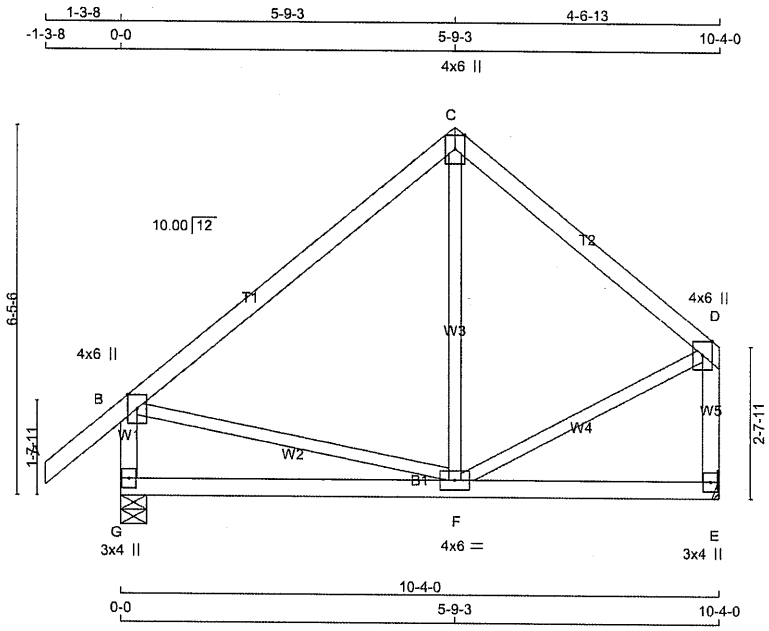

TOTAL WEIGHT = 3 X 47 = 140 lb
[M][F]

LUMBER
N. L. G. A. RULES

CHORDS	SIZE		LUMBER	DESCR.
A - C	2x4	DRY	No.2	SPF
C - D	2x4	DRY	No.2	SPF
G - B	2x4	DRY	No.2	SPF
E - D	2x4	DRY	No.2	SPF
G - E	2x4	DRY	No.2	SPF
ALL WEBS EXCEPT	2x3	DRY	No.2	SPF

DRY: SEASONED LUMBER.

PLATES (table is in inches)

JT	TYPE	PLATES	W	LEN	Y	X
B	TMVW+p	MT20	4.0	6.0	Edge	
C	TTW+p	MT20	4.0	6.0	Edge	
D	TMVW+p	MT20	4.0	6.0	Edge	
E	BMV1+p	MT20	3.0	4.0		
F	BMWWW-t	MT20	4.0	6.0		
G	BMV1+p	MT20	3.0	4.0		

Edge - INDICATES REFERENCE CORNER OF PLATE TOUCHES EDGE OF CHORD.

NOTES- (1)
1) Lateral braces to be a minimum of 2X4 SPF #2.

DIMENSIONS, SUPPORTS AND LOADINGS SPECIFIED BY FABRICATOR TO BE VERIFIED BY BUILDING DESIGNER

BEARINGS

JT	FACTORED GROSS REACTION VERT	HORZ	MAXIMUM FACTORED GROSS REACTION DOWN	HORZ	UPLIFT	INPUT BRG IN-SX	REQRD BRG IN-SX
G	697	0	697	0	0	5-8	1-8
E	570	0	570	0	0	MECHANICAL	

A SUITABLE HANGER/MECHANICAL CONNECTION IS REQUIRED AT JOINT E. MINIMUM BEARING LENGTH AT JOINT E = 1-8.

UNFACTORED REACTIONS

JT	1ST LCASE COMBINED	MAX./MIN. COMPONENT REACTIONS SNOW	LIVE	PERM.LIVE	WIND	DEAD	SOIL
G	490	335 / 0	0 / 0	0 / 0	0 / 0	155 / 0	0 / 0
E	403	264 / 0	0 / 0	0 / 0	0 / 0	138 / 0	0 / 0

BEARING MATERIAL TO BE SPF NO.2 OR BETTER AT JOINT(S) G

BRACING
TOP CHORD TO BE SHEATHED OR MAX. PURLIN SPACING = 6.25 FT.
MAX. UNBRACED BOTTOM CHORD LENGTH = 10.00 FT OR RIGID CEILING DIRECTLY APPLIED.

ALL PITCH BREAKS AND PERIMETER CORNER JOINTS MUST BE LATERALLY RESTRAINED.

LOADING
TOTAL LOAD CASES: (4)

CHORDS

MEMB. FR-TO	MAX. FACTORED FORCE (LBS)	FACTORED VERT. LOAD LC1 (PLF) FROM	TO	MAX CSI (LC)	MAX. UNBRAC LENGTH
A- B	0 / 41	-91.8	-91.8	0.13 (1)	10.00
B- C	-322 / 0	-91.8	-91.8	0.39 (1)	6.25
C- D	-321 / 0	-91.8	-91.8	0.25 (1)	6.25
G- B	-653 / 0	0.0	0.0	0.07 (1)	7.81
E- D	-542 / 0	0.0	0.0	0.08 (1)	7.81
G- F	0 / 0	-18.5	-18.5	0.15 (4)	10.00
F- E	0 / 0	-18.5	-18.5	0.15 (4)	10.00

WEBS

MEMB. FR-TO	MAX. FACTORED FORCE (LBS)	MAX CSI (LC)
F- C	-63 / 67	0.04 (1)
B- F	0 / 253	0.06 (1)
F- D	0 / 277	0.06 (1)

DESIGN CRITERIA

SPECIFIED LOADS:

TOP CH.	LL	=	25.6	PSF
	DL	=	6.0	PSF
BOT CH.	LL	=	0.0	PSF
	DL	=	7.4	PSF
TOTAL LOAD		=	39.0	PSF

SPACING = 24.0 IN. C/C

THIS TRUSS IS DESIGNED FOR RESIDENTIAL OR SMALL BUILDING REQUIREMENTS OF PART 9, NBCC 2015

THIS DESIGN COMPLIES WITH:
- PART 9 OF BCBC 2018 , NBC-2019AE
- PART 9 OF OBC 2012 (2019 AMENDMENT)
- CSA 086-14
- TPIC 2014

(55 % OF 31.3 P.S.F. G.S.L. PLUS 8.4 P.S.F. RAIN LOAD) EQUALS 25.6 P.S.F. SPECIFIED ROOF LIVE LOAD

ALLOWABLE DEFL.(LL)= L/360 (0.34")
CALCULATED VERT. DEFL.(LL) = L/ 999 (0.00")
ALLOWABLE DEFL.(TL)= L/360 (0.34")
CALCULATED VERT. DEFL.(TL) = L/ 999 (0.03")

CSI: TC=0.39/1.00 (B-C:1) , BC=0.15/1.00 (F-G:4) , WB=0.06/1.00 (D-F:1) , SSI=0.16/1.00 (B-C:1)

DOL LUMBER=1.00 NAIL=1.00 LS BEND=1.10 COMP=1.10 SHEAR=1.10 TENS= 1.10

COMPANION LIVE LOAD FACTOR = 1.00

TRUSS PLATE MANUFACTURER IS NOT RESPONSIBLE FOR QUALITY CONTROL IN THE TRUSS MANUFACTURING PLANT .

NAIL VALUES

PLATE	GRIP(DRY) (PSI) MAX	MIN	SHEAR (PLI) MAX	MIN	SECTION (PLI) MAX	MIN
MT20	650	371	1747	788	1987	1873

PLATE PLACEMENT TOL. = 0.250 inches

PLATE ROTATION TOL. = 5.0 Deg.

JSI GRIP= 0.41 (B) (INPUT = 0.90)
JSI METAL= 0.24 (B) (INPUT = 0.95)

LICENSED PROFESSIONAL ENGINEER
9/25/23
C. M. HEYENS
100505065
PROVINCE OF ONTARIO

STRUCTURAL COMPONENT ONLY
DWG # TR23091809

CITY OF RICHMOND HILL
BUILDING DIVISION
05/01/2024
RECEIVED
Per: joshua.nabua

JOB NAME	TRUSS NAME	QUANTITY	PLY	JOB DESC.	DRWG NO.
434951	T20	1	1	GREENPARK HOMES TRUSS DESC.	

Tamarack Roof Truss, Burlington

Version 8.630 S Aug 30 2023 MiTek Industries, Inc. Fri Sep 22 10:22:00 2023 Page 1
ID:?7smMffSHcbvu6uGxGPN4oyih5x-8S72clclznwGSAJ5AtYjFf7zpVQ00VlVP0N72Hyb77r

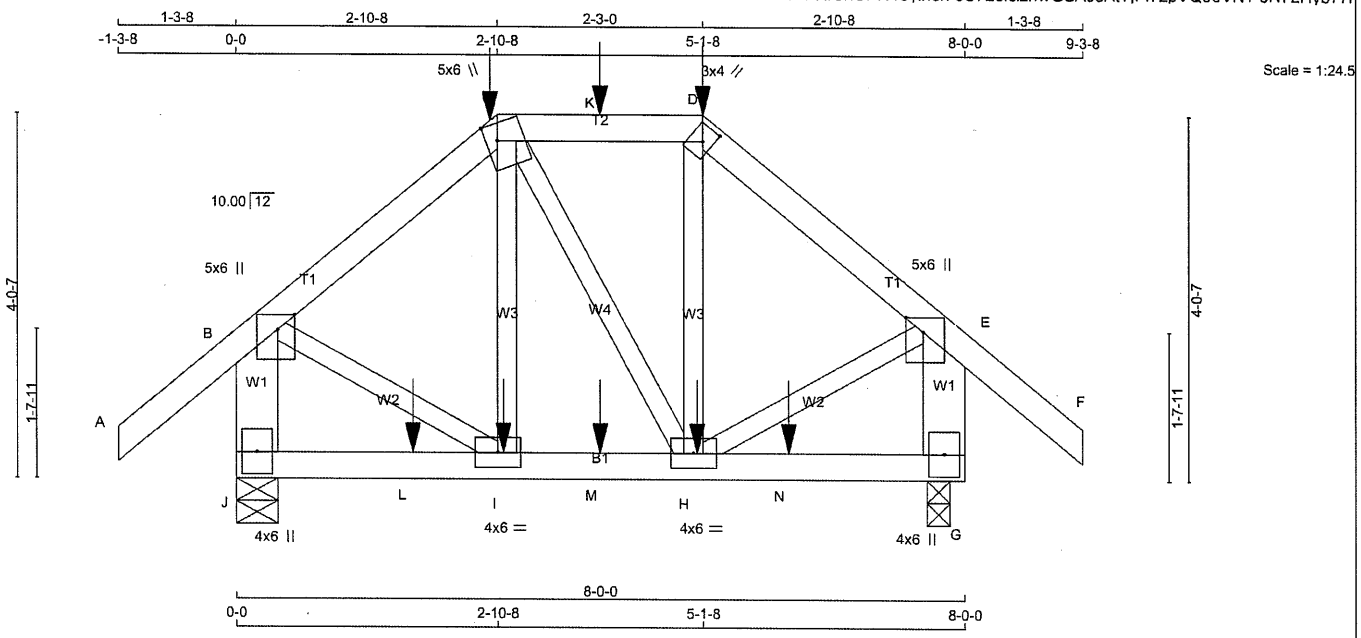

TOTAL WEIGHT = 43 lb

LUMBER
N. L. G. A. RULES

CHORDS	SIZE		LUMBER	DESCR.
A - C	2x4	DRY	No.2	SPF
C - D	2x4	DRY	No.2	SPF
D - F	2x4	DRY	No.2	SPF
J - B	2x6	DRY	No.2	SPF
G - E	2x6	DRY	No.2	SPF
J - G	2x4	DRY	No.2	SPF
ALL WEBS EXCEPT	2x3	DRY	No.2	SPF

DRY: SEASONED LUMBER.

PLATES (table is in inches)

JT	TYPE	PLATES	W	LEN	Y	X
B	TMVW+p	MT20	5.0	6.0	2.00	2.25
C	TTWW+m	MT20	5.0	6.0	2.25	1.50
D	TTW+h	MT20	3.0	4.0	2.00	1.25
E	TMVW+p	MT20	5.0	6.0	2.00	2.25
G	BMV1+p	MT20	4.0	6.0		
H	BMWWW-t	MT20	4.0	6.0		
I	BMWW-t	MT20	4.0	6.0		
J	BMV1+p	MT20	4.0	6.0		

NOTES- (1)
1) Lateral braces to be a minimum of 2X4 SPF #2.

DIMENSIONS, SUPPORTS AND LOADINGS SPECIFIED BY FABRICATOR TO BE VERIFIED BY BUILDING DESIGNER

BEARINGS

JT	FACTORED GROSS REACTION VERT	HORZ	MAXIMUM FACTORED GROSS REACTION DOWN	HORZ	UPLIFT	INPUT BRG IN-SX	REQRD BRG IN-SX
J	790	0	790	0	0	5-8	1-8
G	790	0	790	0	0	3-0	1-8

UNFACTORED REACTIONS

JT	1ST LCASE COMBINED	MAX./MIN. COMPONENT REACTIONS SNOW	LIVE	PERM.LIVE	WIND	DEAD	SOIL
J	555	384 / 0	0 / 0	0 / 0	0 / 0	171 / 0	0 / 0
G	555	384 / 0	0 / 0	0 / 0	0 / 0	171 / 0	0 / 0

BEARING MATERIAL TO BE SPF NO.2 OR BETTER AT JOINT(S) J, G

BRACING
TOP CHORD TO BE SHEATHED OR MAX. PURLIN SPACING = 6.25 FT.
MAX. UNBRACED BOTTOM CHORD LENGTH = 10.00 FT OR RIGID CEILING DIRECTLY APPLIED.

ALL PITCH BREAKS AND PERIMETER CORNER JOINTS MUST BE LATERALLY RESTRAINED.

LOADING
TOTAL LOAD CASES: (4)

CHORDS

MEMB. FR-TO	MAX. FACTORED FORCE (LBS)	FACTORED VERT. LOAD (PLF) FROM	TO	LC1	MAX CSI (LC)	MAX. UNBRAC LENGTH
A- B	0 / 41	-91.8	-91.8	0.14 (1)	10.00	
B- C	-516 / 0	-91.8	-91.8	0.15 (1)	6.25	
C- K	-391 / 0	-91.8	-91.8	0.12 (1)	6.25	
K- D	-391 / 0	-91.8	-91.8	0.12 (1)	6.25	
D- E	-515 / 0	-91.8	-91.8	0.15 (1)	6.25	
E- F	0 / 41	-91.8	-91.8	0.14 (1)	10.00	
J- B	-764 / 0	0.0	0.0	0.06 (1)	7.81	
G- E	-763 / 0	0.0	0.0	0.06 (1)	7.81	
J- L	0 / 0	-18.5	-18.5	0.05 (4)	10.00	
L- I	0 / 0	-18.5	-18.5	0.05 (4)	10.00	
I- M	0 / 392	-18.5	-18.5	0.09 (1)	10.00	
M- H	0 / 392	-18.5	-18.5	0.09 (1)	10.00	
H- N	0 / 0	-18.5	-18.5	0.04 (4)	10.00	
N- G	0 / 0	-18.5	-18.5	0.04 (4)	10.00	

WEBS

MEMB. FR-TO	MAX. FACTORED FORCE (LBS)	MAX CSI (LC)
I- C	-104 / 21	0.03 (1)
H- D	-106 / 21	0.03 (1)
B- I	0 / 431	0.11 (1)
H- E	0 / 431	0.11 (1)

SPECIFIED CONCENTRATED LOADS (LBS)

JT	LOC.	LC1	MAX-	MAX+	FACE	DIR.	TYPE	HEEL	CONN.
C	2-10-8	-126	-126	---	BACK	VERT	TOTAL	---	C1
D	5-1-8	-126	-126	---	BACK	VERT	TOTAL	---	C1
H	5-0-12	-6	-6	---	BACK	VERT	TOTAL	---	C1
I	2-11-4	-6	-6	---	BACK	VERT	TOTAL	---	C1
K	4-0-0	-28	-28	---	BACK	VERT	TOTAL	---	C1
L	1-11-4	-6	-6	---	BACK	VERT	TOTAL	---	C1
M	4-0-0	-6	-6	---	BACK	VERT	TOTAL	---	C1
N	6-0-12	-6	-6	---	BACK	VERT	TOTAL	---	C1

CONNECTION REQUIREMENTS

1) **C1:** A SUITABLE HANGER/MECHANICAL CONNECTION IS REQUIRED.

DESIGN CRITERIA

SPECIFIED LOADS:

TOP	CH.	LL	=	25.6	PSF
		DL	=	6.0	PSF
BOT	CH.	LL	=	0.0	PSF
		DL	=	7.4	PSF
TOTAL	LOAD		=	39.0	PSF

SPACING = 24.0 IN. C/C

LOADING IN FLAT SECTION BASED ON A SLOPE OF 2.00/12 MINIMUM

THIS TRUSS IS DESIGNED FOR RESIDENTIAL OR SMALL BUILDING REQUIREMENTS OF PART 9, NBCC 2015

THIS DESIGN COMPLIES WITH:
- PART 9 OF BCBC 2018 , NBC-2019AE
- PART 9 OF OBC 2012 (2019 AMENDMENT)
- CSA 086-14
- TPIC 2014

(55 % OF 31.3 P.S.F. G.S.L. PLUS 8.4 P.S.F. RAIN LOAD) EQUALS 25.6 P.S.F. SPECIFIED ROOF LIVE LOAD

ALLOWABLE DEFL.(LL)= L/360 (0.27")
CALCULATED VERT. DEFL.(LL) = L/ 999 (0.00")
ALLOWABLE DEFL.(TL)= L/360 (0.27")
CALCULATED VERT. DEFL.(TL) = L/ 999 (0.01")

CSI: TC=0.15/1.00 (B-C:1) , BC=0.09/1.00 (H-I:1) , WB=0.11/1.00 (B-I:1) , SSI=0.11/1.00 (C-D:1)

DOL LUMBER=1.00 NAIL=1.00 LS BEND=1.00 COMP=1.00 SHEAR=1.00 TENS= 1.00

COMPANION LIVE LOAD FACTOR = 1.00

AUTOSOLVE HEELS OFF

TRUSS PLATE MANUFACTURER IS NOT RESPONSIBLE FOR QUALITY CONTROL IN THE TRUSS MANUFACTURING PLANT .

NAIL VALUES

PLATE	GRIP(DRY) (PSI) MAX	MIN	SHEAR (PLI) MAX	MIN	SECTION (PLI) MAX	MIN
MT20	650	371	1747	788	1987	1873

PLATE PLACEMENT TOL. = 0.250 inches

PLATE ROTATION TOL. = 5.0 Deg.

JSI GRIP= 0.55 (D) (INPUT = 0.90)
JSI METAL= 0.12 (H) (INPUT = 0.95)

LICENSED PROFESSIONAL ENGINEER
9/25/23
C. M. HEYENS
100505065
PROVINCE OF ONTARIO

STRUCTURAL COMPONENT ONLY
DWG # TR23091810

CITY OF RICHMOND HILL
BUILDING DIVISION
05/01/2024
RECEIVED
Per: joshua.nabua

JOB NAME	TRUSS NAME	QUANTITY	PLY	JOB DESC.	DRWG NO.
434951	T21	1	2	GREENPARK HOMES TRUSS DESC.	

Tamarack Roof Truss, Burlington

Version 8.630 S Aug 30 2023 MiTek Industries, Inc. Fri Sep 22 10:22:01 2023 Page 1
ID:?7smMffSHcbvu6uGxGPN4oyih5x-cfhQpedNk5273KuHja3yntq0pvn?lzffeq7qajyb77q

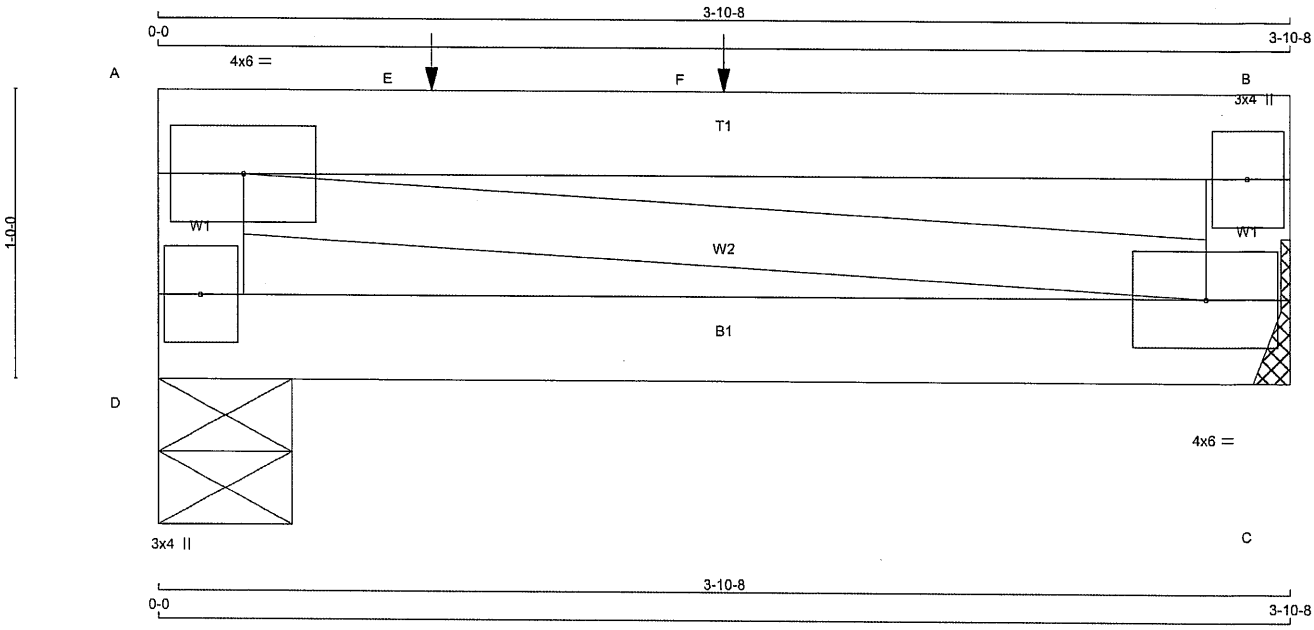

Scale = 1:7.6

TOTAL WEIGHT = 2 X 12 = 25 lb

LUMBER

N. L. G. A. RULES

CHORDS	SIZE		LUMBER	DESCR.
D - A	2x4	DRY	No.2	SPF
A - B	2x4	DRY	No.2	SPF
C - B	2x4	DRY	No.2	SPF
D - C	2x4	DRY	No.2	SPF
ALL WEBS	2x3	DRY	No.2	SPF

DRY: SEASONED LUMBER.

DESIGN CONSISTS OF 2 TRUSSES BUILT SEPARATELY THEN FASTENED TOGETHER AS FOLLOWS:

CHORDS	#ROWS	SURFACE SPACING (IN)	LOAD(PLF)
TOP CHORDS : (0.122"X3") SPIRAL NAILS			
D- A	1	12	TOP
A- B	1	12	SIDE(0.0)
B- C	1	12	TOP
BOTTOM CHORDS : (0.122"X3") SPIRAL NAILS			
D- C	1	12	TOP
WEBS : (0.122"X3") SPIRAL NAILS			
2x3	1	6	

NAILS TO BE DRIVEN FROM ONE SIDE ONLY.

GIRDER NAILING ASSUMES NAILED HANGERS ARE FASTENED WITH MIN. 3-0 INCH NAILS.

TOP - COMPONENTS ARE LOADED FROM THE TOP AND MUST BE PLACED ON TOP EDGE OF ALL PLIES FOR THE LOAD TO BE TRANSFERRED TO EACH PLY.

SIDE - PLF SHOWN IS THE EQUIVALENT UDL APPLIED TO ONE SIDE THAT THE CORRESPONDING NAILING PATTERN SHALL BE CAPABLE OF TRANSFERING. REMAINING PLF MUST BE APPLIED ON THE OPPOSITE SIDE OR ON THE TOP.

PLATES (table is in inches)

JT	TYPE	PLATES	W	LEN Y	X
A	TMVW-t	MT20	4.0	6.0	
B	TMV+p	MT20	3.0	4.0	
C	BMVW1-t	MT20	4.0	6.0	
D	BMV1+p	MT20	3.0	4.0	

LICENSED PROFESSIONAL ENGINEER
9/25/23
C. M. HEYENS
100505065
PROVINCE OF ONTARIO

STRUCTURAL COMPONENT ONLY
DWG # TR23091811

DIMENSIONS, SUPPORTS AND LOADINGS SPECIFIED BY FABRICATOR TO BE VERIFIED BY BUILDING DESIGNER

BEARINGS

JT	FACTORED GROSS REACTION VERT	HORZ	MAXIMUM FACTORED GROSS REACTION DOWN	HORZ	UPLIFT	INPUT BRG IN-SX	REQRD BRG IN-SX
D	719	0	719	0	0	5-8	1-8
C	612	0	612	0	0	MECHANICAL	

A SUITABLE HANGER/MECHANICAL CONNECTION IS REQUIRED AT JOINT C. MINIMUM BEARING LENGTH AT JOINT C = 1-8.

UNFACTORED REACTIONS

MAX./MIN. COMPONENT REACTIONS

JT	1ST LCASE COMBINED	SNOW	LIVE	PERM.LIVE	WIND	DEAD	SOIL
D	506	345 / 0	0 / 0	0 / 0	0 / 0	161 / 0	0 / 0
C	432	291 / 0	0 / 0	0 / 0	0 / 0	141 / 0	0 / 0

BEARING MATERIAL TO BE SPF NO.2 OR BETTER AT JOINT(S) D

BRACING

TOP CHORD TO BE SHEATHED OR MAX. PURLIN SPACING = 10.00 FT.
MAX. UNBRACED BOTTOM CHORD LENGTH = 10.00 FT OR RIGID CEILING DIRECTLY APPLIED.

ALL PITCH BREAKS AND PERIMETER CORNER JOINTS MUST BE LATERALLY RESTRAINED.

LOADING

TOTAL LOAD CASES: (4)

CHORDS

MEMB. FR-TO	MAX. FACTORED FORCE (LBS)	FACTORED VERT. LOAD (PLF) FROM	TO	LC1	MAX CSI (LC)	MAX. UNBRAC LENGTH
D- A	-683 / 0	0.0	0.0	0.03 (1)	7.81	
A- E	0 / 0	-91.8	-91.8	0.64 (1)	10.00	
E- F	0 / 0	-91.8	-91.8	0.64 (1)	10.00	
F- B	0 / 0	-91.8	-91.8	0.64 (1)	10.00	
C- B	-577 / 0	0.0	0.0	0.03 (1)	7.81	
D- C	0 / 0	-18.5	-18.5	0.04 (4)	10.00	

WEBS

MEMB. FR-TO	MAX. FACTORED FORCE (LBS)	MAX CSI (LC)
A- C	0 / 0	0.00 (1)

SPECIFIED CONCENTRATED LOADS (LBS)

JT	LOC.	LC1	MAX-	MAX+	FACE	DIR.	TYPE	HEEL	CONN.
E	11-4	-143	-143	---	BACK	VERT	TOTAL	---	C1
F	1-11-4	-492	-492	---	TOP	VERT	TOTAL	---	C1

CONNECTION REQUIREMENTS

1) **C1:** A SUITABLE HANGER/MECHANICAL CONNECTION IS REQUIRED.

DESIGN CRITERIA

SPECIFIED LOADS:

TOP CH.	LL	=	25.6	PSF
	DL	=	6.0	PSF
BOT CH.	LL	=	0.0	PSF
	DL	=	7.4	PSF
TOTAL LOAD		=	39.0	PSF

SPACING = 24.0 IN. C/C

LOADING IN FLAT SECTION BASED ON A SLOPE OF 2.00/12 MINIMUM

THIS TRUSS IS DESIGNED FOR RESIDENTIAL OR SMALL BUILDING REQUIREMENTS OF PART 9, NBCC 2015

THIS DESIGN COMPLIES WITH:
- PART 9 OF BCBC 2018 , NBC-2019AE
- PART 9 OF OBC 2012 (2019 AMENDMENT)
- CSA 086-14
- TPIC 2014

(55 % OF 31.3 P.S.F. G.S.L. PLUS 8.4 P.S.F. RAIN LOAD) EQUALS 25.6 P.S.F. SPECIFIED ROOF LIVE LOAD

ALLOWABLE DEFL.(TL)= L/360 (0.19")
CALCULATED VERT. DEFL.(TL) = L/ 999 (0.01")

CSI: TC=0.64/1.00 (A-B:1) , BC=0.04/1.00 (C-D:4) , WB=0.00/1.00 (A-C:1) , SSI=0.27/1.00 (A-B:1)

DOL LUMBER=1.00 NAIL=1.00 LS BEND=1.10 COMP=1.10 SHEAR=1.10 TENS= 1.10

COMPANION LIVE LOAD FACTOR = 1.00

TRUSS PLATE MANUFACTURER IS NOT RESPONSIBLE FOR QUALITY CONTROL IN THE TRUSS MANUFACTURING PLANT .

NAIL VALUES

PLATE	GRIP(DRY) (PSI) MAX	MIN	SHEAR (PLI) MAX	MIN	SECTION (PLI) MAX	MIN
MT20	650	371	1747	788	1987	1873

PLATE PLACEMENT TOL. = 0.250 inches

PLATE ROTATION TOL. = 5.0 Deg.

JSI GRIP= 0.14 (D) (INPUT = 0.90)
JSI METAL= 0.05 (D) (INPUT = 0.95)

CITY OF RICHMOND HILL
BUILDING DIVISION
05/01/2024
RECEIVED
Per: joshua.nabua

CONTINUED ON PAGE 2

JOB NAME	TRUSS NAME	QUANTITY	PLY	JOB DESC. GREENPARK HOMES	DRWG NO.
434951	T21	1	2	TRUSS DESC.	

Tamarack Roof Truss, Burlington

ID:?7smMffSHcbvu6uGxGPN4oyih5x-cfhQpedNk5273KuHja3yntg0pvn?lzffeg7gajyb77q

NOTES- (1)
1) Lateral braces to be a minimum of 2X4 SPF #2.

LICENSED PROFESSIONAL ENGINEER
9/25/23
C. M. HEYENS
100505065
PROVINCE OF ONTARIO

STRUCTURAL COMPONENT ONLY
DWG # TR23091811

CITY OF RICHMOND HILL
BUILDING DIVISION
05/01/2024
RECEIVED
Per: joshua.nabua

JOB NAME	TRUSS NAME	QUANTITY	PLY	JOB DESC.	DRWG NO.
434951	T22	1	1	GREENPARK HOMES TRUSS DESC.	

Tamarack Roof Truss, Burlington

Version 8.630 S Aug 30 2023 MiTek Industries, Inc. Fri Sep 22 10:22:02 2023 Page 1
ID:?7smMffSHcbvu6uGxGPN4oyih5x-4rEo1 e?VPA hUSUHIaBK4CJmJ7NUQZosKsD79yb77p

Scale = 1:16.5

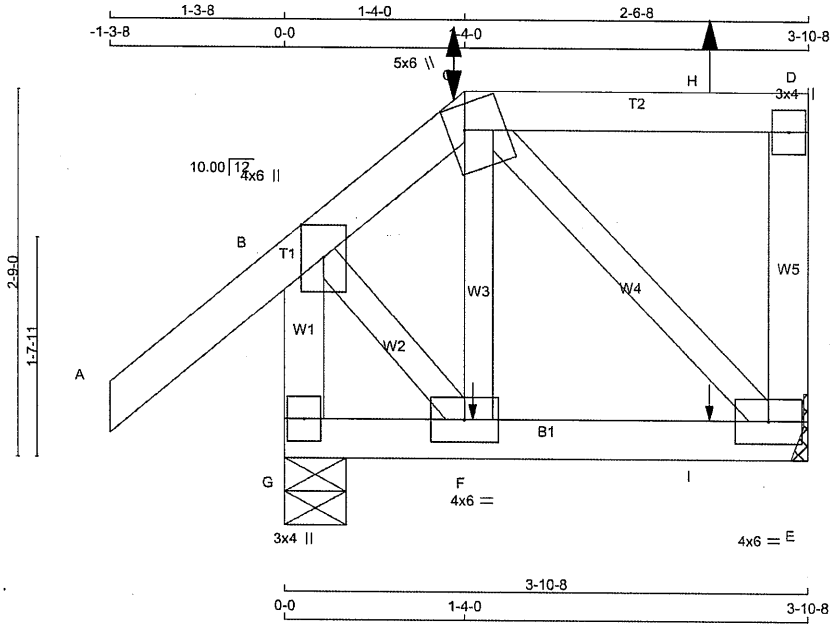

TOTAL WEIGHT = 21 lb
[M]

LUMBER
N. L. G. A. RULES

CHORDS	SIZE		LUMBER	DESCR.
A - C	2x4	DRY	No.2	SPF
C - D	2x4	DRY	No.2	SPF
E - D	2x4	DRY	No.2	SPF
G - B	2x4	DRY	No.2	SPF
G - E	2x4	DRY	No.2	SPF
ALL WEBS EXCEPT	2x3	DRY	No.2	SPF

DRY: SEASONED LUMBER.

PLATES (table is in inches)

JT	TYPE	PLATES	W	LEN	Y	X
B	TMVW+p	MT20	4.0	6.0	Edge	
C	TTWW+m	MT20	5.0	6.0	2.25	1.50
D	TMV+p	MT20	3.0	4.0		
E	BMVW1-t	MT20	4.0	6.0		
F	BMWW-t	MT20	4.0	6.0		
G	BMV1+p	MT20	3.0	4.0		

Edge - INDICATES REFERENCE CORNER OF PLATE TOUCHES EDGE OF CHORD.

NOTES- (1)
1) Lateral braces to be a minimum of 2X4 SPF #2.

DIMENSIONS, SUPPORTS AND LOADINGS SPECIFIED BY FABRICATOR TO BE VERIFIED BY BUILDING DESIGNER

BEARINGS

JT	FACTORED GROSS REACTION VERT	HORZ	MAXIMUM FACTORED GROSS REACTION DOWN	HORZ	UPLIFT	INPUT BRG IN-SX	REQRD BRG IN-SX
E	190	0	190	0	0	MECHANICAL	
G	380	0	380	0	0	5-8	1-8

A SUITABLE HANGER/MECHANICAL CONNECTION IS REQUIRED AT JOINT E. MINIMUM BEARING LENGTH AT JOINT E = 1-8.

UNFACTORED REACTIONS

JT	1ST LCASE COMBINED	MAX./MIN. COMPONENT REACTIONS SNOW	LIVE	PERM.LIVE	WIND	DEAD	SOIL
E	133	94 / -13	0 / 0	0 / 0	0 / 0	39 / 0	0 / 0
G	265	197 / 0	0 / 0	0 / 0	0 / 0	68 / 0	0 / 0

BEARING MATERIAL TO BE SPF NO.2 OR BETTER AT JOINT(S) G

BRACING
TOP CHORD TO BE SHEATHED OR MAX. PURLIN SPACING = 6.25 FT.
MAX. UNBRACED BOTTOM CHORD LENGTH = 10.00 FT OR RIGID CEILING DIRECTLY APPLIED.

ALL PITCH BREAKS AND PERIMETER CORNER JOINTS MUST BE LATERALLY RESTRAINED.

LOADING
TOTAL LOAD CASES: (9)

CHORDS

MEMB. FR-TO	MAX. FACTORED FORCE (LBS)	FACTORED VERT. LOAD LC1 (PLF) FROM	TO	MAX CSI (LC)	MAX. UNBRAC LENGTH
A- B	0 / 41	-91.8	-91.8	0.18 (5)	10.00
B- C	-130 / 0	-91.8	-91.8	0.17 (5)	6.25
C- H	0 / 0	-91.8	-91.8	0.10 (1)	10.00
H- D	0 / 0	-91.8	-91.8	0.10 (1)	10.00
E- D	-107 / 0	0.0	0.0	0.02 (1)	7.81
G- B	-371 / 0	0.0	0.0	0.04 (1)	7.81
G- F	0 / 0	-18.5	-18.5	0.02 (4)	10.00
F- I	-5 / 65	-18.5	-18.5	0.03 (4)	10.00
I- E	-5 / 65	-18.5	-18.5	0.03 (4)	10.00

WEBS

MEMB. FR-TO	MAX. FACTORED FORCE (LBS)	MAX CSI (LC)
F- C	-18 / 52	0.01 (6)
C- E	-91 / 7	0.02 (1)
B- F	-9 / 89	0.02 (1)

SPECIFIED CONCENTRATED LOADS (LBS)

JT	LOC.	LC1	MAX-	MAX+	FACE	DIR.	TYPE	HEEL	CONN.
C	1-4-0	-19	-26	95	BACK	VERT	TOTAL	---	C1
F	1-4-12	1	1	---	BACK	VERT	TOTAL	---	C1
H	3-1-12	11	1	92	BACK	VERT	TOTAL	---	C1
I	3-1-12	1	1	---	BACK	VERT	TOTAL	---	C1

CONNECTION REQUIREMENTS

1) **C1:** A SUITABLE HANGER/MECHANICAL CONNECTION IS REQUIRED.

CANTILEVER ANALYSIS HAS BEEN CONSIDERED IN THIS DESIGN

DESIGN CRITERIA

SPECIFIED LOADS:

TOP CH.	LL =	25.6	PSF
	DL =	6.0	PSF
BOT CH.	LL =	0.0	PSF
	DL =	7.4	PSF
TOTAL LOAD	=	39.0	PSF

SPACING = 24.0 IN. C/C

LOADING IN FLAT SECTION BASED ON A SLOPE OF 2.00/12 MINIMUM

THIS TRUSS IS DESIGNED FOR RESIDENTIAL OR SMALL BUILDING REQUIREMENTS OF PART 9, NBCC 2015

THIS DESIGN COMPLIES WITH:
- PART 9 OF BCBC 2018 , NBC-2019AE
- PART 9 OF OBC 2012 (2019 AMENDMENT)
- CSA 086-14
- TPIC 2014

DESIGN ASSUMPTIONS
-OVERHANG NOT TO BE ALTERED OR CUT OFF.

(55 % OF 31.3 P.S.F. G.S.L. PLUS 8.4 P.S.F. RAIN LOAD) EQUALS 25.6 P.S.F. SPECIFIED ROOF LIVE LOAD

ALLOWABLE DEFL.(LL)= L/360 (0.19")
CALCULATED VERT. DEFL.(LL) = L/ 999 (0.00")
ALLOWABLE DEFL.(TL)= L/360 (0.19")
CALCULATED VERT. DEFL.(TL) = L/ 999 (0.00")

CSI: TC=0.18/1.00 (A-B:5) , BC=0.03/1.00 (E-F:4) , WB=0.02/1.00 (B-F:1) , SSI=0.11/1.00 (A-B:5)

DOL LUMBER=1.00 NAIL=1.00 LS BEND=1.00 COMP=1.00 SHEAR=1.00 TENS= 1.00

COMPANION LIVE LOAD FACTOR = 1.00

TRUSS PLATE MANUFACTURER IS NOT RESPONSIBLE FOR QUALITY CONTROL IN THE TRUSS MANUFACTURING PLANT .

NAIL VALUES

PLATE	GRIP(DRY) (PSI) MAX	MIN	SHEAR (PLI) MAX	MIN	SECTION (PLI) MAX	MIN
MT20	650	371	1747	788	1987	1873

PLATE PLACEMENT TOL. = 0.250 inches

PLATE ROTATION TOL. = 5.0 Deg.

JSI GRIP= 0.23 (B) (INPUT = 0.90)
JSI METAL= 0.10 (B) (INPUT = 0.95)

LICENSED PROFESSIONAL ENGINEER
9/25/23
C. M. HEYENS
100505065
PROVINCE OF ONTARIO

STRUCTURAL COMPONENT ONLY
DWG # TR23091812

CITY OF RICHMOND HILL
BUILDING DIVISION
05/01/2024
RECEIVED
Per: joshua.nabua

JOB NAME	TRUSS NAME	QUANTITY	PLY	JOB DESC.	DRWG NO.
434952	T30	1	1	GREENPARK HOMES TRUSS DESC.	

Tamarack Roof Truss, Burlington

Version 8.630 S Aug 30 2023 MiTek Industries, Inc. Fri Sep 22 10:27:55 2023 Page 1

ID:?7smMffSHcbvu6uGxGPN4oyih5x-EI4F6hvQNseuXkyKSwPz7WKc1cU5h0II1ltP0Cyb72I

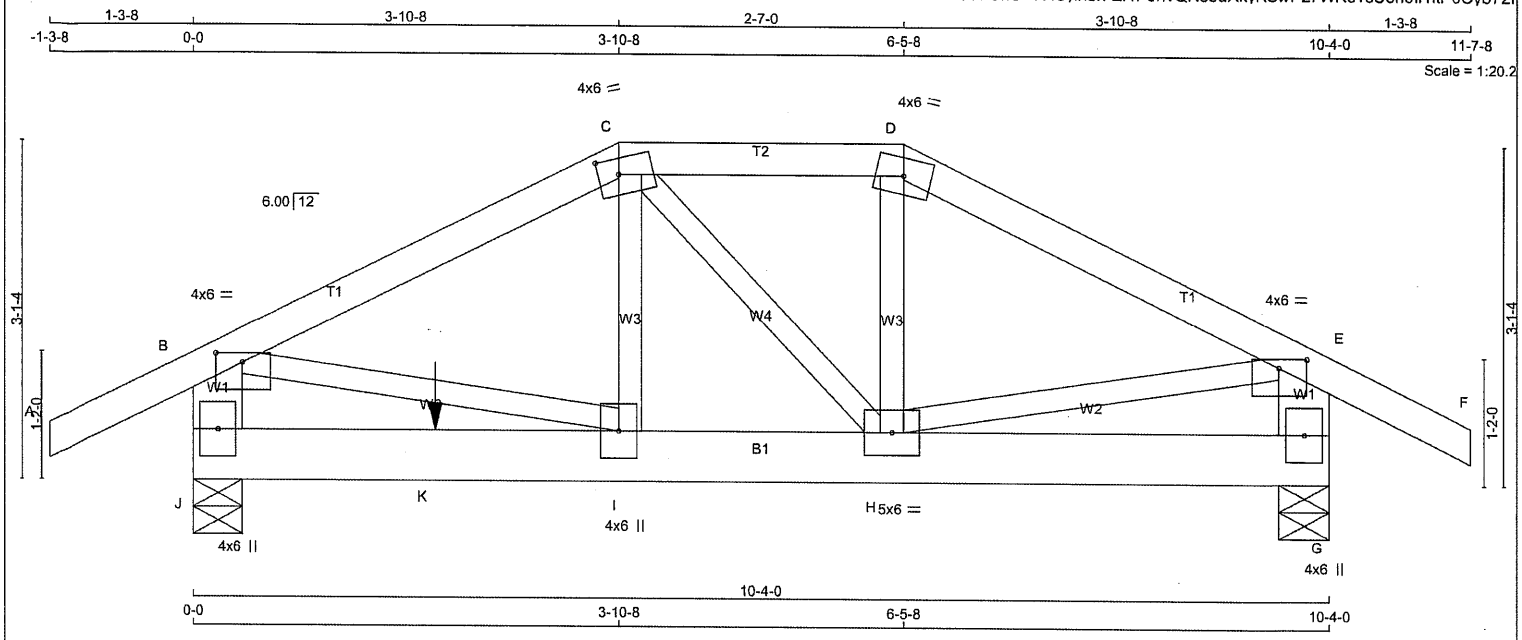

TOTAL WEIGHT = 49 lb

[M]

LUMBER

N. L. G. A. RULES

CHORDS	SIZE		LUMBER	DESCR.
A - C	2x4	DRY	No.2	SPF
C - D	2x4	DRY	No.2	SPF
D - F	2x4	DRY	No.2	SPF
J - B	2x6	DRY	No.2	SPF
G - E	2x6	DRY	No.2	SPF
J - G	2x6	DRY	No.2	SPF
ALL WEBS EXCEPT	2x3	DRY	No.2	SPF

DRY: SEASONED LUMBER.

PLATES (table is in inches)

JT	TYPE	PLATES	W	LEN	Y	X
B	TMVW-p	MT20	4.0	6.0	1.00	3.00
C	TTWW-m	MT20	4.0	6.0	1.75	2.25
D	TTW-m	MT20	4.0	6.0		
E	TMVW-p	MT20	4.0	6.0	1.00	3.00
G	BMV1+p	MT20	4.0	6.0		
H	BMWWW-t	MT20	5.0	6.0		
I	BMWW+t	MT20	4.0	6.0		
J	BMV1+p	MT20	4.0	6.0		

NOTES- (1)

1) Lateral braces to be a minimum of 2X4 SPF #2.

DIMENSIONS, SUPPORTS AND LOADINGS SPECIFIED BY FABRICATOR TO BE VERIFIED BY BUILDING DESIGNER

BEARINGS

JT	FACTORED GROSS REACTION VERT	HORZ	MAXIMUM FACTORED GROSS REACTION DOWN	HORZ	UPLIFT	INPUT BRG IN-SX	REQRD BRG IN-SX
J	1322	0	1322	0	0	5-8	1-8
G	865	0	865	0	0	5-8	1-8

UNFACTORED REACTIONS

JT	1ST LCASE COMBINED	MAX./MIN. COMPONENT REACTIONS SNOW	LIVE	PERM.LIVE	WIND	DEAD	SOIL
J	928	649 / 0	0 / 0	0 / 0	0 / 0	279 / 0	0 / 0
G	608	419 / 0	0 / 0	0 / 0	0 / 0	189 / 0	0 / 0

BEARING MATERIAL TO BE SPF NO.2 OR BETTER AT JOINT(S) J, G

BRACING

TOP CHORD TO BE SHEATHED OR MAX. PURLIN SPACING = 5.56 FT.
MAX. UNBRACED BOTTOM CHORD LENGTH = 10.00 FT OR RIGID CEILING DIRECTLY APPLIED.

ALL PITCH BREAKS AND PERIMETER CORNER JOINTS MUST BE LATERALLY RESTRAINED.

LOADING

TOTAL LOAD CASES: (4)

CHORDS

MEMB. FR-TO	MAX. FACTORED FORCE (LBS)	FACTORED VERT. LOAD (PLF) FROM	TO	LC1	MAX CSI (LC)	MAX. UNBRAC LENGTH
A- B	0 / 28	-91.8	-91.8	0.13 (1)	10.00	
B- C	-1139 / 0	-91.8	-91.8	0.29 (1)	5.56	
C- D	-744 / 0	-91.8	-91.8	0.12 (1)	6.25	
D- E	-827 / 0	-91.8	-91.8	0.28 (1)	6.25	
E- F	0 / 28	-91.8	-91.8	0.13 (1)	10.00	
J- B	-1012 / 0	0.0	0.0	0.07 (1)	7.81	
G- E	-815 / 0	0.0	0.0	0.06 (1)	7.81	
J- K	0 / 0	-18.5	-18.5	0.47 (1)	10.00	
K- I	0 / 0	-18.5	-18.5	0.47 (1)	10.00	
I- H	0 / 1039	-18.5	-18.5	0.37 (1)	10.00	
H- G	0 / 0	-18.5	-18.5	0.05 (1)	10.00	

WEBS

MEMB. FR-TO	MAX. FACTORED FORCE (LBS)	MAX CSI (LC)
I- C	0 / 549	0.14 (1)
H- D	-445 / 0	0.11 (1)
B- I	0 / 75	0.03 (4)
H- E	0 / 1037	0.26 (1)
	0 / 752	0.19 (1)

SPECIFIED CONCENTRATED LOADS (LBS)

JT	LOC.	LC1	MAX-	MAX+	FACE	DIR.	TYPE	HEEL	CONN.
K	2-2-8	-559	-559	---	FRONT	VERT	TOTAL	---	C1

CONNECTION REQUIREMENTS

1) **C1:** A SUITABLE HANGER/MECHANICAL CONNECTION IS REQUIRED.

DESIGN CRITERIA

SPECIFIED LOADS:

TOP CH.	LL	=	25.6	PSF
	DL	=	6.0	PSF
BOT CH.	LL	=	0.0	PSF
	DL	=	7.4	PSF
TOTAL LOAD		=	39.0	PSF

SPACING = 24.0 IN. C/C

LOADING IN FLAT SECTION BASED ON A SLOPE OF 2.00/12 MINIMUM

THIS TRUSS IS DESIGNED FOR RESIDENTIAL OR SMALL BUILDING REQUIREMENTS OF PART 9, NBCC 2015

THIS DESIGN COMPLIES WITH:
- PART 9 OF BCBC 2018 , NBC-2019AE
- PART 9 OF OBC 2012 (2019 AMENDMENT)
- CSA 086-14
- TPIC 2014

(55 % OF 31.3 P.S.F. G.S.L. PLUS 8.4 P.S.F. RAIN LOAD) EQUALS 25.6 P.S.F. SPECIFIED ROOF LIVE LOAD

ALLOWABLE DEFL.(LL)= L/360 (0.34")
CALCULATED VERT. DEFL.(LL) = L/ 999 (0.03")
ALLOWABLE DEFL.(TL)= L/360 (0.34")
CALCULATED VERT. DEFL.(TL) = L/ 999 (0.06")

CSI: TC=0.29/1.00 (B-C:1) , BC=0.47/1.00 (I-J:1) , WB=0.26/1.00 (B-I:1) , SSI=0.37/1.00 (I-J:1)

DOL LUMBER=1.00 NAIL=1.00 LS BEND=1.00 COMP=1.00 SHEAR=1.00 TENS= 1.00

COMPANION LIVE LOAD FACTOR = 1.00

AUTOSOLVE HEELS OFF

TRUSS PLATE MANUFACTURER IS NOT RESPONSIBLE FOR QUALITY CONTROL IN THE TRUSS MANUFACTURING PLANT .

NAIL VALUES

PLATE	GRIP(DRY) (PSI) MAX	MIN	SHEAR (PLI) MAX	MIN	SECTION (PLI) MAX	MIN
MT20	650	371	1747	788	1987	1873

PLATE PLACEMENT TOL. = 0.250 inches

PLATE ROTATION TOL. = 5.0 Deg.

JSI GRIP= 0.85 (I) (INPUT = 0.90)
JSI METAL= 0.47 (I) (INPUT = 0.95)

LICENSED PROFESSIONAL ENGINEER
9/25/23
C. M. HEYENS
100505065
PROVINCE OF ONTARIO

STRUCTURAL COMPONENT ONLY
DWG # TR23091815

CITY OF RICHMOND HILL
BUILDING DIVISION
05/01/2024
RECEIVED
Per: joshua.nabua

JOB NAME	TRUSS NAME	QUANTITY	PLY	JOB DESC.	DRWG NO.
434952	T31	4	1	GREENPARK HOMES TRUSS DESC.	

Tamarack Roof Truss, Burlington

Version 8.630 S Aug 30 2023 MiTek Industries, Inc. Fri Sep 22 10:27:56 2023 Page 1
ID:?7smMffSHcbvu6uGxGPN4oyih5x-jyddK1w37Aml9uWW0ewCgktnK0vXQWzvGPcyYeyb72H

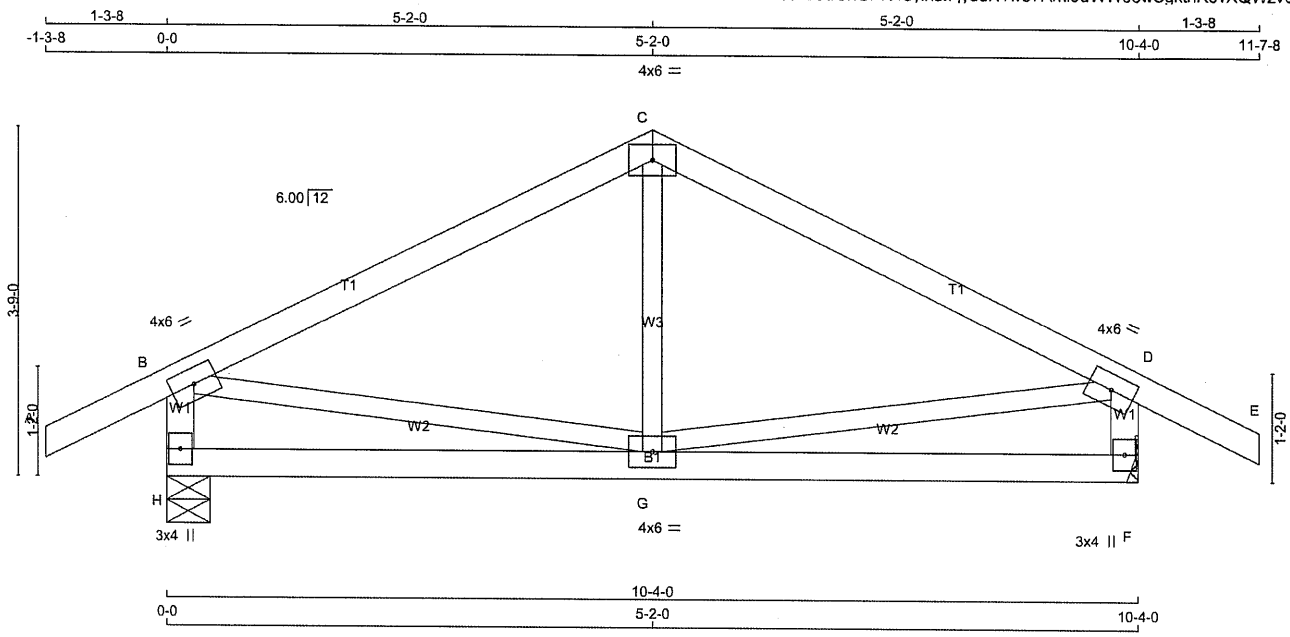

TOTAL WEIGHT = 4 X 41 = 162 lb

LUMBER

N. L. G. A. RULES

CHORDS	SIZE		LUMBER	DESCR.
A - C	2x4	DRY	No.2	SPF
C - E	2x4	DRY	No.2	SPF
H - B	2x4	DRY	No.2	SPF
F - D	2x4	DRY	No.2	SPF
H - F	2x4	DRY	No.2	SPF
ALL WEBS EXCEPT	2x3	DRY	No.2	SPF

DRY: SEASONED LUMBER.

PLATES (table is in inches)

JT	TYPE	PLATES	W	LEN	Y	X
B	TMVW-t	MT20	4.0	6.0		
C	TTW-p	MT20	4.0	6.0		
D	TMVW-t	MT20	4.0	6.0		
F	BMV1+p	MT20	3.0	4.0		
G	BMWWW-t	MT20	4.0	6.0		
H	BMV1+p	MT20	3.0	4.0		

NOTES- (1)
1) Lateral braces to be a minimum of 2X4 SPF #2.

DIMENSIONS, SUPPORTS AND LOADINGS SPECIFIED BY FABRICATOR TO BE VERIFIED BY BUILDING DESIGNER

BEARINGS

JT	FACTORED GROSS REACTION VERT	HORZ	MAXIMUM FACTORED GROSS REACTION DOWN	HORZ	UPLIFT	INPUT BRG IN-SX	REQRD BRG IN-SX
H	694	0	694	0	0	5-8	1-8
F	694	0	694	0	0	MECHANICAL	

A SUITABLE HANGER/MECHANICAL CONNECTION IS REQUIRED AT JOINT F. MINIMUM BEARING LENGTH AT JOINT F = 1-8.

UNFACTORED REACTIONS

JT	1ST LCASE COMBINED	MAX./MIN. COMPONENT REACTIONS SNOW	LIVE	PERM.LIVE	WIND	DEAD	SOIL
H	489	334 / 0	0 / 0	0 / 0	0 / 0	155 / 0	0 / 0
F	489	334 / 0	0 / 0	0 / 0	0 / 0	155 / 0	0 / 0

BEARING MATERIAL TO BE SPF NO.2 OR BETTER AT JOINT(S) H

BRACING

TOP CHORD TO BE SHEATHED OR MAX. PURLIN SPACING = 6.25 FT.
MAX. UNBRACED BOTTOM CHORD LENGTH = 10.00 FT OR RIGID CEILING DIRECTLY APPLIED.

ALL PITCH BREAKS AND PERIMETER CORNER JOINTS MUST BE LATERALLY RESTRAINED.

LOADING

TOTAL LOAD CASES: (4)

CHORDS

MEMB. FR-TO	MAX. FACTORED FORCE (LBS)	FACTORED VERT. LOAD (PLF) FROM	TO	LC1 CSI (LC)	MAX UNBRAC LENGTH
A- B	0 / 28	-91.8	-91.8	0.12 (1)	10.00
B- C	-496 / 0	-91.8	-91.8	0.32 (1)	6.25
C- D	-496 / 0	-91.8	-91.8	0.32 (1)	6.25
D- E	0 / 28	-91.8	-91.8	0.12 (1)	10.00
H- B	-657 / 0	0.0	0.0	0.07 (1)	7.81
F- D	-657 / 0	0.0	0.0	0.07 (1)	7.81
H- G	0 / 0	-18.5	-18.5	0.14 (4)	10.00
G- F	0 / 0	-18.5	-18.5	0.14 (4)	10.00

WEBS

MEMB. FR-TO	MAX. FACTORED FORCE (LBS)	MAX CSI (LC)
G- C	-31 / 78	0.03 (4)
B- G	0 / 449	0.10 (1)
G- D	0 / 449	0.10 (1)

[M][F]

DESIGN CRITERIA

SPECIFIED LOADS:

TOP CH.	LL	=	25.6	PSF
	DL	=	6.0	PSF
BOT CH.	LL	=	0.0	PSF
	DL	=	7.4	PSF
TOTAL LOAD		=	39.0	PSF

SPACING = 24.0 IN. C/C

THIS TRUSS IS DESIGNED FOR RESIDENTIAL OR SMALL BUILDING REQUIREMENTS OF PART 9, NBCC 2015

THIS DESIGN COMPLIES WITH:
- PART 9 OF BCBC 2018 , NBC-2019AE
- PART 9 OF OBC 2012 (2019 AMENDMENT)
- CSA 086-14
- TPIC 2014

(55 % OF 31.3 P.S.F. G.S.L. PLUS 8.4 P.S.F. RAIN LOAD) EQUALS 25.6 P.S.F. SPECIFIED ROOF LIVE LOAD

ALLOWABLE DEFL.(LL)= L/360 (0.34")
CALCULATED VERT. DEFL.(LL) = L/ 999 (0.01")
ALLOWABLE DEFL.(TL)= L/360 (0.34")
CALCULATED VERT. DEFL.(TL) = L/ 999 (0.02")

CSI: TC=0.32/1.00 (B-C:1) , BC=0.14/1.00 (G-H:4) , WB=0.10/1.00 (D-G:1) , SSI=0.17/1.00 (B-C:1)

DOL LUMBER=1.00 NAIL=1.00 LS BEND=1.10 COMP=1.10 SHEAR=1.10 TENS= 1.10

COMPANION LIVE LOAD FACTOR = 1.00

TRUSS PLATE MANUFACTURER IS NOT RESPONSIBLE FOR QUALITY CONTROL IN THE TRUSS MANUFACTURING PLANT .

NAIL VALUES

PLATE	GRIP(DRY) (PSI) MAX	MIN	SHEAR (PLI) MAX	MIN	SECTION (PLI) MAX	MIN
MT20	650	371	1747	788	1987	1873

PLATE PLACEMENT TOL. = 0.250 inches

PLATE ROTATION TOL. = 5.0 Deg.

JSI GRIP= 0.57 (G) (INPUT = 0.90)
JSI METAL= 0.15 (D) (INPUT = 0.95)

LICENSED PROFESSIONAL ENGINEER
9/25/23
C. M. HEYENS
100505065
PROVINCE OF ONTARIO

STRUCTURAL COMPONENT ONLY
DWG # TR23091816

CITY OF RICHMOND HILL
BUILDING DIVISION
05/01/2024
RECEIVED
Per: joshua.nabua

JOB NAME	TRUSS NAME	QUANTITY	PLY	JOB DESC.	DRWG NO.
434952	T32	3	1	GREENPARK HOMES TRUSS DESC.	

Tamarack Roof Truss, Burlington

Version 8.630 S Aug 30 2023 MiTek Industries, Inc. Fri Sep 22 10:27:57 2023 Page 1
ID:?7smMffSHcbvu6uGxGPN4oyih5x-B8B?XMwhuTucn25iaLSRDxP 4QGf9zf2V3MW54yb72G

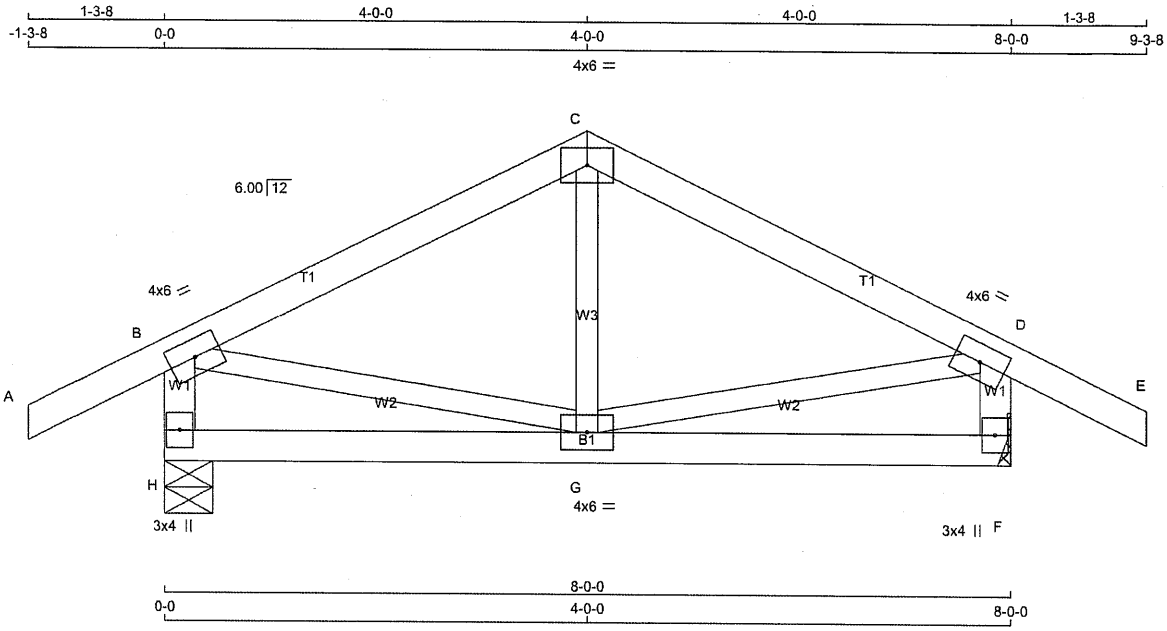

TOTAL WEIGHT = 3 X 33 = 98 lb

LUMBER
N. L. G. A. RULES

CHORDS	SIZE		LUMBER	DESCR.
A - C	2x4	DRY	No.2	SPF
C - E	2x4	DRY	No.2	SPF
H - B	2x4	DRY	No.2	SPF
F - D	2x4	DRY	No.2	SPF
H - F	2x4	DRY	No.2	SPF
ALL WEBS EXCEPT	2x3	DRY	No.2	SPF

DRY: SEASONED LUMBER.

PLATES (table is in inches)

JT	TYPE	PLATES	W	LEN	Y	X
B	TMVW-t	MT20	4.0	6.0		
C	TTW-p	MT20	4.0	6.0		
D	TMVW-t	MT20	4.0	6.0		
F	BMV1+p	MT20	3.0	4.0		
G	BMWWW-t	MT20	4.0	6.0		
H	BMV1+p	MT20	3.0	4.0		

NOTES- (1)
1) Lateral braces to be a minimum of 2X4 SPF #2.

DIMENSIONS, SUPPORTS AND LOADINGS SPECIFIED BY FABRICATOR TO BE VERIFIED BY BUILDING DESIGNER

BEARINGS

JT	FACTORED GROSS REACTION VERT	HORZ	MAXIMUM FACTORED GROSS REACTION DOWN	HORZ	UPLIFT	INPUT BRG IN-SX	REQRD BRG IN-SX
H	566	0	566	0	0	5-8	1-8
F	566	0	566	0	0	MECHANICAL	

A SUITABLE HANGER/MECHANICAL CONNECTION IS REQUIRED AT JOINT F. MINIMUM BEARING LENGTH AT JOINT F = 1-8.

UNFACTORED REACTIONS

JT	1ST LCASE COMBINED	MAX./MIN. COMPONENT REACTIONS SNOW	LIVE	PERM.LIVE	WIND	DEAD	SOIL
H	398	274 / 0	0 / 0	0 / 0	0 / 0	123 / 0	0 / 0
F	398	274 / 0	0 / 0	0 / 0	0 / 0	123 / 0	0 / 0

BEARING MATERIAL TO BE SPF NO.2 OR BETTER AT JOINT(S) H

BRACING
TOP CHORD TO BE SHEATHED OR MAX. PURLIN SPACING = 6.25 FT.
MAX. UNBRACED BOTTOM CHORD LENGTH = 10.00 FT OR RIGID CEILING DIRECTLY APPLIED.

ALL PITCH BREAKS AND PERIMETER CORNER JOINTS MUST BE LATERALLY RESTRAINED.

LOADING
TOTAL LOAD CASES: (4)

CHORDS

MEMB. FR-TO	MAX. FACTORED FORCE (LBS)	FACTORED VERT. LOAD LC1 (PLF) FROM	TO	MAX CSI (LC)	MAX. UNBRAC LENGTH
A- B	0 / 28	-91.8	-91.8	0.12 (1)	10.00
B- C	-357 / 0	-91.8	-91.8	0.19 (1)	6.25
C- D	-357 / 0	-91.8	-91.8	0.19 (1)	6.25
D- E	0 / 28	-91.8	-91.8	0.12 (1)	10.00
H- B	-536 / 0	0.0	0.0	0.05 (1)	7.81
F- D	-536 / 0	0.0	0.0	0.05 (1)	7.81
H- G	0 / 0	-18.5	-18.5	0.08 (4)	10.00
G- F	0 / 0	-18.5	-18.5	0.08 (4)	10.00

WEBS

MEMB. FR-TO	MAX. FACTORED FORCE (LBS)	MAX CSI (LC)
G- C	-48 / 51	0.02 (4)
B- G	0 / 326	0.07 (1)
G- D	0 / 326	0.07 (1)

[M][F]

DESIGN CRITERIA

SPECIFIED LOADS:

TOP CH.	LL	=	25.6	PSF
	DL	=	6.0	PSF
BOT CH.	LL	=	0.0	PSF
	DL	=	7.4	PSF
TOTAL LOAD		=	39.0	PSF

SPACING = 24.0 IN. C/C

THIS TRUSS IS DESIGNED FOR RESIDENTIAL OR SMALL BUILDING REQUIREMENTS OF PART 9, NBCC 2015

THIS DESIGN COMPLIES WITH:
- PART 9 OF BCBC 2018 , NBC-2019AE
- PART 9 OF OBC 2012 (2019 AMENDMENT)
- CSA 086-14
- TPIC 2014

(55 % OF 31.3 P.S.F. G.S.L. PLUS 8.4 P.S.F. RAIN LOAD) EQUALS 25.6 P.S.F. SPECIFIED ROOF LIVE LOAD

ALLOWABLE DEFL.(LL)= L/360 (0.27")
CALCULATED VERT. DEFL.(LL) = L/ 999 (0.00")
ALLOWABLE DEFL.(TL)= L/360 (0.27")
CALCULATED VERT. DEFL.(TL) = L/ 999 (0.01")

CSI: TC=0.19/1.00 (B-C:1) , BC=0.08/1.00 (F-G:4) , WB=0.07/1.00 (D-G:1) , SSI=0.13/1.00 (B-C:1)

DOL LUMBER=1.00 NAIL=1.00 LS BEND=1.10 COMP=1.10 SHEAR=1.10 TENS= 1.10

COMPANION LIVE LOAD FACTOR = 1.00

TRUSS PLATE MANUFACTURER IS NOT RESPONSIBLE FOR QUALITY CONTROL IN THE TRUSS MANUFACTURING PLANT .

NAIL VALUES

PLATE	GRIP(DRY) (PSI) MAX	MIN	SHEAR (PLI) MAX	MIN	SECTION (PLI) MAX	MIN
MT20	650	371	1747	788	1987	1873

PLATE PLACEMENT TOL. = 0.250 inches

PLATE ROTATION TOL. = 5.0 Deg.

JSI GRIP= 0.42 (G) (INPUT = 0.90)
JSI METAL= 0.11 (D) (INPUT = 0.95)

LICENSED PROFESSIONAL ENGINEER
9/25/23
C. M. HEYENS
100505065
PROVINCE OF ONTARIO

STRUCTURAL COMPONENT ONLY
DWG # TR23091817

CITY OF RICHMOND HILL
BUILDING DIVISION
05/01/2024
RECEIVED
Per: joshua.nabua

JOB NAME	TRUSS NAME	QUANTITY	PLY	JOB DESC.	DRWG NO.
434952	T33	1	1	GREENPARK HOMES TRUSS DESC.	

Tamarack Roof Truss, Burlington

Version 8.630 S Aug 30 2023 MiTek Industries, Inc. Fri Sep 22 10:27:58 2023 Page 1
ID:?7smMffSHcbvu6uGxGPN4oyih5x-fKINkixJfn0TOBqv83zqI9y3Epa uKzCkj53dXyb72F

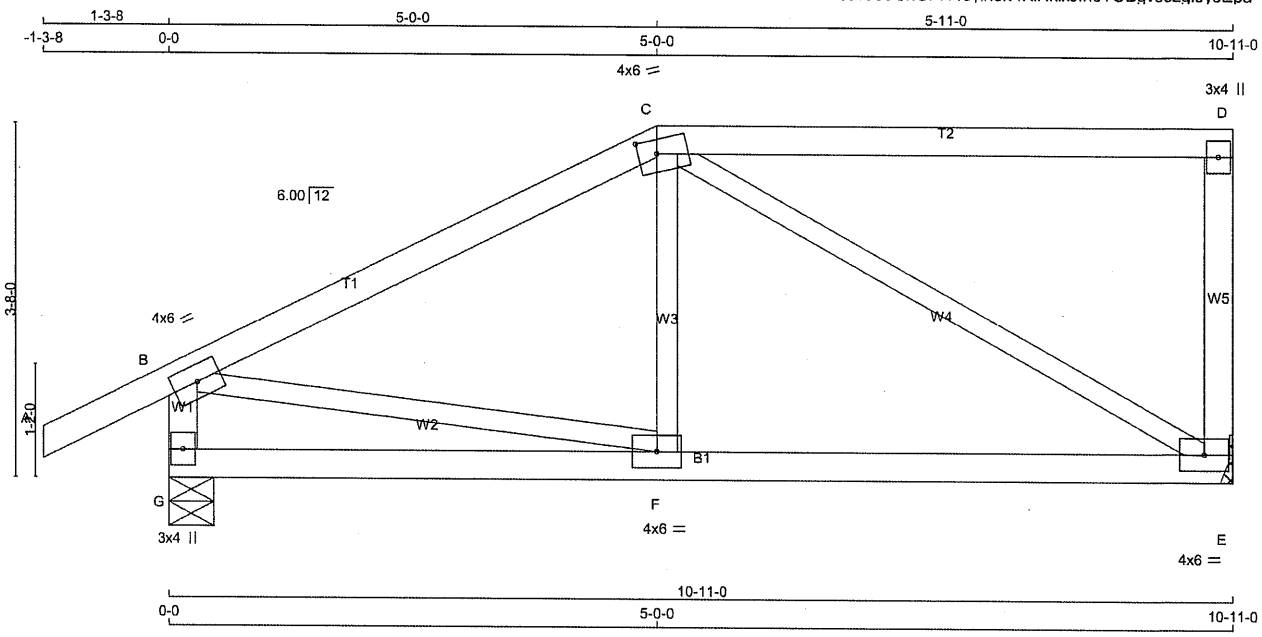

Scale = 1:22.8

TOTAL WEIGHT = 43 lb
[M]

LUMBER
N. L. G. A. RULES

CHORDS	SIZE		LUMBER	DESCR.
A - C	2x4	DRY	No.2	SPF
C - D	2x4	DRY	No.2	SPF
E - D	2x4	DRY	No.2	SPF
G - B	2x4	DRY	No.2	SPF
G - E	2x4	DRY	No.2	SPF
ALL WEBS EXCEPT	2x3	DRY	No.2	SPF

DRY: SEASONED LUMBER.

PLATES (table is in inches)

JT	TYPE	PLATES	W	LEN	Y	X
B	TMVW-t	MT20	4.0	6.0		
C	TTWW-m	MT20	4.0	6.0	1.75	2.25
D	TMV+p	MT20	3.0	4.0		
E	BMVW1-t	MT20	4.0	6.0		
F	BMWW-t	MT20	4.0	6.0		
G	BMV1+p	MT20	3.0	4.0		

NOTES- (1)
1) Lateral braces to be a minimum of 2X4 SPF #2.

DIMENSIONS, SUPPORTS AND LOADINGS SPECIFIED BY FABRICATOR TO BE VERIFIED BY BUILDING DESIGNER

BEARINGS

JT	FACTORED GROSS REACTION VERT	HORZ	MAXIMUM FACTORED GROSS REACTION DOWN	HORZ	UPLIFT	INPUT BRG IN-SX	REQRD BRG IN-SX
E	602	0	602	0	0	MECHANICAL	
G	726	0	726	0	0	5-8	1-8

A SUITABLE HANGER/MECHANICAL CONNECTION IS REQUIRED AT JOINT E. MINIMUM BEARING LENGTH AT JOINT E = 1-8.

UNFACTORED REACTIONS

JT	1ST LCASE COMBINED	MAX./MIN. COMPONENT REACTIONS SNOW	LIVE	PERM.LIVE	WIND	DEAD	SOIL
E	426	279 / 0	0 / 0	0 / 0	0 / 0	146 / 0	0 / 0
G	511	349 / 0	0 / 0	0 / 0	0 / 0	163 / 0	0 / 0

BEARING MATERIAL TO BE SPF NO.2 OR BETTER AT JOINT(S) G

BRACING
TOP CHORD TO BE SHEATHED OR MAX. PURLIN SPACING = 6.25 FT.
MAX. UNBRACED BOTTOM CHORD LENGTH = 10.00 FT OR RIGID CEILING DIRECTLY APPLIED.

ALL PITCH BREAKS AND PERIMETER CORNER JOINTS MUST BE LATERALLY RESTRAINED.

LOADING
TOTAL LOAD CASES: (4)

CHORDS

MEMB. FR-TO	MAX. FACTORED FORCE (LBS)	FACTORED VERT. LOAD (PLF) FROM	TO	LC1 MAX CSI (LC)	MAX. UNBRAC LENGTH
A- B	0 / 28	-91.8	-91.8	0.12 (1)	10.00
B- C	-563 / 0	-91.8	-91.8	0.41 (1)	6.25
C- D	0 / 0	-91.8	-91.8	0.55 (1)	10.00
E- D	-271 / 0	0.0	0.0	0.06 (1)	7.81
G- B	-691 / 0	0.0	0.0	0.07 (1)	7.81
G- F	0 / 0	-18.5	-18.5	0.16 (4)	10.00
F- E	0 / 504	-18.5	-18.5	0.20 (4)	10.00

WEBS

MEMB. FR-TO	MAX. FACTORED FORCE (LBS)	MAX CSI (LC)
F- C	0 / 109	0.04 (4)
C- E	-580 / 0	0.45 (1)
B- F	0 / 510	0.11 (1)

DESIGN CRITERIA

SPECIFIED LOADS:

TOP CH.	LL	=	25.6	PSF
	DL	=	6.0	PSF
BOT CH.	LL	=	0.0	PSF
	DL	=	7.4	PSF
TOTAL LOAD		=	39.0	PSF

SPACING = 24.0 IN. C/C

LOADING IN FLAT SECTION BASED ON A SLOPE OF 2.00/12 MINIMUM

THIS TRUSS IS DESIGNED FOR RESIDENTIAL OR SMALL BUILDING REQUIREMENTS OF PART 9, NBCC 2015

THIS DESIGN COMPLIES WITH:
- PART 9 OF BCBC 2018 , NBC-2019AE
- PART 9 OF OBC 2012 (2019 AMENDMENT)
- CSA 086-14
- TPIC 2014

(55 % OF 31.3 P.S.F. G.S.L. PLUS 8.4 P.S.F. RAIN LOAD) EQUALS 25.6 P.S.F. SPECIFIED ROOF LIVE LOAD

ALLOWABLE DEFL.(LL)= L/360 (0.36")
CALCULATED VERT. DEFL.(LL) = L/ 999 (0.01")
ALLOWABLE DEFL.(TL)= L/360 (0.36")
CALCULATED VERT. DEFL.(TL) = L/ 999 (0.04")

CSI: TC=0.55/1.00 (C-D:1) , BC=0.20/1.00 (E-F:4) , WB=0.45/1.00 (C-E:1) , SSI=0.21/1.00 (C-D:1)

DOL LUMBER=1.00 NAIL=1.00 LS BEND=1.10 COMP=1.10 SHEAR=1.10 TENS= 1.10

COMPANION LIVE LOAD FACTOR = 1.00

TRUSS PLATE MANUFACTURER IS NOT RESPONSIBLE FOR QUALITY CONTROL IN THE TRUSS MANUFACTURING PLANT .

NAIL VALUES

PLATE	GRIP(DRY) (PSI) MAX	MIN	SHEAR (PLI) MAX	MIN	SECTION (PLI) MAX	MIN
MT20	650	371	1747	788	1987	1873

PLATE PLACEMENT TOL. = 0.250 inches

PLATE ROTATION TOL. = 5.0 Deg.

JSI GRIP= 0.65 (C) (INPUT = 0.90)
JSI METAL= 0.19 (C) (INPUT = 0.95)

LICENSED PROFESSIONAL ENGINEER
9/25/23
C. M. HEYENS
100505065
PROVINCE OF ONTARIO

STRUCTURAL COMPONENT ONLY
DWG # TR23091818

CITY OF RICHMOND HILL
BUILDING DIVISION
05/01/2024
RECEIVED
Per: joshua.nabua

JOB NAME	TRUSS NAME	QUANTITY	PLY	JOB DESC.	DRWG NO.
434952	T34	1	1	GREENPARK HOMES TRUSS DESC.	

Tamarack Roof Truss, Burlington

Version 8.630 S Aug 30 2023 MiTek Industries, Inc. Fri Sep 22 10:27:59 2023 Page 1
ID:?7smMffSHcbvu6uGxGPN4oyih5x-7XJmy2yxQ58K0LF5hmUvIMVJsDvzdq4LyNrc9zyb72E

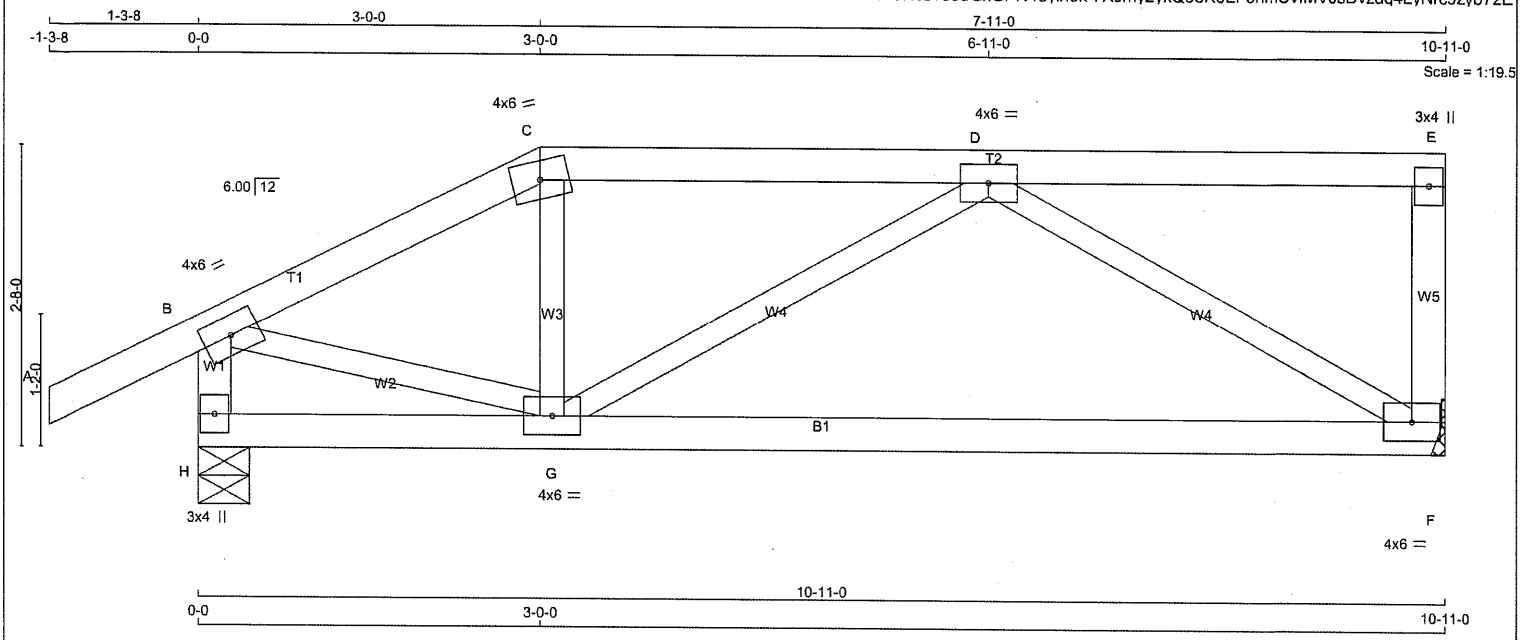

TOTAL WEIGHT = 41 lb
[M]

LUMBER
N. L. G. A. RULES

CHORDS	SIZE		LUMBER	DESCR.
A - C	2x4	DRY	No.2	SPF
C - E	2x4	DRY	No.2	SPF
F - E	2x4	DRY	No.2	SPF
H - B	2x4	DRY	No.2	SPF
H - F	2x4	DRY	No.2	SPF
ALL WEBS EXCEPT	2x3	DRY	No.2	SPF

DRY: SEASONED LUMBER.

PLATES (table is in inches)

JT	TYPE	PLATES	W	LEN	Y	X
B	TMVW-t	MT20	4.0	6.0		
C	TTW-m	MT20	4.0	6.0		
D	TMWW-t	MT20	4.0	6.0		
E	TMV+p	MT20	3.0	4.0		
F	BMVW1-t	MT20	4.0	6.0		
G	BMWWW-t	MT20	4.0	6.0		
H	BMV1+p	MT20	3.0	4.0		

NOTES- (1)
1) Lateral braces to be a minimum of 2X4 SPF #2.

DIMENSIONS, SUPPORTS AND LOADINGS SPECIFIED BY FABRICATOR TO BE VERIFIED BY BUILDING DESIGNER

BEARINGS

JT	FACTORED GROSS REACTION VERT	HORZ	MAXIMUM FACTORED GROSS REACTION DOWN	HORZ	UPLIFT	INPUT BRG IN-SX	REQRD BRG IN-SX
F	602	0	602	0	0	MECHANICAL	
H	726	0	726	0	0	5-8	1-8

A SUITABLE HANGER/MECHANICAL CONNECTION IS REQUIRED AT JOINT F. MINIMUM BEARING LENGTH AT JOINT F = 1-8.

UNFACTORED REACTIONS

JT	1ST LCASE COMBINED	MAX./MIN. COMPONENT REACTIONS SNOW	LIVE	PERM.LIVE	WIND	DEAD	SOIL
F	426	279 / 0	0 / 0	0 / 0	0 / 0	146 / 0	0 / 0
H	511	349 / 0	0 / 0	0 / 0	0 / 0	163 / 0	0 / 0

BEARING MATERIAL TO BE SPF NO.2 OR BETTER AT JOINT(S) H

BRACING
TOP CHORD TO BE SHEATHED OR MAX. PURLIN SPACING = 6.25 FT.
MAX. UNBRACED BOTTOM CHORD LENGTH = 10.00 FT OR RIGID CEILING DIRECTLY APPLIED.

ALL PITCH BREAKS AND PERIMETER CORNER JOINTS MUST BE LATERALLY RESTRAINED.

LOADING
TOTAL LOAD CASES: (4)

CHORDS

MEMB. FR-TO	MAX. FACTORED FORCE (LBS)	FACTORED VERT. LOAD (PLF) FROM	TO	LC1 MAX CSI (LC)	MAX. UNBRAC LENGTH
A- B	0 / 28	-91.8	-91.8	0.12 (1)	10.00
B- C	-674 / 0	-91.8	-91.8	0.15 (1)	6.25
C- D	-604 / 0	-91.8	-91.8	0.23 (1)	6.25
D- E	0 / 0	-91.8	-91.8	0.23 (1)	10.00
F- E	-142 / 0	0.0	0.0	0.02 (1)	7.81
H- B	-725 / 0	0.0	0.0	0.07 (1)	7.81
H- G	0 / 0	-18.5	-18.5	0.23 (4)	10.00
G- F	0 / 675	-18.5	-18.5	0.28 (4)	10.00

WEBS

MEMB. FR-TO	MAX. FACTORED FORCE (LBS)	MAX CSI (LC)
G- C	0 / 68	0.02 (4)
G- D	-84 / 60	0.03 (1)
D- F	-785 / 0	0.27 (1)
B- G	0 / 623	0.14 (1)

DESIGN CRITERIA

SPECIFIED LOADS:

TOP CH.	LL	=	25.6	PSF
	DL	=	6.0	PSF
BOT CH.	LL	=	0.0	PSF
	DL	=	7.4	PSF
TOTAL LOAD		=	39.0	PSF

SPACING = 24.0 IN. C/C

LOADING IN FLAT SECTION BASED ON A SLOPE OF 2.00/12 MINIMUM

THIS TRUSS IS DESIGNED FOR RESIDENTIAL OR SMALL BUILDING REQUIREMENTS OF PART 9, NBCC 2015

THIS DESIGN COMPLIES WITH:
- PART 9 OF BCBC 2018 , NBC-2019AE
- PART 9 OF OBC 2012 (2019 AMENDMENT)
- CSA 086-14
- TPIC 2014

(55 % OF 31.3 P.S.F. G.S.L. PLUS 8.4 P.S.F. RAIN LOAD) EQUALS 25.6 P.S.F. SPECIFIED ROOF LIVE LOAD

ALLOWABLE DEFL.(LL)= L/360 (0.36")
CALCULATED VERT. DEFL.(LL) = L/ 999 (0.01")
ALLOWABLE DEFL.(TL)= L/360 (0.36")
CALCULATED VERT. DEFL.(TL) = L/ 999 (0.10")

CSI: TC=0.23/1.00 (C-D:1) , BC=0.28/1.00 (F-G:4) , WB=0.27/1.00 (D-F:1) , SSI=0.18/1.00 (D-E:1)

DOL LUMBER=1.00 NAIL=1.00 LS BEND=1.10 COMP=1.10 SHEAR=1.10 TENS= 1.10

COMPANION LIVE LOAD FACTOR = 1.00

TRUSS PLATE MANUFACTURER IS NOT RESPONSIBLE FOR QUALITY CONTROL IN THE TRUSS MANUFACTURING PLANT .

NAIL VALUES

PLATE	GRIP(DRY) (PSI) MAX	MIN	SHEAR (PLI) MAX	MIN	SECTION (PLI) MAX	MIN
MT20	650	371	1747	788	1987	1873

PLATE PLACEMENT TOL. = 0.250 inches

PLATE ROTATION TOL. = 5.0 Deg.

JSI GRIP= 0.85 (G) (INPUT = 0.90)
JSI METAL= 0.18 (B) (INPUT = 0.95)

LICENSED PROFESSIONAL ENGINEER
9/25/23
C. M. HEYENS
100505065
PROVINCE OF ONTARIO

STRUCTURAL COMPONENT ONLY
DWG # TR23091819

CITY OF RICHMOND HILL
BUILDING DIVISION
05/01/2024
RECEIVED
Per: joshua.nabua

JOB NAME	TRUSS NAME	QUANTITY	PLY	JOB DESC.	DRWG NO.
434952	T35	2	1	GREENPARK HOMES TRUSS DESC.	

Tamarack Roof Truss, Burlington

Version 8.630 S Aug 30 2023 MiTek Industries, Inc. Fri Sep 22 10:27:59 2023 Page 1
ID:?7smMffSHcbvu6uGxGPN4oyih5x-7XJmy2yxQ58K0LF5hmUvIMVHvDx6dsXLyNrc9zyb72E

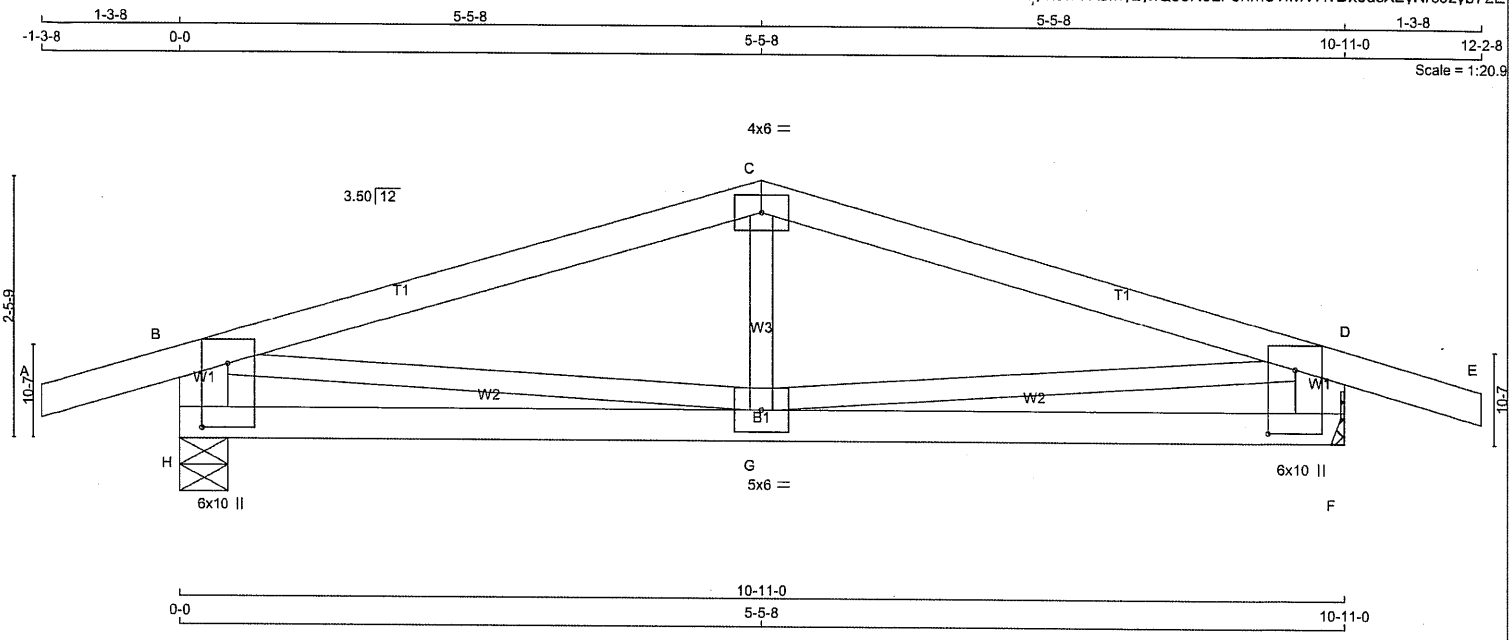

TOTAL WEIGHT = 2 X 40 = 79 lb

LUMBER
N. L. G. A. RULES

CHORDS	SIZE		LUMBER	DESCR.
A - C	2x4	DRY	No.2	SPF
C - E	2x4	DRY	No.2	SPF
H - B	2x6	DRY	No.2	SPF
F - D	2x6	DRY	No.2	SPF
H - F	2x4	DRY	No.2	SPF
ALL WEBS EXCEPT	2x3	DRY	No.2	SPF

DRY: SEASONED LUMBER.

PLATES (table is in inches)

JT	TYPE	PLATES	W	LEN	Y	X
B, D, F, H						
B						
C	TTW-p	MT20	4.0	6.0		
F	TMBMVW1*+p	MT20	6.0	10.0	7.25	3.00
G	BMWWW-t	MT20	5.0	6.0		
H	TMBMVW1*+p	MT20	6.0	10.0	7.25	3.00

NOTES- (1)
1) Lateral braces to be a minimum of 2X4 SPF #2.

DIMENSIONS, SUPPORTS AND LOADINGS SPECIFIED BY FABRICATOR TO BE VERIFIED BY BUILDING DESIGNER

BEARINGS

JT	FACTORED GROSS REACTION VERT	HORZ	MAXIMUM FACTORED GROSS REACTION DOWN	HORZ	UPLIFT	INPUT BRG IN-SX	REQRD BRG IN-SX
H	724	0	724	0	0	5-8	1-8
F	724	0	724	0	0	MECHANICAL	

A SUITABLE HANGER/MECHANICAL CONNECTION IS REQUIRED AT JOINT F. MINIMUM BEARING LENGTH AT JOINT F = 1-8.

UNFACTORED REACTIONS

JT	1ST LCASE COMBINED	MAX./MIN. COMPONENT REACTIONS SNOW	LIVE	PERM.LIVE	WIND	DEAD	SOIL
H	510	347 / 0	0 / 0	0 / 0	0 / 0	162 / 0	0 / 0
F	510	347 / 0	0 / 0	0 / 0	0 / 0	162 / 0	0 / 0

BEARING MATERIAL TO BE SPF NO.2 OR BETTER AT JOINT(S) H

BRACING
TOP CHORD TO BE SHEATHED OR MAX. PURLIN SPACING = 6.24 FT.
MAX. UNBRACED BOTTOM CHORD LENGTH = 10.00 FT OR RIGID CEILING DIRECTLY APPLIED.

ALL PITCH BREAKS AND PERIMETER CORNER JOINTS MUST BE LATERALLY RESTRAINED.

LOADING
TOTAL LOAD CASES: (4)

CHORDS

MEMB. FR-TO	MAX. FACTORED FORCE (LBS)	FACTORED VERT. LOAD LC1 (PLF) FROM	TO	MAX CSI (LC)	MAX. UNBRAC LENGTH
A- B	0 / 17	-91.8	-91.8	0.11 (1)	10.00
B- C	-814 / 0	-91.8	-91.8	0.36 (1)	6.24
C- D	-814 / 0	-91.8	-91.8	0.36 (1)	6.24
D- E	0 / 17	-91.8	-91.8	0.11 (1)	10.00
H- B	-683 / 0	0.0	0.0	0.04 (1)	7.81
F- D	-683 / 0	0.0	0.0	0.04 (1)	7.81
H- G	0 / 0	-18.5	-18.5	0.15 (4)	10.00
G- F	0 / 0	-18.5	-18.5	0.15 (4)	10.00

WEBS

MEMB. FR-TO	MAX. FACTORED FORCE (LBS)	MAX CSI (LC)
G- C	-45 / 78	0.03 (4)
B- G	0 / 785	0.18 (1)
G- D	0 / 785	0.18 (1)

DESIGN CRITERIA

SPECIFIED LOADS:

TOP CH.	LL	=	25.6	PSF
	DL	=	6.0	PSF
BOT CH.	LL	=	0.0	PSF
	DL	=	7.4	PSF
TOTAL LOAD		=	39.0	PSF

SPACING = 24.0 IN. C/C

THIS TRUSS IS DESIGNED FOR RESIDENTIAL OR SMALL BUILDING REQUIREMENTS OF PART 9, NBCC 2015

THIS DESIGN COMPLIES WITH:
- PART 9 OF BCBC 2018 , NBC-2019AE
- PART 9 OF OBC 2012 (2019 AMENDMENT)
- CSA 086-14
- TPIC 2014

(55 % OF 31.3 P.S.F. G.S.L. PLUS 8.4 P.S.F. RAIN LOAD) EQUALS 25.6 P.S.F. SPECIFIED ROOF LIVE LOAD

ALLOWABLE DEFL.(LL)= L/360 (0.36")
CALCULATED VERT. DEFL.(LL) = L/ 999 (0.02")
ALLOWABLE DEFL.(TL)= L/360 (0.36")
CALCULATED VERT. DEFL.(TL) = L/ 999 (0.04")

CSI: TC=0.36/1.00 (C-D:1) , BC=0.15/1.00 (F-G:4) , WB=0.18/1.00 (B-G:1) , SSI=0.19/1.00 (C-D:1)

DOL LUMBER=1.00 NAIL=1.00 LS BEND=1.10 COMP=1.10 SHEAR=1.10 TENS= 1.10

COMPANION LIVE LOAD FACTOR = 1.00

AUTOSOLVE HEELS OFF

TRUSS PLATE MANUFACTURER IS NOT RESPONSIBLE FOR QUALITY CONTROL IN THE TRUSS MANUFACTURING PLANT .

NAIL VALUES

PLATE	GRIP(DRY) (PSI) MAX	MIN	SHEAR (PLI) MAX	MIN	SECTION (PLI) MAX	MIN
MT20	650	371	1747	788	1987	1873

PLATE PLACEMENT TOL. = 0.250 inches

PLATE ROTATION TOL. = 5.0 Deg.

JSI GRIP= 0.70 (G) (INPUT = 0.90)
JSI METAL= 0.28 (F) (INPUT = 0.95)

LICENSED PROFESSIONAL ENGINEER
9/25/23
C. M. HEYENS
100505065
PROVINCE OF ONTARIO

STRUCTURAL COMPONENT ONLY
DWG # TR23091820

CITY OF RICHMOND HILL
BUILDING DIVISION
05/01/2024
RECEIVED
Per: joshua.nabua

JOB NAME	TRUSS NAME	QUANTITY	PLY	JOB DESC.	DRWG NO.
434952	T36	1	2	GREENPARK HOMES TRUSS DESC.	

Tamarack Roof Truss, Burlington

Version 8.630 S Aug 30 2023 MiTek Industries, Inc. Fri Sep 22 10:28:01 2023 Page 1
ID:?7smMffSHcbvu6uGxGPN4oyih5x-3vRWNk ByiP2FfPTpBWNNnah 1cv5lFeQhKjEryb72C

Scale = 1:23.5

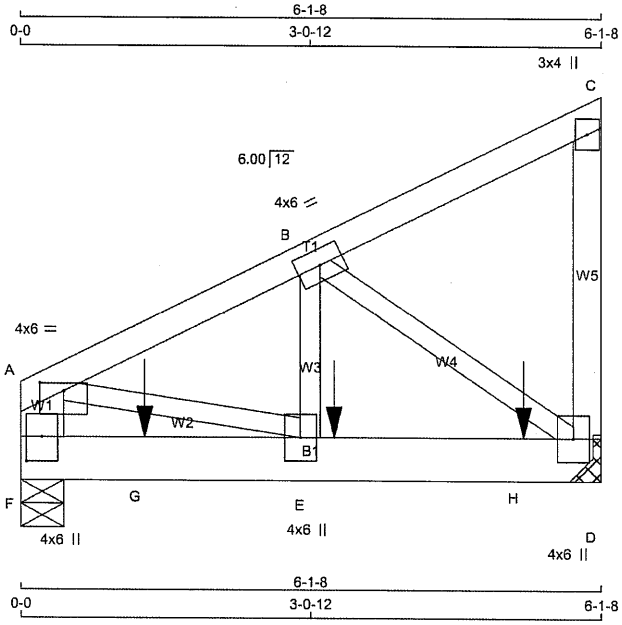

TOTAL WEIGHT = 2 X 30 = 60 lb

LUMBER
N. L. G. A. RULES

CHORDS	SIZE		LUMBER	DESCR.
A - C	2x4	DRY	No.2	SPF
D - C	2x4	DRY	No.2	SPF
F - A	2x6	DRY	No.2	SPF
F - D	2x6	DRY	No.2	SPF
ALL WEBS EXCEPT	2x3	DRY	No.2	SPF

DRY: SEASONED LUMBER.

DESIGN CONSISTS OF 2 TRUSSES BUILT SEPARATELY THEN FASTENED TOGETHER AS FOLLOWS:

CHORDS	#ROWS	SURFACE SPACING (IN)	LOAD(PLF)
TOP CHORDS : (0.122"X3") SPIRAL NAILS			
A- C	1	12	TOP
C- D	1	12	TOP
F- A	2	12	TOP
BOTTOM CHORDS : (0.122"X3") SPIRAL NAILS			
F- D	2	12	SIDE(183.1)
WEBS : (0.122"X3") SPIRAL NAILS			
2x3	1	6	

NAILS TO BE DRIVEN FROM ONE SIDE ONLY.

GIRDER NAILING ASSUMES NAILED HANGERS ARE FASTENED WITH MIN. 3-0 INCH NAILS.

TOP - COMPONENTS ARE LOADED FROM THE TOP AND MUST BE PLACED ON TOP EDGE OF ALL PLIES FOR THE LOAD TO BE TRANSFERRED TO EACH PLY.

SIDE - PLF SHOWN IS THE EQUIVALENT UDL APPLIED TO ONE SIDE THAT THE CORRESPONDING NAILING PATTERN SHALL BE CAPABLE OF TRANSFERING. REMAINING PLF MUST BE APPLIED ON THE OPPOSITE SIDE OR ON THE TOP.

PLATES (table is in inches)

JT	TYPE	PLATES	W	LEN	Y	X
A	TMVW-p	MT20	4.0	6.0	1.00	3.00
B	TMWW-t	MT20	4.0	6.0		
C	TMV+p	MT20	3.0	4.0		

LICENSED PROFESSIONAL ENGINEER
9/25/23
C. M. HEYENS
100505065
PROVINCE OF ONTARIO

STRUCTURAL COMPONENT ONLY
DWG # TR23091821

DIMENSIONS, SUPPORTS AND LOADINGS SPECIFIED BY FABRICATOR TO BE VERIFIED BY BUILDING DESIGNER

BEARINGS

JT	FACTORED GROSS REACTION VERT	HORZ	MAXIMUM FACTORED GROSS REACTION DOWN	HORZ	UPLIFT	INPUT BRG IN-SX	REQRD BRG IN-SX
D	1288	0	1288	0	0	MECHANICAL	
F	1261	0	1261	0	0	5-8	1-8

A SUITABLE HANGER/MECHANICAL CONNECTION IS REQUIRED AT JOINT D. MINIMUM BEARING LENGTH AT JOINT D = 1-8.

UNFACTORED REACTIONS

JT	1ST LCASE COMBINED	MAX./MIN. COMPONENT REACTIONS SNOW	LIVE	PERM.LIVE	WIND	DEAD	SOIL
D	908	613 / 0	0 / 0	0 / 0	0 / 0	295 / 0	0 / 0
F	888	606 / 0	0 / 0	0 / 0	0 / 0	281 / 0	0 / 0

BEARING MATERIAL TO BE SPF NO.2 OR BETTER AT JOINT(S) F

BRACING
TOP CHORD TO BE SHEATHED OR MAX. PURLIN SPACING = 6.25 FT.
MAX. UNBRACED BOTTOM CHORD LENGTH = 10.00 FT OR RIGID CEILING DIRECTLY APPLIED.

ALL PITCH BREAKS AND PERIMETER CORNER JOINTS MUST BE LATERALLY RESTRAINED.

LOADING
TOTAL LOAD CASES: (4)

CHORDS

MEMB. FR-TO	MAX. FACTORED FORCE (LBS)	FACTORED VERT. LOAD (PLF) FROM	TO	LC1 CSI (LC)	MAX UNBRAC LENGTH
A- B	-1200 / 0	-91.8	-91.8	0.07 (1)	6.25
B- C	-12 / 0	-91.8	-91.8	0.06 (1)	6.25
D- C	-114 / 0	0.0	0.0	0.01 (1)	7.81
F- A	-886 / 0	0.0	0.0	0.03 (1)	7.81
F- G	0 / 0	-18.5	-18.5	0.18 (1)	10.00
G- E	0 / 0	-18.5	-18.5	0.18 (1)	10.00
E- H	0 / 1084	-18.5	-18.5	0.19 (1)	10.00
H- D	0 / 1084	-18.5	-18.5	0.19 (1)	10.00

WEBS

MEMB. FR-TO	MAX. FACTORED FORCE (LBS)	MAX CSI (LC)
E- B	0 / 980	0.12 (1)
B- D	-1331 / 0	0.16 (1)
A- E	0 / 1108	0.14 (1)

SPECIFIED CONCENTRATED LOADS (LBS)

JT	LOC.	LC1	MAX-	MAX+	FACE	DIR.	TYPE	HEEL	CONN.
E	3-3-12	-411	-411	---	FRONT	VERT	TOTAL	---	C1
G	1-3-12	-495	-495	---	FRONT	VERT	TOTAL	---	C1
H	5-3-12	-412	-412	---	FRONT	VERT	TOTAL	---	C1

CONNECTION REQUIREMENTS

1) **C1:** A SUITABLE HANGER/MECHANICAL CONNECTION IS REQUIRED.

DESIGN CRITERIA

SPECIFIED LOADS:

TOP	CH.	LL	=	25.6	PSF
		DL	=	6.0	PSF
BOT	CH.	LL	=	0.0	PSF
		DL	=	7.4	PSF
TOTAL	LOAD		=	39.0	PSF

SPACING = 24.0 IN. C/C

THIS TRUSS IS DESIGNED FOR RESIDENTIAL OR SMALL BUILDING REQUIREMENTS OF PART 9, NBCC 2015

THIS DESIGN COMPLIES WITH:
- PART 9 OF BCBC 2018 , NBC-2019AE
- PART 9 OF OBC 2012 (2019 AMENDMENT)
- CSA 086-14
- TPIC 2014

(55 % OF 31.3 P.S.F. G.S.L. PLUS 8.4 P.S.F. RAIN LOAD) EQUALS 25.6 P.S.F. SPECIFIED ROOF LIVE LOAD

ALLOWABLE DEFL.(LL)= L/360 (0.20")
CALCULATED VERT. DEFL.(LL) = L/ 999 (0.01")
ALLOWABLE DEFL.(TL)= L/360 (0.20")
CALCULATED VERT. DEFL.(TL) = L/ 999 (0.02")

CSI: TC=0.07/1.00 (A-B:1) , BC=0.19/1.00 (D-E:1) , WB=0.16/1.00 (B-D:1) , SSI=0.13/1.00 (D-E:1)

DOL LUMBER=1.00 NAIL=1.00 LS BEND=1.00 COMP=1.00 SHEAR=1.00 TENS= 1.00

COMPANION LIVE LOAD FACTOR = 1.00

AUTOSOLVE RIGHT HEEL ONLY

TRUSS PLATE MANUFACTURER IS NOT RESPONSIBLE FOR QUALITY CONTROL IN THE TRUSS MANUFACTURING PLANT .

NAIL VALUES

PLATE	GRIP(DRY) (PSI) MAX	MIN	SHEAR (PLI) MAX	MIN	SECTION (PLI) MAX	MIN
MT20	650	371	1747	788	1987	1873

PLATE PLACEMENT TOL. = 0.250 inches

PLATE ROTATION TOL. = 5.0 Deg.

JSI GRIP= 0.54 (D) (INPUT = 0.90)
JSI METAL= 0.24 (D) (INPUT = 0.95)

CITY OF RICHMOND HILL
BUILDING DIVISION
05/01/2024
RECEIVED
Per: joshua.nabua

CONTINUED ON PAGE 2

JOB NAME	TRUSS NAME	QUANTITY	PLY	JOB DESC. GREENPARK HOMES	DRWG NO.
434952	T36	1	2	TRUSS DESC.	

Tamarack Roof Truss, Burlington

Version 8.630 S Aug 30 2023 MiTek Industries, Inc. Fri Sep 22 10:28:01 2023 Page 2
ID:?7smMffSHcbvu6uGxGPN4oyih5x-3vRWNk_ByiP2FfPTpBWNNnah_1cv5lFeQhKjEryb72C

PLATES (table is in inches)

JT	TYPE	PLATES	W	LEN	Y	X
D	BMVW1+p	MT20	4.0	6.0		
E	BMWW+t	MT20	4.0	6.0		
F	BMV1+p	MT20	4.0	6.0	3.25	2.00

NOTES- (1)
1) Lateral braces to be a minimum of 2X4 SPF #2.

LICENSED PROFESSIONAL ENGINEER
9/25/23
C. M. HEYENS
100505065
PROVINCE OF ONTARIO

STRUCTURAL COMPONENT ONLY
DWG # TR23091821

CITY OF RICHMOND HILL
BUILDING DIVISION
05/01/2024
RECEIVED
Per: joshua.nabua

JOB NAME	TRUSS NAME	QUANTITY	PLY	JOB DESC.	DRWG NO.
434952	T36Z	1	2	GREENPARK HOMES TRUSS DESC.	

Tamarack Roof Truss, Burlington

Version 8.630 S Aug 30 2023 MiTek Industries, Inc. Fri Sep 22 10:28:02 2023 Page 1
ID:?7smMffSHcbvu6uGxGPN4oyih5x-X6?ua4 pj0Xutp gNv1cv?7sjRxLqCHneL3HmIyb72B

Scale = 1:23.5

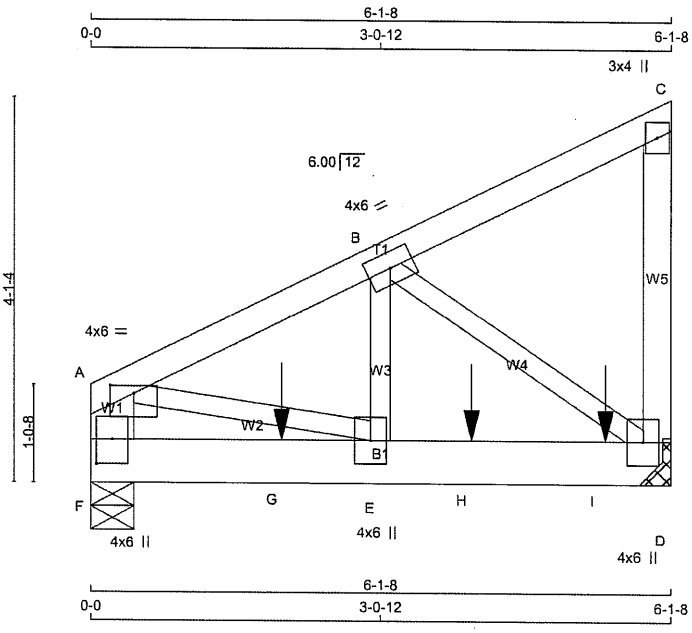

TOTAL WEIGHT = 2 X 30 = 60 lb
[M]

LUMBER
N. L. G. A. RULES

CHORDS	SIZE		LUMBER	DESCR.
A - C	2x4	DRY	No.2	SPF
D - C	2x4	DRY	No.2	SPF
F - A	2x6	DRY	No.2	SPF
F - D	2x6	DRY	No.2	SPF
ALL WEBS EXCEPT	2x3	DRY	No.2	SPF

DRY: SEASONED LUMBER.

DESIGN CONSISTS OF 2 TRUSSES BUILT SEPARATELY THEN FASTENED TOGETHER AS FOLLOWS:

CHORDS #ROWS	SURFACE SPACING (IN)	LOAD(PLF)
TOP CHORDS : (0.122"X3") SPIRAL NAILS		
A- C 1	12	TOP
C- D 1	12	TOP
F- A 2	12	TOP
BOTTOM CHORDS : (0.122"X3") SPIRAL NAILS		
F- D 2	12	SIDE(0.0)
WEBS : (0.122"X3") SPIRAL NAILS		
2x3 1	6	

NAILS TO BE DRIVEN FROM ONE SIDE ONLY.

GIRDER NAILING ASSUMES NAILED HANGERS ARE FASTENED WITH MIN. 3-0 INCH NAILS.

TOP - COMPONENTS ARE LOADED FROM THE TOP AND MUST BE PLACED ON TOP EDGE OF ALL PLIES FOR THE LOAD TO BE TRANSFERRED TO EACH PLY.

SIDE - PLF SHOWN IS THE EQUIVALENT UDL APPLIED TO ONE SIDE THAT THE CORRESPONDING NAILING PATTERN SHALL BE CAPABLE OF TRANSFERING. REMAINING PLF MUST BE APPLIED ON THE OPPOSITE SIDE OR ON THE TOP.

PLATES (table is in inches)

JT	TYPE	PLATES	W	LEN	Y	X
A	TMWW-p	MT20	4.0	6.0	1.00	3.00
B	TMWW-t	MT20	4.0	6.0		
C	TMV+p	MT20	3.0	4.0		

LICENSED PROFESSIONAL ENGINEER
9/25/23
C. M. HEYENS
100505065
PROVINCE OF ONTARIO

STRUCTURAL COMPONENT ONLY
DWG # TR23091822

DIMENSIONS, SUPPORTS AND LOADINGS SPECIFIED BY FABRICATOR TO BE VERIFIED BY BUILDING DESIGNER

BEARINGS

JT	FACTORED GROSS REACTION VERT	HORZ	MAXIMUM FACTORED GROSS REACTION DOWN	HORZ	UPLIFT	INPUT BRG IN-SX	REQRD BRG IN-SX
D	1607	0	1607	0	0	MECHANICAL	
F	1099	0	1099	0	0	5-8	1-8

A SUITABLE HANGER/MECHANICAL CONNECTION IS REQUIRED AT JOINT D. MINIMUM BEARING LENGTH AT JOINT D = 1-8.

UNFACTORED REACTIONS

MAX./MIN. COMPONENT REACTIONS

JT	1ST LCASE COMBINED	SNOW	LIVE	PERM.LIVE	WIND	DEAD	SOIL
D	1129	782 / 0	0 / 0	0 / 0	0 / 0	346 / 0	0 / 0
F	772	532 / 0	0 / 0	0 / 0	0 / 0	240 / 0	0 / 0

BEARING MATERIAL TO BE SPF NO.2 OR BETTER AT JOINT(S) F

BRACING

TOP CHORD TO BE SHEATHED OR MAX. PURLIN SPACING = 6.25 FT.
MAX. UNBRACED BOTTOM CHORD LENGTH = 10.00 FT OR RIGID CEILING DIRECTLY APPLIED.

ALL PITCH BREAKS AND PERIMETER CORNER JOINTS MUST BE LATERALLY RESTRAINED.

LOADING

TOTAL LOAD CASES: (4)

CHORDS

MEMB. FR-TO	MAX. FACTORED FORCE (LBS)	FACTORED VERT. LOAD (PLF) FROM	TO	LC1 MAX CSI (LC)	MAX. UNBRAC LENGTH
A- B	-1307 / 0	-91.8	-91.8	0.07 (1)	6.25
B- C	-12 / 0	-91.8	-91.8	0.06 (1)	6.25
D- C	-115 / 0	0.0	0.0	0.01 (1)	7.81
F- A	-955 / 0	0.0	0.0	0.03 (1)	7.81
F- G	0 / 0	-18.5	-18.5	0.13 (1)	10.00
G- E	0 / 0	-18.5	-18.5	0.13 (1)	10.00
E- H	0 / 1180	-18.5	-18.5	0.24 (1)	10.00
H- I	0 / 1180	-18.5	-18.5	0.24 (1)	10.00
I- D	0 / 1180	-18.5	-18.5	0.24 (1)	10.00

WEBS

MEMB. FR-TO	MAX. FACTORED FORCE (LBS)	MAX CSI (LC)
E- B	0 / 1097	0.14 (1)
B- D	-1448 / 0	0.18 (1)
A- E	0 / 1206	0.15 (1)

SPECIFIED CONCENTRATED LOADS (LBS)

JT	LOC.	LC1	MAX-	MAX+	FACE	DIR.	TYPE	HEEL	CONN.
G	2-0-4	-474	-474	---	BACK	VERT	TOTAL	---	C1
H	4-0-4	-474	-474	---	BACK	VERT	TOTAL	---	C1
I	5-5-4	-476	-476	---	BACK	VERT	TOTAL	---	C1

CONNECTION REQUIREMENTS

1) **C1:** A SUITABLE HANGER/MECHANICAL CONNECTION IS REQUIRED.

DESIGN CRITERIA

SPECIFIED LOADS:

TOP	CH.	LL	=	25.6	PSF
		DL	=	6.0	PSF
BOT	CH.	LL	=	0.0	PSF
		DL	=	7.4	PSF
TOTAL	LOAD		=	39.0	PSF

SPACING = 24.0 IN. C/C

THIS TRUSS IS DESIGNED FOR RESIDENTIAL OR SMALL BUILDING REQUIREMENTS OF PART 9, NBCC 2015

THIS DESIGN COMPLIES WITH:
- PART 9 OF BCBC 2018 , NBC-2019AE
- PART 9 OF OBC 2012 (2019 AMENDMENT)
- CSA 086-14
- TPIC 2014

(55 % OF 31.3 P.S.F. G.S.L. PLUS 8.4 P.S.F. RAIN LOAD) EQUALS 25.6 P.S.F. SPECIFIED ROOF LIVE LOAD

ALLOWABLE DEFL.(LL)= L/360 (0.20")
CALCULATED VERT. DEFL.(LL) = L/ 999 (0.01")
ALLOWABLE DEFL.(TL)= L/360 (0.20")
CALCULATED VERT. DEFL.(TL) = L/ 999 (0.02")

CSI: TC=0.07/1.00 (A-B:1) , BC=0.24/1.00 (D-E:1) , WB=0.18/1.00 (B-D:1) , SSI=0.25/1.00 (D-E:1)

DOL LUMBER=1.00 NAIL=1.00 LS BEND=1.00 COMP=1.00 SHEAR=1.00 TENS= 1.00

COMPANION LIVE LOAD FACTOR = 1.00

AUTOSOLVE RIGHT HEEL ONLY

TRUSS PLATE MANUFACTURER IS NOT RESPONSIBLE FOR QUALITY CONTROL IN THE TRUSS MANUFACTURING PLANT .

NAIL VALUES

PLATE	GRIP(DRY) (PSI) MAX	MIN	SHEAR (PLI) MAX	MIN	SECTION (PLI) MAX	MIN
MT20	650	371	1747	788	1987	1873

PLATE PLACEMENT TOL. = 0.250 inches

PLATE ROTATION TOL. = 5.0 Deg.

JSI GRIP= 0.59 (D) (INPUT = 0.90)
JSI METAL= 0.27 (D) (INPUT = 0.95)

CONTINUED ON PAGE 2

CITY OF RICHMOND HILL
BUILDING DIVISION
05/01/2024
RECEIVED
Per: joshua.nabua

JOB NAME	TRUSS NAME	QUANTITY	PLY	JOB DESC. GREENPARK HOMES	DRWG NO.
434952	T36Z	1	2	TRUSS DESC.	

Tamarack Roof Truss, Burlington

Version 8.630 S Aug 30 2023 MiTek Industries, Inc. Fri Sep 22 10:28:02 2023 Page 2
ID:?7smMffSHcbvu6uGxGPN4oyih5x-X6?ua4_pj0Xutp_gNv1cv?7sjRxLqCHneL3HmIyb72B

PLATES (table is in inches)

JT	TYPE	PLATES	W	LEN	Y	X
D	BMVW1+p	MT20	4.0	6.0		
E	BMWW+t	MT20	4.0	6.0		
F	BMV1+p	MT20	4.0	6.0	3.25	2.00

NOTES- (1)
1) Lateral braces to be a minimum of 2X4 SPF #2.

LICENSED PROFESSIONAL ENGINEER
9/25/23
C. M. HEYENS
100505065
PROVINCE OF ONTARIO

STRUCTURAL COMPONENT ONLY
DWG # TR23091822

CITY OF RICHMOND HILL
BUILDING DIVISION
05/01/2024
RECEIVED
Per: joshua.nabua

JOB NAME	TRUSS NAME	QUANTITY	PLY	JOB DESC.	DRWG NO.
434952	T37	1	2	GREENPARK HOMES TRUSS DESC.	

Tamarack Roof Truss, Burlington

Version 8.630 S Aug 30 2023 MiTek Industries, Inc. Fri Sep 22 10:28:02 2023 Page 1
ID:?7smMffSHcbvu6uGxGPN4oyih5x-X6?ua4_pj0Xutp_gNv1cv?7t9RyJqDxneL3HmIyb72B

Scale = 1:13.8

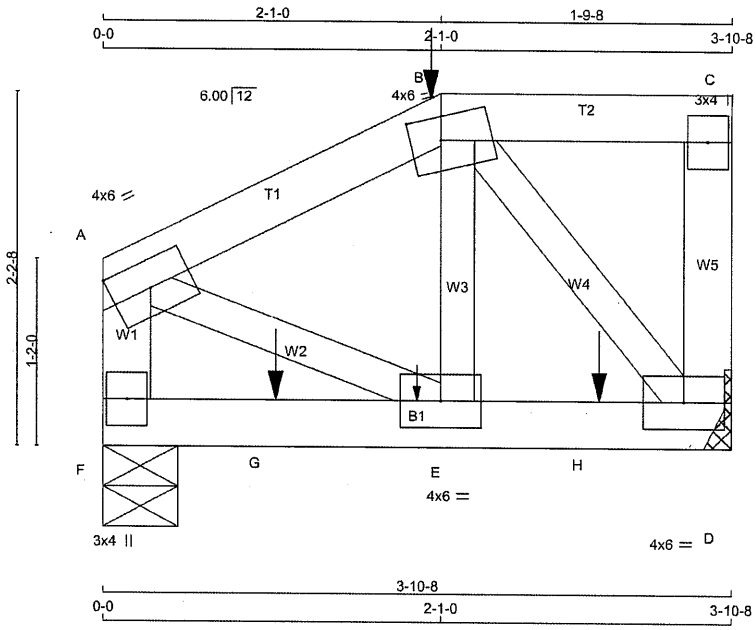

TOTAL WEIGHT = 2 X 17 = 33 lb

LUMBER

N. L. G. A. RULES

CHORDS	SIZE		LUMBER	DESCR.
A - B	2x4	DRY	No.2	SPF
B - C	2x4	DRY	No.2	SPF
D - C	2x4	DRY	No.2	SPF
F - A	2x4	DRY	No.2	SPF
F - D	2x4	DRY	No.2	SPF
ALL WEBS EXCEPT	2x3	DRY	No.2	SPF

DRY: SEASONED LUMBER.

DESIGN CONSISTS OF 2 TRUSSES BUILT SEPARATELY THEN FASTENED TOGETHER AS FOLLOWS:

CHORDS	#ROWS	SURFACE SPACING (IN)	LOAD(PLF)
TOP CHORDS : (0.122"X3") SPIRAL NAILS			
A- B	1	12	SIDE(61.0)
B- C	1	12	SIDE(61.0)
C- D	1	12	TOP
F- A	1	12	TOP
BOTTOM CHORDS : (0.122"X3") SPIRAL NAILS			
F- D	1	12	SIDE(0.0)
WEBS : (0.122"X3") SPIRAL NAILS			
2x3	1	6	

NAILS TO BE DRIVEN FROM ONE SIDE ONLY.

GIRDER NAILING ASSUMES NAILED HANGERS ARE FASTENED WITH MIN. 3-0 INCH NAILS.

TOP - COMPONENTS ARE LOADED FROM THE TOP AND MUST BE PLACED ON TOP EDGE OF ALL PLIES FOR THE LOAD TO BE TRANSFERRED TO EACH PLY.

SIDE - PLF SHOWN IS THE EQUIVALENT UDL APPLIED TO ONE SIDE THAT THE CORRESPONDING NAILING PATTERN SHALL BE CAPABLE OF TRANSFERING. REMAINING PLF MUST BE APPLIED ON THE OPPOSITE SIDE OR ON THE TOP.

PLATES (table is in inches)

JT	TYPE	PLATES	W	LEN	Y	X
A	TMVW-t	MT20	4.0	6.0		Edge

LICENSED PROFESSIONAL ENGINEER
9/25/23
C. M. HEYENS
100505065
PROVINCE OF ONTARIO

STRUCTURAL COMPONENT ONLY
DWG # TR23091823

DIMENSIONS, SUPPORTS AND LOADINGS SPECIFIED BY FABRICATOR TO BE VERIFIED BY BUILDING DESIGNER

BEARINGS

JT	FACTORED GROSS REACTION VERT	HORZ	MAXIMUM FACTORED GROSS REACTION DOWN	HORZ	UPLIFT	INPUT BRG IN-SX	REQRD BRG IN-SX
D	817	0	817	0	0	MECHANICAL	
F	742	0	742	0	0	5-8	1-8

A SUITABLE HANGER/MECHANICAL CONNECTION IS REQUIRED AT JOINT D. MINIMUM BEARING LENGTH AT JOINT D = 1-8.

UNFACTORED REACTIONS

JT	1ST LCASE COMBINED	MAX./MIN. COMPONENT REACTIONS SNOW	LIVE	PERM.LIVE	WIND	DEAD	SOIL
D	573	401 / 0	0 / 0	0 / 0	0 / 0	173 / 0	0 / 0
F	521	364 / 0	0 / 0	0 / 0	0 / 0	157 / 0	0 / 0

BEARING MATERIAL TO BE SPF NO.2 OR BETTER AT JOINT(S) F

BRACING

TOP CHORD TO BE SHEATHED OR MAX. PURLIN SPACING = 6.25 FT.
MAX. UNBRACED BOTTOM CHORD LENGTH = 10.00 FT OR RIGID CEILING DIRECTLY APPLIED.

ALL PITCH BREAKS AND PERIMETER CORNER JOINTS MUST BE LATERALLY RESTRAINED.

LOADING

TOTAL LOAD CASES: (4)

CHORDS

MEMB. FR-TO	MAX. FACTORED FORCE (LBS)	FACTORED VERT. LOAD (PLF) FROM	TO	LC1	MAX CSI (LC)	MAX. UNBRAC LENGTH
A- B	-533 / 0	-91.8	-91.8	0.04 (1)	6.25	
B- C	0 / 0	-91.8	-91.8	0.03 (1)	10.00	
D- C	-82 / 0	0.0	0.0	0.01 (1)	7.81	
F- A	-522 / 0	0.0	0.0	0.03 (1)	7.81	
F- G	0 / 0	-18.5	-18.5	0.17 (1)	10.00	
G- E	0 / 0	-18.5	-18.5	0.17 (1)	10.00	
E- H	0 / 507	-18.5	-18.5	0.18 (1)	10.00	
H- D	0 / 507	-18.5	-18.5	0.18 (1)	10.00	

WEBS

MEMB. FR-TO	MAX. FACTORED FORCE (LBS)	MAX CSI (LC)
E- B	0 / 566	0.07 (1)
B- D	-740 / 0	0.07 (1)
A- E	0 / 511	0.06 (1)

SPECIFIED CONCENTRATED LOADS (LBS)

JT	LOC.	LC1	MAX-	MAX+	FACE	DIR.	TYPE	HEEL	CONN.
B	2-1-0	-5	-5	---	FRONT	VERT	DEAD	---	C1
B	2-1-0	-3	-3	---	BACK	VERT	TOTAL	---	C1
B	2-1-0	-18	-18	---	FRONT	VERT	SNOW	---	C1
E	1-11-4	1	1	---	BACK	VERT	TOTAL	---	C1
G	1-0-12	-383	-383	---	FRONT	VERT	TOTAL	---	C1
H	3-0-12	-384	-384	---	FRONT	VERT	TOTAL	---	C1

CONNECTION REQUIREMENTS

1) **C1:** A SUITABLE HANGER/MECHANICAL CONNECTION IS REQUIRED.

[M]

DESIGN CRITERIA

*** SPECIAL LOADS ANALYSIS ***
GEOMETRY AND/OR BASIC LOADS CHANGED BY USER.
LOADS WERE DERIVED FROM USER INPUT
NO FURTHER MODIFICATIONS WERE MADE

SPECIFIED LOADS:

TOP CH.	LL	=	25.6	PSF
	DL	=	6.0	PSF
BOT CH.	LL	=	0.0	PSF
	DL	=	7.4	PSF
TOTAL LOAD		=	39.0	PSF

SPACING = 24.0 IN. C/C

LOADING IN FLAT SECTION BASED ON A SLOPE OF 2.00/12 MINIMUM

*** NON STANDARD GIRDER ***
ADDT'L USER-DEFINED LOADS APPLIED TO ALL LOAD CASES.

THIS TRUSS IS DESIGNED FOR RESIDENTIAL OR SMALL BUILDING REQUIREMENTS OF PART 9, NBCC 2015

THIS DESIGN COMPLIES WITH:
- PART 9 OF BCBC 2018 , NBC-2019AE
- PART 9 OF OBC 2012 (2019 AMENDMENT)
- CSA 086-14
- TPIC 2014

(55 % OF 31.3 P.S.F. G.S.L. PLUS 8.4 P.S.F. RAIN LOAD) EQUALS 25.6 P.S.F. SPECIFIED ROOF LIVE LOAD

ALLOWABLE DEFL.(LL)= L/360 (0.19")
CALCULATED VERT. DEFL.(LL) = L/ 999 (0.01")
ALLOWABLE DEFL.(TL)= L/360 (0.19")
CALCULATED VERT. DEFL.(TL) = L/ 999 (0.01")

CSI: TC=0.04/1.00 (A-B:1) , BC=0.18/1.00 (D-E:1) , WB=0.07/1.00 (B-E:1) , SSI=0.17/1.00 (D-E:1)

DOL LUMBER=1.00 NAIL=1.00 LS BEND=1.00 COMP=1.00 SHEAR=1.00 TENS= 1.00

COMPANION LIVE LOAD FACTOR = 1.00

TRUSS PLATE MANUFACTURER IS NOT RESPONSIBLE FOR QUALITY CONTROL IN THE TRUSS MANUFACTURING PLANT .

NAIL VALUES

PLATE	GRIP(DRY) (PSI) MAX	MIN	SHEAR (PLI) MAX	MIN	SECTION (PLI) MAX	MIN
MT20	650	371	1747	788	1987	1873

PLATE PLACEMENT TOL. = 0.250 inches

PLATE ROTATION TOL. = 5.0 Deg.

JSI GRIP= 0.43 (B) (INPUT = 0.90)
JSI METAL= 0.14 (B) (INPUT = 0.95)

CONTINUED ON PAGE 2

CITY OF RICHMOND HILL
BUILDING DIVISION
05/01/2024
RECEIVED
Per: joshua.nabua

JOB NAME	TRUSS NAME	QUANTITY	PLY	JOB DESC. GREENPARK HOMES	DRWG NO.
434952	T37	1	2	TRUSS DESC.	

Tamarack Roof Truss, Burlington

ID:?7smMffSHcbvu6uGxGPN4oyih5x-?IYGoQ?SUJflVzZswcZrSCf2vqIYZgBxt?pqIkyb72A

PLATES (table is in inches)

JT	TYPE	PLATES	W	LEN	Y	X
B	TTWW-m	MT20	4.0	6.0	1.75	2.25
C	TMV+p	MT20	3.0	4.0		
D	BMVW1-t	MT20	4.0	6.0		
E	BMWW-t	MT20	4.0	6.0		
F	BMV1+p	MT20	3.0	4.0		

Edge - INDICATES REFERENCE CORNER OF PLATE TOUCHES EDGE OF CHORD.

NOTES- (1)
1) Lateral braces to be a minimum of 2X4 SPF #2.

LICENSED PROFESSIONAL ENGINEER
9/25/23
C. M. HEYENS
100505065
PROVINCE OF ONTARIO

STRUCTURAL COMPONENT ONLY
DWG # TR23091823

CITY OF RICHMOND HILL
BUILDING DIVISION
05/01/2024
RECEIVED
Per: joshua.nabua

JOB NAME	TRUSS NAME	QUANTITY	PLY	JOB DESC.	DRWG NO.
434950	T38	7	1	GREENPARK HOMES TRUSS DESC.	

Tamarack Roof Truss, Burlington

Version 8.630 S Aug 30 2023 MiTek Industries, Inc. Fri Sep 22 10:16:07 2023 Page 1
ID:k9FUa2BLPEMel6oi5h6?yeyfqBp-zYIbWbLK6KRLbwqF EixRD?fCCycpt0YEbMxAEyb7DM

Scale = 1:24.4

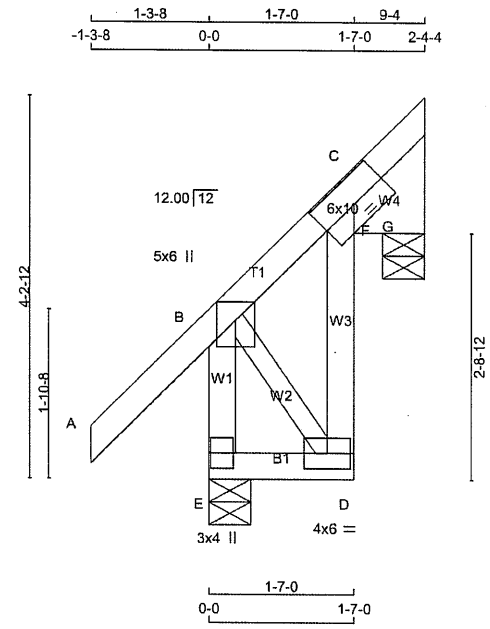

TOTAL WEIGHT = 7 X 18 = 123 lb [M]

LUMBER
N. L. G. A. RULES

CHORDS	SIZE		LUMBER	DESCR.
A - C	2x4	DRY	No.2	SPF
D - C	2x4	DRY	No.2	SPF
E - B	2x4	DRY	No.2	SPF
E - D	2x4	DRY	No.2	SPF
ALL WEBS	2x3	DRY	No.2	SPF

DRY: SEASONED LUMBER.

PLATES (table is in inches)

JT	TYPE	PLATES	W	LEN	Y	X
B	TMVW+p	MT20	5.0	6.0	Edge	2.50
C	TMVW1-t	MT20	6.0	10.0	3.25	5.00
D	BMVW-t	MT20	4.0	6.0		
E	BMV1+p	MT20	3.0	4.0		

Edge - INDICATES REFERENCE CORNER OF PLATE TOUCHES EDGE OF CHORD.

NOTES- (1)
1) Lateral braces to be a minimum of 2X4 SPF #2.

DIMENSIONS, SUPPORTS AND LOADINGS SPECIFIED BY FABRICATOR TO BE VERIFIED BY BUILDING DESIGNER

BEARINGS

JT	FACTORED GROSS REACTION VERT	HORZ	MAXIMUM FACTORED GROSS REACTION DOWN	HORZ	UPLIFT	INPUT BRG IN-SX	REQRD BRG IN-SX
G(C)	23	0	23	0	-28	5-8	8-12
E	280	0	280	0	0	5-8	1-8

PROVIDE ANCHORAGE AT BEARING JOINT C FOR 150 LBS FACTORED UPLIFT

UNFACTORED REACTIONS

JT	1ST LCASE COMBINED	MAX./MIN. COMPONENT REACTIONS SNOW	LIVE	PERM.LIVE	WIND	DEAD	SOIL
G(C)	17	7 / -23	0 / 0	0 / 0	0 / 0	10 / 0	0 / 0
E	194	146 / 0	0 / 0	0 / 0	0 / 0	49 / 0	0 / 0

BEARING MATERIAL TO BE SPF NO.2 OR BETTER AT JOINT(S) G(C), E

BRACING
TOP CHORD TO BE SHEATHED OR MAX. PURLIN SPACING = 6.25 FT.
MAX. UNBRACED BOTTOM CHORD LENGTH = 10.00 FT OR RIGID CEILING DIRECTLY APPLIED.

ALL PITCH BREAKS AND PERIMETER CORNER JOINTS MUST BE LATERALLY RESTRAINED.

LOADING
TOTAL LOAD CASES: (5)

CHORDS

MEMB. FR-TO	MAX. FACTORED FORCE (LBS)	FACTORED VERT. LOAD (PLF) FROM	TO	LC1 MAX CSI (LC)	MAX. UNBRAC LENGTH
A- B	0 / 45	-91.8	-91.8	0.13 (1)	10.00
B- C	-46 / 0	-91.8	-91.8	0.12 (1)	6.25
D- F	0 / 15	0.0	0.0	0.02 (5)	10.00
F- C	0 / 15	0.0	0.0	0.02 (5)	10.00
E- B	-265 / 0	0.0	0.0	0.03 (1)	7.81
E- D	0 / 0	-18.5	-18.5	0.01 (4)	10.00

WEBS

MEMB. FR-TO	MAX. FACTORED FORCE (LBS)	MAX CSI (LC)
B- D	-7 / 6	0.00 (1)
C- G	-33 / 40	0.00 (5)
F- G	-29 / 24	0.00 (1)

CANTILEVER ANALYSIS HAS BEEN CONSIDERED IN THIS DESIGN

DESIGN CRITERIA

SPECIFIED LOADS:

TOP CH.	LL	=	25.6	PSF
	DL	=	6.0	PSF
BOT CH.	LL	=	0.0	PSF
	DL	=	7.4	PSF
TOTAL LOAD		=	39.0	PSF

SPACING = 24.0 IN. C/C

THIS TRUSS IS DESIGNED FOR RESIDENTIAL OR SMALL BUILDING REQUIREMENTS OF PART 9, NBCC 2015

THIS DESIGN COMPLIES WITH:
- PART 9 OF BCBC 2018 , NBC-2019AE
- PART 9 OF OBC 2012 (2019 AMENDMENT)
- CSA 086-14
- TPIC 2014

DESIGN ASSUMPTIONS
-OVERHANG NOT TO BE ALTERED OR CUT OFF.

(55 % OF 31.3 P.S.F. G.S.L. PLUS 8.4 P.S.F. RAIN LOAD) EQUALS 25.6 P.S.F. SPECIFIED ROOF LIVE LOAD

ALLOWABLE DEFL.(LL)= L/360 (0.19")
CALCULATED VERT. DEFL.(LL) = L/ 999 (0.00")
ALLOWABLE DEFL.(TL)= L/360 (0.19")
CALCULATED VERT. DEFL.(TL) = L/ 999 (0.00")

CSI: TC=0.13/1.00 (A-B:1) , BC=0.01/1.00 (D-E:4) , WB=0.00/1.00 (C-G:5) , SSI=0.07/1.00 (B-C:1)

DOL LUMBER=1.00 NAIL=1.00 LS BEND=1.10 COMP=1.10 SHEAR=1.10 TENS= 1.10

COMPANION LIVE LOAD FACTOR = 1.00

TRUSS PLATE MANUFACTURER IS NOT RESPONSIBLE FOR QUALITY CONTROL IN THE TRUSS MANUFACTURING PLANT .

NAIL VALUES

PLATE	GRIP(DRY) (PSI) MAX	MIN	SHEAR (PLI) MAX	MIN	SECTION (PLI) MAX	MIN
MT20	650	371	1747	788	1987	1873

PLATE PLACEMENT TOL. = 0.250 inches

PLATE ROTATION TOL. = 5.0 Deg.

JSI GRIP= 0.13 (B) (INPUT = 0.90)
JSI METAL= 0.06 (B) (INPUT = 0.95)

LICENSED PROFESSIONAL ENGINEER
9/25/23
C. M. HEYENS
100505065
PROVINCE OF ONTARIO

STRUCTURAL COMPONENT ONLY
DWG # TR23091800

CITY OF RICHMOND HILL
BUILDING DIVISION
05/01/2024
RECEIVED
Per: joshua.nabua

JOB NAME	TRUSS NAME	QUANTITY	PLY	JOB DESC.	DRWG NO.
434950	T38Z	6	1	GREENPARK HOMES TRUSS DESC.	

Tamarack Roof Truss, Burlington

Version 8.630 S Aug 30 2023 MiTek Industries, Inc. Fri Sep 22 10:16:08 2023 Page 1
ID:k9FUa2BLPEMel6oi5h6?yeyfqBp-RkrzkxLyteZCD4ORYyEAzQYpxclrYKFhTF6Uiqyb7DL

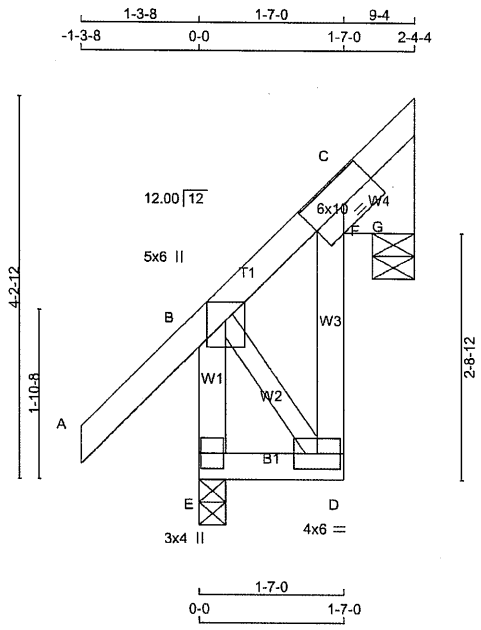

TOTAL WEIGHT = 6 X 18 = 105 lb [M]

LUMBER
N. L. G. A. RULES

CHORDS	SIZE		LUMBER	DESCR.
A - C	2x4	DRY	No.2	SPF
D - C	2x4	DRY	No.2	SPF
E - B	2x4	DRY	No.2	SPF
E - D	2x4	DRY	No.2	SPF
ALL WEBS	2x3	DRY	No.2	SPF

DRY: SEASONED LUMBER.

PLATES (table is in inches)

JT	TYPE	PLATES	W	LEN	Y	X
B	TMVW+p	MT20	5.0	6.0	Edge	2.50
C	TMVW1-t	MT20	6.0	10.0	3.25	5.00
D	BMVW-t	MT20	4.0	6.0		
E	BMV1+p	MT20	3.0	4.0		

Edge - INDICATES REFERENCE CORNER OF PLATE TOUCHES EDGE OF CHORD.

NOTES- (1)
1) Lateral braces to be a minimum of 2X4 SPF #2.

DIMENSIONS, SUPPORTS AND LOADINGS SPECIFIED BY FABRICATOR TO BE VERIFIED BY BUILDING DESIGNER

BEARINGS

JT	FACTORED GROSS REACTION VERT	HORZ	MAXIMUM FACTORED GROSS REACTION DOWN	HORZ	UPLIFT	INPUT BRG IN-SX	REQRD BRG IN-SX
G(C)	23	0	23	0	-28	5-8	8-12
E	280	0	280	0	0	3-8	1-8

PROVIDE ANCHORAGE AT BEARING JOINT C FOR 150 LBS FACTORED UPLIFT

UNFACTORED REACTIONS

JT	1ST LCASE COMBINED	MAX./MIN. COMPONENT REACTIONS SNOW	LIVE	PERM.LIVE	WIND	DEAD	SOIL
G(C)	17	7 / -23	0 / 0	0 / 0	0 / 0	10 / 0	0 / 0
E	194	146 / 0	0 / 0	0 / 0	0 / 0	49 / 0	0 / 0

BEARING MATERIAL TO BE SPF NO.2 OR BETTER AT JOINT(S) G(C), E

BRACING
TOP CHORD TO BE SHEATHED OR MAX. PURLIN SPACING = 6.25 FT.
MAX. UNBRACED BOTTOM CHORD LENGTH = 10.00 FT OR RIGID CEILING DIRECTLY APPLIED.

ALL PITCH BREAKS AND PERIMETER CORNER JOINTS MUST BE LATERALLY RESTRAINED.

LOADING
TOTAL LOAD CASES: (5)

CHORDS

MEMB. FR-TO	MAX. FACTORED FORCE (LBS)	FACTORED VERT. LOAD (PLF) FROM	TO	LC1 MAX CSI (LC)	MAX. UNBRAC LENGTH
A- B	0 / 45	-91.8	-91.8	0.13 (1)	10.00
B- C	-46 / 0	-91.8	-91.8	0.12 (1)	6.25
D- F	0 / 15	0.0	0.0	0.02 (5)	10.00
F- C	0 / 15	0.0	0.0	0.02 (5)	10.00
E- B	-265 / 0	0.0	0.0	0.03 (1)	7.81
E- D	0 / 0	-18.5	-18.5	0.01 (4)	10.00

WEBS

MEMB. FR-TO	MAX. FACTORED FORCE (LBS)	MAX CSI (LC)
B- D	-7 / 6	0.00 (1)
C- G	-33 / 40	0.00 (5)
F- G	-29 / 24	0.00 (1)

CANTILEVER ANALYSIS HAS BEEN CONSIDERED IN THIS DESIGN

DESIGN CRITERIA

SPECIFIED LOADS:

TOP CH.	LL	=	25.6	PSF
	DL	=	6.0	PSF
BOT CH.	LL	=	0.0	PSF
	DL	=	7.4	PSF
TOTAL LOAD		=	39.0	PSF

SPACING = 24.0 IN. C/C

THIS TRUSS IS DESIGNED FOR RESIDENTIAL OR SMALL BUILDING REQUIREMENTS OF PART 9, NBCC 2015

THIS DESIGN COMPLIES WITH:
- PART 9 OF BCBC 2018 , NBC-2019AE
- PART 9 OF OBC 2012 (2019 AMENDMENT)
- CSA 086-14
- TPIC 2014

DESIGN ASSUMPTIONS
-OVERHANG NOT TO BE ALTERED OR CUT OFF.

(55 % OF 31.3 P.S.F. G.S.L. PLUS 8.4 P.S.F. RAIN LOAD) EQUALS 25.6 P.S.F. SPECIFIED ROOF LIVE LOAD

ALLOWABLE DEFL.(LL)= L/360 (0.19")
CALCULATED VERT. DEFL.(LL) = L/ 999 (0.00")
ALLOWABLE DEFL.(TL)= L/360 (0.19")
CALCULATED VERT. DEFL.(TL) = L/ 999 (0.00")

CSI: TC=0.13/1.00 (A-B:1) , BC=0.01/1.00 (D-E:4) , WB=0.00/1.00 (C-G:5) , SSI=0.07/1.00 (B-C:1)

DOL LUMBER=1.00 NAIL=1.00 LS BEND=1.10 COMP=1.10 SHEAR=1.10 TENS= 1.10

COMPANION LIVE LOAD FACTOR = 1.00

TRUSS PLATE MANUFACTURER IS NOT RESPONSIBLE FOR QUALITY CONTROL IN THE TRUSS MANUFACTURING PLANT .

NAIL VALUES

PLATE	GRIP(DRY) (PSI) MAX	MIN	SHEAR (PLI) MAX	MIN	SECTION (PLI) MAX	MIN
MT20	650	371	1747	788	1987	1873

PLATE PLACEMENT TOL. = 0.250 inches

PLATE ROTATION TOL. = 5.0 Deg.

JSI GRIP= 0.13 (B) (INPUT = 0.90)
JSI METAL= 0.06 (B) (INPUT = 0.95)

LICENSED PROFESSIONAL ENGINEER
9/25/23
C. M. HEYENS
100505065
PROVINCE OF ONTARIO

STRUCTURAL COMPONENT ONLY
DWG # TR23091801

CITY OF RICHMOND HILL
BUILDING DIVISION
05/01/2024
RECEIVED
Per: joshua.nabua

JOB NAME	TRUSS NAME	QUANTITY	PLY	JOB DESC.	DRWG NO.
434952	T40	1	2	GREENPARK HOMES TRUSS DESC.	

Tamarack Roof Truss, Burlington

Version 8.630 S Aug 30 2023 MiTek Industries, Inc. Fri Sep 22 10:28:03 2023 Page 1
ID:?7smMffSHcbvu6uGxGPN4oyih5x-?IYGoQ?SUJflVzZswcZrSCfwRqCbZbUxt?pqlkyb72A

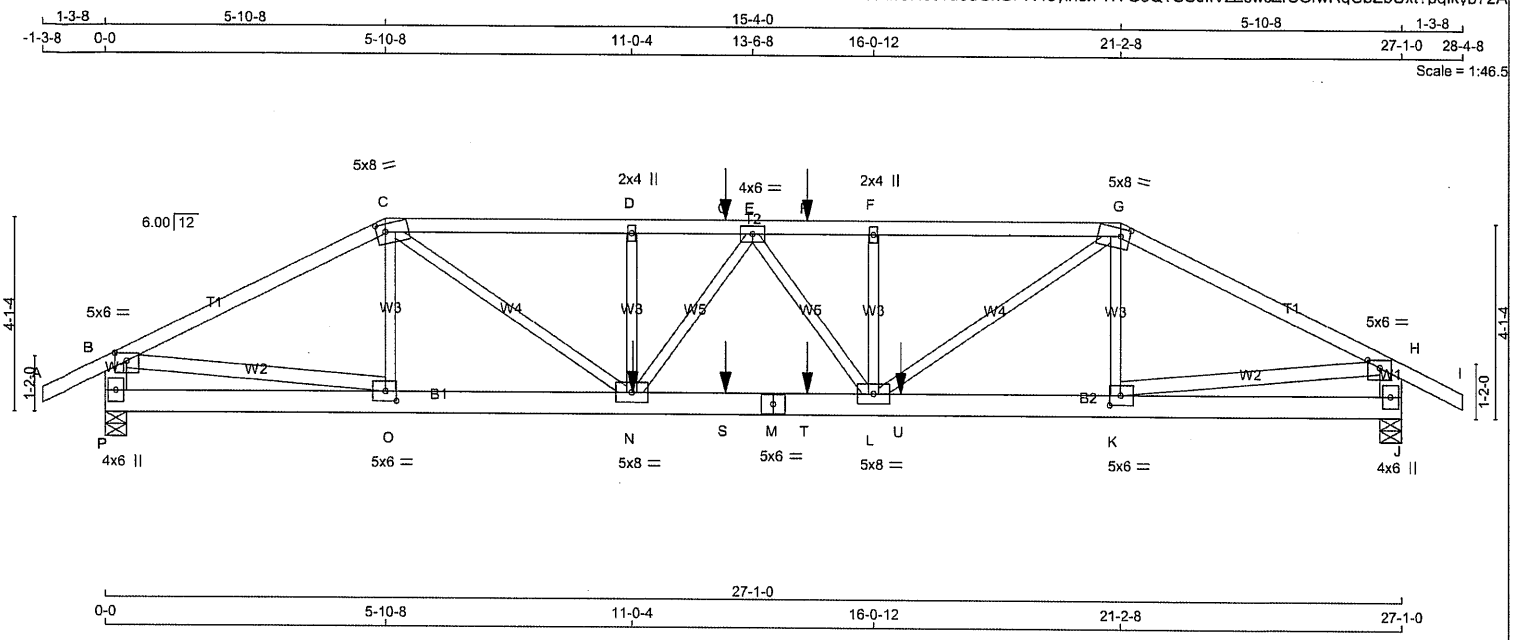

TOTAL WEIGHT = 2 X 126 = 253 lb [M]

LUMBER

N. L. G. A. RULES

CHORDS	SIZE		LUMBER	DESCR.
A - C	2x4	DRY	No.2	SPF
C - G	2x4	DRY	No.2	SPF
G - I	2x4	DRY	No.2	SPF
P - B	2x6	DRY	No.2	SPF
J - H	2x6	DRY	No.2	SPF
P - M	2x6	DRY	No.2	SPF
M - J	2x6	DRY	No.2	SPF
ALL WEBS EXCEPT	2x3	DRY	No.2	SPF
B - O	2x4	DRY	No.2	SPF
K - H	2x4	DRY	No.2	SPF

DRY: SEASONED LUMBER.

DESIGN CONSISTS OF 2 TRUSSES BUILT SEPARATELY THEN FASTENED TOGETHER AS FOLLOWS:

CHORDS	#ROWS	SURFACE SPACING (IN)	LOAD(PLF)
TOP CHORDS : (0.122"X3") SPIRAL NAILS			
A- C	1	12	TOP
C- G	1	12	SIDE(0.0)
G- I	1	12	TOP
P- B	2	12	TOP
J- H	2	12	TOP
BOTTOM CHORDS : (0.122"X3") SPIRAL NAILS			
P- M	2	12	SIDE(183.1)
M- J	2	12	SIDE(0.0)
WEBS : (0.122"X3") SPIRAL NAILS			
D- N	1	6	SIDE(148.1)
2x3	1	6	
2x4	1	6	

NAILS TO BE DRIVEN FROM ONE SIDE ONLY.

GIRDER NAILING ASSUMES NAILED HANGERS ARE FASTENED WITH MIN. 3-0 INCH NAILS.

TOP - COMPONENTS ARE LOADED FROM THE TOP AND MUST BE PLACED ON TOP EDGE OF ALL PLIES FOR THE LOAD TO BE TRANSFERRED TO EACH PLY.

LICENSED PROFESSIONAL ENGINEER
9/25/23
C. M. HEYENS
100505065
PROVINCE OF ONTARIO

STRUCTURAL COMPONENT ONLY
DWG # TR23091824

DIMENSIONS, SUPPORTS AND LOADINGS SPECIFIED BY FABRICATOR TO BE VERIFIED BY BUILDING DESIGNER

BEARINGS

JT	FACTORED GROSS REACTION VERT	HORZ	MAXIMUM FACTORED GROSS REACTION DOWN	HORZ	UPLIFT	INPUT BRG IN-SX	REQRD BRG IN-SX
P	3127	0	3127	0	0	5-8	1-11
J	3259	0	3259	0	0	5-8	1-12

UNFACTORED REACTIONS

JT	1ST LCASE COMBINED	MAX./MIN. COMPONENT REACTIONS SNOW	LIVE	PERM.LIVE	WIND	DEAD	SOIL
P	2203	1493 / 0	0 / 0	0 / 0	0 / 0	710 / 0	0 / 0
J	2295	1560 / 0	0 / 0	0 / 0	0 / 0	735 / 0	0 / 0

BEARING MATERIAL TO BE SPF NO.2 OR BETTER AT JOINT(S) P, J

BRACING

TOP CHORD TO BE SHEATHED OR MAX. PURLIN SPACING = 3.33 FT.
MAX. UNBRACED BOTTOM CHORD LENGTH = 10.00 FT OR RIGID CEILING DIRECTLY APPLIED.

ALL PITCH BREAKS AND PERIMETER CORNER JOINTS MUST BE LATERALLY RESTRAINED.

LOADING

TOTAL LOAD CASES: (4)

CHORDS MEMB. FR-TO	MAX. FACTORED FORCE (LBS)	FACTORED VERT. LOAD (PLF) FROM	TO	LC1	MAX CSI (LC)	MAX. UNBRAC LENGTH
A- B	0 / 28	-91.8	-91.8	0.07 (1)	10.00	
B- C	-4763 / 0	-91.8	-91.8	0.50 (1)	3.99	
C- D	-7065 / 0	-91.8	-91.8	0.42 (1)	3.41	
D- Q	-7065 / 0	-91.8	-91.8	0.29 (1)	3.46	
Q- E	-7065 / 0	-91.8	-91.8	0.29 (1)	3.46	
E- R	-7335 / 0	-91.8	-91.8	0.30 (1)	3.39	
R- F	-7335 / 0	-91.8	-91.8	0.30 (1)	3.39	
F- G	-7335 / 0	-91.8	-91.8	0.44 (1)	3.33	
G- H	-5024 / 0	-91.8	-91.8	0.52 (1)	3.89	
H- I	0 / 28	-91.8	-91.8	0.07 (1)	10.00	
P- B	-3081 / 0	0.0	0.0	0.11 (1)	7.81	
J- H	-3228 / 0	0.0	0.0	0.11 (1)	7.71	
P- O	0 / 0	-18.5	-18.5	0.04 (4)	10.00	
O- N	0 / 4247	-18.5	-18.5	0.36 (1)	10.00	
N- S	0 / 7292	-18.5	-18.5	0.56 (1)	10.00	
S- M	0 / 7292	-18.5	-18.5	0.56 (1)	10.00	
M- T	0 / 7292	-18.5	-18.5	0.56 (1)	10.00	
T- L	0 / 7292	-18.5	-18.5	0.56 (1)	10.00	
L- U	0 / 4482	-18.5	-18.5	0.51 (1)	10.00	
U- K	0 / 4482	-18.5	-18.5	0.51 (1)	10.00	
K- J	0 / 0	-18.5	-18.5	0.05 (1)	10.00	

WEBS MEMB. FR-TO	MAX. FACTORED FORCE (LBS)	MAX CSI (LC)
O- C	-387 / 0	0.05 (1)
N- D	-457 / 0	0.06 (1)
L- F	-485 / 0	0.06 (1)
L- G	0 / 3520	0.44 (1)
K- G	-296 / 0	0.04 (1)
B- O	0 / 4294	0.38 (1)
K- H	0 / 4528	0.40 (1)
N- E	-405 / 0	0.07 (1)
E- L	0 / 77	0.01 (1)

SPECIFIED CONCENTRATED LOADS (LBS)

JT	LOC.	LC1	MAX-	MAX+	FACE	DIR.	TYPE	HEEL	CONN.
N	11-0-8	-893	-893	---	BACK	VERT	TOTAL	---	C1
Q	12-11-12	-82	-82	---	BACK	VERT	TOTAL	---	C1
R	14-8-4	-82	-82	---	BACK	VERT	TOTAL	---	C1
S	12-11-12	-22	-22	---	BACK	VERT	TOTAL	---	C1
T	14-8-4	-22	-22	---	BACK	VERT	TOTAL	---	C1
U	16-7-8	-1114	-1114	---	BACK	VERT	TOTAL	---	C1

CONNECTION REQUIREMENTS

1) **C1:** A SUITABLE HANGER/MECHANICAL CONNECTION IS REQUIRED.

DESIGN CRITERIA

SPECIFIED LOADS:

TOP CH.	LL	=	25.6	PSF
	DL	=	6.0	PSF
BOT CH.	LL	=	0.0	PSF
	DL	=	7.4	PSF
TOTAL LOAD		=	39.0	PSF

SPACING = 24.0 IN. C/C

LOADING IN FLAT SECTION BASED ON A SLOPE OF 2.00/12 MINIMUM

THIS TRUSS IS DESIGNED FOR RESIDENTIAL OR SMALL BUILDING REQUIREMENTS OF PART 9, NBCC 2015

THIS DESIGN COMPLIES WITH:
- PART 9 OF BCBC 2018 , NBC-2019AE
- PART 9 OF OBC 2012 (2019 AMENDMENT)
- CSA 086-14
- TPIC 2014

(55 % OF 31.3 P.S.F. G.S.L. PLUS 8.4 P.S.F. RAIN LOAD) EQUALS 25.6 P.S.F. SPECIFIED ROOF LIVE LOAD

ALLOWABLE DEFL.(LL)= L/360 (0.90")
CALCULATED VERT. DEFL.(LL) = L/ 999 (0.15")
ALLOWABLE DEFL.(TL)= L/360 (0.90")
CALCULATED VERT. DEFL.(TL) = L/ 999 (0.27")

CSI: TC=0.52/1.00 (G-H:1) , BC=0.56/1.00 (L-N:1) , WB=0.44/1.00 (G-L:1) , SSI=0.49/1.00 (K-L:1)

DOL LUMBER=1.00 NAIL=1.00 LS BEND=1.00 COMP=1.00 SHEAR=1.00 TENS= 1.00

COMPANION LIVE LOAD FACTOR = 1.00

AUTOSOLVE HEELS OFF

TRUSS PLATE MANUFACTURER IS NOT RESPONSIBLE FOR QUALITY CONTROL IN THE TRUSS MANUFACTURING PLANT .

NAIL VALUES

PLATE	GRIP(DRY) (PSI) MAX	MIN	SHEAR (PLI) MAX	MIN	SECTION (PLI) MAX	MIN
MT20	650	371	1747	788	1987	1873

PLATE PLACEMENT TOL. = 0.250 inches

PLATE ROTATION TOL. = 5.0 Deg.

JSI GRIP= 0.90 (G) (INPUT = 0.90)
JSI METAL= 0.68 (M) (INPUT = 0.95)

CITY OF RICHMOND HILL
BUILDING DIVISION
05/01/2024
RECEIVED
Per: joshua.nabua

CONTINUED ON PAGE 2

JOB NAME	TRUSS NAME	QUANTITY	PLY	JOB DESC. GREENPARK HOMES	DRWG NO.
434952	T40	1	2	TRUSS DESC.	

Tamarack Roof Truss, Burlington

Version 8.630 S Aug 30 2023 MiTek Industries, Inc. Fri Sep 22 10:28:04 2023 Page 2
ID:??smMffSHcbvu6uGxGPN4oyih5x-UU6f?m04Fdnc7682UJ44?QC4BEYql2k46fYNqAyb729

PLATES (table is in inches)

JT	TYPE	PLATES	W	LEN	Y	X
B	TMVW-p	MT20	5.0	6.0	2.00	3.00
C	TTWW-m	MT20	5.0	8.0	2.00	2.25
D	TMW+w	MT20	2.0	4.0		
E	TMWW-t	MT20	4.0	6.0		
F	TMW+w	MT20	2.0	4.0		
G	TTWW-m	MT20	5.0	8.0	2.00	2.25
H	TMVW-p	MT20	5.0	6.0	2.00	3.00
J	BMV1+p	MT20	4.0	6.0		
K	BMWW-t	MT20	5.0	6.0	2.50	2.75
L	BMWWW-t	MT20	5.0	8.0		
M	BS-t	MT20	5.0	6.0		
N	BMWWW-t	MT20	5.0	8.0		
O	BMWW-t	MT20	5.0	6.0	2.50	2.75
P	BMV1+p	MT20	4.0	6.0		

NOTES- (1)
1) Lateral braces to be a minimum of 2X4 SPF #2.

LICENSED PROFESSIONAL ENGINEER
9/25/23
C. M. HEYENS
100505065
PROVINCE OF ONTARIO

STRUCTURAL COMPONENT ONLY
DWG # TR23091824

CITY OF RICHMOND HILL
BUILDING DIVISION
05/01/2024
RECEIVED
Per: joshua.nabua

JOB NAME	TRUSS NAME	QUANTITY	PLY	JOB DESC.	DRWG NO.
434952	T40Z	1	2	GREENPARK HOMES TRUSS DESC.	

Tamarack Roof Truss, Burlington

Version 8.630 S Aug 30 2023 MiTek Industries, Inc. Fri Sep 22 10:28:05 2023 Page 1
ID:?7smMffSHcbvu6uGxGPN4oyih5x-ygq1C61i0xvTkGjF21bJXdlHCex21X?ELJlxNdyb728

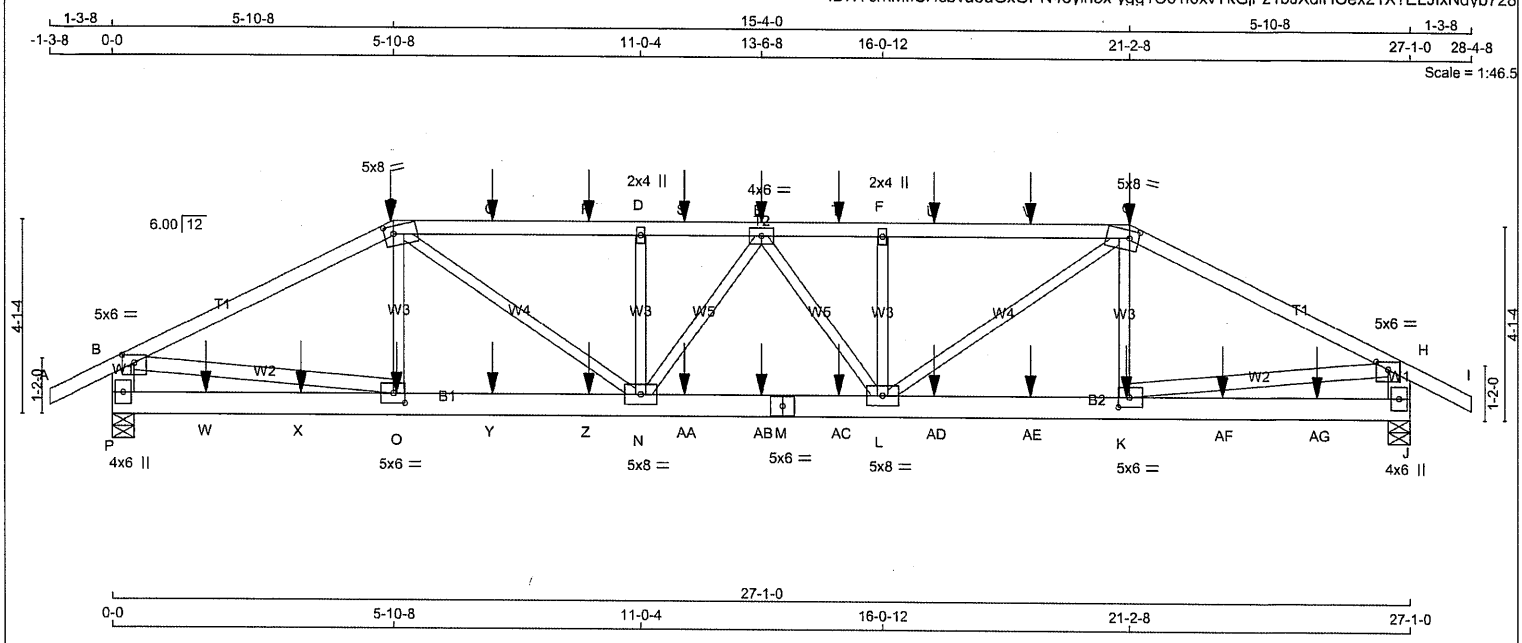

TOTAL WEIGHT = 2 X 126 = 253 lb

LUMBER
N. L. G. A. RULES

CHORDS	SIZE		LUMBER	DESCR.
A - C	2x4	DRY	No.2	SPF
C - G	2x4	DRY	No.2	SPF
G - I	2x4	DRY	No.2	SPF
P - B	2x6	DRY	No.2	SPF
J - H	2x6	DRY	No.2	SPF
P - M	2x6	DRY	No.2	SPF
M - J	2x6	DRY	No.2	SPF
ALL WEBS EXCEPT	2x3	DRY	No.2	SPF
B - O	2x4	DRY	No.2	SPF
K - H	2x4	DRY	No.2	SPF

DRY: SEASONED LUMBER.

DESIGN CONSISTS OF 2 TRUSSES BUILT SEPARATELY THEN FASTENED TOGETHER AS FOLLOWS:

CHORDS	#ROWS	SURFACE SPACING (IN)	LOAD(PLF)
TOP CHORDS : (0.122"X3") SPIRAL NAILS			
A- C	1	12	SIDE(61.0)
C- G	1	12	SIDE(61.0)
G- I	1	12	SIDE(61.0)
P- B	2	12	TOP
J- H	2	12	TOP
BOTTOM CHORDS : (0.122"X3") SPIRAL NAILS			
P- M	2	12	SIDE(183.1)
M- J	2	12	SIDE(183.1)
WEBS : (0.122"X3") SPIRAL NAILS			
2x3	1	6	
2x4	1	6	

NAILS TO BE DRIVEN FROM ONE SIDE ONLY.

GIRDER NAILING ASSUMES NAILED HANGERS ARE FASTENED WITH MIN. 3-0 INCH NAILS.

TOP - COMPONENTS ARE LOADED FROM THE TOP AND MUST BE PLACED ON TOP EDGE OF ALL PLIES FOR THE LOAD TO BE TRANSFERRED TO EACH PLY.

LICENSED PROFESSIONAL ENGINEER
9/25/23
C. M. HEYENS
100505065
PROVINCE OF ONTARIO

STRUCTURAL COMPONENT ONLY
DWG # TR23091825

DIMENSIONS, SUPPORTS AND LOADINGS SPECIFIED BY FABRICATOR TO BE VERIFIED BY BUILDING DESIGNER

BEARINGS

JT	FACTORED GROSS REACTION VERT	HORZ	MAXIMUM FACTORED GROSS REACTION DOWN	HORZ	UPLIFT	INPUT BRG IN-SX	REQRD BRG IN-SX
P	2634	0	2634	0	0	5-8	1-8
J	2634	0	2634	0	0	5-8	1-8

UNFACTORED REACTIONS

JT	1ST LCASE COMBINED	MAX./MIN. COMPONENT REACTIONS SNOW	LIVE	PERM.LIVE	WIND	DEAD	SOIL
P	1862	1226 / 0	0 / 0	0 / 0	0 / 0	636 / 0	0 / 0
J	1862	1226 / 0	0 / 0	0 / 0	0 / 0	636 / 0	0 / 0

BEARING MATERIAL TO BE SPF NO.2 OR BETTER AT JOINT(S) P, J

BRACING
TOP CHORD TO BE SHEATHED OR MAX. PURLIN SPACING = 4.05 FT.
MAX. UNBRACED BOTTOM CHORD LENGTH = 10.00 FT OR RIGID CEILING DIRECTLY APPLIED.

ALL PITCH BREAKS AND PERIMETER CORNER JOINTS MUST BE LATERALLY RESTRAINED.

LOADING
TOTAL LOAD CASES: (4)

CHORDS

MEMB. FR-TO	MAX. FACTORED FORCE (LBS)	FACTORED VERT. LOAD (PLF) FROM	TO	LC1 CSI	MAX (LC)	MAX. UNBRAC LENGTH
A- B	0 / 28	-91.8	-91.8	0.07	(1)	10.00
B- C	-3840 / 0	-91.8	-91.8	0.44	(1)	4.41
C- Q	-4765 / 0	-91.8	-91.8	0.39	(1)	4.05
Q- R	-4765 / 0	-91.8	-91.8	0.39	(1)	4.05
R- D	-4765 / 0	-91.8	-91.8	0.39	(1)	4.05
D- S	-4765 / 0	-91.8	-91.8	0.33	(1)	4.06
S- E	-4765 / 0	-91.8	-91.8	0.33	(1)	4.06
E- T	-4765 / 0	-91.8	-91.8	0.33	(1)	4.06
T- F	-4765 / 0	-91.8	-91.8	0.33	(1)	4.06
F- U	-4765 / 0	-91.8	-91.8	0.39	(1)	4.05
U- V	-4765 / 0	-91.8	-91.8	0.39	(1)	4.05
V- G	-4765 / 0	-91.8	-91.8	0.39	(1)	4.05
G- H	-3840 / 0	-91.8	-91.8	0.44	(1)	4.41
H- I	0 / 28	-91.8	-91.8	0.07	(1)	10.00
P- B	-2560 / 0	0.0	0.0	0.09	(1)	7.81
J- H	-2560 / 0	0.0	0.0	0.09	(1)	7.81
P- W	0 / 0	-18.5	-18.5	0.06	(4)	10.00
W- X	0 / 0	-18.5	-18.5	0.06	(4)	10.00
X- O	0 / 0	-18.5	-18.5	0.06	(4)	10.00
O- Y	0 / 3425	-18.5	-18.5	0.26	(1)	10.00
Y- Z	0 / 3425	-18.5	-18.5	0.26	(1)	10.00
Z- N	0 / 3425	-18.5	-18.5	0.26	(1)	10.00
N-AA	0 / 4805	-18.5	-18.5	0.37	(1)	10.00
AA-AB	0 / 4805	-18.5	-18.5	0.37	(1)	10.00
AB- M	0 / 4805	-18.5	-18.5	0.37	(1)	10.00
M-AC	0 / 4805	-18.5	-18.5	0.37	(1)	10.00
AC- L	0 / 4805	-18.5	-18.5	0.37	(1)	10.00
L-AD	0 / 3426	-18.5	-18.5	0.26	(1)	10.00
AD-AE	0 / 3426	-18.5	-18.5	0.26	(1)	10.00
AE- K	0 / 3426	-18.5	-18.5	0.26	(1)	10.00
K-AF	0 / 0	-18.5	-18.5	0.06	(4)	10.00
AF-AG	0 / 0	-18.5	-18.5	0.06	(4)	10.00
AG- J	0 / 0	-18.5	-18.5	0.06	(4)	10.00

WEBS

MEMB. FR-TO	MAX. FACTORED FORCE (LBS)	MAX CSI (LC)
O- C	-246 / 72	0.03 (1)
N- D	-761 / 0	0.10 (1)
L- F	-761 / 0	0.10 (1)
L- G	0 / 1653	0.20 (1)
K- G	-246 / 72	0.03 (1)
B- O	0 / 3461	0.31 (1)
K- H	0 / 3461	0.31 (1)
N- E	-72 / 0	0.01 (1)
E- L	-72 / 0	0.01 (1)

SPECIFIED CONCENTRATED LOADS (LBS)

JT	LOC.	LC1	MAX-	MAX+	FACE	DIR.	TYPE	HEEL	CONN.
C	5-10-8	-318	-318	---	FRONT	VERT	TOTAL	---	C1
E	13-6-8	-76	-76	---	FRONT	VERT	TOTAL	---	C1
G	21-2-8	-318	-318	---	FRONT	VERT	TOTAL	---	C1
K	21-1-12	-21	-21	---	FRONT	VERT	TOTAL	---	C1
O	5-11-4	-21	-21	---	FRONT	VERT	TOTAL	---	C1

[M]

DESIGN CRITERIA

SPECIFIED LOADS:

TOP CH.	LL	=	25.6	PSF
	DL	=	6.0	PSF
BOT CH.	LL	=	0.0	PSF
	DL	=	7.4	PSF
TOTAL LOAD		=	39.0	PSF

SPACING = 24.0 IN. C/C

LOADING IN FLAT SECTION BASED ON A SLOPE OF 2.00/12 MINIMUM

THIS TRUSS IS DESIGNED FOR RESIDENTIAL OR SMALL BUILDING REQUIREMENTS OF PART 9, NBCC 2015

THIS DESIGN COMPLIES WITH:
- PART 9 OF BCBC 2018 , NBC-2019AE
- PART 9 OF OBC 2012 (2019 AMENDMENT)
- CSA 086-14
- TPIC 2014

(55 % OF 31.3 P.S.F. G.S.L. PLUS 8.4 P.S.F. RAIN LOAD) EQUALS 25.6 P.S.F. SPECIFIED ROOF LIVE LOAD

ALLOWABLE DEFL.(LL)= L/360 (0.90")
CALCULATED VERT. DEFL.(LL) = L/ 999 (0.10")
ALLOWABLE DEFL.(TL)= L/360 (0.90")
CALCULATED VERT. DEFL.(TL) = L/ 999 (0.19")

CSI: TC=0.44/1.00 (G-H:1) , BC=0.37/1.00 (L-N:1) , WB=0.31/1.00 (H-K:1) , SSI=0.19/1.00 (C-D:1)

DOL LUMBER=1.00 NAIL=1.00 LS BEND=1.00 COMP=1.00 SHEAR=1.00 TENS= 1.00

COMPANION LIVE LOAD FACTOR = 1.00

AUTOSOLVE HEELS OFF

TRUSS PLATE MANUFACTURER IS NOT RESPONSIBLE FOR QUALITY CONTROL IN THE TRUSS MANUFACTURING PLANT .

NAIL VALUES

PLATE	GRIP(DRY) (PSI) MAX	MIN	SHEAR (PLI) MAX	MIN	SECTION (PLI) MAX	MIN
MT20	650	371	1747	788	1987	1873

PLATE PLACEMENT TOL. = 0.250 inches

PLATE ROTATION TOL. = 5.0 Deg.

JSI GRIP= 0.65 (K) (INPUT = 0.90)
JSI METAL= 0.47 (M) (INPUT = 0.95)

CITY OF RICHMOND HILL
BUILDING DIVISION
05/01/2024
RECEIVED
Per: joshua.nabua

CONTINUED ON PAGE 2

JOB NAME	TRUSS NAME	QUANTITY	PLY	JOB DESC.	DRWG NO.
434952	T40Z	1	2	GREENPARK HOMES TRUSS DESC.	

Tamarack Roof Truss, Burlington

ID:??smMffSHcbvu6uGxGPN4oyih5x-ygg1C61i0xvTkGjF21bJXdlHCex21X?ELJlxNdyb728

PLATES (table is in inches)

JT	TYPE	PLATES	W	LEN	Y	X
B	TMVW-p	MT20	5.0	6.0	2.00	3.00
C	TTWW-m	MT20	5.0	8.0	2.00	2.25
D	TMW+w	MT20	2.0	4.0		
E	TMWW-t	MT20	4.0	6.0		
F	TMW+w	MT20	2.0	4.0		
G	TTWW-m	MT20	5.0	8.0	2.00	2.25
H	TMVW-p	MT20	5.0	6.0	2.00	3.00
J	BMV1+p	MT20	4.0	6.0		
K	BMWW-t	MT20	5.0	6.0	2.50	2.75
L	BMWWW-t	MT20	5.0	8.0		
M	BS-t	MT20	5.0	6.0		
N	BMWWW-t	MT20	5.0	8.0		
O	BMWW-t	MT20	5.0	6.0	2.50	2.75
P	BMV1+p	MT20	4.0	6.0		

NOTES- (1)
1) Lateral braces to be a minimum of 2X4 SPF #2.

SPECIFIED CONCENTRATED LOADS (LBS)

JT	LOC.	LC1	MAX-	MAX+	FACE	DIR.	TYPE	HEEL	CONN.
Q	7-11-4	-76	-76	---	FRONT	VERT	TOTAL	---	C1
R	9-11-4	-76	-76	---	FRONT	VERT	TOTAL	---	C1
S	11-11-4	-76	-76	---	FRONT	VERT	TOTAL	---	C1
T	15-1-12	-76	-76	---	FRONT	VERT	TOTAL	---	C1
U	17-1-12	-76	-76	---	FRONT	VERT	TOTAL	---	C1
V	19-1-12	-76	-76	---	FRONT	VERT	TOTAL	---	C1
W	1-11-4	-20	-20	---	FRONT	VERT	TOTAL	---	C1
X	3-11-4	-21	-21	---	FRONT	VERT	TOTAL	---	C1
Y	7-11-4	-21	-21	---	FRONT	VERT	TOTAL	---	C1
Z	9-11-4	-21	-21	---	FRONT	VERT	TOTAL	---	C1
AA	11-11-4	-21	-21	---	FRONT	VERT	TOTAL	---	C1
AB	13-6-8	-21	-21	---	FRONT	VERT	TOTAL	---	C1
AC	15-1-12	-21	-21	---	FRONT	VERT	TOTAL	---	C1
AD	17-1-12	-21	-21	---	FRONT	VERT	TOTAL	---	C1
AE	19-1-12	-21	-21	---	FRONT	VERT	TOTAL	---	C1
AF	23-1-12	-21	-21	---	FRONT	VERT	TOTAL	---	C1
AG	25-1-12	-20	-20	---	FRONT	VERT	TOTAL	---	C1

CONNECTION REQUIREMENTS

1) **C1:** A SUITABLE HANGER/MECHANICAL CONNECTION IS REQUIRED.

LICENSED PROFESSIONAL ENGINEER
9/25/23
C. M. HEYENS
100505065
PROVINCE OF ONTARIO

STRUCTURAL COMPONENT ONLY
DWG # TR23091825

CITY OF RICHMOND HILL
BUILDING DIVISION
05/01/2024
RECEIVED
Per: joshua.nabua

JOB NAME	TRUSS NAME	QUANTITY	PLY	JOB DESC.	DRWG NO.
435081	V1	1	1	GREENPARK HOMES TRUSS DESC.	

Tamarack Roof Truss, Burlington

Version 8.630 S Aug 30 2023 MiTek Industries, Inc. Fri Sep 22 10:30:49 2023 Page 1
ID:qEyZ9Goq1wpa84Z?iErU?hyq2hj-8Ea1dA0aOKZCPTFmfTXmBDXO4lzwTmcM2q0c76yb7?a

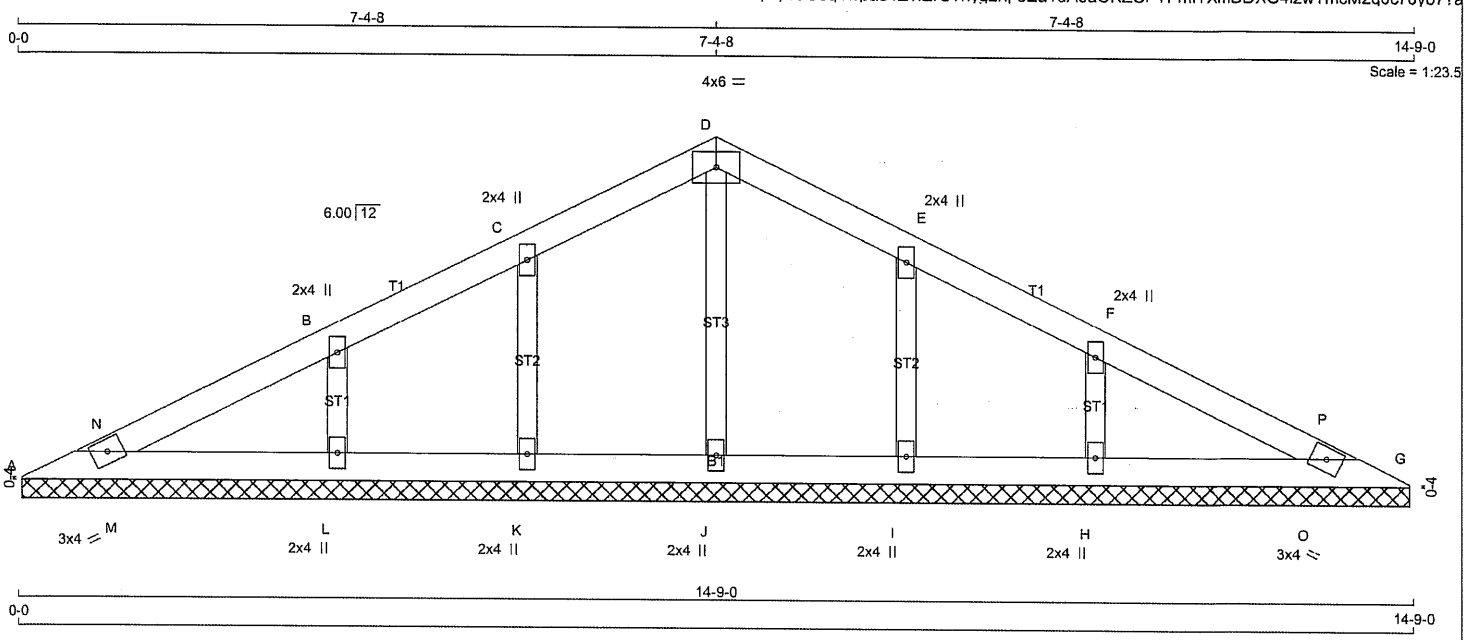

TOTAL WEIGHT = 42 lb
[M]

LUMBER
N. L. G. A. RULES

CHORDS	SIZE		LUMBER	DESCR.
A - D	2x4	DRY	No.2	SPF
D - G	2x4	DRY	No.2	SPF
A - G	2x4	DRY	No.2	SPF
ALL WEBS	2x3	DRY	No.2	SPF

DRY: SEASONED LUMBER.

PLATES (table is in inches)

JT	TYPE	PLATES	W	LEN Y	X
A	TBM1-h	MT20	3.0	4.0	
B, C, E, F					
B	TMW+w	MT20	2.0	4.0	
D	TTW-p	MT20	4.0	6.0	
G	TBM1-h	MT20	3.0	4.0	
H, I, J, K, L					
H	BMW1+w	MT20	2.0	4.0	

NOTES- (1)
1) Lateral braces to be a minimum of 2X4 SPF #2.

DIMENSIONS, SUPPORTS AND LOADINGS SPECIFIED BY FABRICATOR TO BE VERIFIED BY BUILDING DESIGNER

BEARINGS

JT	FACTORED GROSS REACTION VERT	HORZ	MAXIMUM FACTORED GROSS REACTION DOWN	HORZ	UPLIFT	INPUT BRG IN-SX	REQRD BRG IN-SX
A	127	0	127	0	0	14-8-0	1-8
G	127	0	127	0	0	14-8-0	1-8
J	282	0	282	0	0	14-8-0	1-8
K	193	0	193	0	0	14-8-0	1-8
L	348	0	348	0	0	14-8-0	1-8
I	193	0	193	0	0	14-8-0	1-8
H	348	0	348	0	0	14-8-0	1-8

UNFACTORED REACTIONS

JT	1ST LCASE COMBINED	MAX./MIN. COMPONENT REACTIONS SNOW	LIVE	PERM.LIVE	WIND	DEAD	SOIL
A	90	60 / 0	0 / 0	0 / 0	0 / 0	30 / 0	0 / 0
G	90	60 / 0	0 / 0	0 / 0	0 / 0	30 / 0	0 / 0
J	200	127 / 0	0 / 0	0 / 0	0 / 0	73 / 0	0 / 0
K	136	92 / 0	0 / 0	0 / 0	0 / 0	44 / 0	0 / 0
L	246	160 / 0	0 / 0	0 / 0	0 / 0	86 / 0	0 / 0
I	136	92 / 0	0 / 0	0 / 0	0 / 0	44 / 0	0 / 0
H	246	160 / 0	0 / 0	0 / 0	0 / 0	86 / 0	0 / 0

BEARING MATERIAL TO BE SPF NO.2 OR BETTER AT JOINT(S) A, G, J, K, L, I, H

BRACING
TOP CHORD TO BE SHEATHED OR MAX. PURLIN SPACING = 10.00 FT.
MAX. UNBRACED BOTTOM CHORD LENGTH = 6.25 FT OR RIGID CEILING DIRECTLY APPLIED.

ALL PITCH BREAKS AND PERIMETER CORNER JOINTS MUST BE LATERALLY RESTRAINED.

LOADING
TOTAL LOAD CASES: (4)

CHORDS

MEMB. FR-TO	MAX. FACTORED FORCE (LBS)	FACTORED VERT. LOAD (PLF) FROM	TO	LC1 MAX CSI (LC)	MAX. UNBRAC LENGTH
A- N	0 / 51	-91.8	-91.8	0.05 (1)	10.00
N- B	0 / 81	-91.8	-91.8	0.10 (1)	10.00
B- C	0 / 69	-91.8	-91.8	0.10 (1)	10.00
C- D	0 / 75	-91.8	-91.8	0.06 (1)	10.00
D- E	0 / 75	-91.8	-91.8	0.06 (1)	10.00
E- F	0 / 69	-91.8	-91.8	0.10 (1)	10.00
F- P	0 / 81	-91.8	-91.8	0.10 (1)	10.00
P- G	0 / 51	-91.8	-91.8	0.05 (1)	10.00
A- M	-65 / 0	-18.5	-18.5	0.08 (1)	6.25
M- L	-56 / 0	-18.5	-18.5	0.08 (1)	6.25
L- K	-68 / 0	-18.5	-18.5	0.05 (1)	6.25
K- J	-73 / 0	-18.5	-18.5	0.02 (4)	6.25
J- I	-73 / 0	-18.5	-18.5	0.02 (4)	6.25
I- H	-68 / 0	-18.5	-18.5	0.05 (1)	6.25
H- O	-56 / 0	-18.5	-18.5	0.08 (1)	6.25
O- G	-65 / 0	-18.5	-18.5	0.08 (1)	6.25

WEBS

MEMB. FR-TO	MAX. FACTORED FORCE (LBS)	MAX CSI (LC)
J- D	-231 / 0	0.05 (1)
K- C	-185 / 0	0.03 (1)
L- B	-244 / 0	0.03 (1)
I- E	-185 / 0	0.03 (1)
H- F	-244 / 0	0.03 (1)
M- N	-76 / 3	0.00 (1)
O- P	-76 / 3	0.00 (1)

DESIGN CRITERIA

SPECIFIED LOADS:

TOP CH.	LL	=	25.6	PSF
	DL	=	6.0	PSF
BOT CH.	LL	=	0.0	PSF
	DL	=	7.4	PSF
TOTAL LOAD		=	39.0	PSF

SPACING = 24.0 IN. C/C

THIS TRUSS IS DESIGNED FOR RESIDENTIAL OR SMALL BUILDING REQUIREMENTS OF PART 9, NBCC 2015

THIS DESIGN COMPLIES WITH:
- PART 9 OF BCBC 2018 , NBC-2019AE
- PART 9 OF OBC 2012 (2019 AMENDMENT)
- CSA 086-14
- TPIC 2014

(55 % OF 31.3 P.S.F. G.S.L. PLUS 8.4 P.S.F. RAIN LOAD) EQUALS 25.6 P.S.F. SPECIFIED ROOF LIVE LOAD

CSI: TC=0.10/1.00 (F-P:1) , BC=0.08/1.00 (H-O:1) , WB=0.05/1.00 (D-J:1) , SSI=0.10/1.00 (B-N:1)

DOL LUMBER=1.00 NAIL=1.00 LS BEND=1.10 COMP=1.10 SHEAR=1.10 TENS= 1.10

COMPANION LIVE LOAD FACTOR = 1.00

TRUSS PLATE MANUFACTURER IS NOT RESPONSIBLE FOR QUALITY CONTROL IN THE TRUSS MANUFACTURING PLANT .

NAIL VALUES

PLATE	GRIP(DRY) (PSI) MAX	MIN	SHEAR (PLI) MAX	MIN	SECTION (PLI) MAX	MIN
MT20	650	371	1747	788	1987	1873

PLATE PLACEMENT TOL. = 0.250 inches

PLATE ROTATION TOL. = 5.0 Deg.

JSI GRIP= 0.14 (B) (INPUT = 0.90)
JSI METAL= 0.10 (B) (INPUT = 0.95)

LICENSED PROFESSIONAL ENGINEER
9/25/23
C. M. HEYENS
100505065
PROVINCE OF ONTARIO

STRUCTURAL COMPONENT ONLY
DWG # TR23091826

CITY OF RICHMOND HILL
BUILDING DIVISION
05/01/2024
RECEIVED
Per: joshua.nabua

JOB NAME	TRUSS NAME	QUANTITY	PLY	JOB DESC.	DRWG NO.
435081	V2	1	1	GREENPARK HOMES TRUSS DESC.	

Tamarack Roof Truss, Burlington

Version 8.630 S Aug 30 2023 MiTek Industries, Inc. Fri Sep 22 10:30:51 2023 Page 1

ID:qEvZ9Goq1wpa84Z?iErU?hyq2hj-5cin2s1qwxpwfnP8muZEGedkLZfWxqGfW8VjB?yb7?Y

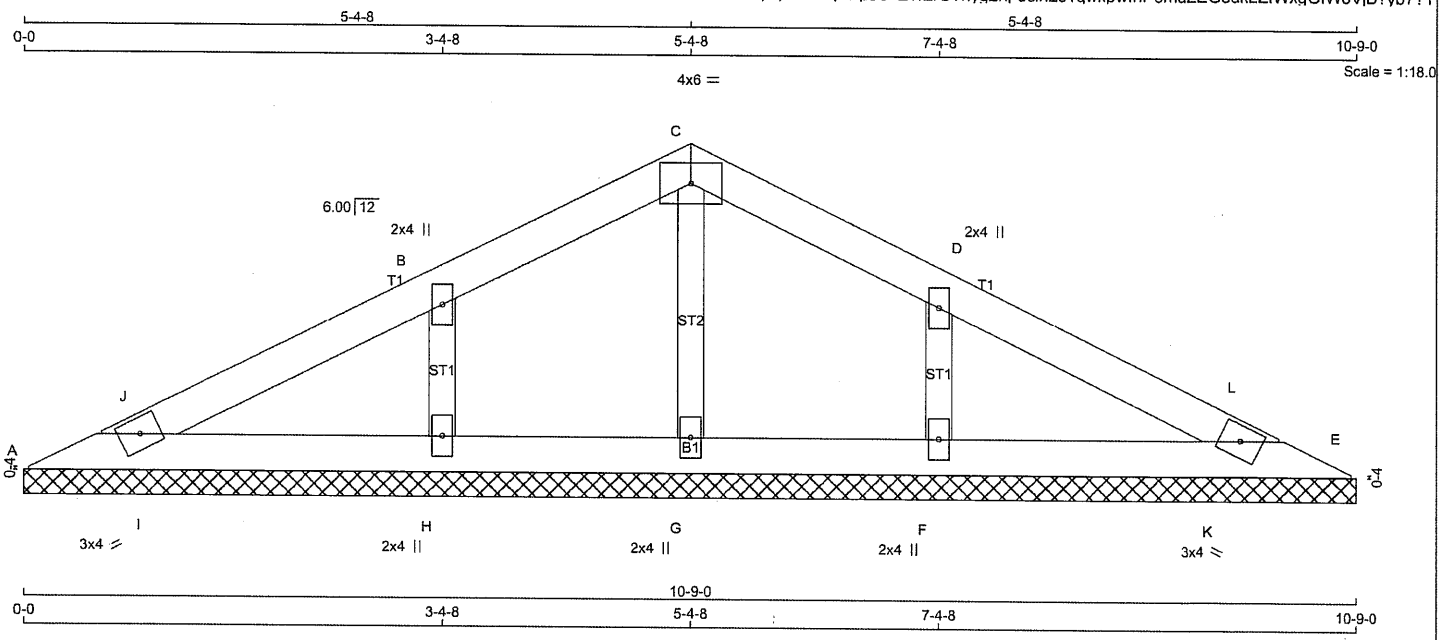

TOTAL WEIGHT = 28 lb

[M]

LUMBER

N. L. G. A. RULES

CHORDS	SIZE		LUMBER	DESCR.
A - C	2x4	DRY	No.2	SPF
C - E	2x4	DRY	No.2	SPF
A - E	2x4	DRY	No.2	SPF
ALL WEBS	2x3	DRY	No.2	SPF

DRY: SEASONED LUMBER.

PLATES (table is in inches)

JT	TYPE	PLATES	W	LEN Y	X
A	TBM1-h	MT20	3.0	4.0	
B	TMW+w	MT20	2.0	4.0	
C	TTW-p	MT20	4.0	6.0	
D	TMW+w	MT20	2.0	4.0	
E	TBM1-h	MT20	3.0	4.0	
F, G, H					
F	BMW1+w	MT20	2.0	4.0	

NOTES- (1)

1) Lateral braces to be a minimum of 2X4 SPF #2.

DIMENSIONS, SUPPORTS AND LOADINGS SPECIFIED BY FABRICATOR TO BE VERIFIED BY BUILDING DESIGNER

BEARINGS

JT	FACTORED GROSS REACTION VERT	HORZ	MAXIMUM FACTORED GROSS REACTION DOWN	HORZ	UPLIFT	INPUT BRG IN-SX	REQRD BRG IN-SX
A	113	0	113	0	0	10-9-0 (10-8-0)	8
E	113	0	113	0	0	10-9-0 (10-8-0)	8
G	208	0	208	0	0	10-9-0 (10-8-0)	8
H	371	0	371	0	0	10-9-0 (10-8-0)	8
F	371	0	371	0	0	10-9-0 (10-8-0)	8

VALUE IN PARENTHESIS INDICATES EFFECTIVE BEARING LENGTH

UNFACTORED REACTIONS

JT	1ST LCASE COMBINED	MAX./MIN. COMPONENT REACTIONS SNOW	LIVE	PERM.LIVE	WIND	DEAD	SOIL
A	80	53 / 0	0 / 0	0 / 0	0 / 0	27 / 0	0 / 0
E	80	53 / 0	0 / 0	0 / 0	0 / 0	27 / 0	0 / 0
G	148	93 / 0	0 / 0	0 / 0	0 / 0	55 / 0	0 / 0
H	262	173 / 0	0 / 0	0 / 0	0 / 0	89 / 0	0 / 0
F	262	173 / 0	0 / 0	0 / 0	0 / 0	89 / 0	0 / 0

BEARING MATERIAL TO BE SPF NO.2 OR BETTER AT JOINT(S) A, E, G, H, F

BRACING

TOP CHORD TO BE SHEATHED OR MAX. PURLIN SPACING = 10.00 FT.
MAX. UNBRACED BOTTOM CHORD LENGTH = 6.25 FT OR RIGID CEILING DIRECTLY APPLIED.

ALL PITCH BREAKS AND PERIMETER CORNER JOINTS MUST BE LATERALLY RESTRAINED.

LOADING

TOTAL LOAD CASES: (4)

CHORDS

MEMB. FR-TO	MAX. FACTORED FORCE (LBS)	FACTORED VERT. LOAD LC1 (PLF) FROM	TO	MAX CSI (LC)	MAX. UNBRAC LENGTH
A- J	0 / 83	-91.8	-91.8	0.05 (1)	10.00
J- B	0 / 114	-91.8	-91.8	0.11 (1)	10.00
B- C	0 / 95	-91.8	-91.8	0.11 (1)	10.00
C- D	0 / 95	-91.8	-91.8	0.11 (1)	10.00
D- L	0 / 114	-91.8	-91.8	0.11 (1)	10.00
L- E	0 / 83	-91.8	-91.8	0.05 (1)	10.00
A- I	-93 / 0	-18.5	-18.5	0.07 (1)	6.25
I- H	-85 / 0	-18.5	-18.5	0.07 (1)	6.25
H- G	-98 / 0	-18.5	-18.5	0.05 (1)	6.25
G- F	-98 / 0	-18.5	-18.5	0.05 (1)	6.25
F- K	-85 / 0	-18.5	-18.5	0.07 (1)	6.25
K- E	-93 / 0	-18.5	-18.5	0.07 (1)	6.25

WEBS

MEMB. FR-TO	MAX. FACTORED FORCE (LBS)	MAX CSI (LC)
G- C	-220 / 0	0.04 (1)
H- B	-267 / 0	0.04 (1)
F- D	-267 / 0	0.04 (1)
I- J	-72 / 3	0.00 (1)
K- L	-72 / 3	0.00 (1)

DESIGN CRITERIA

SPECIFIED LOADS:

TOP CH.	LL	=	25.6	PSF
	DL	=	6.0	PSF
BOT CH.	LL	=	0.0	PSF
	DL	=	7.4	PSF
TOTAL LOAD		=	39.0	PSF

SPACING = 24.0 IN. C/C

THIS TRUSS IS DESIGNED FOR RESIDENTIAL OR SMALL BUILDING REQUIREMENTS OF PART 9, NBCC 2015

THIS DESIGN COMPLIES WITH:
- PART 9 OF BCBC 2018 , NBC-2019AE
- PART 9 OF OBC 2012 (2019 AMENDMENT)
- CSA 086-14
- TPIC 2014

(55 % OF 31.3 P.S.F. G.S.L. PLUS 8.4 P.S.F. RAIN LOAD) EQUALS 25.6 P.S.F. SPECIFIED ROOF LIVE LOAD

CSI: TC=0.11/1.00 (D-L:1) , BC=0.07/1.00 (H-I:1) , WB=0.04/1.00 (B-H:1) , SSI=0.10/1.00 (B-J:1)

DOL LUMBER=1.00 NAIL=1.00 LS BEND=1.10 COMP=1.10 SHEAR=1.10 TENS= 1.10

COMPANION LIVE LOAD FACTOR = 1.00

TRUSS PLATE MANUFACTURER IS NOT RESPONSIBLE FOR QUALITY CONTROL IN THE TRUSS MANUFACTURING PLANT .

NAIL VALUES

PLATE	GRIP(DRY) (PSI) MAX	MIN	SHEAR (PLI) MAX	MIN	SECTION (PLI) MAX	MIN
MT20	650	371	1747	788	1987	1873

PLATE PLACEMENT TOL. = 0.250 inches

PLATE ROTATION TOL. = 5.0 Deg.

JSI GRIP= 0.15 (B) (INPUT = 0.90)
JSI METAL= 0.11 (B) (INPUT = 0.95)

LICENSED PROFESSIONAL ENGINEER
9/25/23
C. M. HEYENS
100505065
PROVINCE OF ONTARIO

STRUCTURAL COMPONENT ONLY
DWG # TR23091827

CITY OF RICHMOND HILL
BUILDING DIVISION
05/01/2024
RECEIVED
Per: joshua.nabua

JOB NAME	TRUSS NAME	QUANTITY	PLY	JOB DESC.	DRWG NO.
435081	V3	1	1	GREENPARK HOMES TRUSS DESC.	

Tamarack Roof Truss, Burlington

Version 8.630 S Aug 30 2023 MiTek Industries, Inc. Fri Sep 22 10:30:52 2023 Page 1
ID:qEyZ9Goq1wpa84Z?iErU?hyq2hj-ZpG9GC2ShFxnGx LKc5Tor9v3y?Jq7FpknFGjRyb7?X

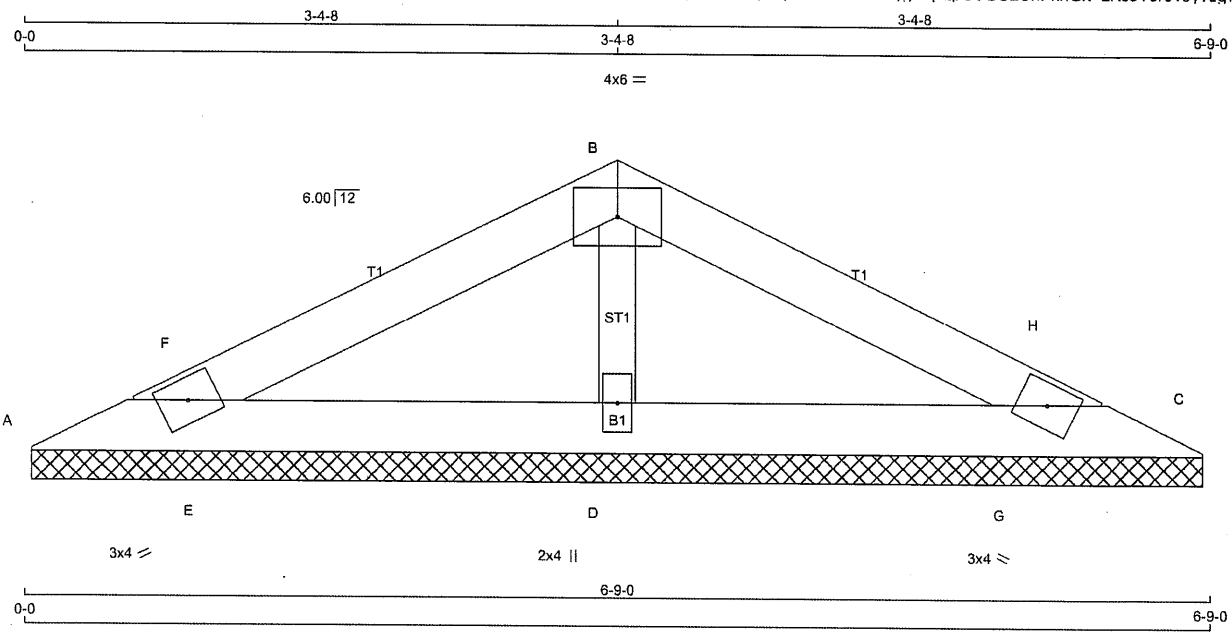

TOTAL WEIGHT = 15 lb [M]

LUMBER
N. L. G. A. RULES

CHORDS	SIZE		LUMBER	DESCR.
A - B	2x4	DRY	No.2	SPF
B - C	2x4	DRY	No.2	SPF
A - C	2x4	DRY	No.2	SPF
ALL WEBS	2x3	DRY	No.2	SPF

DRY: SEASONED LUMBER.

PLATES (table is in inches)

JT	TYPE	PLATES	W	LEN	Y	X
A	TBM1-h	MT20	3.0	4.0		
B	TTW-p	MT20	4.0	6.0		
C	TBM1-h	MT20	3.0	4.0		
D	BMW1+w	MT20	2.0	4.0		

NOTES- (1)
1) Lateral braces to be a minimum of 2X4 SPF #2.

DIMENSIONS, SUPPORTS AND LOADINGS SPECIFIED BY FABRICATOR TO BE VERIFIED BY BUILDING DESIGNER

BEARINGS

JT	FACTORED GROSS REACTION VERT	HORZ	MAXIMUM FACTORED GROSS REACTION DOWN	HORZ	UPLIFT	INPUT BRG IN-SX	REQRD BRG IN-SX
A	90	0	90	0	0	6-8-0	1-8
C	90	0	90	0	0	6-8-0	1-8
D	555	0	555	0	0	6-8-0	1-8

UNFACTORED REACTIONS

JT	1ST LCASE COMBINED	MAX./MIN. COMPONENT REACTIONS SNOW	LIVE	PERM.LIVE	WIND	DEAD	SOIL
A	64	42 / 0	0 / 0	0 / 0	0 / 0	22 / 0	0 / 0
C	64	42 / 0	0 / 0	0 / 0	0 / 0	22 / 0	0 / 0
D	392	257 / 0	0 / 0	0 / 0	0 / 0	135 / 0	0 / 0

BEARING MATERIAL TO BE SPF NO.2 OR BETTER AT JOINT(S) A, C, D

BRACING
TOP CHORD TO BE SHEATHED OR MAX. PURLIN SPACING = 10.00 FT.
MAX. UNBRACED BOTTOM CHORD LENGTH = 6.25 FT OR RIGID CEILING DIRECTLY APPLIED.

ALL PITCH BREAKS AND PERIMETER CORNER JOINTS MUST BE LATERALLY RESTRAINED.

LOADING
TOTAL LOAD CASES: (4)

CHORDS

MEMB. FR-TO	MAX. FACTORED FORCE (LBS)	FACTORED VERT. LOAD (PLF) FROM	TO	LC1 CSI (LC)	MAX UNBRAC LENGTH
A- F	0 / 184	-91.8	-91.8	0.05 (1)	10.00
F- B	0 / 195	-91.8	-91.8	0.12 (1)	10.00
B- H	0 / 195	-91.8	-91.8	0.12 (1)	10.00
H- C	0 / 184	-91.8	-91.8	0.05 (1)	10.00
A- E	-185 / 0	-18.5	-18.5	0.10 (1)	6.25
E- D	-174 / 0	-18.5	-18.5	0.10 (1)	6.25
D- G	-174 / 0	-18.5	-18.5	0.10 (1)	6.25
G- C	-185 / 0	-18.5	-18.5	0.10 (1)	6.25

WEBS

MEMB. FR-TO	MAX. FACTORED FORCE (LBS)	MAX CSI (LC)
D- B	-387 / 0	0.06 (1)
E- F	-125 / 0	0.00 (1)
G- H	-125 / 0	0.00 (1)

DESIGN CRITERIA

SPECIFIED LOADS:

TOP CH.	LL	=	25.6	PSF
	DL	=	6.0	PSF
BOT CH.	LL	=	0.0	PSF
	DL	=	7.4	PSF
TOTAL LOAD		=	39.0	PSF

SPACING = 24.0 IN. C/C

THIS TRUSS IS DESIGNED FOR RESIDENTIAL OR SMALL BUILDING REQUIREMENTS OF PART 9, NBCC 2015

THIS DESIGN COMPLIES WITH:
- PART 9 OF BCBC 2018 , NBC-2019AE
- PART 9 OF OBC 2012 (2019 AMENDMENT)
- CSA 086-14
- TPIC 2014

(55 % OF 31.3 P.S.F. G.S.L. PLUS 8.4 P.S.F. RAIN LOAD) EQUALS 25.6 P.S.F. SPECIFIED ROOF LIVE LOAD

CSI: TC=0.12/1.00 (B-F:1) , BC=0.10/1.00 (D-E:1) , WB=0.06/1.00 (B-D:1) , SSI=0.07/1.00 (B-F:1)

DOL LUMBER=1.00 NAIL=1.00 LS BEND=1.10 COMP=1.10 SHEAR=1.10 TENS= 1.10

COMPANION LIVE LOAD FACTOR = 1.00

TRUSS PLATE MANUFACTURER IS NOT RESPONSIBLE FOR QUALITY CONTROL IN THE TRUSS MANUFACTURING PLANT .

NAIL VALUES

PLATE	GRIP(DRY) (PSI) MAX	MIN	SHEAR (PLI) MAX	MIN	SECTION (PLI) MAX	MIN
MT20	650	371	1747	788	1987	1873

PLATE PLACEMENT TOL. = 0.250 inches

PLATE ROTATION TOL. = 5.0 Deg.

JSI GRIP= 0.21 (B) (INPUT = 0.90)
JSI METAL= 0.11 (B) (INPUT = 0.95)

LICENSED PROFESSIONAL ENGINEER
9/25/23
C. M. HEYENS
100505065
PROVINCE OF ONTARIO

STRUCTURAL COMPONENT ONLY
DWG # TR23091828

CITY OF RICHMOND HILL
BUILDING DIVISION
05/01/2024
RECEIVED
Per: joshua.nabua

JOB NAME	TRUSS NAME	QUANTITY	PLY	JOB DESC.	DRWG NO.
434950	J1	9	1	GREENPARK HOMES TRUSS DESC.	

Tamarack Roof Truss, Burlington

Version 8.630 S Aug 30 2023 MiTek Industries, Inc. Fri Sep 22 10:15:47 2023 Page 1
ID:?7smMffSHcbvu6uGxGPN4oyih5x-Zi41Kl5npBwBCsIPp1LFd?A8q8657q4beUWtSOyb7Dg

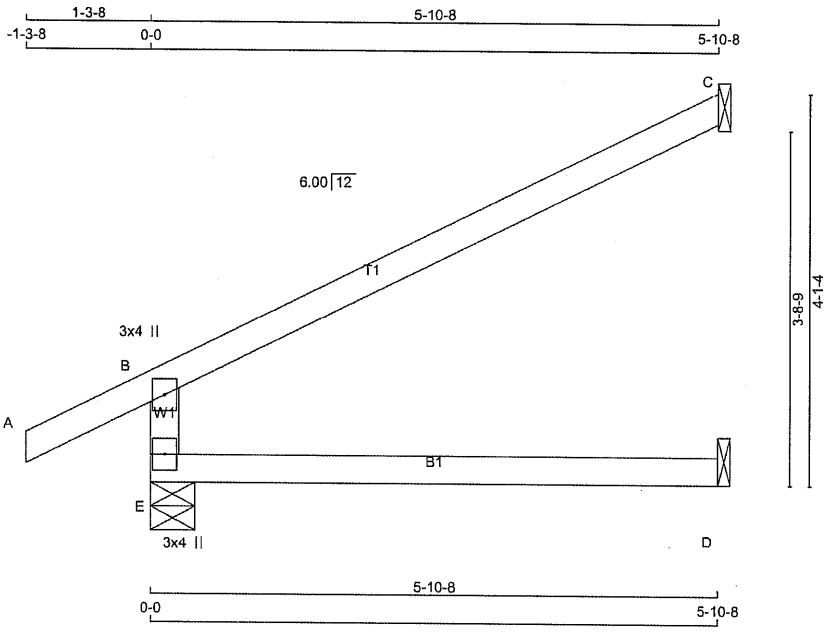

TOTAL WEIGHT = 9 X 17 = 151 lb
[M]

LUMBER
N. L. G. A. RULES

CHORDS	SIZE		LUMBER	DESCR.
E - B	2x4	DRY	No.2	SPF
A - C	2x4	DRY	No.2	SPF
E - D	2x4	DRY	No.2	SPF

DRY: SEASONED LUMBER.

PLATES (table is in inches)

JT	TYPE	PLATES	W	LEN	Y	X
B	TMV+p	MT20	3.0	4.0		
E	BMV1+p	MT20	3.0	4.0		

NOTES- (1)
1) Lateral braces to be a minimum of 2X4 SPF #2.

DIMENSIONS, SUPPORTS AND LOADINGS SPECIFIED BY FABRICATOR TO BE VERIFIED BY BUILDING DESIGNER

BEARINGS

JT	FACTORED GROSS REACTION VERT	HORZ	MAXIMUM FACTORED GROSS REACTION DOWN	HORZ	UPLIFT	INPUT BRG IN-SX	REQRD BRG IN-SX
E	525	0	525	0	0	5-8	1-8
C	202	0	202	0	0	1-8	1-8
D	45	0	50	0	0	1-8	1-8

SEE MITEK STANDARD DETAIL MSD2015-H FOR CONNECTION TO JOINT(S) C , D

UNFACTORED REACTIONS

JT	1ST LCASE COMBINED	MAX./MIN. COMPONENT REACTIONS SNOW	LIVE	PERM.LIVE	WIND	DEAD	SOIL
E	369	257 / 0	0 / 0	0 / 0	0 / 0	111 / 0	0 / 0
C	139	113 / 0	0 / 0	0 / 0	0 / 0	26 / 0	0 / 0
D	36	0 / 0	0 / 0	0 / 0	0 / 0	36 / 0	0 / 0

BEARING MATERIAL TO BE SPF NO.2 OR BETTER AT JOINT(S) E

BRACING
TOP CHORD TO BE SHEATHED OR MAX. PURLIN SPACING = 6.25 FT.
MAX. UNBRACED BOTTOM CHORD LENGTH = 10.00 FT OR RIGID CEILING DIRECTLY APPLIED.

ALL PITCH BREAKS AND PERIMETER CORNER JOINTS MUST BE LATERALLY RESTRAINED.

LOADING
TOTAL LOAD CASES: (4)

CHORDS

MEMB. FR-TO	MAX. FACTORED FORCE (LBS)	FACTORED VERT. LOAD (PLF) FROM	TO	LC1	MAX CSI (LC)	MAX. UNBRAC LENGTH
E- B	-461 / 0	0.0	0.0	0.13 (4)		7.81
A- B	0 / 28	-91.8	-91.8	0.12 (1)		10.00
B- C	-30 / 0	-91.8	-91.8	0.54 (1)		6.25
E- D	0 / 0	-18.5	-18.5	0.13 (4)		10.00

WEBS

MEMB. FR-TO	MAX. FACTORED FORCE (LBS)	MAX CSI (LC)

DESIGN CRITERIA

SPECIFIED LOADS:

TOP CH.	LL	=	25.6	PSF
	DL	=	6.0	PSF
BOT CH.	LL	=	0.0	PSF
	DL	=	7.4	PSF
TOTAL LOAD		=	39.0	PSF

SPACING = 24.0 IN. C/C

THIS TRUSS IS DESIGNED FOR RESIDENTIAL OR SMALL BUILDING REQUIREMENTS OF PART 9, NBCC 2015

THIS DESIGN COMPLIES WITH:
- PART 9 OF BCBC 2018 , NBC-2019AE
- PART 9 OF OBC 2012 (2019 AMENDMENT)
- CSA 086-14
- TPIC 2014

DESIGN ASSUMPTIONS
-OVERHANG NOT TO BE ALTERED OR CUT OFF.

(55 % OF 31.3 P.S.F. G.S.L. PLUS 8.4 P.S.F. RAIN LOAD) EQUALS 25.6 P.S.F. SPECIFIED ROOF LIVE LOAD

ALLOWABLE DEFL.(LL)= L/360 (0.20")
CALCULATED VERT. DEFL.(LL) = L/ 999 (0.00")
ALLOWABLE DEFL.(TL)= L/360 (0.20")
CALCULATED VERT. DEFL.(TL) = L/ 999 (0.03")

CSI: TC=0.54/1.00 (B-C:1) , BC=0.13/1.00 (D-E:4) , WB=0.00/1.00 (n/a:0) , SSI=0.24/1.00 (B-C:1)

DOL LUMBER=1.00 NAIL=1.00 LS BEND=1.10 COMP=1.10 SHEAR=1.10 TENS= 1.10

COMPANION LIVE LOAD FACTOR = 1.00

TRUSS PLATE MANUFACTURER IS NOT RESPONSIBLE FOR QUALITY CONTROL IN THE TRUSS MANUFACTURING PLANT .

NAIL VALUES

PLATE	GRIP(DRY) (PSI) MAX	MIN	SHEAR (PLI) MAX	MIN	SECTION (PLI) MAX	MIN
MT20	650	371	1747	788	1987	1873

PLATE PLACEMENT TOL. = 0.250 inches

PLATE ROTATION TOL. = 5.0 Deg.

JSI GRIP= 0.18 (E) (INPUT = 0.90)
JSI METAL= 0.13 (B) (INPUT = 0.95)

LICENSED PROFESSIONAL ENGINEER
9/25/23
C. M. HEYENS
100505065
PROVINCE OF ONTARIO

STRUCTURAL COMPONENT ONLY
DWG # TR23091780

CITY OF RICHMOND HILL
BUILDING DIVISION
05/01/2024
RECEIVED
Per: joshua.nabua

JOB NAME	TRUSS NAME	QUANTITY	PLY	JOB DESC.	DRWG NO.
434950	J2	2	1	GREENPARK HOMES TRUSS DESC.	

Tamarack Roof Truss, Burlington

Version 8.630 S Aug 30 2023 MiTek Industries, Inc. Fri Sep 22 10:15:48 2023 Page 1
ID:?7smMffSHcbvu6uGxGPN4oyih5x-1uePX56PaU22p0tbNltUACjOKYS5sHJls8GR?ryb7Df

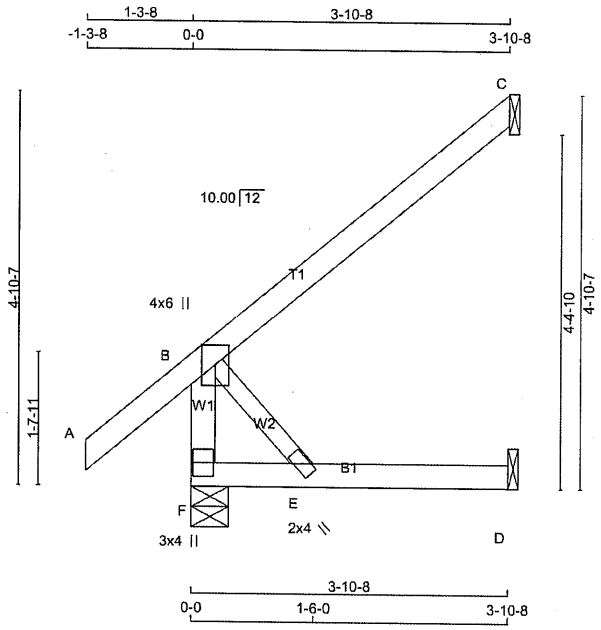

TOTAL WEIGHT = 2 X 15 = 30 lb
[M]

LUMBER
N. L. G. A. RULES

CHORDS	SIZE		LUMBER	DESCR.
F - B	2x4	DRY	No.2	SPF
A - C	2x4	DRY	No.2	SPF
F - D	2x4	DRY	No.2	SPF
ALL WEBS	2x3	DRY	No.2	SPF

DRY: SEASONED LUMBER.

PLATES (table is in inches)

JT	TYPE	PLATES	W	LEN	Y	X
B	TMVW+p	MT20	4.0	6.0	Edge	
E	BMW+w	MT20	2.0	4.0		
F	BMV1+p	MT20	3.0	4.0		

Edge - INDICATES REFERENCE CORNER OF PLATE TOUCHES EDGE OF CHORD.

NOTES- (1)
1) Lateral braces to be a minimum of 2X4 SPF #2.

DIMENSIONS, SUPPORTS AND LOADINGS SPECIFIED BY FABRICATOR TO BE VERIFIED BY BUILDING DESIGNER

BEARINGS

JT	FACTORED GROSS REACTION VERT	HORZ	MAXIMUM FACTORED GROSS REACTION DOWN	HORZ	UPLIFT	INPUT BRG IN-SX	REQRD BRG IN-SX
F	341	0	341	0	0	5-8	1-8
C	178	0	178	0	0	1-8	1-8
D	36	0	40	0	0	1-8	1-8

SEE MITEK STANDARD DETAIL MSD2015-H FOR CONNECTION TO JOINT(S) C , D

UNFACTORED REACTIONS

JT	1ST LCASE COMBINED	MAX./MIN. COMPONENT REACTIONS SNOW	LIVE	PERM.LIVE	WIND	DEAD	SOIL
F	239	170 / 0	0 / 0	0 / 0	0 / 0	69 / 0	0 / 0
C	122	99 / 0	0 / 0	0 / 0	0 / 0	23 / 0	0 / 0
D	29	0 / 0	0 / 0	0 / 0	0 / 0	29 / 0	0 / 0

BEARING MATERIAL TO BE SPF NO.2 OR BETTER AT JOINT(S) F

BRACING
TOP CHORD TO BE SHEATHED OR MAX. PURLIN SPACING = 10.00 FT.
MAX. UNBRACED BOTTOM CHORD LENGTH = 10.00 FT OR RIGID CEILING DIRECTLY APPLIED.

ALL PITCH BREAKS AND PERIMETER CORNER JOINTS MUST BE LATERALLY RESTRAINED.

LOADING
TOTAL LOAD CASES: (5)

CHORDS

MEMB. FR-TO	MAX. FACTORED FORCE (LBS)	FACTORED VERT. LOAD (PLF) FROM	TO	LC1 MAX CSI (LC)	MAX. UNBRAC LENGTH
F- B	-305 / 0	0.0	0.0	0.03 (1)	7.81
A- B	0 / 41	-91.8	-91.8	0.14 (5)	10.00
B- C	0 / 0	-91.8	-91.8	0.23 (1)	10.00
F- E	0 / 0	-18.5	-18.5	0.07 (4)	10.00
E- D	0 / 0	-18.5	-18.5	0.08 (4)	10.00

WEBS

MEMB. FR-TO	MAX. FACTORED FORCE (LBS)	MAX CSI (LC)
B- E	0 / 0	0.00 (1)

CANTILEVER ANALYSIS HAS BEEN CONSIDERED IN THIS DESIGN

DESIGN CRITERIA

SPECIFIED LOADS:

TOP CH.	LL	=	25.6	PSF
	DL	=	6.0	PSF
BOT CH.	LL	=	0.0	PSF
	DL	=	7.4	PSF
TOTAL LOAD		=	39.0	PSF

SPACING = 24.0 IN. C/C

THIS TRUSS IS DESIGNED FOR RESIDENTIAL OR SMALL BUILDING REQUIREMENTS OF PART 9, NBCC 2015

THIS DESIGN COMPLIES WITH:
- PART 9 OF BCBC 2018 , NBC-2019AE
- PART 9 OF OBC 2012 (2019 AMENDMENT)
- CSA 086-14
- TPIC 2014

(55 % OF 31.3 P.S.F. G.S.L. PLUS 8.4 P.S.F. RAIN LOAD) EQUALS 25.6 P.S.F. SPECIFIED ROOF LIVE LOAD

ALLOWABLE DEFL.(LL)= L/360 (0.19")
CALCULATED VERT. DEFL.(LL) = L/ 999 (0.00")
ALLOWABLE DEFL.(TL)= L/360 (0.19")
CALCULATED VERT. DEFL.(TL) = L/ 999 (0.01")

CSI: TC=0.23/1.00 (B-C:1) , BC=0.08/1.00 (D-E:4) , WB=0.00/1.00 (B-E:1) , SSI=0.11/1.00 (B-C:1)

DOL LUMBER=1.00 NAIL=1.00 LS BEND=1.10 COMP=1.10 SHEAR=1.10 TENS= 1.10

COMPANION LIVE LOAD FACTOR = 1.00

AUTOSOLVE RIGHT HEEL ONLY

TRUSS PLATE MANUFACTURER IS NOT RESPONSIBLE FOR QUALITY CONTROL IN THE TRUSS MANUFACTURING PLANT .

NAIL VALUES

PLATE	GRIP(DRY) (PSI) MAX	MIN	SHEAR (PLI) MAX	MIN	SECTION (PLI) MAX	MIN
MT20	650	371	1747	788	1987	1873

PLATE PLACEMENT TOL. = 0.250 inches

PLATE ROTATION TOL. = 5.0 Deg.

JSI GRIP= 0.19 (B) (INPUT = 0.90)
JSI METAL= 0.08 (B) (INPUT = 0.95)

LICENSED PROFESSIONAL ENGINEER
9/25/23
C. M. HEYENS
100505065
PROVINCE OF ONTARIO

STRUCTURAL COMPONENT ONLY
DWG # TR23091781

CITY OF RICHMOND HILL
BUILDING DIVISION
05/01/2024
RECEIVED
Per: joshua.nabua

JOB NAME	TRUSS NAME	QUANTITY	PLY	JOB DESC.	DRWG NO.
434950	J3	10	1	GREENPARK HOMES TRUSS DESC.	

Tamarack Roof Truss, Burlington

Version 8.630 S Aug 30 2023 MiTek Industries, Inc. Fri Sep 22 10:15:49 2023 Page 1
ID:?7smMffSHcbvu6uGxGPN4oyih5x-V4CokR71LoAvR9SoxSOjiQGT2ym9bkZu5o? XHyb7De

Scale = 1:19.0

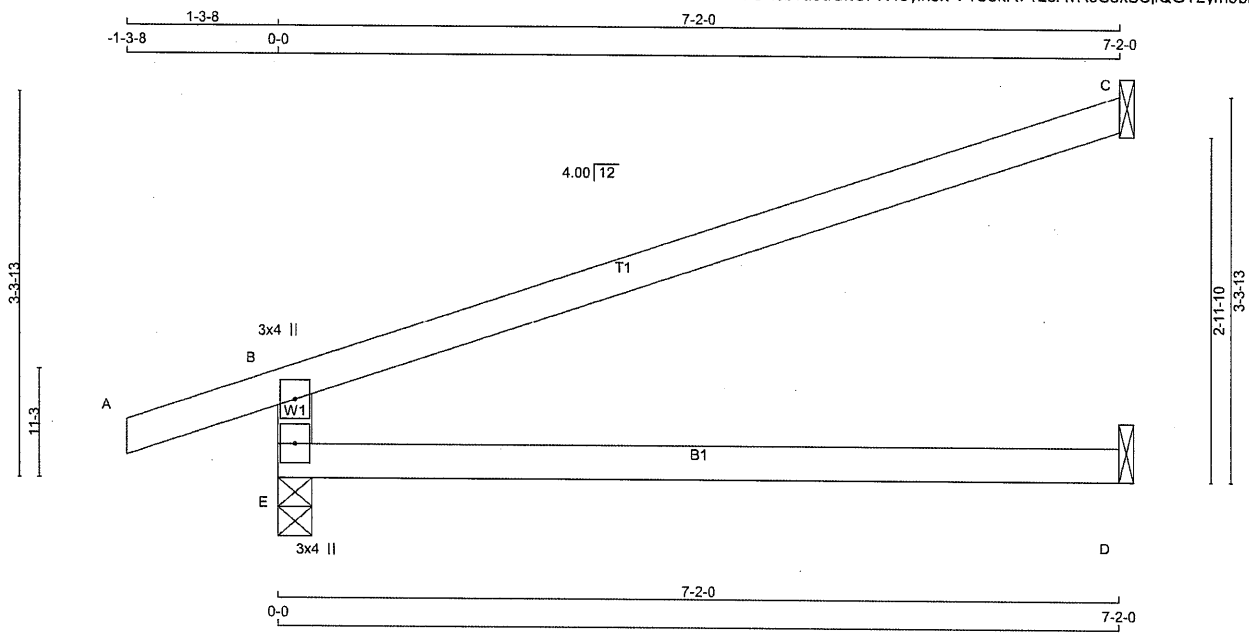

TOTAL WEIGHT = 10 X 19 = 189 lb

LUMBER
N. L. G. A. RULES

CHORDS	SIZE		LUMBER	DESCR.
E - B	2x4	DRY	No.2	SPF
A - C	2x4	DRY	No.2	SPF
E - D	2x4	DRY	No.2	SPF

DRY: SEASONED LUMBER.

PLATES (table is in inches)

JT	TYPE	PLATES	W	LEN	Y	X
B	TMV+p	MT20	3.0	4.0		
E	BMV1+p	MT20	3.0	4.0		

NOTES- (1)
1) Lateral braces to be a minimum of 2X4 SPF #2.

DIMENSIONS, SUPPORTS AND LOADINGS SPECIFIED BY FABRICATOR TO BE VERIFIED BY BUILDING DESIGNER

BEARINGS

JT	FACTORED GROSS REACTION VERT	HORZ	MAXIMUM FACTORED GROSS REACTION DOWN	HORZ	UPLIFT	INPUT BRG IN-SX	REQRD BRG IN-SX
E	613	0	613	0	0	3-8	1-8
C	247	0	247	0	0	1-8	1-8
D	53	0	60	0	0	1-8	1-8

SEE MITEK STANDARD DETAIL MSD2015-H FOR CONNECTION TO JOINT(S) C , D

UNFACTORED REACTIONS

JT	1ST LCASE COMBINED	MAX./MIN. COMPONENT REACTIONS SNOW	LIVE	PERM.LIVE	WIND	DEAD	SOIL
E	431	298 / 0	0 / 0	0 / 0	0 / 0	133 / 0	0 / 0
C	170	138 / 0	0 / 0	0 / 0	0 / 0	32 / 0	0 / 0
D	43	0 / 0	0 / 0	0 / 0	0 / 0	43 / 0	0 / 0

BEARING MATERIAL TO BE SPF NO.2 OR BETTER AT JOINT(S) E

BRACING
TOP CHORD TO BE SHEATHED OR MAX. PURLIN SPACING = 6.25 FT.
MAX. UNBRACED BOTTOM CHORD LENGTH = 10.00 FT OR RIGID CEILING DIRECTLY APPLIED.

ALL PITCH BREAKS AND PERIMETER CORNER JOINTS MUST BE LATERALLY RESTRAINED.

LOADING
TOTAL LOAD CASES: (4)

CHORDS MEMB. FR-TO	MAX. FACTORED FORCE (LBS)	FACTORED VERT. LOAD (PLF) FROM	TO	LC1	MAX CSI (LC)	MAX. UNBRAC LENGTH	WEBS MEMB. FR-TO	MAX. FACTORED FORCE (LBS)	MAX CSI (LC)
E- B	-534 / 0	0.0	0.0		0.18 (4)	7.81			
A- B	0 / 19	-91.8	-91.8		0.11 (1)	10.00			
B- C	-26 / 0	-91.8	-91.8		0.62 (1)	6.25			
E- D	0 / 0	-18.5	-18.5		0.22 (4)	10.00			

[M][F]

DESIGN CRITERIA

SPECIFIED LOADS:

TOP CH.	LL	=	25.6	PSF
	DL	=	6.0	PSF
BOT CH.	LL	=	0.0	PSF
	DL	=	7.4	PSF
TOTAL LOAD		=	39.0	PSF

SPACING = 24.0 IN. C/C

THIS TRUSS IS DESIGNED FOR RESIDENTIAL OR SMALL BUILDING REQUIREMENTS OF PART 9, NBCC 2015

THIS DESIGN COMPLIES WITH:
- PART 9 OF BCBC 2018 , NBC-2019AE
- PART 9 OF OBC 2012 (2019 AMENDMENT)
- CSA 086-14
- TPIC 2014

DESIGN ASSUMPTIONS
-OVERHANG NOT TO BE ALTERED OR CUT OFF.

(55 % OF 31.3 P.S.F. G.S.L. PLUS 8.4 P.S.F. RAIN LOAD) EQUALS 25.6 P.S.F. SPECIFIED ROOF LIVE LOAD

ALLOWABLE DEFL.(LL)= L/360 (0.24")
CALCULATED VERT. DEFL.(LL) = L/ 999 (0.00")
ALLOWABLE DEFL.(TL)= L/360 (0.24")
CALCULATED VERT. DEFL.(TL) = L/ 999 (0.06")

CSI: TC=0.62/1.00 (B-C:1) , BC=0.22/1.00 (D-E:4) , WB=0.00/1.00 (n/a:0) , SSI=0.30/1.00 (B-C:1)

DOL LUMBER=1.00 NAIL=1.00 LS BEND=1.10 COMP=1.10 SHEAR=1.10 TENS= 1.10

COMPANION LIVE LOAD FACTOR = 1.00

TRUSS PLATE MANUFACTURER IS NOT RESPONSIBLE FOR QUALITY CONTROL IN THE TRUSS MANUFACTURING PLANT .

NAIL VALUES

PLATE	GRIP(DRY) (PSI) MAX	MIN	SHEAR (PLI) MAX	MIN	SECTION (PLI) MAX	MIN
MT20	650	371	1747	788	1987	1873

PLATE PLACEMENT TOL. = 0.250 inches

PLATE ROTATION TOL. = 5.0 Deg.

JSI GRIP= 0.21 (E) (INPUT = 0.90)
JSI METAL= 0.10 (B) (INPUT = 0.95)

LICENSED PROFESSIONAL ENGINEER
9/25/23
C. M. HEYENS
100505065
PROVINCE OF ONTARIO

STRUCTURAL COMPONENT ONLY
DWG # TR23091782

CITY OF RICHMOND HILL
BUILDING DIVISION
05/01/2024
RECEIVED
Per: joshua.nabua

JOB NAME	TRUSS NAME	QUANTITY	PLY	JOB DESC.	DRWG NO.
434950	J4	1	1	GREENPARK HOMES TRUSS DESC.	

Tamarack Roof Truss, Burlington

Version 8.630 S Aug 30 2023 MiTek Industries, Inc. Fri Sep 22 10:15:49 2023 Page 1
ID:?7smMffSHcbvu6uGxGPN4oyih5x-V4CokR71LoAvR9SoxSOjiQGbmypEbkZu5o? XHyb7De

Scale = 1:19.9

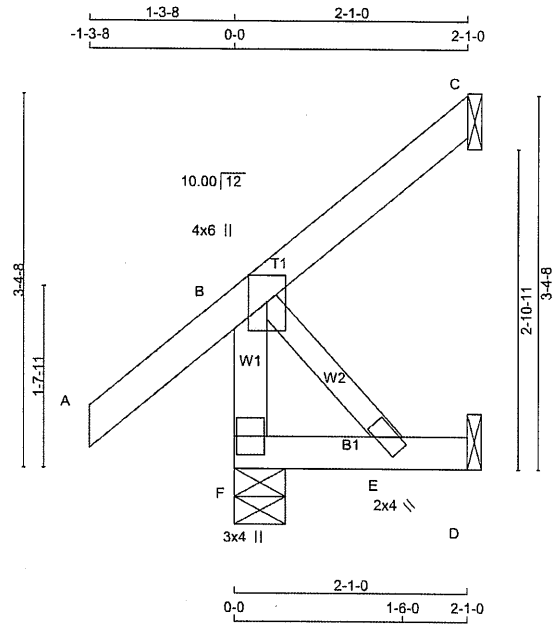

TOTAL WEIGHT = 10 lb [M]

LUMBER
N. L. G. A. RULES

CHORDS	SIZE		LUMBER	DESCR.
F - B	2x4	DRY	No.2	SPF
A - C	2x4	DRY	No.2	SPF
F - D	2x4	DRY	No.2	SPF
ALL WEBS	2x3	DRY	No.2	SPF

DRY: SEASONED LUMBER.

PLATES (table is in inches)

JT	TYPE	PLATES	W	LEN	Y	X
B	TMWW+p	MT20	4.0	6.0	Edge	
E	BMW+w	MT20	2.0	4.0		
F	BMV1+p	MT20	3.0	4.0		

Edge - INDICATES REFERENCE CORNER OF PLATE TOUCHES EDGE OF CHORD.

NOTES- (1)
1) Lateral braces to be a minimum of 2X4 SPF #2.

DIMENSIONS, SUPPORTS AND LOADINGS SPECIFIED BY FABRICATOR TO BE VERIFIED BY BUILDING DESIGNER

BEARINGS

JT	FACTORED GROSS REACTION VERT	HORZ	MAXIMUM FACTORED GROSS REACTION DOWN	HORZ	UPLIFT	INPUT BRG IN-SX	REQRD BRG IN-SX
F	242	0	242	0	0	5-8	1-8
C	96	0	96	0	0	1-8	1-8
D	19	0	22	0	0	1-8	1-8

SEE MITEK STANDARD DETAIL MSD2015-H FOR CONNECTION TO JOINT(S) C , D

UNFACTORED REACTIONS

JT	1ST LCASE COMBINED	MAX./MIN. COMPONENT REACTIONS SNOW	LIVE	PERM.LIVE	WIND	DEAD	SOIL
F	169	124 / 0	0 / 0	0 / 0	0 / 0	45 / 0	0 / 0
C	66	53 / 0	0 / 0	0 / 0	0 / 0	12 / 0	0 / 0
D	15	0 / 0	0 / 0	0 / 0	0 / 0	15 / 0	0 / 0

BEARING MATERIAL TO BE SPF NO.2 OR BETTER AT JOINT(S) F

BRACING
TOP CHORD TO BE SHEATHED OR MAX. PURLIN SPACING = 10.00 FT.
MAX. UNBRACED BOTTOM CHORD LENGTH = 10.00 FT OR RIGID CEILING DIRECTLY APPLIED.

ALL PITCH BREAKS AND PERIMETER CORNER JOINTS MUST BE LATERALLY RESTRAINED.

LOADING
TOTAL LOAD CASES: (5)

CHORDS

MEMB. FR-TO	MAX. FACTORED FORCE (LBS)	FACTORED VERT. LOAD LC1 (PLF) FROM	TO	MAX CSI (LC)	MAX. UNBRAC LENGTH
F- B	-223 / 0	0.0	0.0	0.02 (1)	7.81
A- B	0 / 41	-91.8	-91.8	0.13 (1)	10.00
B- C	0 / 0	-91.8	-91.8	0.07 (1)	10.00
F- E	0 / 0	-18.5	-18.5	0.02 (4)	10.00
E- D	0 / 0	-18.5	-18.5	0.02 (4)	10.00

WEBS

MEMB. FR-TO	MAX. FACTORED FORCE (LBS)	MAX CSI (LC)
B- E	0 / 0	0.00 (1)

CANTILEVER ANALYSIS HAS BEEN CONSIDERED IN THIS DESIGN

DESIGN CRITERIA

SPECIFIED LOADS:

TOP CH.	LL =	25.6	PSF
	DL =	6.0	PSF
BOT CH.	LL =	0.0	PSF
	DL =	7.4	PSF
TOTAL LOAD	=	39.0	PSF

SPACING = 24.0 IN. C/C

THIS TRUSS IS DESIGNED FOR RESIDENTIAL OR SMALL BUILDING REQUIREMENTS OF PART 9, NBCC 2015

THIS DESIGN COMPLIES WITH:
- PART 9 OF BCBC 2018 , NBC-2019AE
- PART 9 OF OBC 2012 (2019 AMENDMENT)
- CSA 086-14
- TPIC 2014

(55 % OF 31.3 P.S.F. G.S.L. PLUS 8.4 P.S.F. RAIN LOAD) EQUALS 25.6 P.S.F. SPECIFIED ROOF LIVE LOAD

ALLOWABLE DEFL.(LL)= L/360 (0.19")
CALCULATED VERT. DEFL.(LL) = L/ 999 (0.00")
ALLOWABLE DEFL.(TL)= L/360 (0.19")
CALCULATED VERT. DEFL.(TL) = L/ 999 (0.00")

CSI: TC=0.13/1.00 (A-B:1) , BC=0.02/1.00 (E-F:4) , WB=0.00/1.00 (B-E:1) , SSI=0.08/1.00 (A-B:1)

DOL LUMBER=1.00 NAIL=1.00 LS BEND=1.10 COMP=1.10 SHEAR=1.10 TENS= 1.10

COMPANION LIVE LOAD FACTOR = 1.00

AUTOSOLVE RIGHT HEEL ONLY

TRUSS PLATE MANUFACTURER IS NOT RESPONSIBLE FOR QUALITY CONTROL IN THE TRUSS MANUFACTURING PLANT .

NAIL VALUES

PLATE	GRIP(DRY) (PSI) MAX	MIN	SHEAR (PLI) MAX	MIN	SECTION (PLI) MAX	MIN
MT20	650	371	1747	788	1987	1873

PLATE PLACEMENT TOL. = 0.250 inches

PLATE ROTATION TOL. = 5.0 Deg.

JSI GRIP= 0.14 (B) (INPUT = 0.90)
JSI METAL= 0.06 (B) (INPUT = 0.95)

LICENSED PROFESSIONAL ENGINEER
9/25/23
C. M. HEYENS
100505065
PROVINCE OF ONTARIO

STRUCTURAL COMPONENT ONLY
DWG # TR23091783

CITY OF RICHMOND HILL
BUILDING DIVISION
05/01/2024
RECEIVED
Per: joshua.nabua

JOB NAME	TRUSS NAME	QUANTITY	PLY	JOB DESC.	DRWG NO.
434951	J20	3	1	GREENPARK HOMES TRUSS DESC.	

Tamarack Roof Truss, Burlington

Version 8.630 S Aug 30 2023 MiTek Industries, Inc. Fri Sep 22 10:21:54 2023 Page 1
ID:?7smMffSHcbvu6uGxGPN4oyih5x-JImnLFX Ox96kFrxpcRJ?OtyX5OIcpwd15wordyb77x

Scale = 1:23.2

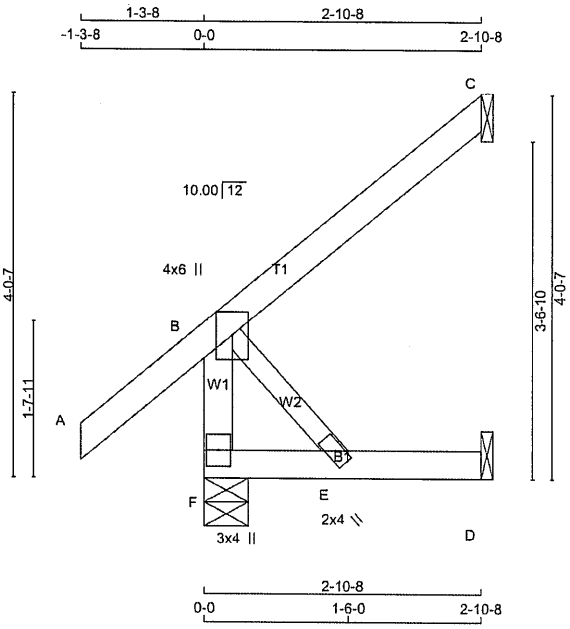

TOTAL WEIGHT = 3 X 13 = 38 lb [M]

LUMBER
N. L. G. A. RULES

CHORDS	SIZE		LUMBER	DESCR.
F - B	2x4	DRY	No.2	SPF
A - C	2x4	DRY	No.2	SPF
F - D	2x4	DRY	No.2	SPF
ALL WEBS	2x3	DRY	No.2	SPF

DRY: SEASONED LUMBER.

PLATES (table is in inches)

JT	TYPE	PLATES	W	LEN	Y	X
B	TMVW+p	MT20	4.0	6.0	Edge	
E	BMW+w	MT20	2.0	4.0		
F	BMV1+p	MT20	3.0	4.0		

Edge - INDICATES REFERENCE CORNER OF PLATE TOUCHES EDGE OF CHORD.

NOTES- (1)
1) Lateral braces to be a minimum of 2X4 SPF #2.

DIMENSIONS, SUPPORTS AND LOADINGS SPECIFIED BY FABRICATOR TO BE VERIFIED BY BUILDING DESIGNER

BEARINGS

JT	FACTORED GROSS REACTION VERT	HORZ	MAXIMUM FACTORED GROSS REACTION DOWN	HORZ	UPLIFT	INPUT BRG IN-SX	REQRD BRG IN-SX
F	286	0	286	0	0	5-8	1-8
C	132	0	132	0	0	1-8	1-8
D	27	0	30	0	0	1-8	1-8

SEE MITEK STANDARD DETAIL MSD2015-H FOR CONNECTION TO JOINT(S) C , D

UNFACTORED REACTIONS

JT	1ST LCASE COMBINED	MAX./MIN. COMPONENT REACTIONS SNOW	LIVE	PERM.LIVE	WIND	DEAD	SOIL
F	200	144 / 0	0 / 0	0 / 0	0 / 0	55 / 0	0 / 0
C	91	74 / 0	0 / 0	0 / 0	0 / 0	17 / 0	0 / 0
D	21	0 / 0	0 / 0	0 / 0	0 / 0	21 / 0	0 / 0

BEARING MATERIAL TO BE SPF NO.2 OR BETTER AT JOINT(S) F

BRACING
TOP CHORD TO BE SHEATHED OR MAX. PURLIN SPACING = 10.00 FT.
MAX. UNBRACED BOTTOM CHORD LENGTH = 10.00 FT OR RIGID CEILING DIRECTLY APPLIED.

ALL PITCH BREAKS AND PERIMETER CORNER JOINTS MUST BE LATERALLY RESTRAINED.

LOADING
TOTAL LOAD CASES: (5)

CHORDS

MEMB. FR-TO	MAX. FACTORED FORCE (LBS)	FACTORED VERT. LOAD (PLF) FROM	TO	LC1 MAX CSI (LC)	MAX. UNBRAC LENGTH
F- B	-259 / 0	0.0	0.0	0.03 (1)	7.81
A- B	0 / 41	-91.8	-91.8	0.13 (5)	10.00
B- C	0 / 0	-91.8	-91.8	0.13 (1)	10.00
F- E	0 / 0	-18.5	-18.5	0.04 (4)	10.00
E- D	0 / 0	-18.5	-18.5	0.04 (4)	10.00

WEBS

MEMB. FR-TO	MAX. FACTORED FORCE (LBS)	MAX CSI (LC)
B- E	0 / 0	0.00 (1)

CANTILEVER ANALYSIS HAS BEEN CONSIDERED IN THIS DESIGN

DESIGN CRITERIA

SPECIFIED LOADS:

TOP CH.	LL	=	25.6	PSF
	DL	=	6.0	PSF
BOT CH.	LL	=	0.0	PSF
	DL	=	7.4	PSF
TOTAL LOAD		=	39.0	PSF

SPACING = 24.0 IN. C/C

THIS TRUSS IS DESIGNED FOR RESIDENTIAL OR SMALL BUILDING REQUIREMENTS OF PART 9, NBCC 2015

THIS DESIGN COMPLIES WITH:
- PART 9 OF BCBC 2018 , NBC-2019AE
- PART 9 OF OBC 2012 (2019 AMENDMENT)
- CSA 086-14
- TPIC 2014

(55 % OF 31.3 P.S.F. G.S.L. PLUS 8.4 P.S.F. RAIN LOAD) EQUALS 25.6 P.S.F. SPECIFIED ROOF LIVE LOAD

ALLOWABLE DEFL.(LL)= L/360 (0.19")
CALCULATED VERT. DEFL.(LL) = L/ 999 (0.00")
ALLOWABLE DEFL.(TL)= L/360 (0.19")
CALCULATED VERT. DEFL.(TL) = L/ 999 (0.00")

CSI: TC=0.13/1.00 (A-B:5) , BC=0.04/1.00 (D-E:4) , WB=0.00/1.00 (B-E:1) , SSI=0.08/1.00 (A-B:5)

DOL LUMBER=1.00 NAIL=1.00 LS BEND=1.10 COMP=1.10 SHEAR=1.10 TENS= 1.10

COMPANION LIVE LOAD FACTOR = 1.00

AUTOSOLVE RIGHT HEEL ONLY

TRUSS PLATE MANUFACTURER IS NOT RESPONSIBLE FOR QUALITY CONTROL IN THE TRUSS MANUFACTURING PLANT .

NAIL VALUES

PLATE	GRIP(DRY) (PSI) MAX	MIN	SHEAR (PLI) MAX	MIN	SECTION (PLI) MAX	MIN
MT20	650	371	1747	788	1987	1873

PLATE PLACEMENT TOL. = 0.250 inches

PLATE ROTATION TOL. = 5.0 Deg.

JSI GRIP= 0.16 (B) (INPUT = 0.90)
JSI METAL= 0.07 (B) (INPUT = 0.95)

LICENSED PROFESSIONAL ENGINEER
9/25/23
C. M. HEYENS
100505065
PROVINCE OF ONTARIO

STRUCTURAL COMPONENT ONLY
DWG # TR23091804

CITY OF RICHMOND HILL
BUILDING DIVISION
05/01/2024
RECEIVED
Per: joshua.nabua

JOB NAME	TRUSS NAME	QUANTITY	PLY	JOB DESC.	DRWG NO.
434951	J21	2	1	GREENPARK HOMES TRUSS DESC.	

Tamarack Roof Truss, Burlington

Version 8.630 S Aug 30 2023 MiTek Industries, Inc. Fri Sep 22 10:21:55 2023 Page 1
ID:?7smMffSHcbvu6uGxGPN4oyih5x-nVJ9ZbYc8FHzLPQ8NKyYYcQ8PUk6LGAmFkgMN3yb77w

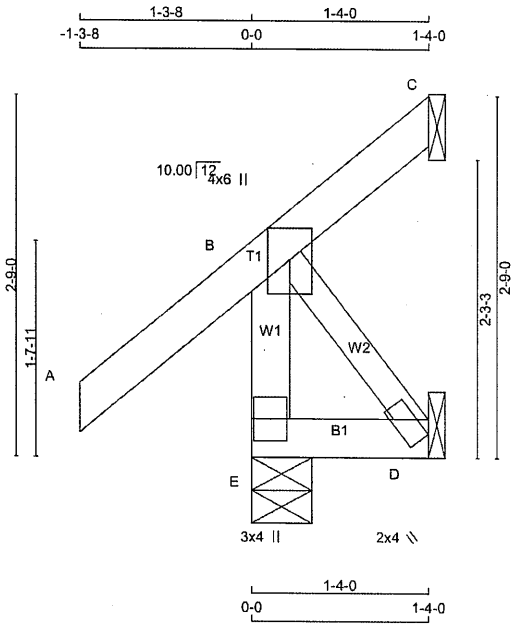

TOTAL WEIGHT = 2 X 8 = 17 lb
[M]

LUMBER
N. L. G. A. RULES

CHORDS	SIZE		LUMBER	DESCR.
E - B	2x4	DRY	No.2	SPF
A - C	2x4	DRY	No.2	SPF
E - D	2x4	DRY	No.2	SPF
ALL WEBS	2x3	DRY	No.2	SPF

DRY: SEASONED LUMBER.

PLATES (table is in inches)

JT	TYPE	PLATES	W	LEN	Y	X
B	TMVW+p	MT20	4.0	6.0	Edge	
D	BMW1+w	MT20	2.0	4.0		Edge
E	BMV1+p	MT20	3.0	4.0		

Edge - INDICATES REFERENCE CORNER OF PLATE TOUCHES EDGE OF CHORD.

NOTES- (1)
1) Lateral braces to be a minimum of 2X4 SPF #2.

DIMENSIONS, SUPPORTS AND LOADINGS SPECIFIED BY FABRICATOR TO BE VERIFIED BY BUILDING DESIGNER

BEARINGS

JT	FACTORED GROSS REACTION VERT	HORZ	MAXIMUM FACTORED GROSS REACTION DOWN	HORZ	UPLIFT	INPUT BRG IN-SX	REQRD BRG IN-SX
E	265	0	265	0	0	5-8	1-8
C	-5	0	0	0	-59	1-8	1-8
D	11	0	12	0	0	1-8	1-8

SEE MITEK STANDARD DETAIL MSD2015-H FOR CONNECTION TO JOINT(S) C , D

PROVIDE ANCHORAGE AT BEARING JOINT C FOR 150 LBS FACTORED UPLIFT

UNFACTORED REACTIONS

JT	1ST LCASE COMBINED	MAX./MIN. COMPONENT REACTIONS SNOW	LIVE	PERM.LIVE	WIND	DEAD	SOIL
E	184	142 / 0	0 / 0	0 / 0	0 / 0	42 / 0	0 / 0
C	-3	0 / -37	0 / 0	0 / 0	0 / 0	0 / -1	0 / 0
D	9	0 / 0	0 / 0	0 / 0	0 / 0	9 / 0	0 / 0

BEARING MATERIAL TO BE SPF NO.2 OR BETTER AT JOINT(S) E

BRACING
TOP CHORD TO BE SHEATHED OR MAX. PURLIN SPACING = 6.25 FT.
MAX. UNBRACED BOTTOM CHORD LENGTH = 10.00 FT OR RIGID CEILING DIRECTLY APPLIED.

ALL PITCH BREAKS AND PERIMETER CORNER JOINTS MUST BE LATERALLY RESTRAINED.

LOADING
TOTAL LOAD CASES: (5)

CHORDS MEMB. FR-TO	MAX. FACTORED FORCE (LBS)	FACTORED VERT. LOAD (PLF) FROM	TO	LC1 MAX CSI (LC)	MAX. UNBRAC LENGTH	WEBS MEMB. FR-TO	MAX. FACTORED FORCE (LBS)	MAX CSI (LC)
E- B	-254 / 0	0.0	0.0	0.03 (1)	7.81	B- D	0 / 0	0.00 (1)
A- B	0 / 41	-91.8	-91.8	0.13 (1)	10.00			
B- C	-42 / 0	-91.8	-91.8	0.12 (1)	6.25			
E- D	0 / 0	-18.5	-18.5	0.01 (4)	10.00			

CANTILEVER ANALYSIS HAS BEEN CONSIDERED IN THIS DESIGN

DESIGN CRITERIA

SPECIFIED LOADS:

TOP CH.	LL	=	25.6	PSF
	DL	=	6.0	PSF
BOT CH.	LL	=	0.0	PSF
	DL	=	7.4	PSF
TOTAL LOAD		=	39.0	PSF

SPACING = 24.0 IN. C/C

THIS TRUSS IS DESIGNED FOR RESIDENTIAL OR SMALL BUILDING REQUIREMENTS OF PART 9, NBCC 2015

THIS DESIGN COMPLIES WITH:
- PART 9 OF BCBC 2018 , NBC-2019AE
- PART 9 OF OBC 2012 (2019 AMENDMENT)
- CSA 086-14
- TPIC 2014

DESIGN ASSUMPTIONS
-OVERHANG NOT TO BE ALTERED OR CUT OFF.

(55 % OF 31.3 P.S.F. G.S.L. PLUS 8.4 P.S.F. RAIN LOAD) EQUALS 25.6 P.S.F. SPECIFIED ROOF LIVE LOAD

ALLOWABLE DEFL.(TL)= L/360 (0.19")
CALCULATED VERT. DEFL.(TL) = L/ 999 (0.00")

CSI: TC=0.13/1.00 (A-B:1) , BC=0.01/1.00 (D-E:4) , WB=0.00/1.00 (B-D:1) , SSI=0.08/1.00 (B-C:1)

DOL LUMBER=1.00 NAIL=1.00 LS BEND=1.10 COMP=1.10 SHEAR=1.10 TENS= 1.10

COMPANION LIVE LOAD FACTOR = 1.00

AUTOSOLVE RIGHT HEEL ONLY

TRUSS PLATE MANUFACTURER IS NOT RESPONSIBLE FOR QUALITY CONTROL IN THE TRUSS MANUFACTURING PLANT .

NAIL VALUES

PLATE	GRIP(DRY) (PSI) MAX	MIN	SHEAR (PLI) MAX	MIN	SECTION (PLI) MAX	MIN
MT20	650	371	1747	788	1987	1873

PLATE PLACEMENT TOL. = 0.250 inches

PLATE ROTATION TOL. = 5.0 Deg.

JSI GRIP= 0.16 (B) (INPUT = 0.90)
JSI METAL= 0.07 (B) (INPUT = 0.95)

LICENSED PROFESSIONAL ENGINEER
9/25/23
C. M. HEYENS
100505065
PROVINCE OF ONTARIO

STRUCTURAL COMPONENT ONLY
DWG # TR23091805

CITY OF RICHMOND HILL
BUILDING DIVISION
05/01/2024
RECEIVED
Per: joshua.nabua

JOB NAME	TRUSS NAME	QUANTITY	PLY	JOB DESC.	DRWG NO.
434951	J22W	4	1	GREENPARK HOMES TRUSS DESC.	

Tamarack Roof Truss, Burlington

Version 8.630 S Aug 30 2023 MiTek Industries, Inc. Fri Sep 22 10:21:56 2023 Page 1
ID:?7smMffSHcbvu6uGxGPN4oyih5x-FhtXmwZEvZPqzZ?Kx1Tn4pyDUu?A4jQwUOPvvVyb77v

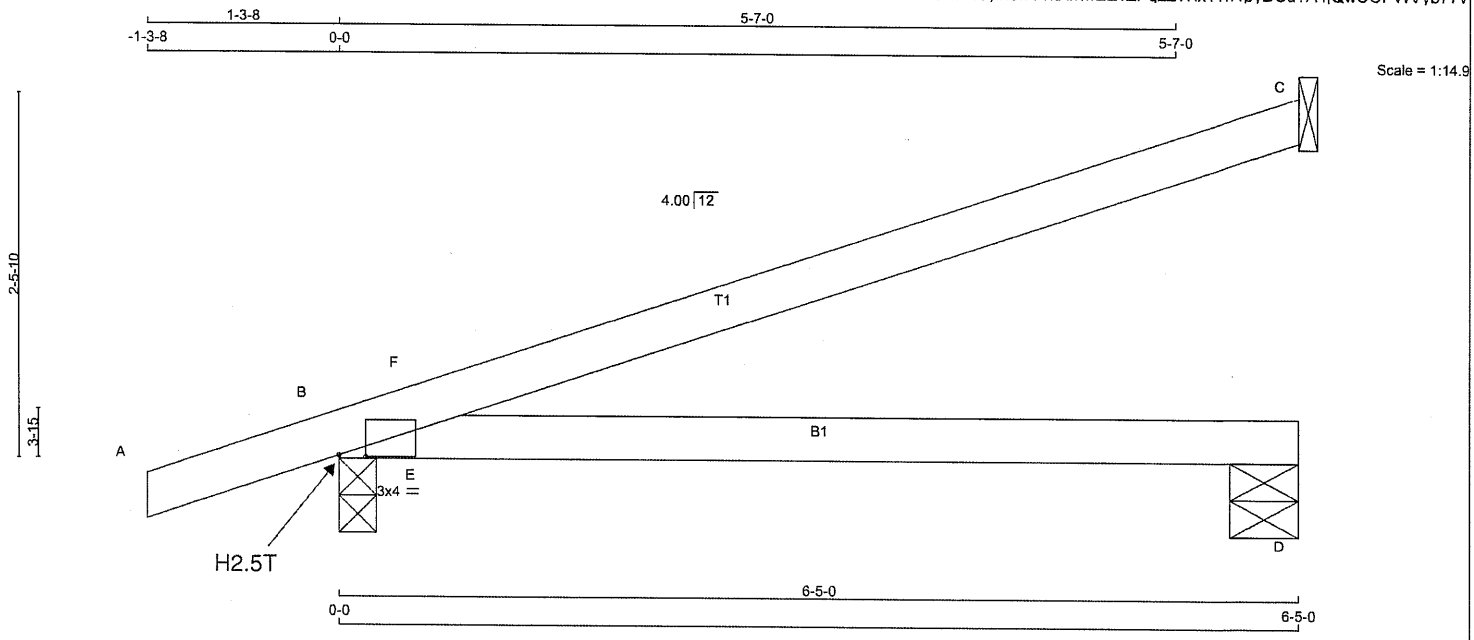

TOTAL WEIGHT = 4 X 17 = 67 lb

LUMBER
N. L. G. A. RULES

CHORDS	SIZE		LUMBER	DESCR.
A - C	2x4	DRY	No.2	SPF
B - D	2x4	DRY	No.2	SPF

DRY: SEASONED LUMBER.

PLATES (table is in inches)

JT	TYPE	PLATES	W	LEN	Y	X
B	TMB1-I	MT20	3.0	4.0	0.25	2.25

NOTES- (1)
1) Lateral braces to be a minimum of 2X4 SPF #2.

DIMENSIONS, SUPPORTS AND LOADINGS SPECIFIED BY FABRICATOR TO BE VERIFIED BY BUILDING DESIGNER

BEARINGS

JT	FACTORED GROSS REACTION VERT	HORZ	MAXIMUM FACTORED GROSS REACTION DOWN	HORZ	UPLIFT	INPUT BRG IN-SX	REQRD BRG IN-SX
C	258	0	258	0	-169	1-8	1-8
B	476	0	476	151	-292	3-0	1-8
D	96	0	96	0	-119	5-8	1-8

SEE MITEK STANDARD DETAIL MSD2015-H FOR CONNECTION TO JOINT(S) C

PROVIDE ANCHORAGE AT BEARING JOINT C FOR 169 LBS FACTORED UPLIFT
PROVIDE ANCHORAGE AT BEARING JOINT B FOR 292 LBS FACTORED UPLIFT
PROVIDE ANCHORAGE AT BEARING JOINT D FOR 150 LBS FACTORED UPLIFT

PROVIDE FOR 151 LBS FACTORED HORIZONTAL REACTION AT JOINT B

UNFACTORED REACTIONS

JT	1ST LCASE COMBINED	MAX./MIN. COMPONENT REACTIONS SNOW	LIVE	PERM.LIVE	WIND	DEAD	SOIL
C	178	139 / 0	0 / 0	0 / 0	0 / -146	40 / 0	0 / 0
B	335	233 / 0	0 / 0	0 / 0	0 / -274	102 / 0	0 / 0
D	72	25 / 0	0 / 0	0 / 0	0 / -115	46 / 0	0 / 0
HORIZONTAL REACTIONS							
B	---	0 / 0	0 / 0	0 / 0	108 / 0	0 / 0	0 /0

BEARING MATERIAL TO BE SPF NO.2 OR BETTER AT JOINT(S) C, B, D

BRACING
TOP CHORD TO BE SHEATHED OR MAX. PURLIN SPACING = 6.25 FT.
MAX. UNBRACED BOTTOM CHORD LENGTH = 10.00 FT OR RIGID CEILING DIRECTLY APPLIED.

ALL PITCH BREAKS AND PERIMETER CORNER JOINTS MUST BE LATERALLY RESTRAINED.

LOADING
TOTAL LOAD CASES: (12)

CHORDS

MEMB. FR-TO	MAX. FACTORED FORCE (LBS)	FACTORED VERT. LOAD LC1 (PLF) FROM	TO	MAX CSI (LC)	MAX. UNBRAC LENGTH
A- B	0 / 18	-91.8	-91.8	0.11 (1)	10.00
B- F	-115 / 33	-91.8	-91.8	0.10 (3)	6.25
F- C	-63 / 2	-91.8	-91.8	0.49 (1)	6.25
B- E	0 / 0	-18.5	-18.5	0.33 (1)	10.00
E- D	0 / 0	-18.5	-18.5	0.34 (1)	10.00

WEBS

MEMB. FR-TO	MAX. FACTORED FORCE (LBS)	MAX CSI (LC)
E- F	-408 / 148	0.00 (1)

WIND LOAD APPLIED IS DERIVED FROM REFERENCE VELOCITY PRESSURE OF { 9.2} PSF AT {20-0-0} FT-IN-SX REFERENCE HEIGHT ABOVE GRADE AND USING EXTERNAL PEAK COEFFICIENTS, CpCg, BASED ON THE {MAIN WIND FORCE RESISTING SYSTEM}.INTERNAL WIND PRESSURE IS BASED ON DESIGN {CATEGORY 2}. BUILDING MAY BE LOCATED ON {OPEN TERRAIN}, AND TRUSS IS DESIGNED TO BE LOCATED AT LEAST {0-0} FT-IN-SX AWAY FROM EAVE.TRUSS UPLIFT IS BASED ON TOP AND BOTTOM CHORD DEAD LOADS OF 6.0 PSF AND 7.4 PSF RESPECTIVELY.

[M][F]

DESIGN CRITERIA

SPECIFIED LOADS:

TOP CH.	LL	=	25.6	PSF
	DL	=	6.0	PSF
BOT CH.	LL	=	0.0	PSF
	DL	=	7.4	PSF
TOTAL LOAD		=	39.0	PSF

SPACING = 24.0 IN. C/C

THIS TRUSS IS DESIGNED FOR RESIDENTIAL OR SMALL BUILDING REQUIREMENTS OF PART 9, NBCC 2015

THIS DESIGN COMPLIES WITH:
- PART 9 OF BCBC 2018 , NBC-2019AE
- PART 9 OF OBC 2012 (2019 AMENDMENT)
- CSA 086-14
- TPIC 2014

(55 % OF 31.3 P.S.F. G.S.L. PLUS 8.4 P.S.F. RAIN LOAD) EQUALS 25.6 P.S.F. SPECIFIED ROOF LIVE LOAD

ALLOWABLE DEFL.(LL)= L/360 (0.21")
CALCULATED VERT. DEFL.(LL) = L/ 503 (0.15")
ALLOWABLE DEFL.(TL)= L/360 (0.21")
CALCULATED VERT. DEFL.(TL) = L/ 380 (0.20")

CSI: TC=0.49/1.00 (C-F:1) , BC=0.34/1.00 (D-E:1) , WB=0.00/1.00 (E-F:1) , SSI=0.32/1.00 (B-E:1)

DOL LUMBER=1.00 NAIL=1.00 LS BEND=1.10 COMP=1.10 SHEAR=1.10 TENS= 1.10

COMPANION LIVE LOAD FACTOR = 1.00

TRUSS PLATE MANUFACTURER IS NOT RESPONSIBLE FOR QUALITY CONTROL IN THE TRUSS MANUFACTURING PLANT .

NAIL VALUES

PLATE	GRIP(DRY) (PSI) MAX	MIN	SHEAR (PLI) MAX	MIN	SECTION (PLI) MAX	MIN
MT20	650	371	1747	788	1987	1873

PLATE PLACEMENT TOL. = 0.250 inches

PLATE ROTATION TOL. = 5.0 Deg.

JSI GRIP= 0.32 (B) (INPUT = 0.90)
JSI METAL= 0.08 (B) (INPUT = 0.95)

LICENSED PROFESSIONAL ENGINEER
9/25/23
C. M. HEYENS
100505065
PROVINCE OF ONTARIO

STRUCTURAL COMPONENT ONLY
DWG # TR23091806

CITY OF RICHMOND HILL
BUILDING DIVISION
05/01/2024
RECEIVED
Per: joshua.nabua

JOB NAME	TRUSS NAME	QUANTITY	PLY	JOB DESC.	DRWG NO.
434952	J30	2	1	GREENPARK HOMES TRUSS DESC.	

Tamarack Roof Truss, Burlington

Version 8.630 S Aug 30 2023 MiTek Industries, Inc. Fri Sep 22 10:27:53 2023 Page 1
ID:?7smMffSHcbvu6uGxGPN4oyih5x-INyUh?tArFOAIQoxLWNV25FD?oufDAoTaROIyJyb72K

Scale = 1:23.0

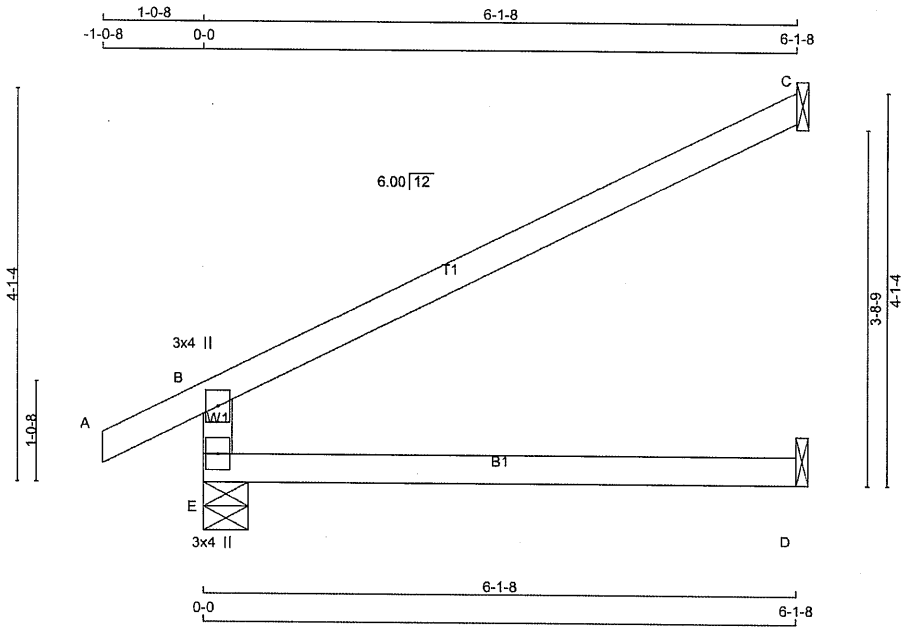

TOTAL WEIGHT = 2 X 17 = 34 lb
[M][F]

LUMBER
N. L. G. A. RULES

CHORDS	SIZE		LUMBER	DESCR.
E - B	2x4	DRY	No.2	SPF
A - C	2x4	DRY	No.2	SPF
E - D	2x4	DRY	No.2	SPF

DRY: SEASONED LUMBER.

PLATES (table is in inches)

JT	TYPE	PLATES	W	LEN	Y	X
B	TMV+p	MT20	3.0	4.0		
E	BMV1+p	MT20	3.0	4.0		

NOTES- (1)
1) Lateral braces to be a minimum of 2X4 SPF #2.

DIMENSIONS, SUPPORTS AND LOADINGS SPECIFIED BY FABRICATOR TO BE VERIFIED BY BUILDING DESIGNER

BEARINGS

JT	FACTORED GROSS REACTION VERT	HORZ	MAXIMUM FACTORED GROSS REACTION DOWN	HORZ	UPLIFT	INPUT BRG IN-SX	REQRD BRG IN-SX
E	520	0	520	0	0	5-8	1-8
C	211	0	211	0	0	1-8	1-8
D	46	0	52	0	0	1-8	1-8

SEE MITEK STANDARD DETAIL MSD2015-H FOR CONNECTION TO JOINT(S) C , D

UNFACTORED REACTIONS

JT	1ST LCASE COMBINED	MAX./MIN. COMPONENT REACTIONS SNOW	LIVE	PERM.LIVE	WIND	DEAD	SOIL
E	365	252 / 0	0 / 0	0 / 0	0 / 0	113 / 0	0 / 0
C	145	118 / 0	0 / 0	0 / 0	0 / 0	28 / 0	0 / 0
D	37	0 / 0	0 / 0	0 / 0	0 / 0	37 / 0	0 / 0

BEARING MATERIAL TO BE SPF NO.2 OR BETTER AT JOINT(S) E

BRACING
TOP CHORD TO BE SHEATHED OR MAX. PURLIN SPACING = 6.25 FT.
MAX. UNBRACED BOTTOM CHORD LENGTH = 10.00 FT OR RIGID CEILING DIRECTLY APPLIED.

ALL PITCH BREAKS AND PERIMETER CORNER JOINTS MUST BE LATERALLY RESTRAINED.

LOADING
TOTAL LOAD CASES: (4)

CHORDS

MEMB. FR-TO	MAX. FACTORED FORCE (LBS)	FACTORED VERT. LOAD (PLF) FROM	TO	LC1 MAX CSI (LC)	MAX. UNBRAC LENGTH
E- B	-453 / 0	0.0	0.0	0.12 (4)	7.81
A- B	0 / 23	-91.8	-91.8	0.08 (1)	10.00
B- C	-31 / 0	-91.8	-91.8	0.45 (1)	6.25
E- D	0 / 0	-18.5	-18.5	0.15 (4)	10.00

WEBS

MEMB. FR-TO	MAX. FACTORED FORCE (LBS)	MAX CSI (LC)

DESIGN CRITERIA

SPECIFIED LOADS:

TOP CH.	LL =	25.6	PSF
	DL =	6.0	PSF
BOT CH.	LL =	0.0	PSF
	DL =	7.4	PSF
TOTAL LOAD	=	39.0	PSF

SPACING = 24.0 IN. C/C

THIS TRUSS IS DESIGNED FOR RESIDENTIAL OR SMALL BUILDING REQUIREMENTS OF PART 9, NBCC 2015

THIS DESIGN COMPLIES WITH:
- PART 9 OF BCBC 2018 , NBC-2019AE
- PART 9 OF OBC 2012 (2019 AMENDMENT)
- CSA 086-14
- TPIC 2014

DESIGN ASSUMPTIONS
-OVERHANG NOT TO BE ALTERED OR CUT OFF.

(55 % OF 31.3 P.S.F. G.S.L. PLUS 8.4 P.S.F. RAIN LOAD) EQUALS 25.6 P.S.F. SPECIFIED ROOF LIVE LOAD

ALLOWABLE DEFL.(LL)= L/360 (0.20")
CALCULATED VERT. DEFL.(LL) = L/ 999 (0.00")
ALLOWABLE DEFL.(TL)= L/360 (0.20")
CALCULATED VERT. DEFL.(TL) = L/ 999 (0.04")

CSI: TC=0.45/1.00 (B-C:1) , BC=0.15/1.00 (D-E:4) , WB=0.00/1.00 (n/a:0) , SSI=0.25/1.00 (B-C:1)

DOL LUMBER=1.00 NAIL=1.00 LS BEND=1.10 COMP=1.10 SHEAR=1.10 TENS= 1.10

COMPANION LIVE LOAD FACTOR = 1.00

TRUSS PLATE MANUFACTURER IS NOT RESPONSIBLE FOR QUALITY CONTROL IN THE TRUSS MANUFACTURING PLANT .

NAIL VALUES

PLATE	GRIP(DRY) (PSI) MAX	MIN	SHEAR (PLI) MAX	MIN	SECTION (PLI) MAX	MIN
MT20	650	371	1747	788	1987	1873

PLATE PLACEMENT TOL. = 0.250 inches

PLATE ROTATION TOL. = 5.0 Deg.

JSI GRIP= 0.18 (E) (INPUT = 0.90)
JSI METAL= 0.13 (B) (INPUT = 0.95)

LICENSED PROFESSIONAL ENGINEER
9/25/23
C. M. HEYENS
100505065
PROVINCE OF ONTARIO

STRUCTURAL COMPONENT ONLY
DWG # TR23091813

CITY OF RICHMOND HILL
BUILDING DIVISION
05/01/2024
RECEIVED
Per: joshua.nabua

JOB NAME	TRUSS NAME	QUANTITY	PLY	JOB DESC.	DRWG NO.
434952	J31	1	1	GREENPARK HOMES TRUSS DESC.	

Tamarack Roof Truss, Burlington

Version 8.630 S Aug 30 2023 MiTek Industries, Inc. Fri Sep 22 10:27:54 2023 Page 1
ID:?7smMffSHcbvu6uGxGPN4oyih5x-mZWtvLuocZW1waN7vDukbJnUvCFxyd2cp57sUlyb72J

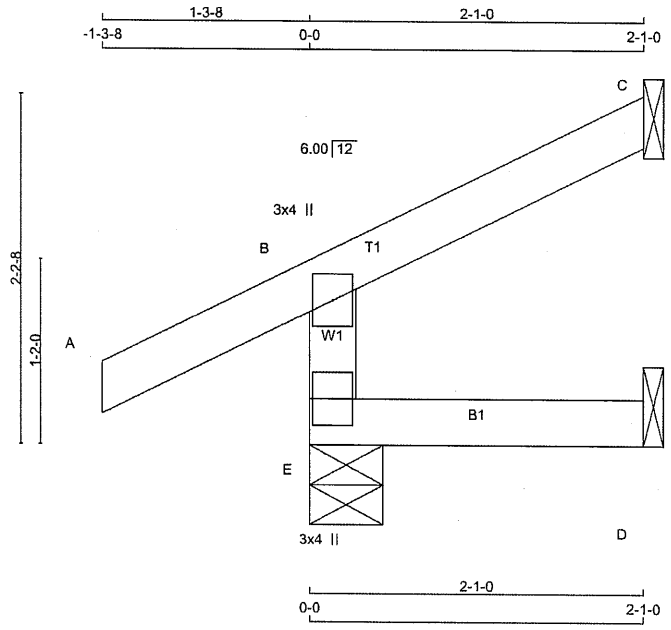

TOTAL WEIGHT = 8 lb [M]

LUMBER
N. L. G. A. RULES

CHORDS	SIZE		LUMBER	DESCR.
E - B	2x4	DRY	No.2	SPF
A - C	2x4	DRY	No.2	SPF
E - D	2x4	DRY	No.2	SPF

DRY: SEASONED LUMBER.

PLATES (table is in inches)

JT	TYPE	PLATES	W	LEN	Y	X
B	TMV+p	MT20	3.0	4.0		
E	BMV1+p	MT20	3.0	4.0		

NOTES- (1)
1) Lateral braces to be a minimum of 2X4 SPF #2.

DIMENSIONS, SUPPORTS AND LOADINGS SPECIFIED BY FABRICATOR TO BE VERIFIED BY BUILDING DESIGNER

BEARINGS

JT	FACTORED GROSS REACTION VERT	HORZ	MAXIMUM FACTORED GROSS REACTION DOWN	HORZ	UPLIFT	INPUT BRG IN-SX	REQRD BRG IN-SX
E	265	0	265	0	0	5-8	1-8
C	72	0	72	0	0	1-8	1-8
D	17	0	19	0	0	1-8	1-8

SEE MITEK STANDARD DETAIL MSD2015-H FOR CONNECTION TO JOINT(S) C , D

UNFACTORED REACTIONS

JT	1ST LCASE COMBINED	MAX./MIN. COMPONENT REACTIONS SNOW	LIVE	PERM.LIVE	WIND	DEAD	SOIL
E	185	136 / 0	0 / 0	0 / 0	0 / 0	49 / 0	0 / 0
C	50	40 / 0	0 / 0	0 / 0	0 / 0	9 / 0	0 / 0
D	14	0 / 0	0 / 0	0 / 0	0 / 0	14 / 0	0 / 0

BEARING MATERIAL TO BE SPF NO.2 OR BETTER AT JOINT(S) E, C

BRACING
TOP CHORD TO BE SHEATHED OR MAX. PURLIN SPACING = 6.25 FT.
MAX. UNBRACED BOTTOM CHORD LENGTH = 10.00 FT OR RIGID CEILING DIRECTLY APPLIED.

ALL PITCH BREAKS AND PERIMETER CORNER JOINTS MUST BE LATERALLY RESTRAINED.

LOADING
TOTAL LOAD CASES: (5)

CHORDS

MEMB. FR-TO	MAX. FACTORED FORCE (LBS)	FACTORED VERT. LOAD (PLF) FROM	TO	LC1 MAX CSI (LC)	MAX. UNBRAC LENGTH
E- B	-244 / 0	0.0	0.0	0.01 (4)	7.81
A- B	0 / 28	-91.8	-91.8	0.12 (5)	10.00
B- C	-10 / 0	-91.8	-91.8	0.07 (1)	6.25
E- D	0 / 0	-18.5	-18.5	0.02 (4)	10.00

WEBS

MEMB. FR-TO	MAX. FACTORED FORCE (LBS)	MAX CSI (LC)

CANTILEVER ANALYSIS HAS BEEN CONSIDERED IN THIS DESIGN

DESIGN CRITERIA

SPECIFIED LOADS:

TOP CH.	LL =	25.6	PSF
	DL =	6.0	PSF
BOT CH.	LL =	0.0	PSF
	DL =	7.4	PSF
TOTAL LOAD	=	39.0	PSF

SPACING = 24.0 IN. C/C

THIS TRUSS IS DESIGNED FOR RESIDENTIAL OR SMALL BUILDING REQUIREMENTS OF PART 9, NBCC 2015

THIS DESIGN COMPLIES WITH:
- PART 9 OF BCBC 2018 , NBC-2019AE
- PART 9 OF OBC 2012 (2019 AMENDMENT)
- CSA 086-14
- TPIC 2014

DESIGN ASSUMPTIONS
-OVERHANG NOT TO BE ALTERED OR CUT OFF.

(55 % OF 31.3 P.S.F. G.S.L. PLUS 8.4 P.S.F. RAIN LOAD) EQUALS 25.6 P.S.F. SPECIFIED ROOF LIVE LOAD

ALLOWABLE DEFL.(LL)= L/360 (0.19")
CALCULATED VERT. DEFL.(LL) = L/ 999 (0.00")
ALLOWABLE DEFL.(TL)= L/360 (0.19")
CALCULATED VERT. DEFL.(TL) = L/ 999 (0.00")

CSI: TC=0.12/1.00 (A-B:5) , BC=0.02/1.00 (D-E:4) , WB=0.00/1.00 (n/a:0) , SSI=0.09/1.00 (A-B:5)

DOL LUMBER=1.00 NAIL=1.00 LS BEND=1.10 COMP=1.10 SHEAR=1.10 TENS= 1.10

COMPANION LIVE LOAD FACTOR = 1.00

TRUSS PLATE MANUFACTURER IS NOT RESPONSIBLE FOR QUALITY CONTROL IN THE TRUSS MANUFACTURING PLANT .

NAIL VALUES

PLATE	GRIP(DRY) (PSI) MAX	MIN	SHEAR (PLI) MAX	MIN	SECTION (PLI) MAX	MIN
MT20	650	371	1747	788	1987	1873

PLATE PLACEMENT TOL. = 0.250 inches

PLATE ROTATION TOL. = 5.0 Deg.

JSI GRIP= 0.10 (E) (INPUT = 0.90)
JSI METAL= 0.07 (B) (INPUT = 0.95)

LICENSED PROFESSIONAL ENGINEER
9/25/23
C. M. HEYENS
100505065
PROVINCE OF ONTARIO

STRUCTURAL COMPONENT ONLY
DWG # TR23091814

CITY OF RICHMOND HILL
BUILDING DIVISION
05/01/2024
RECEIVED
Per: joshua.nabua

JOB NAME	TRUSS NAME	QUANTITY	PLY	JOB DESC.	DRWG NO.
434950	C1	2	1	GREENPARK HOMES TRUSS DESC.	

Tamarack Roof Truss, Burlington

Version 8.630 S Aug 30 2023 MiTek Industries, Inc. Fri Sep 22 10:15:40 2023 Page 1
ID:?7smMffSHcbvu6uGxGPN4oyih5x-GM9OsM0OT12AsnF3v3icrXO29Klw fLZ1vK0jlyb7Dn

Scale = 1:13.2

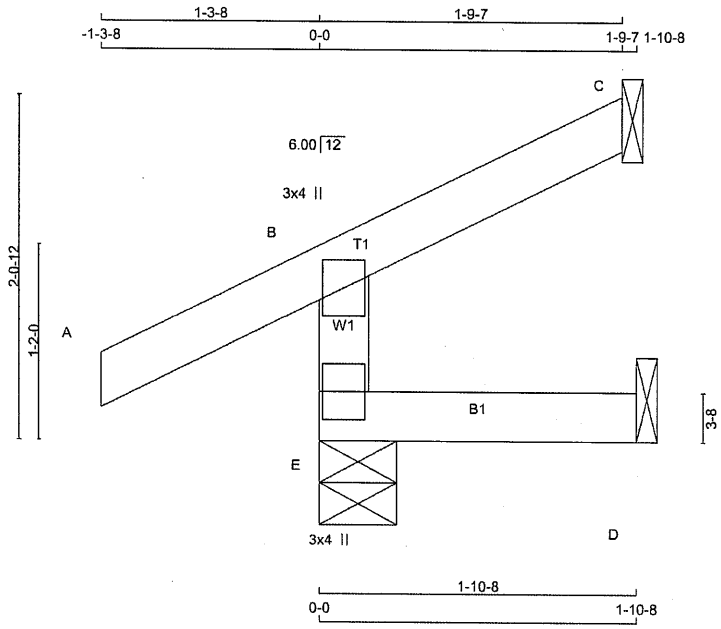

TOTAL WEIGHT = 2 X 7 = 14 lb

LUMBER
N. L. G. A. RULES

CHORDS	SIZE		LUMBER	DESCR.
E - B	2x4	DRY	No.2	SPF
A - C	2x4	DRY	No.2	SPF
E - D	2x4	DRY	No.2	SPF

DRY: SEASONED LUMBER.

PLATES (table is in inches)

JT	TYPE	PLATES	W	LEN	Y	X
B	TMV+p	MT20	3.0	4.0		
E	BMV1+p	MT20	3.0	4.0		

NOTES- (1)
1) Lateral braces to be a minimum of 2X4 SPF #2.

DIMENSIONS, SUPPORTS AND LOADINGS SPECIFIED BY FABRICATOR TO BE VERIFIED BY BUILDING DESIGNER

BEARINGS

JT	FACTORED GROSS REACTION VERT	HORZ	MAXIMUM FACTORED GROSS REACTION DOWN	HORZ	UPLIFT	INPUT BRG IN-SX	REQRD BRG IN-SX
E	271	0	271	0	0	5-8	1-8
C	45	0	45	0	-23	1-8	1-8
D	8	0	17	0	-2	1-8	1-8

SEE MITEK STANDARD DETAIL MSD2015-H FOR CONNECTION TO JOINT(S) C , D

PROVIDE ANCHORAGE AT BEARING JOINT C FOR 150 LBS FACTORED UPLIFT
PROVIDE ANCHORAGE AT BEARING JOINT D FOR 150 LBS FACTORED UPLIFT

UNFACTORED REACTIONS

JT	1ST LCASE COMBINED	MAX./MIN. COMPONENT REACTIONS SNOW	LIVE	PERM.LIVE	WIND	DEAD	SOIL
E	188	141 / 0	0 / 0	0 / 0	0 / 0	47 / 0	0 / 0
C	31	24 / -18	0 / 0	0 / 0	0 / 0	7 / 0	0 / 0
D	7	0 / -8	0 / 0	0 / 0	0 / 0	12 / 0	0 / 0

BEARING MATERIAL TO BE SPF NO.2 OR BETTER AT JOINT(S) E, C

BRACING
TOP CHORD TO BE SHEATHED OR MAX. PURLIN SPACING = 6.25 FT.
MAX. UNBRACED BOTTOM CHORD LENGTH = 10.00 FT OR RIGID CEILING DIRECTLY APPLIED.

ALL PITCH BREAKS AND PERIMETER CORNER JOINTS MUST BE LATERALLY RESTRAINED.

LOADING
TOTAL LOAD CASES: (5)

CHORDS

MEMB. FR-TO	MAX. FACTORED FORCE (LBS)	FACTORED VERT. LOAD (PLF) FROM	TO	LC1 CSI	MAX (LC)	MAX. UNBRAC LENGTH
E- B	-244 / 0	0.0	0.0	0.04	(5)	7.81
A- B	0 / 28	-91.8	-91.8	0.12	(1)	10.00
B- C	-17 / 0	-91.8	-91.8	0.09	(1)	6.25
E- D	0 / 0	-18.5	-18.5	0.04	(5)	10.00

WEBS

MEMB. FR-TO	MAX. FACTORED FORCE (LBS)	MAX CSI (LC)

CANTILEVER ANALYSIS HAS BEEN CONSIDERED IN THIS DESIGN

DESIGN CRITERIA [M]

SPECIFIED LOADS:

TOP CH.	LL	=	25.6	PSF
	DL	=	6.0	PSF
BOT CH.	LL	=	0.0	PSF
	DL	=	7.4	PSF
TOTAL LOAD		=	39.0	PSF

SPACING = 24.0 IN. C/C

THIS TRUSS IS DESIGNED FOR RESIDENTIAL OR SMALL BUILDING REQUIREMENTS OF PART 9, NBCC 2015

THIS DESIGN COMPLIES WITH:
- PART 9 OF BCBC 2018 , NBC-2019AE
- PART 9 OF OBC 2012 (2019 AMENDMENT)
- CSA 086-14
- TPIC 2014

DESIGN ASSUMPTIONS
-OVERHANG NOT TO BE ALTERED OR CUT OFF.

(55 % OF 31.3 P.S.F. G.S.L. PLUS 8.4 P.S.F. RAIN LOAD) EQUALS 25.6 P.S.F. SPECIFIED ROOF LIVE LOAD

ALLOWABLE DEFL.(LL)= L/360 (0.19")
CALCULATED VERT. DEFL.(LL) = L/ 999 (0.00")
ALLOWABLE DEFL.(TL)= L/360 (0.19")
CALCULATED VERT. DEFL.(TL) = L/ 999 (0.00")

CSI: TC=0.12/1.00 (A-B:1) , BC=0.04/1.00 (D-E:5) , WB=0.00/1.00 (n/a:0) , SSI=0.09/1.00 (A-B:1)

DOL LUMBER=1.00 NAIL=1.00 LS BEND=1.10 COMP=1.10 SHEAR=1.10 TENS= 1.10

COMPANION LIVE LOAD FACTOR = 1.00

TRUSS PLATE MANUFACTURER IS NOT RESPONSIBLE FOR QUALITY CONTROL IN THE TRUSS MANUFACTURING PLANT .

NAIL VALUES

PLATE	GRIP(DRY) (PSI) MAX	MIN	SHEAR (PLI) MAX	MIN	SECTION (PLI) MAX	MIN
MT20	650	371	1747	788	1987	1873

PLATE PLACEMENT TOL. = 0.250 inches

PLATE ROTATION TOL. = 5.0 Deg.

JSI GRIP= 0.10 (E) (INPUT = 0.90)
JSI METAL= 0.07 (B) (INPUT = 0.95)

LICENSED PROFESSIONAL ENGINEER
9/25/23
C. M. HEYENS
100505065
PROVINCE OF ONTARIO

STRUCTURAL COMPONENT ONLY
DWG # TR23091772

CITY OF RICHMOND HILL
BUILDING DIVISION
05/01/2024
RECEIVED
Per: joshua.nabua

JOB NAME	TRUSS NAME	QUANTITY	PLY	JOB DESC.	DRWG NO.
434950	C2	2	1	GREENPARK HOMES TRUSS DESC.	

Tamarack Roof Truss, Burlington

Version 8.630 S Aug 30 2023 MiTek Industries, Inc. Fri Sep 22 10:15:41 2023 Page 1
ID:?7smMffSHcbvu6uGxGPN4oyih5x-kYjm3i00DLA1UxqFTnFrNkwBGk4Uj6bjFZ3ZFkyb7Dm

Scale = 1:18.3

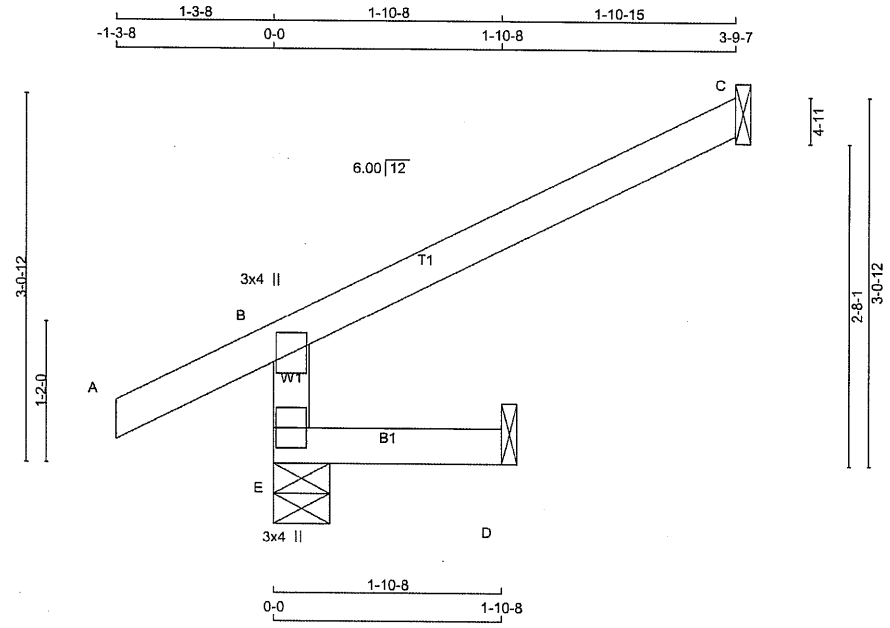

TOTAL WEIGHT = 2 X 10 = 19 lb
[M]

LUMBER
N. L. G. A. RULES

CHORDS	SIZE		LUMBER	DESCR.
E - B	2x4	DRY	No.2	SPF
A - C	2x4	DRY	No.2	SPF
E - D	2x4	DRY	No.2	SPF

DRY: SEASONED LUMBER.

PLATES (table is in inches)

JT	TYPE	PLATES	W	LEN	Y	X
B	TMV+p	MT20	3.0	4.0		
E	BMV1+p	MT20	3.0	4.0		

NOTES- (1)
1) Lateral braces to be a minimum of 2X4 SPF #2.

DIMENSIONS, SUPPORTS AND LOADINGS SPECIFIED BY FABRICATOR TO BE VERIFIED BY BUILDING DESIGNER

BEARINGS

JT	FACTORED GROSS REACTION VERT	HORZ	MAXIMUM FACTORED GROSS REACTION DOWN	HORZ	UPLIFT	INPUT BRG IN-SX	REQRD BRG IN-SX
E	361	0	361	0	0	5-8	1-8
C	130	0	130	0	0	1-8	1-8
D	16	0	17	0	0	1-8	1-8

SEE MITEK STANDARD DETAIL MSD2015-H FOR CONNECTION TO JOINT(S) C , D

UNFACTORED REACTIONS

JT	1ST LCASE COMBINED	MAX./MIN. COMPONENT REACTIONS SNOW	LIVE	PERM.LIVE	WIND	DEAD	SOIL
E	250	190 / 0	0 / 0	0 / 0	0 / 0	60 / 0	0 / 0
C	90	73 / 0	0 / 0	0 / 0	0 / 0	17 / 0	0 / 0
D	12	0 / 0	0 / 0	0 / 0	0 / 0	12 / 0	0 / 0

BEARING MATERIAL TO BE SPF NO.2 OR BETTER AT JOINT(S) E

BRACING
TOP CHORD TO BE SHEATHED OR MAX. PURLIN SPACING = 6.25 FT.
MAX. UNBRACED BOTTOM CHORD LENGTH = 10.00 FT OR RIGID CEILING DIRECTLY APPLIED.

ALL PITCH BREAKS AND PERIMETER CORNER JOINTS MUST BE LATERALLY RESTRAINED.

LOADING
TOTAL LOAD CASES: (5)

CHORDS

MEMB. FR-TO	MAX. FACTORED FORCE (LBS)	FACTORED VERT. LOAD (PLF) FROM	TO	LC1 MAX CSI (LC)	MAX. UNBRAC LENGTH
E- B	-342 / 0	0.0	0.0	0.01 (4)	7.81
A- B	0 / 28	-91.8	-91.8	0.13 (5)	10.00
B- C	-19 / 0	-91.8	-91.8	0.22 (1)	6.25
E- D	0 / 0	-18.5	-18.5	0.02 (4)	10.00

WEBS

MEMB. FR-TO	MAX. FACTORED FORCE (LBS)	MAX CSI (LC)

CANTILEVER ANALYSIS HAS BEEN CONSIDERED IN THIS DESIGN

DESIGN CRITERIA

SPECIFIED LOADS:

TOP CH.	LL	=	25.6	PSF
	DL	=	6.0	PSF
BOT CH.	LL	=	0.0	PSF
	DL	=	7.4	PSF
TOTAL LOAD		=	39.0	PSF

SPACING = 24.0 IN. C/C

THIS TRUSS IS DESIGNED FOR RESIDENTIAL OR SMALL BUILDING REQUIREMENTS OF PART 9, NBCC 2015

THIS DESIGN COMPLIES WITH:
- PART 9 OF BCBC 2018 , NBC-2019AE
- PART 9 OF OBC 2012 (2019 AMENDMENT)
- CSA 086-14
- TPIC 2014

DESIGN ASSUMPTIONS
-OVERHANG NOT TO BE ALTERED OR CUT OFF.

(55 % OF 31.3 P.S.F. G.S.L. PLUS 8.4 P.S.F. RAIN LOAD) EQUALS 25.6 P.S.F. SPECIFIED ROOF LIVE LOAD

ALLOWABLE DEFL.(LL)= L/360 (0.19")
CALCULATED VERT. DEFL.(LL) = L/ 999 (0.00")
ALLOWABLE DEFL.(TL)= L/360 (0.19")
CALCULATED VERT. DEFL.(TL) = L/ 999 (0.00")

CSI: TC=0.22/1.00 (B-C:1) , BC=0.02/1.00 (D-E:4) , WB=0.00/1.00 (n/a:0) , SSI=0.15/1.00 (B-C:1)

DOL LUMBER=1.00 NAIL=1.00 LS BEND=1.10 COMP=1.10 SHEAR=1.10 TENS= 1.10

COMPANION LIVE LOAD FACTOR = 1.00

TRUSS PLATE MANUFACTURER IS NOT RESPONSIBLE FOR QUALITY CONTROL IN THE TRUSS MANUFACTURING PLANT .

NAIL VALUES

PLATE	GRIP(DRY) (PSI) MAX	MIN	SHEAR (PLI) MAX	MIN	SECTION (PLI) MAX	MIN
MT20	650	371	1747	788	1987	1873

PLATE PLACEMENT TOL. = 0.250 inches

PLATE ROTATION TOL. = 5.0 Deg.

JSI GRIP= 0.14 (E) (INPUT = 0.90)
JSI METAL= 0.09 (B) (INPUT = 0.95)

LICENSED PROFESSIONAL ENGINEER
9/25/23
C. M. HEYENS
100505065
PROVINCE OF ONTARIO

STRUCTURAL COMPONENT ONLY
DWG # TR23091773

CITY OF RICHMOND HILL
BUILDING DIVISION
05/01/2024
RECEIVED
Per: joshua.nabua

JOB NAME	TRUSS NAME	QUANTITY	PLY	JOB DESC.	DRWG NO.
434950	C3	2	1	GREENPARK HOMES TRUSS DESC.	

Tamarack Roof Truss, Burlington

Version 8.630 S Aug 30 2023 MiTek Industries, Inc. Fri Sep 22 10:15:42 2023 Page 1
ID:?7smMffSHcbvu6uGxGPN4oyih5x-CkH8G21e eIu54PS0Um4wyTOd7OqSZqsUCp6nByb7DI

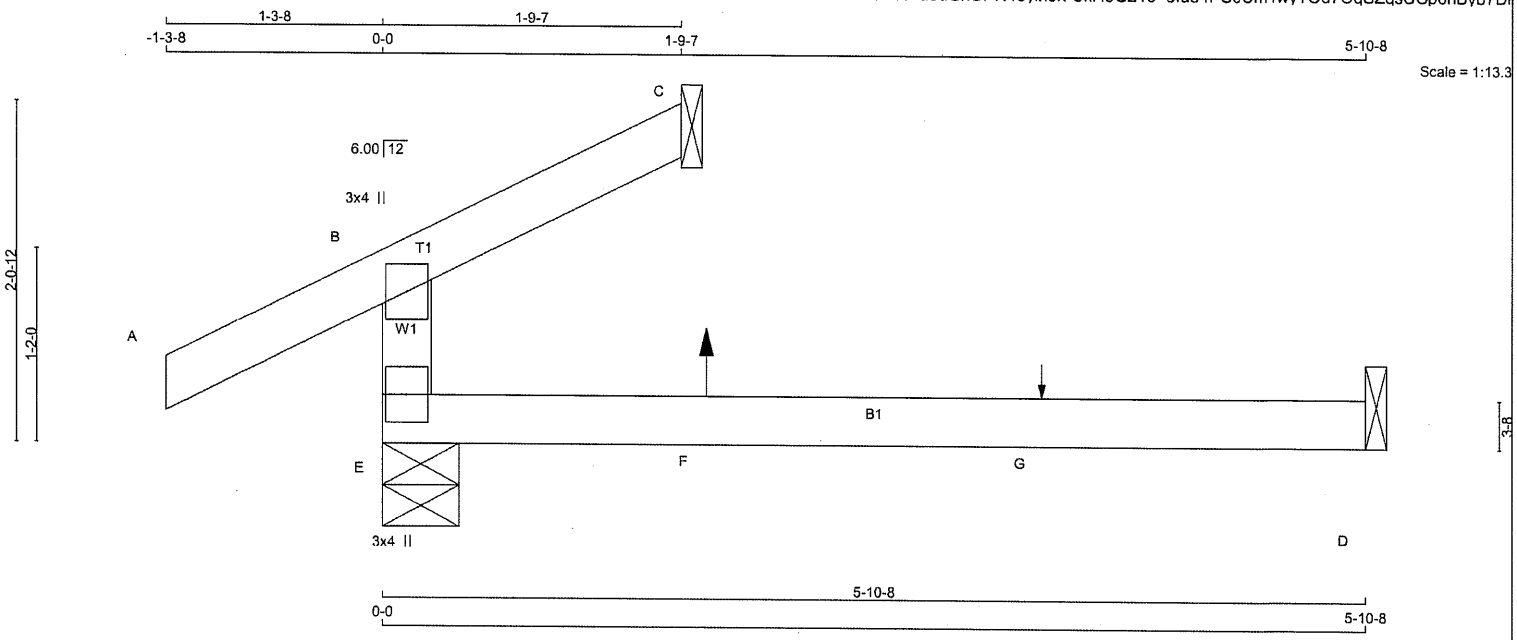

TOTAL WEIGHT = 2 X 12 = 23 lb [M]

LUMBER
N. L. G. A. RULES

CHORDS	SIZE		LUMBER	DESCR.
E - B	2x4	DRY	No.2	SPF
A - C	2x4	DRY	No.2	SPF
E - D	2x4	DRY	No.2	SPF

DRY: SEASONED LUMBER.

PLATES (table is in inches)

JT	TYPE	PLATES	W	LEN	Y	X
B	TMV+p	MT20	3.0	4.0		
E	BMV1+p	MT20	3.0	4.0		

NOTES- (1)
1) Lateral braces to be a minimum of 2X4 SPF #2.

DIMENSIONS, SUPPORTS AND LOADINGS SPECIFIED BY FABRICATOR TO BE VERIFIED BY BUILDING DESIGNER

BEARINGS

JT	FACTORED GROSS REACTION VERT	HORZ	MAXIMUM FACTORED GROSS REACTION DOWN	HORZ	UPLIFT	INPUT BRG IN-SX	REQRD BRG IN-SX
E	284	0	284	0	0	5-8	1-8
C	63	0	63	0	0	1-8	1-8
D	44	0	52	0	0	1-8	1-8

SEE MITEK STANDARD DETAIL MSD2015-H FOR CONNECTION TO JOINT(S) C , D

UNFACTORED REACTIONS

JT	1ST LCASE COMBINED	MAX./MIN. COMPONENT REACTIONS SNOW	LIVE	PERM.LIVE	WIND	DEAD	SOIL
E	200	137 / 0	0 / 0	0 / 0	0 / 0	62 / 0	0 / 0
C	46	21 / 0	0 / 0	0 / 0	0 / 0	25 / 0	0 / 0
D	35	0 / -3	0 / 0	0 / 0	0 / 0	37 / 0	0 / 0

BEARING MATERIAL TO BE SPF NO.2 OR BETTER AT JOINT(S) E, C

BRACING
TOP CHORD TO BE SHEATHED OR MAX. PURLIN SPACING = 10.00 FT.
MAX. UNBRACED BOTTOM CHORD LENGTH = 10.00 FT OR RIGID CEILING DIRECTLY APPLIED.

ALL PITCH BREAKS AND PERIMETER CORNER JOINTS MUST BE LATERALLY RESTRAINED.

LOADING
TOTAL LOAD CASES: (7)

CHORDS

MEMB. FR-TO	MAX. FACTORED FORCE (LBS)	FACTORED VERT. LOAD (PLF) FROM	TO	LC1	MAX CSI (LC)	MAX. UNBRAC LENGTH
E- B	-227 / 0	0.0	0.0	0.11 (4)	7.81	
A- B	0 / 28	-91.8	-91.8	0.12 (1)	10.00	
B- C	-9 / 9	-91.8	-91.8	0.08 (4)	10.00	
E- F	0 / 0	-18.5	-18.5	0.14 (4)	10.00	
F- G	0 / 0	-18.5	-18.5	0.14 (4)	10.00	
G- D	0 / 0	-18.5	-18.5	0.14 (4)	10.00	

WEBS

MEMB. FR-TO	MAX. FACTORED FORCE (LBS)	MAX CSI (LC)

SPECIFIED CONCENTRATED LOADS (LBS)

JT	LOC.	LC1	MAX-	MAX+	FACE	DIR.	TYPE	HEEL	CONN.
F	1-11-4	5	1	8	BACK	VERT	TOTAL	---	C1
G	3-11-4	1	1	---	BACK	VERT	TOTAL	---	C1

CONNECTION REQUIREMENTS

1) **C1:** A SUITABLE HANGER/MECHANICAL CONNECTION IS REQUIRED.

DESIGN CRITERIA

SPECIFIED LOADS:

TOP CH.	LL	=	25.6	PSF
	DL	=	6.0	PSF
BOT CH.	LL	=	0.0	PSF
	DL	=	7.4	PSF
TOTAL LOAD		=	39.0	PSF

SPACING = 24.0 IN. C/C

THIS TRUSS IS DESIGNED FOR RESIDENTIAL OR SMALL BUILDING REQUIREMENTS OF PART 9, NBCC 2015

THIS DESIGN COMPLIES WITH:
- PART 9 OF BCBC 2018 , NBC-2019AE
- PART 9 OF OBC 2012 (2019 AMENDMENT)
- CSA 086-14
- TPIC 2014

DESIGN ASSUMPTIONS
-OVERHANG NOT TO BE ALTERED OR CUT OFF.

(55 % OF 31.3 P.S.F. G.S.L. PLUS 8.4 P.S.F. RAIN LOAD) EQUALS 25.6 P.S.F. SPECIFIED ROOF LIVE LOAD

ALLOWABLE DEFL.(LL)= L/360 (0.20")
CALCULATED VERT. DEFL.(LL) = L/ 999 (0.01")
ALLOWABLE DEFL.(TL)= L/360 (0.20")
CALCULATED VERT. DEFL.(TL) = L/ 999 (0.04")

CSI: TC=0.12/1.00 (A-B:1) , BC=0.14/1.00 (D-E:4) , WB=0.00/1.00 (n/a:0) , SSI=0.09/1.00 (A-B:1)

DOL LUMBER=0.99 NAIL=0.99 LS BEND=1.10 COMP=1.10 SHEAR=1.10 TENS= 1.10

COMPANION LIVE LOAD FACTOR = 1.00

TRUSS PLATE MANUFACTURER IS NOT RESPONSIBLE FOR QUALITY CONTROL IN THE TRUSS MANUFACTURING PLANT .

NAIL VALUES

PLATE	GRIP(DRY) (PSI) MAX	MIN	SHEAR (PLI) MAX	MIN	SECTION (PLI) MAX	MIN
MT20	650	371	1747	788	1987	1873

PLATE PLACEMENT TOL. = 0.250 inches

PLATE ROTATION TOL. = 5.0 Deg.

JSI GRIP= 0.09 (E) (INPUT = 0.90)
JSI METAL= 0.06 (B) (INPUT = 0.95)

LICENSED PROFESSIONAL ENGINEER
9/25/23
C. M. HEYENS
100505065
PROVINCE OF ONTARIO

STRUCTURAL COMPONENT ONLY
DWG # TR23091774

CITY OF RICHMOND HILL
BUILDING DIVISION
05/01/2024
RECEIVED
Per: joshua.nabua

JOB NAME	TRUSS NAME	QUANTITY	PLY	JOB DESC.	DRWG NO.
434950	C4	2	1	GREENPARK HOMES TRUSS DESC.	

Tamarack Roof Truss, Burlington

Version 8.630 S Aug 30 2023 MiTek Industries, Inc. Fri Sep 22 10:15:42 2023 Page 1
ID:?7smMffSHcbvu6uGxGPN4oyih5x-CkH8G21e eIu54PS0Um4wyTM07OwSZqsUCp6nByb7DI

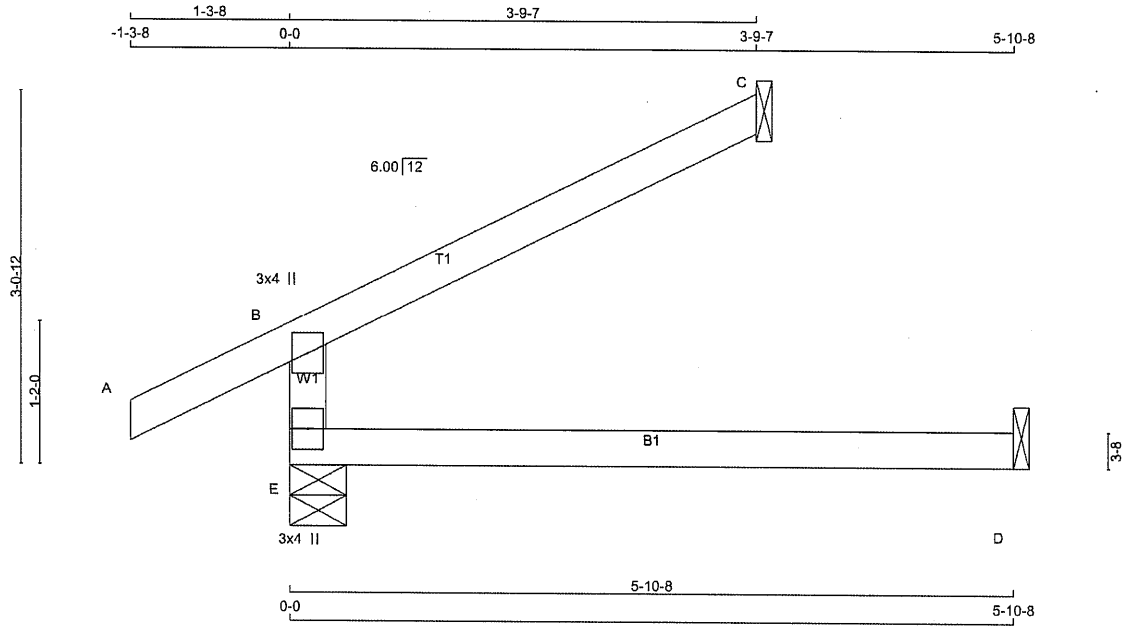

TOTAL WEIGHT = 2 X 14 = 28 lb [M]

LUMBER
N. L. G. A. RULES

CHORDS	SIZE		LUMBER	DESCR.
E - B	2x4	DRY	No.2	SPF
A - C	2x4	DRY	No.2	SPF
E - D	2x4	DRY	No.2	SPF

DRY: SEASONED LUMBER.

PLATES (table is in inches)

JT	TYPE	PLATES	W	LEN	Y	X
B	TMV+p	MT20	3.0	4.0		
E	BMV1+p	MT20	3.0	4.0		

NOTES- (1)
1) Lateral braces to be a minimum of 2X4 SPF #2.

DIMENSIONS, SUPPORTS AND LOADINGS SPECIFIED BY FABRICATOR TO BE VERIFIED BY BUILDING DESIGNER

BEARINGS

JT	FACTORED GROSS REACTION VERT	HORZ	MAXIMUM FACTORED GROSS REACTION DOWN	HORZ	UPLIFT	INPUT BRG IN-SX	REQRD BRG IN-SX
E	405	0	405	0	0	5-8	1-8
C	130	0	130	0	0	1-8	1-8
D	45	0	50	0	0	1-8	1-8

SEE MITEK STANDARD DETAIL MSD2015-H FOR CONNECTION TO JOINT(S) C , D

UNFACTORED REACTIONS

JT	1ST LCASE COMBINED	MAX./MIN. COMPONENT REACTIONS SNOW	LIVE	PERM.LIVE	WIND	DEAD	SOIL
E	286	190 / 0	0 / 0	0 / 0	0 / 0	96 / 0	0 / 0
C	90	73 / 0	0 / 0	0 / 0	0 / 0	17 / 0	0 / 0
D	36	0 / 0	0 / 0	0 / 0	0 / 0	36 / 0	0 / 0

BEARING MATERIAL TO BE SPF NO.2 OR BETTER AT JOINT(S) E, C

BRACING
TOP CHORD TO BE SHEATHED OR MAX. PURLIN SPACING = 6.25 FT.
MAX. UNBRACED BOTTOM CHORD LENGTH = 10.00 FT OR RIGID CEILING DIRECTLY APPLIED.

ALL PITCH BREAKS AND PERIMETER CORNER JOINTS MUST BE LATERALLY RESTRAINED.

LOADING
TOTAL LOAD CASES: (4)

CHORDS

MEMB. FR-TO	MAX. FACTORED FORCE (LBS)	FACTORED VERT. LOAD (PLF) FROM	TO	LC1 CSI (LC)	MAX UNBRAC LENGTH
E- B	-342 / 0	0.0	0.0	0.13 (4)	7.81
A- B	0 / 28	-91.8	-91.8	0.12 (1)	10.00
B- C	-19 / 0	-91.8	-91.8	0.22 (1)	6.25
E- D	0 / 0	-18.5	-18.5	0.13 (4)	10.00

WEBS

MEMB. FR-TO	MAX. FACTORED FORCE (LBS)	MAX CSI (LC)

DESIGN CRITERIA

SPECIFIED LOADS:

TOP CH.	LL	=	25.6	PSF
	DL	=	6.0	PSF
BOT CH.	LL	=	0.0	PSF
	DL	=	7.4	PSF
TOTAL LOAD		=	39.0	PSF

SPACING = 24.0 IN. C/C

THIS TRUSS IS DESIGNED FOR RESIDENTIAL OR SMALL BUILDING REQUIREMENTS OF PART 9, NBCC 2015

THIS DESIGN COMPLIES WITH:
- PART 9 OF BCBC 2018 , NBC-2019AE
- PART 9 OF OBC 2012 (2019 AMENDMENT)
- CSA 086-14
- TPIC 2014

DESIGN ASSUMPTIONS
-OVERHANG NOT TO BE ALTERED OR CUT OFF.

(55 % OF 31.3 P.S.F. G.S.L. PLUS 8.4 P.S.F. RAIN LOAD) EQUALS 25.6 P.S.F. SPECIFIED ROOF LIVE LOAD

ALLOWABLE DEFL.(LL)= L/360 (0.20")
CALCULATED VERT. DEFL.(LL) = L/ 999 (0.00")
ALLOWABLE DEFL.(TL)= L/360 (0.20")
CALCULATED VERT. DEFL.(TL) = L/ 999 (0.03")

CSI: TC=0.22/1.00 (B-C:1) , BC=0.13/1.00 (D-E:4) , WB=0.00/1.00 (n/a:0) , SSI=0.15/1.00 (B-C:1)

DOL LUMBER=1.00 NAIL=1.00 LS BEND=1.10 COMP=1.10 SHEAR=1.10 TENS= 1.10

COMPANION LIVE LOAD FACTOR = 1.00

TRUSS PLATE MANUFACTURER IS NOT RESPONSIBLE FOR QUALITY CONTROL IN THE TRUSS MANUFACTURING PLANT .

NAIL VALUES

PLATE	GRIP(DRY) (PSI) MAX	MIN	SHEAR (PLI) MAX	MIN	SECTION (PLI) MAX	MIN
MT20	650	371	1747	788	1987	1873

PLATE PLACEMENT TOL. = 0.250 inches

PLATE ROTATION TOL. = 5.0 Deg.

JSI GRIP= 0.14 (E) (INPUT = 0.90)
JSI METAL= 0.09 (B) (INPUT = 0.95)

LICENSED PROFESSIONAL ENGINEER
9/25/23
C. M. HEYENS
100505065
PROVINCE OF ONTARIO

STRUCTURAL COMPONENT ONLY
DWG # TR23091775

CITY OF RICHMOND HILL
BUILDING DIVISION
05/01/2024
RECEIVED
Per: joshua.nabua

JOB NAME	TRUSS NAME	QUANTITY	PLY	JOB DESC.	DRWG NO.
434950	C5	1	1	GREENPARK HOMES TRUSS DESC.	

Tamarack Roof Truss, Burlington

Version 8.630 S Aug 30 2023 MiTek Industries, Inc. Fri Sep 22 10:15:43 2023 Page 1
ID:?7smMffSHcbvu6uGxGPN4oyih5x-gxrWUO2GlyQljE eaCHJT90ZHXm4B040jsYqJdyb7Dk

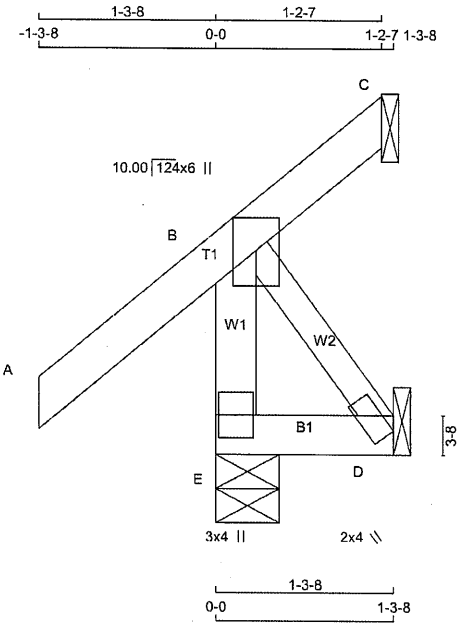

TOTAL WEIGHT = 8 lb
[M]

LUMBER
N. L. G. A. RULES

CHORDS	SIZE		LUMBER	DESCR.
E - B	2x4	DRY	No.2	SPF
A - C	2x4	DRY	No.2	SPF
E - D	2x4	DRY	No.2	SPF
ALL WEBS	2x3	DRY	No.2	SPF

DRY: SEASONED LUMBER.

PLATES (table is in inches)

JT	TYPE	PLATES	W	LEN	Y	X
B	TMVW+p	MT20	4.0	6.0	Edge	
D	BMW1+w	MT20	2.0	4.0		Edge
E	BMV1+p	MT20	3.0	4.0		

Edge - INDICATES REFERENCE CORNER OF PLATE TOUCHES EDGE OF CHORD.

NOTES- (1)
1) Lateral braces to be a minimum of 2X4 SPF #2.

DIMENSIONS, SUPPORTS AND LOADINGS SPECIFIED BY FABRICATOR TO BE VERIFIED BY BUILDING DESIGNER

BEARINGS

JT	FACTORED GROSS REACTION VERT	HORZ	MAXIMUM FACTORED GROSS REACTION DOWN	HORZ	UPLIFT	INPUT BRG IN-SX	REQRD BRG IN-SX
E	266	0	266	0	0	5-8	1-8
C	-18	0	0	0	-67	1-8	1-8
D	11	0	12	0	0	1-8	1-8

SEE MITEK STANDARD DETAIL MSD2015-H FOR CONNECTION TO JOINT(S) C , D

PROVIDE ANCHORAGE AT BEARING JOINT C FOR 150 LBS FACTORED UPLIFT

UNFACTORED REACTIONS

JT	1ST LCASE COMBINED	MAX./MIN. COMPONENT REACTIONS SNOW	LIVE	PERM.LIVE	WIND	DEAD	SOIL
E	184	142 / 0	0 / 0	0 / 0	0 / 0	42 / 0	0 / 0
C	-12	0 / -41	0 / 0	0 / 0	0 / 0	0 / -2	0 / 0
D	9	0 / 0	0 / 0	0 / 0	0 / 0	9 / 0	0 / 0

BEARING MATERIAL TO BE SPF NO.2 OR BETTER AT JOINT(S) E, C

BRACING
TOP CHORD TO BE SHEATHED OR MAX. PURLIN SPACING = 6.25 FT.
MAX. UNBRACED BOTTOM CHORD LENGTH = 10.00 FT OR RIGID CEILING DIRECTLY APPLIED.

ALL PITCH BREAKS AND PERIMETER CORNER JOINTS MUST BE LATERALLY RESTRAINED.

LOADING
TOTAL LOAD CASES: (5)

CHORDS MEMB. FR-TO	MAX. FACTORED FORCE (LBS)	FACTORED VERT. LOAD (PLF) FROM	TO	LC1 MAX CSI (LC)	MAX. UNBRAC LENGTH	WEBS MEMB. FR-TO	MAX. FACTORED FORCE (LBS)	MAX CSI (LC)
E- B	-255 / 0	0.0	0.0	0.03 (1)	7.81	B- D	0 / 0	0.00 (1)
A- B	0 / 41	-91.8	-91.8	0.13 (1)	10.00			
B- C	-47 / 0	-91.8	-91.8	0.12 (1)	6.25			
E- D	0 / 0	-18.5	-18.5	0.01 (4)	10.00			

CANTILEVER ANALYSIS HAS BEEN CONSIDERED IN THIS DESIGN

DESIGN CRITERIA

SPECIFIED LOADS:

TOP CH.	LL	=	25.6	PSF
	DL	=	6.0	PSF
BOT CH.	LL	=	0.0	PSF
	DL	=	7.4	PSF
TOTAL LOAD		=	39.0	PSF

SPACING = 24.0 IN. C/C

THIS TRUSS IS DESIGNED FOR RESIDENTIAL OR SMALL BUILDING REQUIREMENTS OF PART 9, NBCC 2015

THIS DESIGN COMPLIES WITH:
- PART 9 OF BCBC 2018 , NBC-2019AE
- PART 9 OF OBC 2012 (2019 AMENDMENT)
- CSA 086-14
- TPIC 2014

DESIGN ASSUMPTIONS
-OVERHANG NOT TO BE ALTERED OR CUT OFF.

(55 % OF 31.3 P.S.F. G.S.L. PLUS 8.4 P.S.F. RAIN LOAD) EQUALS 25.6 P.S.F. SPECIFIED ROOF LIVE LOAD

ALLOWABLE DEFL.(TL)= L/360 (0.19")
CALCULATED VERT. DEFL.(TL) = L/ 999 (0.00")

CSI: TC=0.13/1.00 (A-B:1) , BC=0.01/1.00 (D-E:4) , WB=0.00/1.00 (B-D:1) , SSI=0.08/1.00 (B-C:1)

DOL LUMBER=1.00 NAIL=1.00 LS BEND=1.10 COMP=1.10 SHEAR=1.10 TENS= 1.10

COMPANION LIVE LOAD FACTOR = 1.00

AUTOSOLVE RIGHT HEEL ONLY

TRUSS PLATE MANUFACTURER IS NOT RESPONSIBLE FOR QUALITY CONTROL IN THE TRUSS MANUFACTURING PLANT .

NAIL VALUES

PLATE	GRIP(DRY) (PSI) MAX	MIN	SHEAR (PLI) MAX	MIN	SECTION (PLI) MAX	MIN
MT20	650	371	1747	788	1987	1873

PLATE PLACEMENT TOL. = 0.250 inches

PLATE ROTATION TOL. = 5.0 Deg.

JSI GRIP= 0.16 (B) (INPUT = 0.90)
JSI METAL= 0.07 (B) (INPUT = 0.95)

LICENSED PROFESSIONAL ENGINEER
9/25/23
C. M. HEYENS
100505065
PROVINCE OF ONTARIO

STRUCTURAL COMPONENT ONLY
DWG # TR23091776

CITY OF RICHMOND HILL
BUILDING DIVISION
05/01/2024
RECEIVED
Per: joshua.nabua

JOB NAME	TRUSS NAME	QUANTITY	PLY	JOB DESC.	DRWG NO.
434950	C6	1	1	GREENPARK HOMES TRUSS DESC.	

Tamarack Roof Truss, Burlington

Version 8.630 S Aug 30 2023 MiTek Industries, Inc. Fri Sep 22 10:15:44 2023 Page 1
ID:?7smMffSHcbvu6uGxGPN4oyih5x-87Pvhk3uWGYcLOZq8voY?NYj?x63wTK9xWIDs3yb7Dj

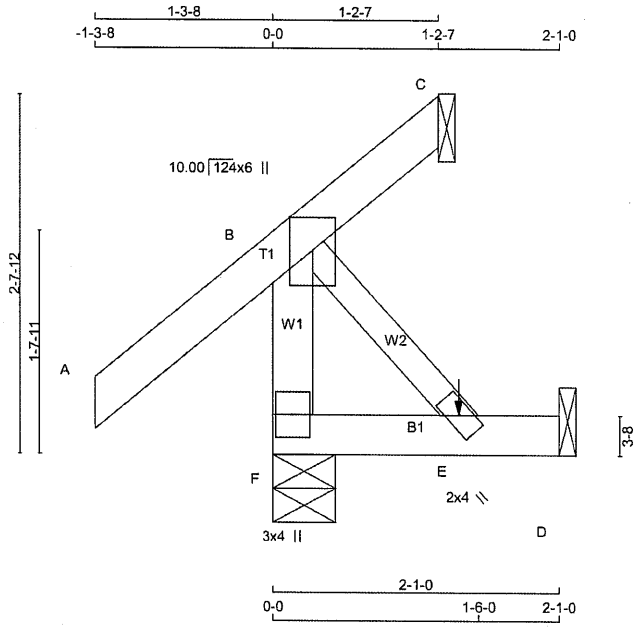

TOTAL WEIGHT = 9 lb
[M]

LUMBER
N. L. G. A. RULES

CHORDS	SIZE		LUMBER	DESCR.
F - B	2x4	DRY	No.2	SPF
A - C	2x4	DRY	No.2	SPF
F - D	2x4	DRY	No.2	SPF
ALL WEBS	2x3	DRY	No.2	SPF

DRY: SEASONED LUMBER.

PLATES (table is in inches)

JT	TYPE	PLATES	W	LEN	Y	X
B	TMVW+p	MT20	4.0	6.0	Edge	
E	BMW+w	MT20	2.0	4.0		
F	BMV1+p	MT20	3.0	4.0		

Edge - INDICATES REFERENCE CORNER OF PLATE TOUCHES EDGE OF CHORD.

NOTES- (1)
1) Lateral braces to be a minimum of 2X4 SPF #2.

DIMENSIONS, SUPPORTS AND LOADINGS SPECIFIED BY FABRICATOR TO BE VERIFIED BY BUILDING DESIGNER

BEARINGS

JT	FACTORED GROSS REACTION VERT	HORZ	MAXIMUM FACTORED GROSS REACTION DOWN	HORZ	UPLIFT	INPUT BRG IN-SX	REQRD BRG IN-SX
F	275	0	275	0	0	5-8	1-8
C	-18	0	0	0	-67	1-8	1-8
D	19	0	22	0	0	1-8	1-8

SEE MITEK STANDARD DETAIL MSD2015-H FOR CONNECTION TO JOINT(S) C , D

PROVIDE ANCHORAGE AT BEARING JOINT C FOR 150 LBS FACTORED UPLIFT

UNFACTORED REACTIONS

JT	1ST LCASE COMBINED	MAX./MIN. COMPONENT REACTIONS SNOW	LIVE	PERM.LIVE	WIND	DEAD	SOIL
F	191	142 / 0	0 / 0	0 / 0	0 / 0	49 / 0	0 / 0
C	-12	0 / -41	0 / 0	0 / 0	0 / 0	0 / -2	0 / 0
D	15	0 / 0	0 / 0	0 / 0	0 / 0	15 / 0	0 / 0

BEARING MATERIAL TO BE SPF NO.2 OR BETTER AT JOINT(S) F, C

BRACING
TOP CHORD TO BE SHEATHED OR MAX. PURLIN SPACING = 6.25 FT.
MAX. UNBRACED BOTTOM CHORD LENGTH = 10.00 FT OR RIGID CEILING DIRECTLY APPLIED.

ALL PITCH BREAKS AND PERIMETER CORNER JOINTS MUST BE LATERALLY RESTRAINED.

LOADING
TOTAL LOAD CASES: (5)

CHORDS

MEMB. FR-TO	MAX. FACTORED FORCE (LBS)	FACTORED VERT. LOAD (PLF) FROM	TO	LC1 MAX CSI (LC)	MAX. UNBRAC LENGTH
F- B	-255 / 0	0.0	0.0	0.03 (1)	7.81
A- B	0 / 41	-91.8	-91.8	0.13 (5)	10.00
B- C	-47 / 0	-91.8	-91.8	0.12 (5)	6.25
F- E	0 / 0	-18.5	-18.5	0.02 (4)	10.00
E- D	0 / 0	-18.5	-18.5	0.02 (4)	10.00

WEBS

MEMB. FR-TO	MAX. FACTORED FORCE (LBS)	MAX CSI (LC)
B- E	0 / 0	0.00 (1)

SPECIFIED CONCENTRATED LOADS (LBS)

JT	LOC.	LC1	MAX-	MAX+	FACE	DIR.	TYPE	HEEL	CONN.
E	1-4-4	1	1	---	FRONT	VERT	TOTAL	---	C1

CONNECTION REQUIREMENTS

1) **C1:** A SUITABLE HANGER/MECHANICAL CONNECTION IS REQUIRED.

CANTILEVER ANALYSIS HAS BEEN CONSIDERED IN THIS DESIGN

DESIGN CRITERIA

SPECIFIED LOADS:

TOP CH.	LL	=	25.6	PSF
	DL	=	6.0	PSF
BOT CH.	LL	=	0.0	PSF
	DL	=	7.4	PSF
TOTAL LOAD		=	39.0	PSF

SPACING = 24.0 IN. C/C

THIS TRUSS IS DESIGNED FOR RESIDENTIAL OR SMALL BUILDING REQUIREMENTS OF PART 9, NBCC 2015

THIS DESIGN COMPLIES WITH:
- PART 9 OF BCBC 2018 , NBC-2019AE
- PART 9 OF OBC 2012 (2019 AMENDMENT)
- CSA 086-14
- TPIC 2014

DESIGN ASSUMPTIONS
-OVERHANG NOT TO BE ALTERED OR CUT OFF.

(55 % OF 31.3 P.S.F. G.S.L. PLUS 8.4 P.S.F. RAIN LOAD) EQUALS 25.6 P.S.F. SPECIFIED ROOF LIVE LOAD

ALLOWABLE DEFL.(LL)= L/360 (0.19")
CALCULATED VERT. DEFL.(LL) = L/ 999 (0.00")
ALLOWABLE DEFL.(TL)= L/360 (0.19")
CALCULATED VERT. DEFL.(TL) = L/ 999 (0.00")

CSI: TC=0.13/1.00 (A-B:5) , BC=0.02/1.00 (E-F:4) , WB=0.00/1.00 (B-E:1) , SSI=0.08/1.00 (A-B:5)

DOL LUMBER=1.00 NAIL=1.00 LS BEND=1.10 COMP=1.10 SHEAR=1.10 TENS= 1.10

COMPANION LIVE LOAD FACTOR = 1.00

AUTOSOLVE RIGHT HEEL ONLY

TRUSS PLATE MANUFACTURER IS NOT RESPONSIBLE FOR QUALITY CONTROL IN THE TRUSS MANUFACTURING PLANT .

NAIL VALUES

PLATE	GRIP(DRY) (PSI) MAX	MIN	SHEAR (PLI) MAX	MIN	SECTION (PLI) MAX	MIN
MT20	650	371	1747	788	1987	1873

PLATE PLACEMENT TOL. = 0.250 inches

PLATE ROTATION TOL. = 5.0 Deg.

JSI GRIP= 0.16 (B) (INPUT = 0.90)
JSI METAL= 0.07 (B) (INPUT = 0.95)

LICENSED PROFESSIONAL ENGINEER
9/25/23
C. M. HEYENS
100505065
PROVINCE OF ONTARIO

STRUCTURAL COMPONENT ONLY
DWG # TR23091777

CITY OF RICHMOND HILL
BUILDING DIVISION
05/01/2024
RECEIVED
Per: joshua.nabua

JOB NAME	TRUSS NAME	QUANTITY	PLY	JOB DESC.	DRWG NO.
434951	C7	2	1	GREENPARK HOMES TRUSS DESC.	

Tamarack Roof Truss, Burlington

Version 8.630 S Aug 30 2023 MiTek Industries, Inc. Fri Sep 22 10:21:53 2023 Page 1
ID:?7smMffSHcbvu6uGxGPN4oyih5x-r6CO8vXMde1F65GIFvw4SBLovh2StMqToRBFIByb77y

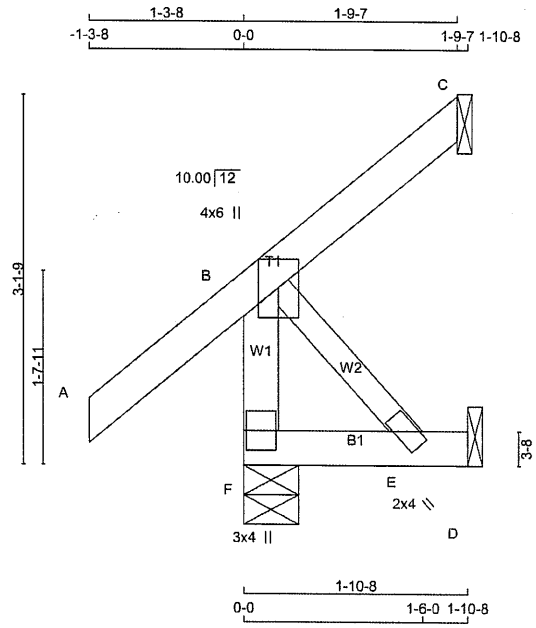

TOTAL WEIGHT = 2 X 10 = 20 lb

LUMBER
N. L. G. A. RULES

CHORDS	SIZE		LUMBER	DESCR.
F - B	2x4	DRY	No.2	SPF
A - C	2x4	DRY	No.2	SPF
F - D	2x4	DRY	No.2	SPF
ALL WEBS	2x3	DRY	No.2	SPF

DRY: SEASONED LUMBER.

PLATES (table is in inches)

JT	TYPE	PLATES	W	LEN	Y	X
B	TMVW+p	MT20	4.0	6.0	Edge	
E	BMW+w	MT20	2.0	4.0		
F	BMV1+p	MT20	3.0	4.0		

Edge - INDICATES REFERENCE CORNER OF PLATE TOUCHES EDGE OF CHORD.

NOTES- (1)
1) Lateral braces to be a minimum of 2X4 SPF #2.

DIMENSIONS, SUPPORTS AND LOADINGS SPECIFIED BY FABRICATOR TO BE VERIFIED BY BUILDING DESIGNER

BEARINGS

JT	FACTORED GROSS REACTION VERT	HORZ	MAXIMUM FACTORED GROSS REACTION DOWN	HORZ	UPLIFT	INPUT BRG IN-SX	REQRD BRG IN-SX
F	276	0	276	0	0	5-8	1-8
C	33	0	33	0	-40	1-8	1-8
D	17	0	19	0	0	1-8	1-8

SEE MITEK STANDARD DETAIL MSD2015-H FOR CONNECTION TO JOINT(S) C , D

PROVIDE ANCHORAGE AT BEARING JOINT C FOR 150 LBS FACTORED UPLIFT

UNFACTORED REACTIONS

JT	1ST LCASE COMBINED	MAX./MIN. COMPONENT REACTIONS SNOW	LIVE	PERM.LIVE	WIND	DEAD	SOIL
F	192	144 / 0	0 / 0	0 / 0	0 / 0	48 / 0	0 / 0
C	23	18 / -27	0 / 0	0 / 0	0 / 0	4 / 0	0 / 0
D	14	0 / 0	0 / 0	0 / 0	0 / 0	14 / 0	0 / 0

BEARING MATERIAL TO BE SPF NO.2 OR BETTER AT JOINT(S) F, C

BRACING
TOP CHORD TO BE SHEATHED OR MAX. PURLIN SPACING = 6.25 FT.
MAX. UNBRACED BOTTOM CHORD LENGTH = 10.00 FT OR RIGID CEILING DIRECTLY APPLIED.

ALL PITCH BREAKS AND PERIMETER CORNER JOINTS MUST BE LATERALLY RESTRAINED.

LOADING
TOTAL LOAD CASES: (5)

CHORDS MEMB. FR-TO	MAX. FACTORED FORCE (LBS)	FACTORED VERT. LOAD (PLF) FROM	TO	LC1 MAX CSI (LC)	MAX. UNBRAC LENGTH	WEBS MEMB. FR-TO	MAX. FACTORED FORCE (LBS)	MAX CSI (LC)
F- B	-258 / 0	0.0	0.0	0.03 (1)	7.81	B- E	0 / 0	0.00 (1)
A- B	0 / 41	-91.8	-91.8	0.13 (1)	10.00			
B- C	-32 / 0	-91.8	-91.8	0.12 (1)	6.25			
F- E	0 / 0	-18.5	-18.5	0.02 (4)	10.00			
E- D	0 / 0	-18.5	-18.5	0.02 (4)	10.00			

CANTILEVER ANALYSIS HAS BEEN CONSIDERED IN THIS DESIGN

DESIGN CRITERIA [M]

SPECIFIED LOADS:

TOP CH.	LL	=	25.6	PSF
	DL	=	6.0	PSF
BOT CH.	LL	=	0.0	PSF
	DL	=	7.4	PSF
TOTAL LOAD		=	39.0	PSF

SPACING = 24.0 IN. C/C

THIS TRUSS IS DESIGNED FOR RESIDENTIAL OR SMALL BUILDING REQUIREMENTS OF PART 9, NBCC 2015

THIS DESIGN COMPLIES WITH:
- PART 9 OF BCBC 2018 , NBC-2019AE
- PART 9 OF OBC 2012 (2019 AMENDMENT)
- CSA 086-14
- TPIC 2014

DESIGN ASSUMPTIONS
-OVERHANG NOT TO BE ALTERED OR CUT OFF.

(55 % OF 31.3 P.S.F. G.S.L. PLUS 8.4 P.S.F. RAIN LOAD) EQUALS 25.6 P.S.F. SPECIFIED ROOF LIVE LOAD

ALLOWABLE DEFL.(LL)= L/360 (0.19")
CALCULATED VERT. DEFL.(LL) = L/ 999 (0.00")
ALLOWABLE DEFL.(TL)= L/360 (0.19")
CALCULATED VERT. DEFL.(TL) = L/ 999 (0.00")

CSI: TC=0.13/1.00 (A-B:1) , BC=0.02/1.00 (E-F:4) , WB=0.00/1.00 (B-E:1) , SSI=0.08/1.00 (B-C:1)

DOL LUMBER=1.00 NAIL=1.00 LS BEND=1.10 COMP=1.10 SHEAR=1.10 TENS= 1.10

COMPANION LIVE LOAD FACTOR = 1.00

AUTOSOLVE RIGHT HEEL ONLY

TRUSS PLATE MANUFACTURER IS NOT RESPONSIBLE FOR QUALITY CONTROL IN THE TRUSS MANUFACTURING PLANT .

NAIL VALUES

PLATE	GRIP(DRY) (PSI) MAX	MIN	SHEAR (PLI) MAX	MIN	SECTION (PLI) MAX	MIN
MT20	650	371	1747	788	1987	1873

PLATE PLACEMENT TOL. = 0.250 inches

PLATE ROTATION TOL. = 5.0 Deg.

JSI GRIP= 0.16 (B) (INPUT = 0.90)
JSI METAL= 0.07 (B) (INPUT = 0.95)

LICENSED PROFESSIONAL ENGINEER
9/25/23
C. M. HEYENS
100505065
PROVINCE OF ONTARIO

STRUCTURAL COMPONENT ONLY
DWG # TR23091802

CITY OF RICHMOND HILL
BUILDING DIVISION
05/01/2024
RECEIVED
Per: joshua.nabua

JOB NAME	TRUSS NAME	QUANTITY	PLY	JOB DESC.	DRWG NO.
434951	C8	2	1	GREENPARK HOMES TRUSS DESC.	

Tamarack Roof Truss, Burlington

Version 8.630 S Aug 30 2023 MiTek Industries, Inc. Fri Sep 22 10:21:53 2023 Page 1
ID:?7smMffSHcbvu6uGxGPN4oyih5x-r6CO8vXMde1F65GlFvw4SBLnjh23tMqToRBFIByb77y

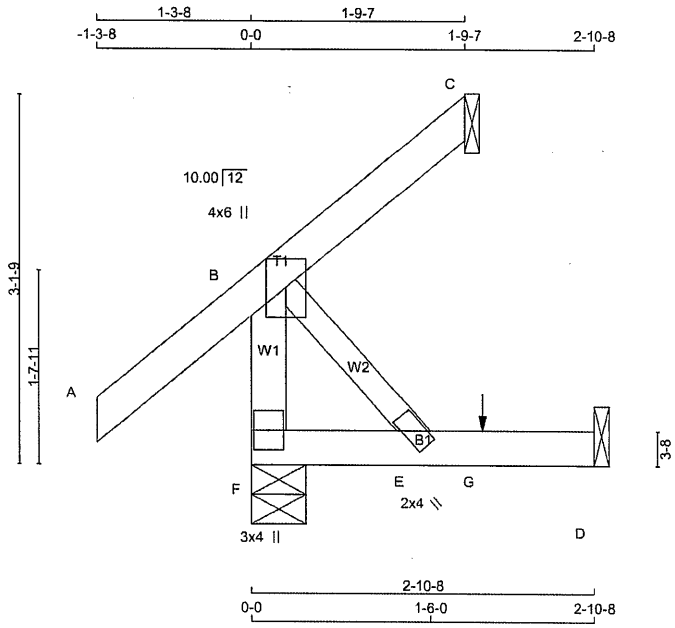

TOTAL WEIGHT = 2 X 11 = 22 lb [M]

LUMBER
N. L. G. A. RULES

CHORDS	SIZE		LUMBER	DESCR.
F - B	2x4	DRY	No.2	SPF
A - C	2x4	DRY	No.2	SPF
F - D	2x4	DRY	No.2	SPF
ALL WEBS	2x3	DRY	No.2	SPF

DRY: SEASONED LUMBER.

PLATES (table is in inches)

JT	TYPE	PLATES	W	LEN	Y	X
B	TMVW+p	MT20	4.0	6.0	Edge	
E	BMW+w	MT20	2.0	4.0		
F	BMV1+p	MT20	3.0	4.0		

Edge - INDICATES REFERENCE CORNER OF PLATE TOUCHES EDGE OF CHORD.

NOTES- (1)
1) Lateral braces to be a minimum of 2X4 SPF #2.

DIMENSIONS, SUPPORTS AND LOADINGS SPECIFIED BY FABRICATOR TO BE VERIFIED BY BUILDING DESIGNER

BEARINGS

JT	FACTORED GROSS REACTION VERT	HORZ	MAXIMUM FACTORED GROSS REACTION DOWN	HORZ	UPLIFT	INPUT BRG IN-SX	REQRD BRG IN-SX
F	285	0	285	0	0	5-8	1-8
C	33	0	33	0	-40	1-8	1-8
D	27	0	30	0	0	1-8	1-8

SEE MITEK STANDARD DETAIL MSD2015-H FOR CONNECTION TO JOINT(S) C , D

PROVIDE ANCHORAGE AT BEARING JOINT C FOR 150 LBS FACTORED UPLIFT

UNFACTORED REACTIONS

JT	1ST LCASE COMBINED	MAX./MIN. COMPONENT REACTIONS SNOW	LIVE	PERM.LIVE	WIND	DEAD	SOIL
F	199	144 / 0	0 / 0	0 / 0	0 / 0	55 / 0	0 / 0
C	23	18 / -27	0 / 0	0 / 0	0 / 0	4 / 0	0 / 0
D	21	0 / 0	0 / 0	0 / 0	0 / 0	21 / 0	0 / 0

BEARING MATERIAL TO BE SPF NO.2 OR BETTER AT JOINT(S) F, C

BRACING
TOP CHORD TO BE SHEATHED OR MAX. PURLIN SPACING = 6.25 FT.
MAX. UNBRACED BOTTOM CHORD LENGTH = 10.00 FT OR RIGID CEILING DIRECTLY APPLIED.

ALL PITCH BREAKS AND PERIMETER CORNER JOINTS MUST BE LATERALLY RESTRAINED.

LOADING
TOTAL LOAD CASES: (5)

CHORDS

MEMB. FR-TO	MAX. FACTORED FORCE (LBS)	FACTORED VERT. LOAD (PLF) FROM	TO	LC1 MAX CSI (LC)	MAX. UNBRAC LENGTH
F- B	-258 / 0	0.0	0.0	0.03 (1)	7.81
A- B	0 / 41	-91.8	-91.8	0.14 (5)	10.00
B- C	-32 / 0	-91.8	-91.8	0.13 (5)	6.25
F- E	0 / 0	-18.5	-18.5	0.04 (4)	10.00
E- G	0 / 0	-18.5	-18.5	0.04 (4)	10.00
G- D	0 / 0	-18.5	-18.5	0.04 (4)	10.00

WEBS

MEMB. FR-TO	MAX. FACTORED FORCE (LBS)	MAX CSI (LC)
B- E	0 / 0	0.00 (1)

SPECIFIED CONCENTRATED LOADS (LBS)

JT	LOC.	LC1	MAX-	MAX+	FACE	DIR.	TYPE	HEEL	CONN.
G	1-11-4	1	1	—	FRONT	VERT	TOTAL	---	C1

CONNECTION REQUIREMENTS

1) **C1:** A SUITABLE HANGER/MECHANICAL CONNECTION IS REQUIRED.

CANTILEVER ANALYSIS HAS BEEN CONSIDERED IN THIS DESIGN

DESIGN CRITERIA

SPECIFIED LOADS:

TOP CH.	LL	=	25.6	PSF
	DL	=	6.0	PSF
BOT CH.	LL	=	0.0	PSF
	DL	=	7.4	PSF
TOTAL LOAD		=	39.0	PSF

SPACING = 24.0 IN. C/C

THIS TRUSS IS DESIGNED FOR RESIDENTIAL OR SMALL BUILDING REQUIREMENTS OF PART 9, NBCC 2015

THIS DESIGN COMPLIES WITH:
- PART 9 OF BCBC 2018 , NBC-2019AE
- PART 9 OF OBC 2012 (2019 AMENDMENT)
- CSA 086-14
- TPIC 2014

DESIGN ASSUMPTIONS
-OVERHANG NOT TO BE ALTERED OR CUT OFF.

(55 % OF 31.3 P.S.F. G.S.L. PLUS 8.4 P.S.F. RAIN LOAD) EQUALS 25.6 P.S.F. SPECIFIED ROOF LIVE LOAD

ALLOWABLE DEFL.(LL)= L/360 (0.19")
CALCULATED VERT. DEFL.(LL) = L/ 999 (0.00")
ALLOWABLE DEFL.(TL)= L/360 (0.19")
CALCULATED VERT. DEFL.(TL) = L/ 999 (0.00")

CSI: TC=0.14/1.00 (A-B:5) , BC=0.04/1.00 (D-E:4) , WB=0.00/1.00 (B-E:1) , SSI=0.08/1.00 (A-B:5)

DOL LUMBER=1.00 NAIL=1.00 LS BEND=1.10 COMP=1.10 SHEAR=1.10 TENS= 1.10

COMPANION LIVE LOAD FACTOR = 1.00

AUTOSOLVE RIGHT HEEL ONLY

TRUSS PLATE MANUFACTURER IS NOT RESPONSIBLE FOR QUALITY CONTROL IN THE TRUSS MANUFACTURING PLANT .

NAIL VALUES

PLATE	GRIP(DRY) (PSI) MAX	MIN	SHEAR (PLI) MAX	MIN	SECTION (PLI) MAX	MIN
MT20	650	371	1747	788	1987	1873

PLATE PLACEMENT TOL. = 0.250 inches

PLATE ROTATION TOL. = 5.0 Deg.

JSI GRIP= 0.16 (B) (INPUT = 0.90)
JSI METAL= 0.07 (B) (INPUT = 0.95)

LICENSED PROFESSIONAL ENGINEER
9/25/23
C. M. HEYENS
100505065
PROVINCE OF ONTARIO

STRUCTURAL COMPONENT ONLY
DWG # TR23091803

CITY OF RICHMOND HILL
BUILDING DIVISION
05/01/2024
RECEIVED
Per: joshua.nabua

EWP DESIGN INC.

(905) 832-2250 FAX (905) 832-0286

RESPONSIBILITIES AND SPECIFICATIONS

RESPONSIBILITIES

1. EWP DESIGN INC. is responsible for the design of trusses as individual components.
2. It is the responsibility of others to ascertain that the design loads utilized on each drawing meet or exceed the actual dead load imposed by the structure, the live load imposed by the intended use and the snow load imposed by local building code or authorities with jurisdictions.
3. All dimensions are to be verified by the owner, contractor, architect or other authorities with jurisdictions before truss fabrication.
4. EWP DESIGN INC. bears no responsibility for the erection of trusses. Persons erecting trusses are cautioned to seek professional advice regarding the temporary and permanent bracing for the system. Bracing shown on EWP DESIGN INC. drawing is specified for the truss as a component only and forms an integral part of the truss design.
5. It is the truss manufacturer's responsibility to ensure that trusses are manufactured in conformance with specifications of EWP DESIGN INC. as outlined below.

SPECIFICATIONS

1. Trusses designed by EWP DESIGN INC. conform to the relevant section of the Ontario Building Code of Canada (Part 9 or Part 4) or to the Canadian code for farm buildings, whichever applies to the building type, as indicated on the EWP DESIGN INC. drawings, and conform to the design procedures established by the Truss Plate Institute of Canada. Unit stresses used for truss designs are as per the edition of CSA-O86 shown on EWP DESIGN INC. drawings.
2. Lumber is to be the size, species and grade as specified on EWP DESIGN INC. drawings.
3. Moisture content of lumber shall not exceed 19% in service unless specified otherwise.
4. Metal connector plates shall be applied to both faces of truss at each joint and shall be positioned as specified.
5. Top chords of trusses are assumed to be continuously braced laterally by roof sheathing or by purlins at intervals not exceeding 12.5 times the thickness of top chord member.
6. Bottom chords shall be laterally braced at intervals not exceeding 3M (10') o.c., where rigid ceiling is not applied directly to the underside of chords.

THESE DRAWINGS CONSTITUTE THE PROPERTY OF EWP DESIGN INC., SHALL NOT BE REPRODUCED, PUBLISHED, OR REDISTRIBUTED IN ANY MANNER OR UTILIZED FOR ANY PURPOSE OTHER THAN THE MANUFACTURE OF TRUSSES BY THE ALPA LUMBER GROUP, AND WILL BE RETRACTED BY EWP DESIGN INC. IF UTILIZED FOR ANY OTHER PURPOSE.

February 1, 2019

CITY OF RICHMOND HILL
BUILDING DIVISION
05/01/2024
RECEIVED
Per: joshua.nabua

MiTek®

STANDARD DETAIL MSD2015-H

Issued: **SEPTEMBER 22, 2020**
Expiry: **APRIL 30, 2022**

TOE-NAIL CAPACITY DETAILS

LATERAL AND WITHDRAWAL RESISTANCE OF BEARING ANCHORAGE BY TOE-NAILS

NAIL TYPE	DIMENSIONS (in.)		LATERAL RESISTANCE (lbs)		WITHDRAWAL RESISTANCE (lbs)	
			SPF	D. FIR	SPF	D. FIR
COMMON WIRE	3.00	0.144	122	139	30	42
	3.25	0.144	127	144	32	45
	3.50	0.160	152	173	38	52
COMMON SPIRAL	3.00	0.122	96	108	26	36
	3.25	0.122	97	108	28	40
	3.50	0.152	142	161	36	50
3.25" Gun nail	3.25	0.120	94	105	28	39

Note: If using truss with D. Fir lumber and SPF bearing plate, use tabulated SPF values in table.

Nail type:	**Common wire**	**Common spiral**	**Common wire**	**Common spiral**	**Gun Nail**
Diameter (in.)	0.160	0.152	0.144	0.122	0.120
Length (in.)	3.50	3.50	3.00	3.00	3.25
LUMBER	**MAXIMUM NUMBER OF TOE-NAILS**				
2x4 SPF	2	2	3	3	3
2x6 SPF	4	4	4	5	5
2x4 D. FIR	2	2	2	2	2
2x6 D. FIR	3	3	3	4	4

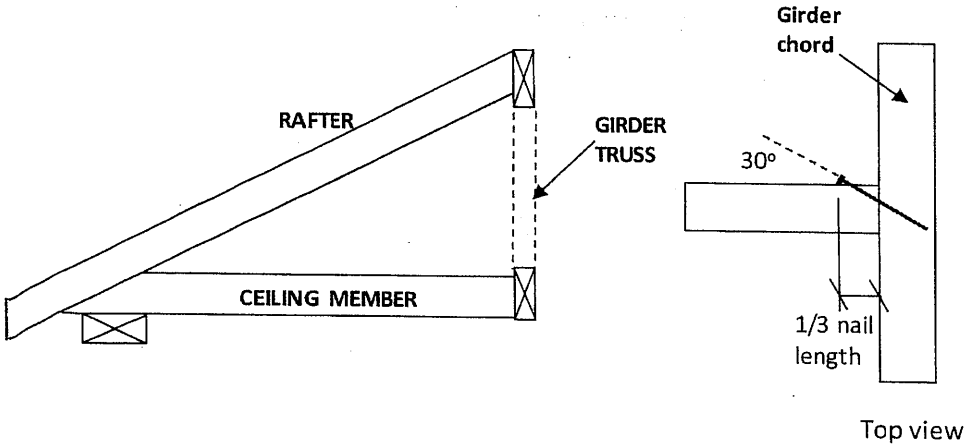

Figure 1: Toe-Nailing Rafter / Ceiling Member to Girder Truss

PEO
Certificate No. 10889485

LICENSED PROFESSIONAL ENGINEER
C. Cordogiannis
90553736
PROVINCE OF ONTARIO

December 21, 2020

©2020 MiTek Canada Inc., 240 Stirling Crescent, Bradford, Ontario, L3Z 4L5 | (800) 268-3434, www.mitek.ca

CITY OF RICHMOND HILL
BUILDING DIVISION
05/01/2024
RECEIVED
Per: joshua.nabua

TOE-NAIL CAPACITY DETAILS

Figure 2: Toe-Nail Anchorage to Bearing Plate for Uplift

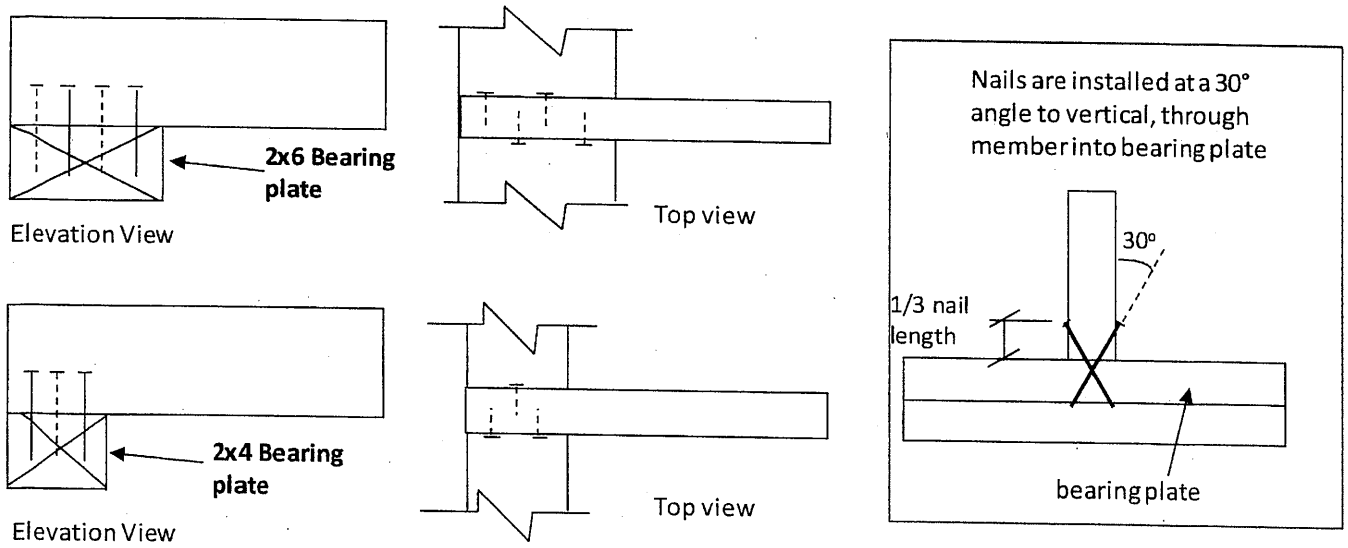

NOTES:

1. Rafter and ceiling members may be connected to top and bottom chords of girder truss by toe-nailing the members into the girder chords (see fig. 1), provided the factored vertical reactions of the supported members do not exceed the lateral resistance of the toe-nails. Mechanical connectors (hangers) are required if factored vertical reactions exceed the toe-nail capacity, or if the connection must resist horizontal loads (loads perpendicular to the face of girder or rafter).

2. Trusses, rafters or ceiling members may be anchored to the bearing plate with toe-nails (see fig. 2), provided that the factored uplift reactions due to **wind or earthquake loads** do not exceed the **withdrawal resistance of the toe-nails.** Mechanical anchors (tie-downs) are required for reactions that exceed the toe-nail withdrawal capacity. Toe-nail anchorage to bearing plates is **NOT** permitted if uplift reactions are generated from gravity loads (snow, floor live, dead).

3. Tabulated toe-nail resistances on page 1 are for **one** toe-nail. Multiply unit values by the number of nails used in the connection. Maximum number of nails in a connection shall not exceed the tabulated limits shown on page 1 for a given lumber size /species.

4. Nail values are based on specific gravity of G = 0.42 (SPF) and G = 0.49 (D. Fir).

5. Toe-nails shall be driven at approximately 1/3 the nail length from the edge of the joist/truss chord and driven at an angle of 30° to the grain of the member.

6. For wind / earthquake loads, tabulated lateral resistances may be multiplied by 1.15 (K_D factor). No increases are permitted for tabulated withdrawal resistances.

7. Lumber must be dry (< 19% moisture content) at the time of nail installation.

8. Nail values in this table comply with CSA O86-19, Clause 12.9.

PEO
Certificate No. 10889485

©2020 MiTek Canada Inc., 240 Stirling Crescent, Bradford, Ontario, L3Z 4L5 | (800) 268-3434, www.mitek.ca

December 21, 2020

CITY OF RICHMOND HILL
BUILDING DIVISION
05/01/2024
RECEIVED
Per: joshua.nabua

LUL/LUS/LJS/HUS/HHUS/HGUS

SIMPSON Strong-Tie®

Standard and Double-Shear Joist Hangers

This product is preferable to similar connectors because of a) easier installation, b) higher capacities, c) lower installed cost, or a combination of these features.

Most hangers in this series have double-shear nailing — an innovation that distributes the load through two points on each joist nail for greater strength. This allows for fewer nails, faster installation, and the use of all common nails for the same connection. (Do not bend or remove tabs)

Double-shear hangers range from the light capacity LUS hangers to the highest capacity HGUS hangers. For medium load truss applications, the HUS offers a lower cost alternative and easier installation than the HGUS hangers, while providing greater load capacity and bearing than the LUS.

Material: See table on pp. 217–218.

Finish: Galvanized. Some products available in stainless steel or ZMAX® coating; see Corrosion Information, pp. 18–20.

Installation:

- Use all specified fasteners; see General Notes.
- Nails must be driven at an angle through the joist or truss into the header to achieve the tabulated resistances (except LUL).
- Where 16d commons are specified, 10d commons may be used at 0.83 of the tabulated factored resistance.
- Not designed for welded or nailer applications.
- With single ply 2x carrying members, use 10d x 1½" nails into the header and 10d commons into the joist, and reduce the resistance to 0.64 of the table value where 16d nails are specified and 0.77 where 10d nails are specified.

Options:

- LUS, LJS, LUL and HUS hangers cannot be modified.
- Other sizes available; consult your Simpson Strong-Tie representative.
- See Hanger Options information on pp. 105–107.

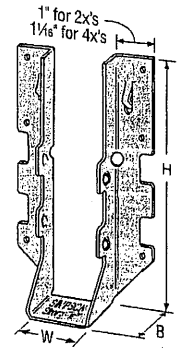

LUS28

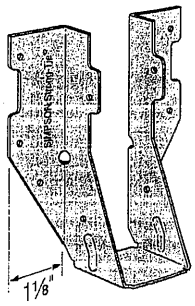

LU26L

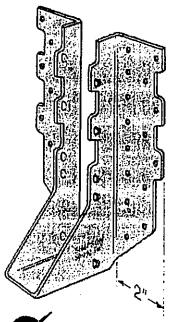

HUS210
(HUS26, HUS28, and HHUS similar)

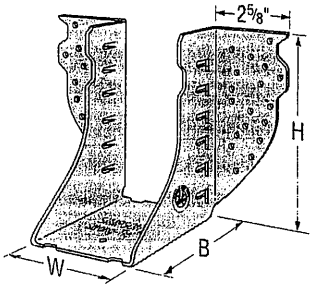

HGUS28-2

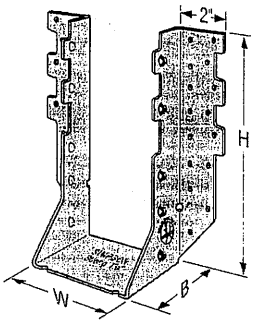

HHUS210-2

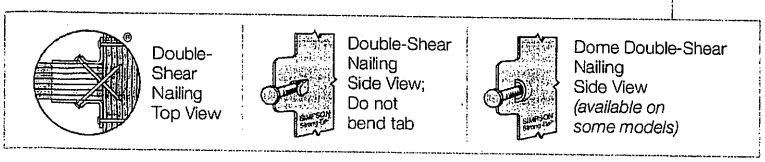

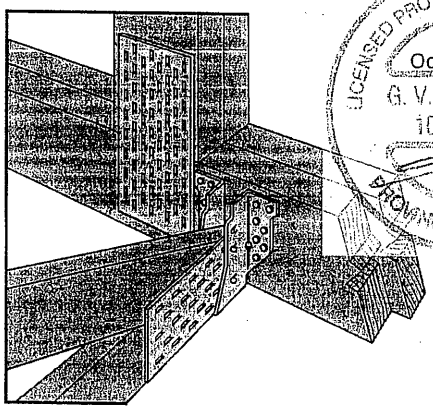

Typical HUS26 Installation with Reduced Heel Height
(Truss Designer to provide fastener quantity for connecting multiple members together)

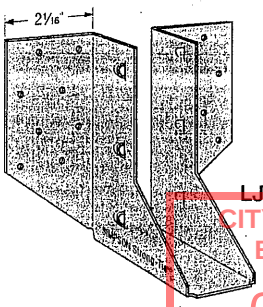

LJS26DS

LICENSED PROFESSIONAL ENGINEER
Oct. 14, 2020
G. V. LUBARSKY
100044463
PROVINCE OF ONTARIO

CITY OF RICHMOND HILL
BUILDING DIVISION
05/01/2024
RECEIVED
Per: joshua.nabua

C-C-CAN2020 ©2020 SIMPSON STRONG-TIE COMPANY INC.

TECHNICAL BULLETIN

LUS – Double Shear Joist Hangers

SIMPSON Strong-Tie®

All LUS hangers have double shear nailing. This patented innovation distributes the load through two points on each joist nail for greater strength. It also allows the use of fewer nails, faster installation and the use of common nails for all connections.

Material: 18 gauge

Finish: G90 galvanized

Design:

- Factored resistances are in accordance with CSA O86-14.
- Uplift resistances have been increased 15%. No further increase is permitted.
- Wood shear is not considered in the factored resistances given. The specifier must ensure that the joist and header capacities are capable of withstanding these loads.

Installation:

- Use all specified fasteners.
- Nails: 16d = 0.162" dia. x 3½" long common wire, 10d = 0.148" x 3" long common wire.
- Double shear nails must be driven at an angle through the joist or truss into the header to achieve the table loads.
- Not designed for welded or nailer applications.

Options:

- These hangers cannot be modified

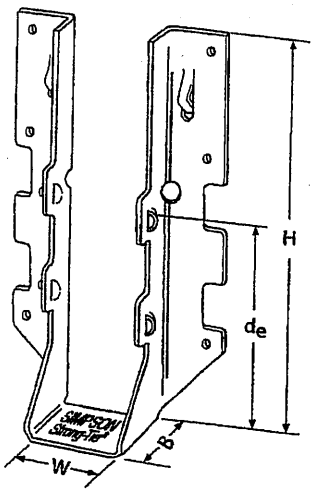

LUS28

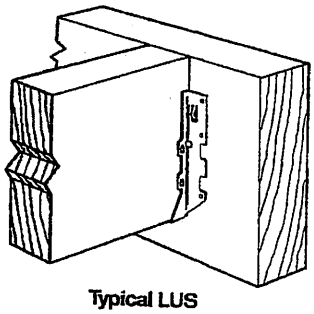

Typical LUS Installation

Model No.	Ga.	Dimensions (in.)				Fasteners		Factored Resistance (lb.)			
								D.Fir-L		S-P-F	
		W	H	B	d_e[1]	Face	Joist	Uplift (K_D=1.15)	Normal (K_D=1.00)	Uplift (K_D=1.15)	Normal (K_D=1.00)
LUS24	18	1 9/16	3 1/8	1 3/4	1 15/16	(4) 10d	(2) 10d	710	1630	645	1155
LUS24-2	18	3 1/8	3 1/8	2	1 13/16	(4) 16d	(2) 16d	835	2020	590	1435
LUS26	18	1 9/16	4 3/4	1 3/4	3 5/8	(4) 10d	(4) 10d	1420	2170	1290	1630
LUS26-2	18	3 1/8	4 7/8	2	4	(4) 16d	(4) 16d	1720	2595	1545	1920
LUS26-3	18	4 5/8	4 3/16	2	3 1/4	(4) 16d	(4) 16d	1720	2595	1545	2340
LUS28	18	1 9/16	6 5/8	1 3/4	3 3/4	(6) 10d	(6) 10d	1420	2520	1290	1790
LUS28-2	18	3 1/8	7	2	4	(6) 16d	(4) 16d	1720	3325	1545	2575
LUS28-3	18	4 5/8	6 1/4	2	3 1/4	(6) 16d	(4) 16d	1720	3325	1545	2375
LUS210	18	1 9/16	7 13/16	1 3/4	3 7/8	(8) 10d	(4) 10d	1420	2785	1290	2210
LUS210-2	18	3 1/8	9	2	6	(8) 16d	(6) 16d	2580	4500	2320	3195
LUS210-3	18	4 5/8	8 3/16	2	5 1/4	(8) 16d	(6) 16d	2580	3345	2320	2375

1. d_e is the distance from the seat of the hanger to the highest joist nail.

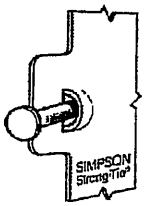

Dome Double Shear Nailing prevents tabs breaking off (available on some models).

U.S. Patent 5,603,580

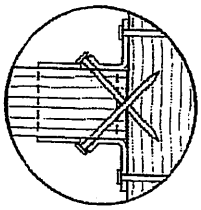

Double Shear Nailing Top View.

LICENSED PROFESSIONAL ENGINEER
04/01/2020
B. D. BUNTING
PROVINCE OF ONTARIO

LIMIT STATES DESIGN

This technical bulletin is effective until June 30, 2022, and reflects information available as of April 1, 2020. This information is updated periodically and should not be relied upon after June 30, 2022. Contact Simpson Strong-Tie for current information and limited warranty or see strongtie.com.

© 2020 Simpson Strong-Tie Company Inc.

T-SPECLUS20 3/20 exp. 6/22

(800) 999-5099
strongtie.com

CITY OF RICHMOND HILL
BUILDING DIVISION
05/01/2024
RECEIVED
Per: joshua.nabua

TECHNICAL BULLETIN

HUS/LJS – Double Shear Joist Hangers

SIMPSON Strong-Tie®

All hangers have double shear nailing. This patented innovation distributes the load through two points on each joist nail for greater strength. It also allows the use of fewer nails, faster installation and the use of common nails for all connections. Do not bend or remove tabs.

Material: See table

Finish: G90 galvanized

Design:

- Factored resistances are in accordance with CSA O86-14.
- Uplift resistances have been increased 15%. No further increase is permitted.
- Wood shear is not considered in the factored resistances given. The specifier must ensure that the joist and header capacities are capable of withstanding these loads.

Installation:

- Use all specified fasteners
- Nails: 16d = 0.162" dia. x 3½" long common wire
- Double shear nails must be driven at an angle through the joist or truss into the header to achieve the table loads
- Not designed for welded or nailer applications

Options:

- See current catalogue for options

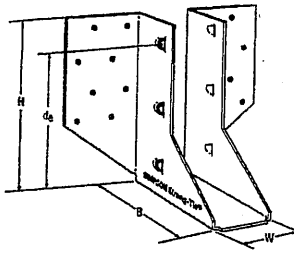

LJS26DS

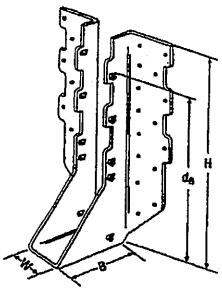

HUS210
(HUS26, HUS28, similar)

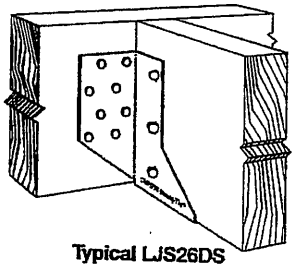

Typical LJS26DS Installation

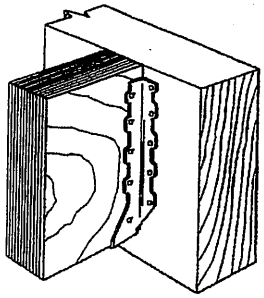

Typical HUS Installation

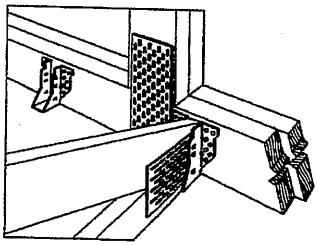

Typical HUS Installation
(Truss Designer to provide fastener quantity for connecting multiple members together)

Model No.	Ga.	Dimensions (in.)				Fasteners		Factored Resistance (lb.)			
								D.Fir-L.		S-P-F	
		W	H	B	d_e[1]	Face	Joist	Uplift (K_D=1.15) lb.	Normal (K_D=1.00) lb.	Uplift (K_D=1.15) lb.	Normal (K_D=1.00) lb.
LJS26DS	18	1 9/16	5	3½	4⅝	(16) 16d	(6) 16d	2055	4265	1460	4115
HUS26	16	1⅝	5⅜	3	3 15/16	(14) 16d	(6) 16d	2705	4940	2065	3875
HUS28	16	1⅝	7 3/32	3	6 3/32	(22) 16d	(8) 16d	3605	5365	2675	4345
HUS210	16	1⅝	9 3/32	3	7 31/32	(30) 16d	(10) 16d	4505	5795	4010	4740
HUS1.81/10	16	1 13/16	9	3	8	(30) 16d	(10) 16d	4505	6450	4010	5200

1. d_e is the distance from the seat of the hanger to the highest joist nail.

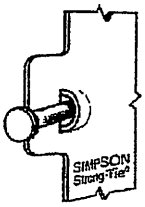

Dome Double Shear Nailing prevents tabs breaking off (available on some models).

U.S. Patent 5,603,580

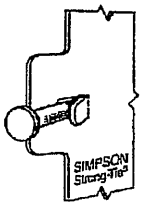

Double Shear Nailing Side View. Do not bend tab back.

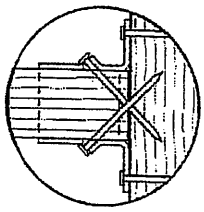

Double Shear Nailing Top View.

LICENSED PROFESSIONAL ENGINEER
04/01/2020
B. D. BUNTING
PROVINCE OF ONTARIO

LIMIT STATES DESIGN

This technical bulletin is effective until June 30, 2022, and reflects information available as of April 1, 2020. This information is updated periodically and should not be relied upon after June 30, 2022. Contact Simpson Strong-Tie for current information and limited warranty or see strongtie.com.

© 2020 Simpson Strong-Tie Company Inc.

T-SPECHUS20 3/20 exp. 6/22

(800) 999-5099
strongtie.com

CITY OF RICHMOND HILL
BUILDING DIVISION
05/01/2024
RECEIVED
Per: joshua.nabua

TECHNICAL BULLETIN

HGUS – Double Shear Joist Hangers

SIMPSON Strong-Tie®

All HGUS hangers have double shear nailing. This patented innovation distributes the load through two points on each joist nail for greater strength. It also allows the use of fewer nails, faster installation and the use of common nails for all connections. Do not bend or remove tabs.

Material: 12 gauge

Finish: G90 galvanized

Design:

- Factored resistances are in accordance with CSA O86-14.
- Uplift resistances have been increased 15%. No further increase is permitted.
- Wood shear is not considered in the factored resistances given. The specifier must ensure that the joist and header capacities are capable of withstanding these loads.

Installation:

- Use all specified fasteners
- Nails: 16d = 0.162" dia x 3½" long common wire
- Double shear nails must be driven at an angle through the joist or truss into the header to achieve the table loads
- Not designed for welded or nailer applications

Options:

- See current catalogue for options

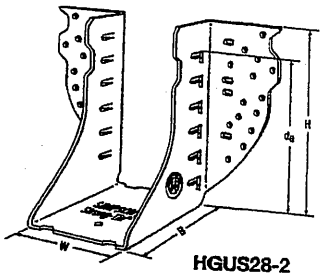

HGUS28-2

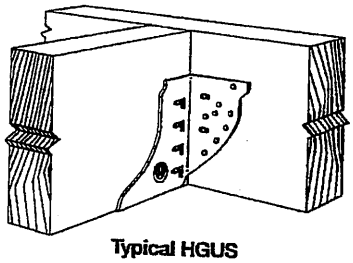

Typical HGUS Installation

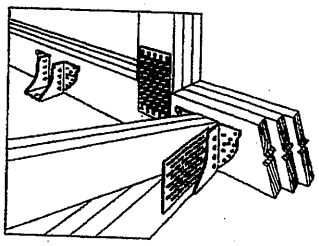

Typical HGUS Installation (Truss Designer to provide fastener quantity for connecting multiple members together)

Model No.	Ga.	Dimensions (in.)				Fasteners		Factored Resistance (lb.)			
								D.Fir-L		S-P-F	
		W	H	B	d_e[1]	Face	Joist	Uplift (K_D=1.15)	Normal (K_D=1.00)	Uplift (K_D=1.15)	Normal (K_D=1.00)
HGUS26	12	1⅝	5⅜	5	4 5/32	(20) 16d	(8) 16d	2685	6625	2685	5700
HGUS26-2	12	3 5/16	5 7/16	4	4⅛	(20) 16d	(8) 16d	4385	8950	3100	6355
HGUS26-3	12	4 15/16	5½	4	4⅛	(20) 16d	(8) 16d	4385	8950	3100	6355
HGUS26-4	12	6 9/16	5 7/16	4	4⅛	(20) 16d	(8) 16d	4385	8950	3100	6355
HGUS28	12	1⅝	7⅛	5	6⅛	(36) 16d	(12) 16d	3310	7675	3100	6900
HGUS28-2	12	3 5/16	7 3/16	4	6⅛	(36) 16d	(12) 16d	6070	12980	4310	9215
HGUS28-3	12	4 15/16	7¼	4	6⅜	(36) 16d	(12) 16d	6070	12980	4310	9215
HGUS28-4	12	6 9/16	7 3/16	4	6⅛	(36) 16d	(12) 16d	6070	12980	4310	9215
HGUS210	12	1⅝	9⅛	5	7⅞	(46) 16d	(16) 16d	3535	11070	2510	8090
HGUS210-2	12	3 5/16	9 3/16	4	8⅛	(46) 16d	(16) 16d	6840	14015	4855	10270
HGUS210-3	12	4 15/16	9¼	4	8⅜	(46) 16d	(16) 16d	6840	14645	4855	10400
HGUS210-4	12	6 9/16	9 3/16	4	8⅛	(46) 16d	(16) 16d	6840	14645	4855	10400
HGUS212-4	12	6 9/16	10⅝	4	10⅛	(56) 16d	(20) 16d	7640	14995	5425	10645
HGUS214-4	12	6 9/16	12⅝	4	11⅛	(66) 16d	(22) 16d	10130	16400	7195	11645

1. d_e is the distance from the seat of the hanger to the highest joist nail.

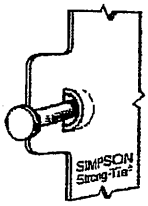

Dome Double Shear Nailing prevents tabs breaking off (available on some models).

U.S. Patent 5,603,580

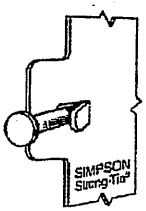

Double Shear Nailing Side View. Do not bend tab back.

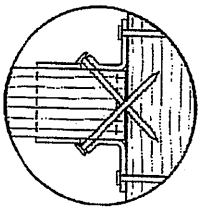

Double Shear Nailing Top View.

LICENSED PROFESSIONAL ENGINEER
04/01/2020
B. D. BUNTING
PROVINCE OF ONTARIO

LIMIT STATES DESIGN

This technical bulletin is effective until June 30, 2022, and reflects information available as of April 1, 2020. This information is updated periodically and should not be relied upon after June 30, 2022. Contact Simpson Strong-Tie for current information and limited warranty or see strongtie.com.

© 2020 Simpson Strong-Tie Company Inc.

T-SPECHGUS20 3/20 exp. 6/22

(800) 999-5099
strongtie.com

CITY OF RICHMOND HILL
BUILDING DIVISION
05/01/2024
RECEIVED
Per: joshua.nabua

SIMPSON Strong-Tie

H/TSP

Seismic and Hurricane Ties (cont.)

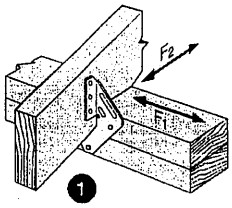

1 H1 Installation

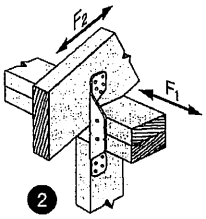

2 H2A Installation

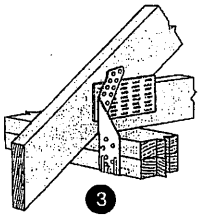

3 TSP Installation

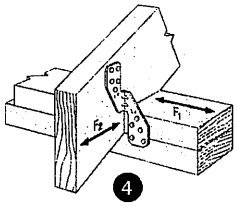

4 H2.5A Installation
(Nails into both top plates)

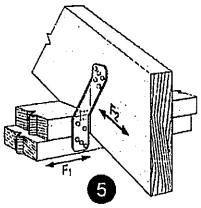

5 H2.5T Installation
(Nails into both top plates)

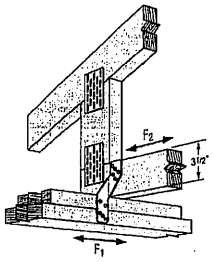

6 H2.5T Installation

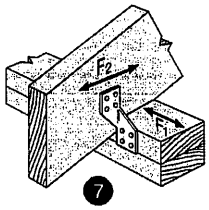

7 H3 Installation
(Nails into upper top plate)

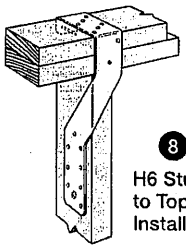

8 H6 Stud to Top Plate Installation

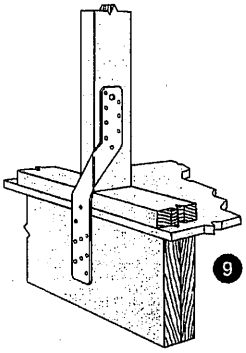

9 H6 Stud to Band Joist Installation

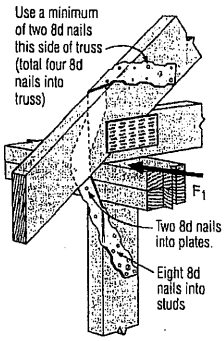

10 H7Z Installation

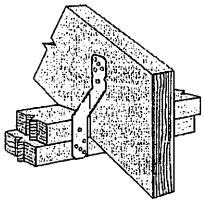

11 H8 Attaching Rafter to Double Top Plates

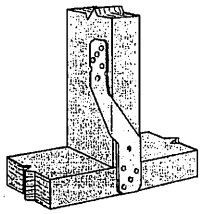

12 H8 attaching Stud to Sill
((4) 8d into plate, (5) 8d into stud)

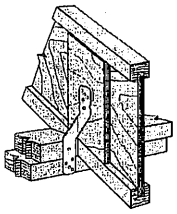

13 H8 attaching I-Joist to Double Top Plates

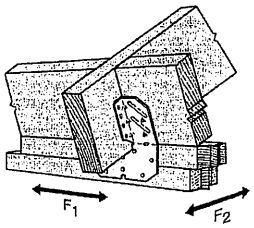

14 H10A Field-Bent Installation

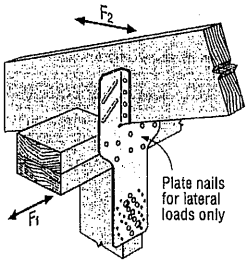

15 H10S Installation

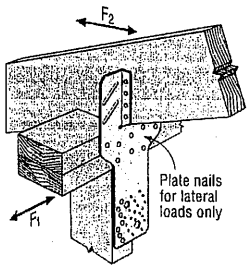

16 H10S Installation with Stud Offset

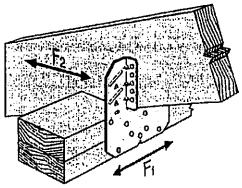

17 H10A Installation

H10A optional positive angle nailing connects shear blocking to rafter. Use 8d common nails. Slot allows maximum field-bending up to a pitch of 6/12, use 75% of the table uplift value; bend one time only.

1

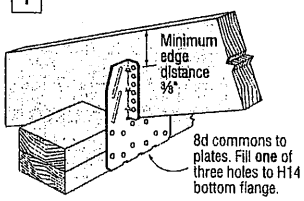

18 H14 Installation to Double Top Plates

2

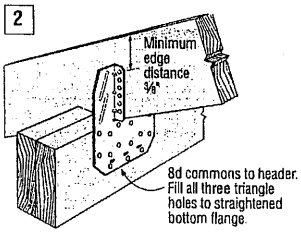

19 H14 Installation to Double 2x Header

Avoid a Misinstallation

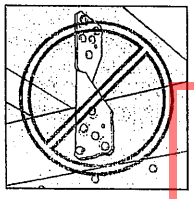

Do not make new holes or overdrive nails.

C-C-CAN2018 ©2017 SIMPSON STRONG-TIE COMPANY INC.

CITY OF RICHMOND HILL
BUILDING DIVISION
05/01/2024
RECEIVED
Per: joshua.nabua

H/TSP

Seismic and Hurricane Ties

Simpson Strong-Tie® hurricane ties provide a positive connection between truss/rafter and the wall of the structure to resist wind and seismic forces. New additions to the line provide even more options.

- H10AR — The heavy-duty design of the H10A available with a 2" wide throat to accommodate rough lumber
- H10A-2 — The H10A design with a 3" throat for double 2x members
- H2ASS, H2.5ASS and H10ASS — Popular ties now available in stainless steel

Material: See table

Finish: Galvanized. H7Z and H11Z — ZMAX® coating. Some models available in stainless steel or ZMAX; see Corrosion Information, pp. 20–24 or visit **strongtie.com**.

Installation:

- Use all specified fasteners; see General Notes.
- H1 can be installed with flanges facing inward (reverse of H1 installation drawing; number 1).
- H2.5T, H3 and H6 ties are shipped in equal quantities of right and left versions (right versions shown).
- Hurricane ties do not replace solid blocking.
- When installing ties on plated trusses (on the side opposite the truss plate) do not fasten through the truss plate from behind. This can force the truss plate off of the truss and compromise truss performance.
- H10A optional nailing to connect shear blocking, use 8d nails. Slots allow maximum field bending up to a pitch of 6:12, use H10A sloped loads for field bent installation.

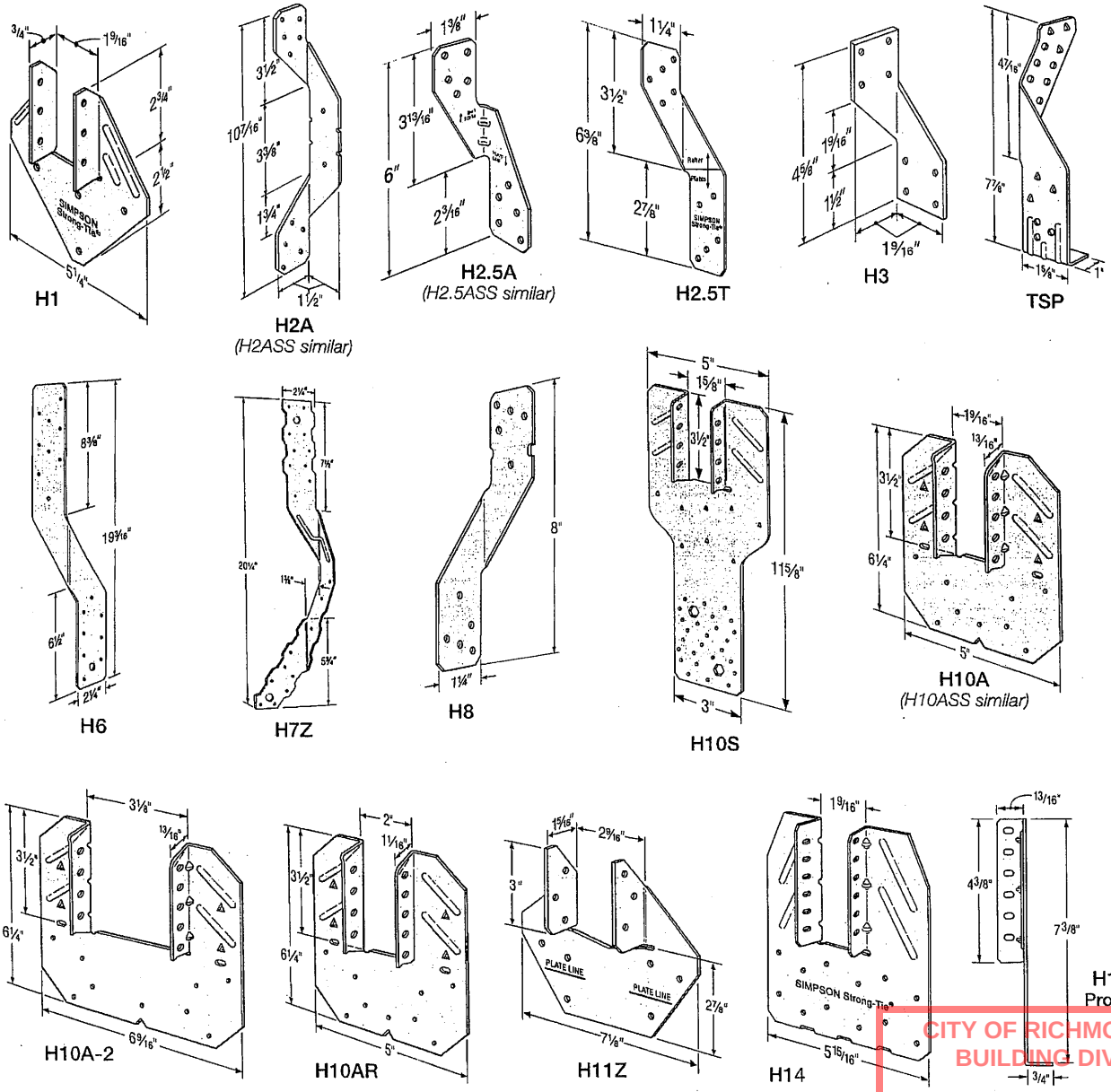

C-C-CAN2018 ©2017 SIMPSON STRONG-TIE COMPANY INC.

CITY OF RICHMOND HILL
BUILDING DIVISION
05/01/2024
RECEIVED
Per: joshua.nabua

TECHNICAL BULLETIN

H – Seismic and Hurricane Ties

SIMPSON Strong-Tie®

The H connector series provides wind and seismic ties for trusses and rafters.

Material: 18 gauge **Finish:** G90 galvanized

Design: • Factored resistances are in accordance with CSA O86-14
• Factored resistances have been increased 15%. No further increase is permitted.

Installation: • Use all specified fasteners
• Nails: 8d = 0.131" dia. x 2½" long common wire, 8d x 1½" = 0.131" x 1½ long, 10d x 1½" = 0.146" x 1½" long
• H1 can be installed with flanges facing outwards
• Hurricane ties do not replace solid blocking

Factored resistances for more than one direction for a single connection cannot be added together. A factored load which can be divided into components in the directions given must be evaluated as follows: Factored Shear/Resisting Shear + Factored Tension/Resisting Tension ≤ 1.0.

Hurricane Tie Installations to Achieve Twice the Load (Top View)

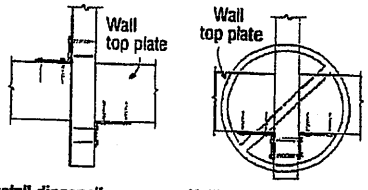

Install diagonally across from each other for minimum 2x truss.

Nailing into both sides of a single ply 2x truss may cause the wood to split.

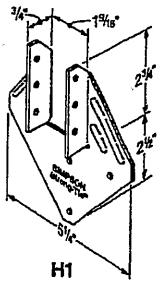
H1

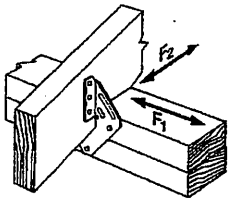

H1 Installation

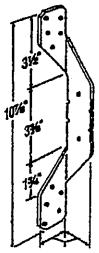
H2A

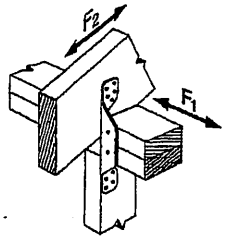

H2A Installation

H2.5A

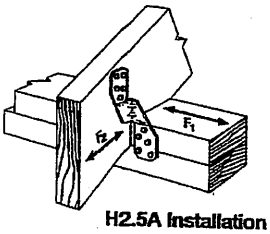

H2.5A Installation

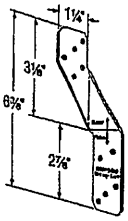
H2.5T

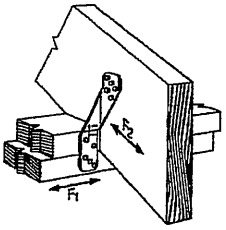

H2.5T Installation
(Nails into both top plates)

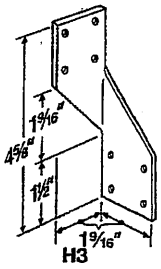
H3

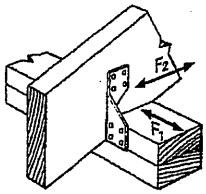

H3 Installation

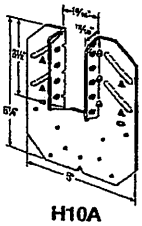
H10A

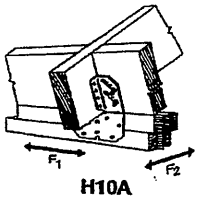

H10A Installation

Model No.	Ga.	Fasteners			Factored Resistance (lb.)					
					D.Fir-L			S-P-F		
		To Rafter	To Plates	To Studs	Uplift	Normal F_1	Normal F_2	Uplift	Normal F_1	Normal F_2
					(K_D=1.15)			(K_D=1.15)		
H1	18	(6) 8d x 1½"	(4) 8d	—	740	685	300	680	485	215
H2A	18	(5) 8d x 1½"	(2) 8d x 1½"	(5) 8d x 1½"	830	220	75	590	155	55
H2.5A	18	(5) 8d	(5) 8d	—	805	160	160	755	160	160
H2.5T	18	(5) 8d	(5) 8d	—	835	175	240	740	160	210
H3	18	(4) 8d	(4) 8d	—	740	180	265	615	125	190
H10A	18	(9) 10d x 1½"	(9) 10d x 1½"	—	1735	795	410	1505	565	290

1. Factored resistances have been increased 15% for earthquake or wind loading with no further increase allowed.
2. Factored resistances are for one anchor. A minimum rafter thickness of 2½" must be used when framing anchors are installed on each side of the joist and on the same side of the plate.
3. When cross-grain bending or cross-grain tension cannot be avoided, mechanical reinforcement to resist such forces should be considered.
4. Hurricane ties are shown installed on the outside of the wall for clarity. Installation on the inside of the wall is acceptable. For a Continuous Load Path, connections must be on same side of the wall.

LICENSED PROFESSIONAL ENGINEER
04/01/2020
B. D. BUNTING
PROVINCE OF ONTARIO

LIMIT STATES DESIGN

This technical bulletin is effective until June 30, 2022, and reflects information available as of April 1, 2020. This information is updated periodically and should not be relied upon after June 30, 2022. Contact Simpson Strong-Tie for current information and limited warranty or see strongtie.com.

© 2020 Simpson Strong-Tie Company Inc.

T-SPECH20 3/20 exp. 6/22

(800) 999-5099
strongtie.com

CITY OF RICHMOND HILL
BUILDING DIVISION
05/01/2024
RECEIVED
Per: joshua.nabua

ONTARIO WOOD TRUSS
FABRICATORS ASSOCIATION

TECH-NOTES

TN 15-001
Piggyback Bracing

Overview:

Where piggybacks are connected overtop of base trusses, 2x4 purlins must be first added to the flat portion of the base truss at a spacing no more than 24" o/c. These purlins not only provide support for the piggyback trusses above, but are required to laterally support the top chord of the base truss which will not have the sheathing directly connected to the flat portion of the base truss. This ensures the top chord, most often in compression, will not buckle laterally.

Further, the purlins in the plane of the flat portion require diagonal bracing to prevent lateral displacement of the purlins themselves where under certain conditions, the trusses may in fact all buckle in the same direction if this additional bracing is not added in the plane of the purlins.

Detail:

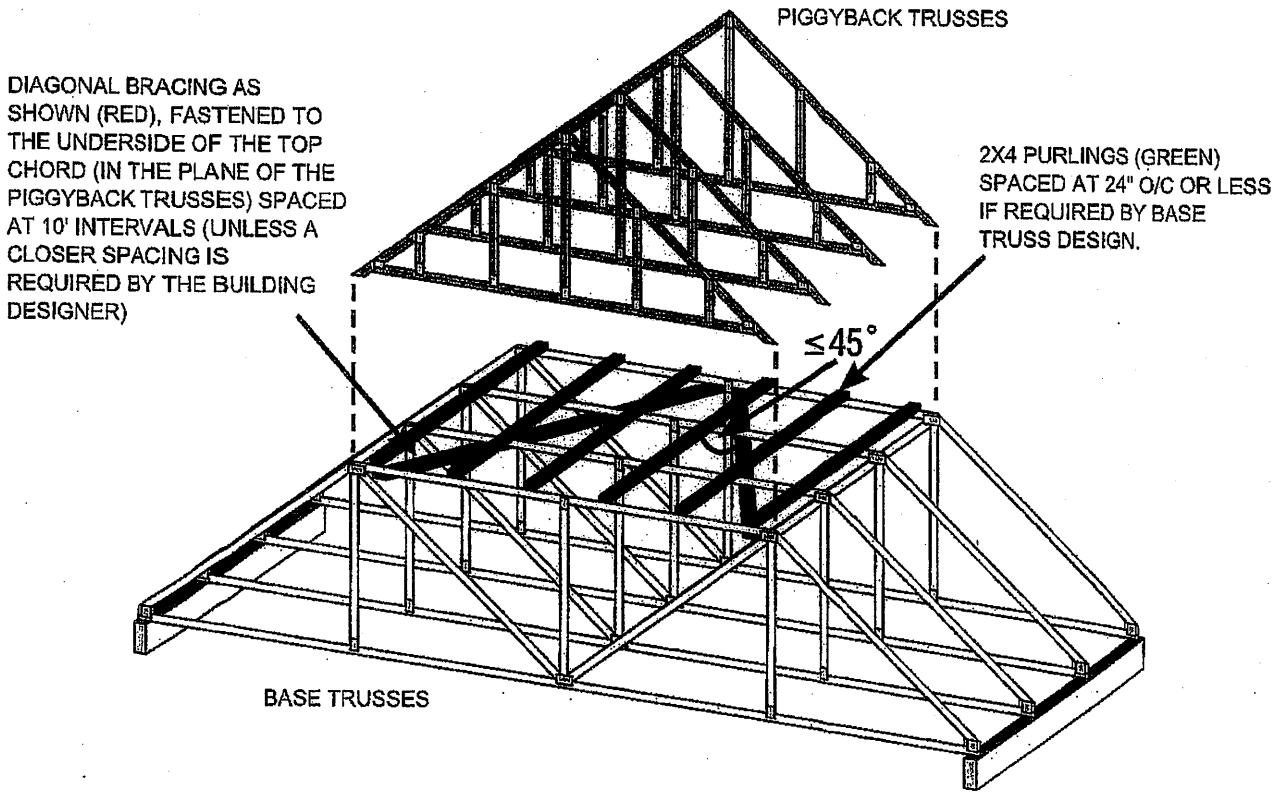

NOTE: THE SLOPED PORTION OF THE TOP CHORD OF THE BASE TRUSS AND PIGGYBACK TRUSS IN THIS SKETCH IS ASSUMED TO BE SHEATHED IN ACCORDANCE WITH THE OBC.

SKETCH FROM BCSI-CANADA 2013

Disclaimer:

OWTFA Tech Notes are intended to provide guidance to the design community both within the membership as well as to third party designers who might benefit from the information. The details have been developed by the OWTFA technical committee and although there may be professional engineers involved in development, the information contained in the tech-note are not intended to be used without having a professional engineer review the information for a specific application. The OWTFA takes no responsibility with respect to the information provided but has developed this tech-note to offer guidance where it is not currently readily available.

CITY OF RICHMOND HILL
BUILDING DIVISION
05/01/2024
RECEIVED
Per: joshua.nabua

Symbols

PLATE LOCATION AND ORIENTATION

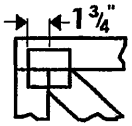

Center plate on joint unless x, y offsets are indicated. Dimensions are in ft-in-sixteenths or mm. Apply plates to both sides of truss and fully embed teeth.

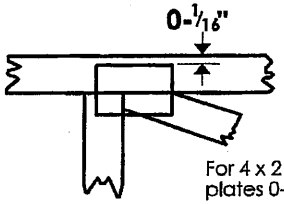

For 4 x 2 orientation, locate plates 0-1/16" from outside edge of truss.

This symbol indicates the required direction of slots in connector plates.

*Plate location details available in MiTek software or upon request.

PLATE SIZE

4 x 4

The first dimension is the plate width measured perpendicular to slots. Second dimension is the length parallel to slots.

LATERAL BRACING LOCATION

Indicated by symbol shown and/or by text in the bracing section of the output. Use T, I or Eliminator bracing if indicated.

BEARING

Indicates location where bearings (supports) occur. Icons vary but reaction section indicates joint number where bearings occur.

Industry Standards:

TPIC: Truss Design Procedures and Specifications for Light Metal Plate Connected Wood Trusses
DSB-89: Design Standard for Bracing.
BCSI: Building Component Safety Information, Guide to Good Practice for Handling, Installing & Bracing of Metal Plate Connected Wood Trusses.

Numbering System

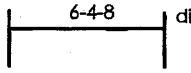

dimensions shown in ft-in-sixteenths or mm (Drawings not to scale)

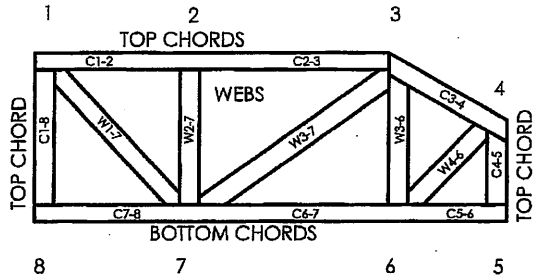

JOINTS ARE GENERALLY NUMBERED/LETTERED CLOCKWISE AROUND THE TRUSS STARTING AT THE JOINT FARTHEST TO THE LEFT.

CHORDS AND WEBS ARE IDENTIFIED BY END JOINT NUMBERS/LETTERS.

PRODUCT CODE APPROVALS

CCMC Reports:

11996-L, 10319-L, 13270-L, 12691-R

© 2007 MiTek® All Rights Reserved

MiTek®
POWER TO PERFORM.™

MiTek Engineering Reference Sheet: MII-7473C rev. 10-'08

General Safety Notes

Failure to Follow Could Cause Property Damage or Personal Injury

1. Additional stability bracing for truss system, e.g. diagonal or X-bracing, is always required. See BCSI.
2. Truss bracing must be designed by an engineer. For wide truss spacing, individual lateral braces themselves may require bracing, or alternative T, I, or Eliminator bracing should be considered.
3. Never exceed the design loading shown and never stack materials on inadequately braced trusses.
4. Provide copies of this truss design to the building designer, erection supervisor, property owner and all other interested parties.
5. Cut members to bear tightly against each other.
6. Place plates on each face of truss at each joint and embed fully. Knots and wane at joint locations are regulated by TPIC.
7. Design assumes trusses will be suitably protected from the environment in accord with TPIC.
8. Unless otherwise noted, moisture content of lumber shall not exceed 19% at time of fabrication.
9. Unless expressly noted, this design is not applicable for use with fire retardant, preservative treated, or green lumber.
10. Camber is a non-structural consideration and is the responsibility of truss fabricator. General practice is to camber for dead load deflection.
11. Plate type, size, orientation and location dimensions indicated are minimum plating requirements.
12. Lumber used shall be of the species and size, and in all respects, equal to or better than that specified.
13. Top chords must be sheathed or purlins provided at spacing indicated on design.
14. Bottom chords require lateral bracing at 10 ft. spacing, or less, if no ceiling is installed, unless otherwise noted.
15. Connections not shown are the responsibility of others.
16. Do not cut or alter truss member or plate without prior approval of an engineer.
17. Install and load vertically unless indicated otherwise.
18. Use of green or treated lumber may pose unacceptable environmental, health or performance risks. Consult with project engineer before use.
19. Review all portions of this design (front, back, words and pictures) before use. Reviewing pictures alone is not sufficient.
20. Design assumes manufacture in accordance with TPIC Quality Criteria.

RECEIVED
Per: joshua.nabua
05/01/2024
CITY OF RICHMOND HILL
BUILDING DIVISION