ENGINEERING NOTE PAGE (ENP-1)
PLEASE READ PRIOR TO INSTALLATION

NE0618-032
GREEN YORK HOMES-CELESTIAL 2 EL 1

RESPONSIBILITIES

THIS DESIGN IS FOR AN INDIVIDUAL BUILDING COMPONENT AND HAS BEEN BASED ON INFORMATION PROVIDED BY THE DESIGN OFFICE OF KOTT LUMBER. THE UNDERSIGNED ENGINEER DISCLAIMS ANY RESPONSIBILITY FOR DAMAGES AS A RESULT OF FAULTY OR INCORRECT INFORMATION, SPECIFICATION AND/OR DESIGNS FURNISHED TO THE ENGINEER. THE UNDERSIGNED ENGINEER IS ONLY RESPONSIBLE FOR THE STRUCTURAL INTEGRITY OF THIS BUILDING COMPONENT FOR THE CONDITIONS AND LOADS SHOWN ON THIS DRAWING. THE STRUCTURAL INTEGRITY OF THE BUILDING AND THE VERIFICATION OF THE DIMENSIONS AND THE DESIGN LOADS USED ARE THE RESPONSIBILITY OF THE BUILDING DESIGNER.

TRUSSES ARE DESIGNED IN CONFORMANCE WITH THE RELEVANT SECTIONS OF THE NATIONAL BUILDING CODE OF CANADA OR THE CANADIAN CODE FOR FARM BUILDINGS, WHICHEVER APPLIES TO THE BUILDING TYPE INDICATED ON THE DRAWING

IT IS THE RESPONSIBILITY OF KOTT LUMBER TO ENSURE THAT TRUSSES ARE MANUFACTURED IN CONFORMANCE WITH THESE DESIGNS AND WITH THE SPECIFICATIONS OUTLINED BELOW. THE UNDERSIGNED ENGINEER IS NOT RESPONSIBLE FOR QUALITY CONTROL IN THE TRUSS MANUFACTURING PLANT.

USE AND OCCUPANCY

- The building is of the type indicated on the drawing

LOADING

- The truss loading intensity and distribution as well as load transfer mechanism is that indicated on the drawing
- No buildings, trees, parapets or other projections higher than the roof for which the trusses are used are located within a distance less than ten (10) times the difference in height, or five metres (16 ft) whichever is greater, unless the drawing indicates that the snow drifting has been taken into account

HANDLING, INSTALLATION AND BRACING

- The trusses must be handled and installed by a qualified professional as per the supplied document titled *Information for Truss Installers* and the BCSI-B1 and BCSI-B3 Summary Sheets
- The compression chords are laterally braced by continuous rigid diaphragm sheathing or as specified on the drawing
- Temporary and permanent bracing must be installed as indicated on the truss drawing and according to the BCSI-B1 and BCSI-B3 Summary Sheets. Bracing for the lateral stability of the truss is to be provided by the building designer
- **It is recommended that a Professional Engineer's advice be obtained for the bracing of trusses spanning more than 12.37m (40'-7")**

SUPPORTS

- The trusses are to be supported at the bearing points indicated and anchored to the supports where considered necessary by the designer of the overall structure
- Bearing sizes shown are the minimum required to prevent crushing of the truss members and do not necessarily take into account stability of the overall building structure
- Elevation of bearings must be carefully checked and shimmed to alignment for solid bearings
- Adequate wood truss bearing is the responsibility of the building designer.

DIMENSIONS

- Geometry of the truss and dimensions indicated on the drawing are identical to those of the installed truss.

KOTT

THIS CERTIFICATION IS FOR THE ENGINEERING REVIEW OF STRUCTURAL COMPONENTS SHOWN ON THIS DRAWING AND IS LIMITED TO THE COMPONENTS SUPPLIED BY KOTT LUMBER FOR THE LOADS AND CONDITIONS SHOWN ON THE CALCULATION PAGE OF EACH COMPONENT. THE PLACEMENT OF THESE COMPONENTS ON THIS LAYOUT IS SHOWN FOR REFERENCE ONLY. ROOF TRUSSES MUST BE INSTALLED ACCORDING TO MANUFACTURER'S GUIDELINES AT 24" C/C UNLESS NOTED OTHERWISE. CONVENTIONAL FRAMING SHOWN ON THE LAYOUT MUST BE DESIGNED AND APPROVED BY THE PROJECT ENGINEER. TEMPORARY AND PERMANENT BRACINGS OF THE ROOF AND BUILDING ARE THE RESPONSIBILITY OF THE PROJECT ENGINEER AND TO CONFORM TO BCSI GUIDELINES.

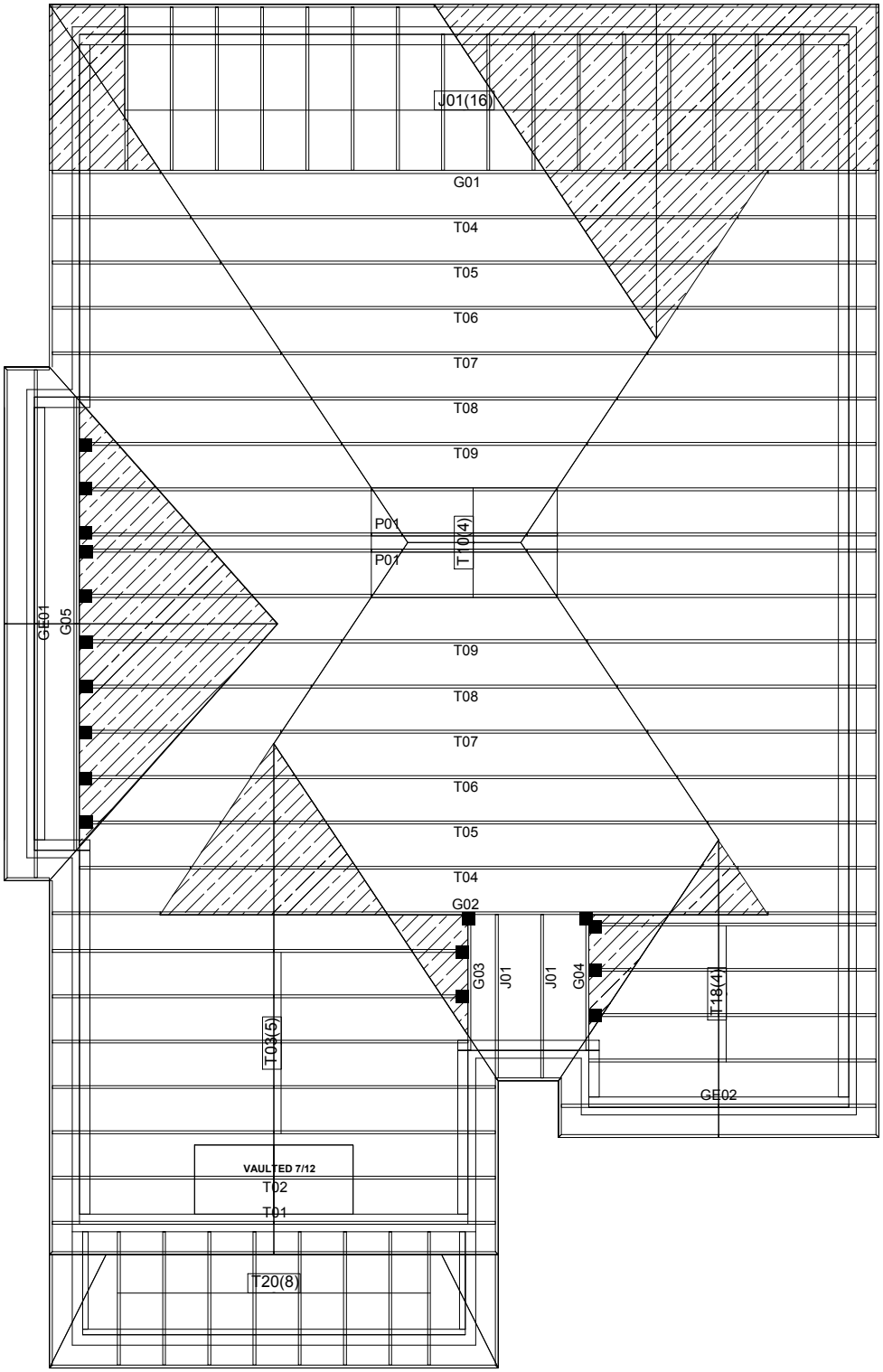

LICENSED PROFESSIONAL ENGINEER
N.A. EL-MASRI
PROVINCE OF ONTARIO

Jun 05, 2018

NE0618-032

The components shown on this layout conform to our recommendations and are adequate to support the design loads required by the Ontario Building Code O.Reg 332/12 as amended and as shown on the engineering calculation page of each component.

The framing direction and girder locations shown on this layout conform to that shown on the architectural drawing.

Deflection: LL = L/360
1.33LL+DL=L/360

Architectural Drawing Info:
Date: MAY 22, 2018
Project number: 17-55
Model: CELESTIAL 2

CONVENTIONAL FRAMING BY OTHERS

ALL CONVENTIONAL FRAMING TO CONFORM WITH PART 9 OF THE O.B.C
ROOF RAFTERS THAT CROSS MEET OVER TRUSSES TO BE 2x4 S.P.F. @ 24"O/C WITH A 2x4 VERTICAL POST TO THE TRUSS UNDERNEATH EACH CROSS POINT. VERTICAL POST LONGER THAN 6' TO HAVE LATERAL BRACING SO THAT THE DISTANCE BETWEEN END POINT AND BETWEEN ROWS OF BRACING DOES NOT EXCEED 6'.

HANGER LEGEND:

▼ LUS24 ■ LJS26DS
● HGUS26 ✕ HGUS26-2

SIZE AND LOCATION OF CONVENTIONAL FRAMING IS APPROXIMATE. ALL AREAS MAY NOT BE SHOWN. REFER TO ARCHITECTURAL PLANS FOR DETAILS.

DESIGN CRITERIA
SPECIFIED LOADS:
TOP CH. LL = 23.3 PSF
DL = 3 PSF
BOT CH. LL = 0 PSF
DL = 7 PSF
TOTAL LOAD = 33.3 PSF

SPACING = 24" O/C.

THIS TRUSS IS DESIGNED FOR RESIDENTIAL OR SMALL BUILDING REQUIREMENTS OF PART 9, NBCC 2010

THIS DESIGN COMPLIES WITH:
- PART 9 OF OBC 2012 , BCBC 2012 , ABC 2014
- CSA 086-09
- TPIC 2011

Model: **CELESTIAL 2 EL 1 4&5 BED**
Customer: GREEN YORK HOMES
Project: GRANELLI HOMES
Location: BRAMPTON
Date: 5/31/2018 Drawn by: BB

JOB NAME	TRUSS NAME	QUANTITY	PLY	JOB DESC.	DWG NO.
NE0618-032	G01	1	1	GREEN YORK HOMES-CELESTIAL 2 EL 1 / TRUSS DESC.	PAGE 3 OF 30

Version 8.210 S Mar 12 2018 MiTek Industries, Inc. Tue Jun 5 16:23:07 2018 Page 1
ID:XgvKq7wA9gLFADxpsWFVufzB0Hj-yk9nXifCjydwQycvaqFj0J5bOTaOvx?2HnDjBBz9I9I

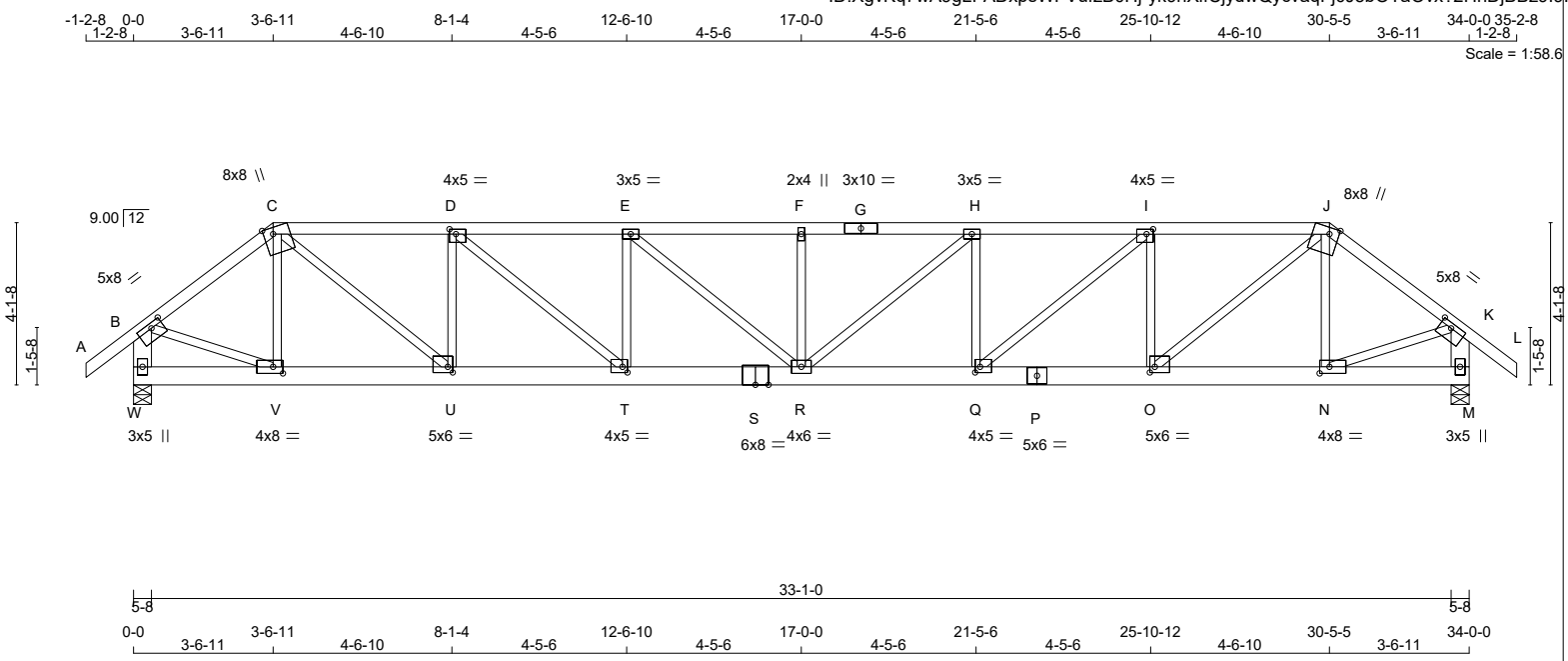

TOTAL WEIGHT = 160 lb

LUMBER

N. L. G. A. RULES

CHORDS	SIZE		LUMBER	DESCR.
A - C	2x4	DRY	No.2	SPF
C - G	2x4	DRY	2100F 1.8E	SPF
G - J	2x4	DRY	2100F 1.8E	SPF
J - L	2x4	DRY	No.2	SPF
W - B	2x6	DRY	No.2	SPF
M - K	2x6	DRY	No.2	SPF
W - S	2x6	DRY	No.2	SPF
S - P	2x6	DRY	No.2	SPF
P - M	2x6	DRY	No.2	SPF
ALL WEBS EXCEPT	2x3	DRY	No.2	SPF

DRY: SEASONED LUMBER.

PLATES (table is in inches)

JT	TYPE	PLATES	W	LEN	Y	X
B	TMVW-t	MT20	5.0	8.0	1.50	3.50
C	TTWW+m	MT20	8.0	8.0	Edge	3.00
D	TMWW-t	MT20	4.0	5.0	1.50	2.00
E	TMWW-t	MT20	3.0	5.0		
F	TMW+w	MT20	2.0	4.0		
G	TS-t	MT20	3.0	10.0		
H	TMWW-t	MT20	3.0	5.0		
I	TMWW-t	MT20	4.0	5.0	1.50	2.00
J	TTWW+m	MT20	8.0	8.0	Edge	3.00
K	TMVW-t	MT20	5.0	8.0	1.50	3.50
M	BMV1+p	MT20	3.0	5.0		
N	BMWW-t	MT20	4.0	8.0	2.00	3.00
O	BMWW-t	MT20	5.0	6.0	1.75	1.50
P	BS-t	MT20	5.0	6.0		
Q	BMWW-t	MT20	4.0	5.0	1.75	1.50
R	BMWWW-t	MT20	4.0	6.0		
S	BS-t	MT20	6.0	8.0		
T	BMWW-t	MT20	4.0	5.0	1.75	1.50
U	BMWW-t	MT20	5.0	6.0	1.75	1.50
V	BMWW-t	MT20	4.0	8.0	2.00	3.00
W	BMV1+p	MT20	3.0	5.0		

Edge - INDICATES REFERENCE CORNER OF PLATE TOUCHES EDGE OF CHORD.

READ ALL NOTES ON THIS PAGE AND ON ENGINEERING NOTE PAGE ENP-1. THIS NOTE PAGE IS AN INTEGRAL PART OF THIS DRAWING AS IT CONTAINS SPECIFICATIONS AND CRITERIA USED IN THE DESIGN OF THIS COMPONENT.

LICENSED PROFESSIONAL ENGINEER
N.A. EL-MASRI
PROVINCE OF ONTARIO
Jun 05, 2018

DIMENSIONS, SUPPORTS AND LOADINGS SPECIFIED BY FABRICATOR TO BE VERIFIED BY BUILDING DESIGNER

BEARINGS

JT	FACTORED GROSS REACTION VERT	HORZ	MAXIMUM FACTORED GROSS REACTION DOWN	HORZ	UPLIFT	INPUT BRG IN-SX	REQRD BRG IN-SX
W	3104	0	3104	0	0	5-8	5-8
M	3104	0	3104	0	0	5-8	5-8

UNFACTORED REACTIONS

JT	1ST LCASE COMBINED	MAX./MIN. COMPONENT REACTIONS SNOW	LIVE	PERM.LIVE	WIND	DEAD	SOIL
W	2177	1531 / 0	0 / 0	0 / 0	0 / 0	646 / 0	0 / 0
M	2177	1531 / 0	0 / 0	0 / 0	0 / 0	646 / 0	0 / 0

BEARING MATERIAL TO BE SPF NO.2 OR BETTER AT JOINT(S) W, M

BRACING

TOP CHORD TO BE SHEATHED OR MAX. PURLIN SPACING = 2.97 FT.
MAX. UNBRACED BOTTOM CHORD LENGTH = 10.00 FT OR RIGID CEILING DIRECTLY APPLIED.

ALL PITCH BREAKS AND PERIMETER CORNER JOINTS MUST BE LATERALLY RESTRAINED.

LOADING

TOTAL LOAD CASES: (4)

CHORDS

MEMB. FR-TO	MAX. FACTORED FORCE (LBS)	FACTORED VERT. LOAD (PLF) FROM	TO	LC1 CSI (LC)	MAX UNBRAC LENGTH
A- B	0 / 30	-77.4	-77.4	0.10 (1)	10.00
B- C	-3398 / 0	-77.4	-77.4	0.38 (1)	3.46
C- D	-5152 / 0	-145.9	-145.9	0.48 (1)	3.47
D- E	-6542 / 0	-145.9	-145.9	0.58 (1)	3.00
E- F	-7008 / 0	-145.9	-145.9	0.54 (1)	2.97
F- G	-7008 / 0	-145.9	-145.9	0.54 (1)	2.97
G- H	-7008 / 0	-145.9	-145.9	0.54 (1)	2.97
H- I	-6542 / 0	-145.9	-145.9	0.58 (1)	3.00
I- J	-5152 / 0	-145.9	-145.9	0.48 (1)	3.47
J- K	-3398 / 0	-77.4	-77.4	0.38 (1)	3.46
K- L	0 / 30	-77.4	-77.4	0.10 (1)	10.00
W- B	-3061 / 0	0.0	0.0	0.22 (1)	5.98
M- K	-3061 / 0	0.0	0.0	0.22 (1)	5.98
W- V	0 / 0	-33.0	-33.0	0.07 (4)	10.00
V- U	0 / 2695	-33.0	-33.0	0.40 (1)	10.00
U- T	0 / 5153	-33.0	-33.0	0.75 (1)	10.00
T- S	0 / 6542	-33.0	-33.0	0.95 (1)	10.00
S- R	0 / 6542	-33.0	-33.0	0.95 (1)	10.00
R- Q	0 / 6542	-33.0	-33.0	0.95 (1)	10.00
Q- P	0 / 5153	-33.0	-33.0	0.75 (1)	10.00
P- O	0 / 5153	-33.0	-33.0	0.75 (1)	10.00
O- N	0 / 2695	-33.0	-33.0	0.40 (1)	10.00
N- M	0 / 0	-33.0	-33.0	0.07 (4)	10.00

WEBS

MEMB. FR-TO	MAX. FACTORED FORCE (LBS)	MAX CSI (LC)
V- C	-602 / 0	0.15 (1)
C- U	0 / 3178	0.79 (1)
U- D	-1889 / 0	0.48 (1)
D- T	0 / 1818	0.45 (1)
T- E	-1018 / 0	0.26 (1)
E- R	0 / 609	0.15 (1)
R- F	-656 / 0	0.17 (1)
R- H	0 / 609	0.15 (1)
Q- H	-1018 / 0	0.26 (1)
Q- I	0 / 1818	0.45 (1)
O- I	-1889 / 0	0.48 (1)
O- J	0 / 3178	0.79 (1)
N- J	-602 / 0	0.15 (1)
B- V	0 / 2821	0.70 (1)
N- K	0 / 2821	0.70 (1)

FACTORED CONCENTRATED LOADS (LBS)

JT	LOC.	LC1	MAX-	MAX+	FACE	DIR.	TYPE
C	3-6-11	-206	-206	---	FRONT	VERT	TOTAL
J	30-5-5	-206	-206	---	FRONT	VERT	TOTAL

DESIGN CRITERIA

SPECIFIED LOADS:

TOP CH.	LL	=	23.3	PSF
	DL	=	3.0	PSF
BOT CH.	LL	=	0.0	PSF
	DL	=	7.0	PSF
TOTAL LOAD		=	33.3	PSF

SPACING = 24.0 IN. C/C

LOADING IN FLAT SECTION BASED ON A SLOPE OF 2.00/12 MINIMUM

GIRDER TYPE: CPrimeHip
SIDE SETBACK = 3-6-11
END SETBACK = 6-0-0
END WALL WIDTH = 5-8
CORNER FRAMING TYPE: CONVENTIONAL
END JACK TYPE: CONVENTIONAL
APPLIED TO FRONT SIDE
- ADDT'L LOADS BASED ON 55 % OF GSL.

THIS TRUSS IS DESIGNED FOR RESIDENTIAL OR SMALL BUILDING REQUIREMENTS OF PART 9, NBCC 2010

THIS DESIGN COMPLIES WITH:
- PART 9 OF OBC 2012 , BCBC 2012 , ABC 2014
- CSA 086-09
- TPIC 2011

(55 % OF 27.2 P.S.F. G.S.L. PLUS 8.4 P.S.F. RAIN LOAD) EQUALS 23.3 P.S.F. SPECIFIED ROOF LIVE LOAD

ALLOWABLE DEFL.(LL)= L/360 (1.13")
CALCULATED VERT. DEFL.(LL) = L/ 999 (0.37")
ALLOWABLE DEFL.(TL)= L/360 (1.13")
CALCULATED VERT. DEFL.(TL) = L/ 638 (0.64")

CSI: TC=0.58/1.00 (D-E:1) , BC=0.95/1.00 (R-T:1) , WB=0.79/1.00 (J-O:1) , SSI=0.34/1.00 (I-J:1)

DOL LUMBER=1.00 NAIL=1.00 LS BEND=1.00 COMP=1.00 SHEAR=1.00 TENS= 1.00

COMPANION LIVE LOAD FACTOR = 0.50

TRUSS PLATE MANUFACTURER IS NOT RESPONSIBLE FOR QUALITY CONTROL IN THE TRUSS MANUFACTURING PLANT .

NAIL VALUES

PLATE	GRIP(DRY) (PSI) MAX	MIN	SHEAR (PLI) MAX	MIN	SECTION (PLI) MAX	MIN
MT20	618	354	1667	822	2284	1656

CONTINUED ON PAGE 2

KOTT

HANGERS NOTES

1) SPECIAL HANGER(S) OR CONNECTION(S) REQUIRED TO SUPPORT CONCENTRATED LOAD(S) 206.4 lbs FACTORED DOWN AT 30-5-5, AND 206.4 lbs FACTORED DOWN AT 3-6-11 ON TOP CHORD. DESIGN FOR UNSPECIFIED CONNECTION(S) IS DELEGATED TO THE BUILDING DESIGNER.

PLATE PLACEMENT TOL. = 0.250 inches

PLATE ROTATION TOL. = 5.0 Deg.

JSI GRIP= 0.90 (V) (INPUT = 0.90)
JSI METAL= 0.88 (S) (INPUT = 1.00)

READ ALL NOTES ON THIS PAGE AND ON ENGINEERING NOTE PAGE ENP-1. THIS NOTE PAGE IS AN INTEGRAL PART OF THIS DRAWING AS IT CONTAINS SPECIFICATIONS AND CRITERIA USED IN THE DESIGN OF THIS COMPONENT.

KOTT

JOB NAME	TRUSS NAME	QUANTITY	PLY	JOB DESC.	DWG NO.
NE0618-032	G02	1	1	GREEN YORK HOMES-CELESTIAL 2 EL 1	
				TRUSS DESC.	PAGE 5 OF 30

Version 8.210 S Mar 12 2018 MiTek Industries, Inc. Tue Jun 5 16:23:08 2018 Page 1
ID:XgvKq7wA9gLFADxpsWFVufzB0Hj-Qxj9k2gqUGln16B58YmyYXdk7s17eNECWRzHjdz9I9H

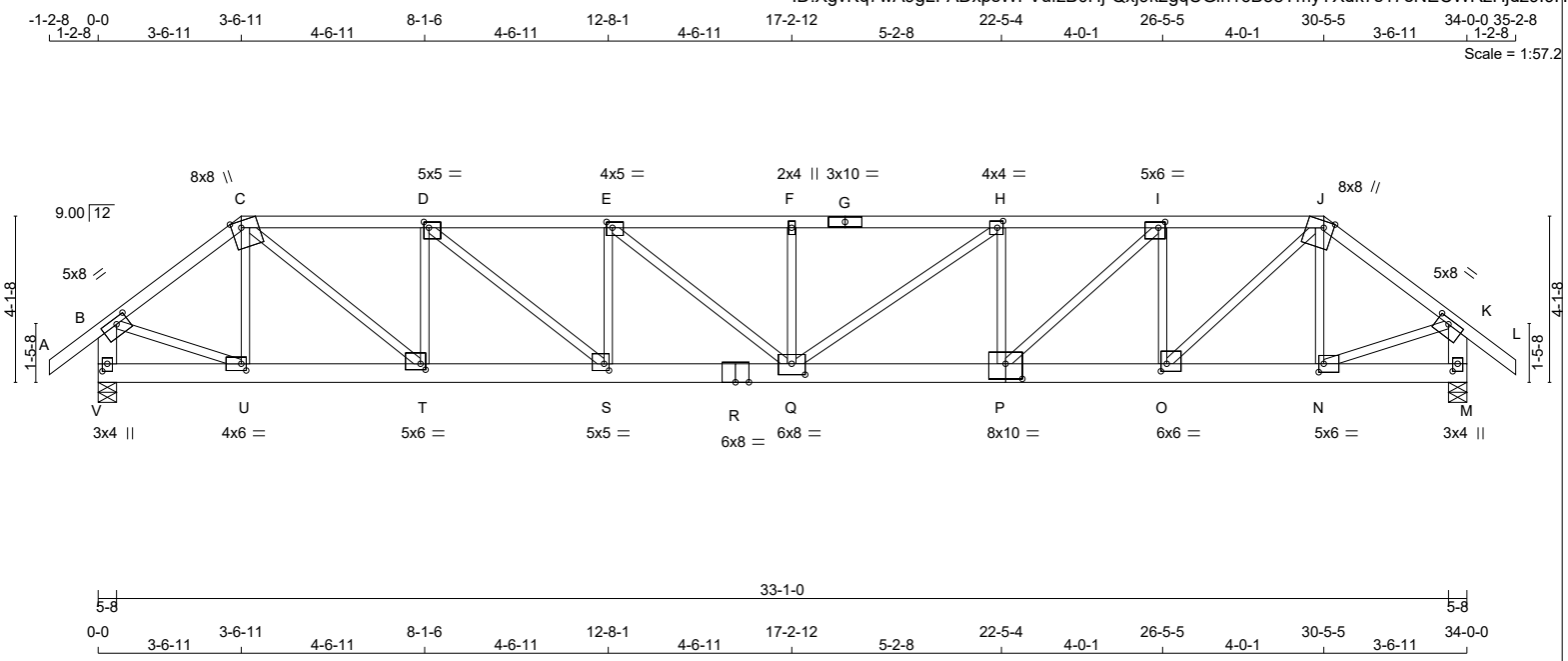

TOTAL WEIGHT = 160 lb

LUMBER
N. L. G. A. RULES

CHORDS	SIZE		LUMBER	DESCR.
A - C	2x4	DRY	No.2	SPF
C - G	2x4	DRY	2100F 1.8E	SPF
G - J	2x4	DRY	2100F 1.8E	SPF
J - L	2x4	DRY	No.2	SPF
V - B	2x6	DRY	No.2	SPF
M - K	2x6	DRY	No.2	SPF
V - R	2x6	DRY	2100F 1.8E	SPF
R - P	2x6	DRY	2100F 1.8E	SPF
P - M	2x6	DRY	2100F 1.8E	SPF
ALL WEBS EXCEPT	2x3	DRY	No.2	SPF

DRY: SEASONED LUMBER.

PLATES (table is in inches)

JT	TYPE	PLATES	W	LEN	Y	X
B	TMVW-t	MT20	5.0	8.0	1.75	3.50
C	TTWW+m	MT20	8.0	8.0	Edge	3.00
D	TMWW-t	MT20	5.0	5.0	1.75	1.50
E	TMWW-t	MT20	4.0	5.0	1.75	1.75
F	TMW+w	MT20	2.0	4.0		
G	TS-t	MT20	3.0	10.0		
H	TMWW-t	MT20	4.0	4.0	2.00	1.75
I	TMWW-t	MT20	5.0	6.0	1.75	2.00
J	TTWW+m	MT20	8.0	8.0	Edge	3.00
K	TMVW-t	MT20	5.0	8.0	1.50	3.50
M	BMV1+p	MT20	3.0	4.0	2.25	1.50
N	BMWW-t	MT20	5.0	6.0	2.50	1.50
O	BMWW-t	MT20	6.0	6.0	2.25	1.75
P	BSWW-l	MT20	8.0	10.0	4.50	5.00
Q	BMWWW-t	MT20	6.0	8.0	3.25	4.00
R	BS-t	MT20	6.0	8.0		
S	BMWW-t	MT20	5.0	5.0	2.00	1.50
T	BMWW-t	MT20	5.0	6.0	1.75	1.50
U	BMWW-t	MT20	4.0	6.0	2.00	1.50
V	BMV1+p	MT20	3.0	4.0	2.25	1.50

Edge - INDICATES REFERENCE CORNER OF PLATE TOUCHES EDGE OF CHORD.

READ ALL NOTES ON THIS PAGE AND ON ENGINEERING NOTE PAGE ENP-1. THIS NOTE PAGE IS AN INTEGRAL PART OF THIS DRAWING AS IT CONTAINS SPECIFICATIONS AND CRITERIA USED IN THE DESIGN OF THIS COMPONENT.

LICENSED PROFESSIONAL ENGINEER
N.A. EL-MASRI
PROVINCE OF ONTARIO
Jun 05, 2018

DIMENSIONS, SUPPORTS AND LOADINGS SPECIFIED BY FABRICATOR TO BE VERIFIED BY BUILDING DESIGNER

BEARINGS

JT	FACTORED GROSS REACTION VERT	HORZ	MAXIMUM FACTORED GROSS REACTION DOWN	HORZ	UPLIFT	INPUT BRG IN-SX	REQRD BRG IN-SX
V	2685	0	2685	0	0	5-8	5-8
M	2999	0	2999	0	0	5-8	5-8

UNFACTORED REACTIONS

JT	1ST LCASE COMBINED	MAX./MIN. COMPONENT REACTIONS SNOW	LIVE	PERM.LIVE	WIND	DEAD	SOIL
V	1882	1329 / 0	0 / 0	0 / 0	0 / 0	553 / 0	0 / 0
M	2103	1484 / 0	0 / 0	0 / 0	0 / 0	619 / 0	0 / 0

BEARING MATERIAL TO BE SPF NO.2 OR BETTER AT JOINT(S) V, M

BRACING
TOP CHORD TO BE SHEATHED OR MAX. PURLIN SPACING = 2.76 FT.
MAX. UNBRACED BOTTOM CHORD LENGTH = 10.00 FT OR RIGID CEILING DIRECTLY APPLIED.

ALL PITCH BREAKS AND PERIMETER CORNER JOINTS MUST BE LATERALLY RESTRAINED.

LOADING
TOTAL LOAD CASES: (4)

CHORDS

MEMB. FR-TO	MAX. FACTORED FORCE (LBS)	FACTORED VERT. LOAD (PLF) FROM	TO	LC1 CSI (LC)	MAX UNBRAC LENGTH
A- B	0 / 30	-77.4	-77.4	0.10 (1)	10.00
B- C	-2927 / 0	-77.4	-77.4	0.33 (1)	3.75
C- D	-4784 / 0	-77.4	-77.4	0.30 (1)	3.78
D- E	-6717 / 0	-77.4	-77.4	0.45 (1)	3.14
E- F	-8093 / 0	-77.4	-77.4	0.54 (1)	2.81
F- G	-8093 / 0	-77.4	-77.4	0.65 (1)	2.76
G- H	-8093 / 0	-77.4	-77.4	0.65 (1)	2.76
H- I	-7254 / 0	-77.4	-77.4	0.43 (1)	3.03
I- J	-5134 / 0	-77.4	-77.4	0.27 (1)	3.69
J- K	-3302 / 0	-77.4	-77.4	0.37 (1)	3.52
K- L	0 / 30	-77.4	-77.4	0.10 (1)	10.00
V- B	-2670 / 0	0.0	0.0	0.19 (1)	6.33
M- K	-2982 / 0	0.0	0.0	0.21 (1)	6.05
V- U	0 / 0	-17.5	-17.5	0.03 (1)	10.00
U- T	0 / 2321	-17.5	-17.5	0.15 (1)	10.00
T- S	0 / 4784	-17.5	-17.5	0.29 (1)	10.00
S- R	0 / 6717	-17.5	-17.5	0.44 (1)	10.00
R- Q	0 / 6717	-17.5	-17.5	0.44 (1)	10.00
Q- P	0 / 7254	-17.5	-17.5	0.47 (1)	10.00
P- O	0 / 5134	-17.5	-17.5	0.31 (1)	10.00
O- N	0 / 2617	-17.5	-17.5	0.16 (1)	10.00
N- M	0 / 0	-17.5	-17.5	0.02 (4)	10.00

WEBS

MEMB. FR-TO	MAX. FACTORED FORCE (LBS)	MAX CSI (LC)
U- C	-554 / 0	0.14 (1)
C- T	0 / 3184	0.79 (1)
T- D	-1967 / 0	0.50 (1)
D- S	0 / 2503	0.62 (1)
S- E	-1470 / 0	0.38 (1)
E- Q	0 / 1782	0.44 (1)
Q- F	-380 / 0	0.10 (1)
Q- H	0 / 1034	0.26 (1)
P- H	-967 / 0	0.25 (1)
P- I	0 / 2904	0.72 (1)
O- I	-2289 / 0	0.58 (1)
O- J	0 / 3441	0.85 (1)
N- J	-649 / 0	0.17 (1)
B- U	0 / 2430	0.60 (1)
N- K	0 / 2741	0.68 (1)

FACTORED CONCENTRATED LOADS (LBS)

JT	LOC.	LC1	MAX-	MAX+	FACE	DIR.	TYPE
P	22-5-4	-928	-928	---	FRONT	VERT	TOTAL
Q	17-2-12	-1331	-1331	---	FRONT	VERT	TOTAL

DESIGN CRITERIA

*** SPECIAL LOADS ANALYSIS ***
GEOMETRY AND/OR BASIC LOADS CHANGED BY USER.
LOADS WERE DERIVED FROM USER INPUT
NO FURTHER MODIFICATIONS WERE MADE

SPECIFIED LOADS:

TOP	CH.	LL	=	23.3	PSF
		DL	=	3.0	PSF
BOT	CH.	LL	=	0.0	PSF
		DL	=	7.0	PSF
TOTAL	LOAD		=	33.3	PSF

SPACING = 24.0 IN. C/C

LOADING IN FLAT SECTION BASED ON A SLOPE OF 2.00/12 MINIMUM

*** NON STANDARD GIRDER ***
ADDT'L USER-DEFINED LOADS APPLIED TO ALL LOAD CASES.

THIS TRUSS IS DESIGNED FOR RESIDENTIAL OR SMALL BUILDING REQUIREMENTS OF PART 9, NBCC 2010

THIS DESIGN COMPLIES WITH:
- PART 9 OF OBC 2012 , BCBC 2012 , ABC 2014
- CSA 086-09
- TPIC 2011

(55 % OF 27.2 P.S.F. G.S.L. PLUS 8.4 P.S.F. RAIN LOAD) EQUALS 23.3 P.S.F. SPECIFIED ROOF LIVE LOAD

ALLOWABLE DEFL.(LL)= L/360 (1.13")
CALCULATED VERT. DEFL.(LL) = L/ 999 (0.38")
ALLOWABLE DEFL.(TL)= L/360 (1.13")
CALCULATED VERT. DEFL.(TL) = L/ 607 (0.67")

CSI: TC=0.65/1.00 (F-H:1) , BC=0.47/1.00 (P-Q:1) , WB=0.85/1.00 (J-O:1) , SSI=0.18/1.00 (C-D:1)

DOL LUMBER=1.00 NAIL=1.00 LS BEND=1.00 COMP=1.00 SHEAR=1.00 TENS= 1.00

COMPANION LIVE LOAD FACTOR = 0.50

TRUSS PLATE MANUFACTURER IS NOT RESPONSIBLE FOR QUALITY CONTROL IN THE TRUSS MANUFACTURING PLANT .

NAIL VALUES

PLATE	GRIP(DRY) (PSI) MAX	MIN	SHEAR (PLI) MAX	MIN	SECTION (PLI) MAX	MIN
MT20	618	354	1667	822	2284	1656

CONTINUED ON PAGE 2

KOTT

HANGERS NOTES

1) SPECIAL HANGER(S) OR CONNECTION(S) REQUIRED TO SUPPORT CONCENTRATED LOAD(S) 1330.9 lbs FACTORED DOWN AT 17-2-12, AND 927.6 lbs FACTORED DOWN AT 22-5-4 ON BOTTOM CHORD. DESIGN FOR UNSPECIFIED CONNECTION(S) IS DELEGATED TO THE BUILDING DESIGNER.

PLATE PLACEMENT TOL. = 0.250 inches

PLATE ROTATION TOL. = 5.0 Deg.

JSI GRIP= 0.90 (O) (INPUT = 0.90)
JSI METAL= 0.98 (P) (INPUT = 1.00)

READ ALL NOTES ON THIS PAGE AND ON ENGINEERING NOTE PAGE ENP-1. THIS NOTE PAGE IS AN INTEGRAL PART OF THIS DRAWING AS IT CONTAINS SPECIFICATIONS AND CRITERIA USED IN THE DESIGN OF THIS COMPONENT.

KOTT

JOB NAME	TRUSS NAME	QUANTITY	PLY	JOB DESC.	DRWG NO.
NE0618-032	G03	1	1	GREEN YORK HOMES-CELESTIAL 2 EL 1 TRUSS DESC.	PAGE 7 OF 30

Version 8.210 S Mar 12 2018 MiTek Industries, Inc. Tue Jun 5 16:23:09 2018 Page 1
ID:XgvKq7wA9gLFADxpsWFVufzB0Hj-u7HXxOgSEatefGmIiFHB5kA2EGOGNztLI5iqF3z9I9G

Scale: 1/2"=1'

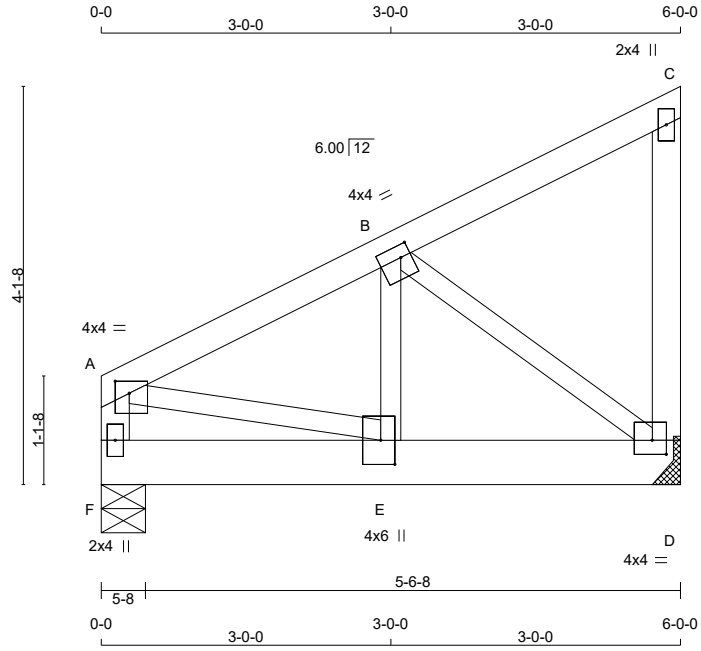

TOTAL WEIGHT = 29 lb [M]

LUMBER
N. L. G. A. RULES

CHORDS	SIZE		LUMBER	DESCR.
F - A	2x4	DRY	No.2	SPF
A - C	2x4	DRY	No.2	SPF
D - C	2x4	DRY	No.2	SPF
F - D	2x6	DRY	No.2	SPF
ALL WEBS	2x3	DRY	No.2	SPF

DRY: SEASONED LUMBER.

PLATES (table is in inches)

JT	TYPE	PLATES	W	LEN	Y	X
A	TMVW-p	MT20	4.0	4.0	1.50	1.75
B	TMWW-t	MT20	4.0	4.0	1.50	1.25
C	TMV+p	MT20	2.0	4.0		
D	BMVW1-t	MT20	4.0	4.0	1.75	1.75
E	BMWW+t	MT20	4.0	6.0	3.00	1.75
F	BMV1+p	MT20	2.0	4.0		

READ ALL NOTES ON THIS PAGE AND ON ENGINEERING NOTE PAGE ENP-1. THIS NOTE PAGE IS AN INTEGRAL PART OF THIS DRAWING AS IT CONTAINS SPECIFICATIONS AND CRITERIA USED IN THE DESIGN OF THIS COMPONENT.

LICENSED PROFESSIONAL ENGINEER
N.A. EL-MASRI
PROVINCE OF ONTARIO
Jun 05, 2018

DIMENSIONS, SUPPORTS AND LOADINGS SPECIFIED BY FABRICATOR TO BE VERIFIED BY BUILDING DESIGNER

BEARINGS

JT	FACTORED GROSS REACTION VERT	HORZ	MAXIMUM FACTORED GROSS REACTION DOWN	HORZ	UPLIFT	INPUT BRG IN-SX	REQRD BRG IN-SX
F	1331	0	1331	0	0	5-8	5-8
D	1331	0	1331	0	0	MECHANICAL	

A SUITABLE MECHANICAL CONNECTION IS REQUIRED AT JOINT D TO RESIST THE MAX FACTORED REACTIONS.

UNFACTORED REACTIONS

JT	1ST LCASE COMBINED	MAX./MIN. COMPONENT REACTIONS SNOW	LIVE	PERM.LIVE	WIND	DEAD	SOIL
F	934	653 / 0	0 / 0	0 / 0	0 / 0	281 / 0	0 / 0
D	934	653 / 0	0 / 0	0 / 0	0 / 0	281 / 0	0 / 0

BEARING MATERIAL TO BE SPF NO.2 OR BETTER AT JOINT(S) F

BRACING
TOP CHORD TO BE SHEATHED OR MAX. PURLIN SPACING = 5.78 FT.
MAX. UNBRACED BOTTOM CHORD LENGTH = 10.00 FT OR RIGID CEILING DIRECTLY APPLIED.

ALL PITCH BREAKS AND PERIMETER CORNER JOINTS MUST BE LATERALLY RESTRAINED.

LOADING
TOTAL LOAD CASES: (4)

CHORDS MEMB. FR-TO	MAX. FACTORED FORCE (LBS)	FACTORED VERT. LOAD (PLF) FROM	TO	LC1 MAX CSI (LC)	MAX. UNBRAC LENGTH	WEBS MEMB. FR-TO	MAX. FACTORED FORCE (LBS)	MAX CSI (LC)
F- A	-870 / 0	0.0	0.0	0.10 (1)	7.81	A- E	0 / 1071	0.27 (1)
A- B	-1154 / 0	-77.4	-77.4	0.11 (1)	5.78	E- B	0 / 1021	0.25 (1)
B- C	-9 / 0	-77.4	-77.4	0.09 (1)	10.00	B- D	-1297 / 0	0.31 (1)
D- C	-95 / 0	0.0	0.0	0.02 (1)	7.81			
F- E	0 / 0	-366.3	-366.3	0.21 (1)	10.00			
E- D	0 / 1041	-366.3	-366.3	0.35 (1)	10.00			

DESIGN CRITERIA

SPECIFIED LOADS:

TOP	CH.	LL	=	23.3	PSF
		DL	=	3.0	PSF
BOT	CH.	LL	=	0.0	PSF
		DL	=	7.0	PSF
TOTAL	LOAD		=	33.3	PSF

SPACING = 24.0 IN. C/C

GIRDER TYPE: CStdGirder
START DISTANCE = 0-0
START SPAN CARRIED = 17-2-0
END DISTANCE = 6-0-0
END SPAN CARRIED = 17-2-0
END WALL WIDTH = 5-8
APPLIED TO FRONT SIDE OF BOTTOM CHORD.
- ADDT'L LOADS BASED ON 55 % OF GSL.

THIS TRUSS IS DESIGNED FOR RESIDENTIAL OR SMALL BUILDING REQUIREMENTS OF PART 9, NBCC 2010

THIS DESIGN COMPLIES WITH:
- PART 9 OF OBC 2012 , BCBC 2012 , ABC 2014
- CSA 086-09
- TPIC 2011

(55 % OF 27.2 P.S.F. G.S.L. PLUS 8.4 P.S.F. RAIN LOAD) EQUALS 23.3 P.S.F. SPECIFIED ROOF LIVE LOAD

ALLOWABLE DEFL.(LL)= L/360 (0.20")
CALCULATED VERT. DEFL.(LL) = L/ 999 (0.01")
ALLOWABLE DEFL.(TL)= L/360 (0.20")
CALCULATED VERT. DEFL.(TL) = L/ 999 (0.03")

CSI: TC=0.11/1.00 (A-B:1) , BC=0.35/1.00 (D-E:1) , WB=0.31/1.00 (B-D:1) , SSI=0.42/1.00 (E-F:1)

DOL LUMBER=1.00 NAIL=1.00 LS BEND=1.00 COMP=1.00 SHEAR=1.00 TENS= 1.00

COMPANION LIVE LOAD FACTOR = 0.50

TRUSS PLATE MANUFACTURER IS NOT RESPONSIBLE FOR QUALITY CONTROL IN THE TRUSS MANUFACTURING PLANT .

NAIL VALUES

PLATE	GRIP(DRY) (PSI) MAX	MIN	SHEAR (PLI) MAX	MIN	SECTION (PLI) MAX	MIN
MT20	618	354	1667	822	2284	1656

PLATE PLACEMENT TOL. = 0.250 inches

PLATE ROTATION TOL. = 5.0 Deg.

CONTINUED ON PAGE 2

KOTT

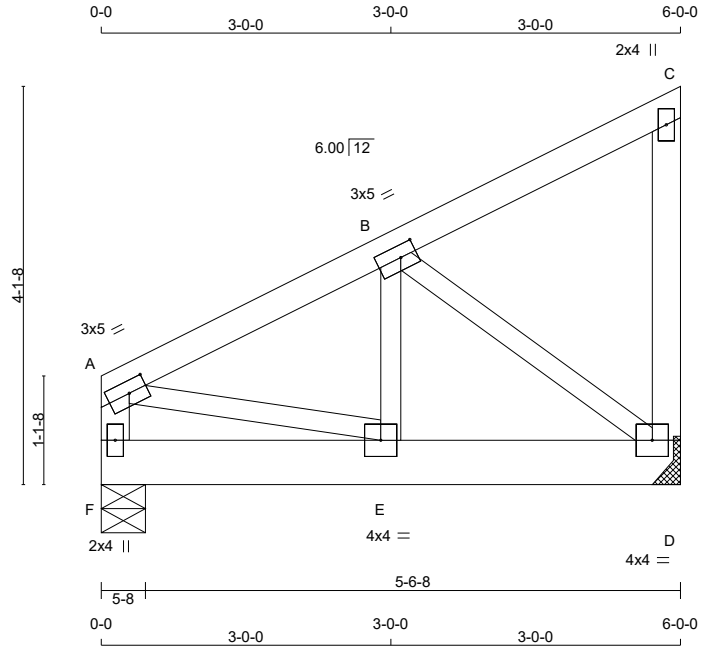

Scale: 1/2"=1'

TOTAL WEIGHT = 29 lb [M]

LUMBER
N. L. G. A. RULES

CHORDS	SIZE		LUMBER	DESCR.
F - A	2x4	DRY	No.2	SPF
A - C	2x4	DRY	No.2	SPF
D - C	2x4	DRY	No.2	SPF
F - D	2x6	DRY	No.2	SPF
ALL WEBS	2x3	DRY	No.2	SPF

DRY: SEASONED LUMBER.

PLATES (table is in inches)

JT	TYPE	PLATES	W	LEN	Y	X
A	TMVW-t	MT20	3.0	5.0	1.50	2.25
B	TMWW-t	MT20	3.0	5.0	1.50	2.00
C	TMV+p	MT20	2.0	4.0		
D	BMVW1-t	MT20	4.0	4.0		
E	BMWW-t	MT20	4.0	4.0		
F	BMV1+p	MT20	2.0	4.0		

READ ALL NOTES ON THIS PAGE AND ON ENGINEERING NOTE PAGE ENP-1. THIS NOTE PAGE IS AN INTEGRAL PART OF THIS DRAWING AS IT CONTAINS SPECIFICATIONS AND CRITERIA USED IN THE DESIGN OF THIS COMPONENT.

LICENSED PROFESSIONAL ENGINEER
N.A. EL-MASRI
PROVINCE OF ONTARIO
Jun 05, 2018

DIMENSIONS, SUPPORTS AND LOADINGS SPECIFIED BY FABRICATOR TO BE VERIFIED BY BUILDING DESIGNER

BEARINGS

JT	FACTORED GROSS REACTION VERT	HORZ	MAXIMUM FACTORED GROSS REACTION DOWN	HORZ	UPLIFT	INPUT BRG IN-SX	REQRD BRG IN-SX
F	928	0	928	0	0	5-8	5-8
D	928	0	928	0	0	MECHANICAL	

A SUITABLE MECHANICAL CONNECTION IS REQUIRED AT JOINT D TO RESIST THE MAX FACTORED REACTIONS.

UNFACTORED REACTIONS

JT	1ST LCASE COMBINED	MAX./MIN. COMPONENT REACTIONS SNOW	LIVE	PERM.LIVE	WIND	DEAD	SOIL
F	651	456 / 0	0 / 0	0 / 0	0 / 0	196 / 0	0 / 0
D	651	456 / 0	0 / 0	0 / 0	0 / 0	196 / 0	0 / 0

BEARING MATERIAL TO BE SPF NO.2 OR BETTER AT JOINT(S) F

BRACING
TOP CHORD TO BE SHEATHED OR MAX. PURLIN SPACING = 6.25 FT.
MAX. UNBRACED BOTTOM CHORD LENGTH = 10.00 FT OR RIGID CEILING DIRECTLY APPLIED.

ALL PITCH BREAKS AND PERIMETER CORNER JOINTS MUST BE LATERALLY RESTRAINED.

LOADING
TOTAL LOAD CASES: (4)

CHORDS

MEMB. FR-TO	MAX. FACTORED FORCE (LBS)	FACTORED VERT. LOAD (PLF) FROM	TO	LC1 MAX CSI (LC)	MAX. UNBRAC LENGTH
F- A	-633 / 0	0.0	0.0	0.07 (1)	7.81
A- B	-802 / 0	-77.4	-77.4	0.12 (1)	6.25
B- C	-10 / 0	-77.4	-77.4	0.10 (1)	6.25
D- C	-93 / 0	0.0	0.0	0.02 (1)	7.81
F- E	0 / 0	-231.9	-231.9	0.14 (1)	10.00
E- D	0 / 726	-231.9	-231.9	0.23 (1)	10.00

WEBS

MEMB. FR-TO	MAX. FACTORED FORCE (LBS)	MAX CSI (LC)
A- E	0 / 748	0.19 (1)
E- B	0 / 625	0.15 (1)
B- D	-905 / 0	0.22 (1)

DESIGN CRITERIA

SPECIFIED LOADS:

TOP	CH.	LL	=	23.3	PSF
		DL	=	3.0	PSF
BOT	CH.	LL	=	0.0	PSF
		DL	=	7.0	PSF
TOTAL	LOAD		=	33.3	PSF

SPACING = 24.0 IN. C/C

GIRDER TYPE: CStdGirder
START DISTANCE = 0-0
START SPAN CARRIED = 11-6-0
END DISTANCE = 6-0-0
END SPAN CARRIED = 11-6-0
END WALL WIDTH = 5-8
APPLIED TO FRONT SIDE OF BOTTOM CHORD.
- ADDT'L LOADS BASED ON 55 % OF GSL.

THIS TRUSS IS DESIGNED FOR RESIDENTIAL OR SMALL BUILDING REQUIREMENTS OF PART 9, NBCC 2010

THIS DESIGN COMPLIES WITH:
- PART 9 OF OBC 2012 , BCBC 2012 , ABC 2014
- CSA 086-09
- TPIC 2011

(55 % OF 27.2 P.S.F. G.S.L. PLUS 8.4 P.S.F. RAIN LOAD) EQUALS 23.3 P.S.F. SPECIFIED ROOF LIVE LOAD

ALLOWABLE DEFL.(LL)= L/360 (0.20")
CALCULATED VERT. DEFL.(LL) = L/ 999 (0.01")
ALLOWABLE DEFL.(TL)= L/360 (0.20")
CALCULATED VERT. DEFL.(TL) = L/ 999 (0.02")

CSI: TC=0.12/1.00 (A-B:1) , BC=0.23/1.00 (D-E:1) , WB=0.22/1.00 (B-D:1) , SSI=0.27/1.00 (E-F:1)

DOL LUMBER=1.00 NAIL=1.00 LS BEND=1.00 COMP=1.00 SHEAR=1.00 TENS= 1.00

COMPANION LIVE LOAD FACTOR = 0.50

TRUSS PLATE MANUFACTURER IS NOT RESPONSIBLE FOR QUALITY CONTROL IN THE TRUSS MANUFACTURING PLANT .

NAIL VALUES

PLATE	GRIP(DRY) (PSI) MAX	MIN	SHEAR (PLI) MAX	MIN	SECTION (PLI) MAX	MIN
MT20	618	354	1667	822	2284	1656

PLATE PLACEMENT TOL. = 0.250 inches

PLATE ROTATION TOL. = 5.0 Deg.

CONTINUED ON PAGE 2

KOTT

JSI GRIP= 0.83 (A) (INPUT = 0.90)
JSI METAL= 0.27 (D) (INPUT = 1.00)

READ ALL NOTES ON THIS PAGE AND ON ENGINEERING NOTE PAGE ENP-1. THIS NOTE PAGE IS AN INTEGRAL PART OF THIS DRAWING AS IT CONTAINS SPECIFICATIONS AND CRITERIA USED IN THE DESIGN OF THIS COMPONENT.

KOTT

JOB NAME	TRUSS NAME	QUANTITY	PLY	JOB DESC.	DWG NO.
NE0618-032	G05	1	2	GREEN YORK HOMES-CELESTIAL 2 EL 1 TRUSS DESC.	PAGE 10 OF 30

Version 8.210 S Mar 12 2018 MiTek Industries, Inc. Tue Jun 5 16:23:10 2018 Page 1
ID:XgvKq7wA9gLFADxpsWFVufzB0Hj-MJrv9kh4?t0VHQLUFzpQeyj4Xgiz6FnVzlSNnWz9I9F

Scale = 1:48.6

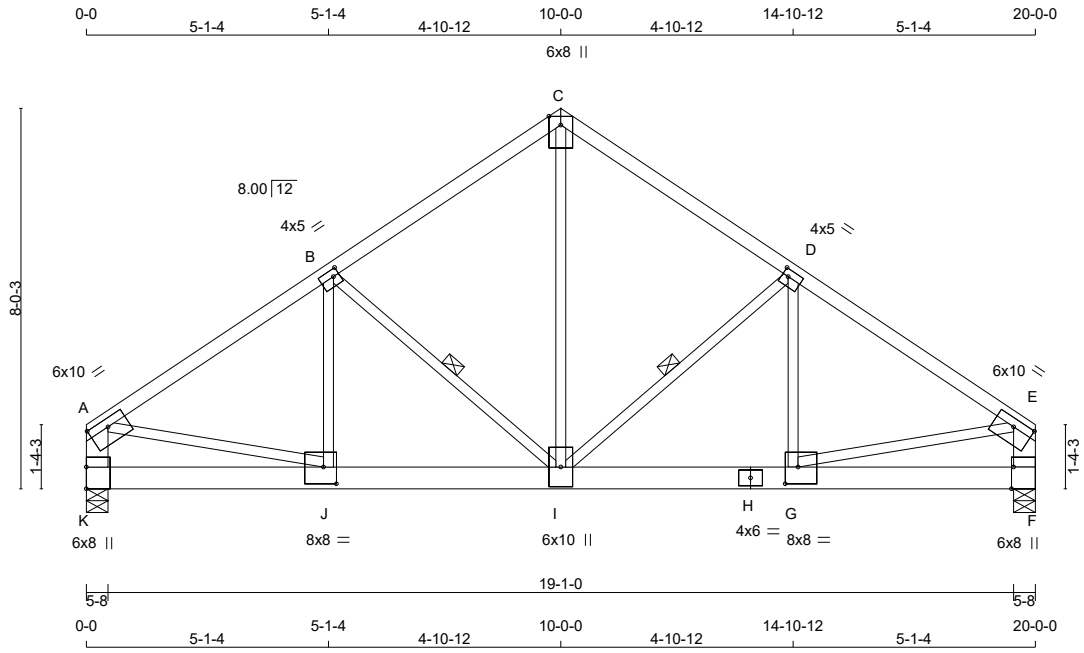

TOTAL WEIGHT = 2 X 97 = 193 lb

LUMBER

N. L. G. A. RULES

CHORDS	SIZE		LUMBER	DESCR.
A - C	2x4	DRY	No.2	SPF
C - E	2x4	DRY	No.2	SPF
K - A	2x6	DRY	No.2	SPF
F - E	2x6	DRY	No.2	SPF
K - H	2x6	DRY	2100F 1.8E	SPF
H - F	2x6	DRY	2100F 1.8E	SPF
ALL WEBS EXCEPT	2x3	DRY	No.2	SPF

DRY: SEASONED LUMBER.

DESIGN CONSISTS OF 2 TRUSSES BUILT SEPARATELY THEN FASTENED TOGETHER AS FOLLOWS:

CHORDS	#ROWS	SURFACE SPACING (IN)	LOAD(PLF)
TOP CHORDS : (0.122"X3") SPIRAL NAILS			
A- C	1	12	TOP
C- E	1	12	TOP
K- A	2	12	TOP
F- E	2	12	TOP
BOTTOM CHORDS : (0.122"X3") SPIRAL NAILS			
K- H	2	8	SIDE(374.0)
H- F	2	8	SIDE(374.0)
WEBS : (0.122"X3") SPIRAL NAILS			
2x3	1	6	

NAILS TO BE DRIVEN FROM ONE SIDE ONLY.

TOP - COMPONENTS ARE LOADED FROM THE TOP AND MUST BE PLACED ON TOP EDGE OF ALL PLIES FOR THE LOAD TO BE TRANSFERRED TO EACH PLY.

SIDE - PLF SHOWN IS THE EQUIVALENT UDL APPLIED TO ONE SIDE THAT THE CORRESPONDING NAILING PATTERN SHALL BE CAPABLE OF TRANSFERING. REMAINING PLF MUST BE APPLIED ON THE OPPOSITE SIDE OR ON THE TOP.

PLATES (table is in inches)

JT	TYPE	PLATES	W	LEN	Y	X
A	TMVW-t	MT20	6.0	10.0	2.00	5.00

READ ALL NOTES ON THIS PAGE AND ON ENGINEERING NOTE PAGE ENP-1. THIS NOTE PAGE IS AN INTEGRAL PART OF THIS DRAWING AS IT CONTAINS SPECIFICATIONS AND CRITERIA USED IN THE DESIGN OF THIS COMPONENT.

LICENSED PROFESSIONAL ENGINEER
N.A. EL-MASRI
PROVINCE OF ONTARIO
Jun 05, 2018

DIMENSIONS, SUPPORTS AND LOADINGS SPECIFIED BY FABRICATOR TO BE VERIFIED BY BUILDING DESIGNER

BEARINGS

JT	FACTORED GROSS REACTION VERT	HORZ	MAXIMUM FACTORED GROSS REACTION DOWN	HORZ	UPLIFT	INPUT BRG IN-SX	REQRD BRG IN-SX
K	8429	0	8429	0	0	5-8	5-8
F	8429	0	8429	0	0	5-8	5-8

UNFACTORED REACTIONS

JT	1ST LCASE COMBINED	MAX./MIN. COMPONENT REACTIONS SNOW	LIVE	PERM.LIVE	WIND	DEAD	SOIL
K	5915	4138 / 0	0 / 0	0 / 0	0 / 0	1777 / 0	0 / 0
F	5915	4138 / 0	0 / 0	0 / 0	0 / 0	1777 / 0	0 / 0

BEARING MATERIAL TO BE SPF NO.2 OR BETTER AT JOINT(S) K, F

BRACING

TOP CHORD TO BE SHEATHED OR MAX. PURLIN SPACING = 2.88 FT.
MAX. UNBRACED BOTTOM CHORD LENGTH = 10.00 FT OR RIGID CEILING DIRECTLY APPLIED.

ALL PITCH BREAKS AND PERIMETER CORNER JOINTS MUST BE LATERALLY RESTRAINED.

1 - 1x4 LATERAL BRACE(S) AT 1/ 2 LENGTH OF D-I, B-I. DBS = 10-0-0 . CBF = 170 LBS.

DBS = DIAGONAL BRACE SPACING (MAX). CBF = CUMULATIVE BRACING FORCE (PER BRACE). FASTEN LATERAL BRACE(S) TO EACH PLY USING (0.122"X3") SPIRAL NAILS : 1 NAIL FOR 2x3 BRACE(S), 2 FOR 1x4, 2x4, 2x5, 3 FOR 2x6, 4 FOR 2x8, 5 FOR 2x10, AND 6 FOR 2x12.

END VERTICAL(S) MUST BE SHEATHED OR HAVE BRACES AS INDICATED IN THE MAX. UNBRACED LENGTH COLUMN OF THE TABLE BELOW

LOADING

TOTAL LOAD CASES: (4)

CHORDS MEMB. FR-TO	MAX. FORCE (LBS)	FACTORED VERT. LOAD (PLF) FROM	TO	LC1 CSI (LC)	MAX UNBRAC LENGTH
A- B	-9307 / 0	-77.4	-77.4	0.65 (1)	2.88
B- C	-6893 / 0	-77.4	-77.4	0.39 (1)	3.52
C- D	-6893 / 0	-77.4	-77.4	0.39 (1)	3.52
D- E	-9307 / 0	-77.4	-77.4	0.65 (1)	2.88
K- A	-6776 / 0	0.0	0.0	0.24 (1)	5.73
F- E	-6776 / 0	0.0	0.0	0.24 (1)	5.73
K- J	0 / 0	-765.5	-765.5	0.36 (1)	10.00
J- I	0 / 7757	-765.5	-765.5	0.51 (1)	10.00
I- H	0 / 7757	-765.5	-765.5	0.51 (1)	10.00
H- G	0 / 7757	-765.5	-765.5	0.51 (1)	10.00
G- F	0 / 0	-765.5	-765.5	0.36 (1)	10.00

WEBS MEMB. FR-TO	MAX. FORCE (LBS)	MAX CSI (LC)
I- C	0 / 7310	0.90 (1)
I- D	-2722 / 0	0.42 (1)
G- D	0 / 2720	0.34 (1)
B- I	-2722 / 0	0.42 (1)
J- B	0 / 2720	0.34 (1)
A- J	0 / 7889	0.98 (1)
G- E	0 / 7889	0.98 (1)

DESIGN CRITERIA

SPECIFIED LOADS:

TOP	CH.	LL	=	23.3	PSF
		DL	=	3.0	PSF
BOT	CH.	LL	=	0.0	PSF
		DL	=	7.0	PSF
TOTAL	LOAD		=	33.3	PSF

SPACING = 24.0 IN. C/C

GIRDER TYPE: CStdGirder
START DISTANCE = 0-0
START SPAN CARRIED = 34-0-0
END DISTANCE = 20-0-0
END SPAN CARRIED = 34-0-0
END WALL WIDTH = 5-8
APPLIED TO FRONT SIDE OF BOTTOM CHORD.
- ADDT'L LOADS BASED ON 55 % OF GSL.

THIS TRUSS IS DESIGNED FOR RESIDENTIAL OR SMALL BUILDING REQUIREMENTS OF PART 9, NBCC 2010

THIS DESIGN COMPLIES WITH:
- PART 9 OF OBC 2012 , BCBC 2012 , ABC 2014
- CSA 086-09
- TPIC 2011

(55 % OF 27.2 P.S.F. G.S.L. PLUS 8.4 P.S.F. RAIN LOAD) EQUALS 23.3 P.S.F. SPECIFIED ROOF LIVE LOAD

ALLOWABLE DEFL.(LL)= L/360 (0.67")
CALCULATED VERT. DEFL.(LL) = L/ 999 (0.13")
ALLOWABLE DEFL.(TL)= L/360 (0.67")
CALCULATED VERT. DEFL.(TL) = L/ 999 (0.23")

CSI: TC=0.65/1.00 (D-E:1) , BC=0.51/1.00 (G-I:1) , WB=0.98/1.00 (E-G:1) , SSI=0.75/1.00 (F-G:1)

DOL LUMBER=1.00 NAIL=1.00 LS BEND=1.00 COMP=1.00 SHEAR=1.00 TENS= 1.00

COMPANION LIVE LOAD FACTOR = 0.50

TRUSS PLATE MANUFACTURER IS NOT RESPONSIBLE FOR QUALITY CONTROL IN THE TRUSS MANUFACTURING PLANT .

NAIL VALUES

PLATE	GRIP(DRY) (PSI) MAX	MIN	SHEAR (PLI) MAX	MIN	SECTION (PLI) MAX	MIN
MT20	618	354	1667	822	2284	1656

PLATE PLACEMENT TOL. = 0.250 inches

PLATE ROTATION TOL. = 5.0 Deg.

CONTINUED ON PAGE 2

KOTT

PLATES (table is in inches)

JT	TYPE	PLATES	W	LEN	Y	X
B	TMWW-t	MT20	4.0	5.0	1.75	1.50
C	TTW+p	MT20	6.0	8.0	Edge	
D	TMWW-t	MT20	4.0	5.0	1.75	1.50
E	TMVW-t	MT20	6.0	10.0	2.00	5.00
F	BMV1+t	MT20	6.0	8.0	Edge	0.50
G	BMWW-t	MT20	8.0	8.0	4.25	3.25
H	BS-t	MT20	4.0	6.0		
I	BMWWW+t	MT20	6.0	10.0		
J	BMWW-t	MT20	8.0	8.0	4.25	3.25
K	BMV1+t	MT20	6.0	8.0	5.50	

Edge - INDICATES REFERENCE CORNER OF PLATE TOUCHES EDGE OF CHORD.

JSI GRIP= 0.89 (J) (INPUT = 0.90)
JSI METAL= 0.81 (H) (INPUT = 1.00)

READ ALL NOTES ON THIS PAGE AND ON ENGINEERING NOTE PAGE ENP-1. THIS NOTE PAGE IS AN INTEGRAL PART OF THIS DRAWING AS IT CONTAINS SPECIFICATIONS AND CRITERIA USED IN THE DESIGN OF THIS COMPONENT.

KOTT

JOB NAME	TRUSS NAME	QUANTITY	PLY	JOB DESC.	DRWG NO.
NE0618-032	GE01	1	1	GREEN YORK HOMES-CELESTIAL 2 EL 1 / TRUSS DESC.	PAGE 12 OF 30

Version 8.210 S Mar 12 2018 MiTek Industries, Inc. Tue Jun 5 16:23:11 2018 Page 1
ID:XgvKq7wA9gLFADxpsWFVufzB0Hj-qVPHM4iimB8MuZwgpgKfA9FO449vrvWeCPBxKyz9I9E

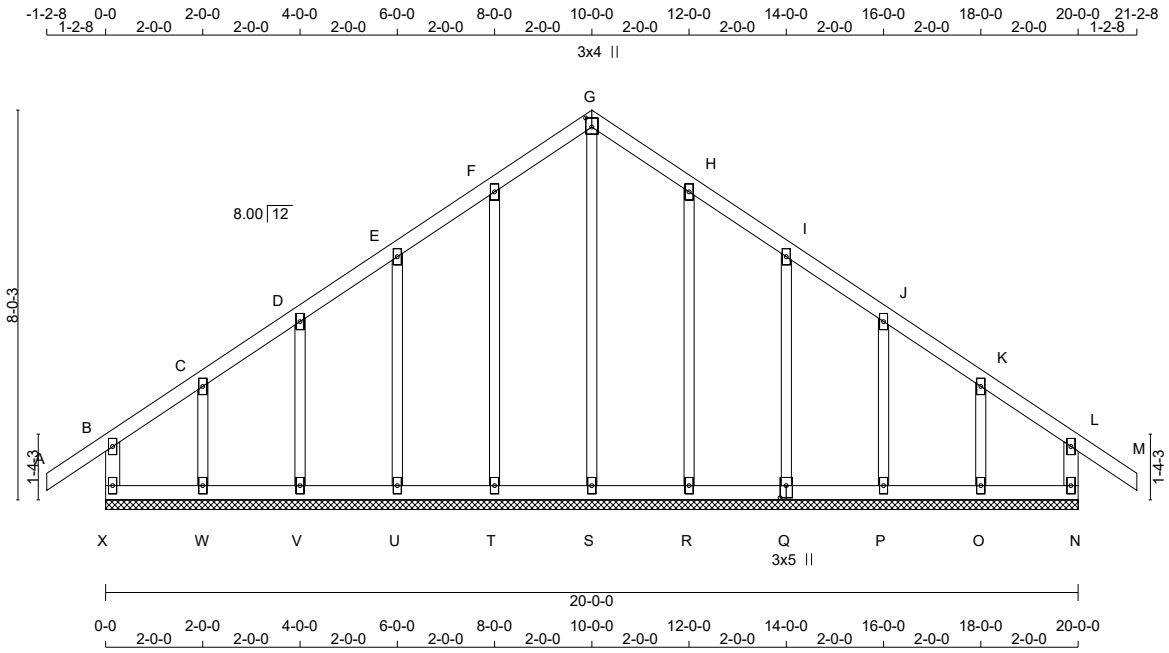

TOTAL WEIGHT = 89 lb
[M]

LUMBER
N. L. G. A. RULES

CHORDS	SIZE		LUMBER	DESCR.
X - B	2x4	DRY	No.2	SPF
A - G	2x4	DRY	No.2	SPF
G - M	2x4	DRY	No.2	SPF
N - L	2x4	DRY	No.2	SPF
X - Q	2x4	DRY	No.2	SPF
Q - N	2x4	DRY	No.2	SPF
ALL WEBS	2x3	DRY	No.2	SPF
ALL GABLE WEBS	2x3	DRY	No.2	SPF

DRY: SEASONED LUMBER.

GABLE STUDS SPACED AT 2-0-0 OC.

PLATES (table is in inches)

JT	TYPE	PLATES	W	LEN	Y	X
B	TMV+p	MT20	2.0	4.0		
C, D, E, F, H, I, J, K						
C	TMW+w	MT20	2.0	4.0		
G	TTW+p	MT20	3.0	4.0	2.25	1.50
L	TMV+p	MT20	2.0	4.0		
N	BMV1+p	MT20	2.0	4.0		
O, P, R, S, T, U, V, W						
O	BMW1+w	MT20	2.0	4.0		
Q	BSW1+l	MT20	3.0	5.0	3.00	1.50
X	BMV1+p	MT20	2.0	4.0		

READ ALL NOTES ON THIS PAGE AND ON ENGINEERING NOTE PAGE ENP-1. THIS NOTE PAGE IS AN INTEGRAL PART OF THIS DRAWING AS IT CONTAINS SPECIFICATIONS AND CRITERIA USED IN THE DESIGN OF THIS COMPONENT.

LICENSED PROFESSIONAL ENGINEER
N.A. EL-MASRI
PROVINCE OF ONTARIO
Jun 05, 2018

DIMENSIONS, SUPPORTS AND LOADINGS SPECIFIED BY FABRICATOR TO BE VERIFIED BY BUILDING DESIGNER

BEARINGS

THIS TRUSS DESIGNED FOR CONTINUOUS BEARINGS.

THIS TRUSS REQUIRES RIGID SHEATHING ON EXPOSED FACE.

BEARING MATERIAL TO BE SPF NO.2 OR BETTER AT JOINT(S)

BRACING
TOP CHORD TO BE SHEATHED OR MAX. PURLIN SPACING = 6.25 FT.
MAX. UNBRACED BOTTOM CHORD LENGTH = 10.00 FT OR RIGID CEILING DIRECTLY APPLIED.

ALL PITCH BREAKS AND PERIMETER CORNER JOINTS MUST BE LATERALLY RESTRAINED.

LOADING
TOTAL LOAD CASES: (4)

CHORDS

MEMB. FR-TO	MAX. FORCE (LBS)	FACTORED VERT. LOAD (PLF) FROM	TO	LC1	MAX CSI (LC)	MAX. UNBRAC LENGTH
X- B	-190 / 0	0.0	0.0		0.02 (1)	7.81
A- B	0 / 28	-77.4	-77.4		0.09 (1)	10.00
B- C	-29 / 0	-77.4	-77.4		0.03 (1)	6.25
C- D	-22 / 0	-77.4	-77.4		0.04 (1)	6.25
D- E	-19 / 0	-77.4	-77.4		0.04 (1)	6.25
E- F	-15 / 0	-77.4	-77.4		0.04 (1)	6.25
F- G	-13 / 0	-77.4	-77.4		0.04 (1)	6.25
G- H	-13 / 0	-77.4	-77.4		0.04 (1)	6.25
H- I	-15 / 0	-77.4	-77.4		0.04 (1)	6.25
I- J	-19 / 0	-77.4	-77.4		0.04 (1)	6.25
J- K	-22 / 0	-77.4	-77.4		0.04 (1)	6.25
K- L	-29 / 0	-77.4	-77.4		0.03 (1)	6.25
L- M	0 / 28	-77.4	-77.4		0.09 (1)	10.00
N- L	-190 / 0	0.0	0.0		0.02 (1)	7.81
X- W	0 / 24	-17.5	-17.5		0.02 (1)	10.00
W- V	0 / 19	-17.5	-17.5		0.02 (4)	10.00
V- U	0 / 15	-17.5	-17.5		0.01 (4)	10.00
U- T	0 / 13	-17.5	-17.5		0.01 (4)	10.00
T- S	0 / 11	-17.5	-17.5		0.01 (4)	10.00
S- R	0 / 11	-17.5	-17.5		0.01 (4)	10.00
R- Q	0 / 13	-17.5	-17.5		0.01 (4)	10.00
Q- P	0 / 16	-17.5	-17.5		0.01 (4)	10.00
P- O	0 / 19	-17.5	-17.5		0.02 (4)	10.00
O- N	0 / 24	-17.5	-17.5		0.02 (1)	10.00

WEBS

MEMB. FR-TO	MAX. FORCE (LBS)	MAX CSI (LC)
S- G	-147 / 0	0.18 (1)
T- F	-157 / 0	0.12 (1)
U- E	-152 / 0	0.07 (1)
V- D	-154 / 0	0.04 (1)
W- C	-147 / 0	0.02 (1)
R- H	-157 / 0	0.12 (1)
Q- I	-152 / 0	0.07 (1)
P- J	-154 / 0	0.04 (1)
O- K	-147 / 0	0.02 (1)

DESIGN CRITERIA

SPECIFIED LOADS:

TOP CH.	LL	=	23.3	PSF
	DL	=	3.0	PSF
BOT CH.	LL	=	0.0	PSF
	DL	=	7.0	PSF
TOTAL LOAD		=	33.3	PSF

SPACING = 24.0 IN. C/C

THIS TRUSS IS DESIGNED FOR RESIDENTIAL OR SMALL BUILDING REQUIREMENTS OF PART 9, NBCC 2010

THIS DESIGN COMPLIES WITH:
- PART 9 OF OBC 2012 , BCBC 2012 , ABC 2014
- CSA 086-09
- TPIC 2011

DESIGN ASSUMPTIONS
-OVERHANG NOT TO BE ALTERED OR CUT OFF.

(55 % OF 27.2 P.S.F. G.S.L. PLUS 8.4 P.S.F. RAIN LOAD) EQUALS 23.3 P.S.F. SPECIFIED ROOF LIVE LOAD

CSI: TC=0.09/1.00 (L-M:1) , BC=0.02/1.00 (N-O:1) , WB=0.18/1.00 (G-S:1) , SSI=0.06/1.00 (L-M:1)

DOL LUMBER=1.00 NAIL=1.00 LS BEND=1.10 COMP=1.10 SHEAR=1.10 TENS= 1.10

COMPANION LIVE LOAD FACTOR = 0.50

TRUSS PLATE MANUFACTURER IS NOT RESPONSIBLE FOR QUALITY CONTROL IN THE TRUSS MANUFACTURING PLANT .

NAIL VALUES

PLATE	GRIP(DRY) (PSI) MAX	MIN	SHEAR (PLI) MAX	MIN	SECTION (PLI) MAX	MIN
MT20	618	354	1667	822	2284	1656

PLATE PLACEMENT TOL. = 0.250 inches

PLATE ROTATION TOL. = 5.0 Deg.

JSI GRIP= 0.63 (Q) (INPUT = 0.90)
JSI METAL= 0.06 (Q) (INPUT = 1.00)

KOTT

JOB NAME	TRUSS NAME	QUANTITY	PLY	JOB DESC.	DRWG NO.
NE0618-032	GE02	1	1	GREEN YORK HOMES-CELESTIAL 2 EL 1 / TRUSS DESC.	PAGE 13 OF 30

Version 8.210 S Mar 12 2018 MiTek Industries, Inc. Tue Jun 5 16:23:11 2018 Page 1
ID:XgvKq7wA9gLFADxpsWFVufzB0Hj-qVPHM4iimB8MuZwgpgKfA9FO249zrwreCPBxKyz9I9E

Scale: 3/8"=1'

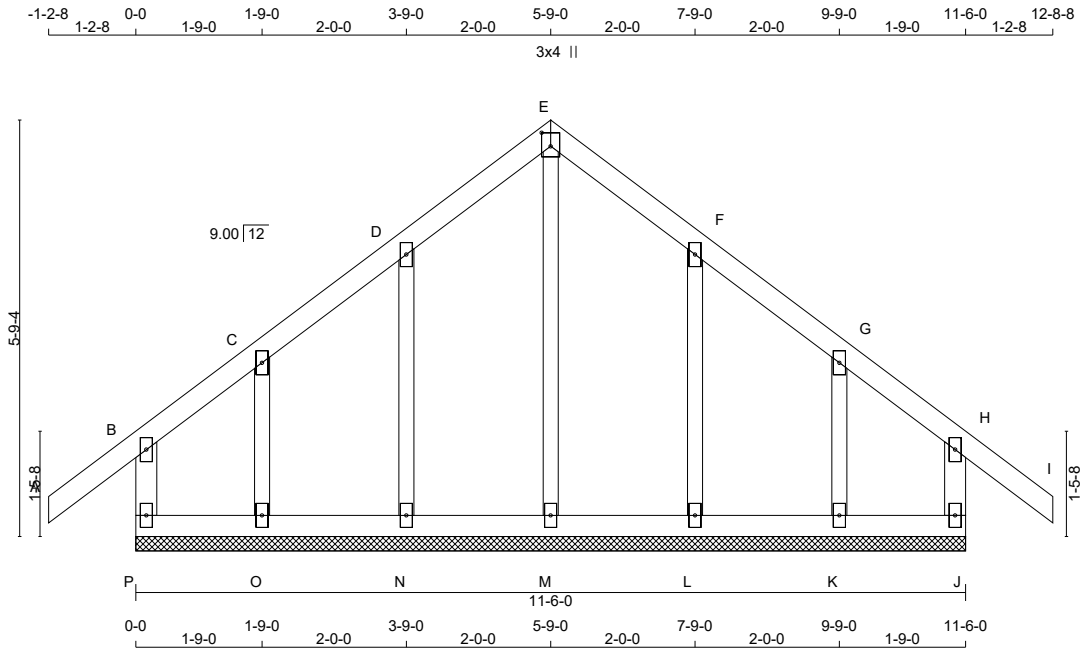

TOTAL WEIGHT = 50 lb
[M]

LUMBER
N. L. G. A. RULES

CHORDS	SIZE		LUMBER	DESCR.
P - B	2x4	DRY	No.2	SPF
A - E	2x4	DRY	No.2	SPF
E - I	2x4	DRY	No.2	SPF
J - H	2x4	DRY	No.2	SPF
P - J	2x4	DRY	No.2	SPF
ALL WEBS	2x3	DRY	No.2	SPF
ALL GABLE WEBS	2x3	DRY	No.2	SPF

DRY: SEASONED LUMBER.

GABLE STUDS SPACED AT 2-0-0 OC.

PLATES (table is in inches)

JT	TYPE	PLATES	W	LEN	Y	X
B	TMV+p	MT20	2.0	4.0		
C, D, F, G						
C	TMW+w	MT20	2.0	4.0		
E	TTW+p	MT20	3.0	4.0	2.25	1.50
H	TMV+p	MT20	2.0	4.0		
J	BMV1+p	MT20	2.0	4.0		
K, L, M, N, O						
K	BMW1+w	MT20	2.0	4.0		
P	BMV1+p	MT20	2.0	4.0		

READ ALL NOTES ON THIS PAGE AND ON ENGINEERING NOTE PAGE ENP-1. THIS NOTE PAGE IS AN INTEGRAL PART OF THIS DRAWING AS IT CONTAINS SPECIFICATIONS AND CRITERIA USED IN THE DESIGN OF THIS COMPONENT.

LICENSED PROFESSIONAL ENGINEER
N.A. EL-MASRI
PROVINCE OF ONTARIO
Jun 05, 2018

DIMENSIONS, SUPPORTS AND LOADINGS SPECIFIED BY FABRICATOR TO BE VERIFIED BY BUILDING DESIGNER

BEARINGS

THIS TRUSS DESIGNED FOR CONTINUOUS BEARINGS.

THIS TRUSS REQUIRES RIGID SHEATHING ON EXPOSED FACE.

BEARING MATERIAL TO BE SPF NO.2 OR BETTER AT JOINT(S)

BRACING
TOP CHORD TO BE SHEATHED OR MAX. PURLIN SPACING = 10.00 FT.
MAX. UNBRACED BOTTOM CHORD LENGTH = 6.25 FT OR RIGID CEILING DIRECTLY APPLIED.

ALL PITCH BREAKS AND PERIMETER CORNER JOINTS MUST BE LATERALLY RESTRAINED.

LOADING
TOTAL LOAD CASES: (4)

CHORDS

MEMB. FR-TO	MAX. FACTORED FORCE (LBS)	FACTORED VERT. LOAD (PLF) FROM	TO	LC1	MAX CSI (LC)	MAX. UNBRAC LENGTH
P- B	-172 / 0	0.0	0.0	0.03 (1)	7.81	
A- B	0 / 30	-77.4	-77.4	0.09 (1)	10.00	
B- C	-2 / 6	-77.4	-77.4	0.06 (1)	10.00	
C- D	0 / 26	-77.4	-77.4	0.05 (1)	10.00	
D- E	0 / 24	-77.4	-77.4	0.05 (1)	10.00	
E- F	0 / 24	-77.4	-77.4	0.05 (1)	10.00	
F- G	0 / 26	-77.4	-77.4	0.05 (1)	10.00	
G- H	-2 / 6	-77.4	-77.4	0.06 (1)	10.00	
H- I	0 / 30	-77.4	-77.4	0.09 (1)	10.00	
J- H	-172 / 0	0.0	0.0	0.03 (1)	7.81	
P- O	-13 / 0	-17.5	-17.5	0.01 (4)	6.25	
O- N	-17 / 0	-17.5	-17.5	0.01 (4)	6.25	
N- M	-21 / 0	-17.5	-17.5	0.01 (4)	6.25	
M- L	-21 / 0	-17.5	-17.5	0.01 (4)	6.25	
L- K	-17 / 0	-17.5	-17.5	0.01 (4)	6.25	
K- J	-13 / 0	-17.5	-17.5	0.01 (4)	6.25	

WEBS

MEMB. FR-TO	MAX. FACTORED FORCE (LBS)	MAX CSI (LC)
M- E	-187 / 0	0.09 (1)
N- D	-165 / 0	0.05 (1)
O- C	-114 / 0	0.02 (1)
L- F	-165 / 0	0.05 (1)
K- G	-114 / 0	0.02 (1)

DESIGN CRITERIA

SPECIFIED LOADS:

TOP CH.	LL	=	23.3	PSF
	DL	=	3.0	PSF
BOT CH.	LL	=	0.0	PSF
	DL	=	7.0	PSF
TOTAL LOAD		=	33.3	PSF

SPACING = 24.0 IN. C/C

THIS TRUSS IS DESIGNED FOR RESIDENTIAL OR SMALL BUILDING REQUIREMENTS OF PART 9, NBCC 2010

THIS DESIGN COMPLIES WITH:
- PART 9 OF OBC 2012 , BCBC 2012 , ABC 2014
- CSA 086-09
- TPIC 2011

DESIGN ASSUMPTIONS
-OVERHANG NOT TO BE ALTERED OR CUT OFF.

(55 % OF 27.2 P.S.F. G.S.L. PLUS 8.4 P.S.F. RAIN LOAD) EQUALS 23.3 P.S.F. SPECIFIED ROOF LIVE LOAD

CSI: TC=0.09/1.00 (H-I:1) , BC=0.01/1.00 (L-M:4) , WB=0.09/1.00 (E-M:1) , SSI=0.06/1.00 (H-I:1)

DOL LUMBER=1.00 NAIL=1.00 LS BEND=1.10 COMP=1.10 SHEAR=1.10 TENS= 1.10

COMPANION LIVE LOAD FACTOR = 0.50

TRUSS PLATE MANUFACTURER IS NOT RESPONSIBLE FOR QUALITY CONTROL IN THE TRUSS MANUFACTURING PLANT .

NAIL VALUES

PLATE	GRIP(DRY) (PSI) MAX	MIN	SHEAR (PLI) MAX	MIN	SECTION (PLI) MAX	MIN
MT20	618	354	1667	822	2284	1656

PLATE PLACEMENT TOL. = 0.250 inches

PLATE ROTATION TOL. = 5.0 Deg.

JSI GRIP= 0.13 (E) (INPUT = 0.90)
JSI METAL= 0.06 (E) (INPUT = 1.00)

KOTT

JOB NAME	TRUSS NAME	QUANTITY	PLY	JOB DESC.	DRWG NO.
NE0618-032	J01	18	1	GREEN YORK HOMES-CELESTIAL 2 EL 1 TRUSS DESC.	PAGE 14 OF 30

Version 8.210 S Mar 12 2018 MiTek Industries, Inc. Tue Jun 5 16:23:12 2018 Page 1
ID:XgvKq7wA9gLFADxpsWFVufzB0Hj-lizgaQjKXVGDWjVsNNrvjNoVZUTMaOXnR3xUsOz9I9D

Scale = 1:23.4

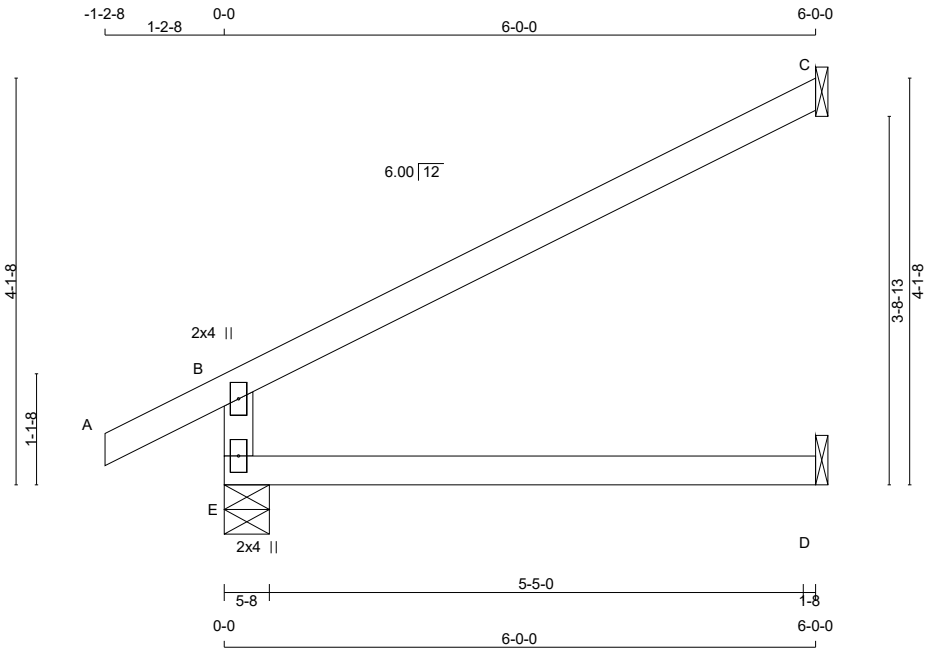

TOTAL WEIGHT = 18 X 17 = 305 lb

LUMBER
N. L. G. A. RULES

CHORDS	SIZE		LUMBER	DESCR.
E - B	2x4	DRY	No.2	SPF
A - C	2x4	DRY	No.2	SPF
E - D	2x4	DRY	No.2	SPF

DRY: SEASONED LUMBER.

PLATES (table is in inches)

JT	TYPE	PLATES	W	LEN	Y	X
B	TMV+p	MT20	2.0	4.0		
E	BMV1+p	MT20	2.0	4.0		

READ ALL NOTES ON THIS PAGE AND ON ENGINEERING NOTE PAGE ENP-1. THIS NOTE PAGE IS AN INTEGRAL PART OF THIS DRAWING AS IT CONTAINS SPECIFICATIONS AND CRITERIA USED IN THE DESIGN OF THIS COMPONENT.

LICENSED PROFESSIONAL ENGINEER
N.A. EL-MASRI
PROVINCE OF ONTARIO
Jun 05, 2018

DIMENSIONS, SUPPORTS AND LOADINGS SPECIFIED BY FABRICATOR TO BE VERIFIED BY BUILDING DESIGNER

BEARINGS

JT	FACTORED GROSS REACTION VERT	HORZ	MAXIMUM GROSS REACTION DOWN	HORZ	UPLIFT	FACTORED INPUT BRG IN-SX	REQRD BRG IN-SX
E	450	0	450	0	0	5-8	5-8
C	174	0	174	0	0	1-8	1-8
D	43	0	48	0	0	1-8	1-8

SEE MITEK STANDARD DETAIL B37579H FOR CONNECTION TO JOINT(S) C , D

UNFACTORED REACTIONS

JT	1ST LCASE COMBINED	MAX./MIN. COMPONENT REACTIONS SNOW	LIVE	PERM.LIVE	WIND	DEAD	SOIL
E	314	234 / 0	0 / 0	0 / 0	0 / 0	80 / 0	0 / 0
C	118	105 / 0	0 / 0	0 / 0	0 / 0	14 / 0	0 / 0
D	35	0 / 0	0 / 0	0 / 0	0 / 0	35 / 0	0 / 0

BEARING MATERIAL TO BE SPF NO.2 OR BETTER AT JOINT(S) E

BRACING
TOP CHORD TO BE SHEATHED OR MAX. PURLIN SPACING = 6.25 FT.
MAX. UNBRACED BOTTOM CHORD LENGTH = 10.00 FT OR RIGID CEILING DIRECTLY APPLIED.

ALL PITCH BREAKS AND PERIMETER CORNER JOINTS MUST BE LATERALLY RESTRAINED.

LOADING
TOTAL LOAD CASES: (4)

CHORDS MEMB. FR-TO	MAX. FACTORED FORCE (LBS)	FACTORED VERT. LOAD (PLF) FROM	TO	LC1 MAX CSI (LC)	WEBS MAX. UNBRAC LENGTH	MEMB. FR-TO	MAX. FACTORED FORCE (LBS)	MAX CSI (LC)
E- B	-389 / 0	0.0	0.0	0.11 (4)	7.81			
A- B	0 / 22	-77.4	-77.4	0.09 (1)	10.00			
B- C	-26 / 0	-77.4	-77.4	0.36 (1)	6.25			
E- D	0 / 0	-17.5	-17.5	0.13 (4)	10.00			

[M][F]

DESIGN CRITERIA

SPECIFIED LOADS:

TOP	CH.	LL	=	23.3	PSF
		DL	=	3.0	PSF
BOT	CH.	LL	=	0.0	PSF
		DL	=	7.0	PSF
TOTAL	LOAD		=	33.3	PSF

SPACING = 24.0 IN. C/C

THIS TRUSS IS DESIGNED FOR RESIDENTIAL OR SMALL BUILDING REQUIREMENTS OF PART 9, NBCC 2010

THIS DESIGN COMPLIES WITH:
- PART 9 OF OBC 2012 , BCBC 2012 , ABC 2014
- CSA 086-09
- TPIC 2011

DESIGN ASSUMPTIONS
-OVERHANG NOT TO BE ALTERED OR CUT OFF.

(55 % OF 27.2 P.S.F. G.S.L. PLUS 8.4 P.S.F. RAIN LOAD) EQUALS 23.3 P.S.F. SPECIFIED ROOF LIVE LOAD

ALLOWABLE DEFL.(LL)= L/360 (0.20")
CALCULATED VERT. DEFL.(LL) = L/ 999 (0.00")
ALLOWABLE DEFL.(TL)= L/360 (0.20")
CALCULATED VERT. DEFL.(TL) = L/ 999 (0.03")

CSI: TC=0.36/1.00 (B-C:1) , BC=0.13/1.00 (D-E:4) , WB=0.00/1.00 (n/a:0) , SSI=0.20/1.00 (B-C:1)

DOL LUMBER=1.00 NAIL=1.00 LS BEND=1.10 COMP=1.10 SHEAR=1.10 TENS= 1.10

COMPANION LIVE LOAD FACTOR = 0.50

TRUSS PLATE MANUFACTURER IS NOT RESPONSIBLE FOR QUALITY CONTROL IN THE TRUSS MANUFACTURING PLANT .

NAIL VALUES

PLATE	GRIP(DRY) (PSI) MAX	MIN	SHEAR (PLI) MAX	MIN	SECTION (PLI) MAX	MIN
MT20	618	354	1667	822	2284	1656

PLATE PLACEMENT TOL. = 0.250 inches

PLATE ROTATION TOL. = 5.0 Deg.

JSI GRIP= 0.22 (B) (INPUT = 0.90)
JSI METAL= 0.09 (B) (INPUT = 1.00)

KOTT

JOB NAME	TRUSS NAME	QUANTITY	PLY	JOB DESC.	DWG NO.
NE0618-032	P01	2	1	GREEN YORK HOMES-CELESTIAL 2 EL 1 TRUSS DESC.	PAGE 15 OF 30

Version 8.210 S Mar 12 2018 MiTek Industries, Inc. Tue Jun 5 16:23:13 2018 Page 1
ID:XgvKq7wA9gLFADxpsWFVufzB0Hj-muX2nmkyIoO38t43x5M8FaLiFtp0Jrmxfjg2Oqz9I9C

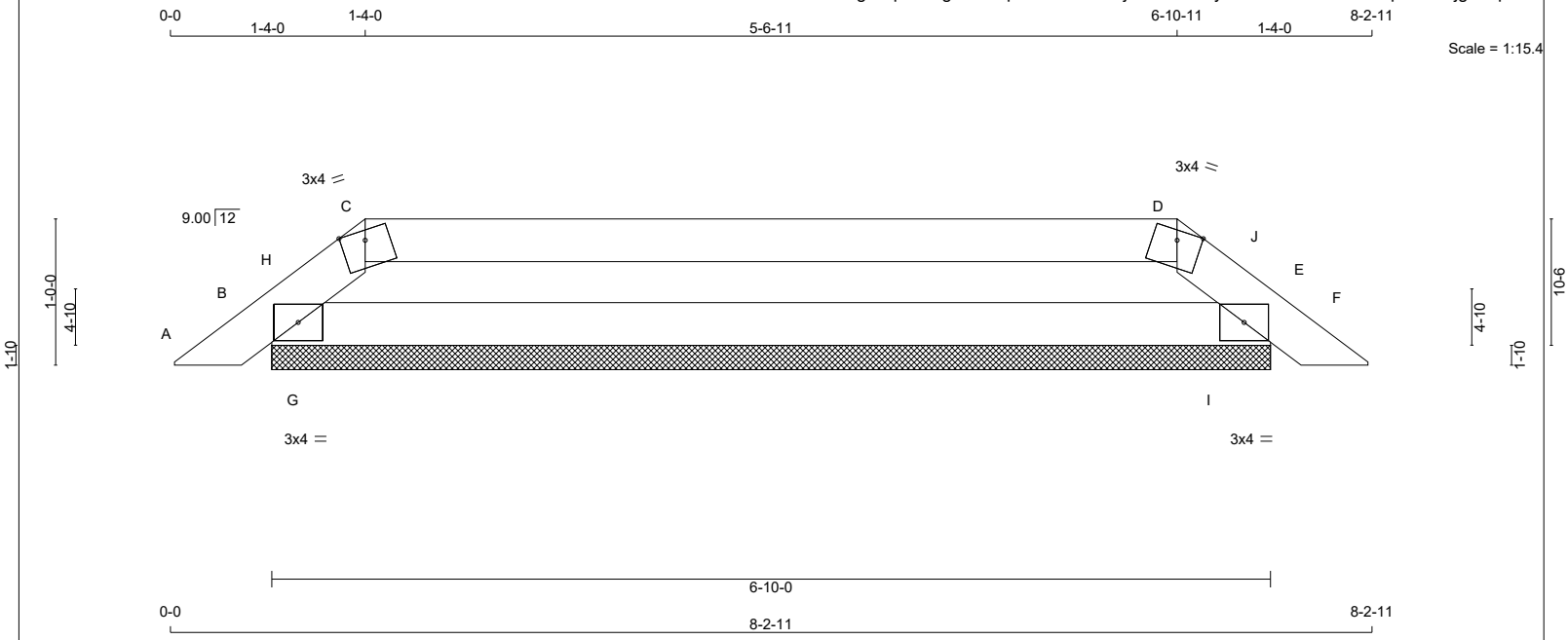

TOTAL WEIGHT = 2 X 18 = 36 lb [M]

LUMBER
N. L. G. A. RULES

CHORDS	SIZE		LUMBER	DESCR.
A - C	2x4	DRY	No.2	SPF
C - D	2x4	DRY	No.2	SPF
D - F	2x4	DRY	No.2	SPF
B - E	2x4	DRY	No.2	SPF

DRY: SEASONED LUMBER.

PLATES (table is in inches)

JT	TYPE	PLATES	W	LEN	Y	X
B	TMB1-I	MT20	3.0	4.0		
C	TT-m	MT20	3.0	4.0	Edge	
D	TT-m	MT20	3.0	4.0	Edge	
E	TMB1-I	MT20	3.0	4.0		

Edge - INDICATES REFERENCE CORNER OF PLATE TOUCHES EDGE OF CHORD.

READ ALL NOTES ON THIS PAGE AND ON ENGINEERING NOTE PAGE ENP-1. THIS NOTE PAGE IS AN INTEGRAL PART OF THIS DRAWING AS IT CONTAINS SPECIFICATIONS AND CRITERIA USED IN THE DESIGN OF THIS COMPONENT.

LICENSED PROFESSIONAL ENGINEER
N.A. EL-MASRI
PROVINCE OF ONTARIO
Jun 05, 2018

DIMENSIONS, SUPPORTS AND LOADINGS SPECIFIED BY FABRICATOR TO BE VERIFIED BY BUILDING DESIGNER

BEARINGS

JT	FACTORED GROSS REACTION VERT	HORZ	MAXIMUM GROSS REACTION DOWN	FACTORED HORZ	UPLIFT	INPUT BRG IN-SX	REQRD BRG IN-SX
B	370	0	370	0	0	6-10-0	6-10-0
E	370	0	370	0	0	6-10-0	6-10-0

UNFACTORED REACTIONS

JT	1ST LCASE COMBINED	MAX./MIN. COMPONENT REACTIONS SNOW	LIVE	PERM.LIVE	WIND	DEAD	SOIL
B	258	187 / 0	0 / 0	0 / 0	0 / 0	72 / 0	0 / 0
E	258	187 / 0	0 / 0	0 / 0	0 / 0	72 / 0	0 / 0

BEARING MATERIAL TO BE SPF NO.2 OR BETTER AT JOINT(S) B, E

BRACING
TOP CHORD TO BE SHEATHED OR MAX. PURLIN SPACING = 6.25 FT.
MAX. UNBRACED BOTTOM CHORD LENGTH = 10.00 FT OR RIGID CEILING DIRECTLY APPLIED.

ALL PITCH BREAKS AND PERIMETER CORNER JOINTS MUST BE LATERALLY RESTRAINED.

LOADING
TOTAL LOAD CASES: (4)

CHORDS

MEMB. FR-TO	MAX. FACTORED FORCE (LBS)	FACTORED VERT. LOAD (PLF) FROM	TO	LC1 CSI (LC)	MAX UNBRAC LENGTH
A- B	0 / 12	-77.4	-77.4	0.02 (1)	10.00
B- H	-247 / 0	-77.4	-77.4	0.06 (4)	6.25
H- C	-656 / 0	-77.4	-77.4	0.23 (1)	6.25
C- D	-657 / 0	-77.4	-77.4	0.24 (1)	6.25
D- J	-656 / 0	-77.4	-77.4	0.23 (1)	6.25
J- E	-247 / 0	-77.4	-77.4	0.06 (4)	6.25
E- F	0 / 12	-77.4	-77.4	0.02 (1)	10.00
B- G	0 / 176	-17.5	-17.5	0.06 (1)	10.00
G- I	0 / 657	-17.5	-17.5	0.17 (4)	10.00
I- E	0 / 176	-17.5	-17.5	0.06 (1)	10.00

WEBS

MEMB. FR-TO	MAX. FACTORED FORCE (LBS)	MAX CSI (LC)
G- H	-80 / 122	0.00 (1)
I- J	-80 / 122	0.00 (1)

DESIGN CRITERIA

SPECIFIED LOADS:

TOP CH.	LL =	23.3	PSF
	DL =	3.0	PSF
BOT CH.	LL =	0.0	PSF
	DL =	7.0	PSF
TOTAL LOAD	=	33.3	PSF

SPACING = 24.0 IN. C/C

LOADING IN FLAT SECTION BASED ON A SLOPE OF 2.00/12 MINIMUM

THIS TRUSS IS DESIGNED FOR RESIDENTIAL OR SMALL BUILDING REQUIREMENTS OF PART 9, NBCC 2010

THIS DESIGN COMPLIES WITH:
- PART 9 OF OBC 2012 , BCBC 2012 , ABC 2014
- CSA 086-09
- TPIC 2011

DESIGN ASSUMPTIONS
-OVERHANG NOT TO BE ALTERED OR CUT OFF.

(55 % OF 27.2 P.S.F. G.S.L. PLUS 8.4 P.S.F. RAIN LOAD) EQUALS 23.3 P.S.F. SPECIFIED ROOF LIVE LOAD

CSI: TC=0.24/1.00 (C-D:1) , BC=0.17/1.00 (G-I:4) , WB=0.00/1.00 (G-H:1) , SSI=0.19/1.00 (C-H:1)

DOL LUMBER=1.00 NAIL=1.00 LS BEND=1.10 COMP=1.10 SHEAR=1.10 TENS= 1.10

COMPANION LIVE LOAD FACTOR = 0.50

TRUSS PLATE MANUFACTURER IS NOT RESPONSIBLE FOR QUALITY CONTROL IN THE TRUSS MANUFACTURING PLANT .

NAIL VALUES

PLATE	GRIP(DRY) (PSI) MAX	MIN	SHEAR (PLI) MAX	MIN	SECTION (PLI) MAX	MIN
MT20	618	354	1667	822	2284	1656

PLATE PLACEMENT TOL. = 0.250 inches

PLATE ROTATION TOL. = 5.0 Deg.

JSI GRIP= 0.49 (E) (INPUT = 0.90)
JSI METAL= 0.17 (B) (INPUT = 1.00)

KOTT

JOB NAME	TRUSS NAME	QUANTITY	PLY	JOB DESC.	DRWG NO.
NE0618-032	T01	1	1	GREEN YORK HOMES-CELESTIAL 2 EL 1 / TRUSS DESC.	PAGE 16 OF 30

Version 8.210 S Mar 12 2018 MiTek Industries, Inc. Tue Jun 5 16:23:14 2018 Page 1
ID:XgvKq7wA9gLFADxpsWFVufzB0Hj-F44Q?6kb36Wwl1fFUotNoottCH9V2GI4uNQbwHz9I9B

Scale = 1:46.0

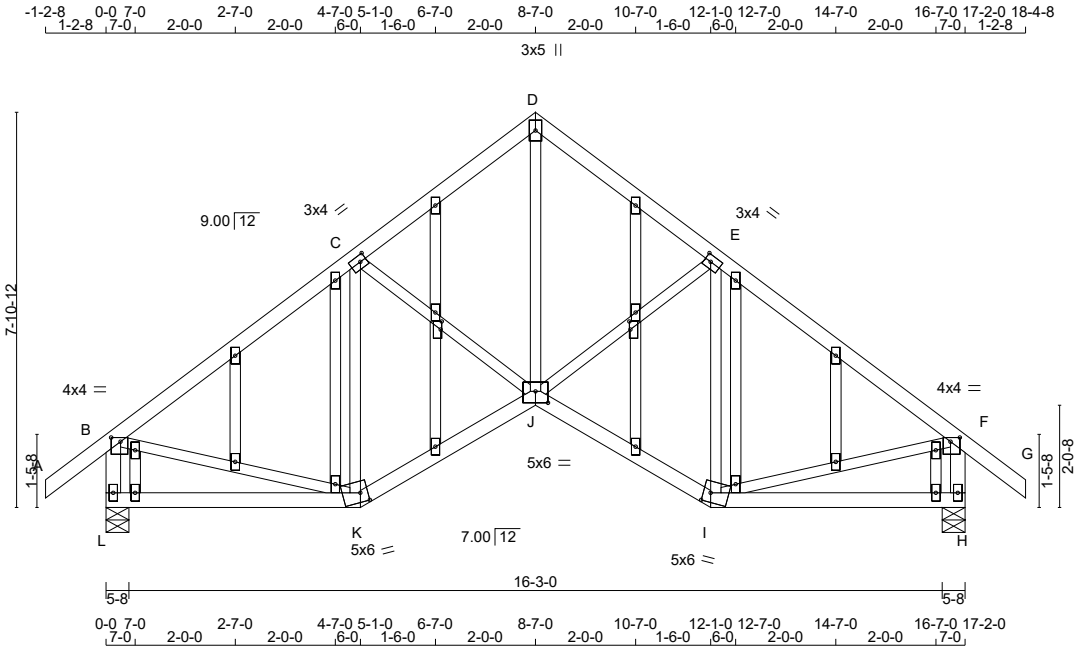

TOTAL WEIGHT = 98 lb
[M][F]

LUMBER
N. L. G. A. RULES

CHORDS	SIZE		LUMBER	DESCR.
A - D	2x4	DRY	No.2	SPF
D - G	2x4	DRY	No.2	SPF
L - B	2x4	DRY	No.2	SPF
H - F	2x4	DRY	No.2	SPF
L - K	2x4	DRY	No.2	SPF
K - J	2x4	DRY	No.2	SPF
J - I	2x4	DRY	No.2	SPF
I - H	2x4	DRY	No.2	SPF
ALL WEBS	2x3	DRY	No.2	SPF
EXCEPT				
ALL GABLE WEBS	2x3	DRY	No.2	SPF

DRY: SEASONED LUMBER.

GABLE STUDS SPACED AT 2-0-0 OC.

PLATES (table is in inches)

JT	TYPE	PLATES	W	LEN	Y	X
B	TMVW-p	MT20	4.0	4.0	1.00	2.25
C	TMWW-t	MT20	3.0	4.0	1.50	1.50
D	TTW+p	MT20	3.0	5.0		
E	TMWW-t	MT20	3.0	4.0	1.50	1.50
F	TMVW-p	MT20	4.0	4.0	1.00	2.25
H	BMV1+p	MT20	2.0	4.0		
H, I, K, L, M, N, O, P, Q, R, S, T, U, V, W, X, Y, Z						
H	NP+w	MT20	2.0	4.0		
I	BBWW-m	MT20	5.0	6.0	2.25	1.75
J	BBWWW-p	MT20	5.0	6.0	2.75	3.00
K	BBWW-m	MT20	5.0	6.0	2.25	1.75
L	BMV1+p	MT20	2.0	4.0		
M	NP+w	MT20	2.0	4.0	2.00	0.25
V	NP+w	MT20	2.0	4.0	2.00	0.25

READ ALL NOTES ON THIS PAGE AND ON ENGINEERING NOTE PAGE ENP-1. THIS NOTE PAGE IS AN INTEGRAL PART OF THIS DRAWING AS IT CONTAINS SPECIFICATIONS AND CRITERIA USED IN THE DESIGN OF THIS COMPONENT.

LICENSED PROFESSIONAL ENGINEER
N.A. EL-MASRI
PROVINCE OF ONTARIO
Jun 05, 2018

DIMENSIONS, SUPPORTS AND LOADINGS SPECIFIED BY FABRICATOR TO BE VERIFIED BY BUILDING DESIGNER

BEARINGS

JT	FACTORED GROSS REACTION VERT	HORZ	MAXIMUM FACTORED GROSS REACTION DOWN	HORZ	UPLIFT	INPUT BRG IN-SX	REQRD BRG IN-SX
L	914	0	914	0	0	5-8	5-8
H	914	0	914	0	0	5-8	5-8

UNFACTORED REACTIONS

JT	1ST LCASE COMBINED	MAX./MIN. COMPONENT REACTIONS SNOW	LIVE	PERM.LIVE	WIND	DEAD	SOIL
L	640	460 / 0	0 / 0	0 / 0	0 / 0	179 / 0	0 / 0
H	640	460 / 0	0 / 0	0 / 0	0 / 0	179 / 0	0 / 0

BEARING MATERIAL TO BE SPF NO.2 OR BETTER AT JOINT(S) L, H

BRACING
TOP CHORD TO BE SHEATHED OR MAX. PURLIN SPACING = 6.25 FT.
MAX. UNBRACED BOTTOM CHORD LENGTH = 10.00 FT OR RIGID CEILING DIRECTLY APPLIED.

ALL PITCH BREAKS AND PERIMETER CORNER JOINTS MUST BE LATERALLY RESTRAINED.

LOADING
TOTAL LOAD CASES: (4)

CHORDS

MEMB. FR-TO	MAX. FACTORED FORCE (LBS)	FACTORED VERT. LOAD (PLF) FROM	TO	LC1 CSI (LC)	MAX UNBRAC LENGTH
A- B	0 / 30	-77.4	-77.4	0.09 (1)	10.00
B- C	-769 / 0	-77.4	-77.4	0.23 (1)	6.25
C- D	-824 / 0	-77.4	-77.4	0.20 (1)	6.25
D- E	-824 / 0	-77.4	-77.4	0.20 (1)	6.25
E- F	-769 / 0	-77.4	-77.4	0.23 (1)	6.25
F- G	0 / 30	-77.4	-77.4	0.09 (1)	10.00
L- B	-870 / 0	0.0	0.0	0.09 (1)	7.81
H- F	-870 / 0	0.0	0.0	0.09 (1)	7.81
L- K	0 / 0	-17.5	-17.5	0.13 (4)	10.00
K- J	0 / 723	-17.5	-17.5	0.15 (1)	10.00
J- I	0 / 723	-17.5	-17.5	0.15 (1)	10.00
I- H	0 / 0	-17.5	-17.5	0.13 (4)	10.00

WEBS

MEMB. FR-TO	MAX. FACTORED FORCE (LBS)	MAX CSI (LC)
J- D	0 / 775	0.17 (1)
J- E	0 / 15	0.00 (4)
I- E	-430 / 0	0.17 (1)
C- J	0 / 15	0.00 (4)
K- C	-430 / 0	0.17 (1)
B- K	0 / 648	0.15 (1)
I- F	0 / 648	0.15 (1)

DESIGN CRITERIA

SPECIFIED LOADS:

TOP	CH.	LL	=	23.3	PSF
		DL	=	3.0	PSF
BOT	CH.	LL	=	0.0	PSF
		DL	=	7.0	PSF
TOTAL	LOAD		=	33.3	PSF

SPACING = 24.0 IN. C/C

THIS TRUSS IS DESIGNED FOR RESIDENTIAL OR SMALL BUILDING REQUIREMENTS OF PART 9, NBCC 2010

THIS DESIGN COMPLIES WITH:
- PART 9 OF OBC 2012 , BCBC 2012 , ABC 2014
- CSA 086-09
- TPIC 2011

(55 % OF 27.2 P.S.F. G.S.L. PLUS 8.4 P.S.F. RAIN LOAD) EQUALS 23.3 P.S.F. SPECIFIED ROOF LIVE LOAD

ALLOWABLE DEFL.(LL)= L/360 (0.57")
CALCULATED VERT. DEFL.(LL) = L/ 999 (0.03")
ALLOWABLE DEFL.(TL)= L/360 (0.57")
CALCULATED VERT. DEFL.(TL) = L/ 999 (0.05")

CSI: TC=0.23/1.00 (B-C:1) , BC=0.15/1.00 (I-J:1) , WB=0.17/1.00 (D-J:1) , SSI=0.14/1.00 (B-C:1)

DOL LUMBER=1.00 NAIL=1.00 LS BEND=1.10 COMP=1.10 SHEAR=1.10 TENS= 1.10

COMPANION LIVE LOAD FACTOR = 0.50

TRUSS PLATE MANUFACTURER IS NOT RESPONSIBLE FOR QUALITY CONTROL IN THE TRUSS MANUFACTURING PLANT .

NAIL VALUES

PLATE	GRIP(DRY) (PSI) MAX	MIN	SHEAR (PLI) MAX	MIN	SECTION (PLI) MAX	MIN
MT20	618	354	1667	822	2284	1656

PLATE PLACEMENT TOL. = 0.250 inches

PLATE ROTATION TOL. = 5.0 Deg.

JSI GRIP= 0.89 (E) (INPUT = 0.90)
JSI METAL= 0.24 (F) (INPUT = 1.00)

KOTT

JOB NAME	TRUSS NAME	QUANTITY	PLY	JOB DESC.	DRWG NO.
NE0618-032	T02	1	1	GREEN YORK HOMES-CELESTIAL 2 EL 1 TRUSS DESC.	PAGE 17 OF 30

Version 8.210 S Mar 12 2018 MiTek Industries, Inc. Tue Jun 5 16:23:15 2018 Page 1
ID:XgvKq7wA9gLFADxpsWFVufzB0Hj-jHeoCRIDqQenNBER2WOcL?Q2yhUknjYE7198Tjz9I9A

Scale = 1:46.3

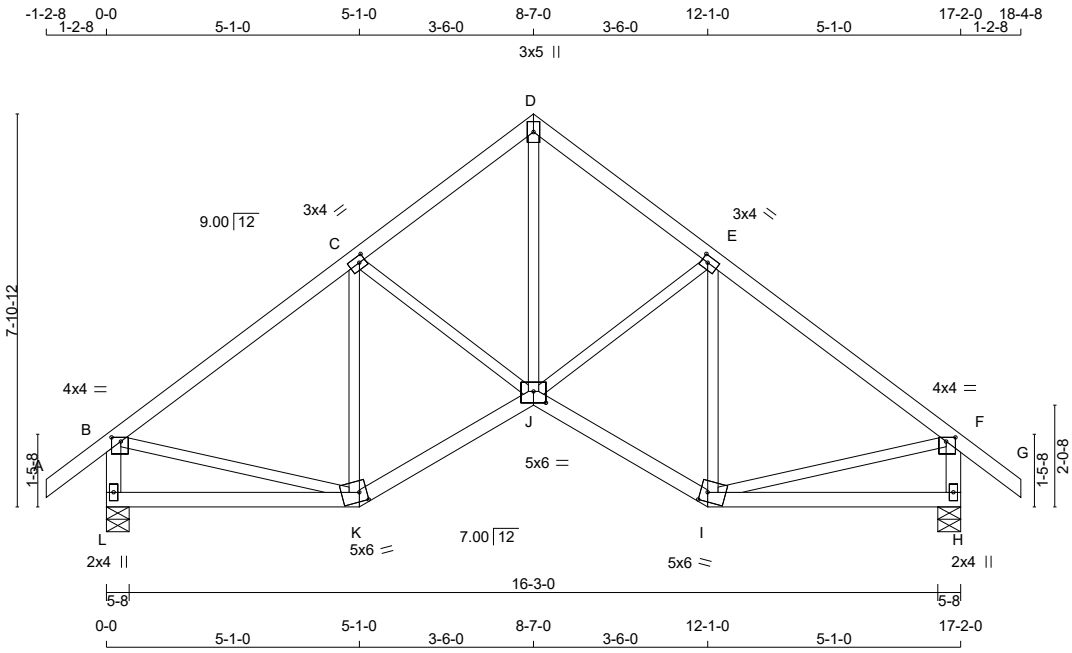

TOTAL WEIGHT = 78 lb

LUMBER
N. L. G. A. RULES

CHORDS	SIZE		LUMBER	DESCR.
A - D	2x4	DRY	No.2	SPF
D - G	2x4	DRY	No.2	SPF
L - B	2x4	DRY	No.2	SPF
H - F	2x4	DRY	No.2	SPF
L - K	2x4	DRY	No.2	SPF
K - J	2x4	DRY	No.2	SPF
J - I	2x4	DRY	No.2	SPF
I - H	2x4	DRY	No.2	SPF
ALL WEBS EXCEPT	2x3	DRY	No.2	SPF

DRY: SEASONED LUMBER.

PLATES (table is in inches)

JT	TYPE	PLATES	W	LEN	Y	X
B	TMVW-p	MT20	4.0	4.0	1.00	2.25
C	TMWW-t	MT20	3.0	4.0	1.50	1.50
D	TTW+p	MT20	3.0	5.0		
E	TMWW-t	MT20	3.0	4.0	1.50	1.50
F	TMVW-p	MT20	4.0	4.0	1.00	2.25
H	BMV1+p	MT20	2.0	4.0		
I	BBWW-m	MT20	5.0	6.0	2.25	1.75
J	BBWWW-p	MT20	5.0	6.0	2.75	3.00
K	BBWW-m	MT20	5.0	6.0	2.25	1.75
L	BMV1+p	MT20	2.0	4.0		

READ ALL NOTES ON THIS PAGE AND ON ENGINEERING NOTE PAGE ENP-1. THIS NOTE PAGE IS AN INTEGRAL PART OF THIS DRAWING AS IT CONTAINS SPECIFICATIONS AND CRITERIA USED IN THE DESIGN OF THIS COMPONENT.

LICENSED PROFESSIONAL ENGINEER
N.A. EL-MASRI
PROVINCE OF ONTARIO
Jun 05, 2018

DIMENSIONS, SUPPORTS AND LOADINGS SPECIFIED BY FABRICATOR TO BE VERIFIED BY BUILDING DESIGNER

BEARINGS

JT	FACTORED GROSS REACTION VERT	HORZ	MAXIMUM FACTORED GROSS REACTION DOWN	HORZ	UPLIFT	INPUT BRG IN-SX	REQRD BRG IN-SX
L	914	0	914	0	0	5-8	5-8
H	914	0	914	0	0	5-8	5-8

UNFACTORED REACTIONS

JT	1ST LCASE COMBINED	MAX./MIN. COMPONENT REACTIONS SNOW	LIVE	PERM.LIVE	WIND	DEAD	SOIL
L	640	460 / 0	0 / 0	0 / 0	0 / 0	179 / 0	0 / 0
H	640	460 / 0	0 / 0	0 / 0	0 / 0	179 / 0	0 / 0

BEARING MATERIAL TO BE SPF NO.2 OR BETTER AT JOINT(S) L, H

BRACING
TOP CHORD TO BE SHEATHED OR MAX. PURLIN SPACING = 6.25 FT.
MAX. UNBRACED BOTTOM CHORD LENGTH = 10.00 FT OR RIGID CEILING DIRECTLY APPLIED.

ALL PITCH BREAKS AND PERIMETER CORNER JOINTS MUST BE LATERALLY RESTRAINED.

LOADING
TOTAL LOAD CASES: (4)

CHORDS

MEMB. FR-TO	MAX. FACTORED FORCE (LBS)	FACTORED VERT. LOAD (PLF) FROM	TO	LC1 CSI (LC)	MAX UNBRAC LENGTH
A- B	0 / 30	-77.4	-77.4	0.09 (1)	10.00
B- C	-769 / 0	-77.4	-77.4	0.23 (1)	6.25
C- D	-824 / 0	-77.4	-77.4	0.20 (1)	6.25
D- E	-824 / 0	-77.4	-77.4	0.20 (1)	6.25
E- F	-769 / 0	-77.4	-77.4	0.23 (1)	6.25
F- G	0 / 30	-77.4	-77.4	0.09 (1)	10.00
L- B	-870 / 0	0.0	0.0	0.09 (1)	7.81
H- F	-870 / 0	0.0	0.0	0.09 (1)	7.81
L- K	0 / 0	-17.5	-17.5	0.13 (4)	10.00
K- J	0 / 723	-17.5	-17.5	0.15 (1)	10.00
J- I	0 / 723	-17.5	-17.5	0.15 (1)	10.00
I- H	0 / 0	-17.5	-17.5	0.13 (4)	10.00

WEBS

MEMB. FR-TO	MAX. FACTORED FORCE (LBS)	MAX CSI (LC)
J- D	0 / 775	0.17 (1)
I- E	-430 / 0	0.17 (1)
C- J	0 / 15	0.00 (4)
K- C	-430 / 0	0.17 (1)
B- K	0 / 648	0.15 (1)
I- F	0 / 648	0.15 (1)

DESIGN CRITERIA

SPECIFIED LOADS:

TOP CH.	LL	=	23.3	PSF
	DL	=	3.0	PSF
BOT CH.	LL	=	0.0	PSF
	DL	=	7.0	PSF
TOTAL LOAD		=	33.3	PSF

SPACING = 24.0 IN. C/C

THIS TRUSS IS DESIGNED FOR RESIDENTIAL OR SMALL BUILDING REQUIREMENTS OF PART 9, NBCC 2010

THIS DESIGN COMPLIES WITH:
- PART 9 OF OBC 2012 , BCBC 2012 , ABC 2014
- CSA 086-09
- TPIC 2011

(55 % OF 27.2 P.S.F. G.S.L. PLUS 8.4 P.S.F. RAIN LOAD) EQUALS 23.3 P.S.F. SPECIFIED ROOF LIVE LOAD

ALLOWABLE DEFL.(LL)= L/360 (0.57")
CALCULATED VERT. DEFL.(LL) = L/ 999 (0.03")
ALLOWABLE DEFL.(TL)= L/360 (0.57")
CALCULATED VERT. DEFL.(TL) = L/ 999 (0.05")

CSI: TC=0.23/1.00 (B-C:1) , BC=0.15/1.00 (I-J:1) , WB=0.17/1.00 (D-J:1) , SSI=0.14/1.00 (B-C:1)

DOL LUMBER=1.00 NAIL=1.00 LS BEND=1.10 COMP=1.10 SHEAR=1.10 TENS= 1.10

COMPANION LIVE LOAD FACTOR = 0.50

TRUSS PLATE MANUFACTURER IS NOT RESPONSIBLE FOR QUALITY CONTROL IN THE TRUSS MANUFACTURING PLANT .

NAIL VALUES

PLATE	GRIP(DRY) (PSI) MAX	MIN	SHEAR (PLI) MAX	MIN	SECTION (PLI) MAX	MIN
MT20	618	354	1667	822	2284	1656

PLATE PLACEMENT TOL. = 0.250 inches

PLATE ROTATION TOL. = 5.0 Deg.

JSI GRIP= 0.89 (E) (INPUT = 0.90)
JSI METAL= 0.24 (F) (INPUT = 1.00)

KOTT

JOB NAME	TRUSS NAME	QUANTITY	PLY	JOB DESC.	DWG NO.
NE0618-032	T03	5	1	GREEN YORK HOMES-CELESTIAL 2 EL 1 TRUSS DESC.	PAGE 18 OF 30

Version 8.210 S Mar 12 2018 MiTek Industries, Inc. Tue Jun 5 16:23:15 2018 Page 1
ID:XgvKq7wA9gLFADxpsWFVufzB0Hj-jHeoCRlDqQenNBER2WOcL?Q2uhQgndZE7198Tjz9I9A

Scale = 1:46.3

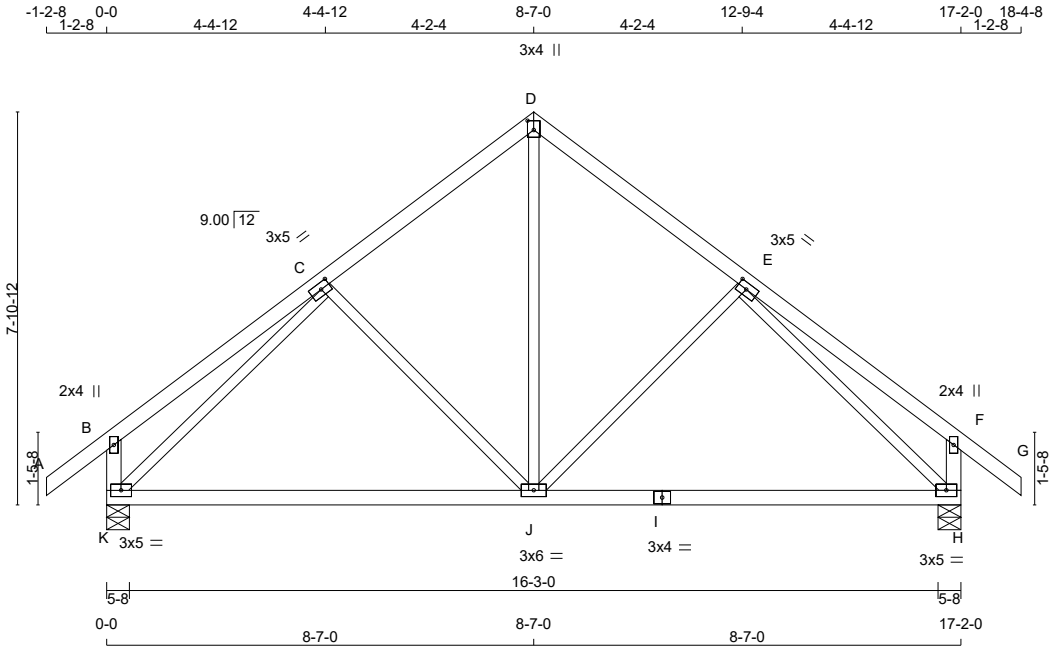

TOTAL WEIGHT = 5 X 75 = 375 lb

LUMBER
N. L. G. A. RULES

CHORDS	SIZE		LUMBER	DESCR.
A - D	2x4	DRY	No.2	SPF
D - G	2x4	DRY	No.2	SPF
K - B	2x4	DRY	No.2	SPF
H - F	2x4	DRY	No.2	SPF
K - I	2x4	DRY	No.2	SPF
I - H	2x4	DRY	No.2	SPF
ALL WEBS EXCEPT	2x3	DRY	No.2	SPF

DRY: SEASONED LUMBER.

PLATES (table is in inches)

JT	TYPE	PLATES	W	LEN	Y	X
B	TMV+p	MT20	2.0	4.0		
C	TMWW-t	MT20	3.0	5.0	1.50	2.25
D	TTW+p	MT20	3.0	4.0	2.25	1.50
E	TMWW-t	MT20	3.0	5.0	1.50	2.25
F	TMV+p	MT20	2.0	4.0		
H	BMVW1-t	MT20	3.0	5.0		
I	BS-t	MT20	3.0	4.0		
J	BMWWW-t	MT20	3.0	6.0		
K	BMVW1-t	MT20	3.0	5.0		

READ ALL NOTES ON THIS PAGE AND ON ENGINEERING NOTE PAGE ENP-1. THIS NOTE PAGE IS AN INTEGRAL PART OF THIS DRAWING AS IT CONTAINS SPECIFICATIONS AND CRITERIA USED IN THE DESIGN OF THIS COMPONENT.

LICENSED PROFESSIONAL ENGINEER
N.A. EL-MASRI
PROVINCE OF ONTARIO
Jun 05, 2018

DIMENSIONS, SUPPORTS AND LOADINGS SPECIFIED BY FABRICATOR TO BE VERIFIED BY BUILDING DESIGNER

BEARINGS

JT	FACTORED GROSS REACTION VERT	HORZ	MAXIMUM FACTORED GROSS REACTION DOWN	HORZ	UPLIFT	INPUT BRG IN-SX	REQRD BRG IN-SX
K	914	0	914	0	0	5-8	5-8
H	914	0	914	0	0	5-8	5-8

UNFACTORED REACTIONS

JT	1ST LCASE COMBINED	MAX./MIN. COMPONENT REACTIONS SNOW	LIVE	PERM.LIVE	WIND	DEAD	SOIL
K	640	460 / 0	0 / 0	0 / 0	0 / 0	179 / 0	0 / 0
H	640	460 / 0	0 / 0	0 / 0	0 / 0	179 / 0	0 / 0

BEARING MATERIAL TO BE SPF NO.2 OR BETTER AT JOINT(S) K, H

BRACING
TOP CHORD TO BE SHEATHED OR MAX. PURLIN SPACING = 6.25 FT.
MAX. UNBRACED BOTTOM CHORD LENGTH = 10.00 FT OR RIGID CEILING DIRECTLY APPLIED.

ALL PITCH BREAKS AND PERIMETER CORNER JOINTS MUST BE LATERALLY RESTRAINED.

LOADING
TOTAL LOAD CASES: (4)

CHORDS

MEMB. FR-TO	MAX. FACTORED FORCE (LBS)	FACTORED VERT. LOAD (PLF) FROM	TO	LC1 CSI (LC)	MAX UNBRAC LENGTH
A- B	0 / 30	-77.4	-77.4	0.09 (1)	10.00
B- C	0 / 23	-77.4	-77.4	0.23 (1)	10.00
C- D	-626 / 0	-77.4	-77.4	0.18 (1)	6.25
D- E	-626 / 0	-77.4	-77.4	0.18 (1)	6.25
E- F	0 / 23	-77.4	-77.4	0.23 (1)	10.00
F- G	0 / 30	-77.4	-77.4	0.09 (1)	10.00
K- B	-227 / 0	0.0	0.0	0.02 (1)	7.81
H- F	-227 / 0	0.0	0.0	0.02 (1)	7.81
K- J	0 / 622	-17.5	-17.5	0.41 (4)	10.00
J- I	0 / 622	-17.5	-17.5	0.41 (4)	10.00
I- H	0 / 622	-17.5	-17.5	0.41 (4)	10.00

WEBS

MEMB. FR-TO	MAX. FACTORED FORCE (LBS)	MAX CSI (LC)
J- D	0 / 467	0.11 (1)
J- E	-198 / 0	0.13 (1)
C- J	-198 / 0	0.13 (1)
K- C	-886 / 0	0.56 (1)
E- H	-886 / 0	0.56 (1)

[M][F]

DESIGN CRITERIA

SPECIFIED LOADS:

TOP CH.	LL	=	23.3	PSF
	DL	=	3.0	PSF
BOT CH.	LL	=	0.0	PSF
	DL	=	7.0	PSF
TOTAL LOAD		=	33.3	PSF

SPACING = 24.0 IN. C/C

THIS TRUSS IS DESIGNED FOR RESIDENTIAL OR SMALL BUILDING REQUIREMENTS OF PART 9, NBCC 2010

THIS DESIGN COMPLIES WITH:
- PART 9 OF OBC 2012 , BCBC 2012 , ABC 2014
- CSA 086-09
- TPIC 2011

(55 % OF 27.2 P.S.F. G.S.L. PLUS 8.4 P.S.F. RAIN LOAD) EQUALS 23.3 P.S.F. SPECIFIED ROOF LIVE LOAD

ALLOWABLE DEFL.(LL)= L/360 (0.57")
CALCULATED VERT. DEFL.(LL) = L/ 999 (0.02")
ALLOWABLE DEFL.(TL)= L/360 (0.57")
CALCULATED VERT. DEFL.(TL) = L/ 999 (0.12")

CSI: TC=0.23/1.00 (B-C:1) , BC=0.41/1.00 (H-J:4) , WB=0.56/1.00 (C-K:1) , SSI=0.13/1.00 (C-D:1)

DOL LUMBER=1.00 NAIL=1.00 LS BEND=1.10 COMP=1.10 SHEAR=1.10 TENS= 1.10

COMPANION LIVE LOAD FACTOR = 0.50

TRUSS PLATE MANUFACTURER IS NOT RESPONSIBLE FOR QUALITY CONTROL IN THE TRUSS MANUFACTURING PLANT .

NAIL VALUES

PLATE	GRIP(DRY) (PSI) MAX	MIN	SHEAR (PLI) MAX	MIN	SECTION (PLI) MAX	MIN
MT20	618	354	1667	822	2284	1656

PLATE PLACEMENT TOL. = 0.250 inches

PLATE ROTATION TOL. = 5.0 Deg.

JSI GRIP= 0.89 (E) (INPUT = 0.90)
JSI METAL= 0.25 (C) (INPUT = 1.00)

KOTT

JOB NAME	TRUSS NAME	QUANTITY	PLY	JOB DESC.		DWG NO.
NE0618-032	T04	2	1	TRUSS DESC.	GREEN YORK HOMES-CELESTIAL 2 EL 1	PAGE 19 OF 30

Version 8.210 S Mar 12 2018 MiTek Industries, Inc. Tue Jun 5 16:23:16 2018 Page 1
ID:XgvKq7wA9gLFADxpsWFVufzB0Hj-BTCAPnmrbjme?LoecDvrtDzAl5lfW6JNMgvi?9z9I99

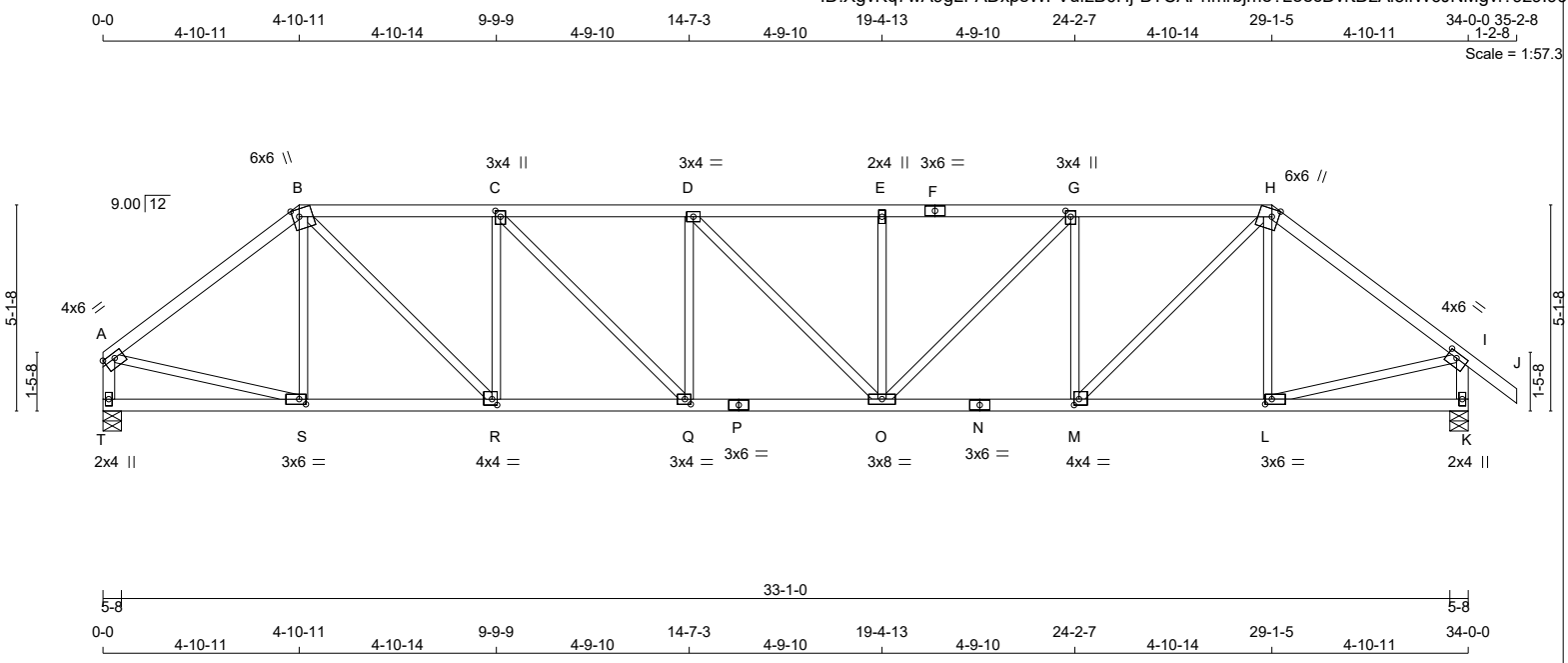

TOTAL WEIGHT = 2 X 141 = 282 lb

LUMBER
N. L. G. A. RULES

CHORDS	SIZE		LUMBER	DESCR.
A - B	2x4	DRY	No.2	SPF
B - F	2x4	DRY	No.2	SPF
F - H	2x4	DRY	No.2	SPF
H - J	2x4	DRY	No.2	SPF
T - A	2x4	DRY	No.2	SPF
K - I	2x4	DRY	No.2	SPF
T - P	2x4	DRY	No.2	SPF
P - N	2x4	DRY	No.2	SPF
N - K	2x4	DRY	No.2	SPF
ALL WEBS EXCEPT	2x3	DRY	No.2	SPF

DRY: SEASONED LUMBER.

PLATES (table is in inches)

JT	TYPE	PLATES	W	LEN	Y	X
A	TMVW-t	MT20	4.0	6.0	1.50	Edge
B	TTWW+m	MT20	6.0	6.0	Edge	2.00
C	TMWW+t	MT20	3.0	4.0	1.75	1.50
D	TMWW-t	MT20	3.0	4.0		
E	TMW+w	MT20	2.0	4.0		
F	TS-t	MT20	3.0	6.0		
G	TMWW+t	MT20	3.0	4.0	1.75	1.50
H	TTWW+m	MT20	6.0	6.0	Edge	2.00
I	TMVW-t	MT20	4.0	6.0	1.50	2.75
K	BMV1+p	MT20	2.0	4.0		
L	BMWW-t	MT20	3.0	6.0	1.50	2.00
M	BMWW-t	MT20	4.0	4.0	1.75	1.50
N	BS-t	MT20	3.0	6.0		
O	BMWWW-t	MT20	3.0	8.0		
P	BS-t	MT20	3.0	6.0		
Q	BMWW-t	MT20	3.0	4.0	1.50	1.75
R	BMWW-t	MT20	4.0	4.0	1.75	1.50
S	BMWW-t	MT20	3.0	6.0	1.50	2.00
T	BMV1+p	MT20	2.0	4.0		

Edge - INDICATES REFERENCE CORNER OF PLATE TOUCHES EDGE OF CHORD.

READ ALL NOTES ON THIS PAGE AND ON ENGINEERING NOTE PAGE ENP-1. THIS NOTE PAGE IS AN INTEGRAL PART OF THIS DRAWING AS IT CONTAINS SPECIFICATIONS AND CRITERIA USED IN THE DESIGN OF THIS COMPONENT.

LICENSED PROFESSIONAL ENGINEER
N.A. EL-MASRI
PROVINCE OF ONTARIO
Jun 05, 2018

DIMENSIONS, SUPPORTS AND LOADINGS SPECIFIED BY FABRICATOR TO BE VERIFIED BY BUILDING DESIGNER

BEARINGS

JT	FACTORED GROSS REACTION VERT	HORZ	MAXIMUM FACTORED GROSS REACTION DOWN	HORZ	UPLIFT	INPUT BRG IN-SX	REQRD BRG IN-SX
T	1613	0	1613	0	0	5-8	5-8
K	1713	0	1713	0	0	5-8	5-8

UNFACTORED REACTIONS

JT	1ST LCASE COMBINED	MAX./MIN. COMPONENT REACTIONS SNOW	LIVE	PERM.LIVE	WIND	DEAD	SOIL
T	1132	792 / 0	0 / 0	0 / 0	0 / 0	340 / 0	0 / 0
K	1200	852 / 0	0 / 0	0 / 0	0 / 0	348 / 0	0 / 0

BEARING MATERIAL TO BE SPF NO.2 OR BETTER AT JOINT(S) T, K

BRACING
TOP CHORD TO BE SHEATHED OR MAX. PURLIN SPACING = 3.81 FT.
MAX. UNBRACED BOTTOM CHORD LENGTH = 10.00 FT OR RIGID CEILING DIRECTLY APPLIED.

ALL PITCH BREAKS AND PERIMETER CORNER JOINTS MUST BE LATERALLY RESTRAINED.

LOADING
TOTAL LOAD CASES: (4)

CHORDS

MEMB. FR-TO	MAX. FACTORED FORCE (LBS)	FACTORED VERT. LOAD (PLF) FROM	TO	LC1 CSI (LC)	MAX UNBRAC LENGTH
A- B	-1774 / 0	-77.4	-77.4	0.42 (1)	4.58
B- C	-2368 / 0	-77.4	-77.4	0.36 (1)	4.13
C- D	-2811 / 0	-77.4	-77.4	0.40 (1)	3.81
D- E	-2810 / 0	-77.4	-77.4	0.32 (1)	3.90
E- F	-2810 / 0	-77.4	-77.4	0.40 (1)	3.81
F- G	-2810 / 0	-77.4	-77.4	0.40 (1)	3.81
G- H	-2368 / 0	-77.4	-77.4	0.36 (1)	4.13
H- I	-1774 / 0	-77.4	-77.4	0.42 (1)	4.58
I- J	0 / 30	-77.4	-77.4	0.09 (1)	10.00
T- A	-1577 / 0	0.0	0.0	0.16 (1)	6.57
K- I	-1678 / 0	0.0	0.0	0.17 (1)	6.41
T- S	0 / 0	-17.5	-17.5	0.10 (4)	10.00
S- R	0 / 1412	-17.5	-17.5	0.28 (1)	10.00
R- Q	0 / 2368	-17.5	-17.5	0.42 (1)	10.00
Q- P	0 / 2811	-17.5	-17.5	0.49 (1)	10.00
P- O	0 / 2811	-17.5	-17.5	0.49 (1)	10.00
O- N	0 / 2369	-17.5	-17.5	0.42 (1)	10.00
N- M	0 / 2369	-17.5	-17.5	0.42 (1)	10.00
M- L	0 / 1412	-17.5	-17.5	0.28 (1)	10.00
L- K	0 / 0	-17.5	-17.5	0.10 (4)	10.00

WEBS

MEMB. FR-TO	MAX. FACTORED FORCE (LBS)	MAX CSI (LC)
S- B	-222 / 13	0.09 (1)
B- R	0 / 1340	0.30 (1)
R- C	-859 / 0	0.33 (1)
C- Q	0 / 628	0.14 (1)
Q- D	-361 / 0	0.14 (1)
D- O	-2 / 0	0.00 (1)
O- E	-360 / 0	0.14 (1)
O- G	0 / 626	0.14 (1)
M- G	-859 / 0	0.33 (1)
M- H	0 / 1341	0.30 (1)
L- H	-222 / 13	0.09 (1)
A- S	0 / 1452	0.33 (1)
L- I	0 / 1452	0.33 (1)

DESIGN CRITERIA

SPECIFIED LOADS:

TOP CH.	LL	=	23.3	PSF
	DL	=	3.0	PSF
BOT CH.	LL	=	0.0	PSF
	DL	=	7.0	PSF
TOTAL LOAD		=	33.3	PSF

SPACING = 24.0 IN. C/C

LOADING IN FLAT SECTION BASED ON A SLOPE OF 2.00/12 MINIMUM

THIS TRUSS IS DESIGNED FOR RESIDENTIAL OR SMALL BUILDING REQUIREMENTS OF PART 9, NBCC 2010

THIS DESIGN COMPLIES WITH:
- PART 9 OF OBC 2012 , BCBC 2012 , ABC 2014
- CSA 086-09
- TPIC 2011

(55 % OF 27.2 P.S.F. G.S.L. PLUS 8.4 P.S.F. RAIN LOAD) EQUALS 23.3 P.S.F. SPECIFIED ROOF LIVE LOAD

ALLOWABLE DEFL.(LL)= L/360 (1.13")
CALCULATED VERT. DEFL.(LL) = L/ 999 (0.16")
ALLOWABLE DEFL.(TL)= L/360 (1.13")
CALCULATED VERT. DEFL.(TL) = L/ 999 (0.29")

CSI: TC=0.42/1.00 (A-B:1) , BC=0.49/1.00 (O-Q:1) , WB=0.33/1.00 (C-R:1) , SSI=0.18/1.00 (G-H:1)

DOL LUMBER=1.00 NAIL=1.00 LS BEND=1.10 COMP=1.10 SHEAR=1.10 TENS= 1.10

COMPANION LIVE LOAD FACTOR = 0.50

TRUSS PLATE MANUFACTURER IS NOT RESPONSIBLE FOR QUALITY CONTROL IN THE TRUSS MANUFACTURING PLANT .

NAIL VALUES

PLATE	GRIP(DRY) (PSI) MAX	MIN	SHEAR (PLI) MAX	MIN	SECTION (PLI) MAX	MIN
MT20	618	354	1667	822	2284	1656

PLATE PLACEMENT TOL. = 0.250 inches

PLATE ROTATION TOL. = 5.0 Deg.

JSI GRIP= 0.90 (Q) (INPUT = 0.90)
JSI METAL= 0.73 (P) (INPUT = 1.00)

CONTINUED ON PAGE 2

KOTT

JOB NAME	TRUSS NAME	QUANTITY	PLY	JOB DESC.	DWG NO.
NE0618-032	T05	2	1	GREEN YORK HOMES-CELESTIAL 2 EL 1 / TRUSS DESC.	PAGE 20 OF 30

Version 8.210 S Mar 12 2018 MiTek Industries, Inc. Tue Jun 5 16:23:16 2018 Page 1
ID:XgvKq7wA9gLFADxpsWFVufzB0Hj-BTCAPnmrbjme?LoecDvrtDz5q5mEW50NMgvi?9z9I99

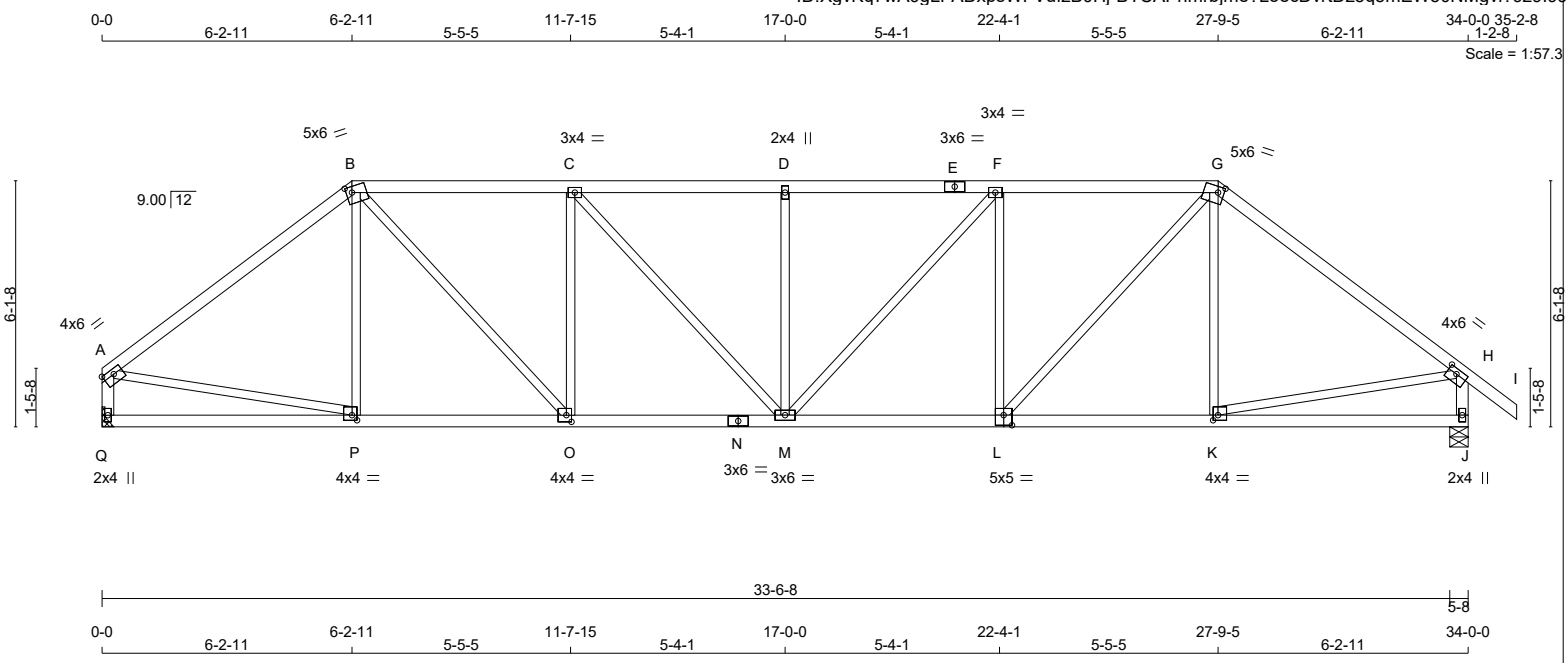

TOTAL WEIGHT = 2 X 143 = 285 lb

LUMBER
N. L. G. A. RULES

CHORDS	SIZE		LUMBER	DESCR.
A - B	2x4	DRY	No.2	SPF
B - E	2x4	DRY	No.2	SPF
E - G	2x4	DRY	No.2	SPF
G - I	2x4	DRY	No.2	SPF
Q - A	2x4	DRY	No.2	SPF
J - H	2x4	DRY	No.2	SPF
Q - N	2x4	DRY	No.2	SPF
N - L	2x4	DRY	No.2	SPF
L - J	2x4	DRY	No.2	SPF
ALL WEBS EXCEPT	2x3	DRY	No.2	SPF

DRY: SEASONED LUMBER.

PLATES (table is in inches)

JT	TYPE	PLATES	W	LEN	Y	X
A	TMVW-t	MT20	4.0	6.0	1.50	Edge
B	TTWW-m	MT20	5.0	6.0	1.75	1.75
C	TMWW-t	MT20	3.0	4.0		
D	TMW+w	MT20	2.0	4.0		
E	TS-t	MT20	3.0	6.0		
F	TMWW-t	MT20	3.0	4.0		
G	TTWW-m	MT20	5.0	6.0	1.75	1.75
H	TMVW-t	MT20	4.0	6.0	1.50	2.75
J	BMV1+p	MT20	2.0	4.0		
K	BMWW-t	MT20	4.0	4.0	1.50	1.50
L	BSWW-l	MT20	5.0	5.0	3.00	2.50
M	BMWWW-t	MT20	3.0	6.0		
N	BS-t	MT20	3.0	6.0		
O	BMWW-t	MT20	4.0	4.0	2.00	1.50
P	BMWW-t	MT20	4.0	4.0	1.50	1.50
Q	BMV1+p	MT20	2.0	4.0		

Edge - INDICATES REFERENCE CORNER OF PLATE TOUCHES EDGE OF CHORD.

READ ALL NOTES ON THIS PAGE AND ON ENGINEERING NOTE PAGE ENP-1. THIS NOTE PAGE IS AN INTEGRAL PART OF THIS DRAWING AS IT CONTAINS SPECIFICATIONS AND CRITERIA USED IN THE DESIGN OF THIS COMPONENT.

LICENSED PROFESSIONAL ENGINEER
N.A. EL-MASRI
PROVINCE OF ONTARIO
Jun 05, 2018

DIMENSIONS, SUPPORTS AND LOADINGS SPECIFIED BY FABRICATOR TO BE VERIFIED BY BUILDING DESIGNER

BEARINGS

JT	FACTORED GROSS REACTION VERT	HORZ	MAXIMUM GROSS REACTION DOWN	FACTORED HORZ	UPLIFT	INPUT BRG IN-SX	REQRD BRG IN-SX
Q	1613	0	1613	0	0	MECHANICAL	
J	1713	0	1713	0	0	5-8	5-8

A SUITABLE MECHANICAL CONNECTION IS REQUIRED AT JOINT Q TO RESIST THE MAX FACTORED REACTIONS.

UNFACTORED REACTIONS

JT	1ST LCASE COMBINED	MAX./MIN. COMPONENT REACTIONS SNOW	LIVE	PERM.LIVE	WIND	DEAD	SOIL
Q	1132	792 / 0	0 / 0	0 / 0	0 / 0	340 / 0	0 / 0
J	1200	852 / 0	0 / 0	0 / 0	0 / 0	348 / 0	0 / 0

BEARING MATERIAL TO BE SPF NO.2 OR BETTER AT JOINT(S) J

BRACING
TOP CHORD TO BE SHEATHED OR MAX. PURLIN SPACING = 4.02 FT.
MAX. UNBRACED BOTTOM CHORD LENGTH = 10.00 FT OR RIGID CEILING DIRECTLY APPLIED.

ALL PITCH BREAKS AND PERIMETER CORNER JOINTS MUST BE LATERALLY RESTRAINED.

LOADING
TOTAL LOAD CASES: (4)

CHORDS

MEMB. FR-TO	MAX. FACTORED FORCE (LBS)	FACTORED VERT. LOAD (PLF) FROM	TO	LC1 CSI (LC)	MAX UNBRAC LENGTH
A- B	-1783 / 0	-77.4	-77.4	0.73 (1)	4.21
B- C	-2163 / 0	-77.4	-77.4	0.44 (1)	4.20
C- D	-2380 / 0	-77.4	-77.4	0.45 (1)	4.02
D- E	-2380 / 0	-77.4	-77.4	0.45 (1)	4.02
E- F	-2380 / 0	-77.4	-77.4	0.45 (1)	4.02
F- G	-2163 / 0	-77.4	-77.4	0.44 (1)	4.20
G- H	-1783 / 0	-77.4	-77.4	0.73 (1)	4.21
H- I	0 / 30	-77.4	-77.4	0.09 (1)	10.00
Q- A	-1567 / 0	0.0	0.0	0.16 (1)	6.58
J- H	-1668 / 0	0.0	0.0	0.17 (1)	6.42
Q- P	0 / 0	-17.5	-17.5	0.16 (4)	10.00
P- O	0 / 1422	-17.5	-17.5	0.31 (1)	10.00
O- N	0 / 2163	-17.5	-17.5	0.39 (1)	10.00
N- M	0 / 2163	-17.5	-17.5	0.39 (1)	10.00
M- L	0 / 2163	-17.5	-17.5	0.39 (1)	10.00
L- K	0 / 1422	-17.5	-17.5	0.31 (1)	10.00
K- J	0 / 0	-17.5	-17.5	0.16 (4)	10.00

WEBS

MEMB. FR-TO	MAX. FACTORED FORCE (LBS)	MAX CSI (LC)
P- B	-136 / 57	0.08 (1)
B- O	0 / 1085	0.24 (1)
O- C	-706 / 0	0.42 (1)
C- M	0 / 322	0.07 (1)
M- D	-380 / 0	0.22 (1)
M- F	0 / 322	0.07 (1)
L- F	-706 / 0	0.42 (1)
L- G	0 / 1085	0.24 (1)
K- G	-136 / 57	0.08 (1)
A- P	0 / 1447	0.33 (1)
K- H	0 / 1447	0.33 (1)

DESIGN CRITERIA

SPECIFIED LOADS:

TOP CH.	LL	=	23.3	PSF
	DL	=	3.0	PSF
BOT CH.	LL	=	0.0	PSF
	DL	=	7.0	PSF
TOTAL LOAD		=	33.3	PSF

SPACING = 24.0 IN. C/C

LOADING IN FLAT SECTION BASED ON A SLOPE OF 2.00/12 MINIMUM

THIS TRUSS IS DESIGNED FOR RESIDENTIAL OR SMALL BUILDING REQUIREMENTS OF PART 9, NBCC 2010

THIS DESIGN COMPLIES WITH:
- PART 9 OF OBC 2012 , BCBC 2012 , ABC 2014
- CSA 086-09
- TPIC 2011

(55 % OF 27.2 P.S.F. G.S.L. PLUS 8.4 P.S.F. RAIN LOAD) EQUALS 23.3 P.S.F. SPECIFIED ROOF LIVE LOAD

ALLOWABLE DEFL.(LL)= L/360 (1.13")
CALCULATED VERT. DEFL.(LL) = L/ 999 (0.13")
ALLOWABLE DEFL.(TL)= L/360 (1.13")
CALCULATED VERT. DEFL.(TL) = L/ 999 (0.22")

CSI: TC=0.73/1.00 (A-B:1) , BC=0.39/1.00 (M-O:1) , WB=0.42/1.00 (C-O:1) , SSI=0.20/1.00 (F-G:1)

DOL LUMBER=1.00 NAIL=1.00 LS BEND=1.10 COMP=1.10 SHEAR=1.10 TENS= 1.10

COMPANION LIVE LOAD FACTOR = 0.50

TRUSS PLATE MANUFACTURER IS NOT RESPONSIBLE FOR QUALITY CONTROL IN THE TRUSS MANUFACTURING PLANT .

NAIL VALUES

PLATE	GRIP(DRY) (PSI) MAX	MIN	SHEAR (PLI) MAX	MIN	SECTION (PLI) MAX	MIN
MT20	618	354	1667	822	2284	1656

PLATE PLACEMENT TOL. = 0.250 inches

PLATE ROTATION TOL. = 5.0 Deg.

JSI GRIP= 0.89 (L) (INPUT = 0.90)
JSI METAL= 0.56 (N) (INPUT = 1.00)

KOTT

JOB NAME	TRUSS NAME	QUANTITY	PLY	JOB DESC.	DWG NO.
NE0618-032	T06	2	1	GREEN YORK HOMES-CELESTIAL 2 EL 1 / TRUSS DESC.	PAGE 21 OF 30

Version 8.210 S Mar 12 2018 MiTek Industries, Inc. Tue Jun 5 16:23:17 2018 Page 1
ID:XgvKq7wA9gLFADxpsWFVufzB0Hj-ffmZd7nTM1uVdUNqAxR4QQVJJV7fFPkXaKeFXcz9I98

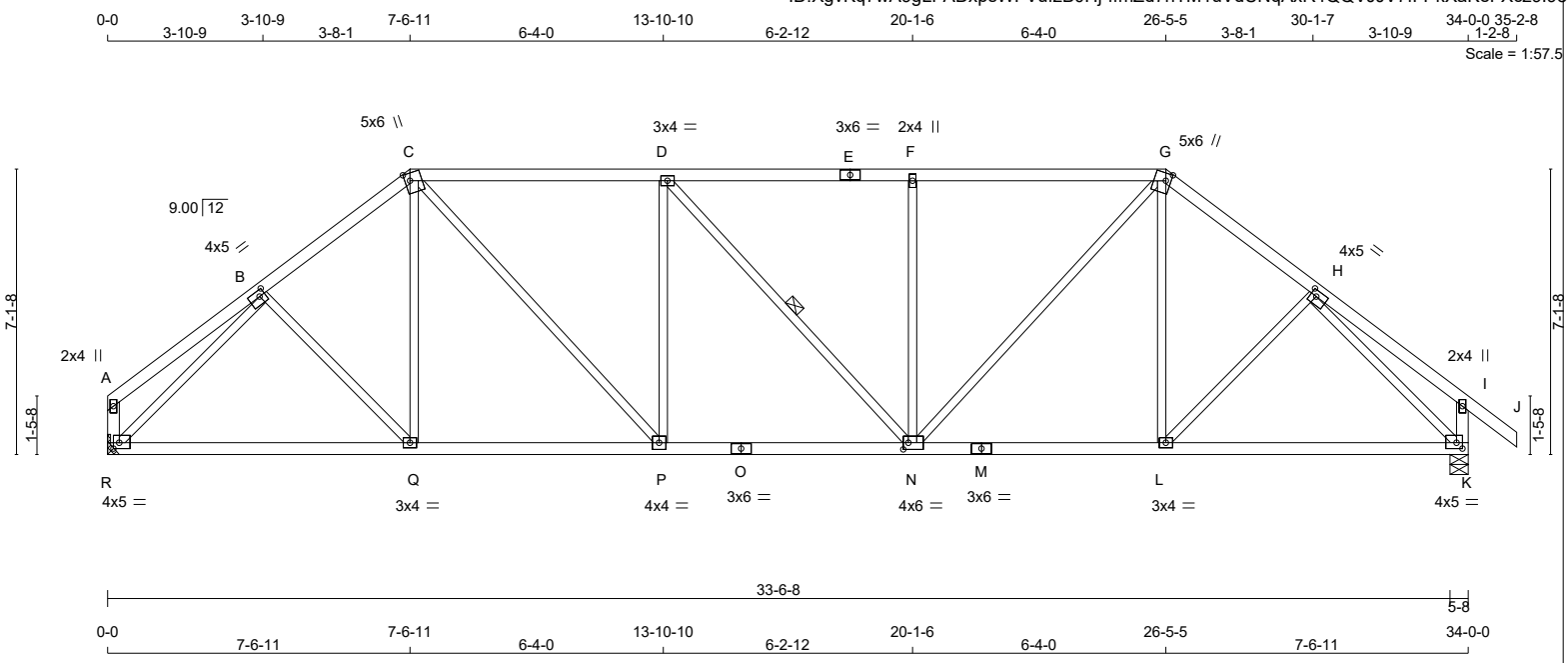

TOTAL WEIGHT = 2 X 146 = 292 lb [M]

LUMBER
N. L. G. A. RULES

CHORDS	SIZE		LUMBER	DESCR.
A - C	2x4	DRY	No.2	SPF
C - E	2x4	DRY	No.2	SPF
E - G	2x4	DRY	No.2	SPF
G - J	2x4	DRY	No.2	SPF
R - A	2x4	DRY	No.2	SPF
K - I	2x4	DRY	No.2	SPF
R - O	2x4	DRY	No.2	SPF
O - M	2x4	DRY	No.2	SPF
M - K	2x4	DRY	No.2	SPF
ALL WEBS EXCEPT	2x3	DRY	No.2	SPF

DRY: SEASONED LUMBER.

PLATES (table is in inches)

JT	TYPE	PLATES	W	LEN	Y	X
A	TMV+p	MT20	2.0	4.0		
B	TMWW-t	MT20	4.0	5.0	1.75	1.75
C	TTWW+m	MT20	5.0	6.0	2.25	1.50
D	TMWW-t	MT20	3.0	4.0		
E	TS-t	MT20	3.0	6.0		
F	TMW+w	MT20	2.0	4.0		
G	TTWW+m	MT20	5.0	6.0	2.25	1.50
H	TMWW-t	MT20	4.0	5.0	1.75	1.75
I	TMV+p	MT20	2.0	4.0		
K	BMVW1-t	MT20	4.0	5.0	1.75	1.75
L	BMWW-t	MT20	3.0	4.0		
M	BS-t	MT20	3.0	6.0		
N	BMWWW-t	MT20	4.0	6.0	2.00	1.50
O	BS-t	MT20	3.0	6.0		
P	BMWW-t	MT20	4.0	4.0		
Q	BMWW-t	MT20	3.0	4.0		
R	BMVW1-t	MT20	4.0	5.0	1.75	1.75

READ ALL NOTES ON THIS PAGE AND ON ENGINEERING NOTE PAGE ENP-1. THIS NOTE PAGE IS AN INTEGRAL PART OF THIS DRAWING AS IT CONTAINS SPECIFICATIONS AND CRITERIA USED IN THE DESIGN OF THIS COMPONENT.

LICENSED PROFESSIONAL ENGINEER
N.A. EL-MASRI
PROVINCE OF ONTARIO
Jun 05, 2018

DIMENSIONS, SUPPORTS AND LOADINGS SPECIFIED BY FABRICATOR TO BE VERIFIED BY BUILDING DESIGNER

BEARINGS

JT	FACTORED GROSS REACTION VERT	HORZ	MAXIMUM GROSS REACTION DOWN	FACTORED HORZ	UPLIFT	INPUT BRG IN-SX	REQRD BRG IN-SX
R	1613	0	1613	0	0	MECHANICAL	
K	1713	0	1713	0	0	5-8	5-8

A SUITABLE MECHANICAL CONNECTION IS REQUIRED AT JOINT R TO RESIST THE MAX FACTORED REACTIONS.

UNFACTORED REACTIONS

JT	1ST LCASE COMBINED	MAX./MIN. COMPONENT REACTIONS SNOW	LIVE	PERM.LIVE	WIND	DEAD	SOIL
R	1132	792 / 0	0 / 0	0 / 0	0 / 0	340 / 0	0 / 0
K	1200	852 / 0	0 / 0	0 / 0	0 / 0	348 / 0	0 / 0

BEARING MATERIAL TO BE SPF NO.2 OR BETTER AT JOINT(S) K

BRACING
TOP CHORD TO BE SHEATHED OR MAX. PURLIN SPACING = 4.21 FT.
MAX. UNBRACED BOTTOM CHORD LENGTH = 10.00 FT OR RIGID CEILING DIRECTLY APPLIED.

ALL PITCH BREAKS AND PERIMETER CORNER JOINTS MUST BE LATERALLY RESTRAINED.

1 - 1x4 LATERAL BRACE(S) AT 1/ 2 LENGTH OF D-N. DBS = 20-0-0 . CBF = 0 LBS.

DBS = DIAGONAL BRACE SPACING (MAX). CBF = CUMULATIVE BRACING FORCE (PER BRACE). FASTEN LATERAL BRACE(S) USING (0.122"X3") SPIRAL NAILS : 1 NAIL FOR 2x3 BRACE(S), 2 FOR 1x4, 2x4, 2x5, 3 FOR 2x6, 4 FOR 2x8, 5 FOR 2x10, AND 6 FOR 2x12.

END VERTICAL(S) MUST BE SHEATHED OR HAVE BRACES AS INDICATED IN THE MAX. UNBRACED LENGTH COLUMN OF THE TABLE BELOW

LOADING
TOTAL LOAD CASES: (4)

CHORDS

MEMB. FR-TO	MAX. FACTORED FORCE (LBS)	FACTORED VERT. LOAD (PLF) FROM	TO	LC1	MAX CSI (LC)	MAX. UNBRAC LENGTH
A- B	0 / 19	-77.4	-77.4	0.16 (1)	10.00	
B- C	-1777 / 0	-77.4	-77.4	0.21 (1)	4.82	
C- D	-1989 / 0	-77.4	-77.4	0.56 (1)	4.21	
D- E	-1988 / 0	-77.4	-77.4	0.55 (1)	4.21	
E- F	-1988 / 0	-77.4	-77.4	0.55 (1)	4.21	
F- G	-1987 / 0	-77.4	-77.4	0.55 (1)	4.22	
G- H	-1777 / 0	-77.4	-77.4	0.21 (1)	4.82	
H- I	0 / 19	-77.4	-77.4	0.16 (1)	10.00	
I- J	0 / 30	-77.4	-77.4	0.09 (1)	10.00	
R- A	-114 / 0	0.0	0.0	0.01 (1)	7.81	
K- I	-215 / 0	0.0	0.0	0.02 (1)	7.81	
R- Q	0 / 1374	-17.5	-17.5	0.35 (1)	10.00	
Q- P	0 / 1405	-17.5	-17.5	0.35 (1)	10.00	
P- O	0 / 1989	-17.5	-17.5	0.38 (1)	10.00	
O- N	0 / 1989	-17.5	-17.5	0.38 (1)	10.00	
N- M	0 / 1405	-17.5	-17.5	0.35 (1)	10.00	
M- L	0 / 1405	-17.5	-17.5	0.35 (1)	10.00	
L- K	0 / 1374	-17.5	-17.5	0.35 (1)	10.00	

WEBS

MEMB. FR-TO	MAX. FACTORED FORCE (LBS)	MAX CSI (LC)
B- Q	0 / 62	0.02 (4)
Q- C	0 / 115	0.04 (4)
C- P	0 / 858	0.19 (1)
P- D	-526 / 0	0.46 (1)
D- N	-2 / 0	0.00 (1)
N- F	-526 / 0	0.46 (1)
N- G	0 / 856	0.19 (1)
L- G	0 / 115	0.04 (4)
L- H	0 / 62	0.02 (4)
R- B	-1992 / 0	0.96 (1)
H- K	-1992 / 0	0.96 (1)

DESIGN CRITERIA

SPECIFIED LOADS:

TOP CH.	LL	=	23.3	PSF
	DL	=	3.0	PSF
BOT CH.	LL	=	0.0	PSF
	DL	=	7.0	PSF
TOTAL LOAD		=	33.3	PSF

SPACING = 24.0 IN. C/C

LOADING IN FLAT SECTION BASED ON A SLOPE OF 2.00/12 MINIMUM

THIS TRUSS IS DESIGNED FOR RESIDENTIAL OR SMALL BUILDING REQUIREMENTS OF PART 9, NBCC 2010

THIS DESIGN COMPLIES WITH:
- PART 9 OF OBC 2012 , BCBC 2012 , ABC 2014
- CSA 086-09
- TPIC 2011

(55 % OF 27.2 P.S.F. G.S.L. PLUS 8.4 P.S.F. RAIN LOAD) EQUALS 23.3 P.S.F. SPECIFIED ROOF LIVE LOAD

ALLOWABLE DEFL.(LL)= L/360 (1.13")
CALCULATED VERT. DEFL.(LL) = L/ 999 (0.10")
ALLOWABLE DEFL.(TL)= L/360 (1.13")
CALCULATED VERT. DEFL.(TL) = L/ 999 (0.20")

CSI: TC=0.56/1.00 (C-D:1) , BC=0.38/1.00 (N-P:1) , WB=0.96/1.00 (H-K:1) , SSI=0.23/1.00 (C-D:1)

DOL LUMBER=1.00 NAIL=1.00 LS BEND=1.10 COMP=1.10 SHEAR=1.10 TENS= 1.10

COMPANION LIVE LOAD FACTOR = 0.50

TRUSS PLATE MANUFACTURER IS NOT RESPONSIBLE FOR QUALITY CONTROL IN THE TRUSS MANUFACTURING PLANT .

NAIL VALUES

PLATE	GRIP(DRY) (PSI) MAX	MIN	SHEAR (PLI) MAX	MIN	SECTION (PLI) MAX	MIN
MT20	618	354	1667	822	2284	1656

PLATE PLACEMENT TOL. = 0.250 inches

PLATE ROTATION TOL. = 5.0 Deg.

JSI GRIP= 0.89 (H) (INPUT = 0.90)
JSI METAL= 0.59 (H) (INPUT = 1.00)

KOTT

JOB NAME	TRUSS NAME	QUANTITY	PLY	JOB DESC.	DWG NO.
NE0618-032	T07	2	1	GREEN YORK HOMES-CELESTIAL 2 EL 1 / TRUSS DESC.	PAGE 22 OF 30

Version 8.210 S Mar 12 2018 MiTek Industries, Inc. Tue Jun 5 16:23:18 2018 Page 1
ID:XgvKq7wA9gLFADxpsWFVufzB0Hj-7sKxqTn57L0MEey0jeyJye2Y3uTc_z2gp_Oo32z9I97

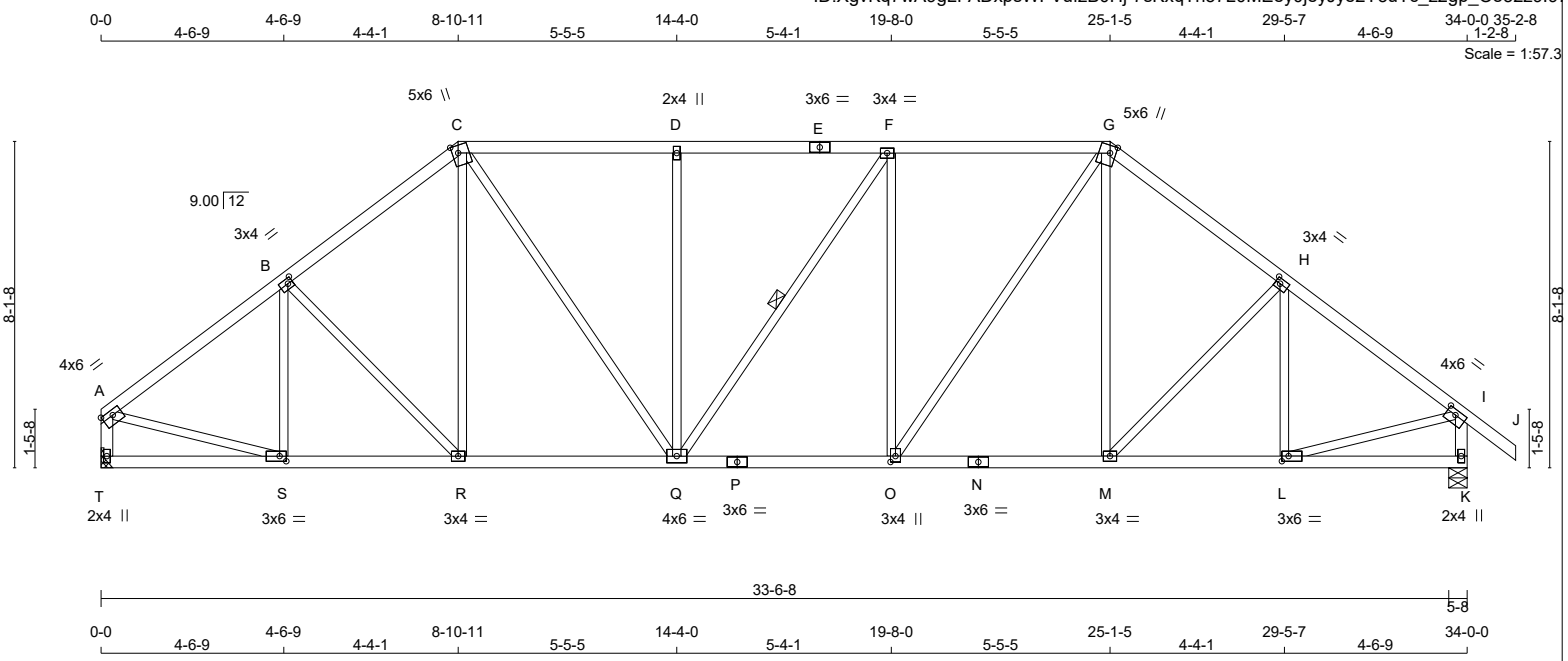

TOTAL WEIGHT = 2 X 158 = 316 lb

LUMBER
N. L. G. A. RULES

CHORDS	SIZE		LUMBER	DESCR.
A - C	2x4	DRY	No.2	SPF
C - E	2x4	DRY	No.2	SPF
E - G	2x4	DRY	No.2	SPF
G - J	2x4	DRY	No.2	SPF
T - A	2x4	DRY	No.2	SPF
K - I	2x4	DRY	No.2	SPF
T - P	2x4	DRY	No.2	SPF
P - N	2x4	DRY	No.2	SPF
N - K	2x4	DRY	No.2	SPF
ALL WEBS EXCEPT	2x3	DRY	No.2	SPF

DRY: SEASONED LUMBER.

PLATES (table is in inches)

JT	TYPE	PLATES	W	LEN	Y	X
A	TMVW-t	MT20	4.0	6.0	1.50	Edge
B	TMWW-t	MT20	3.0	4.0	1.50	1.50
C	TTWW+m	MT20	5.0	6.0	2.25	1.75
D	TMW+w	MT20	2.0	4.0		
E	TS-t	MT20	3.0	6.0		
F	TMWW-t	MT20	3.0	4.0		
G	TTWW+m	MT20	5.0	6.0	2.25	1.75
H	TMWW-t	MT20	3.0	4.0	1.50	1.50
I	TMVW-t	MT20	4.0	6.0	1.50	2.75
K	BMV1+p	MT20	2.0	4.0		
L	BMWW-t	MT20	3.0	6.0	1.50	2.00
M	BMWW-t	MT20	3.0	4.0		
N	BS-t	MT20	3.0	6.0		
O	BMWW+t	MT20	3.0	4.0	1.75	1.50
P	BS-t	MT20	3.0	6.0		
Q	BMWWW-t	MT20	4.0	6.0		
R	BMWW-t	MT20	3.0	4.0		
S	BMWW-t	MT20	3.0	6.0	1.50	2.00
T	BMV1+p	MT20	2.0	4.0		

Edge - INDICATES REFERENCE CORNER OF PLATE TOUCHES EDGE OF CHORD.

READ ALL NOTES ON THIS PAGE AND ON ENGINEERING NOTE PAGE ENP-1. THIS NOTE PAGE IS AN INTEGRAL PART OF THIS DRAWING AS IT CONTAINS SPECIFICATIONS AND CRITERIA USED IN THE DESIGN OF THIS COMPONENT.

LICENSED PROFESSIONAL ENGINEER
N.A. EL-MASRI
PROVINCE OF ONTARIO
Jun 05, 2018

DIMENSIONS, SUPPORTS AND LOADINGS SPECIFIED BY FABRICATOR TO BE VERIFIED BY BUILDING DESIGNER

BEARINGS

JT	FACTORED GROSS REACTION VERT	HORZ	MAXIMUM GROSS REACTION DOWN	FACTORED HORZ	UPLIFT	INPUT BRG IN-SX	REQRD BRG IN-SX
T	1613	0	1613	0	0	MECHANICAL	
K	1713	0	1713	0	0	5-8	5-8

A SUITABLE MECHANICAL CONNECTION IS REQUIRED AT JOINT T TO RESIST THE MAX FACTORED REACTIONS.

UNFACTORED REACTIONS

JT	1ST LCASE COMBINED	MAX./MIN. COMPONENT REACTIONS SNOW	LIVE	PERM.LIVE	WIND	DEAD	SOIL
T	1132	792 / 0	0 / 0	0 / 0	0 / 0	340 / 0	0 / 0
K	1200	852 / 0	0 / 0	0 / 0	0 / 0	348 / 0	0 / 0

BEARING MATERIAL TO BE SPF NO.2 OR BETTER AT JOINT(S) K

BRACING

TOP CHORD TO BE SHEATHED OR MAX. PURLIN SPACING = 4.77 FT.
MAX. UNBRACED BOTTOM CHORD LENGTH = 10.00 FT OR RIGID CEILING DIRECTLY APPLIED.

ALL PITCH BREAKS AND PERIMETER CORNER JOINTS MUST BE LATERALLY RESTRAINED.

1 - 1x4 LATERAL BRACE(S) AT 1/ 2 LENGTH OF F-Q. DBS = 20-0-0 . CBF = 0 LBS.

DBS = DIAGONAL BRACE SPACING (MAX). CBF = CUMULATIVE BRACING FORCE (PER BRACE). FASTEN LATERAL BRACE(S) USING (0.122"X3") SPIRAL NAILS : 1 NAIL FOR 2x3 BRACE(S), 2 FOR 1x4, 2x4, 2x5, 3 FOR 2x6, 4 FOR 2x8, 5 FOR 2x10, AND 6 FOR 2x12.

END VERTICAL(S) MUST BE SHEATHED OR HAVE BRACES AS INDICATED IN THE MAX. UNBRACED LENGTH COLUMN OF THE TABLE BELOW

LOADING

TOTAL LOAD CASES: (4)

CHORDS

MEMB. FR-TO	MAX. FACTORED FORCE (LBS)	FACTORED VERT. LOAD (PLF) FROM	TO	LC1	MAX CSI (LC)	MAX. UNBRAC LENGTH
A- B	-1780 / 0	-77.4	-77.4	0.24 (1)	4.80	
B- C	-1725 / 0	-77.4	-77.4	0.23 (1)	4.86	
C- D	-1738 / 0	-77.4	-77.4	0.30 (1)	4.77	
D- E	-1738 / 0	-77.4	-77.4	0.28 (1)	4.80	
E- F	-1738 / 0	-77.4	-77.4	0.28 (1)	4.80	
F- G	-1740 / 0	-77.4	-77.4	0.30 (1)	4.77	
G- H	-1725 / 0	-77.4	-77.4	0.23 (1)	4.86	
H- I	-1780 / 0	-77.4	-77.4	0.24 (1)	4.80	
I- J	0 / 30	-77.4	-77.4	0.09 (1)	10.00	
T- A	-1577 / 0	0.0	0.0	0.16 (1)	6.57	
K- I	-1677 / 0	0.0	0.0	0.17 (1)	6.41	
T- S	0 / 0	-17.5	-17.5	0.07 (4)	10.00	
S- R	0 / 1442	-17.5	-17.5	0.28 (1)	10.00	
R- Q	0 / 1360	-17.5	-17.5	0.27 (1)	10.00	
Q- P	0 / 1740	-17.5	-17.5	0.33 (1)	10.00	
P- O	0 / 1740	-17.5	-17.5	0.33 (1)	10.00	
O- N	0 / 1360	-17.5	-17.5	0.27 (1)	10.00	
N- M	0 / 1360	-17.5	-17.5	0.27 (1)	10.00	
M- L	0 / 1443	-17.5	-17.5	0.28 (1)	10.00	
L- K	0 / 0	-17.5	-17.5	0.07 (4)	10.00	

WEBS

MEMB. FR-TO	MAX. FACTORED FORCE (LBS)	MAX CSI (LC)
S- B	-279 / 0	0.10 (1)
B- R	-121 / 0	0.09 (1)
R- C	0 / 177	0.04 (4)
C- Q	0 / 662	0.15 (1)
Q- D	-450 / 0	0.57 (1)
Q- F	-2 / 0	0.00 (1)
O- F	-450 / 0	0.57 (1)
O- G	0 / 665	0.15 (1)
M- G	0 / 175	0.04 (4)
M- H	-121 / 0	0.09 (1)
L- H	-279 / 0	0.10 (1)
A- S	0 / 1486	0.33 (1)
L- I	0 / 1486	0.33 (1)

DESIGN CRITERIA

SPECIFIED LOADS:

TOP CH.	LL	=	23.3	PSF
	DL	=	3.0	PSF
BOT CH.	LL	=	0.0	PSF
	DL	=	7.0	PSF
TOTAL LOAD		=	33.3	PSF

SPACING = 24.0 IN. C/C

LOADING IN FLAT SECTION BASED ON A SLOPE OF 2.00/12 MINIMUM

THIS TRUSS IS DESIGNED FOR RESIDENTIAL OR SMALL BUILDING REQUIREMENTS OF PART 9, NBCC 2010

THIS DESIGN COMPLIES WITH:
- PART 9 OF OBC 2012 , BCBC 2012 , ABC 2014
- CSA 086-09
- TPIC 2011

(55 % OF 27.2 P.S.F. G.S.L. PLUS 8.4 P.S.F. RAIN LOAD) EQUALS 23.3 P.S.F. SPECIFIED ROOF LIVE LOAD

ALLOWABLE DEFL.(LL)= L/360 (1.13")
CALCULATED VERT. DEFL.(LL) = L/ 999 (0.08")
ALLOWABLE DEFL.(TL)= L/360 (1.13")
CALCULATED VERT. DEFL.(TL) = L/ 999 (0.15")

CSI: TC=0.30/1.00 (F-G:1) , BC=0.33/1.00 (O-Q:1) , WB=0.57/1.00 (F-O:1) , SSI=0.20/1.00 (F-G:1)

DOL LUMBER=1.00 NAIL=1.00 LS BEND=1.10 COMP=1.10 SHEAR=1.10 TENS= 1.10

COMPANION LIVE LOAD FACTOR = 0.50

TRUSS PLATE MANUFACTURER IS NOT RESPONSIBLE FOR QUALITY CONTROL IN THE TRUSS MANUFACTURING PLANT .

NAIL VALUES

PLATE	GRIP(DRY) (PSI) MAX	MIN	SHEAR (PLI) MAX	MIN	SECTION (PLI) MAX	MIN
MT20	618	354	1667	822	2284	1656

PLATE PLACEMENT TOL. = 0.250 inches

PLATE ROTATION TOL. = 5.0 Deg.

JSI GRIP= 0.88 (K) (INPUT = 0.90)
JSI METAL= 0.49 (I) (INPUT = 1.00)

CONTINUED ON PAGE 2

KOTT

JOB NAME	TRUSS NAME	QUANTITY	PLY	JOB DESC.	DWG NO.
NE0618-032	T08	2	1	GREEN YORK HOMES-CELESTIAL 2 EL 1 / TRUSS DESC.	PAGE 23 OF 30

Version 8.210 S Mar 12 2018 MiTek Industries, Inc. Tue Jun 5 16:23:19 2018 Page 1
ID:XgvKq7wA9gLFADxpsWFVufzB0Hj-b2uJ2pojue8DsoXDHMTYVrbgXIqHjTop2e7McUz9I96

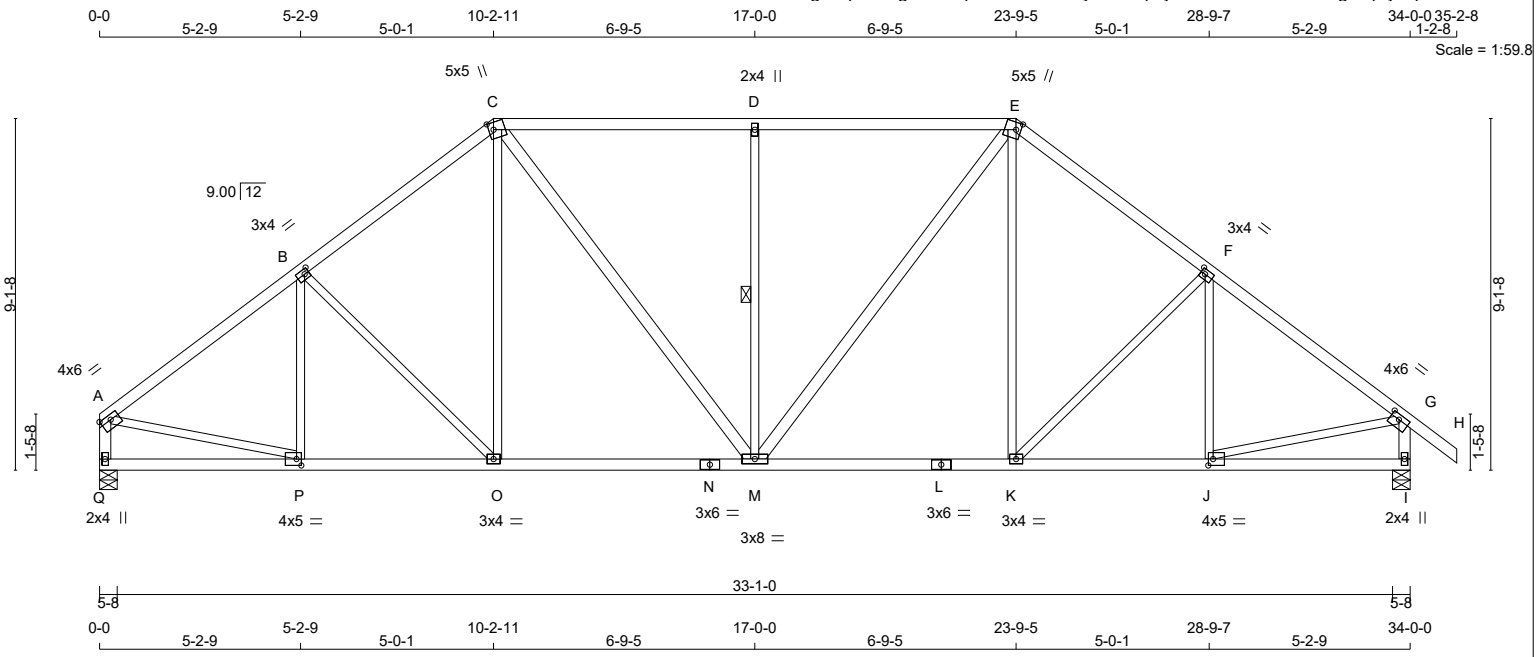

TOTAL WEIGHT = 2 X 160 = 320 lb

[M][F]

LUMBER

N. L. G. A. RULES

CHORDS	SIZE		LUMBER	DESCR.
A - C	2x4	DRY	No.2	SPF
C - E	2x4	DRY	No.2	SPF
E - H	2x4	DRY	No.2	SPF
Q - A	2x4	DRY	No.2	SPF
I - G	2x4	DRY	No.2	SPF
Q - N	2x4	DRY	No.2	SPF
N - L	2x4	DRY	No.2	SPF
L - I	2x4	DRY	No.2	SPF
ALL WEBS	2x3	DRY	No.2	SPF
EXCEPT				
C - M	2x4	DRY	No.2	SPF
M - E	2x4	DRY	No.2	SPF

DRY: SEASONED LUMBER.

PLATES (table is in inches)

JT	TYPE	PLATES	W	LEN	Y	X
A	TMVW-t	MT20	4.0	6.0	1.50	Edge
B	TMWW-t	MT20	3.0	4.0	1.50	1.50
C	TTWW+m	MT20	5.0	5.0	2.25	1.50
D	TMW+w	MT20	2.0	4.0		
E	TTWW+m	MT20	5.0	5.0	2.25	1.50
F	TMWW-t	MT20	3.0	4.0	1.50	1.50
G	TMVW-t	MT20	4.0	6.0	1.50	2.75
I	BMV1+p	MT20	2.0	4.0		
J	BMWW-t	MT20	4.0	5.0	2.00	1.50
K	BMWW-t	MT20	3.0	4.0		
L	BS-t	MT20	3.0	6.0		
M	BMWWW-t	MT20	3.0	8.0		
N	BS-t	MT20	3.0	6.0		
O	BMWW-t	MT20	3.0	4.0		
P	BMWW-t	MT20	4.0	5.0	2.00	1.50
Q	BMV1+p	MT20	2.0	4.0		

Edge - INDICATES REFERENCE CORNER OF PLATE TOUCHES EDGE OF CHORD.

READ ALL NOTES ON THIS PAGE AND ON ENGINEERING NOTE PAGE ENP-1. THIS NOTE PAGE IS AN INTEGRAL PART OF THIS DRAWING AS IT CONTAINS SPECIFICATIONS AND CRITERIA USED IN THE DESIGN OF THIS COMPONENT.

LICENSED PROFESSIONAL ENGINEER
N.A. EL-MASRI
PROVINCE OF ONTARIO
Jun 05, 2018

DIMENSIONS, SUPPORTS AND LOADINGS SPECIFIED BY FABRICATOR TO BE VERIFIED BY BUILDING DESIGNER

BEARINGS

JT	FACTORED GROSS REACTION VERT	HORZ	MAXIMUM FACTORED GROSS REACTION DOWN	HORZ	UPLIFT	INPUT BRG IN-SX	REQRD BRG IN-SX
Q	1613	0	1613	0	0	5-8	5-8
I	1713	0	1713	0	0	5-8	5-8

UNFACTORED REACTIONS

JT	1ST LCASE COMBINED	MAX./MIN. COMPONENT REACTIONS SNOW	LIVE	PERM.LIVE	WIND	DEAD	SOIL
Q	1132	792 / 0	0 / 0	0 / 0	0 / 0	340 / 0	0 / 0
I	1200	852 / 0	0 / 0	0 / 0	0 / 0	348 / 0	0 / 0

BEARING MATERIAL TO BE SPF NO.2 OR BETTER AT JOINT(S) Q, I

BRACING

TOP CHORD TO BE SHEATHED OR MAX. PURLIN SPACING = 4.61 FT.
MAX. UNBRACED BOTTOM CHORD LENGTH = 10.00 FT OR RIGID CEILING DIRECTLY APPLIED.

ALL PITCH BREAKS AND PERIMETER CORNER JOINTS MUST BE LATERALLY RESTRAINED.

1 - 1x4 LATERAL BRACE(S) AT 1/ 2 LENGTH OF D-M. DBS = 20-0-0 . CBF = 80 LBS.

DBS = DIAGONAL BRACE SPACING (MAX). CBF = CUMULATIVE BRACING FORCE (PER BRACE). FASTEN LATERAL BRACE(S) USING (0.122"X3") SPIRAL NAILS : 1 NAIL FOR 2x3 BRACE(S), 2 FOR 1x4, 2x4, 2x5, 3 FOR 2x6, 4 FOR 2x8, 5 FOR 2x10, AND 6 FOR 2x12.

END VERTICAL(S) MUST BE SHEATHED OR HAVE BRACES AS INDICATED IN THE MAX. UNBRACED LENGTH COLUMN OF THE TABLE BELOW

LOADING

TOTAL LOAD CASES: (4)

CHORDS

MEMB. FR-TO	MAX. FACTORED FORCE (LBS)	FACTORED VERT. LOAD (PLF) FROM	TO	LC1	MAX CSI (LC)	MAX. UNBRAC LENGTH
A- B	-1805 / 0	-77.4	-77.4	0.32 (1)	4.69	
B- C	-1671 / 0	-77.4	-77.4	0.30 (1)	4.85	
C- D	-1608 / 0	-77.4	-77.4	0.51 (1)	4.61	
D- E	-1608 / 0	-77.4	-77.4	0.51 (1)	4.61	
E- F	-1671 / 0	-77.4	-77.4	0.30 (1)	4.85	
F- G	-1805 / 0	-77.4	-77.4	0.32 (1)	4.69	
G- H	0 / 30	-77.4	-77.4	0.09 (1)	10.00	
Q- A	-1573 / 0	0.0	0.0	0.16 (1)	6.58	
I- G	-1673 / 0	0.0	0.0	0.17 (1)	6.42	
Q- P	0 / 0	-17.5	-17.5	0.10 (4)	10.00	
P- O	0 / 1466	-17.5	-17.5	0.30 (1)	10.00	
O- N	0 / 1314	-17.5	-17.5	0.30 (1)	10.00	
N- M	0 / 1314	-17.5	-17.5	0.30 (1)	10.00	
M- L	0 / 1314	-17.5	-17.5	0.30 (1)	10.00	
L- K	0 / 1314	-17.5	-17.5	0.30 (1)	10.00	
K- J	0 / 1466	-17.5	-17.5	0.30 (1)	10.00	
J- I	0 / 0	-17.5	-17.5	0.10 (4)	10.00	

WEBS

MEMB. FR-TO	MAX. FACTORED FORCE (LBS)	MAX CSI (LC)
P- B	-225 / 15	0.10 (1)
B- O	-218 / 0	0.22 (1)
O- C	0 / 257	0.06 (1)
C- M	0 / 483	0.08 (1)
M- D	-644 / 0	0.35 (1)
M- E	0 / 483	0.08 (1)
K- E	0 / 257	0.06 (1)
K- F	-218 / 0	0.22 (1)
J- F	-225 / 15	0.10 (1)
A- P	0 / 1500	0.34 (1)
J- G	0 / 1500	0.34 (1)

DESIGN CRITERIA

SPECIFIED LOADS:

TOP CH.	LL	=	23.3	PSF
	DL	=	3.0	PSF
BOT CH.	LL	=	0.0	PSF
	DL	=	7.0	PSF
TOTAL LOAD		=	33.3	PSF

SPACING = 24.0 IN. C/C

LOADING IN FLAT SECTION BASED ON A SLOPE OF 2.00/12 MINIMUM

THIS TRUSS IS DESIGNED FOR RESIDENTIAL OR SMALL BUILDING REQUIREMENTS OF PART 9, NBCC 2010

THIS DESIGN COMPLIES WITH:
- PART 9 OF OBC 2012 , BCBC 2012 , ABC 2014
- CSA 086-09
- TPIC 2011

(55 % OF 27.2 P.S.F. G.S.L. PLUS 8.4 P.S.F. RAIN LOAD) EQUALS 23.3 P.S.F. SPECIFIED ROOF LIVE LOAD

ALLOWABLE DEFL.(LL)= L/360 (1.13")
CALCULATED VERT. DEFL.(LL) = L/ 999 (0.07")
ALLOWABLE DEFL.(TL)= L/360 (1.13")
CALCULATED VERT. DEFL.(TL) = L/ 999 (0.14")

CSI: TC=0.51/1.00 (C-D:1) , BC=0.30/1.00 (J-K:1) , WB=0.35/1.00 (D-M:1) , SSI=0.25/1.00 (C-D:1)

DOL LUMBER=1.00 NAIL=1.00 LS BEND=1.10 COMP=1.10 SHEAR=1.10 TENS= 1.10

COMPANION LIVE LOAD FACTOR = 0.50

TRUSS PLATE MANUFACTURER IS NOT RESPONSIBLE FOR QUALITY CONTROL IN THE TRUSS MANUFACTURING PLANT .

NAIL VALUES

PLATE	GRIP(DRY) (PSI) MAX	MIN	SHEAR (PLI) MAX	MIN	SECTION (PLI) MAX	MIN
MT20	618	354	1667	822	2284	1656

PLATE PLACEMENT TOL. = 0.250 inches

PLATE ROTATION TOL. = 5.0 Deg.

JSI GRIP= 0.88 (P) (INPUT = 0.90)
JSI METAL= 0.50 (A) (INPUT = 1.00)

KOTT

JOB NAME	TRUSS NAME	QUANTITY	PLY	JOB DESC.	DWG NO.
NE0618-032	T09	2	1	GREEN YORK HOMES-CELESTIAL 2 EL 1 / TRUSS DESC.	PAGE 24 OF 30

Version 8.210 S Mar 12 2018 MiTek Industries, Inc. Tue Jun 5 16:23:19 2018 Page 1
ID:XgvKq7wA9gLFADxpsWFVufzB0Hj-b2uJ2pojue8DsoXDHMTYVrbhyIqFjShp2e7McUz9I96

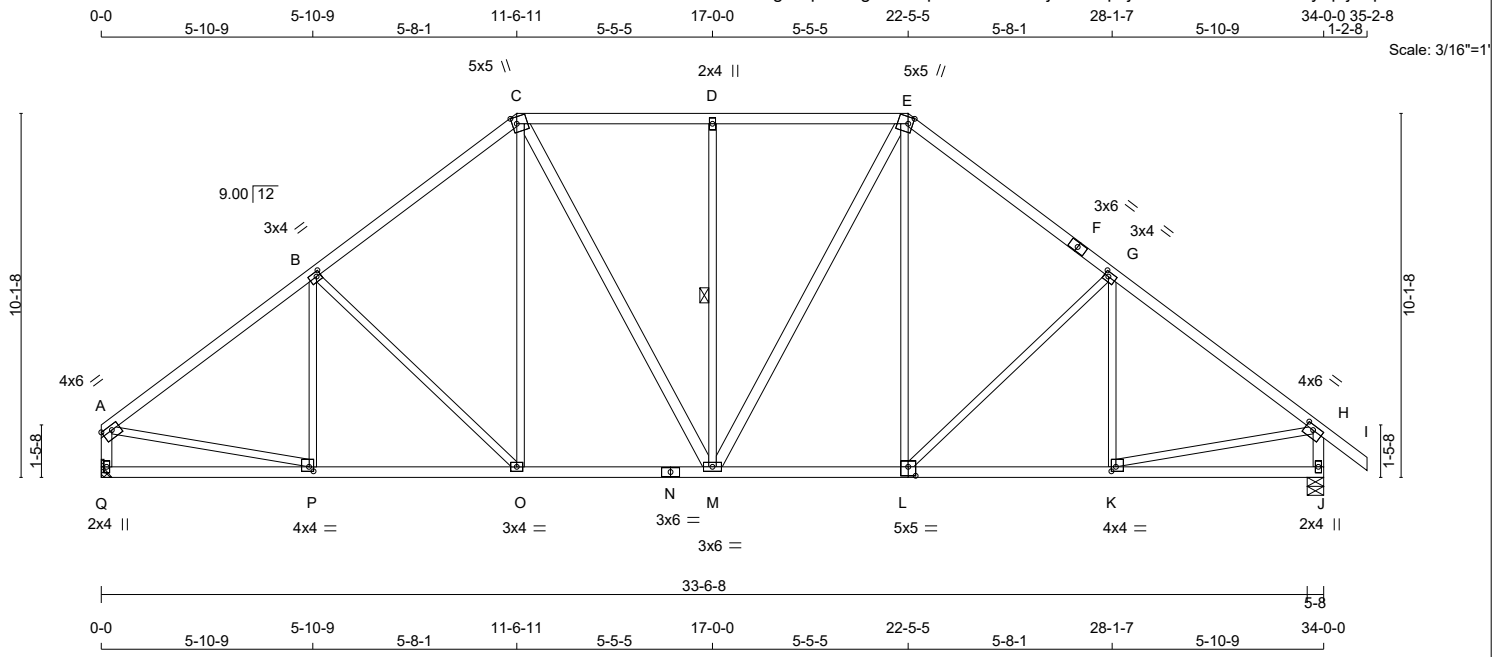

TOTAL WEIGHT = 2 X 167 = 334 lb

LUMBER
N. L. G. A. RULES

CHORDS	SIZE		LUMBER	DESCR.
A - C	2x4	DRY	No.2	SPF
C - E	2x4	DRY	No.2	SPF
E - F	2x4	DRY	No.2	SPF
F - I	2x4	DRY	No.2	SPF
Q - A	2x4	DRY	No.2	SPF
J - H	2x4	DRY	No.2	SPF
Q - N	2x4	DRY	No.2	SPF
N - L	2x4	DRY	No.2	SPF
L - J	2x4	DRY	No.2	SPF
ALL WEBS	2x3	DRY	No.2	SPF
EXCEPT				
C - M	2x4	DRY	No.2	SPF
M - E	2x4	DRY	No.2	SPF

DRY: SEASONED LUMBER.

PLATES (table is in inches)

JT	TYPE	PLATES	W	LEN	Y	X
A	TMVW-t	MT20	4.0	6.0	1.50	Edge
B	TMWW-t	MT20	3.0	4.0	1.50	1.50
C	TTWW+m	MT20	5.0	5.0	2.25	1.50
D	TMW+w	MT20	2.0	4.0		
E	TTWW+m	MT20	5.0	5.0	2.25	1.50
F	TS-t	MT20	3.0	6.0		
G	TMWW-t	MT20	3.0	4.0	1.50	1.50
H	TMVW-t	MT20	4.0	6.0	1.50	2.75
J	BMV1+p	MT20	2.0	4.0		
K	BMWW-t	MT20	4.0	4.0	1.50	1.50
L	BSWW-l	MT20	5.0	5.0	3.00	2.50
M	BMWWW-t	MT20	3.0	6.0		
N	BS-t	MT20	3.0	6.0		
O	BMWW-t	MT20	3.0	4.0		
P	BMWW-t	MT20	4.0	4.0	1.50	1.50
Q	BMV1+p	MT20	2.0	4.0		

Edge - INDICATES REFERENCE CORNER OF PLATE TOUCHES EDGE OF CHORD.

READ ALL NOTES ON THIS PAGE AND ON ENGINEERING NOTE PAGE ENP-1. THIS NOTE PAGE IS AN INTEGRAL PART OF THIS DRAWING AS IT CONTAINS SPECIFICATIONS AND CRITERIA USED IN THE DESIGN OF THIS COMPONENT.

LICENSED PROFESSIONAL ENGINEER
N.A. EL-MASRI
PROVINCE OF ONTARIO
Jun 05, 2018

DIMENSIONS, SUPPORTS AND LOADINGS SPECIFIED BY FABRICATOR TO BE VERIFIED BY BUILDING DESIGNER

BEARINGS

JT	FACTORED GROSS REACTION VERT	HORZ	MAXIMUM FACTORED GROSS REACTION DOWN	HORZ	UPLIFT	INPUT BRG IN-SX	REQRD BRG IN-SX
Q	1613	0	1613	0	0	MECHANICAL	
J	1713	0	1713	0	0	5-8	5-8

A SUITABLE MECHANICAL CONNECTION IS REQUIRED AT JOINT Q TO RESIST THE MAX FACTORED REACTIONS.

UNFACTORED REACTIONS

JT	1ST LCASE COMBINED	MAX./MIN. COMPONENT REACTIONS SNOW	LIVE	PERM.LIVE	WIND	DEAD	SOIL
Q	1132	792 / 0	0 / 0	0 / 0	0 / 0	340 / 0	0 / 0
J	1200	852 / 0	0 / 0	0 / 0	0 / 0	348 / 0	0 / 0

BEARING MATERIAL TO BE SPF NO.2 OR BETTER AT JOINT(S) J

BRACING
TOP CHORD TO BE SHEATHED OR MAX. PURLIN SPACING = 4.57 FT.
MAX. UNBRACED BOTTOM CHORD LENGTH = 10.00 FT OR RIGID CEILING DIRECTLY APPLIED.

ALL PITCH BREAKS AND PERIMETER CORNER JOINTS MUST BE LATERALLY RESTRAINED.

1 - 1x4 LATERAL BRACE(S) AT 1/ 2 LENGTH OF D-M. DBS = 20-0-0 . CBF = 64 LBS.

DBS = DIAGONAL BRACE SPACING (MAX). CBF = CUMULATIVE BRACING FORCE (PER BRACE). FASTEN LATERAL BRACE(S) USING (0.122"X3") SPIRAL NAILS : 1 NAIL FOR 2x3 BRACE(S), 2 FOR 1x4, 2x4, 2x5, 3 FOR 2x6, 4 FOR 2x8, 5 FOR 2x10, AND 6 FOR 2x12.

END VERTICAL(S) MUST BE SHEATHED OR HAVE BRACES AS INDICATED IN THE MAX. UNBRACED LENGTH COLUMN OF THE TABLE BELOW

LOADING
TOTAL LOAD CASES: (4)

CHORDS

MEMB. FR-TO	MAX. FACTORED FORCE (LBS)	FACTORED VERT. LOAD (PLF) FROM	TO	LC1	MAX CSI (LC)	MAX. UNBRAC LENGTH
A- B	-1819 / 0	-77.4	-77.4	0.42 (1)	4.57	
B- C	-1604 / 0	-77.4	-77.4	0.39 (1)	4.82	
C- D	-1426 / 0	-77.4	-77.4	0.32 (1)	5.11	
D- E	-1426 / 0	-77.4	-77.4	0.32 (1)	5.11	
E- F	-1604 / 0	-77.4	-77.4	0.39 (1)	4.82	
F- G	-1604 / 0	-77.4	-77.4	0.39 (1)	4.82	
G- H	-1819 / 0	-77.4	-77.4	0.42 (1)	4.57	
H- I	0 / 30	-77.4	-77.4	0.09 (1)	10.00	
Q- A	-1570 / 0	0.0	0.0	0.16 (1)	6.58	
J- H	-1670 / 0	0.0	0.0	0.17 (1)	6.42	
Q- P	0 / 0	-17.5	-17.5	0.14 (4)	10.00	
P- O	0 / 1481	-17.5	-17.5	0.31 (1)	10.00	
O- N	0 / 1258	-17.5	-17.5	0.26 (1)	10.00	
N- M	0 / 1258	-17.5	-17.5	0.26 (1)	10.00	
M- L	0 / 1258	-17.5	-17.5	0.26 (1)	10.00	
L- K	0 / 1481	-17.5	-17.5	0.31 (1)	10.00	
K- J	0 / 0	-17.5	-17.5	0.14 (4)	10.00	

WEBS

MEMB. FR-TO	MAX. FACTORED FORCE (LBS)	MAX CSI (LC)
P- B	-172 / 46	0.09 (1)
B- O	-313 / 0	0.42 (1)
O- C	0 / 313	0.07 (1)
C- M	0 / 346	0.06 (1)
M- D	-513 / 0	0.36 (1)
M- E	0 / 346	0.06 (1)
L- E	0 / 313	0.07 (1)
L- G	-314 / 0	0.42 (1)
K- G	-173 / 46	0.09 (1)
A- P	0 / 1508	0.34 (1)
K- H	0 / 1508	0.34 (1)

DESIGN CRITERIA

SPECIFIED LOADS:

TOP	CH.	LL	=	23.3	PSF
		DL	=	3.0	PSF
BOT	CH.	LL	=	0.0	PSF
		DL	=	7.0	PSF
TOTAL	LOAD		=	33.3	PSF

SPACING = 24.0 IN. C/C

LOADING IN FLAT SECTION BASED ON A SLOPE OF 2.00/12 MINIMUM

THIS TRUSS IS DESIGNED FOR RESIDENTIAL OR SMALL BUILDING REQUIREMENTS OF PART 9, NBCC 2010

THIS DESIGN COMPLIES WITH:
- PART 9 OF OBC 2012 , BCBC 2012 , ABC 2014
- CSA 086-09
- TPIC 2011

(55 % OF 27.2 P.S.F. G.S.L. PLUS 8.4 P.S.F. RAIN LOAD) EQUALS 23.3 P.S.F. SPECIFIED ROOF LIVE LOAD

ALLOWABLE DEFL.(LL)= L/360 (1.13")
CALCULATED VERT. DEFL.(LL) = L/ 999 (0.07")
ALLOWABLE DEFL.(TL)= L/360 (1.13")
CALCULATED VERT. DEFL.(TL) = L/ 999 (0.13")

CSI: TC=0.42/1.00 (G-H:1) , BC=0.31/1.00 (O-P:1) , WB=0.42/1.00 (G-L:1) , SSI=0.20/1.00 (C-D:1)

DOL LUMBER=1.00 NAIL=1.00 LS BEND=1.10 COMP=1.10 SHEAR=1.10 TENS= 1.10

COMPANION LIVE LOAD FACTOR = 0.50

TRUSS PLATE MANUFACTURER IS NOT RESPONSIBLE FOR QUALITY CONTROL IN THE TRUSS MANUFACTURING PLANT .

NAIL VALUES

PLATE	GRIP(DRY) (PSI) MAX	MIN	SHEAR (PLI) MAX	MIN	SECTION (PLI) MAX	MIN
MT20	618	354	1667	822	2284	1656

PLATE PLACEMENT TOL. = 0.250 inches

PLATE ROTATION TOL. = 5.0 Deg.

JSI GRIP= 0.89 (K) (INPUT = 0.90)
JSI METAL= 0.55 (K) (INPUT = 1.00)

CONTINUED ON PAGE 2

KOTT

JOB NAME	TRUSS NAME	QUANTITY	PLY	JOB DESC.	DWG NO.
NE0618-032	T10	4	1	GREEN YORK HOMES-CELESTIAL 2 EL 1 / TRUSS DESC.	PAGE 25 OF 30

Version 8.210 S Mar 12 2018 MiTek Industries, Inc. Tue Jun 5 16:23:20 2018 Page 1
ID:XgvKq7wA9gLFADxpsWFVufzB0Hj-3EShF9pLfyG4Uy6Pr3_n137qli9_Sw4zGItv8wz9I95

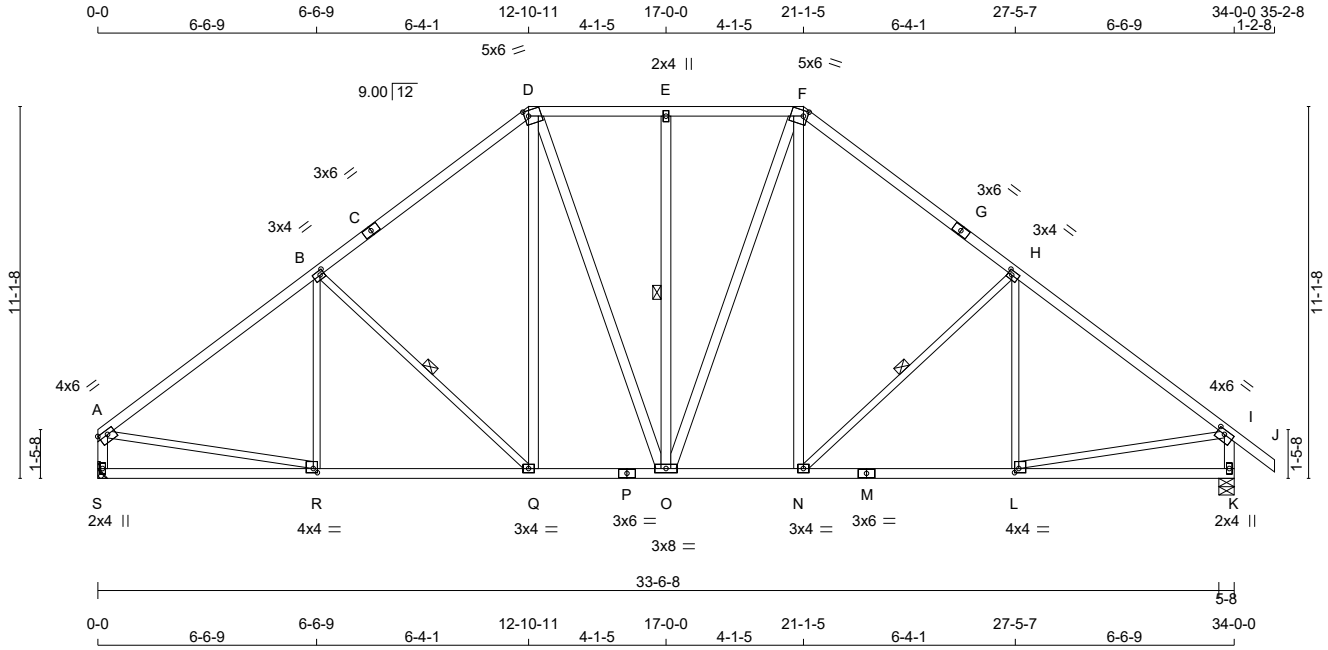

TOTAL WEIGHT = 4 X 184 = 738 lb

LUMBER
N. L. G. A. RULES

CHORDS	SIZE		LUMBER	DESCR.
A - C	2x4	DRY	No.2	SPF
C - D	2x4	DRY	No.2	SPF
D - F	2x4	DRY	No.2	SPF
F - G	2x4	DRY	No.2	SPF
G - J	2x4	DRY	No.2	SPF
S - A	2x4	DRY	No.2	SPF
K - I	2x4	DRY	No.2	SPF
S - P	2x4	DRY	No.2	SPF
P - M	2x4	DRY	No.2	SPF
M - K	2x4	DRY	No.2	SPF
ALL WEBS EXCEPT	2x4	DRY	No.2	SPF
R - B	2x3	DRY	No.2	SPF
B - Q	2x3	DRY	No.2	SPF
N - H	2x3	DRY	No.2	SPF
L - H	2x3	DRY	No.2	SPF
A - R	2x3	DRY	No.2	SPF
L - I	2x3	DRY	No.2	SPF

DRY: SEASONED LUMBER.

PLATES (table is in inches)

JT	TYPE	PLATES	W	LEN	Y	X
A	TMVW-t	MT20	4.0	6.0	1.50	Edge
B	TMWW-t	MT20	3.0	4.0	1.50	1.50
C	TS-t	MT20	3.0	6.0		
D	TTWW-m	MT20	5.0	6.0	2.00	1.50
E	TMW+w	MT20	2.0	4.0		
F	TTWW-m	MT20	5.0	6.0	2.00	1.50
G	TS-t	MT20	3.0	6.0		
H	TMWW-t	MT20	3.0	4.0	1.50	1.50
I	TMVW-t	MT20	4.0	6.0	1.50	2.75
K	BMV1+p	MT20	2.0	4.0		
L	BMWW-t	MT20	4.0	4.0	1.50	1.50
M	BS-t	MT20	3.0	6.0		
N	BMWW-t	MT20	3.0	4.0		
O	BMWWW-t	MT20	3.0	8.0		
P	BS-t	MT20	3.0	6.0		
Q	BMWW-t	MT20	3.0	4.0		
R	BMWW-t	MT20	4.0	4.0	1.50	1.50
S	BMV1+p	MT20	2.0	4.0		

READ ALL NOTES ON THIS PAGE AND ON ENGINEERING NOTE PAGE ENP-1. THIS NOTE PAGE IS AN INTEGRAL PART OF THIS DRAWING AS IT CONTAINS SPECIFICATIONS AND CRITERIA USED IN THE DESIGN OF THIS COMPONENT.

LICENSED PROFESSIONAL ENGINEER
N.A. EL-MASRI
PROVINCE OF ONTARIO
Jun 05, 2018

DIMENSIONS, SUPPORTS AND LOADINGS SPECIFIED BY FABRICATOR TO BE VERIFIED BY BUILDING DESIGNER

BEARINGS

JT	FACTORED GROSS REACTION VERT	HORZ	MAXIMUM FACTORED GROSS REACTION DOWN	HORZ	UPLIFT	INPUT BRG IN-SX	REQRD BRG IN-SX
S	1643	0	1643	0	0	MECHANICAL	
K	1744	0	1744	0	0	5-8	5-8

A SUITABLE MECHANICAL CONNECTION IS REQUIRED AT JOINT S TO RESIST THE MAX FACTORED REACTIONS.

UNFACTORED REACTIONS

JT	1ST LCASE COMBINED	MAX./MIN. COMPONENT REACTIONS SNOW	LIVE	PERM.LIVE	WIND	DEAD	SOIL
S	1156	792 / 0	0 / 0	0 / 0	0 / 0	365 / 0	0 / 0
K	1225	852 / 0	0 / 0	0 / 0	0 / 0	372 / 0	0 / 0

BEARING MATERIAL TO BE SPF NO.2 OR BETTER AT JOINT(S) K

BRACING
FOR SECTION D-F, MAX. PURLIN SPACING = 2.00 FT.
FOR OTHER SECTIONS, TOP CHORD TO BE SHEATHED OR MAX. PURLIN SPACING = 4.37 FT.
MAX. UNBRACED BOTTOM CHORD LENGTH = 10.00 FT OR RIGID CEILING DIRECTLY APPLIED.

ALL PITCH BREAKS AND PERIMETER CORNER JOINTS MUST BE LATERALLY RESTRAINED.

1 - 1x4 LATERAL BRACE(S) AT 1/ 2 LENGTH OF B-Q, E-O, H-N. DBS = 20-0-0 . CBF = 52 LBS.

DBS = DIAGONAL BRACE SPACING (MAX). CBF = CUMULATIVE BRACING FORCE (PER BRACE). FASTEN LATERAL BRACE(S) USING (0.122"X3") SPIRAL NAILS : 1 NAIL FOR 2x3 BRACE(S), 2 FOR 1x4, 2x4, 2x5, 3 FOR 2x6, 4 FOR 2x8, 5 FOR 2x10, AND 6 FOR 2x12.

END VERTICAL(S) MUST BE SHEATHED OR HAVE BRACES AS INDICATED IN THE MAX. UNBRACED LENGTH COLUMN OF THE TABLE BELOW

LOADING
TOTAL LOAD CASES: (4)

CHORDS

MEMB. FR-TO	MAX. FACTORED FORCE (LBS)	FACTORED VERT. LOAD (PLF) FROM	TO	LC1	MAX CSI (LC)	MAX. UNBRAC LENGTH
A- B	-1865 / 0	-77.4	-77.4	0.54 (1)	4.37	
B- C	-1576 / 0	-77.4	-77.4	0.49 (1)	4.72	
C- D	-1576 / 0	-77.4	-77.4	0.49 (1)	4.72	
D- E	-1324 / 0	-84.9	-84.9	0.20 (1)	2.00	
E- F	-1324 / 0	-84.9	-84.9	0.20 (1)	2.00	
F- G	-1576 / 0	-77.4	-77.4	0.49 (1)	4.72	
G- H	-1576 / 0	-77.4	-77.4	0.49 (1)	4.72	
H- I	-1865 / 0	-77.4	-77.4	0.54 (1)	4.37	
I- J	0 / 30	-77.4	-77.4	0.09 (1)	10.00	
S- A	-1597 / 0	0.0	0.0	0.17 (1)	6.54	
K- I	-1697 / 0	0.0	0.0	0.18 (1)	6.38	
S- R	0 / 0	-17.5	-17.5	0.18 (4)	10.00	
R- Q	0 / 1521	-17.5	-17.5	0.34 (1)	10.00	
Q- P	0 / 1235	-17.5	-17.5	0.26 (1)	10.00	
P- O	0 / 1235	-17.5	-17.5	0.26 (1)	10.00	
O- N	0 / 1235	-17.5	-17.5	0.26 (1)	10.00	
N- M	0 / 1521	-17.5	-17.5	0.34 (1)	10.00	
M- L	0 / 1521	-17.5	-17.5	0.34 (1)	10.00	
L- K	0 / 0	-17.5	-17.5	0.18 (4)	10.00	

WEBS

MEMB. FR-TO	MAX. FACTORED FORCE (LBS)	MAX CSI (LC)
R- B	-134 / 65	0.09 (1)
B- Q	-398 / 0	0.21 (1)
Q- D	0 / 367	0.06 (1)
D- O	0 / 253	0.04 (1)
O- E	-418 / 0	0.27 (1)
O- F	0 / 253	0.04 (1)
N- F	0 / 367	0.06 (1)
N- H	-398 / 0	0.21 (1)
L- H	-134 / 65	0.09 (1)
A- R	0 / 1544	0.35 (1)
L- I	0 / 1544	0.35 (1)

DESIGN CRITERIA

SPECIFIED LOADS:

TOP	CH.	LL	=	23.3	PSF
		DL	=	3.0	PSF
BOT	CH.	LL	=	0.0	PSF
		DL	=	7.0	PSF
TOTAL	LOAD		=	33.3	PSF

SPACING = 24.0 IN. C/C

LOADING IN FLAT SECTION BASED ON PIGGYBACK TRUSS WITH SLOPES OF 9.00/12 AND -9.00/12 AND RESPECTIVE WALL HEIGHTS OF 0-0 AND 0-0 AND AN ADDITIONAL DEAD LOAD OF 3.0 P.S.F.

THIS TRUSS IS DESIGNED FOR RESIDENTIAL OR SMALL BUILDING REQUIREMENTS OF PART 9, NBCC 2010

THIS DESIGN COMPLIES WITH:
- PART 9 OF OBC 2012 , BCBC 2012 , ABC 2014
- CSA 086-09
- TPIC 2011

(55 % OF 27.2 P.S.F. G.S.L. PLUS 8.4 P.S.F. RAIN LOAD) EQUALS 23.3 P.S.F. SPECIFIED ROOF LIVE LOAD

ALLOWABLE DEFL.(LL)= L/360 (1.13")
CALCULATED VERT. DEFL.(LL) = L/ 999 (0.07")
ALLOWABLE DEFL.(TL)= L/360 (1.13")
CALCULATED VERT. DEFL.(TL) = L/ 999 (0.13")

CSI: TC=0.54/1.00 (A-B:1) , BC=0.34/1.00 (Q-R:1) , WB=0.35/1.00 (A-R:1) , SSI=0.20/1.00 (A-B:1)

DOL LUMBER=1.00 NAIL=1.00 LS BEND=1.10 COMP=1.10 SHEAR=1.10 TENS= 1.10

COMPANION LIVE LOAD FACTOR = 0.50

TRUSS PLATE MANUFACTURER IS NOT RESPONSIBLE FOR QUALITY CONTROL IN THE TRUSS MANUFACTURING PLANT .

NAIL VALUES

PLATE	GRIP(DRY) (PSI) MAX	MIN	SHEAR (PLI) MAX	MIN	SECTION (PLI) MAX	MIN
MT20	618	354	1667	822	2284	1656

PLATE PLACEMENT TOL. = 0.250 inches

PLATE ROTATION TOL. = 5.0 Deg.

JSI GRIP= 0.90 (L) (INPUT = 0.90)
JSI METAL= 0.57 (R) (INPUT = 1.00)

CONTINUED ON PAGE 2

KOTT

Edge - INDICATES REFERENCE CORNER OF PLATE TOUCHES EDGE OF CHORD.

READ ALL NOTES ON THIS PAGE AND ON ENGINEERING NOTE PAGE ENP-1. THIS NOTE PAGE IS AN INTEGRAL PART OF THIS DRAWING AS IT CONTAINS SPECIFICATIONS AND CRITERIA USED IN THE DESIGN OF THIS COMPONENT.

KOTT

JOB NAME	TRUSS NAME	QUANTITY	PLY	JOB DESC.	DWG NO.
NE0618-032	T18	4	1	GREEN YORK HOMES-CELESTIAL 2 EL 1 TRUSS DESC.	PAGE 27 OF 30

Version 8.210 S Mar 12 2018 MiTek Industries, Inc. Tue Jun 5 16:23:21 2018 Page 1
ID:XgvKq7wA9gLFADxpsWFVufzB0Hj-XR03TVq_QGOx56hbPmV0aGg2q6XwBRh6VycTgNz9I94

Scale = 1:34.8

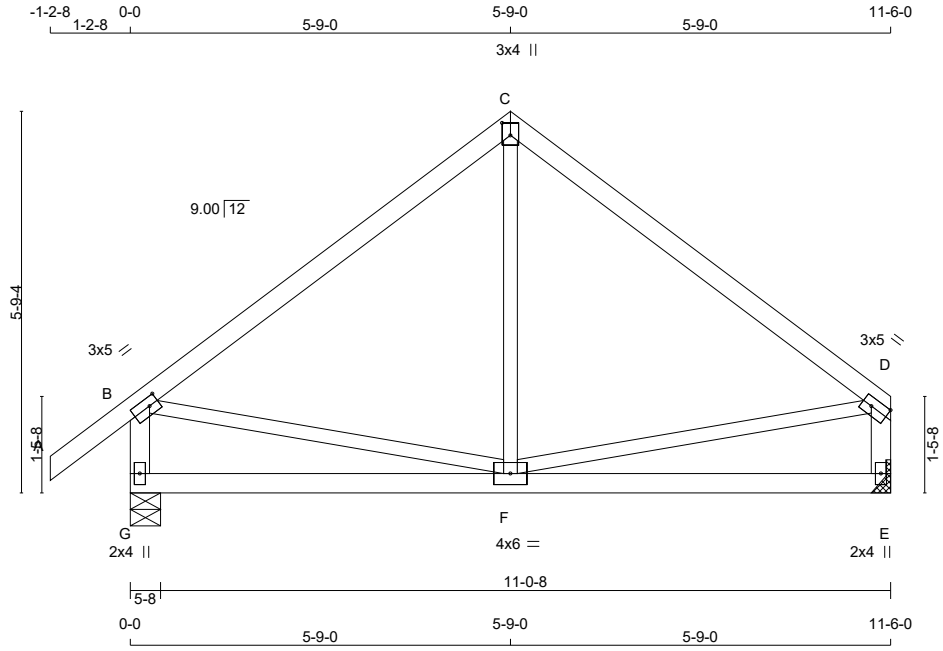

TOTAL WEIGHT = 4 X 47 = 188 lb

LUMBER
N. L. G. A. RULES

CHORDS	SIZE		LUMBER	DESCR.
A - C	2x4	DRY	No.2	SPF
C - D	2x4	DRY	No.2	SPF
G - B	2x4	DRY	No.2	SPF
E - D	2x4	DRY	No.2	SPF
G - E	2x4	DRY	No.2	SPF
ALL WEBS EXCEPT	2x3	DRY	No.2	SPF

DRY: SEASONED LUMBER.

PLATES (table is in inches)

JT	TYPE	PLATES	W	LEN	Y	X
B	TMVW-t	MT20	3.0	5.0	1.50	1.75
C	TTW+p	MT20	3.0	4.0	2.25	1.50
D	TMVW-t	MT20	3.0	5.0	1.50	Edge
E	BMV1+p	MT20	2.0	4.0		
F	BMWWW-t	MT20	4.0	6.0		
G	BMV1+p	MT20	2.0	4.0		

Edge - INDICATES REFERENCE CORNER OF PLATE TOUCHES EDGE OF CHORD.

READ ALL NOTES ON THIS PAGE AND ON ENGINEERING NOTE PAGE ENP-1. THIS NOTE PAGE IS AN INTEGRAL PART OF THIS DRAWING AS IT CONTAINS SPECIFICATIONS AND CRITERIA USED IN THE DESIGN OF THIS COMPONENT.

LICENSED PROFESSIONAL ENGINEER
N.A. EL-MASRI
PROVINCE OF ONTARIO
Jun 05, 2018

DIMENSIONS, SUPPORTS AND LOADINGS SPECIFIED BY FABRICATOR TO BE VERIFIED BY BUILDING DESIGNER

BEARINGS

JT	FACTORED GROSS REACTION VERT	HORZ	MAXIMUM FACTORED GROSS REACTION DOWN	HORZ	UPLIFT	INPUT BRG IN-SX	REQRD BRG IN-SX
G	646	0	646	0	0	5-8	5-8
E	545	0	545	0	0	MECHANICAL	

A SUITABLE MECHANICAL CONNECTION IS REQUIRED AT JOINT E TO RESIST THE MAX FACTORED REACTIONS.

UNFACTORED REACTIONS

JT	1ST LCASE COMBINED	MAX./MIN. COMPONENT REACTIONS SNOW	LIVE	PERM.LIVE	WIND	DEAD	SOIL
G	451	328 / 0	0 / 0	0 / 0	0 / 0	123 / 0	0 / 0
E	383	268 / 0	0 / 0	0 / 0	0 / 0	115 / 0	0 / 0

BEARING MATERIAL TO BE SPF NO.2 OR BETTER AT JOINT(S) G

BRACING
TOP CHORD TO BE SHEATHED OR MAX. PURLIN SPACING = 6.25 FT.
MAX. UNBRACED BOTTOM CHORD LENGTH = 10.00 FT OR RIGID CEILING DIRECTLY APPLIED.

ALL PITCH BREAKS AND PERIMETER CORNER JOINTS MUST BE LATERALLY RESTRAINED.

LOADING
TOTAL LOAD CASES: (4)

CHORDS

MEMB. FR-TO	MAX. FACTORED FORCE (LBS)	FACTORED VERT. LOAD (PLF) FROM	TO	LC1 MAX CSI (LC)	MAX. UNBRAC LENGTH
A- B	0 / 30	-77.4	-77.4	0.09 (1)	10.00
B- C	-376 / 0	-77.4	-77.4	0.33 (1)	6.25
C- D	-376 / 0	-77.4	-77.4	0.33 (1)	6.25
G- B	-607 / 0	0.0	0.0	0.06 (1)	7.81
E- D	-507 / 0	0.0	0.0	0.05 (1)	7.81
G- F	0 / 0	-17.5	-17.5	0.17 (4)	10.00
F- E	0 / 0	-17.5	-17.5	0.17 (4)	10.00

WEBS

MEMB. FR-TO	MAX. FACTORED FORCE (LBS)	MAX CSI (LC)
F- C	0 / 101	0.03 (4)
B- F	0 / 306	0.07 (1)
F- D	0 / 306	0.07 (1)

DESIGN CRITERIA

SPECIFIED LOADS:

TOP	CH.	LL =	23.3	PSF
		DL =	3.0	PSF
BOT	CH.	LL =	0.0	PSF
		DL =	7.0	PSF
TOTAL	LOAD	=	33.3	PSF

SPACING = 24.0 IN. C/C

THIS TRUSS IS DESIGNED FOR RESIDENTIAL OR SMALL BUILDING REQUIREMENTS OF PART 9, NBCC 2010

THIS DESIGN COMPLIES WITH:
- PART 9 OF OBC 2012 , BCBC 2012 , ABC 2014
- CSA 086-09
- TPIC 2011

(55 % OF 27.2 P.S.F. G.S.L. PLUS 8.4 P.S.F. RAIN LOAD) EQUALS 23.3 P.S.F. SPECIFIED ROOF LIVE LOAD

ALLOWABLE DEFL.(LL)= L/360 (0.38")
CALCULATED VERT. DEFL.(LL) = L/ 999 (0.00")
ALLOWABLE DEFL.(TL)= L/360 (0.38")
CALCULATED VERT. DEFL.(TL) = L/ 999 (0.03")

CSI: TC=0.33/1.00 (B-C:1) , BC=0.17/1.00 (E-F:4) , WB=0.07/1.00 (B-F:1) , SSI=0.14/1.00 (B-C:1)

DOL LUMBER=1.00 NAIL=1.00 LS BEND=1.10 COMP=1.10 SHEAR=1.10 TENS= 1.10

COMPANION LIVE LOAD FACTOR = 0.50

TRUSS PLATE MANUFACTURER IS NOT RESPONSIBLE FOR QUALITY CONTROL IN THE TRUSS MANUFACTURING PLANT .

NAIL VALUES

PLATE	GRIP(DRY) (PSI) MAX	MIN	SHEAR (PLI) MAX	MIN	SECTION (PLI) MAX	MIN
MT20	618	354	1667	822	2284	1656

PLATE PLACEMENT TOL. = 0.250 inches

PLATE ROTATION TOL. = 5.0 Deg.

JSI GRIP= 0.51 (D) (INPUT = 0.90)
JSI METAL= 0.17 (D) (INPUT = 1.00)

KOTT

JOB NAME	TRUSS NAME	QUANTITY	PLY	JOB DESC.	DRWG NO.
NE0618-032	T20	8	1	GREEN YORK HOMES-CELESTIAL 2 EL 1 TRUSS DESC.	PAGE 28 OF 30

Version 8.210 S Mar 12 2018 MiTek Industries, Inc. Tue Jun 5 16:23:21 2018 Page 1
ID:XgvKq7wA9gLFADxpsWFVufzB0Hj-XR03TVq_QGOx56hbPmV0aGg6L6VBBSo6VycTgNz9I94

Scale = 1:14.6

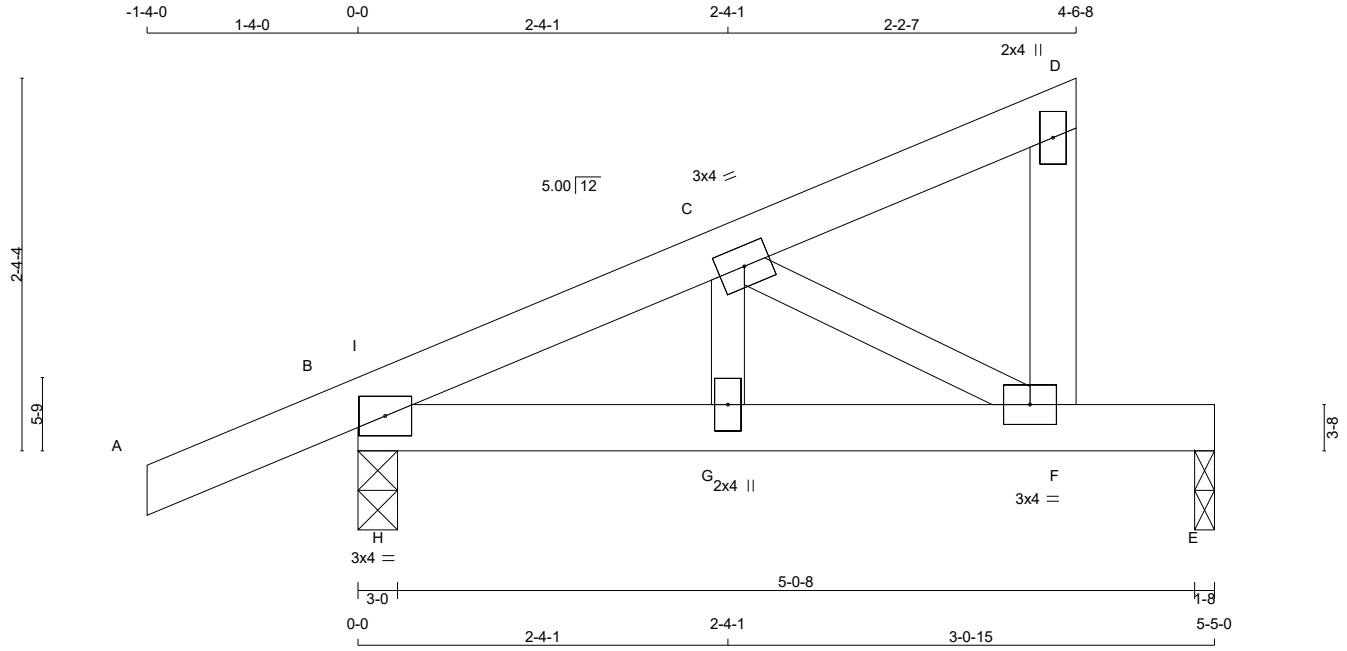

TOTAL WEIGHT = 8 X 18 = 143 lb [M]

LUMBER
N. L. G. A. RULES

CHORDS	SIZE		LUMBER	DESCR.
A - D	2x4	DRY	No.2	SPF
F - D	2x4	DRY	No.2	SPF
B - E	2x4	DRY	No.2	SPF
ALL WEBS	2x3	DRY	No.2	SPF

DRY: SEASONED LUMBER.

PLATES (table is in inches)

JT	TYPE	PLATES	W	LEN	Y	X
B	TMB1-I	MT20	3.0	4.0		
C	TMWW-t	MT20	3.0	4.0		
D	TMV+p	MT20	2.0	4.0		
F	BMVW-t	MT20	3.0	4.0		
G	BMW+w	MT20	2.0	4.0		

READ ALL NOTES ON THIS PAGE AND ON ENGINEERING NOTE PAGE ENP-1. THIS NOTE PAGE IS AN INTEGRAL PART OF THIS DRAWING AS IT CONTAINS SPECIFICATIONS AND CRITERIA USED IN THE DESIGN OF THIS COMPONENT.

LICENSED PROFESSIONAL ENGINEER
N.A. EL-MASRI
PROVINCE OF ONTARIO
Jun 05, 2018

DIMENSIONS, SUPPORTS AND LOADINGS SPECIFIED BY FABRICATOR TO BE VERIFIED BY BUILDING DESIGNER

BEARINGS

JT	FACTORED GROSS REACTION VERT	HORZ	MAXIMUM FACTORED GROSS REACTION DOWN	HORZ	UPLIFT	INPUT BRG IN-SX	REQRD BRG IN-SX
B	359	0	359	0	0	3-0	3-0
E	195	0	195	0	0	1-8	1-8

UNFACTORED REACTIONS

JT	1ST LCASE COMBINED	MAX./MIN. COMPONENT REACTIONS SNOW	LIVE	PERM.LIVE	WIND	DEAD	SOIL
B	250	188 / 0	0 / 0	0 / 0	0 / 0	62 / 0	0 / 0
E	138	89 / 0	0 / 0	0 / 0	0 / 0	49 / 0	0 / 0

BEARING MATERIAL TO BE SPF NO.2 OR BETTER AT JOINT(S) B, E

BRACING
TOP CHORD TO BE SHEATHED OR MAX. PURLIN SPACING = 6.25 FT.
MAX. UNBRACED BOTTOM CHORD LENGTH = 10.00 FT OR RIGID CEILING DIRECTLY APPLIED.

ALL PITCH BREAKS AND PERIMETER CORNER JOINTS MUST BE LATERALLY RESTRAINED.

LOADING
TOTAL LOAD CASES: (4)

CHORDS

MEMB. FR-TO	MAX. FACTORED FORCE (LBS)	FACTORED VERT. LOAD (PLF) FROM	TO	LC1 CSI (LC)	MAX UNBRAC LENGTH
A- B	0 / 16	-77.4	-77.4	0.10 (1)	10.00
B- I	-399 / 0	-77.4	-77.4	0.04 (1)	6.25
I- C	-368 / 0	-77.4	-77.4	0.04 (1)	6.25
C- D	-4 / 0	-77.4	-77.4	0.05 (1)	10.00
F- D	-76 / 0	0.0	0.0	0.01 (1)	7.81
B- H	0 / 338	-17.5	-17.5	0.06 (1)	10.00
H- G	0 / 338	-17.5	-17.5	0.10 (1)	10.00
G- F	0 / 338	-17.5	-17.5	0.28 (1)	10.00
F- E	0 / 0	-17.5	-17.5	0.22 (1)	10.00

WEBS

MEMB. FR-TO	MAX. FACTORED FORCE (LBS)	MAX CSI (LC)
G- C	0 / 144	0.03 (1)
C- F	-380 / 0	0.06 (1)
H- I	-8 / 26	0.00 (1)

DESIGN CRITERIA

SPECIFIED LOADS:

TOP CH.	LL	=	23.3	PSF
	DL	=	3.0	PSF
BOT CH.	LL	=	0.0	PSF
	DL	=	7.0	PSF
TOTAL LOAD		=	33.3	PSF

SPACING = 24.0 IN. C/C

THIS TRUSS IS DESIGNED FOR RESIDENTIAL OR SMALL BUILDING REQUIREMENTS OF PART 9, NBCC 2010

THIS DESIGN COMPLIES WITH:
- PART 9 OF OBC 2012 , BCBC 2012 , ABC 2014
- CSA 086-09
- TPIC 2011

(55 % OF 27.2 P.S.F. G.S.L. PLUS 8.4 P.S.F. RAIN LOAD) EQUALS 23.3 P.S.F. SPECIFIED ROOF LIVE LOAD

ALLOWABLE DEFL.(LL)= L/360 (0.19")
CALCULATED VERT. DEFL.(LL) = L/ 999 (0.02")
ALLOWABLE DEFL.(TL)= L/360 (0.19")
CALCULATED VERT. DEFL.(TL) = L/ 999 (0.03")

CSI: TC=0.10/1.00 (A-B:1) , BC=0.28/1.00 (F-G:1) , WB=0.06/1.00 (C-F:1) , SSI=0.15/1.00 (E-F:1)

DOL LUMBER=1.00 NAIL=1.00 LS BEND=1.10 COMP=1.10 SHEAR=1.10 TENS= 1.10

COMPANION LIVE LOAD FACTOR = 0.50

TRUSS PLATE MANUFACTURER IS NOT RESPONSIBLE FOR QUALITY CONTROL IN THE TRUSS MANUFACTURING PLANT .

NAIL VALUES

PLATE	GRIP(DRY) (PSI) MAX	MIN	SHEAR (PLI) MAX	MIN	SECTION (PLI) MAX	MIN
MT20	618	354	1667	822	2284	1656

PLATE PLACEMENT TOL. = 0.250 inches

PLATE ROTATION TOL. = 5.0 Deg.

JSI GRIP= 0.52 (F) (INPUT = 0.90)
JSI METAL= 0.13 (B) (INPUT = 1.00)

KOTT

BEARING ANCHORAGE BY TOE-NAILS FOR LATERAL CAPACITY

B37579H1

NAIL TYPE	LENGTH (IN)	DIAMETER (IN)	NAIL LATERAL CAPACITY (LB)	
			S-P-F	D. FIR
COMMON WIRE	3.00	0.144	132	147
	3.25	0.144	132	147
	3.50	0.160	159	177

NOTES:

1. Rafter and ceiling members may be anchored to top and bottom chords of girder truss by toe-nailing rafter and ceiling members to girder chords provided the reaction does not exceed the lateral capacities in the table. Hangers (specified by others) are required for reactions higher than the maximum toe-nail capacity. Reactions are based on factored loads.

2. Toe nail capacities shown in the table are for **one** toe-nail. For additional toe-nails multiply values in table by the number of toe-nails used. Toe-nail capacities take into account toe-nailing factor J_A in CSA O86-09, section 10.9.4.1.

3. For 9- 3/4 gauge 3.25" common wire gun nails (diameter = 0.120") use 3" common spiral nail values.

4. Maximum number of toe-nails allowed depends on the lumber size & species to be toe-nailed to supporting member and nail diameter, as shown in tables below.

5. Nail values in table are based on the following relative lumber densities: G = 0.42 (SPF), G = 0.49 (D. Fir).

6. Toe-nails shall be driven at approximately 1/3 the nail length from the edge of the joist/truss chord and driven at an angle of 30º to the grain of the member (See next page for nailing on bearing plate).

7. For loads due to **wind** the nail lateral capacity in this table may be multiplied by 1.15 (K_D factor).

8. Lumber must be dry (< 19% moisture content) at the time of nail installation.

9. Nail values in this table comply with CSA O86-09, section 10.9.4

10. This design is not valid after April 30, 2019.

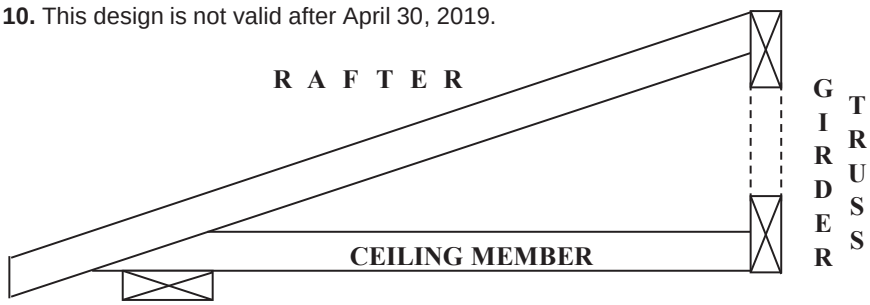

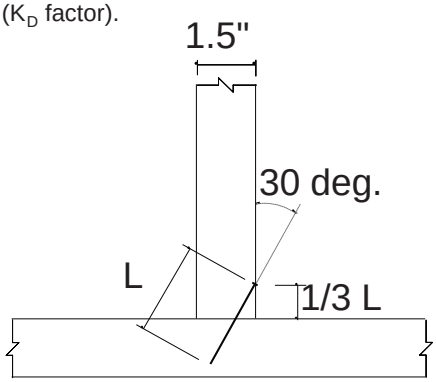

TOE-NAIL INSTALLATION

Nail type	Common wire	Common spiral	Common wire
Nail dia. (in)	0.160	0.152	0.144
	(3.5" nail)		(3" and 3.25" nail)
LUMBER SIZE	MAXIMUM NUMBER OF TOE-NAILS		
2X4 SPF	2	2	3
2X4 D. Fir	2	2	2
2X6 SPF	4	4	4
2X6 D. Fir	3	3	3

MiTek Canada Inc
100 Industrial Rd.
Bradford, Ontario L3Z 3G7

PEO
Certificate No. 10889485
LICENSED PROFESSIONAL ENGINEER
C. Cordogiannis
90553736
PROVINCE OF ONTARIO

April 26, 2017

BEARING ANCHORAGE BY TOE-NAILS FOR WIND LOADING B37579H2

NAIL TYPE	LENGTH (IN)	DIAMETER (IN)	NAIL WITHDRAWAL CAPACITY (LB)	
			S-P-F	D. FIR
COMMON WIRE	3.00	0.144	30	42
	3.25	0.144	32	45
	3.50	0.160	38	52

Note: If using truss with D. Fir lumber and S-P-F bearing plate, use values in table for S-P-F.

NOTES:

1. Truss chord, rafter, or ceiling members may be anchored to bearing plate by toe-nails, provided that the actual factored uplift force due to **wind or earthquake** load does not exceed the withdrawal capacities in the table. Hangers (specified by others) are required for uplift forces that are higher than the maximum toe-nail withdrawal capacity.
2. Toe nail capacities shown in the table are for **one** toe-nail. For additional toe-nails multiply values in table by the number of toe-nails used. Toe-nail capacities take into account toe-nailing factor J_A in CSA O86-09, section 10.9.5.2.
3. For 9- 3/4 gauge 3.25" common wire gun nails (diameter = 0.120") use 3" common spiral nail values.
4. Maximum number of toe-nails allowed depends on the lumber size & species to be toe-nailed to supporting member and nail diameter, as shown in table above.
5. Nail values in table are based on the following relative lumber densities: G = 0.42(SPF), G = 0.49(D. Fir).
6. Toe-nails shall be driven at approximately 1/3 the nail length from the edge of the joist/truss chord and driven at an angle of 30º to the grain of the member (See drawing on detail B37579H1).
7. Lumber must be dry (< 19% moisture content) at the time of nail installation.
8. Nail values in this table comply with CSA O86-09, section 10.9.5
9. This design is not valid after April 30, 2019

Toe-nailing on 2x6 Bearing Plate

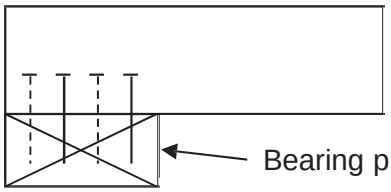

Elevation view

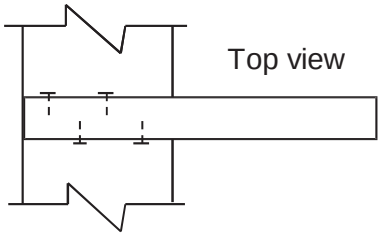

Top view

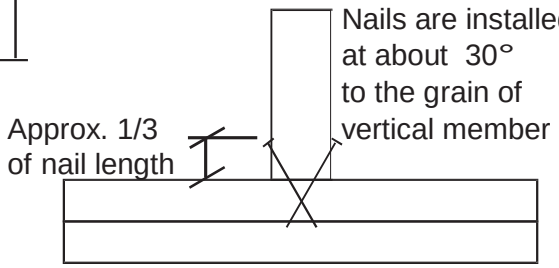

Toe-nailing viewed from end of joist or truss

Toe-nailing on 2x4 Bearing Plate

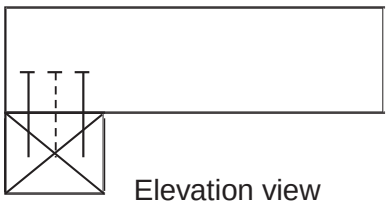

Elevation view

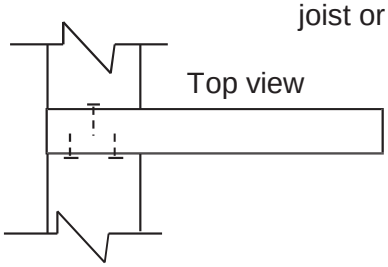

Top view

MiTek Canada Inc
100 Industrial Rd.
Bradford, Ontario L3Z 3G7

PEO
Certificate No. 10889485

LICENSED PROFESSIONAL ENGINEER
C. Cordogiannis
90553736
PROVINCE OF ONTARIO

April 26, 2017