NE0518-227
GREEN YORK HOMES - GRANELLI
HOME CORP - AMELIA 12 ELE 1

ENGINEERING NOTE PAGE (ENP-1)
PLEASE READ PRIOR TO INSTALLATION

RESPONSIBILITIES

THIS DESIGN IS FOR AN INDIVIDUAL BUILDING COMPONENT AND HAS BEEN BASED ON INFORMATION PROVIDED BY THE DESIGN OFFICE OF KOTT LUMBER. THE UNDERSIGNED ENGINEER DISCLAIMS ANY RESPONSIBILITY FOR DAMAGES AS A RESULT OF FAULTY OR INCORRECT INFORMATION, SPECIFICATION AND/OR DESIGNS FURNISHED TO THE ENGINEER. THE UNDERSIGNED ENGINEER IS ONLY RESPONSIBLE FOR THE STRUCTURAL INTEGRITY OF THIS BUILDING COMPONENT FOR THE CONDITIONS AND LOADS SHOWN ON THIS DRAWING. THE STRUCTURAL INTEGRITY OF THE BUILDING AND THE VERIFICATION OF THE DIMENSIONS AND THE DESIGN LOADS USED ARE THE RESPONSIBILITY OF THE BUILDING DESIGNER.

TRUSSES ARE DESIGNED IN CONFORMANCE WITH THE RELEVANT SECTIONS OF THE NATIONAL BUILDING CODE OF CANADA OR THE CANADIAN CODE FOR FARM BUILDINGS, WHICHEVER APPLIES TO THE BUILDING TYPE INDICATED ON THE DRAWING

IT IS THE RESPONSIBILITY OF KOTT LUMBER TO ENSURE THAT TRUSSES ARE MANUFACTURED IN CONFORMANCE WITH THESE DESIGNS AND WITH THE SPECIFICATIONS OUTLINED BELOW. THE UNDERSIGNED ENGINEER IS NOT RESPONSIBLE FOR QUALITY CONTROL IN THE TRUSS MANUFACTURING PLANT.

USE AND OCCUPANCY

- The building is of the type indicated on the drawing

LOADING

- The truss loading intensity and distribution as well as load transfer mechanism is that indicated on the drawing
- No buildings, trees, parapets or other projections higher than the roof for which the trusses are used are located within a distance less than ten (10) times the difference in height, or five metres (16 ft) whichever is greater, unless the drawing indicates that the snow drifting has been taken into account

HANDLING, INSTALLATION AND BRACING

- The trusses must be handled and installed by a qualified professional as per the supplied document titled *Information for Truss Installers* and the BCSI-B1 and BCSI-B3 Summary Sheets
- The compression chords are laterally braced by continuous rigid diaphragm sheathing or as specified on the drawing
- Temporary and permanent bracing must be installed as indicated on the truss drawing and according to the BCSI-B1 and BCSI-B3 Summary Sheets. Bracing for the lateral stability of the truss is to be provided by the building designer
- **It is recommended that a Professional Engineer's advice be obtained for the bracing of trusses spanning more than 12.37m (40'-7")**

SUPPORTS

- The trusses are to be supported at the bearing points indicated and anchored to the supports where considered necessary by the designer of the overall structure
- Bearing sizes shown are the minimum required to prevent crushing of the truss members and do not necessarily take into account stability of the overall building structure
- Elevation of bearings must be carefully checked and shimmed to alignment for solid bearings
- Adequate wood truss bearing is the responsibility of the building designer.

DIMENSIONS

- Geometry of the truss and dimensions indicated on the drawing are identical to those of the installed truss.

Layout based on plans provided by
Jardin Design Group Inc.
Revision #2 dated May 22, 2018

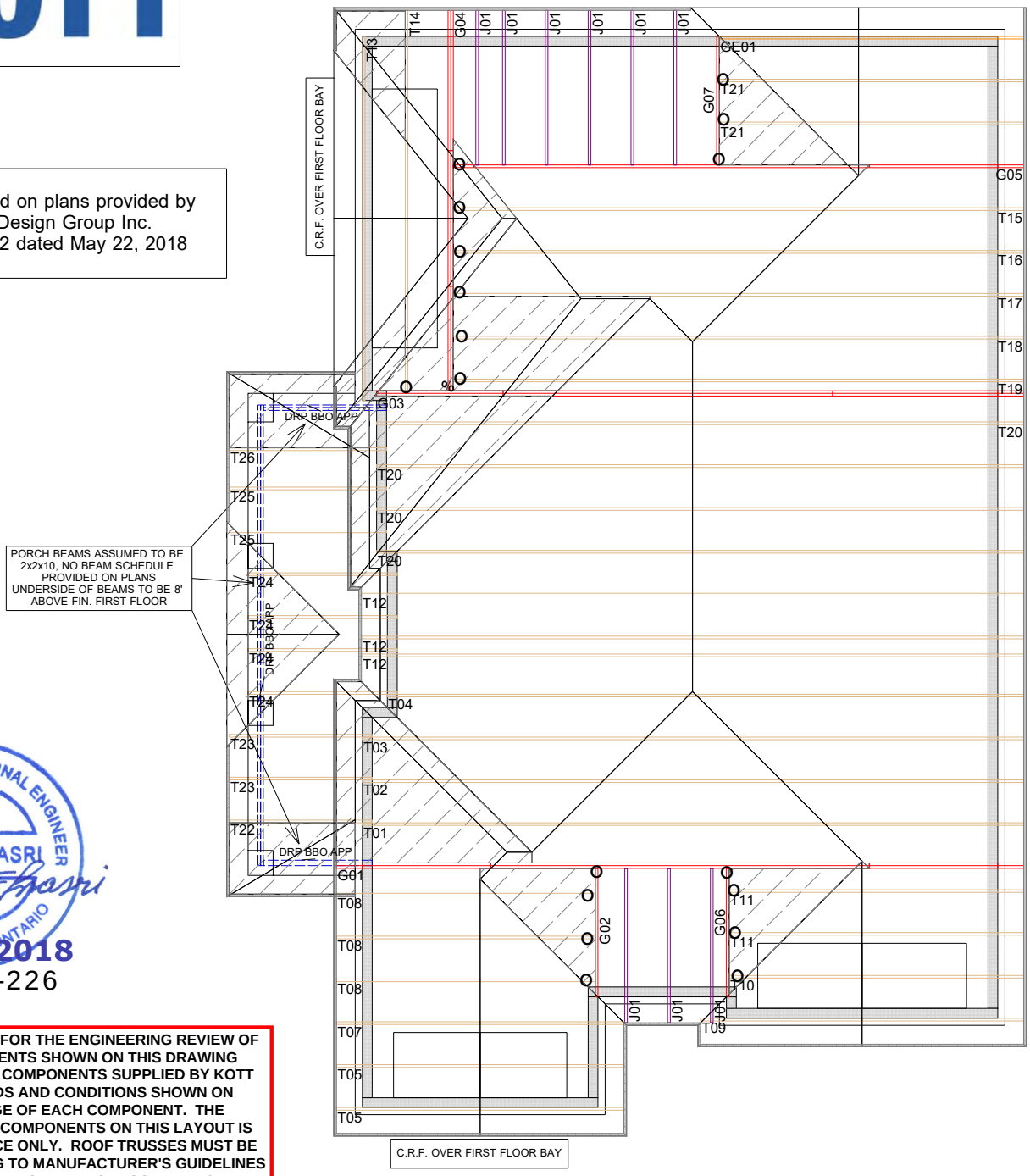

LICENSED PROFESSIONAL ENGINEER
N.A. EL-MASRI
PROVINCE OF ONTARIO
May 31, 2018
NE0518-226

THIS CERTIFICATION IS FOR THE ENGINEERING REVIEW OF STRUCTURAL COMPONENTS SHOWN ON THIS DRAWING AND IS LIMITED TO THE COMPONENTS SUPPLIED BY KOTT LUMBER FOR THE LOADS AND CONDITIONS SHOWN ON THE CALCULATION PAGE OF EACH COMPONENT. THE PLACEMENT OF THESE COMPONENTS ON THIS LAYOUT IS SHOWN FOR REFERENCE ONLY. ROOF TRUSSES MUST BE INSTALLED ACCORDING TO MANUFACTURER'S GUIDELINES AT 24" C/C UNLESS NOTED OTHERWISE. CONVENTIONAL FRAMING SHOWN ON THE LAYOUT MUST BE DESIGNED AND APPROVED BY THE PROJECT ENGINEER. TEMPORARY AND PERMANENT BRACINGS OF THE ROOF AND BUILDING ARE THE RESPONSIBILITY OF THE PROJECT ENGINEER AND TO CONFORM TO BCSI GUIDELINES.

ROOF TRUSS LAYOUT

CONVENTIONAL FRAMING BY OTHERS

HANGER LEGEND

X - LUS24
O - LJS26DS
- HGUS26
% - HGUS26-2

SIZE AND LOCATION OF CONVENTIONAL FRAMING IS APPROXIMATE. ALL AREAS MAY NOT BE SHOWN. REFER TO ARCHITECTURAL PLANS FOR DETAILS.

ALL CONVENTIONAL FRAMING TO CONFORM WITH PART 9 OF THE O.B.C RAFTER THAT CROSS MEET OVER TRUSSES TO BE 2X4 SPF @ 24" O/C WITH 2X4 VERT POST TO THE TRUSS BELOW EA CROSS PT. VERT POS . THAN 6' TO HAVE A LATERAL BRACING SO THAT THE DISTANCE BETEN PT & VERT ROWS OF BRACING DOES NOT EXCEED 6'

DESIGN CRITERIA
SPECIFIED LOADS:
TOP CH. LL = 23.3 psf
DL = 3.0 psf
BOT CH. LL = 0.0 psf
DL = 7.0 psf
TOTAL LOAD = 33.3 psf

SPACING @ 24" CENTERS,
THIS TRUSS SYSTEM IS DESIGN FOR RESIDENTIAL OR SMALL BUILDING REQUIREMENTS OF PART 9, NBCC 2010

THIS DESIGN COMPLIES WITH PART 9 OF OBC 2012, BCBC 2012, ABC 2012; CSA 086-09; TPIC 2011

ALLOWABLE DEFLECTION OF EACH COMPONENT = L/360

Model:	AMILIA 12 ELE 1
Customer:	GREEN YORK HOMES
Project:	GRANELLI HOME
Location:	BRAMPTON, ON
Drawn By:	DM
Date:	5/30/2018

JOB NAME	TRUSS NAME	QUANTITY	PLY	JOB DESC.	DRWG NO.
NE0518-227	G01	1	2	GREEN YORK HOMES - GRANELLI HOME CORP - AMELIA 12 ELE 1 TRUSS DESC.	PAGE 3 OF 45

Version 8.210 S Mar 12 2018 MiTek Industries, Inc. Thu May 31 18:08:12 2018 Page 1
ID:JiDzXONJoFa2AxdT?3zOcwzBMzn-f0WVUpugU9Y4slgkLnVgNrbR7DZfLVgTtXDJWczAw4n

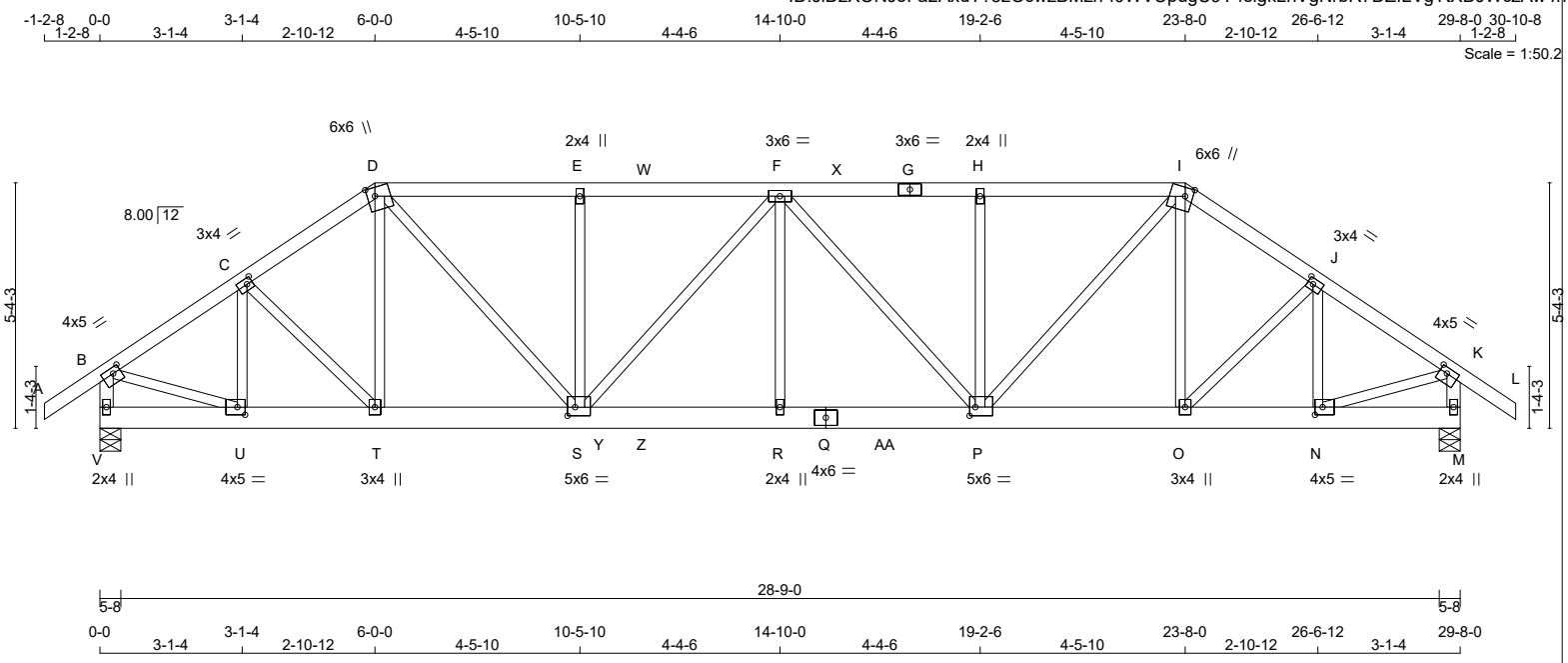

TOTAL WEIGHT = 2 X 149 = 299 lb

LUMBER

N. L. G. A. RULES

CHORDS	SIZE		LUMBER	DESCR.
A - D	2x4	DRY	No.2	SPF
D - G	2x4	DRY	No.2	SPF
G - I	2x4	DRY	No.2	SPF
I - L	2x4	DRY	No.2	SPF
V - B	2x4	DRY	No.2	SPF
M - K	2x4	DRY	No.2	SPF
V - Q	2x6	DRY	No.2	SPF
Q - M	2x6	DRY	No.2	SPF
ALL WEBS EXCEPT	2x3	DRY	No.2	SPF

DRY: SEASONED LUMBER.

DESIGN CONSISTS OF 2 TRUSSES BUILT SEPARATELY THEN FASTENED TOGETHER AS FOLLOWS:

CHORDS	#ROWS	SURFACE SPACING (IN)	LOAD(PLF)
TOP CHORDS : (0.122"X3") SPIRAL NAILS			
A- D	1	12	TOP
D- G	1	12	SIDE(33.1)
G- I	1	12	TOP
I- L	1	12	TOP
V- B	1	12	TOP
M- K	1	12	TOP
BOTTOM CHORDS : (0.122"X3") SPIRAL NAILS			
V- Q	2	12	SIDE(9.1)
Q- M	2	12	SIDE(0.0)
WEBS : (0.122"X3") SPIRAL NAILS			
2x3	1	6	

NAILS TO BE DRIVEN FROM ONE SIDE ONLY.

GIRDER NAILING ASSUMES NAILED HANGERS ARE FASTENED WITH MIN. 3-0 INCH NAILS.

TOP - COMPONENTS ARE LOADED FROM THE TOP AND MUST BE PLACED ON TOP EDGE OF ALL PLIES FOR THE LOAD TO BE TRANSFERRED TO EACH PLY.

LICENSED PROFESSIONAL ENGINEER
N.A. EL-MASRI
PROVINCE OF ONTARIO
May 31, 2018

READ ALL NOTES ON THIS PAGE AND ON ENGINEERING NOTE PAGE ENP-1. THIS NOTE PAGE IS AN INTEGRAL PART OF THIS DRAWING AS IT CONTAINS SPECIFICATIONS AND CRITERIA USED IN THE DESIGN OF THIS COMPONENT.

DIMENSIONS, SUPPORTS AND LOADINGS SPECIFIED BY FABRICATOR TO BE VERIFIED BY BUILDING DESIGNER

BEARINGS

JT	FACTORED GROSS REACTION VERT	HORZ	MAXIMUM FACTORED GROSS REACTION DOWN	HORZ	UPLIFT	INPUT BRG IN-SX	REQRD BRG IN-SX
V	2693	0	2693	0	0	5-8	5-8
M	2590	0	2590	0	0	5-8	5-8

UNFACTORED REACTIONS

JT	1ST LCASE COMBINED	MAX./MIN. COMPONENT REACTIONS SNOW	LIVE	PERM.LIVE	WIND	DEAD	SOIL
V	1893	1306 / 0	0 / 0	0 / 0	0 / 0	586 / 0	0 / 0
M	1821	1259 / 0	0 / 0	0 / 0	0 / 0	562 / 0	0 / 0

BEARING MATERIAL TO BE SPF NO.2 OR BETTER AT JOINT(S) V, M

BRACING

TOP CHORD TO BE SHEATHED OR MAX. PURLIN SPACING = 4.37 FT.
MAX. UNBRACED BOTTOM CHORD LENGTH = 10.00 FT OR RIGID CEILING DIRECTLY APPLIED.

ALL PITCH BREAKS AND PERIMETER CORNER JOINTS MUST BE LATERALLY RESTRAINED.

LOADING

TOTAL LOAD CASES: (4)

CHORDS

MEMB. FR-TO	MAX. FACTORED FORCE (LBS)	FACTORED VERT. LOAD (PLF) FROM	TO	LC1 CSI (LC)	MAX UNBRAC LENGTH
A- B	0 / 28	-77.4	-77.4	0.05 (1)	10.00
B- C	-3000 / 0	-77.4	-77.4	0.08 (1)	5.27
C- D	-3395 / 0	-77.4	-77.4	0.09 (1)	5.01
D- E	-4442 / 0	-77.4	-77.4	0.22 (1)	4.37
E- W	-4442 / 0	-77.4	-77.4	0.22 (1)	4.37
W- F	-4442 / 0	-143.6	-143.6	0.22 (1)	4.37
F- X	-4271 / 0	-143.6	-143.6	0.21 (1)	4.45
X- G	-4271 / 0	-77.4	-77.4	0.21 (1)	4.45
G- H	-4271 / 0	-77.4	-77.4	0.21 (1)	4.45
H- I	-4271 / 0	-77.4	-77.4	0.18 (1)	4.48
I- J	-3228 / 0	-77.4	-77.4	0.08 (1)	5.11
J- K	-2882 / 0	-77.4	-77.4	0.08 (1)	5.35
K- L	0 / 28	-77.4	-77.4	0.05 (1)	10.00
V- B	-2632 / 0	0.0	0.0	0.15 (1)	7.01
M- K	-2536 / 0	0.0	0.0	0.14 (1)	7.11
V- U	0 / 0	-18.2	-18.2	0.04 (1)	10.00
U- T	0 / 2505	-18.2	-18.2	0.20 (1)	10.00
T- S	0 / 2805	-18.2	-18.2	0.21 (1)	10.00
S- Y	0 / 4960	-18.2	-18.2	0.46 (1)	10.00
Y- Z	0 / 4960	-18.2	-18.2	0.46 (1)	10.00
Z- R	0 / 4960	-34.4	-34.4	0.46 (1)	10.00
R- Q	0 / 4960	-34.4	-34.4	0.63 (1)	10.00
Q-AA	0 / 4960	-18.2	-18.2	0.63 (1)	10.00
AA- P	0 / 4960	-18.2	-18.2	0.63 (1)	10.00
P- O	0 / 2665	-18.2	-18.2	0.27 (1)	10.00
O- N	0 / 2407	-18.2	-18.2	0.19 (1)	10.00
N- M	0 / 0	-18.2	-18.2	0.03 (1)	10.00

WEBS

MEMB. FR-TO	MAX. FACTORED FORCE (LBS)	MAX CSI (LC)
U- C	-793 / 0	0.08 (1)
C- T	0 / 430	0.05 (1)
T- D	-170 / 0	0.03 (1)
D- S	0 / 2445	0.30 (1)
S- E	-431 / 0	0.09 (1)
S- F	-785 / 0	0.31 (1)
R- F	0 / 825	0.10 (1)
F- P	-1044 / 0	0.41 (1)
P- H	-360 / 0	0.07 (1)
P- I	0 / 2399	0.30 (1)
O- I	-237 / 0	0.05 (1)
O- J	0 / 372	0.05 (1)
N- J	-725 / 0	0.07 (1)
B- U	0 / 2618	0.32 (1)
N- K	0 / 2516	0.31 (1)

FACTORED CONCENTRATED LOADS (LBS)

JT	LOC.	LC1	MAX-	MAX+	FACE	DIR.	TYPE
Y	10-11-4	-891	-891	---	FRONT	VERT	TOTAL
AA	17-0-12	-1011	-1011	---	FRONT	VERT	TOTAL

DESIGN CRITERIA

*** SPECIAL LOADS ANALYSIS ***
GEOMETRY AND/OR BASIC LOADS CHANGED BY USER.
LOADS WERE DERIVED FROM USER INPUT
NO FURTHER MODIFICATIONS WERE MADE

SPECIFIED LOADS:

TOP	CH.	LL	=	23.3	PSF
		DL	=	3.0	PSF
BOT	CH.	LL	=	0.0	PSF
		DL	=	7.3	PSF
TOTAL	LOAD		=	33.6	PSF

SPACING = 24.0 IN. C/C

LOADING IN FLAT SECTION BASED ON A SLOPE OF 2.00/12 MINIMUM

*** NON STANDARD GIRDER ***
ADDT'L USER-DEFINED LOADS APPLIED TO ALL LOAD CASES.

THIS TRUSS IS DESIGNED FOR RESIDENTIAL OR SMALL BUILDING REQUIREMENTS OF PART 9, NBCC 2010

THIS DESIGN COMPLIES WITH:
- PART 9 OF OBC 2012 , BCBC 2012 , ABC 2014
- CSA 086-09
- TPIC 2011

(55 % OF 27.2 P.S.F. G.S.L. PLUS 8.4 P.S.F. RAIN LOAD) EQUALS 23.3 P.S.F. SPECIFIED ROOF LIVE LOAD

ALLOWABLE DEFL.(LL)= L/360 (0.99")
CALCULATED VERT. DEFL.(LL) = L/ 999 (0.10")
ALLOWABLE DEFL.(TL)= L/360 (0.99")
CALCULATED VERT. DEFL.(TL) = L/ 999 (0.18")

CSI: TC=0.22/1.00 (D-E:1) , BC=0.63/1.00 (P-R:1) , WB=0.41/1.00 (F-P:1) , SSI=0.25/1.00 (R-S:1)

DOL LUMBER=1.00 NAIL=1.00 LS BEND=1.00 COMP=1.00 SHEAR=1.00 TENS= 1.00

COMPANION LIVE LOAD FACTOR = 0.50

TRUSS PLATE MANUFACTURER IS NOT RESPONSIBLE FOR QUALITY CONTROL IN THE TRUSS MANUFACTURING PLANT .

NAIL VALUES

PLATE	GRIP(DRY) (PSI) MAX	MIN	SHEAR (PLI) MAX	MIN	SECTION (PLI) MAX	MIN
MT20	618	354	1667	822	2284	1656

CONTINUED ON PAGE 2

KOTT

PLATES (table is in inches)

JT	TYPE	PLATES	W	LEN	Y	X
B	TMVW-t	MT20	4.0	5.0	1.50	2.00
C	TMWW-t	MT20	3.0	4.0	1.50	1.50
D	TTWW+m	MT20	6.0	6.0	2.25	2.00
E	TMW+w	MT20	2.0	4.0		
F	TMWWW-t	MT20	3.0	6.0		
G	TS-t	MT20	3.0	6.0		
H	TMW+w	MT20	2.0	4.0		
I	TTWW+m	MT20	6.0	6.0	2.25	2.00
J	TMWW-t	MT20	3.0	4.0	1.50	1.50
K	TMVW-t	MT20	4.0	5.0	1.50	2.00
M	BMV1+p	MT20	2.0	4.0		
N	BMWW-t	MT20	4.0	5.0	2.00	2.00
O	BMWW+t	MT20	3.0	4.0		
P	BMWWW-t	MT20	5.0	6.0	2.25	1.50
Q	BS-t	MT20	4.0	6.0		
R	BMW+w	MT20	2.0	4.0		
S	BMWWW-t	MT20	5.0	6.0	2.25	2.00
T	BMWW+t	MT20	3.0	4.0		
U	BMWW-t	MT20	4.0	5.0	2.00	2.00
V	BMV1+p	MT20	2.0	4.0		

HANGERS NOTES

1) SPECIAL HANGER(S) OR CONNECTION(S) REQUIRED TO SUPPORT CONCENTRATED LOAD(S) 891.0 lbs FACTORED DOWN AT 10-11-4, AND 1010.6 lbs FACTORED DOWN AT 17-0-12 ON BOTTOM CHORD. DESIGN FOR UNSPECIFIED CONNECTION(S) IS DELEGATED TO THE BUILDING DESIGNER.

PLATE PLACEMENT TOL. = 0.250 inches

PLATE ROTATION TOL. = 5.0 Deg.

JSI GRIP= 0.89 (J) (INPUT = 0.90)
JSI METAL= 0.58 (Q) (INPUT = 1.00)

READ ALL NOTES ON THIS PAGE AND ON ENGINEERING NOTE PAGE ENP-1. THIS NOTE PAGE IS AN INTEGRAL PART OF THIS DRAWING AS IT CONTAINS SPECIFICATIONS AND CRITERIA USED IN THE DESIGN OF THIS COMPONENT.

KOTT

JOB NAME	TRUSS NAME	QUANTITY	PLY	JOB DESC.		DRWG NO.
NE0518-227	G02	1	1	TRUSS DESC.	GREEN YORK HOMES - GRANELLI HOME CORP - AMELIA 12 ELE 1	PAGE 5 OF 45

Version 8.210 S Mar 12 2018 MiTek Industries, Inc. Thu May 31 18:08:13 2018 Page 1
ID:JiDzXONJoFa2AxdT?3zOcwzBMzn-7C4th9vIFTgxUvFwvU0vw38eLd?d4?yd5Bzs22zAw4m

Scale = 1:31.4

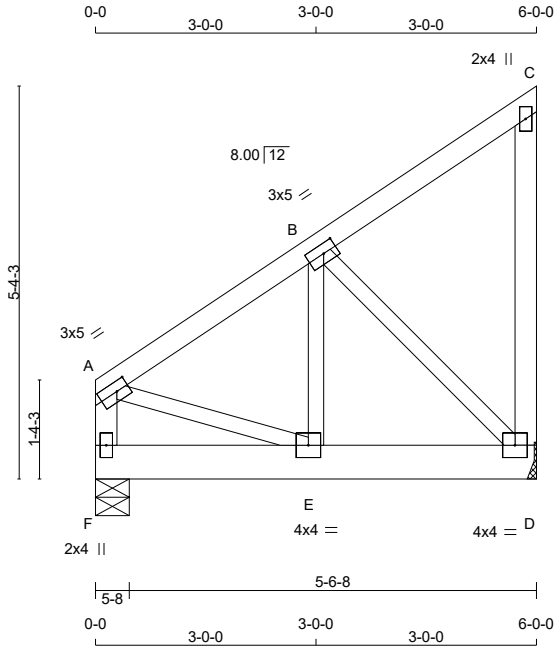

TOTAL WEIGHT = 33 lb
[M]

LUMBER
N. L. G. A. RULES

CHORDS	SIZE		LUMBER	DESCR.
A - C	2x4	DRY	No.2	SPF
D - C	2x4	DRY	No.2	SPF
F - A	2x4	DRY	No.2	SPF
F - D	2x6	DRY	No.2	SPF
ALL WEBS EXCEPT	2x3	DRY	No.2	SPF

DRY: SEASONED LUMBER.

PLATES (table is in inches)

JT	TYPE	PLATES	W	LEN	Y	X
A	TMVW-t	MT20	3.0	5.0	1.50	2.00
B	TMWW-t	MT20	3.0	5.0	1.50	2.25
C	TMV+p	MT20	2.0	4.0		
D	BMVW1-t	MT20	4.0	4.0		
E	BMWW-t	MT20	4.0	4.0		
F	BMV1+p	MT20	2.0	4.0		

DIMENSIONS, SUPPORTS AND LOADINGS SPECIFIED BY FABRICATOR TO BE VERIFIED BY BUILDING DESIGNER

BEARINGS

JT	FACTORED GROSS REACTION VERT	HORZ	MAXIMUM FACTORED GROSS REACTION DOWN	HORZ	UPLIFT	INPUT BRG IN-SX	REQRD BRG IN-SX
D	890	0	890	0	0	MECHANICAL	
F	890	0	890	0	0	5-8	5-8

A SUITABLE MECHANICAL CONNECTION IS REQUIRED AT JOINT D TO RESIST THE MAX FACTORED REACTIONS.

UNFACTORED REACTIONS

JT	1ST LCASE COMBINED	MAX./MIN. COMPONENT REACTIONS SNOW	LIVE	PERM.LIVE	WIND	DEAD	SOIL
D	626	434 / 0	0 / 0	0 / 0	0 / 0	192 / 0	0 / 0
F	626	434 / 0	0 / 0	0 / 0	0 / 0	192 / 0	0 / 0

BEARING MATERIAL TO BE SPF NO.2 OR BETTER AT JOINT(S) F

BRACING
TOP CHORD TO BE SHEATHED OR MAX. PURLIN SPACING = 6.25 FT.
MAX. UNBRACED BOTTOM CHORD LENGTH = 10.00 FT OR RIGID CEILING DIRECTLY APPLIED.

ALL PITCH BREAKS AND PERIMETER CORNER JOINTS MUST BE LATERALLY RESTRAINED.

LOADING
TOTAL LOAD CASES: (4)

CHORDS

MEMB. FR-TO	MAX. FACTORED FORCE (LBS)	FACTORED VERT. LOAD (PLF) FROM	TO	LC1 MAX CSI (LC)	MAX. UNBRAC LENGTH
A- B	-631 / 0	-77.4	-77.4	0.12 (1)	6.25
B- C	-14 / 0	-77.4	-77.4	0.12 (1)	6.25
D- C	-90 / 0	0.0	0.0	0.04 (1)	7.81
F- A	-617 / 0	0.0	0.0	0.07 (1)	7.81
F- E	0 / 0	-219.4	-219.4	0.13 (1)	10.00
E- D	0 / 537	-219.4	-219.4	0.20 (1)	10.00

WEBS

MEMB. FR-TO	MAX. FACTORED FORCE (LBS)	MAX CSI (LC)
E- B	0 / 601	0.15 (1)
B- D	-752 / 0	0.22 (1)
A- E	0 / 562	0.14 (1)

DESIGN CRITERIA

SPECIFIED LOADS:

TOP	CH.	LL	=	23.3	PSF
		DL	=	3.0	PSF
BOT	CH.	LL	=	0.0	PSF
		DL	=	7.3	PSF
TOTAL	LOAD		=	33.6	PSF

SPACING = 24.0 IN. C/C

GIRDER TYPE: CStdGirder
START DISTANCE = 0-0
START SPAN CARRIED = 10-10-8
END DISTANCE = 6-0-0
END SPAN CARRIED = 10-10-8
END WALL WIDTH = 5-8
APPLIED TO FRONT SIDE OF BOTTOM CHORD.
- ADDT'L LOADS BASED ON 55 % OF GSL. (DEFINED BY USER)

THIS TRUSS IS DESIGNED FOR RESIDENTIAL OR SMALL BUILDING REQUIREMENTS OF PART 9, NBCC 2010

THIS DESIGN COMPLIES WITH:
- PART 9 OF OBC 2012 , BCBC 2012 , ABC 2014
- CSA 086-09
- TPIC 2011

(55 % OF 27.2 P.S.F. G.S.L. PLUS 8.4 P.S.F. RAIN LOAD) EQUALS 23.3 P.S.F. SPECIFIED ROOF LIVE LOAD

ALLOWABLE DEFL.(LL)= L/360 (0.20")
CALCULATED VERT. DEFL.(LL) = L/ 999 (0.01")
ALLOWABLE DEFL.(TL)= L/360 (0.20")
CALCULATED VERT. DEFL.(TL) = L/ 999 (0.01")

CSI: TC=0.12/1.00 (A-B:1) , BC=0.20/1.00 (D-E:1) , WB=0.22/1.00 (B-D:1) , SSI=0.26/1.00 (D-E:1)

DOL LUMBER=1.00 NAIL=1.00 LS BEND=1.00 COMP=1.00 SHEAR=1.00 TENS= 1.00

COMPANION LIVE LOAD FACTOR = 0.50

TRUSS PLATE MANUFACTURER IS NOT RESPONSIBLE FOR QUALITY CONTROL IN THE TRUSS MANUFACTURING PLANT .

NAIL VALUES

PLATE	GRIP(DRY) (PSI) MAX	MIN	SHEAR (PLI) MAX	MIN	SECTION (PLI) MAX	MIN
MT20	618	354	1667	822	2284	1656

PLATE PLACEMENT TOL. = 0.250 inches

PLATE ROTATION TOL. = 0.5 Deg.

CONTINUED ON PAGE 2

LICENSED PROFESSIONAL ENGINEER
N.A. EL-MASRI
PROVINCE OF ONTARIO
May 31, 2018

READ ALL NOTES ON THIS PAGE AND ON ENGINEERING NOTE PAGE ENP-1. THIS NOTE PAGE IS AN INTEGRAL PART OF THIS DRAWING AS IT CONTAINS SPECIFICATIONS AND CRITERIA USED IN THE DESIGN OF THIS COMPONENT.

KOTT

JSI GRIP= 0.90 (B) (INPUT = 0.90)
JSI METAL= 0.21 (A) (INPUT = 1.00)

READ ALL NOTES ON THIS PAGE AND ON ENGINEERING NOTE PAGE ENP-1. THIS NOTE PAGE IS AN INTEGRAL PART OF THIS DRAWING AS IT CONTAINS SPECIFICATIONS AND CRITERIA USED IN THE DESIGN OF THIS COMPONENT.

KOTT

JOB NAME	TRUSS NAME	QUANTITY	PLY	JOB DESC.	DRWG NO.
NE0518-227	G03	1	2	GREEN YORK HOMES - GRANELLI HOME CORP - AMELIA 12 ELE 1 / TRUSS DESC.	PAGE 7 OF 45

Version 8.210 S Mar 12 2018 MiTek Industries, Inc. Thu May 31 18:08:14 2018 Page 1
ID:JiDzXONJoFa2AxdT?3zOcwzBMzn-bOdGuVww0moo63q6TCX8SGgmR1GUpKZmKriQbVzAw4I

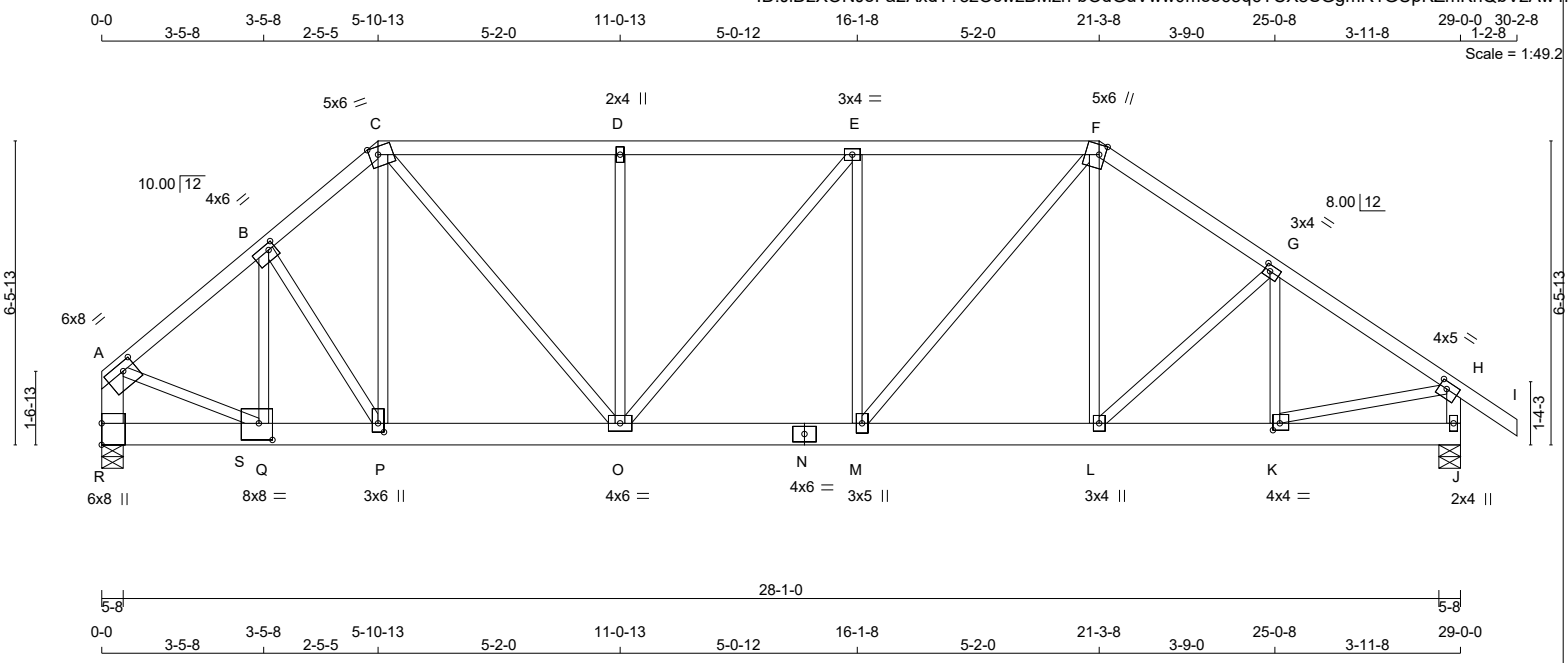

TOTAL WEIGHT = 2 X 150 = 299 lb

LUMBER

N. L. G. A. RULES

CHORDS	SIZE		LUMBER	DESCR.
A - C	2x4	DRY	No.2	SPF
C - F	2x4	DRY	No.2	SPF
F - I	2x4	DRY	No.2	SPF
R - A	2x6	DRY	No.2	SPF
J - H	2x4	DRY	No.2	SPF
R - N	2x6	DRY	No.2	SPF
N - J	2x6	DRY	No.2	SPF
ALL WEBS EXCEPT	2x3	DRY	No.2	SPF

DRY: SEASONED LUMBER.

DESIGN CONSISTS OF 2 TRUSSES BUILT SEPARATELY THEN FASTENED TOGETHER AS FOLLOWS:

CHORDS	#ROWS	SURFACE SPACING (IN)	LOAD(PLF)
TOP CHORDS : (0.122"X3") SPIRAL NAILS			
A- C	1	12	TOP
C- F	1	12	TOP
F- I	1	12	TOP
J- H	1	12	TOP
R- A	2	12	TOP
BOTTOM CHORDS : (0.122"X3") SPIRAL NAILS			
R- N	2	12	SIDE(168.3)
N- J	2	12	TOP
WEBS : (0.122"X3") SPIRAL NAILS			
2x3	1	6	

NAILS TO BE DRIVEN FROM ONE SIDE ONLY.

GIRDER NAILING ASSUMES NAILED HANGERS ARE FASTENED WITH MIN. 3-0 INCH NAILS.

TOP - COMPONENTS ARE LOADED FROM THE TOP AND MUST BE PLACED ON TOP EDGE OF ALL PLIES FOR THE LOAD TO BE TRANSFERRED TO EACH PLY.

SIDE - PLF SHOWN IS THE EQUIVALENT UDL APPLIED TO ONE SIDE THAT THE CORRESPONDING NAILING PATTERN SHALL BE CAPABLE OF TRANSFERING. REMAINING PLF MUST BE APPLIED ON THE OPPOSITE SIDE OR ON THE TOP.

LICENSED PROFESSIONAL ENGINEER
N.A. EL-MASRI
PROVINCE OF ONTARIO
May 31, 2018

READ ALL NOTES ON THIS PAGE AND ON ENGINEERING NOTE PAGE ENP-1. THIS NOTE PAGE IS AN INTEGRAL PART OF THIS DRAWING AS IT CONTAINS SPECIFICATIONS AND CRITERIA USED IN THE DESIGN OF THIS COMPONENT.

DIMENSIONS, SUPPORTS AND LOADINGS SPECIFIED BY FABRICATOR TO BE VERIFIED BY BUILDING DESIGNER

BEARINGS

JT	FACTORED GROSS REACTION VERT	HORZ	MAXIMUM FACTORED GROSS REACTION DOWN	HORZ	UPLIFT	INPUT BRG IN-SX	REQRD BRG IN-SX
R	7134	0	7134	0	0	5-8	5-8
J	2187	0	2187	0	0	5-8	5-8

UNFACTORED REACTIONS

JT	1ST LCASE COMBINED	MAX./MIN. COMPONENT REACTIONS SNOW	LIVE	PERM.LIVE	WIND	DEAD	SOIL
R	5012	3475 / 0	0 / 0	0 / 0	0 / 0	1537 / 0	0 / 0
J	1534	1077 / 0	0 / 0	0 / 0	0 / 0	457 / 0	0 / 0

BEARING MATERIAL TO BE SPF NO.2 OR BETTER AT JOINT(S) R, J

BRACING

TOP CHORD TO BE SHEATHED OR MAX. PURLIN SPACING = 3.52 FT.
MAX. UNBRACED BOTTOM CHORD LENGTH = 10.00 FT OR RIGID CEILING DIRECTLY APPLIED.

ALL PITCH BREAKS AND PERIMETER CORNER JOINTS MUST BE LATERALLY RESTRAINED.

LOADING

TOTAL LOAD CASES: (4)

CHORDS MEMB. FR-TO	MAX. FACTORED FORCE (LBS)	FACTORED VERT. LOAD (PLF) FROM	TO	LC1 CSI (LC)	MAX UNBRAC LENGTH	WEBS MEMB. FR-TO	MAX. FACTORED FORCE (LBS)	MAX CSI (LC)
A- B	-7031 / 0	-77.4	-77.4	0.29 (1)	3.52	Q- B	0 / 3860	0.48 (1)
B- C	-4832 / 0	-77.4	-77.4	0.13 (1)	4.30	B- P	-3189 / 0	0.60 (1)
C- D	-3638 / 0	-77.4	-77.4	0.21 (1)	4.75	P- C	0 / 2967	0.37 (1)
D- E	-3638 / 0	-77.4	-77.4	0.21 (1)	4.75	C- O	-170 / 0	0.11 (1)
E- F	-3133 / 0	-77.4	-77.4	0.20 (1)	5.05	O- D	-415 / 0	0.14 (1)
F- G	-2646 / 0	-77.4	-77.4	0.12 (1)	5.48	O- E	0 / 791	0.10 (1)
G- H	-2523 / 0	-77.4	-77.4	0.12 (1)	5.58	M- E	-1034 / 0	0.34 (1)
H- I	0 / 28	-77.4	-77.4	0.05 (1)	10.00	M- F	0 / 1470	0.18 (1)
R- A	-6433 / 0	0.0	0.0	0.24 (1)	5.86	L- F	0 / 78	0.01 (4)
J- H	-2134 / 0	0.0	0.0	0.12 (1)	7.60	L- G	0 / 94	0.01 (1)
						K- G	-481 / 0	0.06 (1)
R- S	0 / 0	-354.9	-354.9	0.25 (1)	10.00	A- Q	0 / 5691	0.70 (1)
S- Q	0 / 0	-18.2	-18.2	0.25 (1)	10.00	K- H	0 / 2173	0.27 (1)
Q- P	0 / 5400	-18.2	-18.2	0.48 (1)	10.00			
P- O	0 / 3748	-18.2	-18.2	0.28 (1)	10.00			
O- N	0 / 3133	-18.2	-18.2	0.22 (1)	10.00			
N- M	0 / 3133	-18.2	-18.2	0.22 (1)	10.00			
M- L	0 / 2183	-18.2	-18.2	0.16 (1)	10.00			
L- K	0 / 2113	-18.2	-18.2	0.16 (1)	10.00			
K- J	0 / 0	-18.2	-18.2	0.03 (1)	10.00			

FACTORED CONCENTRATED LOADS (LBS)

JT	LOC.	LC1	MAX-	MAX+	FACE	DIR.	TYPE
Q	3-5-8	-5439	-5439	---	BACK	VERT	TOTAL

DESIGN CRITERIA

*** SPECIAL LOADS ANALYSIS ***
GEOMETRY AND/OR BASIC LOADS CHANGED BY USER.
LOADS WERE DERIVED FROM USER INPUT
NO FURTHER MODIFICATIONS WERE MADE

SPECIFIED LOADS:

TOP	CH.	LL	=	23.3	PSF
		DL	=	3.0	PSF
BOT	CH.	LL	=	0.0	PSF
		DL	=	7.3	PSF
TOTAL	LOAD		=	33.6	PSF

SPACING = 24.0 IN. C/C

LOADING IN FLAT SECTION BASED ON A SLOPE OF 2.00/12 MINIMUM

GIRDER TYPE: CStdGirder
START DISTANCE = 0-0
START SPAN CARRIED = 16-6-8
END DISTANCE = 3-0-0
END SPAN CARRIED = 16-6-8
END WALL WIDTH = 5-8
APPLIED TO BACK SIDE OF BOTTOM CHORD.
- ADDT'L LOADS BASED ON 55 % OF GSL. (DEFINED BY USER)

*** NON STANDARD GIRDER ***
ADDT'L USER-DEFINED LOADS APPLIED TO ALL LOAD CASES.

THIS TRUSS IS DESIGNED FOR RESIDENTIAL OR SMALL BUILDING REQUIREMENTS OF PART 9, NBCC 2010

THIS DESIGN COMPLIES WITH:
- PART 9 OF OBC 2012 , BCBC 2012 , ABC 2014
- CSA 086-09
- TPIC 2011

(55 % OF 27.2 P.S.F. G.S.L. PLUS 8.4 P.S.F. RAIN LOAD) EQUALS 23.3 P.S.F. SPECIFIED ROOF LIVE LOAD

ALLOWABLE DEFL.(LL)= L/360 (0.97")
CALCULATED VERT. DEFL.(LL) = L/ 999 (0.06")
ALLOWABLE DEFL.(TL)= L/360 (0.97")
CALCULATED VERT. DEFL.(TL) = L/ 999 (0.11")

CSI: TC=0.29/1.00 (A-B:1) , BC=0.48/1.00 (P-Q:1) , WB=0.70/1.00 (A-Q:1) , SSI=0.23/1.00 (Q-R:1)

DOL LUMBER=1.00 NAIL=1.00 LS BEND=1.00 COMP=1.00 SHEAR=1.00 TENS= 1.00

COMPANION LIVE LOAD FACTOR = 0.50

CONTINUED ON PAGE 2

KOTT

PLATES (table is in inches)

JT	TYPE	PLATES	W	LEN	Y	X
A	TMVW-t	MT20	6.0	8.0	2.00	3.25
B	TMWW-t	MT20	4.0	6.0	1.50	1.75
C	TTWW-m	MT20	5.0	6.0	2.00	2.25
D	TMW+w	MT20	2.0	4.0		
E	TMWW-t	MT20	3.0	4.0		
F	TTWW+m	MT20	5.0	6.0	2.50	1.50
G	TMWW-t	MT20	3.0	4.0	1.50	1.50
H	TMVW-t	MT20	4.0	5.0	1.75	2.00
J	BMV1+p	MT20	2.0	4.0		
K	BMWW-t	MT20	4.0	4.0	1.75	1.75
L	BMWW+t	MT20	3.0	4.0		
M	BMWW+t	MT20	3.0	5.0		
N	BS-t	MT20	4.0	6.0		
O	BMWWW-t	MT20	4.0	6.0		
P	BMWW+t	MT20	3.0	6.0	2.25	1.50
Q	BMWW-t	MT20	8.0	8.0	4.25	3.50
R	BMV1+t	MT20	6.0	8.0	5.50	

HANGERS NOTES

1) SPECIAL HANGER(S) OR CONNECTION(S) REQUIRED TO SUPPORT CONCENTRATED LOAD(S) 5438.6 lbs FACTORED DOWN AT 3-5-8 ON BOTTOM CHORD. DESIGN FOR UNSPECIFIED CONNECTION(S) IS DELEGATED TO THE BUILDING DESIGNER.

AUTOSOLVE RIGHT HEEL ONLY

TRUSS PLATE MANUFACTURER IS NOT RESPONSIBLE FOR QUALITY CONTROL IN THE TRUSS MANUFACTURING PLANT .

NAIL VALUES

PLATE	GRIP(DRY) (PSI)		SHEAR (PLI)		SECTION (PLI)	
	MAX	MIN	MAX	MIN	MAX	MIN
MT20	618	354	1667	822	2284	1656

PLATE PLACEMENT TOL. = 0.250 inches

PLATE ROTATION TOL. = 5.0 Deg.

JSI GRIP= 0.89 (P) (INPUT = 0.90)
JSI METAL= 0.67 (A) (INPUT = 1.00)

READ ALL NOTES ON THIS PAGE AND ON ENGINEERING NOTE PAGE ENP-1. THIS NOTE PAGE IS AN INTEGRAL PART OF THIS DRAWING AS IT CONTAINS SPECIFICATIONS AND CRITERIA USED IN THE DESIGN OF THIS COMPONENT.

KOTT

JOB NAME	TRUSS NAME	QUANTITY	PLY	JOB DESC.	DRWG NO.
NE0518-227	G04	1	2	GREEN YORK HOMES - GRANELLI HOME CORP - AMELIA 12 ELE 1 TRUSS DESC.	PAGE 9 OF 45

Version 8.210 S Mar 12 2018 MiTek Industries, Inc. Thu May 31 18:08:14 2018 Page 1
ID:JiDzXONJoFa2AxdT?3zOcwzBMzn-bOdGuVww0moo63q6TCX8SGgka1DFpNomKriQbVzAw4I

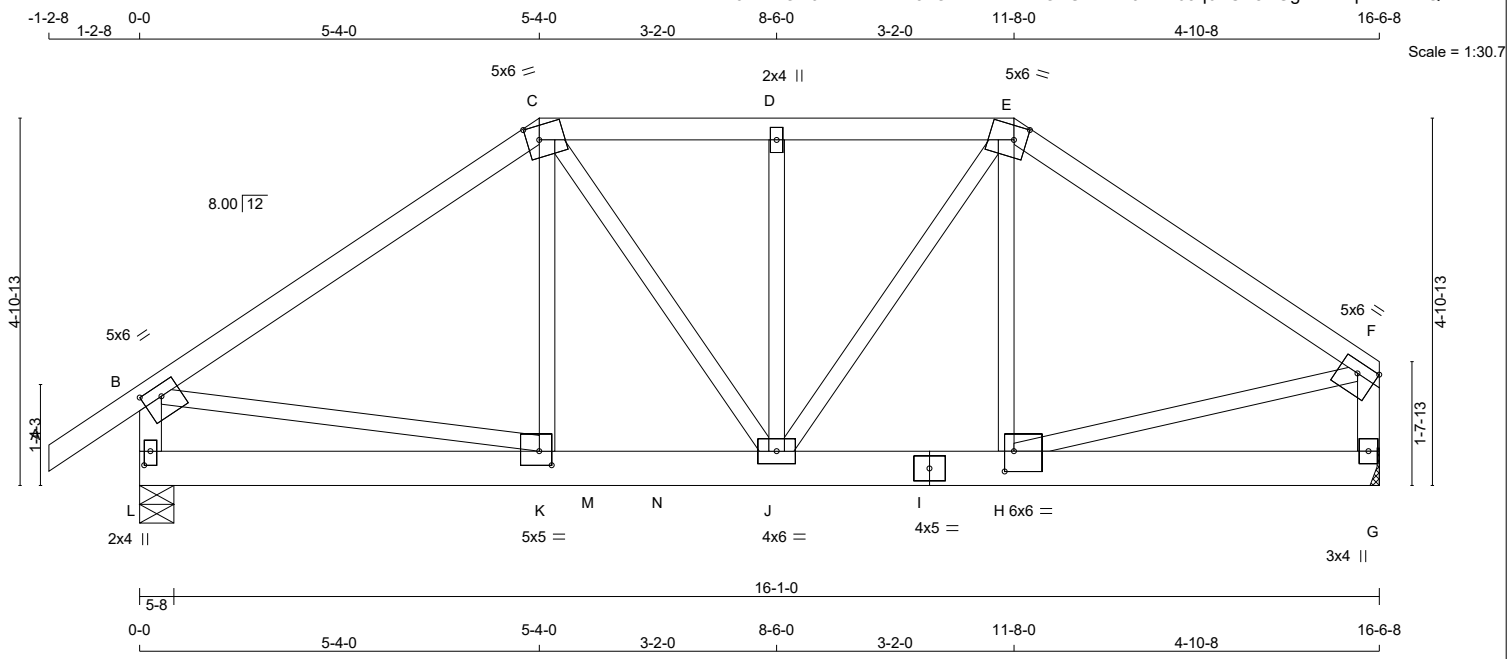

TOTAL WEIGHT = 2 X 81 = 163 lb [M]

LUMBER

N. L. G. A. RULES

CHORDS	SIZE		LUMBER	DESCR.
A - C	2x4	DRY	No.2	SPF
C - E	2x4	DRY	No.2	SPF
E - F	2x4	DRY	No.2	SPF
L - B	2x4	DRY	No.2	SPF
G - F	2x4	DRY	No.2	SPF
L - I	2x6	DRY	No.2	SPF
I - G	2x6	DRY	No.2	SPF
ALL WEBS EXCEPT	2x3	DRY	No.2	SPF

DRY: SEASONED LUMBER.

DESIGN CONSISTS OF 2 TRUSSES BUILT SEPARATELY THEN FASTENED TOGETHER AS FOLLOWS:

CHORDS	#ROWS	SURFACE SPACING (IN)	LOAD(PLF)
TOP CHORDS : (0.122"X3") SPIRAL NAILS			
A- C	1	12	TOP
C- E	1	12	TOP
E- F	1	12	TOP
L- B	1	12	TOP
G- F	1	12	TOP
BOTTOM CHORDS : (0.122"X3") SPIRAL NAILS			
L- I	2	9	SIDE(274.4)
I- G	2	9	SIDE(274.4)
WEBS : (0.122"X3") SPIRAL NAILS			
2x3	1	6	

NAILS TO BE DRIVEN FROM ONE SIDE ONLY.

GIRDER NAILING ASSUMES NAILED HANGERS ARE FASTENED WITH MIN. 3-0 INCH NAILS.

TOP - COMPONENTS ARE LOADED FROM THE TOP AND MUST BE PLACED ON TOP EDGE OF ALL PLIES FOR THE LOAD TO BE TRANSFERRED TO EACH PLY.

SIDE - PLF SHOWN IS THE EQUIVALENT UDL APPLIED TO ONE SIDE THAT THE CORRESPONDING NAILING PATTERN SHALL BE CAPABLE OF TRANSFERING. REMAINING PLF MUST BE APPLIED ON THE OPPOSITE SIDE OR ON THE TOP.

LICENSED PROFESSIONAL ENGINEER
N.A. EL-MASRI
PROVINCE OF ONTARIO
May 31, 2018

READ ALL NOTES ON THIS PAGE AND ON ENGINEERING NOTE PAGE ENP-1. THIS NOTE PAGE IS AN INTEGRAL PART OF THIS DRAWING AS IT CONTAINS SPECIFICATIONS AND CRITERIA USED IN THE DESIGN OF THIS COMPONENT.

DIMENSIONS, SUPPORTS AND LOADINGS SPECIFIED BY FABRICATOR TO BE VERIFIED BY BUILDING DESIGNER

BEARINGS

JT	FACTORED GROSS REACTION VERT	HORZ	MAXIMUM FACTORED GROSS REACTION DOWN	HORZ	UPLIFT	INPUT BRG IN-SX	REQRD BRG IN-SX
L	3995	0	3995	0	0	5-8	5-8
G	5439	0	5439	0	0	MECHANICAL	

A SUITABLE MECHANICAL CONNECTION IS REQUIRED AT JOINT G TO RESIST THE MAX FACTORED REACTIONS.

UNFACTORED REACTIONS

JT	1ST LCASE COMBINED	SNOW	LIVE	PERM.LIVE	WIND	DEAD	SOIL
		MAX./MIN. COMPONENT REACTIONS					
L	2804	1957 / 0	0 / 0	0 / 0	0 / 0	847 / 0	0 / 0
G	3821	2650 / 0	0 / 0	0 / 0	0 / 0	1172 / 0	0 / 0

BEARING MATERIAL TO BE SPF NO.2 OR BETTER AT JOINT(S) L

BRACING

TOP CHORD TO BE SHEATHED OR MAX. PURLIN SPACING = 3.93 FT.
MAX. UNBRACED BOTTOM CHORD LENGTH = 10.00 FT OR RIGID CEILING DIRECTLY APPLIED.

ALL PITCH BREAKS AND PERIMETER CORNER JOINTS MUST BE LATERALLY RESTRAINED.

LOADING

TOTAL LOAD CASES: (4)

CHORDS MEMB. FR-TO	MAX. FACTORED FORCE (LBS)	FACTORED VERT. LOAD (PLF) FROM	TO	LC1 MAX CSI (LC)	MAX. UNBRAC LENGTH	WEBS MEMB. FR-TO	MAX. FACTORED FORCE (LBS)	MAX CSI (LC)
A- B	0 / 28	-77.4	-77.4	0.05 (1)	10.00	K- C	0 / 1522	0.19 (1)
B- C	-5270 / 0	-77.4	-77.4	0.41 (1)	3.93	C- J	0 / 1309	0.16 (1)
C- D	-5167 / 0	-77.4	-77.4	0.15 (1)	4.16	J- D	-225 / 0	0.04 (1)
D- E	-5167 / 0	-77.4	-77.4	0.15 (1)	4.16	J- E	0 / 1268	0.16 (1)
E- F	-5298 / 0	-77.4	-77.4	0.34 (1)	3.96	H- E	0 / 1589	0.20 (1)
L- B	-3997 / 0	0.0	0.0	0.22 (1)	5.92	B- K	0 / 4445	0.55 (1)
G- F	-4240 / 0	0.0	0.0	0.24 (1)	5.77	H- F	0 / 4538	0.56 (1)
L- K	0 / 0	-18.2	-18.2	0.10 (1)	10.00			
K- M	0 / 4415	-18.2	-18.2	0.68 (1)	10.00			
M- N	0 / 4415	-18.2	-18.2	0.68 (1)	10.00			
N- J	0 / 4415	-567.0	-567.0	0.68 (1)	10.00			
J- I	0 / 4438	-567.0	-567.0	0.68 (1)	10.00			
I- H	0 / 4438	-567.0	-567.0	0.68 (1)	10.00			
H- G	0 / 0	-567.0	-567.0	0.47 (1)	10.00			

FACTORED CONCENTRATED LOADS (LBS)

JT	LOC.	LC1	MAX-	MAX+	FACE	DIR.	TYPE
M	6-0-12	-2516	-2516	---	BACK	VERT	TOTAL

DESIGN CRITERIA

*** SPECIAL LOADS ANALYSIS ***
GEOMETRY AND/OR BASIC LOADS CHANGED BY USER.
LOADS WERE DERIVED FROM USER INPUT
NO FURTHER MODIFICATIONS WERE MADE

SPECIFIED LOADS:

TOP	CH.	LL	=	23.3	PSF
		DL	=	3.0	PSF
BOT	CH.	LL	=	0.0	PSF
		DL	=	7.3	PSF
TOTAL	LOAD		=	33.6	PSF

SPACING = 24.0 IN. C/C

LOADING IN FLAT SECTION BASED ON A SLOPE OF 2.00/12 MINIMUM

GIRDER TYPE: CStdGirder
START DISTANCE = 7-0-0
START SPAN CARRIED = 25-5-0
END DISTANCE = 16-6-8
END SPAN CARRIED = 25-5-0
END WALL WIDTH = 5-8
APPLIED TO BACK SIDE OF BOTTOM CHORD.
- ADDT'L LOADS BASED ON 55 % OF GSL. (DEFINED BY USER)

*** NON STANDARD GIRDER ***
ADDT'L USER-DEFINED LOADS APPLIED TO ALL LOAD CASES.

THIS TRUSS IS DESIGNED FOR RESIDENTIAL OR SMALL BUILDING REQUIREMENTS OF PART 9, NBCC 2010

THIS DESIGN COMPLIES WITH:
- PART 9 OF OBC 2012 , BCBC 2012 , ABC 2014
- CSA 086-09
- TPIC 2011

(55 % OF 27.2 P.S.F. G.S.L. PLUS 8.4 P.S.F. RAIN LOAD) EQUALS 23.3 P.S.F. SPECIFIED ROOF LIVE LOAD

ALLOWABLE DEFL.(LL)= L/360 (0.55")
CALCULATED VERT. DEFL.(LL) = L/ 999 (0.07")
ALLOWABLE DEFL.(TL)= L/360 (0.55")
CALCULATED VERT. DEFL.(TL) = L/ 999 (0.12")

CSI: TC=0.41/1.00 (B-C:1) , BC=0.68/1.00 (J-K:1) , WB=0.56/1.00 (F-H:1) , SSI=0.72/1.00 (J-K:1)

DOL LUMBER=1.00 NAIL=1.00 LS BEND=1.00 COMP=1.00 SHEAR=1.00 TENS= 1.00

COMPANION LIVE LOAD FACTOR = 0.50

CONTINUED ON PAGE 2

KOTT

PLATES (table is in inches)

JT	TYPE	PLATES	W	LEN	Y	X
B	TMVW-t	MT20	5.0	6.0	1.75	3.00
C	TTWW-m	MT20	5.0	6.0	2.25	2.00
D	TMW+w	MT20	2.0	4.0		
E	TTWW-m	MT20	5.0	6.0	2.25	2.00
F	TMVW-t	MT20	5.0	6.0	1.75	Edge
G	BMV1+p	MT20	3.0	4.0		
H	BMWW-t	MT20	6.0	6.0	3.25	1.50
I	BS-t	MT20	4.0	5.0		
J	BMWWW-t	MT20	4.0	6.0		
K	BMWW-t	MT20	5.0	5.0	2.25	2.00
L	BMV1+p	MT20	2.0	4.0	2.25	1.00

Edge - INDICATES REFERENCE CORNER OF PLATE TOUCHES EDGE OF CHORD.

HANGERS NOTES

1) SPECIAL HANGER(S) OR CONNECTION(S) REQUIRED TO SUPPORT CONCENTRATED LOAD(S) 2516.5 lbs FACTORED DOWN AT 6-0-12 ON BOTTOM CHORD. DESIGN FOR UNSPECIFIED CONNECTION(S) IS DELEGATED TO THE BUILDING DESIGNER.

TRUSS PLATE MANUFACTURER IS NOT RESPONSIBLE FOR QUALITY CONTROL IN THE TRUSS MANUFACTURING PLANT .

NAIL VALUES

PLATE	GRIP(DRY) (PSI)		SHEAR (PLI)		SECTION (PLI)	
	MAX	MIN	MAX	MIN	MAX	MIN
MT20	618	354	1667	822	2284	1656

PLATE PLACEMENT TOL. = 0.250 inches

PLATE ROTATION TOL. = 5.0 Deg.

JSI GRIP= 0.90 (L) (INPUT = 0.90)
JSI METAL= 0.68 (B) (INPUT = 1.00)

READ ALL NOTES ON THIS PAGE AND ON ENGINEERING NOTE PAGE ENP-1. THIS NOTE PAGE IS AN INTEGRAL PART OF THIS DRAWING AS IT CONTAINS SPECIFICATIONS AND CRITERIA USED IN THE DESIGN OF THIS COMPONENT.

KOTT

JOB NAME	TRUSS NAME	QUANTITY	PLY	JOB DESC.		DRWG NO.
NE0518-227	G05	1	1	TRUSS DESC.	GREEN YORK HOMES - GRANELLI HOME CORP - AMELIA 12 ELE 1	PAGE 11 OF 45

Version 8.210 S Mar 12 2018 MiTek Industries, Inc. Thu May 31 18:08:15 2018 Page 1
ID:JiDzXONJoFa2AxdT?3zOcwzBMzn-3bBe6rwYn4wfjDPJ1v3N?UDouRbJYmfwZVSz7xzAw4k

Scale = 1:42.7

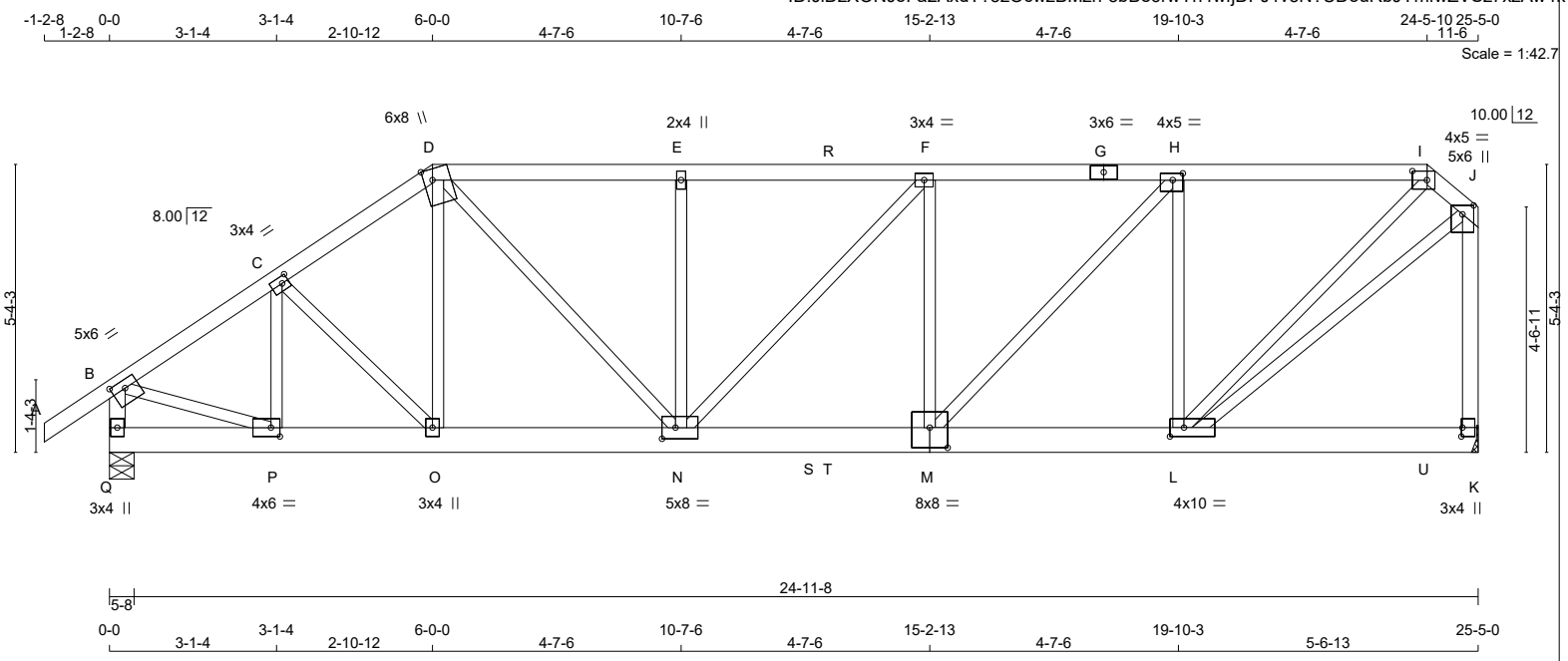

TOTAL WEIGHT = 132 lb

LUMBER

N. L. G. A. RULES

CHORDS	SIZE		LUMBER	DESCR.
A - D	2x4	DRY	No.2	SPF
D - G	2x4	DRY	No.2	SPF
G - I	2x4	DRY	No.2	SPF
I - J	2x4	DRY	No.2	SPF
Q - B	2x4	DRY	No.2	SPF
K - J	2x4	DRY	No.2	SPF
Q - M	2x6	DRY	2100F 1.8E	SPF
M - K	2x6	DRY	No.2	SPF
ALL WEBS EXCEPT	2x3	DRY	No.2	SPF

DRY: SEASONED LUMBER.

PLATES (table is in inches)

JT	TYPE	PLATES	W	LEN	Y	X
B	TMVW-t	MT20	5.0	6.0	1.75	3.00
C	TMWW-t	MT20	3.0	4.0	1.50	1.50
D	TTWW+m	MT20	6.0	8.0	Edge	2.00
E	TMW+w	MT20	2.0	4.0		
F	TMWW-t	MT20	3.0	4.0		
G	TS-t	MT20	3.0	6.0		
H	TMWW-t	MT20	4.0	5.0	1.50	2.25
I	TTW-l	MT20	4.0	5.0	2.00	3.25
J	TMVW+p	MT20	5.0	6.0	2.00	2.50
K	BMV1+p	MT20	3.0	4.0	2.00	0.25
L	BMWWW-t	MT20	4.0	10.0	2.00	3.00
M	BSWW-l	MT20	8.0	8.0	4.50	4.00
N	BMWWW-t	MT20	5.0	8.0	2.50	3.00
O	BMWW+t	MT20	3.0	4.0		
P	BMWW-t	MT20	4.0	6.0	2.00	2.00
Q	BMV1+p	MT20	3.0	4.0		

Edge - INDICATES REFERENCE CORNER OF PLATE TOUCHES EDGE OF CHORD.

HANGERS NOTES

1)

LICENSED PROFESSIONAL ENGINEER
N.A. EL-MASRI
PROVINCE OF ONTARIO
May 31, 2018

READ ALL NOTES ON THIS PAGE AND ON ENGINEERING NOTE PAGE ENP-1. THIS NOTE PAGE IS AN INTEGRAL PART OF THIS DRAWING AS IT CONTAINS SPECIFICATIONS AND CRITERIA USED IN THE DESIGN OF THIS COMPONENT.

DIMENSIONS, SUPPORTS AND LOADINGS SPECIFIED BY FABRICATOR TO BE VERIFIED BY BUILDING DESIGNER

BEARINGS

JT	FACTORED GROSS REACTION VERT	HORZ	MAXIMUM FACTORED GROSS REACTION DOWN	HORZ	UPLIFT	INPUT BRG IN-SX	REQRD BRG IN-SX
Q	2063	0	2063	0	0	5-8	5-8
K	2516	0	2516	0	0	MECHANICAL	

A SUITABLE MECHANICAL CONNECTION IS REQUIRED AT JOINT K TO RESIST THE MAX FACTORED REACTIONS.

UNFACTORED REACTIONS

JT	1ST LCASE COMBINED	MAX./MIN. COMPONENT REACTIONS SNOW	LIVE	PERM.LIVE	WIND	DEAD	SOIL
Q	1447	1016 / 0	0 / 0	0 / 0	0 / 0	431 / 0	0 / 0
K	1768	1225 / 0	0 / 0	0 / 0	0 / 0	544 / 0	0 / 0

BEARING MATERIAL TO BE SPF NO.2 OR BETTER AT JOINT(S) Q

BRACING

TOP CHORD TO BE SHEATHED OR MAX. PURLIN SPACING = 2.92 FT.
MAX. UNBRACED BOTTOM CHORD LENGTH = 10.00 FT OR RIGID CEILING DIRECTLY APPLIED.

ALL PITCH BREAKS AND PERIMETER CORNER JOINTS MUST BE LATERALLY RESTRAINED.

LOADING

TOTAL LOAD CASES: (4)

CHORDS

MEMB. FR-TO	MAX. FACTORED FORCE (LBS)	FACTORED VERT. LOAD (PLF) FROM	TO	LC1 MAX CSI (LC)	MAX. UNBRAC LENGTH
A- B	0 / 28	-77.4	-77.4	0.10 (1)	10.00
B- C	-2231 / 0	-77.4	-77.4	0.18 (1)	4.39
C- D	-2454 / 0	-77.4	-77.4	0.19 (1)	4.21
D- E	-3201 / 0	-77.4	-77.4	0.44 (1)	3.50
E- R	-3201 / 0	-77.4	-77.4	0.49 (1)	3.44
R- F	-3201 / 0	-145.9	-145.9	0.49 (1)	3.44
F- G	-3393 / 0	-145.9	-145.9	0.76 (1)	2.92
G- H	-3393 / 0	-145.9	-145.9	0.76 (1)	2.92
H- I	-2343 / 0	-145.9	-145.9	0.63 (1)	3.66
I- J	-1967 / 0	-77.4	-77.4	0.06 (1)	4.75
Q- B	-2009 / 0	0.0	0.0	0.22 (1)	5.91
K- J	-2426 / 0	0.0	0.0	0.82 (1)	5.43
Q- P	0 / 0	-18.2	-18.2	0.03 (1)	10.00
P- O	0 / 1866	-18.2	-18.2	0.13 (1)	10.00
O- N	0 / 2023	-18.2	-18.2	0.23 (1)	10.00
N- S	0 / 3393	-18.2	-18.2	0.57 (1)	10.00
S- T	0 / 3393	-18.2	-18.2	0.57 (1)	10.00
T- M	0 / 3393	-34.4	-34.4	0.57 (1)	10.00
M- L	0 / 2343	-34.4	-34.4	0.51 (1)	10.00
L- U	0 / 0	-34.4	-34.4	0.12 (4)	10.00
U- K	0 / 0	-34.4	-34.4	0.12 (4)	10.00

WEBS

MEMB. FR-TO	MAX. FACTORED FORCE (LBS)	MAX CSI (LC)
P- C	-555 / 0	0.11 (1)
C- O	0 / 227	0.06 (1)
O- D	-146 / 5	0.06 (1)
D- N	0 / 1728	0.43 (1)
N- E	-399 / 0	0.16 (1)
N- F	-283 / 0	0.24 (1)
M- F	-384 / 0	0.16 (1)
M- H	0 / 1543	0.38 (1)
L- H	-1895 / 0	0.78 (1)
L- I	0 / 1246	0.31 (1)
B- P	0 / 1950	0.48 (1)
L- J	0 / 1861	0.46 (1)

FACTORED CONCENTRATED LOADS (LBS)

JT	LOC.	LC1	MAX-	MAX+	FACE	DIR.	TYPE
I	24-5-10	-55	-55	---	FRONT	VERT	TOTAL
S	13-0-12	-1043	-1043	---	FRONT	VERT	TOTAL

DESIGN CRITERIA

*** SPECIAL LOADS ANALYSIS ***
GEOMETRY AND/OR BASIC LOADS CHANGED BY USER.
LOADS WERE DERIVED FROM USER INPUT
NO FURTHER MODIFICATIONS WERE MADE

SPECIFIED LOADS:

TOP	CH.	LL	=	23.3	PSF
		DL	=	3.0	PSF
BOT	CH.	LL	=	0.0	PSF
		DL	=	7.3	PSF
TOTAL	LOAD		=	33.6	PSF

SPACING = 24.0 IN. C/C

LOADING IN FLAT SECTION BASED ON A SLOPE OF 2.00/12 MINIMUM

GIRDER TYPE: CPrimeHip
LEFT SETBACK = 6-0-0
RIGHT SETBACK = 11-6
END SETBACK = 6-0-0
END WALL WIDTH = 5-8
CORNER FRAMING TYPE: CONVENTIONAL
END JACK TYPE: CONVENTIONAL
APPLIED TO FRONT SIDE
- ADDT'L LOADS BASED ON 55 % OF GSL.
LOADS APPLIED TO FIRST 12-0-0 OF SPAN MEASURED FROM THE RIGHT.

*** NON STANDARD GIRDER ***
ADDT'L USER-DEFINED LOADS APPLIED TO ALL LOAD CASES.

THIS TRUSS IS DESIGNED FOR RESIDENTIAL OR SMALL BUILDING REQUIREMENTS OF PART 9, NBCC 2010

THIS DESIGN COMPLIES WITH:
- PART 9 OF OBC 2012 , BCBC 2012 , ABC 2014
- CSA 086-09
- TPIC 2011

(55 % OF 27.2 P.S.F. G.S.L. PLUS 8.4 P.S.F. RAIN LOAD) EQUALS 23.3 P.S.F. SPECIFIED ROOF LIVE LOAD

ALLOWABLE DEFL.(LL)= L/360 (0.85")
CALCULATED VERT. DEFL.(LL) = L/ 999 (0.14")
ALLOWABLE DEFL.(TL)= L/360 (0.85")
CALCULATED VERT. DEFL.(TL) = L/ 999 (0.25")

CSI: TC=0.82/1.00 (J-K:1) , BC=0.57/1.00 (M-N:1) , WB=0.78/1.00 (H-L:1) , SSI=0.41/1.00 (M-N:1)

DOL LUMBER=1.00 NAIL=1.00 LS BEND=1.00 COMP=1.00 SHEAR=1.00 TENS= 1.00

COMPANION LIVE LOAD FACTOR = 0.50

CONTINUED ON PAGE 2

KOTT

HANGERS NOTES

1) SPECIAL HANGER(S) OR CONNECTION(S) REQUIRED TO SUPPORT CONCENTRATED LOAD(S) 55.0 lbs FACTORED DOWN AT 24-5-10 ON TOP CHORD, AND 1043.3 lbs FACTORED DOWN AT 13-0-12 ON BOTTOM CHORD. DESIGN FOR UNSPECIFIED CONNECTION(S) IS DELEGATED TO THE BUILDING DESIGNER.

TRUSS PLATE MANUFACTURER IS NOT RESPONSIBLE FOR QUALITY CONTROL IN THE TRUSS MANUFACTURING PLANT .

NAIL VALUES

PLATE	GRIP(DRY) (PSI)		SHEAR (PLI)		SECTION (PLI)	
	MAX	MIN	MAX	MIN	MAX	MIN
MT20	618	354	1667	822	2284	1656

PLATE PLACEMENT TOL. = 0.250 inches

PLATE ROTATION TOL. = 5.0 Deg.

JSI GRIP= 0.89 (N) (INPUT = 0.90)
JSI METAL= 0.59 (B) (INPUT = 1.00)

READ ALL NOTES ON THIS PAGE AND ON ENGINEERING NOTE PAGE ENP-1. THIS NOTE PAGE IS AN INTEGRAL PART OF THIS DRAWING AS IT CONTAINS SPECIFICATIONS AND CRITERIA USED IN THE DESIGN OF THIS COMPONENT.

KOTT

JOB NAME	TRUSS NAME	QUANTITY	PLY	JOB DESC.		DRWG NO.
NE0518-227	G06	1	1	TRUSS DESC.	GREEN YORK HOMES - GRANELLI HOME CORP - AMELIA 12 ELE 1	PAGE 13 OF 45

Version 8.210 S Mar 12 2018 MiTek Industries, Inc. Thu May 31 18:08:16 2018 Page 1
ID:JiDzXONJoFa2AxdT?3zOcwzBMzn-Xnl0JBxAYO2WLNzVacacXhm8bq0rHMF3n9BXfNzAw4j

Scale = 1:31.4

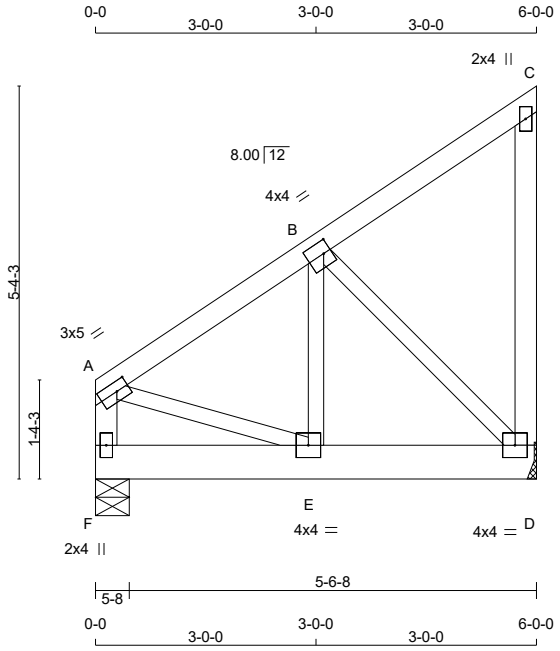

TOTAL WEIGHT = 33 lb

LUMBER
N. L. G. A. RULES

CHORDS	SIZE		LUMBER	DESCR.
A - C	2x4	DRY	No.2	SPF
D - C	2x4	DRY	No.2	SPF
F - A	2x4	DRY	No.2	SPF
F - D	2x6	DRY	No.2	SPF
ALL WEBS EXCEPT	2x3	DRY	No.2	SPF

DRY: SEASONED LUMBER.

PLATES (table is in inches)

JT	TYPE	PLATES	W	LEN	Y	X
A	TMVW-t	MT20	3.0	5.0	1.50	2.00
B	TMWW-t	MT20	4.0	4.0	2.00	1.25
C	TMV+p	MT20	2.0	4.0		
D	BMVW1-t	MT20	4.0	4.0		
E	BMWW-t	MT20	4.0	4.0		
F	BMV1+p	MT20	2.0	4.0		

DIMENSIONS, SUPPORTS AND LOADINGS SPECIFIED BY FABRICATOR TO BE VERIFIED BY BUILDING DESIGNER

BEARINGS

JT	FACTORED GROSS REACTION VERT	HORZ	MAXIMUM FACTORED GROSS REACTION DOWN	HORZ	UPLIFT	INPUT BRG IN-SX	REQRD BRG IN-SX
D	1010	0	1010	0	0	MECHANICAL	
F	1010	0	1010	0	0	5-8	5-8

A SUITABLE MECHANICAL CONNECTION IS REQUIRED AT JOINT D TO RESIST THE MAX FACTORED REACTIONS.

UNFACTORED REACTIONS

JT	1ST LCASE COMBINED	MAX./MIN. COMPONENT REACTIONS SNOW	LIVE	PERM.LIVE	WIND	DEAD	SOIL
D	710	492 / 0	0 / 0	0 / 0	0 / 0	218 / 0	0 / 0
F	710	492 / 0	0 / 0	0 / 0	0 / 0	218 / 0	0 / 0

BEARING MATERIAL TO BE SPF NO.2 OR BETTER AT JOINT(S) F

BRACING
TOP CHORD TO BE SHEATHED OR MAX. PURLIN SPACING = 6.25 FT.
MAX. UNBRACED BOTTOM CHORD LENGTH = 10.00 FT OR RIGID CEILING DIRECTLY APPLIED.

ALL PITCH BREAKS AND PERIMETER CORNER JOINTS MUST BE LATERALLY RESTRAINED.

LOADING
TOTAL LOAD CASES: (4)

CHORDS

MEMB. FR-TO	MAX. FACTORED FORCE (LBS)	FACTORED VERT. LOAD (PLF) FROM	TO	LC1 MAX CSI (LC)	MAX. UNBRAC LENGTH
A- B	-717 / 0	-77.4	-77.4	0.12 (1)	6.25
B- C	-14 / 0	-77.4	-77.4	0.11 (1)	6.25
D- C	-91 / 0	0.0	0.0	0.04 (1)	7.81
F- A	-687 / 0	0.0	0.0	0.08 (1)	7.81
F- E	0 / 0	-259.3	-259.3	0.15 (1)	10.00
E- D	0 / 608	-259.3	-259.3	0.23 (1)	10.00

WEBS

MEMB. FR-TO	MAX. FACTORED FORCE (LBS)	MAX CSI (LC)
E- B	0 / 720	0.18 (1)
B- D	-852 / 0	0.24 (1)
A- E	0 / 637	0.16 (1)

DESIGN CRITERIA

SPECIFIED LOADS:

TOP	CH.	LL	=	23.3	PSF
		DL	=	3.0	PSF
BOT	CH.	LL	=	0.0	PSF
		DL	=	7.3	PSF
TOTAL	LOAD		=	33.6	PSF

SPACING = 24.0 IN. C/C

GIRDER TYPE: CStdGirder
START DISTANCE = 0-0
START SPAN CARRIED = 12-6-8
END DISTANCE = 6-0-0
END SPAN CARRIED = 12-6-8
END WALL WIDTH = 5-8
APPLIED TO FRONT SIDE OF BOTTOM CHORD.
- ADDT'L LOADS BASED ON 55 % OF GSL. (DEFINED BY USER)

THIS TRUSS IS DESIGNED FOR RESIDENTIAL OR SMALL BUILDING REQUIREMENTS OF PART 9, NBCC 2010

THIS DESIGN COMPLIES WITH:
- PART 9 OF OBC 2012 , BCBC 2012 , ABC 2014
- CSA 086-09
- TPIC 2011

(55 % OF 27.2 P.S.F. G.S.L. PLUS 8.4 P.S.F. RAIN LOAD) EQUALS 23.3 P.S.F. SPECIFIED ROOF LIVE LOAD

ALLOWABLE DEFL.(LL)= L/360 (0.20")
CALCULATED VERT. DEFL.(LL) = L/ 999 (0.01")
ALLOWABLE DEFL.(TL)= L/360 (0.20")
CALCULATED VERT. DEFL.(TL) = L/ 999 (0.02")

CSI: TC=0.12/1.00 (A-B:1) , BC=0.23/1.00 (D-E:1) , WB=0.24/1.00 (B-D:1) , SSI=0.30/1.00 (D-E:1)

DOL LUMBER=1.00 NAIL=1.00 LS BEND=1.00 COMP=1.00 SHEAR=1.00 TENS= 1.00

COMPANION LIVE LOAD FACTOR = 0.50

TRUSS PLATE MANUFACTURER IS NOT RESPONSIBLE FOR QUALITY CONTROL IN THE TRUSS MANUFACTURING PLANT .

NAIL VALUES

PLATE	GRIP(DRY) (PSI) MAX	MIN	SHEAR (PLI) MAX	MIN	SECTION (PLI) MAX	MIN
MT20	618	354	1667	822	2284	1656

PLATE PLACEMENT TOL. = 0.250 inches

PLATE ROTATION TOL. = 0.5 Deg.

CONTINUED ON PAGE 2

LICENSED PROFESSIONAL ENGINEER
N.A. EL-MASRI
PROVINCE OF ONTARIO
May 31, 2018

READ ALL NOTES ON THIS PAGE AND ON ENGINEERING NOTE PAGE ENP-1. THIS NOTE PAGE IS AN INTEGRAL PART OF THIS DRAWING AS IT CONTAINS SPECIFICATIONS AND CRITERIA USED IN THE DESIGN OF THIS COMPONENT.

KOTT

JSI GRIP= 0.87 (A) (INPUT = 0.90)
JSI METAL= 0.23 (A) (INPUT = 1.00)

READ ALL NOTES ON THIS PAGE AND ON ENGINEERING NOTE PAGE ENP-1. THIS NOTE PAGE IS AN INTEGRAL PART OF THIS DRAWING AS IT CONTAINS SPECIFICATIONS AND CRITERIA USED IN THE DESIGN OF THIS COMPONENT.

KOTT

JOB NAME	TRUSS NAME	QUANTITY	PLY	JOB DESC.		DRWG NO.
NE0518-227	G07	1	1	TRUSS DESC.	GREEN YORK HOMES - GRANELLI HOME CORP - AMELIA 12 ELE 1	PAGE 15 OF 45

Version 8.210 S Mar 12 2018 MiTek Industries, Inc. Thu May 31 18:08:16 2018 Page 1
ID:JiDzXONJoFa2AxdT?3zOcwzBMzn-Xnl0JBxAYO2WLNzVacacXhm8cq0iHM73n9BXfNzAw4j

Scale = 1:31.4

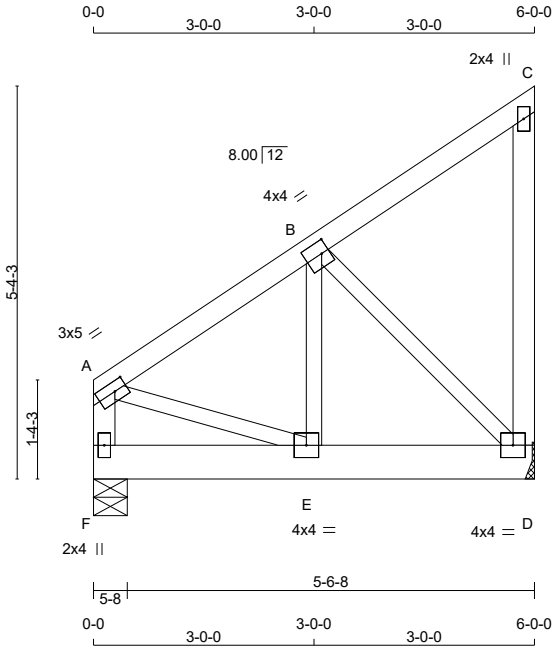

TOTAL WEIGHT = 33 lb

LUMBER
N. L. G. A. RULES

CHORDS	SIZE		LUMBER	DESCR.
A - C	2x4	DRY	No.2	SPF
D - C	2x4	DRY	No.2	SPF
F - A	2x4	DRY	No.2	SPF
F - D	2x6	DRY	No.2	SPF
ALL WEBS EXCEPT	2x3	DRY	No.2	SPF

DRY: SEASONED LUMBER.

PLATES (table is in inches)

JT	TYPE	PLATES	W	LEN	Y	X
A	TMVW-t	MT20	3.0	5.0	1.50	2.00
B	TMWW-t	MT20	4.0	4.0	2.00	1.25
C	TMV+p	MT20	2.0	4.0		
D	BMVW1-t	MT20	4.0	4.0		
E	BMWW-t	MT20	4.0	4.0		
F	BMV1+p	MT20	2.0	4.0		

DIMENSIONS, SUPPORTS AND LOADINGS SPECIFIED BY FABRICATOR TO BE VERIFIED BY BUILDING DESIGNER

BEARINGS

JT	FACTORED GROSS REACTION VERT	HORZ	MAXIMUM FACTORED GROSS REACTION DOWN	HORZ	UPLIFT	INPUT BRG IN-SX	REQRD BRG IN-SX
D	1043	0	1043	0	0	MECHANICAL	
F	1043	0	1043	0	0	5-8	5-8

A SUITABLE MECHANICAL CONNECTION IS REQUIRED AT JOINT D TO RESIST THE MAX FACTORED REACTIONS.

UNFACTORED REACTIONS

JT	1ST LCASE COMBINED	MAX./MIN. COMPONENT REACTIONS SNOW	LIVE	PERM.LIVE	WIND	DEAD	SOIL
D	733	508 / 0	0 / 0	0 / 0	0 / 0	225 / 0	0 / 0
F	733	508 / 0	0 / 0	0 / 0	0 / 0	225 / 0	0 / 0

BEARING MATERIAL TO BE SPF NO.2 OR BETTER AT JOINT(S) F

BRACING
TOP CHORD TO BE SHEATHED OR MAX. PURLIN SPACING = 6.25 FT.
MAX. UNBRACED BOTTOM CHORD LENGTH = 10.00 FT OR RIGID CEILING DIRECTLY APPLIED.

ALL PITCH BREAKS AND PERIMETER CORNER JOINTS MUST BE LATERALLY RESTRAINED.

LOADING
TOTAL LOAD CASES: (4)

CHORDS

MEMB. FR-TO	MAX. FACTORED FORCE (LBS)	FACTORED VERT. LOAD (PLF) FROM	TO	LC1 MAX CSI (LC)	MAX. UNBRAC LENGTH
A- B	-741 / 0	-77.4	-77.4	0.12 (1)	6.25
B- C	-14 / 0	-77.4	-77.4	0.11 (1)	6.25
D- C	-91 / 0	0.0	0.0	0.04 (1)	7.81
F- A	-707 / 0	0.0	0.0	0.08 (1)	7.81
F- E	0 / 0	-270.2	-270.2	0.15 (1)	10.00
E- D	0 / 628	-270.2	-270.2	0.24 (1)	10.00

WEBS

MEMB. FR-TO	MAX. FACTORED FORCE (LBS)	MAX CSI (LC)
E- B	0 / 752	0.19 (1)
B- D	-880 / 0	0.25 (1)
A- E	0 / 658	0.16 (1)

DESIGN CRITERIA

SPECIFIED LOADS:

TOP	CH.	LL	=	23.3	PSF
		DL	=	3.0	PSF
BOT	CH.	LL	=	0.0	PSF
		DL	=	7.3	PSF
TOTAL	LOAD		=	33.6	PSF

SPACING = 24.0 IN. C/C

GIRDER TYPE: CStdGirder
START DISTANCE = 0-0
START SPAN CARRIED = 13-0-0
END DISTANCE = 6-0-0
END SPAN CARRIED = 13-0-0
END WALL WIDTH = 5-8
APPLIED TO FRONT SIDE OF BOTTOM CHORD.
- ADDT'L LOADS BASED ON 55 % OF GSL. (DEFINED BY USER)

THIS TRUSS IS DESIGNED FOR RESIDENTIAL OR SMALL BUILDING REQUIREMENTS OF PART 9, NBCC 2010

THIS DESIGN COMPLIES WITH:
- PART 9 OF OBC 2012 , BCBC 2012 , ABC 2014
- CSA 086-09
- TPIC 2011

(55 % OF 27.2 P.S.F. G.S.L. PLUS 8.4 P.S.F. RAIN LOAD) EQUALS 23.3 P.S.F. SPECIFIED ROOF LIVE LOAD

ALLOWABLE DEFL.(LL)= L/360 (0.20")
CALCULATED VERT. DEFL.(LL) = L/ 999 (0.01")
ALLOWABLE DEFL.(TL)= L/360 (0.20")
CALCULATED VERT. DEFL.(TL) = L/ 999 (0.02")

CSI: TC=0.12/1.00 (A-B:1) , BC=0.24/1.00 (D-E:1) , WB=0.25/1.00 (B-D:1) , SSI=0.31/1.00 (D-E:1)

DOL LUMBER=1.00 NAIL=1.00 LS BEND=1.00 COMP=1.00 SHEAR=1.00 TENS= 1.00

COMPANION LIVE LOAD FACTOR = 0.50

TRUSS PLATE MANUFACTURER IS NOT RESPONSIBLE FOR QUALITY CONTROL IN THE TRUSS MANUFACTURING PLANT .

NAIL VALUES

PLATE	GRIP(DRY) (PSI) MAX	MIN	SHEAR (PLI) MAX	MIN	SECTION (PLI) MAX	MIN
MT20	618	354	1667	822	2284	1656

PLATE PLACEMENT TOL. = 0.250 inches

PLATE ROTATION TOL. = 0.5 Deg.

CONTINUED ON PAGE 2

LICENSED PROFESSIONAL ENGINEER
N.A. EL-MASRI
PROVINCE OF ONTARIO
May 31, 2018

READ ALL NOTES ON THIS PAGE AND ON ENGINEERING NOTE PAGE ENP-1. THIS NOTE PAGE IS AN INTEGRAL PART OF THIS DRAWING AS IT CONTAINS SPECIFICATIONS AND CRITERIA USED IN THE DESIGN OF THIS COMPONENT.

KOTT

JSI GRIP= 0.90 (E) (INPUT = 0.90)
JSI METAL= 0.24 (A) (INPUT = 1.00)

READ ALL NOTES ON THIS PAGE AND ON ENGINEERING NOTE PAGE ENP-1. THIS NOTE PAGE IS AN INTEGRAL PART OF THIS DRAWING AS IT CONTAINS SPECIFICATIONS AND CRITERIA USED IN THE DESIGN OF THIS COMPONENT.

KOTT

JOB NAME	TRUSS NAME	QUANTITY	PLY	JOB DESC.		DRWG NO.
NE0518-227	GE01	1	1	TRUSS DESC.	GREEN YORK HOMES - GRANELLI HOME CORP - AMELIA 12 ELE 1	PAGE 17 OF 45

Version 8.210 S Mar 12 2018 MiTek Industries, Inc. Thu May 31 18:08:17 2018 Page 1
ID:JiDzXONJoFa2AxdT?3zOcwzBMzn-?zJOXXyoJhANzXYh8K5r4vIJqEPD0sKC0px4BqzAw4i

Scale = 1:31.3

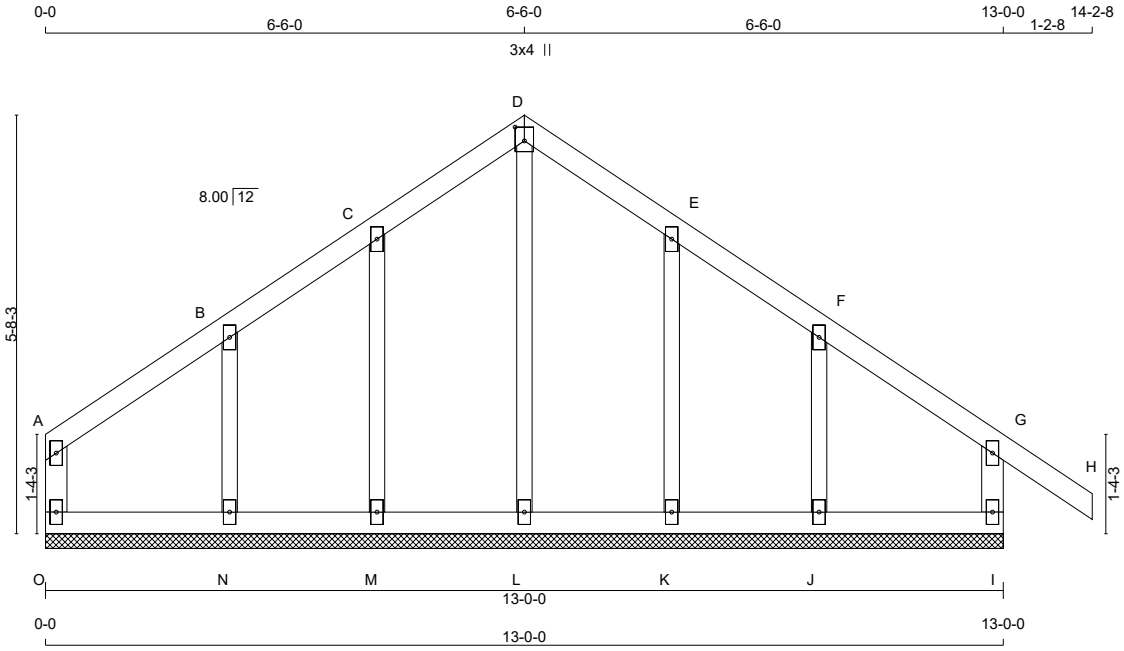

TOTAL WEIGHT = 51 lb [M]

LUMBER
N. L. G. A. RULES

CHORDS	SIZE		LUMBER	DESCR.
O - A	2x4	DRY	No.2	SPF
A - D	2x4	DRY	No.2	SPF
D - H	2x4	DRY	No.2	SPF
I - G	2x4	DRY	No.2	SPF
O - I	2x4	DRY	No.2	SPF
ALL WEBS	2x3	DRY	No.2	SPF
ALL GABLE WEBS	2x3	DRY	No.2	SPF

DRY: SEASONED LUMBER.

GABLE STUDS SPACED AT 2-0-0 OC.

PLATES (table is in inches)

JT	TYPE	PLATES	W	LEN	Y	X
A	TMV+p	MT20	2.0	4.0		
B, C, E, F						
B	TMW+w	MT20	2.0	4.0		
D	TTW+p	MT20	3.0	4.0	2.25	1.50
G	TMV+p	MT20	2.0	4.0		
I	BMV1+p	MT20	2.0	4.0		
J, K, L, M, N						
J	BMW1+w	MT20	2.0	4.0		
O	BMV1+p	MT20	2.0	4.0		

DIMENSIONS, SUPPORTS AND LOADINGS SPECIFIED BY FABRICATOR TO BE VERIFIED BY BUILDING DESIGNER

BEARINGS

THIS TRUSS DESIGNED FOR CONTINUOUS BEARINGS.

THIS TRUSS REQUIRES RIGID SHEATHING ON EXPOSED FACE.

BEARING MATERIAL TO BE SPF NO.2 OR BETTER AT JOINT(S)

BRACING
TOP CHORD TO BE SHEATHED OR MAX. PURLIN SPACING = 6.25 FT.
MAX. UNBRACED BOTTOM CHORD LENGTH = 10.00 FT OR RIGID CEILING DIRECTLY APPLIED.

ALL PITCH BREAKS AND PERIMETER CORNER JOINTS MUST BE LATERALLY RESTRAINED.

LOADING
TOTAL LOAD CASES: (4)

CHORDS

MEMB. FR-TO	MAX. FORCE (LBS)	FACTORED VERT. LOAD (PLF) FROM	TO	LC1	MAX CSI (LC)	MAX. UNBRAC LENGTH
O- A	-113 / 0	0.0	0.0		0.04 (1)	7.81
A- B	-39 / 0	-77.4	-77.4		0.05 (1)	6.25
B- C	-37 / 0	-77.4	-77.4		0.05 (1)	6.25
C- D	-30 / 0	-77.4	-77.4		0.04 (1)	6.25
D- E	-30 / 0	-77.4	-77.4		0.04 (1)	6.25
E- F	-36 / 0	-77.4	-77.4		0.04 (1)	6.25
F- G	-43 / 0	-77.4	-77.4		0.06 (1)	6.25
G- H	0 / 28	-77.4	-77.4		0.09 (1)	10.00
I- G	-220 / 0	0.0	0.0		0.03 (1)	7.81
O- N	0 / 34	-18.2	-18.2		0.02 (4)	10.00
N- M	0 / 29	-18.2	-18.2		0.02 (4)	10.00
M- L	0 / 26	-18.2	-18.2		0.02 (4)	10.00
L- K	0 / 26	-18.2	-18.2		0.02 (4)	10.00
K- J	0 / 29	-18.2	-18.2		0.02 (4)	10.00
J- I	0 / 34	-18.2	-18.2		0.03 (1)	10.00

WEBS

MEMB. FR-TO	MAX. FORCE (LBS)	MAX CSI (LC)
L- D	-131 / 0	0.06 (1)
M- C	-148 / 0	0.04 (1)
N- B	-176 / 0	0.03 (1)
K- E	-151 / 0	0.04 (1)
J- F	-166 / 0	0.03 (1)

DESIGN CRITERIA

SPECIFIED LOADS:

TOP	CH.	LL	=	23.3	PSF
		DL	=	3.0	PSF
BOT	CH.	LL	=	0.0	PSF
		DL	=	7.3	PSF
TOTAL	LOAD		=	33.6	PSF

SPACING = 24.0 IN. C/C

THIS TRUSS IS DESIGNED FOR RESIDENTIAL OR SMALL BUILDING REQUIREMENTS OF PART 9, NBCC 2010

THIS DESIGN COMPLIES WITH:
- PART 9 OF OBC 2012 , BCBC 2012 , ABC 2014
- CSA 086-09
- TPIC 2011

DESIGN ASSUMPTIONS
-OVERHANG NOT TO BE ALTERED OR CUT OFF.

(55 % OF 27.2 P.S.F. G.S.L. PLUS 8.4 P.S.F. RAIN LOAD) EQUALS 23.3 P.S.F. SPECIFIED ROOF LIVE LOAD

CSI: TC=0.09/1.00 (G-H:1) , BC=0.03/1.00 (I-J:1) , WB=0.06/1.00 (D-L:1) , SSI=0.06/1.00 (G-H:1)

DOL LUMBER=1.00 NAIL=1.00 LS BEND=1.10 COMP=1.10 SHEAR=1.10 TENS= 1.10

COMPANION LIVE LOAD FACTOR = 0.50

TRUSS PLATE MANUFACTURER IS NOT RESPONSIBLE FOR QUALITY CONTROL IN THE TRUSS MANUFACTURING PLANT .

NAIL VALUES

PLATE	GRIP(DRY) (PSI) MAX	MIN	SHEAR (PLI) MAX	MIN	SECTION (PLI) MAX	MIN
MT20	618	354	1667	822	2284	1656

PLATE PLACEMENT TOL. = 0.250 inches

PLATE ROTATION TOL. = 5.0 Deg.

JSI GRIP= 0.17 (A) (INPUT = 0.90)
JSI METAL= 0.07 (A) (INPUT = 1.00)

LICENSED PROFESSIONAL ENGINEER
N.A. EL-MASRI
PROVINCE OF ONTARIO
May 31, 2018

READ ALL NOTES ON THIS PAGE AND ON ENGINEERING NOTE PAGE ENP-1. THIS NOTE PAGE IS AN INTEGRAL PART OF THIS DRAWING AS IT CONTAINS SPECIFICATIONS AND CRITERIA USED IN THE DESIGN OF THIS COMPONENT.

KOTT

JOB NAME	TRUSS NAME	QUANTITY	PLY	JOB DESC.		DRWG NO.
NE0518-227	J01	9	1	TRUSS DESC.	GREEN YORK HOMES - GRANELLI HOME CORP - AMELIA 12 ELE 1	PAGE 18 OF 45

Version 8.210 S Mar 12 2018 MiTek Industries, Inc. Thu May 31 18:08:18 2018 Page 1
ID:JiDzXONJoFa2AxdT?3zOcwzBMzn-TAtmktzR4?IEag7ui1c4d6rQJejlIJYMFTgdkGzAw4h

Scale = 1:30.6

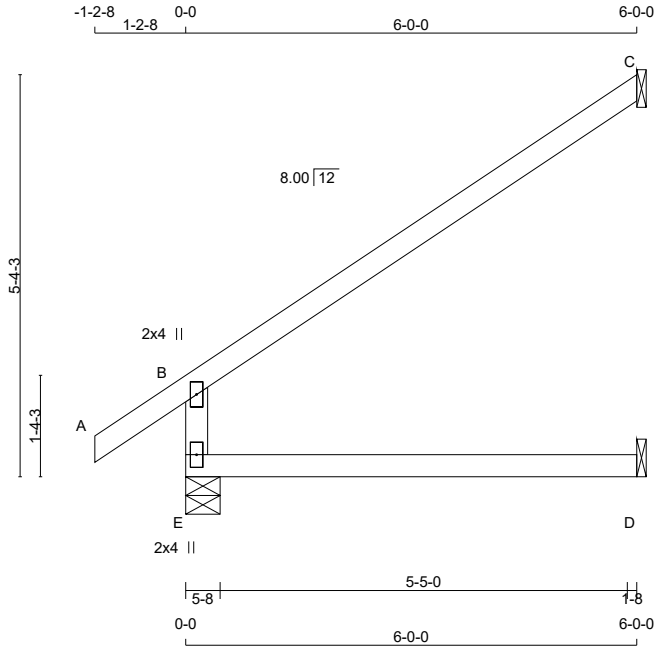

TOTAL WEIGHT = 9 X 18 = 162 lb

[M][F]

LUMBER
N. L. G. A. RULES

CHORDS	SIZE		LUMBER	DESCR.
E - B	2x4	DRY	No.2	SPF
A - C	2x4	DRY	No.2	SPF
E - D	2x4	DRY	No.2	SPF

DRY: SEASONED LUMBER.

PLATES (table is in inches)

JT	TYPE	PLATES	W	LEN Y	X
B	TMV+p	MT20	2.0	4.0	
E	BMV1+p	MT20	2.0	4.0	

DIMENSIONS, SUPPORTS AND LOADINGS SPECIFIED BY FABRICATOR TO BE VERIFIED BY BUILDING DESIGNER

BEARINGS

JT	FACTORED GROSS REACTION VERT	HORZ	MAXIMUM FACTORED GROSS REACTION DOWN	HORZ	UPLIFT	INPUT BRG IN-SX	REQRD BRG IN-SX
E	454	0	454	0	0	5-8	5-8
C	174	0	174	0	0	1-8	1-8
D	46	0	51	0	0	1-8	1-8

SEE MITEK STANDARD DETAIL B37579H FOR CONNECTION TO JOINT(S) C , D

UNFACTORED REACTIONS

JT	1ST LCASE COMBINED	MAX./MIN. COMPONENT REACTIONS SNOW	LIVE	PERM.LIVE	WIND	DEAD	SOIL
E	316	235 / 0	0 / 0	0 / 0	0 / 0	81 / 0	0 / 0
C	118	105 / 0	0 / 0	0 / 0	0 / 0	14 / 0	0 / 0
D	37	0 / 0	0 / 0	0 / 0	0 / 0	37 / 0	0 / 0

BEARING MATERIAL TO BE SPF NO.2 OR BETTER AT JOINT(S) E, C

BRACING
TOP CHORD TO BE SHEATHED OR MAX. PURLIN SPACING = 6.25 FT.
MAX. UNBRACED BOTTOM CHORD LENGTH = 10.00 FT OR RIGID CEILING DIRECTLY APPLIED.

ALL PITCH BREAKS AND PERIMETER CORNER JOINTS MUST BE LATERALLY RESTRAINED.

LOADING
TOTAL LOAD CASES: (4)

CHORDS MEMB. FR-TO	MAX. FACTORED FORCE (LBS)	FACTORED VERT. LOAD (PLF) FROM	TO	LC1 MAX CSI (LC)	MAX. UNBRAC LENGTH	WEBS MEMB. FR-TO	MAX. FACTORED FORCE (LBS)	MAX CSI (LC)
E- B	-390 / 0	0.0	0.0	0.11 (4)	7.81			
A- B	0 / 28	-77.4	-77.4	0.09 (1)	10.00			
B- C	-32 / 0	-77.4	-77.4	0.36 (1)	6.25			
E- D	0 / 0	-18.2	-18.2	0.13 (4)	10.00			

DESIGN CRITERIA

SPECIFIED LOADS:

TOP	CH.	LL	=	23.3	PSF
		DL	=	3.0	PSF
BOT	CH.	LL	=	0.0	PSF
		DL	=	7.3	PSF
TOTAL	LOAD		=	33.6	PSF

SPACING = 24.0 IN. C/C

THIS TRUSS IS DESIGNED FOR RESIDENTIAL OR SMALL BUILDING REQUIREMENTS OF PART 9, NBCC 2010

THIS DESIGN COMPLIES WITH:
- PART 9 OF OBC 2012 , BCBC 2012 , ABC 2014
- CSA 086-09
- TPIC 2011

DESIGN ASSUMPTIONS
-OVERHANG NOT TO BE ALTERED OR CUT OFF.

(55 % OF 27.2 P.S.F. G.S.L. PLUS 8.4 P.S.F. RAIN LOAD) EQUALS 23.3 P.S.F. SPECIFIED ROOF LIVE LOAD

ALLOWABLE DEFL.(LL)= L/360 (0.20")
CALCULATED VERT. DEFL.(LL) = L/ 999 (0.00")
ALLOWABLE DEFL.(TL)= L/360 (0.20")
CALCULATED VERT. DEFL.(TL) = L/ 999 (0.04")

CSI: TC=0.36/1.00 (B-C:1) , BC=0.13/1.00 (D-E:4) , WB=0.00/1.00 (n/a:0) , SSI=0.19/1.00 (B-C:1)

DOL LUMBER=1.00 NAIL=1.00 LS BEND=1.10 COMP=1.10 SHEAR=1.10 TENS= 1.10

COMPANION LIVE LOAD FACTOR = 0.50

AUTOSOLVE RIGHT HEEL ONLY

TRUSS PLATE MANUFACTURER IS NOT RESPONSIBLE FOR QUALITY CONTROL IN THE TRUSS MANUFACTURING PLANT .

NAIL VALUES

PLATE	GRIP(DRY) (PSI) MAX	MIN	SHEAR (PLI) MAX	MIN	SECTION (PLI) MAX	MIN
MT20	618	354	1667	822	2284	1656

PLATE PLACEMENT TOL. = 0.250 inches

PLATE ROTATION TOL. = 5.0 Deg.

JSI GRIP= 0.25 (B) (INPUT = 0.90)
JSI METAL= 0.10 (B) (INPUT = 1.00)

LICENSED PROFESSIONAL ENGINEER
N.A. EL-MASRI
PROVINCE OF ONTARIO
May 31, 2018

READ ALL NOTES ON THIS PAGE AND ON ENGINEERING NOTE PAGE ENP-1. THIS NOTE PAGE IS AN INTEGRAL PART OF THIS DRAWING AS IT CONTAINS SPECIFICATIONS AND CRITERIA USED IN THE DESIGN OF THIS COMPONENT.

KOTT

JOB NAME	TRUSS NAME	QUANTITY	PLY	JOB DESC.	DRWG NO.
NE0518-227	T01	1	1	GREEN YORK HOMES - GRANELLI HOME CORP - AMELIA 12 ELE 1 TRUSS DESC.	PAGE 19 OF 45

Version 8.210 S Mar 12 2018 MiTek Industries, Inc. Thu May 31 18:08:19 2018 Page 1
ID:JiDzXONJoFa2AxdT?3zOcwzBMzn-yMR8yDz3qJQ5Cqi4Gl7J9KNax2_eUcjVU7QBGizAw4g

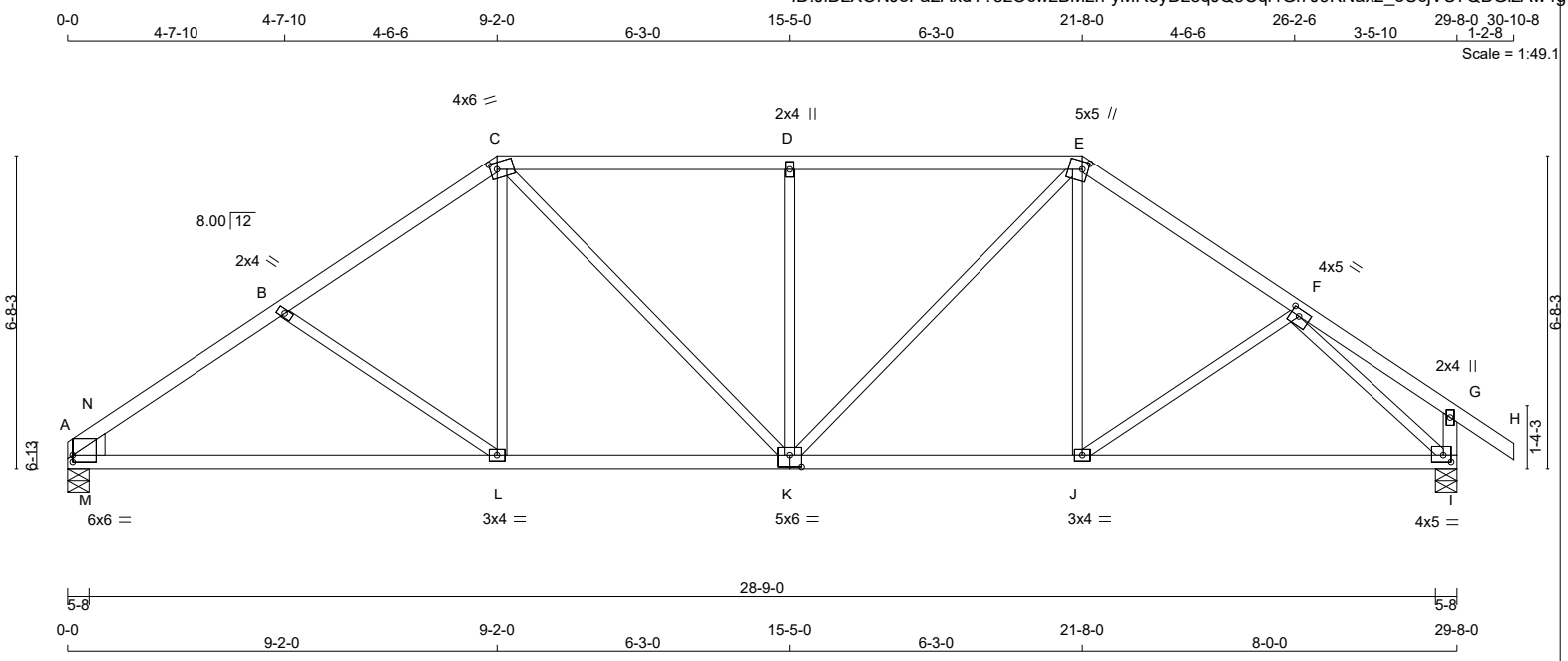

TOTAL WEIGHT = 117 lb

[M][F]

LUMBER

N. L. G. A. RULES

CHORDS	SIZE		LUMBER	DESCR.
A - C	2x4	DRY	No.2	SPF
C - E	2x4	DRY	No.2	SPF
E - H	2x4	DRY	No.2	SPF
I - G	2x4	DRY	No.2	SPF
A - K	2x4	DRY	No.2	SPF
K - I	2x4	DRY	No.2	SPF
ALL WEBS EXCEPT	2x3	DRY	No.2	SPF

DRY: SEASONED LUMBER.

PLATES (table is in inches)

JT	TYPE	PLATES	W	LEN	Y	X
A	TMBH1-I	MT20	6.0	6.0	1.75	
B	TMW+w	MT20	2.0	4.0		
C	TTWW-m	MT20	4.0	6.0	1.75	1.75
D	TMW+w	MT20	2.0	4.0		
E	TTWW+m	MT20	5.0	5.0	2.00	1.50
F	TMWW-t	MT20	4.0	5.0	1.75	2.25
G	TMV+p	MT20	2.0	4.0		
I	BMVW1-t	MT20	4.0	5.0	1.75	2.00
J	BMWW-t	MT20	3.0	4.0		
K	BSWWW-l	MT20	5.0	6.0	3.00	3.00
L	BMWW-t	MT20	3.0	4.0		

DIMENSIONS, SUPPORTS AND LOADINGS SPECIFIED BY FABRICATOR TO BE VERIFIED BY BUILDING DESIGNER

BEARINGS

JT	FACTORED GROSS REACTION VERT	HORZ	MAXIMUM FACTORED GROSS REACTION DOWN	HORZ	UPLIFT	INPUT BRG IN-SX	REQRD BRG IN-SX	HEEL WEDGE
A	1418	0	1418	0	0	5-8	5-8	2x6 L
I	1518	0	1518	0	0	5-8	5-8	

UNFACTORED REACTIONS

JT	1ST LCASE COMBINED	MAX./MIN. COMPONENT REACTIONS SNOW	LIVE	PERM.LIVE	WIND	DEAD	SOIL
A	996	691 / 0	0 / 0	0 / 0	0 / 0	306 / 0	0 / 0
I	1064	751 / 0	0 / 0	0 / 0	0 / 0	313 / 0	0 / 0

BEARING MATERIAL TO BE SPF NO.2 OR BETTER AT JOINT(S) A, I

BRACING

TOP CHORD TO BE SHEATHED OR MAX. PURLIN SPACING = 4.22 FT.
MAX. UNBRACED BOTTOM CHORD LENGTH = 10.00 FT OR RIGID CEILING DIRECTLY APPLIED.

ALL PITCH BREAKS AND PERIMETER CORNER JOINTS MUST BE LATERALLY RESTRAINED.

LOADING

TOTAL LOAD CASES: (4)

CHORDS MEMB. FR-TO	MAX. FACTORED FORCE (LBS)	FACTORED VERT. LOAD (PLF) FROM	TO	LC1 CSI (LC)	MAX UNBRAC LENGTH	WEBS MEMB. FR-TO	MAX. FACTORED FORCE (LBS)	MAX CSI (LC)
A- N	-2429 / 0	-77.4	-77.4	0.22 (1)	4.22	B- L	-324 / 0	0.19 (1)
N- B	-2028 / 0	-77.4	-77.4	0.22 (1)	4.57	L- C	0 / 322	0.07 (1)
B- C	-1721 / 0	-77.4	-77.4	0.24 (1)	4.86	C- K	0 / 404	0.09 (1)
C- D	-1706 / 0	-77.4	-77.4	0.44 (1)	4.62	K- D	-592 / 0	0.44 (1)
D- E	-1706 / 0	-77.4	-77.4	0.44 (1)	4.62	K- E	0 / 554	0.12 (1)
E- F	-1601 / 0	-77.4	-77.4	0.23 (1)	5.01	J- E	0 / 151	0.05 (4)
F- G	0 / 24	-77.4	-77.4	0.20 (1)	10.00	J- F	0 / 62	0.02 (4)
G- H	0 / 28	-77.4	-77.4	0.09 (1)	10.00	F- I	-1823 / 0	0.65 (1)
I- G	-187 / 0	0.0	0.0	0.02 (1)	7.81	M- N	0 / 460	0.00 (1)
A- M	0 / 1684	-18.2	-18.2	0.48 (1)	10.00			
M- L	0 / 1684	-18.2	-18.2	0.48 (1)	10.00			
L- K	0 / 1423	-18.2	-18.2	0.35 (4)	10.00			
K- J	0 / 1318	-18.2	-18.2	0.37 (4)	10.00			
J- I	0 / 1308	-18.2	-18.2	0.36 (1)	10.00			

DESIGN CRITERIA

SPECIFIED LOADS:

TOP	CH.	LL	=	23.3	PSF
		DL	=	3.0	PSF
BOT	CH.	LL	=	0.0	PSF
		DL	=	7.3	PSF
TOTAL	LOAD		=	33.6	PSF

SPACING = 24.0 IN. C/C

LOADING IN FLAT SECTION BASED ON A SLOPE OF 2.00/12 MINIMUM

THIS TRUSS IS DESIGNED FOR RESIDENTIAL OR SMALL BUILDING REQUIREMENTS OF PART 9, NBCC 2010

THIS DESIGN COMPLIES WITH:
- PART 9 OF OBC 2012 , BCBC 2012 , ABC 2014
- CSA 086-09
- TPIC 2011

(55 % OF 27.2 P.S.F. G.S.L. PLUS 8.4 P.S.F. RAIN LOAD) EQUALS 23.3 P.S.F. SPECIFIED ROOF LIVE LOAD

ALLOWABLE DEFL.(LL)= L/360 (0.99")
CALCULATED VERT. DEFL.(LL) = L/ 999 (0.09")
ALLOWABLE DEFL.(TL)= L/360 (0.99")
CALCULATED VERT. DEFL.(TL) = L/ 999 (0.16")

CSI: TC=0.44/1.00 (C-D:1) , BC=0.48/1.00 (A-M:1) , WB=0.65/1.00 (F-I:1) , SSI=0.33/1.00 (A-M:4)

DOL LUMBER=1.00 NAIL=1.00 LS BEND=1.10 COMP=1.10 SHEAR=1.10 TENS= 1.10

COMPANION LIVE LOAD FACTOR = 0.50

TRUSS PLATE MANUFACTURER IS NOT RESPONSIBLE FOR QUALITY CONTROL IN THE TRUSS MANUFACTURING PLANT .

NAIL VALUES

PLATE	GRIP(DRY) (PSI) MAX	MIN	SHEAR (PLI) MAX	MIN	SECTION (PLI) MAX	MIN
MT20	618	354	1667	822	2284	1656

PLATE PLACEMENT TOL. = 0.250 inches

PLATE ROTATION TOL. = 5.0 Deg.

JSI GRIP= 0.89 (E) (INPUT = 0.90)
JSI METAL= 0.54 (F) (INPUT = 1.00)

LICENSED PROFESSIONAL ENGINEER
N.A. EL-MASRI
PROVINCE OF ONTARIO
May 31, 2018

READ ALL NOTES ON THIS PAGE AND ON ENGINEERING NOTE PAGE ENP-1. THIS NOTE PAGE IS AN INTEGRAL PART OF THIS DRAWING AS IT CONTAINS SPECIFICATIONS AND CRITERIA USED IN THE DESIGN OF THIS COMPONENT.

KOTT

JOB NAME	TRUSS NAME	QUANTITY	PLY	JOB DESC.		DRWG NO.
NE0518-227	T02	1	1	TRUSS DESC.	GREEN YORK HOMES - GRANELLI HOME CORP - AMELIA 12 ELE 1	PAGE 20 OF 45

Version 8.210 S Mar 12 2018 MiTek Industries, Inc. Thu May 31 18:08:19 2018 Page 1
ID:JiDzXONJoFa2AxdT?3zOcwzBMzn-yMR8yDz3qJQ5Cqi4GI7J9KNbj2?ZUgGVU7QBGizAw4g

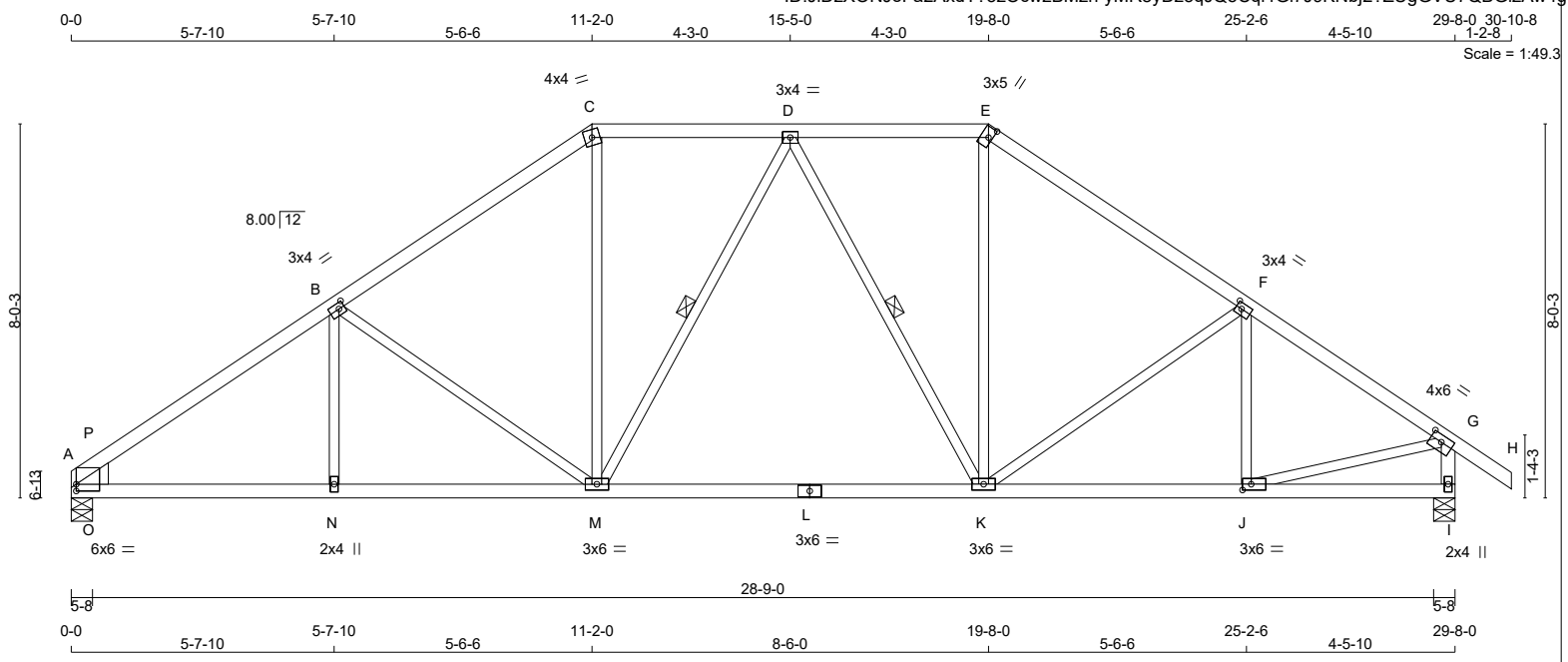

TOTAL WEIGHT = 123 lb

LUMBER
N. L. G. A. RULES

CHORDS	SIZE		LUMBER	DESCR.
A - C	2x4	DRY	No.2	SPF
C - E	2x4	DRY	No.2	SPF
E - H	2x4	DRY	No.2	SPF
I - G	2x4	DRY	No.2	SPF
A - L	2x4	DRY	No.2	SPF
L - I	2x4	DRY	No.2	SPF
ALL WEBS EXCEPT	2x3	DRY	No.2	SPF

DRY: SEASONED LUMBER.

PLATES (table is in inches)

JT	TYPE	PLATES	W	LEN	Y	X
A	TMBH1-l	MT20	6.0	6.0	1.75	
B	TMWW-t	MT20	3.0	4.0	1.50	1.50
C	TTW-m	MT20	4.0	4.0		
D	TMWW-t	MT20	3.0	4.0		
E	TTW+h	MT20	3.0	5.0	2.50	1.00
F	TMWW-t	MT20	3.0	4.0	1.50	1.50
G	TMVW-t	MT20	4.0	6.0	1.75	3.00
I	BMV1+p	MT20	2.0	4.0		
J	BMWW-t	MT20	3.0	6.0	1.50	2.25
K	BMWWW-t	MT20	3.0	6.0		
L	BS-t	MT20	3.0	6.0		
M	BMWWW-t	MT20	3.0	6.0		
N	BMW+w	MT20	2.0	4.0		

DIMENSIONS, SUPPORTS AND LOADINGS SPECIFIED BY FABRICATOR TO BE VERIFIED BY BUILDING DESIGNER

BEARINGS

JT	FACTORED GROSS REACTION VERT	HORZ	MAXIMUM FACTORED GROSS REACTION DOWN	HORZ	UPLIFT	INPUT BRG IN-SX	REQRD BRG IN-SX	HEEL WEDGE
A	1418	0	1418	0	0	5-8	5-8	2x6 L
I	1518	0	1518	0	0	5-8	5-8	

UNFACTORED REACTIONS

JT	1ST LCASE COMBINED	MAX./MIN. COMPONENT REACTIONS SNOW	LIVE	PERM.LIVE	WIND	DEAD	SOIL
A	996	691 / 0	0 / 0	0 / 0	0 / 0	306 / 0	0 / 0
I	1064	751 / 0	0 / 0	0 / 0	0 / 0	313 / 0	0 / 0

BEARING MATERIAL TO BE SPF NO.2 OR BETTER AT JOINT(S) A, I

BRACING
TOP CHORD TO BE SHEATHED OR MAX. PURLIN SPACING = 4.25 FT.
MAX. UNBRACED BOTTOM CHORD LENGTH = 10.00 FT OR RIGID CEILING DIRECTLY APPLIED.

ALL PITCH BREAKS AND PERIMETER CORNER JOINTS MUST BE LATERALLY RESTRAINED.

1 - 1x4 LATERAL BRACE(S) AT 1/ 2 LENGTH OF D-M, D-K. DBS = 20-0-0 . CBF = 36 LBS.

DBS = DIAGONAL BRACE SPACING (MAX). CBF = CUMULATIVE BRACING FORCE (PER BRACE). FASTEN LATERAL BRACE(S) USING (0.122"X3") SPIRAL NAILS : 1 NAIL FOR 2x3 BRACE(S), 2 FOR 1x4, 2x4, 2x5, 3 FOR 2x6, 4 FOR 2x8, 5 FOR 2x10, AND 6 FOR 2x12.

END VERTICAL(S) MUST BE SHEATHED OR HAVE BRACES AS INDICATED IN THE MAX. UNBRACED LENGTH COLUMN OF THE TABLE BELOW

LOADING
TOTAL LOAD CASES: (4)

CHORDS

MEMB. FR-TO	MAX. FACTORED FORCE (LBS)	FACTORED VERT. LOAD (PLF) FROM	TO	LC1 MAX CSI (LC)	MAX. UNBRAC LENGTH
A- P	-2339 / 0	-77.4	-77.4	0.25 (1)	4.25
P- B	-2002 / 0	-77.4	-77.4	0.30 (1)	4.52
B- C	-1573 / 0	-77.4	-77.4	0.32 (1)	4.94
C- D	-1296 / 0	-77.4	-77.4	0.19 (1)	5.47
D- E	-1235 / 0	-77.4	-77.4	0.19 (1)	5.58
E- F	-1502 / 0	-77.4	-77.4	0.32 (1)	5.04
F- G	-1663 / 0	-77.4	-77.4	0.29 (1)	4.86
G- H	0 / 28	-77.4	-77.4	0.09 (1)	10.00
I- G	-1482 / 0	0.0	0.0	0.15 (1)	6.73
A- O	0 / 1668	-18.2	-18.2	0.42 (1)	10.00
O- N	0 / 1668	-18.2	-18.2	0.42 (1)	10.00
N- M	0 / 1668	-18.2	-18.2	0.40 (1)	10.00
M- L	0 / 1372	-18.2	-18.2	0.35 (1)	10.00
L- K	0 / 1372	-18.2	-18.2	0.35 (1)	10.00
K- J	0 / 1408	-18.2	-18.2	0.34 (1)	10.00
J- I	0 / 0	-18.2	-18.2	0.07 (4)	10.00

WEBS

MEMB. FR-TO	MAX. FACTORED FORCE (LBS)	MAX CSI (LC)
N- B	0 / 92	0.03 (4)
B- M	-465 / 0	0.42 (1)
M- C	0 / 556	0.13 (1)
M- D	-160 / 0	0.08 (1)
D- K	-289 / 0	0.15 (1)
K- E	0 / 520	0.12 (1)
K- F	-220 / 0	0.20 (1)
J- F	-238 / 4	0.07 (1)
J- G	0 / 1444	0.33 (1)
O- P	0 / 339	0.00 (1)

DESIGN CRITERIA

SPECIFIED LOADS:

TOP	CH.	LL	=	23.3	PSF
		DL	=	3.0	PSF
BOT	CH.	LL	=	0.0	PSF
		DL	=	7.3	PSF
TOTAL	LOAD		=	33.6	PSF

SPACING = 24.0 IN. C/C

LOADING IN FLAT SECTION BASED ON A SLOPE OF 2.00/12 MINIMUM

THIS TRUSS IS DESIGNED FOR RESIDENTIAL OR SMALL BUILDING REQUIREMENTS OF PART 9, NBCC 2010

THIS DESIGN COMPLIES WITH:
- PART 9 OF OBC 2012 , BCBC 2012 , ABC 2014
- CSA 086-09
- TPIC 2011

(55 % OF 27.2 P.S.F. G.S.L. PLUS 8.4 P.S.F. RAIN LOAD) EQUALS 23.3 P.S.F. SPECIFIED ROOF LIVE LOAD

ALLOWABLE DEFL.(LL)= L/360 (0.99")
CALCULATED VERT. DEFL.(LL) = L/ 999 (0.07")
ALLOWABLE DEFL.(TL)= L/360 (0.99")
CALCULATED VERT. DEFL.(TL) = L/ 999 (0.18")

CSI: TC=0.32/1.00 (B-C:1) , BC=0.42/1.00 (A-O:1) , WB=0.42/1.00 (B-M:1) , SSI=0.23/1.00 (A-P:1)

DOL LUMBER=1.00 NAIL=1.00 LS BEND=1.10 COMP=1.10 SHEAR=1.10 TENS= 1.10

COMPANION LIVE LOAD FACTOR = 0.50

TRUSS PLATE MANUFACTURER IS NOT RESPONSIBLE FOR QUALITY CONTROL IN THE TRUSS MANUFACTURING PLANT .

NAIL VALUES

PLATE	GRIP(DRY) (PSI) MAX	MIN	SHEAR (PLI) MAX	MIN	SECTION (PLI) MAX	MIN
MT20	618	354	1667	822	2284	1656

PLATE PLACEMENT TOL. = 0.250 inches

PLATE ROTATION TOL. = 5.0 Deg.

JSI GRIP= 0.90 (J) (INPUT = 0.90)
JSI METAL= 0.49 (L) (INPUT = 1.00)

LICENSED PROFESSIONAL ENGINEER
N.A. EL-MASRI
PROVINCE OF ONTARIO
May 31, 2018

READ ALL NOTES ON THIS PAGE AND ON ENGINEERING NOTE PAGE ENP-1. THIS NOTE PAGE IS AN INTEGRAL PART OF THIS DRAWING AS IT CONTAINS SPECIFICATIONS AND CRITERIA USED IN THE DESIGN OF THIS COMPONENT.

KOTT

JOB NAME	TRUSS NAME	QUANTITY	PLY	JOB DESC.		DRWG NO.
NE0518-227	T03	1	1	TRUSS DESC.	GREEN YORK HOMES - GRANELLI HOME CORP - AMELIA 12 ELE 1	PAGE 21 OF 45

Version 8.210 S Mar 12 2018 MiTek Industries, Inc. Thu May 31 18:08:20 2018 Page 1
ID:JiDzXONJoFa2AxdT?3zOcwzBMzn-QY?X9Y_hbcYyq_HGpSeYiXwkTSMaD0ufin9ko8zAw4f

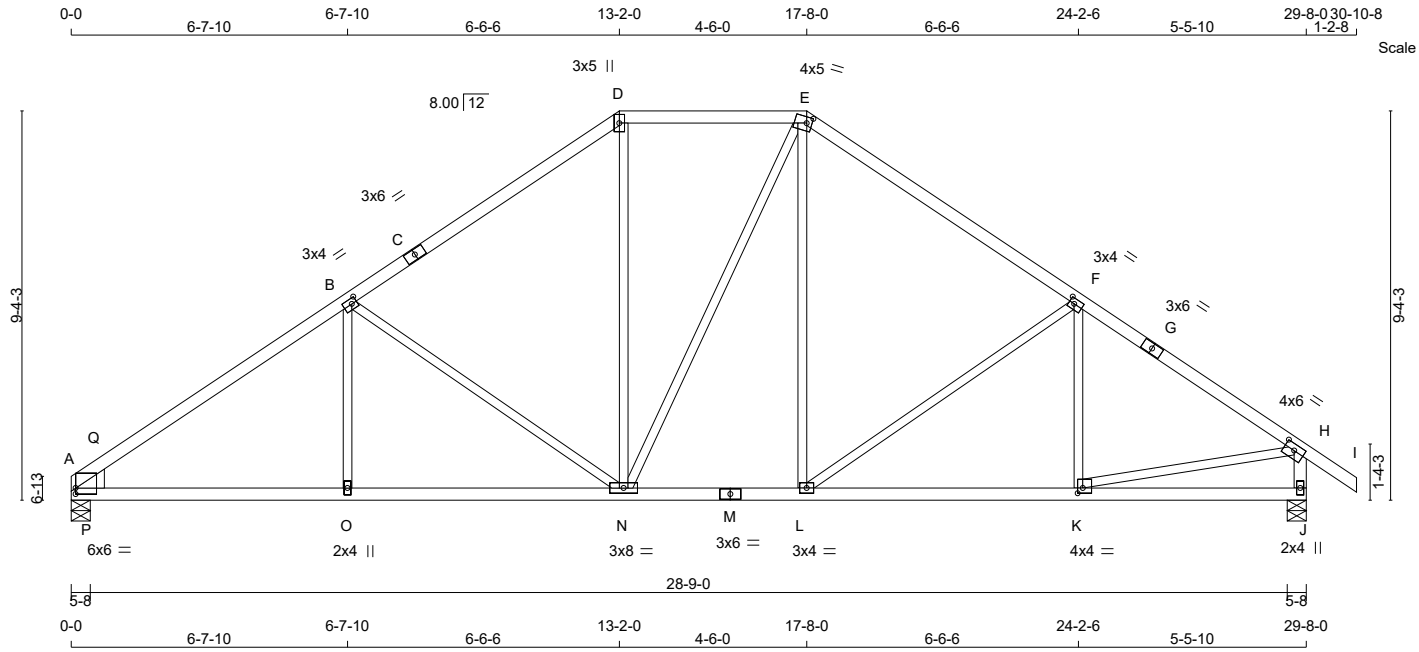

TOTAL WEIGHT = 124 lb

LUMBER
N. L. G. A. RULES

CHORDS	SIZE		LUMBER	DESCR.
A - C	2x4	DRY	No.2	SPF
C - D	2x4	DRY	No.2	SPF
D - E	2x4	DRY	No.2	SPF
E - G	2x4	DRY	No.2	SPF
G - I	2x4	DRY	No.2	SPF
J - H	2x4	DRY	No.2	SPF
A - M	2x4	DRY	No.2	SPF
M - J	2x4	DRY	No.2	SPF
ALL WEBS EXCEPT	2x3	DRY	No.2	SPF

DRY: SEASONED LUMBER.

PLATES (table is in inches)

JT	TYPE	PLATES	W	LEN	Y	X
A	TMBH1-I	MT20	6.0	6.0	1.75	
B	TMWW-t	MT20	3.0	4.0	1.50	1.50
C	TS-t	MT20	3.0	6.0		
D	TTW+p	MT20	3.0	5.0		
E	TTWW-m	MT20	4.0	5.0	1.75	1.50
F	TMWW-t	MT20	3.0	4.0	1.50	1.50
G	TS-t	MT20	3.0	6.0		
H	TMVW-t	MT20	4.0	6.0	1.75	3.00
J	BMV1+p	MT20	2.0	4.0		
K	BMWW-t	MT20	4.0	4.0	1.50	1.50
L	BMWW-t	MT20	3.0	4.0		
M	BS-t	MT20	3.0	6.0		
N	BMWWW-t	MT20	3.0	8.0		
O	BMW+w	MT20	2.0	4.0		

DIMENSIONS, SUPPORTS AND LOADINGS SPECIFIED BY FABRICATOR TO BE VERIFIED BY BUILDING DESIGNER

BEARINGS

JT	FACTORED GROSS REACTION VERT	HORZ	MAXIMUM FACTORED GROSS REACTION DOWN	HORZ	UPLIFT	INPUT BRG IN-SX	REQRD BRG IN-SX	HEEL WEDGE
A	1418	0	1418	0	0	5-8	5-8	2x6 L
J	1518	0	1518	0	0	5-8	5-8	

UNFACTORED REACTIONS

JT	1ST LCASE COMBINED	MAX./MIN. COMPONENT REACTIONS SNOW	LIVE	PERM.LIVE	WIND	DEAD	SOIL
A	996	691 / 0	0 / 0	0 / 0	0 / 0	306 / 0	0 / 0
J	1064	751 / 0	0 / 0	0 / 0	0 / 0	313 / 0	0 / 0

BEARING MATERIAL TO BE SPF NO.2 OR BETTER AT JOINT(S) A, J

BRACING
TOP CHORD TO BE SHEATHED OR MAX. PURLIN SPACING = 4.30 FT.
MAX. UNBRACED BOTTOM CHORD LENGTH = 10.00 FT OR RIGID CEILING DIRECTLY APPLIED.

ALL PITCH BREAKS AND PERIMETER CORNER JOINTS MUST BE LATERALLY RESTRAINED.

LOADING
TOTAL LOAD CASES: (4)

CHORDS

MEMB. FR-TO	MAX. FACTORED FORCE (LBS)	FACTORED VERT. LOAD (PLF) FROM	TO	LC1 CSI (LC)	MAX UNBRAC LENGTH
A- Q	-2260 / 0	-77.4	-77.4	0.27 (1)	4.30
Q- B	-1964 / 0	-77.4	-77.4	0.45 (1)	4.40
B- C	-1411 / 0	-77.4	-77.4	0.45 (1)	4.98
C- D	-1411 / 0	-77.4	-77.4	0.45 (1)	4.98
D- E	-1155 / 0	-77.4	-77.4	0.22 (1)	5.68
E- F	-1380 / 0	-77.4	-77.4	0.45 (1)	5.02
F- G	-1696 / 0	-77.4	-77.4	0.42 (1)	4.66
G- H	-1696 / 0	-77.4	-77.4	0.42 (1)	4.66
H- I	0 / 28	-77.4	-77.4	0.09 (1)	10.00
J- H	-1479 / 0	0.0	0.0	0.15 (1)	6.74
A- P	0 / 1643	-18.2	-18.2	0.37 (1)	10.00
P- O	0 / 1643	-18.2	-18.2	0.37 (1)	10.00
O- N	0 / 1643	-18.2	-18.2	0.34 (1)	10.00
N- M	0 / 1126	-18.2	-18.2	0.25 (1)	10.00
M- L	0 / 1126	-18.2	-18.2	0.25 (1)	10.00
L- K	0 / 1440	-18.2	-18.2	0.31 (1)	10.00
K- J	0 / 0	-18.2	-18.2	0.16 (4)	10.00

WEBS

MEMB. FR-TO	MAX. FACTORED FORCE (LBS)	MAX CSI (LC)
O- B	0 / 136	0.05 (4)
B- N	-603 / 0	0.84 (1)
N- D	0 / 393	0.09 (1)
N- E	0 / 65	0.01 (1)
L- E	0 / 319	0.07 (1)
L- F	-388 / 0	0.54 (1)
K- F	-147 / 61	0.05 (1)
K- H	0 / 1465	0.33 (1)
P- Q	0 / 249	0.00 (1)

DESIGN CRITERIA

SPECIFIED LOADS:

TOP	CH.	LL	=	23.3	PSF
		DL	=	3.0	PSF
BOT	CH.	LL	=	0.0	PSF
		DL	=	7.3	PSF
TOTAL	LOAD		=	33.6	PSF

SPACING = 24.0 IN. C/C

LOADING IN FLAT SECTION BASED ON A SLOPE OF 2.00/12 MINIMUM

THIS TRUSS IS DESIGNED FOR RESIDENTIAL OR SMALL BUILDING REQUIREMENTS OF PART 9, NBCC 2010

THIS DESIGN COMPLIES WITH:
- PART 9 OF OBC 2012 , BCBC 2012 , ABC 2014
- CSA 086-09
- TPIC 2011

(55 % OF 27.2 P.S.F. G.S.L. PLUS 8.4 P.S.F. RAIN LOAD) EQUALS 23.3 P.S.F. SPECIFIED ROOF LIVE LOAD

ALLOWABLE DEFL.(LL)= L/360 (0.99")
CALCULATED VERT. DEFL.(LL) = L/ 999 (0.07")
ALLOWABLE DEFL.(TL)= L/360 (0.99")
CALCULATED VERT. DEFL.(TL) = L/ 999 (0.15")

CSI: TC=0.45/1.00 (E-F:1) , BC=0.37/1.00 (A-P:1) , WB=0.84/1.00 (B-N:1) , SSI=0.25/1.00 (A-Q:1)

DOL LUMBER=1.00 NAIL=1.00 LS BEND=1.10 COMP=1.10 SHEAR=1.10 TENS= 1.10

COMPANION LIVE LOAD FACTOR = 0.50

TRUSS PLATE MANUFACTURER IS NOT RESPONSIBLE FOR QUALITY CONTROL IN THE TRUSS MANUFACTURING PLANT .

NAIL VALUES

PLATE	GRIP(DRY) (PSI) MAX	MIN	SHEAR (PLI) MAX	MIN	SECTION (PLI) MAX	MIN
MT20	618	354	1667	822	2284	1656

PLATE PLACEMENT TOL. = 0.250 inches

PLATE ROTATION TOL. = 5.0 Deg.

JSI GRIP= 0.88 (D) (INPUT = 0.90)
JSI METAL= 0.54 (K) (INPUT = 1.00)

LICENSED PROFESSIONAL ENGINEER
N.A. EL-MASRI
PROVINCE OF ONTARIO
May 31, 2018

READ ALL NOTES ON THIS PAGE AND ON ENGINEERING NOTE PAGE ENP-1. THIS NOTE PAGE IS AN INTEGRAL PART OF THIS DRAWING AS IT CONTAINS SPECIFICATIONS AND CRITERIA USED IN THE DESIGN OF THIS COMPONENT.

KOTT

JOB NAME	TRUSS NAME	QUANTITY	PLY	JOB DESC.		DRWG NO.
NE0518-227	T04	1	1	TRUSS DESC.	GREEN YORK HOMES - GRANELLI HOME CORP - AMELIA 12 ELE 1	PAGE 22 OF 45

Version 8.210 S Mar 12 2018 MiTek Industries, Inc. Thu May 31 18:08:21 2018 Page 1
ID:JiDzXONJoFa2AxdT?3zOcwzBMzn-ulZvMu?JMwhpR8sTNA9nElTtSrhlybloxRvlKbzAw4e

Scale = 1:66.0

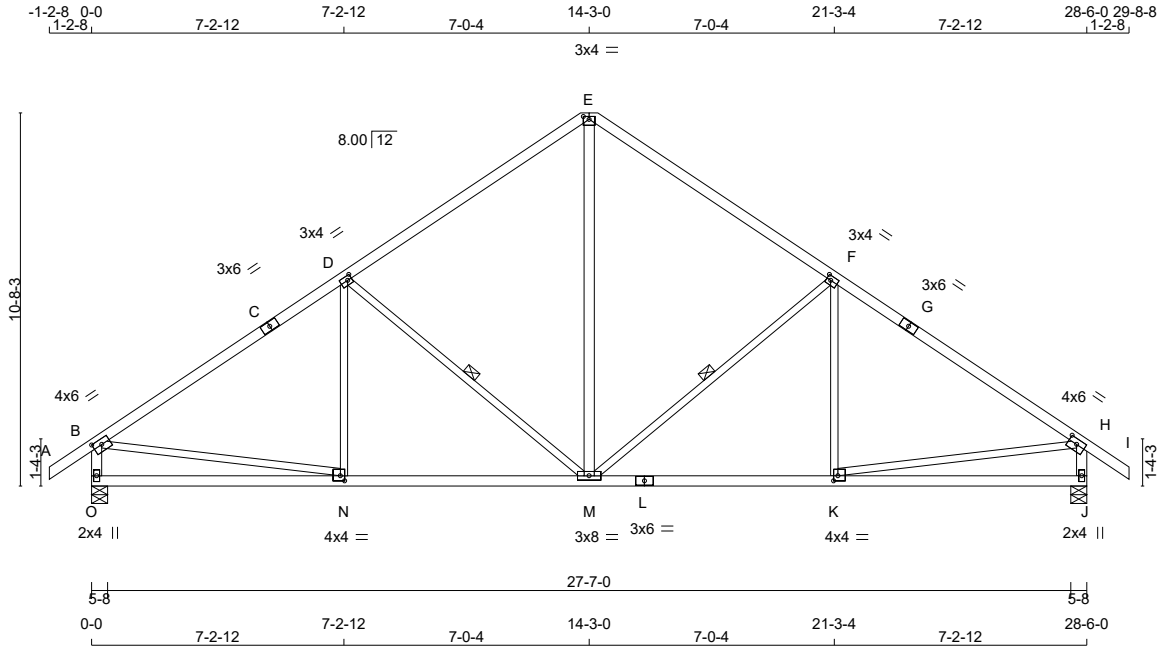

TOTAL WEIGHT = 123 lb

LUMBER
N. L. G. A. RULES

CHORDS	SIZE		LUMBER	DESCR.
A - C	2x4	DRY	No.2	SPF
C - E	2x4	DRY	No.2	SPF
E - G	2x4	DRY	No.2	SPF
G - I	2x4	DRY	No.2	SPF
O - B	2x4	DRY	No.2	SPF
J - H	2x4	DRY	No.2	SPF
O - L	2x4	DRY	No.2	SPF
L - J	2x4	DRY	No.2	SPF
ALL WEBS	2x3	DRY	No.2	SPF
EXCEPT				
M - E	2x4	DRY	No.2	SPF

DRY: SEASONED LUMBER.

PLATES (table is in inches)

JT	TYPE	PLATES	W	LEN	Y	X
B	TMVW-t	MT20	4.0	6.0	1.75	3.00
C	TS-t	MT20	3.0	6.0		
D	TMWW-t	MT20	3.0	4.0	1.50	1.50
E	TTW-p	MT20	3.0	4.0	1.00	2.00
F	TMWW-t	MT20	3.0	4.0	1.50	1.50
G	TS-t	MT20	3.0	6.0		
H	TMVW-t	MT20	4.0	6.0	1.75	3.00
J	BMV1+p	MT20	2.0	4.0		
K	BMWW-t	MT20	4.0	4.0	1.75	1.50
L	BS-t	MT20	3.0	6.0		
M	BMWWW-t	MT20	3.0	8.0		
N	BMWW-t	MT20	4.0	4.0	1.75	1.50
O	BMV1+p	MT20	2.0	4.0		

DIMENSIONS, SUPPORTS AND LOADINGS SPECIFIED BY FABRICATOR TO BE VERIFIED BY BUILDING DESIGNER

BEARINGS

JT	FACTORED GROSS REACTION VERT	HORZ	MAXIMUM FACTORED GROSS REACTION DOWN	HORZ	UPLIFT	INPUT BRG IN-SX	REQRD BRG IN-SX
O	1462	0	1462	0	0	5-8	5-8
J	1462	0	1462	0	0	5-8	5-8

UNFACTORED REACTIONS

JT	1ST LCASE COMBINED	MAX./MIN. COMPONENT REACTIONS SNOW	LIVE	PERM.LIVE	WIND	DEAD	SOIL
O	1025	724 / 0	0 / 0	0 / 0	0 / 0	301 / 0	0 / 0
J	1025	724 / 0	0 / 0	0 / 0	0 / 0	301 / 0	0 / 0

BEARING MATERIAL TO BE SPF NO.2 OR BETTER AT JOINT(S) O, J

BRACING
TOP CHORD TO BE SHEATHED OR MAX. PURLIN SPACING = 4.50 FT.
MAX. UNBRACED BOTTOM CHORD LENGTH = 10.00 FT OR RIGID CEILING DIRECTLY APPLIED.

ALL PITCH BREAKS AND PERIMETER CORNER JOINTS MUST BE LATERALLY RESTRAINED.

1 - 1x4 LATERAL BRACE(S) AT 1/ 2 LENGTH OF F-M, D-M. DBS = 20-0-0 . CBF = 69 LBS.

DBS = DIAGONAL BRACE SPACING (MAX). CBF = CUMULATIVE BRACING FORCE (PER BRACE). FASTEN LATERAL BRACE(S) USING (0.122"X3") SPIRAL NAILS : 1 NAIL FOR 2x3 BRACE(S), 2 FOR 1x4, 2x4, 2x5, 3 FOR 2x6, 4 FOR 2x8, 5 FOR 2x10, AND 6 FOR 2x12.

END VERTICAL(S) MUST BE SHEATHED OR HAVE BRACES AS INDICATED IN THE MAX. UNBRACED LENGTH COLUMN OF THE TABLE BELOW

LOADING
TOTAL LOAD CASES: (4)

CHORDS

MEMB. FR-TO	MAX. FACTORED FORCE (LBS)	FACTORED VERT. LOAD LC1 (PLF) FROM	TO	MAX CSI (LC)	MAX. UNBRAC LENGTH
A- B	0 / 28	-77.4	-77.4	0.09 (1)	10.00
B- C	-1591 / 0	-77.4	-77.4	0.63 (1)	4.50
C- D	-1591 / 0	-77.4	-77.4	0.63 (1)	4.50
D- E	-1154 / 0	-77.4	-77.4	0.56 (1)	5.16
E- F	-1154 / 0	-77.4	-77.4	0.56 (1)	5.16
F- G	-1591 / 0	-77.4	-77.4	0.63 (1)	4.50
G- H	-1591 / 0	-77.4	-77.4	0.63 (1)	4.50
H- I	0 / 28	-77.4	-77.4	0.09 (1)	10.00
O- B	-1408 / 0	0.0	0.0	0.14 (1)	6.87
J- H	-1408 / 0	0.0	0.0	0.14 (1)	6.87
O- N	0 / 0	-18.2	-18.2	0.23 (4)	10.00
N- M	0 / 1354	-18.2	-18.2	0.34 (1)	10.00
M- L	0 / 1354	-18.2	-18.2	0.34 (1)	10.00
L- K	0 / 1354	-18.2	-18.2	0.34 (1)	10.00
K- J	0 / 0	-18.2	-18.2	0.23 (4)	10.00

WEBS

MEMB. FR-TO	MAX. FACTORED FORCE (LBS)	MAX CSI (LC)
M- E	0 / 832	0.13 (1)
M- F	-554 / 0	0.32 (1)
K- F	-47 / 108	0.04 (4)
D- M	-554 / 0	0.32 (1)
N- D	-47 / 108	0.04 (4)
B- N	0 / 1368	0.31 (1)
K- H	0 / 1368	0.31 (1)

DESIGN CRITERIA

SPECIFIED LOADS:

TOP	CH.	LL	=	23.3	PSF
		DL	=	3.0	PSF
BOT	CH.	LL	=	0.0	PSF
		DL	=	7.3	PSF
TOTAL	LOAD		=	33.6	PSF

SPACING = 24.0 IN. C/C

THIS TRUSS IS DESIGNED FOR RESIDENTIAL OR SMALL BUILDING REQUIREMENTS OF PART 9, NBCC 2010

THIS DESIGN COMPLIES WITH:
- PART 9 OF OBC 2012 , BCBC 2012 , ABC 2014
- CSA 086-09
- TPIC 2011

(55 % OF 27.2 P.S.F. G.S.L. PLUS 8.4 P.S.F. RAIN LOAD) EQUALS 23.3 P.S.F. SPECIFIED ROOF LIVE LOAD

ALLOWABLE DEFL.(LL)= L/360 (0.95")
CALCULATED VERT. DEFL.(LL) = L/ 999 (0.06")
ALLOWABLE DEFL.(TL)= L/360 (0.95")
CALCULATED VERT. DEFL.(TL) = L/ 999 (0.12")

CSI: TC=0.63/1.00 (F-H:1) , BC=0.34/1.00 (K-M:1) , WB=0.32/1.00 (F-M:1) , SSI=0.22/1.00 (F-H:1)

DOL LUMBER=1.00 NAIL=1.00 LS BEND=1.10 COMP=1.10 SHEAR=1.10 TENS= 1.10

COMPANION LIVE LOAD FACTOR = 0.50

TRUSS PLATE MANUFACTURER IS NOT RESPONSIBLE FOR QUALITY CONTROL IN THE TRUSS MANUFACTURING PLANT .

NAIL VALUES

PLATE	GRIP(DRY) (PSI) MAX	MIN	SHEAR (PLI) MAX	MIN	SECTION (PLI) MAX	MIN
MT20	618	354	1667	822	2284	1656

PLATE PLACEMENT TOL. = 0.250 inches

PLATE ROTATION TOL. = 5.0 Deg.

JSI GRIP= 0.90 (N) (INPUT = 0.90)
JSI METAL= 0.51 (K) (INPUT = 1.00)

LICENSED PROFESSIONAL ENGINEER
N.A. EL-MASRI
PROVINCE OF ONTARIO
May 31, 2018

READ ALL NOTES ON THIS PAGE AND ON ENGINEERING NOTE PAGE ENP-1. THIS NOTE PAGE IS AN INTEGRAL PART OF THIS DRAWING AS IT CONTAINS SPECIFICATIONS AND CRITERIA USED IN THE DESIGN OF THIS COMPONENT.

KOTT

JOB NAME	TRUSS NAME	QUANTITY	PLY	JOB DESC.		DRWG NO.
NE0518-227	T05	2	1	TRUSS DESC.	GREEN YORK HOMES - GRANELLI HOME CORP - AMELIA 12 ELE 1	PAGE 23 OF 45

Version 8.210 S Mar 12 2018 MiTek Industries, Inc. Thu May 31 18:08:21 2018 Page 1
ID:JiDzXONJoFa2AxdT?3zOcwzBMzn-ulZvMu?JMwhpR8sTNA9nEIT_nrlkyfRoxRvIKbzAw4e

Scale = 1:30.4

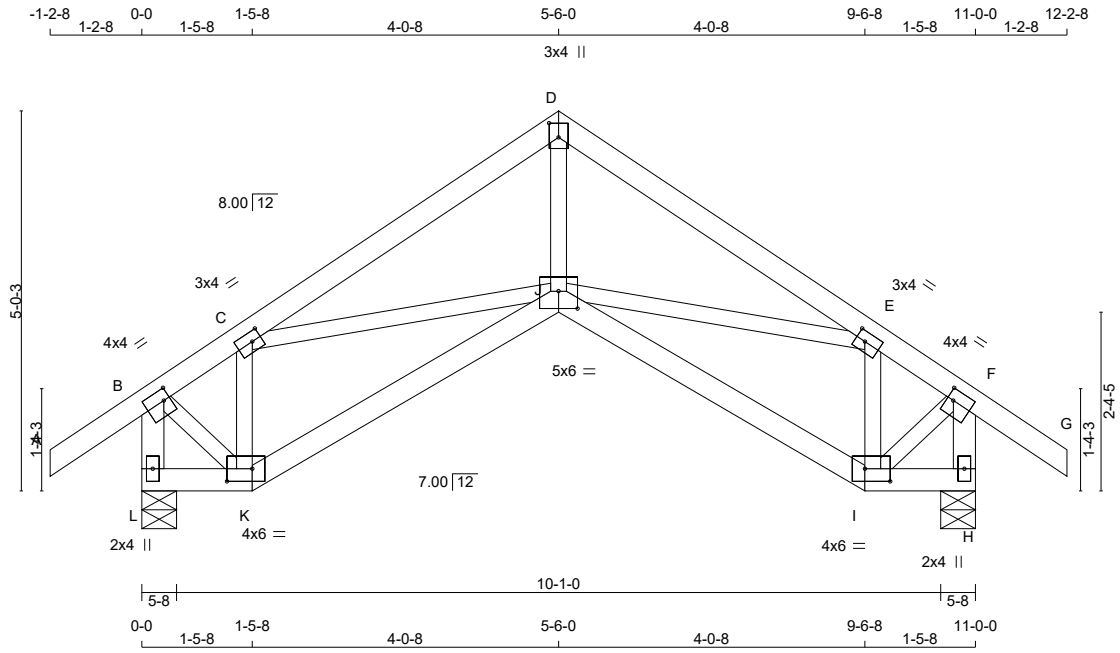

TOTAL WEIGHT = 2 X 48 = 97 lb

LUMBER
N. L. G. A. RULES

CHORDS	SIZE		LUMBER	DESCR.
A - D	2x4	DRY	No.2	SPF
D - G	2x4	DRY	No.2	SPF
L - B	2x4	DRY	No.2	SPF
H - F	2x4	DRY	No.2	SPF
L - K	2x4	DRY	No.2	SPF
K - J	2x4	DRY	No.2	SPF
J - I	2x4	DRY	No.2	SPF
I - H	2x4	DRY	No.2	SPF
ALL WEBS EXCEPT	2x3	DRY	No.2	SPF

DRY: SEASONED LUMBER.

PLATES (table is in inches)

JT	TYPE	PLATES	W	LEN	Y	X
B	TMVW-t	MT20	4.0	4.0	1.75	1.00
C	TMWW-t	MT20	3.0	4.0	1.50	1.50
D	TTW+p	MT20	3.0	4.0	2.25	1.50
E	TMWW-t	MT20	3.0	4.0	1.50	1.50
F	TMVW-t	MT20	4.0	4.0	1.75	1.00
H	BMV1+p	MT20	2.0	4.0		
I	BBWW-p	MT20	4.0	6.0	2.00	4.00
J	BBWWW-p	MT20	5.0	6.0	2.75	3.00
K	BBWW-p	MT20	4.0	6.0	2.00	4.00
L	BMV1+p	MT20	2.0	4.0		

DIMENSIONS, SUPPORTS AND LOADINGS SPECIFIED BY FABRICATOR TO BE VERIFIED BY BUILDING DESIGNER

BEARINGS

JT	FACTORED GROSS REACTION VERT	HORZ	MAXIMUM FACTORED GROSS REACTION DOWN	HORZ	UPLIFT	INPUT BRG IN-SX	REQRD BRG IN-SX
L	626	0	626	0	0	5-8	5-8
H	626	0	626	0	0	5-8	5-8

UNFACTORED REACTIONS

JT	1ST LCASE COMBINED	MAX./MIN. COMPONENT REACTIONS SNOW	LIVE	PERM.LIVE	WIND	DEAD	SOIL
L	437	316 / 0	0 / 0	0 / 0	0 / 0	121 / 0	0 / 0
H	437	316 / 0	0 / 0	0 / 0	0 / 0	121 / 0	0 / 0

BEARING MATERIAL TO BE SPF NO.2 OR BETTER AT JOINT(S) L, H

BRACING
TOP CHORD TO BE SHEATHED OR MAX. PURLIN SPACING = 6.25 FT.
MAX. UNBRACED BOTTOM CHORD LENGTH = 10.00 FT OR RIGID CEILING DIRECTLY APPLIED.

ALL PITCH BREAKS AND PERIMETER CORNER JOINTS MUST BE LATERALLY RESTRAINED.

LOADING
TOTAL LOAD CASES: (4)

CHORDS

MEMB. FR-TO	MAX. FACTORED FORCE (LBS)	FACTORED VERT. LOAD (PLF) FROM	TO	LC1 CSI (LC)	MAX UNBRAC LENGTH
A- B	0 / 28	-77.4	-77.4	0.09 (1)	10.00
B- C	-418 / 0	-77.4	-77.4	0.12 (1)	6.25
C- D	-733 / 0	-77.4	-77.4	0.16 (1)	6.25
D- E	-733 / 0	-77.4	-77.4	0.16 (1)	6.25
E- F	-418 / 0	-77.4	-77.4	0.12 (1)	6.25
F- G	0 / 28	-77.4	-77.4	0.09 (1)	10.00
L- B	-612 / 0	0.0	0.0	0.06 (1)	7.81
H- F	-612 / 0	0.0	0.0	0.06 (1)	7.81
L- K	0 / 0	-18.2	-18.2	0.01 (4)	10.00
K- J	0 / 396	-18.2	-18.2	0.12 (4)	10.00
J- I	0 / 396	-18.2	-18.2	0.12 (4)	10.00
I- H	0 / 0	-18.2	-18.2	0.01 (4)	10.00

WEBS

MEMB. FR-TO	MAX. FACTORED FORCE (LBS)	MAX CSI (LC)
J- D	0 / 530	0.12 (1)
J- E	0 / 257	0.06 (1)
I- E	-404 / 0	0.06 (1)
C- J	0 / 257	0.06 (1)
K- C	-404 / 0	0.06 (1)
B- K	0 / 443	0.10 (1)
I- F	0 / 443	0.10 (1)

[M][F]

DESIGN CRITERIA

SPECIFIED LOADS:

TOP	CH.	LL	=	23.3	PSF
		DL	=	3.0	PSF
BOT	CH.	LL	=	0.0	PSF
		DL	=	7.3	PSF
TOTAL	LOAD		=	33.6	PSF

SPACING = 24.0 IN. C/C

THIS TRUSS IS DESIGNED FOR RESIDENTIAL OR SMALL BUILDING REQUIREMENTS OF PART 9, NBCC 2010

THIS DESIGN COMPLIES WITH:
- PART 9 OF OBC 2012 , BCBC 2012 , ABC 2014
- CSA 086-09
- TPIC 2011

DESIGN ASSUMPTIONS
-OVERHANG NOT TO BE ALTERED OR CUT OFF.

(55 % OF 27.2 P.S.F. G.S.L. PLUS 8.4 P.S.F. RAIN LOAD) EQUALS 23.3 P.S.F. SPECIFIED ROOF LIVE LOAD

ALLOWABLE DEFL.(LL)= L/360 (0.37")
CALCULATED VERT. DEFL.(LL) = L/ 999 (0.02")
ALLOWABLE DEFL.(TL)= L/360 (0.37")
CALCULATED VERT. DEFL.(TL) = L/ 999 (0.03")

CSI: TC=0.16/1.00 (C-D:1) , BC=0.12/1.00 (I-J:4) , WB=0.12/1.00 (D-J:1) , SSI=0.12/1.00 (C-D:1)

DOL LUMBER=1.00 NAIL=1.00 LS BEND=1.10 COMP=1.10 SHEAR=1.10 TENS= 1.10

COMPANION LIVE LOAD FACTOR = 0.50

TRUSS PLATE MANUFACTURER IS NOT RESPONSIBLE FOR QUALITY CONTROL IN THE TRUSS MANUFACTURING PLANT .

NAIL VALUES

PLATE	GRIP(DRY) (PSI) MAX	MIN	SHEAR (PLI) MAX	MIN	SECTION (PLI) MAX	MIN
MT20	618	354	1667	822	2284	1656

PLATE PLACEMENT TOL. = 0.250 inches

PLATE ROTATION TOL. = 5.0 Deg.

JSI GRIP= 0.72 (D) (INPUT = 0.90)
JSI METAL= 0.19 (B) (INPUT = 1.00)

LICENSED PROFESSIONAL ENGINEER
N.A. EL-MASRI
PROVINCE OF ONTARIO
May 31, 2018

READ ALL NOTES ON THIS PAGE AND ON ENGINEERING NOTE PAGE ENP-1. THIS NOTE PAGE IS AN INTEGRAL PART OF THIS DRAWING AS IT CONTAINS SPECIFICATIONS AND CRITERIA USED IN THE DESIGN OF THIS COMPONENT.

KOTT

JOB NAME	TRUSS NAME	QUANTITY	PLY	JOB DESC.		DRWG NO.
NE0518-227	T07	1	1	TRUSS DESC.	GREEN YORK HOMES - GRANELLI HOME CORP - AMELIA 12 ELE 1	PAGE 24 OF 45

Version 8.210 S Mar 12 2018 MiTek Industries, Inc. Thu May 31 18:08:22 2018 Page 1
ID:JiDzXONJoFa2AxdT?3zOcwzBMzn-Mx6HaE0x7Epf3IRfxth0ny?7HF4Jh6PyA5ert1zAw4d

Scale = 1:30.4

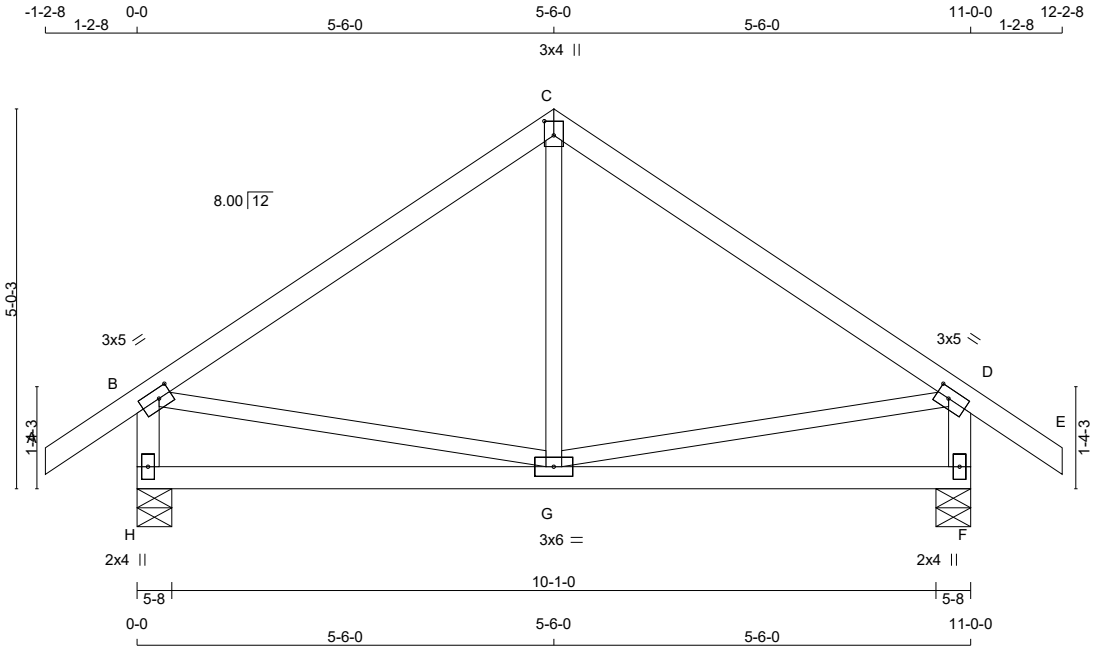

TOTAL WEIGHT = 45 lb

LUMBER
N. L. G. A. RULES

CHORDS	SIZE		LUMBER	DESCR.
A - C	2x4	DRY	No.2	SPF
C - E	2x4	DRY	No.2	SPF
H - B	2x4	DRY	No.2	SPF
F - D	2x4	DRY	No.2	SPF
H - F	2x4	DRY	No.2	SPF
ALL WEBS EXCEPT	2x3	DRY	No.2	SPF

DRY: SEASONED LUMBER.

PLATES (table is in inches)

JT	TYPE	PLATES	W	LEN	Y	X
B	TMVW-t	MT20	3.0	5.0	1.50	2.00
C	TTW+p	MT20	3.0	4.0	2.25	1.50
D	TMVW-t	MT20	3.0	5.0	1.50	2.00
F	BMV1+p	MT20	2.0	4.0		
G	BMWWW-t	MT20	3.0	6.0		
H	BMV1+p	MT20	2.0	4.0		

DIMENSIONS, SUPPORTS AND LOADINGS SPECIFIED BY FABRICATOR TO BE VERIFIED BY BUILDING DESIGNER

BEARINGS

JT	FACTORED GROSS REACTION VERT	HORZ	MAXIMUM FACTORED GROSS REACTION DOWN	HORZ	UPLIFT	INPUT BRG IN-SX	REQRD BRG IN-SX
H	626	0	626	0	0	5-8	5-8
F	626	0	626	0	0	5-8	5-8

UNFACTORED REACTIONS

JT	1ST LCASE COMBINED	MAX./MIN. COMPONENT REACTIONS SNOW	LIVE	PERM.LIVE	WIND	DEAD	SOIL
H	437	316 / 0	0 / 0	0 / 0	0 / 0	121 / 0	0 / 0
F	437	316 / 0	0 / 0	0 / 0	0 / 0	121 / 0	0 / 0

BEARING MATERIAL TO BE SPF NO.2 OR BETTER AT JOINT(S) H, F

BRACING
TOP CHORD TO BE SHEATHED OR MAX. PURLIN SPACING = 6.25 FT.
MAX. UNBRACED BOTTOM CHORD LENGTH = 10.00 FT OR RIGID CEILING DIRECTLY APPLIED.

ALL PITCH BREAKS AND PERIMETER CORNER JOINTS MUST BE LATERALLY RESTRAINED.

LOADING
TOTAL LOAD CASES: (4)

CHORDS MEMB. FR-TO	MAX. FACTORED FORCE (LBS)	FACTORED VERT. LOAD (PLF) FROM	TO	LC1 CSI (LC)	MAX UNBRAC LENGTH	WEBS MEMB. FR-TO	MAX. FACTORED FORCE (LBS)	MAX CSI (LC)
A- B	0 / 28	-77.4	-77.4	0.09 (1)	10.00	G- C	0 / 99	0.03 (4)
B- C	-387 / 0	-77.4	-77.4	0.30 (1)	6.25	B- G	0 / 327	0.07 (1)
C- D	-387 / 0	-77.4	-77.4	0.30 (1)	6.25	G- D	0 / 327	0.07 (1)
D- E	0 / 28	-77.4	-77.4	0.09 (1)	10.00			
H- B	-587 / 0	0.0	0.0	0.06 (1)	7.81			
F- D	-587 / 0	0.0	0.0	0.06 (1)	7.81			
H- G	0 / 0	-18.2	-18.2	0.16 (4)	10.00			
G- F	0 / 0	-18.2	-18.2	0.16 (4)	10.00			

DESIGN CRITERIA [M][F]

SPECIFIED LOADS:

TOP	CH.	LL	=	23.3	PSF
		DL	=	3.0	PSF
BOT	CH.	LL	=	0.0	PSF
		DL	=	7.3	PSF
TOTAL	LOAD		=	33.6	PSF

SPACING = 24.0 IN. C/C

THIS TRUSS IS DESIGNED FOR RESIDENTIAL OR SMALL BUILDING REQUIREMENTS OF PART 9, NBCC 2010

THIS DESIGN COMPLIES WITH:
- PART 9 OF OBC 2012 , BCBC 2012 , ABC 2014
- CSA 086-09
- TPIC 2011

(55 % OF 27.2 P.S.F. G.S.L. PLUS 8.4 P.S.F. RAIN LOAD) EQUALS 23.3 P.S.F. SPECIFIED ROOF LIVE LOAD

ALLOWABLE DEFL.(LL)= L/360 (0.37")
CALCULATED VERT. DEFL.(LL) = L/ 999 (0.01")
ALLOWABLE DEFL.(TL)= L/360 (0.37")
CALCULATED VERT. DEFL.(TL) = L/ 999 (0.02")

CSI: TC=0.30/1.00 (B-C:1) , BC=0.16/1.00 (G-H:4) , WB=0.07/1.00 (B-G:1) , SSI=0.14/1.00 (B-C:1)

DOL LUMBER=1.00 NAIL=1.00 LS BEND=1.10 COMP=1.10 SHEAR=1.10 TENS= 1.10

COMPANION LIVE LOAD FACTOR = 0.50

TRUSS PLATE MANUFACTURER IS NOT RESPONSIBLE FOR QUALITY CONTROL IN THE TRUSS MANUFACTURING PLANT .

NAIL VALUES

PLATE	GRIP(DRY) (PSI) MAX	MIN	SHEAR (PLI) MAX	MIN	SECTION (PLI) MAX	MIN
MT20	618	354	1667	822	2284	1656

PLATE PLACEMENT TOL. = 0.250 inches

PLATE ROTATION TOL. = 5.0 Deg.

JSI GRIP= 0.71 (G) (INPUT = 0.90)
JSI METAL= 0.17 (D) (INPUT = 1.00)

LICENSED PROFESSIONAL ENGINEER
N.A. EL-MASRI
PROVINCE OF ONTARIO
May 31, 2018

READ ALL NOTES ON THIS PAGE AND ON ENGINEERING NOTE PAGE ENP-1. THIS NOTE PAGE IS AN INTEGRAL PART OF THIS DRAWING AS IT CONTAINS SPECIFICATIONS AND CRITERIA USED IN THE DESIGN OF THIS COMPONENT.

KOTT

JOB NAME	TRUSS NAME	QUANTITY	PLY	JOB DESC.		DRWG NO.
NE0518-227	T08	3	1	TRUSS DESC.	GREEN YORK HOMES - GRANELLI HOME CORP - AMELIA 12 ELE 1	PAGE 25 OF 45

Version 8.210 S Mar 12 2018 MiTek Industries, Inc. Thu May 31 18:08:23 2018 Page 1
ID:JiDzXONJoFa2AxdT?3zOcwzBMzn-q7gfna1ZuXxWhS0rVbCFKAYI1fQbQZf5OlOOPTzAw4c

Scale = 1:30.4

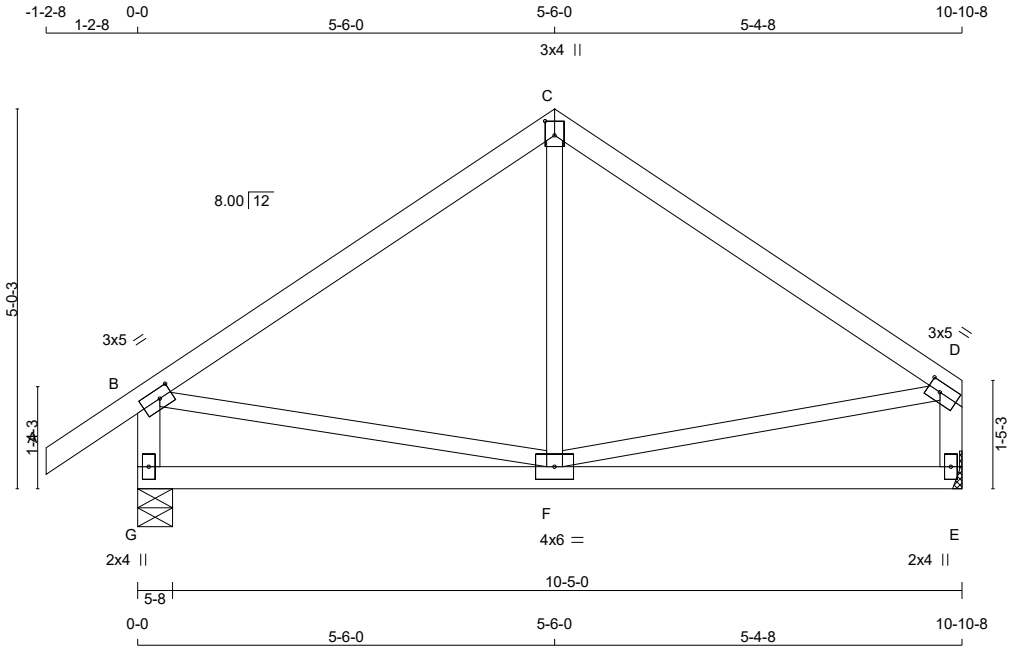

TOTAL WEIGHT = 3 X 43 = 130 lb

LUMBER
N. L. G. A. RULES

CHORDS	SIZE		LUMBER	DESCR.
A - C	2x4	DRY	No.2	SPF
C - D	2x4	DRY	No.2	SPF
G - B	2x4	DRY	No.2	SPF
E - D	2x4	DRY	No.2	SPF
G - E	2x4	DRY	No.2	SPF
ALL WEBS EXCEPT	2x3	DRY	No.2	SPF

DRY: SEASONED LUMBER.

PLATES (table is in inches)

JT	TYPE	PLATES	W	LEN	Y	X
B	TMVW-t	MT20	3.0	5.0	1.50	2.00
C	TTW+p	MT20	3.0	4.0	2.25	1.50
D	TMVW-t	MT20	3.0	5.0	1.50	2.00
E	BMV1+p	MT20	2.0	4.0		
F	BMWWW-t	MT20	4.0	6.0		
G	BMV1+p	MT20	2.0	4.0		

DIMENSIONS, SUPPORTS AND LOADINGS SPECIFIED BY FABRICATOR TO BE VERIFIED BY BUILDING DESIGNER

BEARINGS

JT	FACTORED GROSS REACTION VERT	HORZ	MAXIMUM FACTORED GROSS REACTION DOWN	HORZ	UPLIFT	INPUT BRG IN-SX	REQRD BRG IN-SX
G	620	0	620	0	0	5-8	5-8
E	520	0	520	0	0	MECHANICAL	

A SUITABLE MECHANICAL CONNECTION IS REQUIRED AT JOINT E TO RESIST THE MAX FACTORED REACTIONS.

UNFACTORED REACTIONS

JT	1ST LCASE COMBINED	MAX./MIN. COMPONENT REACTIONS SNOW	LIVE	PERM.LIVE	WIND	DEAD	SOIL
G	433	313 / 0	0 / 0	0 / 0	0 / 0	120 / 0	0 / 0
E	365	253 / 0	0 / 0	0 / 0	0 / 0	112 / 0	0 / 0

BEARING MATERIAL TO BE SPF NO.2 OR BETTER AT JOINT(S) G

BRACING
TOP CHORD TO BE SHEATHED OR MAX. PURLIN SPACING = 6.25 FT.
MAX. UNBRACED BOTTOM CHORD LENGTH = 10.00 FT OR RIGID CEILING DIRECTLY APPLIED.

ALL PITCH BREAKS AND PERIMETER CORNER JOINTS MUST BE LATERALLY RESTRAINED.

LOADING
TOTAL LOAD CASES: (4)

CHORDS

MEMB. FR-TO	MAX. FACTORED FORCE (LBS)	FACTORED VERT. LOAD (PLF) FROM	TO	LC1 MAX CSI (LC)	MAX. UNBRAC LENGTH
A- B	0 / 28	-77.4	-77.4	0.09 (1)	10.00
B- C	-378 / 0	-77.4	-77.4	0.30 (1)	6.25
C- D	-378 / 0	-77.4	-77.4	0.29 (1)	6.25
G- B	-581 / 0	0.0	0.0	0.06 (1)	7.81
E- D	-482 / 0	0.0	0.0	0.05 (1)	7.81
G- F	0 / 0	-18.2	-18.2	0.15 (4)	10.00
F- E	0 / 0	-18.2	-18.2	0.15 (4)	10.00

WEBS

MEMB. FR-TO	MAX. FACTORED FORCE (LBS)	MAX CSI (LC)
F- C	-1 / 96	0.03 (4)
B- F	0 / 320	0.07 (1)
F- D	0 / 321	0.07 (1)

DESIGN CRITERIA [M][F]

SPECIFIED LOADS:

TOP	CH.	LL	=	23.3	PSF
		DL	=	3.0	PSF
BOT	CH.	LL	=	0.0	PSF
		DL	=	7.3	PSF
TOTAL	LOAD		=	33.6	PSF

SPACING = 24.0 IN. C/C

THIS TRUSS IS DESIGNED FOR RESIDENTIAL OR SMALL BUILDING REQUIREMENTS OF PART 9, NBCC 2010

THIS DESIGN COMPLIES WITH:
- PART 9 OF OBC 2012 , BCBC 2012 , ABC 2014
- CSA 086-09
- TPIC 2011

(55 % OF 27.2 P.S.F. G.S.L. PLUS 8.4 P.S.F. RAIN LOAD) EQUALS 23.3 P.S.F. SPECIFIED ROOF LIVE LOAD

ALLOWABLE DEFL.(LL)= L/360 (0.36")
CALCULATED VERT. DEFL.(LL) = L/ 999 (0.00")
ALLOWABLE DEFL.(TL)= L/360 (0.36")
CALCULATED VERT. DEFL.(TL) = L/ 999 (0.02")

CSI: TC=0.30/1.00 (B-C:1) , BC=0.15/1.00 (F-G:4) , WB=0.07/1.00 (D-F:1) , SSI=0.14/1.00 (B-C:1)

DOL LUMBER=1.00 NAIL=1.00 LS BEND=1.10 COMP=1.10 SHEAR=1.10 TENS= 1.10

COMPANION LIVE LOAD FACTOR = 0.50

TRUSS PLATE MANUFACTURER IS NOT RESPONSIBLE FOR QUALITY CONTROL IN THE TRUSS MANUFACTURING PLANT .

NAIL VALUES

PLATE	GRIP(DRY) (PSI) MAX	MIN	SHEAR (PLI) MAX	MIN	SECTION (PLI) MAX	MIN
MT20	618	354	1667	822	2284	1656

PLATE PLACEMENT TOL. = 0.250 inches

PLATE ROTATION TOL. = 5.0 Deg.

JSI GRIP= 0.53 (B) (INPUT = 0.90)
JSI METAL= 0.17 (B) (INPUT = 1.00)

LICENSED PROFESSIONAL ENGINEER
N.A. EL-MASRI
PROVINCE OF ONTARIO
May 31, 2018

READ ALL NOTES ON THIS PAGE AND ON ENGINEERING NOTE PAGE ENP-1. THIS NOTE PAGE IS AN INTEGRAL PART OF THIS DRAWING AS IT CONTAINS SPECIFICATIONS AND CRITERIA USED IN THE DESIGN OF THIS COMPONENT.

KOTT

JOB NAME	TRUSS NAME	QUANTITY	PLY	JOB DESC.		DRWG NO.
NE0518-227	T09	1	1	TRUSS DESC.	GREEN YORK HOMES - GRANELLI HOME CORP - AMELIA 12 ELE 1	PAGE 26 OF 45

Version 8.210 S Mar 12 2018 MiTek Industries, Inc. Thu May 31 18:08:23 2018 Page 1
ID:JiDzXONJoFa2AxdT?3zOcwzBMzn-q7gfna1ZuXxWhS0rVbCFKAYJ8fQUQYF5OlOOPTzAw4c

Scale = 1:33.5

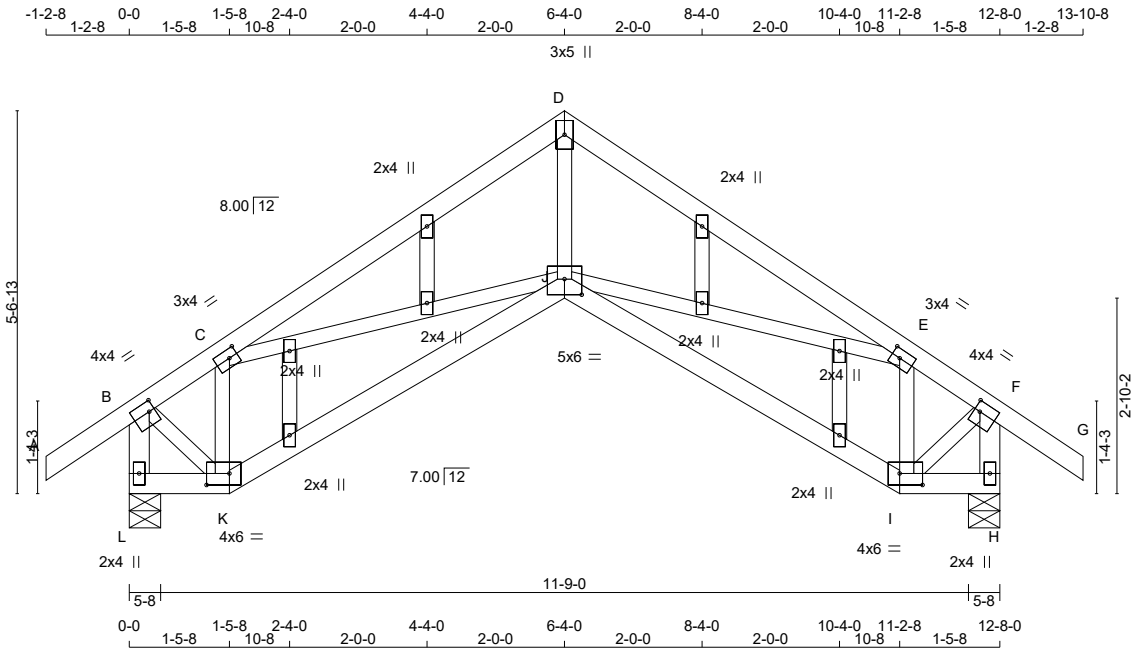

TOTAL WEIGHT = 58 lb

LUMBER
N. L. G. A. RULES

CHORDS	SIZE		LUMBER	DESCR.
A - D	2x4	DRY	No.2	SPF
D - G	2x4	DRY	No.2	SPF
L - B	2x4	DRY	No.2	SPF
H - F	2x4	DRY	No.2	SPF
L - K	2x4	DRY	No.2	SPF
K - J	2x4	DRY	No.2	SPF
J - I	2x4	DRY	No.2	SPF
I - H	2x4	DRY	No.2	SPF
ALL WEBS EXCEPT	2x3	DRY	No.2	SPF
ALL GABLE WEBS	2x3	DRY	No.2	SPF

DRY: SEASONED LUMBER.

GABLE STUDS SPACED AT 2-0-0 OC.

PLATES (table is in inches)

JT	TYPE	PLATES	W	LEN	Y	X
B	TMVW-t	MT20	4.0	4.0	1.75	1.00
C	TMWW-t	MT20	3.0	4.0	1.50	1.50
D	TTW+p	MT20	3.0	5.0		
E	TMWW-t	MT20	3.0	4.0	1.50	1.50
F	TMVW-t	MT20	4.0	4.0	1.75	1.00
H	BMV1+p	MT20	2.0	4.0		
I	BBWW-p	MT20	4.0	6.0	2.00	4.00
J	BBWWW-p	MT20	5.0	6.0	2.75	3.00
K	BBWW-p	MT20	4.0	6.0	2.00	4.00
L	BMV1+p	MT20	2.0	4.0		
M, N, O, P, Q, R, S, T						
M	NP+w	MT20	2.0	4.0		

DIMENSIONS, SUPPORTS AND LOADINGS SPECIFIED BY FABRICATOR TO BE VERIFIED BY BUILDING DESIGNER

BEARINGS

JT	FACTORED GROSS REACTION VERT	HORZ	MAXIMUM FACTORED GROSS REACTION DOWN	HORZ	UPLIFT	INPUT BRG IN-SX	REQRD BRG IN-SX
L	705	0	705	0	0	5-8	5-8
H	705	0	705	0	0	5-8	5-8

UNFACTORED REACTIONS

JT	1ST LCASE COMBINED	MAX./MIN. COMPONENT REACTIONS SNOW	LIVE	PERM.LIVE	WIND	DEAD	SOIL
L	493	355 / 0	0 / 0	0 / 0	0 / 0	138 / 0	0 / 0
H	493	355 / 0	0 / 0	0 / 0	0 / 0	138 / 0	0 / 0

BEARING MATERIAL TO BE SPF NO.2 OR BETTER AT JOINT(S) L, H

BRACING
TOP CHORD TO BE SHEATHED OR MAX. PURLIN SPACING = 6.09 FT.
MAX. UNBRACED BOTTOM CHORD LENGTH = 10.00 FT OR RIGID CEILING DIRECTLY APPLIED.

ALL PITCH BREAKS AND PERIMETER CORNER JOINTS MUST BE LATERALLY RESTRAINED.

LOADING
TOTAL LOAD CASES: (4)

CHORDS

MEMB. FR-TO	MAX. FACTORED FORCE (LBS)	FACTORED VERT. LOAD (PLF) FROM	TO	LC1 CSI (LC)	MAX UNBRAC LENGTH
A- B	0 / 28	-77.4	-77.4	0.09 (1)	10.00
B- C	-503 / 0	-77.4	-77.4	0.19 (1)	6.25
C- D	-955 / 0	-77.4	-77.4	0.23 (1)	6.09
D- E	-955 / 0	-77.4	-77.4	0.23 (1)	6.09
E- F	-503 / 0	-77.4	-77.4	0.19 (1)	6.25
F- G	0 / 28	-77.4	-77.4	0.09 (1)	10.00
L- B	-692 / 0	0.0	0.0	0.07 (1)	7.81
H- F	-692 / 0	0.0	0.0	0.07 (1)	7.81
L- K	0 / 0	-18.2	-18.2	0.01 (4)	10.00
K- J	0 / 497	-18.3	-18.3	0.16 (4)	10.00
J- I	0 / 497	-18.3	-18.3	0.16 (4)	10.00
I- H	0 / 0	-18.2	-18.2	0.01 (4)	10.00

WEBS

MEMB. FR-TO	MAX. FACTORED FORCE (LBS)	MAX CSI (LC)
J- D	0 / 723	0.16 (1)
J- E	0 / 355	0.08 (1)
I- E	-512 / 0	0.08 (1)
C- J	0 / 355	0.08 (1)
K- C	-512 / 0	0.08 (1)
B- K	0 / 556	0.13 (1)
I- F	0 / 556	0.13 (1)

DESIGN CRITERIA

SPECIFIED LOADS:

TOP	CH.	LL	=	23.3	PSF
		DL	=	3.0	PSF
BOT	CH.	LL	=	0.0	PSF
		DL	=	7.3	PSF
TOTAL	LOAD		=	33.6	PSF

SPACING = 24.0 IN. C/C

THIS TRUSS IS DESIGNED FOR RESIDENTIAL OR SMALL BUILDING REQUIREMENTS OF PART 9, NBCC 2010

THIS DESIGN COMPLIES WITH:
- PART 9 OF OBC 2012 , BCBC 2012 , ABC 2014
- CSA 086-09
- TPIC 2011

DESIGN ASSUMPTIONS
-OVERHANG NOT TO BE ALTERED OR CUT OFF.

(55 % OF 27.2 P.S.F. G.S.L. PLUS 8.4 P.S.F. RAIN LOAD) EQUALS 23.3 P.S.F. SPECIFIED ROOF LIVE LOAD

ALLOWABLE DEFL.(LL)= L/360 (0.42")
CALCULATED VERT. DEFL.(LL) = L/ 999 (0.03")
ALLOWABLE DEFL.(TL)= L/360 (0.42")
CALCULATED VERT. DEFL.(TL) = L/ 999 (0.06")

CSI: TC=0.23/1.00 (C-D:1) , BC=0.16/1.00 (I-J:4) , WB=0.16/1.00 (D-J:1) , SSI=0.15/1.00 (C-D:1)

DOL LUMBER=1.00 NAIL=1.00 LS BEND=1.10 COMP=1.10 SHEAR=1.10 TENS= 1.10

COMPANION LIVE LOAD FACTOR = 0.50

TRUSS PLATE MANUFACTURER IS NOT RESPONSIBLE FOR QUALITY CONTROL IN THE TRUSS MANUFACTURING PLANT .

NAIL VALUES

PLATE	GRIP(DRY) (PSI) MAX	MIN	SHEAR (PLI) MAX	MIN	SECTION (PLI) MAX	MIN
MT20	618	354	1667	822	2284	1656

PLATE PLACEMENT TOL. = 0.250 inches

PLATE ROTATION TOL. = 0.5 Deg.

JSI GRIP= 0.89 (I) (INPUT = 0.90)
JSI METAL= 0.22 (E) (INPUT = 1.00)

LICENSED PROFESSIONAL ENGINEER
N.A. EL-MASRI
PROVINCE OF ONTARIO
May 31, 2018

READ ALL NOTES ON THIS PAGE AND ON ENGINEERING NOTE PAGE ENP-1. THIS NOTE PAGE IS AN INTEGRAL PART OF THIS DRAWING AS IT CONTAINS SPECIFICATIONS AND CRITERIA USED IN THE DESIGN OF THIS COMPONENT.

KOTT

JOB NAME	TRUSS NAME	QUANTITY	PLY	JOB DESC.		DRWG NO.
NE0518-227	T10	1	1	TRUSS DESC.	GREEN YORK HOMES - GRANELLI HOME CORP - AMELIA 12 ELE 1	PAGE 27 OF 45

Version 8.210 S Mar 12 2018 MiTek Industries, Inc. Thu May 31 18:08:24 2018 Page 1
ID:JiDzXONJoFa2AxdT?3zOcwzBMzn-IJE1?w1Bfr3NIbb12IjUsN5Uu3mj9?VEdP7yxwzAw4b

Scale = 1:33.5

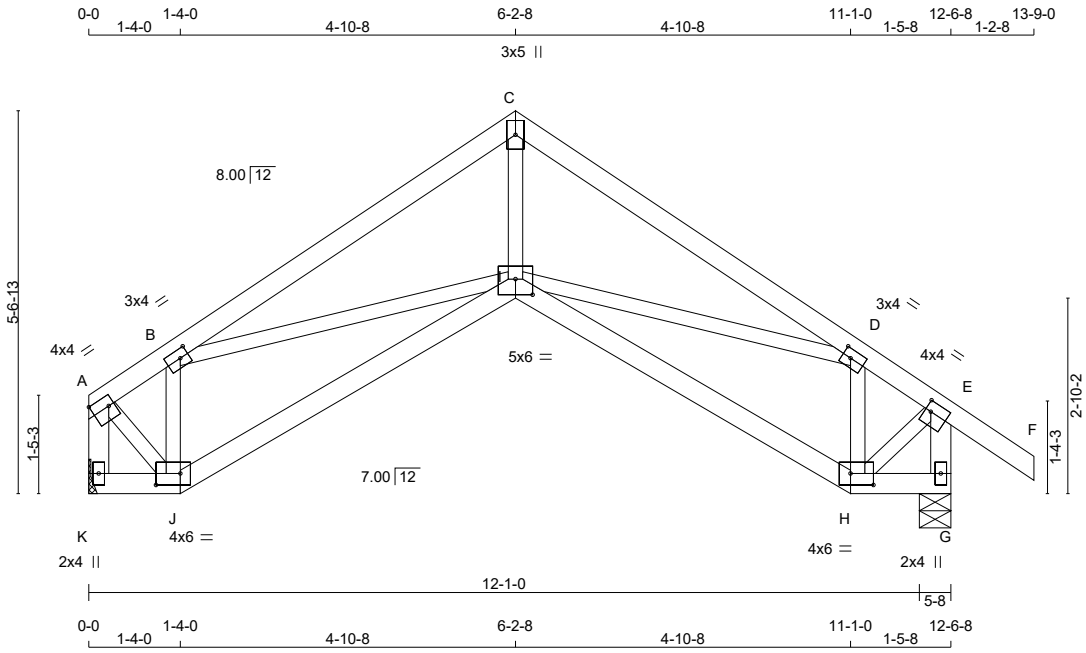

TOTAL WEIGHT = 52 lb

LUMBER
N. L. G. A. RULES

CHORDS	SIZE		LUMBER	DESCR.
A - C	2x4	DRY	No.2	SPF
C - F	2x4	DRY	No.2	SPF
K - A	2x4	DRY	No.2	SPF
G - E	2x4	DRY	No.2	SPF
K - J	2x4	DRY	No.2	SPF
J - I	2x4	DRY	No.2	SPF
I - H	2x4	DRY	No.2	SPF
H - G	2x4	DRY	No.2	SPF
ALL WEBS EXCEPT	2x3	DRY	No.2	SPF

DRY: SEASONED LUMBER.

PLATES (table is in inches)

JT	TYPE	PLATES	W	LEN	Y	X
A	TMVW-t	MT20	4.0	4.0	1.75	Edge
B	TMWW-t	MT20	3.0	4.0	1.50	1.50
C	TTW+p	MT20	3.0	5.0		
D	TMWW-t	MT20	3.0	4.0	1.50	1.50
E	TMVW-t	MT20	4.0	4.0	1.75	1.00
G	BMV1+p	MT20	2.0	4.0		
H	BBWW-p	MT20	4.0	6.0	2.00	4.00
I	BBWWW-p	MT20	5.0	6.0	2.75	3.00
J	BBWW-p	MT20	4.0	6.0	2.00	4.25
K	BMV1+p	MT20	2.0	4.0		

Edge - INDICATES REFERENCE CORNER OF PLATE TOUCHES EDGE OF CHORD.

DIMENSIONS, SUPPORTS AND LOADINGS SPECIFIED BY FABRICATOR TO BE VERIFIED BY BUILDING DESIGNER

BEARINGS

JT	FACTORED GROSS REACTION VERT	HORZ	MAXIMUM GROSS REACTION DOWN	FACTORED HORZ	UPLIFT	INPUT BRG IN-SX	REQRD BRG IN-SX
K	594	0	594	0	0	MECHANICAL	
G	704	0	704	0	0	5-8	5-8

A SUITABLE MECHANICAL CONNECTION IS REQUIRED AT JOINT K TO RESIST THE MAX FACTORED REACTIONS.

UNFACTORED REACTIONS

JT	1ST LCASE COMBINED	MAX./MIN. COMPONENT REACTIONS SNOW	LIVE	PERM.LIVE	WIND	DEAD	SOIL
K	418	289 / 0	0 / 0	0 / 0	0 / 0	129 / 0	0 / 0
G	493	355 / 0	0 / 0	0 / 0	0 / 0	137 / 0	0 / 0

BEARING MATERIAL TO BE SPF NO.2 OR BETTER AT JOINT(S) G

BRACING
TOP CHORD TO BE SHEATHED OR MAX. PURLIN SPACING = 6.09 FT.
MAX. UNBRACED BOTTOM CHORD LENGTH = 10.00 FT OR RIGID CEILING DIRECTLY APPLIED.

ALL PITCH BREAKS AND PERIMETER CORNER JOINTS MUST BE LATERALLY RESTRAINED.

LOADING
TOTAL LOAD CASES: (4)

CHORDS

MEMB. FR-TO	MAX. FACTORED FORCE (LBS)	FACTORED VERT. LOAD (PLF) FROM	TO	LC1	MAX CSI (LC)	MAX. UNBRAC LENGTH
A- B	-469 / 0	-77.4	-77.4	0.20 (1)	6.25	
B- C	-953 / 0	-77.4	-77.4	0.23 (1)	6.09	
C- D	-952 / 0	-77.4	-77.4	0.23 (1)	6.09	
D- E	-502 / 0	-77.4	-77.4	0.19 (1)	6.25	
E- F	0 / 28	-77.4	-77.4	0.09 (1)	10.00	
K- A	-582 / 0	0.0	0.0	0.06 (1)	7.81	
G- E	-691 / 0	0.0	0.0	0.07 (1)	7.81	
K- J	0 / 0	-18.2	-18.2	0.01 (4)	10.00	
J- I	0 / 496	-18.3	-18.3	0.16 (4)	10.00	
I- H	0 / 496	-18.3	-18.3	0.16 (4)	10.00	
H- G	0 / 0	-18.2	-18.2	0.01 (4)	10.00	

WEBS

MEMB. FR-TO	MAX. FACTORED FORCE (LBS)	MAX CSI (LC)
J- B	-573 / 0	0.09 (1)
B- I	0 / 354	0.08 (1)
I- C	0 / 722	0.16 (1)
I- D	0 / 354	0.08 (1)
H- D	-511 / 0	0.08 (1)
A- J	0 / 595	0.13 (1)
H- E	0 / 555	0.12 (1)

DESIGN CRITERIA [M][F]

SPECIFIED LOADS:

TOP	CH.	LL	=	23.3	PSF
		DL	=	3.0	PSF
BOT	CH.	LL	=	0.0	PSF
		DL	=	7.3	PSF
TOTAL	LOAD		=	33.6	PSF

SPACING = 24.0 IN. C/C

THIS TRUSS IS DESIGNED FOR RESIDENTIAL OR SMALL BUILDING REQUIREMENTS OF PART 9, NBCC 2010

THIS DESIGN COMPLIES WITH:
- PART 9 OF OBC 2012 , BCBC 2012 , ABC 2014
- CSA 086-09
- TPIC 2011

DESIGN ASSUMPTIONS
-OVERHANG NOT TO BE ALTERED OR CUT OFF.

(55 % OF 27.2 P.S.F. G.S.L. PLUS 8.4 P.S.F. RAIN LOAD) EQUALS 23.3 P.S.F. SPECIFIED ROOF LIVE LOAD

ALLOWABLE DEFL.(LL)= L/360 (0.42")
CALCULATED VERT. DEFL.(LL) = L/ 999 (0.03")
ALLOWABLE DEFL.(TL)= L/360 (0.42")
CALCULATED VERT. DEFL.(TL) = L/ 999 (0.06")

CSI: TC=0.23/1.00 (C-D:1) , BC=0.16/1.00 (H-I:4) , WB=0.16/1.00 (C-I:1) , SSI=0.15/1.00 (B-C:1)

DOL LUMBER=1.00 NAIL=1.00 LS BEND=1.10 COMP=1.10 SHEAR=1.10 TENS= 1.10

COMPANION LIVE LOAD FACTOR = 0.50

TRUSS PLATE MANUFACTURER IS NOT RESPONSIBLE FOR QUALITY CONTROL IN THE TRUSS MANUFACTURING PLANT .

NAIL VALUES

PLATE	GRIP(DRY) (PSI) MAX	MIN	SHEAR (PLI) MAX	MIN	SECTION (PLI) MAX	MIN
MT20	618	354	1667	822	2284	1656

PLATE PLACEMENT TOL. = 0.250 inches

PLATE ROTATION TOL. = 5.0 Deg.

JSI GRIP= 0.89 (H) (INPUT = 0.90)
JSI METAL= 0.23 (B) (INPUT = 1.00)

LICENSED PROFESSIONAL ENGINEER
N.A. EL-MASRI
PROVINCE OF ONTARIO
May 31, 2018

READ ALL NOTES ON THIS PAGE AND ON ENGINEERING NOTE PAGE ENP-1. THIS NOTE PAGE IS AN INTEGRAL PART OF THIS DRAWING AS IT CONTAINS SPECIFICATIONS AND CRITERIA USED IN THE DESIGN OF THIS COMPONENT.

KOTT

JOB NAME	TRUSS NAME	QUANTITY	PLY	JOB DESC.	DRWG NO.
NE0518-227	T11	2	1	GREEN YORK HOMES - GRANELLI HOME CORP - AMELIA 12 ELE 1 TRUSS DESC.	PAGE 28 OF 45

Version 8.210 S Mar 12 2018 MiTek Industries, Inc. Thu May 31 18:08:25 2018 Page 1
ID:JiDzXONJoFa2AxdT?3zOcwzBMzn-mWoQCG2qQ9BEwl9Ec?EjPbdcyT5GuTyOs3tVTMzAw4a

Scale = 1:33.5

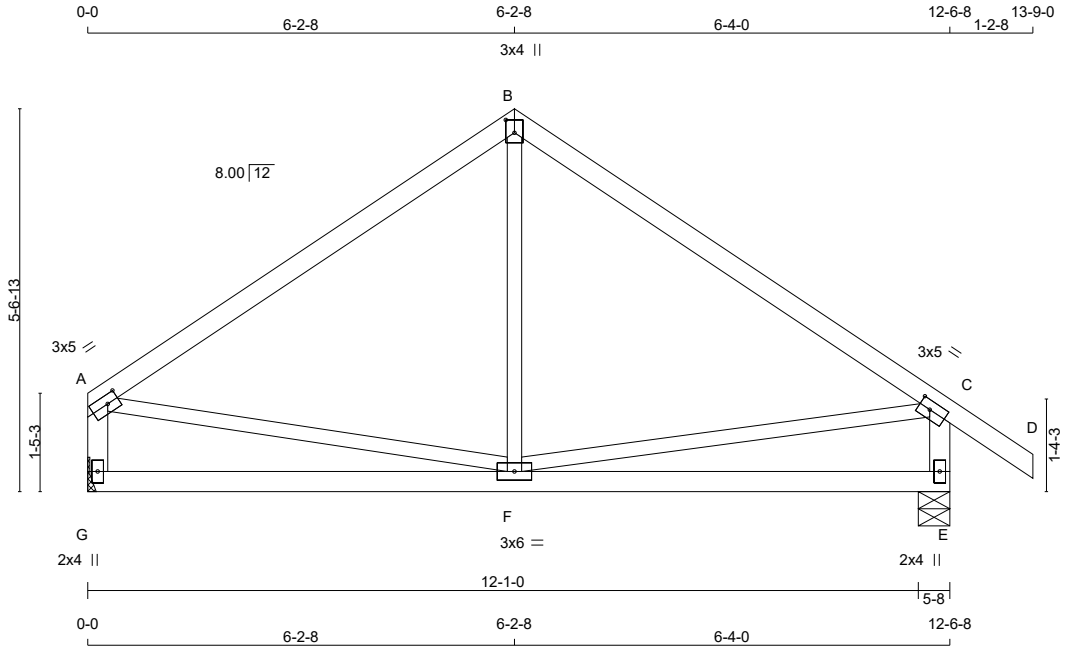

TOTAL WEIGHT = 2 X 49 = 99 lb

LUMBER
N. L. G. A. RULES

CHORDS	SIZE		LUMBER	DESCR.
A - B	2x4	DRY	No.2	SPF
B - D	2x4	DRY	No.2	SPF
G - A	2x4	DRY	No.2	SPF
E - C	2x4	DRY	No.2	SPF
G - E	2x4	DRY	No.2	SPF
ALL WEBS EXCEPT	2x3	DRY	No.2	SPF

DRY: SEASONED LUMBER.

PLATES (table is in inches)

JT	TYPE	PLATES	W	LEN	Y	X
A	TMVW-t	MT20	3.0	5.0	1.50	2.00
B	TTW+p	MT20	3.0	4.0	2.25	1.50
C	TMVW-t	MT20	3.0	5.0	1.50	2.00
E	BMV1+p	MT20	2.0	4.0		
F	BMWWW-t	MT20	3.0	6.0		
G	BMV1+p	MT20	2.0	4.0		

DIMENSIONS, SUPPORTS AND LOADINGS SPECIFIED BY FABRICATOR TO BE VERIFIED BY BUILDING DESIGNER

BEARINGS

JT	FACTORED GROSS REACTION VERT	HORZ	MAXIMUM GROSS REACTION DOWN	HORZ	FACTORED UPLIFT	INPUT BRG IN-SX	REQRD BRG IN-SX
G	600	0	600	0	0	MECHANICAL	
E	699	0	699	0	0	5-8	5-8

A SUITABLE MECHANICAL CONNECTION IS REQUIRED AT JOINT G TO RESIST THE MAX FACTORED REACTIONS.

UNFACTORED REACTIONS

JT	1ST LCASE COMBINED	MAX./MIN. COMPONENT REACTIONS SNOW	LIVE	PERM.LIVE	WIND	DEAD	SOIL
G	421	292 / 0	0 / 0	0 / 0	0 / 0	129 / 0	0 / 0
E	489	352 / 0	0 / 0	0 / 0	0 / 0	137 / 0	0 / 0

BEARING MATERIAL TO BE SPF NO.2 OR BETTER AT JOINT(S) E

BRACING
TOP CHORD TO BE SHEATHED OR MAX. PURLIN SPACING = 6.25 FT.
MAX. UNBRACED BOTTOM CHORD LENGTH = 10.00 FT OR RIGID CEILING DIRECTLY APPLIED.

ALL PITCH BREAKS AND PERIMETER CORNER JOINTS MUST BE LATERALLY RESTRAINED.

LOADING
TOTAL LOAD CASES: (4)

CHORDS

MEMB. FR-TO	MAX. FACTORED FORCE (LBS)	FACTORED VERT. LOAD (PLF) FROM	TO	LC1 MAX CSI (LC)	MAX. UNBRAC LENGTH
A- B	-450 / 0	-77.4	-77.4	0.39 (1)	6.25
B- C	-450 / 0	-77.4	-77.4	0.40 (1)	6.25
C- D	0 / 28	-77.4	-77.4	0.09 (1)	10.00
G- A	-557 / 0	0.0	0.0	0.06 (1)	7.81
E- C	-655 / 0	0.0	0.0	0.07 (1)	7.81
G- F	0 / 0	-18.2	-18.2	0.21 (4)	10.00
F- E	0 / 0	-18.2	-18.2	0.21 (4)	10.00

WEBS

MEMB. FR-TO	MAX. FACTORED FORCE (LBS)	MAX CSI (LC)
F- B	0 / 116	0.04 (4)
A- F	0 / 380	0.09 (1)
F- C	0 / 379	0.09 (1)

DESIGN CRITERIA [M][F]

SPECIFIED LOADS:

TOP	CH.	LL	=	23.3	PSF
		DL	=	3.0	PSF
BOT	CH.	LL	=	0.0	PSF
		DL	=	7.3	PSF
TOTAL	LOAD		=	33.6	PSF

SPACING = 24.0 IN. C/C

THIS TRUSS IS DESIGNED FOR RESIDENTIAL OR SMALL BUILDING REQUIREMENTS OF PART 9, NBCC 2010

THIS DESIGN COMPLIES WITH:
- PART 9 OF OBC 2012 , BCBC 2012 , ABC 2014
- CSA 086-09
- TPIC 2011

(55 % OF 27.2 P.S.F. G.S.L. PLUS 8.4 P.S.F. RAIN LOAD) EQUALS 23.3 P.S.F. SPECIFIED ROOF LIVE LOAD

ALLOWABLE DEFL.(LL)= L/360 (0.42")
CALCULATED VERT. DEFL.(LL) = L/ 999 (0.01")
ALLOWABLE DEFL.(TL)= L/360 (0.42")
CALCULATED VERT. DEFL.(TL) = L/ 999 (0.04")

CSI: TC=0.40/1.00 (B-C:1) , BC=0.21/1.00 (F-G:4) , WB=0.09/1.00 (A-F:1) , SSI=0.16/1.00 (B-C:1)

DOL LUMBER=1.00 NAIL=1.00 LS BEND=1.10 COMP=1.10 SHEAR=1.10 TENS= 1.10

COMPANION LIVE LOAD FACTOR = 0.50

TRUSS PLATE MANUFACTURER IS NOT RESPONSIBLE FOR QUALITY CONTROL IN THE TRUSS MANUFACTURING PLANT .

NAIL VALUES

PLATE	GRIP(DRY) (PSI) MAX	MIN	SHEAR (PLI) MAX	MIN	SECTION (PLI) MAX	MIN
MT20	618	354	1667	822	2284	1656

PLATE PLACEMENT TOL. = 0.250 inches

PLATE ROTATION TOL. = 5.0 Deg.

JSI GRIP= 0.82 (F) (INPUT = 0.90)
JSI METAL= 0.19 (C) (INPUT = 1.00)

LICENSED PROFESSIONAL ENGINEER
N.A. EL-MASRI
PROVINCE OF ONTARIO
May 31, 2018

READ ALL NOTES ON THIS PAGE AND ON ENGINEERING NOTE PAGE ENP-1. THIS NOTE PAGE IS AN INTEGRAL PART OF THIS DRAWING AS IT CONTAINS SPECIFICATIONS AND CRITERIA USED IN THE DESIGN OF THIS COMPONENT.

KOTT

JOB NAME	TRUSS NAME	QUANTITY	PLY	JOB DESC.		DRWG NO.
NE0518-227	T12	3	1	TRUSS DESC.	GREEN YORK HOMES - GRANELLI HOME CORP - AMELIA 12 ELE 1	PAGE 29 OF 45

Version 8.210 S Mar 12 2018 MiTek Industries, Inc. Thu May 31 18:08:25 2018 Page 1
ID:JiDzXONJoFa2AxdT?3zOcwzBMzn-mWoQCG2qQ9BEwl9Ec?EjPbdZRT3EuPHOs3tVTMzAw4a

Scale = 1:65.4

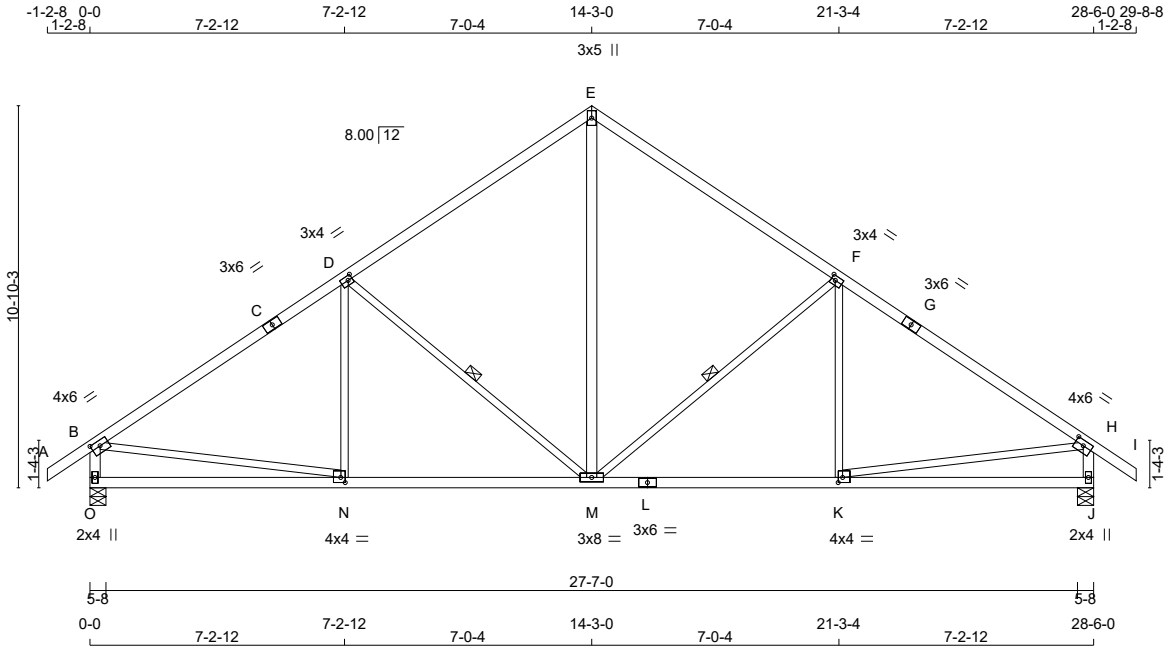

TOTAL WEIGHT = 3 X 124 = 371 lb

LUMBER

N. L. G. A. RULES

CHORDS	SIZE		LUMBER	DESCR.
A - C	2x4	DRY	No.2	SPF
C - E	2x4	DRY	No.2	SPF
E - G	2x4	DRY	No.2	SPF
G - I	2x4	DRY	No.2	SPF
O - B	2x4	DRY	No.2	SPF
J - H	2x4	DRY	No.2	SPF
O - L	2x4	DRY	No.2	SPF
L - J	2x4	DRY	No.2	SPF
ALL WEBS	2x3	DRY	No.2	SPF
EXCEPT				
M - E	2x4	DRY	No.2	SPF

DRY: SEASONED LUMBER.

PLATES (table is in inches)

JT	TYPE	PLATES	W	LEN	Y	X
B	TMVW-t	MT20	4.0	6.0	1.75	3.00
C	TS-t	MT20	3.0	6.0		
D	TMWW-t	MT20	3.0	4.0	1.50	1.50
E	TTW+p	MT20	3.0	5.0		
F	TMWW-t	MT20	3.0	4.0	1.50	1.50
G	TS-t	MT20	3.0	6.0		
H	TMVW-t	MT20	4.0	6.0	1.75	3.00
J	BMV1+p	MT20	2.0	4.0		
K	BMWW-t	MT20	4.0	4.0	1.75	1.50
L	BS-t	MT20	3.0	6.0		
M	BMWWW-t	MT20	3.0	8.0		
N	BMWW-t	MT20	4.0	4.0	1.75	1.50
O	BMV1+p	MT20	2.0	4.0		

DIMENSIONS, SUPPORTS AND LOADINGS SPECIFIED BY FABRICATOR TO BE VERIFIED BY BUILDING DESIGNER

BEARINGS

JT	FACTORED GROSS REACTION VERT	HORZ	MAXIMUM FACTORED GROSS REACTION DOWN	HORZ	UPLIFT	INPUT BRG IN-SX	REQRD BRG IN-SX
O	1462	0	1462	0	0	5-8	5-8
J	1462	0	1462	0	0	5-8	5-8

UNFACTORED REACTIONS

JT	1ST LCASE COMBINED	MAX./MIN. COMPONENT REACTIONS SNOW	LIVE	PERM.LIVE	WIND	DEAD	SOIL
O	1025	724 / 0	0 / 0	0 / 0	0 / 0	301 / 0	0 / 0
J	1025	724 / 0	0 / 0	0 / 0	0 / 0	301 / 0	0 / 0

BEARING MATERIAL TO BE SPF NO.2 OR BETTER AT JOINT(S) O, J

BRACING

TOP CHORD TO BE SHEATHED OR MAX. PURLIN SPACING = 4.50 FT.
MAX. UNBRACED BOTTOM CHORD LENGTH = 10.00 FT OR RIGID CEILING DIRECTLY APPLIED.

ALL PITCH BREAKS AND PERIMETER CORNER JOINTS MUST BE LATERALLY RESTRAINED.

1 - 1x4 LATERAL BRACE(S) AT 1/ 2 LENGTH OF F-M, D-M. DBS = 20-0-0 . CBF = 69 LBS.

DBS = DIAGONAL BRACE SPACING (MAX). CBF = CUMULATIVE BRACING FORCE (PER BRACE). FASTEN LATERAL BRACE(S) USING (0.122"X3") SPIRAL NAILS : 1 NAIL FOR 2x3 BRACE(S), 2 FOR 1x4, 2x4, 2x5, 3 FOR 2x6, 4 FOR 2x8, 5 FOR 2x10, AND 6 FOR 2x12.

END VERTICAL(S) MUST BE SHEATHED OR HAVE BRACES AS INDICATED IN THE MAX. UNBRACED LENGTH COLUMN OF THE TABLE BELOW

LOADING

TOTAL LOAD CASES: (4)

CHORDS

MEMB. FR-TO	MAX. FACTORED FORCE (LBS)	FACTORED VERT. LOAD (PLF) FROM	TO	LC1 CSI (LC)	MAX MAX. UNBRAC LENGTH
A- B	0 / 28	-77.4	-77.4	0.09 (1)	10.00
B- C	-1591 / 0	-77.4	-77.4	0.63 (1)	4.50
C- D	-1591 / 0	-77.4	-77.4	0.63 (1)	4.50
D- E	-1154 / 0	-77.4	-77.4	0.56 (1)	5.16
E- F	-1154 / 0	-77.4	-77.4	0.56 (1)	5.16
F- G	-1591 / 0	-77.4	-77.4	0.63 (1)	4.50
G- H	-1591 / 0	-77.4	-77.4	0.63 (1)	4.50
H- I	0 / 28	-77.4	-77.4	0.09 (1)	10.00
O- B	-1408 / 0	0.0	0.0	0.14 (1)	6.87
J- H	-1408 / 0	0.0	0.0	0.14 (1)	6.87
O- N	0 / 0	-18.2	-18.2	0.23 (4)	10.00
N- M	0 / 1354	-18.2	-18.2	0.34 (1)	10.00
M- L	0 / 1354	-18.2	-18.2	0.34 (1)	10.00
L- K	0 / 1354	-18.2	-18.2	0.34 (1)	10.00
K- J	0 / 0	-18.2	-18.2	0.23 (4)	10.00

WEBS

MEMB. FR-TO	MAX. FACTORED FORCE (LBS)	MAX CSI (LC)
M- E	0 / 832	0.13 (1)
M- F	-554 / 0	0.32 (1)
K- F	-47 / 108	0.04 (4)
D- M	-554 / 0	0.32 (1)
N- D	-47 / 108	0.04 (4)
B- N	0 / 1368	0.31 (1)
K- H	0 / 1368	0.31 (1)

DESIGN CRITERIA

SPECIFIED LOADS:

TOP	CH.	LL	=	23.3	PSF
		DL	=	3.0	PSF
BOT	CH.	LL	=	0.0	PSF
		DL	=	7.3	PSF
TOTAL	LOAD		=	33.6	PSF

SPACING = 24.0 IN. C/C

THIS TRUSS IS DESIGNED FOR RESIDENTIAL OR SMALL BUILDING REQUIREMENTS OF PART 9, NBCC 2010

THIS DESIGN COMPLIES WITH:
- PART 9 OF OBC 2012 , BCBC 2012 , ABC 2014
- CSA 086-09
- TPIC 2011

(55 % OF 27.2 P.S.F. G.S.L. PLUS 8.4 P.S.F. RAIN LOAD) EQUALS 23.3 P.S.F. SPECIFIED ROOF LIVE LOAD

ALLOWABLE DEFL.(LL)= L/360 (0.95")
CALCULATED VERT. DEFL.(LL) = L/ 999 (0.06")
ALLOWABLE DEFL.(TL)= L/360 (0.95")
CALCULATED VERT. DEFL.(TL) = L/ 999 (0.12")

CSI: TC=0.63/1.00 (F-H:1) , BC=0.34/1.00 (K-M:1) , WB=0.32/1.00 (F-M:1) , SSI=0.22/1.00 (B-D:1)

DOL LUMBER=1.00 NAIL=1.00 LS BEND=1.10 COMP=1.10 SHEAR=1.10 TENS= 1.10

COMPANION LIVE LOAD FACTOR = 0.50

TRUSS PLATE MANUFACTURER IS NOT RESPONSIBLE FOR QUALITY CONTROL IN THE TRUSS MANUFACTURING PLANT .

NAIL VALUES

PLATE	GRIP(DRY) (PSI) MAX	MIN	SHEAR (PLI) MAX	MIN	SECTION (PLI) MAX	MIN
MT20	618	354	1667	822	2284	1656

PLATE PLACEMENT TOL. = 0.250 inches

PLATE ROTATION TOL. = 5.0 Deg.

JSI GRIP= 0.90 (N) (INPUT = 0.90)
JSI METAL= 0.51 (N) (INPUT = 1.00)

LICENSED PROFESSIONAL ENGINEER
N.A. EL-MASRI
PROVINCE OF ONTARIO
May 31, 2018

READ ALL NOTES ON THIS PAGE AND ON ENGINEERING NOTE PAGE ENP-1. THIS NOTE PAGE IS AN INTEGRAL PART OF THIS DRAWING AS IT CONTAINS SPECIFICATIONS AND CRITERIA USED IN THE DESIGN OF THIS COMPONENT.

KOTT

JOB NAME	TRUSS NAME	QUANTITY	PLY	JOB DESC.		DRWG NO.
NE0518-227	T13	1	1	TRUSS DESC.	GREEN YORK HOMES - GRANELLI HOME CORP - AMELIA 12 ELE 1	PAGE 30 OF 45

Version 8.210 S Mar 12 2018 MiTek Industries, Inc. Thu May 31 18:08:26 2018 Page 1
ID:JiDzXONJoFa2AxdT?3zOcwzBMzn-EiMoQc3SBSJ5YvkQAjlyxoAmFsOidqzX5jc20ozAw4Z

Scale = 1:33.2

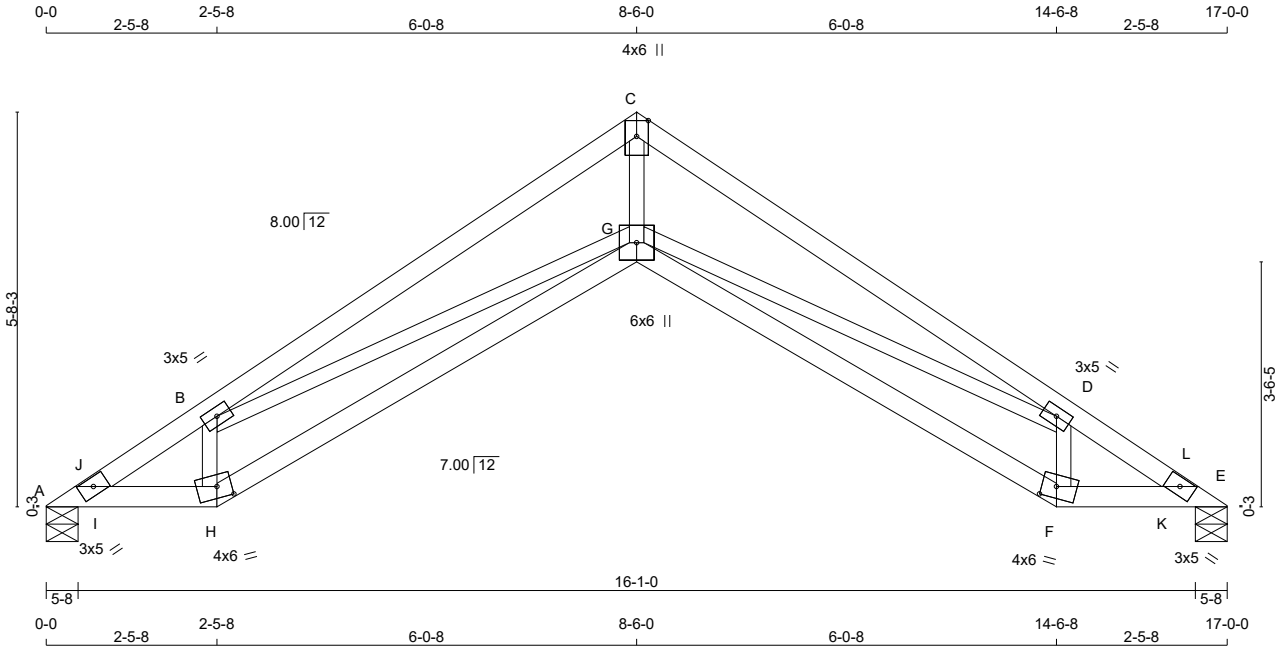

TOTAL WEIGHT = 58 lb

LUMBER
N. L. G. A. RULES

CHORDS	SIZE		LUMBER	DESCR.
A - C	2x4	DRY	No.2	SPF
C - E	2x4	DRY	No.2	SPF
A - H	2x4	DRY	No.2	SPF
H - G	2x4	DRY	No.2	SPF
G - F	2x4	DRY	No.2	SPF
F - E	2x4	DRY	No.2	SPF
ALL WEBS	2x3	DRY	No.2	SPF

DRY: SEASONED LUMBER.

GABLE STUDS SPACED AT 2-0-0 OC.

PLATES (table is in inches)

JT	TYPE	PLATES	W	LEN	Y	X
A	TBM1-h	MT20	3.0	5.0		
B	TMWW-t	MT20	3.0	5.0		
C	TTW+p	MT20	4.0	6.0	2.75	2.00
D	TMWW-t	MT20	3.0	5.0		
E	TBM1-h	MT20	3.0	5.0		
F	BBW-m	MT20	4.0	6.0	2.00	2.50
G	BBWWW+p	MT20	6.0	6.0		
H	BBW-m	MT20	4.0	6.0	2.00	2.50

DIMENSIONS, SUPPORTS AND LOADINGS SPECIFIED BY FABRICATOR TO BE VERIFIED BY BUILDING DESIGNER

BEARINGS

JT	FACTORED GROSS REACTION VERT	HORZ	MAXIMUM FACTORED GROSS REACTION DOWN	HORZ	UPLIFT	INPUT BRG IN-SX	REQRD BRG IN-SX
A	813	0	813	0	0	5-8	5-8
E	813	0	813	0	0	5-8	5-8

UNFACTORED REACTIONS

JT	1ST LCASE COMBINED	MAX./MIN. COMPONENT REACTIONS SNOW	LIVE	PERM.LIVE	WIND	DEAD	SOIL
A	571	396 / 0	0 / 0	0 / 0	0 / 0	175 / 0	0 / 0
E	571	396 / 0	0 / 0	0 / 0	0 / 0	175 / 0	0 / 0

BEARING MATERIAL TO BE SPF NO.2 OR BETTER AT JOINT(S) A, E

BRACING
TOP CHORD TO BE SHEATHED OR MAX. PURLIN SPACING = 4.08 FT.
MAX. UNBRACED BOTTOM CHORD LENGTH = 10.00 FT OR RIGID CEILING DIRECTLY APPLIED.

ALL PITCH BREAKS AND PERIMETER CORNER JOINTS MUST BE LATERALLY RESTRAINED.

LOADING
TOTAL LOAD CASES: (4)

CHORDS

MEMB. FR-TO	MAX. FACTORED FORCE (LBS)	FACTORED VERT. LOAD (PLF) FROM	TO	LC1 CSI (LC)	MAX UNBRAC LENGTH
A- J	-1825 / 0	-77.4	-77.4	0.20 (1)	4.77
J- B	-1718 / 0	-77.4	-77.4	0.34 (1)	4.72
B- C	-2317 / 0	-77.4	-77.4	0.49 (1)	4.08
C- D	-2317 / 0	-77.4	-77.4	0.49 (1)	4.08
D- L	-1718 / 0	-77.4	-77.4	0.34 (1)	4.72
L- E	-1825 / 0	-77.4	-77.4	0.20 (1)	4.77
A- I	0 / 1580	-18.2	-18.2	0.38 (1)	10.00
I- H	0 / 1576	-18.3	-18.3	0.38 (1)	10.00
H- G	0 / 1682	-18.2	-18.2	0.38 (1)	10.00
G- F	0 / 1682	-18.2	-18.2	0.38 (1)	10.00
F- K	0 / 1576	-18.3	-18.3	0.38 (1)	10.00
K- E	0 / 1580	-18.3	-18.3	0.38 (1)	10.00

WEBS

MEMB. FR-TO	MAX. FACTORED FORCE (LBS)	MAX CSI (LC)
G- C	0 / 2152	0.48 (1)
G- D	0 / 485	0.11 (1)
F- D	-721 / 0	0.10 (1)
B- G	0 / 485	0.11 (1)
H- B	-721 / 0	0.10 (1)
I- J	0 / 118	0.00 (1)
K- L	0 / 118	0.00 (1)

DESIGN CRITERIA

SPECIFIED LOADS:

TOP	CH.	LL	=	23.3	PSF
		DL	=	3.0	PSF
BOT	CH.	LL	=	0.0	PSF
		DL	=	7.3	PSF
TOTAL	LOAD		=	33.6	PSF

SPACING = 24.0 IN. C/C

THIS TRUSS IS DESIGNED FOR RESIDENTIAL OR SMALL BUILDING REQUIREMENTS OF PART 9, NBCC 2010

THIS DESIGN COMPLIES WITH:
- PART 9 OF OBC 2012 , BCBC 2012 , ABC 2014
- CSA 086-09
- TPIC 2011

(55 % OF 27.2 P.S.F. G.S.L. PLUS 8.4 P.S.F. RAIN LOAD) EQUALS 23.3 P.S.F. SPECIFIED ROOF LIVE LOAD

ALLOWABLE DEFL.(LL)= L/360 (0.57")
CALCULATED VERT. DEFL.(LL) = L/ 999 (0.14")
ALLOWABLE DEFL.(TL)= L/360 (0.57")
CALCULATED VERT. DEFL.(TL) = L/ 767 (0.27")

CSI: TC=0.49/1.00 (C-D:1) , BC=0.38/1.00 (A-I:1) , WB=0.48/1.00 (C-G:1) , SSI=0.24/1.00 (B-J:1)

DOL LUMBER=1.00 NAIL=1.00 LS BEND=1.10 COMP=1.10 SHEAR=1.10 TENS= 1.10

COMPANION LIVE LOAD FACTOR = 0.50

TRUSS PLATE MANUFACTURER IS NOT RESPONSIBLE FOR QUALITY CONTROL IN THE TRUSS MANUFACTURING PLANT .

NAIL VALUES

PLATE	GRIP(DRY) (PSI) MAX	MIN	SHEAR (PLI) MAX	MIN	SECTION (PLI) MAX	MIN
MT20	618	354	1667	822	2284	1656

PLATE PLACEMENT TOL. = 0.250 inches

PLATE ROTATION TOL. = 5.0 Deg.

JSI GRIP= 0.89 (C) (INPUT = 0.90)
JSI METAL= 0.65 (E) (INPUT = 1.00)

LICENSED PROFESSIONAL ENGINEER
N.A. EL-MASRI
PROVINCE OF ONTARIO
May 31, 2018

READ ALL NOTES ON THIS PAGE AND ON ENGINEERING NOTE PAGE ENP-1. THIS NOTE PAGE IS AN INTEGRAL PART OF THIS DRAWING AS IT CONTAINS SPECIFICATIONS AND CRITERIA USED IN THE DESIGN OF THIS COMPONENT.

KOTT

JOB NAME	TRUSS NAME	QUANTITY	PLY	JOB DESC.		DRWG NO.
NE0518-227	T14	1	1	TRUSS DESC.	GREEN YORK HOMES - GRANELLI HOME CORP - AMELIA 12 ELE 1	PAGE 31 OF 45

Version 8.210 S Mar 12 2018 MiTek Industries, Inc. Thu May 31 18:08:27 2018 Page 1
ID:JiDzXONJoFa2AxdT?3zOcwzBMzn-juwAdy44ymRy93JckQGBU0j0kGkyMHOhJNMcYEzAw4Y

Scale = 1:35.2

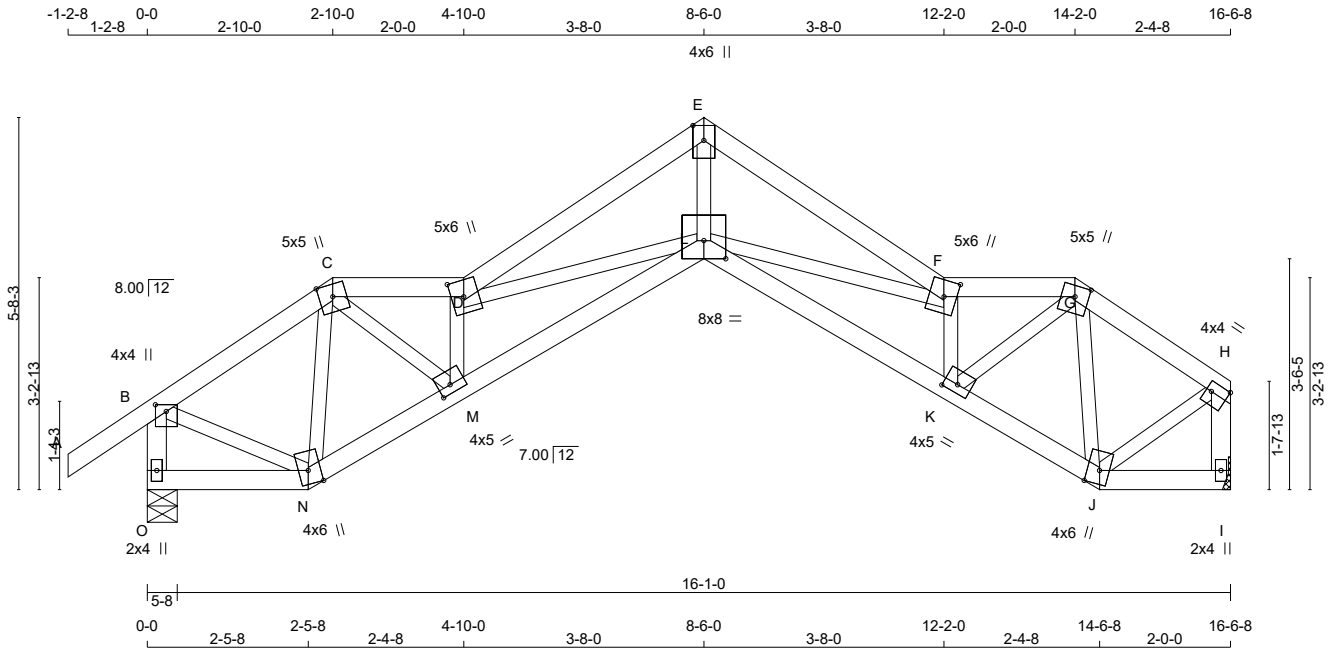

TOTAL WEIGHT = 69 lb

LUMBER
N. L. G. A. RULES

CHORDS	SIZE		LUMBER	DESCR.
A - C	2x4	DRY	No.2	SPF
C - D	2x4	DRY	No.2	SPF
D - E	2x4	DRY	No.2	SPF
E - F	2x4	DRY	No.2	SPF
F - G	2x4	DRY	No.2	SPF
G - H	2x4	DRY	No.2	SPF
O - B	2x4	DRY	No.2	SPF
I - H	2x4	DRY	No.2	SPF
O - N	2x4	DRY	No.2	SPF
N - L	2x4	DRY	No.2	SPF
L - J	2x4	DRY	No.2	SPF
J - I	2x4	DRY	No.2	SPF
ALL WEBS EXCEPT	2x3	DRY	No.2	SPF

DRY: SEASONED LUMBER.

PLATES (table is in inches)

JT	TYPE	PLATES	W	LEN	Y	X
B	TMVW+p	MT20	4.0	4.0	1.25	2.00
C	TTWW+m	MT20	5.0	5.0	Edge	
D	TTWW+m	MT20	5.0	6.0	3.00	2.25
E	TTW+p	MT20	4.0	6.0	2.75	2.00
F	TTWW+m	MT20	5.0	6.0	3.00	2.25
G	TTWW+m	MT20	5.0	5.0	2.00	2.50
H	TMVW-t	MT20	4.0	4.0	1.75	Edge
I	BMV1+p	MT20	2.0	4.0		
J	BBWW+m	MT20	4.0	6.0	Edge	2.25
K	BMWW-t	MT20	4.0	5.0	1.50	2.50
L	BBWWW-p	MT20	8.0	8.0	3.25	4.00
M	BMWW-t	MT20	4.0	5.0	1.50	2.25
N	BBWW+m	MT20	4.0	6.0	Edge	2.25
O	BMV1+p	MT20	2.0	4.0		

Edge - INDICATES REFERENCE CORNER OF PLATE TOUCHES EDGE OF CHORD.

LICENSED PROFESSIONAL ENGINEER
N.A. EL-MASRI
PROVINCE OF ONTARIO
May 31, 2018

READ ALL NOTES ON THIS PAGE AND ON ENGINEERING NOTE PAGE ENP-1. THIS NOTE PAGE IS AN INTEGRAL PART OF THIS DRAWING AS IT CONTAINS SPECIFICATIONS AND CRITERIA USED IN THE DESIGN OF THIS COMPONENT.

DIMENSIONS, SUPPORTS AND LOADINGS SPECIFIED BY FABRICATOR TO BE VERIFIED BY BUILDING DESIGNER

BEARINGS

JT	FACTORED GROSS REACTION VERT	HORZ	MAXIMUM FACTORED GROSS REACTION DOWN	HORZ	UPLIFT	INPUT BRG IN-SX	REQRD BRG IN-SX
O	891	0	891	0	0	5-8	5-8
I	791	0	791	0	0	MECHANICAL	

A SUITABLE MECHANICAL CONNECTION IS REQUIRED AT JOINT I TO RESIST THE MAX FACTORED REACTIONS.

UNFACTORED REACTIONS

JT	1ST LCASE COMBINED	MAX./MIN. COMPONENT REACTIONS SNOW	LIVE	PERM.LIVE	WIND	DEAD	SOIL
O	623	445 / 0	0 / 0	0 / 0	0 / 0	178 / 0	0 / 0
I	556	385 / 0	0 / 0	0 / 0	0 / 0	170 / 0	0 / 0

BEARING MATERIAL TO BE SPF NO.2 OR BETTER AT JOINT(S) O

BRACING
TOP CHORD TO BE SHEATHED OR MAX. PURLIN SPACING = 4.48 FT.
MAX. UNBRACED BOTTOM CHORD LENGTH = 10.00 FT OR RIGID CEILING DIRECTLY APPLIED.

ALL PITCH BREAKS AND PERIMETER CORNER JOINTS MUST BE LATERALLY RESTRAINED.

LOADING
TOTAL LOAD CASES: (4)

CHORDS

MEMB. FR-TO	MAX. FACTORED FORCE (LBS)	FACTORED VERT. LOAD (PLF) FROM	TO	LC1 MAX CSI (LC)	MAX. UNBRAC LENGTH
A- B	0 / 28	-77.4	-77.4	0.09 (1)	10.00
B- C	-732 / 0	-77.4	-77.4	0.09 (1)	6.25
C- D	-1674 / 0	-77.4	-77.4	0.07 (1)	5.09
D- E	-2163 / 0	-77.4	-77.4	0.19 (1)	4.48
E- F	-2163 / 0	-77.4	-77.4	0.19 (1)	4.48
F- G	-1571 / 0	-77.4	-77.4	0.06 (1)	5.22
G- H	-615 / 0	-77.4	-77.4	0.06 (1)	6.25
O- B	-868 / 0	0.0	0.0	0.09 (1)	7.81
I- H	-773 / 0	0.0	0.0	0.08 (1)	7.81
O- N	0 / 0	-18.2	-18.2	0.03 (4)	10.00
N- M	0 / 792	-18.2	-18.2	0.15 (1)	10.00
M- L	0 / 2047	-18.2	-18.2	0.38 (1)	10.00
L- K	0 / 1927	-18.3	-18.3	0.36 (1)	10.00
K- J	0 / 686	-18.2	-18.2	0.14 (1)	10.00
J- I	0 / 0	-18.3	-18.3	0.02 (4)	10.00

WEBS

MEMB. FR-TO	MAX. FACTORED FORCE (LBS)	MAX CSI (LC)
N- C	-609 / 0	0.11 (1)
C- M	0 / 1288	0.29 (1)
M- D	-1411 / 0	0.21 (1)
D- L	0 / 37	0.01 (1)
L- E	0 / 2106	0.47 (1)
L- F	0 / 142	0.03 (1)
K- F	-1393 / 0	0.20 (1)
K- G	0 / 1274	0.29 (1)
G- J	-647 / 0	0.12 (1)
B- N	0 / 657	0.15 (1)
J- H	0 / 612	0.14 (1)

[M][F]

DESIGN CRITERIA

SPECIFIED LOADS:

TOP	CH.	LL	=	23.3	PSF
		DL	=	3.0	PSF
BOT	CH.	LL	=	0.0	PSF
		DL	=	7.3	PSF
TOTAL	LOAD		=	33.6	PSF

SPACING = 24.0 IN. C/C

LOADING IN ALL FLAT SECTIONS BASED ON A SLOPE OF 2.00/12 MINIMUM

THIS TRUSS IS DESIGNED FOR RESIDENTIAL OR SMALL BUILDING REQUIREMENTS OF PART 9, NBCC 2010

THIS DESIGN COMPLIES WITH:
- PART 9 OF OBC 2012 , BCBC 2012 , ABC 2014
- CSA 086-09
- TPIC 2011

(55 % OF 27.2 P.S.F. G.S.L. PLUS 8.4 P.S.F. RAIN LOAD) EQUALS 23.3 P.S.F. SPECIFIED ROOF LIVE LOAD

ALLOWABLE DEFL.(LL)= L/360 (0.55")
CALCULATED VERT. DEFL.(LL) = L/ 999 (0.11")
ALLOWABLE DEFL.(TL)= L/360 (0.55")
CALCULATED VERT. DEFL.(TL) = L/ 999 (0.20")

CSI: TC=0.19/1.00 (E-F:1) , BC=0.38/1.00 (L-M:1) , WB=0.47/1.00 (E-L:1) , SSI=0.09/1.00 (D-E:1)

DOL LUMBER=1.00 NAIL=1.00 LS BEND=1.10 COMP=1.10 SHEAR=1.10 TENS= 1.10

COMPANION LIVE LOAD FACTOR = 0.50

AUTOSOLVE HEELS OFF

TRUSS PLATE MANUFACTURER IS NOT RESPONSIBLE FOR QUALITY CONTROL IN THE TRUSS MANUFACTURING PLANT .

NAIL VALUES

PLATE	GRIP(DRY) (PSI) MAX	MIN	SHEAR (PLI) MAX	MIN	SECTION (PLI) MAX	MIN
MT20	618	354	1667	822	2284	1656

PLATE PLACEMENT TOL. = 0.250 inches

PLATE ROTATION TOL. = 5.0 Deg.

JSI GRIP= 0.90 (K) (INPUT = 0.90)
JSI METAL= 0.37 (M) (INPUT = 1.00)

KOTT

JOB NAME	TRUSS NAME	QUANTITY	PLY	JOB DESC.		DRWG NO.
NE0518-227	T15	1	1	TRUSS DESC.	GREEN YORK HOMES - GRANELLI HOME CORP - AMELIA 12 ELE 1	PAGE 32 OF 45

Version 8.210 S Mar 12 2018 MiTek Industries, Inc. Thu May 31 18:08:27 2018 Page 1
ID:JiDzXONJoFa2AxdT?3zOcwzBMzn-juwAdy44ymRy93JckQGBU0jrMGkMMDIhJNMcYEzAw4Y

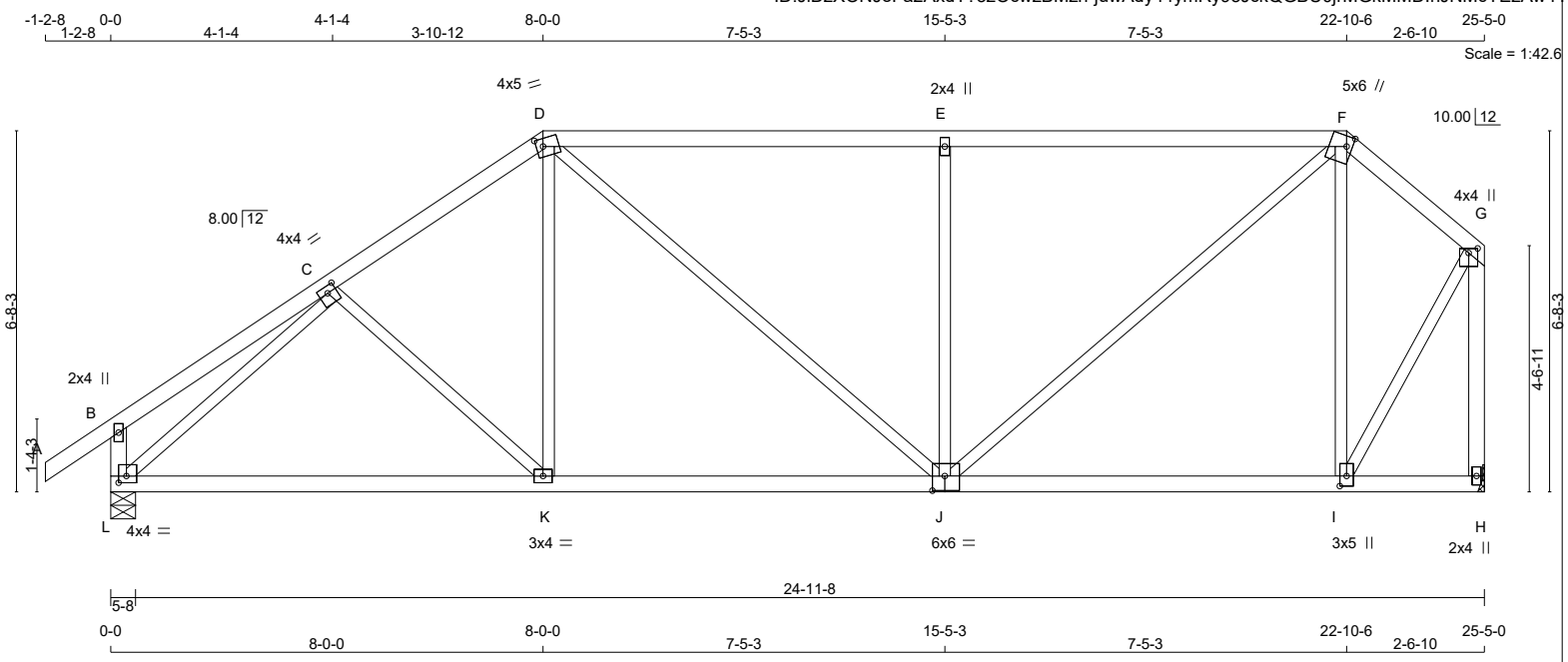

TOTAL WEIGHT = 111 lb

LUMBER
N. L. G. A. RULES

CHORDS	SIZE		LUMBER	DESCR.
A - D	2x4	DRY	No.2	SPF
D - F	2x4	DRY	No.2	SPF
F - G	2x4	DRY	No.2	SPF
L - B	2x4	DRY	No.2	SPF
H - G	2x4	DRY	No.2	SPF
L - J	2x4	DRY	No.2	SPF
J - H	2x4	DRY	No.2	SPF
ALL WEBS EXCEPT	2x3	DRY	No.2	SPF

DRY: SEASONED LUMBER.

PLATES (table is in inches)

JT	TYPE	PLATES	W	LEN	Y	X
B	TMV+p	MT20	2.0	4.0		
C	TMWW-t	MT20	4.0	4.0	1.50	2.00
D	TTWW-m	MT20	4.0	5.0	1.75	1.50
E	TMW+w	MT20	2.0	4.0		
F	TTWW+m	MT20	5.0	6.0	2.25	1.25
G	TMVW+p	MT20	4.0	4.0	1.00	2.00
H	BMV1+p	MT20	2.0	4.0		
I	BMWW+t	MT20	3.0	5.0	2.25	1.50
J	BSWWW-l	MT20	6.0	6.0	3.25	2.75
K	BMWW-t	MT20	3.0	4.0		
L	BMVW1-t	MT20	4.0	4.0	1.50	1.75

LICENSED PROFESSIONAL ENGINEER
N.A. EL-MASRI
PROVINCE OF ONTARIO
May 31, 2018

READ ALL NOTES ON THIS PAGE AND ON ENGINEERING NOTE PAGE ENP-1. THIS NOTE PAGE IS AN INTEGRAL PART OF THIS DRAWING AS IT CONTAINS SPECIFICATIONS AND CRITERIA USED IN THE DESIGN OF THIS COMPONENT.

DIMENSIONS, SUPPORTS AND LOADINGS SPECIFIED BY FABRICATOR TO BE VERIFIED BY BUILDING DESIGNER

BEARINGS

JT	FACTORED GROSS REACTION VERT	HORZ	MAXIMUM FACTORED GROSS REACTION DOWN	HORZ	UPLIFT	INPUT BRG IN-SX	REQRD BRG IN-SX
L	1315	0	1315	0	0	5-8	5-8
H	1215	0	1215	0	0	MECHANICAL	

A SUITABLE MECHANICAL CONNECTION IS REQUIRED AT JOINT H TO RESIST THE MAX FACTORED REACTIONS.

UNFACTORED REACTIONS

JT	1ST LCASE COMBINED	MAX./MIN. COMPONENT REACTIONS SNOW	LIVE	PERM.LIVE	WIND	DEAD	SOIL
L	921	652 / 0	0 / 0	0 / 0	0 / 0	270 / 0	0 / 0
H	854	592 / 0	0 / 0	0 / 0	0 / 0	262 / 0	0 / 0

BEARING MATERIAL TO BE SPF NO.2 OR BETTER AT JOINT(S) L

BRACING
TOP CHORD TO BE SHEATHED OR MAX. PURLIN SPACING = 4.32 FT.
MAX. UNBRACED BOTTOM CHORD LENGTH = 10.00 FT OR RIGID CEILING DIRECTLY APPLIED.

ALL PITCH BREAKS AND PERIMETER CORNER JOINTS MUST BE LATERALLY RESTRAINED.

LOADING
TOTAL LOAD CASES: (4)

CHORDS

MEMB. FR-TO	MAX. FACTORED FORCE (LBS)	FACTORED VERT. LOAD (PLF) FROM	TO	LC1 MAX CSI (LC)	MAX. UNBRAC LENGTH
A- B	0 / 28	-77.4	-77.4	0.09 (1)	10.00
B- C	0 / 19	-77.4	-77.4	0.19 (1)	10.00
C- D	-1296 / 0	-77.4	-77.4	0.22 (1)	5.43
D- E	-1245 / 0	-77.4	-77.4	0.86 (1)	4.32
E- F	-1245 / 0	-77.4	-77.4	0.86 (1)	4.32
F- G	-601 / 0	-77.4	-77.4	0.09 (1)	6.25
L- B	-220 / 0	0.0	0.0	0.02 (1)	7.81
H- G	-1217 / 0	0.0	0.0	0.44 (1)	7.26
L- K	0 / 1120	-18.2	-18.2	0.35 (4)	10.00
K- J	0 / 1064	-18.2	-18.2	0.36 (4)	10.00
J- I	0 / 450	-18.2	-18.2	0.21 (4)	10.00
I- H	0 / 0	-18.2	-18.2	0.16 (4)	10.00

WEBS

MEMB. FR-TO	MAX. FACTORED FORCE (LBS)	MAX CSI (LC)
C- K	-80 / 33	0.04 (1)
K- D	0 / 215	0.05 (4)
D- J	0 / 239	0.05 (1)
J- E	-709 / 0	0.53 (1)
J- F	0 / 1047	0.24 (1)
I- F	-614 / 0	0.45 (1)
L- C	-1525 / 0	0.74 (1)
I- G	0 / 864	0.19 (1)

DESIGN CRITERIA

SPECIFIED LOADS:

TOP CH.	LL	=	23.3	PSF
	DL	=	3.0	PSF
BOT CH.	LL	=	0.0	PSF
	DL	=	7.3	PSF
TOTAL LOAD		=	33.6	PSF

SPACING = 24.0 IN. C/C

LOADING IN FLAT SECTION BASED ON A SLOPE OF 2.00/12 MINIMUM

THIS TRUSS IS DESIGNED FOR RESIDENTIAL OR SMALL BUILDING REQUIREMENTS OF PART 9, NBCC 2010

THIS DESIGN COMPLIES WITH:
- PART 9 OF OBC 2012 , BCBC 2012 , ABC 2014
- CSA 086-09
- TPIC 2011

(55 % OF 27.2 P.S.F. G.S.L. PLUS 8.4 P.S.F. RAIN LOAD) EQUALS 23.3 P.S.F. SPECIFIED ROOF LIVE LOAD

ALLOWABLE DEFL.(LL)= L/360 (0.85")
CALCULATED VERT. DEFL.(LL) = L/ 999 (0.05")
ALLOWABLE DEFL.(TL)= L/360 (0.85")
CALCULATED VERT. DEFL.(TL) = L/ 999 (0.14")

CSI: TC=0.86/1.00 (D-E:1) , BC=0.36/1.00 (J-K:4) , WB=0.74/1.00 (C-L:1) , SSI=0.28/1.00 (D-E:1)

DOL LUMBER=1.00 NAIL=1.00 LS BEND=1.10 COMP=1.10 SHEAR=1.10 TENS= 1.10

COMPANION LIVE LOAD FACTOR = 0.50

TRUSS PLATE MANUFACTURER IS NOT RESPONSIBLE FOR QUALITY CONTROL IN THE TRUSS MANUFACTURING PLANT .

NAIL VALUES

PLATE	GRIP(DRY) (PSI) MAX	MIN	SHEAR (PLI) MAX	MIN	SECTION (PLI) MAX	MIN
MT20	618	354	1667	822	2284	1656

PLATE PLACEMENT TOL. = 0.250 inches

PLATE ROTATION TOL. = 5.0 Deg.

JSI GRIP= 0.90 (C) (INPUT = 0.90)
JSI METAL= 0.56 (C) (INPUT = 1.00)

KOTT

JOB NAME	TRUSS NAME	QUANTITY	PLY	JOB DESC.		DRWG NO.
NE0518-227	T16	1	1	TRUSS DESC.	GREEN YORK HOMES - GRANELLI HOME CORP - AMELIA 12 ELE 1	PAGE 33 OF 45

Version 8.210 S Mar 12 2018 MiTek Industries, Inc. Thu May 31 18:08:28 2018 Page 1
ID:JiDzXONJoFa2AxdT?3zOcwzBMzn-B5UYqH4ij3ZpnDupH8oQ1DF7pg6M5hoqY1594hzAw4X

Scale: 1/4"=1'

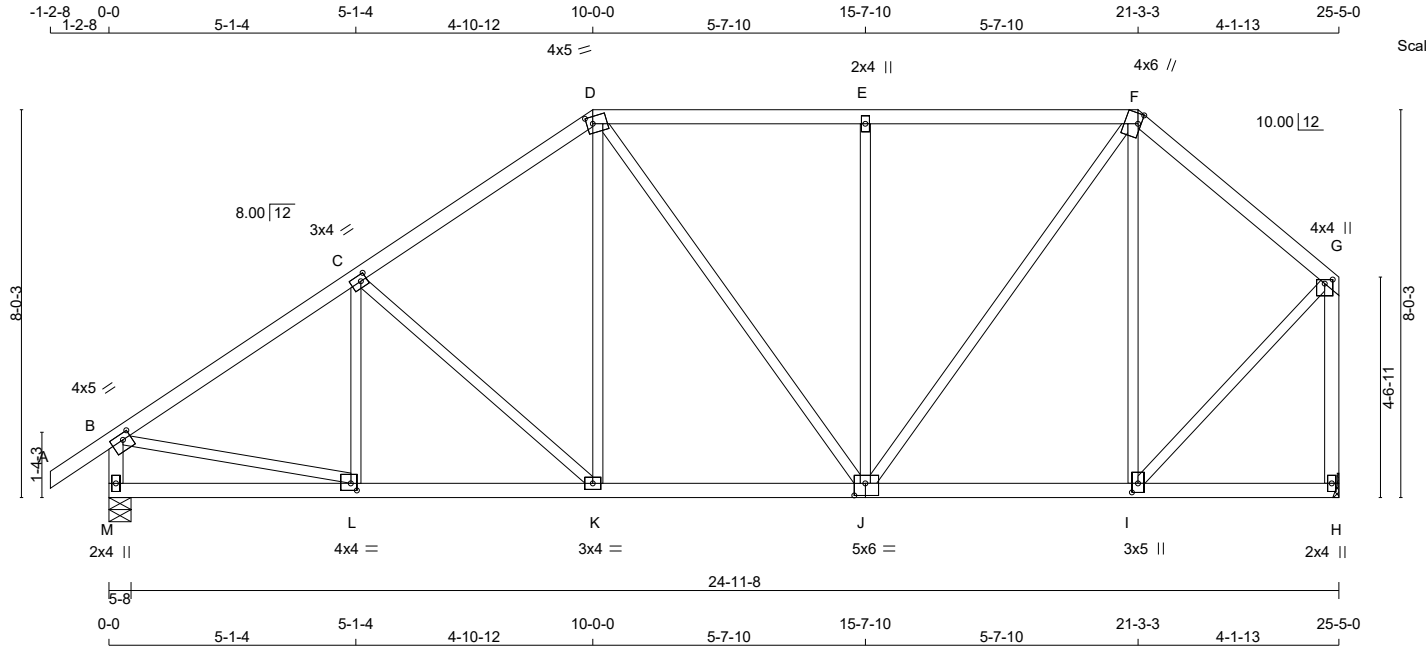

TOTAL WEIGHT = 120 lb

LUMBER

N. L. G. A. RULES

CHORDS	SIZE		LUMBER	DESCR.
A - D	2x4	DRY	No.2	SPF
D - F	2x4	DRY	No.2	SPF
F - G	2x4	DRY	No.2	SPF
M - B	2x4	DRY	No.2	SPF
H - G	2x4	DRY	No.2	SPF
M - J	2x4	DRY	No.2	SPF
J - H	2x4	DRY	No.2	SPF
ALL WEBS EXCEPT	2x3	DRY	No.2	SPF

DRY: SEASONED LUMBER.

PLATES (table is in inches)

JT	TYPE	PLATES	W	LEN	Y	X
B	TMVW-t	MT20	4.0	5.0	1.50	2.00
C	TMWW-t	MT20	3.0	4.0	1.50	1.50
D	TTWW-m	MT20	4.0	5.0	1.75	1.50
E	TMW+w	MT20	2.0	4.0		
F	TTWW+m	MT20	4.0	6.0	2.50	0.75
G	TMVW+p	MT20	4.0	4.0	1.00	2.00
H	BMV1+p	MT20	2.0	4.0		
I	BMWW+t	MT20	3.0	5.0	2.25	1.50
J	BSWWW-l	MT20	5.0	6.0	3.00	2.75
K	BMWW-t	MT20	3.0	4.0		
L	BMWW-t	MT20	4.0	4.0	1.75	1.50
M	BMV1+p	MT20	2.0	4.0		

DIMENSIONS, SUPPORTS AND LOADINGS SPECIFIED BY FABRICATOR TO BE VERIFIED BY BUILDING DESIGNER

BEARINGS

JT	FACTORED GROSS REACTION VERT	HORZ	MAXIMUM FACTORED GROSS REACTION DOWN	HORZ	UPLIFT	INPUT BRG IN-SX	REQRD BRG IN-SX
M	1315	0	1315	0	0	5-8	5-8
H	1215	0	1215	0	0	MECHANICAL	

A SUITABLE MECHANICAL CONNECTION IS REQUIRED AT JOINT H TO RESIST THE MAX FACTORED REACTIONS.

UNFACTORED REACTIONS

JT	1ST LCASE COMBINED	MAX./MIN. COMPONENT REACTIONS SNOW	LIVE	PERM.LIVE	WIND	DEAD	SOIL
M	921	652 / 0	0 / 0	0 / 0	0 / 0	270 / 0	0 / 0
H	854	592 / 0	0 / 0	0 / 0	0 / 0	262 / 0	0 / 0

BEARING MATERIAL TO BE SPF NO.2 OR BETTER AT JOINT(S) M

BRACING

TOP CHORD TO BE SHEATHED OR MAX. PURLIN SPACING = 5.23 FT.
MAX. UNBRACED BOTTOM CHORD LENGTH = 10.00 FT OR RIGID CEILING DIRECTLY APPLIED.

ALL PITCH BREAKS AND PERIMETER CORNER JOINTS MUST BE LATERALLY RESTRAINED.

LOADING

TOTAL LOAD CASES: (4)

CHORDS

MEMB. FR-TO	MAX. FACTORED FORCE (LBS)	FACTORED VERT. LOAD (PLF) FROM	TO	LC1 MAX CSI (LC)	MAX. UNBRAC LENGTH
A- B	0 / 28	-77.4	-77.4	0.09 (1)	10.00
B- C	-1392 / 0	-77.4	-77.4	0.28 (1)	5.23
C- D	-1179 / 0	-77.4	-77.4	0.26 (1)	5.58
D- E	-990 / 0	-77.4	-77.4	0.33 (1)	5.86
E- F	-990 / 0	-77.4	-77.4	0.33 (1)	5.86
F- G	-732 / 0	-77.4	-77.4	0.18 (1)	6.25
M- B	-1275 / 0	0.0	0.0	0.13 (1)	7.13
H- G	-1187 / 0	0.0	0.0	0.43 (1)	7.33
M- L	0 / 0	-18.2	-18.2	0.10 (4)	10.00
L- K	0 / 1179	-18.2	-18.2	0.24 (1)	10.00
K- J	0 / 962	-18.2	-18.2	0.21 (1)	10.00
J- I	0 / 555	-18.2	-18.2	0.15 (4)	10.00
I- H	0 / 0	-18.2	-18.2	0.10 (4)	10.00

WEBS

MEMB. FR-TO	MAX. FACTORED FORCE (LBS)	MAX CSI (LC)
L- C	-139 / 43	0.05 (1)
C- K	-295 / 0	0.24 (1)
K- D	0 / 293	0.07 (1)
D- J	0 / 48	0.01 (1)
J- E	-534 / 0	0.66 (1)
J- F	0 / 738	0.17 (1)
I- F	-455 / 0	0.56 (1)
B- L	0 / 1202	0.27 (1)
I- G	0 / 790	0.18 (1)

DESIGN CRITERIA

SPECIFIED LOADS:

TOP	CH.	LL	=	23.3	PSF
		DL	=	3.0	PSF
BOT	CH.	LL	=	0.0	PSF
		DL	=	7.3	PSF
TOTAL	LOAD		=	33.6	PSF

SPACING = 24.0 IN. C/C

LOADING IN FLAT SECTION BASED ON A SLOPE OF 2.00/12 MINIMUM

THIS TRUSS IS DESIGNED FOR RESIDENTIAL OR SMALL BUILDING REQUIREMENTS OF PART 9, NBCC 2010

THIS DESIGN COMPLIES WITH:
- PART 9 OF OBC 2012 , BCBC 2012 , ABC 2014
- CSA 086-09
- TPIC 2011

(55 % OF 27.2 P.S.F. G.S.L. PLUS 8.4 P.S.F. RAIN LOAD) EQUALS 23.3 P.S.F. SPECIFIED ROOF LIVE LOAD

ALLOWABLE DEFL.(LL)= L/360 (0.85")
CALCULATED VERT. DEFL.(LL) = L/ 999 (0.04")
ALLOWABLE DEFL.(TL)= L/360 (0.85")
CALCULATED VERT. DEFL.(TL) = L/ 999 (0.08")

CSI: TC=0.43/1.00 (G-H:1) , BC=0.24/1.00 (K-L:1) , WB=0.66/1.00 (E-J:1) , SSI=0.21/1.00 (D-E:1)

DOL LUMBER=1.00 NAIL=1.00 LS BEND=1.10 COMP=1.10 SHEAR=1.10 TENS= 1.10

COMPANION LIVE LOAD FACTOR = 0.50

TRUSS PLATE MANUFACTURER IS NOT RESPONSIBLE FOR QUALITY CONTROL IN THE TRUSS MANUFACTURING PLANT .

NAIL VALUES

PLATE	GRIP(DRY) (PSI) MAX	MIN	SHEAR (PLI) MAX	MIN	SECTION (PLI) MAX	MIN
MT20	618	354	1667	822	2284	1656

PLATE PLACEMENT TOL. = 0.250 inches

PLATE ROTATION TOL. = 0.5 Deg.

JSI GRIP= 0.89 (I) (INPUT = 0.90)
JSI METAL= 0.47 (B) (INPUT = 1.00)

LICENSED PROFESSIONAL ENGINEER
N.A. EL-MASRI
PROVINCE OF ONTARIO
May 31, 2018

READ ALL NOTES ON THIS PAGE AND ON ENGINEERING NOTE PAGE ENP-1. THIS NOTE PAGE IS AN INTEGRAL PART OF THIS DRAWING AS IT CONTAINS SPECIFICATIONS AND CRITERIA USED IN THE DESIGN OF THIS COMPONENT.

KOTT

JOB NAME	TRUSS NAME	QUANTITY	PLY	JOB DESC.		DRWG NO.
NE0518-227	T17	1	1	TRUSS DESC.	GREEN YORK HOMES - GRANELLI HOME CORP - AMELIA 12 ELE 1	PAGE 34 OF 45

Version 8.210 S Mar 12 2018 MiTek Industries, Inc. Thu May 31 18:08:29 2018 Page 1
ID:JiDzXONJoFa2AxdT?3zOcwzBMzn-fH1w2d5KUNhgPNT?rrJfZRoId4R?qAgznhrjd7zAw4W

Scale = 1:53.5

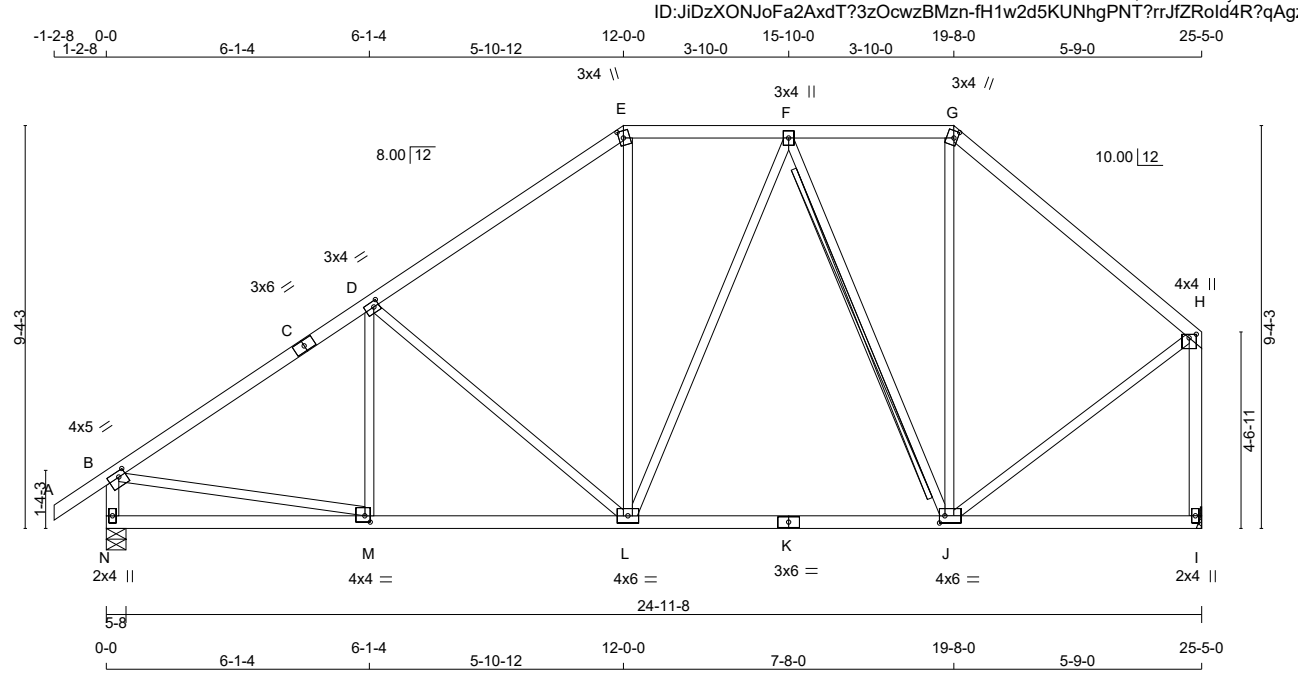

TOTAL WEIGHT = 121 lb

LUMBER
N. L. G. A. RULES

CHORDS	SIZE		LUMBER	DESCR.
A - C	2x4	DRY	No.2	SPF
C - E	2x4	DRY	No.2	SPF
E - G	2x4	DRY	No.2	SPF
G - H	2x4	DRY	No.2	SPF
N - B	2x4	DRY	No.2	SPF
I - H	2x4	DRY	No.2	SPF
N - K	2x4	DRY	No.2	SPF
K - I	2x4	DRY	No.2	SPF
ALL WEBS EXCEPT	2x3	DRY	No.2	SPF

DRY: SEASONED LUMBER.

PLATES (table is in inches)

JT	TYPE	PLATES	W	LEN	Y	X
B	TMVW-t	MT20	4.0	5.0	1.50	2.00
C	TS-t	MT20	3.0	6.0		
D	TMWW-t	MT20	3.0	4.0	1.50	1.50
E	TTW+m	MT20	3.0	4.0	2.00	1.25
F	TMWW+t	MT20	3.0	4.0		
G	TTW+m	MT20	3.0	4.0	2.00	1.00
H	TMVW+p	MT20	4.0	4.0	1.00	2.00
I	BMV1+p	MT20	2.0	4.0		
J	BMWWW-t	MT20	4.0	6.0	2.00	1.50
K	BS-t	MT20	3.0	6.0		
L	BMWWW-t	MT20	4.0	6.0		
M	BMWW-t	MT20	4.0	4.0	1.75	1.50
N	BMV1+p	MT20	2.0	4.0		

LICENSED PROFESSIONAL ENGINEER
N.A. EL-MASRI
PROVINCE OF ONTARIO
May 31, 2018

READ ALL NOTES ON THIS PAGE AND ON ENGINEERING NOTE PAGE ENP-1. THIS NOTE PAGE IS AN INTEGRAL PART OF THIS DRAWING AS IT CONTAINS SPECIFICATIONS AND CRITERIA USED IN THE DESIGN OF THIS COMPONENT.

DIMENSIONS, SUPPORTS AND LOADINGS SPECIFIED BY FABRICATOR TO BE VERIFIED BY BUILDING DESIGNER

BEARINGS

JT	FACTORED GROSS REACTION VERT	HORZ	MAXIMUM FACTORED GROSS REACTION DOWN	HORZ	UPLIFT	INPUT BRG IN-SX	REQRD BRG IN-SX
N	1315	0	1315	0	0	5-8	5-8
I	1215	0	1215	0	0	MECHANICAL	

A SUITABLE MECHANICAL CONNECTION IS REQUIRED AT JOINT I TO RESIST THE MAX FACTORED REACTIONS.

UNFACTORED REACTIONS

JT	1ST LCASE COMBINED	MAX./MIN. COMPONENT REACTIONS SNOW	LIVE	PERM.LIVE	WIND	DEAD	SOIL
N	921	652 / 0	0 / 0	0 / 0	0 / 0	270 / 0	0 / 0
I	854	592 / 0	0 / 0	0 / 0	0 / 0	262 / 0	0 / 0

BEARING MATERIAL TO BE SPF NO.2 OR BETTER AT JOINT(S) N

BRACING

TOP CHORD TO BE SHEATHED OR MAX. PURLIN SPACING = 5.06 FT.
MAX. UNBRACED BOTTOM CHORD LENGTH = 10.00 FT OR RIGID CEILING DIRECTLY APPLIED.

ALL PITCH BREAKS AND PERIMETER CORNER JOINTS MUST BE LATERALLY RESTRAINED.

2x4 DRY SPF No.2 T-BRACE AT F-J

FASTEN T AND I-BRACES TO NARROW EDGE OF WEB WITH ONE ROW PER PLY OF 3" COMMON WIRE NAILS @ 6" O.C. WITH 3" MINIMUM END DISTANCE. BRACE MUST COVER 90% OF WEB LENGTH.

END VERTICAL(S) MUST BE SHEATHED OR HAVE BRACES AS INDICATED IN THE MAX. UNBRACED LENGTH COLUMN OF THE TABLE BELOW

LOADING

TOTAL LOAD CASES: (4)

CHORDS

MEMB. FR-TO	MAX. FACTORED FORCE (LBS)	FACTORED VERT. LOAD LC1 (PLF) FROM	TO	MAX CSI (LC)	MAX. UNBRAC LENGTH
A- B	0 / 28	-77.4	-77.4	0.09 (1)	10.00
B- C	-1391 / 0	-77.4	-77.4	0.41 (1)	5.06
C- D	-1391 / 0	-77.4	-77.4	0.41 (1)	5.06
D- E	-1061 / 0	-77.4	-77.4	0.38 (1)	5.64
E- F	-858 / 0	-77.4	-77.4	0.15 (1)	6.25
F- G	-614 / 0	-77.4	-77.4	0.14 (1)	6.25
G- H	-798 / 0	-77.4	-77.4	0.34 (1)	6.25
N- B	-1268 / 0	0.0	0.0	0.13 (1)	7.15
I- H	-1176 / 0	0.0	0.0	0.42 (1)	7.35
N- M	0 / 0	-18.2	-18.2	0.15 (4)	10.00
M- L	0 / 1183	-18.2	-18.2	0.28 (1)	10.00
L- K	0 / 810	-18.2	-18.2	0.26 (4)	10.00
K- J	0 / 810	-18.2	-18.2	0.26 (4)	10.00
J- I	0 / 0	-18.2	-18.2	0.20 (4)	10.00

WEBS

MEMB. FR-TO	MAX. FACTORED FORCE (LBS)	MAX CSI (LC)
M- D	-82 / 75	0.04 (1)
D- L	-430 / 0	0.55 (1)
L- E	0 / 284	0.06 (1)
J- G	0 / 172	0.04 (4)
B- M	0 / 1199	0.27 (1)
J- H	0 / 754	0.17 (1)
F- J	-515 / 0	0.41 (1)
L- F	0 / 127	0.03 (1)

DESIGN CRITERIA

SPECIFIED LOADS:

TOP	CH.	LL	=	23.3	PSF
		DL	=	3.0	PSF
BOT	CH.	LL	=	0.0	PSF
		DL	=	7.3	PSF
TOTAL	LOAD		=	33.6	PSF

SPACING = 24.0 IN. C/C

LOADING IN FLAT SECTION BASED ON A SLOPE OF 2.00/12 MINIMUM

THIS TRUSS IS DESIGNED FOR RESIDENTIAL OR SMALL BUILDING REQUIREMENTS OF PART 9, NBCC 2010

THIS DESIGN COMPLIES WITH:
- PART 9 OF OBC 2012 , BCBC 2012 , ABC 2014
- CSA 086-09
- TPIC 2011

(55 % OF 27.2 P.S.F. G.S.L. PLUS 8.4 P.S.F. RAIN LOAD) EQUALS 23.3 P.S.F. SPECIFIED ROOF LIVE LOAD

ALLOWABLE DEFL.(LL)= L/360 (0.85")
CALCULATED VERT. DEFL.(LL) = L/ 999 (0.04")
ALLOWABLE DEFL.(TL)= L/360 (0.85")
CALCULATED VERT. DEFL.(TL) = L/ 999 (0.09")

CSI: TC=0.42/1.00 (H-I:1) , BC=0.28/1.00 (L-M:1) , WB=0.55/1.00 (D-L:1) , SSI=0.19/1.00 (B-D:1)

DOL LUMBER=1.00 NAIL=1.00 LS BEND=1.10 COMP=1.10 SHEAR=1.10 TENS= 1.10

COMPANION LIVE LOAD FACTOR = 0.50

TRUSS PLATE MANUFACTURER IS NOT RESPONSIBLE FOR QUALITY CONTROL IN THE TRUSS MANUFACTURING PLANT .

NAIL VALUES

PLATE	GRIP(DRY) (PSI) MAX	MIN	SHEAR (PLI) MAX	MIN	SECTION (PLI) MAX	MIN
MT20	618	354	1667	822	2284	1656

PLATE PLACEMENT TOL. = 0.250 inches

PLATE ROTATION TOL. = 5.0 Deg.

JSI GRIP= 0.89 (H) (INPUT = 0.90)
JSI METAL= 0.47 (B) (INPUT = 1.00)

KOTT

JOB NAME	TRUSS NAME	QUANTITY	PLY	JOB DESC.		DRWG NO.
NE0518-227	T18	1	1	TRUSS DESC.	GREEN YORK HOMES - GRANELLI HOME CORP - AMELIA 12 ELE 1	PAGE 35 OF 45

Version 8.210 S Mar 12 2018 MiTek Industries, Inc. Thu May 31 18:08:29 2018 Page 1
ID:JiDzXONJoFa2AxdT?3zOcwzBMzn-fH1w2d5KUNhgPNT?rrJfZRoFq4RbqD4znhrjd7zAw4W

Scale = 1:65.2

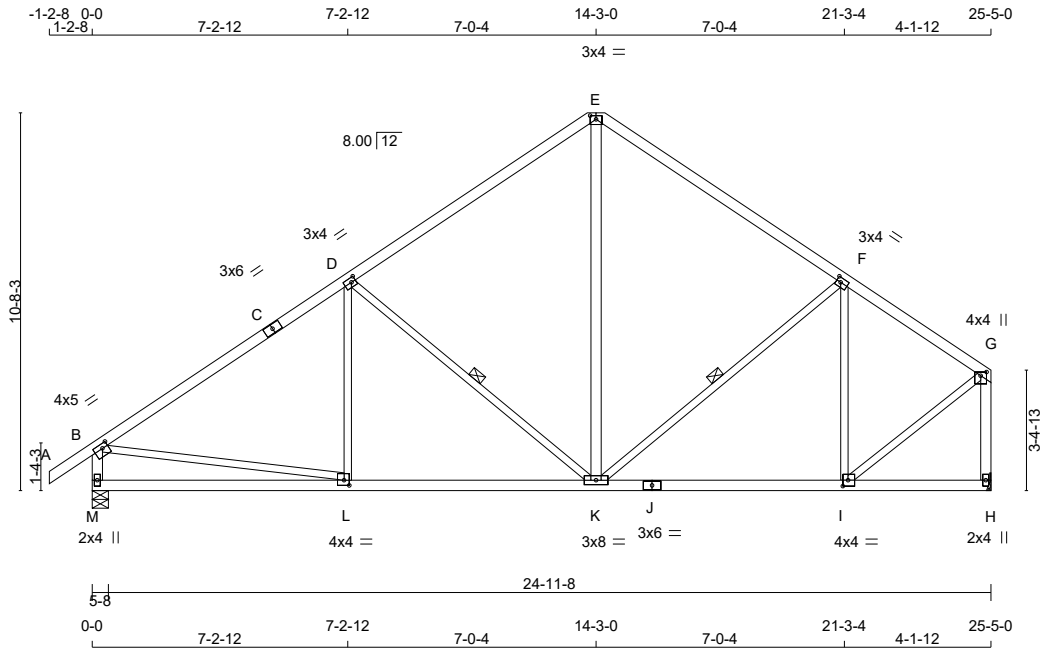

TOTAL WEIGHT = 115 lb

LUMBER
N. L. G. A. RULES

CHORDS	SIZE		LUMBER	DESCR.
A - C	2x4	DRY	No.2	SPF
C - E	2x4	DRY	No.2	SPF
E - G	2x4	DRY	No.2	SPF
M - B	2x4	DRY	No.2	SPF
H - G	2x4	DRY	No.2	SPF
M - J	2x4	DRY	No.2	SPF
J - H	2x4	DRY	No.2	SPF
ALL WEBS	2x3	DRY	No.2	SPF
EXCEPT				
K - E	2x4	DRY	No.2	SPF

DRY: SEASONED LUMBER.

PLATES (table is in inches)

JT	TYPE	PLATES	W	LEN	Y	X
B	TMVW-t	MT20	4.0	5.0	1.50	2.00
C	TS-t	MT20	3.0	6.0		
D	TMWW-t	MT20	3.0	4.0	1.50	1.50
E	TTW-p	MT20	3.0	4.0	1.25	2.00
F	TMWW-t	MT20	3.0	4.0	1.50	1.50
G	TMVW+p	MT20	4.0	4.0	1.25	2.00
H	BMV1+p	MT20	2.0	4.0		
I	BMWW-t	MT20	4.0	4.0	2.00	1.75
J	BS-t	MT20	3.0	6.0		
K	BMWWW-t	MT20	3.0	8.0		
L	BMWW-t	MT20	4.0	4.0	1.75	1.75
M	BMV1+p	MT20	2.0	4.0		

LICENSED PROFESSIONAL ENGINEER
N.A. EL-MASRI
PROVINCE OF ONTARIO
May 31, 2018

READ ALL NOTES ON THIS PAGE AND ON ENGINEERING NOTE PAGE ENP-1. THIS NOTE PAGE IS AN INTEGRAL PART OF THIS DRAWING AS IT CONTAINS SPECIFICATIONS AND CRITERIA USED IN THE DESIGN OF THIS COMPONENT.

DIMENSIONS, SUPPORTS AND LOADINGS SPECIFIED BY FABRICATOR TO BE VERIFIED BY BUILDING DESIGNER

BEARINGS

JT	FACTORED GROSS REACTION VERT	HORZ	MAXIMUM FACTORED GROSS REACTION DOWN	HORZ	UPLIFT	INPUT BRG IN-SX	REQRD BRG IN-SX
M	1315	0	1315	0	0	5-8	5-8
H	1215	0	1215	0	0	MECHANICAL	

A SUITABLE MECHANICAL CONNECTION IS REQUIRED AT JOINT H TO RESIST THE MAX FACTORED REACTIONS.

UNFACTORED REACTIONS

JT	1ST LCASE COMBINED	MAX./MIN. COMPONENT REACTIONS SNOW	LIVE	PERM.LIVE	WIND	DEAD	SOIL
M	921	652 / 0	0 / 0	0 / 0	0 / 0	270 / 0	0 / 0
H	854	592 / 0	0 / 0	0 / 0	0 / 0	262 / 0	0 / 0

BEARING MATERIAL TO BE SPF NO.2 OR BETTER AT JOINT(S) M

BRACING
TOP CHORD TO BE SHEATHED OR MAX. PURLIN SPACING = 4.79 FT.
MAX. UNBRACED BOTTOM CHORD LENGTH = 10.00 FT OR RIGID CEILING DIRECTLY APPLIED.

ALL PITCH BREAKS AND PERIMETER CORNER JOINTS MUST BE LATERALLY RESTRAINED.

1 - 1x4 LATERAL BRACE(S) AT 1/ 2 LENGTH OF D-K, F-K. DBS = 20-0-0 . CBF = 72 LBS.

DBS = DIAGONAL BRACE SPACING (MAX). CBF = CUMULATIVE BRACING FORCE (PER BRACE). FASTEN LATERAL BRACE(S) USING (0.122"X3") SPIRAL NAILS : 1 NAIL FOR 2x3 BRACE(S), 2 FOR 1x4, 2x4, 2x5, 3 FOR 2x6, 4 FOR 2x8, 5 FOR 2x10, AND 6 FOR 2x12.

END VERTICAL(S) MUST BE SHEATHED OR HAVE BRACES AS INDICATED IN THE MAX. UNBRACED LENGTH COLUMN OF THE TABLE BELOW

LOADING
TOTAL LOAD CASES: (4)

CHORDS

MEMB. FR-TO	MAX. FACTORED FORCE (LBS)	FACTORED VERT. LOAD (PLF) FROM	TO	LC1	MAX CSI (LC)	MAX. UNBRAC LENGTH
A- B	0 / 28	-77.4	-77.4	0.09 (1)	10.00	
B- C	-1372 / 0	-77.4	-77.4	0.60 (1)	4.79	
C- D	-1372 / 0	-77.4	-77.4	0.60 (1)	4.79	
D- E	-915 / 0	-77.4	-77.4	0.55 (1)	5.65	
E- F	-905 / 0	-77.4	-77.4	0.48 (1)	5.81	
F- G	-904 / 0	-77.4	-77.4	0.38 (1)	5.96	
M- B	-1261 / 0	0.0	0.0	0.13 (1)	7.16	
H- G	-1191 / 0	0.0	0.0	0.23 (1)	7.32	
M- L	0 / 0	-18.2	-18.2	0.22 (4)	10.00	
L- K	0 / 1172	-18.2	-18.2	0.31 (4)	10.00	
K- J	0 / 791	-18.2	-18.2	0.23 (4)	10.00	
J- I	0 / 791	-18.2	-18.2	0.23 (4)	10.00	
I- H	0 / 0	-18.2	-18.2	0.14 (4)	10.00	

WEBS

MEMB. FR-TO	MAX. FACTORED FORCE (LBS)	MAX CSI (LC)
L- D	-23 / 114	0.04 (4)
D- K	-576 / 0	0.33 (1)
K- E	0 / 549	0.09 (1)
K- F	-80 / 0	0.05 (1)
I- F	-475 / 0	0.29 (1)
B- L	0 / 1184	0.27 (1)
I- G	0 / 986	0.22 (1)

DESIGN CRITERIA

SPECIFIED LOADS:

TOP	CH.	LL	=	23.3	PSF
		DL	=	3.0	PSF
BOT	CH.	LL	=	0.0	PSF
		DL	=	7.3	PSF
TOTAL	LOAD		=	33.6	PSF

SPACING = 24.0 IN. C/C

THIS TRUSS IS DESIGNED FOR RESIDENTIAL OR SMALL BUILDING REQUIREMENTS OF PART 9, NBCC 2010

THIS DESIGN COMPLIES WITH:
- PART 9 OF OBC 2012 , BCBC 2012 , ABC 2014
- CSA 086-09
- TPIC 2011

(55 % OF 27.2 P.S.F. G.S.L. PLUS 8.4 P.S.F. RAIN LOAD) EQUALS 23.3 P.S.F. SPECIFIED ROOF LIVE LOAD

ALLOWABLE DEFL.(LL)= L/360 (0.85")
CALCULATED VERT. DEFL.(LL) = L/ 999 (0.04")
ALLOWABLE DEFL.(TL)= L/360 (0.85")
CALCULATED VERT. DEFL.(TL) = L/ 999 (0.11")

CSI: TC=0.60/1.00 (B-D:1) , BC=0.31/1.00 (K-L:4) , WB=0.33/1.00 (D-K:1) , SSI=0.22/1.00 (B-D:1)

DOL LUMBER=1.00 NAIL=1.00 LS BEND=1.10 COMP=1.10 SHEAR=1.10 TENS= 1.10

COMPANION LIVE LOAD FACTOR = 0.50

TRUSS PLATE MANUFACTURER IS NOT RESPONSIBLE FOR QUALITY CONTROL IN THE TRUSS MANUFACTURING PLANT .

NAIL VALUES

PLATE	GRIP(DRY) (PSI) MAX	MIN	SHEAR (PLI) MAX	MIN	SECTION (PLI) MAX	MIN
MT20	618	354	1667	822	2284	1656

PLATE PLACEMENT TOL. = 0.250 inches

PLATE ROTATION TOL. = 5.0 Deg.

JSI GRIP= 0.90 (L) (INPUT = 0.90)
JSI METAL= 0.47 (B) (INPUT = 1.00)

KOTT

JOB NAME	TRUSS NAME	QUANTITY	PLY	JOB DESC.		DRWG NO.
NE0518-227	T19	1	1	TRUSS DESC.	GREEN YORK HOMES - GRANELLI HOME CORP - AMELIA 12 ELE 1	PAGE 36 OF 45

Version 8.210 S Mar 12 2018 MiTek Industries, Inc. Thu May 31 18:08:30 2018 Page 1
ID:JiDzXONJoFa2AxdT?3zOcwzBMzn-7TbJFz6yFhpX0W2BPZqu6eLQaUnqZgK7?LaG9ZzAw4V

Scale = 1:65.4

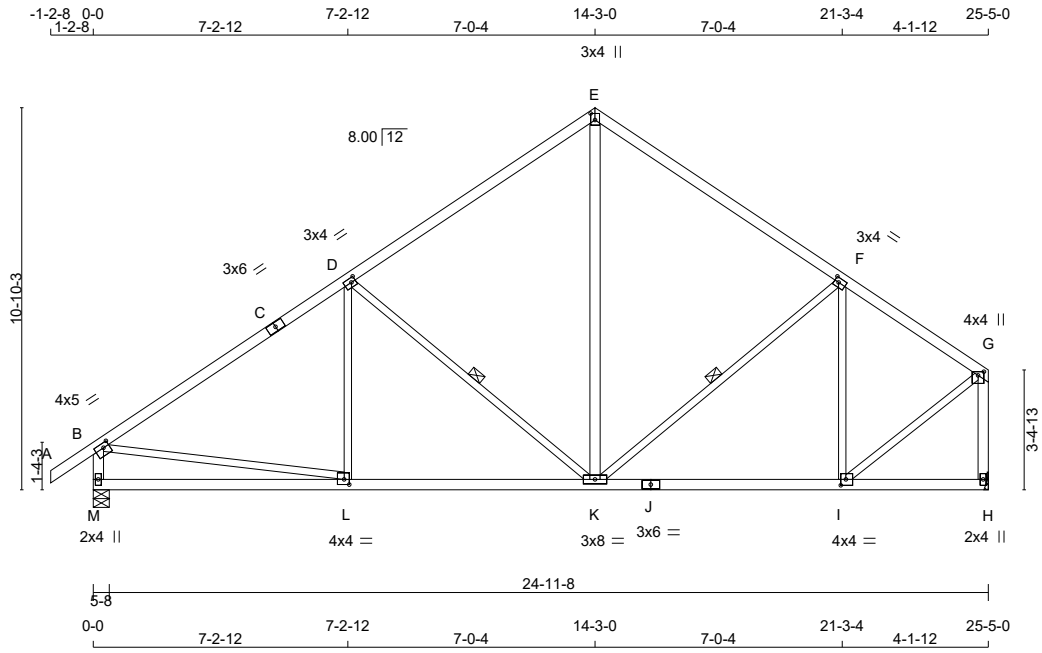

TOTAL WEIGHT = 115 lb

LUMBER
N. L. G. A. RULES

CHORDS	SIZE		LUMBER	DESCR.
A - C	2x4	DRY	No.2	SPF
C - E	2x4	DRY	No.2	SPF
E - G	2x4	DRY	No.2	SPF
M - B	2x4	DRY	No.2	SPF
H - G	2x4	DRY	No.2	SPF
M - J	2x4	DRY	No.2	SPF
J - H	2x4	DRY	No.2	SPF
ALL WEBS	2x3	DRY	No.2	SPF
EXCEPT				
K - E	2x4	DRY	No.2	SPF

DRY: SEASONED LUMBER.

PLATES (table is in inches)

JT	TYPE	PLATES	W	LEN	Y	X
B	TMVW-t	MT20	4.0	5.0	1.50	2.00
C	TS-t	MT20	3.0	6.0		
D	TMWW-t	MT20	3.0	4.0	1.50	1.50
E	TTW+p	MT20	3.0	4.0	2.25	1.50
F	TMWW-t	MT20	3.0	4.0	1.50	1.50
G	TMVW+p	MT20	4.0	4.0	1.25	2.00
H	BMV1+p	MT20	2.0	4.0		
I	BMWW-t	MT20	4.0	4.0	2.00	1.75
J	BS-t	MT20	3.0	6.0		
K	BMWWW-t	MT20	3.0	8.0		
L	BMWW-t	MT20	4.0	4.0	1.75	1.75
M	BMV1+p	MT20	2.0	4.0		

DIMENSIONS, SUPPORTS AND LOADINGS SPECIFIED BY FABRICATOR TO BE VERIFIED BY BUILDING DESIGNER

BEARINGS

JT	FACTORED GROSS REACTION VERT	HORZ	MAXIMUM FACTORED GROSS REACTION DOWN	HORZ	UPLIFT	INPUT BRG IN-SX	REQRD BRG IN-SX
M	1315	0	1315	0	0	5-8	5-8
H	1215	0	1215	0	0	MECHANICAL	

A SUITABLE MECHANICAL CONNECTION IS REQUIRED AT JOINT H TO RESIST THE MAX FACTORED REACTIONS.

UNFACTORED REACTIONS

JT	1ST LCASE COMBINED	MAX./MIN. COMPONENT REACTIONS SNOW	LIVE	PERM.LIVE	WIND	DEAD	SOIL
M	921	652 / 0	0 / 0	0 / 0	0 / 0	270 / 0	0 / 0
H	854	592 / 0	0 / 0	0 / 0	0 / 0	262 / 0	0 / 0

BEARING MATERIAL TO BE SPF NO.2 OR BETTER AT JOINT(S) M

BRACING
TOP CHORD TO BE SHEATHED OR MAX. PURLIN SPACING = 4.79 FT.
MAX. UNBRACED BOTTOM CHORD LENGTH = 10.00 FT OR RIGID CEILING DIRECTLY APPLIED.

ALL PITCH BREAKS AND PERIMETER CORNER JOINTS MUST BE LATERALLY RESTRAINED.

1 - 1x4 LATERAL BRACE(S) AT 1/ 2 LENGTH OF D-K, F-K. DBS = 20-0-0 . CBF = 72 LBS.

DBS = DIAGONAL BRACE SPACING (MAX). CBF = CUMULATIVE BRACING FORCE (PER BRACE). FASTEN LATERAL BRACE(S) USING (0.122"X3") SPIRAL NAILS : 1 NAIL FOR 2x3 BRACE(S), 2 FOR 1x4, 2x4, 2x5, 3 FOR 2x6, 4 FOR 2x8, 5 FOR 2x10, AND 6 FOR 2x12.

END VERTICAL(S) MUST BE SHEATHED OR HAVE BRACES AS INDICATED IN THE MAX. UNBRACED LENGTH COLUMN OF THE TABLE BELOW

LOADING
TOTAL LOAD CASES: (4)

CHORDS

MEMB. FR-TO	MAX. FACTORED FORCE (LBS)	FACTORED VERT. LOAD (PLF) FROM	TO	LC1	MAX CSI (LC)	MAX. UNBRAC LENGTH
A- B	0 / 28	-77.4	-77.4	0.09 (1)	10.00	
B- C	-1372 / 0	-77.4	-77.4	0.60 (1)	4.79	
C- D	-1372 / 0	-77.4	-77.4	0.60 (1)	4.79	
D- E	-915 / 0	-77.4	-77.4	0.55 (1)	5.65	
E- F	-905 / 0	-77.4	-77.4	0.48 (1)	5.81	
F- G	-904 / 0	-77.4	-77.4	0.38 (1)	5.96	
M- B	-1261 / 0	0.0	0.0	0.13 (1)	7.16	
H- G	-1191 / 0	0.0	0.0	0.23 (1)	7.32	
M- L	0 / 0	-18.2	-18.2	0.22 (4)	10.00	
L- K	0 / 1172	-18.2	-18.2	0.31 (4)	10.00	
K- J	0 / 791	-18.2	-18.2	0.23 (4)	10.00	
J- I	0 / 791	-18.2	-18.2	0.23 (4)	10.00	
I- H	0 / 0	-18.2	-18.2	0.14 (4)	10.00	

WEBS

MEMB. FR-TO	MAX. FACTORED FORCE (LBS)	MAX CSI (LC)
L- D	-23 / 114	0.04 (4)
D- K	-576 / 0	0.33 (1)
K- E	0 / 549	0.09 (1)
K- F	-80 / 0	0.05 (1)
I- F	-475 / 0	0.29 (1)
B- L	0 / 1184	0.27 (1)
I- G	0 / 986	0.22 (1)

DESIGN CRITERIA

SPECIFIED LOADS:

TOP	CH.	LL	=	23.3	PSF
		DL	=	3.0	PSF
BOT	CH.	LL	=	0.0	PSF
		DL	=	7.3	PSF
TOTAL	LOAD		=	33.6	PSF

SPACING = 24.0 IN. C/C

THIS TRUSS IS DESIGNED FOR RESIDENTIAL OR SMALL BUILDING REQUIREMENTS OF PART 9, NBCC 2010

THIS DESIGN COMPLIES WITH:
- PART 9 OF OBC 2012 , BCBC 2012 , ABC 2014
- CSA 086-09
- TPIC 2011

(55 % OF 27.2 P.S.F. G.S.L. PLUS 8.4 P.S.F. RAIN LOAD) EQUALS 23.3 P.S.F. SPECIFIED ROOF LIVE LOAD

ALLOWABLE DEFL.(LL)= L/360 (0.85")
CALCULATED VERT. DEFL.(LL) = L/ 999 (0.04")
ALLOWABLE DEFL.(TL)= L/360 (0.85")
CALCULATED VERT. DEFL.(TL) = L/ 999 (0.11")

CSI: TC=0.60/1.00 (B-D:1) , BC=0.31/1.00 (K-L:4) , WB=0.33/1.00 (D-K:1) , SSI=0.22/1.00 (B-D:1)

DOL LUMBER=1.00 NAIL=1.00 LS BEND=1.10 COMP=1.10 SHEAR=1.10 TENS= 1.10

COMPANION LIVE LOAD FACTOR = 0.50

TRUSS PLATE MANUFACTURER IS NOT RESPONSIBLE FOR QUALITY CONTROL IN THE TRUSS MANUFACTURING PLANT .

NAIL VALUES

PLATE	GRIP(DRY) (PSI) MAX	MIN	SHEAR (PLI) MAX	MIN	SECTION (PLI) MAX	MIN
MT20	618	354	1667	822	2284	1656

PLATE PLACEMENT TOL. = 0.250 inches

PLATE ROTATION TOL. = 5.0 Deg.

JSI GRIP= 0.90 (L) (INPUT = 0.90)
JSI METAL= 0.47 (B) (INPUT = 1.00)

LICENSED PROFESSIONAL ENGINEER
N.A. EL-MASRI
PROVINCE OF ONTARIO
May 31, 2018

READ ALL NOTES ON THIS PAGE AND ON ENGINEERING NOTE PAGE ENP-1. THIS NOTE PAGE IS AN INTEGRAL PART OF THIS DRAWING AS IT CONTAINS SPECIFICATIONS AND CRITERIA USED IN THE DESIGN OF THIS COMPONENT.

KOTT

JOB NAME	TRUSS NAME	QUANTITY	PLY	JOB DESC.		DRWG NO.
NE0518-227	T20	4	1	TRUSS DESC.	GREEN YORK HOMES - GRANELLI HOME CORP - AMELIA 12 ELE 1	PAGE 37 OF 45

Version 8.210 S Mar 12 2018 MiTek Industries, Inc. Thu May 31 18:08:30 2018 Page 1
ID:JiDzXONJoFa2AxdT?3zOcwzBMzn-7TbJFz6yFhpX0W2BPZqu6eLP5Um1Zgf7?LaG9ZzAw4V

Scale = 1:62.6

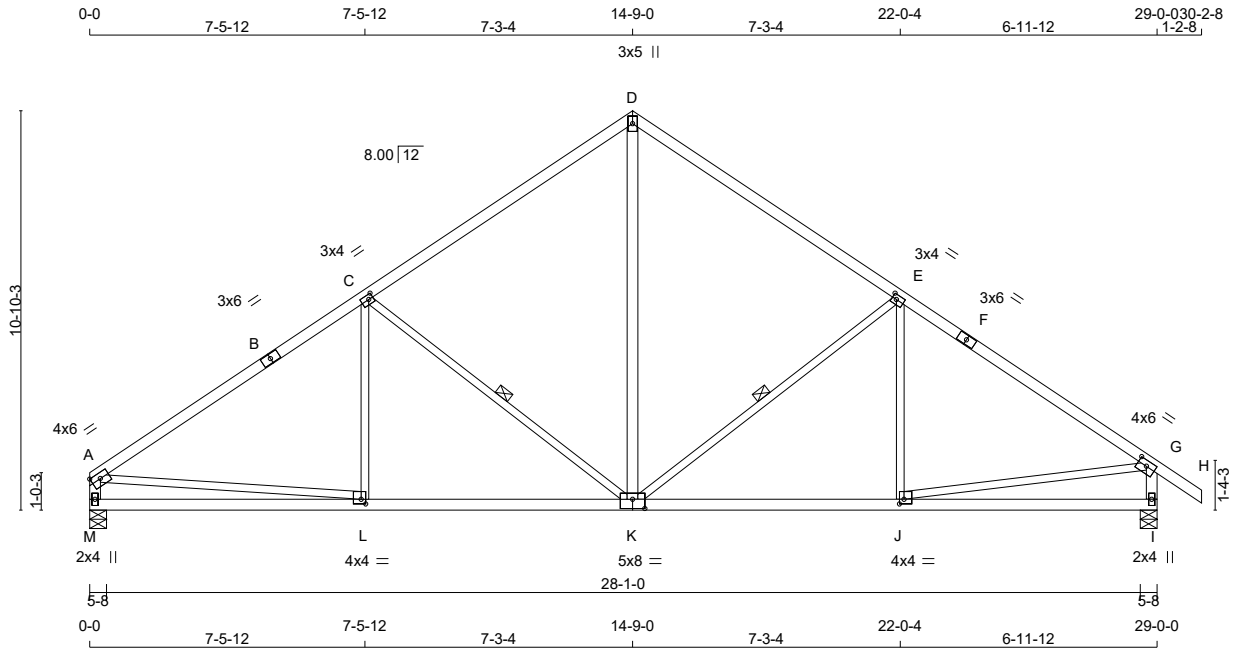

TOTAL WEIGHT = 4 X 123 = 491 lb

LUMBER

N. L. G. A. RULES

CHORDS	SIZE		LUMBER	DESCR.
A - B	2x4	DRY	No.2	SPF
B - D	2x4	DRY	No.2	SPF
D - F	2x4	DRY	No.2	SPF
F - H	2x4	DRY	No.2	SPF
M - A	2x4	DRY	No.2	SPF
I - G	2x4	DRY	No.2	SPF
M - K	2x4	DRY	No.2	SPF
K - I	2x4	DRY	No.2	SPF
ALL WEBS EXCEPT	2x3	DRY	No.2	SPF
K - D	2x4	DRY	No.2	SPF

DRY: SEASONED LUMBER.

PLATES (table is in inches)

JT	TYPE	PLATES	W	LEN	Y	X
A	TMVW-t	MT20	4.0	6.0	1.75	Edge
B	TS-t	MT20	3.0	6.0		
C	TMWW-t	MT20	3.0	4.0	1.50	1.50
D	TTW+p	MT20	3.0	5.0		
E	TMWW-t	MT20	3.0	4.0	1.50	1.50
F	TS-t	MT20	3.0	6.0		
G	TMVW-t	MT20	4.0	6.0	1.75	3.00
I	BMV1+p	MT20	2.0	4.0		
J	BMWW-t	MT20	4.0	4.0	1.50	1.50
K	BSWWW-l	MT20	5.0	8.0	3.00	4.00
L	BMWW-t	MT20	4.0	4.0	1.50	1.50
M	BMV1+p	MT20	2.0	4.0		

Edge - INDICATES REFERENCE CORNER OF PLATE TOUCHES EDGE OF CHORD.

DIMENSIONS, SUPPORTS AND LOADINGS SPECIFIED BY FABRICATOR TO BE VERIFIED BY BUILDING DESIGNER

BEARINGS

JT	FACTORED GROSS REACTION VERT	HORZ	MAXIMUM FACTORED GROSS REACTION DOWN	HORZ	UPLIFT	INPUT BRG IN-SX	REQRD BRG IN-SX
M	1386	0	1386	0	0	5-8	5-8
I	1486	0	1486	0	0	5-8	5-8

UNFACTORED REACTIONS

JT	1ST LCASE COMBINED	MAX./MIN. COMPONENT REACTIONS SNOW	LIVE	PERM.LIVE	WIND	DEAD	SOIL
M	974	675 / 0	0 / 0	0 / 0	0 / 0	299 / 0	0 / 0
I	1042	735 / 0	0 / 0	0 / 0	0 / 0	306 / 0	0 / 0

BEARING MATERIAL TO BE SPF NO.2 OR BETTER AT JOINT(S) M, I

BRACING

TOP CHORD TO BE SHEATHED OR MAX. PURLIN SPACING = 4.27 FT.
MAX. UNBRACED BOTTOM CHORD LENGTH = 10.00 FT OR RIGID CEILING DIRECTLY APPLIED.

ALL PITCH BREAKS AND PERIMETER CORNER JOINTS MUST BE LATERALLY RESTRAINED.

1 - 1x4 LATERAL BRACE(S) AT 1/ 2 LENGTH OF C-K, E-K. DBS = 20-0-0 . CBF = 79 LBS.

DBS = DIAGONAL BRACE SPACING (MAX). CBF = CUMULATIVE BRACING FORCE (PER BRACE). FASTEN LATERAL BRACE(S) USING (0.122"X3") SPIRAL NAILS : 1 NAIL FOR 2x3 BRACE(S), 2 FOR 1x4, 2x4, 2x5, 3 FOR 2x6, 4 FOR 2x8, 5 FOR 2x10, AND 6 FOR 2x12.

END VERTICAL(S) MUST BE SHEATHED OR HAVE BRACES AS INDICATED IN THE MAX. UNBRACED LENGTH COLUMN OF THE TABLE BELOW

LOADING

TOTAL LOAD CASES: (4)

CHORDS

MEMB. FR-TO	MAX. FACTORED FORCE (LBS)	FACTORED VERT. LOAD (PLF) FROM	TO	LC1 MAX CSI (LC)	MAX. UNBRAC LENGTH
A- B	-1718 / 0	-77.4	-77.4	0.70 (1)	4.27
B- C	-1718 / 0	-77.4	-77.4	0.70 (1)	4.27
C- D	-1195 / 0	-77.4	-77.4	0.61 (1)	5.00
D- E	-1192 / 0	-77.4	-77.4	0.59 (1)	5.07
E- F	-1636 / 0	-77.4	-77.4	0.61 (1)	4.47
F- G	-1636 / 0	-77.4	-77.4	0.61 (1)	4.47
G- H	0 / 28	-77.4	-77.4	0.09 (1)	10.00
M- A	-1330 / 0	0.0	0.0	0.13 (1)	7.02
I- G	-1434 / 0	0.0	0.0	0.15 (1)	6.82
M- L	0 / 0	-18.2	-18.2	0.24 (4)	10.00
L- K	0 / 1462	-18.2	-18.2	0.36 (1)	10.00
K- J	0 / 1393	-18.2	-18.2	0.34 (1)	10.00
J- I	0 / 0	-18.2	-18.2	0.22 (4)	10.00

WEBS

MEMB. FR-TO	MAX. FACTORED FORCE (LBS)	MAX CSI (LC)
L- C	0 / 130	0.05 (4)
C- K	-634 / 0	0.38 (1)
K- D	0 / 856	0.14 (1)
K- E	-547 / 0	0.32 (1)
J- E	-61 / 103	0.04 (4)
A- L	0 / 1468	0.33 (1)
J- G	0 / 1408	0.32 (1)

DESIGN CRITERIA

SPECIFIED LOADS:

TOP CH.	LL	=	23.3	PSF
	DL	=	3.0	PSF
BOT CH.	LL	=	0.0	PSF
	DL	=	7.3	PSF
TOTAL LOAD		=	33.6	PSF

SPACING = 24.0 IN. C/C

THIS TRUSS IS DESIGNED FOR RESIDENTIAL OR SMALL BUILDING REQUIREMENTS OF PART 9, NBCC 2010

THIS DESIGN COMPLIES WITH:
- PART 9 OF OBC 2012 , BCBC 2012 , ABC 2014
- CSA 086-09
- TPIC 2011

(55 % OF 27.2 P.S.F. G.S.L. PLUS 8.4 P.S.F. RAIN LOAD) EQUALS 23.3 P.S.F. SPECIFIED ROOF LIVE LOAD

ALLOWABLE DEFL.(LL)= L/360 (0.97")
CALCULATED VERT. DEFL.(LL) = L/ 999 (0.07")
ALLOWABLE DEFL.(TL)= L/360 (0.97")
CALCULATED VERT. DEFL.(TL) = L/ 999 (0.14")

CSI: TC=0.70/1.00 (A-C:1) , BC=0.36/1.00 (K-L:1) , WB=0.38/1.00 (C-K:1) , SSI=0.23/1.00 (A-C:1)

DOL LUMBER=1.00 NAIL=1.00 LS BEND=1.10 COMP=1.10 SHEAR=1.10 TENS= 1.10

COMPANION LIVE LOAD FACTOR = 0.50

TRUSS PLATE MANUFACTURER IS NOT RESPONSIBLE FOR QUALITY CONTROL IN THE TRUSS MANUFACTURING PLANT .

NAIL VALUES

PLATE	GRIP(DRY) (PSI) MAX	MIN	SHEAR (PLI) MAX	MIN	SECTION (PLI) MAX	MIN
MT20	618	354	1667	822	2284	1656

PLATE PLACEMENT TOL. = 0.250 inches

PLATE ROTATION TOL. = 5.0 Deg.

JSI GRIP= 0.84 (B) (INPUT = 0.90)
JSI METAL= 0.55 (L) (INPUT = 1.00)

LICENSED PROFESSIONAL ENGINEER
N.A. EL-MASRI
PROVINCE OF ONTARIO
May 31, 2018

READ ALL NOTES ON THIS PAGE AND ON ENGINEERING NOTE PAGE ENP-1. THIS NOTE PAGE IS AN INTEGRAL PART OF THIS DRAWING AS IT CONTAINS SPECIFICATIONS AND CRITERIA USED IN THE DESIGN OF THIS COMPONENT.

KOTT

JOB NAME	TRUSS NAME	QUANTITY	PLY	JOB DESC.		DRWG NO.
NE0518-227	T21	2	1	TRUSS DESC.	GREEN YORK HOMES - GRANELLI HOME CORP - AMELIA 12 ELE 1	PAGE 38 OF 45

Version 8.210 S Mar 12 2018 MiTek Industries, Inc. Thu May 31 18:08:31 2018 Page 1
ID:JiDzXONJoFa2AxdT?3zOcwzBMzn-bg9hTJ7a0_xOegdOzGL7estimt8wI8GGE?Kph0zAw4U

Scale = 1:34.1

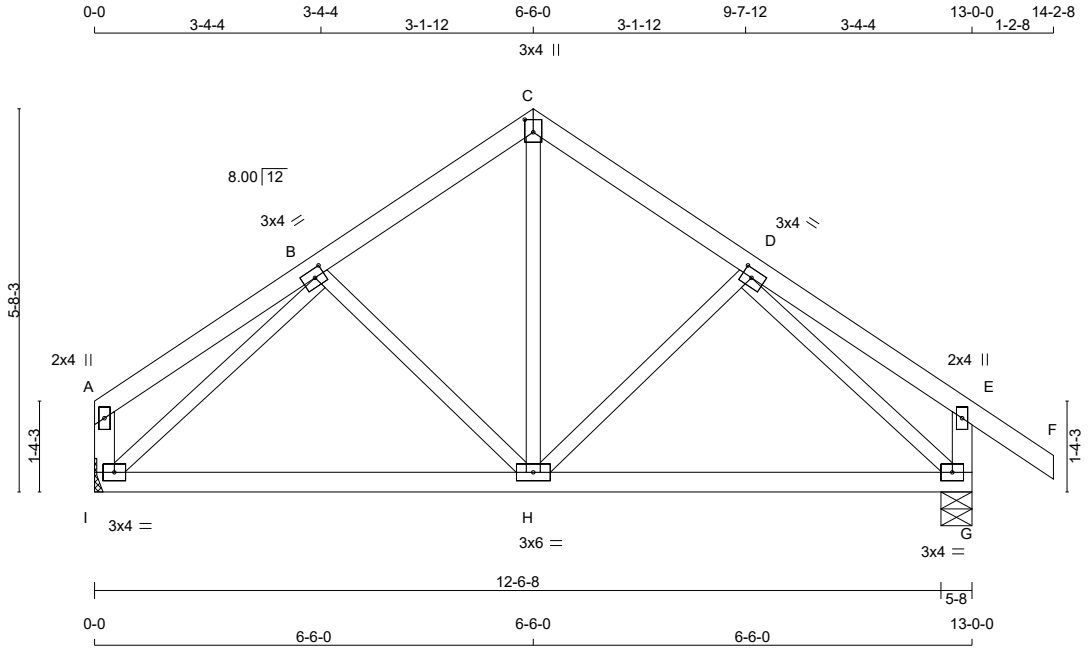

TOTAL WEIGHT = 2 X 55 = 109 lb

LUMBER
N. L. G. A. RULES

CHORDS	SIZE		LUMBER	DESCR.
A - C	2x4	DRY	No.2	SPF
C - F	2x4	DRY	No.2	SPF
I - A	2x4	DRY	No.2	SPF
G - E	2x4	DRY	No.2	SPF
I - G	2x4	DRY	No.2	SPF
ALL WEBS EXCEPT	2x3	DRY	No.2	SPF

DRY: SEASONED LUMBER.

PLATES (table is in inches)

JT	TYPE	PLATES	W	LEN	Y	X
A	TMV+p	MT20	2.0	4.0		
B	TMWW-t	MT20	3.0	4.0	1.50	1.75
C	TTW+p	MT20	3.0	4.0	2.25	1.50
D	TMWW-t	MT20	3.0	4.0	1.50	1.75
E	TMV+p	MT20	2.0	4.0		
G	BMVW1-t	MT20	3.0	4.0		
H	BMWWW-t	MT20	3.0	6.0		
I	BMVW1-t	MT20	3.0	4.0		

DIMENSIONS, SUPPORTS AND LOADINGS SPECIFIED BY FABRICATOR TO BE VERIFIED BY BUILDING DESIGNER

BEARINGS

JT	FACTORED GROSS REACTION VERT	HORZ	MAXIMUM GROSS REACTION DOWN	FACTORED HORZ	UPLIFT	INPUT BRG IN-SX	REQRD BRG IN-SX
I	621	0	621	0	0	MECHANICAL	
G	721	0	721	0	0	5-8	5-8

A SUITABLE MECHANICAL CONNECTION IS REQUIRED AT JOINT I TO RESIST THE MAX FACTORED REACTIONS.

UNFACTORED REACTIONS

JT	1ST LCASE COMBINED	MAX./MIN. COMPONENT REACTIONS SNOW	LIVE	PERM.LIVE	WIND	DEAD	SOIL
I	437	303 / 0	0 / 0	0 / 0	0 / 0	134 / 0	0 / 0
G	504	363 / 0	0 / 0	0 / 0	0 / 0	142 / 0	0 / 0

BEARING MATERIAL TO BE SPF NO.2 OR BETTER AT JOINT(S) G

BRACING
TOP CHORD TO BE SHEATHED OR MAX. PURLIN SPACING = 6.25 FT.
MAX. UNBRACED BOTTOM CHORD LENGTH = 10.00 FT OR RIGID CEILING DIRECTLY APPLIED.

ALL PITCH BREAKS AND PERIMETER CORNER JOINTS MUST BE LATERALLY RESTRAINED.

LOADING
TOTAL LOAD CASES: (4)

CHORDS

MEMB. FR-TO	MAX. FACTORED FORCE (LBS)	FACTORED VERT. LOAD (PLF) FROM	TO	LC1 MAX CSI (LC)	MAX. UNBRAC LENGTH
A- B	0 / 15	-77.4	-77.4	0.13 (1)	10.00
B- C	-488 / 0	-77.4	-77.4	0.10 (1)	6.25
C- D	-488 / 0	-77.4	-77.4	0.10 (1)	6.25
D- E	0 / 15	-77.4	-77.4	0.13 (1)	10.00
E- F	0 / 28	-77.4	-77.4	0.09 (1)	10.00
I- A	-97 / 0	0.0	0.0	0.01 (1)	7.81
G- E	-197 / 0	0.0	0.0	0.02 (1)	7.81
I- H	0 / 487	-18.2	-18.2	0.25 (4)	10.00
H- G	0 / 487	-18.2	-18.2	0.25 (4)	10.00

WEBS

MEMB. FR-TO	MAX. FACTORED FORCE (LBS)	MAX CSI (LC)
H- C	0 / 328	0.07 (1)
H- D	-130 / 7	0.04 (1)
B- H	-130 / 7	0.04 (1)
I- B	-682 / 0	0.22 (1)
D- G	-682 / 0	0.22 (1)

DESIGN CRITERIA [M][F]

SPECIFIED LOADS:

TOP	CH.	LL =	23.3	PSF
		DL =	3.0	PSF
BOT	CH.	LL =	0.0	PSF
		DL =	7.3	PSF
TOTAL	LOAD	=	33.6	PSF

SPACING = 24.0 IN. C/C

THIS TRUSS IS DESIGNED FOR RESIDENTIAL OR SMALL BUILDING REQUIREMENTS OF PART 9, NBCC 2010

THIS DESIGN COMPLIES WITH:
- PART 9 OF OBC 2012 , BCBC 2012 , ABC 2014
- CSA 086-09
- TPIC 2011

(55 % OF 27.2 P.S.F. G.S.L. PLUS 8.4 P.S.F. RAIN LOAD) EQUALS 23.3 P.S.F. SPECIFIED ROOF LIVE LOAD

ALLOWABLE DEFL.(LL)= L/360 (0.43")
CALCULATED VERT. DEFL.(LL) = L/ 999 (0.01")
ALLOWABLE DEFL.(TL)= L/360 (0.43")
CALCULATED VERT. DEFL.(TL) = L/ 999 (0.05")

CSI: TC=0.13/1.00 (D-E:1) , BC=0.25/1.00 (G-H:4) , WB=0.22/1.00 (D-G:1) , SSI=0.10/1.00 (C-D:1)

DOL LUMBER=1.00 NAIL=1.00 LS BEND=1.10 COMP=1.10 SHEAR=1.10 TENS= 1.10

COMPANION LIVE LOAD FACTOR = 0.50

TRUSS PLATE MANUFACTURER IS NOT RESPONSIBLE FOR QUALITY CONTROL IN THE TRUSS MANUFACTURING PLANT .

NAIL VALUES

PLATE	GRIP(DRY) (PSI) MAX	MIN	SHEAR (PLI) MAX	MIN	SECTION (PLI) MAX	MIN
MT20	618	354	1667	822	2284	1656

PLATE PLACEMENT TOL. = 0.250 inches

PLATE ROTATION TOL. = 5.0 Deg.

JSI GRIP= 0.88 (G) (INPUT = 0.90)
JSI METAL= 0.24 (B) (INPUT = 1.00)

LICENSED PROFESSIONAL ENGINEER
N.A. EL-MASRI
PROVINCE OF ONTARIO
May 31, 2018

READ ALL NOTES ON THIS PAGE AND ON ENGINEERING NOTE PAGE ENP-1. THIS NOTE PAGE IS AN INTEGRAL PART OF THIS DRAWING AS IT CONTAINS SPECIFICATIONS AND CRITERIA USED IN THE DESIGN OF THIS COMPONENT.

KOTT

JOB NAME	TRUSS NAME	QUANTITY	PLY	JOB DESC.		DRWG NO.
NE0518-227	T22	1	1	TRUSS DESC.	GREEN YORK HOMES - GRANELLI HOME CORP - AMELIA 12 ELE 1	PAGE 39 OF 45

Version 8.210 S Mar 12 2018 MiTek Industries, Inc. Thu May 31 18:08:31 2018 Page 1
ID:JiDzXONJoFa2AxdT?3zOcwzBMzn-bg9hTJ7a0_xOegdOzGL7esthLt5TIBBGE?Kph0zAw4U

Scale = 1:20.2

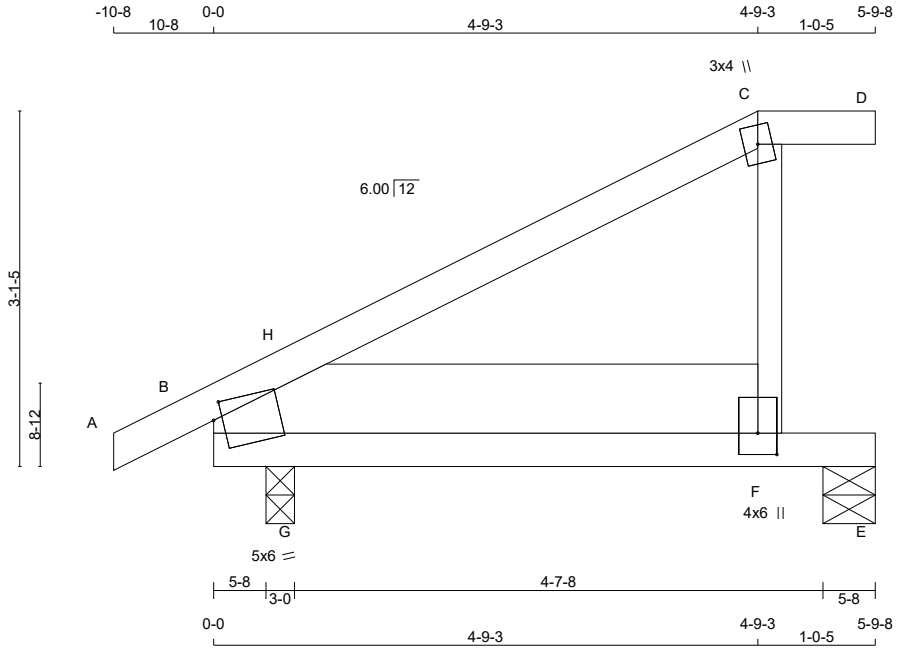

TOTAL WEIGHT = 28 lb
[M]

LUMBER
N. L. G. A. RULES

CHORDS	SIZE		LUMBER	DESCR.
A - C	2x4	DRY	No.2	SPF
C - D	2x4	DRY	No.2	SPF
B - E	2x4	DRY	No.2	SPF
REINFORCING MEMBERS				
HW1	2x8	DRY	No.2	SPF
ALL WEBS	2x3	DRY	No.2	SPF

DRY: SEASONED LUMBER.

PLATES (table is in inches)

JT	TYPE	PLATES	W	LEN	Y	X
B	TMBMW1-m	MT20	5.0	6.0	1.75	1.00
C	TTW+m	MT20	3.0	4.0		
F	BMWW+t	MT20	4.0	6.0	2.25	2.00

DIMENSIONS, SUPPORTS AND LOADINGS SPECIFIED BY FABRICATOR TO BE VERIFIED BY BUILDING DESIGNER

BEARINGS

JT	FACTORED GROSS REACTION VERT	HORZ	MAXIMUM GROSS REACTION DOWN	HORZ	UPLIFT	INPUT BRG IN-SX	REQRD BRG IN-SX
E	270	0	270	0	0	5-8	5-8
B	357	0	357	0	0	3-0	3-0

UNFACTORED REACTIONS

JT	1ST LCASE COMBINED	MAX./MIN. COMPONENT REACTIONS SNOW	LIVE	PERM.LIVE	WIND	DEAD	SOIL
E	190	131 / 0	0 / 0	0 / 0	0 / 0	59 / 0	0 / 0
B	249	183 / 0	0 / 0	0 / 0	0 / 0	66 / 0	0 / 0

BEARING MATERIAL TO BE SPF NO.2 OR BETTER AT JOINT(S) E, B

BRACING
TOP CHORD TO BE SHEATHED OR MAX. PURLIN SPACING = 6.25 FT.
MAX. UNBRACED BOTTOM CHORD LENGTH = 10.00 FT OR RIGID CEILING DIRECTLY APPLIED.

ALL PITCH BREAKS AND PERIMETER CORNER JOINTS MUST BE LATERALLY RESTRAINED.

LOADING
TOTAL LOAD CASES: (4)

CHORDS

MEMB. FR-TO	MAX. FORCE (LBS)	FACTORED VERT. LOAD (PLF) FROM	TO	LC1 CSI (LC)	MAX UNBRAC LENGTH
A- B	0 / 2	-77.4	-77.4	0.05 (1)	10.00
B- H	-636 / 0	-77.4	-77.4	0.15 (1)	6.25
H- C	-21 / 0	-77.4	-77.4	0.15 (1)	6.25
C- D	0 / 0	-77.4	-77.4	0.06 (1)	10.00
B- G	0 / 508	-18.2	-18.2	0.23 (1)	10.00
G- F	0 / 508	-18.2	-18.2	0.41 (1)	10.00
F- E	0 / 0	-18.2	-18.2	0.33 (1)	10.00

WEBS

MEMB. FR-TO	MAX. FORCE (LBS)	MAX CSI (LC)
F- C	-205 / 0	0.04 (1)
F- H	-510 / 0	0.06 (1)
G- H	0 / 277	0.00 (1)

DESIGN CRITERIA

SPECIFIED LOADS:

TOP CH.	LL	=	23.3	PSF
	DL	=	3.0	PSF
BOT CH.	LL	=	0.0	PSF
	DL	=	7.3	PSF
TOTAL LOAD		=	33.6	PSF

SPACING = 24.0 IN. C/C

LOADING IN ALL FLAT SECTIONS BASED ON A SLOPE OF 2.00/12 MINIMUM

THIS TRUSS IS DESIGNED FOR RESIDENTIAL OR SMALL BUILDING REQUIREMENTS OF PART 9, NBCC 2010

THIS DESIGN COMPLIES WITH:
- PART 9 OF OBC 2012 , BCBC 2012 , ABC 2014
- CSA 086-09
- TPIC 2011

(55 % OF 27.2 P.S.F. G.S.L. PLUS 8.4 P.S.F. RAIN LOAD) EQUALS 23.3 P.S.F. SPECIFIED ROOF LIVE LOAD

ALLOWABLE DEFL.(LL)= L/360 (0.19")
CALCULATED VERT. DEFL.(LL) = L/ 999 (0.05")
ALLOWABLE DEFL.(TL)= L/360 (0.19")
CALCULATED VERT. DEFL.(TL) = L/ 765 (0.09")

CSI: TC=0.15/1.00 (B-H:1) , BC=0.41/1.00 (F-G:1) , WB=0.06/1.00 (F-H:1) , SSI=0.21/1.00 (E-F:1)

DOL LUMBER=1.00 NAIL=1.00 LS BEND=1.10 COMP=1.10 SHEAR=1.10 TENS= 1.10

COMPANION LIVE LOAD FACTOR = 0.50

TRUSS PLATE MANUFACTURER IS NOT RESPONSIBLE FOR QUALITY CONTROL IN THE TRUSS MANUFACTURING PLANT .

NAIL VALUES

PLATE	GRIP(DRY) (PSI) MAX	MIN	SHEAR (PLI) MAX	MIN	SECTION (PLI) MAX	MIN
MT20	618	354	1667	822	2284	1656

PLATE PLACEMENT TOL. = 0.250 inches

PLATE ROTATION TOL. = 5.0 Deg.

JSI GRIP= 0.42 (B) (INPUT = 0.90)
JSI METAL= 0.17 (F) (INPUT = 1.00)

LICENSED PROFESSIONAL ENGINEER
N.A. EL-MASRI
PROVINCE OF ONTARIO
May 31, 2018

READ ALL NOTES ON THIS PAGE AND ON ENGINEERING NOTE PAGE ENP-1. THIS NOTE PAGE IS AN INTEGRAL PART OF THIS DRAWING AS IT CONTAINS SPECIFICATIONS AND CRITERIA USED IN THE DESIGN OF THIS COMPONENT.

KOTT

JOB NAME	TRUSS NAME	QUANTITY	PLY	JOB DESC.	DRWG NO.
NE0518-227	T23	2	1	GREEN YORK HOMES - GRANELLI HOME CORP - AMELIA 12 ELE 1 TRUSS DESC.	PAGE 40 OF 45

Version 8.210 S Mar 12 2018 MiTek Industries, Inc. Thu May 31 18:08:32 2018 Page 1
ID:JiDzXONJoFa2AxdT?3zOcwzBMzn-3sj3gf7DnI3FGqCaWzsMB3Qp8HS01eFQTf3NDSzAw4T

Scale = 1:21.6

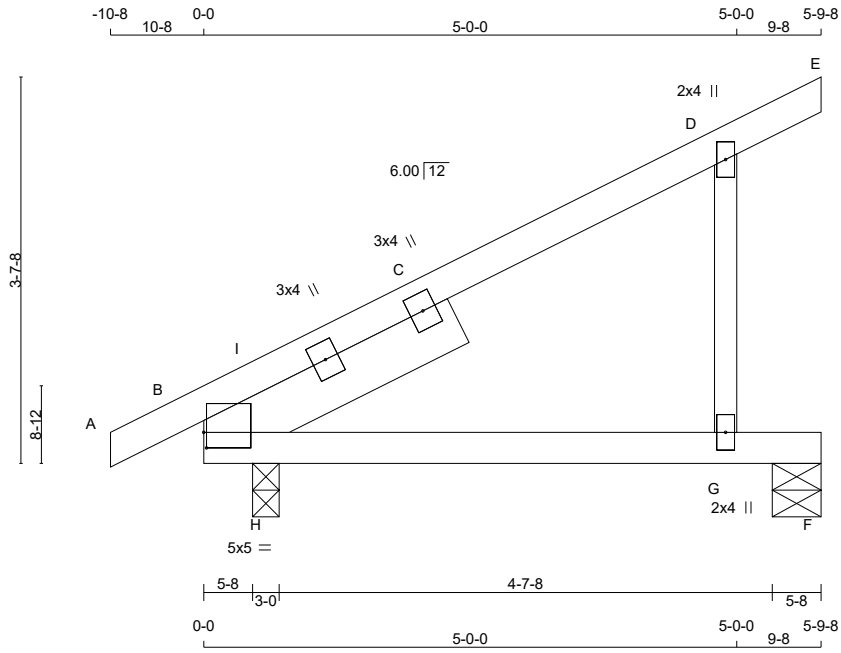

TOTAL WEIGHT = 2 X 22 = 44 lb

LUMBER
N. L. G. A. RULES

CHORDS	SIZE		LUMBER	DESCR.
A - E	2x4	DRY	No.2	SPF
B - F	2x4	DRY	No.2	SPF
REINFORCING MEMBERS				
HW1	2x6	DRY	No.2	SPF
ALL WEBS	2x3	DRY	No.2	SPF

DRY: SEASONED LUMBER.

PLATES (table is in inches)

JT	TYPE	PLATES	W	LEN	Y	X
B	TMBMR1-I	MT20	5.0	5.0	1.75	0.25
B	RT+t	MT20	3.0	4.0		
B	RT+t	MT20	3.0	4.0		
D	TMW+w	MT20	2.0	4.0		
G	BMW+w	MT20	2.0	4.0		

DIMENSIONS, SUPPORTS AND LOADINGS SPECIFIED BY FABRICATOR TO BE VERIFIED BY BUILDING DESIGNER

BEARINGS

JT	FACTORED GROSS REACTION VERT	HORZ	MAXIMUM FACTORED GROSS REACTION DOWN	HORZ	UPLIFT	INPUT BRG IN-SX	REQRD BRG IN-SX
B	357	0	357	0	0	3-0	3-0
F	275	0	275	0	0	5-8	5-8

UNFACTORED REACTIONS

JT	1ST LCASE COMBINED	MAX./MIN. COMPONENT REACTIONS SNOW	LIVE	PERM.LIVE	WIND	DEAD	SOIL
B	249	183 / 0	0 / 0	0 / 0	0 / 0	66 / 0	0 / 0
F	193	134 / 0	0 / 0	0 / 0	0 / 0	60 / 0	0 / 0

BEARING MATERIAL TO BE SPF NO.2 OR BETTER AT JOINT(S) B, F

BRACING
TOP CHORD TO BE SHEATHED OR MAX. PURLIN SPACING = 6.25 FT.
MAX. UNBRACED BOTTOM CHORD LENGTH = 10.00 FT OR RIGID CEILING DIRECTLY APPLIED.

ALL PITCH BREAKS AND PERIMETER CORNER JOINTS MUST BE LATERALLY RESTRAINED.

LOADING
TOTAL LOAD CASES: (4)

CHORDS

MEMB. FR-TO	MAX. FACTORED FORCE (LBS)	FACTORED VERT. LOAD (PLF) FROM	TO	LC1 CSI (LC)	MAX UNBRAC LENGTH
A- B	0 / 2	-77.4	-77.4	0.05 (1)	10.00
B- I	-304 / 0	-77.4	-77.4	0.07 (1)	6.25
I- C	-157 / 0	-77.4	-77.4	0.34 (1)	6.25
C- D	-157 / 0	-77.4	-77.4	0.34 (1)	6.25
D- E	-18 / 0	-77.4	-77.4	0.04 (1)	6.25
B- H	0 / 249	-18.2	-18.2	0.09 (1)	10.00
H- G	0 / 6	-18.2	-18.2	0.33 (1)	10.00
G- F	0 / 0	-18.2	-18.2	0.33 (1)	10.00

WEBS

MEMB. FR-TO	MAX. FACTORED FORCE (LBS)	MAX CSI (LC)
G- D	-266 / 0	0.05 (1)
H- I	-215 / 0	0.00 (1)
H- C	0 / 340	0.04 (1)

DESIGN CRITERIA [M][F]

SPECIFIED LOADS:

TOP CH.	LL	=	23.3	PSF
	DL	=	3.0	PSF
BOT CH.	LL	=	0.0	PSF
	DL	=	7.3	PSF
TOTAL LOAD		=	33.6	PSF

SPACING = 24.0 IN. C/C

THIS TRUSS IS DESIGNED FOR RESIDENTIAL OR SMALL BUILDING REQUIREMENTS OF PART 9, NBCC 2010

THIS DESIGN COMPLIES WITH:
- PART 9 OF OBC 2012 , BCBC 2012 , ABC 2014
- CSA 086-09
- TPIC 2011

(55 % OF 27.2 P.S.F. G.S.L. PLUS 8.4 P.S.F. RAIN LOAD) EQUALS 23.3 P.S.F. SPECIFIED ROOF LIVE LOAD

ALLOWABLE DEFL.(LL)= L/360 (0.19")
CALCULATED VERT. DEFL.(LL) = L/ 869 (0.08")
ALLOWABLE DEFL.(TL)= L/360 (0.19")
CALCULATED VERT. DEFL.(TL) = L/ 473 (0.15")

CSI: TC=0.34/1.00 (D-I:1) , BC=0.33/1.00 (G-H:1) , WB=0.05/1.00 (D-G:1) , SSI=0.21/1.00 (F-G:1)

DOL LUMBER=1.00 NAIL=1.00 LS BEND=1.10 COMP=1.10 SHEAR=1.10 TENS= 1.10

COMPANION LIVE LOAD FACTOR = 0.50

TRUSS PLATE MANUFACTURER IS NOT RESPONSIBLE FOR QUALITY CONTROL IN THE TRUSS MANUFACTURING PLANT .

NAIL VALUES

PLATE	GRIP(DRY) (PSI) MAX	MIN	SHEAR (PLI) MAX	MIN	SECTION (PLI) MAX	MIN
MT20	618	354	1667	822	2284	1656

PLATE PLACEMENT TOL. = 0.250 inches

PLATE ROTATION TOL. = 5.0 Deg.

JSI GRIP= 0.16 (D) (INPUT = 0.90)
JSI METAL= 0.06 (D) (INPUT = 1.00)

LICENSED PROFESSIONAL ENGINEER
N.A. EL-MASRI
PROVINCE OF ONTARIO
May 31, 2018

READ ALL NOTES ON THIS PAGE AND ON ENGINEERING NOTE PAGE ENP-1. THIS NOTE PAGE IS AN INTEGRAL PART OF THIS DRAWING AS IT CONTAINS SPECIFICATIONS AND CRITERIA USED IN THE DESIGN OF THIS COMPONENT.

KOTT

JOB NAME	TRUSS NAME	QUANTITY	PLY	JOB DESC.		DRWG NO.
NE0518-227	T24	4	1	TRUSS DESC.	GREEN YORK HOMES - GRANELLI HOME CORP - AMELIA 12 ELE 1	PAGE 41 OF 45

Version 8.210 S Mar 12 2018 MiTek Industries, Inc. Thu May 31 18:08:32 2018 Page 1
ID:JiDzXONJoFa2AxdT?3zOcwzBMzn-3sj3gf7DnI3FGqCaWzsMB3QquHU71e9QTf3NDSzAw4T

Scale = 1:24.5

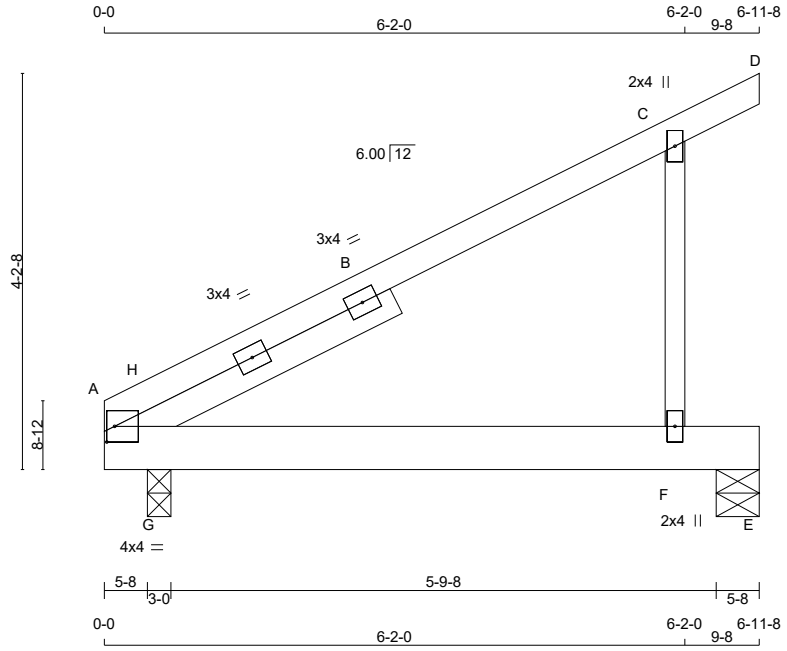

TOTAL WEIGHT = 4 X 28 = 111 lb

LUMBER
N. L. G. A. RULES

CHORDS	SIZE		LUMBER	DESCR.
A - D	2x4	DRY	No.2	SPF
A - E	2x6	DRY	No.2	SPF
REINFORCING MEMBERS				
HW1	2x4	DRY	No.2	SPF
ALL WEBS	2x3	DRY	No.2	SPF

DRY: SEASONED LUMBER.

PLATES (table is in inches)

JT	TYPE	PLATES	W	LEN	Y	X
A	TMBR1-I	MT20	4.0	4.0	2.00	1.00
A	RT-t	MT20	3.0	4.0		
A	RT-t	MT20	3.0	4.0		
C	TMW+w	MT20	2.0	4.0		
F	BMW+w	MT20	2.0	4.0		

DIMENSIONS, SUPPORTS AND LOADINGS SPECIFIED BY FABRICATOR TO BE VERIFIED BY BUILDING DESIGNER

BEARINGS

JT	FACTORED GROSS REACTION VERT	HORZ	MAXIMUM FACTORED GROSS REACTION DOWN	HORZ	UPLIFT	INPUT BRG IN-SX	REQRD BRG IN-SX
A	338	0	338	0	0	3-0	3-0
E	332	0	332	0	0	5-8	5-8

UNFACTORED REACTIONS

JT	1ST LCASE COMBINED	MAX./MIN. COMPONENT REACTIONS SNOW	LIVE	PERM.LIVE	WIND	DEAD	SOIL
A	238	166 / 0	0 / 0	0 / 0	0 / 0	72 / 0	0 / 0
E	233	162 / 0	0 / 0	0 / 0	0 / 0	72 / 0	0 / 0

BEARING MATERIAL TO BE SPF NO.2 OR BETTER AT JOINT(S) A, E

BRACING
TOP CHORD TO BE SHEATHED OR MAX. PURLIN SPACING = 6.25 FT.
MAX. UNBRACED BOTTOM CHORD LENGTH = 6.25 FT OR RIGID CEILING DIRECTLY APPLIED.

ALL PITCH BREAKS AND PERIMETER CORNER JOINTS MUST BE LATERALLY RESTRAINED.

LOADING
TOTAL LOAD CASES: (4)

CHORDS

MEMB. FR-TO	MAX. FACTORED FORCE (LBS)	FACTORED VERT. LOAD (PLF) FROM	TO	LC1 CSI (LC)	MAX UNBRAC LENGTH
A- H	-82 / 243	-77.4	-77.4	0.19 (1)	6.25
H- B	-41 / 27	-77.4	-77.4	0.29 (1)	6.25
B- C	-41 / 27	-77.4	-77.4	0.29 (1)	6.25
C- D	-18 / 0	-77.4	-77.4	0.04 (1)	6.25
A- G	-68 / 69	-18.2	-18.2	0.17 (1)	6.25
G- F	0 / 5	-18.2	-18.2	0.26 (1)	10.00
F- E	0 / 0	-18.2	-18.2	0.19 (1)	10.00

WEBS

MEMB. FR-TO	MAX. FACTORED FORCE (LBS)	MAX CSI (LC)
F- C	-258 / 0	0.06 (1)
G- H	-475 / 0	0.00 (1)
G- B	-92 / 86	0.02 (4)

DESIGN CRITERIA [M][F]

SPECIFIED LOADS:

TOP	CH.	LL	=	23.3	PSF
		DL	=	3.0	PSF
BOT	CH.	LL	=	0.0	PSF
		DL	=	7.3	PSF
TOTAL	LOAD		=	33.6	PSF

SPACING = 24.0 IN. C/C

THIS TRUSS IS DESIGNED FOR RESIDENTIAL OR SMALL BUILDING REQUIREMENTS OF PART 9, NBCC 2010

THIS DESIGN COMPLIES WITH:
- PART 9 OF OBC 2012 , BCBC 2012 , ABC 2014
- CSA 086-09
- TPIC 2011

(55 % OF 27.2 P.S.F. G.S.L. PLUS 8.4 P.S.F. RAIN LOAD) EQUALS 23.3 P.S.F. SPECIFIED ROOF LIVE LOAD

ALLOWABLE DEFL.(LL)= L/360 (0.23")
CALCULATED VERT. DEFL.(LL) = L/ 999 (0.06")
ALLOWABLE DEFL.(TL)= L/360 (0.23")
CALCULATED VERT. DEFL.(TL) = L/ 744 (0.11")

CSI: TC=0.29/1.00 (C-H:1) , BC=0.26/1.00 (F-G:1) , WB=0.06/1.00 (C-F:1) , SSI=0.35/1.00 (A-G:1)

DOL LUMBER=1.00 NAIL=1.00 LS BEND=1.10 COMP=1.10 SHEAR=1.10 TENS= 1.10

COMPANION LIVE LOAD FACTOR = 0.50

TRUSS PLATE MANUFACTURER IS NOT RESPONSIBLE FOR QUALITY CONTROL IN THE TRUSS MANUFACTURING PLANT .

NAIL VALUES

PLATE	GRIP(DRY) (PSI) MAX	MIN	SHEAR (PLI) MAX	MIN	SECTION (PLI) MAX	MIN
MT20	618	354	1667	822	2284	1656

PLATE PLACEMENT TOL. = 0.250 inches

PLATE ROTATION TOL. = 5.0 Deg.

JSI GRIP= 0.46 (A) (INPUT = 0.90)
JSI METAL= 0.06 (C) (INPUT = 1.00)

LICENSED PROFESSIONAL ENGINEER
N.A. EL-MASRI
PROVINCE OF ONTARIO
May 31, 2018

READ ALL NOTES ON THIS PAGE AND ON ENGINEERING NOTE PAGE ENP-1. THIS NOTE PAGE IS AN INTEGRAL PART OF THIS DRAWING AS IT CONTAINS SPECIFICATIONS AND CRITERIA USED IN THE DESIGN OF THIS COMPONENT.

KOTT

JOB NAME	TRUSS NAME	QUANTITY	PLY	JOB DESC.		DRWG NO.
NE0518-227	T25	2	1	TRUSS DESC.	GREEN YORK HOMES - GRANELLI HOME CORP - AMELIA 12 ELE 1	PAGE 42 OF 45

Version 8.210 S Mar 12 2018 MiTek Industries, Inc. Thu May 31 18:08:32 2018 Page 1
ID:JiDzXONJoFa2AxdT?3zOcwzBMzn-3sj3gf7DnI3FGqCaWzsMB3QrcHUf1eHQTf3NDSzAw4T

Scale = 1:23.2

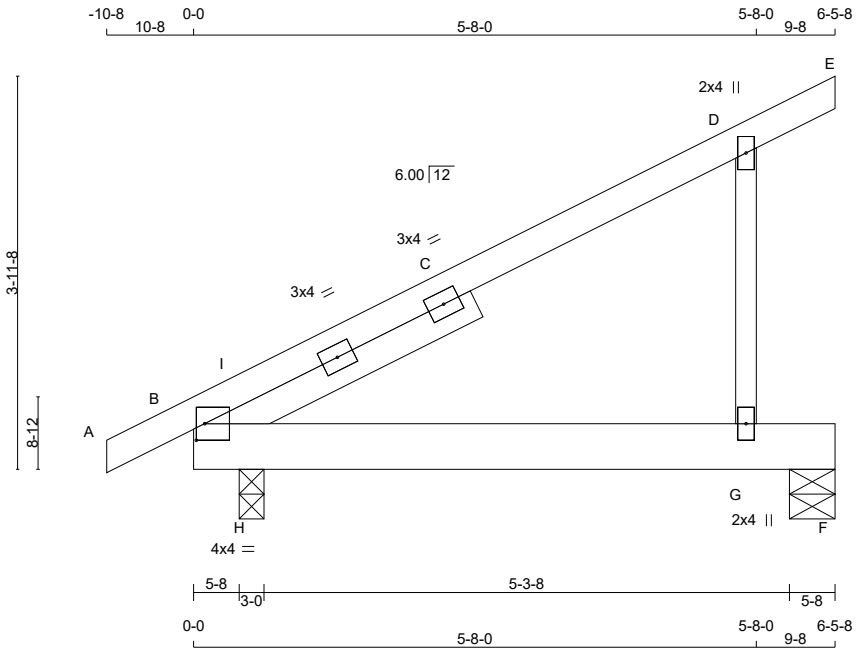

TOTAL WEIGHT = 2 X 27 = 54 lb

LUMBER
N. L. G. A. RULES

CHORDS	SIZE		LUMBER	DESCR.
A - E	2x4	DRY	No.2	SPF
B - F	2x6	DRY	No.2	SPF
REINFORCING MEMBERS				
HW1	2x4	DRY	No.2	SPF
ALL WEBS	2x3	DRY	No.2	SPF

DRY: SEASONED LUMBER.

PLATES (table is in inches)

JT	TYPE	PLATES	W	LEN	Y	X
B	TMBR1-I	MT20	4.0	4.0	2.00	1.00
B	RT-t	MT20	3.0	4.0		
B	RT-t	MT20	3.0	4.0		
D	TMW+w	MT20	2.0	4.0		
G	BMW+w	MT20	2.0	4.0		

DIMENSIONS, SUPPORTS AND LOADINGS SPECIFIED BY FABRICATOR TO BE VERIFIED BY BUILDING DESIGNER

BEARINGS

JT	FACTORED GROSS REACTION VERT	HORZ	MAXIMUM FACTORED GROSS REACTION DOWN	HORZ	UPLIFT	INPUT BRG IN-SX	REQRD BRG IN-SX
B	388	0	388	0	0	3-0	3-0
F	308	0	308	0	0	5-8	5-8

UNFACTORED REACTIONS

JT	1ST LCASE COMBINED	MAX./MIN. COMPONENT REACTIONS SNOW	LIVE	PERM.LIVE	WIND	DEAD	SOIL
B	271	198 / 0	0 / 0	0 / 0	0 / 0	73 / 0	0 / 0
F	216	150 / 0	0 / 0	0 / 0	0 / 0	66 / 0	0 / 0

BEARING MATERIAL TO BE SPF NO.2 OR BETTER AT JOINT(S) B, F

BRACING
TOP CHORD TO BE SHEATHED OR MAX. PURLIN SPACING = 6.25 FT.
MAX. UNBRACED BOTTOM CHORD LENGTH = 6.25 FT OR RIGID CEILING DIRECTLY APPLIED.

ALL PITCH BREAKS AND PERIMETER CORNER JOINTS MUST BE LATERALLY RESTRAINED.

LOADING
TOTAL LOAD CASES: (4)

CHORDS

MEMB. FR-TO	MAX. FACTORED FORCE (LBS)	FACTORED VERT. LOAD (PLF) FROM	TO	LC1 CSI (LC)	MAX UNBRAC LENGTH
A- B	0 / 5	-77.4	-77.4	0.05 (1)	10.00
B- I	-74 / 178	-77.4	-77.4	0.15 (1)	6.25
I- C	-36 / 14	-77.4	-77.4	0.25 (1)	6.25
C- D	-36 / 14	-77.4	-77.4	0.25 (1)	6.25
D- E	-18 / 0	-77.4	-77.4	0.04 (1)	6.25
B- H	-44 / 60	-18.2	-18.2	0.14 (1)	6.25
H- G	0 / 5	-18.2	-18.2	0.22 (1)	10.00
G- F	0 / 0	-18.2	-18.2	0.18 (1)	10.00

WEBS

MEMB. FR-TO	MAX. FACTORED FORCE (LBS)	MAX CSI (LC)
G- D	-243 / 0	0.05 (1)
H- I	-401 / 0	0.00 (1)
H- C	-63 / 76	0.02 (4)

DESIGN CRITERIA [M][F]

SPECIFIED LOADS:

TOP	CH.	LL	=	23.3	PSF
		DL	=	3.0	PSF
BOT	CH.	LL	=	0.0	PSF
		DL	=	7.3	PSF
TOTAL	LOAD		=	33.6	PSF

SPACING = 24.0 IN. C/C

THIS TRUSS IS DESIGNED FOR RESIDENTIAL OR SMALL BUILDING REQUIREMENTS OF PART 9, NBCC 2010

THIS DESIGN COMPLIES WITH:
- PART 9 OF OBC 2012 , BCBC 2012 , ABC 2014
- CSA 086-09
- TPIC 2011

(55 % OF 27.2 P.S.F. G.S.L. PLUS 8.4 P.S.F. RAIN LOAD) EQUALS 23.3 P.S.F. SPECIFIED ROOF LIVE LOAD

ALLOWABLE DEFL.(LL)= L/360 (0.22")
CALCULATED VERT. DEFL.(LL) = L/ 999 (0.05")
ALLOWABLE DEFL.(TL)= L/360 (0.22")
CALCULATED VERT. DEFL.(TL) = L/ 920 (0.08")

CSI: TC=0.25/1.00 (D-I:1) , BC=0.22/1.00 (G-H:1) , WB=0.05/1.00 (D-G:1) , SSI=0.30/1.00 (B-H:1)

DOL LUMBER=1.00 NAIL=1.00 LS BEND=1.10 COMP=1.10 SHEAR=1.10 TENS= 1.10

COMPANION LIVE LOAD FACTOR = 0.50

TRUSS PLATE MANUFACTURER IS NOT RESPONSIBLE FOR QUALITY CONTROL IN THE TRUSS MANUFACTURING PLANT .

NAIL VALUES

PLATE	GRIP(DRY) (PSI) MAX	MIN	SHEAR (PLI) MAX	MIN	SECTION (PLI) MAX	MIN
MT20	618	354	1667	822	2284	1656

PLATE PLACEMENT TOL. = 0.250 inches

PLATE ROTATION TOL. = 5.0 Deg.

JSI GRIP= 0.56 (B) (INPUT = 0.90)
JSI METAL= 0.05 (D) (INPUT = 1.00)

LICENSED PROFESSIONAL ENGINEER
N.A. EL-MASRI
PROVINCE OF ONTARIO
May 31, 2018

READ ALL NOTES ON THIS PAGE AND ON ENGINEERING NOTE PAGE ENP-1. THIS NOTE PAGE IS AN INTEGRAL PART OF THIS DRAWING AS IT CONTAINS SPECIFICATIONS AND CRITERIA USED IN THE DESIGN OF THIS COMPONENT.

KOTT

JOB NAME	TRUSS NAME	QUANTITY	PLY	JOB DESC.		DRWG NO.
NE0518-227	T26	1	1	TRUSS DESC.	GREEN YORK HOMES - GRANELLI HOME CORP - AMELIA 12 ELE 1	PAGE 43 OF 45

Version 8.210 S Mar 12 2018 MiTek Industries, Inc. Thu May 31 18:08:33 2018 Page 1
ID:JiDzXONJoFa2AxdT?3zOcwzBMzn-X2HRu?8rXcB6t_nm4hNbjHz1hhn_m5aZiJpwmuzAw4$

Scale = 1:20.0

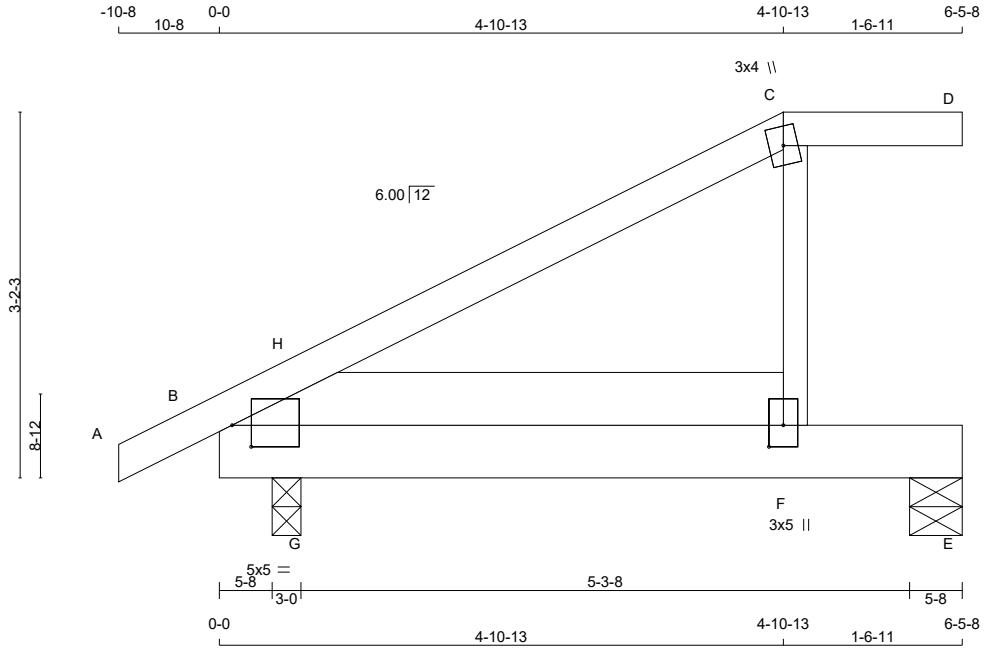

TOTAL WEIGHT = 31 lb
[M]

LUMBER
N. L. G. A. RULES

CHORDS	SIZE		LUMBER	DESCR.
A - C	2x4	DRY	No.2	SPF
C - D	2x4	DRY	No.2	SPF
B - E	2x6	DRY	No.2	SPF
REINFORCING MEMBERS				
HW1	2x6	DRY	No.2	SPF
ALL WEBS	2x3	DRY	No.2	SPF

DRY: SEASONED LUMBER.

PLATES (table is in inches)

JT	TYPE	PLATES	W	LEN	Y	X
B	TMBW1-I	MT20	5.0	5.0	2.25	2.00
C	TTW+m	MT20	3.0	4.0		
F	BMWW+t	MT20	3.0	5.0	2.25	1.50

DIMENSIONS, SUPPORTS AND LOADINGS SPECIFIED BY FABRICATOR TO BE VERIFIED BY BUILDING DESIGNER

BEARINGS

JT	FACTORED GROSS REACTION VERT	HORZ	MAXIMUM GROSS REACTION DOWN	FACTORED HORZ	UPLIFT	INPUT BRG IN-SX	REQRD BRG IN-SX
E	294	0	294	0	0	5-8	5-8
B	396	0	396	0	0	3-0	3-0

UNFACTORED REACTIONS

JT	1ST LCASE COMBINED	MAX./MIN. COMPONENT REACTIONS SNOW	LIVE	PERM.LIVE	WIND	DEAD	SOIL
E	207	142 / 0	0 / 0	0 / 0	0 / 0	65 / 0	0 / 0
B	276	203 / 0	0 / 0	0 / 0	0 / 0	73 / 0	0 / 0

BEARING MATERIAL TO BE SPF NO.2 OR BETTER AT JOINT(S) E, B

BRACING
TOP CHORD TO BE SHEATHED OR MAX. PURLIN SPACING = 6.25 FT.
MAX. UNBRACED BOTTOM CHORD LENGTH = 10.00 FT OR RIGID CEILING DIRECTLY APPLIED.

ALL PITCH BREAKS AND PERIMETER CORNER JOINTS MUST BE LATERALLY RESTRAINED.

LOADING
TOTAL LOAD CASES: (4)

CHORDS

MEMB. FR-TO	MAX. FACTORED FORCE (LBS)	FACTORED VERT. LOAD (PLF) FROM	TO	LC1 CSI (LC)	MAX UNBRAC LENGTH
A- B	0 / 5	-77.4	-77.4	0.05 (1)	10.00
B- H	-719 / 0	-77.4	-77.4	0.16 (1)	6.25
H- C	-23 / 0	-77.4	-77.4	0.16 (1)	6.25
C- D	0 / 0	-77.4	-77.4	0.13 (1)	10.00
B- G	0 / 599	-18.2	-18.2	0.14 (1)	10.00
G- F	0 / 599	-18.2	-18.2	0.34 (1)	10.00
F- E	0 / 0	-18.2	-18.2	0.27 (1)	10.00

WEBS

MEMB. FR-TO	MAX. FACTORED FORCE (LBS)	MAX CSI (LC)
F- C	-248 / 0	0.04 (1)
F- H	-598 / 0	0.10 (1)
G- H	0 / 291	0.00 (1)

DESIGN CRITERIA

SPECIFIED LOADS:

TOP CH.	LL	=	23.3	PSF
	DL	=	3.0	PSF
BOT CH.	LL	=	0.0	PSF
	DL	=	7.3	PSF
TOTAL LOAD		=	33.6	PSF

SPACING = 24.0 IN. C/C

LOADING IN ALL FLAT SECTIONS BASED ON A SLOPE OF 2.00/12 MINIMUM

THIS TRUSS IS DESIGNED FOR RESIDENTIAL OR SMALL BUILDING REQUIREMENTS OF PART 9, NBCC 2010

THIS DESIGN COMPLIES WITH:
- PART 9 OF OBC 2012 , BCBC 2012 , ABC 2014
- CSA 086-09
- TPIC 2011

(55 % OF 27.2 P.S.F. G.S.L. PLUS 8.4 P.S.F. RAIN LOAD) EQUALS 23.3 P.S.F. SPECIFIED ROOF LIVE LOAD

ALLOWABLE DEFL.(LL)= L/360 (0.22")
CALCULATED VERT. DEFL.(LL) = L/ 999 (0.03")
ALLOWABLE DEFL.(TL)= L/360 (0.22")
CALCULATED VERT. DEFL.(TL) = L/ 999 (0.06")

CSI: TC=0.16/1.00 (B-H:1) , BC=0.34/1.00 (F-G:1) , WB=0.10/1.00 (F-H:1) , SSI=0.18/1.00 (E-F:1)

DOL LUMBER=1.00 NAIL=1.00 LS BEND=1.10 COMP=1.10 SHEAR=1.10 TENS= 1.10

COMPANION LIVE LOAD FACTOR = 0.50

TRUSS PLATE MANUFACTURER IS NOT RESPONSIBLE FOR QUALITY CONTROL IN THE TRUSS MANUFACTURING PLANT .

NAIL VALUES

PLATE	GRIP(DRY) (PSI) MAX	MIN	SHEAR (PLI) MAX	MIN	SECTION (PLI) MAX	MIN
MT20	618	354	1667	822	2284	1656

PLATE PLACEMENT TOL. = 0.250 inches

PLATE ROTATION TOL. = 0.5 Deg.

JSI GRIP= 0.79 (F) (INPUT = 0.90)
JSI METAL= 0.26 (F) (INPUT = 1.00)

LICENSED PROFESSIONAL ENGINEER
N.A. EL-MASRI
PROVINCE OF ONTARIO
May 31, 2018

READ ALL NOTES ON THIS PAGE AND ON ENGINEERING NOTE PAGE ENP-1. THIS NOTE PAGE IS AN INTEGRAL PART OF THIS DRAWING AS IT CONTAINS SPECIFICATIONS AND CRITERIA USED IN THE DESIGN OF THIS COMPONENT.

KOTT

BEARING ANCHORAGE BY TOE-NAILS FOR LATERAL CAPACITY

B37579H1

NAIL TYPE	LENGTH (IN)	DIAMETER (IN)	NAIL LATERAL CAPACITY (LB)	
			S-P-F	D. FIR
COMMON WIRE	3.00	0.144	132	147
	3.25	0.144	132	147
	3.50	0.160	159	177

NOTES:

1. Rafter and ceiling members may be anchored to top and bottom chords of girder truss by toe-nailing rafter and ceiling members to girder chords provided the reaction does not exceed the lateral capacities in the table. Hangers (specified by others) are required for reactions higher than the maximum toe-nail capacity. Reactions are based on factored loads.

2. Toe nail capacities shown in the table are for **one** toe-nail. For additional toe-nails multiply values in table by the number of toe-nails used. Toe-nail capacities take into account toe-nailing factor J_A in CSA O86-09, section 10.9.4.1.

3. For 9- 3/4 gauge 3.25" common wire gun nails (diameter = 0.120") use 3" common spiral nail values.

4. Maximum number of toe-nails allowed depends on the lumber size & species to be toe-nailed to supporting member and nail diameter, as shown in tables below.

5. Nail values in table are based on the following relative lumber densities: G = 0.42 (SPF), G = 0.49 (D. Fir).

6. Toe-nails shall be driven at approximately 1/3 the nail length from the edge of the joist/truss chord and driven at an angle of 30º to the grain of the member (See next page for nailing on bearing plate).

7. For loads due to **wind** the nail lateral capacity in this table may be multiplied by 1.15 (K_D factor).

8. Lumber must be dry (< 19% moisture content) at the time of nail installation.

9. Nail values in this table comply with CSA O86-09, section 10.9.4

10. This design is not valid after April 30, 2019.

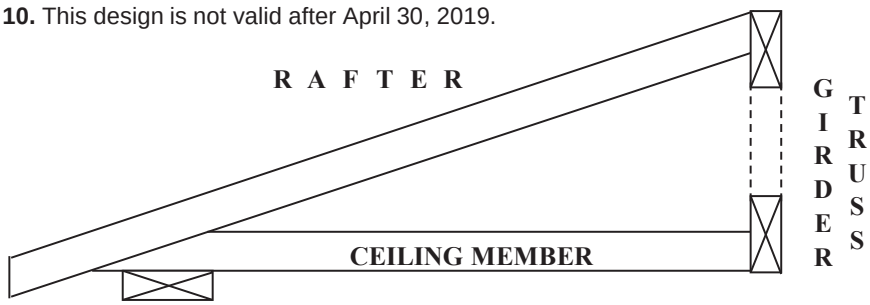

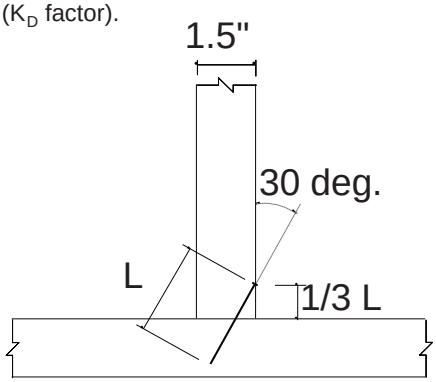

TOE-NAIL INSTALLATION

Nail type	Common wire	Common spiral	Common wire
Nail dia. (in)	0.160	0.152	0.144
	(3.5" nail)		(3" and 3.25" nail)
LUMBER SIZE	MAXIMUM NUMBER OF TOE-NAILS		
2X4 SPF	2	2	3
2X4 D. Fir	2	2	2
2X6 SPF	4	4	4
2X6 D. Fir	3	3	3

MiTek Canada Inc
100 Industrial Rd.
Bradford, Ontario L3Z 3G7

PEO
Certificate No. 10889485
LICENSED PROFESSIONAL ENGINEER
C. Cordogiannis
90553736
PROVINCE OF ONTARIO

April 26, 2017

BEARING ANCHORAGE BY TOE-NAILS FOR WIND LOADING B37579H2

NAIL TYPE	LENGTH (IN)	DIAMETER (IN)	NAIL WITHDRAWAL CAPACITY (LB)	
			S-P-F	D. FIR
COMMON WIRE	3.00	0.144	30	42
	3.25	0.144	32	45
	3.50	0.160	38	52

Note: If using truss with D. Fir lumber and S-P-F bearing plate, use values in table for S-P-F.

NOTES:

1. Truss chord, rafter, or ceiling members may be anchored to bearing plate by toe-nails, provided that the actual factored uplift force due to **wind or earthquake** load does not exceed the withdrawal capacities in the table. Hangers (specified by others) are required for uplift forces that are higher than the maximum toe-nail withdrawal capacity.
2. Toe nail capacities shown in the table are for **one** toe-nail. For additional toe-nails multiply values in table by the number of toe-nails used. Toe-nail capacities take into account toe-nailing factor J_A in CSA O86-09, section 10.9.5.2.
3. For 9- 3/4 gauge 3.25" common wire gun nails (diameter = 0.120") use 3" common spiral nail values.
4. Maximum number of toe-nails allowed depends on the lumber size & species to be toe-nailed to supporting member and nail diameter, as shown in table above.
5. Nail values in table are based on the following relative lumber densities: G = 0.42(SPF), G = 0.49(D. Fir).
6. Toe-nails shall be driven at approximately 1/3 the nail length from the edge of the joist/truss chord and driven at an angle of 30º to the grain of the member (See drawing on detail B37579H1).
7. Lumber must be dry (< 19% moisture content) at the time of nail installation.
8. Nail values in this table comply with CSA O86-09, section 10.9.5
9. This design is not valid after April 30, 2019

Toe-nailing on 2x6 Bearing Plate

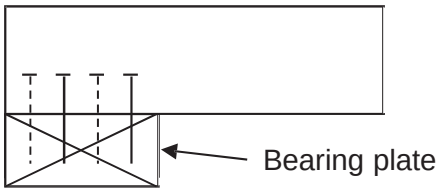

Elevation view

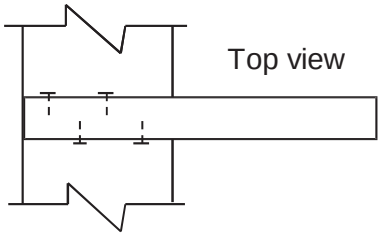

Top view

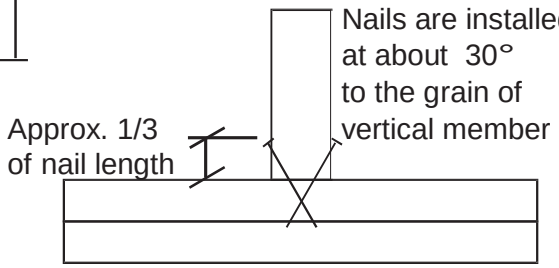

Toe-nailing viewed from end of joist or truss

Toe-nailing on 2x4 Bearing Plate

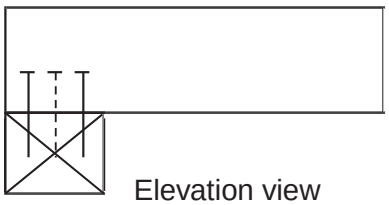

Elevation view

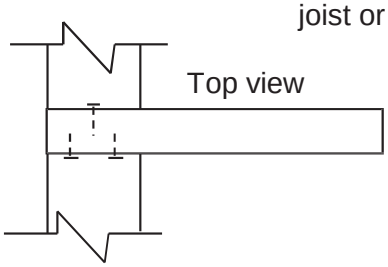

Top view

MiTek Canada Inc
100 Industrial Rd.
Bradford, Ontario L3Z 3G7

PEO
Certificate No. 10889485

LICENSED PROFESSIONAL ENGINEER
C. Cordogiannis
90553736
PROVINCE OF ONTARIO

April 26, 2017