KOTT

ENGINEERING NOTE PAGE (ENP-1)
PLEASE READ PRIOR TO INSTALLATION

NE0618-035
GREEN YORK HOMES - GRANELLI
HOME CORP - INDIGO 1 ELEV 2

RESPONSIBILITIES

THIS DESIGN IS FOR AN INDIVIDUAL BUILDING COMPONENT AND HAS BEEN BASED ON INFORMATION PROVIDED BY THE DESIGN OFFICE OF KOTT LUMBER. THE UNDERSIGNED ENGINEER DISCLAIMS ANY RESPONSIBILITY FOR DAMAGES AS A RESULT OF FAULTY OR INCORRECT INFORMATION, SPECIFICATION AND/OR DESIGNS FURNISHED TO THE ENGINEER. THE UNDERSIGNED ENGINEER IS ONLY RESPONSIBLE FOR THE STRUCTURAL INTEGRITY OF THIS BUILDING COMPONENT FOR THE CONDITIONS AND LOADS SHOWN ON THIS DRAWING. THE STRUCTURAL INTEGRITY OF THE BUILDING AND THE VERIFICATION OF THE DIMENSIONS AND THE DESIGN LOADS USED ARE THE RESPONSIBILITY OF THE BUILDING DESIGNER.

TRUSSES ARE DESIGNED IN CONFORMANCE WITH THE RELEVANT SECTIONS OF THE NATIONAL BUILDING CODE OF CANADA OR THE CANADIAN CODE FOR FARM BUILDINGS, WHICHEVER APPLIES TO THE BUILDING TYPE INDICATED ON THE DRAWING

IT IS THE RESPONSIBILITY OF KOTT LUMBER TO ENSURE THAT TRUSSES ARE MANUFACTURED IN CONFORMANCE WITH THESE DESIGNS AND WITH THE SPECIFICATIONS OUTLINED BELOW. THE UNDERSIGNED ENGINEER IS NOT RESPONSIBLE FOR QUALITY CONTROL IN THE TRUSS MANUFACTURING PLANT.

For conventional framing roof / ceilings framing shall conform to OBC.9.23

USE AND OCCUPANCY

- The building is of the type indicated on the drawing

LOADING

- The truss loading intensity and distribution as well as load transfer mechanism is that indicated on the drawing
- No buildings, trees, parapets or other projections higher than the roof for which the trusses are used are located within a distance less than ten (10) times the difference in height, or five metres (16 ft) whichever is greater, unless the drawing indicates that the snow drifting has been taken into account

HANDLING, INSTALLATION AND BRACING

- The trusses must be handled and installed by a qualified professional as per the supplied document titled *Information for Truss Installers* and the BCSI-B1 and BCSI-B3 Summary Sheets
- The compression chords are laterally braced by continuous rigid diaphragm sheathing or as specified on the drawing
- Temporary and permanent bracing must be installed as indicated on the truss drawing and according to the BCSI-B1 and BCSI-B3 Summary Sheets. Bracing for the lateral stability of the truss is to be provided by the building designer
- **It is recommended that a Professional Engineer's advice be obtained for the bracing of trusses spanning more than 12.37m (40'-7")**

SUPPORTS

- The trusses are to be supported at the bearing points indicated and anchored to the supports where considered necessary by the designer of the overall structure
- Bearing sizes shown are the minimum required to prevent crushing of the truss members and do not necessarily take into account stability of the overall building structure
- Elevation of bearings must be carefully checked and shimmed to alignment for solid bearings
- Adequate wood truss bearing is the responsibility of the building designer.

DIMENSIONS

- Geometry of the truss and dimensions indicated on the drawing are identical to those of the installed truss.

KOTT

Layout based on plans provided by
Jardin Design Group Inc.
Revision #2 dated May 22, 2018

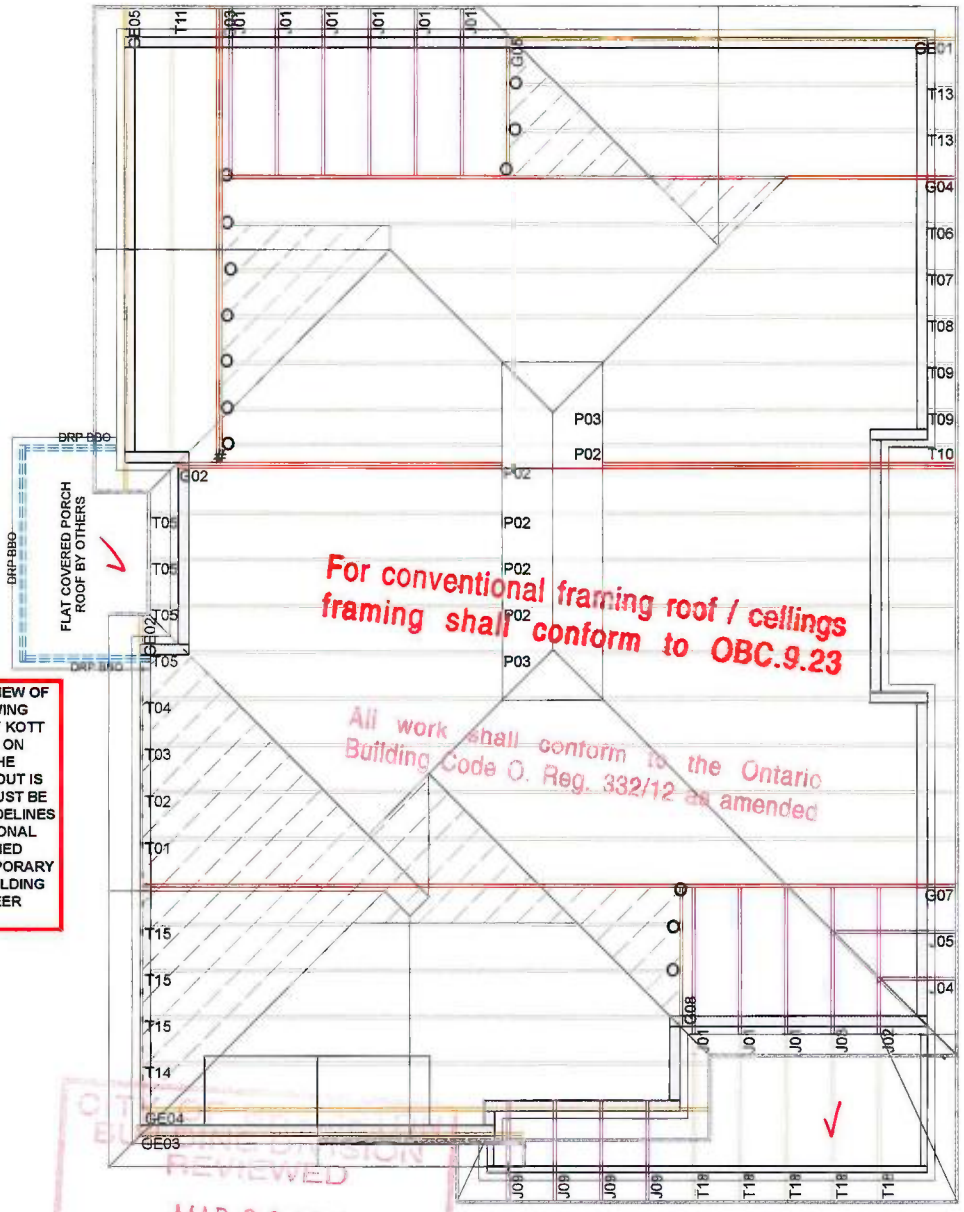

For conventional framing roof / ceilings framing shall conform to OBC.9.23

All work shall conform to the Ontario Building Code O. Reg. 332/12 as amended

THIS CERTIFICATION IS FOR THE ENGINEERING REVIEW OF STRUCTURAL COMPONENTS SHOWN ON THIS DRAWING AND IS LIMITED TO THE COMPONENTS SUPPLIED BY KOTT LUMBER FOR THE LOADS AND CONDITIONS SHOWN ON THE CALCULATION PAGE OF EACH COMPONENT. THE PLACEMENT OF THESE COMPONENTS ON THIS LAYOUT IS SHOWN FOR REFERENCE ONLY. ROOF TRUSSES MUST BE INSTALLED ACCORDING TO MANUFACTURER'S GUIDELINES AT 24" C/C UNLESS NOTED OTHERWISE. CONVENTIONAL FRAMING SHOWN ON THE LAYOUT MUST BE DESIGNED AND APPROVED BY THE PROJECT ENGINEER. TEMPORARY AND PERMANENT BRACINGS OF THE ROOF AND BUILDING ARE THE RESPONSIBILITY OF THE PROJECT ENGINEER AND TO CONFORM TO BCSI GUIDELINES.

LICENSED PROFESSIONAL ENGINEER
N.A. EL-MASRI
PROVINCE OF ONTARIO
Jun 05, 2018
NE0618-035

REVIEWED
MAR 06 2019
BY
MARY FRENETTE

GARAGE TOP OF PLATE TO MATCH UNDERSIDE OF SOFFIT

19-444496-000-00RR

ROOF TRUSS LAYOUT

CONVENTIONAL FRAMING BY OTHERS

HANGER LEGEND

X - LUS24
O - LJS26DS
- HGUS28-2
% - HGUS26-2

SIZE AND LOCATION OF CONVENTIONAL FRAMING IS APPROXIMATE. ALL AREAS MAY NOT BE SHOWN. REFER TO ARCHITECTURAL PLANS FOR DETAILS.

ALL CONVENTIONAL FRAMING TO CONFORM WITH PART 9 OF THE O.B.C RAFTER THAT CROSS MEET OVER TRUSSES TO BE 2X4 SPF @ 24" O/C WITH 2X4 VERT POST TO THE TRUSS BELOW EA CROSS PT. VERT POS . THAN 6' TO HAVE A LATERAL BRACING SO THAT THE DISTANCE BETEN PT & VERT ROWS OF BRACING DOES NOT EXCEED 6'

DESIGN CRITERIA
SPECIFIED LOADS:
TOP CH. LL = 23.3 psf
DL = 3.0 psf
BOT CH. LL = 0.0 psf
DL = 7.0 psf
TOTAL LOAD = 33.3 psf

SPACING @ 24" CENTERS,
THIS TRUSS SYSTEM IS DESIGN FOR RESIDENTIAL OR SMALL BUILDING REQUIREMENTS OF PART 9, NBCC 2010

THIS DESIGN COMPLIES WITH PART 9 OF OBC 2012, BCBC 2012, ABC 2012; CSA 086-09; TPIC 2011

ALLOWABLE DEFLECTION OF EACH COMPONENT = L/360

Model:	**INDIGO 1 ELE 2**
Customer:	**GREEN YORK HOMES**
Project:	**GRANELLI HOME**
Location:	**BRAMPTON, ON**
Drawn By:	**DM**
Date:	**5/31/2018**

JOB NAME	TRUSS NAME	QUANTITY	PLY	JOB DESC.		DRWG NO.
NE0618-035	G02	1	2	TRUSS DESC.	GREEN YORK HOMES - GRANELLI HOME CORP - INDIGO 1 ELEV 2	PAGE 3 OF 47

Version 8.210 S Mar 12 2018 MiTek Industries, Inc. Tue Jun 5 17:06:55 2018 Page 1
ID:9_xLMwZ3WDKc3QXh8cyzSnzB2V3-?KyG4JSepPk1iqW_XmP?WWxmBqaleVPtbeqoQsz9HWE

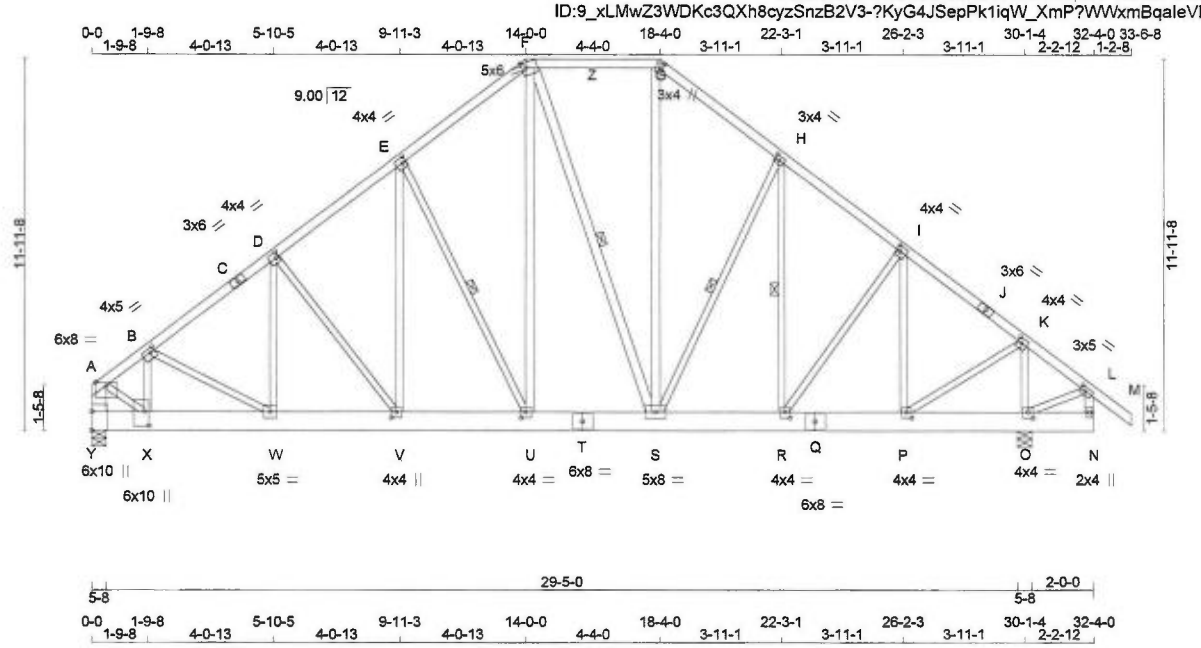

TOTAL WEIGHT = 2 X 224 = 448 lb [M]

LUMBER

N. L. G. A. RULES

CHORDS	SIZE		LUMBER	DESCR.
A - C	2x4	DRY	No.2	SPF
C - F	2x4	DRY	No.2	SPF
F - G	2x4	DRY	No.2	SPF
G - J	2x4	DRY	No.2	SPF
J - M	2x4	DRY	No.2	SPF
Y - A	2x6	DRY	No.2	SPF
N - L	2x4	DRY	No.2	SPF
Y - T	2x8	DRY	No.2	SPF
T - Q	2x8	DRY	No.2	SPF
Q - N	2x8	DRY	No.2	SPF
ALL WEBS	2x3	DRY	No.2	SPF
EXCEPT				
U - F	2x4	DRY	No.2	SPF
F - S	2x4	DRY	No.2	SPF
S - G	2x4	DRY	No.2	SPF

DRY: SEASONED LUMBER.

DESIGN CONSISTS OF 2 TRUSSES BUILT SEPARATELY THEN FASTENED TOGETHER AS FOLLOWS:

CHORDS	#ROWS	SURFACE SPACING (IN)	LOAD(PLF)
TOP CHORDS : (0.122"X3") SPIRAL NAILS			
A- C	1	12	TOP
C- F	1	12	TOP
F- G	1	12	TOP
G- J	1	12	TOP
J- M	1	12	TOP
N- L	1	12	TOP
Y- A	2	12	TOP
BOTTOM CHORDS : (0.122"X3") SPIRAL NAILS			
Y- T	2	12	SIDE(0.0)
T- Q	2	12	TOP
Q- N	2	12	TOP
WEBS : (0.122"X3") SPIRAL NAILS			
2x3	1	6	
2x4	1	6	

NAILS TO BE DRIVEN FROM ONE SIDE ONLY.

GIRDER NAILING ASSUMES NAILED HANGERS ARE FASTENED WITH MIN. 3-0 INCH NAILS.

READ ALL NOTES ON THIS PAGE AND ON ENGINEERING NOTE PAGE ENP-1. THIS NOTE PAGE IS AN INTEGRAL PART OF THIS DRAWING AS IT CONTAINS SPECIFICATIONS AND CRITERIA USED IN THE DESIGN OF THIS COMPONENT.

LICENSED PROFESSIONAL ENGINEER
N.A. EL-MASRI
PROVINCE OF ONTARIO
Jun 05, 2018

DIMENSIONS, SUPPORTS AND LOADINGS SPECIFIED BY FABRICATOR TO BE VERIFIED BY BUILDING DESIGNER

BEARINGS

JT	FACTORED GROSS REACTION VERT	HORZ	MAXIMUM FACTORED GROSS REACTION DOWN	HORZ	UPLIFT	INPUT BRG IN-SX	REQRD BRG IN-SX
Y	8153	0	8153	0	0	5-8	5-8
O	2210	0	2210	0	0	5-8	5-8

UNFACTORED REACTIONS

JT	1ST LCASE COMBINED	MAX./MIN. COMPONENT REACTIONS SNOW	LIVE	PERM.LIVE	WIND	DEAD	SOIL
Y	5730	3964 / 0	0 / 0	0 / 0	0 / 0	1767 / 0	0 / 0
O	1552	1081 / 0	0 / 0	0 / 0	0 / 0	472 / 0	0 / 0

BEARING MATERIAL TO BE SPF NO.2 OR BETTER AT JOINT(S) Y, O

BRACING

FOR SECTION F-G, MAX. PURLIN SPACING = 2.00 FT.
FOR OTHER SECTIONS, TOP CHORD TO BE SHEATHED OR MAX. PURLIN SPACING = 3.58 FT.
MAX. UNBRACED BOTTOM CHORD LENGTH = 6.25 FT OR RIGID CEILING DIRECTLY APPLIED.

ALL PITCH BREAKS AND PERIMETER CORNER JOINTS MUST BE LATERALLY RESTRAINED.

1 - 1x4 LATERAL BRACE(S) AT 1/ 2 LENGTH OF E-U, F-S, H-S, H-R. DBS = 20-0-0 . CBF = 177 LBS.

DBS = DIAGONAL BRACE SPACING (MAX). CBF = CUMULATIVE BRACING FORCE (PER BRACE). FASTEN LATERAL BRACE(S) TO EACH PLY USING (0.122"X3") SPIRAL NAILS : 1 NAIL FOR 2x3 BRACE(S), 2 FOR 1x4, 2x4, 2x5, 3 FOR 2x6, 4 FOR 2x8, 5 FOR 2x10, AND 6 FOR 2x12.

END VERTICAL(S) MUST BE SHEATHED OR HAVE BRACES AS INDICATED IN THE MAX. UNBRACED LENGTH COLUMN OF THE TABLE BELOW

LOADING

TOTAL LOAD CASES: (4)

CHORDS

MEMB. FR-TO	MAX. FACTORED FORCE (LBS)	FACTORED VERT. LOAD (PLF) FROM	TO	LC1	MAX CSI (LC)	MAX. UNBRAC LENGTH
A- B	-7089 / 0	-77.4	-77.4	0.19 (1)	3.58	
B- C	-4025 / 0	-77.4	-77.4	0.17 (1)	4.62	
C- D	-4025 / 0	-77.4	-77.4	0.17 (1)	4.62	
D- E	-2688 / 0	-77.4	-77.4	0.13 (1)	5.45	
E- F	-1921 / 0	-77.4	-77.4	0.11 (1)	6.20	
F- Z	-1343 / 0	-84.9	-84.9	0.16 (1)	2.00	
Z- G	-1343 / 0	-84.9	-84.9	0.16 (1)	2.00	
G- H	-1690 / 0	-77.4	-77.4	0.10 (1)	6.25	
H- I	-1689 / 0	-77.4	-77.4	0.10 (1)	6.25	
I- J	-1400 / 0	-77.4	-77.4	0.08 (1)	6.25	
J- K	-1400 / 0	-77.4	-77.4	0.08 (1)	6.25	
K- L	-5 / 57	-77.4	-77.4	0.08 (1)	10.00	
L- M	0 / 30	-77.4	-77.4	0.05 (1)	10.00	
Y- A	-7407 / 0	0.0	0.0	0.26 (1)	5.51	
N- L	-114 / 0	0.0	0.0	0.01 (1)	7.81	
Y- X	0 / 0	-18.2	-18.2	0.32 (1)	10.00	
X- W	0 / 5670	-18.2	-18.2	0.63 (1)	10.00	
W- V	0 / 3234	-18.2	-18.2	0.21 (1)	10.00	
V- U	0 / 2152	-18.2	-18.2	0.15 (1)	10.00	
U- T	0 / 1536	-18.2	-18.2	0.11 (1)	10.00	
T- S	0 / 1536	-18.2	-18.2	0.11 (1)	10.00	
S- R	0 / 1354	-18.2	-18.2	0.10 (1)	10.00	
R- Q	0 / 1120	-18.2	-18.2	0.08 (1)	10.00	
Q- P	0 / 1120	-18.2	-18.2	0.08 (1)	10.00	
P- O	-26 / 7	-18.2	-18.2	0.07 (1)	6.25	
O- N	0 / 0	-18.2	-18.2	0.07 (1)	10.00	

WEBS

MEMB. FR-TO	MAX. FACTORED FORCE (LBS)	MAX CSI (LC)
X- B	0 / 3020	0.37 (1)
B- W	-2803 / 0	0.51 (1)
W- D	0 / 1898	0.23 (1)
D- V	-1792 / 0	0.73 (1)
V- E	0 / 1385	0.17 (1)
E- U	-1414 / 0	0.44 (1)
U- F	0 / 1364	0.12 (1)
F- S	-564 / 0	0.24 (1)
S- G	0 / 701	0.06 (1)
S- H	-46 / 0	0.01 (1)
R- H	-289 / 0	0.07 (1)
R- I	0 / 408	0.05 (1)
P- I	-806 / 0	0.21 (1)
P- K	0 / 1382	0.17 (1)
O- K	-1912 / 0	0.18 (1)
A- X	0 / 6453	0.80 (1)
O- L	-28 / 7	0.00 (1)

DESIGN CRITERIA

*** SPECIAL LOADS ANALYSIS ***
GEOMETRY AND/OR BASIC LOADS CHANGED BY USER.
LOADS WERE DERIVED FROM USER INPUT
NO FURTHER MODIFICATIONS WERE MADE

SPECIFIED LOADS:

TOP	CH.	LL	=	23.3	PSF
		DL	=	3.0	PSF
BOT	CH.	LL	=	0.0	PSF
		DL	=	7.3	PSF
TOTAL LOAD			=	33.6	PSF

SPACING = 24.0 IN. C/C

LOADING IN FLAT SECTION BASED ON PIGGYBACK TRUSS WITH SLOPES OF 6.00/12 AND -6.00/12 AND RESPECTIVE WALL HEIGHTS OF 0-0 AND 0-0 AND AN ADDITIONAL DEAD LOAD OF 3.0 P.S.F.

*** NON STANDARD GIRDER ***
ADDT'L USER-DEFINED LOADS APPLIED TO ALL LOAD CASES.

THIS TRUSS IS DESIGNED FOR RESIDENTIAL OR SMALL BUILDING REQUIREMENTS OF PART 9, NBCC 2010

THIS DESIGN COMPLIES WITH:
- PART 9 OF OBC 2012 , BCBC 2012 , ABC 2014
- CSA 086-09
- TPIC 2011

(55 % OF 27.2 P.S.F. G.S.L. PLUS 8.4 P.S.F. RAIN LOAD) EQUALS 23.3 P.S.F. SPECIFIED ROOF LIVE LOAD

ALLOWABLE DEFL.(LL)= L/360 (1.00")
CALCULATED VERT. DEFL.(LL) = L/ 999 (0.05")
ALLOWABLE DEFL.(TL)= L/360 (1.00")
CALCULATED VERT. DEFL.(TL) = L/ 999 (0.09")

CANTILEVER DEFLECTION:
ALLOWABLE DEFL.(LL)= L/120 (0.22")
CALCULATED VERT. DEFL.(LL) = L/ 999 (0.00")
ALLOWABLE DEFL.(TL)= L/120 (0.22")
CALCULATED VERT. DEFL.(TL) = L/ 999 (0.00")

CSI: TC=0.26/1.00 (A-Y:1) , BC=0.63/1.00 (W-X:1) , WB=0.80/1.00 (A-X:1) , SSI=0.22/1.00 (X-Y:1)

DOL LUMBER=1.00 NAIL=1.00 LS BEND=1.00 COMP=1.00 SHEAR=1.00 TENS= 1.00

COMPANION LIVE LOAD FACTOR = 0.50

AUTOSOLVE RIGHT HEEL ONLY

CONTINUED ON PAGE 2

KOTT

PLATES (table is in inches)

JT	TYPE	PLATES	W	LEN	Y	X
A	TMVW-p	MT20	6.0	8.0	Edge	
B	TMWW-t	MT20	4.0	5.0	1.50	1.50
C	TS-t	MT20	3.0	6.0		
D	TMWW-t	MT20	4.0	4.0	2.00	1.00
E	TMWW-t	MT20	4.0	4.0	2.00	1.25
F	TTWW-m	MT20	5.0	6.0	2.00	1.50
G	TTW+m	MT20	3.0	4.0	2.00	1.25
H	TMWW-t	MT20	3.0	4.0	1.50	1.50
I	TMWW-t	MT20	4.0	4.0	2.00	1.50
J	TS-t	MT20	3.0	6.0		
K	TMWW-t	MT20	4.0	4.0	1.75	1.50
L	TMVW-t	MT20	3.0	5.0	1.50	1.75
N	BMV+p	MT20	2.0	4.0		
O	BMWW1-t	MT20	4.0	4.0	2.25	2.00
P	BMWW-t	MT20	4.0	4.0	2.25	2.00
Q	BS-t	MT20	6.0	8.0		
R	BMWW-t	MT20	4.0	4.0	2.25	2.00
S	BMWWW-t	MT20	5.0	8.0		
T	BS-t	MT20	6.0	8.0		
U	BMWW-t	MT20	4.0	4.0	2.25	1.75
V	BMWW+t	MT20	4.0	4.0	2.25	2.00
W	BMWW-t	MT20	5.0	5.0		
X	BMWW+t	MT20	6.0	10.0	5.50	1.75
Y	BMV1+t	MT20	6.0	10.0	7.25	

Edge - INDICATES REFERENCE CORNER OF PLATE TOUCHES EDGE OF CHORD.

HANGERS NOTES

1) SPECIAL HANGER(S) OR CONNECTION(S) REQUIRED TO SUPPORT CONCENTRATED LOAD(S) 7139.4 lbs FACTORED DOWN AT 1-9-8 ON BOTTOM CHORD. DESIGN FOR UNSPECIFIED CONNECTION(S) IS DELEGATED TO THE BUILDING DESIGNER.

FACTORED CONCENTRATED LOADS (LBS)

JT	LOC.	LC1	MAX-	MAX+	FACE	DIR.	TYPE
X	1-9-8	-7139	-7139	---	BACK	VERT	TOTAL

TRUSS PLATE MANUFACTURER IS NOT RESPONSIBLE FOR QUALITY CONTROL IN THE TRUSS MANUFACTURING PLANT .

NAIL VALUES

PLATE	GRIP(DRY) (PSI)		SHEAR (PLI)		SECTION (PLI)	
	MAX	MIN	MAX	MIN	MAX	MIN
MT20	618	354	1667	822	2284	1656

PLATE PLACEMENT TOL. = 0.250 inches

PLATE ROTATION TOL. = 5.0 Deg.

JSI GRIP= 0.90 (W) (INPUT = 0.90)
JSI METAL= 0.62 (X) (INPUT = 1.00)

READ ALL NOTES ON THIS PAGE AND ON ENGINEERING NOTE PAGE ENP-1. THIS NOTE PAGE IS AN INTEGRAL PART OF THIS DRAWING AS IT CONTAINS SPECIFICATIONS AND CRITERIA USED IN THE DESIGN OF THIS COMPONENT.

KOTT

JOB NAME	TRUSS NAME	QUANTITY	PLY	JOB DESC.	DRWG NO.
NE0618-035	G03	1	2	GREEN YORK HOMES - GRANELLI HOME CORP - INDIGO 1 ELEV 2 / TRUSS DESC.	PAGE 5 OF 47

Version 8.210 S Mar 12 2018 MiTek Industries, Inc. Tue Jun 5 17:06:56 2018 Page 1
ID:9_xLMwZ3WDKc3QXh8cyzSnzB2V3-TWWelfTHajsuKz5A5TwE3jTweEvlNyR0plZLylz9HWD

Scale = 1:48.8

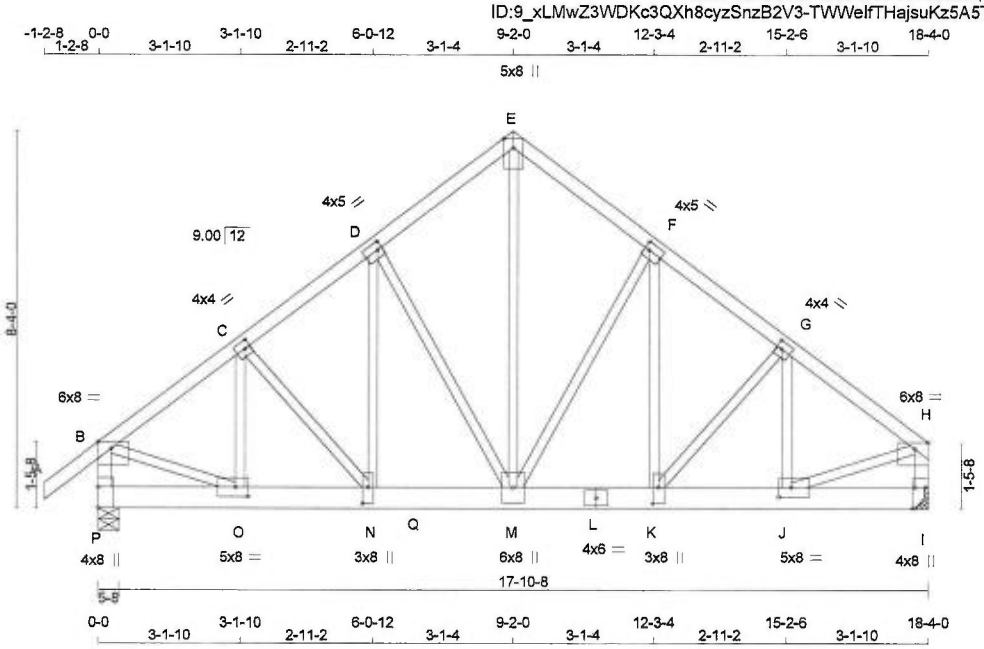

TOTAL WEIGHT = 2 X 104 = 208 lb [M]

LUMBER
N. L. G. A. RULES

CHORDS	SIZE		LUMBER	DESCR.
A - E	2x4	DRY	No.2	SPF
E - H	2x4	DRY	No.2	SPF
P - B	2x4	DRY	No.2	SPF
I - H	2x4	DRY	No.2	SPF
P - L	2x6	DRY	No.2	SPF
L - I	2x6	DRY	No.2	SPF
ALL WEBS EXCEPT	2x3	DRY	No.2	SPF

DRY: SEASONED LUMBER.

DESIGN CONSISTS OF 2 TRUSSES BUILT SEPARATELY THEN FASTENED TOGETHER AS FOLLOWS:

CHORDS	#ROWS	SURFACE SPACING (IN)	LOAD(PLF)
TOP CHORDS : (0.122"X3") SPIRAL NAILS			
A- E	1	12	TOP
E- H	1	12	TOP
P- B	1	12	TOP
I- H	1	12	TOP
BOTTOM CHORDS : (0.122"X3") SPIRAL NAILS			
P- L	2	8	SIDE(334.1)
L- I	2	8	SIDE(334.1)
WEBS : (0.122"X3") SPIRAL NAILS			
2x3	1	6	

NAILS TO BE DRIVEN FROM ONE SIDE ONLY.

GIRDER NAILING ASSUMES NAILED HANGERS ARE FASTENED WITH MIN. 3-0 INCH NAILS.

TOP - COMPONENTS ARE CONNECTED FROM THE TOP AND MUST BE PLACED ON TOP EDGE OF ALL PLIES FOR THE LOAD TO BE TRANSFERRED TO EACH PLY.

SIDE - PLF SHOWN IS THE EQUIVALENT UDL APPLIED TO ONE SIDE THAT THE CORRESPONDING NAILING PATTERN SHALL BE CAPABLE OF TRANSFERING. REMAINING PLF MUST BE APPLIED ON THE OPPOSITE SIDE OR ON THE TOP.

READ ALL NOTES ON THIS PAGE AND ON ENGINEERING NOTE PAGE ENP-1. THIS NOTE PAGE IS AN INTEGRAL PART OF THIS DRAWING AS IT CONTAINS SPECIFICATIONS AND CRITERIA USED IN THE DESIGN OF THIS COMPONENT.

LICENSED PROFESSIONAL ENGINEER
N.A. EL-MASRI
PROVINCE OF ONTARIO
Jun 05, 2018

DIMENSIONS, SUPPORTS AND LOADINGS SPECIFIED BY FABRICATOR TO BE VERIFIED BY BUILDING DESIGNER

BEARINGS

JT	FACTORED GROSS REACTION VERT	HORZ	MAXIMUM FACTORED GROSS REACTION DOWN	HORZ	UPLIFT	INPUT BRG	REQRD BRG
P	5403	0	5403	0	0	5-8	5-8
I	7140	0	7140	0	0	MECHANICAL	IN-SX

A SUITABLE MECHANICAL CONNECTION IS REQUIRED AT JOINT I TO RESIST THE MAX FACTORED REACTIONS.

UNFACTORED REACTIONS

JT	1ST LCASE COMBINED	SNOW	LIVE	PERM.LIVE	WIND	DEAD	SOIL
	MAX./MIN. COMPONENT REACTIONS						
P	3794	2643 / 0	0 / 0	0 / 0	0 / 0	1150 / 0	0 / 0
I	5016	3478 / 0	0 / 0	0 / 0	0 / 0	1538 / 0	0 / 0

BEARING MATERIAL TO BE SPF NO.2 OR BETTER AT JOINT(S) P

BRACING
TOP CHORD TO BE SHEATHED OR MAX. PURLIN SPACING = 3.55 FT.
MAX. UNBRACED BOTTOM CHORD LENGTH = 10.00 FT OR RIGID CEILING DIRECTLY APPLIED.

ALL PITCH BREAKS AND PERIMETER CORNER JOINTS MUST BE LATERALLY RESTRAINED.

LOADING
TOTAL LOAD CASES: (4)

CHORDS

MEMB. FR-TO	MAX. FORCE (LBS)	FACTORED VERT. LOAD (PLF) FROM	TO	LC1 MAX CSI (LC)	MAX. UNBRAC LENGTH
A- B	0 / 30	-77.4	-77.4	0.05 (1)	10.00
B- C	-5910 / 0	-77.4	-77.4	0.19 (1)	3.89
C- D	-6744 / 0	-77.4	-77.4	0.22 (1)	3.64
D- E	-5385 / 0	-77.4	-77.4	0.18 (1)	4.06
E- F	-5387 / 0	-77.4	-77.4	0.18 (1)	4.06
F- G	-6584 / 0	-77.4	-77.4	0.21 (1)	3.68
G- H	-6996 / 0	-77.4	-77.4	0.25 (1)	3.55
P- B	-5342 / 0	0.0	0.0	0.30 (1)	5.20
I- H	-6186 / 0	0.0	0.0	0.35 (1)	4.84
P- O	0 / 0	-18.2	-18.2	0.04 (1)	10.00
O- N	0 / 4732	-18.2	-18.2	0.39 (1)	10.00
N- Q	0 / 5389	-18.2	-18.2	0.64 (1)	10.00
Q- M	0 / 5389	-686.5	-686.5	0.64 (1)	10.00
M- L	0 / 5266	-686.5	-686.5	0.63 (1)	10.00
L- K	0 / 5266	-686.5	-686.5	0.63 (1)	10.00
K- J	0 / 5598	-686.5	-686.5	0.53 (1)	10.00
J- I	0 / 0	-686.5	-686.5	0.24 (1)	10.00

WEBS

MEMB. FR-TO	MAX. FORCE (LBS)	MAX CSI (LC)
M- E	0 / 6221	0.77 (1)
M- F	-1970 / 0	0.72 (1)
K- F	0 / 2209	0.27 (1)
K- G	-509 / 0	0.09 (1)
J- G	0 / 394	0.05 (1)
D- M	-2223 / 0	0.81 (1)
N- D	0 / 2537	0.31 (1)
C- N	0 / 1006	0.12 (1)
O- C	-1511 / 0	0.17 (1)
B- O	0 / 4989	0.62 (1)
J- H	0 / 5902	0.73 (1)

FACTORED CONCENTRATED LOADS (LBS)

JT	LOC.	LC1	MAX-	MAX+	FACE	DIR.	TYPE
N	6-0-12	-3116	-3116	---	BACK	VERT	TOTAL

DESIGN CRITERIA

*** SPECIAL LOADS ANALYSIS ***
GEOMETRY AND/OR BASIC LOADS CHANGED BY USER.
LOADS WERE DERIVED FROM USER INPUT
NO FURTHER MODIFICATIONS WERE MADE

SPECIFIED LOADS:

TOP CH.	LL	=	23.3	PSF
	DL	=	3.0	PSF
BOT CH.	LL	=	0.0	PSF
	DL	=	7.3	PSF
TOTAL LOAD		=	33.6	PSF

SPACING = 24.0 IN. C/C

GIRDER TYPE: CStdGirder
START DISTANCE = 7-0-0
START SPAN CARRIED = 30-5-0
END DISTANCE = 18-4-0
END SPAN CARRIED = 30-5-0
END WALL WIDTH = 5-8
APPLIED TO BACK SIDE OF BOTTOM CHORD.
- ADDT'L LOADS BASED ON 55 % OF GSL.

*** NON STANDARD GIRDER ***
ADDT'L USER-DEFINED LOADS APPLIED TO ALL LOAD CASES.

THIS TRUSS IS DESIGNED FOR RESIDENTIAL OR SMALL BUILDING REQUIREMENTS OF PART 9, NBCC 2010

THIS DESIGN COMPLIES WITH:
- PART 9 OF OBC 2012 , BCBC 2012 , ABC 2014
- CSA 086-09
- TPIC 2011

(55 % OF 27.2 P.S.F. G.S.L. PLUS 8.4 P.S.F. RAIN LOAD) EQUALS 23.3 P.S.F. SPECIFIED ROOF LIVE LOAD

ALLOWABLE DEFL.(LL)= L/360 (0.61")
CALCULATED VERT. DEFL.(LL) = L/ 999 (0.09")
ALLOWABLE DEFL.(TL)= L/360 (0.61")
CALCULATED VERT. DEFL.(TL) = L/ 999 (0.15")

CSI: TC=0.35/1.00 (H-I:1) , BC=0.64/1.00 (M-N:1) , WB=0.81/1.00 (D-M:1) , SSI=0.43/1.00 (M-N:1)

DOL LUMBER=1.00 NAIL=1.00 LS BEND=1.00 COMP=1.00 SHEAR=1.00 TENS= 1.00

COMPANION LIVE LOAD FACTOR = 0.50

TRUSS PLATE MANUFACTURER IS NOT RESPONSIBLE FOR QUALITY CONTROL IN THE TRUSS MANUFACTURING PLANT .

CONTINUED ON PAGE 2

KOTT

PLATES (table is in inches)

JT	TYPE	PLATES	W	LEN	Y	X
B	TMVW-p	MT20	6.0	8.0	Edge	3.50
C	TMWW-t	MT20	4.0	4.0	2.00	1.50
D	TMWW-t	MT20	4.0	5.0	2.00	1.25
E	TTW+p	MT20	5.0	8.0	Edge	
F	TMWW-t	MT20	4.0	5.0	2.00	1.25
G	TMWW-t	MT20	4.0	4.0	2.00	1.50
H	TMVW-p	MT20	6.0	8.0	Edge	3.50
I	BMV1+t	MT20	4.0	8.0	Edge	0.50
J	BMWW-t	MT20	5.0	8.0	2.50	3.25
K	BMWW+t	MT20	3.0	8.0	4.25	1.50
L	BS-t	MT20	4.0	6.0		
M	BMWWW+t	MT20	6.0	8.0		
N	BMWW+t	MT20	3.0	8.0	4.25	1.50
O	BMWW-t	MT20	5.0	8.0	2.50	3.25
P	BMV1+t	MT20	4.0	8.0	5.50	

Edge - INDICATES REFERENCE CORNER OF PLATE TOUCHES EDGE OF CHORD.

HANGERS NOTES

1) SPECIAL HANGER(S) OR CONNECTION(S) REQUIRED TO SUPPORT CONCENTRATED LOAD(S) 3115.7 lbs FACTORED DOWN AT 6-0-12 ON BOTTOM CHORD. DESIGN FOR UNSPECIFIED CONNECTION(S) IS DELEGATED TO THE BUILDING DESIGNER.

NAIL VALUES

PLATE	GRIP(DRY) (PSI) MAX	MIN	SHEAR (PLI) MAX	MIN	SECTION (PLI) MAX	MIN
MT20	618	354	1667	822	2284	1656

PLATE PLACEMENT TOL. = 0.250 inches

PLATE ROTATION TOL. = 5.0 Deg.

JSI GRIP= 0.88 (J) (INPUT = 0.90)
JSI METAL= 0.79 (L) (INPUT = 1.00)

READ ALL NOTES ON THIS PAGE AND ON ENGINEERING NOTE PAGE ENP-1. THIS NOTE PAGE IS AN INTEGRAL PART OF THIS DRAWING AS IT CONTAINS SPECIFICATIONS AND CRITERIA USED IN THE DESIGN OF THIS COMPONENT.

KOTT

JOB NAME	TRUSS NAME	QUANTITY	PLY	JOB DESC.	DRWG NO.
NE0618-035	G04	1	1	GREEN YORK HOMES - GRANELLI HOME CORP - INDIGO 1 ELEV 2 / TRUSS DESC.	PAGE 7 OF 47

Version 8.210 S Mar 12 2018 MiTek Industries, Inc. Tue Jun 5 17:06:57 2018 Page 1
ID:9_xLMwZ3WDKc3QXh8cyzSnzB2V3-xi40V?UvL1_lx7gNeARTcx0yweEk6NHA2yJvUlz9HWC

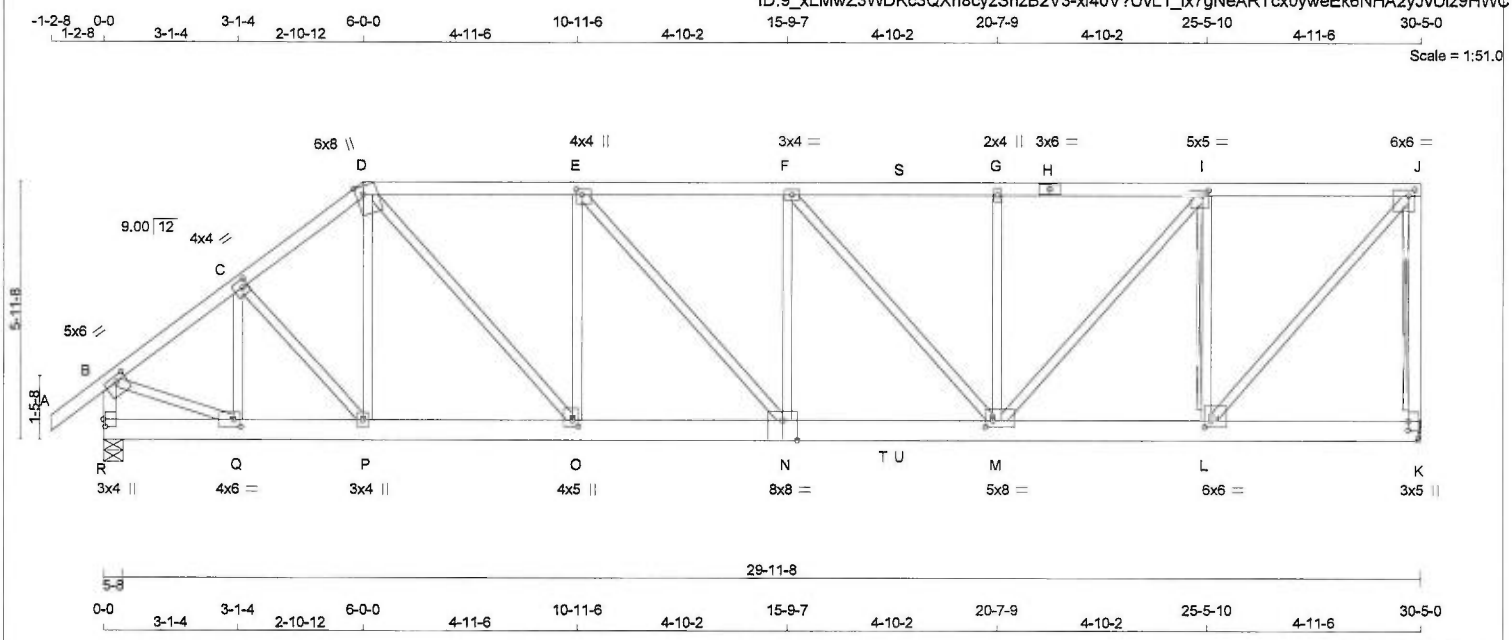

TOTAL WEIGHT = 157 lb
[M]

LUMBER
N. L. G. A. RULES

CHORDS	SIZE		LUMBER	DESCR.
A - D	2x4	DRY	No.2	SPF
D - H	2x4	DRY	No.2	SPF
H - J	2x4	DRY	No.2	SPF
K - J	2x4	DRY	No.2	SPF
R - B	2x4	DRY	No.2	SPF
R - N	2x6	DRY	2100F 1.8E	SPF
N - K	2x6	DRY	2100F 1.8E	SPF
ALL WEBS EXCEPT	2x3	DRY	No.2	SPF

DRY: SEASONED LUMBER.

PLATES (table is in inches)

JT	TYPE	PLATES	W	LEN	Y	X
B	TMVW-t	MT20	5.0	6.0	1.50	2.75
C	TMWW-t	MT20	4.0	4.0	2.00	1.50
D	TTWW+m	MT20	6.0	8.0	Edge	2.00
E	TMWW+t	MT20	4.0	4.0	1.50	1.50
F	TMWW-t	MT20	3.0	4.0		
G	TMW+w	MT20	2.0	4.0		
H	TS-t	MT20	3.0	6.0		
I	TMWW-t	MT20	5.0	5.0	1.50	1.75
J	TMVW-t	MT20	6.0	6.0	1.75	1.75
K	BMV1+p	MT20	3.0	5.0	2.50	
L	BMWW-t	MT20	6.0	6.0	1.75	1.75
M	BMWWW-t	MT20	5.0	8.0	1.75	2.00
N	BSWW-I	MT20	8.0	8.0	Edge	4.00
O	BMWW+t	MT20	4.0	5.0	1.75	1.50
P	BMWW+t	MT20	3.0	4.0		
Q	BMWW-t	MT20	4.0	6.0	2.00	2.00
R	BMV1+p	MT20	3.0	4.0	2.00	0.50

Edge - INDICATES REFERENCE CORNER OF PLATE TOUCHES EDGE OF CHORD.

HANGERS NOTES
1)

READ ALL NOTES ON THIS PAGE AND ON ENGINEERING NOTE PAGE ENP-1. THIS NOTE PAGE IS AN INTEGRAL PART OF THIS DRAWING AS IT CONTAINS SPECIFICATIONS AND CRITERIA USED IN THE DESIGN OF THIS COMPONENT.

LICENSED PROFESSIONAL ENGINEER
N.A. EL-MASRI
PROVINCE OF ONTARIO
Jun 05, 2018

DIMENSIONS, SUPPORTS AND LOADINGS SPECIFIED BY FABRICATOR TO BE VERIFIED BY BUILDING DESIGNER

BEARINGS

JT	FACTORED GROSS REACTION VERT	HORZ	MAXIMUM FACTORED GROSS REACTION DOWN	HORZ	UPLIFT	INPUT BRG IN-SX	REQRD BRG IN-SX
K	3116	0	3116	0	0	MECHANICAL	
R	2333	0	2333	0	0	5-8	5-8

A SUITABLE MECHANICAL CONNECTION IS REQUIRED AT JOINT K TO RESIST THE MAX FACTORED REACTIONS.

UNFACTORED REACTIONS

JT	1ST LCASE COMBINED	MAX./MIN. COMPONENT REACTIONS SNOW	LIVE	PERM.LIVE	WIND	DEAD	SOIL
K	2189	1518 / 0	0 / 0	0 / 0	0 / 0	671 / 0	0 / 0
R	1637	1148 / 0	0 / 0	0 / 0	0 / 0	489 / 0	0 / 0

BEARING MATERIAL TO BE SPF NO.2 OR BETTER AT JOINT(S) R

BRACING
TOP CHORD TO BE SHEATHED OR MAX. PURLIN SPACING = 2.42 FT.
MAX. UNBRACED BOTTOM CHORD LENGTH = 10.00 FT OR RIGID CEILING DIRECTLY APPLIED.

ALL PITCH BREAKS AND PERIMETER CORNER JOINTS MUST BE LATERALLY RESTRAINED.

2x4 DRY SPF No.2 T-BRACE AT J-K, I-L

FASTEN T AND I-BRACES TO NARROW EDGE OF WEB WITH ONE ROW PER PLY OF 3" COMMON WIRE NAILS @ 6" O.C. WITH 3" MINIMUM END DISTANCE. BRACE MUST COVER 90% OF WEB LENGTH.

END VERTICAL(S) MUST BE SHEATHED OR HAVE BRACES AS INDICATED IN THE MAX. UNBRACED LENGTH COLUMN OF THE TABLE BELOW

LOADING
TOTAL LOAD CASES: (4)

CHORDS

MEMB. FR-TO	MAX. FACTORED FORCE (LBS)	FACTORED VERT. LOAD LC1 (PLF) FROM	TO	MAX CSI (LC)	MAX. UNBRAC LENGTH
A- B	0 / 30	-77.4	-77.4	0.10 (1)	10.00
B- C	-2373 / 0	-77.4	-77.4	0.19 (1)	4.27
C- D	-2674 / 0	-77.4	-77.4	0.21 (1)	4.03
D- E	-3359 / 0	-77.4	-77.4	0.53 (1)	3.36
E- F	-4296 / 0	-77.4	-77.4	0.67 (1)	2.86
F- S	-4029 / 0	-77.4	-77.4	0.69 (1)	2.89
S- G	-4029 / 0	-145.9	-145.9	0.69 (1)	2.89
G- H	-4029 / 0	-145.9	-145.9	0.95 (1)	2.42
H- I	-4029 / 0	-145.9	-145.9	0.95 (1)	2.42
I- J	-2419 / 0	-145.9	-145.9	0.72 (1)	3.49
K- J	-3018 / 0	0.0	0.0	0.60 (1)	7.81
R- B	-2274 / 0	0.0	0.0	0.25 (1)	5.60
R- Q	0 / 0	-18.2	-18.2	0.04 (1)	10.00
Q- P	0 / 1909	-18.2	-18.2	0.15 (1)	10.00
P- O	0 / 2121	-18.2	-18.2	0.17 (1)	10.00
O- N	0 / 3359	-18.2	-18.2	0.38 (1)	10.00
N- T	0 / 4296	-18.2	-18.2	0.76 (1)	10.00
T- U	0 / 4296	-18.2	-18.2	0.76 (1)	10.00
U- M	0 / 4296	-34.4	-34.4	0.76 (1)	10.00
M- L	0 / 2419	-34.4	-34.4	0.29 (1)	10.00
L- K	0 / 0	-34.4	-34.4	0.06 (4)	10.00

WEBS

MEMB. FR-TO	MAX. FACTORED FORCE (LBS)	MAX CSI (LC)
Q- C	-690 / 0	0.16 (1)
C- P	0 / 320	0.08 (1)
P- D	-45 / 40	0.02 (1)
D- O	0 / 1865	0.46 (1)
O- E	-1490 / 0	0.79 (1)
E- N	0 / 1430	0.35 (1)
N- F	-78 / 50	0.04 (1)
F- M	-408 / 0	0.43 (1)
M- G	-643 / 0	0.34 (1)
M- I	0 / 2458	0.61 (1)
L- I	-2674 / 0	0.70 (1)
L- J	0 / 3648	0.90 (1)
B- Q	0 / 2014	0.50 (1)

FACTORED CONCENTRATED LOADS (LBS)

JT	LOC.	LC1	MAX-	MAX+	FACE	DIR.	TYPE
T	18-0-12	-1425	-1425	---	FRONT	VERT	TOTAL

DESIGN CRITERIA

*** SPECIAL LOADS ANALYSIS ***
GEOMETRY AND/OR BASIC LOADS CHANGED BY USER.
LOADS WERE DERIVED FROM USER INPUT
NO FURTHER MODIFICATIONS WERE MADE

SPECIFIED LOADS:

TOP CH.	LL	=	23.3	PSF
	DL	=	3.0	PSF
BOT CH.	LL	=	0.0	PSF
	DL	=	7.3	PSF
TOTAL LOAD		=	33.6	PSF

SPACING = 24.0 IN. C/C

LOADING IN FLAT SECTION BASED ON A SLOPE OF 2.00/12 MINIMUM

GIRDER TYPE: CPrimeHip
LEFT SETBACK = 6-0-0
RIGHT SETBACK = 0-0
END SETBACK = 6-0-0
END WALL WIDTH = 5-8
CORNER FRAMING TYPE: CONVENTIONAL
END JACK TYPE: CONVENTIONAL
APPLIED TO FRONT SIDE
- ADDT'L LOADS BASED ON 55 % OF GSL.
LOADS APPLIED TO FIRST 12-0-0 OF SPAN MEASURED FROM THE RIGHT.

*** NON STANDARD GIRDER ***
ADDT'L USER-DEFINED LOADS APPLIED TO ALL LOAD CASES.

THIS TRUSS IS DESIGNED FOR RESIDENTIAL OR SMALL BUILDING REQUIREMENTS OF PART 9, NBCC 2010

THIS DESIGN COMPLIES WITH:
- PART 9 OF OBC 2012 , BCBC 2012 , ABC 2014
- CSA 086-09
- TPIC 2011

(55 % OF 27.2 P.S.F. G.S.L. PLUS 8.4 P.S.F. RAIN LOAD) EQUALS 23.3 P.S.F. SPECIFIED ROOF LIVE LOAD

ALLOWABLE DEFL.(LL)= L/360 (1.01")
CALCULATED VERT. DEFL.(LL) = L/ 999 (0.23")
ALLOWABLE DEFL.(TL)= L/360 (1.01")
CALCULATED VERT. DEFL.(TL) = L/ 908 (0.40")

CSI: TC=0.95/1.00 (G-I:1) , BC=0.76/1.00 (M-N:1) , WB=0.90/1.00 (J-L:1) , SSI=0.55/1.00 (M-N:1)

DOL LUMBER=1.00 NAIL=1.00 LS BEND=1.00 COMP=1.00 SHEAR=1.00 TENS= 1.00

COMPANION LIVE LOAD FACTOR = 0.50

CONTINUED ON PAGE 2

KOTT

HANGERS NOTES

1) SPECIAL HANGER(S) OR CONNECTION(S) REQUIRED TO SUPPORT CONCENTRATED LOAD(S) 1424.8 lbs FACTORED DOWN AT 18-0-12 ON BOTTOM CHORD. DESIGN FOR UNSPECIFIED CONNECTION(S) IS DELEGATED TO THE BUILDING DESIGNER.

TRUSS PLATE MANUFACTURER IS NOT RESPONSIBLE FOR QUALITY CONTROL IN THE TRUSS MANUFACTURING PLANT .

NAIL VALUES

PLATE	GRIP(DRY) (PSI)		SHEAR (PLI)		SECTION (PLI)	
	MAX	MIN	MAX	MIN	MAX	MIN
MT20	618	354	1667	822	2284	1656

PLATE PLACEMENT TOL. = 0.250 inches

PLATE ROTATION TOL. = 5.0 Deg.

JSI GRIP= 0.90 (B) (INPUT = 0.90)
JSI METAL= 0.69 (N) (INPUT = 1.00)

READ ALL NOTES ON THIS PAGE AND ON ENGINEERING NOTE PAGE ENP-1. THIS NOTE PAGE IS AN INTEGRAL PART OF THIS DRAWING AS IT CONTAINS SPECIFICATIONS AND CRITERIA USED IN THE DESIGN OF THIS COMPONENT.

KOTT

JOB NAME	TRUSS NAME	QUANTITY	PLY	JOB DESC.	GREEN YORK HOMES - GRANELLI HOME CORP - INDIGO 1 ELEV 2	DRWG NO.
NE0618-035	G05	1	1	TRUSS DESC.		PAGE 9 OF 47

Version 8.210 S Mar 12 2018 MiTek Industries, Inc. Tue Jun 5 17:06:58 2018 Page 1
ID:9_xLMwZ3WDKc3QXh8cyzSnzB2V3-PvePjLVX6K6cZHFZCuyi88ZKa1gZrz?JHc2S1Bz9HWB

Scale = 1:34.7

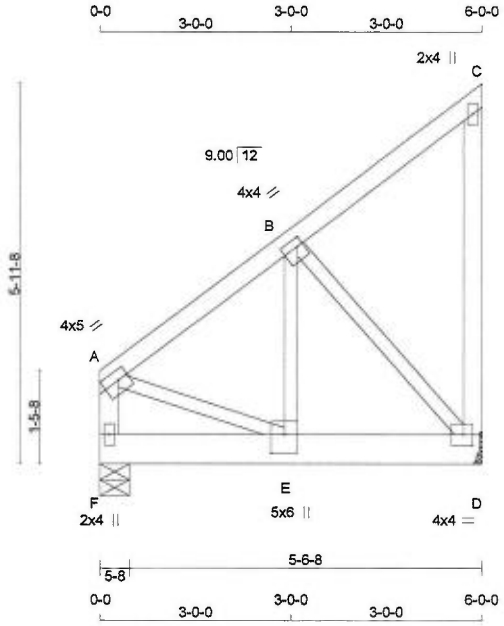

TOTAL WEIGHT = 34 lb

LUMBER
N. L. G. A. RULES

CHORDS	SIZE		LUMBER	DESCR.
A - C	2x4	DRY	No.2	SPF
D - C	2x4	DRY	No.2	SPF
F - A	2x4	DRY	No.2	SPF
F - D	2x6	DRY	No.2	SPF
ALL WEBS EXCEPT	2x3	DRY	No.2	SPF

DRY: SEASONED LUMBER.

PLATES (table is in inches)

JT	TYPE	PLATES	W	LEN	Y	X
A	TMVW-t	MT20	4.0	5.0	1.75	Edge
B	TMWW-t	MT20	4.0	4.0	1.50	1.00
C	TMV+p	MT20	2.0	4.0		
D	BMVW1-t	MT20	4.0	4.0	2.00	1.75
E	BMWW+t	MT20	5.0	6.0	3.50	2.50
F	BMV1+p	MT20	2.0	4.0		

Edge - INDICATES REFERENCE CORNER OF PLATE TOUCHES EDGE OF CHORD.

READ ALL NOTES ON THIS PAGE AND ON ENGINEERING NOTE PAGE ENP-1. THIS NOTE PAGE IS AN INTEGRAL PART OF THIS DRAWING AS IT CONTAINS SPECIFICATIONS AND CRITERIA USED IN THE DESIGN OF THIS COMPONENT.

LICENSED PROFESSIONAL ENGINEER
N.A. EL-MASRI
PROVINCE OF ONTARIO
Jun 05, 2018

DIMENSIONS, SUPPORTS AND LOADINGS SPECIFIED BY FABRICATOR TO BE VERIFIED BY BUILDING DESIGNER

BEARINGS

JT	FACTORED GROSS REACTION VERT	HORZ	MAXIMUM FACTORED GROSS REACTION DOWN	HORZ	UPLIFT	INPUT BRG IN-SX	REQRD BRG IN-SX
D	1425	0	1425	0	0	MECHANICAL	
F	1425	0	1425	0	0	5-8	5-8

A SUITABLE MECHANICAL CONNECTION IS REQUIRED AT JOINT D TO RESIST THE MAX FACTORED REACTIONS.

UNFACTORED REACTIONS

JT	1ST LCASE COMBINED	MAX./MIN. COMPONENT REACTIONS SNOW	LIVE	PERM.LIVE	WIND	DEAD	SOIL
D	1001	694 / 0	0 / 0	0 / 0	0 / 0	307 / 0	0 / 0
F	1001	694 / 0	0 / 0	0 / 0	0 / 0	307 / 0	0 / 0

BEARING MATERIAL TO BE SPF NO.2 OR BETTER AT JOINT(S) F

BRACING
TOP CHORD TO BE SHEATHED OR MAX. PURLIN SPACING = 6.21 FT.
MAX. UNBRACED BOTTOM CHORD LENGTH = 10.00 FT OR RIGID CEILING DIRECTLY APPLIED.

ALL PITCH BREAKS AND PERIMETER CORNER JOINTS MUST BE LATERALLY RESTRAINED.

LOADING
TOTAL LOAD CASES: (4)

CHORDS

MEMB. FR-TO	MAX. FORCE (LBS)	FACTORED VERT. LOAD (PLF) FROM	TO	LC1 MAX CSI (LC)	MAX. UNBRAC LENGTH
A- B	-944 / 0	-77.4	-77.4	0.13 (1)	6.21
B- C	-15 / 0	-77.4	-77.4	0.11 (1)	6.25
D- C	-92 / 0	0.0	0.0	0.06 (1)	7.81
F- A	-935 / 0	0.0	0.0	0.10 (1)	7.81
F- E	0 / 0	-397.7	-397.7	0.23 (1)	10.00
E- D	0 / 767	-397.7	-397.7	0.33 (1)	10.00

WEBS

MEMB. FR-TO	MAX. FORCE (LBS)	MAX CSI (LC)
E- B	0 / 1137	0.28 (1)
B- D	-1140 / 0	0.36 (1)
A- E	0 / 813	0.20 (1)

DESIGN CRITERIA

SPECIFIED LOADS:

TOP CH.	LL	=	23.3	PSF
	DL	=	3.0	PSF
BOT CH.	LL	=	0.0	PSF
	DL	=	7.3	PSF
TOTAL LOAD		=	33.6	PSF

SPACING = 24.0 IN. C/C

GIRDER TYPE: CStdGirder
START DISTANCE = 0-0
START SPAN CARRIED = 18-0-0
END DISTANCE = 6-0-0
END SPAN CARRIED = 18-0-0
END WALL WIDTH = 1-8
APPLIED TO FRONT SIDE OF BOTTOM CHORD.
- ADDT'L LOADS BASED ON 55 % OF GSL.

THIS TRUSS IS DESIGNED FOR RESIDENTIAL OR SMALL BUILDING REQUIREMENTS OF PART 9, NBCC 2010

THIS DESIGN COMPLIES WITH:
- PART 9 OF OBC 2012 , BCBC 2012 , ABC 2014
- CSA 086-09
- TPIC 2011

(55 % OF 27.2 P.S.F. G.S.L. PLUS 8.4 P.S.F. RAIN LOAD) EQUALS 23.3 P.S.F. SPECIFIED ROOF LIVE LOAD

ALLOWABLE DEFL.(LL)= L/360 (0.20")
CALCULATED VERT. DEFL.(LL) = L/ 999 (0.01")
ALLOWABLE DEFL.(TL)= L/360 (0.20")
CALCULATED VERT. DEFL.(TL) = L/ 999 (0.02")

CSI: TC=0.13/1.00 (A-B:1) , BC=0.33/1.00 (D-E:1) , WB=0.36/1.00 (B-D:1) , SSI=0.47/1.00 (D-E:1)

DOL LUMBER=1.00 NAIL=1.00 LS BEND=1.00 COMP=1.00 SHEAR=1.00 TENS= 1.00

COMPANION LIVE LOAD FACTOR = 0.50

TRUSS PLATE MANUFACTURER IS NOT RESPONSIBLE FOR QUALITY CONTROL IN THE TRUSS MANUFACTURING PLANT .

NAIL VALUES

PLATE	GRIP(DRY) (PSI) MAX	MIN	SHEAR (PLI) MAX	MIN	SECTION (PLI) MAX	MIN
MT20	618	354	1667	822	2284	1656

PLATE PLACEMENT TOL. = 0.250 inches

PLATE ROTATION TOL. = 5.0 Deg.

CONTINUED ON PAGE 2

KOTT

JSI GRIP= 0.87 (B) (INPUT = 0.90)
JSI METAL= 0.30 (A) (INPUT = 1.00)

READ ALL NOTES ON THIS PAGE AND ON ENGINEERING NOTE PAGE ENP-1. THIS NOTE PAGE IS AN INTEGRAL PART OF THIS DRAWING AS IT CONTAINS SPECIFICATIONS AND CRITERIA USED IN THE DESIGN OF THIS COMPONENT.

LICENSED PROFESSIONAL ENGINEER
N.A. EL-MASRI
PROVINCE OF ONTARIO
Jun 05, 2018

KOTT

JOB NAME	TRUSS NAME	QUANTITY	PLY	JOB DESC.	DRWG NO.
NE0618-035	G07	1	1	GREEN YORK HOMES - GRANELLI HOME CORP - INDIGO 1 ELEV 2 / TRUSS DESC.	PAGE 11 OF 47

Version 8.210 S Mar 12 2018 MiTek Industries, Inc. Tue Jun 5 17:06:58 2018 Page 1
ID:9_xLMwZ3WDKc3QXh8cyzSnzB2V3-PvePjLVX6K6cZHFZCuyi88ZDr1ZcrrOJHc2S1Bz9HWB

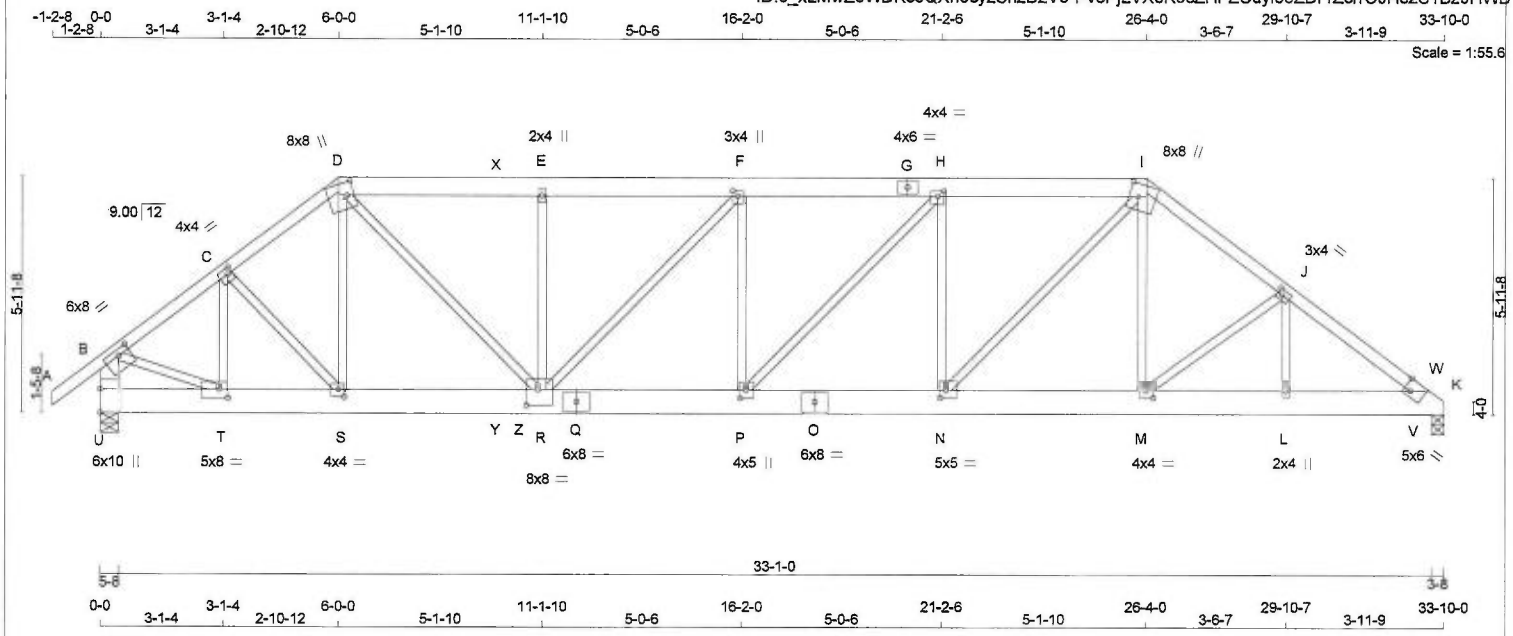

TOTAL WEIGHT = 194 lb
[M]

LUMBER
N. L. G. A. RULES

CHORDS	SIZE		LUMBER	DESCR.
A - D	2x4	DRY	No.2	SPF
D - G	2x6	DRY	No.2	SPF
G - I	2x6	DRY	No.2	SPF
I - K	2x4	DRY	No.2	SPF
U - B	2x6	DRY	No.2	SPF
U - Q	2x8	DRY	No.2	SPF
Q - O	2x8	DRY	No.2	SPF
O - K	2x8	DRY	No.2	SPF
ALL WEBS EXCEPT	2x3	DRY	No.2	SPF

DRY: SEASONED LUMBER.

PLATES (table is in inches)

JT	TYPE	PLATES	W	LEN	Y	X
B	TMVW-t	MT20	6.0	8.0	1.75	3.50
C	TMWW-t	MT20	4.0	4.0	1.75	1.25
D	TTWW+m	MT20	8.0	8.0	4.00	2.25
E	TMW+w	MT20	2.0	4.0		
F	TMWW+t	MT20	3.0	4.0	1.50	1.50
G	TS-t	MT20	4.0	6.0		
H	TMWW-t	MT20	4.0	4.0	1.50	1.75
I	TTWW+m	MT20	8.0	8.0	4.00	2.75
J	TMWW-t	MT20	3.0	4.0	1.50	1.50
K	TBM1-h	MT20	5.0	6.0	Edge	2.00
L	BMW+w	MT20	2.0	4.0		
M	BMWW-t	MT20	4.0	4.0	2.25	2.00
N	BMWW-t	MT20	5.0	5.0	2.25	1.75
O	BS-t	MT20	6.0	8.0		
P	BMWW+t	MT20	4.0	5.0	2.50	1.75
Q	BS-t	MT20	6.0	8.0		
R	BMWWW-t	MT20	8.0	8.0	4.75	3.50
S	BMWW-t	MT20	4.0	4.0	2.25	1.75
T	BMWW-t	MT20	5.0	8.0	2.75	2.50
U	BMV1+t	MT20	6.0	10.0	7.25	

Edge - INDICATES REFERENCE CORNER OF PLATE TOUCHES EDGE OF CHORD.

READ ALL NOTES ON THIS PAGE AND ON ENGINEERING NOTE PAGE ENP-1. THIS NOTE PAGE IS AN INTEGRAL PART OF THIS DRAWING AS IT CONTAINS SPECIFICATIONS AND CRITERIA USED IN THE DESIGN OF THIS COMPONENT.

LICENSED PROFESSIONAL ENGINEER
N.A. EL-MASRI
PROVINCE OF ONTARIO
Jun 05, 2018

DIMENSIONS, SUPPORTS AND LOADINGS SPECIFIED BY FABRICATOR TO BE VERIFIED BY BUILDING DESIGNER

BEARINGS

JT	FACTORED GROSS REACTION VERT	HORZ	MAXIMUM FACTORED GROSS REACTION DOWN	HORZ	UPLIFT	INPUT BRG IN-SX	REQRD BRG IN-SX
K	2389	0	2389	0	0	3-8	3-8
U	3834	0	3834	0	0	5-8	5-8

UNFACTORED REACTIONS

JT	1ST LCASE COMBINED	SNOW	MAX./MIN. COMPONENT REACTIONS LIVE	PERM.LIVE	WIND	DEAD	SOIL
K	1678	1167 / 0	0 / 0	0 / 0	0 / 0	511 / 0	0 / 0
U	2695	1860 / 0	0 / 0	0 / 0	0 / 0	836 / 0	0 / 0

BEARING MATERIAL TO BE SPF NO.2 OR BETTER AT JOINT(S) K, U

BRACING
TOP CHORD TO BE SHEATHED OR MAX. PURLIN SPACING = 2.92 FT.
MAX. UNBRACED BOTTOM CHORD LENGTH = 10.00 FT OR RIGID CEILING DIRECTLY APPLIED.

ALL PITCH BREAKS AND PERIMETER CORNER JOINTS MUST BE LATERALLY RESTRAINED.

LOADING
TOTAL LOAD CASES: (4)

CHORDS

MEMB. FR-TO	MAX. FACTORED FORCE (LBS)	FACTORED VERT. LOAD (PLF) FROM	TO	LC1	MAX CSI (LC)	MAX. UNBRAC LENGTH
A- B	0 / 30	-77.4	-77.4	0.10 (1)	10.00	
B- C	-4073 / 0	-77.4	-77.4	0.35 (1)	3.21	
C- D	-4730 / 0	-77.4	-77.4	0.40 (1)	2.92	
D- X	-5515 / 0	-178.1	-178.1	0.56 (1)	3.20	
X- E	-5515 / 0	-77.4	-77.4	0.56 (1)	3.20	
E- F	-5515 / 0	-77.4	-77.4	0.38 (1)	3.44	
F- G	-5025 / 0	-77.4	-77.4	0.30 (1)	3.67	
G- H	-5025 / 0	-77.4	-77.4	0.30 (1)	3.67	
H- I	-4184 / 0	-77.4	-77.4	0.25 (1)	4.02	
I- J	-3512 / 0	-77.4	-77.4	0.33 (1)	3.47	
J- W	-3794 / 0	-77.4	-77.4	0.35 (1)	3.32	
W- K	-3813 / 0	-77.4	-77.4	0.19 (1)	3.45	
U- B	-3678 / 0	0.0	0.0	0.26 (1)	5.52	
U- T	0 / 0	-42.0	-42.0	0.14 (1)	10.00	
T- S	0 / 3267	-42.0	-42.0	0.53 (1)	10.00	
S- Y	0 / 3791	-42.0	-42.0	0.78 (1)	10.00	
Y- Z	0 / 3791	-18.2	-18.2	0.78 (1)	10.00	
Z- R	0 / 3791	-18.2	-18.2	0.78 (1)	10.00	
R- Q	0 / 5025	-18.2	-18.2	0.59 (1)	10.00	
Q- P	0 / 5025	-18.2	-18.2	0.59 (1)	10.00	
P- O	0 / 4184	-18.2	-18.2	0.51 (1)	10.00	
O- N	0 / 4184	-18.2	-18.2	0.51 (1)	10.00	
N- M	0 / 2815	-18.2	-18.2	0.35 (1)	10.00	
M- L	0 / 3048	-18.2	-18.2	0.42 (1)	10.00	
L- V	0 / 3048	-18.2	-18.2	0.58 (1)	10.00	
V- K	0 / 2971	-18.2	-18.2	0.57 (1)	10.00	

WEBS

MEMB. FR-TO	MAX. FACTORED FORCE (LBS)	MAX CSI (LC)
T- C	-1206 / 0	0.26 (1)
C- S	0 / 778	0.19 (1)
S- D	0 / 184	0.07 (4)
D- R	0 / 2514	0.62 (1)
R- E	-647 / 0	0.30 (1)
R- F	0 / 720	0.18 (1)
P- F	-874 / 0	0.41 (1)
P- H	0 / 1238	0.31 (1)
N- H	-1369 / 0	0.64 (1)
N- I	0 / 1997	0.49 (1)
M- I	0 / 374	0.09 (1)
M- J	-304 / 0	0.11 (1)
L- J	0 / 73	0.03 (4)
B- T	0 / 3424	0.85 (1)
V- W	-121 / 1	0.00 (1)

FACTORED CONCENTRATED LOADS (LBS)

JT	LOC.	LC1	MAX-	MAX+	FACE	DIR.	TYPE
D	6-0-0	-464	-464	—	BACK	VERT	TOTAL
Z	10-7-4	-1783	-1783	—	BACK	VERT	TOTAL

DESIGN CRITERIA

*** SPECIAL LOADS ANALYSIS ***
GEOMETRY AND/OR BASIC LOADS CHANGED BY USER.
LOADS WERE DERIVED FROM USER INPUT
NO FURTHER MODIFICATIONS WERE MADE

SPECIFIED LOADS:
TOP CH. LL = 23.3 PSF
DL = 3.0 PSF
BOT CH. LL = 0.0 PSF
DL = 7.3 PSF
TOTAL LOAD = 33.6 PSF

SPACING = 24.0 IN. C/C

LOADING IN FLAT SECTION BASED ON A SLOPE OF 2.00/12 MINIMUM

GIRDER TYPE: CPrimeHip
LEFT SETBACK = 6-0-0
RIGHT SETBACK = 7-6-0
END SETBACK = 7-6-0
END WALL WIDTH = 3-8
CORNER FRAMING TYPE: CONVENTIONAL
END JACK TYPE: CONVENTIONAL
APPLIED TO BACK SIDE
- ADDT'L LOADS BASED ON 55 % OF GSL.
LOADS APPLIED TO FIRST 10-0-0 OF SPAN MEASURED FROM THE LEFT.

*** NON STANDARD GIRDER ***
ADDT'L USER-DEFINED LOADS APPLIED TO ALL LOAD CASES.

THIS TRUSS IS DESIGNED FOR RESIDENTIAL OR SMALL BUILDING REQUIREMENTS OF PART 9, NBCC 2010

THIS DESIGN COMPLIES WITH:
- PART 9 OF OBC 2012 , BCBC 2012 , ABC 2014
- CSA 086-09
- TPIC 2011

(55 % OF 27.2 P.S.F. G.S.L. PLUS 8.4 P.S.F. RAIN LOAD) EQUALS 23.3 P.S.F. SPECIFIED ROOF LIVE LOAD

ALLOWABLE DEFL.(LL)= L/360 (1.13")
CALCULATED VERT. DEFL.(LL) = L/ 999 (0.19")
ALLOWABLE DEFL.(TL)= L/360 (1.13")
CALCULATED VERT. DEFL.(TL) = L/ 999 (0.33")

CSI: TC=0.56/1.00 (D-E:1) , BC=0.78/1.00 (R-S:1) , WB=0.85/1.00 (B-T:1) , SSI=0.95/1.00 (R-S:1)

DOL LUMBER=1.00 NAIL=1.00 LS BEND=1.00 COMP=1.00 SHEAR=1.00 TENS= 1.00

COMPANION LIVE LOAD FACTOR = 0.50

CONTINUED ON PAGE 2

KOTT

HANGERS NOTES

1) SPECIAL HANGER(S) OR CONNECTION(S) REQUIRED TO SUPPORT CONCENTRATED LOAD(S) 464.2 lbs FACTORED DOWN AT 6-0-0 ON TOP CHORD, AND 1783.4 lbs FACTORED DOWN AT 10-7-4 ON BOTTOM CHORD. DESIGN FOR UNSPECIFIED CONNECTION(S) IS DELEGATED TO THE BUILDING DESIGNER.

AUTOSOLVE RIGHT HEEL ONLY

TRUSS PLATE MANUFACTURER IS NOT RESPONSIBLE FOR QUALITY CONTROL IN THE TRUSS MANUFACTURING PLANT .

NAIL VALUES

PLATE	GRIP(DRY) (PSI)		SHEAR (PLI)		SECTION (PLI)	
	MAX	MIN	MAX	MIN	MAX	MIN
MT20	618	354	1667	822	2284	1656

PLATE PLACEMENT TOL. = 0.250 inches

PLATE ROTATION TOL. = 5.0 Deg.

JSI GRIP= 0.90 (F) (INPUT = 0.90)
JSI METAL= 0.84 (K) (INPUT = 1.00)

READ ALL NOTES ON THIS PAGE AND ON ENGINEERING NOTE PAGE ENP-1. THIS NOTE PAGE IS AN INTEGRAL PART OF THIS DRAWING AS IT CONTAINS SPECIFICATIONS AND CRITERIA USED IN THE DESIGN OF THIS COMPONENT.

KOTT

JOB NAME	TRUSS NAME	QUANTITY	PLY	JOB DESC.	GREEN YORK HOMES - GRANELLI HOME CORP - INDIGO 1 ELEV 2	DRWG NO.
NE0618-035	G08	1	1	TRUSS DESC.		PAGE 13 OF 47

Version 8.210 S Mar 12 2018 MiTek Industries, Inc. Tue Jun 5 17:06:59 2018 Page 1
ID:9_xLMwZ3WDKc3QXh8cyzSnzB2V3-u5CnwhV9teETBRqlmbTxhM5UHR?GaOqSWGo?Zdz9HWA

Scale = 1:34.7

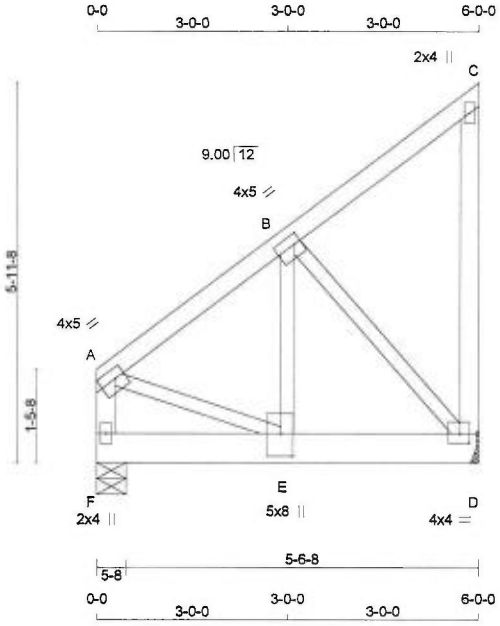

TOTAL WEIGHT = 34 lb
[M]

LUMBER
N. L. G. A. RULES

CHORDS	SIZE		LUMBER	DESCR.
A - C	2x4	DRY	No.2	SPF
D - C	2x4	DRY	No.2	SPF
F - A	2x4	DRY	No.2	SPF
F - D	2x6	DRY	No.2	SPF
ALL WEBS EXCEPT	2x3	DRY	No.2	SPF

DRY: SEASONED LUMBER.

PLATES (table is in inches)

JT	TYPE	PLATES	W	LEN	Y	X
A	TMVW-t	MT20	4.0	5.0	1.75	Edge
B	TMWW-t	MT20	4.0	5.0	1.75	1.25
C	TMV+p	MT20	2.0	4.0		
D	BMVW1-t	MT20	4.0	4.0	1.75	1.75
E	BMWW+t	MT20	5.0	8.0	4.25	2.25
F	BMV1+p	MT20	2.0	4.0		

Edge - INDICATES REFERENCE CORNER OF PLATE TOUCHES EDGE OF CHORD.

READ ALL NOTES ON THIS PAGE AND ON ENGINEERING NOTE PAGE ENP-1. THIS NOTE PAGE IS AN INTEGRAL PART OF THIS DRAWING AS IT CONTAINS SPECIFICATIONS AND CRITERIA USED IN THE DESIGN OF THIS COMPONENT.

LICENSED PROFESSIONAL ENGINEER
N.A. EL-MASRI
PROVINCE OF ONTARIO
Jun 05, 2018

DIMENSIONS, SUPPORTS AND LOADINGS SPECIFIED BY FABRICATOR TO BE VERIFIED BY BUILDING DESIGNER

BEARINGS

JT	FACTORED GROSS REACTION VERT	HORZ	MAXIMUM FACTORED GROSS REACTION DOWN	HORZ	UPLIFT	INPUT BRG IN-SX	REQRD BRG IN-SX
D	1784	0	1784	0	0	MECHANICAL	
F	1784	0	1784	0	0	5-8	5-8

A SUITABLE MECHANICAL CONNECTION IS REQUIRED AT JOINT D TO RESIST THE MAX FACTORED REACTIONS.

UNFACTORED REACTIONS

JT	1ST LCASE COMBINED	MAX./MIN. COMPONENT REACTIONS SNOW	LIVE	PERM.LIVE	WIND	DEAD	SOIL
D	1253	869 / 0	0 / 0	0 / 0	0 / 0	384 / 0	0 / 0
F	1253	869 / 0	0 / 0	0 / 0	0 / 0	384 / 0	0 / 0

BEARING MATERIAL TO BE SPF NO.2 OR BETTER AT JOINT(S) F

BRACING
TOP CHORD TO BE SHEATHED OR MAX. PURLIN SPACING = 5.70 FT.
MAX. UNBRACED BOTTOM CHORD LENGTH = 10.00 FT OR RIGID CEILING DIRECTLY APPLIED.

ALL PITCH BREAKS AND PERIMETER CORNER JOINTS MUST BE LATERALLY RESTRAINED.

LOADING
TOTAL LOAD CASES: (4)

CHORDS

MEMB. FR-TO	MAX. FORCE (LBS)	FACTORED VERT. LOAD (PLF) FROM	TO	LC1 MAX CSI (LC)	MAX. UNBRAC LENGTH
A- B	-1185 / 0	-77.4	-77.4	0.13 (1)	5.70
B- C	-14 / 0	-77.4	-77.4	0.11 (1)	6.25
D- C	-93 / 0	0.0	0.0	0.06 (1)	7.81
F- A	-1147 / 0	0.0	0.0	0.13 (1)	7.39
F- E	0 / 0	-517.2	-517.2	0.31 (1)	10.00
E- D	0 / 959	-517.2	-517.2	0.43 (1)	10.00

WEBS

MEMB. FR-TO	MAX. FORCE (LBS)	MAX CSI (LC)
E- B	0 / 1495	0.37 (1)
B- D	-1426 / 0	0.45 (1)
A- E	0 / 1016	0.25 (1)

DESIGN CRITERIA

SPECIFIED LOADS:

TOP CH.	LL	=	23.3	PSF
	DL	=	3.0	PSF
BOT CH.	LL	=	0.0	PSF
	DL	=	7.3	PSF
TOTAL LOAD		=	33.6	PSF

SPACING = 24.0 IN. C/C

GIRDER TYPE: CStdGirder
START DISTANCE = 0-0
START SPAN CARRIED = 23-2-0
END DISTANCE = 6-0-0
END SPAN CARRIED = 23-2-0
END WALL WIDTH = 3-8
APPLIED TO BACK SIDE OF BOTTOM CHORD.
- ADDT'L LOADS BASED ON 55 % OF GSL.

THIS TRUSS IS DESIGNED FOR RESIDENTIAL OR SMALL BUILDING REQUIREMENTS OF PART 9, NBCC 2010

THIS DESIGN COMPLIES WITH:
- PART 9 OF OBC 2012 , BCBC 2012 , ABC 2014
- CSA 086-09
- TPIC 2011

(55 % OF 27.2 P.S.F. G.S.L. PLUS 8.4 P.S.F. RAIN LOAD) EQUALS 23.3 P.S.F. SPECIFIED ROOF LIVE LOAD

ALLOWABLE DEFL.(LL)= L/360 (0.20")
CALCULATED VERT. DEFL.(LL) = L/ 999 (0.02")
ALLOWABLE DEFL.(TL)= L/360 (0.20")
CALCULATED VERT. DEFL.(TL) = L/ 999 (0.03")

CSI: TC=0.13/1.00 (A-F:1) , BC=0.43/1.00 (D-E:1) , WB=0.45/1.00 (B-D:1) , SSI=0.61/1.00 (E-F:1)

DOL LUMBER=1.00 NAIL=1.00 LS BEND=1.00 COMP=1.00 SHEAR=1.00 TENS= 1.00

COMPANION LIVE LOAD FACTOR = 0.50

TRUSS PLATE MANUFACTURER IS NOT RESPONSIBLE FOR QUALITY CONTROL IN THE TRUSS MANUFACTURING PLANT .

NAIL VALUES

PLATE	GRIP(DRY) (PSI) MAX	MIN	SHEAR (PLI) MAX	MIN	SECTION (PLI) MAX	MIN
MT20	618	354	1667	822	2284	1656

PLATE PLACEMENT TOL. = 0.250 inches

PLATE ROTATION TOL. = 5.0 Deg.

CONTINUED ON PAGE 2

KOTT

JSI GRIP= 0.85 (B) (INPUT = 0.90)
JSI METAL= 0.38 (A) (INPUT = 1.00)

READ ALL NOTES ON THIS PAGE AND ON ENGINEERING NOTE PAGE ENP-1. THIS NOTE PAGE IS AN INTEGRAL PART OF THIS DRAWING AS IT CONTAINS SPECIFICATIONS AND CRITERIA USED IN THE DESIGN OF THIS COMPONENT.

KOTT

JOB NAME	TRUSS NAME	QUANTITY	PLY	JOB DESC.	GREEN YORK HOMES - GRANELLI HOME CORP - INDIGO 1 ELEV 2	DRWG NO.
NE0618-035	GE01	1	1	TRUSS DESC.		PAGE 15 OF 47

Version 8.210 S Mar 12 2018 MiTek Industries, Inc. Tue Jun 5 17:06:59 2018 Page 1
ID:9_xLMwZ3WDKc3QXh8cyzSnzB2V3-u5CnwhV9teETBRqImbTxhM5VqR5caSXSWGo?Zdz9HWA

Scale = 1:48.8

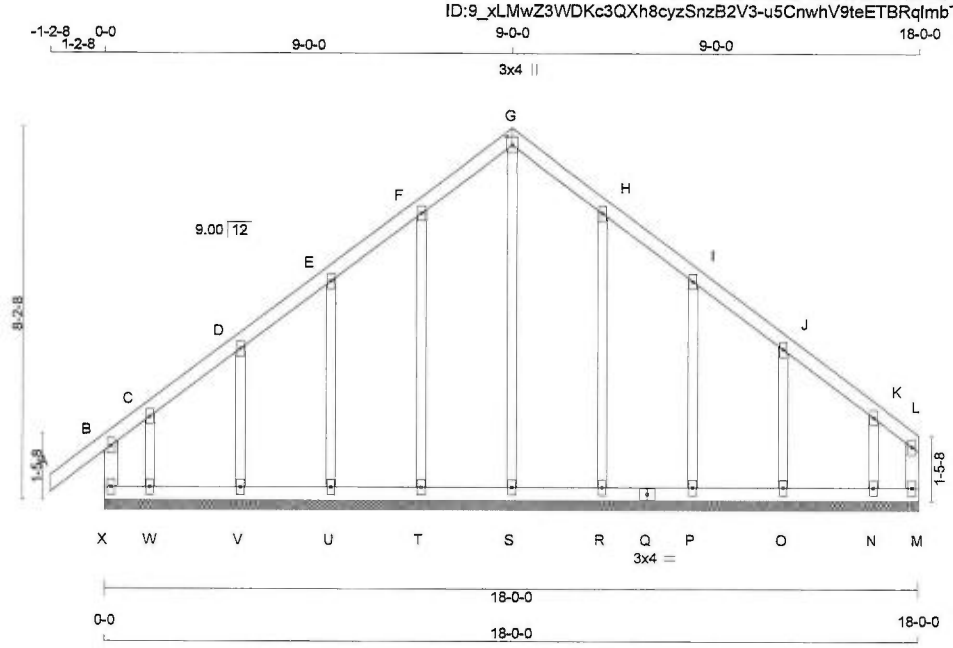

TOTAL WEIGHT = 82 lb [M]

LUMBER
N. L. G. A. RULES

CHORDS	SIZE		LUMBER	DESCR.
X - B	2x4	DRY	No.2	SPF
A - G	2x4	DRY	No.2	SPF
G - L	2x4	DRY	No.2	SPF
M - L	2x4	DRY	No.2	SPF
X - Q	2x4	DRY	No.2	SPF
Q - M	2x4	DRY	No.2	SPF
ALL WEBS	2x3	DRY	No.2	SPF
ALL GABLE WEBS	2x3	DRY	No.2	SPF

DRY: SEASONED LUMBER.

GABLE STUDS SPACED AT 2-0-0 OC.

PLATES (table is in inches)

JT	TYPE	PLATES	W	LEN	Y	X
B	TMV+p	MT20	2.0	4.0		
C, D, E, F, H, I, J, K						
C	TMW+w	MT20	2.0	4.0		
G	TTW+p	MT20	3.0	4.0	2.25	1.50
L	TMV+p	MT20	2.0	4.0		
M	BMV1+p	MT20	2.0	4.0		
N, O, P, R, S, T, U, V, W						
N	BMW1+w	MT20	2.0	4.0		
Q	BS-t	MT20	3.0	4.0		
X	BMV1+p	MT20	2.0	4.0		

READ ALL NOTES ON THIS PAGE AND ON ENGINEERING NOTE PAGE ENP-1. THIS NOTE PAGE IS AN INTEGRAL PART OF THIS DRAWING AS IT CONTAINS SPECIFICATIONS AND CRITERIA USED IN THE DESIGN OF THIS COMPONENT.

LICENSED PROFESSIONAL ENGINEER
N.A. EL-MASRI
PROVINCE OF ONTARIO
Jun 05, 2018

DIMENSIONS, SUPPORTS AND LOADINGS SPECIFIED BY FABRICATOR TO BE VERIFIED BY BUILDING DESIGNER

BEARINGS

THIS TRUSS DESIGNED FOR CONTINUOUS BEARINGS.

THIS TRUSS REQUIRES RIGID SHEATHING ON EXPOSED FACE.

BEARING MATERIAL TO BE SPF NO.2 OR BETTER AT JOINT(S)

BRACING
TOP CHORD TO BE SHEATHED OR MAX. PURLIN SPACING = 6.25 FT.
MAX. UNBRACED BOTTOM CHORD LENGTH = 10.00 FT OR RIGID CEILING DIRECTLY APPLIED.

ALL PITCH BREAKS AND PERIMETER CORNER JOINTS MUST BE LATERALLY RESTRAINED.

LOADING
TOTAL LOAD CASES: (4)

CHORDS

MEMB. FR-TO	MAX. FACTORED FORCE (LBS)	FACTORED VERT. LOAD LC1 (PLF) FROM	TO	MAX CSI (LC)	MAX. UNBRAC LENGTH
X- B	-189 / 0	0.0	0.0	0.02 (1)	7.81
A- B	0 / 30	-77.4	-77.4	0.09 (1)	10.00
B- C	-38 / 0	-77.4	-77.4	0.08 (1)	6.25
C- D	0 / 0	-77.4	-77.4	0.04 (1)	10.00
D- E	-2 / 0	-77.4	-77.4	0.04 (1)	10.00
E- F	0 / 4	-77.4	-77.4	0.04 (1)	10.00
F- G	0 / 5	-77.4	-77.4	0.04 (1)	10.00
G- H	0 / 5	-77.4	-77.4	0.04 (1)	10.00
H- I	0 / 4	-77.4	-77.4	0.04 (1)	10.00
I- J	-1 / 0	-77.4	-77.4	0.04 (1)	10.00
J- K	-3 / 0	-77.4	-77.4	0.04 (1)	10.00
K- L	-5 / 0	-77.4	-77.4	0.02 (1)	10.00
M- L	-30 / 0	0.0	0.0	0.01 (1)	7.81
X- W	0 / 7	-18.2	-18.2	0.03 (1)	10.00
W- V	0 / 5	-18.2	-18.2	0.02 (4)	10.00
V- U	0 / 0	-18.2	-18.2	0.02 (4)	10.00
U- T	-2 / 0	-18.2	-18.2	0.01 (4)	10.00
T- S	-4 / 0	-18.2	-18.2	0.01 (4)	10.00
S- R	-4 / 0	-18.2	-18.2	0.01 (4)	10.00
R- Q	-2 / 0	-18.2	-18.2	0.01 (4)	10.00
Q- P	-2 / 0	-18.2	-18.2	0.01 (4)	10.00
P- O	0 / 0	-18.2	-18.2	0.02 (4)	10.00
O- N	0 / 5	-18.2	-18.2	0.02 (4)	10.00
N- M	0 / 10	-18.2	-18.2	0.01 (4)	10.00

WEBS

MEMB. FR-TO	MAX. FACTORED FORCE (LBS)	MAX CSI (LC)
S- G	-167 / 0	0.21 (1)
T- F	-158 / 0	0.12 (1)
U- E	-149 / 0	0.06 (1)
V- D	-162 / 0	0.04 (1)
W- C	-54 / 0	0.01 (1)
R- H	-158 / 0	0.12 (1)
P- I	-150 / 0	0.06 (1)
O- J	-158 / 0	0.03 (1)
N- K	-117 / 0	0.02 (1)

DESIGN CRITERIA

SPECIFIED LOADS:

TOP CH.	LL	=	23.3	PSF
	DL	=	3.0	PSF
BOT CH.	LL	=	0.0	PSF
	DL	=	7.3	PSF
TOTAL LOAD		=	33.6	PSF

SPACING = 24.0 IN. C/C

THIS TRUSS IS DESIGNED FOR RESIDENTIAL OR SMALL BUILDING REQUIREMENTS OF PART 9, NBCC 2010

THIS DESIGN COMPLIES WITH:
- PART 9 OF OBC 2012 , BCBC 2012 , ABC 2014
- CSA 086-09
- TPIC 2011

DESIGN ASSUMPTIONS
-OVERHANG NOT TO BE ALTERED OR CUT OFF.

(55 % OF 27.2 P.S.F. G.S.L. PLUS 8.4 P.S.F. RAIN LOAD) EQUALS 23.3 P.S.F. SPECIFIED ROOF LIVE LOAD

CSI: TC=0.09/1.00 (A-B:1) , BC=0.03/1.00 (W-X:1) , WB=0.21/1.00 (G-S:1) , SSI=0.06/1.00 (A-B:1)

DOL LUMBER=1.00 NAIL=1.00 LS BEND=1.10 COMP=1.10 SHEAR=1.10 TENS= 1.10

COMPANION LIVE LOAD FACTOR = 0.50

TRUSS PLATE MANUFACTURER IS NOT RESPONSIBLE FOR QUALITY CONTROL IN THE TRUSS MANUFACTURING PLANT .

NAIL VALUES

PLATE	GRIP(DRY) (PSI) MAX	MIN	SHEAR (PLI) MAX	MIN	SECTION (PLI) MAX	MIN
MT20	618	354	1667	822	2284	1656

PLATE PLACEMENT TOL. = 0.250 inches

PLATE ROTATION TOL. = 5.0 Deg.

JSI GRIP= 0.51 (G) (INPUT = 0.90)
JSI METAL= 0.06 (G) (INPUT = 1.00)

KOTT

JOB NAME	TRUSS NAME	QUANTITY	PLY	JOB DESC.	GREEN YORK HOMES - GRANELLI HOME CORP - INDIGO 1 ELEV 2	DRWG NO.
NE0618-035	GE02	1	1	TRUSS DESC.		PAGE 16 OF 47

Version 8.210 S Mar 12 2018 MiTek Industries, Inc. Tue Jun 5 17:07:00 2018 Page 1
ID:9_xLMwZ3WDKc3QXh8cyzSnzB2V3-MHm980WneyMKobPyKJ_ADZegarRrJwFckwXZ53z9HW9

Scale = 1:55.7

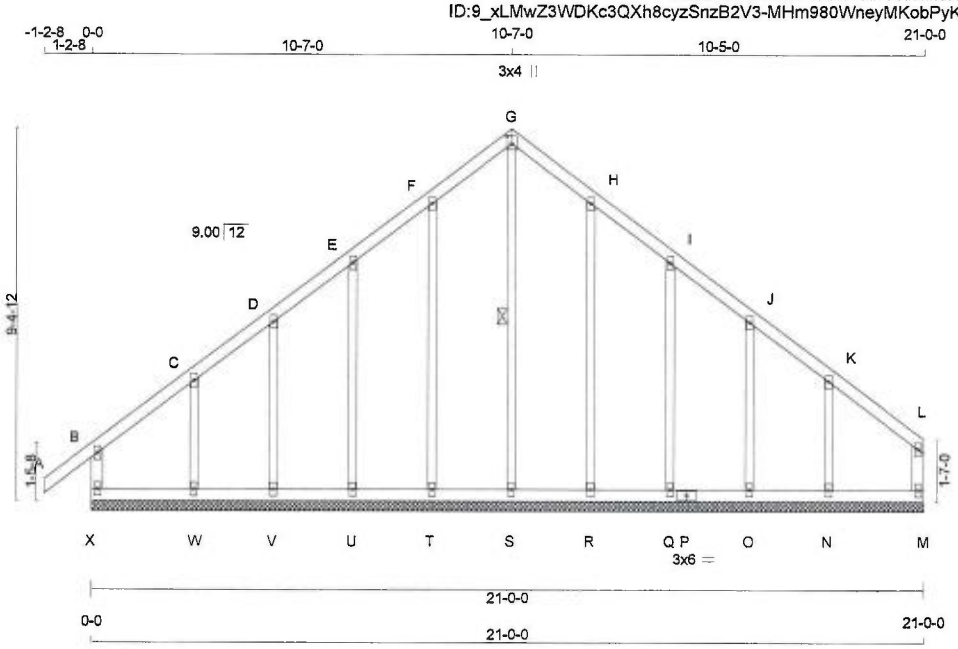

TOTAL WEIGHT = 99 lb [M]

LUMBER
N. L. G. A. RULES

CHORDS	SIZE		LUMBER	DESCR.
X - B	2x4	DRY	No.2	SPF
A - G	2x4	DRY	No.2	SPF
G - L	2x4	DRY	No.2	SPF
M - L	2x4	DRY	No.2	SPF
X - P	2x4	DRY	No.2	SPF
P - M	2x4	DRY	No.2	SPF
ALL WEBS	2x3	DRY	No.2	SPF
ALL GABLE WEBS	2x3	DRY	No.2	SPF

DRY: SEASONED LUMBER.

GABLE STUDS SPACED AT 2-0-0 OC.

PLATES (table is in inches)

JT	TYPE	PLATES	W	LEN	Y	X
B	TMV+p	MT20	2.0	4.0		
C, D, E, F, H, I, J, K						
C	TMW+w	MT20	2.0	4.0		
G	TTW+p	MT20	3.0	4.0	2.25	1.50
L	TMV+p	MT20	2.0	4.0		
M	BMV1+p	MT20	2.0	4.0		
N, O, Q, R, S, T, U, V, W						
N	BMW1+w	MT20	2.0	4.0		
P	BS-t	MT20	3.0	6.0		
X	BMV1+p	MT20	2.0	4.0		

READ ALL NOTES ON THIS PAGE AND ON ENGINEERING NOTE PAGE ENP-1. THIS NOTE PAGE IS AN INTEGRAL PART OF THIS DRAWING AS IT CONTAINS SPECIFICATIONS AND CRITERIA USED IN THE DESIGN OF THIS COMPONENT.

LICENSED PROFESSIONAL ENGINEER
N.A. EL-MASRI
PROVINCE OF ONTARIO
Jun 05, 2018

DIMENSIONS, SUPPORTS AND LOADINGS SPECIFIED BY FABRICATOR TO BE VERIFIED BY BUILDING DESIGNER

BEARINGS

THIS TRUSS DESIGNED FOR CONTINUOUS BEARINGS.

THIS TRUSS REQUIRES RIGID SHEATHING ON EXPOSED FACE.

BEARING MATERIAL TO BE SPF NO.2 OR BETTER AT JOINT(S)

BRACING

TOP CHORD TO BE SHEATHED OR MAX. PURLIN SPACING = 6.25 FT.
MAX. UNBRACED BOTTOM CHORD LENGTH = 10.00 FT OR RIGID CEILING DIRECTLY APPLIED.

ALL PITCH BREAKS AND PERIMETER CORNER JOINTS MUST BE LATERALLY RESTRAINED.

1 - 1x4 LATERAL BRACE(S) AT 1/ 2 LENGTH OF G-S. DBS = 20-0-0 . CBF = 17 LBS.

DBS = DIAGONAL BRACE SPACING (MAX). CBF = CUMULATIVE BRACING FORCE (PER BRACE). FASTEN LATERAL BRACE(S) USING (0.122"X3") SPIRAL NAILS : 1 NAIL FOR 2x3 BRACE(S), 2 FOR 1x4, 2x4, 2x5, 3 FOR 2x6, 4 FOR 2x8, 5 FOR 2x10, AND 6 FOR 2x12.

END VERTICAL(S) MUST BE SHEATHED OR HAVE BRACES AS INDICATED IN THE MAX. UNBRACED LENGTH COLUMN OF THE TABLE BELOW

LOADING

TOTAL LOAD CASES: (4)

CHORDS

MEMB. FR-TO	MAX. FORCE (LBS)	FACTORED VERT. LOAD (PLF) FROM	TO	LC1 MAX CSI (LC)	MAX. UNBRAC LENGTH
X- B	-225 / 0	0.0	0.0	0.03 (1)	7.81
A- B	0 / 30	-77.4	-77.4	0.09 (1)	10.00
B- C	-42 / 0	-77.4	-77.4	0.06 (1)	6.25
C- D	-35 / 0	-77.4	-77.4	0.04 (1)	6.25
D- E	-29 / 0	-77.4	-77.4	0.04 (1)	6.25
E- F	-26 / 0	-77.4	-77.4	0.04 (1)	6.25
F- G	-23 / 0	-77.4	-77.4	0.04 (1)	6.25
G- H	-23 / 0	-77.4	-77.4	0.04 (1)	6.25
H- I	-26 / 0	-77.4	-77.4	0.04 (1)	6.25
I- J	-29 / 0	-77.4	-77.4	0.04 (1)	6.25
J- K	-35 / 0	-77.4	-77.4	0.04 (1)	6.25
K- L	-38 / 0	-77.4	-77.4	0.04 (1)	6.25
M- L	-112 / 0	0.0	0.0	0.04 (1)	7.81
X- W	0 / 31	-18.2	-18.2	0.03 (1)	10.00
W- V	0 / 26	-18.2	-18.2	0.02 (4)	10.00
V- U	0 / 23	-18.2	-18.2	0.02 (4)	10.00
U- T	0 / 21	-18.2	-18.2	0.02 (4)	10.00
T- S	0 / 19	-18.2	-18.2	0.02 (4)	10.00
S- R	0 / 19	-18.2	-18.2	0.02 (4)	10.00
R- Q	0 / 21	-18.2	-18.2	0.02 (4)	10.00
Q- P	0 / 23	-18.2	-18.2	0.02 (4)	10.00
P- O	0 / 23	-18.2	-18.2	0.02 (4)	10.00
O- N	0 / 26	-18.2	-18.2	0.02 (4)	10.00
N- M	0 / 31	-18.2	-18.2	0.02 (4)	10.00

WEBS

MEMB. FR-TO	MAX. FORCE (LBS)	MAX CSI (LC)
S- G	-135 / 0	0.08 (1)
T- F	-156 / 0	0.18 (1)
U- E	-154 / 0	0.10 (1)
V- D	-148 / 0	0.05 (1)
W- C	-169 / 0	0.03 (1)
R- H	-156 / 0	0.18 (1)
Q- I	-154 / 0	0.10 (1)
O- J	-148 / 0	0.05 (1)
N- K	-170 / 0	0.03 (1)

DESIGN CRITERIA

SPECIFIED LOADS:

TOP CH.	LL	=	23.3	PSF
	DL	=	3.0	PSF
BOT CH.	LL	=	0.0	PSF
	DL	=	7.3	PSF
TOTAL LOAD		=	33.6	PSF

SPACING = 24.0 IN. C/C

THIS TRUSS IS DESIGNED FOR RESIDENTIAL OR SMALL BUILDING REQUIREMENTS OF PART 9, NBCC 2010

THIS DESIGN COMPLIES WITH:
- PART 9 OF OBC 2012 , BCBC 2012 , ABC 2014
- CSA 086-09
- TPIC 2011

DESIGN ASSUMPTIONS
-OVERHANG NOT TO BE ALTERED OR CUT OFF.

(55 % OF 27.2 P.S.F. G.S.L. PLUS 8.4 P.S.F. RAIN LOAD) EQUALS 23.3 P.S.F. SPECIFIED ROOF LIVE LOAD

CSI: TC=0.09/1.00 (A-B:1) , BC=0.03/1.00 (W-X:1) , WB=0.18/1.00 (H-R:1) , SSI=0.06/1.00 (B-C:1)

DOL LUMBER=1.00 NAIL=1.00 LS BEND=1.10 COMP=1.10 SHEAR=1.10 TENS= 1.10

COMPANION LIVE LOAD FACTOR = 0.50

TRUSS PLATE MANUFACTURER IS NOT RESPONSIBLE FOR QUALITY CONTROL IN THE TRUSS MANUFACTURING PLANT .

NAIL VALUES

PLATE	GRIP(DRY) (PSI) MAX	MIN	SHEAR (PLI) MAX	MIN	SECTION (PLI) MAX	MIN
MT20	618	354	1667	822	2284	1656

PLATE PLACEMENT TOL. = 0.250 inches

PLATE ROTATION TOL. = 5.0 Deg.

JSI GRIP= 0.51 (G) (INPUT = 0.90)
JSI METAL= 0.07 (B) (INPUT = 1.00)

KOTT

JOB NAME	TRUSS NAME	QUANTITY	PLY	JOB DESC.	GREEN YORK HOMES - GRANELLI HOME CORP - INDIGO 1 ELEV 2	DRWG NO.
NE0618-035	GE03	1	1	TRUSS DESC.		PAGE 17 OF 47

Version 8.210 S Mar 12 2018 MiTek Industries, Inc. Tue Jun 5 17:07:01 2018 Page 1
ID:9_xLMwZ3WDKc3QXh8cyzSnzB2V3-qTJXLMXPPFUBQI_8t0WPmnBp9Fkh2NnlzaH6dWz9HW8

Scale = 1:42.1

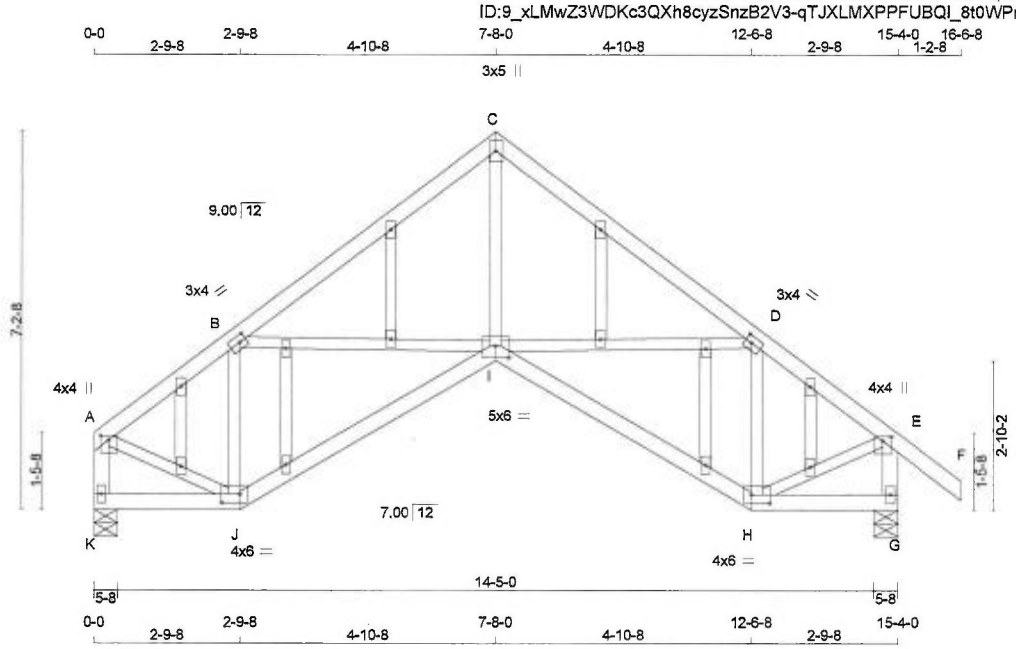

TOTAL WEIGHT = 76 lb
[M][F]

LUMBER
N. L. G. A. RULES

CHORDS	SIZE		LUMBER	DESCR.
A - C	2x4	DRY	No.2	SPF
C - F	2x4	DRY	No.2	SPF
K - A	2x4	DRY	No.2	SPF
G - E	2x4	DRY	No.2	SPF
K - J	2x4	DRY	No.2	SPF
J - I	2x4	DRY	No.2	SPF
I - H	2x4	DRY	No.2	SPF
H - G	2x4	DRY	No.2	SPF
ALL WEBS EXCEPT	2x3	DRY	No.2	SPF
ALL GABLE WEBS	2x3	DRY	No.2	SPF

DRY: SEASONED LUMBER.

GABLE STUDS SPACED AT 2-0-0 OC.

PLATES (table is in inches)

JT	TYPE	PLATES	W	LEN	Y	X
A	TMVW+p	MT20	4.0	4.0	1.00	2.00
B	TMWW-t	MT20	3.0	4.0	1.50	1.50
C	TTW+p	MT20	3.0	5.0		
D	TMWW-t	MT20	3.0	4.0	1.50	1.50
E	TMVW+p	MT20	4.0	4.0	1.00	2.00
G	BMV1+p	MT20	2.0	4.0		
H	BBWW-p	MT20	4.0	6.0	2.00	4.25
I	BBWWW-p	MT20	5.0	6.0	2.75	3.00
J	BBWW-p	MT20	4.0	6.0	2.00	4.25
K	BMV1+p	MT20	2.0	4.0		
L, M, N, O, P, Q, R, S, T, U, V, W						
L	NP+w	MT20	2.0	4.0		

DIMENSIONS, SUPPORTS AND LOADINGS SPECIFIED BY FABRICATOR TO BE VERIFIED BY BUILDING DESIGNER

BEARINGS

JT	FACTORED GROSS REACTION VERT	HORZ	MAXIMUM FACTORED GROSS REACTION DOWN	HORZ	UPLIFT	INPUT BRG IN-SX	REQRD BRG IN-SX
K	733	0	733	0	0	5-8	5-8
G	833	0	833	0	0	5-8	5-8

UNFACTORED REACTIONS

JT	1ST LCASE COMBINED	MAX./MIN. COMPONENT REACTIONS SNOW	LIVE	PERM.LIVE	WIND	DEAD	SOIL
K	515	357 / 0	0 / 0	0 / 0	0 / 0	158 / 0	0 / 0
G	583	417 / 0	0 / 0	0 / 0	0 / 0	166 / 0	0 / 0

BEARING MATERIAL TO BE SPF NO.2 OR BETTER AT JOINT(S) K, G

BRACING
TOP CHORD TO BE SHEATHED OR MAX. PURLIN SPACING = 6.23 FT.
MAX. UNBRACED BOTTOM CHORD LENGTH = 10.00 FT OR RIGID CEILING DIRECTLY APPLIED.

ALL PITCH BREAKS AND PERIMETER CORNER JOINTS MUST BE LATERALLY RESTRAINED.

LOADING
TOTAL LOAD CASES: (4)

CHORDS

MEMB. FR-TO	MAX. FACTORED FORCE (LBS)	FACTORED VERT. LOAD (PLF) FROM	TO	LC1 CSI (LC)	MAX UNBRAC LENGTH
A- B	-686 / 0	-77.4	-77.4	0.18 (1)	6.25
B- C	-896 / 0	-77.4	-77.4	0.23 (1)	6.23
C- D	-896 / 0	-77.4	-77.4	0.23 (1)	6.23
D- E	-686 / 0	-77.4	-77.4	0.18 (1)	6.25
E- F	0 / 30	-77.4	-77.4	0.09 (1)	10.00
K- A	-708 / 0	0.0	0.0	0.07 (1)	7.81
G- E	-808 / 0	0.0	0.0	0.08 (1)	7.81
K- J	0 / 0	-18.2	-18.2	0.04 (4)	10.00
J- I	0 / 653	-18.3	-18.3	0.18 (1)	10.00
I- H	0 / 653	-18.2	-18.2	0.18 (1)	10.00
H- G	0 / 0	-18.2	-18.2	0.04 (4)	10.00

WEBS

MEMB. FR-TO	MAX. FACTORED FORCE (LBS)	MAX CSI (LC)
I- C	0 / 733	0.17 (1)
I- D	0 / 137	0.03 (1)
H- D	-492 / 0	0.10 (1)
B- I	0 / 137	0.03 (1)
J- B	-492 / 0	0.10 (1)
A- J	0 / 624	0.14 (1)
H- E	0 / 624	0.14 (1)

DESIGN CRITERIA

SPECIFIED LOADS:

TOP CH.	LL	=	23.3	PSF
	DL	=	3.0	PSF
BOT CH.	LL	=	0.0	PSF
	DL	=	7.3	PSF
TOTAL LOAD		=	33.6	PSF

SPACING = 24.0 IN. C/C

THIS TRUSS IS DESIGNED FOR RESIDENTIAL OR SMALL BUILDING REQUIREMENTS OF PART 9, NBCC 2010

THIS DESIGN COMPLIES WITH:
- PART 9 OF OBC 2012 , BCBC 2012 , ABC 2014
- CSA 086-09
- TPIC 2011

(55 % OF 27.2 P.S.F. G.S.L. PLUS 8.4 P.S.F. RAIN LOAD) EQUALS 23.3 P.S.F. SPECIFIED ROOF LIVE LOAD

ALLOWABLE DEFL.(LL)= L/360 (0.51")
CALCULATED VERT. DEFL.(LL) = L/ 999 (0.03")
ALLOWABLE DEFL.(TL)= L/360 (0.51")
CALCULATED VERT. DEFL.(TL) = L/ 999 (0.06")

CSI: TC=0.23/1.00 (C-D:1) , BC=0.18/1.00 (I-J:1) , WB=0.17/1.00 (C-I:1) , SSI=0.14/1.00 (C-D:1)

DOL LUMBER=1.00 NAIL=1.00 LS BEND=1.10 COMP=1.10 SHEAR=1.10 TENS= 1.10

COMPANION LIVE LOAD FACTOR = 0.50

TRUSS PLATE MANUFACTURER IS NOT RESPONSIBLE FOR QUALITY CONTROL IN THE TRUSS MANUFACTURING PLANT .

NAIL VALUES

PLATE	GRIP(DRY) (PSI) MAX	MIN	SHEAR (PLI) MAX	MIN	SECTION (PLI) MAX	MIN
MT20	618	354	1667	822	2284	1656

PLATE PLACEMENT TOL. = 0.250 inches

PLATE ROTATION TOL. = 5.0 Deg.

JSI GRIP= 0.89 (H) (INPUT = 0.90)
JSI METAL= 0.21 (A) (INPUT = 1.00)

READ ALL NOTES ON THIS PAGE AND ON ENGINEERING NOTE PAGE ENP-1. THIS NOTE PAGE IS AN INTEGRAL PART OF THIS DRAWING AS IT CONTAINS SPECIFICATIONS AND CRITERIA USED IN THE DESIGN OF THIS COMPONENT.

LICENSED PROFESSIONAL ENGINEER
N.A. EL-MASRI
PROVINCE OF ONTARIO
Jun 05, 2018

KOTT

JOB NAME	TRUSS NAME	QUANTITY	PLY	JOB DESC.	DRWG NO.
NE0618-035	GE04	1	1	GREEN YORK HOMES - GRANELLI HOME CORP - INDIGO 1 ELEV 2 / TRUSS DESC.	PAGE 18 OF 47

Version 8.210 S Mar 12 2018 MiTek Industries, Inc. Tue Jun 5 17:07:03 2018 Page 1
ID:9_xLMwZ3WDKc3QXh8cyzSnzB2V3-msRIm2Zgxtkvf28X?RYtrCG7L2PMWDy2RumDiOz9HW5

Scale = 1:59.0

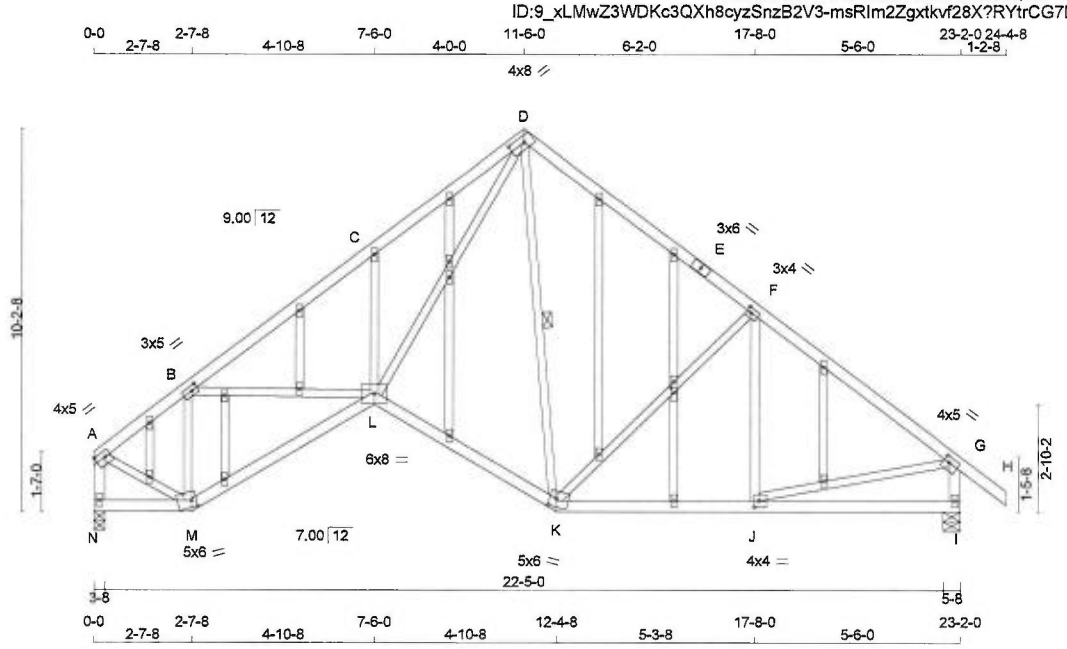

TOTAL WEIGHT = 129 lb

[M][F]

LUMBER

N. L. G. A. RULES

CHORDS	SIZE		LUMBER	DESCR.
A - D	2x4	DRY	No.2	SPF
D - E	2x4	DRY	No.2	SPF
E - H	2x4	DRY	No.2	SPF
N - A	2x4	DRY	No.2	SPF
I - G	2x4	DRY	No.2	SPF
N - M	2x4	DRY	No.2	SPF
M - L	2x4	DRY	No.2	SPF
L - K	2x4	DRY	No.2	SPF
K - I	2x4	DRY	No.2	SPF
ALL WEBS EXCEPT	2x3	DRY	No.2	SPF
ALL GABLE WEBS	2x3	DRY	No.2	SPF

DRY: SEASONED LUMBER.

GABLE STUDS SPACED AT 2-0-0 OC.

PLATES (table is in inches)

JT	TYPE	PLATES	W	LEN	Y	X
A	TMVW-t	MT20	4.0	5.0	1.75	Edge
B	TMWW-t	MT20	3.0	5.0	1.50	2.00
C	TMW+w	MT20	2.0	4.0		
D	TTWW-h	MT20	4.0	8.0	2.00	5.00
E	TS-t	MT20	3.0	6.0		
F	TMWW-t	MT20	3.0	4.0	1.50	1.50
G	TMVW-t	MT20	4.0	5.0	1.75	2.00
I	BMV1+p	MT20	2.0	4.0		
J	BMWW-t	MT20	4.0	4.0	2.00	1.50
K	BBWW-m	MT20	5.0	6.0	2.50	2.25
L	BBWWW-p	MT20	6.0	8.0		
M	BBWW-m	MT20	5.0	6.0	2.25	1.50
N	BMV1+p	MT20	2.0	4.0		
O, Q, P, Q, R, S, T, U, V, W, X, Y, Z, AA, AB, AC, AD						
O	NP+w	MT20	2.0	4.0		
AB	NP+w	MT20	2.0	4.0	1.50	1.00

Edge - INDICATES REFERENCE CORNER OF PLATE TOUCHES EDGE OF CHORD.

READ ALL NOTES ON THIS PAGE AND ON ENGINEERING NOTE PAGE ENP-1. THIS NOTE PAGE IS AN INTEGRAL PART OF THIS DRAWING AS IT CONTAINS SPECIFICATIONS AND CRITERIA USED IN THE DESIGN OF THIS COMPONENT.

LICENSED PROFESSIONAL ENGINEER
N.A. EL-MASRI
PROVINCE OF ONTARIO
Jun 05, 2018

DIMENSIONS, SUPPORTS AND LOADINGS SPECIFIED BY FABRICATOR TO BE VERIFIED BY BUILDING DESIGNER

BEARINGS

JT	FACTORED GROSS REACTION VERT	HORZ	MAXIMUM FACTORED GROSS REACTION DOWN	HORZ	UPLIFT	INPUT BRG IN-SX	REQRD BRG IN-SX
N	1107	0	1107	0	0	3-8	3-8
I	1208	0	1208	0	0	5-8	5-8

UNFACTORED REACTIONS

JT	1ST LCASE COMBINED	MAX./MIN. COMPONENT REACTIONS SNOW	LIVE	PERM.LIVE	WIND	DEAD	SOIL
N	778	539 / 0	0 / 0	0 / 0	0 / 0	239 / 0	0 / 0
I	846	600 / 0	0 / 0	0 / 0	0 / 0	246 / 0	0 / 0

BEARING MATERIAL TO BE SPF NO.2 OR BETTER AT JOINT(S) N, I

BRACING

TOP CHORD TO BE SHEATHED OR MAX. PURLIN SPACING = 4.82 FT.
MAX. UNBRACED BOTTOM CHORD LENGTH = 10.00 FT OR RIGID CEILING DIRECTLY APPLIED.

ALL PITCH BREAKS AND PERIMETER CORNER JOINTS MUST BE LATERALLY RESTRAINED.

1 - 1x4 LATERAL BRACE(S) AT 1/ 2 LENGTH OF D-K. DBS = 20-0-0 . CBF = 5 LBS.

DBS = DIAGONAL BRACE SPACING (MAX). CBF = CUMULATIVE BRACING FORCE (PER BRACE). FASTEN LATERAL BRACE(S) USING (0.122"X3") SPIRAL NAILS : 1 NAIL FOR 2x3 BRACE(S), 2 FOR 1x4, 2x4, 2x5, 3 FOR 2x6, 4 FOR 2x8, 5 FOR 2x10, AND 6 FOR 2x12.

END VERTICAL(S) MUST BE SHEATHED OR HAVE BRACES AS INDICATED IN THE MAX. UNBRACED LENGTH COLUMN OF THE TABLE BELOW

LOADING

TOTAL LOAD CASES: (4)

CHORDS

MEMB. FR-TO	MAX. FACTORED FORCE (LBS)	FACTORED VERT. LOAD (PLF) FROM	TO	LC1 MAX CSI (LC)	MAX. UNBRAC LENGTH
A- B	-1027 / 0	-77.4	-77.4	0.14 (1)	6.04
B- C	-1795 / 0	-77.4	-77.4	0.21 (1)	4.83
C- D	-1807 / 0	-77.4	-77.4	0.19 (1)	4.82
D- E	-880 / 0	-77.4	-77.4	0.38 (1)	6.04
E- F	-880 / 0	-77.4	-77.4	0.38 (1)	6.04
F- G	-1160 / 0	-77.4	-77.4	0.37 (1)	5.47
G- H	0 / 30	-77.4	-77.4	0.09 (1)	10.00
N- A	-1084 / 0	0.0	0.0	0.11 (1)	7.58
I- G	-1168 / 0	0.0	0.0	0.12 (1)	7.38
N- M	0 / 0	-18.2	-18.2	0.04 (4)	10.00
M- L	0 / 947	-18.2	-18.2	0.23 (1)	10.00
L- K	0 / 790	-18.2	-18.2	0.20 (1)	10.00
K- J	0 / 956	-18.2	-18.2	0.23 (1)	10.00
J- I	0 / 0	-18.2	-18.2	0.15 (4)	10.00

WEBS

MEMB. FR-TO	MAX. FACTORED FORCE (LBS)	MAX CSI (LC)
M- B	-811 / 0	0.17 (1)
B- L	0 / 621	0.14 (1)
L- C	-378 / 0	0.11 (1)
L- D	0 / 1508	0.34 (1)
D- K	-40 / 51	0.03 (1)
K- F	-391 / 0	0.44 (1)
J- F	-79 / 77	0.04 (1)
A- M	0 / 934	0.21 (1)
J- G	0 / 976	0.22 (1)

DESIGN CRITERIA

SPECIFIED LOADS:

TOP CH.	LL	=	23.3	PSF
	DL	=	3.0	PSF
BOT CH.	LL	=	0.0	PSF
	DL	=	7.3	PSF
TOTAL LOAD		=	33.6	PSF

SPACING = 24.0 IN. C/C

THIS TRUSS IS DESIGNED FOR RESIDENTIAL OR SMALL BUILDING REQUIREMENTS OF PART 9, NBCC 2010

THIS DESIGN COMPLIES WITH:
- PART 9 OF OBC 2012 , BCBC 2012 , ABC 2014
- CSA 086-09
- TPIC 2011

(55 % OF 27.2 P.S.F. G.S.L. PLUS 8.4 P.S.F. RAIN LOAD) EQUALS 23.3 P.S.F. SPECIFIED ROOF LIVE LOAD

ALLOWABLE DEFL.(LL)= L/360 (0.77")
CALCULATED VERT. DEFL.(LL) = L/ 999 (0.07")
ALLOWABLE DEFL.(TL)= L/360 (0.77")
CALCULATED VERT. DEFL.(TL) = L/ 999 (0.14")

CSI: TC=0.38/1.00 (D-F:1) , BC=0.23/1.00 (J-K:1) , WB=0.44/1.00 (F-K:1) , SSI=0.18/1.00 (D-F:1)

DOL LUMBER=1.00 NAIL=1.00 LS BEND=1.10 COMP=1.10 SHEAR=1.10 TENS= 1.10

COMPANION LIVE LOAD FACTOR = 0.50

TRUSS PLATE MANUFACTURER IS NOT RESPONSIBLE FOR QUALITY CONTROL IN THE TRUSS MANUFACTURING PLANT .

NAIL VALUES

PLATE	GRIP(DRY) (PSI) MAX	MIN	SHEAR (PLI) MAX	MIN	SECTION (PLI) MAX	MIN
MT20	618	354	1667	822	2284	1656

PLATE PLACEMENT TOL. = 0.250 inches

PLATE ROTATION TOL. = 5.0 Deg.

JSI GRIP= 0.88 (M) (INPUT = 0.90)
JSI METAL= 0.40 (G) (INPUT = 1.00)

CONTINUED ON PAGE 2

KOTT

READ ALL NOTES ON THIS PAGE AND ON ENGINEERING NOTE PAGE ENP-1. THIS NOTE PAGE IS AN INTEGRAL PART OF THIS DRAWING AS IT CONTAINS SPECIFICATIONS AND CRITERIA USED IN THE DESIGN OF THIS COMPONENT.

KOTT

JOB NAME	TRUSS NAME	QUANTITY	PLY	JOB DESC.	GREEN YORK HOMES - GRANELLI HOME CORP - INDIGO 1 ELEV 2	DRWG NO.
NE0618-035	GE05	1	1	TRUSS DESC.		PAGE 20 OF 47

Version 8.210 S Mar 12 2018 MiTek Industries, Inc. Tue Jun 5 17:07:03 2018 Page 1
ID:9_xLMwZ3WDKc3QXh8cyzSnzB2V3-msRIm2Zgxtkvf28X?RYtrCGBq2SiWG02RumDiOz9HW6

Scale = 1:49.5

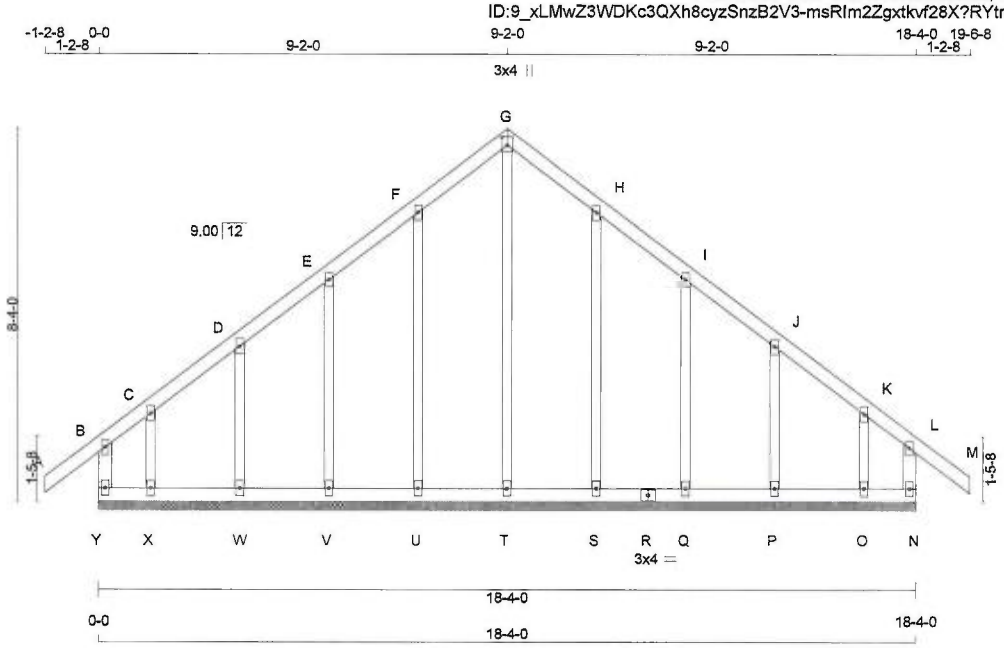

TOTAL WEIGHT = 86 lb

LUMBER
N. L. G. A. RULES

CHORDS	SIZE		LUMBER	DESCR.
Y - B	2x4	DRY	No.2	SPF
A - G	2x4	DRY	No.2	SPF
G - M	2x4	DRY	No.2	SPF
N - L	2x4	DRY	No.2	SPF
Y - R	2x4	DRY	No.2	SPF
R - N	2x4	DRY	No.2	SPF
ALL WEBS	2x3	DRY	No.2	SPF
ALL GABLE WEBS	2x3	DRY	No.2	SPF

DRY: SEASONED LUMBER.

GABLE STUDS SPACED AT 2-0-0 OC.

PLATES (table is in inches)

JT	TYPE	PLATES	W	LEN	Y	X
B	TMV+p	MT20	2.0	4.0		
C, D, E, F, H, I, J, K						
C	TMW+w	MT20	2.0	4.0		
G	TTW+p	MT20	3.0	4.0	2.25	1.50
L	TMV+p	MT20	2.0	4.0		
N	BMV1+p	MT20	2.0	4.0		
O, P, Q, S, T, U, V, W, X						
O	BMW1+w	MT20	2.0	4.0		
R	BS-t	MT20	3.0	4.0		
Y	BMV1+p	MT20	2.0	4.0		

READ ALL NOTES ON THIS PAGE AND ON ENGINEERING NOTE PAGE ENP-1. THIS NOTE PAGE IS AN INTEGRAL PART OF THIS DRAWING AS IT CONTAINS SPECIFICATIONS AND CRITERIA USED IN THE DESIGN OF THIS COMPONENT.

LICENSED PROFESSIONAL ENGINEER
N.A. EL-MASRI
PROVINCE OF ONTARIO
Jun 05, 2018

DIMENSIONS, SUPPORTS AND LOADINGS SPECIFIED BY FABRICATOR TO BE VERIFIED BY BUILDING DESIGNER

BEARINGS

THIS TRUSS DESIGNED FOR CONTINUOUS BEARINGS.

THIS TRUSS REQUIRES RIGID SHEATHING ON EXPOSED FACE.

BEARING MATERIAL TO BE SPF NO.2 OR BETTER AT JOINT(S)

BRACING

TOP CHORD TO BE SHEATHED OR MAX. PURLIN SPACING = 6.25 FT.
MAX. UNBRACED BOTTOM CHORD LENGTH = 6.25 FT OR RIGID CEILING DIRECTLY APPLIED.

ALL PITCH BREAKS AND PERIMETER CORNER JOINTS MUST BE LATERALLY RESTRAINED.

LOADING

TOTAL LOAD CASES: (4)

CHORDS

MEMB. FR-TO	MAX. FORCE (LBS)	FACTORED VERT. LOAD (PLF) FROM	TO	LC1	MAX CSI (LC)	MAX. UNBRAC LENGTH
Y- B	-172 / 0	0.0	0.0	0.02 (1)	7.81	
A- B	0 / 30	-77.4	-77.4	0.09 (1)	10.00	
B- C	-14 / 0	-77.4	-77.4	0.07 (1)	6.25	
C- D	0 / 15	-77.4	-77.4	0.04 (1)	10.00	
D- E	0 / 14	-77.4	-77.4	0.04 (1)	10.00	
E- F	0 / 20	-77.4	-77.4	0.04 (1)	10.00	
F- G	0 / 21	-77.4	-77.4	0.04 (1)	10.00	
G- H	0 / 21	-77.4	-77.4	0.04 (1)	10.00	
H- I	0 / 20	-77.4	-77.4	0.04 (1)	10.00	
I- J	0 / 14	-77.4	-77.4	0.04 (1)	10.00	
J- K	0 / 15	-77.4	-77.4	0.04 (1)	10.00	
K- L	-14 / 0	-77.4	-77.4	0.07 (1)	6.25	
L- M	0 / 30	-77.4	-77.4	0.09 (1)	10.00	
N- L	-172 / 0	0.0	0.0	0.02 (1)	7.81	
Y- X	-5 / 0	-18.2	-18.2	0.01 (1)	10.00	
X- W	-8 / 0	-18.2	-18.2	0.02 (4)	10.00	
W- V	-12 / 0	-18.2	-18.2	0.02 (4)	6.25	
V- U	-15 / 0	-18.2	-18.2	0.01 (4)	6.25	
U- T	-17 / 0	-18.2	-18.2	0.01 (4)	6.25	
T- S	-17 / 0	-18.2	-18.2	0.01 (4)	6.25	
S- R	-15 / 0	-18.2	-18.2	0.01 (4)	6.25	
R- Q	-15 / 0	-18.2	-18.2	0.01 (4)	6.25	
Q- P	-12 / 0	-18.2	-18.2	0.02 (4)	6.25	
P- O	-8 / 0	-18.2	-18.2	0.02 (4)	10.00	
O- N	-5 / 0	-18.2	-18.2	0.01 (1)	10.00	

WEBS

MEMB. FR-TO	MAX. FORCE (LBS)	MAX CSI (LC)
T- G	-185 / 0	0.25 (1)
U- F	-160 / 0	0.13 (1)
V- E	-149 / 0	0.06 (1)
W- D	-162 / 0	0.04 (1)
X- C	-75 / 0	0.01 (1)
S- H	-160 / 0	0.13 (1)
Q- I	-149 / 0	0.06 (1)
P- J	-162 / 0	0.04 (1)
O- K	-75 / 0	0.01 (1)

DESIGN CRITERIA

SPECIFIED LOADS:

TOP CH.	LL	=	23.3	PSF
	DL	=	3.0	PSF
BOT CH.	LL	=	0.0	PSF
	DL	=	7.3	PSF
TOTAL LOAD		=	33.6	PSF

SPACING = 24.0 IN. C/C

THIS TRUSS IS DESIGNED FOR RESIDENTIAL OR SMALL BUILDING REQUIREMENTS OF PART 9, NBCC 2010

THIS DESIGN COMPLIES WITH:
- PART 9 OF OBC 2012 , BCBC 2012 , ABC 2014
- CSA 086-09
- TPIC 2011

DESIGN ASSUMPTIONS
-OVERHANG NOT TO BE ALTERED OR CUT OFF.

(55 % OF 27.2 P.S.F. G.S.L. PLUS 8.4 P.S.F. RAIN LOAD) EQUALS 23.3 P.S.F. SPECIFIED ROOF LIVE LOAD

CSI: TC=0.09/1.00 (A-B:1) , BC=0.02/1.00 (P-Q:4) , WB=0.25/1.00 (G-T:1) , SSI=0.06/1.00 (A-B:1)

DOL LUMBER=1.00 NAIL=1.00 LS BEND=1.10 COMP=1.10 SHEAR=1.10 TENS= 1.10

COMPANION LIVE LOAD FACTOR = 0.50

TRUSS PLATE MANUFACTURER IS NOT RESPONSIBLE FOR QUALITY CONTROL IN THE TRUSS MANUFACTURING PLANT .

NAIL VALUES

PLATE	GRIP(DRY) (PSI) MAX	MIN	SHEAR (PLI) MAX	MIN	SECTION (PLI) MAX	MIN
MT20	618	354	1667	822	2284	1656

PLATE PLACEMENT TOL. = 0.250 inches

PLATE ROTATION TOL. = 5.0 Deg.

JSI GRIP= 0.51 (G) (INPUT = 0.90)
JSI METAL= 0.06 (G) (INPUT = 1.00)

KOTT

JOB NAME	TRUSS NAME	QUANTITY	PLY	JOB DESC.	GREEN YORK HOMES - GRANELLI HOME CORP - INDIGO 1 ELEV 2	DRWG NO.
NE0618-035	J01	9	1	TRUSS DESC.		PAGE 21 OF 47

Version 8.210 S Mar 12 2018 MiTek Industries, Inc. Tue Jun 5 17:07:04 2018 Page 1
ID:9_xLMwZ3WDKc3QXh8cyzSnzB2V3-E2?gzOZIhAsmHCijZ936OPpIKSm3Fl6CfYVmErz9HW5

Scale = 1:33.9

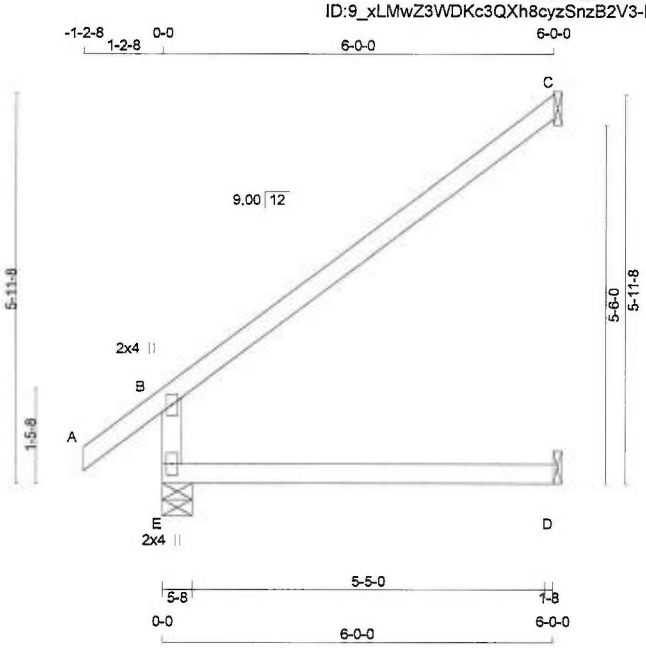

TOTAL WEIGHT = 9 X 19 = 167 lb
[M][F]

LUMBER
N. L. G. A. RULES

CHORDS	SIZE		LUMBER	DESCR.
E - B	2x4	DRY	No.2	SPF
A - C	2x4	DRY	No.2	SPF
E - D	2x4	DRY	No.2	SPF

DRY: SEASONED LUMBER.

PLATES (table is in inches)

JT	TYPE	PLATES	W	LEN	Y	X
B	TMV+p	MT20	2.0	4.0		
E	BMV1+p	MT20	2.0	4.0		

READ ALL NOTES ON THIS PAGE AND ON ENGINEERING NOTE PAGE ENP-1. THIS NOTE PAGE IS AN INTEGRAL PART OF THIS DRAWING AS IT CONTAINS SPECIFICATIONS AND CRITERIA USED IN THE DESIGN OF THIS COMPONENT.

LICENSED PROFESSIONAL ENGINEER
N.A. EL-MASRI
PROVINCE OF ONTARIO
Jun 05, 2018

DIMENSIONS, SUPPORTS AND LOADINGS SPECIFIED BY FABRICATOR TO BE VERIFIED BY BUILDING DESIGNER

BEARINGS

JT	FACTORED GROSS REACTION VERT	HORZ	MAXIMUM FACTORED GROSS REACTION DOWN	HORZ	UPLIFT	INPUT BRG IN-SX	REQRD BRG IN-SX
E	454	0	454	0	0	5-8	5-8
C	174	0	174	0	0	1-8	1-8
D	46	0	52	0	0	1-8	1-8

SEE MITEK STANDARD DETAIL B37579H FOR CONNECTION TO JOINT(S) C , D

UNFACTORED REACTIONS

JT	1ST LCASE COMBINED	MAX./MIN. COMPONENT REACTIONS SNOW	LIVE	PERM.LIVE	WIND	DEAD	SOIL
E	316	235 / 0	0 / 0	0 / 0	0 / 0	81 / 0	0 / 0
C	118	105 / 0	0 / 0	0 / 0	0 / 0	14 / 0	0 / 0
D	37	0 / 0	0 / 0	0 / 0	0 / 0	37 / 0	0 / 0

BEARING MATERIAL TO BE SPF NO.2 OR BETTER AT JOINT(S) E

BRACING
TOP CHORD TO BE SHEATHED OR MAX. PURLIN SPACING = 6.25 FT.
MAX. UNBRACED BOTTOM CHORD LENGTH = 10.00 FT OR RIGID CEILING DIRECTLY APPLIED.

ALL PITCH BREAKS AND PERIMETER CORNER JOINTS MUST BE LATERALLY RESTRAINED.

LOADING
TOTAL LOAD CASES: (4)

CHORDS

MEMB. FR-TO	MAX. FACTORED FORCE (LBS)	FACTORED VERT. LOAD (PLF) FROM	TO	LC1 MAX CSI (LC)	MAX. UNBRAC LENGTH
E- B	-390 / 0	0.0	0.0	0.11 (4)	7.81
A- B	0 / 30	-77.4	-77.4	0.09 (1)	10.00
B- C	-35 / 0	-77.4	-77.4	0.37 (1)	6.25
E- D	0 / 0	-18.2	-18.2	0.14 (4)	10.00

WEBS

MEMB. FR-TO	MAX. FACTORED FORCE (LBS)	MAX CSI (LC)

DESIGN CRITERIA

SPECIFIED LOADS:

TOP CH.	LL	=	23.3	PSF
	DL	=	3.0	PSF
BOT CH.	LL	=	0.0	PSF
	DL	=	7.3	PSF
TOTAL LOAD		=	33.6	PSF

SPACING = 24.0 IN. C/C

THIS TRUSS IS DESIGNED FOR RESIDENTIAL OR SMALL BUILDING REQUIREMENTS OF PART 9, NBCC 2010

THIS DESIGN COMPLIES WITH:
- PART 9 OF OBC 2012 , BCBC 2012 , ABC 2014
- CSA 086-09
- TPIC 2011

DESIGN ASSUMPTIONS
-OVERHANG NOT TO BE ALTERED OR CUT OFF.

(55 % OF 27.2 P.S.F. G.S.L. PLUS 8.4 P.S.F. RAIN LOAD) EQUALS 23.3 P.S.F. SPECIFIED ROOF LIVE LOAD

ALLOWABLE DEFL.(LL)= L/360 (0.20")
CALCULATED VERT. DEFL.(LL) = L/ 999 (0.00")
ALLOWABLE DEFL.(TL)= L/360 (0.20")
CALCULATED VERT. DEFL.(TL) = L/ 999 (0.04")

CSI: TC=0.37/1.00 (B-C:1) , BC=0.14/1.00 (D-E:4) , WB=0.00/1.00 (n/a:0) , SSI=0.18/1.00 (B-C:1)

DOL LUMBER=1.00 NAIL=1.00 LS BEND=1.10 COMP=1.10 SHEAR=1.10 TENS= 1.10

COMPANION LIVE LOAD FACTOR = 0.50

AUTOSOLVE RIGHT HEEL ONLY

TRUSS PLATE MANUFACTURER IS NOT RESPONSIBLE FOR QUALITY CONTROL IN THE TRUSS MANUFACTURING PLANT .

NAIL VALUES

PLATE	GRIP(DRY) (PSI) MAX	MIN	SHEAR (PLI) MAX	MIN	SECTION (PLI) MAX	MIN
MT20	618	354	1667	822	2284	1656

PLATE PLACEMENT TOL. = 0.250 inches

PLATE ROTATION TOL. = 5.0 Deg.

JSI GRIP= 0.27 (B) (INPUT = 0.90)
JSI METAL= 0.10 (B) (INPUT = 1.00)

KOTT

JOB NAME	TRUSS NAME	QUANTITY	PLY	JOB DESC.	GREEN YORK HOMES - GRANELLI HOME CORP - INDIGO 1 ELEV 2	DRWG NO.
NE0618-035	J02	1	1	TRUSS DESC.		PAGE 22 OF 47

Version 8.210 S Mar 12 2018 MiTek Industries, Inc. Tue Jun 5 17:07:04 2018 Page 1
ID:9_xLMwZ3WDKc3QXh8cyzSnzB2V3-E2?gzOZIhAsmHCijZ936OPpMMSm3Fl6CfYVmErz9HW5

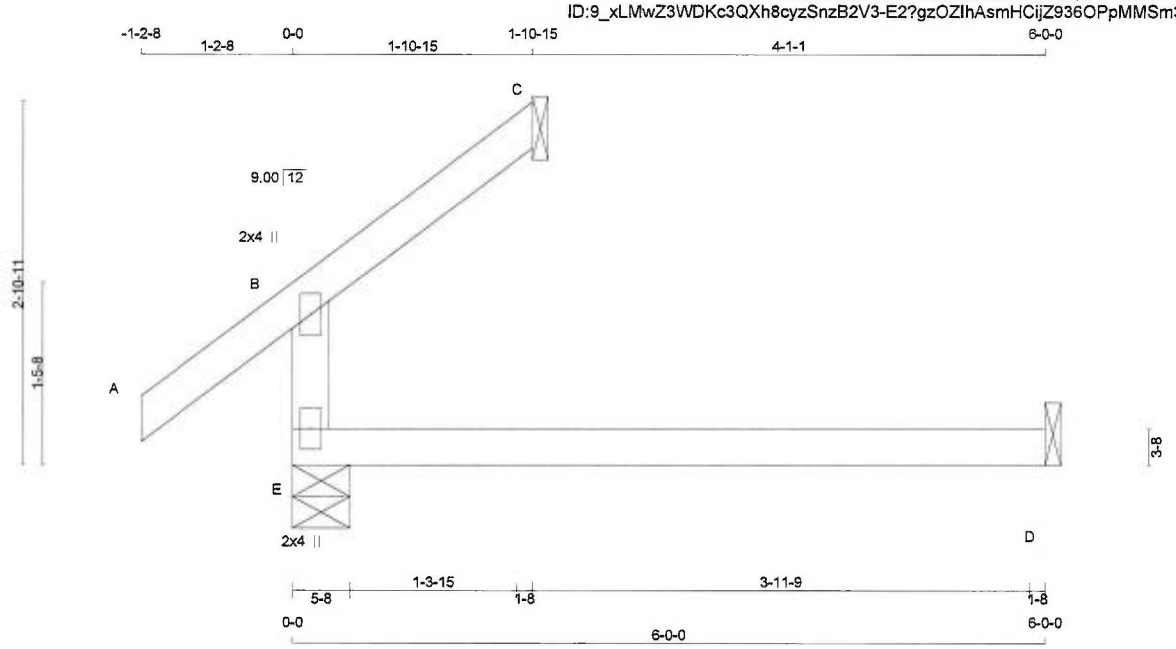

TOTAL WEIGHT = 13 lb
[M][F]

LUMBER
N. L. G. A. RULES

CHORDS	SIZE		LUMBER	DESCR.
E - B	2x4	DRY	No.2	SPF
A - C	2x4	DRY	No.2	SPF
E - D	2x4	DRY	No.2	SPF

DRY: SEASONED LUMBER.

PLATES (table is in inches)

JT	TYPE	PLATES	W	LEN	Y	X
B	TMV+p	MT20	2.0	4.0		
E	BMV1+p	MT20	2.0	4.0		

READ ALL NOTES ON THIS PAGE AND ON ENGINEERING NOTE PAGE ENP-1. THIS NOTE PAGE IS AN INTEGRAL PART OF THIS DRAWING AS IT CONTAINS SPECIFICATIONS AND CRITERIA USED IN THE DESIGN OF THIS COMPONENT.

LICENSED PROFESSIONAL ENGINEER
N.A. EL-MASRI
PROVINCE OF ONTARIO
Jun 05, 2018

DIMENSIONS, SUPPORTS AND LOADINGS SPECIFIED BY FABRICATOR TO BE VERIFIED BY BUILDING DESIGNER

BEARINGS

JT	FACTORED GROSS REACTION VERT	HORZ	MAXIMUM FACTORED GROSS REACTION DOWN	HORZ	UPLIFT	INPUT BRG IN-SX	REQRD BRG IN-SX
E	256	0	256	0	0	5-8	5-8
C	56	0	56	0	0	1-8	1-8
D	46	0	52	0	0	1-8	1-8

SEE MITEK STANDARD DETAIL B37579H FOR CONNECTION TO JOINT(S) C , D

UNFACTORED REACTIONS

JT	1ST LCASE COMBINED	MAX./MIN. COMPONENT REACTIONS SNOW	LIVE	PERM.LIVE	WIND	DEAD	SOIL
E	181	116 / 0	0 / 0	0 / 0	0 / 0	66 / 0	0 / 0
C	38	34 / 0	0 / 0	0 / 0	0 / 0	4 / 0	0 / 0
D	37	0 / 0	0 / 0	0 / 0	0 / 0	37 / 0	0 / 0

BEARING MATERIAL TO BE SPF NO.2 OR BETTER AT JOINT(S) E, C

BRACING
TOP CHORD TO BE SHEATHED OR MAX. PURLIN SPACING = 6.25 FT.
MAX. UNBRACED BOTTOM CHORD LENGTH = 10.00 FT OR RIGID CEILING DIRECTLY APPLIED.

ALL PITCH BREAKS AND PERIMETER CORNER JOINTS MUST BE LATERALLY RESTRAINED.

LOADING
TOTAL LOAD CASES: (4)

CHORDS

MEMB. FR-TO	MAX. FACTORED FORCE (LBS)	FACTORED VERT. LOAD (PLF) FROM	TO	LC1 MAX CSI (LC)	MAX. UNBRAC LENGTH FR-TO
E- B	-192 / 0	0.0	0.0	0.11 (4)	7.81
A- B	0 / 30	-77.4	-77.4	0.09 (1)	10.00
B- C	-11 / 0	-77.4	-77.4	0.04 (1)	6.25
E- D	0 / 0	-18.2	-18.2	0.14 (4)	10.00

WEBS

MEMB.	MAX. FACTORED FORCE (LBS)	MAX CSI (LC)

DESIGN CRITERIA

SPECIFIED LOADS:

TOP CH.	LL	=	23.3	PSF
	DL	=	3.0	PSF
BOT CH.	LL	=	0.0	PSF
	DL	=	7.3	PSF
TOTAL LOAD		=	33.6	PSF

SPACING = 24.0 IN. C/C

THIS TRUSS IS DESIGNED FOR RESIDENTIAL OR SMALL BUILDING REQUIREMENTS OF PART 9, NBCC 2010

THIS DESIGN COMPLIES WITH:
- PART 9 OF OBC 2012 , BCBC 2012 , ABC 2014
- CSA 086-09
- TPIC 2011

DESIGN ASSUMPTIONS
-OVERHANG NOT TO BE ALTERED OR CUT OFF.

(55 % OF 27.2 P.S.F. G.S.L. PLUS 8.4 P.S.F. RAIN LOAD) EQUALS 23.3 P.S.F. SPECIFIED ROOF LIVE LOAD

ALLOWABLE DEFL.(LL)= L/360 (0.20")
CALCULATED VERT. DEFL.(LL) = L/ 999 (0.00")
ALLOWABLE DEFL.(TL)= L/360 (0.20")
CALCULATED VERT. DEFL.(TL) = L/ 999 (0.04")

CSI: TC=0.11/1.00 (B-E:4) , BC=0.14/1.00 (D-E:4) , WB=0.00/1.00 (n/a:0) , SSI=0.09/1.00 (D-E:4)

DOL LUMBER=1.00 NAIL=1.00 LS BEND=1.10 COMP=1.10 SHEAR=1.10 TENS= 1.10

COMPANION LIVE LOAD FACTOR = 0.50

AUTOSOLVE RIGHT HEEL ONLY

TRUSS PLATE MANUFACTURER IS NOT RESPONSIBLE FOR QUALITY CONTROL IN THE TRUSS MANUFACTURING PLANT .

NAIL VALUES

PLATE	GRIP(DRY) (PSI) MAX	MIN	SHEAR (PLI) MAX	MIN	SECTION (PLI) MAX	MIN
MT20	618	354	1667	822	2284	1656

PLATE PLACEMENT TOL. = 0.250 inches

PLATE ROTATION TOL. = 5.0 Deg.

JSI GRIP= 0.13 (B) (INPUT = 0.90)
JSI METAL= 0.05 (B) (INPUT = 1.00)

KOTT

JOB NAME	TRUSS NAME	QUANTITY	PLY	JOB DESC.	GREEN YORK HOMES - GRANELLI HOME CORP - INDIGO 1 ELEV 2	DRWG NO.
NE0618-035	J03	1	1	TRUSS DESC.		PAGE 23 OF 47

Version 8.210 S Mar 12 2018 MiTek Industries, Inc. Tue Jun 5 17:07:04 2018 Page 1
ID:9_xLMwZ3WDKc3QXh8cyzSnzB2V3-E2?gzOZIhAsmHCijZ936OPpLdSm3Fl6CfYVmErz9HW5

Scale = 1:25.1

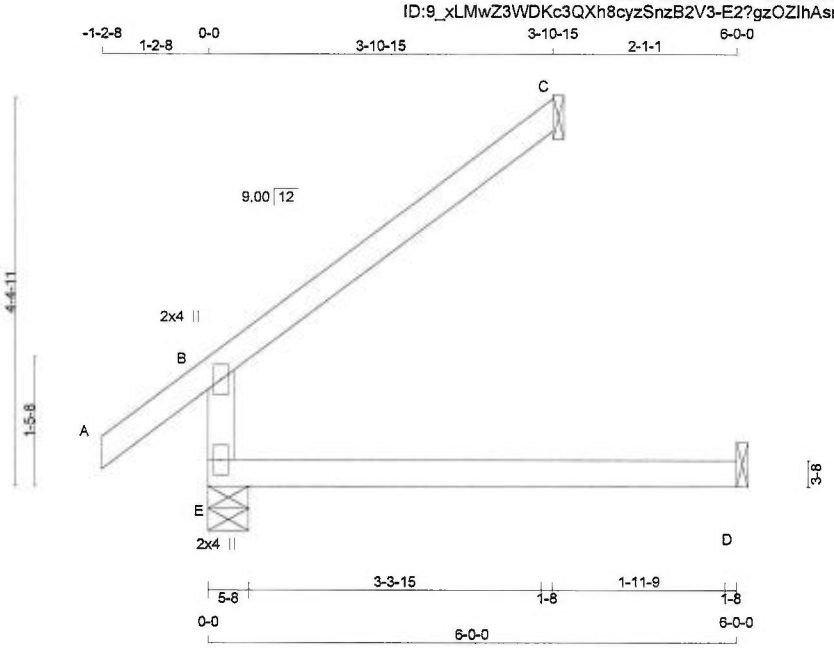

TOTAL WEIGHT = 16 lb

[M][F]

LUMBER
N. L. G. A. RULES

CHORDS	SIZE		LUMBER	DESCR.
E - B	2x4	DRY	No.2	SPF
A - C	2x4	DRY	No.2	SPF
E - D	2x4	DRY	No.2	SPF

DRY: SEASONED LUMBER.

PLATES (table is in inches)

JT	TYPE	PLATES	W	LEN	Y	X
B	TMV+p	MT20	2.0	4.0		
E	BMV1+p	MT20	2.0	4.0		

READ ALL NOTES ON THIS PAGE AND ON ENGINEERING NOTE PAGE ENP-1. THIS NOTE PAGE IS AN INTEGRAL PART OF THIS DRAWING AS IT CONTAINS SPECIFICATIONS AND CRITERIA USED IN THE DESIGN OF THIS COMPONENT.

LICENSED PROFESSIONAL ENGINEER
N.A. EL-MASRI
PROVINCE OF ONTARIO
Jun 05, 2018

DIMENSIONS, SUPPORTS AND LOADINGS SPECIFIED BY FABRICATOR TO BE VERIFIED BY BUILDING DESIGNER

BEARINGS

JT	FACTORED GROSS REACTION VERT	HORZ	MAXIMUM FACTORED GROSS REACTION DOWN	HORZ	UPLIFT	INPUT BRG IN-SX	REQRD BRG IN-SX
E	353	0	353	0	0	5-8	5-8
C	114	0	114	0	0	1-8	1-8
D	46	0	52	0	0	1-8	1-8

SEE MITEK STANDARD DETAIL B37579H FOR CONNECTION TO JOINT(S) C , D

UNFACTORED REACTIONS

JT	1ST LCASE COMBINED	MAX./MIN. COMPONENT REACTIONS SNOW	LIVE	PERM.LIVE	WIND	DEAD	SOIL
E	247	174 / 0	0 / 0	0 / 0	0 / 0	73 / 0	0 / 0
C	77	68 / 0	0 / 0	0 / 0	0 / 0	9 / 0	0 / 0
D	37	0 / 0	0 / 0	0 / 0	0 / 0	37 / 0	0 / 0

BEARING MATERIAL TO BE SPF NO.2 OR BETTER AT JOINT(S) E, C

BRACING
TOP CHORD TO BE SHEATHED OR MAX. PURLIN SPACING = 6.25 FT.
MAX. UNBRACED BOTTOM CHORD LENGTH = 10.00 FT OR RIGID CEILING DIRECTLY APPLIED.

ALL PITCH BREAKS AND PERIMETER CORNER JOINTS MUST BE LATERALLY RESTRAINED.

LOADING
TOTAL LOAD CASES: (4)

CHORDS MEMB. FR-TO	MAX. FORCE (LBS)	FACTORED VERT. LOAD (PLF) FROM	TO	LC1	MAX CSI (LC)	WEBS MAX. UNBRAC LENGTH	MEMB. FR-TO	MAX. FORCE (LBS)	MAX CSI (LC)
E- B	-289 / 0	0.0	0.0	0.11 (4)		7.81			
A- B	0 / 30	-77.4	-77.4	0.09 (1)		10.00			
B- C	-23 / 0	-77.4	-77.4	0.15 (1)		6.25			
E- D	0 / 0	-18.2	-18.2	0.14 (4)		10.00			

DESIGN CRITERIA

SPECIFIED LOADS:

TOP CH.	LL	=	23.3	PSF
	DL	=	3.0	PSF
BOT CH.	LL	=	0.0	PSF
	DL	=	7.3	PSF
TOTAL LOAD		=	33.6	PSF

SPACING = 24.0 IN. C/C

THIS TRUSS IS DESIGNED FOR RESIDENTIAL OR SMALL BUILDING REQUIREMENTS OF PART 9, NBCC 2010

THIS DESIGN COMPLIES WITH:
- PART 9 OF OBC 2012 , BCBC 2012 , ABC 2014
- CSA 086-09
- TPIC 2011

DESIGN ASSUMPTIONS
-OVERHANG NOT TO BE ALTERED OR CUT OFF.

(55 % OF 27.2 P.S.F. G.S.L. PLUS 8.4 P.S.F. RAIN LOAD) EQUALS 23.3 P.S.F. SPECIFIED ROOF LIVE LOAD

ALLOWABLE DEFL.(LL)= L/360 (0.20")
CALCULATED VERT. DEFL.(LL) = L/ 999 (0.00")
ALLOWABLE DEFL.(TL)= L/360 (0.20")
CALCULATED VERT. DEFL.(TL) = L/ 999 (0.04")

CSI: TC=0.15/1.00 (B-C:1) , BC=0.14/1.00 (D-E:4) , WB=0.00/1.00 (n/a:0) , SSI=0.12/1.00 (B-C:1)

DOL LUMBER=1.00 NAIL=1.00 LS BEND=1.10 COMP=1.10 SHEAR=1.10 TENS= 1.10

COMPANION LIVE LOAD FACTOR = 0.50

AUTOSOLVE RIGHT HEEL ONLY

TRUSS PLATE MANUFACTURER IS NOT RESPONSIBLE FOR QUALITY CONTROL IN THE TRUSS MANUFACTURING PLANT .

NAIL VALUES

PLATE	GRIP(DRY) (PSI) MAX	MIN	SHEAR (PLI) MAX	MIN	SECTION (PLI) MAX	MIN
MT20	618	354	1667	822	2284	1656

PLATE PLACEMENT TOL. = 0.250 inches

PLATE ROTATION TOL. = 5.0 Deg.

JSI GRIP= 0.20 (B) (INPUT = 0.90)
JSI METAL= 0.07 (B) (INPUT = 1.00)

KOTT

JOB NAME	TRUSS NAME	QUANTITY	PLY	JOB DESC.	GREEN YORK HOMES - GRANELLI HOME CORP - INDIGO 1 ELEV 2	DRWG NO.
NE0618-035	J04	1	1	TRUSS DESC.		PAGE 24 OF 47

Version 8.210 S Mar 12 2018 MiTek Industries, Inc. Tue Jun 5 17:07:05 2018 Page 1
ID:9_xLMwZ3WDKc3QXh8cyzSnzB2V3-iFZ2BkawSU_dvMHv6saLwdLXJs88_CLLuCFKnHz9HW4

Scale = 1:17.6

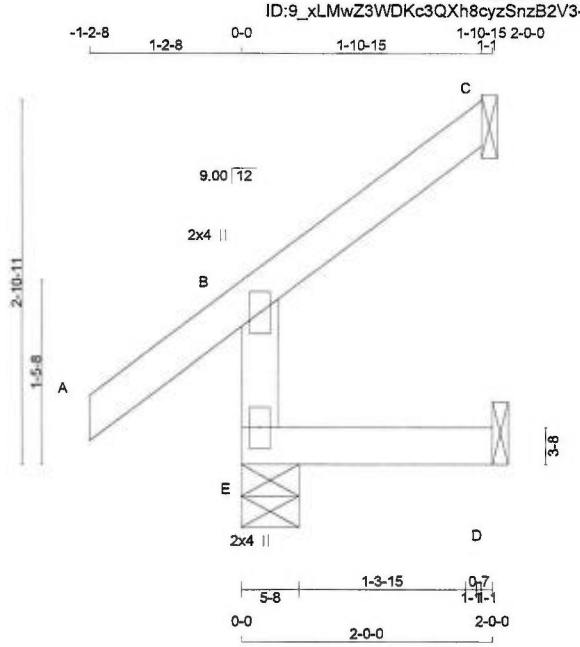

TOTAL WEIGHT = 8 lb
[M]

LUMBER
N. L. G. A. RULES

CHORDS	SIZE		LUMBER	DESCR.
E - B	2x4	DRY	No.2	SPF
A - C	2x4	DRY	No.2	SPF
E - D	2x4	DRY	No.2	SPF

DRY: SEASONED LUMBER.

PLATES (table is in inches)

JT	TYPE	PLATES	W	LEN	Y	X
B	TMV+p	MT20	2.0	4.0		
E	BMV1+p	MT20	2.0	4.0		

DIMENSIONS, SUPPORTS AND LOADINGS SPECIFIED BY FABRICATOR TO BE VERIFIED BY BUILDING DESIGNER

BEARINGS

JT	FACTORED GROSS REACTION VERT	HORZ	MAXIMUM FACTORED GROSS REACTION DOWN	HORZ	UPLIFT	INPUT BRG IN-SX	REQRD BRG IN-SX
E	212	0	212	0	0	5-8	5-8
C	56	0	56	0	0	1-8	1-8
D	17	0	19	0	0	1-8	1-8

SEE MITEK STANDARD DETAIL B37579H FOR CONNECTION TO JOINT(S) C , D

UNFACTORED REACTIONS

JT	1ST LCASE COMBINED	MAX./MIN. COMPONENT REACTIONS SNOW	LIVE	PERM.LIVE	WIND	DEAD	SOIL
E	147	116 / 0	0 / 0	0 / 0	0 / 0	31 / 0	0 / 0
C	38	34 / 0	0 / 0	0 / 0	0 / 0	4 / 0	0 / 0
D	13	0 / 0	0 / 0	0 / 0	0 / 0	13 / 0	0 / 0

BEARING MATERIAL TO BE SPF NO.2 OR BETTER AT JOINT(S) E, C

BRACING
TOP CHORD TO BE SHEATHED OR MAX. PURLIN SPACING = 6.25 FT.
MAX. UNBRACED BOTTOM CHORD LENGTH = 10.00 FT OR RIGID CEILING DIRECTLY APPLIED.

ALL PITCH BREAKS AND PERIMETER CORNER JOINTS MUST BE LATERALLY RESTRAINED.

LOADING
TOTAL LOAD CASES: (5)

CHORDS

MEMB. FR-TO	MAX. FORCE (LBS)	FACTORED VERT. LOAD (PLF) FROM	TO	LC1 MAX CSI (LC)	MAX. UNBRAC LENGTH
E- B	-192 / 0	0.0	0.0	0.01 (4)	7.81
A- B	0 / 30	-77.4	-77.4	0.09 (1)	10.00
B- C	-11 / 0	-77.4	-77.4	0.05 (1)	6.25
E- D	0 / 0	-18.2	-18.2	0.02 (4)	10.00

WEBS

MEMB. FR-TO	MAX. FORCE (LBS)	MAX CSI (LC)

CANTILEVER ANALYSIS HAS BEEN CONSIDERED IN THIS DESIGN

DESIGN CRITERIA

SPECIFIED LOADS:

TOP CH.	LL	=	23.3	PSF
	DL	=	3.0	PSF
BOT CH.	LL	=	0.0	PSF
	DL	=	7.3	PSF
TOTAL LOAD		=	33.6	PSF

SPACING = 24.0 IN. C/C

THIS TRUSS IS DESIGNED FOR RESIDENTIAL OR SMALL BUILDING REQUIREMENTS OF PART 9, NBCC 2010

THIS DESIGN COMPLIES WITH:
- PART 9 OF OBC 2012 , BCBC 2012 , ABC 2014
- CSA 086-09
- TPIC 2011

DESIGN ASSUMPTIONS
-OVERHANG NOT TO BE ALTERED OR CUT OFF.

(55 % OF 27.2 P.S.F. G.S.L. PLUS 8.4 P.S.F. RAIN LOAD) EQUALS 23.3 P.S.F. SPECIFIED ROOF LIVE LOAD

ALLOWABLE DEFL.(LL)= L/360 (0.19")
CALCULATED VERT. DEFL.(LL) = L/ 999 (0.00")
ALLOWABLE DEFL.(TL)= L/360 (0.19")
CALCULATED VERT. DEFL.(TL) = L/ 999 (0.00")

CSI: TC=0.09/1.00 (A-B:1) , BC=0.02/1.00 (D-E:4) , WB=0.00/1.00 (n/a:0) , SSI=0.06/1.00 (A-B:1)

DOL LUMBER=1.00 NAIL=1.00 LS BEND=1.10 COMP=1.10 SHEAR=1.10 TENS= 1.10

COMPANION LIVE LOAD FACTOR = 0.50

AUTOSOLVE RIGHT HEEL ONLY

TRUSS PLATE MANUFACTURER IS NOT RESPONSIBLE FOR QUALITY CONTROL IN THE TRUSS MANUFACTURING PLANT .

NAIL VALUES

PLATE	GRIP(DRY) (PSI) MAX	MIN	SHEAR (PLI) MAX	MIN	SECTION (PLI) MAX	MIN
MT20	618	354	1667	822	2284	1656

PLATE PLACEMENT TOL. = 0.250 inches

PLATE ROTATION TOL. = 5.0 Deg.

JSI GRIP= 0.13 (B) (INPUT = 0.90)
JSI METAL= 0.05 (B) (INPUT = 1.00)

READ ALL NOTES ON THIS PAGE AND ON ENGINEERING NOTE PAGE ENP-1. THIS NOTE PAGE IS AN INTEGRAL PART OF THIS DRAWING AS IT CONTAINS SPECIFICATIONS AND CRITERIA USED IN THE DESIGN OF THIS COMPONENT.

LICENSED PROFESSIONAL ENGINEER
N.A. EL-MASRI
PROVINCE OF ONTARIO
Jun 05, 2018

KOTT

JOB NAME	TRUSS NAME	QUANTITY	PLY	JOB DESC.	GREEN YORK HOMES - GRANELLI HOME CORP - INDIGO 1 ELEV 2	DRWG NO.
NE0618-035	J05	1	1	TRUSS DESC.		PAGE 25 OF 47

Version 8.210 S Mar 12 2018 MiTek Industries, Inc. Tue Jun 5 17:07:05 2018 Page 1
ID:9_xLMwZ3WDKc3QXh8cyzSnzB2V3-iFZ2BkawSU_dvMHv6saLwdLVes88_CLLuCFKnHz9HW4

Scale = 1:25.4

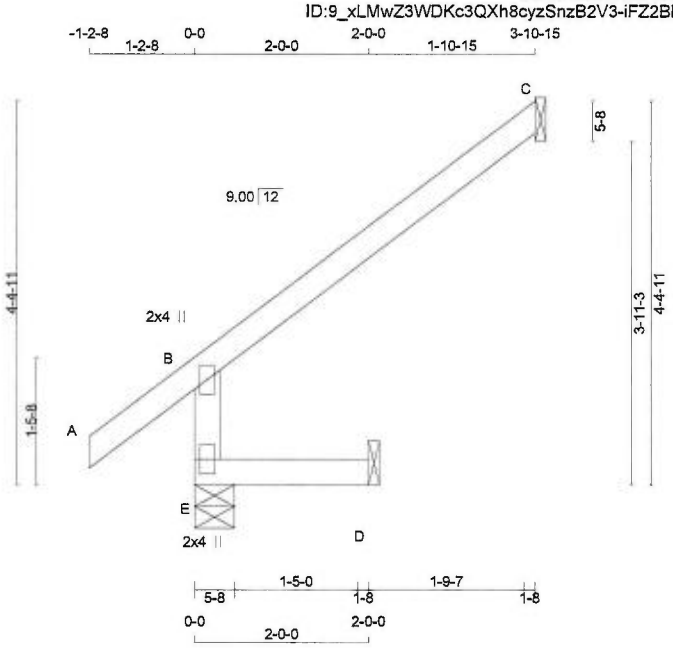

TOTAL WEIGHT = 11 lb [M]

LUMBER
N. L. G. A. RULES

CHORDS	SIZE		LUMBER	DESCR.
E - B	2x4	DRY	No.2	SPF
A - C	2x4	DRY	No.2	SPF
E - D	2x4	DRY	No.2	SPF

DRY: SEASONED LUMBER.

PLATES (table is in inches)

JT	TYPE	PLATES	W	LEN	Y	X
B	TMV+p	MT20	2.0	4.0		
E	BMV1+p	MT20	2.0	4.0		

READ ALL NOTES ON THIS PAGE AND ON ENGINEERING NOTE PAGE ENP-1. THIS NOTE PAGE IS AN INTEGRAL PART OF THIS DRAWING AS IT CONTAINS SPECIFICATIONS AND CRITERIA USED IN THE DESIGN OF THIS COMPONENT.

LICENSED PROFESSIONAL ENGINEER
N.A. EL-MASRI
PROVINCE OF ONTARIO
Jun 05, 2018

DIMENSIONS, SUPPORTS AND LOADINGS SPECIFIED BY FABRICATOR TO BE VERIFIED BY BUILDING DESIGNER

BEARINGS

JT	FACTORED GROSS REACTION VERT	HORZ	MAXIMUM FACTORED GROSS REACTION DOWN	HORZ	UPLIFT	INPUT BRG IN-SX	REQRD BRG IN-SX
E	309	0	309	0	0	5-8	5-8
C	114	0	114	0	0	1-8	1-8
D	17	0	19	0	0	1-8	1-8

SEE MITEK STANDARD DETAIL B37579H FOR CONNECTION TO JOINT(S) C , D

UNFACTORED REACTIONS

JT	1ST LCASE COMBINED	MAX./MIN. COMPONENT REACTIONS SNOW	LIVE	PERM.LIVE	WIND	DEAD	SOIL
E	213	174 / 0	0 / 0	0 / 0	0 / 0	38 / 0	0 / 0
C	77	68 / 0	0 / 0	0 / 0	0 / 0	9 / 0	0 / 0
D	13	0 / 0	0 / 0	0 / 0	0 / 0	13 / 0	0 / 0

BEARING MATERIAL TO BE SPF NO.2 OR BETTER AT JOINT(S) E

BRACING
TOP CHORD TO BE SHEATHED OR MAX. PURLIN SPACING = 6.25 FT.
MAX. UNBRACED BOTTOM CHORD LENGTH = 10.00 FT OR RIGID CEILING DIRECTLY APPLIED.

ALL PITCH BREAKS AND PERIMETER CORNER JOINTS MUST BE LATERALLY RESTRAINED.

LOADING
TOTAL LOAD CASES: (4)

CHORDS

MEMB. FR-TO	MAX. FORCE (LBS)	FACTORED VERT. LOAD (PLF) FROM	TO	LC1 MAX CSI (LC)	MAX. UNBRAC LENGTH
E- B	-289 / 0	0.0	0.0	0.01 (4)	7.81
A- B	0 / 30	-77.4	-77.4	0.09 (1)	10.00
B- C	-23 / 0	-77.4	-77.4	0.20 (1)	6.25
E- D	0 / 0	-18.2	-18.2	0.02 (4)	10.00

WEBS

MEMB. FR-TO	MAX. FORCE (LBS)	MAX CSI (LC)

DESIGN CRITERIA

SPECIFIED LOADS:

TOP CH.	LL	=	23.3	PSF
	DL	=	3.0	PSF
BOT CH.	LL	=	0.0	PSF
	DL	=	7.3	PSF
TOTAL LOAD		=	33.6	PSF

SPACING = 24.0 IN. C/C

THIS TRUSS IS DESIGNED FOR RESIDENTIAL OR SMALL BUILDING REQUIREMENTS OF PART 9, NBCC 2010

THIS DESIGN COMPLIES WITH:
- PART 9 OF OBC 2012 , BCBC 2012 , ABC 2014
- CSA 086-09
- TPIC 2011

DESIGN ASSUMPTIONS
-OVERHANG NOT TO BE ALTERED OR CUT OFF.

(55 % OF 27.2 P.S.F. G.S.L. PLUS 8.4 P.S.F. RAIN LOAD) EQUALS 23.3 P.S.F. SPECIFIED ROOF LIVE LOAD

ALLOWABLE DEFL.(LL)= L/360 (0.19")
CALCULATED VERT. DEFL.(LL) = L/ 999 (0.00")
ALLOWABLE DEFL.(TL)= L/360 (0.19")
CALCULATED VERT. DEFL.(TL) = L/ 999 (0.00")

CSI: TC=0.20/1.00 (B-C:1) , BC=0.02/1.00 (D-E:4) , WB=0.00/1.00 (n/a:0) , SSI=0.12/1.00 (B-C:1)

DOL LUMBER=1.00 NAIL=1.00 LS BEND=1.10 COMP=1.10 SHEAR=1.10 TENS= 1.10

COMPANION LIVE LOAD FACTOR = 0.50

AUTOSOLVE RIGHT HEEL ONLY

TRUSS PLATE MANUFACTURER IS NOT RESPONSIBLE FOR QUALITY CONTROL IN THE TRUSS MANUFACTURING PLANT .

NAIL VALUES

PLATE	GRIP(DRY) (PSI) MAX	MIN	SHEAR (PLI) MAX	MIN	SECTION (PLI) MAX	MIN
MT20	618	354	1667	822	2284	1656

PLATE PLACEMENT TOL. = 0.250 inches

PLATE ROTATION TOL. = 5.0 Deg.

JSI GRIP= 0.20 (B) (INPUT = 0.90)
JSI METAL= 0.07 (B) (INPUT = 1.00)

KOTT

JOB NAME	TRUSS NAME	QUANTITY	PLY	JOB DESC.	GREEN YORK HOMES - GRANELLI HOME CORP - INDIGO 1 ELEV 2	DRWG NO.
NE0618-035	J09	4	1	TRUSS DESC.		PAGE 26 OF 47

Version 8.210 S Mar 12 2018 MiTek Industries, Inc. Tue Jun 5 17:07:05 2018 Page 1
ID:9_xLMwZ3WDKc3QXh8cyzSnzB2V3-iFZ2BkawSU_dvMHv6saLwdLXns8p_CLLuCFKnHz9HW4

Scale = 1:15.5

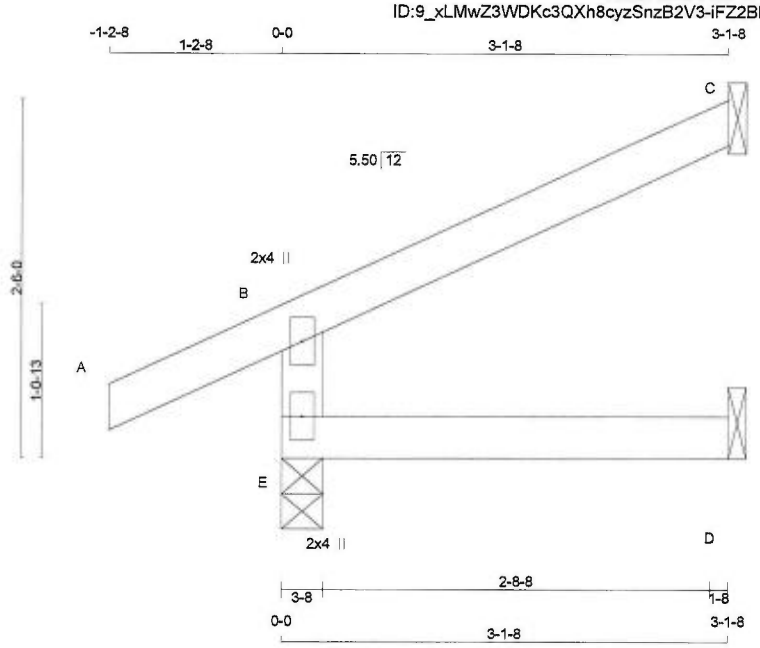

TOTAL WEIGHT = 4 X 10 = 39 lb [M]

LUMBER
N. L. G. A. RULES

CHORDS	SIZE		LUMBER	DESCR.
E - B	2x4	DRY	No.2	SPF
A - C	2x4	DRY	No.2	SPF
E - D	2x4	DRY	No.2	SPF

DRY: SEASONED LUMBER.

PLATES (table is in inches)

JT	TYPE	PLATES	W	LEN	Y	X
B	TMV+p	MT20	2.0	4.0		
E	BMV1+p	MT20	2.0	4.0		

DIMENSIONS, SUPPORTS AND LOADINGS SPECIFIED BY FABRICATOR TO BE VERIFIED BY BUILDING DESIGNER

BEARINGS

JT	FACTORED GROSS REACTION VERT	HORZ	MAXIMUM FACTORED GROSS REACTION DOWN	HORZ	UPLIFT	INPUT BRG IN-SX	REQRD BRG IN-SX
E	282	0	282	0	0	3-8	3-8
C	91	0	91	0	0	1-8	1-8
D	24	0	27	0	0	1-8	1-8

SEE MITEK STANDARD DETAIL B37579H FOR CONNECTION TO JOINT(S) C , D

UNFACTORED REACTIONS

JT	1ST LCASE COMBINED	MAX./MIN. COMPONENT REACTIONS SNOW	LIVE	PERM.LIVE	WIND	DEAD	SOIL
E	195	150 / 0	0 / 0	0 / 0	0 / 0	45 / 0	0 / 0
C	62	55 / 0	0 / 0	0 / 0	0 / 0	7 / 0	0 / 0
D	20	0 / 0	0 / 0	0 / 0	0 / 0	20 / 0	0 / 0

BEARING MATERIAL TO BE SPF NO.2 OR BETTER AT JOINT(S) E, C

BRACING
TOP CHORD TO BE SHEATHED OR MAX. PURLIN SPACING = 6.25 FT.
MAX. UNBRACED BOTTOM CHORD LENGTH = 10.00 FT OR RIGID CEILING DIRECTLY APPLIED.

ALL PITCH BREAKS AND PERIMETER CORNER JOINTS MUST BE LATERALLY RESTRAINED.

LOADING
TOTAL LOAD CASES: (5)

CHORDS MEMB. FR-TO	MAX. FORCE (LBS)	FACTORED VERT. LOAD (PLF) FROM	TO	LC1 MAX CSI (LC)	WEBS MAX. UNBRAC LENGTH	MEMB. FR-TO	MAX. FACTORED FORCE (LBS)	MAX CSI (LC)
E- B	-249 / 0	0.0	0.0	0.03 (4)	7.81			
A- B	0 / 20	-77.4	-77.4	0.09 (1)	10.00			
B- C	-13 / 0	-77.4	-77.4	0.13 (1)	6.25			
E- D	0 / 0	-18.2	-18.2	0.04 (4)	10.00			

CANTILEVER ANALYSIS HAS BEEN CONSIDERED IN THIS DESIGN

DESIGN CRITERIA

SPECIFIED LOADS:

TOP CH.	LL	=	23.3	PSF
	DL	=	3.0	PSF
BOT CH.	LL	=	0.0	PSF
	DL	=	7.3	PSF
TOTAL LOAD		=	33.6	PSF

SPACING = 24.0 IN. C/C

THIS TRUSS IS DESIGNED FOR RESIDENTIAL OR SMALL BUILDING REQUIREMENTS OF PART 9, NBCC 2010

THIS DESIGN COMPLIES WITH:
- PART 9 OF OBC 2012 , BCBC 2012 , ABC 2014
- CSA 086-09
- TPIC 2011

DESIGN ASSUMPTIONS
-OVERHANG NOT TO BE ALTERED OR CUT OFF.

(55 % OF 27.2 P.S.F. G.S.L. PLUS 8.4 P.S.F. RAIN LOAD) EQUALS 23.3 P.S.F. SPECIFIED ROOF LIVE LOAD

ALLOWABLE DEFL.(LL)= L/360 (0.19")
CALCULATED VERT. DEFL.(LL) = L/ 999 (0.00")
ALLOWABLE DEFL.(TL)= L/360 (0.19")
CALCULATED VERT. DEFL.(TL) = L/ 999 (0.00")

CSI: TC=0.13/1.00 (B-C:1) , BC=0.04/1.00 (D-E:4) , WB=0.00/1.00 (n/a:0) , SSI=0.11/1.00 (B-C:1)

DOL LUMBER=1.00 NAIL=1.00 LS BEND=1.10 COMP=1.10 SHEAR=1.10 TENS= 1.10

COMPANION LIVE LOAD FACTOR = 0.50

AUTOSOLVE RIGHT HEEL ONLY

TRUSS PLATE MANUFACTURER IS NOT RESPONSIBLE FOR QUALITY CONTROL IN THE TRUSS MANUFACTURING PLANT .

NAIL VALUES

PLATE	GRIP(DRY) (PSI) MAX	MIN	SHEAR (PLI) MAX	MIN	SECTION (PLI) MAX	MIN
MT20	618	354	1667	822	2284	1656

PLATE PLACEMENT TOL. = 0.250 inches

PLATE ROTATION TOL. = 5.0 Deg.

JSI GRIP= 0.14 (B) (INPUT = 0.90)
JSI METAL= 0.05 (B) (INPUT = 1.00)

READ ALL NOTES ON THIS PAGE AND ON ENGINEERING NOTE PAGE ENP-1. THIS NOTE PAGE IS AN INTEGRAL PART OF THIS DRAWING AS IT CONTAINS SPECIFICATIONS AND CRITERIA USED IN THE DESIGN OF THIS COMPONENT.

LICENSED PROFESSIONAL ENGINEER
N.A. EL-MASRI
PROVINCE OF ONTARIO
Jun 05, 2018

KOTT

JOB NAME	TRUSS NAME	QUANTITY	PLY	JOB DESC.	GREEN YORK HOMES - GRANELLI HOME CORP - INDIGO 1 ELEV 2	DRWG NO.
NE0618-035	P02	5	1	TRUSS DESC.		PAGE 27 OF 47

Version 8.210 S Mar 12 2018 MiTek Industries, Inc. Tue Jun 5 17:07:06 2018 Page 1
ID:9_xLMwZ3WDKc3QXh8cyzSnzB2V3-AR7QO4bYDo6UWWs5gZ5aTqujBGUHjfUU7s_tJjz9HW3

Scale = 1:10.2

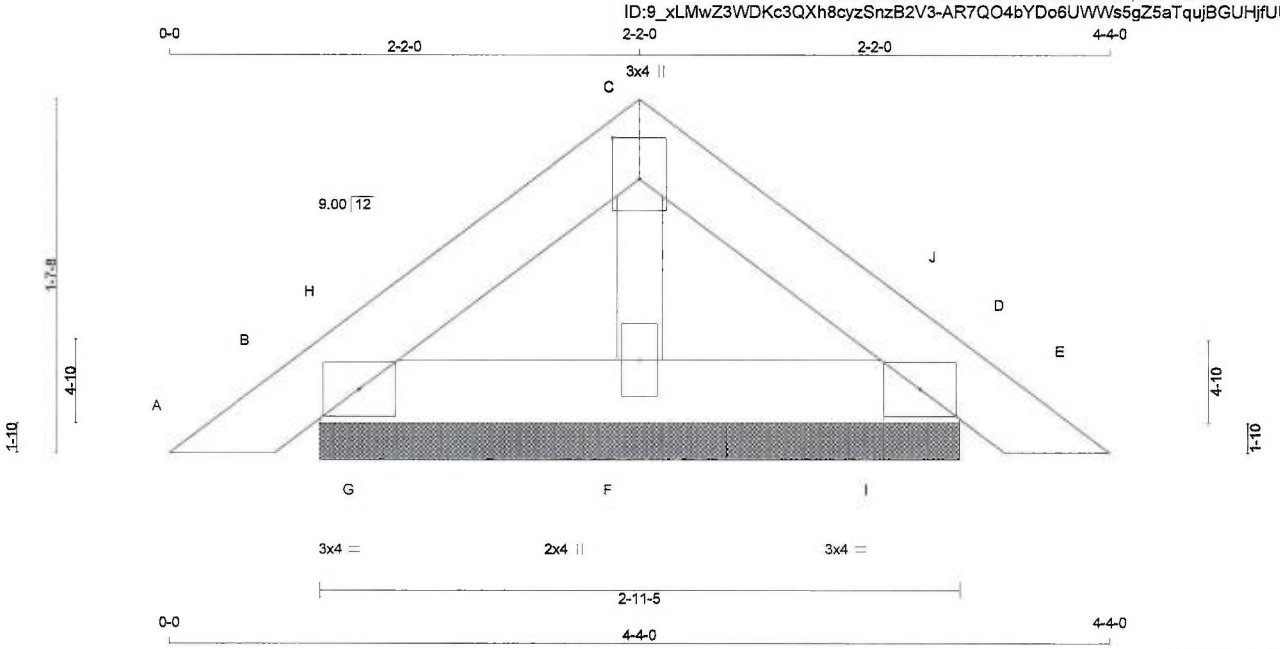

TOTAL WEIGHT = 5 X 10 = 51 lb [M]

LUMBER
N. L. G. A. RULES

CHORDS	SIZE		LUMBER	DESCR.
A - C	2x4	DRY	No.2	SPF
C - E	2x4	DRY	No.2	SPF
B - D	2x4	DRY	No.2	SPF
ALL WEBS	2x3	DRY	No.2	SPF

DRY: SEASONED LUMBER.

PLATES (table is in inches)

JT	TYPE	PLATES	W	LEN	Y	X
B	TMB1-I	MT20	3.0	4.0		
C	TTW+p	MT20	3.0	4.0	2.25	1.50
D	TMB1-I	MT20	3.0	4.0		
F	BMW1+w	MT20	2.0	4.0		

DIMENSIONS, SUPPORTS AND LOADINGS SPECIFIED BY FABRICATOR TO BE VERIFIED BY BUILDING DESIGNER

BEARINGS

JT	FACTORED GROSS REACTION VERT	HORZ	MAXIMUM FACTORED GROSS REACTION DOWN	HORZ	UPLIFT	INPUT BRG IN-SX	REQRD BRG IN-SX
B	127	0	127	0	0	2-11-5	2-11-5
D	127	0	127	0	0	2-11-5	2-11-5
F	121	0	121	0	0	2-11-5	2-11-5

UNFACTORED REACTIONS

JT	1ST LCASE COMBINED	MAX./MIN. COMPONENT REACTIONS SNOW	LIVE	PERM.LIVE	WIND	DEAD	SOIL
B	88	70 / 0	0 / 0	0 / 0	0 / 0	18 / 0	0 / 0
D	88	70 / 0	0 / 0	0 / 0	0 / 0	18 / 0	0 / 0
F	86	55 / 0	0 / 0	0 / 0	0 / 0	31 / 0	0 / 0

BEARING MATERIAL TO BE SPF NO.2 OR BETTER AT JOINT(S) B, D, F

BRACING
TOP CHORD TO BE SHEATHED OR MAX. PURLIN SPACING = 6.25 FT.
MAX. UNBRACED BOTTOM CHORD LENGTH = 10.00 FT OR RIGID CEILING DIRECTLY APPLIED.

ALL PITCH BREAKS AND PERIMETER CORNER JOINTS MUST BE LATERALLY RESTRAINED.

LOADING
TOTAL LOAD CASES: (4)

CHORDS

MEMB. FR-TO	MAX. FACTORED FORCE (LBS)	FACTORED VERT. LOAD (PLF) FROM	TO	LC1 MAX CSI (LC)	MAX. UNBRAC LENGTH
A- B	0 / 13	-77.4	-77.4	0.02 (1)	10.00
B- H	-27 / 0	-77.4	-77.4	0.00 (1)	6.25
H- C	-31 / 0	-77.4	-77.4	0.02 (1)	6.25
C- J	-31 / 0	-77.4	-77.4	0.02 (1)	6.25
J- D	-27 / 0	-77.4	-77.4	0.00 (1)	6.25
D- E	0 / 13	-77.4	-77.4	0.02 (1)	10.00
B- G	0 / 24	-18.2	-18.2	0.02 (1)	10.00
G- F	0 / 24	-18.2	-18.2	0.02 (1)	10.00
F- I	0 / 24	-18.2	-18.2	0.02 (1)	10.00
I- D	0 / 24	-18.2	-18.2	0.02 (1)	10.00

WEBS

MEMB. FR-TO	MAX. FACTORED FORCE (LBS)	MAX CSI (LC)
F- C	-54 / 0	0.01 (1)
G- H	-62 / 0	0.00 (1)
I- J	-62 / 0	0.00 (1)

DESIGN CRITERIA

SPECIFIED LOADS:

TOP CH.	LL	=	23.3	PSF
	DL	=	3.0	PSF
BOT CH.	LL	=	0.0	PSF
	DL	=	7.3	PSF
TOTAL LOAD		=	33.6	PSF

SPACING = 24.0 IN. C/C

THIS TRUSS IS DESIGNED FOR RESIDENTIAL OR SMALL BUILDING REQUIREMENTS OF PART 9, NBCC 2010

THIS DESIGN COMPLIES WITH:
- PART 9 OF OBC 2012 , BCBC 2012 , ABC 2014
- CSA 086-09
- TPIC 2011

(55 % OF 27.2 P.S.F. G.S.L. PLUS 8.4 P.S.F. RAIN LOAD) EQUALS 23.3 P.S.F. SPECIFIED ROOF LIVE LOAD

CSI: TC=0.02/1.00 (D-E:1) , BC=0.02/1.00 (B-G:1) , WB=0.01/1.00 (C-F:1) , SSI=0.04/1.00 (D-I:1)

DOL LUMBER=1.00 NAIL=1.00 LS BEND=1.10 COMP=1.10 SHEAR=1.10 TENS= 1.10

COMPANION LIVE LOAD FACTOR = 0.50

TRUSS PLATE MANUFACTURER IS NOT RESPONSIBLE FOR QUALITY CONTROL IN THE TRUSS MANUFACTURING PLANT .

NAIL VALUES

PLATE	GRIP(DRY) (PSI) MAX	MIN	SHEAR (PLI) MAX	MIN	SECTION (PLI) MAX	MIN
MT20	618	354	1667	822	2284	1656

PLATE PLACEMENT TOL. = 0.250 inches

PLATE ROTATION TOL. = 5.0 Deg.

JSI GRIP= 0.10 (D) (INPUT = 0.90)
JSI METAL= 0.02 (B) (INPUT = 1.00)

READ ALL NOTES ON THIS PAGE AND ON ENGINEERING NOTE PAGE ENP-1. THIS NOTE PAGE IS AN INTEGRAL PART OF THIS DRAWING AS IT CONTAINS SPECIFICATIONS AND CRITERIA USED IN THE DESIGN OF THIS COMPONENT.

LICENSED PROFESSIONAL ENGINEER
N.A. EL-MASRI
PROVINCE OF ONTARIO
Jun 05, 2018

KOTT

JOB NAME	TRUSS NAME	QUANTITY	PLY	JOB DESC.	DRWG NO.
NE0618-035	P03	2	1	GREEN YORK HOMES - GRANELLI HOME CORP - INDIGO 1 ELEV 2 (TRUSS DESC.)	PAGE 28 OF 47

Version 8.210 S Mar 12 2018 MiTek Industries, Inc. Tue Jun 5 17:07:06 2018 Page 1
ID:9_xLMwZ3WDKc3QXh8cyzSnzB2V3-AR7QO4bYDo6UWWs5gZ5aTqujBGULjfSU7s_tJjz9HW3

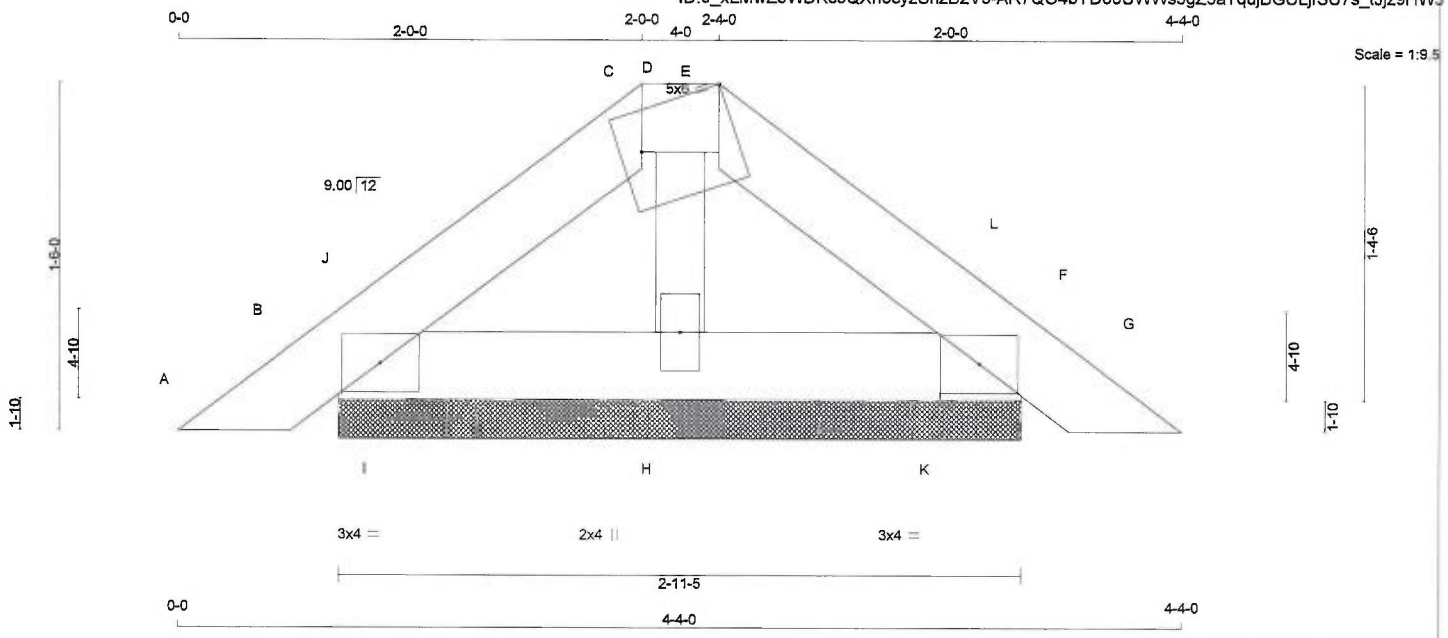

TOTAL WEIGHT = 2 X 10 = 20 lb [M]

LUMBER
N. L. G. A. RULES

CHORDS	SIZE		LUMBER	DESCR.
A - C	2x4	DRY	No.2	SPF
C - E	2x4	DRY	No.2	SPF
E - G	2x4	DRY	No.2	SPF
B - F	2x4	DRY	No.2	SPF
ALL WEBS	2x3	DRY	No.2	SPF

DRY: SEASONED LUMBER.

PLATES (table is in inches)

JT	TYPE	PLATES	W	LEN	Y	X
B	TMB1-I	MT20	3.0	4.0		
C, D, E						
C						
C	TTTW*-m	MT20	5.0	6.0	Edge	5.00
F	TMB1-I	MT20	3.0	4.0		
H	BMW1+w	MT20	2.0	4.0		

Edge - INDICATES REFERENCE CORNER OF PLATE TOUCHES EDGE OF CHORD.

DIMENSIONS, SUPPORTS AND LOADINGS SPECIFIED BY FABRICATOR TO BE VERIFIED BY BUILDING DESIGNER

BEARINGS

JT	FACTORED GROSS REACTION VERT	HORZ	MAXIMUM FACTORED GROSS REACTION DOWN	HORZ	UPLIFT	INPUT BRG IN-SX	REQRD BRG IN-SX
B	125	0	125	0	0	2-11-5	2-11-5
F	125	0	125	0	0	2-11-5	2-11-5
H	126	0	126	0	0	2-11-5	2-11-5

UNFACTORED REACTIONS

JT	1ST LCASE COMBINED	MAX./MIN. COMPONENT REACTIONS SNOW	LIVE	PERM.LIVE	WIND	DEAD	SOIL
B	86	68 / 0	0 / 0	0 / 0	0 / 0	18 / 0	0 / 0
F	86	68 / 0	0 / 0	0 / 0	0 / 0	18 / 0	0 / 0
H	89	57 / 0	0 / 0	0 / 0	0 / 0	32 / 0	0 / 0

BEARING MATERIAL TO BE SPF NO.2 OR BETTER AT JOINT(S) B, F, H

BRACING
TOP CHORD TO BE SHEATHED OR MAX. PURLIN SPACING = 6.25 FT.
MAX. UNBRACED BOTTOM CHORD LENGTH = 10.00 FT OR RIGID CEILING DIRECTLY APPLIED.

ALL PITCH BREAKS AND PERIMETER CORNER JOINTS MUST BE LATERALLY RESTRAINED.

LOADING
TOTAL LOAD CASES: (4)

CHORDS

MEMB. FR-TO	MAX. FACTORED FORCE (LBS)	FACTORED VERT. LOAD (PLF) FROM	TO	LC1 MAX CSI (LC)	MAX. UNBRAC LENGTH
A- B	0 / 13	-77.4	-77.4	0.02 (1)	10.00
B- J	-34 / 0	-77.4	-77.4	0.00 (4)	6.25
J- C	-32 / 0	-77.4	-77.4	0.01 (1)	6.25
C- D	-22 / 0	-77.4	-77.4	0.01 (1)	6.25
D- E	-22 / 0	-77.4	-77.4	0.01 (1)	6.25
E- L	-32 / 0	-77.4	-77.4	0.01 (1)	6.25
L- F	-34 / 0	-77.4	-77.4	0.00 (4)	6.25
F- G	0 / 13	-77.4	-77.4	0.02 (1)	10.00
B- I	0 / 25	-18.2	-18.2	0.02 (1)	10.00
I- H	0 / 25	-18.2	-18.2	0.02 (1)	10.00
H- K	0 / 25	-18.2	-18.2	0.02 (1)	10.00
K- F	0 / 25	-18.2	-18.2	0.02 (1)	10.00

WEBS

MEMB. FR-TO	MAX. FACTORED FORCE (LBS)	MAX CSI (LC)
H- D	-67 / 0	0.01 (1)
I- J	-47 / 2	0.00 (1)
K- L	-47 / 2	0.00 (1)

DESIGN CRITERIA

SPECIFIED LOADS:

TOP CH.	LL	=	23.3	PSF
	DL	=	3.0	PSF
BOT CH.	LL	=	0.0	PSF
	DL	=	7.3	PSF
TOTAL LOAD		=	33.6	PSF

SPACING = 24.0 IN. C/C

LOADING IN FLAT SECTION BASED ON A SLOPE OF 2.00/12 MINIMUM

THIS TRUSS IS DESIGNED FOR RESIDENTIAL OR SMALL BUILDING REQUIREMENTS OF PART 9, NBCC 2010

THIS DESIGN COMPLIES WITH:
- PART 9 OF OBC 2012 , BCBC 2012 , ABC 2014
- CSA 086-09
- TPIC 2011

(55 % OF 27.2 P.S.F. G.S.L. PLUS 8.4 P.S.F. RAIN LOAD) EQUALS 23.3 P.S.F. SPECIFIED ROOF LIVE LOAD

CSI: TC=0.02/1.00 (F-G:1) , BC=0.02/1.00 (H-K:1) , WB=0.01/1.00 (D-H:1) , SSI=0.03/1.00 (F-K:1)

DOL LUMBER=1.00 NAIL=1.00 LS BEND=1.10 COMP=1.10 SHEAR=1.10 TENS= 1.10

COMPANION LIVE LOAD FACTOR = 0.50

TRUSS PLATE MANUFACTURER IS NOT RESPONSIBLE FOR QUALITY CONTROL IN THE TRUSS MANUFACTURING PLANT .

NAIL VALUES

PLATE	GRIP(DRY) (PSI) MAX	MIN	SHEAR (PLI) MAX	MIN	SECTION (PLI) MAX	MIN
MT20	618	354	1667	822	2284	1656

PLATE PLACEMENT TOL. = 0.250 inches

PLATE ROTATION TOL. = 5.0 Deg.

JSI GRIP= 0.09 (F) (INPUT = 0.90)
JSI METAL= 0.02 (F) (INPUT = 1.00)

READ ALL NOTES ON THIS PAGE AND ON ENGINEERING NOTE PAGE ENP-1. THIS NOTE PAGE IS AN INTEGRAL PART OF THIS DRAWING AS IT CONTAINS SPECIFICATIONS AND CRITERIA USED IN THE DESIGN OF THIS COMPONENT.

LICENSED PROFESSIONAL ENGINEER
N.A. EL-MASRI
PROVINCE OF ONTARIO
Jun 05, 2018

KOTT

JOB NAME	TRUSS NAME	QUANTITY	PLY	JOB DESC.	GREEN YORK HOMES - GRANELLI HOME CORP - INDIGO 1 ELEV 2	DRWG NO.
NE0618-035	T01	1	1	TRUSS DESC.		PAGE 29 OF 47

Version 8.210 S Mar 12 2018 MiTek Industries, Inc. Tue Jun 5 17:07:07 2018 Page 1
ID:9_xLMwZ3WDKc3QXh8cyzSnzB2V3-fdhocQcA_5FK8gRIEHcp02RqMgiNSwbeLWkQrAz9HW2

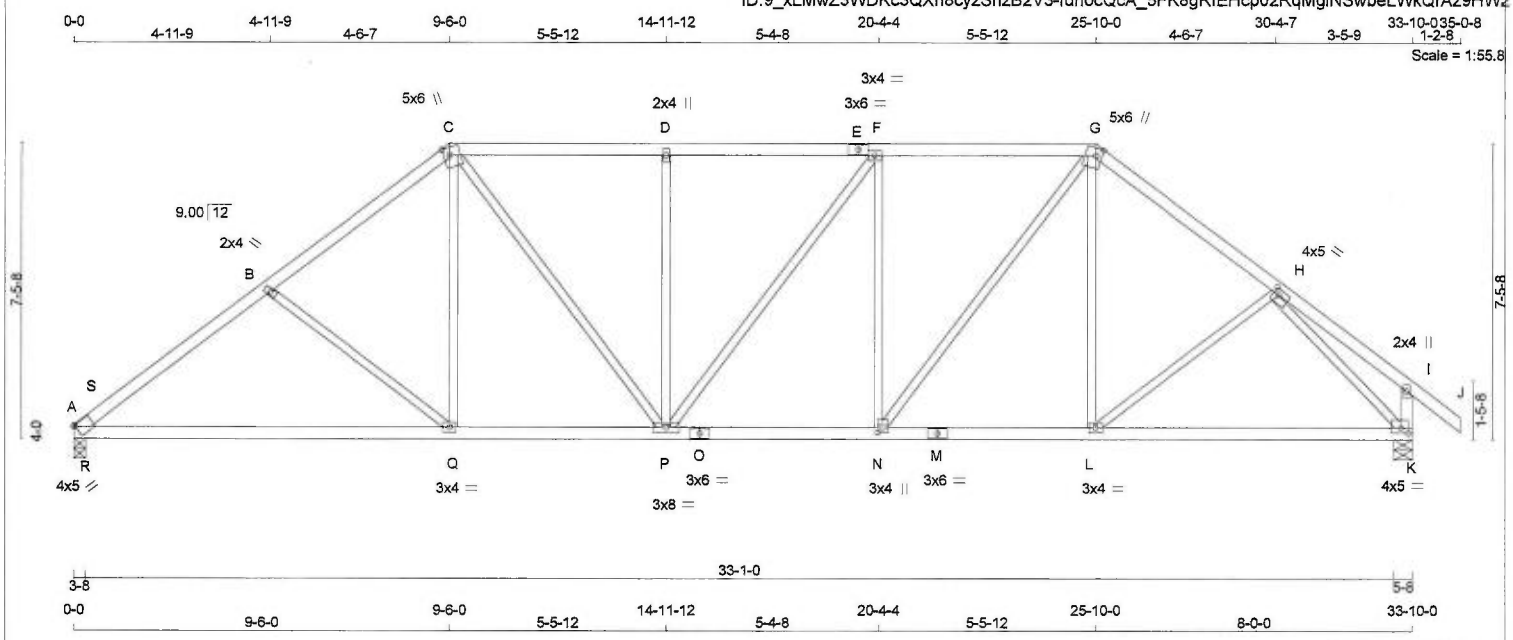

TOTAL WEIGHT = 142 lb
[M][F]

LUMBER
N. L. G. A. RULES

CHORDS	SIZE		LUMBER	DESCR.
A - C	2x4	DRY	No.2	SPF
C - E	2x4	DRY	No.2	SPF
E - G	2x4	DRY	No.2	SPF
G - J	2x4	DRY	No.2	SPF
K - I	2x4	DRY	No.2	SPF
A - O	2x4	DRY	No.2	SPF
O - M	2x4	DRY	No.2	SPF
M - K	2x4	DRY	No.2	SPF
ALL WEBS EXCEPT	2x3	DRY	No.2	SPF

DRY: SEASONED LUMBER.

PLATES (table is in inches)

JT	TYPE	PLATES	W	LEN	Y	X
A	TBM1-h	MT20	4.0	5.0	0.25	0.25
B	TMW+w	MT20	2.0	4.0		
C	TTWW+m	MT20	5.0	6.0	2.25	1.75
D	TMW+w	MT20	2.0	4.0		
E	TS-t	MT20	3.0	6.0		
F	TMWW-t	MT20	3.0	4.0		
G	TTWW+m	MT20	5.0	6.0	2.25	1.75
H	TMWW-t	MT20	4.0	5.0	1.75	1.75
I	TMV+p	MT20	2.0	4.0		
K	BMVW1-t	MT20	4.0	5.0	1.50	2.25
L	BMWW-t	MT20	3.0	4.0		
M	BS-t	MT20	3.0	6.0		
N	BMWW+t	MT20	3.0	4.0	1.50	1.50
O	BS-t	MT20	3.0	6.0		
P	BMWWW-t	MT20	3.0	8.0		
Q	BMWW-t	MT20	3.0	4.0		

READ ALL NOTES ON THIS PAGE AND ON ENGINEERING NOTE PAGE ENP-1. THIS NOTE PAGE IS AN INTEGRAL PART OF THIS DRAWING AS IT CONTAINS SPECIFICATIONS AND CRITERIA USED IN THE DESIGN OF THIS COMPONENT.

LICENSED PROFESSIONAL ENGINEER
N.A. EL-MASRI
PROVINCE OF ONTARIO
Jun 05, 2018

DIMENSIONS, SUPPORTS AND LOADINGS SPECIFIED BY FABRICATOR TO BE VERIFIED BY BUILDING DESIGNER

BEARINGS

JT	FACTORED GROSS REACTION VERT	HORZ	MAXIMUM FACTORED GROSS REACTION DOWN	HORZ	UPLIFT	INPUT BRG IN-SX	REQRD BRG IN-SX
A	1617	0	1617	0	0	3-8	3-8
K	1718	0	1718	0	0	5-8	5-8

UNFACTORED REACTIONS

JT	1ST LCASE COMBINED	MAX./MIN. COMPONENT REACTIONS SNOW	LIVE	PERM.LIVE	WIND	DEAD	SOIL
A	1136	788 / 0	0 / 0	0 / 0	0 / 0	348 / 0	0 / 0
K	1204	848 / 0	0 / 0	0 / 0	0 / 0	356 / 0	0 / 0

BEARING MATERIAL TO BE SPF NO.2 OR BETTER AT JOINT(S) A, K

BRACING
TOP CHORD TO BE SHEATHED OR MAX. PURLIN SPACING = 4.26 FT.
MAX. UNBRACED BOTTOM CHORD LENGTH = 10.00 FT OR RIGID CEILING DIRECTLY APPLIED.

ALL PITCH BREAKS AND PERIMETER CORNER JOINTS MUST BE LATERALLY RESTRAINED.

LOADING
TOTAL LOAD CASES: (4)

CHORDS

MEMB. FR-TO	MAX. FACTORED FORCE (LBS)	FACTORED VERT. LOAD (PLF) FROM	TO	LC1 MAX CSI (LC)	MAX. UNBRAC LENGTH
A- S	-2481 / 0	-77.4	-77.4	0.19 (4)	4.28
S- B	-2295 / 0	-77.4	-77.4	0.31 (1)	4.26
B- C	-1980 / 0	-77.4	-77.4	0.28 (1)	4.55
C- D	-1916 / 0	-77.4	-77.4	0.31 (1)	4.57
D- E	-1916 / 0	-77.4	-77.4	0.29 (1)	4.60
E- F	-1916 / 0	-77.4	-77.4	0.29 (1)	4.60
F- G	-1865 / 0	-77.4	-77.4	0.31 (1)	4.62
G- H	-1767 / 0	-77.4	-77.4	0.24 (1)	4.81
H- I	0 / 26	-77.4	-77.4	0.20 (1)	10.00
I- J	0 / 30	-77.4	-77.4	0.09 (1)	10.00
K- I	-186 / 0	0.0	0.0	0.02 (1)	7.81
A- R	0 / 1865	-18.2	-18.2	0.32 (1)	10.00
R- Q	0 / 1865	-18.2	-18.2	0.48 (1)	10.00
Q- P	0 / 1566	-18.2	-18.2	0.43 (1)	10.00
P- O	0 / 1865	-18.2	-18.2	0.36 (1)	10.00
O- N	0 / 1865	-18.2	-18.2	0.36 (1)	10.00
N- M	0 / 1398	-18.2	-18.2	0.37 (1)	10.00
M- L	0 / 1398	-18.2	-18.2	0.37 (1)	10.00
L- K	0 / 1352	-18.2	-18.2	0.36 (1)	10.00

WEBS

MEMB. FR-TO	MAX. FACTORED FORCE (LBS)	MAX CSI (LC)
B- Q	-387 / 0	0.24 (1)
Q- C	0 / 405	0.09 (1)
C- P	0 / 577	0.13 (1)
P- D	-452 / 0	0.45 (1)
P- F	0 / 86	0.02 (1)
N- F	-523 / 0	0.52 (1)
N- G	0 / 769	0.17 (1)
L- G	0 / 126	0.04 (4)
L- H	0 / 71	0.02 (4)
H- K	-1997 / 0	0.78 (1)
R- S	0 / 343	0.00 (1)

DESIGN CRITERIA

SPECIFIED LOADS:

TOP CH.	LL	=	23.3	PSF
	DL	=	3.0	PSF
BOT CH.	LL	=	0.0	PSF
	DL	=	7.3	PSF
TOTAL LOAD		=	33.6	PSF

SPACING = 24.0 IN. C/C

LOADING IN FLAT SECTION BASED ON A SLOPE OF 2.00/12 MINIMUM

THIS TRUSS IS DESIGNED FOR RESIDENTIAL OR SMALL BUILDING REQUIREMENTS OF PART 9, NBCC 2010

THIS DESIGN COMPLIES WITH:
- PART 9 OF OBC 2012 , BCBC 2012 , ABC 2014
- CSA 086-09
- TPIC 2011

(55 % OF 27.2 P.S.F. G.S.L. PLUS 8.4 P.S.F. RAIN LOAD) EQUALS 23.3 P.S.F. SPECIFIED ROOF LIVE LOAD

ALLOWABLE DEFL.(LL)= L/360 (1.13")
CALCULATED VERT. DEFL.(LL) = L/ 999 (0.10")
ALLOWABLE DEFL.(TL)= L/360 (1.13")
CALCULATED VERT. DEFL.(TL) = L/ 999 (0.27")

CSI: TC=0.31/1.00 (C-D:1) , BC=0.48/1.00 (Q-R:1) , WB=0.78/1.00 (H-K:1) , SSI=0.31/1.00 (A-S:4)

DOL LUMBER=1.00 NAIL=1.00 LS BEND=1.10 COMP=1.10 SHEAR=1.10 TENS= 1.10

COMPANION LIVE LOAD FACTOR = 0.50

TRUSS PLATE MANUFACTURER IS NOT RESPONSIBLE FOR QUALITY CONTROL IN THE TRUSS MANUFACTURING PLANT .

NAIL VALUES

PLATE	GRIP(DRY) (PSI) MAX	MIN	SHEAR (PLI) MAX	MIN	SECTION (PLI) MAX	MIN
MT20	618	354	1667	822	2284	1656

PLATE PLACEMENT TOL. = 0.250 inches

PLATE ROTATION TOL. = 5.0 Deg.

JSI GRIP= 0.88 (P) (INPUT = 0.90)
JSI METAL= 0.64 (A) (INPUT = 1.00)

KOTT

JOB NAME	TRUSS NAME	QUANTITY	PLY	JOB DESC.	GREEN YORK HOMES - GRANELLI HOME CORP - INDIGO 1 ELEV 2	DRWG NO.
NE0618-035	T02	1	1	TRUSS DESC.		PAGE 30 OF 47

Version 8.210 S Mar 12 2018 MiTek Industries, Inc. Tue Jun 5 17:07:07 2018 Page 1
ID:9_xLMwZ3WDKc3QXh8cyzSnzB2V3-fdhocQcA_5FK8gRIEHcp02RohgilS_CeLWkQrAz9HW2

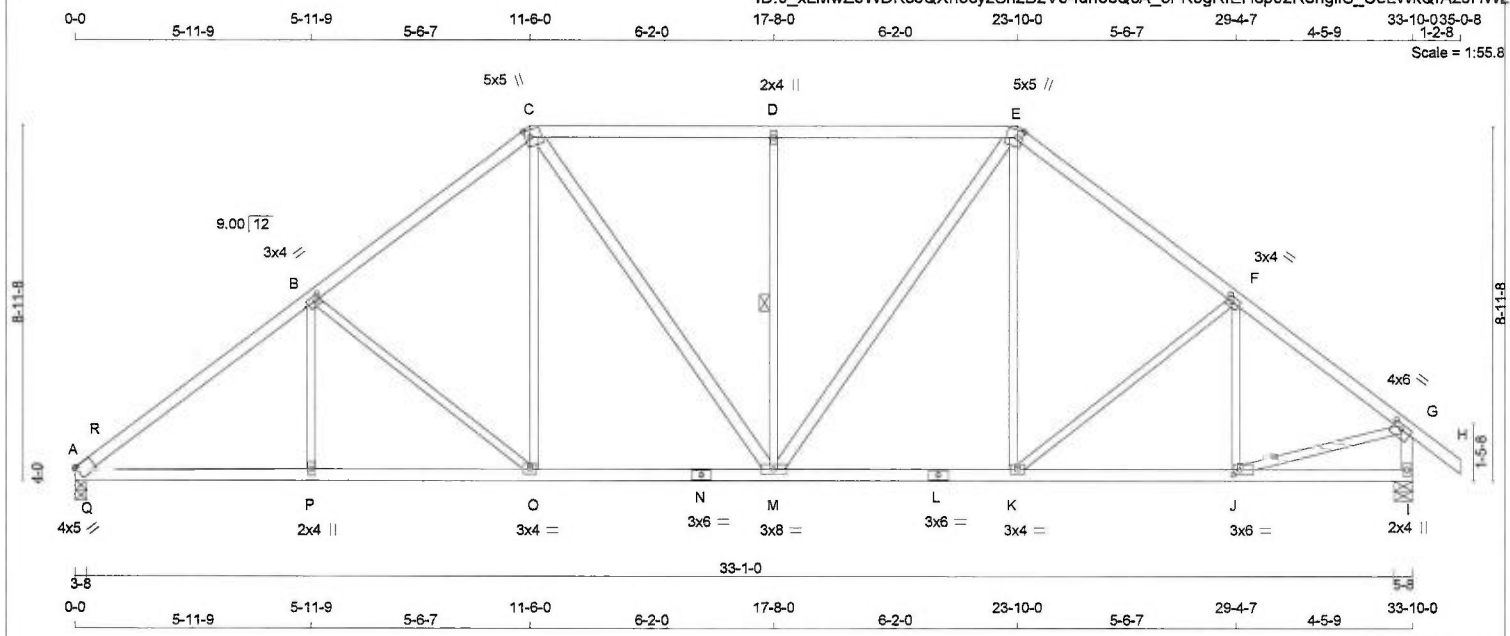

TOTAL WEIGHT = 152 lb
[M][F]

LUMBER
N. L. G. A. RULES

CHORDS	SIZE		LUMBER	DESCR.
A - C	2x4	DRY	No.2	SPF
C - E	2x4	DRY	No.2	SPF
E - H	2x4	DRY	No.2	SPF
I - G	2x4	DRY	No.2	SPF
A - N	2x4	DRY	No.2	SPF
N - L	2x4	DRY	No.2	SPF
L - I	2x4	DRY	No.2	SPF
ALL WEBS	2x3	DRY	No.2	SPF
EXCEPT				
C - M	2x4	DRY	No.2	SPF
M - E	2x4	DRY	No.2	SPF

DRY: SEASONED LUMBER.

PLATES (table is in inches)

JT	TYPE	PLATES	W	LEN	Y	X
A	TBM1-h	MT20	4.0	5.0	0.25	0.25
B	TMWW-t	MT20	3.0	4.0	1.50	1.50
C	TTWW+m	MT20	5.0	5.0	2.25	1.50
D	TMW+w	MT20	2.0	4.0		
E	TTWW+m	MT20	5.0	5.0	2.25	1.50
F	TMWW-t	MT20	3.0	4.0	1.50	1.50
G	TMVW-t	MT20	4.0	6.0	1.50	2.75
I	BMV1+p	MT20	2.0	4.0		
J	BMWW-t	MT20	3.0	6.0	1.50	2.00
K	BMWW-t	MT20	3.0	4.0		
L	BS-t	MT20	3.0	6.0		
M	BMWWW-t	MT20	3.0	8.0		
N	BS-t	MT20	3.0	6.0		
O	BMWW-t	MT20	3.0	4.0		
P	BMW+w	MT20	2.0	4.0		

READ ALL NOTES ON THIS PAGE AND ON ENGINEERING NOTE PAGE ENP-1. THIS NOTE PAGE IS AN INTEGRAL PART OF THIS DRAWING AS IT CONTAINS SPECIFICATIONS AND CRITERIA USED IN THE DESIGN OF THIS COMPONENT.

LICENSED PROFESSIONAL ENGINEER
N.A. EL-MASRI
PROVINCE OF ONTARIO
Jun 05, 2018

DIMENSIONS, SUPPORTS AND LOADINGS SPECIFIED BY FABRICATOR TO BE VERIFIED BY BUILDING DESIGNER

BEARINGS

JT	FACTORED GROSS REACTION VERT	HORZ	MAXIMUM FACTORED GROSS REACTION DOWN	HORZ	UPLIFT	INPUT BRG IN-SX	REQRD BRG IN-SX
A	1617	0	1617	0	0	3-8	3-8
I	1718	0	1718	0	0	5-8	5-8

UNFACTORED REACTIONS

JT	1ST LCASE COMBINED	MAX./MIN. COMPONENT REACTIONS SNOW	LIVE	PERM.LIVE	WIND	DEAD	SOIL
A	1136	788 / 0	0 / 0	0 / 0	0 / 0	348 / 0	0 / 0
I	1204	848 / 0	0 / 0	0 / 0	0 / 0	356 / 0	0 / 0

BEARING MATERIAL TO BE SPF NO.2 OR BETTER AT JOINT(S) A, I

BRACING
TOP CHORD TO BE SHEATHED OR MAX. PURLIN SPACING = 4.18 FT.
MAX. UNBRACED BOTTOM CHORD LENGTH = 10.00 FT OR RIGID CEILING DIRECTLY APPLIED.

ALL PITCH BREAKS AND PERIMETER CORNER JOINTS MUST BE LATERALLY RESTRAINED.

1 - 1x4 LATERAL BRACE(S) AT 1/ 2 LENGTH OF D-M. DBS = 20-0-0 . CBF = 73 LBS.

DBS = DIAGONAL BRACE SPACING (MAX). CBF = CUMULATIVE BRACING FORCE (PER BRACE). FASTEN LATERAL BRACE(S) USING (0.122"X3") SPIRAL NAILS : 1 NAIL FOR 2x3 BRACE(S), 2 FOR 1x4, 2x4, 2x5, 3 FOR 2x6, 4 FOR 2x8, 5 FOR 2x10, AND 6 FOR 2x12.

END VERTICAL(S) MUST BE SHEATHED OR HAVE BRACES AS INDICATED IN THE MAX. UNBRACED LENGTH COLUMN OF THE TABLE BELOW

LOADING
TOTAL LOAD CASES: (4)

CHORDS

MEMB. FR-TO	MAX. FACTORED FORCE (LBS)	FACTORED VERT. LOAD LC1 (PLF) FROM	TO	MAX CSI (LC)	MAX. UNBRAC LENGTH
A- R	-2245 / 0	-77.4	-77.4	0.10 (1)	4.50
R- B	-2290 / 0	-77.4	-77.4	0.41 (1)	4.18
B- C	-1808 / 0	-77.4	-77.4	0.37 (1)	4.63
C- D	-1623 / 0	-77.4	-77.4	0.42 (1)	4.73
D- E	-1623 / 0	-77.4	-77.4	0.42 (1)	4.73
E- F	-1680 / 0	-77.4	-77.4	0.34 (1)	4.80
F- G	-1792 / 0	-77.4	-77.4	0.30 (1)	4.71
G- H	0 / 30	-77.4	-77.4	0.09 (1)	10.00
I- G	-1684 / 0	0.0	0.0	0.17 (1)	6.40
A- Q	0 / 1852	-18.2	-18.2	0.44 (1)	10.00
Q- P	0 / 1852	-18.2	-18.2	0.46 (1)	10.00
P- O	0 / 1852	-18.2	-18.2	0.39 (1)	10.00
O- N	0 / 1425	-18.2	-18.2	0.30 (1)	10.00
N- M	0 / 1425	-18.2	-18.2	0.30 (1)	10.00
M- L	0 / 1324	-18.2	-18.2	0.29 (1)	10.00
L- K	0 / 1324	-18.2	-18.2	0.29 (1)	10.00
K- J	0 / 1459	-18.2	-18.2	0.31 (1)	10.00
J- I	0 / 0	-18.2	-18.2	0.10 (4)	10.00

WEBS

MEMB. FR-TO	MAX. FACTORED FORCE (LBS)	MAX CSI (LC)
P- B	0 / 139	0.04 (4)
B- O	-551 / 0	0.55 (1)
O- C	0 / 443	0.10 (1)
C- M	0 / 341	0.05 (1)
M- D	-583 / 0	0.30 (1)
M- E	0 / 515	0.08 (1)
K- E	0 / 220	0.05 (4)
K- F	-176 / 0	0.18 (1)
J- F	-274 / 0	0.09 (1)
J- G	0 / 1505	0.34 (1)
Q- R	-305 / 58	0.00 (1)

DESIGN CRITERIA

SPECIFIED LOADS:

TOP CH.	LL	=	23.3	PSF
	DL	=	3.0	PSF
BOT CH.	LL	=	0.0	PSF
	DL	=	7.3	PSF
TOTAL LOAD		=	33.6	PSF

SPACING = 24.0 IN. C/C

LOADING IN FLAT SECTION BASED ON A SLOPE OF 2.00/12 MINIMUM

THIS TRUSS IS DESIGNED FOR RESIDENTIAL OR SMALL BUILDING REQUIREMENTS OF PART 9, NBCC 2010

THIS DESIGN COMPLIES WITH:
- PART 9 OF OBC 2012 , BCBC 2012 , ABC 2014
- CSA 086-09
- TPIC 2011

(55 % OF 27.2 P.S.F. G.S.L. PLUS 8.4 P.S.F. RAIN LOAD) EQUALS 23.3 P.S.F. SPECIFIED ROOF LIVE LOAD

ALLOWABLE DEFL.(LL)= L/360 (1.13")
CALCULATED VERT. DEFL.(LL) = L/ 999 (0.08")
ALLOWABLE DEFL.(TL)= L/360 (1.13")
CALCULATED VERT. DEFL.(TL) = L/ 999 (0.16")

CSI: TC=0.42/1.00 (C-D:1) , BC=0.46/1.00 (P-Q:1) , WB=0.55/1.00 (B-O:1) , SSI=0.26/1.00 (A-Q:1)

DOL LUMBER=1.00 NAIL=1.00 LS BEND=1.10 COMP=1.10 SHEAR=1.10 TENS= 1.10

COMPANION LIVE LOAD FACTOR = 0.50

TRUSS PLATE MANUFACTURER IS NOT RESPONSIBLE FOR QUALITY CONTROL IN THE TRUSS MANUFACTURING PLANT .

NAIL VALUES

PLATE	GRIP(DRY) (PSI) MAX	MIN	SHEAR (PLI) MAX	MIN	SECTION (PLI) MAX	MIN
MT20	618	354	1667	822	2284	1656

PLATE PLACEMENT TOL. = 0.250 inches

PLATE ROTATION TOL. = 5.0 Deg.

JSI GRIP= 0.90 (E) (INPUT = 0.90)
JSI METAL= 0.64 (A) (INPUT = 1.00)

KOTT

JOB NAME	TRUSS NAME	QUANTITY	PLY	JOB DESC.		DRWG NO.
NE0618-035	T03	1	1	TRUSS DESC.	GREEN YORK HOMES - GRANELLI HOME CORP - INDIGO 1 ELEV 2	PAGE 31 OF 47

Version 8.210 S Mar 12 2018 MiTek Industries, Inc. Tue Jun 5 17:07:08 2018 Page 1

ID:9_xLMwZ3WDKc3QXh8cyzSnzB2V3-7qEBpmcolPNBmp0Uo_82YFzwm32FBUYnaAT_Ncz9HW1

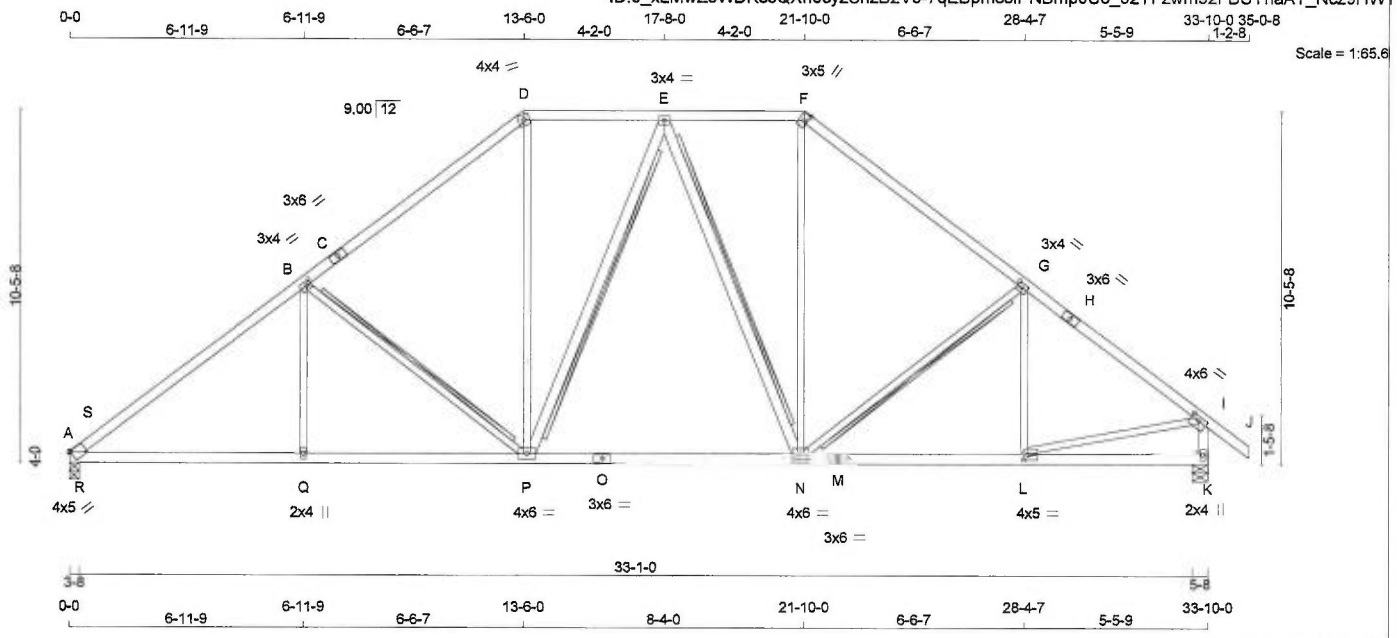

TOTAL WEIGHT = 154 lb

[M][F]

LUMBER

N. L. G. A. RULES

CHORDS	SIZE		LUMBER	DESCR.
A - C	2x4	DRY	No.2	SPF
C - D	2x4	DRY	No.2	SPF
D - F	2x4	DRY	No.2	SPF
F - H	2x4	DRY	No.2	SPF
H - J	2x4	DRY	No.2	SPF
K - I	2x4	DRY	No.2	SPF
A - O	2x4	DRY	No.2	SPF
O - M	2x4	DRY	No.2	SPF
M - K	2x4	DRY	No.2	SPF
ALL WEBS EXCEPT	2x3	DRY	No.2	SPF
P - E	2x4	DRY	No.2	SPF
E - N	2x4	DRY	No.2	SPF

DRY: SEASONED LUMBER.

PLATES (table is in inches)

JT	TYPE	PLATES	W	LEN	Y	X
A	TBM1-h	MT20	4.0	5.0	0.25	0.25
B	TMWW-t	MT20	3.0	4.0	1.50	1.50
C	TS-t	MT20	3.0	6.0		
D	TTW-m	MT20	4.0	4.0		
E	TMWW-t	MT20	3.0	4.0		
F	TTW+h	MT20	3.0	5.0	2.50	1.00
G	TMWW-t	MT20	3.0	4.0	1.50	1.50
H	TS-t	MT20	3.0	6.0		
I	TMVW-t	MT20	4.0	6.0	1.50	2.75
K	BMV1+p	MT20	2.0	4.0		
L	BMWW-t	MT20	4.0	5.0	2.00	1.50
M	BS-t	MT20	3.0	6.0		
N	BMWWW-t	MT20	4.0	6.0		
O	BS-t	MT20	3.0	6.0		
P	BMWWW-t	MT20	4.0	6.0		
Q	BMW+w	MT20	2.0	4.0		

READ ALL NOTES ON THIS PAGE AND ON ENGINEERING NOTE PAGE ENP-1. THIS NOTE PAGE IS AN INTEGRAL PART OF THIS DRAWING AS IT CONTAINS SPECIFICATIONS AND CRITERIA USED IN THE DESIGN OF THIS COMPONENT.

LICENSED PROFESSIONAL ENGINEER
N.A. EL-MASRI
PROVINCE OF ONTARIO
Jun 05, 2018

DIMENSIONS, SUPPORTS AND LOADINGS SPECIFIED BY FABRICATOR TO BE VERIFIED BY BUILDING DESIGNER

BEARINGS

JT	FACTORED GROSS REACTION VERT	HORZ	MAXIMUM GROSS REACTION DOWN	HORZ	UPLIFT	INPUT BRG IN-SX	REQRD BRG IN-SX
A	1617	0	1617	0	0	3-8	3-8
K	1718	0	1718	0	0	5-8	5-8

UNFACTORED REACTIONS

JT	1ST LCASE COMBINED	SNOW	LIVE	PERM.LIVE	WIND	DEAD	SOIL
		MAX./MIN. COMPONENT REACTIONS					
A	1136	788 / 0	0 / 0	0 / 0	0 / 0	348 / 0	0 / 0
K	1204	848 / 0	0 / 0	0 / 0	0 / 0	356 / 0	0 / 0

BEARING MATERIAL TO BE SPF NO.2 OR BETTER AT JOINT(S) A, K

BRACING

TOP CHORD TO BE SHEATHED OR MAX. PURLIN SPACING = 4.05 FT.
MAX. UNBRACED BOTTOM CHORD LENGTH = 10.00 FT OR RIGID CEILING DIRECTLY APPLIED.

ALL PITCH BREAKS AND PERIMETER CORNER JOINTS MUST BE LATERALLY RESTRAINED.

2x4 DRY SPF No.2 T-BRACE AT B-P, E-P, E-N, G-N

FASTEN T AND I-BRACES TO NARROW EDGE OF WEB WITH ONE ROW PER PLY OF 3" COMMON WIRE NAILS @ 6" O.C. WITH 3" MINIMUM END DISTANCE. BRACE MUST COVER 90% OF WEB LENGTH.

END VERTICAL(S) MUST BE SHEATHED OR HAVE BRACES AS INDICATED IN THE MAX. UNBRACED LENGTH COLUMN OF THE TABLE BELOW

LOADING

TOTAL LOAD CASES: (4)

CHORDS

MEMB. FR-TO	MAX. FACTORED FORCE (LBS)	FACTORED VERT. LOAD LC1 (PLF) FROM	TO	MAX CSI (LC)	MAX. UNBRAC LENGTH
A- S	-2144 / 0	-77.4	-77.4	0.12 (1)	4.56
S- B	-2228 / 0	-77.4	-77.4	0.59 (1)	4.05
B- C	-1658 / 0	-77.4	-77.4	0.52 (1)	4.60
C- D	-1658 / 0	-77.4	-77.4	0.52 (1)	4.60
D- E	-1302 / 0	-77.4	-77.4	0.18 (1)	5.48
E- F	-1247 / 0	-77.4	-77.4	0.18 (1)	5.57
F- G	-1584 / 0	-77.4	-77.4	0.48 (1)	4.74
G- H	-1827 / 0	-77.4	-77.4	0.43 (1)	4.52
H- I	-1827 / 0	-77.4	-77.4	0.43 (1)	4.52
I- J	0 / 30	-77.4	-77.4	0.09 (1)	10.00
K- I	-1676 / 0	0.0	0.0	0.17 (1)	6.41
A- R	0 / 1806	-18.2	-18.2	0.48 (1)	10.00
R- Q	0 / 1806	-18.2	-18.2	0.50 (1)	10.00
Q- P	0 / 1806	-18.2	-18.2	0.43 (1)	10.00
P- O	0 / 1351	-18.2	-18.2	0.34 (1)	10.00
O- N	0 / 1351	-18.2	-18.2	0.34 (1)	10.00
N- M	0 / 1492	-18.2	-18.2	0.37 (1)	10.00
M- L	0 / 1492	-18.2	-18.2	0.37 (1)	10.00
L- K	0 / 0	-18.2	-18.2	0.13 (4)	10.00

WEBS

MEMB. FR-TO	MAX. FACTORED FORCE (LBS)	MAX CSI (LC)
Q- B	0 / 162	0.05 (4)
B- P	-649 / 0	0.36 (1)
P- D	0 / 652	0.15 (1)
P- E	-132 / 2	0.11 (1)
E- N	-282 / 0	0.25 (1)
N- F	0 / 603	0.14 (1)
N- G	-320 / 0	0.18 (1)
L- G	-197 / 37	0.09 (1)
L- I	0 / 1523	0.34 (1)
R- S	-406 / 80	0.00 (1)

DESIGN CRITERIA

SPECIFIED LOADS:

TOP CH.	LL	=	23.3	PSF
	DL	=	3.0	PSF
BOT CH.	LL	=	0.0	PSF
	DL	=	7.3	PSF
TOTAL LOAD		=	33.6	PSF

SPACING = 24.0 IN. C/C

LOADING IN FLAT SECTION BASED ON A SLOPE OF 2.00/12 MINIMUM

THIS TRUSS IS DESIGNED FOR RESIDENTIAL OR SMALL BUILDING REQUIREMENTS OF PART 9, NBCC 2010

THIS DESIGN COMPLIES WITH:
- PART 9 OF OBC 2012 , BCBC 2012 , ABC 2014
- CSA 086-09
- TPIC 2011

(55 % OF 27.2 P.S.F. G.S.L. PLUS 8.4 P.S.F. RAIN LOAD) EQUALS 23.3 P.S.F. SPECIFIED ROOF LIVE LOAD

ALLOWABLE DEFL.(LL)= L/360 (1.13")
CALCULATED VERT. DEFL.(LL) = L/ 999 (0.10")
ALLOWABLE DEFL.(TL)= L/360 (1.13")
CALCULATED VERT. DEFL.(TL) = L/ 999 (0.20")

CSI: TC=0.59/1.00 (B-S:1) , BC=0.50/1.00 (Q-R:1) , WB=0.36/1.00 (B-P:1) , SSI=0.34/1.00 (A-R:1)

DOL LUMBER=1.00 NAIL=1.00 LS BEND=1.10 COMP=1.10 SHEAR=1.10 TENS= 1.10

COMPANION LIVE LOAD FACTOR = 0.50

TRUSS PLATE MANUFACTURER IS NOT RESPONSIBLE FOR QUALITY CONTROL IN THE TRUSS MANUFACTURING PLANT .

NAIL VALUES

PLATE	GRIP(DRY) (PSI) MAX	MIN	SHEAR (PLI) MAX	MIN	SECTION (PLI) MAX	MIN
MT20	618	354	1667	822	2284	1656

PLATE PLACEMENT TOL. = 0.250 inches

PLATE ROTATION TOL. = 5.0 Deg.

JSI GRIP= 0.90 (F) (INPUT = 0.90)
JSI METAL= 0.63 (A) (INPUT = 1.00)

KOTT

JOB NAME	TRUSS NAME	QUANTITY	PLY	JOB DESC.		DRWG NO.
NE0618-035	T04	1	1	TRUSS DESC.	GREEN YORK HOMES - GRANELLI HOME CORP - INDIGO 1 ELEV 2	PAGE 32 OF 47

Version 8.210 S Mar 12 2018 MiTek Industries, Inc. Tue Jun 5 17:07:09 2018 Page 1
ID:9_xLMwZ3WDKc3QXh8cyzSnzB2V3-b0oZ05dQWjV2NzbgLifH5TW1sTNfwtDxpqDXw2z9HW0

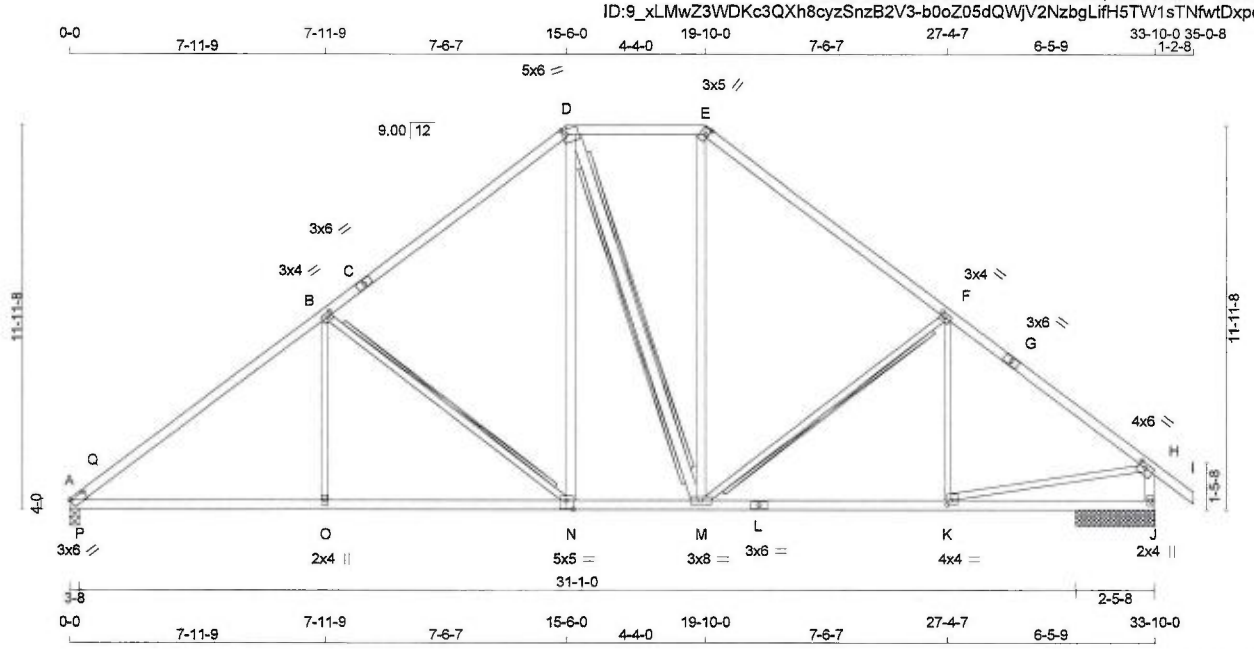

TOTAL WEIGHT = 158 lb
[M][F]

LUMBER
N. L. G. A. RULES

CHORDS	SIZE		LUMBER	DESCR.
A - C	2x4	DRY	No.2	SPF
C - D	2x4	DRY	No.2	SPF
D - E	2x4	DRY	No.2	SPF
E - G	2x4	DRY	No.2	SPF
G - I	2x4	DRY	No.2	SPF
J - H	2x4	DRY	No.2	SPF
A - N	2x4	DRY	No.2	SPF
N - L	2x4	DRY	No.2	SPF
L - J	2x4	DRY	No.2	SPF
ALL WEBS	2x3	DRY	No.2	SPF
EXCEPT				
N - D	2x4	DRY	No.2	SPF
D - M	2x4	DRY	No.2	SPF
M - E	2x4	DRY	No.2	SPF

DRY: SEASONED LUMBER.

PLATES (table is in inches)

JT	TYPE	PLATES	W	LEN	Y	X
A	TBM1-h	MT20	3.0	6.0	0.25	5.75
B	TMWW-t	MT20	3.0	4.0	1.50	1.50
C	TS-t	MT20	3.0	6.0		
D	TTWW-m	MT20	5.0	6.0	2.00	1.50
E	TTW+h	MT20	3.0	5.0	2.50	1.00
F	TMWW-t	MT20	3.0	4.0	1.50	1.50
G	TS-t	MT20	3.0	6.0		
H	TMVW-t	MT20	4.0	6.0	1.50	2.75
J	BMV1+p	MT20	2.0	4.0		
K	BMWW-t	MT20	4.0	4.0	1.50	1.50
L	BS-t	MT20	3.0	6.0		
M	BMWWW-t	MT20	3.0	8.0		
N	BSWW-l	MT20	5.0	5.0	3.25	2.50
O	BMW+w	MT20	2.0	4.0		

READ ALL NOTES ON THIS PAGE AND ON ENGINEERING NOTE PAGE ENP-1. THIS NOTE PAGE IS AN INTEGRAL PART OF THIS DRAWING AS IT CONTAINS SPECIFICATIONS AND CRITERIA USED IN THE DESIGN OF THIS COMPONENT.

LICENSED PROFESSIONAL ENGINEER
N.A. EL-MASRI
PROVINCE OF ONTARIO
Jun 05, 2018

DIMENSIONS, SUPPORTS AND LOADINGS SPECIFIED BY FABRICATOR TO BE VERIFIED BY BUILDING DESIGNER

BEARINGS

JT	FACTORED GROSS REACTION VERT	HORZ	MAXIMUM FACTORED GROSS REACTION DOWN	HORZ	UPLIFT	INPUT BRG IN-SX	REQRD BRG IN-SX
A	1617	0	1617	0	0	3-8	3-8
J	1718	0	1718	0	0	2-5-8	2-5-8

UNFACTORED REACTIONS

JT	1ST LCASE COMBINED	MAX./MIN. COMPONENT REACTIONS SNOW	LIVE	PERM.LIVE	WIND	DEAD	SOIL
A	1136	788 / 0	0 / 0	0 / 0	0 / 0	348 / 0	0 / 0
J	1204	848 / 0	0 / 0	0 / 0	0 / 0	356 / 0	0 / 0

BEARING MATERIAL TO BE SPF NO.2 OR BETTER AT JOINT(S) A, J

BRACING
TOP CHORD TO BE SHEATHED OR MAX. PURLIN SPACING = 3.82 FT.
MAX. UNBRACED BOTTOM CHORD LENGTH = 10.00 FT OR RIGID CEILING DIRECTLY APPLIED.

ALL PITCH BREAKS AND PERIMETER CORNER JOINTS MUST BE LATERALLY RESTRAINED.

2x4 DRY SPF No.2 T-BRACE AT B-N, F-M
2x4 DRY SPF No.2 I-BRACE AT D-M

FASTEN T AND I-BRACES TO NARROW EDGE OF WEB WITH ONE ROW PER PLY OF 3" COMMON WIRE NAILS @ 6" O.C. WITH 3" MINIMUM END DISTANCE. BRACE MUST COVER 90% OF WEB LENGTH.

END VERTICAL(S) MUST BE SHEATHED OR HAVE BRACES AS INDICATED IN THE MAX. UNBRACED LENGTH COLUMN OF THE TABLE BELOW

LOADING
TOTAL LOAD CASES: (4)

CHORDS

MEMB. FR-TO	MAX. FACTORED FORCE (LBS)	FACTORED VERT. LOAD LC1 (PLF) FROM	TO	MAX CSI (LC)	MAX. UNBRAC LENGTH
A- Q	-2028 / 0	-77.4	-77.4	0.15 (1)	4.63
Q- B	-2169 / 0	-77.4	-77.4	0.83 (1)	3.82
B- C	-1496 / 0	-77.4	-77.4	0.70 (1)	4.50
C- D	-1496 / 0	-77.4	-77.4	0.70 (1)	4.50
D- E	-1147 / 0	-77.4	-77.4	0.20 (1)	5.72
E- F	-1465 / 0	-77.4	-77.4	0.66 (1)	4.61
F- G	-1841 / 0	-77.4	-77.4	0.60 (1)	4.28
G- H	-1841 / 0	-77.4	-77.4	0.60 (1)	4.28
H- I	0 / 30	-77.4	-77.4	0.09 (1)	10.00
J- H	-1672 / 0	0.0	0.0	0.17 (1)	6.42
A- P	0 / 1762	-18.2	-18.2	0.53 (1)	10.00
P- O	0 / 1762	-18.2	-18.2	0.56 (1)	10.00
O- N	0 / 1762	-18.2	-18.2	0.50 (1)	10.00
N- M	0 / 1169	-18.2	-18.2	0.28 (1)	10.00
M- L	0 / 1508	-18.2	-18.2	0.36 (1)	10.00
L- K	0 / 1508	-18.2	-18.2	0.36 (1)	10.00
K- J	0 / 0	-18.2	-18.2	0.23 (4)	10.00

WEBS

MEMB. FR-TO	MAX. FACTORED FORCE (LBS)	MAX CSI (LC)
O- B	0 / 202	0.06 (4)
B- N	-760 / 0	0.58 (1)
N- D	0 / 548	0.09 (1)
D- M	-67 / 0	0.06 (1)
M- E	0 / 462	0.07 (1)
M- F	-465 / 0	0.36 (1)
K- F	-119 / 87	0.08 (1)
K- H	0 / 1531	0.34 (1)
P- Q	-539 / 87	0.00 (1)

DESIGN CRITERIA

SPECIFIED LOADS:

TOP CH.	LL	=	23.3	PSF
	DL	=	3.0	PSF
BOT CH.	LL	=	0.0	PSF
	DL	=	7.3	PSF
TOTAL LOAD		=	33.6	PSF

SPACING = 24.0 IN. C/C

LOADING IN FLAT SECTION BASED ON A SLOPE OF 2.00/12 MINIMUM

THIS TRUSS IS DESIGNED FOR RESIDENTIAL OR SMALL BUILDING REQUIREMENTS OF PART 9, NBCC 2010

THIS DESIGN COMPLIES WITH:
- PART 9 OF OBC 2012 , BCBC 2012 , ABC 2014
- CSA 086-09
- TPIC 2011

(55 % OF 27.2 P.S.F. G.S.L. PLUS 8.4 P.S.F. RAIN LOAD) EQUALS 23.3 P.S.F. SPECIFIED ROOF LIVE LOAD

ALLOWABLE DEFL.(LL)= L/360 (1.13")
CALCULATED VERT. DEFL.(LL) = L/ 999 (0.13")
ALLOWABLE DEFL.(TL)= L/360 (1.13")
CALCULATED VERT. DEFL.(TL) = L/ 999 (0.27")

CSI: TC=0.83/1.00 (B-Q:1) , BC=0.56/1.00 (O-P:1) , WB=0.58/1.00 (B-N:1) , SSI=0.44/1.00 (A-P:1)

DOL LUMBER=1.00 NAIL=1.00 LS BEND=1.10 COMP=1.10 SHEAR=1.10 TENS= 1.10

COMPANION LIVE LOAD FACTOR = 0.50

TRUSS PLATE MANUFACTURER IS NOT RESPONSIBLE FOR QUALITY CONTROL IN THE TRUSS MANUFACTURING PLANT .

NAIL VALUES

PLATE	GRIP(DRY) (PSI) MAX	MIN	SHEAR (PLI) MAX	MIN	SECTION (PLI) MAX	MIN
MT20	618	354	1667	822	2284	1656

PLATE PLACEMENT TOL. = 0.250 inches

PLATE ROTATION TOL. = 5.0 Deg.

JSI GRIP= 0.89 (K) (INPUT = 0.90)
JSI METAL= 0.77 (A) (INPUT = 1.00)

KOTT

JOB NAME	TRUSS NAME	QUANTITY	PLY	JOB DESC.		DRWG NO.
NE0618-035	T05	4	1	TRUSS DESC.	GREEN YORK HOMES - GRANELLI HOME CORP - INDIGO 1 ELEV 2	PAGE 33 OF 47

Version 8.210 S Mar 12 2018 MiTek Industries, Inc. Tue Jun 5 17:07:10 2018 Page 1
ID:9_xLMwZ3WDKc3QXh8cyzSnzB2V3-3CMxERe3H0dv?7AtvPAWdg3FutmLfOd42Uy5SUz9HW?

Scale = 1:68.6

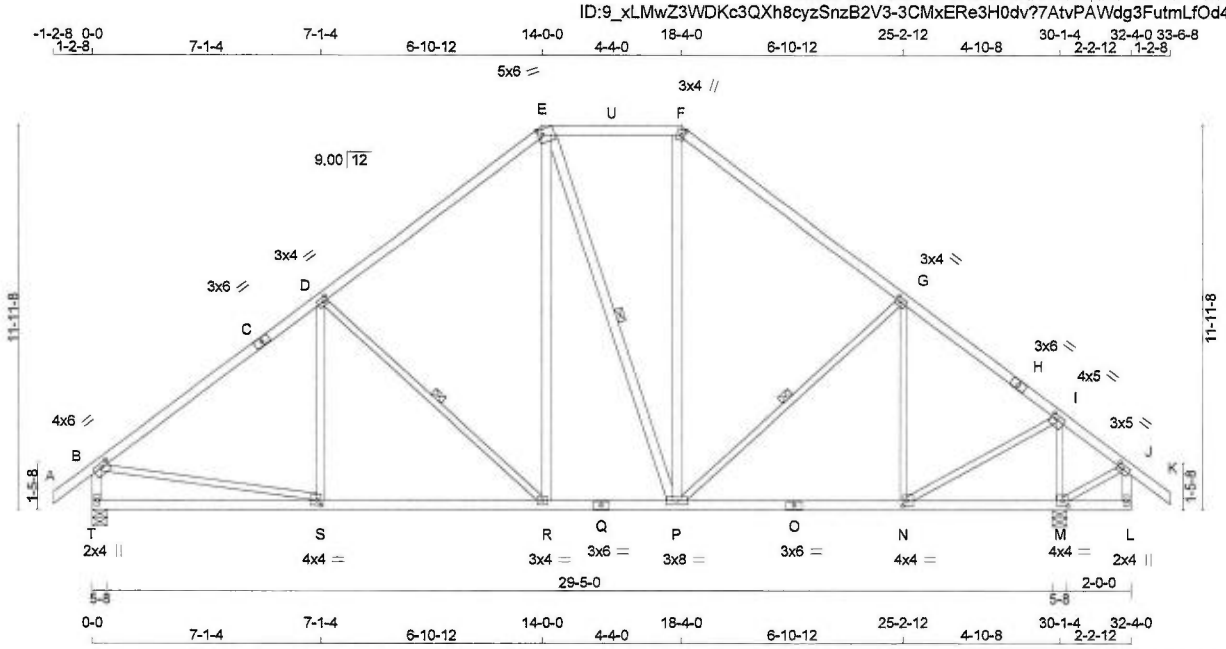

TOTAL WEIGHT = 4 X 166 = 665 lb
[M][F]

LUMBER
N. L. G. A. RULES

CHORDS	SIZE		LUMBER	DESCR.
A - C	2x4	DRY	No.2	SPF
C - E	2x4	DRY	No.2	SPF
E - F	2x4	DRY	No.2	SPF
F - H	2x4	DRY	No.2	SPF
H - K	2x4	DRY	No.2	SPF
T - B	2x4	DRY	No.2	SPF
L - J	2x4	DRY	No.2	SPF
T - Q	2x4	DRY	No.2	SPF
Q - O	2x4	DRY	No.2	SPF
O - L	2x4	DRY	No.2	SPF
ALL WEBS	2x3	DRY	No.2	SPF
EXCEPT				
R - E	2x4	DRY	No.2	SPF
E - P	2x4	DRY	No.2	SPF
P - F	2x4	DRY	No.2	SPF

DRY: SEASONED LUMBER.

PLATES (table is in inches)

JT	TYPE	PLATES	W	LEN	Y	X
B	TMVW-t	MT20	4.0	6.0	1.50	2.75
C	TS-t	MT20	3.0	6.0		
D	TMWW-t	MT20	3.0	4.0	1.50	1.50
E	TTWW-m	MT20	5.0	6.0	2.00	1.50
F	TTW+m	MT20	3.0	4.0	2.00	1.25
G	TMWW-t	MT20	3.0	4.0	1.50	1.50
H	TS-t	MT20	3.0	6.0		
I	TMWW-t	MT20	4.0	5.0	1.50	1.75
J	TMVW-t	MT20	3.0	5.0	1.50	1.75
L	BMV+p	MT20	2.0	4.0		
M	BMWW1-t	MT20	4.0	4.0	2.00	1.75
N	BMWW-t	MT20	4.0	4.0	2.00	1.50
O	BS-t	MT20	3.0	6.0		
P	BMWWW-t	MT20	3.0	8.0		
Q	BS-t	MT20	3.0	6.0		
R	BMWW-t	MT20	3.0	4.0		
S	BMWW-t	MT20	4.0	4.0	1.75	1.50
T	BMV1+p	MT20	2.0	4.0		

READ ALL NOTES ON THIS PAGE AND ON ENGINEERING NOTE PAGE ENP-1. THIS NOTE PAGE IS AN INTEGRAL PART OF THIS DRAWING AS IT CONTAINS SPECIFICATIONS AND CRITERIA USED IN THE DESIGN OF THIS COMPONENT.

LICENSED PROFESSIONAL ENGINEER
N.A. EL-MASRI
PROVINCE OF ONTARIO
Jun 05, 2018

DIMENSIONS, SUPPORTS AND LOADINGS SPECIFIED BY FABRICATOR TO BE VERIFIED BY BUILDING DESIGNER

BEARINGS

JT	FACTORED GROSS REACTION VERT	HORZ	MAXIMUM FACTORED GROSS REACTION DOWN	HORZ	UPLIFT	INPUT BRG IN-SX	REQRD BRG IN-SX
T	1539	0	1539	0	0	5-8	5-8
M	1785	0	1785	0	0	5-8	5-8

UNFACTORED REACTIONS

JT	1ST LCASE COMBINED	MAX./MIN. COMPONENT REACTIONS SNOW	LIVE	PERM.LIVE	WIND	DEAD	SOIL
T	1081	753 / 0	0 / 0	0 / 0	0 / 0	328 / 0	0 / 0
M	1254	874 / 0	0 / 0	0 / 0	0 / 0	380 / 0	0 / 0

BEARING MATERIAL TO BE SPF NO.2 OR BETTER AT JOINT(S) T, M

BRACING
FOR SECTION E-F, MAX. PURLIN SPACING = 2.00 FT.
FOR OTHER SECTIONS, TOP CHORD TO BE SHEATHED OR MAX. PURLIN SPACING = 4.54 FT.
MAX. UNBRACED BOTTOM CHORD LENGTH = 6.25 FT OR RIGID CEILING DIRECTLY APPLIED.

ALL PITCH BREAKS AND PERIMETER CORNER JOINTS MUST BE LATERALLY RESTRAINED.

1 - 1x4 LATERAL BRACE(S) AT 1/ 2 LENGTH OF D-R, E-P, G-P. DBS = 20-0-0 . CBF = 63 LBS.

DBS = DIAGONAL BRACE SPACING (MAX). CBF = CUMULATIVE BRACING FORCE (PER BRACE). FASTEN LATERAL BRACE(S) USING (0.122"X3") SPIRAL NAILS : 1 NAIL FOR 2x3 BRACE(S), 2 FOR 1x4, 2x4, 2x5, 3 FOR 2x6, 4 FOR 2x8, 5 FOR 2x10, AND 6 FOR 2x12.

END VERTICAL(S) MUST BE SHEATHED OR HAVE BRACES AS INDICATED IN THE MAX. UNBRACED LENGTH COLUMN OF THE TABLE BELOW

LOADING
TOTAL LOAD CASES: (4)

CHORDS

MEMB. FR-TO	MAX. FACTORED FORCE (LBS)	FACTORED VERT. LOAD (PLF) FROM	TO	LC1	MAX CSI (LC)	MAX. UNBRAC LENGTH
A- B	0 / 30	-77.4	-77.4	0.09 (1)	10.00	
B- C	-1580 / 0	-77.4	-77.4	0.62 (1)	4.54	
C- D	-1580 / 0	-77.4	-77.4	0.62 (1)	4.54	
D- E	-1196 / 0	-77.4	-77.4	0.56 (1)	5.12	
E- U	-886 / 0	-84.9	-84.9	0.28 (1)	2.00	
U- F	-886 / 0	-84.9	-84.9	0.28 (1)	2.00	
F- G	-1135 / 0	-77.4	-77.4	0.49 (1)	5.35	
G- H	-1122 / 0	-77.4	-77.4	0.38 (1)	5.51	
H- I	-1122 / 0	-77.4	-77.4	0.38 (1)	5.51	
I- J	0 / 175	-77.4	-77.4	0.11 (1)	10.00	
J- K	0 / 30	-77.4	-77.4	0.09 (1)	10.00	
T- B	-1487 / 0	0.0	0.0	0.15 (1)	6.72	
L- J	0 / 11	0.0	0.0	0.00 (4)	10.00	
T- S	0 / 0	-18.2	-18.2	0.23 (4)	10.00	
S- R	0 / 1295	-18.2	-18.2	0.33 (4)	10.00	
R- Q	0 / 929	-18.2	-18.2	0.23 (1)	10.00	
Q- P	0 / 929	-18.2	-18.2	0.23 (1)	10.00	
P- O	0 / 925	-18.2	-18.2	0.23 (1)	10.00	
O- N	0 / 925	-18.2	-18.2	0.23 (1)	10.00	
N- M	-126 / 0	-18.2	-18.2	0.12 (4)	6.25	
M- L	0 / 0	-18.2	-18.2	0.06 (1)	10.00	

WEBS

MEMB. FR-TO	MAX. FACTORED FORCE (LBS)	MAX CSI (LC)
S- D	-57 / 105	0.04 (1)
D- R	-505 / 0	0.32 (1)
R- E	0 / 430	0.07 (1)
E- P	-126 / 0	0.11 (1)
P- F	0 / 264	0.04 (1)
P- G	-58 / 0	0.04 (1)
N- G	-495 / 0	0.38 (1)
N- I	0 / 1213	0.27 (1)
M- I	-1638 / 0	0.30 (1)
B- S	0 / 1312	0.30 (1)
M- J	-141 / 0	0.02 (1)

DESIGN CRITERIA

SPECIFIED LOADS:

TOP CH.	LL	=	23.3	PSF
	DL	=	3.0	PSF
BOT CH.	LL	=	0.0	PSF
	DL	=	7.3	PSF
TOTAL LOAD		=	33.6	PSF

SPACING = 24.0 IN. C/C

LOADING IN FLAT SECTION BASED ON PIGGYBACK TRUSS WITH SLOPES OF 6.00/12 AND -6.00/12 AND RESPECTIVE WALL HEIGHTS OF 0-0 AND 0-0 AND AN ADDITIONAL DEAD LOAD OF 3.0 P.S.F.

THIS TRUSS IS DESIGNED FOR RESIDENTIAL OR SMALL BUILDING REQUIREMENTS OF PART 9, NBCC 2010

THIS DESIGN COMPLIES WITH:
- PART 9 OF OBC 2012 , BCBC 2012 , ABC 2014
- CSA 086-09
- TPIC 2011

(55 % OF 27.2 P.S.F. G.S.L. PLUS 8.4 P.S.F. RAIN LOAD) EQUALS 23.3 P.S.F. SPECIFIED ROOF LIVE LOAD

ALLOWABLE DEFL.(LL)= L/360 (1.00")
CALCULATED VERT. DEFL.(LL) = L/ 999 (0.05")
ALLOWABLE DEFL.(TL)= L/360 (1.00")
CALCULATED VERT. DEFL.(TL) = L/ 999 (0.12")

CANTILEVER DEFLECTION:
ALLOWABLE DEFL.(LL)= L/120 (0.22")
CALCULATED VERT. DEFL.(LL) = L/ 999 (0.00")
ALLOWABLE DEFL.(TL)= L/120 (0.22")
CALCULATED VERT. DEFL.(TL) = L/ 999 (0.00")

CSI: TC=0.62/1.00 (B-D:1) , BC=0.33/1.00 (R-S:4) , WB=0.38/1.00 (G-N:1) , SSI=0.21/1.00 (B-D:1)

DOL LUMBER=1.00 NAIL=1.00 LS BEND=1.10 COMP=1.10 SHEAR=1.10 TENS= 1.10

COMPANION LIVE LOAD FACTOR = 0.50

TRUSS PLATE MANUFACTURER IS NOT RESPONSIBLE FOR QUALITY CONTROL IN THE TRUSS MANUFACTURING PLANT .

NAIL VALUES

PLATE	GRIP(DRY) (PSI) MAX	MIN	SHEAR (PLI) MAX	MIN	SECTION (PLI) MAX	MIN
MT20	618	354	1667	822	2284	1656

CONTINUED ON PAGE 2

KOTT

PLATE PLACEMENT TOL. = 0.250 inches

PLATE ROTATION TOL. = 5.0 Deg.

JSI GRIP= 0.90 (N) (INPUT = 0.90)
JSI METAL= 0.49 (S) (INPUT = 1.00)

READ ALL NOTES ON THIS PAGE AND ON ENGINEERING NOTE PAGE ENP-1. THIS NOTE PAGE IS AN INTEGRAL PART OF THIS DRAWING AS IT CONTAINS SPECIFICATIONS AND CRITERIA USED IN THE DESIGN OF THIS COMPONENT.

KOTT

JOB NAME	TRUSS NAME	QUANTITY	PLY	JOB DESC.	GREEN YORK HOMES - GRANELLI HOME CORP - INDIGO 1 ELEV 2	DRWG NO.
NE0618-035	T06	1	1	TRUSS DESC.		PAGE 35 OF 47

Version 8.210 S Mar 12 2018 MiTek Industries, Inc. Tue Jun 5 17:07:10 2018 Page 1
ID:9_xLMwZ3WDKc3QXh8cyzSnzB2V3-3CMxERe3H0dv?7AtvPAWdg3DctmifEa42Uy5SUz9HW?

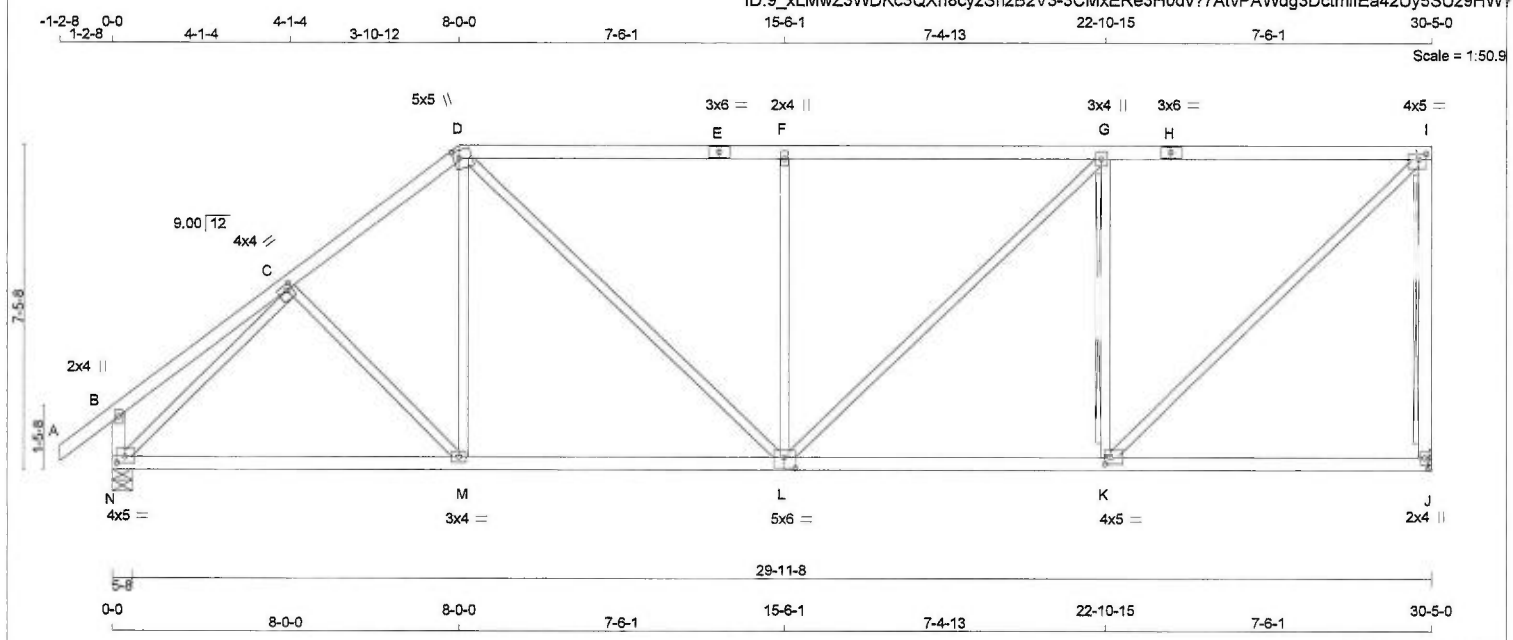

TOTAL WEIGHT = 133 lb
[M]

LUMBER
N. L. G. A. RULES

CHORDS	SIZE		LUMBER	DESCR.
A - D	2x4	DRY	No.2	SPF
D - E	2x4	DRY	No.2	SPF
E - H	2x4	DRY	No.2	SPF
H - I	2x4	DRY	No.2	SPF
J - I	2x4	DRY	No.2	SPF
N - B	2x4	DRY	No.2	SPF
N - L	2x4	DRY	No.2	SPF
L - J	2x4	DRY	No.2	SPF
ALL WEBS EXCEPT	2x3	DRY	No.2	SPF

DRY: SEASONED LUMBER.

PLATES (table is in inches)

JT	TYPE	PLATES	W	LEN	Y	X
B	TMV+p	MT20	2.0	4.0		
C	TMWW-t	MT20	4.0	4.0	1.50	1.50
D	TTWW+m	MT20	5.0	5.0	2.00	1.50
E	TS-t	MT20	3.0	6.0		
F	TMW+w	MT20	2.0	4.0		
G	TMWW+t	MT20	3.0	4.0		
H	TS-t	MT20	3.0	6.0		
I	TMVW-t	MT20	4.0	5.0	1.50	2.00
J	BMV1+p	MT20	2.0	4.0		
K	BMWW-t	MT20	4.0	5.0	1.75	1.50
L	BSWWW-l	MT20	5.0	6.0	3.00	3.00
M	BMWW-t	MT20	3.0	4.0		
N	BMVW1-t	MT20	4.0	5.0	1.75	2.25

READ ALL NOTES ON THIS PAGE AND ON ENGINEERING NOTE PAGE ENP-1. THIS NOTE PAGE IS AN INTEGRAL PART OF THIS DRAWING AS IT CONTAINS SPECIFICATIONS AND CRITERIA USED IN THE DESIGN OF THIS COMPONENT.

LICENSED PROFESSIONAL ENGINEER
N.A. EL-MASRI
PROVINCE OF ONTARIO
Jun 05, 2018

DIMENSIONS, SUPPORTS AND LOADINGS SPECIFIED BY FABRICATOR TO BE VERIFIED BY BUILDING DESIGNER

BEARINGS

JT	FACTORED GROSS REACTION VERT	HORZ	MAXIMUM FACTORED GROSS REACTION DOWN	HORZ	UPLIFT	INPUT BRG IN-SX	REQRD BRG IN-SX
J	1454	0	1454	0	0	MECHANICAL	
N	1554	0	1554	0	0	5-8	5-8

A SUITABLE MECHANICAL CONNECTION IS REQUIRED AT JOINT J TO RESIST THE MAX FACTORED REACTIONS.

UNFACTORED REACTIONS

JT	1ST LCASE COMBINED	MAX./MIN. COMPONENT REACTIONS SNOW	LIVE	PERM.LIVE	WIND	DEAD	SOIL
J	1022	708 / 0	0 / 0	0 / 0	0 / 0	313 / 0	0 / 0
N	1090	769 / 0	0 / 0	0 / 0	0 / 0	321 / 0	0 / 0

BEARING MATERIAL TO BE SPF NO.2 OR BETTER AT JOINT(S) N

BRACING

TOP CHORD TO BE SHEATHED OR MAX. PURLIN SPACING = 4.24 FT.
MAX. UNBRACED BOTTOM CHORD LENGTH = 10.00 FT OR RIGID CEILING DIRECTLY APPLIED.

ALL PITCH BREAKS AND PERIMETER CORNER JOINTS MUST BE LATERALLY RESTRAINED.

2x4 DRY SPF No.2 T-BRACE AT I-J, G-K

FASTEN T AND I-BRACES TO NARROW EDGE OF WEB WITH ONE ROW PER PLY OF 3" COMMON WIRE NAILS @ 6" O.C. WITH 3" MINIMUM END DISTANCE. BRACE MUST COVER 90% OF WEB LENGTH.

END VERTICAL(S) MUST BE SHEATHED OR HAVE BRACES AS INDICATED IN THE MAX. UNBRACED LENGTH COLUMN OF THE TABLE BELOW

LOADING

TOTAL LOAD CASES: (4)

CHORDS

MEMB. FR-TO	MAX. FACTORED FORCE (LBS)	FACTORED VERT. LOAD (PLF) FROM	TO	LC1 MAX CSI (LC)	MAX. UNBRAC LENGTH
A- B	0 / 30	-77.4	-77.4	0.09 (1)	10.00
B- C	0 / 20	-77.4	-77.4	0.19 (1)	10.00
C- D	-1541 / 0	-77.4	-77.4	0.23 (1)	5.07
D- E	-1609 / 0	-77.4	-77.4	0.76 (1)	4.26
E- F	-1609 / 0	-77.4	-77.4	0.76 (1)	4.26
F- G	-1609 / 0	-77.4	-77.4	0.76 (1)	4.24
G- H	-1221 / 0	-77.4	-77.4	0.70 (1)	4.79
H- I	-1221 / 0	-77.4	-77.4	0.70 (1)	4.79
J- I	-1399 / 0	0.0	0.0	0.43 (1)	7.81
N- B	-220 / 0	0.0	0.0	0.02 (1)	7.81
N- M	0 / 1233	-18.2	-18.2	0.37 (4)	10.00
M- L	0 / 1217	-18.2	-18.2	0.38 (4)	10.00
L- K	0 / 1221	-18.2	-18.2	0.34 (4)	10.00
K- J	0 / 0	-18.2	-18.2	0.25 (4)	10.00

WEBS

MEMB. FR-TO	MAX. FACTORED FORCE (LBS)	MAX CSI (LC)
C- M	-26 / 46	0.02 (4)
M- D	0 / 182	0.05 (4)
D- L	0 / 541	0.12 (1)
L- F	-628 / 0	0.63 (1)
L- G	0 / 540	0.12 (1)
K- G	-1010 / 0	0.39 (1)
K- I	0 / 1688	0.38 (1)
N- C	-1773 / 0	0.96 (1)

DESIGN CRITERIA

SPECIFIED LOADS:

TOP CH.	LL	=	23.3	PSF
	DL	=	3.0	PSF
BOT CH.	LL	=	0.0	PSF
	DL	=	7.3	PSF
TOTAL LOAD		=	33.6	PSF

SPACING = 24.0 IN. C/C

LOADING IN FLAT SECTION BASED ON A SLOPE OF 2.00/12 MINIMUM

THIS TRUSS IS DESIGNED FOR RESIDENTIAL OR SMALL BUILDING REQUIREMENTS OF PART 9, NBCC 2010

THIS DESIGN COMPLIES WITH:
- PART 9 OF OBC 2012 , BCBC 2012 , ABC 2014
- CSA 086-09
- TPIC 2011

(55 % OF 27.2 P.S.F. G.S.L. PLUS 8.4 P.S.F. RAIN LOAD) EQUALS 23.3 P.S.F. SPECIFIED ROOF LIVE LOAD

ALLOWABLE DEFL.(LL)= L/360 (1.01")
CALCULATED VERT. DEFL.(LL) = L/ 999 (0.08")
ALLOWABLE DEFL.(TL)= L/360 (1.01")
CALCULATED VERT. DEFL.(TL) = L/ 999 (0.16")

CSI: TC=0.76/1.00 (F-G:1) , BC=0.38/1.00 (L-M:4) , WB=0.96/1.00 (C-N:1) , SSI=0.27/1.00 (G-I:1)

DOL LUMBER=1.00 NAIL=1.00 LS BEND=1.10 COMP=1.10 SHEAR=1.10 TENS= 1.10

COMPANION LIVE LOAD FACTOR = 0.50

TRUSS PLATE MANUFACTURER IS NOT RESPONSIBLE FOR QUALITY CONTROL IN THE TRUSS MANUFACTURING PLANT .

NAIL VALUES

PLATE	GRIP(DRY) (PSI) MAX	MIN	SHEAR (PLI) MAX	MIN	SECTION (PLI) MAX	MIN
MT20	618	354	1667	822	2284	1656

PLATE PLACEMENT TOL. = 0.250 inches

PLATE ROTATION TOL. = 5.0 Deg.

JSI GRIP= 0.90 (C) (INPUT = 0.90)
JSI METAL= 0.65 (C) (INPUT = 1.00)

KOTT

JOB NAME	TRUSS NAME	QUANTITY	PLY	JOB DESC.		DRWG NO.
NE0618-035	T07	1	1	TRUSS DESC.	GREEN YORK HOMES - GRANELLI HOME CORP - INDIGO 1 ELEV 2	PAGE 36 OF 47

Version 8.210 S Mar 12 2018 MiTek Industries, Inc. Tue Jun 5 17:07:11 2018 Page 1
ID:9_xLMwZ3WDKc3QXh8cyzSnzB2V3-XPwJRnfh2KlmdHI3T7hIAubTxH7aOs5EG8ie_xz9HW

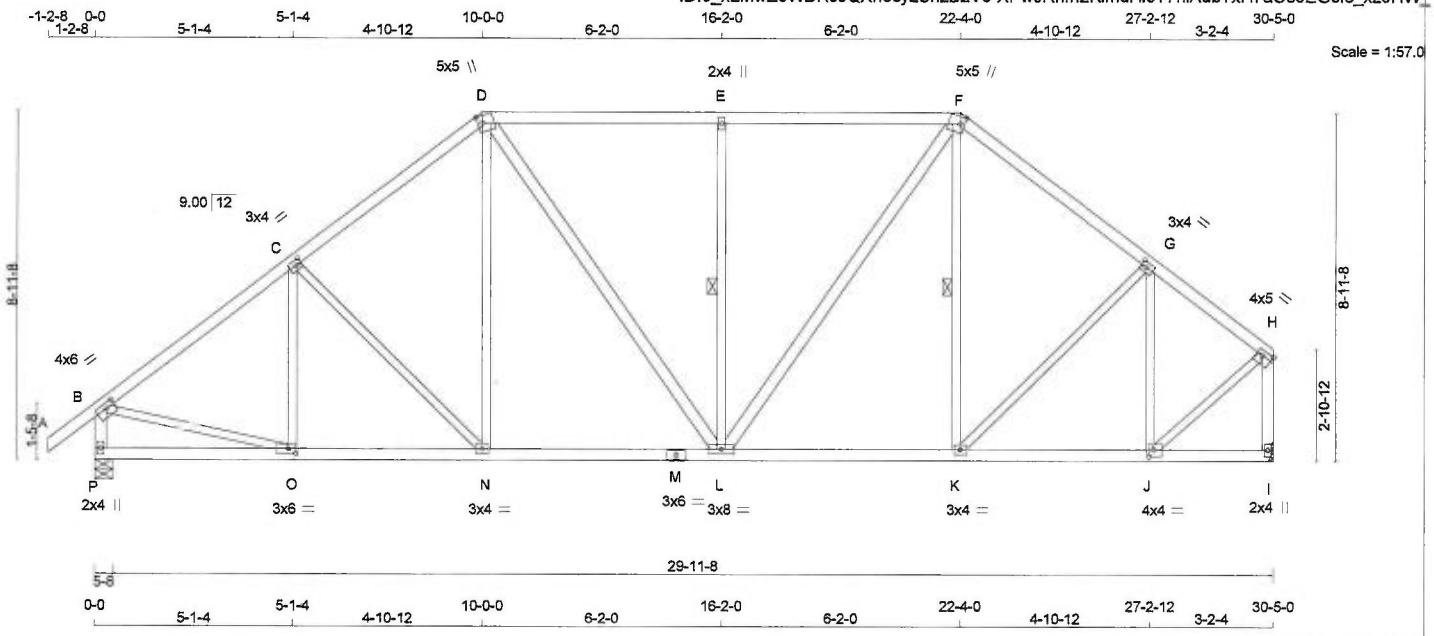

TOTAL WEIGHT = 150 lb
[M][F]

LUMBER
N. L. G. A. RULES

CHORDS	SIZE		LUMBER	DESCR.
A - D	2x4	DRY	No.2	SPF
D - F	2x4	DRY	No.2	SPF
F - H	2x4	DRY	No.2	SPF
P - B	2x4	DRY	No.2	SPF
I - H	2x4	DRY	No.2	SPF
P - M	2x4	DRY	No.2	SPF
M - I	2x4	DRY	No.2	SPF
ALL WEBS EXCEPT	2x3	DRY	No.2	SPF
D - L	2x4	DRY	No.2	SPF
L - F	2x4	DRY	No.2	SPF

DRY: SEASONED LUMBER.

PLATES (table is in inches)

JT	TYPE	PLATES	W	LEN	Y	X
B	TMVW-t	MT20	4.0	6.0	1.50	2.75
C	TMWW-t	MT20	3.0	4.0	1.50	1.50
D	TTWW+m	MT20	5.0	5.0	2.25	1.50
E	TMW+w	MT20	2.0	4.0		
F	TTWW+m	MT20	5.0	5.0	2.25	1.25
G	TMWW-t	MT20	3.0	4.0	1.50	1.50
H	TMVW-t	MT20	4.0	5.0	1.50	Edge
I	BMV1+p	MT20	2.0	4.0		
J	BMWW-t	MT20	4.0	4.0	2.00	1.50
K	BMWW-t	MT20	3.0	4.0		
L	BMWWW-t	MT20	3.0	8.0		
M	BS-t	MT20	3.0	6.0		
N	BMWW-t	MT20	3.0	4.0		
O	BMWW-t	MT20	3.0	6.0	1.50	2.25
P	BMV1+p	MT20	2.0	4.0		

Edge - INDICATES REFERENCE CORNER OF PLATE TOUCHES EDGE OF CHORD.

READ ALL NOTES ON THIS PAGE AND ON ENGINEERING NOTE PAGE ENP-1. THIS NOTE PAGE IS AN INTEGRAL PART OF THIS DRAWING AS IT CONTAINS SPECIFICATIONS AND CRITERIA USED IN THE DESIGN OF THIS COMPONENT.

LICENSED PROFESSIONAL ENGINEER
N.A. EL-MASRI
PROVINCE OF ONTARIO
Jun 05, 2018

DIMENSIONS, SUPPORTS AND LOADINGS SPECIFIED BY FABRICATOR TO BE VERIFIED BY BUILDING DESIGNER

BEARINGS

JT	FACTORED GROSS REACTION VERT	HORZ	MAXIMUM FACTORED GROSS REACTION DOWN	HORZ	UPLIFT	INPUT BRG	REQRD BRG
P	1554	0	1554	0	0	5-8	5-8
I	1454	0	1454	0	0	MECHANICAL	

A SUITABLE MECHANICAL CONNECTION IS REQUIRED AT JOINT I TO RESIST THE MAX FACTORED REACTIONS.

UNFACTORED REACTIONS

JT	1ST LCASE COMBINED	MAX./MIN. COMPONENT REACTIONS SNOW	LIVE	PERM.LIVE	WIND	DEAD	SOIL
P	1090	769 / 0	0 / 0	0 / 0	0 / 0	321 / 0	0 / 0
I	1022	708 / 0	0 / 0	0 / 0	0 / 0	313 / 0	0 / 0

BEARING MATERIAL TO BE SPF NO.2 OR BETTER AT JOINT(S) P

BRACING
TOP CHORD TO BE SHEATHED OR MAX. PURLIN SPACING = 4.95 FT.
MAX. UNBRACED BOTTOM CHORD LENGTH = 10.00 FT OR RIGID CEILING DIRECTLY APPLIED.

ALL PITCH BREAKS AND PERIMETER CORNER JOINTS MUST BE LATERALLY RESTRAINED.

1 - 1x4 LATERAL BRACE(S) AT 1/ 2 LENGTH OF E-L, F-K. DBS = 20-0-0 . CBF = 73 LBS.

DBS = DIAGONAL BRACE SPACING (MAX). CBF = CUMULATIVE BRACING FORCE (PER BRACE). FASTEN LATERAL BRACE(S) USING (0.122"X3") SPIRAL NAILS : 1 NAIL FOR 2x3 BRACE(S), 2 FOR 1x4, 2x4, 2x5, 3 FOR 2x6, 4 FOR 2x8, 5 FOR 2x10, AND 6 FOR 2x12.

END VERTICAL(S) MUST BE SHEATHED OR HAVE BRACES AS INDICATED IN THE MAX. UNBRACED LENGTH COLUMN OF THE TABLE BELOW

LOADING
TOTAL LOAD CASES: (4)

CHORDS

MEMB. FR-TO	MAX. FACTORED FORCE (LBS)	FACTORED VERT. LOAD (PLF) FROM	TO	LC1	MAX CSI (LC)	MAX. UNBRAC LENGTH
A- B	0 / 30	-77.4	-77.4	0.09	(1)	10.00
B- C	-1596 / 0	-77.4	-77.4	0.29	(1)	4.95
C- D	-1445 / 0	-77.4	-77.4	0.28	(1)	5.16
D- E	-1318 / 0	-77.4	-77.4	0.41	(1)	5.15
E- F	-1318 / 0	-77.4	-77.4	0.41	(1)	5.15
F- G	-1279 / 0	-77.4	-77.4	0.24	(1)	5.45
G- H	-1062 / 0	-77.4	-77.4	0.19	(1)	5.90
P- B	-1514 / 0	0.0	0.0	0.16	(1)	6.68
I- H	-1432 / 0	0.0	0.0	0.22	(1)	6.82
P- O	0 / 0	-18.2	-18.2	0.10	(4)	10.00
O- N	0 / 1299	-18.2	-18.2	0.27	(1)	10.00
N- M	0 / 1134	-18.2	-18.2	0.26	(1)	10.00
M- L	0 / 1134	-18.2	-18.2	0.26	(1)	10.00
L- K	0 / 1004	-18.2	-18.2	0.24	(1)	10.00
K- J	0 / 876	-18.2	-18.2	0.21	(1)	10.00
J- I	0 / 0	-18.2	-18.2	0.06	(4)	10.00

WEBS

MEMB. FR-TO	MAX. FACTORED FORCE (LBS)	MAX CSI (LC)
O- C	-191 / 26	0.08 (1)
C- N	-236 / 0	0.22 (1)
N- D	0 / 268	0.06 (1)
D- L	0 / 317	0.05 (1)
L- E	-585 / 0	0.30 (1)
L- F	0 / 541	0.09 (1)
K- F	-22 / 71	0.02 (4)
K- G	0 / 181	0.04 (1)
J- G	-629 / 0	0.26 (1)
B- O	0 / 1330	0.30 (1)
J- H	0 / 1125	0.25 (1)

DESIGN CRITERIA

SPECIFIED LOADS:

TOP CH.	LL	=	23.3	PSF
	DL	=	3.0	PSF
BOT CH.	LL	=	0.0	PSF
	DL	=	7.3	PSF
TOTAL LOAD		=	33.6	PSF

SPACING = 24.0 IN. C/C

LOADING IN FLAT SECTION BASED ON A SLOPE OF 2.00/12 MINIMUM

THIS TRUSS IS DESIGNED FOR RESIDENTIAL OR SMALL BUILDING REQUIREMENTS OF PART 9, NBCC 2010

THIS DESIGN COMPLIES WITH:
- PART 9 OF OBC 2012 , BCBC 2012 , ABC 2014
- CSA 086-09
- TPIC 2011

(55 % OF 27.2 P.S.F. G.S.L. PLUS 8.4 P.S.F. RAIN LOAD) EQUALS 23.3 P.S.F. SPECIFIED ROOF LIVE LOAD

ALLOWABLE DEFL.(LL)= L/360 (1.01")
CALCULATED VERT. DEFL.(LL) = L/ 999 (0.05")
ALLOWABLE DEFL.(TL)= L/360 (1.01")
CALCULATED VERT. DEFL.(TL) = L/ 999 (0.10")

CSI: TC=0.41/1.00 (D-E:1) , BC=0.27/1.00 (N-O:1) , WB=0.30/1.00 (E-L:1) , SSI=0.23/1.00 (E-F:1)

DOL LUMBER=1.00 NAIL=1.00 LS BEND=1.10 COMP=1.10 SHEAR=1.10 TENS= 1.10

COMPANION LIVE LOAD FACTOR = 0.50

TRUSS PLATE MANUFACTURER IS NOT RESPONSIBLE FOR QUALITY CONTROL IN THE TRUSS MANUFACTURING PLANT .

NAIL VALUES

PLATE	GRIP(DRY) (PSI) MAX	MIN	SHEAR (PLI) MAX	MIN	SECTION (PLI) MAX	MIN
MT20	618	354	1667	822	2284	1656

PLATE PLACEMENT TOL. = 0.250 inches

PLATE ROTATION TOL. = 5.0 Deg.

JSI GRIP= 0.89 (G) (INPUT = 0.90)
JSI METAL= 0.44 (B) (INPUT = 1.00)

KOTT

JOB NAME	TRUSS NAME	QUANTITY	PLY	JOB DESC.		DRWG NO.
NE0618-035	T08	1	1	TRUSS DESC.	GREEN YORK HOMES - GRANELLI HOME CORP - INDIGO 1 ELEV 2	PAGE 37 OF 47

Version 8.210 S Mar 12 2018 MiTek Industries, Inc. Tue Jun 5 17:07:12 2018 Page 1

ID:9_xLMwZ3WDKc3QXh8cyzSnzB2V3-?bUhf7gJpetdERKF1qC_j58eDgS?7JPNVnRBVNz9HVz

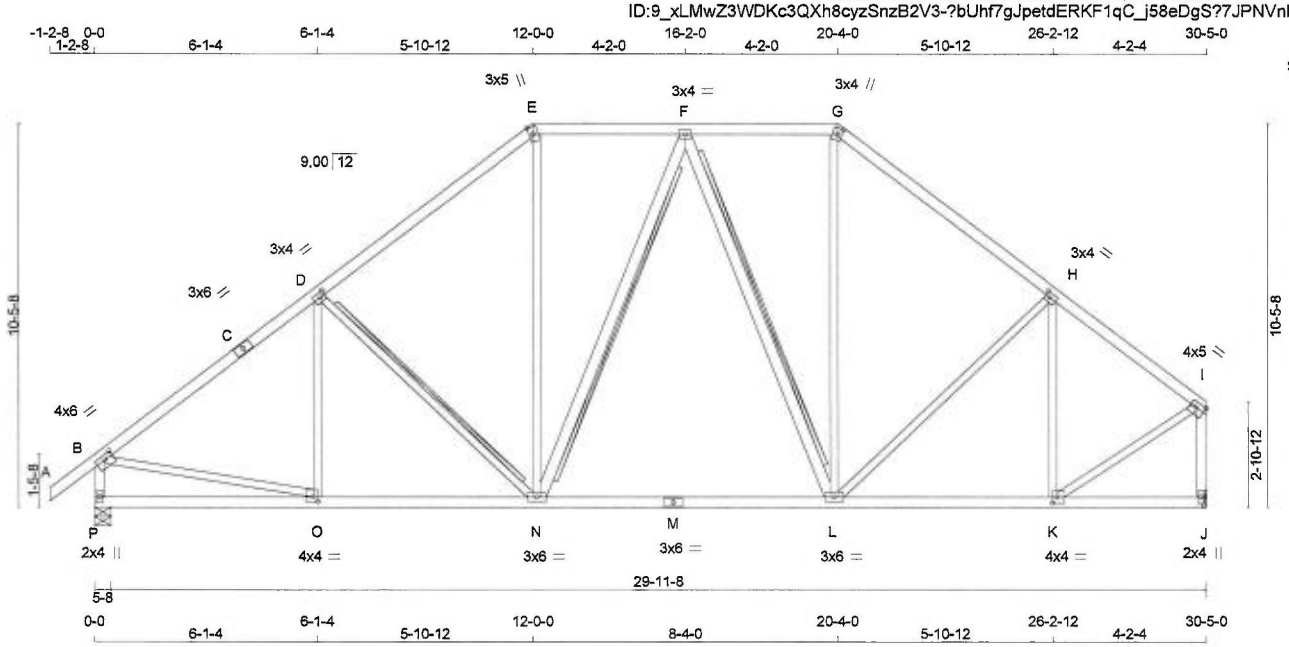

TOTAL WEIGHT = 152 lb

[M][F]

LUMBER

N. L. G. A. RULES

CHORDS	SIZE		LUMBER	DESCR.
A - C	2x4	DRY	No.2	SPF
C - E	2x4	DRY	No.2	SPF
E - G	2x4	DRY	No.2	SPF
G - I	2x4	DRY	No.2	SPF
P - B	2x4	DRY	No.2	SPF
J - I	2x4	DRY	No.2	SPF
P - M	2x4	DRY	No.2	SPF
M - J	2x4	DRY	No.2	SPF
ALL WEBS EXCEPT	2x3	DRY	No.2	SPF
N - F	2x4	DRY	No.2	SPF
F - L	2x4	DRY	No.2	SPF

DRY: SEASONED LUMBER.

PLATES (table is in inches)

JT	TYPE	PLATES	W	LEN	Y	X
B	TMVW-t	MT20	4.0	6.0	1.50	2.75
C	TS-t	MT20	3.0	6.0		
D	TMWW-t	MT20	3.0	4.0	1.50	1.50
E	TTW+m	MT20	3.0	5.0	Edge	1.25
F	TMWW-t	MT20	3.0	4.0		
G	TTW+m	MT20	3.0	4.0	2.00	1.25
H	TMWW-t	MT20	3.0	4.0	1.50	1.50
I	TMVW-t	MT20	4.0	5.0	1.75	Edge
J	BMV1+p	MT20	2.0	4.0		
K	BMWW-t	MT20	4.0	4.0	2.00	1.50
L	BMWWW-t	MT20	3.0	6.0		
M	BS-t	MT20	3.0	6.0		
N	BMWWW-t	MT20	3.0	6.0		
O	BMWW-t	MT20	4.0	4.0	1.50	1.50
P	BMV1+p	MT20	2.0	4.0		

Edge - INDICATES REFERENCE CORNER OF PLATE TOUCHES EDGE OF CHORD.

READ ALL NOTES ON THIS PAGE AND ON ENGINEERING NOTE PAGE ENP-1. THIS NOTE PAGE IS AN INTEGRAL PART OF THIS DRAWING AS IT CONTAINS SPECIFICATIONS AND CRITERIA USED IN THE DESIGN OF THIS COMPONENT.

LICENSED PROFESSIONAL ENGINEER
N.A. EL-MASRI
PROVINCE OF ONTARIO
Jun 05, 2018

DIMENSIONS, SUPPORTS AND LOADINGS SPECIFIED BY FABRICATOR TO BE VERIFIED BY BUILDING DESIGNER

BEARINGS

JT	FACTORED GROSS REACTION VERT	HORZ	MAXIMUM FACTORED GROSS REACTION DOWN	HORZ	UPLIFT	INPUT BRG IN-SX	REQRD BRG IN-SX
P	1554	0	1554	0	0	5-8	5-8
J	1454	0	1454	0	0	MECHANICAL	

A SUITABLE MECHANICAL CONNECTION IS REQUIRED AT JOINT J TO RESIST THE MAX FACTORED REACTIONS.

UNFACTORED REACTIONS

JT	1ST LCASE COMBINED	MAX./MIN. COMPONENT REACTIONS SNOW	LIVE	PERM.LIVE	WIND	DEAD	SOIL
P	1090	769 / 0	0 / 0	0 / 0	0 / 0	321 / 0	0 / 0
J	1022	708 / 0	0 / 0	0 / 0	0 / 0	313 / 0	0 / 0

BEARING MATERIAL TO BE SPF NO.2 OR BETTER AT JOINT(S) P

BRACING

TOP CHORD TO BE SHEATHED OR MAX. PURLIN SPACING = 4.77 FT.
MAX. UNBRACED BOTTOM CHORD LENGTH = 10.00 FT OR RIGID CEILING DIRECTLY APPLIED.

ALL PITCH BREAKS AND PERIMETER CORNER JOINTS MUST BE LATERALLY RESTRAINED.

2x4 DRY SPF No.2 T-BRACE AT D-N, F-N, F-L

FASTEN T AND I-BRACES TO NARROW EDGE OF WEB WITH ONE ROW PER PLY OF 3" COMMON WIRE NAILS @ 6" O.C. WITH 3" MINIMUM END DISTANCE. BRACE MUST COVER 90% OF WEB LENGTH.

END VERTICAL(S) MUST BE SHEATHED OR HAVE BRACES AS INDICATED IN THE MAX. UNBRACED LENGTH COLUMN OF THE TABLE BELOW

LOADING

TOTAL LOAD CASES: (4)

CHORDS

MEMB. FR-TO	MAX. FACTORED FORCE (LBS)	FACTORED VERT. LOAD LC1 (PLF) FROM	TO	MAX CSI (LC)	MAX. UNBRAC LENGTH
A- B	0 / 30	-77.4	-77.4	0.09 (1)	10.00
B- C	-1605 / 0	-77.4	-77.4	0.43 (1)	4.77
C- D	-1605 / 0	-77.4	-77.4	0.43 (1)	4.77
D- E	-1344 / 0	-77.4	-77.4	0.40 (1)	5.14
E- F	-1051 / 0	-77.4	-77.4	0.18 (1)	5.94
F- G	-978 / 0	-77.4	-77.4	0.17 (1)	6.10
G- H	-1245 / 0	-77.4	-77.4	0.35 (1)	5.36
H- I	-1176 / 0	-77.4	-77.4	0.29 (1)	5.55
P- B	-1507 / 0	0.0	0.0	0.16 (1)	6.68
J- I	-1423 / 0	0.0	0.0	0.22 (1)	6.84
P- O	0 / 0	-18.2	-18.2	0.14 (4)	10.00
O- N	0 / 1311	-18.2	-18.2	0.32 (1)	10.00
N- M	0 / 1092	-18.2	-18.2	0.29 (1)	10.00
M- L	0 / 1092	-18.2	-18.2	0.29 (1)	10.00
L- K	0 / 971	-18.2	-18.2	0.28 (4)	10.00
K- J	0 / 0	-18.2	-18.2	0.09 (4)	10.00

WEBS

MEMB. FR-TO	MAX. FACTORED FORCE (LBS)	MAX CSI (LC)
O- D	-129 / 58	0.07 (1)
D- N	-366 / 0	0.19 (1)
N- E	0 / 488	0.11 (1)
N- F	-111 / 8	0.10 (1)
F- L	-307 / 0	0.27 (1)
L- G	0 / 421	0.09 (1)
L- H	0 / 16	0.01 (4)
K- H	-504 / 0	0.29 (1)
B- O	0 / 1333	0.30 (1)
K- I	0 / 1138	0.26 (1)

DESIGN CRITERIA

SPECIFIED LOADS:

TOP CH.	LL	=	23.3	PSF
	DL	=	3.0	PSF
BOT CH.	LL	=	0.0	PSF
	DL	=	7.3	PSF
TOTAL LOAD		=	33.6	PSF

SPACING = 24.0 IN. C/C

LOADING IN FLAT SECTION BASED ON A SLOPE OF 2.00/12 MINIMUM

THIS TRUSS IS DESIGNED FOR RESIDENTIAL OR SMALL BUILDING REQUIREMENTS OF PART 9, NBCC 2010

THIS DESIGN COMPLIES WITH:
- PART 9 OF OBC 2012 , BCBC 2012 , ABC 2014
- CSA 086-09
- TPIC 2011

(55 % OF 27.2 P.S.F. G.S.L. PLUS 8.4 P.S.F. RAIN LOAD) EQUALS 23.3 P.S.F. SPECIFIED ROOF LIVE LOAD

ALLOWABLE DEFL.(LL)= L/360 (1.01")
CALCULATED VERT. DEFL.(LL) = L/ 999 (0.05")
ALLOWABLE DEFL.(TL)= L/360 (1.01")
CALCULATED VERT. DEFL.(TL) = L/ 999 (0.15")

CSI: TC=0.43/1.00 (B-D:1) , BC=0.32/1.00 (N-O:1) , WB=0.30/1.00 (B-O:1) , SSI=0.18/1.00 (B-D:1)

DOL LUMBER=1.00 NAIL=1.00 LS BEND=1.10 COMP=1.10 SHEAR=1.10 TENS= 1.10

COMPANION LIVE LOAD FACTOR = 0.50

TRUSS PLATE MANUFACTURER IS NOT RESPONSIBLE FOR QUALITY CONTROL IN THE TRUSS MANUFACTURING PLANT .

NAIL VALUES

PLATE	GRIP(DRY) (PSI) MAX	MIN	SHEAR (PLI) MAX	MIN	SECTION (PLI) MAX	MIN
MT20	618	354	1667	822	2284	1656

PLATE PLACEMENT TOL. = 0.250 inches

PLATE ROTATION TOL. = 5.0 Deg.

JSI GRIP= 0.89 (G) (INPUT = 0.90)
JSI METAL= 0.49 (O) (INPUT = 1.00)

KOTT

JOB NAME	TRUSS NAME	QUANTITY	PLY	JOB DESC.		DRWG NO.
NE0618-035	T09	2	1	TRUSS DESC.	GREEN YORK HOMES - GRANELLI HOME CORP - INDIGO 1 ELEV 2	PAGE 38 OF 47

Version 8.210 S Mar 12 2018 MiTek Industries, Inc. Tue Jun 5 17:07:12 2018 Page 1

ID:9_xLMwZ3WDKc3QXh8cyzSnzB2V3-?bUhf7gJpetdERKF1qC_j58bHgSI7IMNVnRBVNz9HV

Scale = 1:67.8

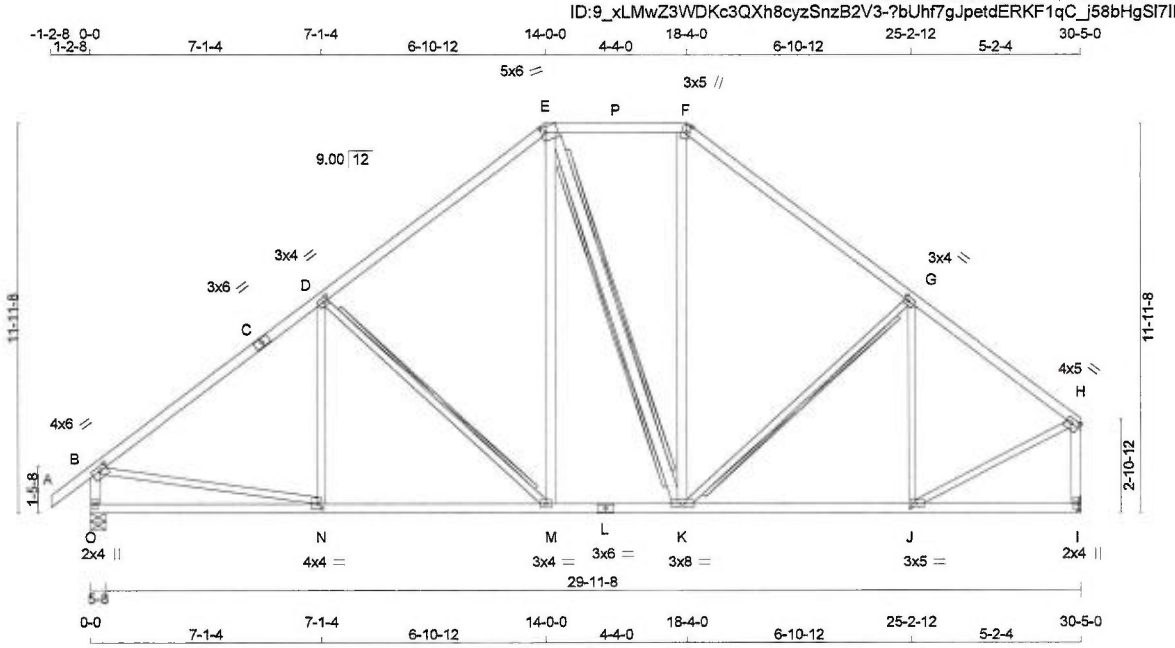

TOTAL WEIGHT = 2 X 158 = 315 lb

[M][F]

LUMBER

N. L. G. A. RULES

CHORDS	SIZE		LUMBER	DESCR.
A - C	2x4	DRY	No.2	SPF
C - E	2x4	DRY	No.2	SPF
E - F	2x4	DRY	No.2	SPF
F - H	2x4	DRY	No.2	SPF
O - B	2x4	DRY	No.2	SPF
I - H	2x4	DRY	No.2	SPF
O - L	2x4	DRY	No.2	SPF
L - I	2x4	DRY	No.2	SPF
ALL WEBS	2x3	DRY	No.2	SPF
EXCEPT				
M - E	2x4	DRY	No.2	SPF
E - K	2x4	DRY	No.2	SPF
K - F	2x4	DRY	No.2	SPF

DRY: SEASONED LUMBER.

PLATES (table is in inches)

JT	TYPE	PLATES	W	LEN	Y	X
B	TMVW-t	MT20	4.0	6.0	1.50	2.75
C	TS-t	MT20	3.0	6.0		
D	TMWW-t	MT20	3.0	4.0	1.50	1.50
E	TTWW-m	MT20	5.0	6.0	2.00	1.50
F	TTW+m	MT20	3.0	5.0	Edge	1.25
G	TMWW-t	MT20	3.0	4.0	1.50	1.50
H	TMVW-t	MT20	4.0	5.0	1.75	Edge
I	BMV1+p	MT20	2.0	4.0		
J	BMWW-t	MT20	3.0	5.0	1.50	1.75
K	BMWWW-t	MT20	3.0	8.0		
L	BS-t	MT20	3.0	6.0		
M	BMWW-t	MT20	3.0	4.0		
N	BMWW-t	MT20	4.0	4.0	1.75	1.50
O	BMV1+p	MT20	2.0	4.0		

Edge - INDICATES REFERENCE CORNER OF PLATE TOUCHES EDGE OF CHORD.

READ ALL NOTES ON THIS PAGE AND ON ENGINEERING NOTE PAGE ENP-1. THIS NOTE PAGE IS AN INTEGRAL PART OF THIS DRAWING AS IT CONTAINS SPECIFICATIONS AND CRITERIA USED IN THE DESIGN OF THIS COMPONENT.

LICENSED PROFESSIONAL ENGINEER
N.A. EL-MASRI
PROVINCE OF ONTARIO
Jun 05, 2018

DIMENSIONS, SUPPORTS AND LOADINGS SPECIFIED BY FABRICATOR TO BE VERIFIED BY BUILDING DESIGNER

BEARINGS

JT	FACTORED GROSS REACTION VERT	HORZ	MAXIMUM FACTORED GROSS REACTION DOWN	HORZ	UPLIFT	INPUT BRG IN-SX	REQRD BRG IN-SX
O	1570	0	1570	0	0	5-8	5-8
I	1471	0	1471	0	0	MECHANICAL	

A SUITABLE MECHANICAL CONNECTION IS REQUIRED AT JOINT I TO RESIST THE MAX FACTORED REACTIONS.

UNFACTORED REACTIONS

JT	1ST LCASE COMBINED	MAX./MIN. COMPONENT REACTIONS SNOW	LIVE	PERM.LIVE	WIND	DEAD	SOIL
O	1102	769 / 0	0 / 0	0 / 0	0 / 0	333 / 0	0 / 0
I	1035	708 / 0	0 / 0	0 / 0	0 / 0	327 / 0	0 / 0

BEARING MATERIAL TO BE SPF NO.2 OR BETTER AT JOINT(S) O

BRACING

FOR SECTION E-F, MAX. PURLIN SPACING = 2.00 FT.
FOR OTHER SECTIONS, TOP CHORD TO BE SHEATHED OR MAX. PURLIN SPACING = 4.49 FT.
MAX. UNBRACED BOTTOM CHORD LENGTH = 10.00 FT OR RIGID CEILING DIRECTLY APPLIED.

ALL PITCH BREAKS AND PERIMETER CORNER JOINTS MUST BE LATERALLY RESTRAINED.

2x4 DRY SPF No.2 T-BRACE AT D-M, G-K
2x4 DRY SPF No.2 I-BRACE AT E-K

FASTEN T AND I-BRACES TO NARROW EDGE OF WEB WITH ONE ROW PER PLY OF 3" COMMON WIRE NAILS @ 6" O.C. WITH 3" MINIMUM END DISTANCE. BRACE MUST COVER 90% OF WEB LENGTH.

END VERTICAL(S) MUST BE SHEATHED OR HAVE BRACES AS INDICATED IN THE MAX. UNBRACED LENGTH COLUMN OF THE TABLE BELOW

LOADING

TOTAL LOAD CASES: (4)

CHORDS

MEMB. FR-TO	MAX. FACTORED FORCE (LBS)	FACTORED VERT. LOAD (PLF) FROM	TO	LC1	MAX CSI (LC)	MAX. UNBRAC LENGTH
A- B	0 / 30	-77.4	-77.4	0.09	(1)	10.00
B- C	-1622 / 0	-77.4	-77.4	0.62	(1)	4.49
C- D	-1622 / 0	-77.4	-77.4	0.62	(1)	4.49
D- E	-1242 / 0	-77.4	-77.4	0.56	(1)	5.04
E- P	-934 / 0	-84.9	-84.9	0.28	(1)	2.00
P- F	-934 / 0	-84.9	-84.9	0.28	(1)	2.00
F- G	-1196 / 0	-77.4	-77.4	0.50	(1)	5.24
G- H	-1270 / 0	-77.4	-77.4	0.42	(1)	5.21
O- B	-1518 / 0	0.0	0.0	0.16	(1)	6.67
I- H	-1437 / 0	0.0	0.0	0.22	(1)	6.81
O- N	0 / 0	-18.2	-18.2	0.23	(4)	10.00
N- M	0 / 1329	-18.2	-18.2	0.34	(1)	10.00
M- L	0 / 965	-18.2	-18.2	0.23	(1)	10.00
L- K	0 / 965	-18.2	-18.2	0.23	(1)	10.00
K- J	0 / 1050	-18.2	-18.2	0.26	(1)	10.00
J- I	0 / 0	-18.2	-18.2	0.17	(4)	10.00

WEBS

MEMB. FR-TO	MAX. FACTORED FORCE (LBS)	MAX CSI (LC)
N- D	-62 / 104	0.05 (1)
D- M	-500 / 0	0.37 (1)
M- E	0 / 428	0.07 (1)
E- K	-94 / 0	0.09 (1)
K- F	0 / 302	0.05 (1)
K- G	-163 / 0	0.12 (1)
J- G	-394 / 0	0.30 (1)
B- N	0 / 1346	0.30 (1)
J- H	0 / 1171	0.26 (1)

DESIGN CRITERIA

SPECIFIED LOADS:

TOP CH.	LL	=	23.3	PSF
	DL	=	3.0	PSF
BOT CH.	LL	=	0.0	PSF
	DL	=	7.3	PSF
TOTAL LOAD		=	33.6	PSF

SPACING = 24.0 IN. C/C

LOADING IN FLAT SECTION BASED ON PIGGYBACK TRUSS WITH SLOPES OF 6.00/12 AND -6.00/12 AND RESPECTIVE WALL HEIGHTS OF 0-0 AND 0-0 AND AN ADDITIONAL DEAD LOAD OF 3.0 P.S.F.

THIS TRUSS IS DESIGNED FOR RESIDENTIAL OR SMALL BUILDING REQUIREMENTS OF PART 9, NBCC 2010

THIS DESIGN COMPLIES WITH:
- PART 9 OF OBC 2012 , BCBC 2012 , ABC 2014
- CSA 086-09
- TPIC 2011

(55 % OF 27.2 P.S.F. G.S.L. PLUS 8.4 P.S.F. RAIN LOAD) EQUALS 23.3 P.S.F. SPECIFIED ROOF LIVE LOAD

ALLOWABLE DEFL.(LL)= L/360 (1.01")
CALCULATED VERT. DEFL.(LL) = L/ 999 (0.05")
ALLOWABLE DEFL.(TL)= L/360 (1.01")
CALCULATED VERT. DEFL.(TL) = L/ 999 (0.12")

CSI: TC=0.62/1.00 (B-D:1) , BC=0.34/1.00 (M-N:1) , WB=0.37/1.00 (D-M:1) , SSI=0.21/1.00 (B-D:1)

DOL LUMBER=1.00 NAIL=1.00 LS BEND=1.10 COMP=1.10 SHEAR=1.10 TENS= 1.10

COMPANION LIVE LOAD FACTOR = 0.50

TRUSS PLATE MANUFACTURER IS NOT RESPONSIBLE FOR QUALITY CONTROL IN THE TRUSS MANUFACTURING PLANT .

NAIL VALUES

PLATE	GRIP(DRY) (PSI) MAX	MIN	SHEAR (PLI) MAX	MIN	SECTION (PLI) MAX	MIN
MT20	618	354	1667	822	2284	1656

PLATE PLACEMENT TOL. = 0.250 inches

PLATE ROTATION TOL. = 5.0 Deg.

JSI GRIP= 0.90 (N) (INPUT = 0.90)
JSI METAL= 0.50 (N) (INPUT = 1.00)

KOTT

JOB NAME	TRUSS NAME	QUANTITY	PLY	JOB DESC.	DRWG NO.
NE0618-035	T10	1	1	GREEN YORK HOMES - GRANELLI HOME CORP - INDIGO 1 ELEV 2 / TRUSS DESC.	PAGE 39 OF 47

Version 8.210 S Mar 12 2018 MiTek Industries, Inc. Tue Jun 5 17:07:13 2018 Page 1
ID:9_xLMwZ3WDKc3QXh8cyzSnzB2V3-Tn24sTgxax?UsbuSaYjDFJhpI4qOsIfWkRBI2pz9HV

Scale = 1:67.8

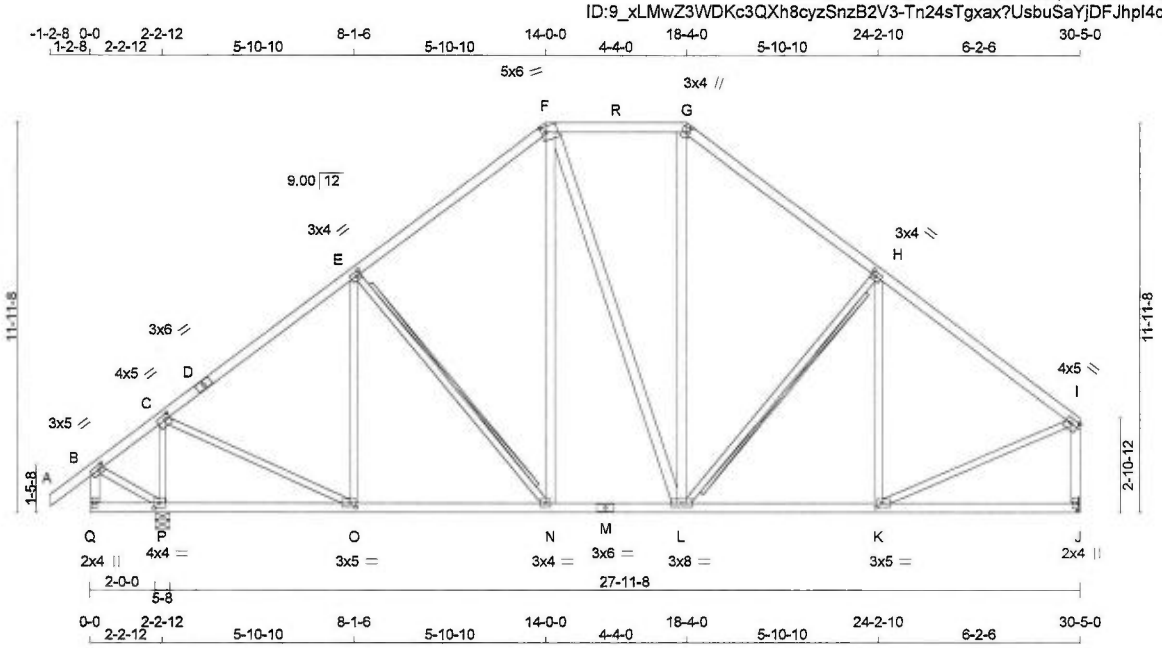

TOTAL WEIGHT = 163 lb
[M][F]

LUMBER
N. L. G. A. RULES

CHORDS	SIZE		LUMBER	DESCR.
A - D	2x4	DRY	No.2	SPF
D - F	2x4	DRY	No.2	SPF
F - G	2x4	DRY	No.2	SPF
G - I	2x4	DRY	No.2	SPF
Q - B	2x4	DRY	No.2	SPF
J - I	2x4	DRY	No.2	SPF
Q - M	2x4	DRY	No.2	SPF
M - J	2x4	DRY	No.2	SPF
ALL WEBS	2x3	DRY	No.2	SPF
EXCEPT				
N - F	2x4	DRY	No.2	SPF
F - L	2x4	DRY	No.2	SPF
L - G	2x4	DRY	No.2	SPF

DRY: SEASONED LUMBER.

PLATES (table is in inches)

JT	TYPE	PLATES	W	LEN	Y	X
B	TMVW-t	MT20	3.0	5.0	1.50	1.75
C	TMWW-t	MT20	4.0	5.0	1.75	1.75
D	TS-t	MT20	3.0	6.0		
E	TMWW-t	MT20	3.0	4.0	1.50	1.50
F	TTWW-m	MT20	5.0	6.0	2.00	1.50
G	TTW+m	MT20	3.0	4.0	2.00	1.25
H	TMWW-t	MT20	3.0	4.0	1.50	1.50
I	TMVW-t	MT20	4.0	5.0	1.75	Edge
J	BMV1+p	MT20	2.0	4.0		
K	BMWW-t	MT20	3.0	5.0	1.50	2.00
L	BMWWW-t	MT20	3.0	8.0		
M	BS-t	MT20	3.0	6.0		
N	BMWW-t	MT20	3.0	4.0		
O	BMWW-t	MT20	3.0	5.0	1.50	2.00
P	BMWW1-t	MT20	4.0	4.0	2.00	1.75
Q	BMV+p	MT20	2.0	4.0		

Edge - INDICATES REFERENCE CORNER OF PLATE TOUCHES EDGE OF CHORD.

READ ALL NOTES ON THIS PAGE AND ON ENGINEERING NOTE PAGE ENP-1. THIS NOTE PAGE IS AN INTEGRAL PART OF THIS DRAWING AS IT CONTAINS SPECIFICATIONS AND CRITERIA USED IN THE DESIGN OF THIS COMPONENT.

LICENSED PROFESSIONAL ENGINEER
N.A. EL-MASRI
PROVINCE OF ONTARIO
Jun 05, 2018

DIMENSIONS, SUPPORTS AND LOADINGS SPECIFIED BY FABRICATOR TO BE VERIFIED BY BUILDING DESIGNER

BEARINGS

JT	FACTORED GROSS REACTION VERT	HORZ	MAXIMUM FACTORED GROSS REACTION DOWN	HORZ	UPLIFT	INPUT BRG IN-SX	REQRD BRG IN-SX
P	1694	0	1694	0	0	5-8	5-8
J	1347	0	1347	0	0	MECHANICAL	

A SUITABLE MECHANICAL CONNECTION IS REQUIRED AT JOINT J TO RESIST THE MAX FACTORED REACTIONS.

UNFACTORED REACTIONS

JT	1ST LCASE COMBINED	MAX./MIN. COMPONENT REACTIONS SNOW	LIVE	PERM.LIVE	WIND	DEAD	SOIL
P	1189	829 / 0	0 / 0	0 / 0	0 / 0	360 / 0	0 / 0
J	948	648 / 0	0 / 0	0 / 0	0 / 0	301 / 0	0 / 0

BEARING MATERIAL TO BE SPF NO.2 OR BETTER AT JOINT(S) P

BRACING
FOR SECTION F-G, MAX. PURLIN SPACING = 2.00 FT.
FOR OTHER SECTIONS, TOP CHORD TO BE SHEATHED OR MAX. PURLIN SPACING = 5.40 FT.
MAX. UNBRACED BOTTOM CHORD LENGTH = 6.25 FT OR RIGID CEILING DIRECTLY APPLIED.

ALL PITCH BREAKS AND PERIMETER CORNER JOINTS MUST BE LATERALLY RESTRAINED.

2x4 DRY SPF No.2 T-BRACE AT E-N, H-L

FASTEN T AND I-BRACES TO NARROW EDGE OF WEB WITH ONE ROW PER PLY OF 3" COMMON WIRE NAILS @ 6" O.C. WITH 3" MINIMUM END DISTANCE. BRACE MUST COVER 90% OF WEB LENGTH.

END VERTICAL(S) MUST BE SHEATHED OR HAVE BRACES AS INDICATED IN THE MAX. UNBRACED LENGTH COLUMN OF THE TABLE BELOW

LOADING
TOTAL LOAD CASES: (4)

CHORDS

MEMB. FR-TO	MAX. FACTORED FORCE (LBS)	FACTORED VERT. LOAD LC1 (PLF) FROM	TO	MAX CSI (LC)	MAX. UNBRAC LENGTH
A- B	0 / 30	-77.4	-77.4	0.09 (1)	10.00
B- C	0 / 151	-77.4	-77.4	0.24 (1)	10.00
C- D	-1086 / 0	-77.4	-77.4	0.33 (1)	5.67
D- E	-1086 / 0	-77.4	-77.4	0.33 (1)	5.67
E- F	-1016 / 0	-77.4	-77.4	0.35 (1)	5.79
F- R	-801 / 0	-84.9	-84.9	0.28 (1)	2.00
R- G	-801 / 0	-84.9	-84.9	0.28 (1)	2.00
G- H	-1035 / 0	-77.4	-77.4	0.39 (1)	5.68
H- I	-1167 / 0	-77.4	-77.4	0.41 (1)	5.40
Q- B	-7 / 0	0.0	0.0	0.00 (1)	7.81
J- I	-1302 / 0	0.0	0.0	0.20 (1)	7.08
Q- P	0 / 0	-18.2	-18.2	0.10 (4)	10.00
P- O	-87 / 0	-18.2	-18.2	0.10 (4)	6.25
O- N	0 / 879	-18.2	-18.2	0.21 (1)	10.00
N- M	0 / 790	-18.2	-18.2	0.18 (1)	10.00
M- L	0 / 790	-18.2	-18.2	0.18 (1)	10.00
L- K	0 / 960	-18.2	-18.2	0.25 (4)	10.00
K- J	0 / 0	-18.2	-18.2	0.17 (4)	10.00

WEBS

MEMB. FR-TO	MAX. FACTORED FORCE (LBS)	MAX CSI (LC)
P- C	-1546 / 0	0.28 (1)
C- O	0 / 1070	0.24 (1)
O- E	-351 / 0	0.36 (1)
E- N	-142 / 0	0.10 (1)
N- F	0 / 201	0.03 (1)
F- L	0 / 32	0.01 (1)
L- G	0 / 249	0.04 (1)
L- H	-253 / 0	0.18 (1)
K- H	-269 / 21	0.28 (1)
B- P	-97 / 0	0.02 (1)
K- I	0 / 1039	0.23 (1)

DESIGN CRITERIA

SPECIFIED LOADS:

TOP CH.	LL	=	23.3	PSF
	DL	=	3.0	PSF
BOT CH.	LL	=	0.0	PSF
	DL	=	7.3	PSF
TOTAL LOAD		=	33.6	PSF

SPACING = 24.0 IN. C/C

LOADING IN FLAT SECTION BASED ON PIGGYBACK TRUSS WITH SLOPES OF 6.00/12 AND -6.00/12 AND RESPECTIVE WALL HEIGHTS OF 0-0 AND 0-0 AND AN ADDITIONAL DEAD LOAD OF 3.0 P.S.F.

THIS TRUSS IS DESIGNED FOR RESIDENTIAL OR SMALL BUILDING REQUIREMENTS OF PART 9, NBCC 2010

THIS DESIGN COMPLIES WITH:
- PART 9 OF OBC 2012 , BCBC 2012 , ABC 2014
- CSA 086-09
- TPIC 2011

(55 % OF 27.2 P.S.F. G.S.L. PLUS 8.4 P.S.F. RAIN LOAD) EQUALS 23.3 P.S.F. SPECIFIED ROOF LIVE LOAD

ALLOWABLE DEFL.(LL)= L/360 (0.94")
CALCULATED VERT. DEFL.(LL) = L/ 999 (0.03")
ALLOWABLE DEFL.(TL)= L/360 (0.94")
CALCULATED VERT. DEFL.(TL) = L/ 999 (0.08")

CANTILEVER DEFLECTION:
ALLOWABLE DEFL.(LL)= L/120 (0.22")
CALCULATED VERT. DEFL.(LL) = L/ 999 (0.00")
ALLOWABLE DEFL.(TL)= L/120 (0.22")
CALCULATED VERT. DEFL.(TL) = L/ 999 (0.00")

CSI: TC=0.41/1.00 (H-I:1) , BC=0.25/1.00 (K-L:4) , WB=0.36/1.00 (E-O:1) , SSI=0.18/1.00 (H-I:1)

DOL LUMBER=1.00 NAIL=1.00 LS BEND=1.10 COMP=1.10 SHEAR=1.10 TENS= 1.10

COMPANION LIVE LOAD FACTOR = 0.50

TRUSS PLATE MANUFACTURER IS NOT RESPONSIBLE FOR QUALITY CONTROL IN THE TRUSS MANUFACTURING PLANT .

NAIL VALUES

PLATE	GRIP(DRY) (PSI) MAX	MIN	SHEAR (PLI) MAX	MIN	SECTION (PLI) MAX	MIN
MT20	618	354	1667	822	2284	1656

CONTINUED ON PAGE 2

KOTT

PLATE PLACEMENT TOL. = 0.250 inches

PLATE ROTATION TOL. = 5.0 Deg.

JSI GRIP= 0.89 (G) (INPUT = 0.90)
JSI METAL= 0.43 (C) (INPUT = 1.00)

READ ALL NOTES ON THIS PAGE AND ON ENGINEERING NOTE PAGE ENP-1. THIS NOTE PAGE IS AN INTEGRAL PART OF THIS DRAWING AS IT CONTAINS SPECIFICATIONS AND CRITERIA USED IN THE DESIGN OF THIS COMPONENT.

KOTT

JOB NAME	TRUSS NAME	QUANTITY	PLY	JOB DESC.	GREEN YORK HOMES - GRANELLI HOME CORP - INDIGO 1 ELEV 2	DRWG NO.
NE0618-035	T11	1	1	TRUSS DESC.		PAGE 41 OF 47

Version 8.210 S Mar 12 2018 MiTek Industries, Inc. Tue Jun 5 17:07:14 2018 Page 1
ID:9_xLMwZ3WDKc3QXh8cyzSnzB2V3-x_cS4phZLF7LUkTe8FESoWD0NU5tb7egy5wIaGz9HVx

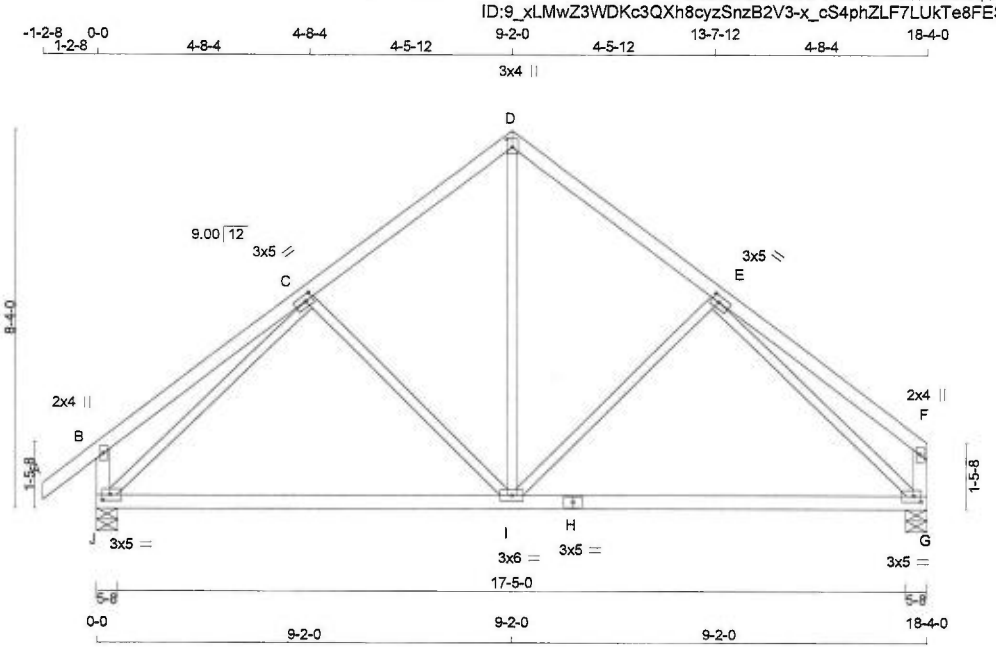

TOTAL WEIGHT = 78 lb
[M][F]

LUMBER
N. L. G. A. RULES

CHORDS	SIZE		LUMBER	DESCR.
A - D	2x4	DRY	No.2	SPF
D - F	2x4	DRY	No.2	SPF
J - B	2x4	DRY	No.2	SPF
G - F	2x4	DRY	No.2	SPF
J - H	2x4	DRY	No.2	SPF
H - G	2x4	DRY	No.2	SPF
ALL WEBS EXCEPT	2x3	DRY	No.2	SPF

DRY: SEASONED LUMBER.

PLATES (table is in inches)

JT	TYPE	PLATES	W	LEN	Y	X
B	TMV+p	MT20	2.0	4.0		
C	TMWW-t	MT20	3.0	5.0	1.50	2.00
D	TTW+p	MT20	3.0	4.0	2.25	1.50
E	TMWW-t	MT20	3.0	5.0	1.50	2.00
F	TMV+p	MT20	2.0	4.0		
G	BMVW1-t	MT20	3.0	5.0	1.50	2.00
H	BS-t	MT20	3.0	5.0		
I	BMWWW-t	MT20	3.0	6.0		
J	BMVW1-t	MT20	3.0	5.0	1.50	2.00

DIMENSIONS, SUPPORTS AND LOADINGS SPECIFIED BY FABRICATOR TO BE VERIFIED BY BUILDING DESIGNER

BEARINGS

JT	FACTORED GROSS REACTION VERT	HORZ	MAXIMUM FACTORED GROSS REACTION DOWN	HORZ	UPLIFT	INPUT BRG IN-SX	REQRD BRG IN-SX
J	977	0	977	0	0	5-8	5-8
G	876	0	876	0	0	5-8	5-8

UNFACTORED REACTIONS

JT	1ST LCASE COMBINED	MAX./MIN. COMPONENT REACTIONS SNOW	LIVE	PERM.LIVE	WIND	DEAD	SOIL
J	684	487 / 0	0 / 0	0 / 0	0 / 0	197 / 0	0 / 0
G	616	427 / 0	0 / 0	0 / 0	0 / 0	189 / 0	0 / 0

BEARING MATERIAL TO BE SPF NO.2 OR BETTER AT JOINT(S) J, G

BRACING
TOP CHORD TO BE SHEATHED OR MAX. PURLIN SPACING = 6.25 FT.
MAX. UNBRACED BOTTOM CHORD LENGTH = 10.00 FT OR RIGID CEILING DIRECTLY APPLIED.

ALL PITCH BREAKS AND PERIMETER CORNER JOINTS MUST BE LATERALLY RESTRAINED.

LOADING
TOTAL LOAD CASES: (4)

CHORDS

MEMB. FR-TO	MAX. FACTORED FORCE (LBS)	FACTORED VERT. LOAD (PLF) FROM	TO	LC1 MAX CSI (LC)	MAX. UNBRAC LENGTH
A- B	0 / 30	-77.4	-77.4	0.09 (1)	10.00
B- C	0 / 25	-77.4	-77.4	0.26 (1)	10.00
C- D	-681 / 0	-77.4	-77.4	0.21 (1)	6.25
D- E	-681 / 0	-77.4	-77.4	0.21 (1)	6.25
E- F	0 / 25	-77.4	-77.4	0.26 (1)	10.00
J- B	-235 / 0	0.0	0.0	0.02 (1)	7.81
G- F	-135 / 0	0.0	0.0	0.01 (1)	7.81
J- I	0 / 680	-18.2	-18.2	0.49 (4)	10.00
I- H	0 / 680	-18.2	-18.2	0.49 (4)	10.00
H- G	0 / 680	-18.2	-18.2	0.49 (4)	10.00

WEBS

MEMB. FR-TO	MAX. FACTORED FORCE (LBS)	MAX CSI (LC)
I- D	0 / 514	0.12 (1)
I- E	-218 / 0	0.17 (1)
C- I	-218 / 0	0.17 (1)
J- C	-960 / 0	0.70 (1)
E- G	-960 / 0	0.70 (1)

DESIGN CRITERIA

SPECIFIED LOADS:

TOP CH.	LL	=	23.3	PSF
	DL	=	3.0	PSF
BOT CH.	LL	=	0.0	PSF
	DL	=	7.3	PSF
TOTAL LOAD		=	33.6	PSF

SPACING = 24.0 IN. C/C

THIS TRUSS IS DESIGNED FOR RESIDENTIAL OR SMALL BUILDING REQUIREMENTS OF PART 9, NBCC 2010

THIS DESIGN COMPLIES WITH:
- PART 9 OF OBC 2012 , BCBC 2012 , ABC 2014
- CSA 086-09
- TPIC 2011

(55 % OF 27.2 P.S.F. G.S.L. PLUS 8.4 P.S.F. RAIN LOAD) EQUALS 23.3 P.S.F. SPECIFIED ROOF LIVE LOAD

ALLOWABLE DEFL.(LL)= L/360 (0.61")
CALCULATED VERT. DEFL.(LL) = L/ 999 (0.02")
ALLOWABLE DEFL.(TL)= L/360 (0.61")
CALCULATED VERT. DEFL.(TL) = L/ 999 (0.16")

CSI: TC=0.26/1.00 (B-C:1) , BC=0.49/1.00 (I-J:4) , WB=0.70/1.00 (C-J:1) , SSI=0.14/1.00 (G-I:4)

DOL LUMBER=1.00 NAIL=1.00 LS BEND=1.10 COMP=1.10 SHEAR=1.10 TENS= 1.10

COMPANION LIVE LOAD FACTOR = 0.50

TRUSS PLATE MANUFACTURER IS NOT RESPONSIBLE FOR QUALITY CONTROL IN THE TRUSS MANUFACTURING PLANT .

NAIL VALUES

PLATE	GRIP(DRY) (PSI) MAX	MIN	SHEAR (PLI) MAX	MIN	SECTION (PLI) MAX	MIN
MT20	618	354	1667	822	2284	1656

PLATE PLACEMENT TOL. = 0.250 inches

PLATE ROTATION TOL. = 5.0 Deg.

JSI GRIP= 0.90 (G) (INPUT = 0.90)
JSI METAL= 0.33 (H) (INPUT = 1.00)

READ ALL NOTES ON THIS PAGE AND ON ENGINEERING NOTE PAGE ENP-1. THIS NOTE PAGE IS AN INTEGRAL PART OF THIS DRAWING AS IT CONTAINS SPECIFICATIONS AND CRITERIA USED IN THE DESIGN OF THIS COMPONENT.

LICENSED PROFESSIONAL ENGINEER
N.A. EL-MASRI
PROVINCE OF ONTARIO
Jun 05, 2018

KOTT

JOB NAME	TRUSS NAME	QUANTITY	PLY	JOB DESC.	DRWG NO.
NE0618-035	T13	2	1	GREEN YORK HOMES - GRANELLI HOME CORP - INDIGO 1 ELEV 2 (TRUSS DESC.)	PAGE 42 OF 47

Version 8.210 S Mar 12 2018 MiTek Industries, Inc. Tue Jun 5 17:07:15 2018 Page 1
ID:9_xLMwZ3WDKc3QXh8cyzSnzB2V3-QAAqH9iB6ZFC5u2qiymhKkmCHuRNKaYpBlgs6iz9HVw

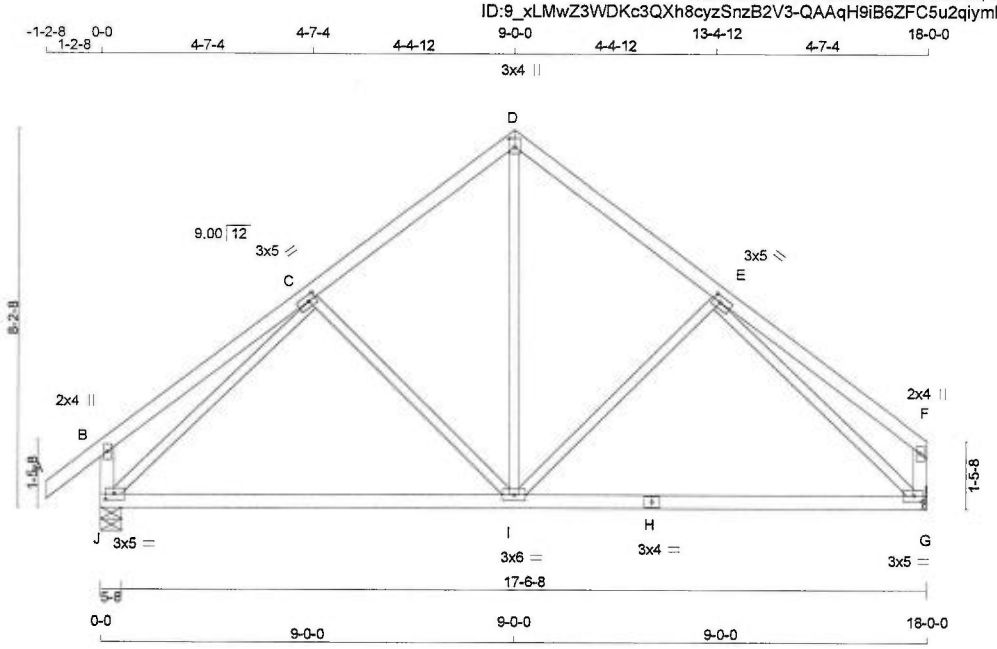

Scale: 1/4"=1'

TOTAL WEIGHT = 2 X 76 = 153 lb

LUMBER
N. L. G. A. RULES

CHORDS	SIZE		LUMBER	DESCR.
A - D	2x4	DRY	No.2	SPF
D - F	2x4	DRY	No.2	SPF
J - B	2x4	DRY	No.2	SPF
G - F	2x4	DRY	No.2	SPF
J - H	2x4	DRY	No.2	SPF
H - G	2x4	DRY	No.2	SPF
ALL WEBS EXCEPT	2x3	DRY	No.2	SPF

DRY: SEASONED LUMBER.

PLATES (table is in inches)

JT	TYPE	PLATES	W	LEN	Y	X
B	TMV+p	MT20	2.0	4.0		
C	TMWW-t	MT20	3.0	5.0	1.50	2.00
D	TTW+p	MT20	3.0	4.0	2.25	1.50
E	TMWW-t	MT20	3.0	5.0	1.50	2.00
F	TMV+p	MT20	2.0	4.0		
G	BMVW1-t	MT20	3.0	5.0	1.50	2.25
H	BS-t	MT20	3.0	4.0		
I	BMWWW-t	MT20	3.0	6.0		
J	BMVW1-t	MT20	3.0	5.0	1.50	2.25

DIMENSIONS, SUPPORTS AND LOADINGS SPECIFIED BY FABRICATOR TO BE VERIFIED BY BUILDING DESIGNER

BEARINGS

JT	FACTORED GROSS REACTION VERT	HORZ	MAXIMUM FACTORED GROSS REACTION DOWN	HORZ	UPLIFT	INPUT BRG IN-SX	REQRD BRG IN-SX
J	961	0	961	0	0	5-8	5-8
G	861	0	861	0	0	MECHANICAL	

A SUITABLE MECHANICAL CONNECTION IS REQUIRED AT JOINT G TO RESIST THE MAX FACTORED REACTIONS.

UNFACTORED REACTIONS

JT	1ST LCASE COMBINED	MAX./MIN. COMPONENT REACTIONS SNOW	LIVE	PERM.LIVE	WIND	DEAD	SOIL
J	673	480 / 0	0 / 0	0 / 0	0 / 0	193 / 0	0 / 0
G	605	419 / 0	0 / 0	0 / 0	0 / 0	185 / 0	0 / 0

BEARING MATERIAL TO BE SPF NO.2 OR BETTER AT JOINT(S) J

BRACING
TOP CHORD TO BE SHEATHED OR MAX. PURLIN SPACING = 6.25 FT.
MAX. UNBRACED BOTTOM CHORD LENGTH = 10.00 FT OR RIGID CEILING DIRECTLY APPLIED.

ALL PITCH BREAKS AND PERIMETER CORNER JOINTS MUST BE LATERALLY RESTRAINED.

LOADING
TOTAL LOAD CASES: (4)

CHORDS

MEMB. FR-TO	MAX. FACTORED FORCE (LBS)	FACTORED VERT. LOAD (PLF) FROM	TO	LC1	MAX CSI (LC)	MAX. UNBRAC LENGTH
A- B	0 / 30	-77.4	-77.4	0.09 (1)		10.00
B- C	0 / 25	-77.4	-77.4	0.25 (1)		10.00
C- D	-667 / 0	-77.4	-77.4	0.20 (1)		6.25
D- E	-667 / 0	-77.4	-77.4	0.20 (1)		6.25
E- F	0 / 25	-77.4	-77.4	0.25 (1)		10.00
J- B	-233 / 0	0.0	0.0	0.02 (1)		7.81
G- F	-132 / 0	0.0	0.0	0.01 (1)		7.81
J- I	0 / 664	-18.2	-18.2	0.47 (4)		10.00
I- H	0 / 664	-18.2	-18.2	0.47 (4)		10.00
H- G	0 / 664	-18.2	-18.2	0.47 (4)		10.00

WEBS

MEMB. FR-TO	MAX. FACTORED FORCE (LBS)	MAX CSI (LC)
I- D	0 / 503	0.11 (1)
I- E	-212 / 0	0.15 (1)
C- I	-212 / 0	0.15 (1)
J- C	-941 / 0	0.66 (1)
E- G	-941 / 0	0.66 (1)

DESIGN CRITERIA

SPECIFIED LOADS:

TOP CH.	LL	=	23.3	PSF
	DL	=	3.0	PSF
BOT CH.	LL	=	0.0	PSF
	DL	=	7.3	PSF
TOTAL LOAD		=	33.6	PSF

SPACING = 24.0 IN. C/C

THIS TRUSS IS DESIGNED FOR RESIDENTIAL OR SMALL BUILDING REQUIREMENTS OF PART 9, NBCC 2010

THIS DESIGN COMPLIES WITH:
- PART 9 OF OBC 2012 , BCBC 2012 , ABC 2014
- CSA 086-09
- TPIC 2011

(55 % OF 27.2 P.S.F. G.S.L. PLUS 8.4 P.S.F. RAIN LOAD) EQUALS 23.3 P.S.F. SPECIFIED ROOF LIVE LOAD

ALLOWABLE DEFL.(LL)= L/360 (0.60")
CALCULATED VERT. DEFL.(LL) = L/ 999 (0.02")
ALLOWABLE DEFL.(TL)= L/360 (0.60")
CALCULATED VERT. DEFL.(TL) = L/ 999 (0.15")

CSI: TC=0.25/1.00 (B-C:1) , BC=0.47/1.00 (I-J:4) , WB=0.66/1.00 (C-J:1) , SSI=0.14/1.00 (I-J:4)

DOL LUMBER=1.00 NAIL=1.00 LS BEND=1.10 COMP=1.10 SHEAR=1.10 TENS= 1.10

COMPANION LIVE LOAD FACTOR = 0.50

TRUSS PLATE MANUFACTURER IS NOT RESPONSIBLE FOR QUALITY CONTROL IN THE TRUSS MANUFACTURING PLANT .

NAIL VALUES

PLATE	GRIP(DRY) (PSI) MAX	MIN	SHEAR (PLI) MAX	MIN	SECTION (PLI) MAX	MIN
MT20	618	354	1667	822	2284	1656

PLATE PLACEMENT TOL. = 0.250 inches

PLATE ROTATION TOL. = 5.0 Deg.

JSI GRIP= 0.89 (G) (INPUT = 0.90)
JSI METAL= 0.27 (H) (INPUT = 1.00)

READ ALL NOTES ON THIS PAGE AND ON ENGINEERING NOTE PAGE ENP-1. THIS NOTE PAGE IS AN INTEGRAL PART OF THIS DRAWING AS IT CONTAINS SPECIFICATIONS AND CRITERIA USED IN THE DESIGN OF THIS COMPONENT.

LICENSED PROFESSIONAL ENGINEER
N.A. EL-MASRI
PROVINCE OF ONTARIO
Jun 05, 2018

KOTT

JOB NAME	TRUSS NAME	QUANTITY	PLY	JOB DESC.	GREEN YORK HOMES - GRANELLI HOME CORP - INDIGO 1 ELEV 2	DRWG NO.
NE0618-035	T14	1	1	TRUSS DESC.		PAGE 43 OF 47

Version 8.210 S Mar 12 2018 MiTek Industries, Inc. Tue Jun 5 17:07:15 2018 Page 1
ID:9_xLMwZ3WDKc3QXh8cyzSnzB2V3-QAAqH9iB6ZFC5u2qiymhKkmAMuV8KewpBlgs6iz9HVw

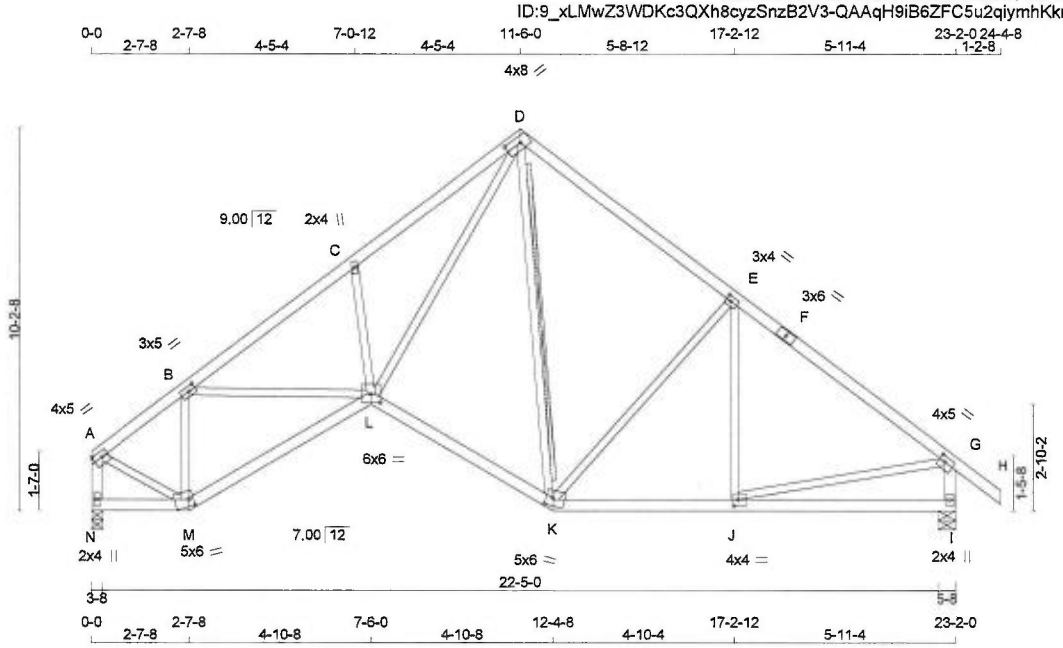

TOTAL WEIGHT = 106 lb
[M][F]

LUMBER
N. L. G. A. RULES

CHORDS	SIZE		LUMBER	DESCR.
A - D	2x4	DRY	No.2	SPF
D - F	2x4	DRY	No.2	SPF
F - H	2x4	DRY	No.2	SPF
N - A	2x4	DRY	No.2	SPF
I - G	2x4	DRY	No.2	SPF
N - M	2x4	DRY	No.2	SPF
M - L	2x4	DRY	No.2	SPF
L - K	2x4	DRY	No.2	SPF
K - I	2x4	DRY	No.2	SPF
ALL WEBS EXCEPT	2x3	DRY	No.2	SPF

DRY: SEASONED LUMBER.

PLATES (table is in inches)

JT	TYPE	PLATES	W	LEN	Y	X
A	TMVW-t	MT20	4.0	5.0	1.75	Edge
B	TMWW-t	MT20	3.0	5.0	1.50	2.25
C	TMW+w	MT20	2.0	4.0		
D	TTWW-h	MT20	4.0	8.0	2.00	5.00
E	TMWW-t	MT20	3.0	4.0	1.50	1.50
F	TS-t	MT20	3.0	6.0		
G	TMVW-t	MT20	4.0	5.0	1.75	2.00
I	BMV1+p	MT20	2.0	4.0		
J	BMWW-t	MT20	4.0	4.0	2.00	1.50
K	BBWW-m	MT20	5.0	6.0	2.50	2.25
L	BBWWW-p	MT20	6.0	6.0	2.75	3.00
M	BBWW-m	MT20	5.0	6.0	2.25	1.50
N	BMV1+p	MT20	2.0	4.0		

Edge - INDICATES REFERENCE CORNER OF PLATE TOUCHES EDGE OF CHORD.

READ ALL NOTES ON THIS PAGE AND ON ENGINEERING NOTE PAGE ENP-1. THIS NOTE PAGE IS AN INTEGRAL PART OF THIS DRAWING AS IT CONTAINS SPECIFICATIONS AND CRITERIA USED IN THE DESIGN OF THIS COMPONENT.

LICENSED PROFESSIONAL ENGINEER
N.A. EL-MASRI
PROVINCE OF ONTARIO
Jun 05, 2018

DIMENSIONS, SUPPORTS AND LOADINGS SPECIFIED BY FABRICATOR TO BE VERIFIED BY BUILDING DESIGNER

BEARINGS

JT	FACTORED GROSS REACTION VERT	HORZ	MAXIMUM FACTORED GROSS REACTION DOWN	HORZ	UPLIFT	INPUT BRG IN-SX	REQRD BRG IN-SX
N	1107	0	1107	0	0	3-8	3-8
I	1208	0	1208	0	0	5-8	5-8

UNFACTORED REACTIONS

JT	1ST LCASE COMBINED	MAX./MIN. COMPONENT REACTIONS SNOW	LIVE	PERM.LIVE	WIND	DEAD	SOIL
N	778	539 / 0	0 / 0	0 / 0	0 / 0	239 / 0	0 / 0
I	846	600 / 0	0 / 0	0 / 0	0 / 0	246 / 0	0 / 0

BEARING MATERIAL TO BE SPF NO.2 OR BETTER AT JOINT(S) N, I

BRACING
TOP CHORD TO BE SHEATHED OR MAX. PURLIN SPACING = 4.80 FT.
MAX. UNBRACED BOTTOM CHORD LENGTH = 10.00 FT OR RIGID CEILING DIRECTLY APPLIED.

ALL PITCH BREAKS AND PERIMETER CORNER JOINTS MUST BE LATERALLY RESTRAINED.

2x4 DRY SPF No.2 T-BRACE AT D-K

FASTEN T AND I-BRACES TO NARROW EDGE OF WEB WITH ONE ROW PER PLY OF 3" COMMON WIRE NAILS @ 6" O.C. WITH 3" MINIMUM END DISTANCE. BRACE MUST COVER 90% OF WEB LENGTH.

END VERTICAL(S) MUST BE SHEATHED OR HAVE BRACES AS INDICATED IN THE MAX. UNBRACED LENGTH COLUMN OF THE TABLE BELOW

LOADING
TOTAL LOAD CASES: (4)

CHORDS

MEMB. FR-TO	MAX. FACTORED FORCE (LBS)	FACTORED VERT. LOAD LC1 (PLF) FROM	TO	MAX CSI (LC)	MAX. UNBRAC LENGTH
A- B	-1022 / 0	-77.4	-77.4	0.10 (1)	6.09
B- C	-1820 / 0	-77.4	-77.4	0.20 (1)	4.80
C- D	-1783 / 0	-77.4	-77.4	0.23 (1)	4.81
D- E	-884 / 0	-77.4	-77.4	0.36 (1)	6.07
E- F	-1147 / 0	-77.4	-77.4	0.38 (1)	5.49
F- G	-1147 / 0	-77.4	-77.4	0.38 (1)	5.49
G- H	0 / 30	-77.4	-77.4	0.09 (1)	10.00
N- A	-1084 / 0	0.0	0.0	0.11 (1)	7.58
I- G	-1163 / 0	0.0	0.0	0.12 (1)	7.39
N- M	0 / 0	-18.2	-18.2	0.04 (4)	10.00
M- L	0 / 936	-18.2	-18.2	0.22 (1)	10.00
L- K	0 / 790	-18.2	-18.2	0.20 (1)	10.00
K- J	0 / 944	-18.3	-18.3	0.23 (1)	10.00
J- I	0 / 0	-18.2	-18.2	0.15 (4)	10.00

WEBS

MEMB. FR-TO	MAX. FACTORED FORCE (LBS)	MAX CSI (LC)
M- B	-801 / 0	0.16 (1)
B- L	0 / 655	0.15 (1)
C- L	-356 / 0	0.09 (1)
L- D	0 / 1471	0.33 (1)
D- K	-18 / 53	0.02 (4)
K- E	-401 / 0	0.44 (1)
J- E	-62 / 83	0.03 (1)
A- M	0 / 924	0.21 (1)
J- G	0 / 961	0.22 (1)

DESIGN CRITERIA

SPECIFIED LOADS:

TOP CH.	LL	=	23.3	PSF
	DL	=	3.0	PSF
BOT CH.	LL	=	0.0	PSF
	DL	=	7.3	PSF
TOTAL LOAD		=	33.6	PSF

SPACING = 24.0 IN. C/C

THIS TRUSS IS DESIGNED FOR RESIDENTIAL OR SMALL BUILDING REQUIREMENTS OF PART 9, NBCC 2010

THIS DESIGN COMPLIES WITH:
- PART 9 OF OBC 2012 , BCBC 2012 , ABC 2014
- CSA 086-09
- TPIC 2011

(55 % OF 27.2 P.S.F. G.S.L. PLUS 8.4 P.S.F. RAIN LOAD) EQUALS 23.3 P.S.F. SPECIFIED ROOF LIVE LOAD

ALLOWABLE DEFL.(LL)= L/360 (0.77")
CALCULATED VERT. DEFL.(LL) = L/ 999 (0.07")
ALLOWABLE DEFL.(TL)= L/360 (0.77")
CALCULATED VERT. DEFL.(TL) = L/ 999 (0.14")

CSI: TC=0.38/1.00 (E-G:1) , BC=0.23/1.00 (J-K:1) , WB=0.44/1.00 (E-K:1) , SSI=0.18/1.00 (E-G:1)

DOL LUMBER=1.00 NAIL=1.00 LS BEND=1.10 COMP=1.10 SHEAR=1.10 TENS= 1.10

COMPANION LIVE LOAD FACTOR = 0.50

TRUSS PLATE MANUFACTURER IS NOT RESPONSIBLE FOR QUALITY CONTROL IN THE TRUSS MANUFACTURING PLANT .

NAIL VALUES

PLATE	GRIP(DRY) (PSI) MAX	MIN	SHEAR (PLI) MAX	MIN	SECTION (PLI) MAX	MIN
MT20	618	354	1667	822	2284	1656

PLATE PLACEMENT TOL. = 0.250 inches

PLATE ROTATION TOL. = 5.0 Deg.

JSI GRIP= 0.90 (L) (INPUT = 0.90)
JSI METAL= 0.40 (G) (INPUT = 1.00)

KOTT

JOB NAME	TRUSS NAME	QUANTITY	PLY	JOB DESC.		DRWG NO.
NE0618-035	T15	3	1	TRUSS DESC.	GREEN YORK HOMES - GRANELLI HOME CORP - INDIGO 1 ELEV 2	PAGE 44 OF 47

Version 8.210 S Mar 12 2018 MiTek Industries, Inc. Tue Jun 5 17:07:16 2018 Page 1
ID:9_xLMwZ3WDKc3QXh8cyzSnzB2V3-uMjCUVjqtsN3j2d0GgHwtxlL7IrO33dzQPPPe8z9HV

Scale = 1:59.3

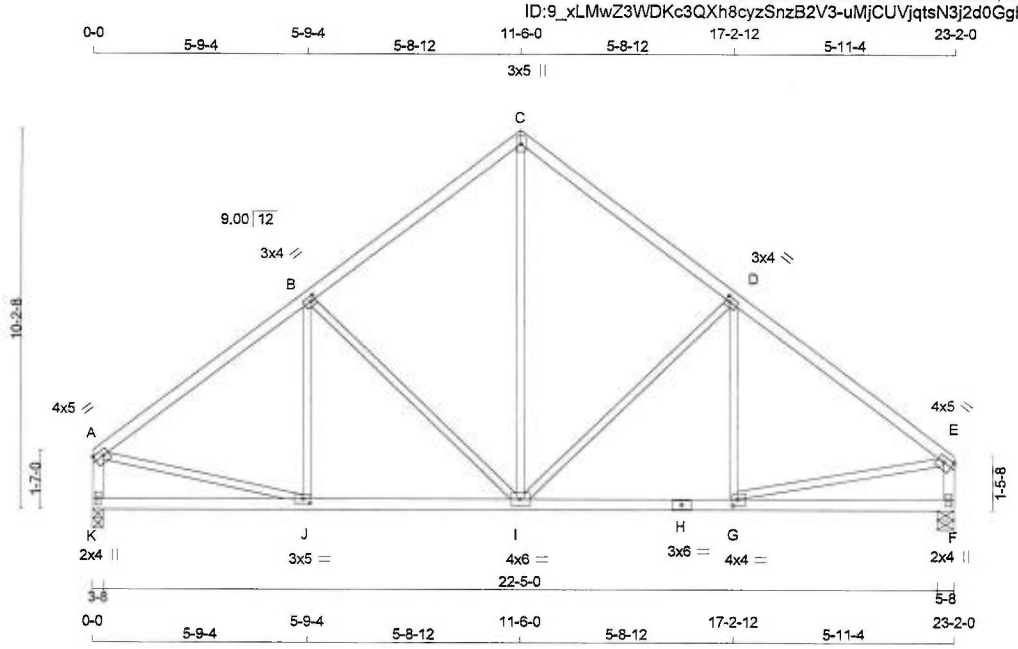

TOTAL WEIGHT = 3 X 100 = 301 lb
[M][F]

LUMBER
N. L. G. A. RULES

CHORDS	SIZE		LUMBER	DESCR.
A - C	2x4	DRY	No.2	SPF
C - E	2x4	DRY	No.2	SPF
K - A	2x4	DRY	No.2	SPF
F - E	2x4	DRY	No.2	SPF
K - H	2x4	DRY	No.2	SPF
H - F	2x4	DRY	No.2	SPF
ALL WEBS EXCEPT	2x3	DRY	No.2	SPF

DRY: SEASONED LUMBER.

PLATES (table is in inches)

JT	TYPE	PLATES	W	LEN	Y	X
A	TMVW-t	MT20	4.0	5.0	1.75	Edge
B	TMWW-t	MT20	3.0	4.0	1.50	1.50
C	TTW+p	MT20	3.0	5.0		
D	TMWW-t	MT20	3.0	4.0	1.50	1.50
E	TMVW-t	MT20	4.0	5.0	1.75	Edge
F	BMV1+p	MT20	2.0	4.0		
G	BMWW-t	MT20	4.0	4.0	2.00	1.50
H	BS-t	MT20	3.0	6.0		
I	BMWWW-t	MT20	4.0	6.0		
J	BMWW-t	MT20	3.0	5.0	1.50	2.25
K	BMV1+p	MT20	2.0	4.0		

Edge - INDICATES REFERENCE CORNER OF PLATE TOUCHES EDGE OF CHORD.

DIMENSIONS, SUPPORTS AND LOADINGS SPECIFIED BY FABRICATOR TO BE VERIFIED BY BUILDING DESIGNER

BEARINGS

JT	FACTORED GROSS REACTION VERT	HORZ	MAXIMUM FACTORED GROSS REACTION DOWN	HORZ	UPLIFT	INPUT BRG IN-SX	REQRD BRG IN-SX
K	1107	0	1107	0	0	3-8	3-8
F	1107	0	1107	0	0	5-8	5-8

UNFACTORED REACTIONS

JT	1ST LCASE COMBINED	MAX./MIN. COMPONENT REACTIONS SNOW	LIVE	PERM.LIVE	WIND	DEAD	SOIL
K	778	539 / 0	0 / 0	0 / 0	0 / 0	239 / 0	0 / 0
F	778	539 / 0	0 / 0	0 / 0	0 / 0	239 / 0	0 / 0

BEARING MATERIAL TO BE SPF NO.2 OR BETTER AT JOINT(S) K, F

BRACING
TOP CHORD TO BE SHEATHED OR MAX. PURLIN SPACING = 5.49 FT.
MAX. UNBRACED BOTTOM CHORD LENGTH = 10.00 FT OR RIGID CEILING DIRECTLY APPLIED.

ALL PITCH BREAKS AND PERIMETER CORNER JOINTS MUST BE LATERALLY RESTRAINED.

LOADING
TOTAL LOAD CASES: (4)

CHORDS

MEMB. FR-TO	MAX. FACTORED FORCE (LBS)	FACTORED VERT. LOAD (PLF) FROM	TO	LC1 CSI	MAX (LC)	MAX. UNBRAC LENGTH
A- B	-1124 / 0	-77.4	-77.4	0.36	(1)	5.55
B- C	-849 / 0	-77.4	-77.4	0.34	(1)	6.18
C- D	-850 / 0	-77.4	-77.4	0.35	(1)	6.16
D- E	-1147 / 0	-77.4	-77.4	0.38	(1)	5.49
K- A	-1064 / 0	0.0	0.0	0.11	(1)	7.64
F- E	-1063 / 0	0.0	0.0	0.11	(1)	7.64
K- J	0 / 0	-18.2	-18.2	0.14	(4)	10.00
J- I	0 / 925	-18.2	-18.2	0.22	(1)	10.00
I- H	0 / 943	-18.2	-18.2	0.23	(1)	10.00
H- G	0 / 943	-18.2	-18.2	0.23	(1)	10.00
G- F	0 / 0	-18.2	-18.2	0.15	(4)	10.00

WEBS

MEMB. FR-TO	MAX. FACTORED FORCE (LBS)	MAX CSI (LC)
J- B	-85 / 73	0.05 (1)
B- I	-379 / 0	0.51 (1)
I- C	0 / 647	0.15 (1)
I- D	-405 / 0	0.54 (1)
G- D	-61 / 82	0.03 (1)
A- J	0 / 946	0.21 (1)
G- E	0 / 960	0.22 (1)

DESIGN CRITERIA

SPECIFIED LOADS:

TOP CH.	LL	=	23.3	PSF
	DL	=	3.0	PSF
BOT CH.	LL	=	0.0	PSF
	DL	=	7.3	PSF
TOTAL LOAD		=	33.6	PSF

SPACING = 24.0 IN. C/C

THIS TRUSS IS DESIGNED FOR RESIDENTIAL OR SMALL BUILDING REQUIREMENTS OF PART 9, NBCC 2010

THIS DESIGN COMPLIES WITH:
- PART 9 OF OBC 2012 , BCBC 2012 , ABC 2014
- CSA 086-09
- TPIC 2011

(55 % OF 27.2 P.S.F. G.S.L. PLUS 8.4 P.S.F. RAIN LOAD) EQUALS 23.3 P.S.F. SPECIFIED ROOF LIVE LOAD

ALLOWABLE DEFL.(LL)= L/360 (0.77")
CALCULATED VERT. DEFL.(LL) = L/ 999 (0.03")
ALLOWABLE DEFL.(TL)= L/360 (0.77")
CALCULATED VERT. DEFL.(TL) = L/ 999 (0.07")

CSI: TC=0.38/1.00 (D-E:1) , BC=0.23/1.00 (G-I:1) , WB=0.54/1.00 (D-I:1) , SSI=0.18/1.00 (D-E:1)

DOL LUMBER=1.00 NAIL=1.00 LS BEND=1.10 COMP=1.10 SHEAR=1.10 TENS= 1.10

COMPANION LIVE LOAD FACTOR = 0.50

TRUSS PLATE MANUFACTURER IS NOT RESPONSIBLE FOR QUALITY CONTROL IN THE TRUSS MANUFACTURING PLANT .

NAIL VALUES

PLATE	GRIP(DRY) (PSI) MAX	MIN	SHEAR (PLI) MAX	MIN	SECTION (PLI) MAX	MIN
MT20	618	354	1667	822	2284	1656

PLATE PLACEMENT TOL. = 0.250 inches

PLATE ROTATION TOL. = 5.0 Deg.

JSI GRIP= 0.89 (J) (INPUT = 0.90)
JSI METAL= 0.39 (E) (INPUT = 1.00)

READ ALL NOTES ON THIS PAGE AND ON ENGINEERING NOTE PAGE ENP-1. THIS NOTE PAGE IS AN INTEGRAL PART OF THIS DRAWING AS IT CONTAINS SPECIFICATIONS AND CRITERIA USED IN THE DESIGN OF THIS COMPONENT.

LICENSED PROFESSIONAL ENGINEER
N.A. EL-MASRI
PROVINCE OF ONTARIO
Jun 05, 2018

KOTT

JOB NAME	TRUSS NAME	QUANTITY	PLY	JOB DESC.	GREEN YORK HOMES - GRANELLI HOME CORP - INDIGO 1 ELEV 2	DRWG NO.
NE0618-035	T18	5	1	TRUSS DESC.		PAGE 45 OF 47

Version 8.210 S Mar 12 2018 MiTek Industries, Inc. Tue Jun 5 17:07:16 2018 Page 1
ID:9_xLMwZ3WDKc3QXh8cyzSnzB2V3-uMjCUVjqtsN3j2d0GgHwtxlJclqM3B4zQPPPe8z9HVv

Scale = 1:22.3

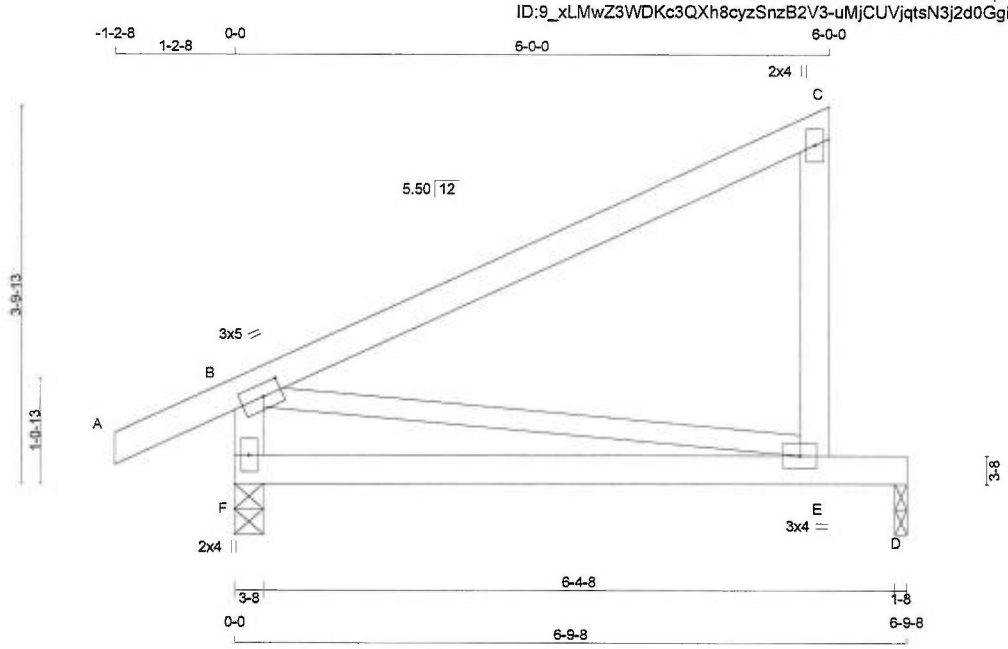

TOTAL WEIGHT = 5 X 26 = 129 lb
[M][F]

LUMBER
N. L. G. A. RULES

CHORDS	SIZE		LUMBER	DESCR.
A - C	2x4	DRY	No.2	SPF
E - C	2x4	DRY	No.2	SPF
F - B	2x4	DRY	No.2	SPF
F - D	2x4	DRY	No.2	SPF
ALL WEBS	2x3	DRY	No.2	SPF

DRY: SEASONED LUMBER.

PLATES (table is in inches)

JT	TYPE	PLATES	W	LEN	Y	X
B	TMVW-t	MT20	3.0	5.0	1.50	2.25
C	TMV+p	MT20	2.0	4.0		
E	BMVW-t	MT20	3.0	4.0		
F	BMV1+p	MT20	2.0	4.0		

DIMENSIONS, SUPPORTS AND LOADINGS SPECIFIED BY FABRICATOR TO BE VERIFIED BY BUILDING DESIGNER

BEARINGS

JT	FACTORED GROSS REACTION VERT	HORZ	MAXIMUM FACTORED GROSS REACTION DOWN	HORZ	UPLIFT	INPUT BRG IN-SX	REQRD BRG IN-SX
F	419	0	419	0	0	3-8	3-8
D	267	0	267	0	0	1-8	1-8

UNFACTORED REACTIONS

JT	1ST LCASE COMBINED	MAX./MIN. COMPONENT REACTIONS SNOW	LIVE	PERM.LIVE	WIND	DEAD	SOIL
F	292	215 / 0	0 / 0	0 / 0	0 / 0	77 / 0	0 / 0
D	189	123 / 0	0 / 0	0 / 0	0 / 0	65 / 0	0 / 0

BEARING MATERIAL TO BE SPF NO.2 OR BETTER AT JOINT(S) F, D

BRACING
TOP CHORD TO BE SHEATHED OR MAX. PURLIN SPACING = 10.00 FT.
MAX. UNBRACED BOTTOM CHORD LENGTH = 10.00 FT OR RIGID CEILING DIRECTLY APPLIED.

ALL PITCH BREAKS AND PERIMETER CORNER JOINTS MUST BE LATERALLY RESTRAINED.

LOADING
TOTAL LOAD CASES: (4)

CHORDS

MEMB. FR-TO	MAX. FACTORED FORCE (LBS)	FACTORED VERT. LOAD LC1 (PLF) FROM	TO	MAX CSI (LC)	MAX. UNBRAC LENGTH
A- B	0 / 20	-77.4	-77.4	0.09 (1)	10.00
B- C	0 / 0	-77.4	-77.4	0.47 (1)	10.00
E- C	-232 / 0	0.0	0.0	0.05 (1)	7.81
F- B	-330 / 0	0.0	0.0	0.03 (1)	7.81
F- E	0 / 0	-18.2	-18.2	0.30 (1)	10.00
E- D	0 / 0	-18.2	-18.2	0.28 (1)	10.00

WEBS

MEMB. FR-TO	MAX. FACTORED FORCE (LBS)	MAX CSI (LC)
B- E	0 / 0	0.00 (1)

DESIGN CRITERIA

SPECIFIED LOADS:

TOP CH.	LL	=	23.3	PSF
	DL	=	3.0	PSF
BOT CH.	LL	=	0.0	PSF
	DL	=	7.3	PSF
TOTAL LOAD		=	33.6	PSF

SPACING = 24.0 IN. C/C

THIS TRUSS IS DESIGNED FOR RESIDENTIAL OR SMALL BUILDING REQUIREMENTS OF PART 9, NBCC 2010

THIS DESIGN COMPLIES WITH:
- PART 9 OF OBC 2012 , BCBC 2012 , ABC 2014
- CSA 086-09
- TPIC 2011

(55 % OF 27.2 P.S.F. G.S.L. PLUS 8.4 P.S.F. RAIN LOAD) EQUALS 23.3 P.S.F. SPECIFIED ROOF LIVE LOAD

ALLOWABLE DEFL.(LL)= L/360 (0.23")
CALCULATED VERT. DEFL.(LL) = L/ 999 (0.08")
ALLOWABLE DEFL.(TL)= L/360 (0.23")
CALCULATED VERT. DEFL.(TL) = L/ 401 (0.20")

CSI: TC=0.47/1.00 (B-C:1) , BC=0.30/1.00 (E-F:1) , WB=0.00/1.00 (B-E:1) , SSI=0.21/1.00 (D-E:1)

DOL LUMBER=1.00 NAIL=1.00 LS BEND=1.10 COMP=1.10 SHEAR=1.10 TENS= 1.10

COMPANION LIVE LOAD FACTOR = 0.50

TRUSS PLATE MANUFACTURER IS NOT RESPONSIBLE FOR QUALITY CONTROL IN THE TRUSS MANUFACTURING PLANT .

NAIL VALUES

PLATE	GRIP(DRY) (PSI) MAX	MIN	SHEAR (PLI) MAX	MIN	SECTION (PLI) MAX	MIN
MT20	618	354	1667	822	2284	1656

PLATE PLACEMENT TOL. = 0.250 inches

PLATE ROTATION TOL. = 5.0 Deg.

JSI GRIP= 0.29 (B) (INPUT = 0.90)
JSI METAL= 0.06 (F) (INPUT = 1.00)

READ ALL NOTES ON THIS PAGE AND ON ENGINEERING NOTE PAGE ENP-1. THIS NOTE PAGE IS AN INTEGRAL PART OF THIS DRAWING AS IT CONTAINS SPECIFICATIONS AND CRITERIA USED IN THE DESIGN OF THIS COMPONENT.

LICENSED PROFESSIONAL ENGINEER
N.A. EL-MASRI
PROVINCE OF ONTARIO
Jun 05, 2018

KOTT

BEARING ANCHORAGE BY TOE-NAILS FOR LATERAL CAPACITY

B37579H1

NAIL TYPE	LENGTH (IN)	DIAMETER (IN)	NAIL LATERAL CAPACITY (LB)	
			S-P-F	D. FIR
COMMON WIRE	3.00	0.144	132	147
	3.25	0.144	132	147
	3.50	0.160	159	177

NOTES:

1. Rafter and ceiling members may be anchored to top and bottom chords of girder truss by toe-nailing rafter and ceiling members to girder chords provided the reaction does not exceed the lateral capacities in the table. Hangers (specified by others) are required for reactions higher than the maximum toe-nail capacity. Reactions are based on factored loads.
2. Toe nail capacities shown in the table are for **one** toe-nail. For additional toe-nails multiply values in table by the number of toe-nails used. Toe-nail capacities take into account toe-nailing factor J_A in CSA O86-09, section 10.9.4.1.
3. For 9- 3/4 gauge 3.25" common wire gun nails (diameter = 0.120") use 3" common spiral nail values.
4. Maximum number of toe-nails allowed depends on the lumber size & species to be toe-nailed to supporting member and nail diameter, as shown in tables below.
5. Nail values in table are based on the following relative lumber densities: G = 0.42 (SPF), G = 0.49 (D. Fir).
6. Toe-nails shall be driven at approximately 1/3 the nail length from the edge of the joist/truss chord and driven at an angle of 30° to the grain of the member (See next page for nailing on bearing plate).
7. For loads due to **wind** the nail lateral capacity in this table may be multiplied by 1.15 (K_D factor).
8. Lumber must be dry (< 19% moisture content) at the time of nail installation.
9. Nail values in this table comply with CSA O86-09, section 10.9.4
10. This design is not valid after April 30, 2019.

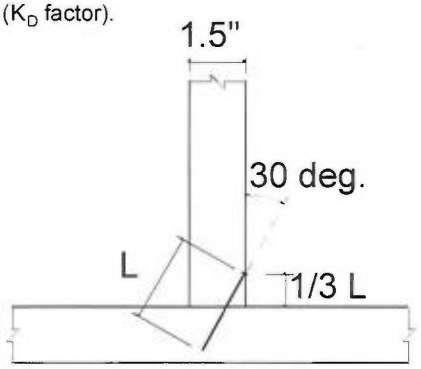

TOE-NAIL INSTALLATION

Nail type	Common wire	Common spiral	Common wire
Nail dia. (in)	0.160	0.152	0.144
	(3.5" nail)		(3" and 3.25" nail)
LUMBER SIZE	MAXIMUM NUMBER OF TOE-NAILS		
2X4 SPF	2	2	3
2X4 D. Fir	2	2	2
2X6 SPF	4	4	4
2X6 D. Fir	3	3	3

MiTek Canada Inc
100 Industrial Rd.
Bradford, Ontario L3Z 3G7

PEO
Certificate No. 10889485

LICENSED PROFESSIONAL ENGINEER
C. Cordogiannis
90553736
PROVINCE OF ONTARIO

April 26, 2017

BEARING ANCHORAGE BY TOE-NAILS FOR WIND LOADING

B37579H2

NAIL TYPE	LENGTH (IN)	DIAMETER (IN)	NAIL WITHDRAWAL CAPACITY (LB)	
			S-P-F	D. FIR
COMMON WIRE	3.00	0.144	30	42
	3.25	0.144	32	45
	3.50	0.160	38	52

Note: If using truss with D. Fir lumber and S-P-F bearing plate, use values in table for S-P-F.

NOTES:

1. Truss chord, rafter, or ceiling members may be anchored to bearing plate by toe-nails, provided that the actual factored uplift force due to **wind or earthquake** load does not exceed the withdrawal capacities in the table. Hangers (specified by others) are required for uplift forces that are higher than the maximum toe-nail withdrawal capacity.
2. Toe nail capacities shown in the table are for **one** toe-nail. For additional toe-nails multiply values in table by the number of toe-nails used. Toe-nail capacities take into account toe-nailing factor J_A in CSA O86-09, section 10.9.5.2.
3. For 9- 3/4 gauge 3.25" common wire gun nails (diameter = 0.120") use 3" common spiral nail values.
4. Maximum number of toe-nails allowed depends on the lumber size & species to be toe-nailed to supporting member and nail diameter, as shown in table above.
5. Nail values in table are based on the following relative lumber densities: G = 0.42(SPF), G = 0.49(D. Fir).
6. Toe-nails shall be driven at approximately 1/3 the nail length from the edge of the joist/truss chord and driven at an angle of 30° to the grain of the member (See drawing on detail B37579H1).
7. Lumber must be dry (< 19% moisture content) at the time of nail installation.
8. Nail values in this table comply with CSA O86-09, section 10.9.5
9. This design is not valid after April 30, 2019

Toe-nailing on 2x6 Bearing Plate

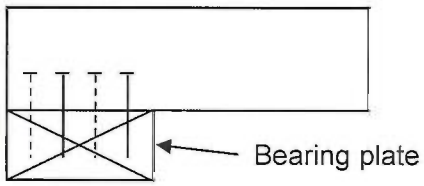

Elevation view

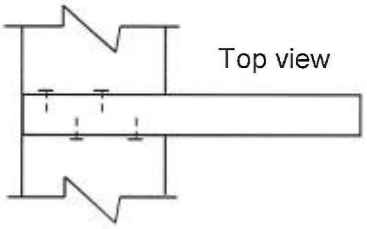

Top view

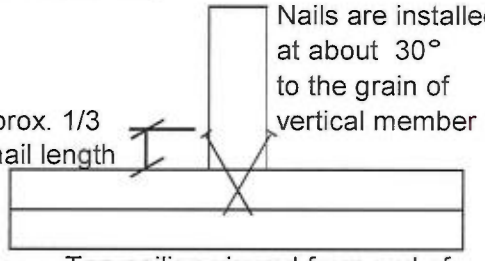

Toe-nailing viewed from end of joist or truss

Toe-nailing on 2x4 Bearing Plate

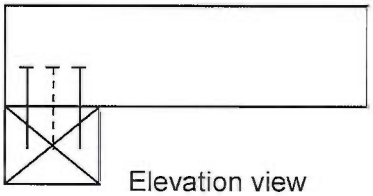

Elevation view

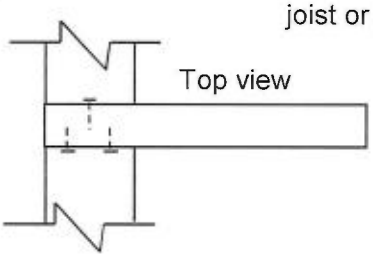

Top view

MiTek Canada Inc
100 Industrial Rd.
Bradford, Ontario L3Z 3G7

PEO
Certificate No. 10889485

LICENSED PROFESSIONAL ENGINEER
C. Cordogiannis
90553736
PROVINCE OF ONTARIO

April 26, 2017