CONSTRUCTION NOTES

ALL CONSTRUCTION TO ADHERE TO THESE PLANS AND SPEC'S AND TO CONFORM TO THE ONTARIO BUILDING CODE AND ALL OTHER APPLICABLE CODES AND AUTHORITIES HAVING JURISDICTION. THESE REQUIREMENTS ARE TO BE TAKEN AS MINIMUM SPECIFICATIONS. ONT. REG. 332/12

1. ROOF CONSTRUCTION
NO.210 (10.25kg/m2) ASPHALT SHINGLES, 11.1mm (7/16") ASPENITE SHEATHING WITH "H" CLIPS. APPROVED WOOD TRUSSES @ 600mm (24") O.C. MAX. APPROVED EAVES PROTECTION TO EXTEND 900mm (3'-0") FROM EDGE OF ROOF AND MIN. 300mm (12") BEYOND INNER FACE OF EXTERIOR WALL, (EAVES PROTECTION NOT REQ'D. FOR ROOF 8:12 OR GREATER)
38x89 (2"x4") TRUSS BRACING @ 1830mm (6'-0") O.C. AT BOTTOM CHORD. PREFIN. ALUM. EAVESTROUGH, FASCIA, RWL & VENTED SOFFIT. ATTIC VENTILATION 1:300 OF INSULATED CEILING AREA WITH 25% AT EAVES. AND 25% AT RIDGE (OBC 9.19.1.2)

2. FRAME WALL CONSTRUCTION (2"x6")
SIDING AS PER ELEVATION, APPROVED AIR BARRIER 11.1mm (7/16") EXTERIOR TYPE SHEATHING, 38x140 (2"x6") STUDS @ 400mm (16") O.C., RSI 3.87 (R22) INSULATION AND APPROVED VAPOUR BARRIER AND APPROVED CONT. AIR BARRIER, 13mm (1/2") INT. DRYWALL FINISH. SIDING TO BE MIN. 200mm (8") ABOVE FIN. GRADE

2A. FRAME WALL CONSTRUCTION (2"x4")
SIDING AS PER ELEVATION, APPROVED AIR BARRIER RSI 0.9 (R5) EXTERIOR RIGID INSULATION BOARD 38x89 (2"x4") STUDS @ 400mm (16") O.C., WITH APPROVED DIAGONAL WALL BRACING, RSI 3.35 (R19) INSULATION AND APPROVED VAPOUR BARRIER AND APPROVED CONT. AIR BARRIER, 13mm (1/2") INT. DRYWALL FINISH. SIDING TO BE MIN. 200mm (8") ABOVE FIN. GRADE

3. BRICK VENEER CONSTRUCTION (2"x6")
90mm (4") FACE BRICK 25mm (1") AIR SPACE, 22x180x0.76mm (7/8"x7"x0.03") GALV. METAL TIES @ 400mm (16") O.C. HORIZONTAL 600mm (24") O.C. VERTICAL. APPROVED AIR BARRIER 11.1mm (7/16") EXTERIOR TYPE SHEATHING, 38x140 (2"x6") STUDS @ 400mm (16") O.C., RSI 3.87 (R22) INSULATION AND APPROVED VAPOUR BARRIER WITH APPROVED CONTIN. AIR BARRIER. 13mm (1/2") INT. DRYWALL FINISH. **PROVIDE WEEP HOLES @ 800mm (32") O.C. BOTTOM COURSE AND OVER OPENINGS. PROVIDE THRU-WALL FLASHING UP MIN. 150mm (6") BEHIND** BUILDING PAPER. BRICK TO BE MIN. 150mm (6") ABOVE FINISH GRADE.

3A. BRICK VENEER CONSTRUCTION (2"x4")
90mm (4") FACE BRICK 25mm (1") AIR SPACE, 22x180x0.76mm (7/8"x7"x0.03") GALV. METAL TIES @ 400mm (16") O.C. HORIZONTAL 600mm (24") O.C. VERTICAL. APPROVED AIR BARRIER RSI 0.9 (R5) EXT. RIGID INSUL. BD., 38x89 (2"x4") STUDS @ 400mm (16") O.C. WITH APPROVED DIAGONAL WALL BRACING, RSI 3.35(R19) INSULATION AND APPROVED VAPOUR BARRIER WITH APPROVED CONT. AIR BARRIER, 13mm (1/2") INT. **DRYWALL FINISH. PROVIDE WEEP HOLES @ 800mm (32") O.C. BOTTOM COURSE AND OVER OPENINGS. PROVIDE THRU-WALL FLASHING UP MIN. 150mm (6") BEHIND BUILDING PAPER. BRICK TO BE MIN. 150MM(6")** ABOVE FINISH GRADE.

4. INTERIOR STUD PARTITIONS
FOR BEARING PARTITIONS 38x89 (2"x4") @ 400mm (16") O.C. FOR 2 STOREYS AND 300mm (12") O.C. FOR 3 STOREYS, NON-BEARING PARTITIONS 38x89 (2"x4") @ 600mm (24") O.C. PROVIDE 38x89 (2"x4") BOTTOM PLATE AND 2/38x89 (2/2"x4") TOP PLATE. 13mm (1/2") INT. DRYWALL BOTH SIDES OF STUDS, PROVIDE 38x140 (2"x6") STUDS/PLATES WHERE NOTED.

5. FOUNDATION WALL/FOOTINGS: -SEE OBC 9.15.3, 9.15.4
200mm (8") POURED CONC. FDTN. WALL 20MPa (3000psi) WITH BITUMENOUS DAMPPROOFING AND OPT. DRAINAGE LAYER. DRAINAGE LAYER REQ. WHEN BASEMENT INSUL. EXTENDS 900 (2'-11") BELOW FIN. GRADE. MAXIMUM POUR HEIGHT 2390 (7'-10") ON 500x155 (20"x6") CONTINUOUS KEYED CONC. FTG. BRACE FDTN. WALL PRIOR TO BACKFILLING. ALL FOOTINGS SHALL REST ON NATURAL UNDISTURBED SOIL OR COMPACTED ENGINEERED **FILL, WITH MIN. BEARING CAPACITY OF 75kPa OR** GREATER. IF SOIL BEARING DOES NOT MEET MIN. CAPACITY, ENGINEERED FOOTINGS ARE REQUIRED. MAX. FLOOR LIVE LOADOF 2.4kpa(50psf) PER FLOOR, AND MAX. LENGTH OF SUPPORTED JOISTS IS 4.9m (16'-1"). REFER TO SOILS REPORT FOR SOILS CONDITIONS AND BEARING CAPACITY.

6. 100mm (4") DIA. WEEPING TILE 150mm (6") CRUSHED STONE OVER AND AROUND WEEPING TILES.

7. BASEMENT SLAB OBC. 9.3.1.6.(1)(b) & 9.16.4.5.(1)
80mm (3")MIN. 25MPa (3600psi) CONC. SLAB ON 100mm (4") COARSE GRANULAR FILL, OR 15MPa. (2200psi) CONC. WITH DAMPPROOFING BELOW SLAB.

8. EXPOSED FLOOR TO EXTERIOR
PROVIDE RSI 5.46 (R31) INSULATION, APPROVED VAPOUR BARRIER AND CONTINUOUS AIR BARRIER, FINISHED SOFFIT.

9. ATTIC INSULATION OBC. 12.3.2.1 & 12.3.3.7
RSI 8.81 (R50) BLOWN IN ROOF INSULATION AND APPROVED VAPOUR BARRIER, 16mm (5/8") INT. DRYWALL FINISH OR APPROVED EQUAL.

10. ALL STAIRS/EXTERIOR STAIRS -OBC. TABLE 9.8.4.1-
UNIFORMITY & TOLERANCES FOR RISERS & TREADS
-BETWEEN ADJACENT TREADS & LANDINGS = 5mm
-BETWEEN TALLEST & SHORTEST RISER IN FLIGHT=10mm

MAX. RISE	= 200 (7-7/8")
MIN. RUN	= 210 (8-1/4")
MIN. TREAD	= 235 (9-1/4")
MAX. NOSING	= 25 (1")
MIN. HEADROOM	= 1950 (6'-5")
RAIL @ LANDING	**= 1070 (3'-6")**
RAIL @ STAIR	**= 865 (2'-11")**
MIN. STAIR WIDTH	= 860 (2'-10")

11. FINISHED RAILING ON PICKETS SPACED MAXIMUM 100mm (4") BETWEEN PICKETS. CLEARANCE BET. HANDRAIL AND SURFACE BEHIND IT TO BE 50mm(2") MIN. HANDRAILS TO BE CONT. EXCEPTING FOR NEWEL POST AT CHANGES OF DIRECTION.
GUARDS -OBC. 9.8.8.3.-

INTERIOR GUARDS:	=900mm (2'-11") MIN.
EXTERIOR GUARDS:	=1070mm (3'-6") MIN.
STAIR/LANDING GUARDS (@10M ABOVE ADJ. GROUND)	**=1500mm (4'-11") MIN.**

12. 38x89 (2"x4") SILL PLATE WITH 13mm (1/2") DIA. ANCHOR BOLTS 200mm (8") LONG, EMBEDDED MIN. 100mm (4") INTO CONC. @ 2400mm (7'-10") O.C. USE NON-SHRINK GROUT TO LEVEL SILL PLATE WHEN REQUIRED. (SEE OBC. 9.23.7)

13. RSI 3.52 (R20) INSULATION BLANKET OR BATTS WITH 38x89 (2"x4") STUD WALL, AND APPROVED VB TO 200 (8") ABOVE FIN. FLOOR LEVEL [OBC 12.3.2.4(3)] DAMPPROOF WITH BUILDING PAPER BETWEEN THE FOUNDATION WALL AND INSULATION UP TO GRADE LEVEL. NOTE: FULL HEIGHT INSULATION AT COLD CELLAR WALLS.

14. BEARING STUD PARTITION
38x89 (2"x4") STUDS @ 400mm (16") O.C. 38x89 (2"x4") SILL PLATE ON DAMPPROOFING MATERIAL, 13mm (1/2") DIA. ANCHOR BOLTS 200mm (8") LONG, EMBEDDED MIN. 100mm (4") INTO CONC. @ 2400mm (7'-10") O.C. 100mm (4") HIGH CONC. CURB ON 350x155 (14"x6") CONC. FOOTING. ADD HORIZ. BLOCKING AT MID-HEIGHT IF WALL IS UNFINISHED.

15. STEEL BASEMENT COLUMN (SEE O.B.C. 9.17.3.1, 9.17.3.4)
75mm (3") DIA. ADJUSTABLE STL. COL. CONFORMING TO CAN/CGSB-7.2M, AND WITH 150x150x9.5 (6"x6"x3/8") STL. PLATE TOP & BOTTOM. 910x910x300 (36"x36"x12") CONC. FOOTING ON UNDISTURBED SOIL OR ENGINEERED FILL CAPABLE OF SUSTAINING A PRESSURE OF 125 Kpa. MINIMUM AND AS PER SOILS REPORT.

15A. STEEL BASEMENT COLUMN (SEE O.B.C. 9.17.3.1, 9.17.3.4)
3"x3"x(.188) NON-ADJUSTABLE STL. COL. WITH 150x150x9.5 (6"x6"x3/8") STL. TOP & BOTTOM PLATE ON 910x910x300 (36"x36"x12"). CONC. FOOTING ON UNDISTURBED SOIL OR ENGINEERED FILL CAPABLE OF SUSTAINING A PRESSURE OF 125 Kpa. MIN. AND AS PER SOILS REPORT.

15B. STEEL COLUMN (SEE OBC. 9.17.3.1, 9.17.3.4)
3"x3"x(.188) NON-ADJUSTABLE STL. COL. TO BE ON 150x150x9.5 (6"x6"x3/8") STEEL TOP PLATE, & BOTTOM PLATE. BASE PLATE 120x250x12.5 (4 1/2"x10"x1/2") WITH 2-12mm DIA. x 300mm LONG x50mm HOOK ANCHORS (2-1/2"x12"x2") FIELD WELD COL. TO BASE PLATE.

15C. STEEL COLUMN (SEE OBC. 9.17.3.1, 9.17.3.4)
90mm(3-1/2") DIA.X4.78mm(.188) NON-ADJUSTABLE STL. COL. TO BE ON 150x150x9.5 (6"x6"x3/8") STEEL TOP PLATE, & BOTTOM PLATE. BASE PLATE 120x250x12.5 (4 1/2"x10"x1/2") WITH 2-12mm DIA. x 300mm LONG x50mm HOOK ANCHORS (2-1/2"x12"x2") FIELD WELD COL. TO BASE PLATE.

16. BEAM POCKET OR 300x150 (12"x6") POURED CONC. NIB WALLS. MIN. BEARING 90mm (3-1/2")

17. 19x64 (1"x3") CONTINUOUS WD. STRAPPING BOTH SIDES OF STEEL BEAM.

18. GARAGE SLAB: 100mm (4") 32MPa (4640psi) CONC. SLAB WITH 5-8% AIR ENTRAINMENT ON OPT. 100 (4") COARSE GRANULAR FILL WITH COMPACTED SUB-BASE OR COMPACTED NATIVE FILL SLOPE TO FRONT AT 1% MIN.

19. 13mm (1/2") GYPSUM BD. ON WALL AND CEILING BETWEEN HOUSE AND GARAGE, RSI 3.35 (R19) IN WALLS, RSI 4.4 (R25) IN CEILING. TAPE AND SEAL ALL JOINTS AIR TIGHT. FUME PROOF, PER OBC 9.10.9.16

20. DOOR AND FRAME GASPROOFED. DOOR EQUIPPED WITH SELF CLOSING DEVICE AND WEATHERSTRIPPING. PER OBC 9.10.13.15

21. WOOD STEP, C/W HANDRAIL & LANDING IF MORE THAN 3 RISERS, MAX.RISE 200mm (7-7/8") MIN.TREAD 250mm (9-1/2") SEE OBC 9.8.9.2, 9.8.9.3 & 9.8.10

22. CAPPED DRYER EXHAUST VENTED TO EXTERIOR. (USE 100mm(4") DIA. SMOOTH WALL VENT PIPE) OBC 6.2.3.8.(7)

23. ATTIC ACCESS HATCH 545x610 (21.5"x24") WITH A MIN. AREA OF 3.44 SF WITH WEATHERSTRIPPING RSI 7.0 (R40) RIGID INSUL. BACKING OBC 9.19.2

24. FIREPLACE CHIMNEYS -OBC. 9.21.-
TOP OF FIREPLACE CHIMNEY SHALL BE 915mm (3'-0") ABOVE THE HIGHEST POINT AT WHICH IT COMES IN CONTACT WITH THE ROOF AND 610mm (2'-0") ABOVE THE ROOF SURFACE WITHIN A HORIZ. DISTANCE OF 3050mm (10'-0") FROM THE CHIMNEY.

25. LINEN CLOSET, 4 SHELVES MIN. 350mm (14") DEEP.

26. MECHANICAL EXHAUST FAN, VENTED TO EXTERIOR, TO PROVIDE AT LEAST ONE AIR CHANGE PER HOUR.

27. STEEL BEARING PLATE FOR MASONRY WALLS
280x280x16 (11"x11"x5/8") STL. PLATE FOR STL BEAMS AND 280x280x12 (11"x11"x1/2") STL. PLATE FOR WOOD BEAMS BEARING ON CONC. BLOCK PARTYWALL, ANCHORED WITH 2-19mm (3/4") x 200mm (8") LONG GALV. ANCHORS WITHIN SOLID BLOCK COURSE. LEVEL WITH NON-SHRINK GROUT.
OR
SOLID WOOD BEARING FOR WOOD STUD WALLS
SOLID BEARING TO BE AT LEAST AS WIDE AS THE SUPPORTED MEMBER. SOLID WOOD BEARING COMPRISED OF BUILT-UP WOOD STUDS TO BE CONSTRUCTED IN ACCORDANCE WITH OBC. 9.17.4.2 (2).

28. U.L.C. RATED CLASS "B" VENT 610mm (2'-0") ABOVE THE POINT IN CONTACT WITH THE ROOF FOR SLOPES UP TO 9/12, REFER TO THE ONTARIO GAS UTILIZATION CODE.

29. 3-38x140 (3-2"x6") BUILT-UP-POST ON METAL BASE SHOE ANCHORED TO CONC. WITH 12.7 DIA. BOLT, 610x610x300 (24"x24"x12") CONC. FTG. OBC 9.17.4

30. STEP FOOTINGS: MIN. HORIZ. STEP = 600mm (23-5/8"). MAX. VERT. STEP = 600mm (23-5/8") FOR FIRM SOILS.

31. PORCH SLAB/STEPS:
130 mm (5") MIN. CONC. 32 MPa SLAB AIR ENTRAINMENT MIN. 5 TO 8% AT 28 DAYS, 10 M BARS @ 250 O/C EACH WAY 10M DOWELS @400 (16") O.C. 2-15m IN THICKENED AREA FROM WALL TO SLAB ALL SIDES (SEE DETAIL)

32. DIRECT VENT FURNACE TERMINAL MIN. 900mm (36") FROM A GAS REGULATOR. MIN. 300mm (12") ABOVE FIN. GRADE, FROM ALL OPENINGS, EXHAUST AND INTAKE VENTS. HRV INTAKE TO BE A MIN. OF 1830mm (6'-0") FROM ALL EXHAUST TERMINALS. REFER TO GAS UTILIZATION CODE.

33. DIRECT VENT GAS FIREPLACE. VENT TO BE A MINIMUM 300mm (12") FROM ANY OPENING AND ABOVE FIN. GRADE. REFER TO GAS UTILIZATION CODE.

34. SUBFLOOR, JOIST STRAPPING AND BRIDGING
-16mm (5/8") T & G SUBFLOOR ON WOOD FLOOR JOISTS. FOR CERAMIC TILE APPLICATION **(* SEE OBC 9.30.6.1 *)**
6mm (1/4") PANEL TYPE UNDERLAY UNDER RESILIENT & PARQUET FLOORING. (-* SEE OBC 9.30.2 *)
ALL JOISTS TO BE BRIDGED WITH 38x38 (2"x2") CROSS BRACING OR SOLID BLOCKING @ 2100mm (6'-11") O.C. MAX. ALL JOISTS TO BE STRAPPED WITH 19x64 (1"x3") @ 2100mm (6'-11") O.C. UNLESS A PANEL TYPE CEILING FINISH IS APPLIED. (SEE OBC 9.23.9.4)

35. EXPOSED BUILDING FACE -OBC. 9.10.14.5-
EXTERIOR WALLS TO HAVE A FIRE RESISTANCE RATING OF NOT LESS THAN 45 min. WHERE LIMITING DISTANCE IS LESS THAN 1.2M (3'-11"). WHERE THE LIMITING DISTANCE IS LESS THAN 600mm (1'-11") THE EXPOSING FACE SHALL BE CLAD IN NON-COMBUSTIBLE MATERIAL.

36. COLD CELLAR PORCH SLAB (OBC 9.39)
FOR MAX. 2500mm (8'-2") PORCH DEPTH, (SHORTEST DIMENSION)
125mm (4 7/8") 32MPa (4640psi) CONC. SLAB WITH 5-8% AIR ENTRAINMENT. REINF. WITH 10M BARS @ 200mm (7 7/8") O.C. EACH WAY IN BOTTOM THIRD OF SLAB, MIN. 30mm(1 1/4") COVER, 600X600mm
23 5/8"x23 5/8") 10M DOWELS @ 600mm (23 5/8") O.C., ANCHORED IN PERIMETER FDTN. WALLS. SLOPE SLAB MIN. 1.0% FROM HOUSE WALL. SLAB TO HAVE MIN. 75mm(3") BEARING IN FDN. WALLS. PROVIDE (L7) LINTELS OVER CELLAR DOOR & WITH 100mm(4") END BEARING.

37. THE FDTN. WALL SHALL NOT BE REDUCED TO LESS THAN 90mm (3-1/2") THICK TO A MAX. DEPTH OF 350mm (13-3/4") AND SHALL BE TIED TO THE FACING MATERIAL WITH METAL TIES SPACED 200mm (8") O.C. VERTICALLY AND 900mm (36") O.C. HORIZONTALLY. FILL SPACE BETWEEN WALL AND FACING SOLID WITH MORTAR. (SEE OBC 9.15.4.7)

38. CONVENTIONAL ROOF FRAMING
38x140 (2"x6") RAFTERS @ 400mm (16"O.C.), FOR MAX. 11'-7" SPAN.
38x184 (2"x8") RIDGE BOARD. 38x89 (2"x4") COLLAR TIES AT MIDSPANS. CEILING JOISTS TO BE 38x89 (2"x4") @ 400mm (16") O.C. FOR MAX. 2830mm (9'-3") SPAN & 38x140 (2"x6") @ 400mm (16") O.C. FOR MAX. 4450mm (14'-7") SPAN. RAFTERS FOR BUILT-UP ROOF TO BE 38x89 (2"x4") @ 600mm (24") O.C. WITH A 38x89 (2"x4") CENTRE POST TO THE TRUSS BELOW, LATERALLY BRACED AT 1800mm (6'-0") O.C. VERTICALLY.

42. EXTERIOR WALLS FOR WALK-OUT CONDITIONS
THE EXTERIOR BASEMENT STUD WALL TO BE 38x140 (2"x6") STUDS @ 16" o.c. OR 38x89 (2"x4") STUDS @ 12"o.c.

43. FLASHING FOR EXT. WALL OPENINGS (O.B.C.9.27.3.8.(3)

39. TWO STOREY VOLUME SPACES
FOR HIGH WALL UP TO 18'=0":
CONSTRUCTION: 2"X6" SPACING AS INDICATED
BLOCKING: 3 ROWS @ 4'-6" O/C ±
SHEATHING: 7/16" ASPENITE
NAILING: 2" STAPLES BET. 4" AND 6" O/C ALONG STUDS
STUD SPACING WITH VARIOUS FINISHES:
1. SIDING-METAL OR VINYL- 2"X6" @16" O/C
2. STUCCO -2"X6" @16" O/C
3. BRICK TO 4'-0" -2"X6" @16" O/C
4. BRICK FULL HEIGHT -2"X6" @12" O/C

40. TYPICAL 1 HOUR RATED PARTYWALL. REFER TO DETAILS FOR TYPE AND SPECIFICATIONS.

41. STRIP FOOTING SUPPORTING EXTERIOR WALLS
-SEE OBC 9.15.3.
-ASSUMING MASONRY VENEER CONSTRUCTION, MAX. FLOOR LIVE LOAD OF 2.4kPa. (50psf.) PER FLOOR, AND MAX. LENGTH OF SUPPORTED FLOOR JOISTS IS 4.9m (16'-1").
THE STRIP FOOTING SIZE IS AS FOLLOWS:

2 STOREY (STANDARD)	500x155 (20"x6")
2 STOREY (WALK-OUT BASEMENT)	545x175 (22"x7")

(UNLESS OTHERWISE NOTED ON PLAN)

44. SUMP PITS (WHERE REQ'D) SEE O.B.C. 9.14.5.2
-MUST BE SEALED AS PER 9.25.3.3.(16)

WINDOWS:
1) MINIMUM BEDROOM WINDOW -OBC. 9.9.10.
AT LEAST ONE BEDROOM WINDOW ON A GIVEN FLOOR IS TO HAVE MIN. 0.35m2 UNOBSTRUCTED GLAZED OR OPENABLE AREA WITH MIN. CLEAR WIDTH OF 380 mm (1'-3").
2) WINDOW GUARDS -OBC. 9.8.8.1.
A GUARD IS REQUIRED WHERE THE TOP OF THE WINDOW SILL IS LOCATED LESS THAN 480mm (1'-7") ABOVE FIN. FLOOR AND THE DISTANCE FROM THE FIN. FLOOR TO THE ADJACENT GRADE IS GREATER THAN 1800mm (5'-11")
3) ALL WINDOWS TO COMPLY WITH THERMAL RESISTANCE REQUIREMENTS STATED IN OBC 12.3.2.6. **AND SB12 PRESCRIPTIVE COMPLIANCE PACKAGE, AND OBC 9.5, 9.6, 9.7**

GENERAL
1) MECHANICAL VENTILATION IS REQUIRED TO PROVIDE 0.3 AIR CHANGES PER HOUR AVERAGED OVER 24 HOURS. SEE MECHANICAL DRAWINGS.
2) ALL DOWNSPOUTS TO DRAIN AWAY FROM THE BUILDINGAS PER OBC 9.26.18.2 AND MUN. STANDARDS.
3) ALL WINDOW WELLS TO DRAIN TO FOOTING LEVEL PER OBC 9.14.6.3 CHECK WITH LOCAL AUTHORITY.
4) PROVIDE STUD WALL REINFORCEMENT FOR FUTURE GRAB BARS IN BATHROOMS. REINF. OF STUD WALLS SHALL BE INSTALLED ADJACENT TO WATER CLOSETS AND SHOWER OR BATHTUB IN MAIN BATHROOM, SEE OBC 9.5.2.3., 3.8.3.8.(1)(d) & 3.8.3.13.(1)(f).

LUMBER:
1) ALL LUMBER SHALL BE SPRUCE NO.2 GRADE, UNLESS NOTED OTHERWISE.
2) STUDS SHALL BE STUD GRADE SPRUCE, UNLESS NOTED OTHERWISE.
3) LUMBER EXPOSED TO THE EXTERIOR TO BE SPRUCE No.2 GRADE PRESSURE TREATED OR CEDAR, UNLESS NOTED OTHERWISE.
4) ALL LAMINATED VENEER LUMBER (L.V.L.) BEAMS, GIRDER TRUSSES, AND METAL HANGER CONNECTIONS SUPPORTING ROOF FRAMING TO BE DESIGNED & CERTIFIED BY TRUSS MANUF.
5) LVL BEAMS SHALL BE 2.0E WS MICRO-LAM LVL (Fb=2800psi.MIN.) OR EQUIVALENT. NAIL EACH PLY OF LVL WITH 89mm (3 1/2") LONG COMMON WIRE NAILS @ 300mm (12") O.C. STAGGERED IN 2 ROWS FOR 184, 240 & 300mm (7 1/4",9 1/2", 11 7/8") DEPTHS AND STAGGERED IN 3 ROWS FOR GREATER DEPTHS AND FOR 4 PLY MEMBERS ADD 13mm (1/2") DIA. GALVANIZED BOLTS BOLTED AT MID-DEPTH OF BEAM @ 915mm (3'-0") O.C.
6) PROVIDE TOP MOUNT BEAM HANGERS TYPE "SCL" MANUFACTURED BY MGA CONNECTOR LTD. Tel. (905) 642-3175 OR EQUAL FOR ALL LVL BEAM TO BEAM CONNECTIONS UNLESS OTHERWISE NOTED.
7) JOIST HANGERS: PROVIDE METAL HANGERS FOR ALL JOISTS AND BUILT-UP WOOD MEMBERS INTERSECTING FLUSH BUILT-UP WOOD MEMBERS.
8) WOOD FRAMING NOT TREATED WITH A WOOD PRESERVATIVE, IN CONTACT WITH CONCRETE, SHALL BE SEPARATED FROM THE CONCRETE BY AT LEAST 2 mil. POLYETHYLENE FILM, No. 50 (45lbs.) ROLL ROOFING OR OTHER DAMPPROOFING MATERIAL, EXCEPT WHERE THE WOOD MEMBER IS ST LEAST 150mm (6") ABOVE THE GROUND.

STEEL:
1) STRUCTURAL STEEL SHALL CONFORM TO CAN/CSA-G40-21 GRADE 300W. HOLLOW STRUCTURAL SECTIONS SHALL CONFORM TO CAN/CSA-G40-21 GRADE 350W CLASS "H".
2) REINFORCING STEEL SHALL CONFORM TO CSA-G30-18M GRADE 400R.

WOOD LINTELS AND BUILT-UP WOOD BEAMS

L1	2/38 x 184 (2/2" x 8") SPR.#2
B1	3/38 x 184 (3/2" x 8") SPR.#2
B2	4/38 x 184 (4/2" x 8") SPR.#2
L3	2/38 x 235 (2/2" x 10") SPR.#2
B3	3/38 x 235 (3/2" x 10") SPR.#2
B4	4/38 x 235 (4/2" x 10") SPR.#2
L5	2/38 x 286 (2/2" x 12") SPR.#2
B5	3/38 x 286 (3/2" x 12") SPR.#2
B6	4/38 x 286 (4/2" x 12") SPR.#2

LOOSE STEEL LINTELS

L7	90 x 90 x 6.0L (3-1/2" x 3-1/2" x 1/4"L)
L8	90 x 90 x 8.0L (3-1/2" x 3-1/2" x 5/16"L)
L9	100 x 90 x 8.0L (4" x 3-1/2" x 5/16"L)
L10	125 x 90 x 8.0L (5" x 3-1/2" x 5/16"L)
L11	125 x 90 x 10.0L (5" x 3-1/2" x 3/8"L)
L12	150 x 100 x 10.0L (6"x 4" x 3/8"L)

LAMINATED VENEER LUMBER (LVL) BEAMS

LVL1	2-1 3/4"x7 1/4" (2-45x184)
LVL2	3-1 3/4"x7 1/4" (3-45x184)
LVL3	4-1 3/4"x7 1/4" (4-45x184)
LVL4	2-1 3/4"x9 1/2" (2-45x240)
LVL5	3-1 3/4"x9 1/2" (3-45x240)
LVL6	2-1 3/4"x11 7/8" (2-45x300)
LVL7	3-1 3/4"x11 7/8" (3-45x300)

STEEL COLUMNS (UNLESS NOTED OTHERWISE)

TP	= (1) 3" DIA. ADJ. ST. POST
2TP	= (2) 3" DIA. ADJ. ST. POSTS
3TP	= (3) 3" DIA. ADJ. ST. POSTS

DOOR SCHEDULE (UNLESS NOTED ON PLAN)

1.	EXTERIOR DOOR	815 x 2030 x 45 (2'-8" x 6'-8" x 1-3/4") INSULATED MIN. RSI 0.7 (R4)
1A	EXTERIOR DOOR	865 x 2030 x 45 (2'-10" x 6'-8" x 1-3/4") INSULATED MIN. RSI 0.7 (R4)
1B	EXTERIOR DOOR	915 x 2030 x 45 (3'-0" x 6'-8" x 1-3/4") INSULATED MIN. RSI 0.7 (R4)
2.	INTERIOR DOOR	815 x 2030 x 35 (2'-8" x 6'-8" x 1-3/8")
2A	EXTERIOR DOOR	815 x 2030 x 45 (2'-8" x 6'-8" x 1-3/4") 20 MIN. RATED DOOR AND FRAME, WITH APPROVED SELF CLOSING DEVICE.

(NOTE: EXTERIOR DOOR TO CONFORM TO OBC 9.5, 9.6, 9.7)

3.	INTERIOR DOOR	760 x 2030 x 35 (2'-6" x 6'-8" x 1-3/8")
3A	INTERIOR DOOR	710 x 2030 x 35 (2'-4" x 6'-8" x 1-3/8")
4.	INTERIOR DOOR	610 x 2030 x 35 (2'-0" x 6'-8" x 1-3/8")
4A	INTERIOR DOOR	660 x 2030 x 35 (2'-2" x 6'-8" x 1-3/8")
5.	INTERIOR DOOR	460 x 2030 x 35 (1'-6" x 6'-8" x 1-3/8")

LEGEND

	CLASS 'B' VENT
	EXHAUST VENT
	DUPLEX OUTLET (12" HIGH)
42"	DUPLEX OUTLET (HEIGHT AS NOTED A.F.F)
WP	WEATHERPROOF DUPLEX OUTLET
	HEAVY DUTY OUTLET
	POT LIGHT
	LIGHT FIXTURE (CEILING MOUNTED)
PC	LIGHT FIXTURE (PULL CHAIN)
	LIGHT FIXTURE (WALL MOUNTED)
	SWITCH
FD	FLOOR DRAIN
HB	HOSE BIB
DJ	DOUBLE JOIST
TJ	TRIPLE JOIST
LVL	LAMINATED VENEER LUMBER
PL	POINT LOAD FROM ABOVE
P.T.	PRESSURE TREATED LUMBER
G.T.	GIRDER TRUSS BY ROOF TRUSS MANUF.
F.A.	FLAT ARCH
C.A.	CURVED ARCH
M.C.	MEDICINE CABINET
	CONC. BLOCK WALL
	DOUBLE VOLUME WALL SEE NOTE 39.
SB	SOLID WOOD BEARING

SB2 - 2 MEMBER BUILT-UP STUD
SB3 - 3 MEMBER BUILT-UP STUD
SB4 - 4 MEMBER BUILT-UP STUD

NOTE: SOLID BEARING TO BE AS WIDE AS SUPPORTED MEMBER. SOLID BEARING TO BE A MINIMUM OF P2(ONE CONTINOUS STUD AND ONE JACK STUD, UNLESS OTHERWISE NOTED ON PLAN.

■ S.A. SMOKE ALARM (REFER TO OBC 9.10.19.)
PROVIDE 1 PER FLOOR, NEAR THE STAIRS CONNECTING THE FLOOR LEVEL. ONE PER SLEEPING ROOMS, INCLUDING HALLWAYS BE CONNECTED TO AN ELECTRICAL CIRCUIT AND INTERCONNECTED TO ACTIVATE ALL ALARMS WHEN ONE ALARM SOUNDS. LOCATED AS PER MANUF. RECOMMENDATION

CMA CARBON MONOXIDE ALARM (OBC 9.33.4)
WHERE A FUEL-BURNING APPLIANCE IS INSTALLED IA A DWELLING UNIT, A CARBON MONOXIDE ALARM CONFORMING TO CAN/CSA-6.19, CSA 6.19 OR UL2034 SHALL BE INSTALLED ADJACENT TO EACH SLEEPING AREA. CARBON MONOXIDE ALARM(S) SHALL BE PERMANENTLY WIRED SO THAT ITS ACTIVATION WILL ACTIVATE ALL CARBON MONOXIDE ALARMS AND BE EQUIPPED WITH AN ALARM THAT IS AUDIBLE WITHIN BEDROOMS WHEN THE INTERVENING DOORS ARE CLOSED.

SOIL GAS CONTROL (OBC 9.13.1. & 9.13.4. & SB9)
PROVIDE CONSTRUCTION TO PREVENT LEAKAGE OF SOIL GAS INTO THE BUILDING IF REQUIRED. (SEE ALSO O.B.C. 9.1.1.7.(1)

CONTRACTOR MUST VERIFY ALL DIMENSIONS ON THE JOB AND REPORT ANY DISCREPANCY TO THE ARCHITECT BEFORE PROCEEDING WITH THE WORK.
ALL DRAWINGS AND SPECIFICATIONS ARE INSTRUMENTS OF SERVICE AND THE PROPERTY OF THE ARCHITECT WHICH MUST BE RETURNED AT THE COMPLETION OF THE WORK. ALL DRAWINGS TO BE USED FOR CONSTRUCTION ONLY AFTER BUILDING PERMIT HAS BEEN ISSUED.

PHOENIX HOMES

Viljoen Architect Inc.
300 A Wilson Avenue
North York, Ontario
M3H 1S8
TEL: (416) 630-2255
FAX: (416) 630-4782

MERKHET - 2008

SITE: WHITE TAIL RIDGE

LOT NUMBER: 19

CIVIC ADDRESS: 176 ANTLER COURT

No.	Description	Date	By
6	REV. AS PER CONST. SUMMARY	JUL28-14	SD
5	REV. AS PER CONST. SUMMARY	JUL15-14	SD
4	ISSUED FOR B.E.P. ONLY	JUN26-14	SD
3	SUNKEN LAUNDRY PER PURCHASER	JUNE13-14	SD
2	ISSUED FOR B.E.P. ONLY	JUNE5-14	SD
1	ISSUED FOR PERMIT APPLICATION	MAY5-14	SD

REVISIONS

footprint:	S2
sht. title:	GENERAL NOTES
drawn by:	IV
checked by:	.
date:	JULY 2007
scale:	AS SHOWN
sheet no:	1/1

NOTE: PROVIDE 2-10M TOP AND BOTTOM BARS ALL AROUND FOUNDATION WALLS (UNLESS NOTED OTHERWISE)

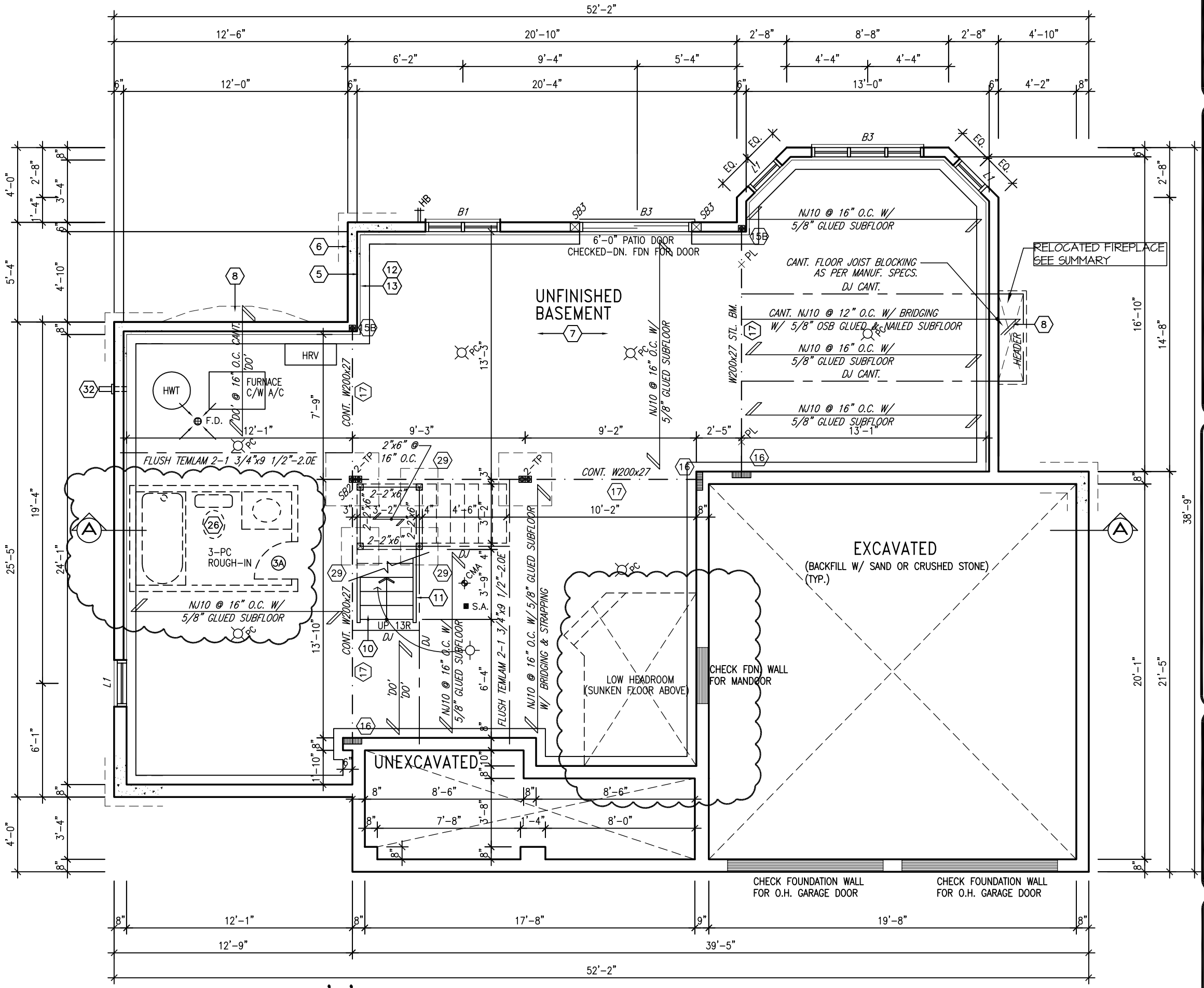

BASEMENT PLAN 'A' (WALK-OUT)

NOTE:
ALL LVL'S SUPPORTING FLOOR LOADS ARE TO BE SPECIFIED BY THE FLOOR TRUSS MANUFACTURER.

NOTE:
FLOOR FRAMING INFO REFER TO KOTT SHOP DRAWINGS FOR ALL TRUSS-JOIST INFORMATION AND DETAILS. UNLESS OTHERWISE NOTED.

footprint:	S2-A
sht. title:	BASEMENT-A
drawn by:	MB
checked by:	OF
date:	FEB. 2001
scale:	3/16"=1'
sheet no:	1A / 6

No.	Description	Date	By
6	REV. AS PER CONST. SUMMARY	JUL28-14	SD
5	REV. AS PER CONST. SUMMARY	JUL15-14	SD
4	ISSUED FOR B.E.P. ONLY	JUN26-14	SD
3	SUNKEN LAUNDRY PER PURCHASER	JUNE13-14	SD
2	ISSUED FOR B.E.P. ONLY	JUNE5-14	SD
1	ISSUED FOR PERMIT APPLICATION	MAY5-14	SD

REVISIONS

MERKHET-2008-A

SITE: WHITE TAIL RIDGE

LOT NUMBER: 19

CIVIC ADDRESS: 1716 ANTLER COURT

Viljoen Architect Inc.
300 A Wilson Avenue
North York, Ontario
M3H 1S8
TEL: (416) 630-2255
FAX: (416) 630-4782

PHOENIX HOMES

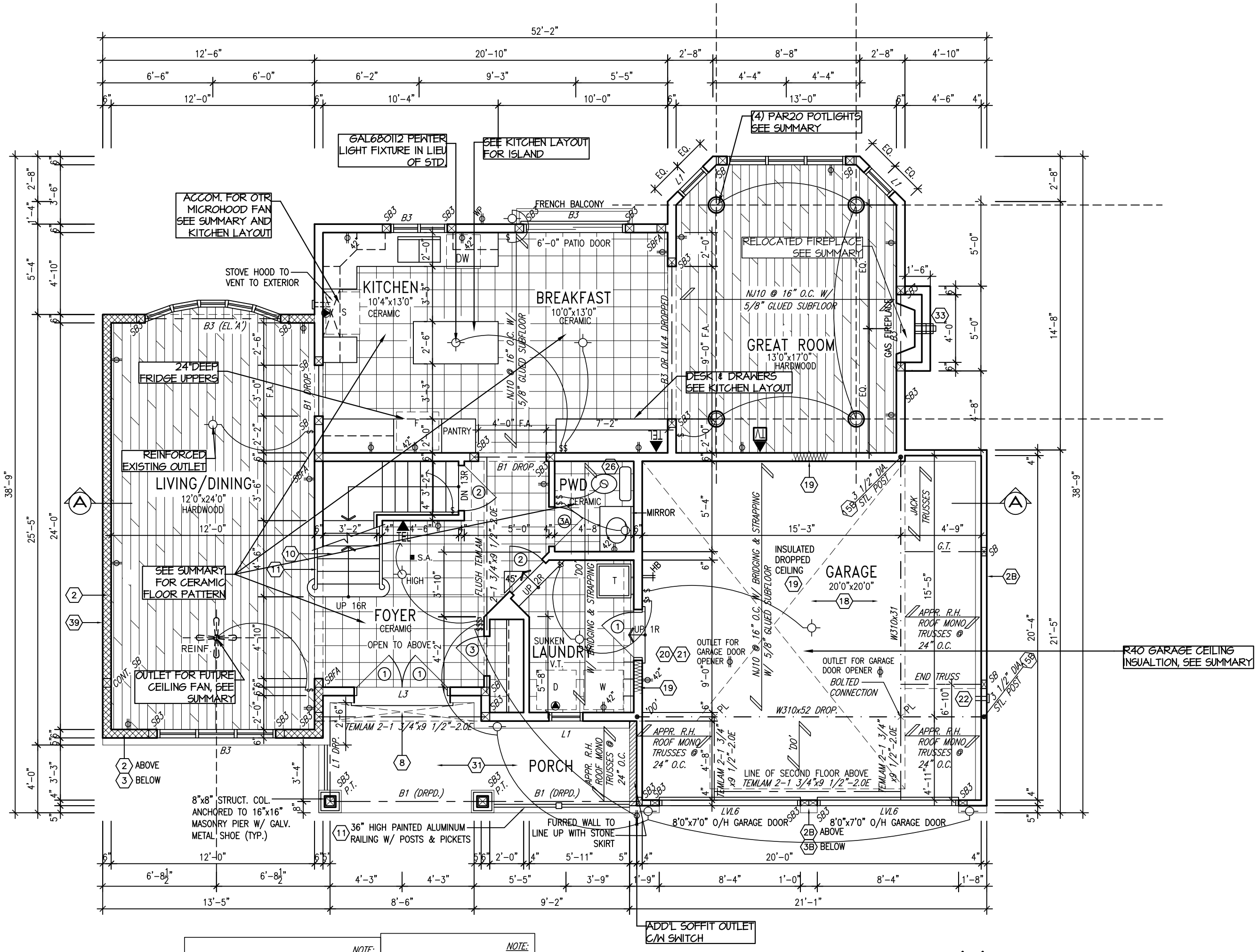

GROUND FLOOR PLAN 'A'

NOTE:
ALL SBs ARE SB2 U/ NOTED

NOTE:
FLOOR FRAMING INFO REFER TO KOTT SHOP DRAWINGS FOR ALL TRUSS-JOIST INFORMATION AND DETAILS. UNLESS OTHERWISE NOTED.

NOTE:
ALL LVL'S SUPPORTING FLOOR LOADS ARE TO BE SPECIFIED BY THE FLOOR TRUSS MANUFACTURER.

footprint:	S2-A
sht. title:	GROUND FLOOR -A
drawn by:	MB
checked by:	OF
date:	FEB. 2007
scale:	3/16"=1'
sheet no:	2A / 6

No.	Description	Date	By
6	REV. AS PER CONST. SUMMARY	JUL28-14	SD
5	REV. AS PER CONST. SUMMARY	JUL15-14	SD
4	ISSUED FOR B.E.P. ONLY	JUN26-14	SD
3	SUNKEN LAUNDRY PER PURCHASER	JUNE13-14	SD
2	ISSUED FOR B.E.P. ONLY	JUNE5-14	SD
1	ISSUED FOR PERMIT APPLICATION	MAY5-14	SD

REVISIONS

MERKHET-2008-A

SITE: WHITE TAIL RIDGE

LOT NUMBER: 19

CIVIC ADDRESS: 1176 ANTLER COURT

Viljoen Architect Inc.
300 A Wilson Avenue
North York, Ontario
M3H 1S8
TEL: (416) 630-2255
FAX: (416) 630-4782

PHOENIX HOMES

NOTE:
ROOF TRUSS INFORMATION REFER TO ROOF TRUSS SHOP DRAWINGS FOR ALL ROOF FRAMING INFORMATION UNLESS OTHERWISE NOTED.

NOTE: ROOF FRAMING INFORMATION
ALL LAMINATED VENEER LUMBER (LVL) BEAMS, BUILT-UP BEAMS, GIRDER TRUSSES AND METAL HANGER CONNECTIONS SUPPORTING ROOF FRAMING TO BE DESIGNED AND CERTIFIED BY ROOF TRUSS MANUFACTURER. REFER TO ROOF TRUSS SHOP DRAWINGS FOR ALL ROOF FRAMING INFORMATION UNLESS OTHERWISE NOTED ON ARCHITECTURAL DRAWINGS.

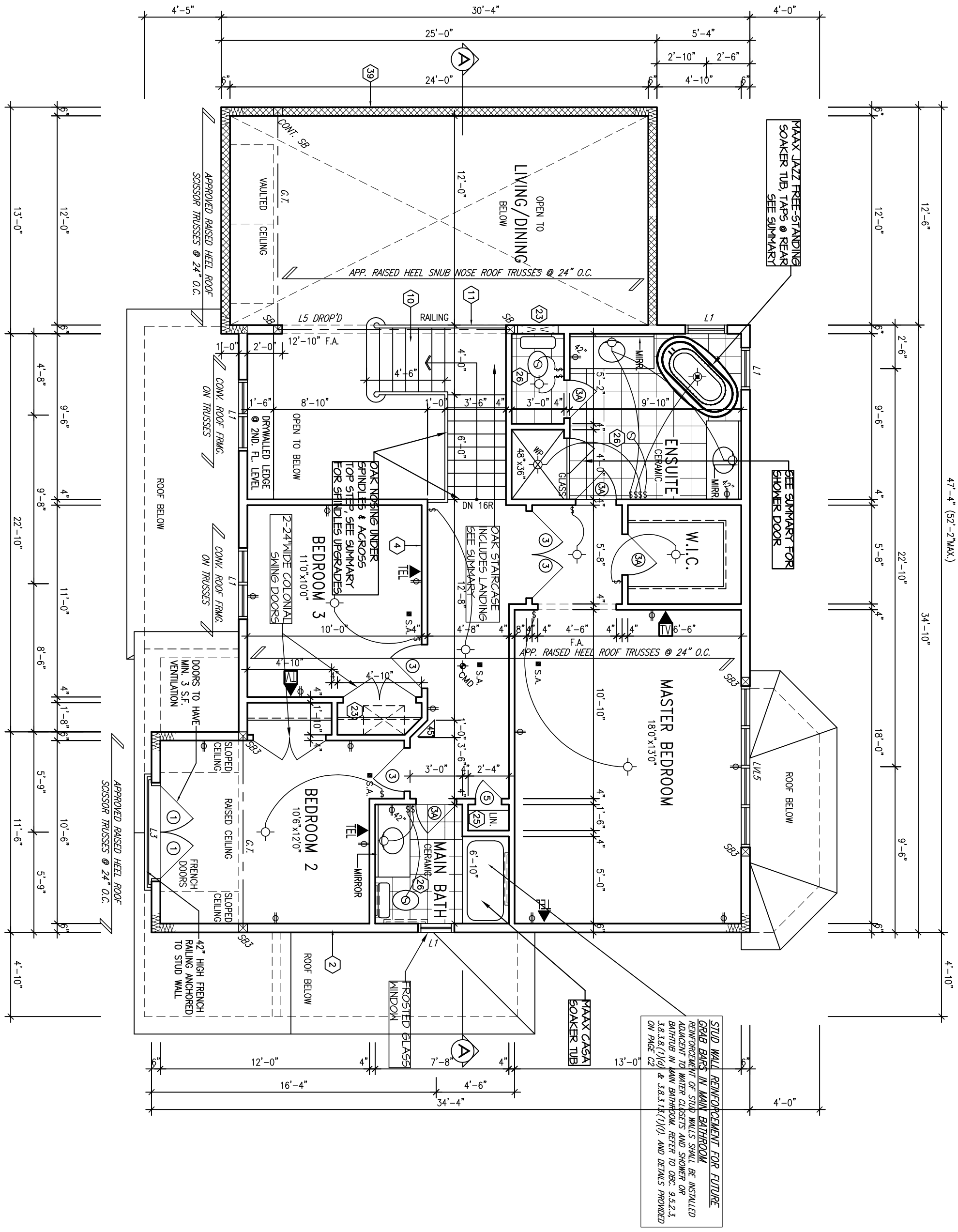

SECOND FLOOR PLAN (3 BEDROOM) 'A'

PHOENIX HOMES

Viljoen Architect Inc.
300 A Wilson Avenue
North York, Ontario
M3H 1S8
TEL: (416) 630-2255
FAX: (416) 630-4782

MERKHET-2008-A

SITE: WHITE TAIL RIDGE

LOT NUMBER: 19

CIVIC ADDRESS: 176 ANTLER COURT

No.	Description	Date	By
6	REV. AS PER CONST. SUMMARY	JUL28-14	SD
5	REV. AS PER CONST. SUMMARY	JUL15-14	SD
4	ISSUED FOR B.E.P. ONLY	JUN26-14	SD
3	SUNKEN LAUNDRY PER PURCHASER	JUNE13-14	SD
2	ISSUED FOR B.E.P. ONLY	JUNE5-14	SD
1	ISSUED FOR PERMIT APPLICATION	MAY5-14	SD

REVISIONS

footprint:	S2-A
sht. title:	ALT. SECOND FLOOR-A
drawn by:	MB
checked by:	OF
date:	FEB. 2007
scale:	3/16"=1'
sheet no:	3A.4 / 6

REAR ELEVATION 'A' (3 BEDRM. W/O)

NOTE:
REFER TO FRONT ELEVATION FOR TYPICAL NOTES & INFORMATION

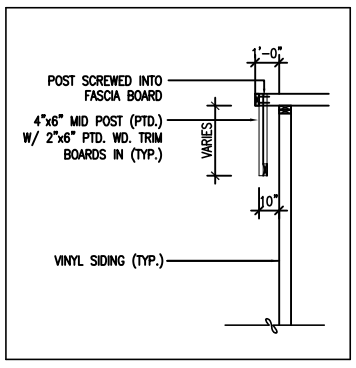

GABLE DEOCR. DETAIL

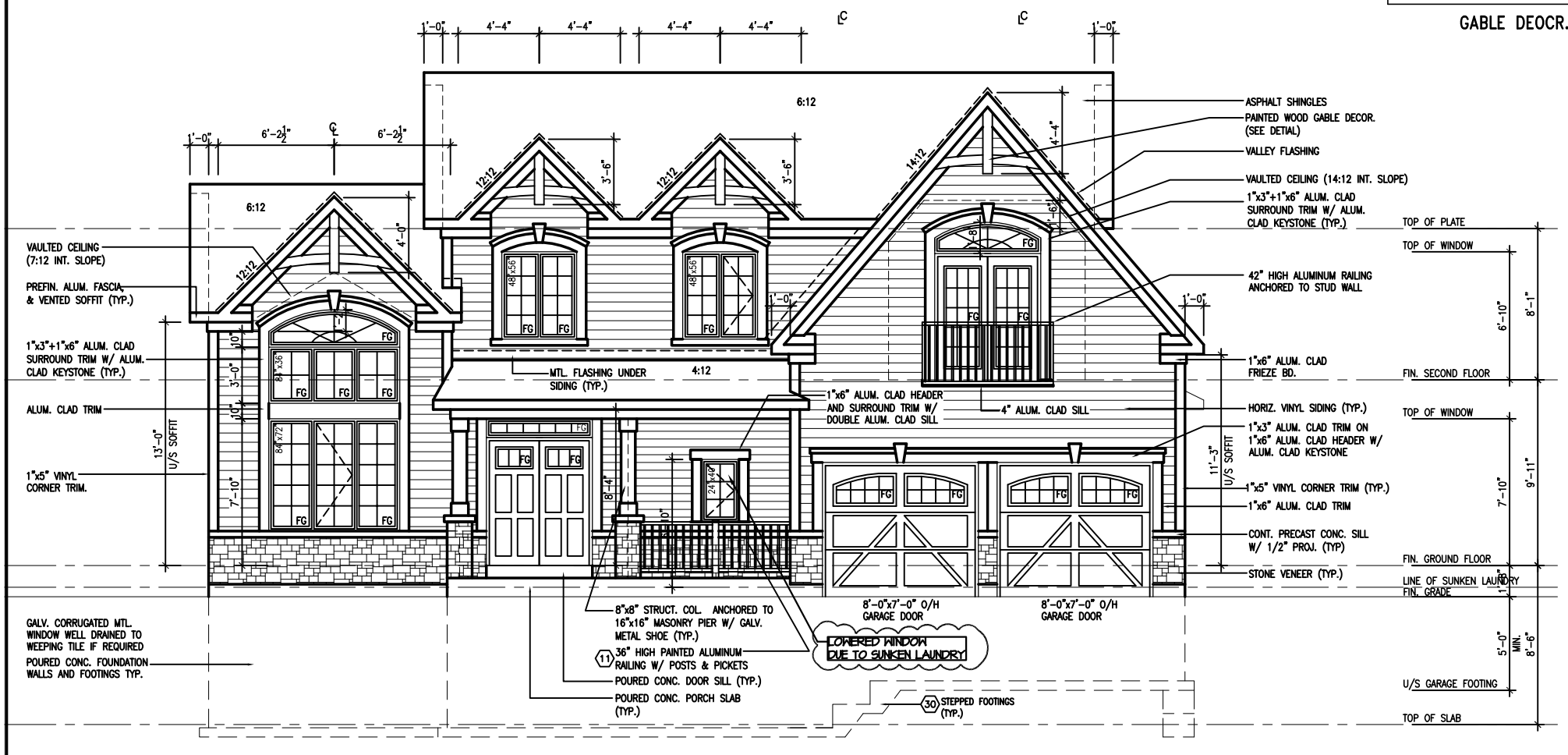

FRONT ELEVATION 'A'

PHOENIX HOMES

Viljoen Architect Inc.

300 A Wilson Avenue
North York, Ontario
M3H 1S8
TEL: (416) 630-2255
FAX: (416) 630-4782

MERKHET-2008-A

SITE: WHITE TAIL RIDGE

LOT NUMBER: 19

CIVIC ADDRESS: 176 ANTLER COURT

No.	Description	Date	By
6	REV. AS PER CONST. SUMMARY	JUL28-14	SD
5	REV. AS PER CONST. SUMMARY	JUL15-14	SD
4	ISSUED FOR B.E.P. ONLY	JUN26-14	SD
3	SUNKEN LAUNDRY PER PURCHASER	JUNE13-14	SD
2	ISSUED FOR B.E.P. ONLY	JUNE5-14	SD
1	ISSUED FOR PERMIT APPLICATION	MAY5-14	SD

REVISIONS

footprint:	S2-A
sht. title:	ELEVATIONS-A
drawn by:	MB
checked by:	OF
date:	FEB. 2007
scale:	1/8"=1'
sheet no:	4A / 6

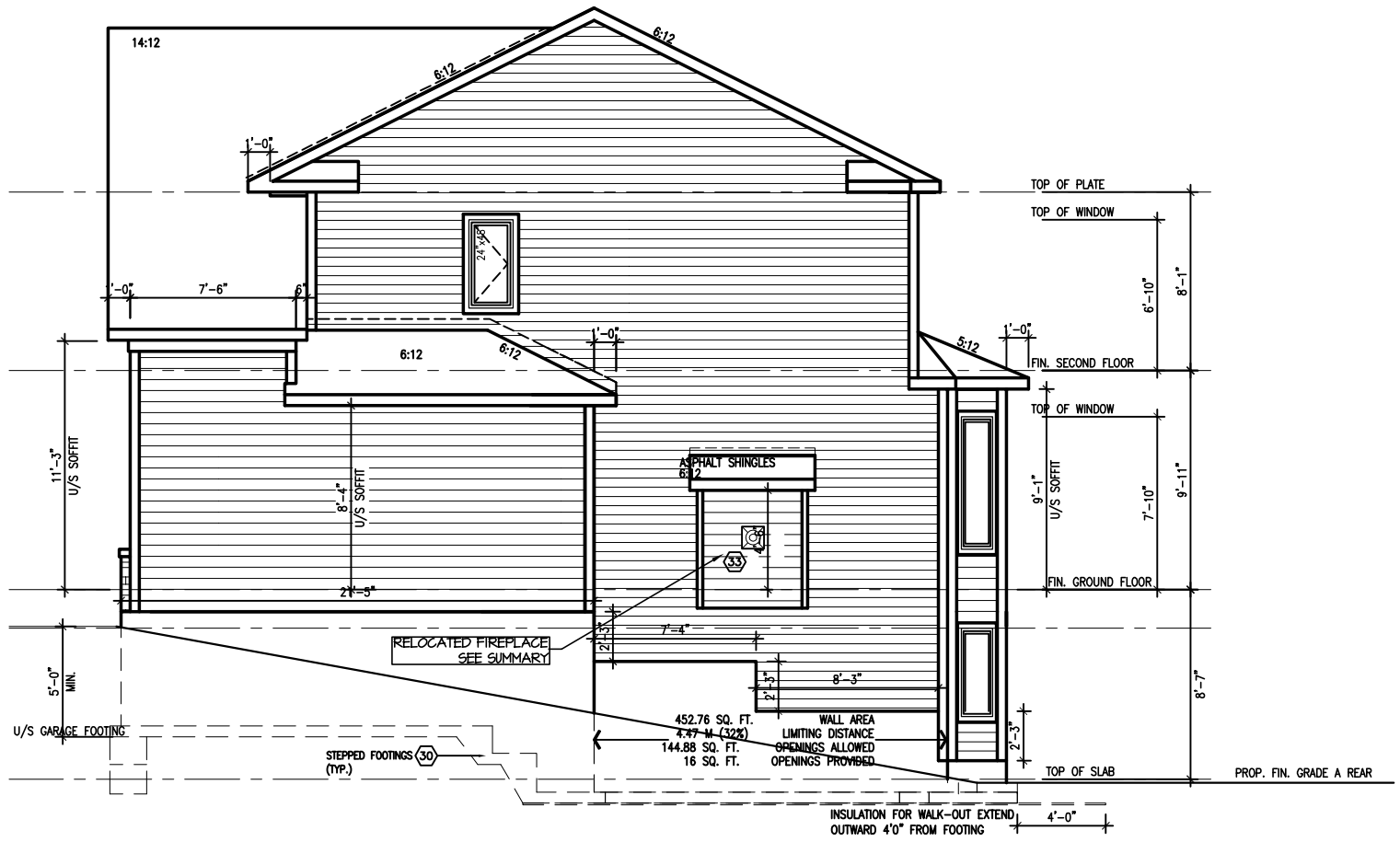

RIGHT SIDE ELEV. 'A' (3 BEDRM.)

NOTE:
REFER TO FRONT ELEVATION FOR TYPICAL NOTES & INFORMATION

NOTE: SEE "APPROVED INDIVIDUAL SITE/GRADING PLAN" FOR ACTUAL LOCATION OF "PROPOSED FINISH GRADE LINE" RELATIVE TO USF OR TOP OF FOUNDATION. DIMENSIONS AND EXTENT OF CHECK-DOWN CONCRETE STEP FOOTING AND FOUNDATION SHOWN ON THIS PLAN ARE FOR REFERENCE ONLY AND MAY BE ADJUSTED ON SITE DUE TO GRADING CONDITIONS, STEP FOOTING TO CONFORM TO O.B.C. 9.15.3.9. DEPTH OF FOUNDATION TO MEET REQUIREMENTS OF O.B.C. 9.12.2.2

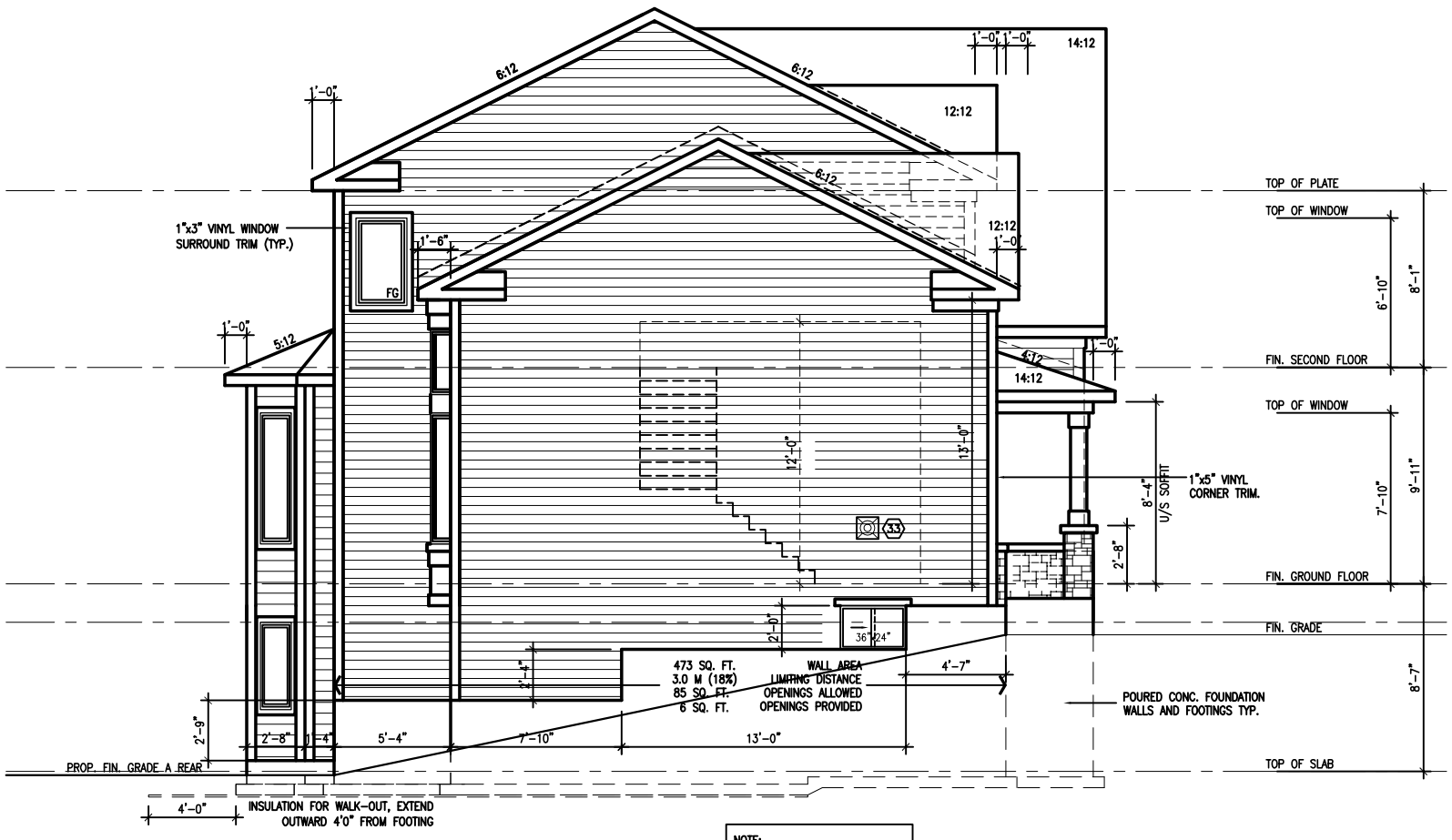

LEFT SIDE ELEV. 'A' (3 BEDRM.)

NOTE:
REFER TO FRONT ELEVATION FOR TYPICAL NOTES & INFORMATION

PHOENIX HOMES

Viljoen Architect Inc.

300 A Wilson Avenue
North York, Ontario
M3H 1S8
TEL: (416) 630-2255
FAX: (416) 630-4782

MERKHET-2008-A

SITE: WHITE TAIL RIDGE

LOT NUMBER: 19

CIVIC ADDRESS:
176 ANTLER COURT

No.	Description	Date	By
6	REV. AS PER CONST. SUMMARY	JUL28-14	SD
5	REV. AS PER CONST. SUMMARY	JUL15-14	SD
4	ISSUED FOR B.E.P. ONLY	JUN26-14	SD
3	SUNKEN LAUNDRY PER PURCHASER	JUNE13-14	SD
2	ISSUED FOR B.E.P. ONLY	JUNE5-14	SD
1	ISSUED FOR PERMIT APPLICATION	MAY5-14	SD

REVISIONS

footprint:	S2-A
sht. title:	ELEVATIONS-A
drawn by:	MB
checked by:	OF
date:	FEB. 2007
scale:	1/8"=1'
sheet no:	5A / 6

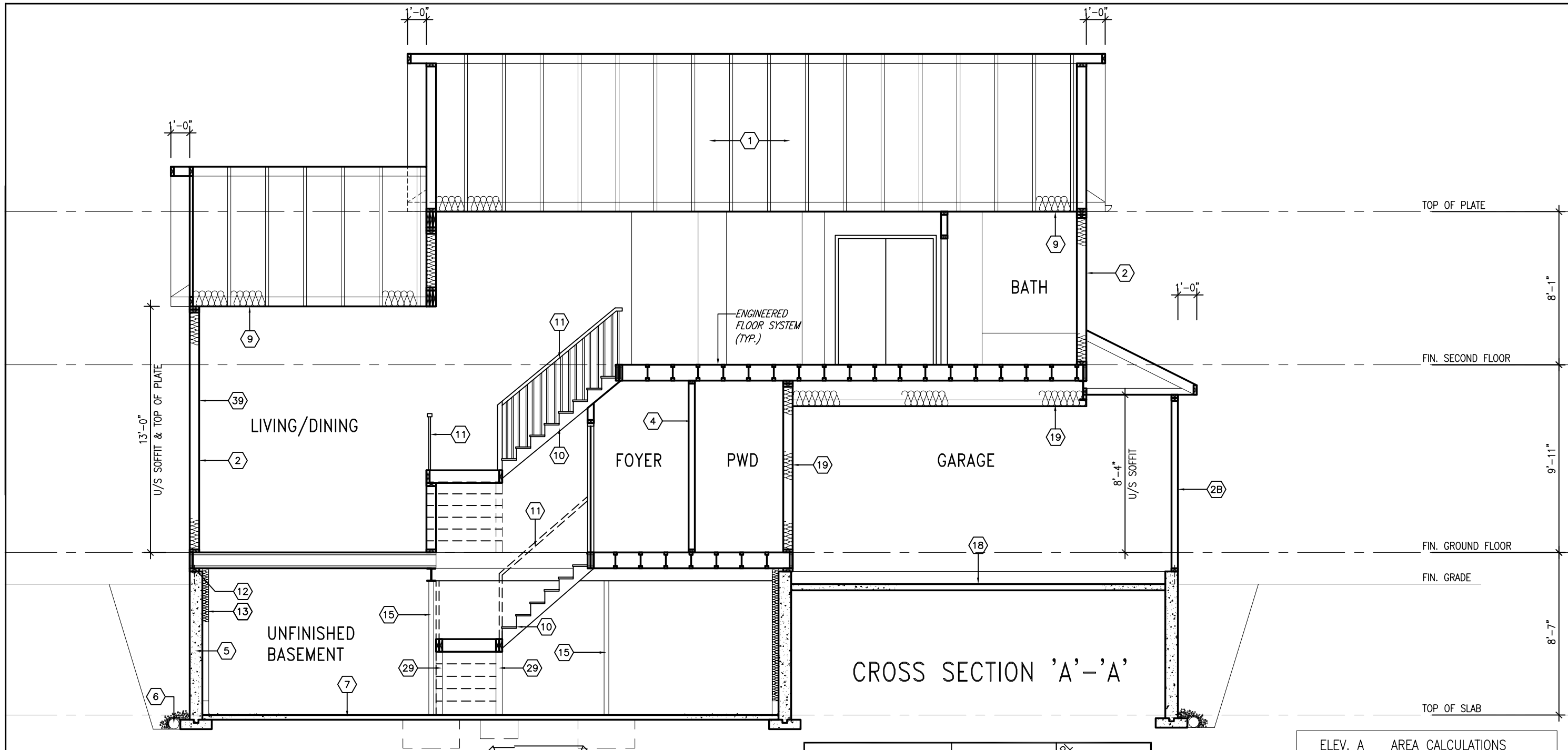

CROSS SECTION 'A'-'A'

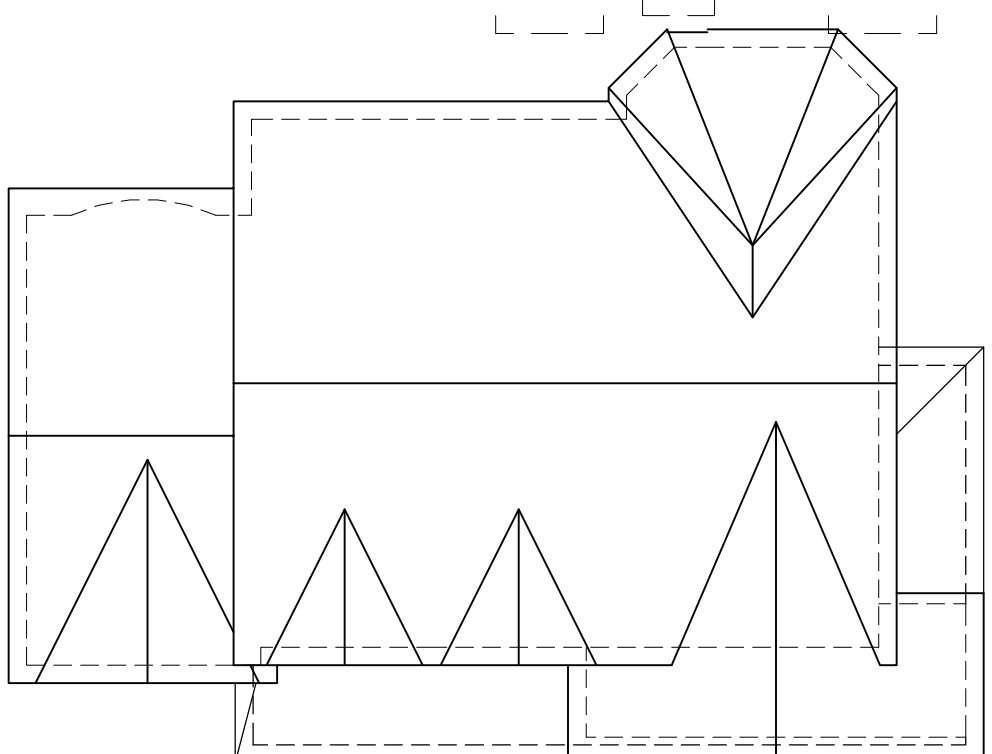

ROOF PLAN 'A' 4 BEDRM.
N.T.S.

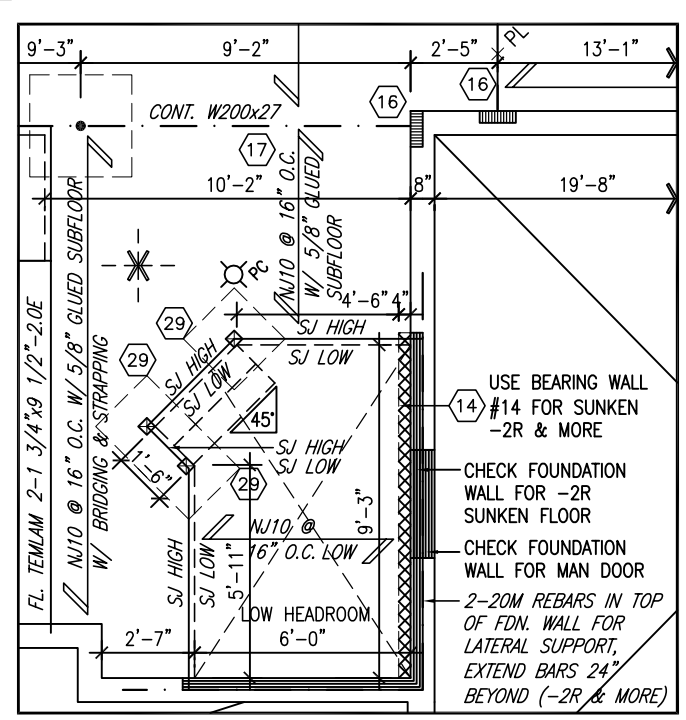

FRAMING FOR SUNKEN LAUNDRY

ELEV. A	AREA CALCULATIONS
4 BEDRM.	
1151 SF	GROUND FLOOR AREA
1441 SF	SECOND FLOOR AREA
2592 SF	SUBTOTAL
368 SF	DEDUCT ALL OPEN AREAS
2224 SF (206.6 m2)	**TOTAL NET AREA**
0 SF	FINISHED BSMT AREA
1576 SF (146.4 m2)	COVERAGE W/OUT PORCH
1680 SF (156.1 m2)	**COVERAGE** W/ PORCH

footprint: S2-A
sht. title: ALT. SECOND FLOOR-A
drawn by: MB
checked by: OF
date: FEB. 2001
scale: 3/16"=1'
sheet no: 6/6

No.	Description	Date	By
6	REV. AS PER CONST. SUMMARY	JUL28-14	SD
5	REV. AS PER CONST. SUMMARY	JUL15-14	SD
4	ISSUED FOR B.E.P. ONLY	JUN26-14	SD
3	SUNKEN LAUNDRY PER PURCHASER	JUNE13-14	SD
2	ISSUED FOR B.E.P. ONLY	JUNE5-14	SD
1	ISSUED FOR PERMIT APPLICATION	MAY5-14	SD

REVISIONS

MERKHET-2008-A

SITE: WHITE TAIL RIDGE

LOT NUMBER: 19

CIVIC ADDRESS: 176 ANTLER COURT

Viljoen Architect Inc.
300 A, Wilson Avenue
North York, Ontario
M3H 1S8
TEL: (416) 630-2255
FAX: (416) 630-4782

PHOENIX HOMES