SITE MASTER

CONSTRUCTION SUMMARY

Grovetrail Developments Inc.

PURCHASERS: STEPHANIE SZETO and ANDREW SEALY **TEL:**

LOT NUMBER	PHASE	HOUSE TYPE	CLOSING DATE	
46 Block 52	1	LAWSON Elev B	14-Apr-22	

Offer Workshee	BONUS PACKAGE FOR TOWNHOUSE: PURCHASER TO RECEIVE $7,500.00 (INCLUSIVE OF TAXES) WORTH OF UPGRADES AT DECOR CENTRE AT TIME OF COLOUR CHART Note:

Offer Workshee	BONUS PACKAGE FOR TOWNHOUSE: 5 APPLIANCES TO INCLUDE FRIDGE, STOVE, DISHWASHER WITH STAINLESS STEEL FINISH AND WHITE WASHER AND DRYER AS PER VENDORS SAMPLES. DELIVERED ONLY - NOT INSTALLED. Note:

SITE MASTER

CONSTRUCTION SUMMARY

Grovetrail Developments Inc.

PURCHASERS: STEPHANIE SZETO and ANDREW SEALY **TEL:**

LOT NUMBER	PHASE	HOUSE TYPE	CLOSING DATE	
46 Block 52	1	LAWSON Elev B	14-Apr-22	

Date Added: 10-Nov-21 **Invoice Number: 7583**

1 - Standard Cable, telephone and Conduit Rough in.
Note:

1 - GARAGE DOOR- Install the builders standard garage door handle with lock
Note:

1 - APPLIANCE PACKAGE- SUPPLY the Standard Appliance Package To be supplied ONLY for the home, where applicable.
Note:

1 - KITCHEN- Install an upgraded undermount sink, in the kitchen, in lieu of the builders std undermount. Install the Blanco Formera Single Bowl Model # 402241
Note: **Install the builders standard Faucet**
PLEASE NOTE Please Note Drain Location**

1 - KITCHEN- Install an Upgrade #1 kitchen cabinet, throughout the kitchen, where applicable. Install the EURO DECOTEC ARCTIC GREY SOFT TOUCH 313
Note:

1 - KITCHEN- Install a Full height Backspalsh, throughout the kitchen, where applicable. Install the Emmerstone MAPLE WHITE full height backspalsh.
Does not include behind the stove or fridge
Note:

1 - KITCHEN- Install an upgraded Edge for the kitchen counter top. Install Edge "L", throughout the kitchen counter top, where applicable.
Note:

287 - MAIN FLOOR- FOYER/KITCHEN /MUD ROOM-Install an upgrad #1 12x24 floor tile on the main floor area, in lieu of the builders standard. Install the 12x24 Cementine Bianco on the Foyer, Mud Room and Kitchen/Dinette area. To be install staright (See Sketch)
Note:

30 - POWDER ROOM- Install an upgrade #2 12x24 floor tile on the Powder Room in lieu of the builders standard. Install the 12x24 LOFT GREY on the Power Room Floor. To be install straight (See Sketch)
Note:

1 - POWDER ROOM- Install an Upgrade #1 cabinet, throughout the Powder Room where applicable. Install the EURO DECOTEC SLATE GREY SOFT TOUCH 423
Note:

1 - POWDER ROOM- Install a 1st Upgrade Ceasarstone counter top for the Powder Room, in lieu of the builders standard. Install the FRESH CONCRETE
Note:

1 - UPPER HALL- Install the Laminate, Highland Watson Oak Natural Model# EE-H-292 on the Upper hall, in lieu of the builders standard carpet.
Note:

1 - MASTER BEDROOM- Install the Laminate, Highland Watson Oak Natural Model# EE-H-292 in the Master Bedroom ONLY, in lieu of the builders standard carpet.
Note:

1 - MAIN BATH- Install an Upgrade #1 cabinet for the Main Bathroom vainty, in lieu of the builders standard. Install the EURO TEXTURED ROVERE LOVE
Note:

50 - MASTER ENSUITE- Install an Upgrade #3 12x24 floor tile on the floor of the Master Ensuite. Install the ETERNA IMPERIAL GREY POLISHED, to be installed straight/stacked
Note:

SITE MASTER

CONSTRUCTION SUMMARY

Grovetrail Developments Inc.

PURCHASERS: STEPHANIE SZETO and ANDREW SEALY **TEL:**

LOT NUMBER	PHASE	HOUSE TYPE	CLOSING DATE	
46 Block 52	1	LAWSON Elev B	14-Apr-22	

Date Added: 10-Nov-21 **Invoice Number: 7583**

95 - MASTER ENSUITE- Install an Upgrade #2 12x24 floor tile on the walls of the Master Ensuite Shower Stall. Install the CEMENTINE BIANCO, to be installed Vertical / straight/stacked (See Sketch)
Note:

1 - Purchaser to receive TEN (X10) Potlights on Main floor as per their Standard Features and Finishes List
SEE BELOW
Note:

1 - MAIN HALL- Delete the builders standard ceilings lights in the Main Hall, and Install FOUR (X4) LED pot lights. All FOUR (X4) Potlights to be on one switch (See Sketch)
Note:

1 - DINETTE- In addition to the builders standard ceiling light and switch, Install FOUR (X4) pot lights. All FOUR (X4) pot lights to be on one seperate switch (See Sketch)
Note: No Charge for additional switch as it is standard as per the Standard Features and Finishes

1 - KITCHEN- In addition to the builders standard ceiling light and switch, Install TWO (X2) pot lights. Both (X2) pot lights to be on one seperate switch (See Sketch)
Note: **Purchaser has been charged for ONE addtional switch

1 - CLARIFICATION-
MASTER ENSUITE / MAIN BATH/POWDER ROOM- Install the builders standard Plumbing Fixtures throughout all bathrooms, where applicable.
Note:

1 - COUNTER TOPS

Purchaser accepts & acknowledges that the Stone slabs vary in size & all seams are visible & the fabricator reserves the right to position the seams as necessary.
Note:

1 - CLARIFICATION-
POWDER RM/ MASTER ENSUITE / MAIN BATH- Install the Standard 3" Splash throughout all bathroom vanity counter tops, where applicable. To include the Powder Rm, Main Bath and the Master Ensuite
Note:

1 - STAIRCASE VS FLOORING
WOOD SPECIES DIFFERENCE:
STAIRCASE - The purchaser was advised and therefore accepts and acknowledges that the wood species of the staircase and flooring chosen do not match. This difference may result in a stain colour variance.
Note: The purchaser agrees that the vendor is to be exempt from any and all claims by the purchaser regarding this colour variance.

1 - STAIRCASE VS FLOORING
STAINING DIFFERENCE:
STAIRCASE - The purchaser was advised and therefore accepts and acknowledges that the stain of the staircase and flooring chosen do not match. This difference might result in an undesirable colour variance.
Note: The purchaser agrees that the vendor is to be exempt from any and all claims by the purchaser regarding this colour variance.

1 - PURCHASER HAS ATTENDED A COLOR APPOINTMENT AT THE DECOR CENTRE AND HAS DECLINED ANY ADDITIONAL UPGRADES.
Note:

1 - PURCHASER AWARE AND ACCEPTS THAT ANY CHANGES MADE TO UPGRADES AFTER SIGNING THIS PURCHASERS EXTRA FORM ARE SUBJECT TO A MINIMUM ADMINISTRATION FEE OF $1,000 PLUS A 10% HOLDBACK FEE.
Note:

Date Added: 26-Jul-21 **Invoice Number: 7445**

1 - UPPER HALL & BEDROOMS- Install smooth ceilings throughout, in lieu of the builders standard stippled ceilings. To include the Upper Hall, Master Bedroom, Bedroom #2 and Bedroom #3 and applicable closets. (See Sketch)
Note:

SITE MASTER

CONSTRUCTION SUMMARY

Grovetrail Developments Inc.

PURCHASERS: STEPHANIE SZETO and ANDREW SEALY **TEL:**

LOT NUMBER	PHASE	HOUSE TYPE	CLOSING DATE	
46 Block 52	1	LAWSON Elev B	14-Apr-22	

Date Added: 26-Jul-21 **Invoice Number: 7445**

1 - PURCHASER HAS ATTENDED A STRUCTURAL APPOINTMENT WITH THE DECOR CENTRE VIA PHONE AND HAS DECLINED ANY ADDITIONAL UPGRADES.
Note:

1 - PURCHASER AWARE AND ACCEPTS THAT ANY CHANGES MADE TO UPGRADES AFTER SIGNING THIS PURCHASERS EXTRA FORM ARE SUBJECT TO A MINIMUM ADMINISTRATION FEE OF $1,000. PLUS A 10% HOLDBACK FEE.
Note:

This Document is Extremely Time Sensitive - Printed 24 Nov 21 at 16:53

DocuSign Envelope ID: 3A3555BF-0970-4FB6-A0D6-26449E478C6F

* INTERIOR COLOUR SCHEME *

Purchasers	Decor Consultant	Model and Elevation	Telephone Res. / Bus	Project	Closing Date	Property
STEPHANIE SZETO & ANDREW SEALY	Laura Di Pede	LAWSON Elev B	/	Grovetrail Developments Inc.	14/04/2022	46 Block 52

Flooring

	Description
Master ensuite	12X24 Eterna Imperial Grey Polished Stacked-Upgd
Main Bathroom	13X13 COSTA WHITE (STD)
Powder Room	12X24 LOFT GREY STACKED (UPGD)
Kitchen/ Dinette	12x24 CEMINTINE BIANCO Stacked (UPGD)
Laundry	13X13 COSTA WHITE (STD)
Mud Room	12x24 CEMINTINE BIANCO Stacked (UPGD)
Foyer	12x24 CEMINTINE BIANCO Stacked (UPGD)
Main Hall	Highland Watson Oak Natural EE-H-292 (STD)
Great Room	Highland Watson Oak Natural EE-H-292 (STD)
UPPER HALL	Highland Watson Oak Natural EE-H-292 (UPGD)
Master Bedroom	Highland Watson Oak Natural EE-H-292 (UPGD)
Bedroom 2	40 OZ OPENING NIGHT #20 (STD)
Bedroom 3	40 OZ OPENING NIGHT #20 (STD)

Wall Tile

	Main	Accent/Insert	Border / Listello	Pattern
Master ensuite	12X24 Cementine Bianco Stacked (UPGD)	N/A	N/A	N/A
Main Bathroom	8x10 UNIWAL WARM GREY (STD)	N/A	N/A	NA/
Powder Room	N/A	N/A	N/A	N/A
Kitchen/ Dinette	Emmerstone MAPLE WHITE Full Height (UPGD)	N/A	N/A	NA/
Laundry	N/A	N/A	N/A	N/A

Plumbing

Master ensuite	WHITE
Main Bathroom	WHITE
Powder Room	WHITE
Kitchen/ Dinette	UPGD
Laundry	STD

Railings and Stairs

Railings	STD- MIRAGE RED OAK DRIFTWOOD	Landing - Upper	Oak Natural EE-H-292 (STD)
Pickets	STD-PLAIN BLACK STEEL	Landing - Lower	Oak Natural EE-H-292 (STD)
Posts	STD- MIRAGE RED OAK DRIFTWOOD	Ledge - Upper	N/A
Stringers	STD- MIRAGE RED OAK DRIFTWOOD	Ledge - Lower	N/A
Treads	STD- MIRAGE RED OAK DRIFTWOOD		
Risers	STD- MIRAGE RED OAK DRIFTWOOD		
Runner	N/A		

Cornice Moulding / Medalion

Foyer	NO
Living Room	NO
Dining Room	NO
Family Room	NO
Main Hall	NO
Kitchen	NO
2nd Floor Hall	NO

Trim

Baseboard & Casing	STANDARD-STEP BEVEL	Knobs	STANDARD
Front Door Glass	STANDARD	Hinges	STANDARD
Interior Doors	STANDARD	Grip Set	STANDARD

Notes

MASTER ENSUITE- 2" GREY MOSAIC SHOWER STALL FLOOR & WHITE STONE CURB

Consultant: Laura Di Pede

Purchaser: DocuSigned by: Stephanie Szeto — STEPHANIE SZETO

Purchaser: DocuSigned by: Sealy — ANDREW SEALY

Vendor: Grovetrail Developments Inc.

DocuSign Envelope ID: 3A3555BF-0970-4FB6-A0D6-26449E478C6F

* INTERIOR COLOUR SCHEME *

Purchasers	Decor Consultant	Model and Elevation	Telephone Res. / Bus	Project	Closing Date	Property
STEPHANIE SZETO & ANDREW SEALY	Laura Di Pede	LAWSON Elev B	/	Grovetrail Developments Inc.	14/04/2022	46 Block 52

	Interior Paint – Description	Cabinet – Style	Countertop	Counter Edge	Handle / Knob
Master Ensuite	STD- SILVER BIRCH	EURO RUSTICA LARICE BIANCO RU-05 (STD)	Emmerstone Pure Grey (STD)	"A" (STD)	930396DBK
Main Bathroom	STD- SILVER BIRCH	EURO TEXTURED ROVERE LOVE (UPGD)	Emmerstone MAPLE WHITE (ST)	"A" (STD)	930396BSN
Mud Room	STD- SILVER BIRCH	N/A	N/A	N/A	N/A
Powder Room	STD- SILVER BIRCH	EURO DECOTEC SLATE GREY SOFT TOUCH 423 (UPGD)	Ceasarstone Fresh Concrete (UPGD)	"A" (STD)	9770DBK-Std
Kitchen/ Dinette	STD- SILVER BIRCH	EURO DECOTEC ARCTIC GREY SOFT TOUCH 313 (UPGD)	Emmerstone Maple White (STD)	"L" (UPGD)	9770DBK-Std
Laundry	STD- SILVER BIRCH				
Foyer	STD- SILVER BIRCH				
Main Hall	STD- SILVER BIRCH				
Great Room	STD- SILVER BIRCH				
UPPER HALL	STD- SILVER BIRCH				
Master Bedroom	STD- SILVER BIRCH				
Bedroom 2	STD- SILVER BIRCH				
Bedroom 3	STD- SILVER BIRCH				

Appliance Opening/Dimension

Fridge Size	Standard	Range	Standard
Built-Ins	None	Microwave	None
Hood Fan	Standard	Exhaust Opening	● 6" ○ 8"
Dishwasher Cabinet	Std 24in Opening		

Fireplace

Fireplace	N/A	Fireplace	N/A
Location Flooring	N/A	Location Flooring	N/A
Style	N/A	Style	N/A
Finish	N/A	Finish	N/A
Marble	N/A	Marble	N/A
Hearth	N/A	Hearth	N/A

Notes

STANDARD STAINLESS STEEL EXHAUST FAN
STANDARD APPLIANCES

Decor Consultant: Laura Di Pede

Purchaser: DocuSigned by: Stephanie Szeto — STEPHANIE SZETO

Purchaser: DocuSigned by: Andrew Sealy — ANDREW SEALY

Vendor: Grovetrail Developments Inc.

Lot: 46 Block 52 Project: Grovetrail Developments Inc. Model: LAWSON Elev B

Printed Nov 10, 2021 10:51 am

* INTERIOR COLOUR SCHEME *

Purchasers	Decor Consultant	Model and Elevation	Telephone Res. / Bus	Project	Closing Date	Property
STEPHANIE SZETO & ANDREW SEALY	Laura Di Pede	LAWSON Elev B	/	Grovetrail Developments Inc.	14/04/2022	46 Block 52

Purchaser(s) acknowledge the following

Arborite Counter Top Waiver:

Purchaser acknowledges that countertops are susceptible to damage/swelling from standing water. Care must be taken to ensure that countertops are kept free of standing water at joints and openings at sinks and faucets. Delamination can also occur caused by excessive heat from appliances and cooking equipment. Therefore, the Vendor assumes no responsibility for these conditions if caused by the Purchaser's negligence.

Hardwood Floor/Stair Waiver

Purchaser acknowledges and accepts that the hardwood flooring is pre-finished in a factory in a controlled environment and that the stairs are finished on site. The vendor will do their best to match the color between the stairs and the floor, but it is not possible to have an identical match and that there will be shade differences.

Standard Appliance Specifications Waiver:

In lieu of supplying appliance specifications and/or special requirements, the purchaser acknowledges that cabinetry will be made to allow for standard openings only. Standard opening sizes are as follows:

Fridge:	36" wide x 72 1/2" high
Stove:	31" wide
Dishwasher:	24" wide
OPTIONAL Microwave box:	24" wide x 15" high x 19" deep

and only those appliances that fit the standard openings should be selected and purchased.

Hardwood Floor Waiver:

Hardwood floors installed by the Vendor will be fully warranted for one full year against any defects in workmanship, due to improper installation. The Purchaser acknowledges and understands that the vendor will not be responsible to repair the natural drying out of wood that may cause shrinkage.

Changes:

This Colour Sheet is FINAL. ANY changes requested are subject to Builder approval and a minimum administration fee of $1,000.00 will be charged.

Decor Consultant: Laura Di Pede

Purchaser: DocuSigned by: Stephanie Szeto — STEPHANIE SZETO

Purchaser: DocuSigned by: — ANDREW SEALY

Vendor: Grovetrail Developments Inc.

TOWN | THE LAWSON (20-08)

BLK. 52 LOT 46

SMOOTH CEILINGS UPPER HALL & BEDROOMS

(C) CABLE (X2)

(T) Telephone (X2)

CONDUIT

LOT 46 BLK 52 ELEV. B

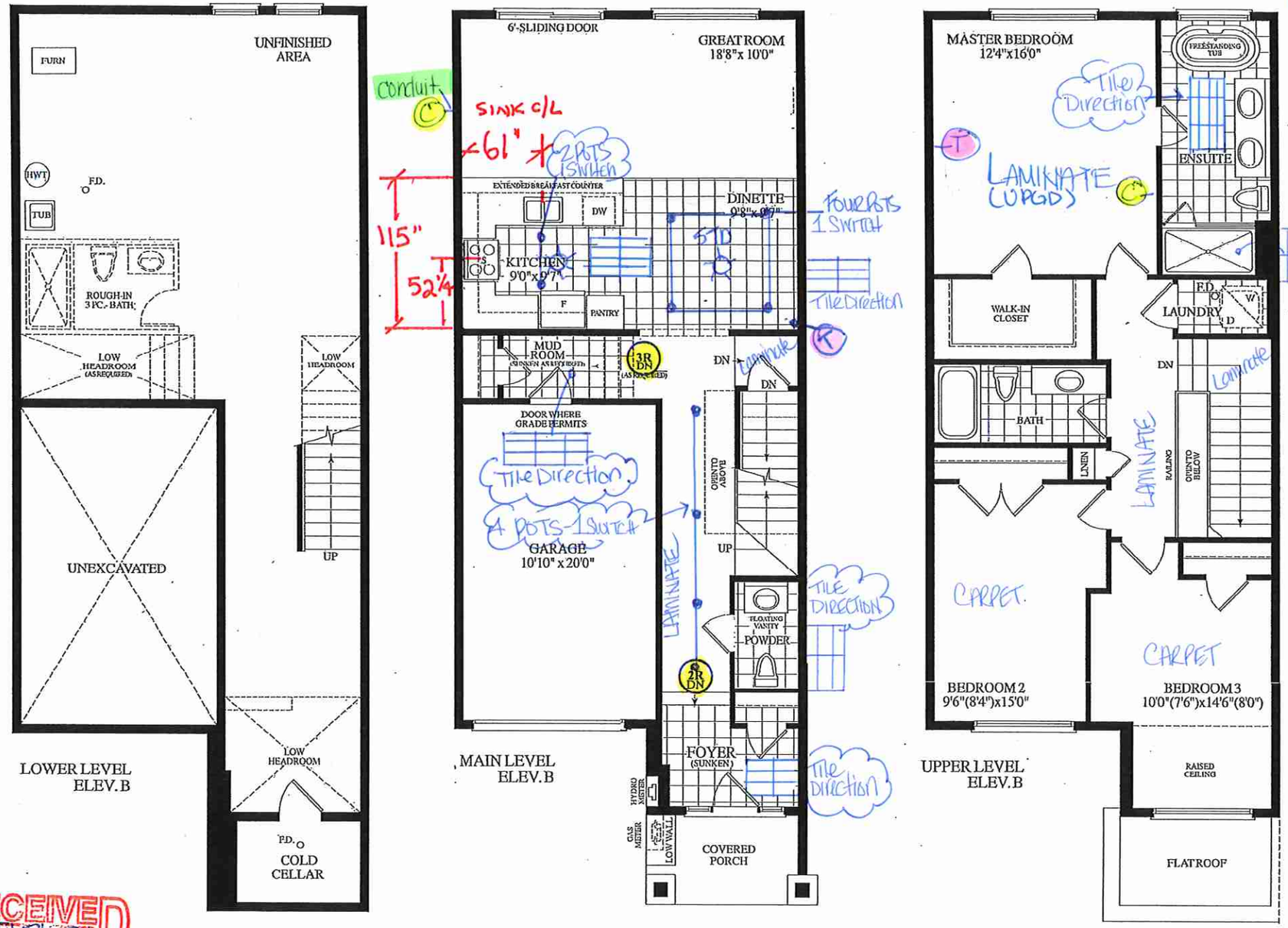

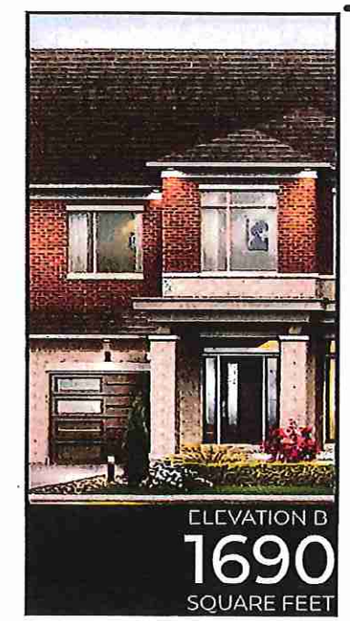

RECEIVED July 26-21

Villa
KITCHENS & FINE CABINETRY LTD

8111 Jane St. Unit 10
Concord, Ontario L4K 4L7
Tel. (905) 669- 7028
Fax. (905) 669 - 7903
email: designstudio@villakitchens.ca
www.villakitchens.ca

CLIENT: ROYAL PINE HOMES

PROJECT: CENTERFIELD

ADDRESS: RP-CE-MASTER

MODEL: LAWSON 2008

KITCHEN

NOTE: THIS SITE GETS STD-CROWN

LOT46 BLK52

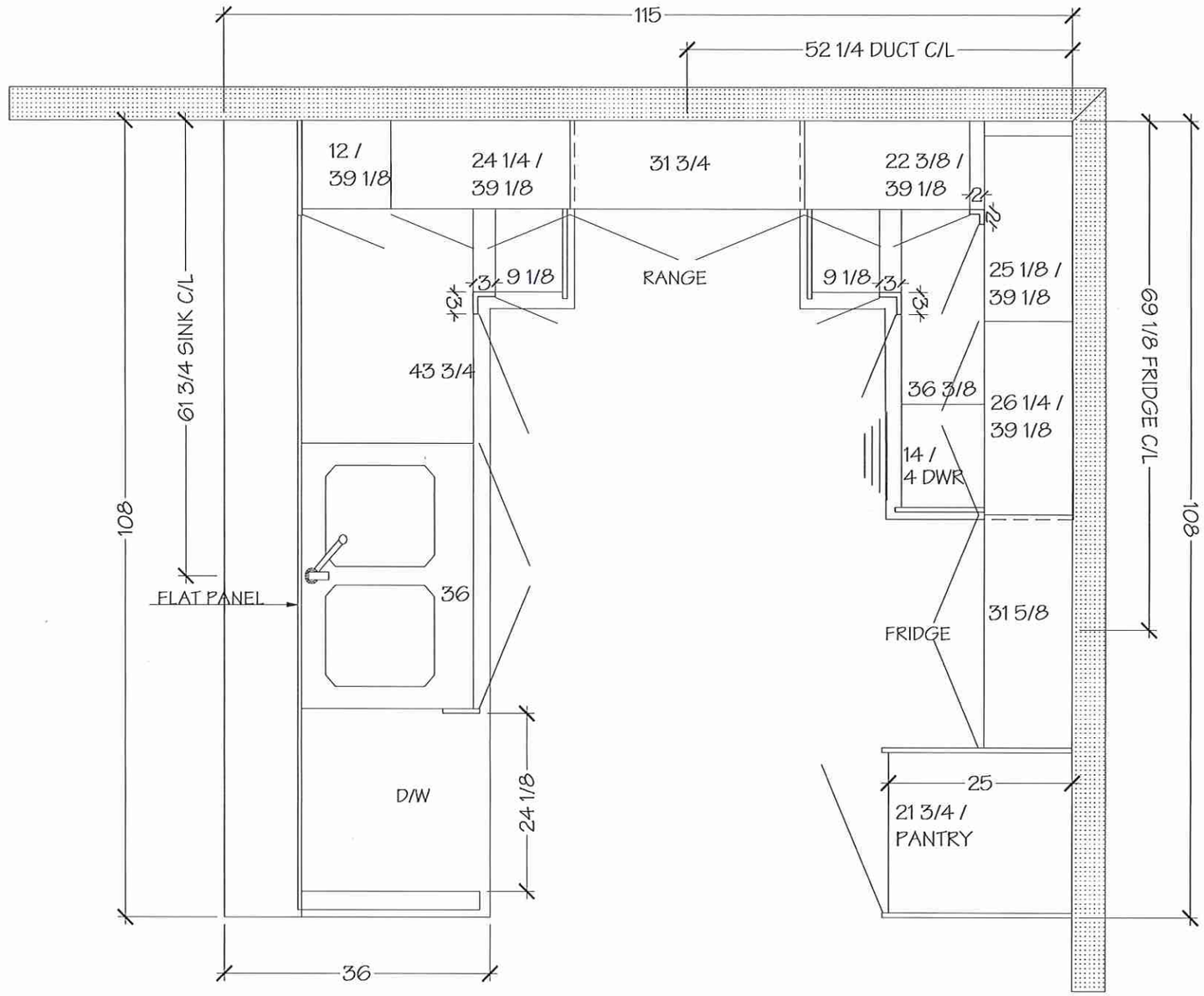

DRAWN BY: DIDI

DATE: JUNE 19/2021

REVISION: NOVEMBER 05/2021

NOTE MEASURES ARE BASED ON FINISHED DRYWALL

Villa
KITCHENS & FINE CABINETRY LTD

8111 Jane St. Unit 10
Concord, Ontario L4K 4L7
Tel. (905) 669- 7028
Fax. (905) 669 - 7903
email: designstudio@villakitchens.ca
www.villakitchens.ca

CLIENT: ROYAL PINE HOMES

PROJECT: CENTERFIELD

ADDRESS: RP-CE-MASTER

MODEL: LAWSON 2008

KITCHEN

NOTE: THIS SITE GETS STD-CROWN

LOT46 BLK 52

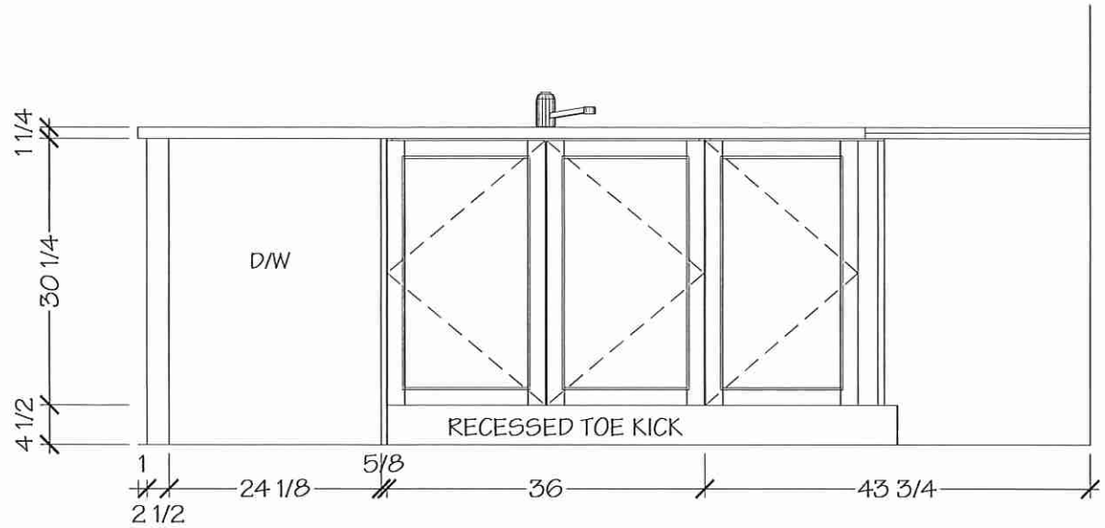

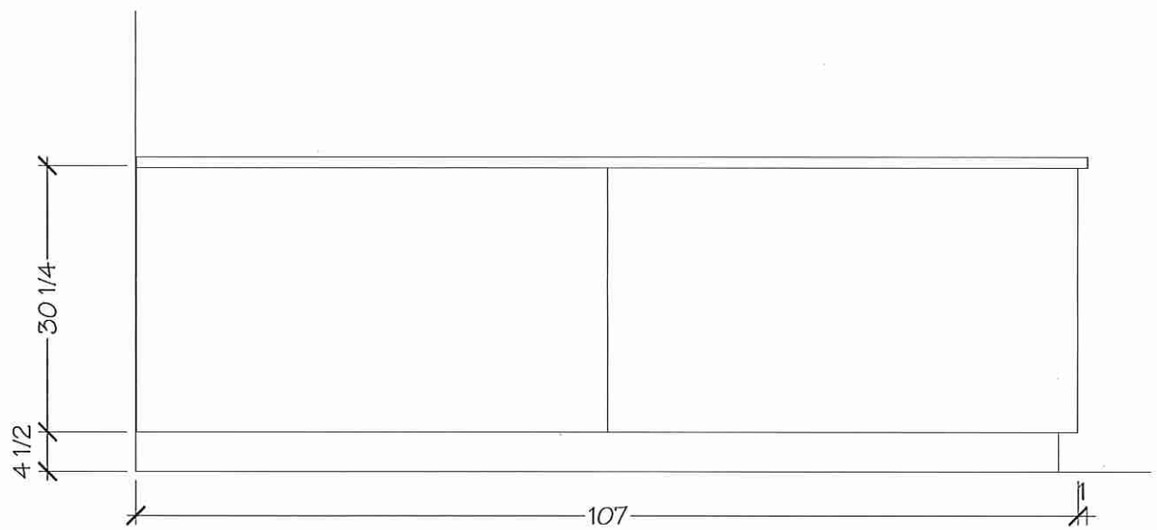

DRAWN BY: DIDI

DATE: JUNE 19/2021

REVISION: NOVEMBER 05/2021

NOTE MEASURES ARE BASED ON FINISHED DRYWALL

KITCHENS & FINE CABINETRY LTD

8111 Jane St. Unit 10
Concord, Ontario L4K 4L7
Tel. (905) 669- 7028
Fax. (905) 669 - 7903
email: designstudio@villakitchens.ca
www.villakitchens.ca

CLIENT: ROYAL PINE HOMES

PROJECT: CENTERFIELD

ADDRESS: RP-CE-MASTER

MODEL: LAWSON 2008

KITCHEN

NOTE: THIS SITE GETS STD-CROWN

LOT 46 BLK 52

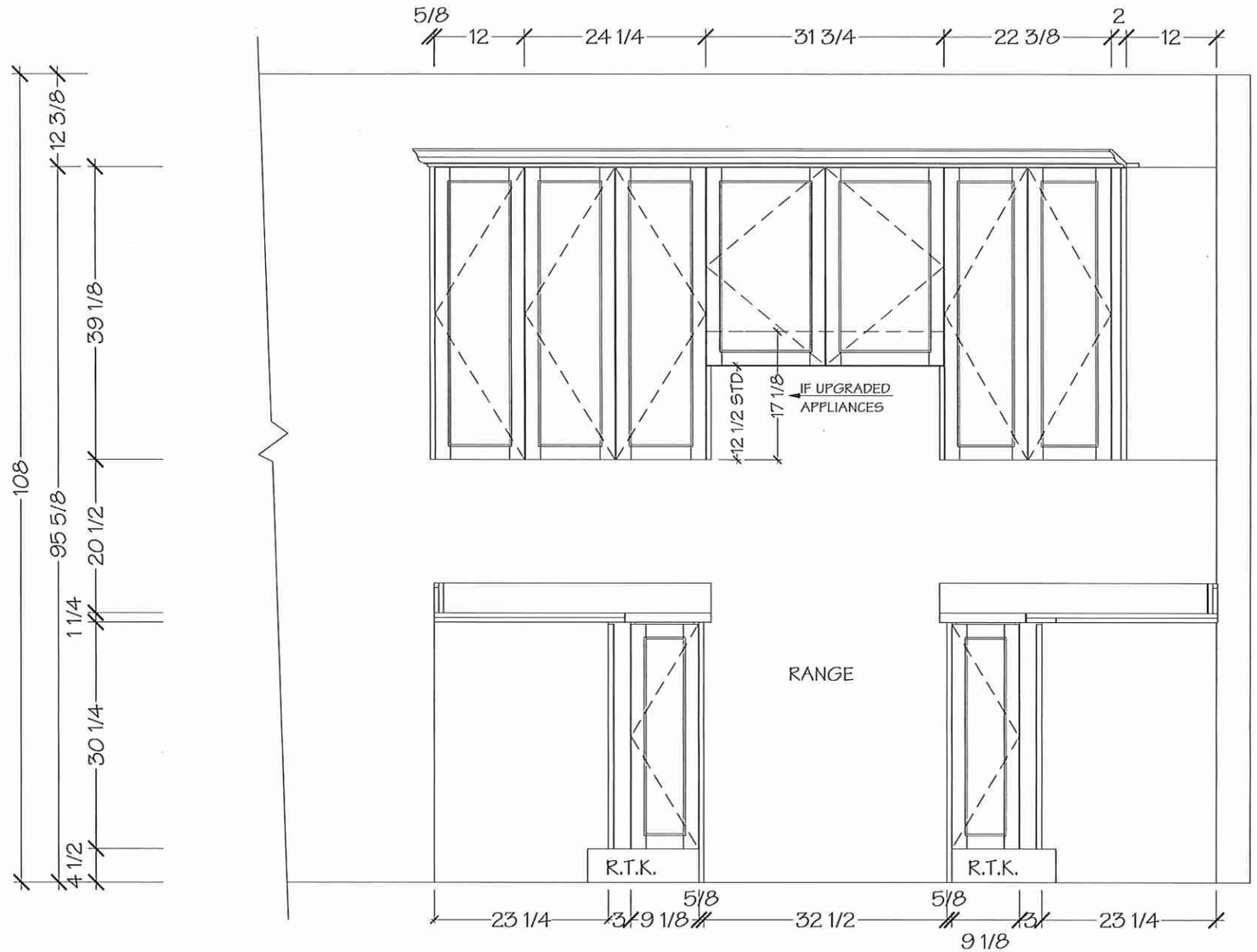

NOTE MEASURES ARE BASED ON FINISHED DRYWALL

DRAWN BY: DIDI

DATE: JUNE 19/2021

REVISION: NOVEMBER 05/2021

Villa
KITCHENS & FINE CABINETRY LTD

8111 Jane St. Unit 10
Concord, Ontario L4K 4L7
Tel. (905) 669- 7028
Fax. (905) 669 - 7903
email: designstudio@villakitchens.ca
www.villakitchens.ca

CLIENT: ROYAL PINE HOMES

PROJECT: CENTERFIELD

ADDRESS: RP-CE-MASTER

MODEL: LAWSON 2008

KITCHEN

NOTE: THIS SITE GETS STD-CROWN

LOT 46 BLK 52

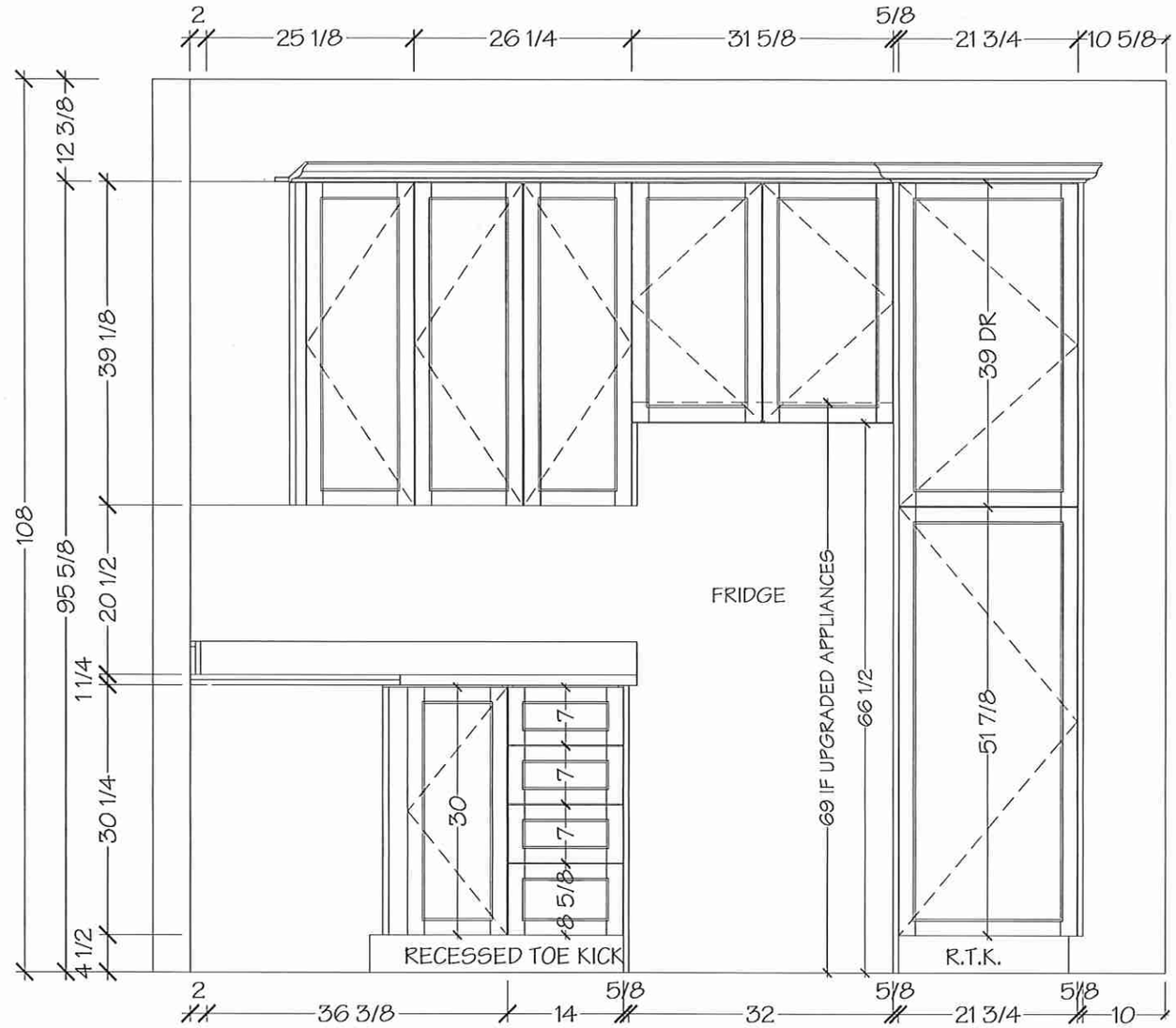

NOTE MEASURES ARE BASED ON FINISHED DRYWALL

DRAWN BY: DIDI

DATE: JUNE 19/2021

REVISION: NOVEMBER 05/2021

Villa
KITCHENS & FINE CABINETRY LTD

8111 Jane St. Unit 10
Concord, Ontario L4K 4L7
Tel. (905) 669- 7028
Fax. (905) 669 - 7903
email: designstudio@villakitchens.ca
www.villakitchens.ca

CLIENT: ROYAL PINE HOMES

PROJECT: CENTERFIELD

ADDRESS: RP-CE-MASTER

MODEL: LAWSON 2008

POWDER ROOM

LOT 46 BLK 52

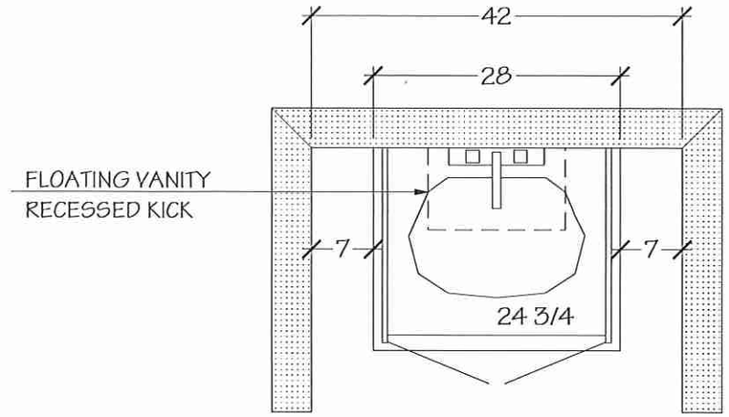

POWDER ROOM

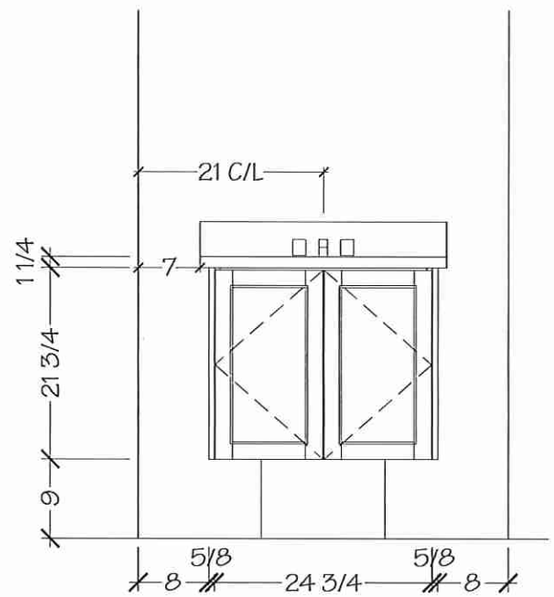

NOTE MEASURES ARE BASED ON FINISHED DRYWALL

DRAWN BY: DIDI

DATE: JUNE 19/2021

REVISION: NOVEMBER 05/2021

Villa
KITCHENS & FINE CABINETRY LTD

8111 Jane St. Unit 10
Concord, Ontario L4K 4L7
Tel. (905) 669- 7028
Fax. (905) 669 - 7903
email: designstudio@villakitchens.ca
www.villakitchens.ca

CLIENT: ROYAL PINE HOMES

PROJECT: CENTERFIELD

ADDRESS: RP-CE-MASTER

MODEL: LAWSON 2008

MASTER ENSUITE

LOT 46 BLK 52

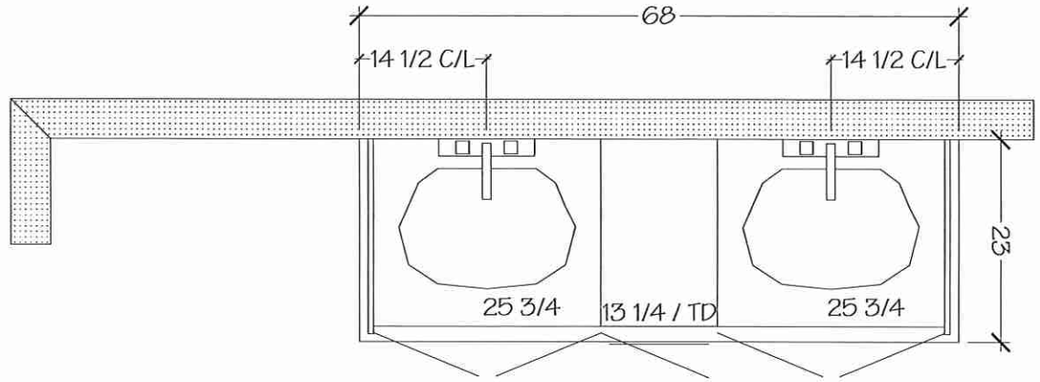

MASTER ENSUITE

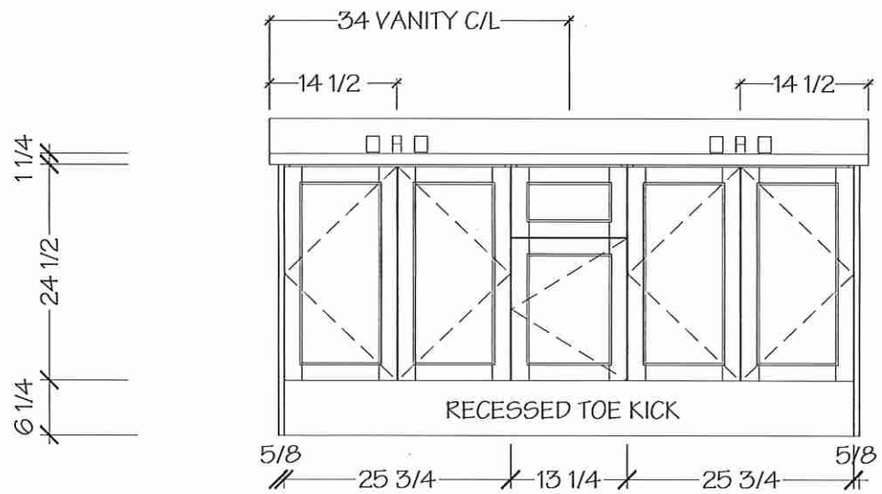

NOTE MEASURES ARE BASED ON FINISHED DRYWALL

DRAWN BY: DIDI

DATE: JUNE 19/2021

REVISION: NOVEMBER 05/2021

KITCHENS & FINE CABINETRY LTD

8111 Jane St. Unit 10
Concord, Ontario L4K 4L7
Tel. (905) 669- 7028
Fax. (905) 669 - 7903
email: designstudio@villakitchens.ca
www.villakitchens.ca

CLIENT: ROYAL PINE HOMES

PROJECT: CENTERFIELD

ADDRESS: RP-CE-MASTER

MODEL: LAWSON 2008

MAIN BATH

LOT46 BLK52

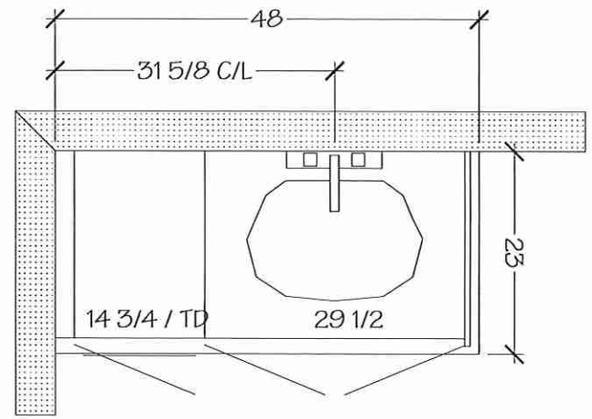

MAIN BATH

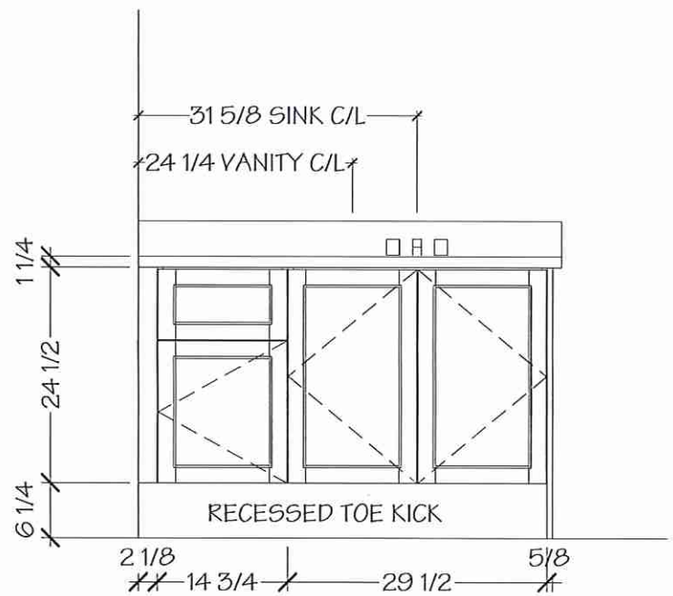

NOTE MEASURES ARE BASED ON FINISHED DRYWALL

DRAWN BY: DIDI

DATE: JUNE 19/2021

REVISION: NOVEMBER 05/2021

Villa
KITCHENS & FINE CABINETRY LTD

8111 Jane St. Unit 10
Concord, Ontario L4K 4L7
Tel. (905) 669- 7028
Fax. (905) 669 - 7903
email: designstudio@villakitchens.ca
www.villakitchens.ca

CLIENT: ROYAL PINE HOMES

PROJECT: CENTERFIELD

ADDRESS: RP-CE-MASTER

MODEL: LAWSON 2008

KITCHEN

NOTE: BULKHEAD IS BASED ON A FLAT EURO CROWN

LOT 46 BLK 52.

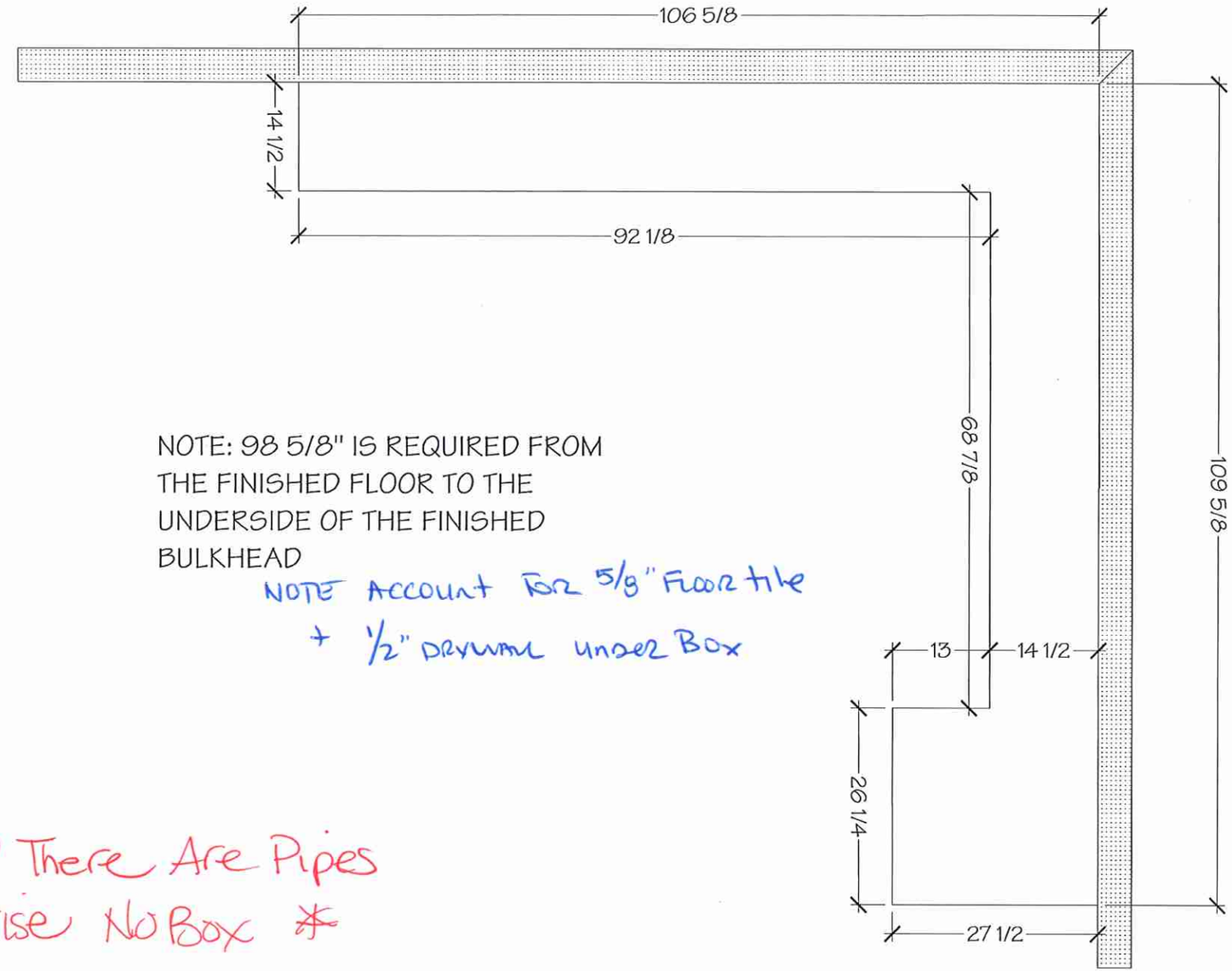

NOTE: 98 5/8" IS REQUIRED FROM THE FINISHED FLOOR TO THE UNDERSIDE OF THE FINISHED BULKHEAD

NOTE ACCOUNT FOR 5/8" FLOOR TILE + 1/2" DRYWALL UNDER BOX

*Only If There Are Pipes Otherwise No Box *

DRAWN BY: DIDI

DATE: SEPT 10/2021

REVISION:

PAGE: 1 OF 1

LOT 46 BLK 52

BLANCO

Sink Specifications

Colour	SKU
	402241

FORMERA U SUPER SINGLE

Stainless steel

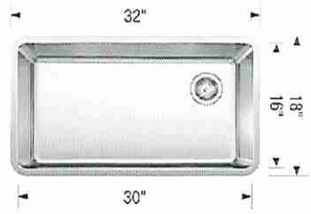

Design and planning tips

- Min cabinet size: 36 in (915 mm)
- Bowl Depth: 9 in (230.0 mm)

Specifications:
Sink template, Installation instructions, Clips, 3½'' (90 mm) stainless steel strainer(s), Limited Lifetime Warranty

Depending on cabinet construction, a different cabinet size may be required. Consult the cabinet manufacturer.
Codes/Standards: ASME A112.19.3-2017/ CSA B45.4-17

Install Standard Faucet

~~Optional Accessories~~

~~CapFlow Strainer Cover~~	~~517666~~
~~Sink Grid~~	~~402248~~

Warranty
Limited lifetime warranty on all sinks and faucets. One-year warranty on all accessories and soap dispensers.

Code/Standards Compliance
BLANCO sinks and faucets are third-party tested and certified to CSA, cUPC, ANSI/ASME, IAPMO and NSF standards and listed by applicable certification bodies. For more information on individual product listings, contact our office or listing organization.

Need support? Learn more by watching our sink & faucet How-to videos:
https://www.blanco.com/ca-en/support/how-to-videos/how-to-videos-for-sinks/

BLANCO Canada Inc
100 Corporation Drive
Brampton ON L6S 6B5

Tel & Fax
Tel: 905-494-2400 Toll free: 1-877-425-2626
Fax: 905-494-2425 Toll free: 1-877-825-2626

While BLANCO strives to provide accurate information, all images and dimensions in this document are intended for reference only and are subject to change at any time without notice. This document is not intended for use as an installation guide. For technical installation details, refer to installation instructions provided with the product. BLANCO assumes no responsibility for the use of superseded or voided specifications.

LOT 46 BLK 52

EDGE DETAILS

004

A.

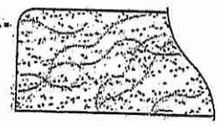

STRAIGHT EDGE
(STANDARD - 3/4")

* POWDER ROOM
* MASTER ENSUITE
* MAIN BATH

**L.

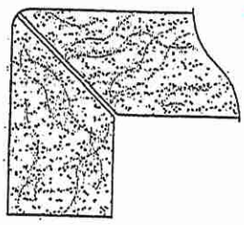

MITER WITH SKIRT EDGE
(MEDIUM - 1 1/2")

* Kitchen

M.

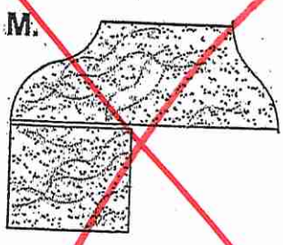

OGEE - SQUARE EDGE
(MED./HIGH - 1 1/2")

EDGING UP-GRADE OPTIONS

RECEIVED
OCT 5 17