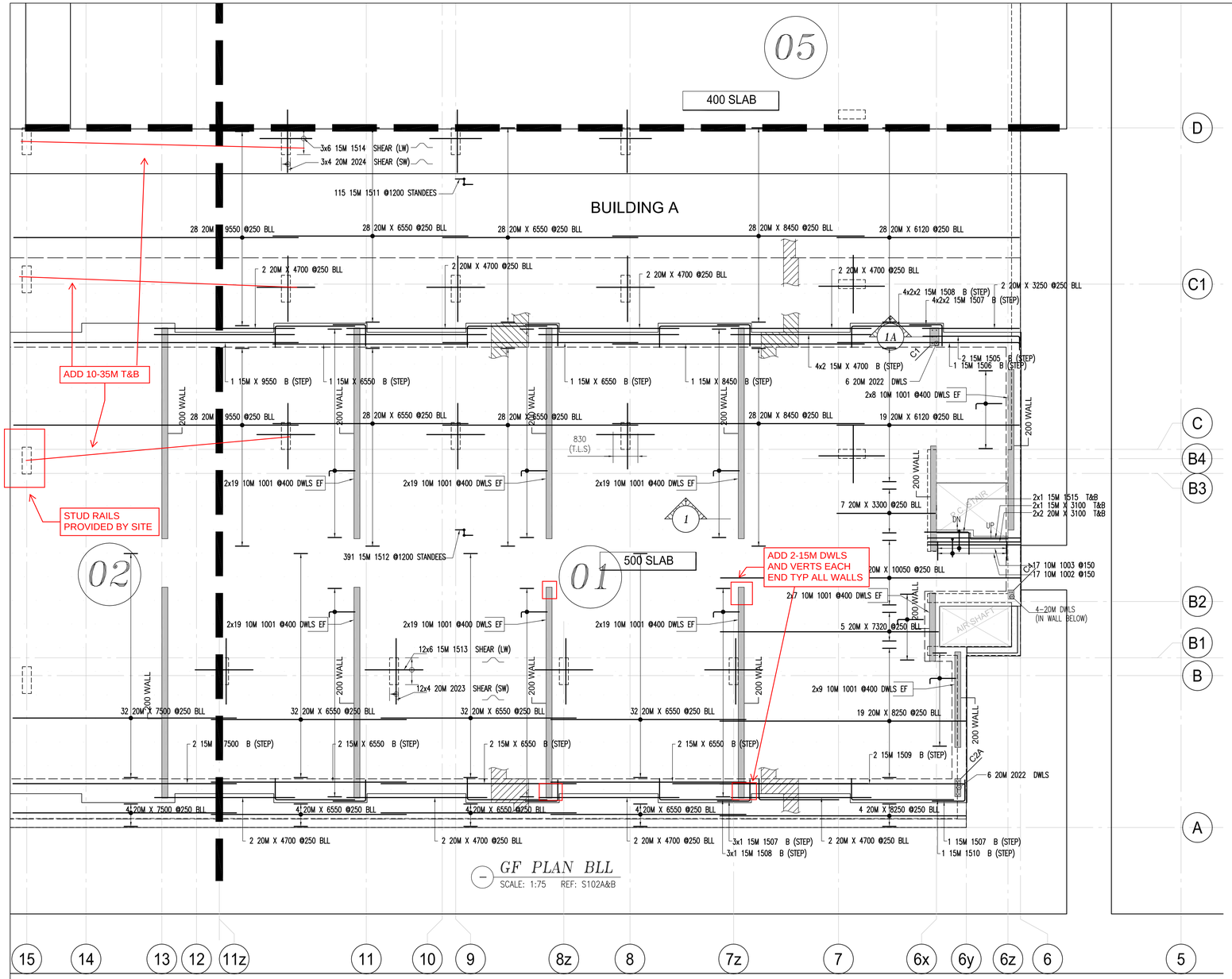

GF PLAN BLL
SCALE: 1:75 REF: S102A&B

Release Code: R6.0A GF BLL P#1						BENDING DETAILS.										
Bar Mark	Qty	Size	Total length	Type	'A'	'B'	'C'	'D'	'E'	'F'	'G'	'H'	'J'	'K'	'O'	'R'
	47	20M	6120			6120										
	56	20M	8450			8450										
	220	20M	6550			6550										
	56	20M	9550			9550										
	23	20M	8250			8250										
	36	20M	7500			7500										
	7	20M	3300			3300										
	5	20M	7320			7320										
	10	20M	10050			10050										
	16	20M	4700			4700										
	2	20M	3250			3250										
	8	15M	4700			4700										
	1	15M	8450			8450										
	8	15M	6550			6550										
	1	15M	9550			9550										
	2	15M	7500			7500										
	4	20M	3100			3100										
	2	15M	3100			3100										
1001	276	10M	1050	2	180	870										
1512	391	15M	1500	26		300	350	200	350	300						
1511	115	15M	1400	26		300	250	200	350	300						
1002	17	10M	1650	17		600	450	600								
1003	17	10M	1550	17		700	350	500								
1505	2	15M	3510	2	260	3250										
1508	19	15M	3400	17		2680	720									
1506	1	15M	6380	2	260	6120										
1507	20	15M	1820	17		1100	720									
1509	2	15M	8500	2	260	8240										
1513	72	15M	2300	3		450	550	300	550	450		410		370	1940	
2023	48	20M	2540	3		600	520	300	520	600		390		350	2200	
1514	18	15M	2020	3		450	410	300	410	450		310		270	1740	
2024	12	20M	2360	3		650	380	300	380	650		290		250	2100	
2022	12	20M	1350	2	310	1040										
1515	2	15M	2250	17		1500	750									
1510	1	15M	4160	17		3440	720									

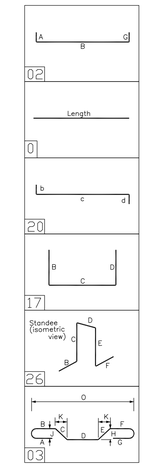

DRAWING REVIEW

This review of this drawing does not in any way relieve the contractor of responsibility for its accuracy or for compliance with the contract documents.

	No comment	✓	See comment
	Amend & Resubmit		Rejected See Remarks

Submission No.
Project No. 19066
By AF
Date 25 May 2021

JABLONSKY, AST AND PARTNERS
Consulting Engineers
3 Concorde Gate, North York, ON M3C 4H9

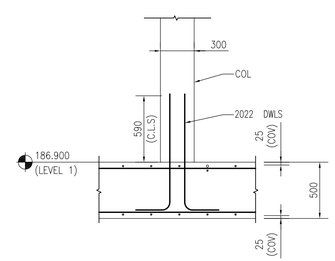

SECTION 1A
SCALE: 1:25

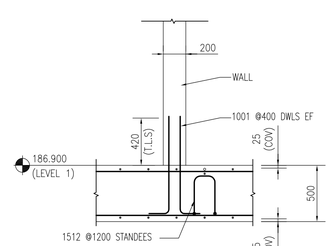

SECTION 1
SCALE: 1:25

* ELEVATIONS AND DIMENSIONS SHOWN ARE FOR VERIFICATION PURPOSES ONLY AND ARE NOT TO BE USED FOR CONSTRUCTION
* ALL CONFIRMS/VERIFIES WILL BE ASSUMED CORRECT AND APPROVED AS IS UNLESS COMMENTED ON THE APPROVAL DRWGS

LEGEND

ALT	= ALTERNATE	FF	= FAR FACE	OF	= OUTSIDE FACE
BOT	= BOTTOM	FS	= FORM SAVER	SC	= SAW CUT END
BIS	= BEND INTO SLAB	GID	= GROUT IN DOWELS	STG	= STAGGER
CB	= CORNER BAR	H	= HORIZONTAL	STIR	= STIRRUPS
CJ	= CONTROL JOINT	IF	= INSIDE FACE	T	= TOP
CTS	= CUT TO SUIT SITE COND.	LL	= LOWER LAYER	THR/1=	THREAD 1END
DWL	= DOWELS	MID	= MIDDLE	THR/2=	THREAD 2ENDS
EE	= EACH END	MIN	= MINIMUM	UL	= UPPER LAYER
EF	= EACH FACE	NF	= NEAR FACE	u/n	= UNLESS NOTED
EJ	= EXPANSION JOINT	OC	= ON CENTER	V	= VERTICAL
ES	= EACH SIDE			TT	= TEMP. TIES
EW	= EACH WAY				

STRAIGHT BARS LABEL FORMAT: 7 B15M X 3600 (QUANTITY, GRADE, LENGTH)

BENT BARS LABEL FORMAT: 7 B15M B1501 (QUANTITY, GRADE, SIZE, BAR MARK)

GRADES OF STEEL
B = GRADE 400R
C = EPOXY COATED
D = 350W
G = GALVANIZED
S = STAINLESS
W = WELDABLE

ISSUE	REMARKS	DATE	BY
0	FOR APPROVAL	MAY/18/21	JJ

MANSTEEL REBAR

MANSTEEL REBAR
105 Industrial Road, Richmond Hill,
Ontario L4C 2Y4 Canada
Phone: 905-737-9797
Fax: 905-737-9704
Email: info@mansteelrebar.com

PROJECT
FORESTSIDE TOWNHOUSES
-BRAMPTON, ON

PART OF STRUCTURE
G.F SLAB BLL P#1

CUSTOMER :
ROYAL PINE HOMES

Project no. 2177
SCALE: AS SHOWN
DRAWING No. R6.0A 0

DETAILED BY: JJ
CHECKED BY:
BAR LIST No.

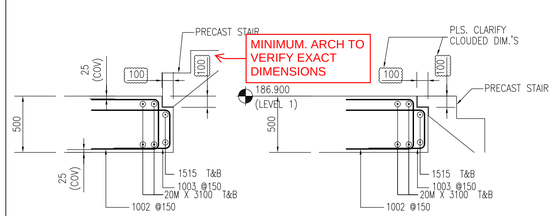

TYP DETAIL
EDGE OF SLAB AT STAIR
SCALE: 1:25

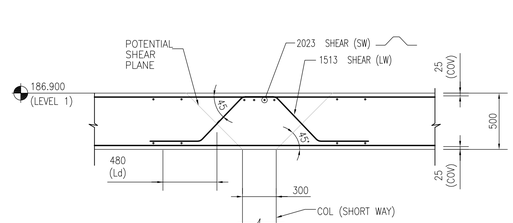

TYP DETAIL
OF PICK-UP SLAB AT COL.
SCALE: 1:25

NOTES

1. ALL STEEL TO BE GRADE 400W
2. STRENGTH OF CONCRETE
   35MPa – SLAB
   35MPa – INTERIOR COLUMNS & WALLS
3. CONCRETE COVER:
   SLAB T -- 25mm
   SLAB B -- 25mm
4. COMPRESSION LAP SPLICE

BAR SIZE	STANDARD LAP (mm)
10M	300
15M	440
20M	590
25M	730
30M	880
35M	1030

5. TENSION LAP SPLICE (L.S) & DEVELOPMENT LENGTH (Ld)

BAR SIZE	fc=25		fc=30		fc=35	
	L.S	L.d	L.S	L.d	L.S	L.d
10M	490	380	450	350	420	320
15M	740	570	670	520	620	480
20M	980	750	890	690	830	640
25M	1530	1170	1390	1070	1290	990
30M	1830	1410	1670	1290	1550	1190
35M	2130	1640	1950	1500	1800	1390

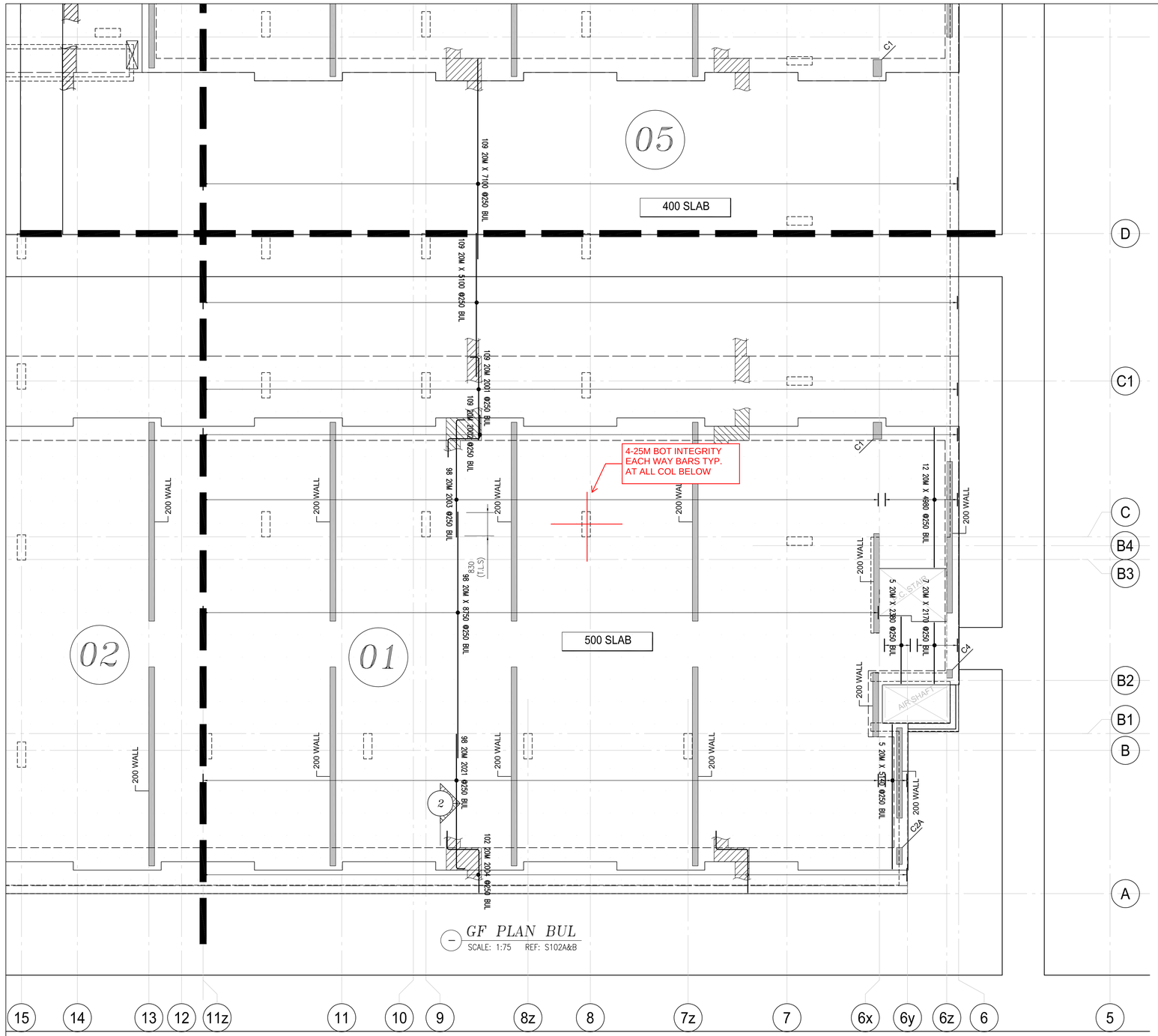

GF PLAN BUL
SCALE: 1:75 REF: S102A&B

Release Code: R6.0B GF BUL P#1						BENDING DETAILS.											
Bar Mark	Qty	Size	Total length	Type	'A'	'B'	'C'	'D'	'E'	'F'	'G'	'H'	'J'	'K'	'O'	'R'
	5	20M	5140			5140										
	98	20M	8750			8750										
	7	20M	2170			2170										
	5	20M	2380			2380										
	12	20M	4980			4980										
	109	20M	5100			5100										
	109	20M	7100			7100										
2021	98	20M	5110	2	310	4800										
2004	102	20M	3360	20		660	1150	1550								
2003	98	20M	4490	2	310	4180										
2001	109	20M	3250	2	310	2940										
2002	109	20M	2660	20		660	1150	850								

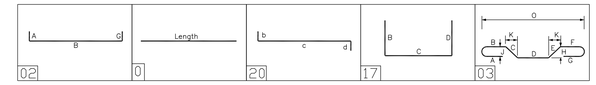

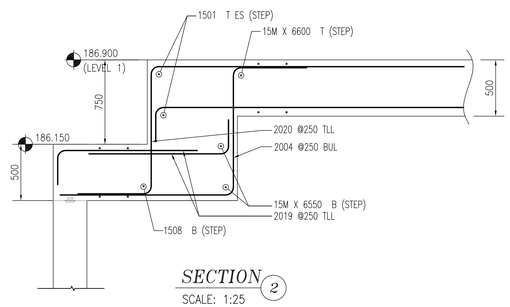

SECTION 2
SCALE: 1:25

DRAWING REVIEW

This review of this drawing does not in any way relieve the contractor of responsibility for its accuracy or for compliance with the contract documents.

	No comment	✓	See comment
	Amend & Resubmit		Rejected See Remarks

Submission No.
Project No. 19066
By AF
Date 25 May 2021

JABLONSKY, AST AND PARTNERS
Consulting Engineers
3 Concorde Gate, North York, ON M3C 4H9

* ELEVATIONS AND DIMENSIONS SHOWN ARE FOR VERIFICATION PURPOSES ONLY AND ARE NOT TO BE USED FOR CONSTRUCTION
* ALL CONFIRMS/VERIFIES WILL BE ASSUMED CORRECT AND APPROVED AS IS UNLESS COMMENTED ON THE APPROVAL DRWGS

LEGEND

ALT = ALTERNATE
BOT = BOTTOM
BRS = BEND INTO SLAB
CB = CORNER BAR
CJ = CONTROL JOINT
CTS = CUT TO SUIT SITE COND.
DWL = DOWELS
EE = EACH END
EF = EACH FACE
EJ = EXPANSION JOINT
ES = EACH SIDE
EW = EACH WAY
FF = FAR FACE
FS = FORM SAVER
GID = GROUT IN DOWELS
H = HORIZONTAL
IF = INSIDE FACE
LL = LOWER LAYER
MID = MIDDLE
MIN = MINIMUM
NF = NEAR FACE
OC = ON CENTER
OF = OUTSIDE FACE
SC = SAW CUT END
STG = STAGGER
STIR = STIRRUPS
T = TOP
THR/1= THREAD 1END
THR/2= THREAD 2ENDS
UL = UPPER LAYER
u/n = UNLESS NOTED
V = VERTICAL
TT = TEMP. TIES

STRAIGHT BARS LABEL FORMAT
7 B15M X 3600
QUANTITY GRADE LENGTH

BENT BARS LABEL FORMAT
7 B15M B1501
QUANTITY GRADE SIZE BAR MARK

GRADES OF STEEL
B = GRADE 400R
E = EPOXY COATED
G = GRADE 60
Z = GALVANIZED
S = STAINLESS
W = WELDABLE

ISSUE	REMARKS	DATE	BY
0	FOR APPROVAL	MAY/18/21	JU

MANSTEEL REBAR

MANSTEEL REBAR
105 Industrial Road, Richmond Hill,
Ontario L4C 2Y4 Canada
Phone: 905-737-9797
Fax: 905-737-9704
Email: info@mansteelrebar.com

PROJECT
FORESTSIDE TOWNHOUSES
–BRAMPTON, ON

PART OF STRUCTURE
G.F SLAB BUL P#1

CUSTOMER :
ROYAL PINE HOMES

Project no. 2177

SCALE: AS SHOWN

DRAWING No.
R6.0B 0

DETAILED BY: JU
CHECKED BY:
BAR LIST No.

NOTES

1. ALL STEEL TO BE GRADE 400W
2. STRENGTH OF CONCRETE
   35MPa – SLAB
   35MPa – INTERIOR COLUMNS & WALLS
3. CONCRETE COVER:
   SLAB T -- 25mm
   SLAB B -- 25mm
4. COMPRESSION LAP SPLICE

BAR SIZE	STANDARD LAP (mm)
10M	300
15M	440
20M	590
25M	730
30M	880
35M	1030

5. TENSION LAP SPLICE (L.S) & DEVELOPMENT LENGTH (Ld)

BAR SIZE	fc=25		fc=30		fc=35	
	L.S	L.d	L.S	L.d	L.S	L.d
10M	490	380	450	350	420	320
15M	740	570	670	520	620	480
20M	980	750	890	690	830	640
25M	1530	1170	1390	1070	1290	990
30M	1830	1410	1670	1290	1550	1190
35M	2130	1640	1950	1500	1800	1390

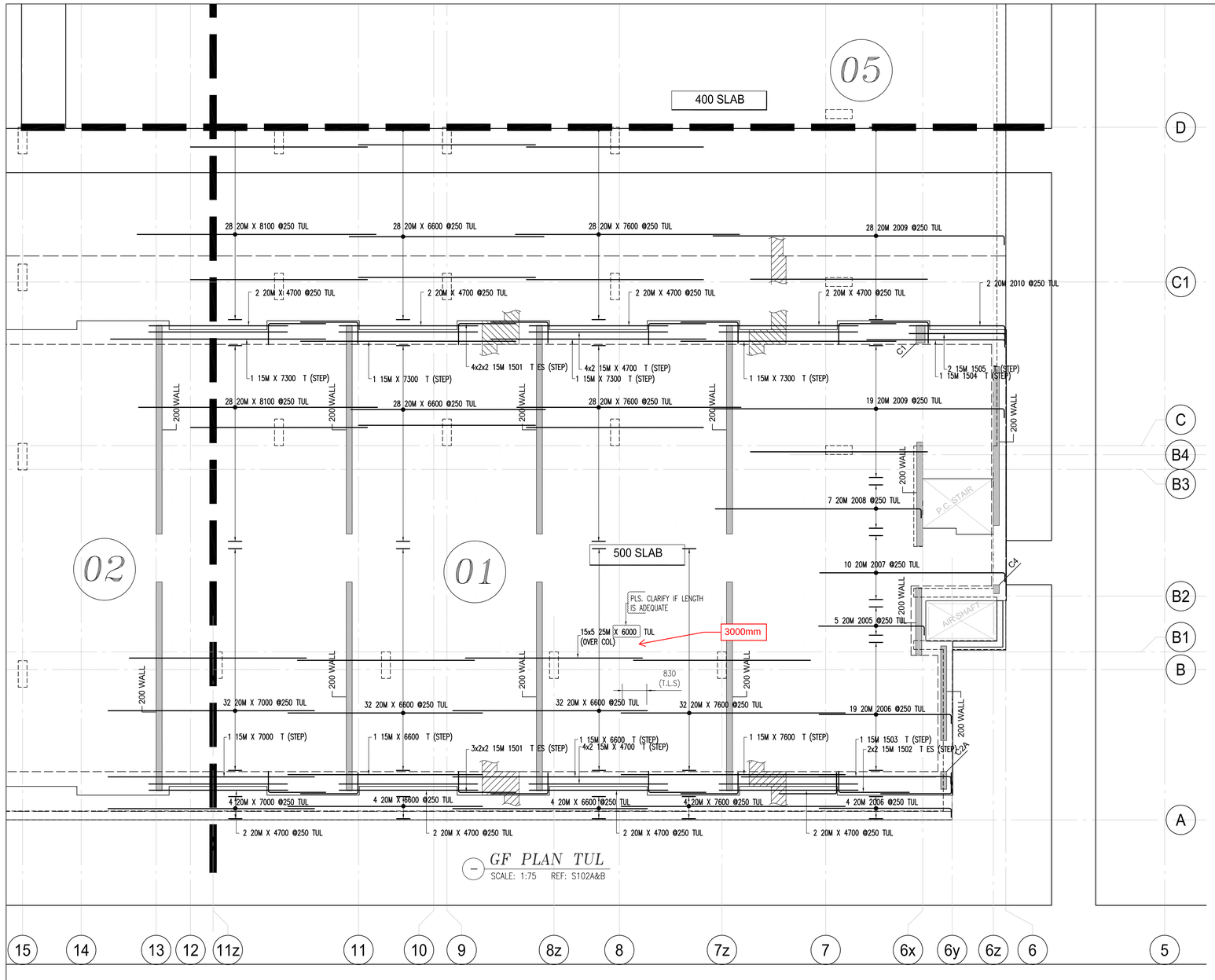

GF PLAN TUL
SCALE: 1:75 REF: S102A&B

Release Code: R6.0C GF TUL P#1 BENDING DETAILS.

Bar Mark	Qty	Size	Total length	Type	'A'	'B'	'C'	'D'	'E'	'F'	'G'	'H'	'J'	'K'	'O'	'R'
	4	15M	7300			7300										
	92	20M	7600			7600										
	128	20M	6600			6600										
	56	20M	8100			8100										
	36	20M	7000			7000										
	16	20M	4700			4700										
	75	25M	6000			6000										
	1	15M	7600			7600										
	2	15M	6600			6600										
	1	15M	7000			7000										
	16	15M	4700			4700										
1504	1	15M	4950	2	260	4690										
2009	47	20M	10200	2	310	9890										
2006	23	20M	4800	2	310	4490										
2005	5	20M	3900	2	310	3590										
2007	10	20M	6600	2	310	6290										
2008	7	20M	7300	2	310	6990										
1501	28	15M	2670	17		1950	720									
1502	4	15M	3120	17		2400	720									
1505	2	15M	3510	2	260	3250										
1503	1	15M	4750	2	260	4490										
2010	2	20M	3560	2	310	3250										

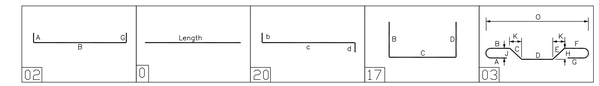

DRAWING REVIEW

This review of this drawing does not in any way relieve the contractor of responsibility for its accuracy or for compliance with the contract documents.

	No comment	√	See comment
	Amend & Resubmit		Rejected See Remarks

Submission No.
Project No. 19066
By AF
Date 25 May 2021

JABLONSKY, AST AND PARTNERS
Consulting Engineers
3 Concorde Gate, North York, ON M3C 4H9

* ELEVATIONS AND DIMENSIONS SHOWN ARE FOR VERIFICATION PURPOSES ONLY AND ARE NOT TO BE USED FOR CONSTRUCTION
* ALL CONFIRMS/VERIFIES WILL BE ASSUMED CORRECT AND APPROVED AS IS UNLESS COMMENTED ON THE APPROVAL DRWGS

LEGEND

ALT	= ALTERNATE	FF	= FAR FACE	OF	= OUTSIDE FACE
BOT	= BOTTOM	FS	= FORM SAVER	SC	= SAW CUT END
BIS	= BEND INTO SLAB	GID	= GROUT IN DOWELS	STG	= STAGGER
CB	= CORNER BAR	H	= HORIZONTAL	STIR	= STIRRUPS
CJ	= CONTROL JOINT			T	= TOP
CTS	= CUT TO SUIT SITE COND.	IF	= INSIDE FACE	THR/1=	THREAD 1END
DWL	= DOWELS	LL	= LOWER LAYER	THR/2=	THREAD 2ENDS
EE	= EACH END	MID	= MIDDLE	UL	= UPPER LAYER
EF	= EACH FACE	MIN	= MINIMUM	U/n	= UNLESS NOTED
EJ	= EXPANSION JOINT	NF	= NEAR FACE	V	= VERTICAL
ES	= EACH SIDE	OC	= ON CENTER	TT	= TEMP. TIES
EW	= EACH WAY				

STRAIGHT BARS LABEL FORMAT
7 B15M X 3600
QUANTITY GRADE LENGTH

BENT BARS LABEL FORMAT
7 B15M B1501
QUANTITY GRADE SIZE BAR MARK

GRADES OF STEEL
D = GRADE 400R
E = EPOXY COATED
P = PSB
G = GALVANIZED
S = STAINLESS
W= WELDABLE

ISSUE	REMARKS	DATE	BY
0	FOR APPROVAL	MAY/18/21	JU

MANSTEEL REBAR
MANSTEEL REBAR
105 Industrial Road, Richmond Hill,
Ontario L4C 2Y4 Canada
Phone: 905-737-9797
Fax: 905-737-9704
Email: info@mansteelrebar.com

PROJECT
FORESTSIDE TOWNHOUSES
-BRAMPTON, ON

PART OF STRUCTURE
G.F SLAB TUL P#1

CUSTOMER :
ROYAL PINE HOMES

Project no. 2177
SCALE: AS SHOWN
DRAWING No. R6.0C 0

DETAILED BY: JU
CHECKED BY:
BAR LIST No.

NOTES

1. ALL STEEL TO BE GRADE 400W
2. STRENGTH OF CONCRETE
   35MPa – SLAB
   35MPa – INTERIOR COLUMNS & WALLS
3. CONCRETE COVER:
   SLAB T -- 25mm
   SLAB B -- 25mm
4. COMPRESSION LAP SPLICE

BAR SIZE	STANDARD LAP (mm)
10M	300
15M	440
20M	590
25M	730
30M	880
35M	1030

5. TENSION LAP SPLICE (L.S) & DEVELOPMENT LENGTH (Ld)

BAR SIZE	fc=25		fc=30		fc=35	
	L.S	L.d	L.S	L.d	L.S	L.d
10M	490	380	450	350	420	320
15M	740	570	670	520	620	480
20M	980	750	890	690	830	640
25M	1530	1170	1390	1070	1290	990
30M	1830	1410	1670	1290	1550	1190
35M	2130	1640	1950	1500	1800	1390

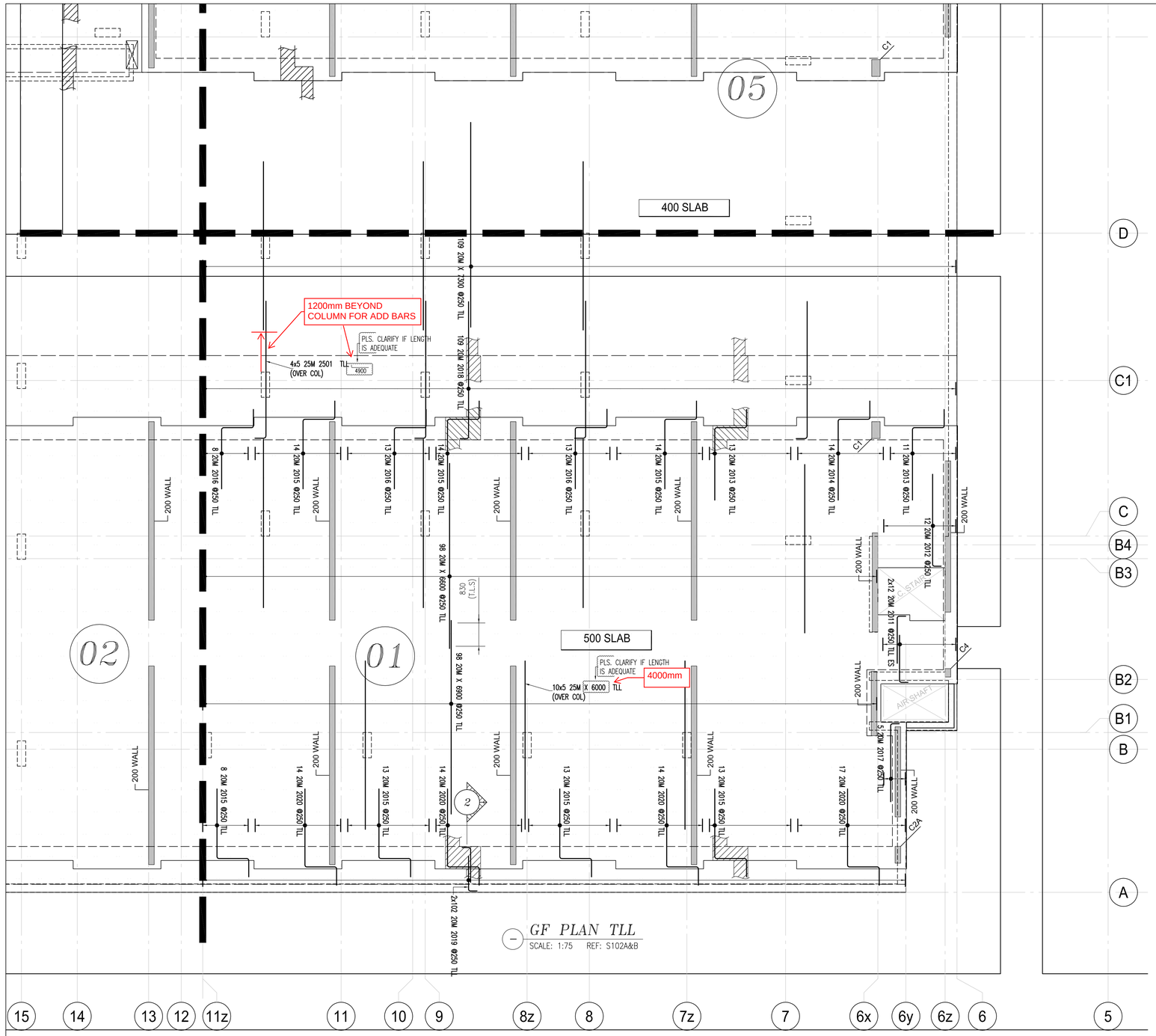

GF PLAN TLL
SCALE: 1:75 REF: S102A&B

Release Code: R6.0D GF TLL P#1 BENDING DETAILS.

Bar Mark	Qty	Size	Total length	Type	'A'	'B'	'C'	'D'	'E'	'F'	'G'	'H'	'J'	'K'	'O'	'R'
	98	20M	6900			6900										
	50	25M	6000			6000										
	98	20M	6600			6600										
	109	20M	7300			7300										
2020	59	20M	4660	20		2790	1150	660								
2015	89	20M	4300	20		2490	1150	660								
2016	34	20M	4000	20		2190	1150	660								
2017	5	20M	3100	2	310	2790										
2013	24	20M	4400	20		2590	1150	660								
2014	14	20M	4700	20		2890	1150	660								
2019	204	20M	1560	2	310	1250										
2501	20	25M	5300	2	400	4900										
2012	12	20M	3600	2	310	3290										
2018	109	20M	5200	2	310	4890										
2011	24	20M	2000	2	310	1690										

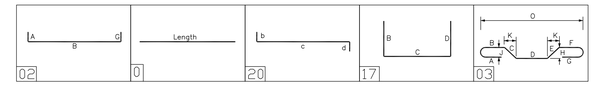

DRAWING REVIEW

This review of this drawing does not in any way relieve the contractor of responsibility for its accuracy or for compliance with the contract documents.

	No comment	✓	See comment
	Amend & Resubmit		Rejected See Remarks

Submission No.
Project No. 19066
By AF
Date 25 May 2021

JABLONSKY, AST AND PARTNERS
Consulting Engineers
3 Concorde Gate, North York, ON M3C 4H9

* ELEVATIONS AND DIMENSIONS SHOWN ARE FOR VERIFICATION PURPOSES ONLY AND ARE NOT TO BE USED FOR CONSTRUCTION
* ALL CONFIRMS/VERIFIES WILL BE ASSUMED CORRECT AND APPROVED AS IS UNLESS COMMENTED ON THE APPROVAL DRWGS

LEGEND

ALT	= ALTERNATE	FF	= FAR FACE	OF	= OUTSIDE FACE
BOT	= BOTTOM	FS	= FORM SAVER	SC	= SAW CUT END
BSI	= BEND INTO SLAB	GID	= GROUT IN DOWELS	STG	= STAGGER
CB	= CORNER BAR	H	= HORIZONTAL	STIR	= STIRRUPS
CJ	= CONTROL JOINT	IF	= INSIDE FACE	T	= TOP
CTS	= CUT TO SUIT SITE COND.	LL	= LOWER LAYER	THR/1	= THREAD 1END
DWL	= DOWELS	MID	= MIDDLE	THR/2	= THREAD 2ENDS
EE	= EACH END	MIN	= MINIMUM	UL	= UPPER LAYER
EF	= EACH FACE	NF	= NEAR FACE	u/n	= UNLESS NOTED
EJ	= EXPANSION JOINT	OC	= ON CENTER	V	= VERTICAL
ES	= EACH SIDE			TT	= TEMP. TIES
EW	= EACH WAY				

STRAIGHT BARS LABEL FORMAT: 7 B15M X 3600 (QUANTITY, GRADE, SIZE, LENGTH)

BENT BARS LABEL FORMAT: 7 B15M B1501 (QUANTITY, GRADE, SIZE, BAR MARK)

GRADES OF STEEL

B =	GRADE 400R
C =	EPOXY COATED
G =	GFRP
Z =	GALVANIZED
S =	STAINLESS
W =	WELDABLE

ISSUE	REMARKS	DATE	BY
0	FOR APPROVAL	MAY/18/21	JU

MANSTEEL REBAR

MANSTEEL REBAR
105 Industrial Road, Richmond Hill,
Ontario L4C 2Y4 Canada
Phone: 905-737-9797
Fax: 905-737-9704
Email: info@mansteelrebar.com

PROJECT
FORESTSIDE TOWNHOUSES
-BRAMPTON, ON

PART OF STRUCTURE
G.F SLAB TLL P#1

CUSTOMER :
ROYAL PINE HOMES

Project no. 2177
SCALE: AS SHOWN
DRAWING No. R6.0D 0

DETAILED BY: JU
CHECKED BY:
BAR LIST No.

NOTES

1. ALL STEEL TO BE GRADE 400W
2. STRENGTH OF CONCRETE
   35MPa – SLAB
   35MPa – INTERIOR COLUMNS & WALLS
3. CONCRETE COVER:
   SLAB T. -- 25mm
   SLAB B -- 25mm

4. COMPRESSION LAP SPLICE

BAR SIZE	STANDARD LAP (mm)
10M	300
15M	440
20M	590
25M	730
30M	880
35M	1030

5. TENSION LAP SPLICE (L.S) & DEVELOPMENT LENGTH (Ld)

BAR SIZE	fc=25		fc=30		fc=35	
	L.S	L.d	L.S	L.d	L.S	L.d
10M	490	380	450	350	420	320
15M	740	570	670	520	620	480
20M	980	750	890	690	830	640
25M	1530	1170	1390	1070	1290	990
30M	1830	1410	1670	1290	1550	1190
35M	2130	1640	1950	1500	1800	1390

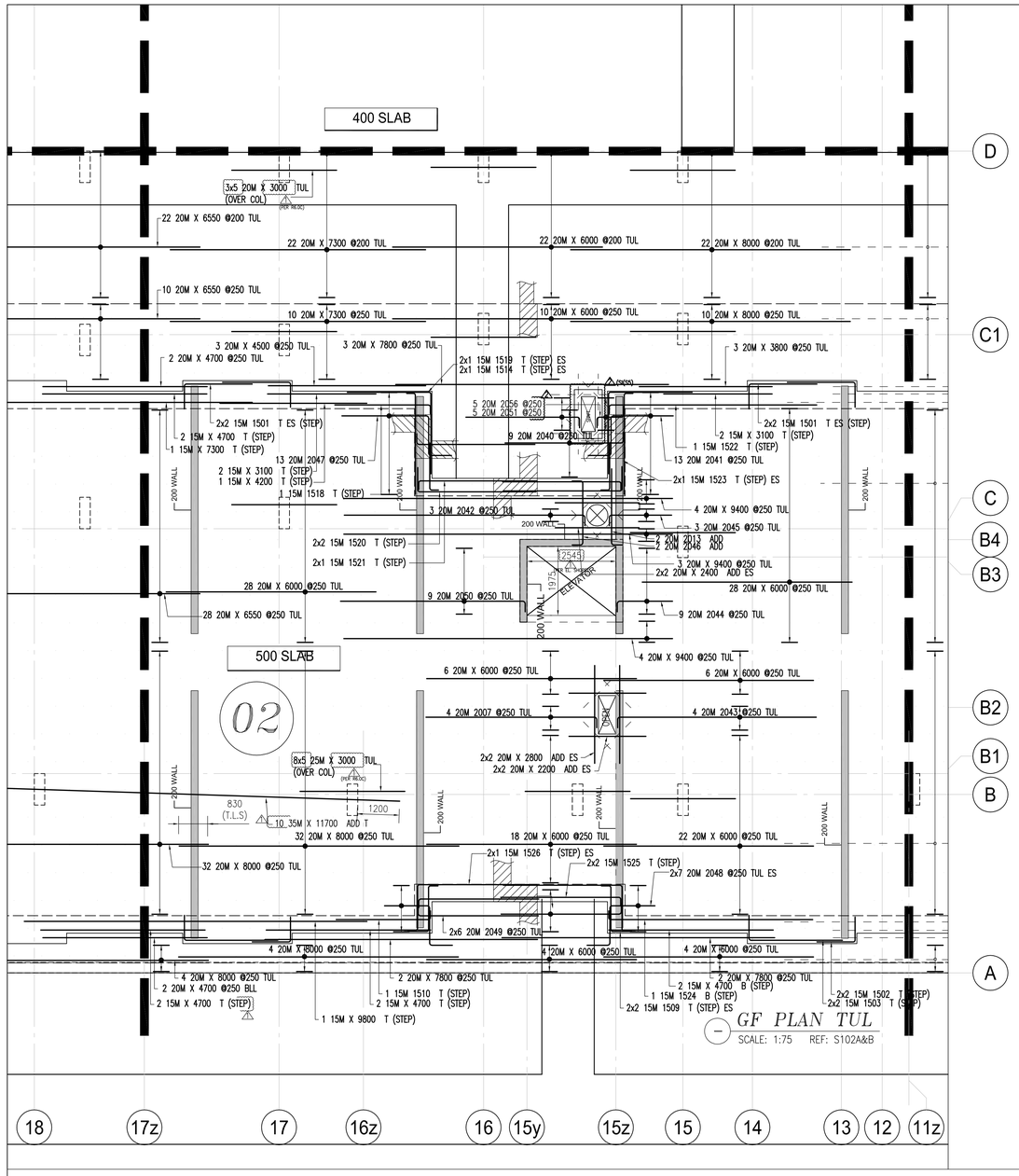

GF PLAN TUL

SCALE: 1:75 REF: S102A&B

Release Code: R6.1C GF TUL P#2 BENDING DETAILS.

Bar Mark	Qty	Size	Total length	Type	'A'	'B'	'C'	'D'	'E'	'F'	'G'	'H'	'J'	'K'	'O'	'R'
	8	15M	4700			4700										
	32	20M	7300			7300										
	60	20M	6550			6550										
	4	20M	4700			4700										
	1	15M	7300			7300										
	4	15M	3100			3100										
	1	15M	4200			4200										
	11	20M	9400			9400										
	4	20M	2200			2200										
	4	20M	2800			2800										
	4	20M	2400			2400										
	1	15M	9800			9800										
	40	25M	3000			3000										
	15	20M	3000			3000										
	104	20M	8000			8000										
	148	20M	6000			6000										
	3	20M	3800			3800										
	3	20M	4500			4500										
	7	20M	7800			7800										
2040	9	20M	3700	2	310	3390										
1522	1	15M	6200	2	260	5940										
2047	13	20M	4300	20		660	1150	2490								
1524	1	15M	6100	2	260	5840										
1510	1	15M	2960	2	260	2700										
1523	2	15M	3160	2	260	2900										
1502	4	15M	1820	17		1100	720									
1503	4	15M	3400	17		2680	720									
2045	3	20M	2100	2	310	1790										
2042	3	20M	7200	2	310	6890										
1509	4	15M	2300	20		700	1320	280								
1526	2	15M	5000	20		3400	1320	280								
1525	4	15M	3700	2	260	3440										
1501	8	15M	2670	17		1950	720									
2048	14	20M	3110	20		660	1150	1300								
2049	12	20M	3760	2	310	3450										
2041	13	20M	3600	20		660	1150	1790								
1518	1	15M	3000	2	260	2740										
2007	4	20M	5200	2	310	4890										
1514	2	15M	1600	2	260	1340										
1521	2	15M	3650	2	260	3390										
2050	9	20M	5600	2	310	5290										
1519	2	15M	4740	17		2400	2340									
1520	4	15M	4090	17		700	3390									
2044	9	20M	1900	2	310	1590										
2013	2	20M	2500	2	310	2190										
2046	2	20M	2470	2	310	1850					310					
2043	4	20M	6000	2	310	5690										

Release Code: R6.1C GF TUL P#2 PATCHBENDING DETAILS.

Bar Mark	Qty	Size	Total length	Type	'A'	'B'	'C'	'D'	'E'	'F'	'G'	'H'	'J'	'K'	'O'	'R'
	10	35M	11700			11700										

Release Code: R6.1C GF TUL P#2 PATCHBENDING DETAILS.

Bar Mark	Qty	Size	Total	length	Type	'A'	'B'	'C'	'D'	'E'	'F'	'G'	'H'	'J'	'K'	'O'	'R'
2056	5	20M	1400	20			310	780	310								
2051	5	20M	3570	2	310		3260										

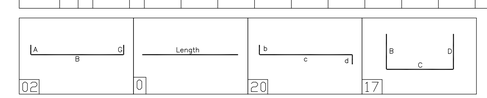

* ELEVATIONS AND DIMENSIONS SHOWN ARE FOR VERIFICATION PURPOSES ONLY AND ARE NOT TO BE USED FOR CONSTRUCTION
* ALL CONFIRMS/VERIFIES WILL BE ASSUMED CORRECT AND APPROVED AS IS UNLESS COMMENTED ON THE APPROVAL DRWGS

LEGEND

ALT = ALTERNATE
BOT = BOTTOM
BIS = BEND INTO SLAB
CB = CORNER BAR
CJ = CONTROL JOINT
CTS = CUT TO SUIT SITE COND.
DWL = DOWELS
EE = EACH END
EF = EACH FACE
EJ = EXPANSION JOINT
ES = EACH SIDE
EW = EACH WAY
FF = FAR FACE
FS = FORM SAVER
GID = GROUT IN DOWELS
H = HORIZONTAL
IF = INSIDE FACE
LL = LOWER LAYER
MID = MIDDLE
MIN = MINIMUM
NF = NEAR FACE
OC = ON CENTER
OF = OUTSIDE FACE
SC = SAW CUT END
STG = STAGGER
STIR = STIRRUPS
T = TOP
THR/1= THREAD 1END
THR/2= THREAD 2ENDS
UL = UPPER LAYER
u/n = UNLESS NOTED
V = VERTICAL
TT = TEMP. TIES

STRAIGHT BARS LABEL FORMAT: 7 B15M X 3600 — QUANTITY, GRADE, LENGTH

BENT BARS LABEL FORMAT: 7 B15M B1501 — QUANTITY, GRADE, SIZE, BAR MARK

GRADES OF STEEL
B = GRADE 400R
E = EPOXY COATED
C = CRS
G = GALVANIZED
S = STAINLESS
W = WELDABLE

DRAWING REVIEW

This review of this drawing does not in any way relieve the contractor of responsibility for its accuracy or for compliance with the contract documents.

✓ No comment	See comment
Amend & Resubmit	Rejected See Remarks

Submission No.
Project No. 19066
By AJ
Date 15 Jun 2021

JABLONSKY, AST AND PARTNERS
Consulting Engineers
3 Concorde Gate, North York, ON M3C 4H9

ISSUE	REMARKS	DATE	BY
2	REV. PER SI(S5)	JUN/09/21	JJ
1	REV. PER COMM. FOR FAB.	MAY/31/21	JJ
0	FOR APPROVAL	MAY/19/21	JJ

MANSTEEL REBAR

MANSTEEL REBAR
105 Industrial Road, Richmond Hill,
Ontario L4C 2Y4 Canada
Phone: 905-737-9797
Fax: 905-737-9704
Email: info@mansteelrebar.com

PROJECT
FORESTSIDE TOWNHOUSES
-BRAMPTON, ON

PART OF STRUCTURE
G.F SLAB TUL P#2

CUSTOMER :
ROYAL PINE HOMES

Project no. 2177
SCALE: AS SHOWN
DRAWING No. R6.1C 2

DETAILED BY: JJ
CHECKED BY:
BAR LIST No.

NOTES

1. ALL STEEL TO BE GRADE 400W
2. STRENGTH OF CONCRETE
   35MPa – SLAB
   35MPa – INTERIOR COLUMNS & WALLS
3. CONCRETE COVER:
   SLAB T -- 25mm
   SLAB B -- 25mm
4. COMPRESSION LAP SPLICE

BAR SIZE	STANDARD LAP (mm)
10M	300
15M	440
20M	590
25M	730
30M	880
35M	1030

5. TENSION LAP SPLICE (L.S) & DEVELOPMENT LENGTH (Ld)

BAR SIZE	fc=25		fc=30		fc=35	
	L.S	L.d	L.S	L.d	L.S	L.d
10M	490	380	450	350	420	320
15M	740	570	670	520	620	480
20M	980	750	890	690	830	640
25M	1530	1170	1390	1070	1290	990
30M	1830	1410	1670	1290	1550	1190
35M	2130	1640	1950	1500	1800	1390

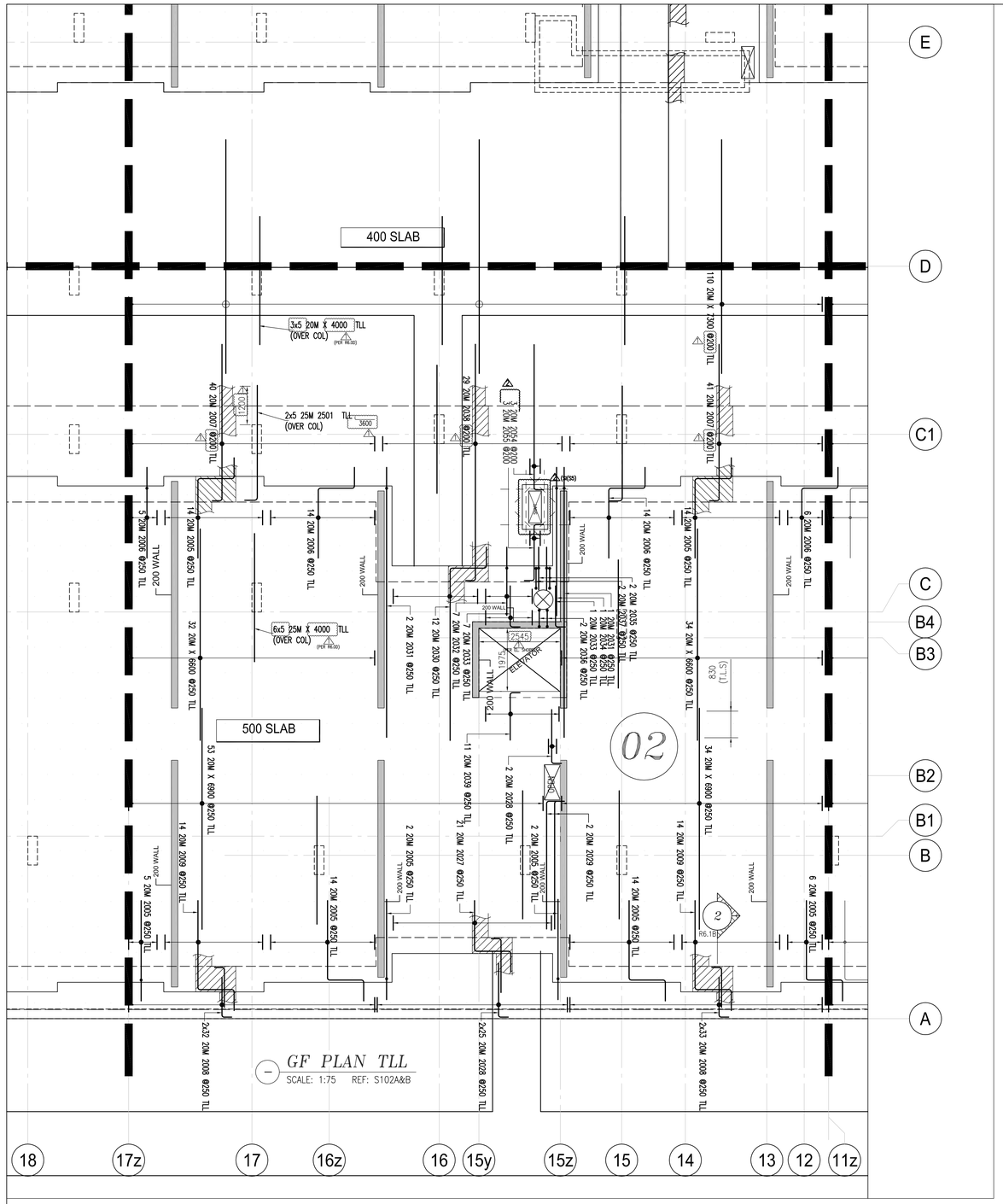

Release Code: R6.1D GF TLL P#2 BENDING DETAILS.

Bar Mark	Qty	Size	Total	length	Type	'A'	'B'	'C'	'D'	'E'	'F'	'G'	'H'	'J'	'K'	'O'	'R'
	30	25M	4000				4000										
	66	20M	6600				6600										
	95	20M	4000				4000										
	12	20M	7300				7300										
	87	20M	6900				6900										
2036	2	20M	1150	2		310	530					310					
2037	2	20M	1260	2		310	640					310					
2006	39	20M	4000	20			2990	1150	660								
2008	130	20M	1560	2		310	1250										
2501	10	25M	4000	2		400	3600										
2005	71	20M	4300	20			2490	1150	660								
2027	21	20M	3400	20			1590	1150	660								
2009	28	20M	4600	20			2790	1150	660								
2038	29	20M	7700	2		310	7390										
2029	2	20M	4310	2		310	4000										
2030	12	20M	7200	20			5390	1150	660								
2031	3	20M	9600	20			7790	1150	660								
2032	7	20M	3300	20			1490	1150	660								
2039	11	20M	1800	2		310	1490										
2028	52	20M	2000	2		310	1690										
2007	81	20M	5200	2		310	4890										
2034	1	20M	5800	20			3990	1150	660								
2033	8	20M	1600	2		310	1290										
2035	2	20M	2500	20			690	1150	660								

Release Code: R6.1D GF TLL P#2 PATCH BENDING DETAILS.

Bar Mark	Qty	Size	Total	length	Type	'A'	'B'	'C'	'D'	'E'	'F'	'G'	'H'	'J'	'K'	'O'	'R'
2054	3	20M	4850	2		310	4540										
2055	3	20M	2390	20			310	1770	310								

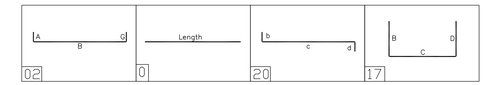

DRAWING REVIEW

This review of this drawing does not in any way relieve the contractor of responsibility for its accuracy or for compliance with the contract documents.

✓	No comment		See comment
	Amend & Resubmit		Rejected See Remarks

Submission No.
Project No. 19066
By AF
Date 15 Jun 2021

JABLONSKY, AST AND PARTNERS
Consulting Engineers
3 Concorde Gate, North York, ON M3C 4H9

- ELEVATIONS AND DIMENSIONS SHOWN ARE FOR VERIFICATION PURPOSES ONLY AND ARE NOT TO BE USED FOR CONSTRUCTION
- ALL CONFIRMS/VERIFIES WILL BE ASSUMED CORRECT AND APPROVED AS IS UNLESS COMMENTED ON THE APPROVAL DRWGS

LEGEND

ALT	= ALTERNATE	FF	= FAR FACE	OF	= OUTSIDE FACE
BOT	= BOTTOM	FS	= FORM SAVER	SC	= SAW CUT END
BIS	= BEND INTO SLAB	GO	= GROUT IN DOWELS	STG	= STAGGER
CB	= CORNER BAR	H	= HORIZONTAL	STIR	= STIRRUPS
CJ	= CONTROL JOINT	IF	= INSIDE FACE	T	= TOP
CTS	= CUT TO SUIT SITE COND.	LL	= LOWER LAYER	THR/1=	THREAD 1ENDS
DWL	= DOWELS	MID	= MIDDLE	THR/2=	THREAD 2ENDS
EE	= EACH END	MIN	= MINIMUM	UL	= UPPER LAYER
EF	= EACH FACE	NF	= NEAR FACE	u/n	= UNLESS NOTED
EJ	= EXPANSION JOINT	OC	= ON CENTER	V	= VERTICAL
ES	= EACH SIDE			TT	= TEMP. TIES
EW	= EACH WAY				

STRAIGHT BARS LABEL FORMAT: 7 B15M X 3600 — QUANTITY, GRADE, LENGTH

BENT BARS LABEL FORMAT: 7 B15M B1501 — QUANTITY, GRADE, SIZE, BAR MARK

GRADES OF STEEL

B =	GRADE 400E
E =	EPOXY COATED
S =	STRIP
G =	GALVANIZED
W =	WELDABLE

ISSUE	REMARKS	DATE	BY
2	REV. PER SI(S5)	JUN/09/21	JU
1	REV. PER COMM. FOR FAB.	MAY/31/21	JU
0	FOR APPROVAL	MAY/19/21	JU

MANSTEEL REBAR

MANSTEEL REBAR
105 Industrial Road, Richmond Hill,
Ontario L4C 2Y4 Canada
Phone: 905-737-9797
Fax: 905-737-9704
Email: info@mansteelrebar.com

PROJECT
FORESTSIDE TOWNHOUSES
-BRAMPTON, ON

PART OF STRUCTURE
G.F SLAB TLL P#2

CUSTOMER :
ROYAL PINE HOMES

Project no. 2177
SCALE: AS SHOWN
DRAWING No. R6.1D 2

DETAILED BY: JU
CHECKED BY:
BAR LIST No.

NOTES

1. ALL STEEL TO BE GRADE 400W
2. STRENGTH OF CONCRETE
   35MPa – SLAB
   35MPa – INTERIOR COLUMNS & WALLS
3. CONCRETE COVER:
   SLAB T -- 25mm
   SLAB B -- 25mm
4. COMPRESSION LAP SPLICE

BAR SIZE	STANDARD LAP (mm)
10M	300
15M	440
20M	590
25M	730
30M	880
35M	1030

5. TENSION LAP SPLICE (L.S) & DEVELOPMENT LENGTH (Ld)

BAR SIZE	fc=25		fc=30		fc=35	
	L.S	L.d	L.S	L.d	L.S	L.d
10M	490	380	450	350	420	320
15M	740	570	670	520	620	480
20M	980	750	890	690	830	640
25M	1530	1170	1390	1070	1290	990
30M	1830	1410	1670	1290	1550	1190
35M	2130	1640	1950	1500	1800	1390

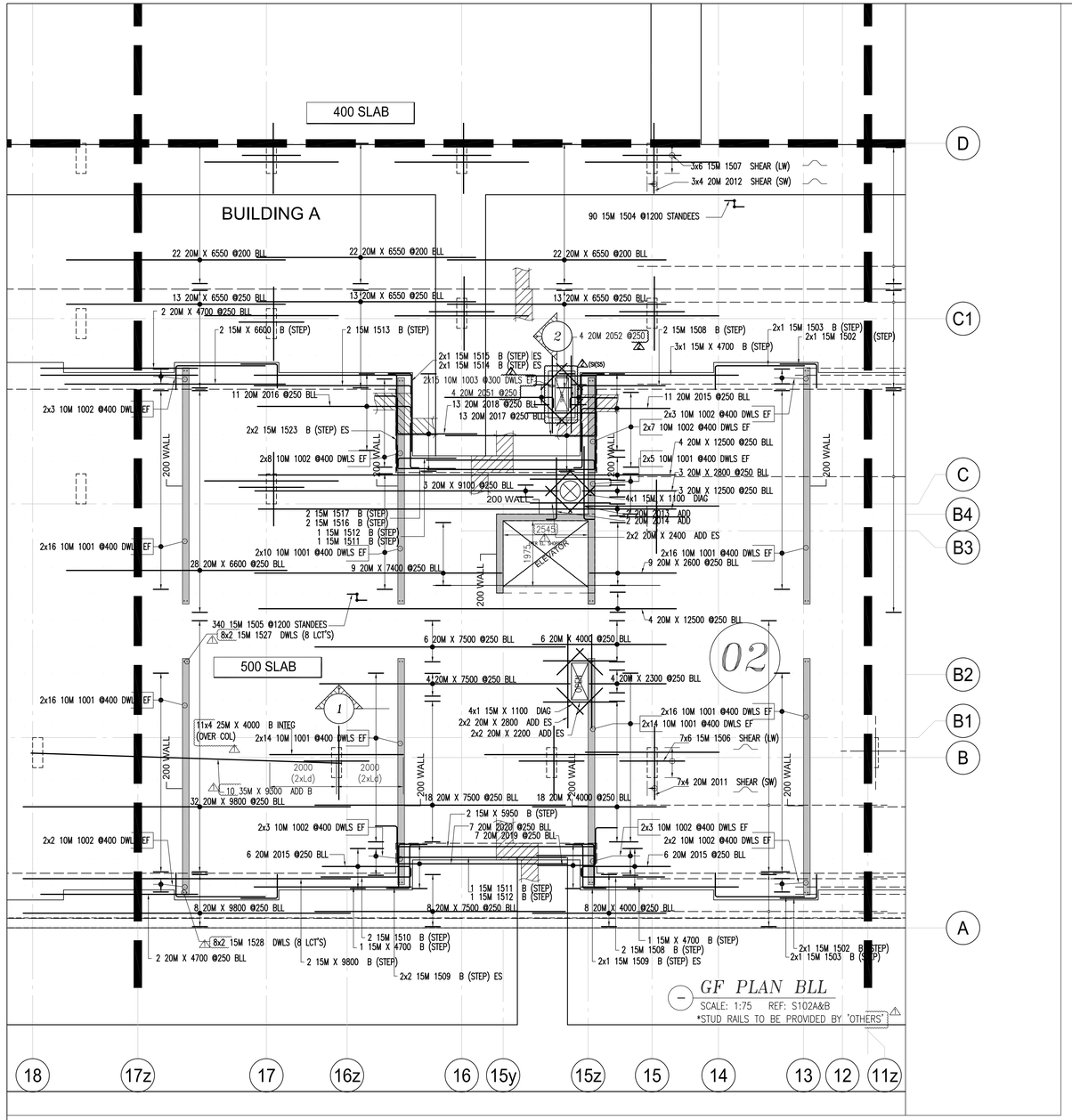

GF PLAN BLL

SCALE: 1:75 REF: S102A&B

*STUD RAILS TO BE PROVIDED BY 'OTHERS'

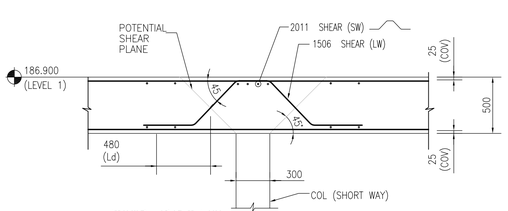

TYP DETAIL OF PICK-UP SLAB AT COL.

SCALE: 1:25

Release Code: R6.1A GF BLL P#2 PATCH BENDING DETAILS.

Bar Mark	Qty	Size	Total length	Type	'A'	'B'	'C'	'D'	'E'	'F'	'G'	'H'	'J'	'K'	'O'	'R'
	4	15M	1100			1100										
	8	20M	2100			2100										
	8	20M	2300			2300										
1004	4	10M	2500	17		900	700	900								
1006	4	10M	1660	2	180	1300					180					
1005	4	10M	1060	2	180	700					180					
1003	30	10M	1330	2	180	1150										
1531	2	15M	1820	2	260	1300					260					
1532	2	15M	1220	2	260	700					260					
2051	4	20M	3570	2	310	3260										
2052	4	20M	1090	2	310	780										
1529	2	15M	2700	17		1000	700	1000								

Release Code: R6.1A GF BLL P#2 BENDING DETAILS.

Bar Mark	Qty	Size	Total length	Type	'A'	'B'	'C'	'D'	'E'	'F'	'G'	'H'	'J'	'K'	'O'	'R'
	36	20M	7500			7500										
	32	20M	4000			4000										
	40	20M	9800			9800										
	4	20M	2300			2300										
	105	20M	6550			6550										
	4	20M	2200			2200										
	7	20M	2800			2800										
	8	15M	1100			1100										
	4	20M	2400			2400										
	9	20M	2600			2600										
	11	20M	12500			12500										
	28	20M	6600			6600										
	9	20M	7400			7400										
	3	20M	9100			9100										
	2	15M	9800			9800										
	4	20M	4700			4700										
	5	15M	4700			4700										
	2	15M	6600			6600										
	2	15M	5950			5950										
	44	25M	4000			4000										
1001	214	10M	1050	2	180	870										
1505	340	15M	1500	26		300	350	200	350	300						
1504	90	15M	1400	26		300	250	200	350	300						
1002	62	10M	1800	2	180	1620										
1510	2	15M	2960	2	260	2700										
2014	2	20M	2170	2	310	1860										
2019	7	20M	3560	20		660	1150	1150								
2020	7	20M	6910	20		660	1150	5100								
2016	11	20M	4910	2	310	4600										
1502	4	15M	1820	17		1100	720									
1503	4	15M	3400	17		2680	720									
2017	13	20M	6310	20		660	1150	4500								
2018	13	20M	4210	20		660	1150	2400								
1513	2	15M	4960	2	260	4700										
2013	2	20M	2500	2	310	2190										
2015	23	20M	2960	2	310	2650										
1509	6	15M	2300	20		700	1320	280								
1511	2	15M	5300	2	260	5040										
1512	2	15M	2000	2	260	1740										
1514	2	15M	1600	2	260	1340										
1515	2	15M	3040	17		700	2340									
1516	2	15M	5740	17		700	5040									
1517	2	15M	2440	17		700	1740									
2011	28	20M	2540	3		600	520	300	520	600		390		350	2200	
1507	18	15M	2020	3		450	410	300	410	450		310		270	1740	
2012	12	20M	2360	3		650	380	300	380	650		290		250	2100	
1506	42	15M	2300	3		450	550	300	550	450		410		370	1940	
1523	4	15M	3160	2	260	2900										
1527	16	15M	1300	2	260	1040										
1528	16	15M	2100	2	260	1840										
1508	4	15M	2760	2	260	2500										

Release Code: R6.1A GF BLL P#2 PATCH BENDING DETAILS.

Bar Mark	Qty	Size	Total length	Type	'A'	'B'	'C'	'D'	'E'	'F'	'G'	'H'	'J'	'K'	'O'	'R'
	10	35M	9300			9300										

DRAWING REVIEW

This review of this drawing does not in any way relieve the contractor of responsibility for its accuracy or for compliance with the contract documents.

✓ No comment	See comment
Amend & Resubmit	Rejected See Remarks

Submission No.
Project No. 19066
By AP
Date 15 Jun 2021

JABLONSKY, AST AND PARTNERS
Consulting Engineers
3 Concorde Gate, North York, ON M3C 4H9

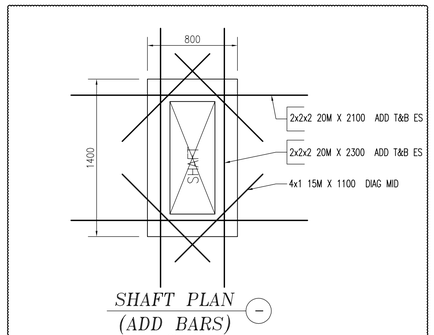

SHAFT PLAN (ADD BARS)

SCALE: 1:25

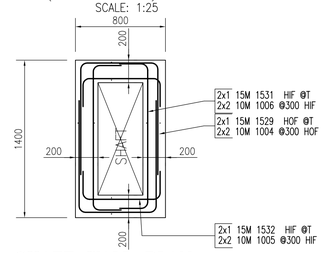

SHAFT WALL PLAN

SCALE: 1:25

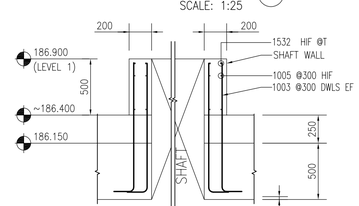

SECTION 2

SCALE: 1:25

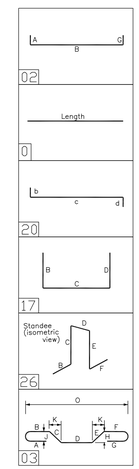

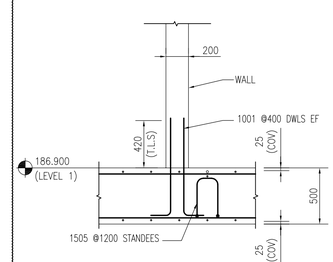

SECTION 1

SCALE: 1:25

NOTES

1. ALL STEEL TO BE GRADE 400W
2. STRENGTH OF CONCRETE
   35MPa – SLAB
   35MPa – INTERIOR COLUMNS & WALLS
3. CONCRETE COVER:
   SLAB T -- 25mm
   SLAB B -- 25mm
4. COMPRESSION LAP SPLICE

BAR SIZE	STANDARD LAP (mm)
10M	300
15M	440
20M	590
25M	730
30M	880
35M	1030

5. TENSION LAP SPLICE (L.S) & DEVELOPMENT LENGTH (Ld)

BAR SIZE	fc=25		fc=30		fc=35	
	L.S	L.d	L.S	L.d	L.S	L.d
10M	490	380	450	350	420	320
15M	740	570	670	520	620	480
20M	980	750	890	690	830	640
25M	1530	1170	1390	1070	1290	990
30M	1830	1410	1670	1290	1550	1190
35M	2130	1640	1950	1500	1800	1390

* ELEVATIONS AND DIMENSIONS SHOWN ARE FOR VERIFICATION PURPOSES ONLY AND ARE NOT TO BE USED FOR CONSTRUCTION
* ALL CONFIRMS/VERIFIES WILL BE ASSUMED CORRECT AND APPROVED AS IS UNLESS COMMENTED ON THE APPROVAL DRWGS

LEGEND

ALT	= ALTERNATE	FF	= FAR FACE	OF	= OUTSIDE FACE
BOT	= BOTTOM	FS	= FORM SAVER	SC	= SAW CUT END
BIS	= BEND INTO SLAB	GID	= GROUT IN DOWELS	STG	= STAGGER
CB	= CORNER BAR	H	= HORIZONTAL	STIR	= STIRRUPS
CJ	= CONTROL JOINT	IF	= INSIDE FACE	T	= TOP
CTS	= CUT TO SUIT SITE COND.	LL	= LOWER LAYER	THR/1=	THREAD 1END
DWL	= DOWELS	MID	= MIDDLE	THR/2=	THREAD 2ENDS
EE	= EACH END	MIN	= MINIMUM	UL	= UPPER LAYER
EF	= EACH FACE	NF	= NEAR FACE	u/n	= UNLESS NOTED
EJ	= EXPANSION JOINT	OC	= ON CENTER	V	= VERTICAL
ES	= EACH SIDE			TT	= TEMP. TIES
EW	= EACH WAY				

STRAIGHT BARS LABEL FORMAT: 7 B15M X 3600 — QUANTITY, GRADE, LENGTH

BENT BARS LABEL FORMAT: 7 B15M B1501 — QUANTITY, GRADE, SIZE, BAR MARK

GRADES OF STEEL

B =	GRADE 400W
C =	EPOXY COATED
S =	STRIP
G =	GALVANIZED
P =	PLAIN
W=	WELDABLE

ISSUE	REMARKS	DATE	BY
2	REV. PER SI(S5)	JUN/09/21	JJ
1	REV. PER COMM. FOR FAB.	MAY/31/21	JJ
0	FOR APPROVAL	MAY/19/21	JJ

MANSTEEL REBAR

MANSTEEL REBAR
105 Industrial Road, Richmond Hill,
Ontario L4C 2Y4 Canada
Phone: 905-737-9797
Fax: 905-737-9704
Email: info@mansteelrebar.com

PROJECT
FORESTSIDE TOWNHOUSES
-BRAMPTON, ON

PART OF STRUCTURE
G.F SLAB BLL P#2

CUSTOMER :
ROYAL PINE HOMES

Project no. 2177
SCALE: AS SHOWN
DRAWING No. R6.1A 2

DETAILED BY: JJ
CHECKED BY:
BAR LIST No.

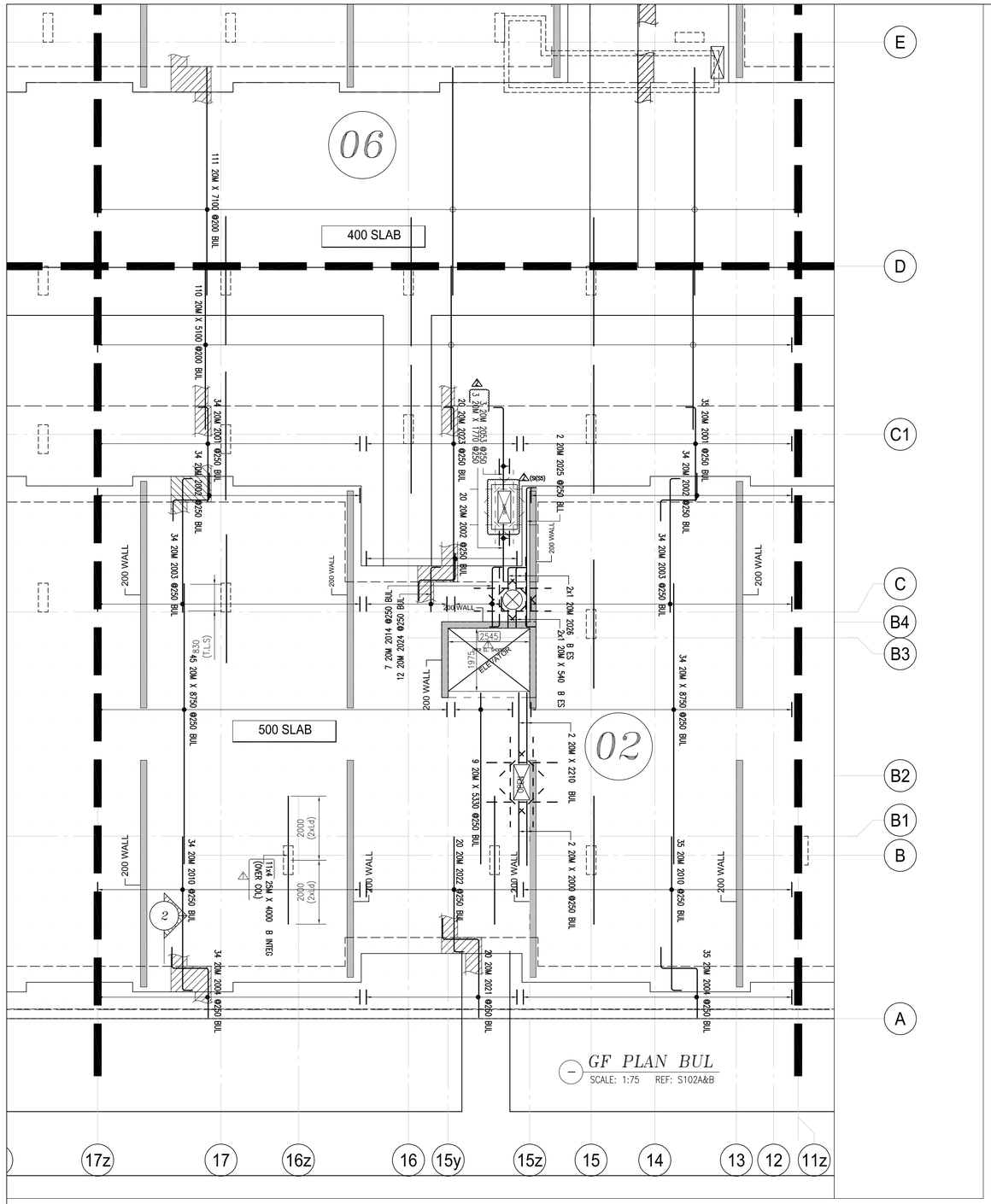

Release Code: R6.1B GF BUL P#2 BENDING DETAILS.

Bar Mark	Qty	Size	Total length	Type	'A'	'B'	'C'	'D'	'E'	'F'	'G'	'H'	'J'	'K'	'O'	'R'
	2	20M	540			540										
	2	20M	2000			2000										
	2	20M	2210			2210										
	110	20M	5100			5100										
	111	20M	7100			7100										
	79	20M	8750			8750										
	9	20M	5330			5330										
	44	25M	4000			4000										
2010	69	20M	5110	2	310	4800										
2021	20	20M	4269	20		660	1150	2450								
2022	20	20M	3990	2	310	3680										
2023	20	20M	5750	2	310	5440										
2024	12	20M	1710	2	310	1400										
2014	7	20M	2170	2	310	1860										
2025	2	20M	4670	2	310	4360										
2026	2	20M	1010	2	310	700										
2004	69	20M	3360	20		660	1150	1550								
2001	69	20M	3250	2	310	2940										
2002	88	20M	2660	20		660	1150	850								
2003	68	20M	4490	2	310	4180										

Release Code: R6.1B GF BUL P#2 PATCH BENDING DETAILS.

Bar Mark	Qty	Size	Total length	Type	'A'	'B'	'C'	'D'	'E'	'F'	'G'	'H'	'J'	'K'	'O'	'R'
	3	20M	1770			1770										
2053	3	20M	2890	2	310	2580										

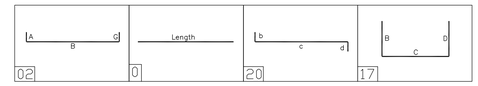

DRAWING REVIEW

This review of this drawing does not in any way relieve the contractor of responsibility for its accuracy or for compliance with the contract documents.

✓ No comment	See comment
Amend & Resubmit	Rejected See Remarks

Submission No.
Project No. 19066
By AF
Date 15 Jun 2021

JABLONSKY, AST AND PARTNERS
Consulting Engineers
3 Concorde Gate, North York, ON M3C 4H9

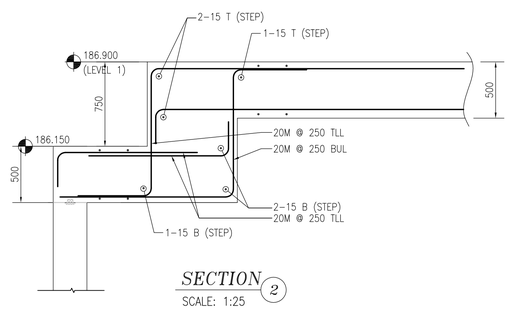

* ELEVATIONS AND DIMENSIONS SHOWN ARE FOR VERIFICATION PURPOSES ONLY AND ARE NOT TO BE USED FOR CONSTRUCTION
* ALL CONFIRMS/VERIFIES WILL BE ASSUMED CORRECT AND APPROVED AS IS UNLESS COMMENTED ON THE APPROVAL DRWGS

LEGEND

ALT = ALTERNATE
BOT = BOTTOM
BIS = BEND INTO SLAB
CB = CORNER BAR
CJ = CONTROL JOINT
CTS = CUT TO SUIT SITE COND.
DWL = DOWELS
EE = EACH END
EF = EACH FACE
EJ = EXPANSION JOINT
ES = EACH SIDE
EW = EACH WAY
FF = FAR FACE
FS = FORM SAVER
GD = GROUT IN DOWELS
H = HORIZONTAL
IF = INSIDE FACE
LL = LOWER LAYER
MID = MIDDLE
MIN = MINIMUM
NF = NEAR FACE
OC = ON CENTER
OF = OUTSIDE FACE
SC = SAW CUT END
STG = STAGGER
STIR = STIRRUPS
T = TOP
THR/1= THREAD 1END
THR/2= THREAD 2ENDS
UL = UPPER LAYER
U/n = UNLESS NOTED
V = VERTICAL
TT = TEMP. TIES

STRAIGHT BARS LABEL FORMAT: 7 B15M X 3600 (GRADE, QUANTITY, LENGTH)

BENT BARS LABEL FORMAT: 7 B15M B1501 (GRADE, QUANTITY, SIZE, BAR MARK)

GRADES OF STEEL
G = GRADE 400W
E = EPOXY COATED
U = UNCOATED
G/E = GALVANIZED/EPOXY
W = WELDABLE

ISSUE	REMARKS	DATE	BY
2	REV. PER SI(S5)	JUN/09/21	JU
1	REV. PER COMM. FOR FAB.	MAY/31/21	JU
0	FOR APPROVAL	MAY/19/21	JU

MANSTEEL REBAR

MANSTEEL REBAR
105 Industrial Road, Richmond Hill,
Ontario L4C 2Y4 Canada
Phone: 905-737-9797
Fax: 905-737-9704
Email: info@mansteelrebar.com

PROJECT
FORESTSIDE TOWNHOUSES
-BRAMPTON, ON

PART OF STRUCTURE
G.F SLAB BUL P#2

CUSTOMER :
ROYAL PINE HOMES

Project no. 2177
SCALE: AS SHOWN
DRAWING No. R6.1B 2

DETAILED BY: JU
CHECKED BY:
BAR LIST No.

NOTES

1. ALL STEEL TO BE GRADE 400W
2. STRENGTH OF CONCRETE
   35MPa – SLAB
   35MPa – INTERIOR COLUMNS & WALLS
3. CONCRETE COVER:
   SLAB T -- 25mm
   SLAB B -- 25mm
4. COMPRESSION LAP SPLICE

BAR SIZE	STANDARD LAP (mm)
10M	300
15M	440
20M	590
25M	730
30M	880
35M	1030

5. TENSION LAP SPLICE (L.S) & DEVELOPMENT LENGTH (Ld)

BAR SIZE	fc=25		fc=30		fc=35	
	L.S	L.d	L.S	L.d	L.S	L.d
10M	490	380	450	350	420	320
15M	740	570	670	520	620	480
20M	980	750	890	690	830	640
25M	1530	1170	1390	1070	1290	990
30M	1830	1410	1670	1290	1550	1190
35M	2130	1640	1950	1500	1800	1390

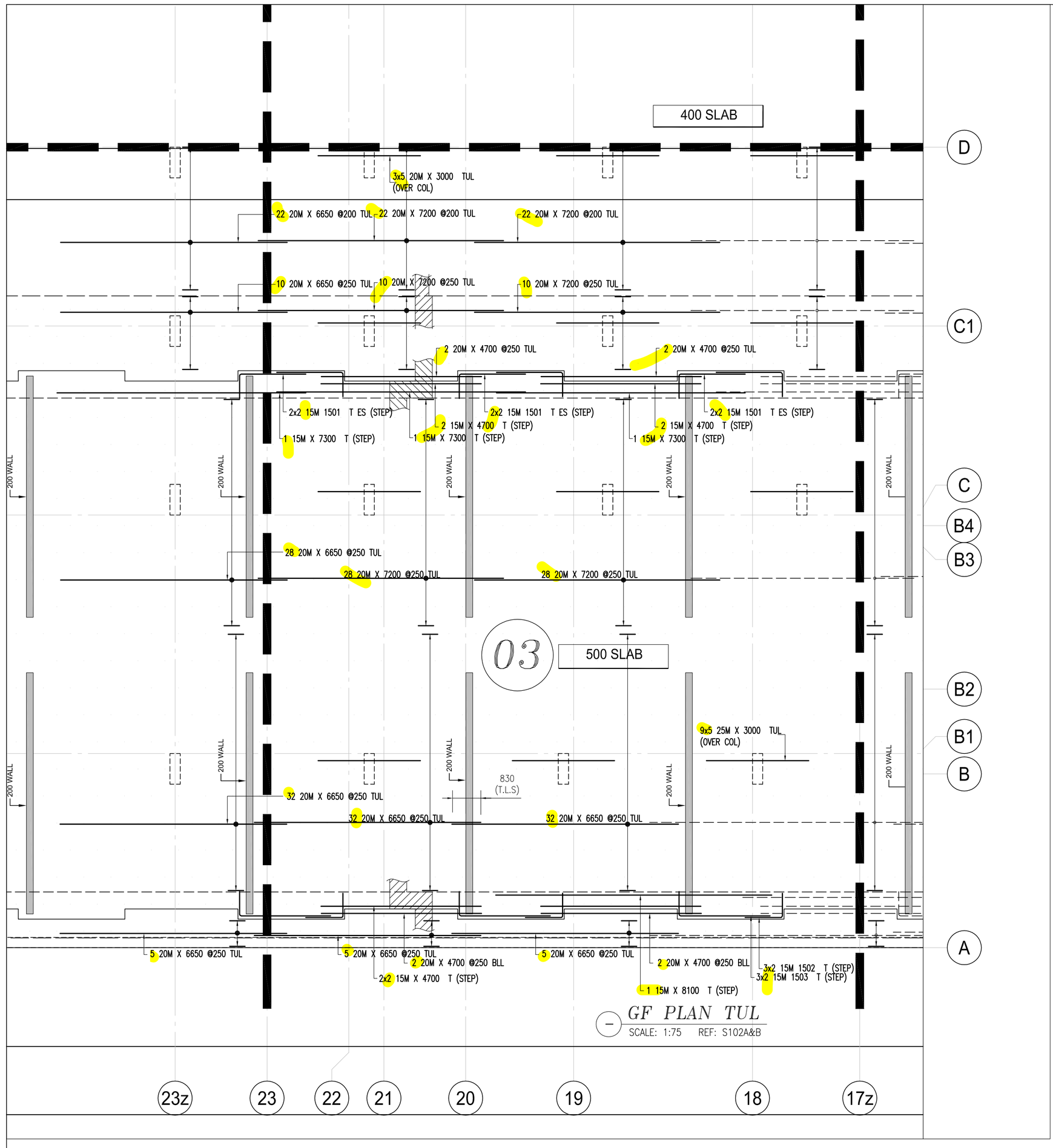

GF PLAN TUL

SCALE: 1:75 REF: S102A&B

Release Code: R6.2C GF TUL P#3 BENDING DETAILS.

Bar Mark	Qty	Size	Total length	Type	'A'	'B'	'C'	'D'	'E'	'F'	'G'	'H'	'J'	'K'	'O'	'R'
	10	20M	7200			7200										
	22	20M	7200			7200										
	32	20M	6650			6650										
	28	20M	7200			7200										
	5	20M	6650			6650										
	1	15M	8100			8100										
	2	20M	4700			4700										
	2	20M	4700			4700										
	4.5	25M	3000			3000										
	15	20M	3000			3000										
	4	15M	4700			4700										
	2	20M	4700			4700										
	2	20M	4700			4700										
	2	15M	4700			4700										
	2	15M	4700			4700										
	1	15M	7300			7300										
	1	15M	7300			7300										
	1	15M	7300			7300										
	10	20M	7200			7200										
	22	20M	7200			7200										
	10	20M	6650			6650										
	22	20M	6650			6650										
	32	20M	6650			6650										
	28	20M	7200			7200										
	32	20M	6650			6650										
	28	20M	6650			6650										
	5	20M	6650			6650										
	5	20M	6650			6650										
1501	4	15M	2670	17		1950	720									
1501	4	15M	2670	17		1950	720									
1503	6	15M	3400	17		2680	720									
1502	6	15M	1820	17		1100	720									
1501	4	15M	2670	17		1950	720									

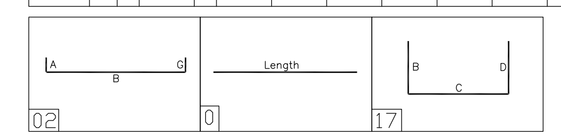

DRAWING REVIEW

This review of this drawing does not in any way relieve the contractor of responsibility for its accuracy or for compliance with the contract documents.

✓	No comment		See comment
	Amend & Resubmit		Rejected See Remarks

Submission No.
Project No. 19066
By MB
Date 05 Jul 2021

JABLONSKY, AST AND PARTNERS
Consulting Engineers
1129 Leslie Street Don Mills, Ont. M3C 2K5

NOTES

1. ALL STEEL TO BE GRADE 400W
2. STRENGTH OF CONCRETE
   35MPa – SLAB
   35MPa – INTERIOR COLUMNS & WALLS
3. CONCRETE COVER:
   SLAB T -- 25mm
   SLAB B -- 25mm
4. COMPRESSION LAP SPLICE

BAR SIZE	STANDARD LAP (mm)
10M	300
15M	440
20M	590
25M	730
30M	880
35M	1030

5. TENSION LAP SPLICE (L.S) & DEVELOPMENT LENGTH (Ld)

BAR SIZE	fc=25		fc=30		fc=35	
	L.S	L.d	L.S	L.d	L.S	L.d
10M	490	380	450	350	420	320
15M	740	570	670	520	620	480
20M	980	750	890	690	830	640
25M	1530	1170	1390	1070	1290	990
30M	1830	1410	1670	1290	1550	1190
35M	2130	1640	1950	1500	1800	1390

* ELEVATIONS AND DIMENSIONS SHOWN ARE FOR VERIFICATION PURPOSES ONLY AND ARE NOT TO BE USED FOR CONSTRUCTION
* ALL CONFIRMS/VERIFIES WILL BE ASSUMED CORRECT AND APPROVED AS IS UNLESS COMMENTED ON THE APPROVAL DRWGS

LEGEND

ALT = ALTERNATE
BOT = BOTTOM
BIS = BEND INTO SLAB
CB = CORNER BARS
CJ = CONTROL JOINT
CTS = CUT TO SUIT SITE COND.
DWL = DOWELS
EE = EACH END
EF = EACH FACE
EJ = EXPANSION JOINT
ES = EACH SIDE
EW = EACH WAY
FF = FAR FACE
FS = FORM SAVER
G/D = GROUT IN DOWELS
H = HORIZONTAL
IF = INSIDE FACE
LL = LOWER LAYER
MID = MIDDLE
MIN = MINIMUM
NF = NEAR FACE
OC = ON CENTER
OF = OUTSIDE FACE
SC = SAW CUT END
STG = STAGGER
STIR = STIRRUPS
T = TOP
THR/1= THREAD 1END
THR/2= THREAD 2ENDS
UL = UPPER LAYER
u/n = UNLESS NOTED
V = VERTICAL
TT = TEMP. TIES

STRAIGHT BARS LABEL FORMAT

7 B15M X 3600
QUANTITY GRADE LENGTH

BENT BARS LABEL FORMAT

7 B15M B1501
QUANTITY GRADE SIZE BAR MARK

GRADES OF STEEL

G= GRADE 400R
E= EPOXY COATED
P= PSB
G= GALVANIZED
S= STAINLESS
W= WELDABLE

ISSUE	REMARKS	DATE	BY
0	FOR APPROVAL	JUN/01/21	JJ

MANSTEEL REBAR

MANSTEEL REBAR
105 Industrial Road, Richmond Hill,
Ontario L4C 2Y4 Canada
Phone: 905-737-9797
Fax: 905-737-9704
Email: info@mansteelrebar.com

PROJECT
FORESTSIDE TOWNHOUSES
–BRAMPTON, ON

PART OF STRUCTURE
G.F SLAB TUL P#3

CUSTOMER :
ROYAL PINE HOMES

Project no. 2177
SCALE: AS SHOWN
DRAWING No. R6.2C 0

DETAILED BY: JJ
CHECKED BY:
BAR LIST No.

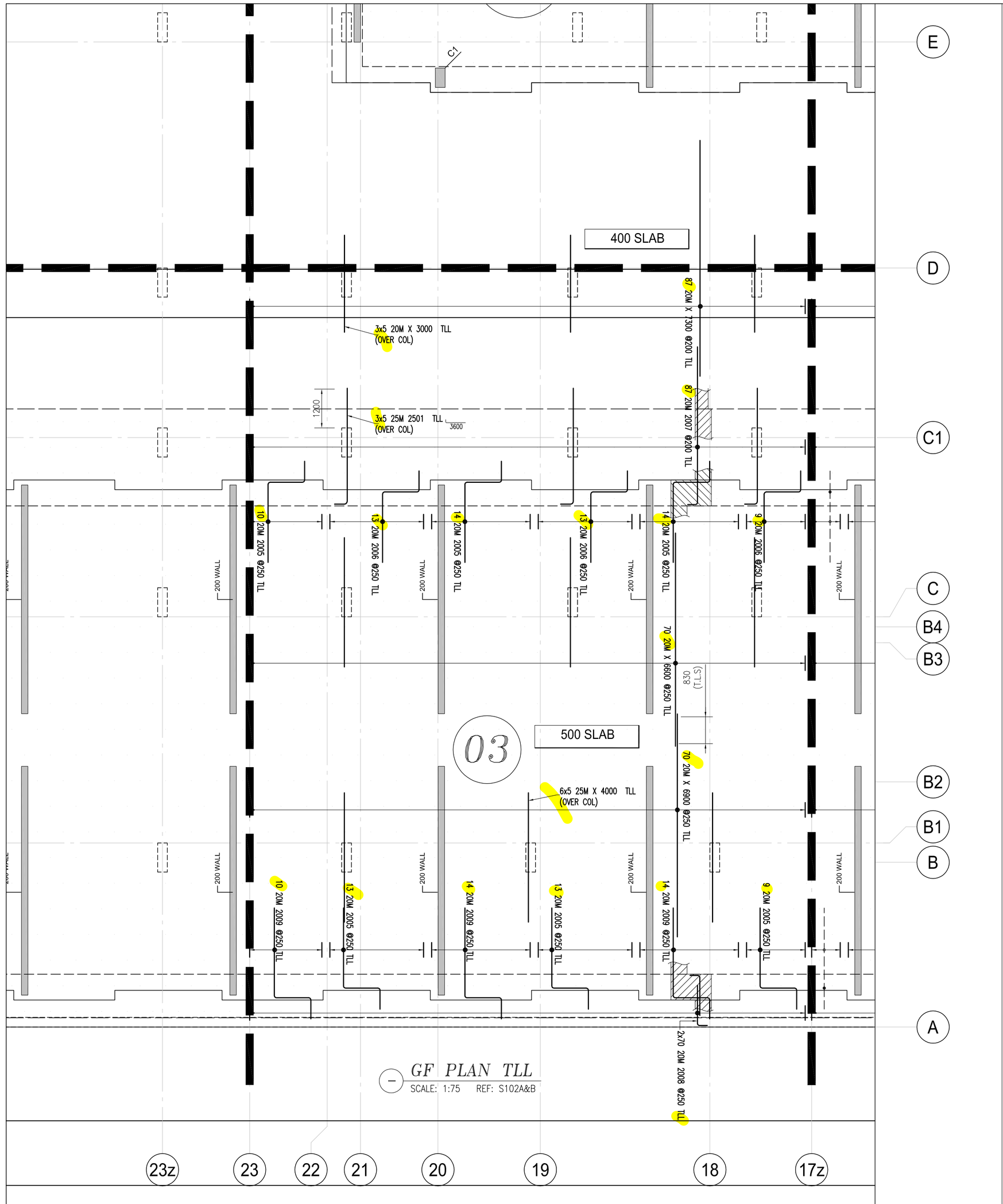

GF PLAN TLL
SCALE: 1:75 REF: S102A&B

Release Code: R6.2D GF TLL P#3 BENDING DETAILS.

Bar Mark	Qty	Size	Total length	Type	'A'	'B'	'C'	'D'	'E'	'F'	'G'	'H'	'J'	'K'	'O'	'R'
	70	20M	6900			6900										
	70	20M	6600			6600										
	87	20M	7300			7300										
	30	25M	4000			4000										
	15	20M	3000			3000										
2005	13	20M	4300	20		2490	1150	660								
2009	14	20M	4600	20		2790	1150	660								
2005	9	20M	4300	20		2490	1150	660								
2007	87	20M	5200	2	310	4890										
2005	14	20M	4300	20		2490	1150	660								
2008	140	20M	1560	2	310	1250										
2006	9	20M	4000	20		2190	1150	660								
2006	13	20M	4000	20		2190	1150	660								
2005	14	20M	4300	20		2490	1150	660								
2005	10	20M	4300	20		2490	1150	660								
2006	13	20M	4000	20		2190	1150	660								
2009	14	20M	4600	20		2790	1150	660								
2005	13	20M	4300	20		2490	1150	660								
2009	10	20M	4600	20		2790	1150	660								
2501	15	25M	4000	2	400	3600										

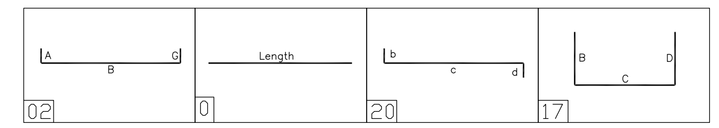

DRAWING REVIEW

This review of this drawing does not in any way relieve the contractor of responsibility for its accuracy or for compliance with the contract documents.

✓	No comment	See comment
	Amend & Resubmit	Rejected See Remarks

Submission No.
Project No. 19066
By MB
Date 05 Jul 2021

JABLONSKY, AST AND PARTNERS
Consulting Engineers
1129 Leslie Street Don Mills, Ont. M3C 2K5

NOTES

1. ALL STEEL TO BE GRADE 400W
2. STRENGTH OF CONCRETE
   35MPa – SLAB
   35MPa – INTERIOR COLUMNS & WALLS
3. CONCRETE COVER:
   SLAB T -- 25mm
   SLAB B -- 25mm
4. COMPRESSION LAP SPLICE

BAR SIZE	STANDARD LAP (mm)
10M	300
15M	440
20M	590
25M	730
30M	880
35M	1030

5. TENSION LAP SPLICE (L.S) & DEVELOPMENT LENGTH (Ld)

BAR SIZE	fc=25		fc=30		fc=35	
	L.S	L.d	L.S	L.d	L.S	L.d
10M	490	380	450	350	420	320
15M	740	570	670	520	620	480
20M	980	750	890	690	830	640
25M	1530	1170	1390	1070	1290	990
30M	1830	1410	1670	1290	1550	1190
35M	2130	1640	1950	1500	1800	1390

* ELEVATIONS AND DIMENSIONS SHOWN ARE FOR VERIFICATION PURPOSES ONLY AND ARE NOT TO BE USED FOR CONSTRUCTION
* ALL CONFIRMS/VERIFIES WILL BE ASSUMED CORRECT AND APPROVED AS IS UNLESS COMMENTED ON THE APPROVAL DRWGS

LEGEND

ALT	= ALTERNATE	FF	= FAR FACE	OF	= OUTSIDE FACE
BOT	= BOTTOM	FS	= FORM SAVER	SC	= SAW CUT END
CIB	= BEND INTO SLAB	GID	= GROUT IN DOWELS	STG	= STAGGER
CR	= CORNER BAR	H	= HORIZONTAL	STIR	= STIRRUPS
CJ	= CONTROL JOINT	IF	= INSIDE FACE	T	= TOP
CTS	= CUT TO SUIT SITE COND.	LL	= LOWER LAYER	THR/1	= THREAD 1END
DWL	= DOWELS	MID	= MIDDLE	THR/2	= THREAD 2ENDS
EE	= EACH END	MIN	= MINIMUM	UL	= UPPER LAYER
EF	= EACH FACE	NF	= NEAR FACE	u/n	= UNLESS NOTED
EJ	= EXPANSION JOINT	OC	= ON CENTER	V	= VERTICAL
ES	= EACH SIDE			TT	= TEMP. TIES
EW	= EACH WAY				

STRAIGHT BARS LABEL FORMAT: 7 B15M X 3600 (QUANTITY, GRADE, LENGTH)

BENT BARS LABEL FORMAT: 7 B15M B1501 (QUANTITY, GRADE, SIZE, BAR MARK)

GRADES OF STEEL

B =	GRADE 400W
E =	EPOXY COATED
C =	CSPB
G =	GALVANIZED
S =	STAINLESS
W=	WELDABLE

ISSUE	REMARKS	DATE	BY
0	FOR APPROVAL	JUN/01/21	JJ

MANSTEEL REBAR
105 Industrial Road, Richmond Hill,
Ontario L4C 2Y4 Canada
Phone: 905-737-9797
Fax: 905-737-9704
Email: info@mansteelrebar.com

PROJECT
FORESTSIDE TOWNHOUSES
-BRAMPTON, ON

PART OF STRUCTURE
G.F SLAB TLL P#3

CUSTOMER :
ROYAL PINE HOMES

Project no. 2177
SCALE: AS SHOWN
DRAWING No. R6.2D 0

DETAILED BY: JJ
CHECKED BY:
BAR LIST No.

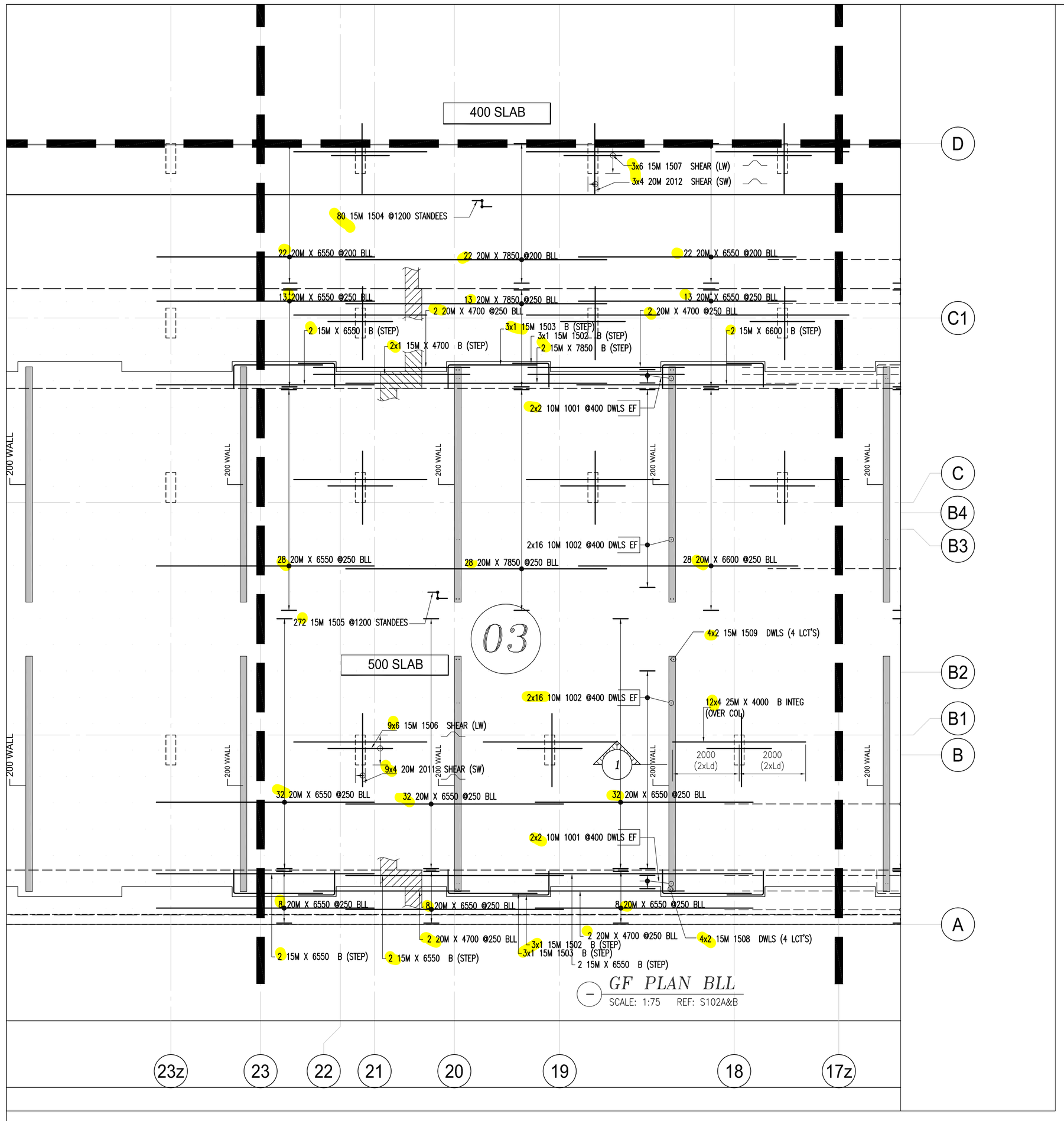

GF PLAN BLL

SCALE: 1:75 REF: S102A&B

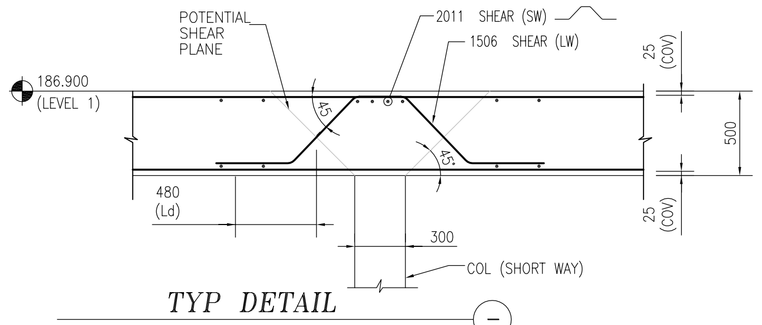

TYP DETAIL OF PICK-UP SLAB AT COL.

SCALE: 1:25

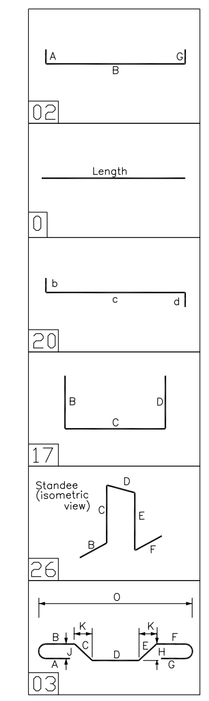

Release Code: R6.2A GF BLL P#3 BENDING DETAILS.

Bar Mark	Qty	Size	Total length	Type	'A'	'B'	'C'	'D'	'E'	'F'	'G'	'H'	'J'	'K'	'O'	'R'
	32	20M	6550			6550										
	8	20M	6550			6550										
	28	20M	6600			6600										
	28	20M	7850			7850										
	28	20M	6550			6550										
	32	20M	6550			6550										
	32	20M	6550			6550										
	8	20M	6550			6550										
	8	20M	6550			6550										
	13	20M	6550			6550										
	22	20M	6550			6550										
	13	20M	7850			7850										
	22	20M	7850			7850										
	13	20M	6550			6550										
	22	20M	6550			6550										
	2	20M	4700			4700										
	2	20M	4700			4700										
	2	15M	6550			6550										
	2	15M	6550			6550										
	2	15M	6550			6550										
	48	25M	4000			4000										
	2	15M	6600			6600										
	2	15M	7850			7850										
	2	15M	6550			6550										
	2	20M	4700			4700										
	2	20M	4700			4700										
	2	15M	4700			4700										
1001	4	10M	1800	2	180	1620										
1002	32	10M	1050	2	180	870										
1002	32	10M	1050	2	180	870										
1001	4	10M	1800	2	180	1620										
1505	272	15M	1500	26		300	350	200	350	300						
1504	80	15M	1400	26		300	250	200	350	300						
1503	3	15M	3400	17		2680	720									
2011	36	20M	2540	3		600	520	300	520	600		390		350	2200	
1508	8	15M	2100	2	260	1840										
1509	8	15M	1300	2	260	1040										
1502	3	15M	1820	17		1100	720									
1507	18	15M	2020	3		450	410	300	410	450		310		270	1740	
2012	12	20M	2360	3		650	380	300	380	650		290		250	2100	
1502	3	15M	1820	17		1100	720									
1503	3	15M	3400	17		2680	720									
1506	54	15M	2300	3		450	550	300	550	450		410		370	1940	

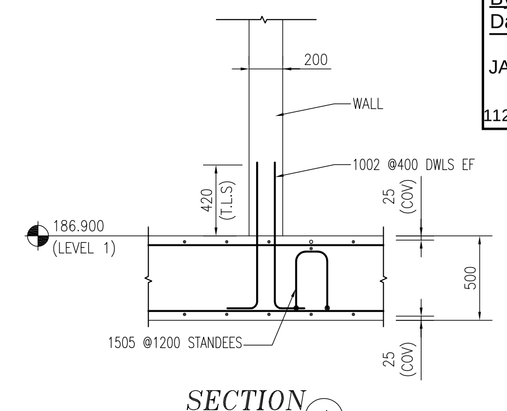

SECTION 1

SCALE: 1:25

DRAWING REVIEW

This review of this drawing does not in any way relieve the contractor of responsibility for its accuracy or for compliance with the contract documents.

✓	No comment	See comment
	Amend & Resubmit	Rejected See Remarks

Submission No.
Project No. 19066
By MB
Date 05 Jul 2021

JABLONSKY, AST AND PARTNERS
Consulting Engineers
1129 Leslie Street Don Mills, Ont. M3C 2K5

NOTES

1. ALL STEEL TO BE GRADE 400W
2. STRENGTH OF CONCRETE
   35MPa – SLAB
   35MPa – INTERIOR COLUMNS & WALLS
3. CONCRETE COVER:
   SLAB T -- 25mm
   SLAB B -- 25mm
4. COMPRESSION LAP SPLICE

BAR SIZE	STANDARD LAP (mm)
10M	300
15M	440
20M	590
25M	730
30M	880
35M	1030

5. TENSION LAP SPLICE (L.S) & DEVELOPMENT LENGTH (Ld)

BAR SIZE	fc=25		fc=30		fc=35	
	L.S	L.d	L.S	L.d	L.S	L.d
10M	490	380	450	350	420	320
15M	740	570	670	520	620	480
20M	980	750	890	690	830	640
25M	1530	1170	1390	1070	1290	990
30M	1830	1410	1670	1290	1550	1190
35M	2130	1640	1950	1500	1800	1390

* ELEVATIONS AND DIMENSIONS SHOWN ARE FOR VERIFICATION PURPOSES ONLY AND ARE NOT TO BE USED FOR CONSTRUCTION
* ALL CONFIRMS/VERIFIES WILL BE ASSUMED CORRECT AND APPROVED AS IS UNLESS COMMENTED ON THE APPROVAL DRWGS

LEGEND

ALT	= ALTERNATE	FF	= FAR FACE	OF	= OUTSIDE FACE
BOT	= BOTTOM	FS	= FORM SAVER	SC	= SAW CUT END
BIS	= BEND INTO SLAB	GID	= GROUT IN DOWELS	STG	= STAGGER
CB	= CORNER BAR	H	= HORIZONTAL	STIR	= STIRRUPS
CJ	= CONTROL JOINT				
CTS	= CUT TO SUIT SITE COND.	IF	= INSIDE FACE	T	= TOP
DWL	= DOWELS	LL	= LOWER LAYER	THR/1=	THREAD 1END
EE	= EACH END	MID	= MIDDLE	THR/2=	THREAD 2ENDS
EF	= EACH FACE	MIN	= MINIMUM	UL	= UPPER LAYER
EJ	= EXPANSION JOINT	NF	= NEAR FACE	U/n	= UNLESS NOTED
ES	= EACH SIDE	OC	= ON CENTER	V	= VERTICAL
EW	= EACH WAY			TT	= TEMP. TIES

STRAIGHT BARS LABEL FORMAT: 7 B15M X 3600 (QUANTITY, GRADE, LENGTH)

BENT BARS LABEL FORMAT: 7 B15M B1501 (QUANTITY, GRADE, SIZE, BAR MARK)

GRADES OF STEEL: D= GRADE 400D; E= EPOXY COATED; G= GRADE 400W; G/G= GALVANIZED; S= STAINLESS; W= WELDABLE

ISSUE	REMARKS	DATE	BY
0	FOR APPROVAL	JUN/01/21	JU

MANSTEEL REBAR

MANSTEEL REBAR
105 Industrial Road, Richmond Hill,
Ontario L4C 2Y4 Canada
Phone: 905-737-9797
Fax: 905-737-9704
Email: info@mansteelrebar.com

PROJECT
FORESTSIDE TOWNHOUSES
-BRAMPTON, ON

PART OF STRUCTURE
G.F SLAB BLL P#3

CUSTOMER :
ROYAL PINE HOMES

Project no. 2177
SCALE: AS SHOWN
DRAWING No. R6.2A 1

DETAILED BY: JU
CHECKED BY:
BAR LIST No.

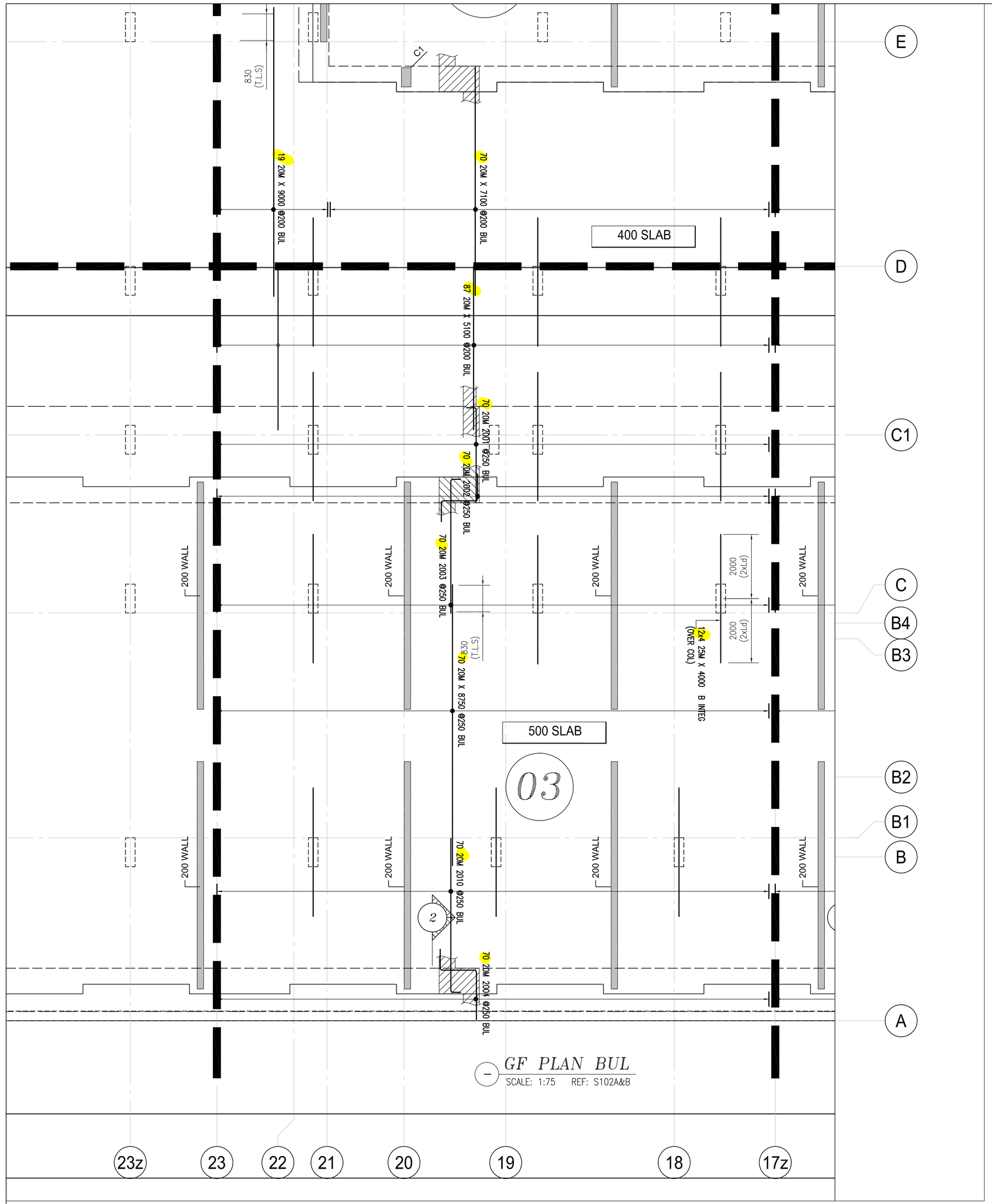

Release Code: R6.2B GF BUL P#3 BENDING DETAILS.

Bar Mark	Qty	Size	Total length	Type	'A'	'B'	'C'	'D'	'E'	'F'	'G'	'H'	'J'	'K'	'O'	'R'
	70	20M	8750			8750										
	87	20M	5100			5100										
	70	20M	7100			7100										
	48	25M	4000			4000										
	19	20M	9000			9000										
2010	70	20M	5110	2	310	4800										
2003	70	20M	4490	2	310	4180										
2004	70	20M	3360	20		660	1150	1550								
2001	70	20M	3250	2	310	2940										
2002	70	20M	2660	20		660	1150	850								

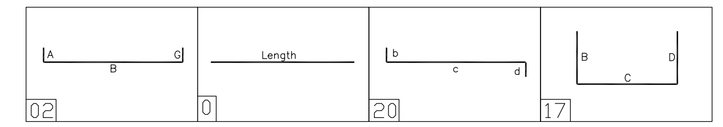

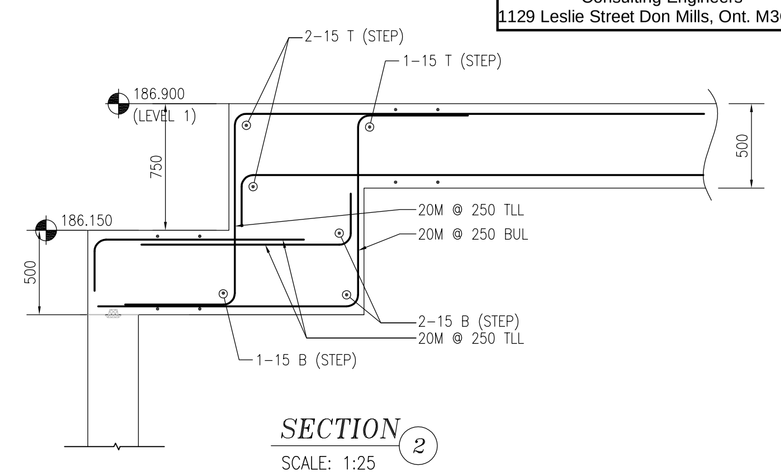

DRAWING REVIEW

This review of this drawing does not in any way relieve the contractor of responsibility for its accuracy or for compliance with the contract documents.

✓	No comment		See comment
	Amend & Resubmit		Rejected See Remarks

Submission No.
Project No. 19066
By MB
Date 05 Jul 2021

JABLONSKY, AST AND PARTNERS
Consulting Engineers
1129 Leslie Street Don Mills, Ont. M3C 2K5

NOTES

1. ALL STEEL TO BE GRADE 400W
2. STRENGTH OF CONCRETE
   35MPa – SLAB
   35MPa – INTERIOR COLUMNS & WALLS
3. CONCRETE COVER:
   SLAB T -- 25mm
   SLAB B -- 25mm
4. COMPRESSION LAP SPLICE

BAR SIZE	STANDARD LAP (mm)
10M	300
15M	440
20M	590
25M	730
30M	880
35M	1030

5. TENSION LAP SPLICE (L.S) & DEVELOPMENT LENGTH (Ld)

BAR SIZE	fc=25		fc=30		fc=35	
	L.S	L.d	L.S	L.d	L.S	L.d
10M	490	380	450	350	420	320
15M	740	570	670	520	620	480
20M	980	750	890	690	830	640
25M	1530	1170	1390	1070	1290	990
30M	1830	1410	1670	1290	1550	1190
35M	2130	1640	1950	1500	1800	1390

* ELEVATIONS AND DIMENSIONS SHOWN ARE FOR VERIFICATION PURPOSES ONLY AND ARE NOT TO BE USED FOR CONSTRUCTION
* ALL CONFIRMS/VERIFIES WILL BE ASSUMED CORRECT AND APPROVED AS IS UNLESS COMMENTED ON THE APPROVAL DRWGS

LEGEND

ALT	= ALTERNATE	FF	= FAR FACE	OF	= OUTSIDE FACE
BOT	= BOTTOM	FS	= FORM SAVER	SC	= SAW CUT END
B/S	= BEND INTO SLAB	GID	= GROUT IN DOWELS	STG	= STAGGER
CB	= CORNER BAR	H	= HORIZONTAL	STIR	= STIRRUPS
CJ	= CONTROL JOINT	IF	= INSIDE FACE	T	= TOP
CTS	= CUT TO SUIT SITE COND.	LL	= LOWER LAYER	THR/1=	THREAD 1END
DWL	= DOWELS	MID	= MIDDLE	THR/2=	THREAD 2ENDS
EE	= EACH END	MIN	= MINIMUM	UL	= UPPER LAYER
EF	= EACH FACE	NF	= NEAR FACE	u/n	= UNLESS NOTED
EJ	= EXPANSION JOINT	OC	= ON CENTER	V	= VERTICAL
ES	= EACH SIDE			TT	= TEMP. TIES
EW	= EACH WAY				

STRAIGHT BARS LABEL FORMAT: 7 B15M X 3600 (QUANTITY, GRADE, LENGTH)

BENT BARS LABEL FORMAT: 7 B15M B1501 (QUANTITY, GRADE, SIZE, BAR MARK)

GRADES OF STEEL

B =	GRADE 400R
E =	EPOXY COATED
G =	GRADE 400
Z =	GALVANIZED
S =	STAINLESS
W =	WELDABLE

ISSUE	REMARKS	DATE	BY
0	FOR APPROVAL	JUN/01/21	JJ

MANSTEEL REBAR

MANSTEEL REBAR
105 Industrial Road, Richmond Hill,
Ontario L4C 2Y4 Canada
Phone: 905-737-9797
Fax: 905-737-9704
Email: info@mansteelrebar.com

PROJECT
FORESTSIDE TOWNHOUSES
-BRAMPTON, ON

PART OF STRUCTURE
G.F SLAB BUL P#3

CUSTOMER :
ROYAL PINE HOMES

Project no. 2177
SCALE: AS SHOWN
DRAWING No.
R6.2B 0

DETAILED BY: JJ
CHECKED BY:
BAR LIST No.