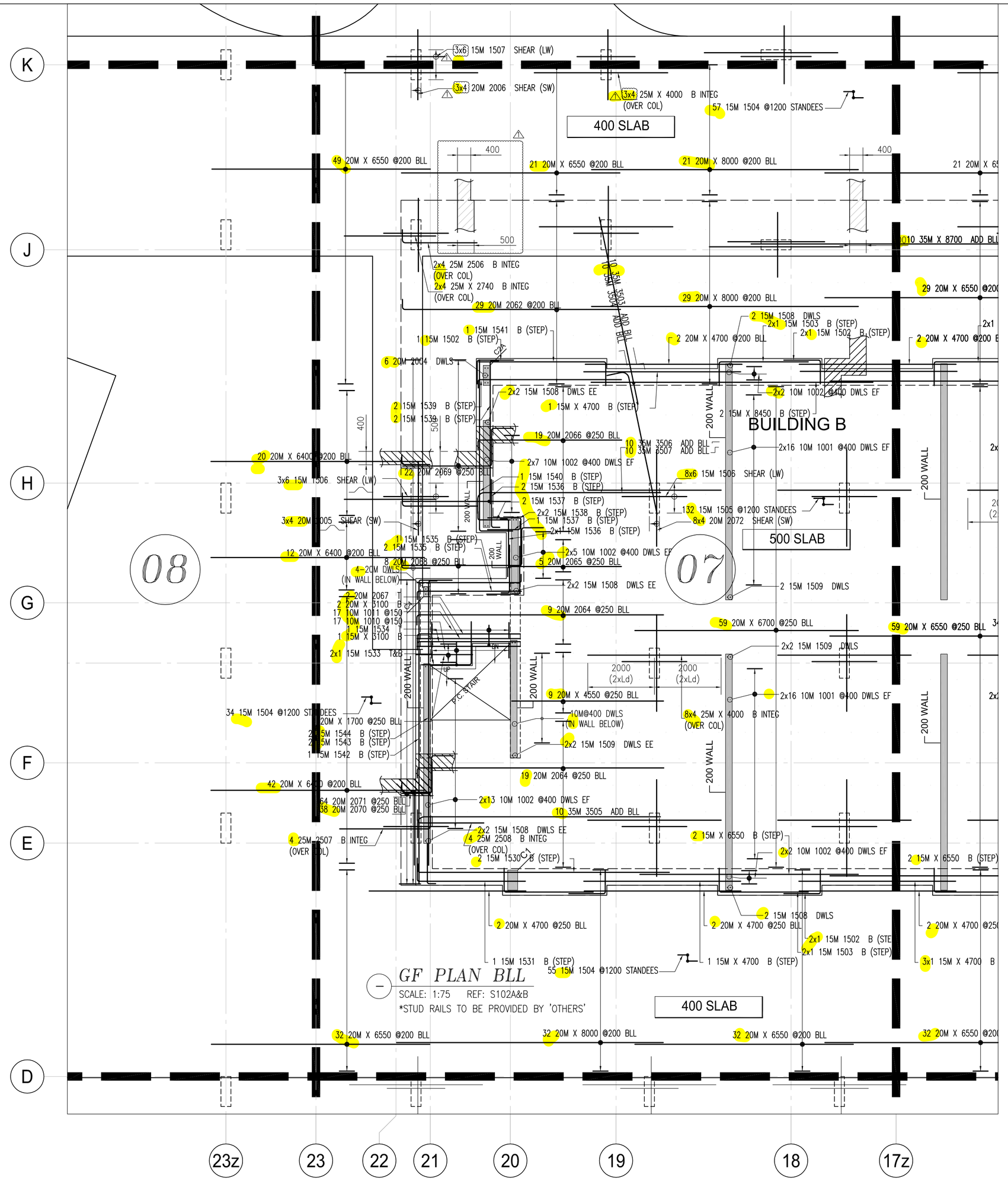

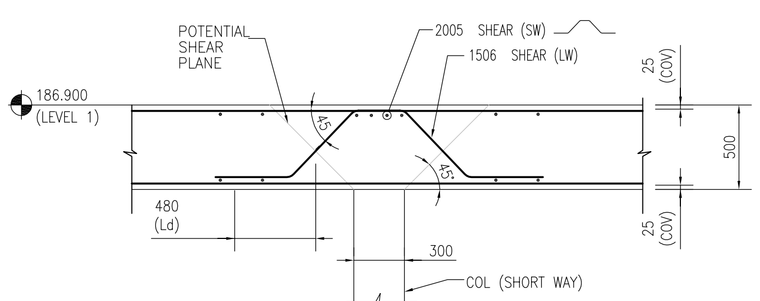

TYP DETAIL OF PICK-UP SLAB AT COL.
SCALE: 1:25

[400 THK SLAB]

Release Code: R6.6A GF BLL(1) P#7 BENDING DETAILS.

Bar Mark	Qty	Size	Total length	Type	'A'	'B'	'C'	'D'	'E'	'F'	'G'	'H'	'J'	'K'	'O'	'R'
	134	20M	6550			6550										
	53	20M	8000			8000										
	6	20M	4700			4700										
	74	20M	6400			6400										
	12	25M	4000			4000										
	1	15M	4700			4700										
	2	15M	6550			6550										
	8	25M	2740			2740										
1504	146	15M	1500	26		300	250	200	250	300						
1502	2	15M	1820	17		1100	720									
2006	12	20M	2360	3		650	380	300	380	650		290		250	2100	
1507	18	15M	2020	3		450	410	300	410	450		310		270	1740	
1530	2	15M	7800	2	260	7540										
1531	1	15M	3950	17		700	3250									
1506	8	25M	2650	2	400	2250										
1503	2	15M	3400	17		2680	720									
1507	4	25M	3140	2	400	2740										
1506	18	15M	2300	3		450	550	300	550	450		410		370	1940	
2005	12	20M	2540	3		600	520	300	520	600		390		350	2200	

[500 THK SLAB]

Release Code: R6.6E GF BLL(2) P#7 BENDING DETAILS.

Bar Mark	Qty	Size	Total length	Type	'A'	'B'	'C'	'D'	'E'	'F'	'G'	'H'	'J'	'K'	'O'	'R'
	29	20M	8000			8000										
	1	20M	4700			4700										
	59	20M	6700			6700										
	9	20M	4550			4550										
	6	20M	1700			1700										
	1	15M	3900			3900										
	2	20M	3900			3900										
	1	15M	4700			4700										
	2	15M	8450			8450										
	37	25M	4000			4000										
1010	17	10M	1550	17		700	350	500								
1505	137	15M	1500	26		300	350	200	350	300						
1011	17	10M	1650	17		600	450	600								
1002	58	10M	1800	2	180	1620										
1001	64	10M	1050	2	180	870										
1534	1	15M	3360	2	260	3100										
1508	16	15M	2100	2	260	1840										
1533	2	15M	2800	17		1500	1300									
2064	28	20M	7710	2	310	7400										
1509	10	15M	1300	2	260	1040										
2068	8	20M	5410	20		660	1950	3600								
1535	3	15M	3390	2	260	3130										
1536	4	15M	1700	2	260	1440										
1537	3	15M	1240	2	260	980										
1538	4	15M	2450	17		1450	1000									
1539	4	15M	4560	2	260	4300										
1540	1	15M	6140	17		1000	5140									
2069	22	20M	4490	20		660	1950	2680								
2062	29	20M	6860	2	310	6550										
1541	1	15M	4540	17		3820	720									
1502	3	15M	1820	17		1100	720									
2004	6	20M	2100	2	310	1790										
3503	18	35M	6910	29		660	1950	5100								
1503	2	15M	3400	17		2680	720									
2070	38	20M	2780	20		660	1950	890								
2071	64	20M	1960	2	310	850										
2065	5	20M	3730	2	310	3420										
2066	19	20M	4630	2	310	4320										
2067	2	20M	3410	2	310	3100										
3505	18	35M	7940	2	640	7300										
3504	18	35M	5040	2	640	4400										
2508	4	25M	2400	2	400	2000										
1506	48	15M	2300	3		450	550	300	550	450		410		370	1940	
2072	37	20M	3240	3		600	520	1000	520	600		390		350	2900	
3506	18	35M	6140	2	640	5500										
3507	18	35M	4410	20		660	1950	2600								
1542	1	15M	10120	17		1000	9120									
1543	2	15M	8800	2	260	8540										
1544	2	15M	1460	2	260	1200										

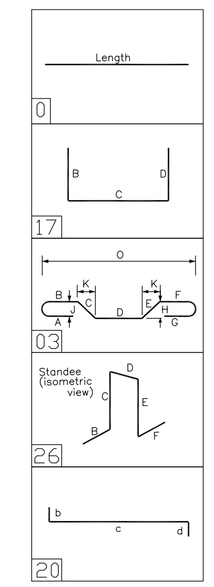

DRAWING REVIEW

This review of this drawing does not in any way relieve the contractor of responsibility for its accuracy or for compliance with the contract documents.

✓	No comment	See comment
	Amend & Resubmit	Rejected See Remarks

Submission No.
Project No. 19066
By MB
Date 08 Sep 2021

JABLONSKY, AST AND PARTNERS
Consulting Engineers
1129 Leslie Street Don Mills, Ont. M3C 2K5

NOTES

1. ALL STEEL TO BE GRADE 400W
2. STRENGTH OF CONCRETE
   35MPa – SLAB
   35MPa – INTERIOR COLUMNS & WALLS
3. CONCRETE COVER:
   SLAB T -- 25mm
   SLAB B -- 25mm
4. COMPRESSION LAP SPLICE

BAR SIZE	STANDARD LAP (mm)
10M	300
15M	440
20M	590
25M	730
30M	880
35M	1030

5. TENSION LAP SPLICE (L.S) & DEVELOPMENT LENGTH (Ld)

BAR SIZE	fc=25		fc=30		fc=35	
	L.S	L.d	L.S	L.d	L.S	L.d
10M	490	380	450	350	420	320
15M	740	570	670	520	620	480
20M	980	750	890	690	830	640
25M	1530	1170	1390	1070	1290	990
30M	1830	1410	1670	1290	1550	1190
35M	2130	1640	1950	1500	1800	1390

- ELEVATIONS AND DIMENSIONS SHOWN ARE FOR VERIFICATION PURPOSES ONLY AND ARE NOT TO BE USED FOR CONSTRUCTION
- ALL CONFIRMS/VERIFIES WILL BE ASSUMED CORRECT AND APPROVED AS IS UNLESS COMMENTED ON THE APPROVAL DRWGS

LEGEND

ALT	= ALTERNATE	FF	= FAR FACE	OF	= OUTSIDE FACE
BOT	= BOTTOM	FS	= FORM SAVER	SC	= SAW CUT END
B/S	= BEND INTO SLAB	GID	= GROUT IN DOWELS	STG	= STAGGER
CB	= CORNER BAR	H	= HORIZONTAL	STIR	= STIRRUPS
CJ	= CONTROL JOINT	IF	= INSIDE FACE	T	= TOP
C/S	= CONTROL SUIT SITE COND.	LL	= LOWER LAYER	THR/1=	THREAD 1END
DWL	= DOWEL	MID	= MIDDLE	THR/2=	THREAD 2ENDS
EE	= EACH END	MIN	= MINIMUM	UL	= UPPER LAYER
EF	= EACH FACE	NF	= NEAR FACE	u/n	= UNLESS NOTED
EJ	= EXPANSION JOINT	OC	= ON CENTER	V	= VERTICAL
ES	= EACH SIDE			TT	= TEMP. TIES
EW	= EACH WAY				

STRAIGHT BARS LABEL FORMAT: 7 B15M X 3600 (GRADE QUANTITY, LENGTH)

BENT BARS LABEL FORMAT: 7 B15M B1501 (GRADE QUANTITY, SIZE, BAR MARK)

GRADES OF STEEL

4=	GRADE 400R
c=	EPOXY COATED
g=	GRADE 60
G=	GALVANIZED
s=	STAINLESS
w=	WELDABLE

ISSUE	REMARKS	DATE	BY
0	FOR APPROVAL	SEP/02/21	JU

MANSTEEL REBAR
105 Industrial Road, Richmond Hill,
Ontario L4C 2Y4 Canada
Phone: 905-737-9797
Fax: 905-737-9704
Email: info@mansteelrebar.com

PROJECT
FORESTSIDE TOWNHOUSES
-BRAMPTON, ON

PART OF STRUCTURE
G.F SLAB BLL P#7 [500 SLAB]

CUSTOMER :
ROYAL PINE HOMES

Project no. 2177
SCALE: AS SHOWN
DRAWING No. R6.6E 0

DETAILED BY: JU
CHECKED BY:
BAR LIST No.

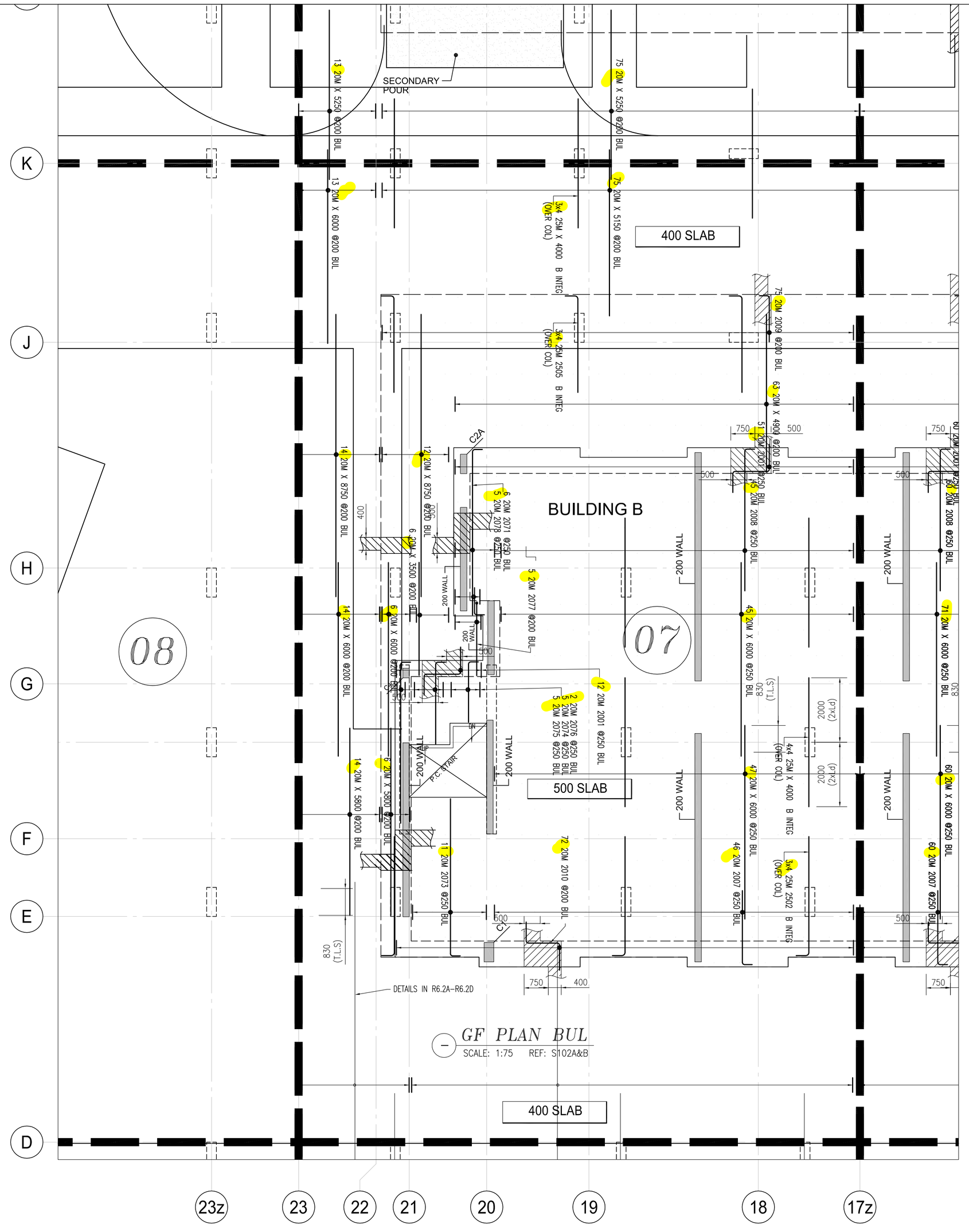

GF PLAN BUL
SCALE: 1:75 REF: S102A&B

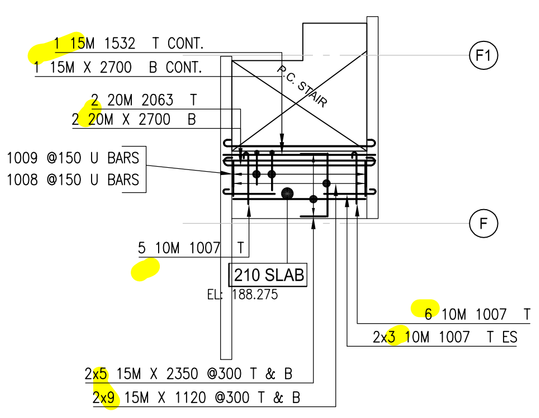

STAIR#B1 MID LANDING
SCALE: 1:75

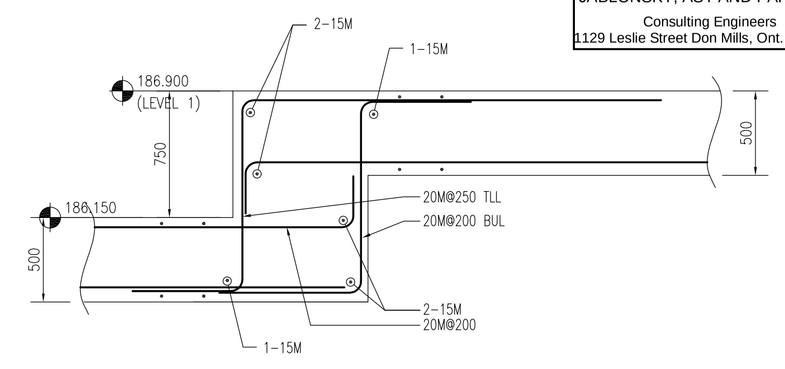

SECTION 2
SCALE: 1:25

[400 THK SLAB]

Release Code: R6.6B GF BUL(1) P#7 BENDING DETAILS.

Bar Mark	Qty	Size	Total	length	Type	'A'	'B'	'C'	'D'	'E'	'F'	'G'	'H'	'J'	'K'	'O'	'R'
	12	25M	4000				4000										
	14	20M	8750				8750										
	14	20M	5800				5800										
	27	20M	6000				6000										
	75	20M	5150				5150										
	88	20M	5250				5250										
2010	72	20M	2560	20			660	1050	850								

[500 THK SLAB]

Release Code: R6.6F GF BUL(2) P#7 BENDING DETAILS.

Bar Mark	Qty	Size	Total	length	Type	'A'	'B'	'C'	'D'	'E'	'F'	'G'	'H'	'J'	'K'	'O'	'R'
	98	20M	6000				6000										
	63	20M	4900				4900										
	6	20M	3500				3500										
	6	20M	5800				5800										
	12	20M	8750				8750										
	16	25M	4000				4000										
2014	5	20M	2860	2		310	2550										
2015	5	20M	2190	2		310	1880										
2016	2	20M	5310	2		310	5000										
2001	63	20M	2660	20			660	1150	850								
2017	5	20M	4470	20			660	1150	2260								
2011	6	20M	1160	2		310	850										
2018	5	20M	5450	2		310	5140										
2008	45	20M	4710	2		310	4400										
2009	75	20M	1750	2		310	1440										
2007	46	20M	2610	2		310	2300										
2013	11	20M	5190	2		310	4880										
2502	12	25M	4100	2		400	3700										
2505	12	25M	3400	2		400	3000										

Release Code: R6.6F MID LAND P#7 BENDING DETAILS.

Bar Mark	Qty	Size	Total	length	Type	'A'	'B'	'C'	'D'	'E'	'F'	'G'	'H'	'J'	'K'	'O'	'R'
	1	15M	2700				2700										
	2	20M	2700				2700										
	18	15M	1120				1120										
	10	15M	2350				2350										
1008	17	10M	1010	S10			670	70	270								
1007	17	10M	1060	1		140	920							90			
1009	17	10M	910	17			570	160	170								
1532	1	15M	3660	1		180	2700					180		130			
2063	2	20M	3120	1		210	2700					210		160			

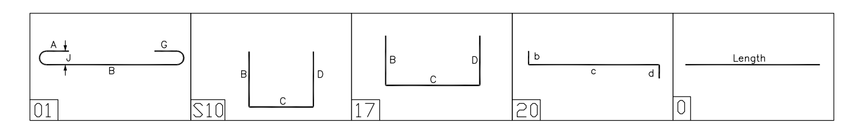

DRAWING REVIEW

This review of this drawing does not in any way relieve the contractor of responsibility for its accuracy or for compliance with the contract documents.

✓	No comment		See comment
	Amend & Resubmit		Rejected See Remarks

Submission No.
Project No. 19066
By MB
Date 08 Sep 2021

JABLONSKY, AST AND PARTNERS
Consulting Engineers
1129 Leslie Street Don Mills, Ont. M3C 2K5

* ELEVATIONS AND DIMENSIONS SHOWN ARE FOR VERIFICATION PURPOSES ONLY AND ARE NOT TO BE USED FOR CONSTRUCTION
* ALL CONFIRMS/VERIFIES WILL BE ASSUMED CORRECT AND APPROVED AS IS UNLESS COMMENTED ON THE APPROVAL DRWGS

LEGEND

ALT	= ALTERNATE	FF	= FAR FACE	OF	= OUTSIDE FACE
BOT	= BOTTOM	FS	= FORM SAVER	SC	= SAW CUT END
BIS	= BEND INTO SLAB	GID	= GROUT IN DOWELS	STG	= STAGGER
CB	= CORNER BAR	H	= HORIZONTAL	STIR	= STIRRUPS
CJ	= CONTROL JOINT			T	= TOP
CTS	= CONTROLS SUIT SITE COND.	IF	= INSIDE FACE	THR/1=	THREAD 1END
DBL	= DOWELS	LL	= LOWER LAYER	THR/2=	THREAD 2ENDS
EE	= EACH END	MID	= MIDDLE	UL	= UPPER LAYER
EF	= EACH FACE	MIN	= MINIMUM	U/n	= UNLESS NOTED
EJ	= EXPANSION JOINT	NF	= NEAR FACE	V	= VERTICAL
ES	= EACH SIDE	OC	= ON CENTER	TT	= TEMP. TIES
EW	= EACH WAY				

STRAIGHT BARS LABEL FORMAT: 7 B15M X 3600 (QUANTITY, GRADE, LENGTH)

BENT BARS LABEL FORMAT: 7 B15M B1501 (QUANTITY, GRADE, SIZE, BAR MARK)

GRADES OF STEEL: G= GRADE 400R; E= EPOXY COATED; F= FBM; G= GALVANIZED; S= STAINLESS; W= WELDABLE

ISSUE	REMARKS	DATE	BY
0	FOR APPROVAL	SEP/02/21	JU

MANSTEEL REBAR
MANSTEEL REBAR
105 Industrial Road, Richmond Hill,
Ontario L4C 2Y4 Canada
Phone: 905-737-9797
Fax: 905-737-9704
Email: info@mansteelrebar.com

PROJECT
FORESTSIDE TOWNHOUSES
-BRAMPTON, ON

PART OF STRUCTURE
G.F SLAB BUL P#7 [500 SLAB]

CUSTOMER :
ROYAL PINE HOMES

Project no. 2177
SCALE: AS SHOWN
DRAWING No. R6.6F 0

DETAILED BY: JU
CHECKED BY:
BAR LIST No.

NOTES

1. ALL STEEL TO BE GRADE 400W
2. STRENGTH OF CONCRETE
   35MPa – SLAB
   35MPa – INTERIOR COLUMNS & WALLS
3. CONCRETE COVER:
   SLAB T -- 25mm
   SLAB B -- 25mm
4. COMPRESSION LAP SPLICE

BAR SIZE	STANDARD LAP (mm)
10M	300
15M	440
20M	590
25M	730
30M	880
35M	1030

5. TENSION LAP SPLICE (L.S) & DEVELOPMENT LENGTH (Ld)

BAR SIZE	fc=25		fc=30		fc=35	
	L.S	L.d	L.S	L.d	L.S	L.d
10M	490	380	450	350	420	320
15M	740	570	670	520	620	480
20M	980	750	890	690	830	640
25M	1530	1170	1390	1070	1290	990
30M	1830	1410	1670	1290	1550	1190
35M	2130	1640	1950	1500	1800	1390

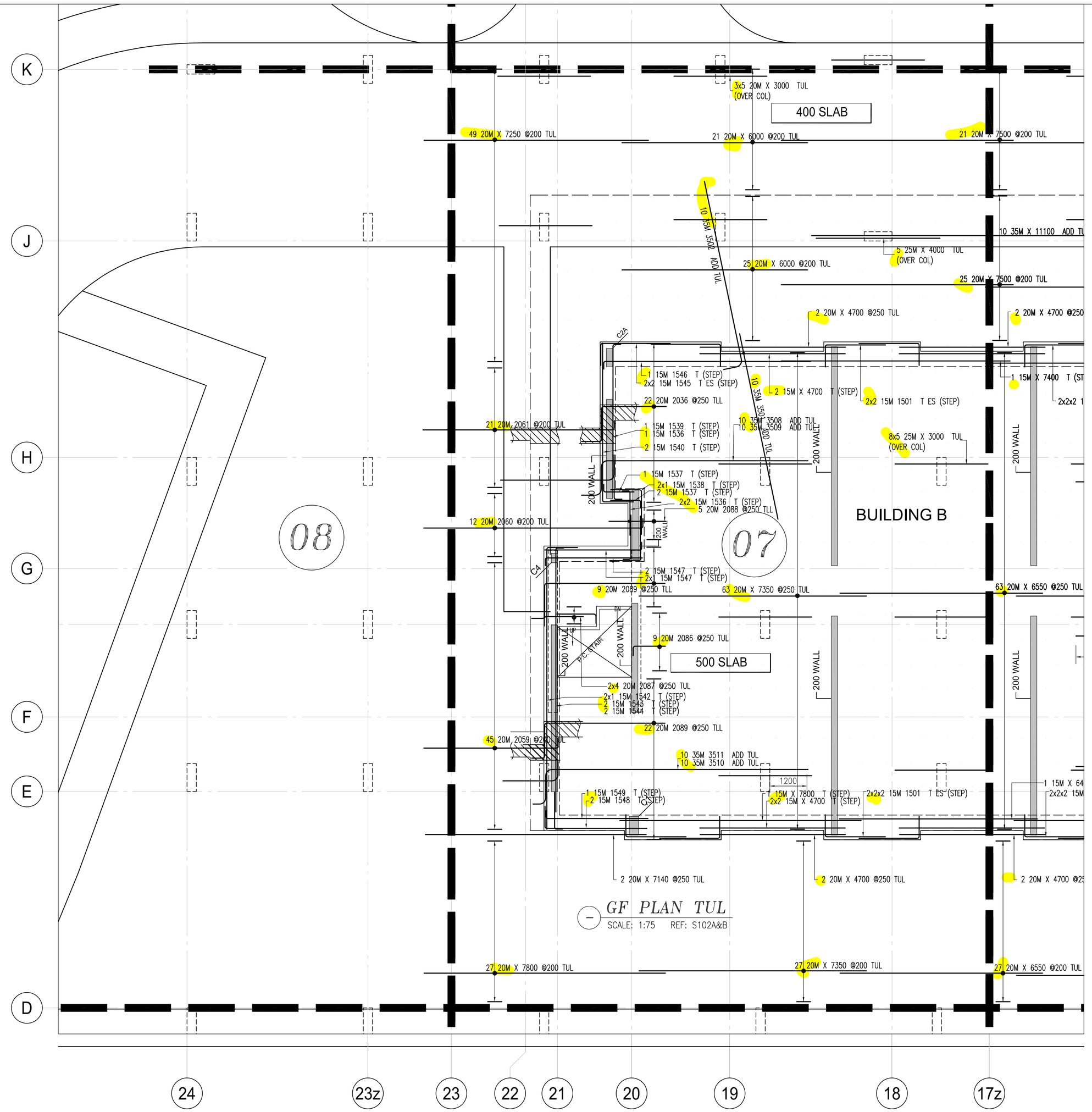

[400 THK SLAB]

Release Code: R6.6C GF TUL(1) P#7 BENDING DETAILS.

Bar Mark	Qty	Size	Total length	Type	'A'	'B'	'C'	'D'	'E'	'F'	'G'	'H'	'J'	'K'	'O'	'R'
	2	20M	7140			7140										
	2	20M	4700			4700										
	27	20M	7800			7800										
	21	20M	6000			6000										
	49	20M	7250			7250										
	15	20M	3000			3000										
	27	20M	7350			7350										
2059	45	20M	4660	2	310	4350										
2060	12	20M	7410	2	310	7100										
2061	21	20M	6510	2	310	6200										
3501	10	35M	6740	2	640	6100										

[500 THK SLAB]

Release Code: R6.6G GF TUL(2) P#7 BENDING DETAILS.

Bar Mark	Qty	Size	Total length	Type	'A'	'B'	'C'	'D'	'E'	'F'	'G'	'H'	'J'	'K'	'O'	'R'
	25	20M	6000			6000										
	2	20M	4700			4700										
	63	20M	7350			7350										
	6	15M	4700			4700										
	1	15M	7800			7800										
	40	25M	3000			3000										
	5	25M	4000			4000										
2087	8	20M	1580	2	310	1270										
2088	5	20M	3010	20		1200	1150	660								
2036	22	20M	3910	20		2100	1150	660								
3511	10	35M	2440	2	640	1800										
1545	4	15M	2970	17		2250	720									
1546	1	15M	6960	2	260	6700										
1539	1	15M	4560	2	260	4300										
1536	5	15M	1700	2	260	1440										
1540	2	15M	6140	17		1000	5140									
1537	3	15M	1240	2	260	980										
1538	2	15M	2450	17		1450	1000									
1547	4	15M	3400	2	260	3140										
1542	2	15M	10120	17		1000	9120									
1543	2	15M	8800	2	260	8540										
3508	10	35M	4340	2	640	3700										
1501	12	15M	2670	17		1950	720									
3509	10	35M	8510	20		660	1150	6700								
3510	10	35M	10080	20		430	1150	8500								
1548	2	15M	4020	17		3300	720									
1544	2	15M	1460	2	260	1200										
1549	1	15M	3560	2	260	3300										
2089	31	20M	5480	20		3900	1150	430								
3501	10	35M	7310	20		660	1150	5500								
2086	9	20M	1360	2	310	1050										

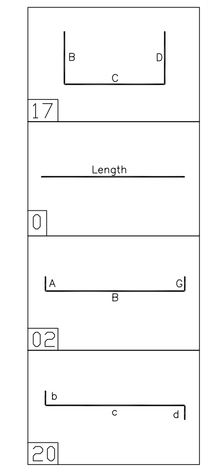

DRAWING REVIEW

This review of this drawing does not in any way relieve the contractor of responsibility for its accuracy or for compliance with the contract documents.

✓	No comment		See comment
	Amend & Resubmit		Rejected See Remarks

Submission No.
Project No. 19066
By MB
Date 08 Sep 2021

JABLONSKY, AST AND PARTNERS
Consulting Engineers
1129 Leslie Street Don Mills, Ont. M3C 2K5

NOTES

1. ALL STEEL TO BE GRADE 400W
2. STRENGTH OF CONCRETE
   35MPa – SLAB
   35MPa – INTERIOR COLUMNS & WALLS
3. CONCRETE COVER:
   SLAB T -- 25mm
   SLAB B -- 25mm
4. COMPRESSION LAP SPLICE

BAR SIZE	STANDARD LAP (mm)
10M	300
15M	440
20M	590
25M	730
30M	880
35M	1030

5. TENSION LAP SPLICE (L.S) & DEVELOPMENT LENGTH (Ld)

BAR SIZE	fc=25		fc=30		fc=35	
	L.S	L.d	L.S	L.d	L.S	L.d
10M	490	380	450	350	420	320
15M	740	570	670	520	620	480
20M	980	750	890	690	830	640
25M	1530	1170	1390	1070	1290	990
30M	1830	1410	1670	1290	1550	1190
35M	2130	1640	1950	1500	1800	1390

* ELEVATIONS AND DIMENSIONS SHOWN ARE FOR VERIFICATION PURPOSES ONLY AND ARE NOT TO BE USED FOR CONSTRUCTION
* ALL CONFIRMS/VERIFIES WILL BE ASSUMED CORRECT AND APPROVED AS IS UNLESS COMMENTED ON THE APPROVAL DRWGS

LEGEND

ALT	= ALTERNATE	FF	= FAR FACE	OF	= OUTSIDE FACE
BOT	= BOTTOM	FS	= FORM SAVER	SC	= SAW CUT END
BIS	= BEND INTO SLAB	GO	= GROUT IN DOWELS	STG	= STAGGER
CB	= CORNER BAR	H	= HORIZONTAL	STIR	= STIRRUPS
CJ	= CONTROL JOINT	IF	= INSIDE FACE	T	= TOP
CTS	= CUT TO SUIT SITE COND.	LL	= LOWER LAYER	THR/1	= THREAD 1END
DWL	= DOWELS	MID	= MIDDLE	THR/2	= THREAD 2ENDS
EE	= EACH END	MIN	= MINIMUM	UL	= UPPER LAYER
EF	= EACH FACE	NF	= NEAR FACE	u/n	= UNLESS NOTED
EJ	= EXPANSION JOINT	OC	= ON CENTER	V	= VERTICAL
ES	= EACH SIDE			TT	= TEMP. TIES
EW	= EACH WAY				

STRAIGHT BARS LABEL FORMAT: 7 B15M X 3600 (QUANTITY, GRADE, LENGTH)

BENT BARS LABEL FORMAT: 7 B15M B1501 (QUANTITY, GRADE, SIZE, BAR MARK)

GRADES OF STEEL

B =	GRADE 400W
E =	EPOXY COATED
F =	FRP
G =	GALVANIZED
S =	STAINLESS
W =	WELDABLE

ISSUE	REMARKS	DATE	BY
0	FOR APPROVAL	SEP/02//21	JU

MANSTEEL REBAR

MANSTEEL REBAR
105 Industrial Road, Richmond Hill,
Ontario L4C 2Y4 Canada
Phone: 905-737-9797
Fax: 905-737-9704
Email: info@mansteelrebar.com

PROJECT
FORESTSIDE TOWNHOUSES
–BRAMPTON, ON

PART OF STRUCTURE
G.F SLAB TUL P#7 [500 SLAB]

CUSTOMER :
ROYAL PINE HOMES

Project no. 2177
SCALE: AS SHOWN
DRAWING No. R6.6G 0

DETAILED BY: JU
CHECKED BY:
BAR LIST No.

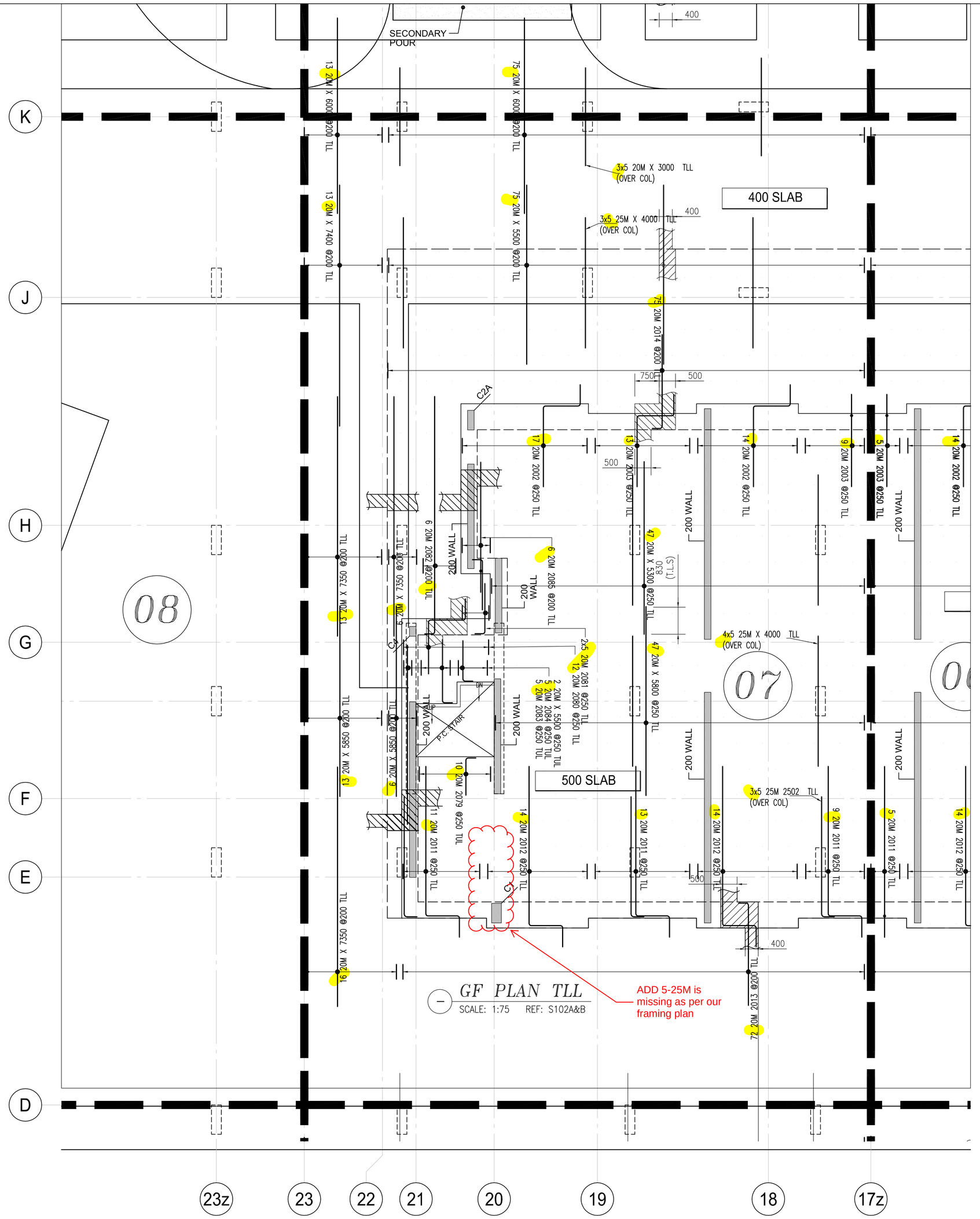

[400 THK SLAB]

Release Code: R6.6D GF TLL(1) P#7 BENDING DETAILS.

Bar Mark	Qty	Size	Total	length	Type	'A'	'B'	'C'	'D'	'E'	'F'	'G'	'H'	'J'	'K'	'O'	'R'
	13	20M	7400				7400										
	88	20M	6000				6000										
	95	20M	3000				3000										
	29	20M	7350				7350										
	13	20M	5850				5850										
	75	20M	5500				5500										
2012	28	20M	6610	20			4900	1050	660								
2011	24	20M	6310	20			4600	1050	660								
2013	72	20M	3460	2		310	3150										

[500 THK SLAB]

Release Code: R6.6H GF TLL(2) P#7 BENDING DETAILS.

Bar Mark	Qty	Size	Total	length	Type	'A'	'B'	'C'	'D'	'E'	'F'	'G'	'H'	'J'	'K'	'O'	'R'
	35	25M	4000				4000										
	47	20M	5800				5800										
	47	20M	5300				5300										
	2	20M	5500				5500										
	6	20M	5850				5850										
	6	20M	7350				7350										
2002	31	20M	4300	20			2490	1150	660								
2003	22	20M	4000	20			2190	1150	660								
2079	10	20M	1460	2		310	1150										
2502	15	25M	4100	2		400	3700										
2085	6	20M	5160	20			3350	1150	660								
2081	10	20M	1860	2		310	1550										
2082	6	20M	7610	2		310	7300										
2083	5	20M	2260	2		310	1950										
2084	5	20M	1560	2		310	1250										
2011	9	20M	6310	20			4600	1050	660								
2080	12	20M	3470	20			1660	1150	660								
2014	75	20M	3200	2		310	2890										

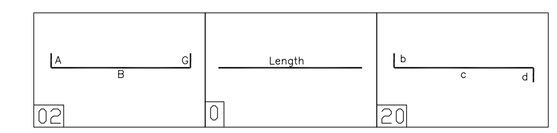

NOTES

1. ALL STEEL TO BE GRADE 400W
2. STRENGTH OF CONCRETE
   35MPa – SLAB
   35MPa – INTERIOR COLUMNS & WALLS
3. CONCRETE COVER:
   SLAB T -- 25mm
   SLAB B -- 25mm
4. COMPRESSION LAP SPLICE

BAR SIZE	STANDARD LAP (mm)
10M	300
15M	440
20M	590
25M	730
30M	880
35M	1030

5. TENSION LAP SPLICE (L.S) & DEVELOPMENT LENGTH (Ld)

BAR SIZE	fc=25		fc=30		fc=35	
	L.S	L.d	L.S	L.d	L.S	L.d
10M	490	380	450	350	420	320
15M	740	570	670	520	620	480
20M	980	750	890	690	830	640
25M	1530	1170	1390	1070	1290	990
30M	1830	1410	1670	1290	1550	1190
35M	2130	1640	1950	1500	1800	1390

DRAWING REVIEW

This review of this drawing does not in any way relieve the contractor of responsibility for its accuracy or for compliance with the contract documents.

	No comment	✓	See comment
	Amend & Resubmit		Rejected See Remarks

Submission No.
Project No. 19066
By MB
Date 08 Sep 2021

JABLONSKY, AST AND PARTNERS
Consulting Engineers
1129 Leslie Street Don Mills, Ont. M3C 2K5

* ELEVATIONS AND DIMENSIONS SHOWN ARE FOR VERIFICATION PURPOSES ONLY AND ARE NOT TO BE USED FOR CONSTRUCTION
* ALL CONFIRMS/VERIFIES WILL BE ASSUMED CORRECT AND APPROVED AS IS UNLESS COMMENTED ON THE APPROVAL DRWGS

LEGEND

ALT	= ALTERNATE	FF	= FAR FACE	OF	= OUTSIDE FACE
BOT	= BOTTOM	FS	= FORM SAVER	SC	= SAW CUT END
BIO	= BEND IN OPPOSITE	GID	= GROUT IN DOWELS	STG	= STAGGER
CB	= CORNER BAR	H	= HORIZONTAL	STIR	= STIRRUPS
CJ	= CONTROL JOINT	IF	= INSIDE FACE	T	= TOP
CTS	= CUT TO SUIT SITE COND.	LL	= LOWER LAYER	THR/1	= THREAD 1END
DWL	= DOWELS	MID	= MIDDLE	THR/2	= THREAD 2ENDS
EE	= EACH END	MIN	= MINIMUM	UL	= UPPER LAYER
EF	= EACH FACE	NF	= NEAR FACE	u/n	= UNLESS NOTED
EJ	= EXPANSION JOINT	OC	= ON CENTER	V	= VERTICAL
ES	= EACH SIDE			TT	= TEMP. TIES
EW	= EACH WAY				

STRAIGHT BARS LABEL FORMAT: 7 B15M X 3600 (GRADE, QUANTITY, LENGTH)

BENT BARS LABEL FORMAT: 7 B15M B1501 (SIZE, BAR MARK, GRADE, QUANTITY)

GRADES OF STEEL

B =	GRADE 400W
E =	EPOXY COATED
K =	CSP
G =	GALVANIZED
S =	STAINLESS
W =	WELDABLE

ISSUE	REMARKS	DATE	BY
0	FOR APPROVAL	SEP/02/21	JU

MANSTEEL REBAR

MANSTEEL REBAR
105 Industrial Road, Richmond Hill,
Ontario L4C 2Y4 Canada
Phone: 905-737-9797
Fax: 905-737-9704
Email: info@mansteelrebar.com

PROJECT
FORESTSIDE TOWNHOUSES
-BRAMPTON, ON

PART OF STRUCTURE
G.F SLAB TLL P#7 [500 SLAB]

CUSTOMER :
ROYAL PINE HOMES

Project no. 2177
SCALE: AS SHOWN
DRAWING No. R6.6H 0

DETAILED BY: JU
CHECKED BY:
BAR LIST No.