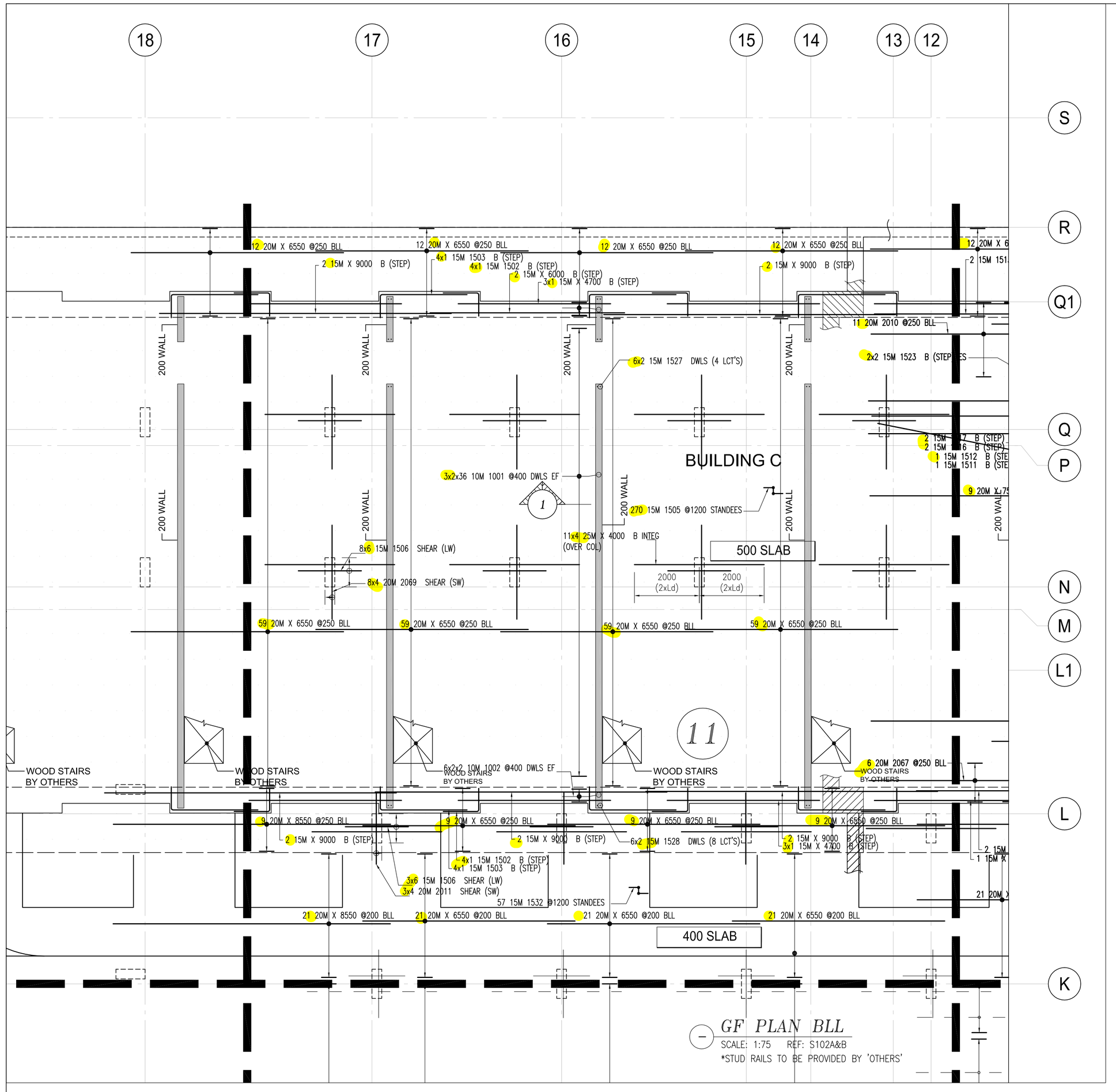

GF PLAN BLL

SCALE: 1:75 REF: S102A&B

*STUD RAILS TO BE PROVIDED BY 'OTHERS'

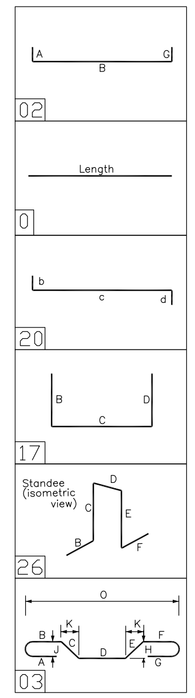

Release Code: R6.10A GF BLL P#11 BENDING DETAILS.

Bar Mark	Qty	Size	Total length	Type	'A'	'B'	'C'	'D'	'E'	'F'	'G'	'H'	'J'	'K'	'O'	'R'
	30	20M	8550			8550										
	374	20M	6550			6550										
	2	15M	6000			6000										
	10	15M	9000			9000										
	6	15M	4700			4700										
	44	25M	4000			4000										
1001	216	10M	1050	2	180	870										
1002	24	10M	1800	2	180	1620										
1532	57	15M	1300	26		300	250	200	250	300						
1505	270	15M	1500	26		300	350	200	350	300						
1503	8	15M	3400	17		2680	720									
2069	32	20M	3240	3		600	520	1000	520	600		390		350	2900	
1506	66	15M	2300	3		450	550	300	550	450		410		370	1940	
1527	12	15M	1300	2	260	1040										
2011	12	20M	2540	3		600	520	300	520	600		390		350	2200	
1502	8	15M	1820	17		1100	720									
1528	12	15M	2100	2	260	1840										

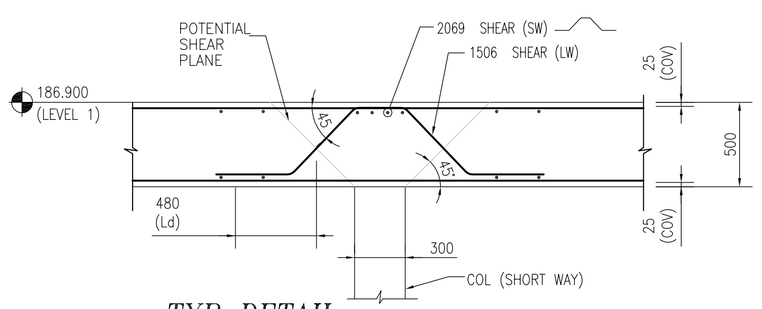

TYP DETAIL
OF PICK-UP SLAB AT COL.

SCALE: 1:25

NOTES

1. ALL STEEL TO BE GRADE 400W
2. STRENGTH OF CONCRETE
   35MPa – SLAB
   35MPa – INTERIOR COLUMNS & WALLS
3. CONCRETE COVER:
   SLAB T -- 25mm
   SLAB B -- 25mm
4. COMPRESSION LAP SPLICE

BAR SIZE	STANDARD LAP (mm)
10M	300
15M	440
20M	590
25M	730
30M	880
35M	1030

5. TENSION LAP SPLICE (L.S) & DEVELOPMENT LENGTH (Ld)

BAR SIZE	fc=25		fc=30		fc=35	
	L.S	L.d	L.S	L.d	L.S	L.d
10M	490	380	450	350	420	320
15M	740	570	670	520	620	480
20M	980	750	890	690	830	640
25M	1530	1170	1390	1070	1290	990
30M	1830	1410	1670	1290	1550	1190
35M	2130	1640	1950	1500	1800	1390

DRAWING REVIEW

This review of this drawing does not in any way relieve the contractor of responsibility for its accuracy or for compliance with the contract documents.

✓	No comment	See comment
	Amend & Resubmit	Rejected See Remarks

Submission No.
Project No. 19066
By MB
Date 14 Sep 2021

JABLONSKY, AST AND PARTNERS
Consulting Engineers
1129 Leslie Street Don Mills, Ont. M3C 2K5

* ELEVATIONS AND DIMENSIONS SHOWN ARE FOR VERIFICATION PURPOSES ONLY AND ARE NOT TO BE USED FOR CONSTRUCTION
* ALL CONFIRMS/VERIFIES WILL BE ASSUMED CORRECT AND APPROVED AS IS UNLESS COMMENTED ON THE APPROVAL DRWGS

LEGEND

ALT = ALTERNATE
BOT = BOTTOM
BIS = BEND INTO SLAB
CB = CORNER BAR
CJ = CONTROL JOINT
CTS = CUT TO SUIT SITE COND.
DWL = DOWELS
EE = EACH END
EF = EACH FACE
EJ = EXPANSION JOINT
ES = EACH SIDE
EW = EACH WAY
FF = FAR FACE
FS = FORM SAVER
GD = GROUT IN DOWELS
H = HORIZONTAL
IF = INSIDE FACE
LL = LOWER LAYER
MID = MIDDLE
MIN = MINIMUM
NF = NEAR FACE
OC = ON CENTER
OF = OUTSIDE FACE
SC = SAW CUT END
STG = STAGGER
STIR = STIRRUPS
T = TOP
THR/1= THREAD 1END
THR/2= THREAD 2ENDS
UL = UPPER LAYER
U/n = UNLESS NOTED
V = VERTICAL
TT = TEMP. TIES

STRAIGHT BARS LABEL FORMAT: 7 B15M X 3600 (QUANTITY, GRADE, LENGTH)

BENT BARS LABEL FORMAT: 7 B15M B1501 (QUANTITY, GRADE, SIZE, BAR MARK)

GRADES OF STEEL
B = GRADE 400W
E = EPOXY COATED
U = UNCOATED
G = GALVANIZED
W = WELDABLE

ISSUE	REMARKS	DATE	BY
0	FOR APPROVAL	SEP/11/21	JU

MANSTEEL REBAR
105 Industrial Road, Richmond Hill,
Ontario L4C 2Y4 Canada
Phone: 905-737-9797
Fax: 905-737-9704
Email: info@mansteelrebar.com

PROJECT
FORESTSIDE TOWNHOUSES
–BRAMPTON, ON

PART OF STRUCTURE
G.F SLAB BLL P#11

CUSTOMER : ROYAL PINE HOMES

Project no. 2177

SCALE: AS SHOWN

DRAWING No. R6.10A

DETAILED BY: JU

CHECKED BY:

BAR LIST No.

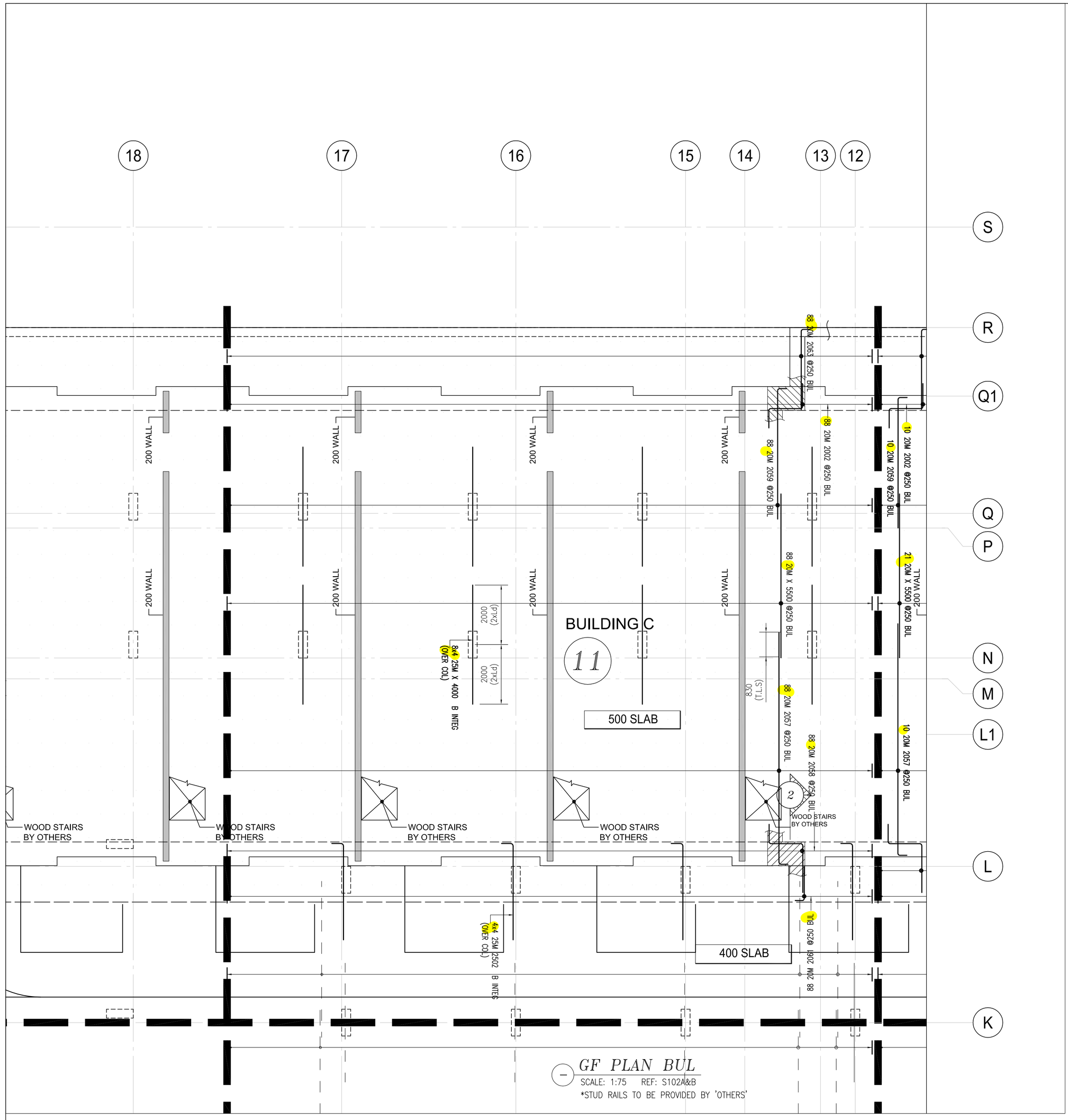

GF PLAN BUL

SCALE: 1:75 REF: S102A&B

*STUD RAILS TO BE PROVIDED BY 'OTHERS'

Release Code: R6.10B GF BUL P#11 BENDING DETAILS.

Bar Mark	Qty	Size	Total length	Type	'A'	'B'	'C'	'D'	'E'	'F'	'G'	'H'	'J'	'K'	'O'	'R'
	88	20M	5500			5500										
	32	25M	4000			4000										
2059	88	20M	4700	2	310	4390										
2057	88	20M	8100	2	310	7790										
2061	88	20M	1450	2	310	1140										
2063	88	20M	3010	2	310	2700										
2002	88	20M	2660	20		660	1150	850								
2502	16	25M	3650	2	400	3250										
2058	88	20M	3460	20		660	1150	1650								

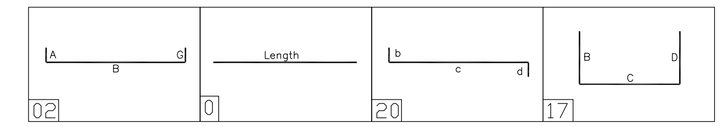

DRAWING REVIEW

This review of this drawing does not in any way relieve the contractor of responsibility for its accuracy or for compliance with the contract documents.

✓	No comment	See comment
	Amend & Resubmit	Rejected See Remarks

Submission No.
Project No. 19066
By MB
Date 14 Sep 2021

JABLONSKY, AST AND PARTNERS
Consulting Engineers
1129 Leslie Street Don Mills, Ont. M3C 2K5

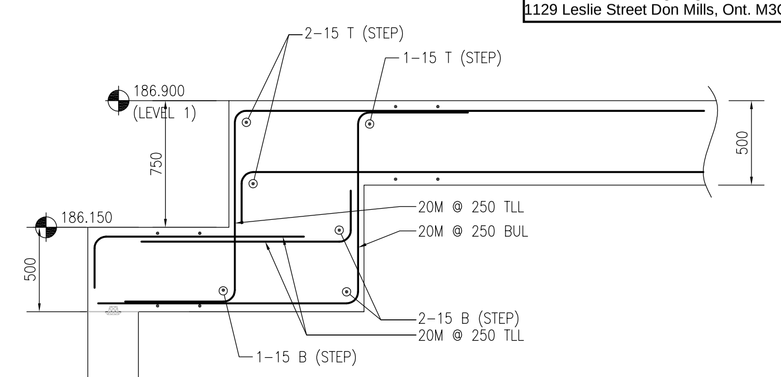

SECTION 2

SCALE: 1:25

* ELEVATIONS AND DIMENSIONS SHOWN ARE FOR VERIFICATION PURPOSES ONLY AND ARE NOT TO BE USED FOR CONSTRUCTION
* ALL CONFIRMS/VERIFIES WILL BE ASSUMED CORRECT AND APPROVED AS IS UNLESS COMMENTED ON THE APPROVAL DRWGS

LEGEND

ALT	= ALTERNATE	FF	= FAR FACE	OF	= OUTSIDE FACE
BOT	= BOTTOM	FS	= FORM SAVER	SC	= SAW CUT END
BIS	= BEND INTO SLAB	GID	= GROUT IN DOWELS	STG	= STAGGER
CB	= CONTROL BAR	H	= HORIZONTAL	STIR	= STIRRUPS
CJ	= CONTROL JOINT	IF	= INSIDE FACE	T	= TOP
CTS	= CUT TO SUIT SITE COND.	LL	= LOWER LAYER	THR/1=	THREAD 1END
DWL	= DOWELS	MID	= MIDDLE	THR/2=	THREAD 2ENDS
EE	= EACH END	MIN	= MINIMUM	UL	= UPPER LAYER
EF	= EACH FACE	NF	= NEAR FACE	u/n	= UNLESS NOTED
EJ	= EXPANSION JOINT	OC	= ON CENTER	V	= VERTICAL
ES	= EACH SIDE			TT	= TEMP. TIES
EW	= EACH WAY				

STRAIGHT BARS LABEL FORMAT: 7 B15M X 3600 (QUANTITY, GRADE, LENGTH)

BENT BARS LABEL FORMAT: 7 B15M B1501 (QUANTITY, GRADE, SIZE, BAR MARK)

GRADES OF STEEL: B = GRADE 400W; E = EPOXY COATED; C = COTED; G = GALVANIZED; S = STAINLESS; W = WELDABLE

ISSUE	REMARKS	DATE	BY
0	FOR APPROVAL	SEP/12/21	JJ

MANSTEEL REBAR

MANSTEEL REBAR
105 Industrial Road, Richmond Hill,
Ontario L4C 2Y4 Canada
Phone: 905-737-9797
Fax: 905-737-9704
Email: info@mansteelrebar.com

PROJECT
FORESTSIDE TOWNHOUSES
-BRAMPTON, ON

PART OF STRUCTURE
G.F SLAB BUL P#11

CUSTOMER :
ROYAL PINE HOMES

Project no. 2177
SCALE: AS SHOWN
DRAWING No. R6.10B

DETAILED BY: JJ
CHECKED BY:
BAR LIST No.

NOTES

1. ALL STEEL TO BE GRADE 400W
2. STRENGTH OF CONCRETE
   35MPa – SLAB
   35MPa – INTERIOR COLUMNS & WALLS
3. CONCRETE COVER:
   SLAB T -- 25mm
   SLAB B -- 25mm

4. COMPRESSION LAP SPLICE

BAR SIZE	STANDARD LAP (mm)
10M	300
15M	440
20M	590
25M	730
30M	880
35M	1030

5. TENSION LAP SPLICE (L.S) & DEVELOPMENT LENGTH (Ld)

BAR SIZE	fc=25		fc=30		fc=35	
	L.S	L.d	L.S	L.d	L.S	L.d
10M	490	380	450	350	420	320
15M	740	570	670	520	620	480
20M	980	750	890	690	830	640
25M	1530	1170	1390	1070	1290	990
30M	1830	1410	1670	1290	1550	1190
35M	2130	1640	1950	1500	1800	1390

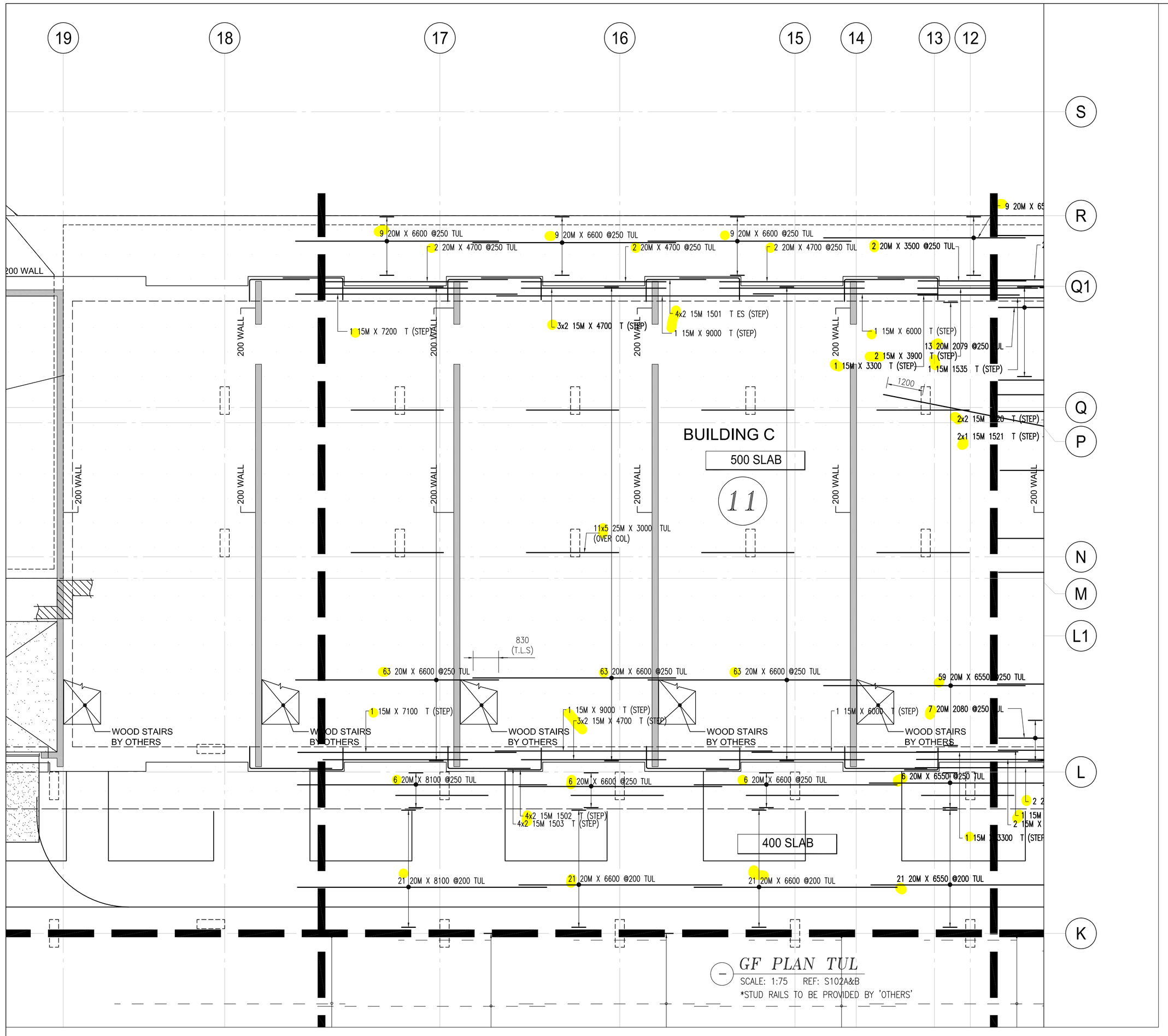

GF PLAN TUL

SCALE: 1:75 REF: S102A&B

*STUD RAILS TO BE PROVIDED BY 'OTHERS'

Release Code: R6.10C GF TUL P#11 BENDING DETAILS.

Bar Mark	Qty	Size	Total length	Type	'A'	'B'	'C'	'D'	'E'	'F'	'G'	'H'	'J'	'K'	'O'	'R'
	270	20M	6600			6600										
	27	20M	8100			8100										
	55	25M	3000			3000										
	12	15M	4700			4700										
	2	15M	9000			9000										
	2	15M	6000			6000										
	1	15M	7100			7100										
	6	20M	4700			4700										
	1	15M	7200			7200										
1503	8	15M	3400	17		2680	720									
1501	8	15M	2670	17		1950	720									
1502	8	15M	1820	17		1100	720									

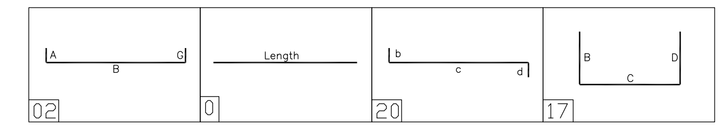

* ELEVATIONS AND DIMENSIONS SHOWN ARE FOR VERIFICATION PURPOSES ONLY AND ARE NOT TO BE USED FOR CONSTRUCTION
* ALL CONFIRMS/VERIFIES WILL BE ASSUMED CORRECT AND APPROVED AS IS UNLESS COMMENTED ON THE APPROVAL DRWGS

LEGEND

ALT = ALTERNATE
BOT = BOTTOM
BIS = BEND INTO SLAB
CB = CORNER BAR
CJ = CONTROL JOINT
CTS = CUT TO SUIT SITE COND.
DWL = DOWELS
EE = EACH END
EF = EACH FACE
EJ = EXPANSION JOINT
ES = EACH SIDE
EW = EACH WAY
FF = FAR FACE
FS = FORM SAVER
GD = GROUT IN DOWELS
H = HORIZONTAL
IF = INSIDE FACE
LL = LOWER LAYER
MID = MIDDLE
MIN = MINIMUM
NF = NEAR FACE
OC = ON CENTER
OF = OUTSIDE FACE
SC = SAW CUT END
STG = STAGGER
STIR = STIRRUPS
T = TOP
THR/1= THREAD 1END
THR/2= THREAD 2ENDS
UL = UPPER LAYER
U/n = UNLESS NOTED
V = VERTICAL
TT = TEMP. TIES

STRAIGHT BARS LABEL FORMAT

7 B15M X 3600
QUANTITY GRADE LENGTH

BENT BARS LABEL FORMAT

7 B15M B1501
QUANTITY GRADE SIZE BAR MARK

GRADES OF STEEL

B = GRADE 400W
E = EPOXY COATED
G = GALVANIZED
S = STAINLESS
W= WELDABLE

DRAWING REVIEW

This review of this drawing does not in any way relieve the contractor of responsibility for its accuracy or for compliance with the contract documents.

✓	No comment	See comment
	Amend & Resubmit	Rejected See Remarks

Submission No.
Project No. 19066
By MB
Date 14 Sep 2021

JABLONSKY, AST AND PARTNERS
Consulting Engineers
1129 Leslie Street Don Mills, Ont. M3C 2K5

ISSUE	REMARKS	DATE	BY
0	FOR APPROVAL	SEP/11/21	JU

MANSTEEL REBAR

MANSTEEL REBAR
105 Industrial Road, Richmond Hill,
Ontario L4C 2Y4 Canada
Phone: 905-737-9797
Fax: 905-737-9704
Email: info@mansteelrebar.com

PROJECT
FORESTSIDE TOWNHOUSES
-BRAMPTON, ON

PART OF STRUCTURE
G.F SLAB TUL P#11

CUSTOMER : ROYAL PINE HOMES

Project no. 2177

SCALE: AS SHOWN

DRAWING No. R6.10C 0

DETAILED BY: JU

CHECKED BY:

BAR LIST No.

NOTES

1, ALL STEEL TO BE GRADE 400W
2, STRENGTH OF CONCRETE
35MPa – SLAB
35MPa – INTERIOR COLUMNS & WALLS

3, CONCRETE COVER:
SLAB T -- 25mm
SLAB B -- 25mm

4, COMPRESSION LAP SPLICE

BAR SIZE	STANDARD LAP (mm)
10M	300
15M	440
20M	590
25M	730
30M	880
35M	1030

5, TENSION LAP SPLICE (L.S) & DEVELOPMENT LENGTH (Ld)

BAR SIZE	fc=25		fc=30		fc=35	
	L.S	L.d	L.S	L.d	L.S	L.d
10M	490	380	450	350	420	320
15M	740	570	670	520	620	480
20M	980	750	890	690	830	640
25M	1530	1170	1390	1070	1290	990
30M	1830	1410	1670	1290	1550	1190
35M	2130	1640	1950	1500	1800	1390

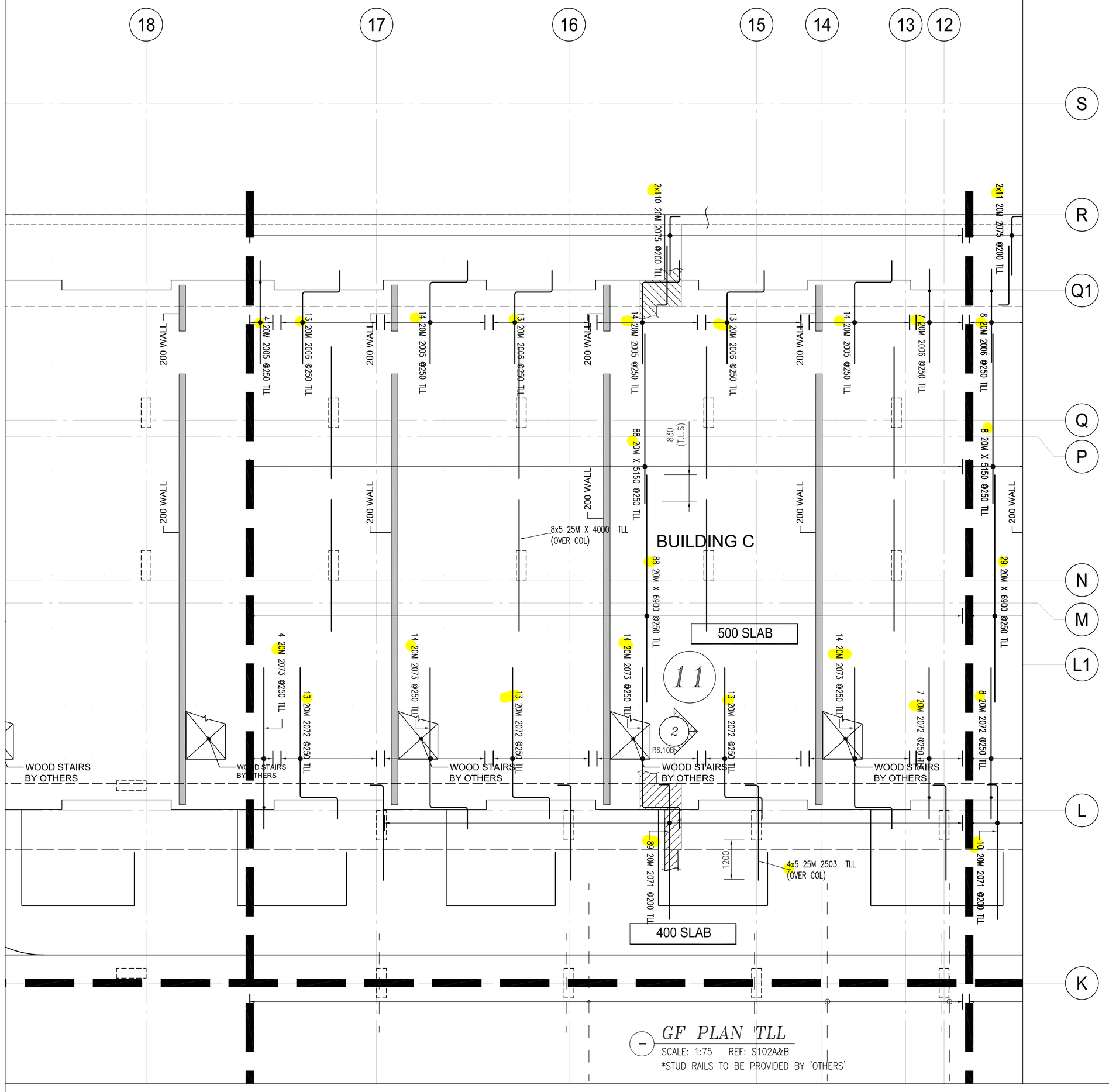

GF PLAN TLL

SCALE: 1:75 REF: S102A&B

*STUD RAILS TO BE PROVIDED BY 'OTHERS'

Release Code: R6.10D GF TLL P#11 BENDING DETAILS.

Bar Mark	Qty	Size	Total length	Type	'A'	'B'	'C'	'D'	'E'	'F'	'G'	'H'	'J'	'K'	'O'	'R'
	88	20M	6900			6900										
	88	20M	5150			5150										
	40	25M	4000			4000										
2072	46	20M	5760	20		3950	1150	660								
2073	46	20M	6060	20		4250	1150	660								
2006	46	20M	4000	20		2190	1150	660								
2005	46	20M	4300	20		2490	1150	660								
2075	220	20M	2110	2	310	1800										
2503	20	25M	3300	2	400	2900										
2071	89	20M	4410	2	310	4100										

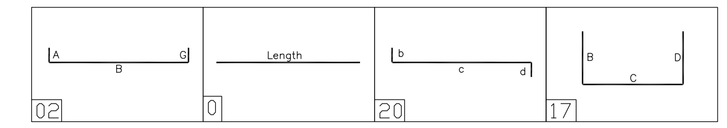

DRAWING REVIEW

This review of this drawing does not in any way relieve the contractor of responsibility for its accuracy or for compliance with the contract documents.

✓	No comment		See comment
	Amend & Resubmit		Rejected See Remarks

Submission No.
Project No. 19066
By MB
Date 14 Sep 2021

JABLONSKY, AST AND PARTNERS
Consulting Engineers
1129 Leslie Street Don Mills, Ont. M3C 2K5

* ELEVATIONS AND DIMENSIONS SHOWN ARE FOR VERIFICATION PURPOSES ONLY AND ARE NOT TO BE USED FOR CONSTRUCTION
* ALL CONFIRMS/VERIFIES WILL BE ASSUMED CORRECT AND APPROVED AS IS UNLESS COMMENTED ON THE APPROVAL DRWGS

LEGEND

ALT = ALTERNATE
BOT = BOTTOM
BIS = BEND INTO SLAB
CB = CURB BAR
CJ = CONTROL JOINT
CTS = CUT TO SUIT SITE COND.
DWL = DOWELS
EE = EACH END
EF = EACH FACE
EJ = EXPANSION JOINT
ES = EACH SIDE
EW = EACH WAY
FF = FAR FACE
FS = FORM SAVER
G/D = GROUT IN DOWELS
H = HORIZONTAL
IF = INSIDE FACE
LL = LOWER LAYER
MID = MIDDLE
MIN = MINIMUM
NF = NEAR FACE
OC = ON CENTER
OF = OUTSIDE FACE
SC = SAW CUT END
STG = STAGGER
STIR = STIRRUPS
T = TOP
THR/1= THREAD 1END
THR/2= THREAD 2ENDS
UL = UPPER LAYER
u/n = UNLESS NOTED
V = VERTICAL
TT = TEMP. TIES

STRAIGHT BARS LABEL FORMAT: 7 B15M X 3600 (QUANTITY, GRADE, LENGTH)

BENT BARS LABEL FORMAT: 7 B15M B1501 (QUANTITY, GRADE, SIZE, BAR MARK)

GRADES OF STEEL
G= GRADE 400R
E= EPOXY COATED
P= PSB
G= GALVANIZED
S= STAINLESS
W= WELDABLE

ISSUE	REMARKS	DATE	BY
0	FOR APPROVAL	SEP/12/21	JU

MANSTEEL REBAR

MANSTEEL REBAR
105 Industrial Road, Richmond Hill,
Ontario L4C 2Y4 Canada
Phone: 905-737-9797
Fax: 905-737-9704
Email: info@mansteelrebar.com

PROJECT
FORESTSIDE TOWNHOUSES
-BRAMPTON, ON

PART OF STRUCTURE
G.F SLAB TLL P#11

CUSTOMER :
ROYAL PINE HOMES

Project no. 2177
SCALE: AS SHOWN
DRAWING No. R6.10D

DETAILED BY: JU
CHECKED BY:
BAR LIST No.

NOTES

1. ALL STEEL TO BE GRADE 400W
2. STRENGTH OF CONCRETE
   35MPa – SLAB
   35MPa – INTERIOR COLUMNS & WALLS
3. CONCRETE COVER:
   SLAB T -- 25mm
   SLAB B -- 25mm
4. COMPRESSION LAP SPLICE

BAR SIZE	STANDARD LAP (mm)
10M	300
15M	440
20M	590
25M	730
30M	880
35M	1030

5. TENSION LAP SPLICE (L.S) & DEVELOPMENT LENGTH (Ld)

BAR SIZE	fc=25		fc=30		fc=35	
	L.S	L.d	L.S	L.d	L.S	L.d
10M	490	380	450	350	420	320
15M	740	570	670	520	620	480
20M	980	750	890	690	830	640
25M	1530	1170	1390	1070	1290	990
30M	1830	1410	1670	1290	1550	1190
35M	2130	1640	1950	1500	1800	1390