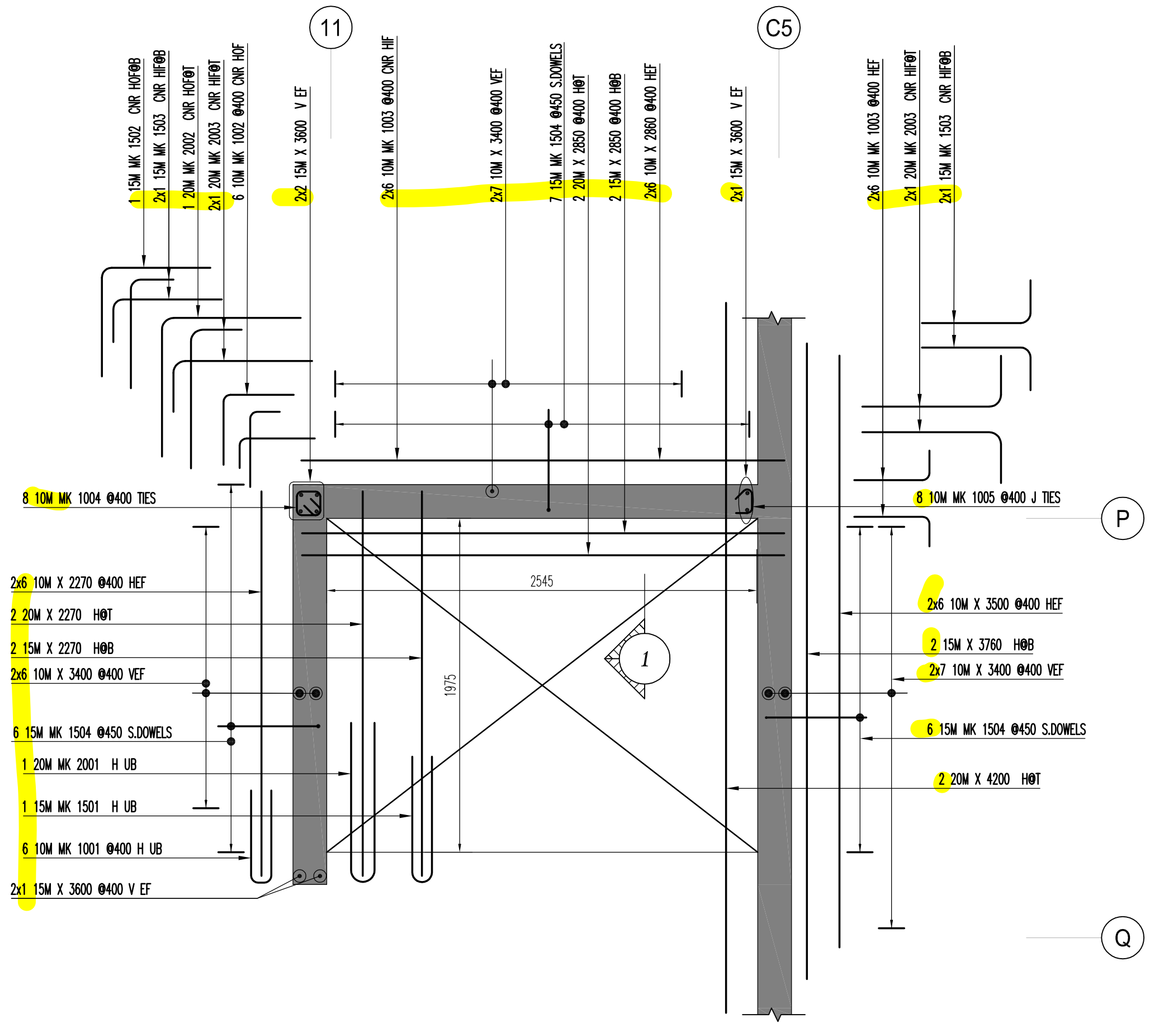

BUILDING–C
ELEVATOR WALL PLAN L2–L3

SCALE: 1:25
(POUR–8)

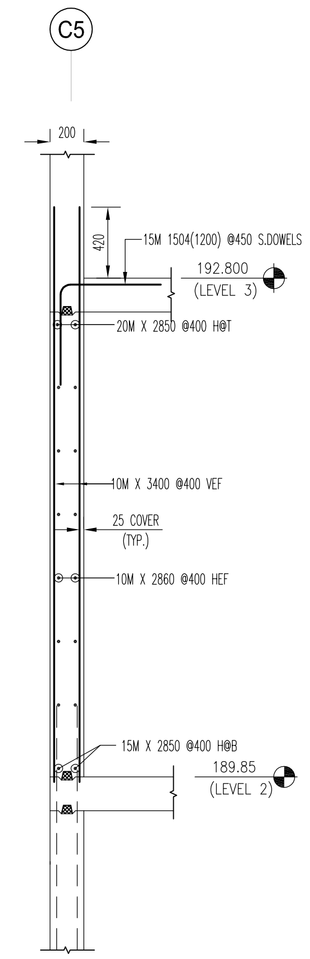

1 SECTION

SCALE: 1:25

Release Number: R10.9 Building–C EW L2–L3 P#8						BAR LIST											
Bar Mark	Qty	Size	Total Length	Type	'A'	'B'	'C'	'D'	'E'	'F'	'G'	'H'	'J'	'K'	'O'	'R'
1004	8	10M	800	T1	100	150	150	150	150		100					
1005	8	10M	350	T9	100	150					100					
	40	10M	3400			3400										
	12	10M	3500			3500										
	12	10M	2270			2270										
	12	10M	2860			2860										
1001	6	10M	1230	17		550	130	550								
1003	24	10M	630	2	180	450										
1002	6	10M	840	17		420	420									
	8	15M	3600			3600										
	2	15M	2270			2270										
	2	15M	2850			2850										
	2	15M	3760			3760										
1502	1	15M	1300	17		650	650									
1503	4	15M	910	2	260	650										
1504	19	15M	1200	17		600	600									
1501	1	15M	1630	17		750	130	750								
	2	20M	2850			2850										
	2	20M	2270			2270										
	2	20M	4200			4200										
2001	1	20M	2060	17		950	160	950								
2003	4	20M	1140	2	310	830										
2002	1	20M	1660	17		830	830									

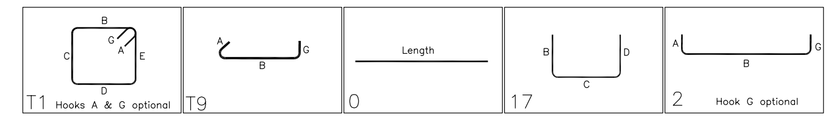

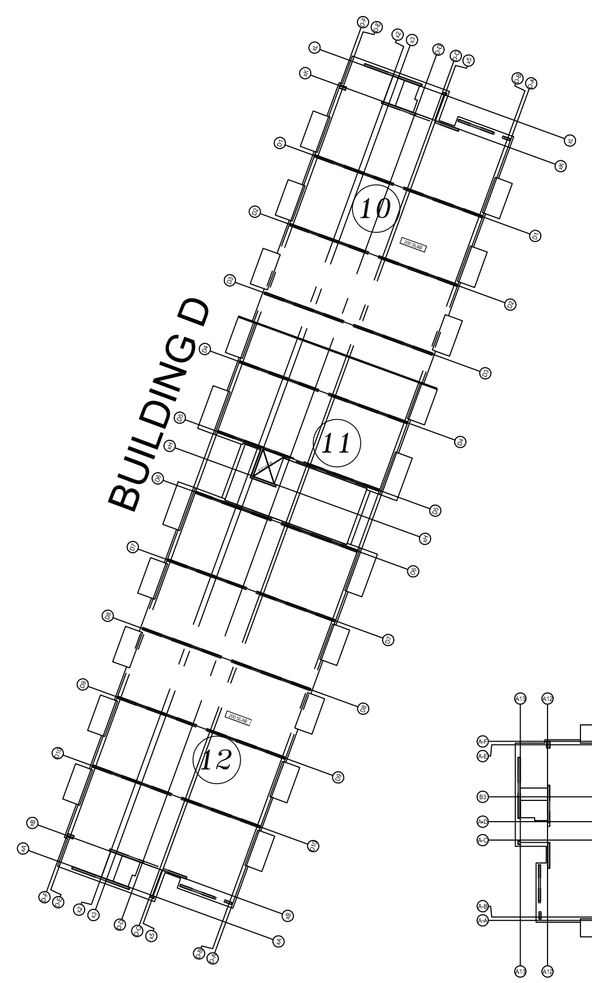

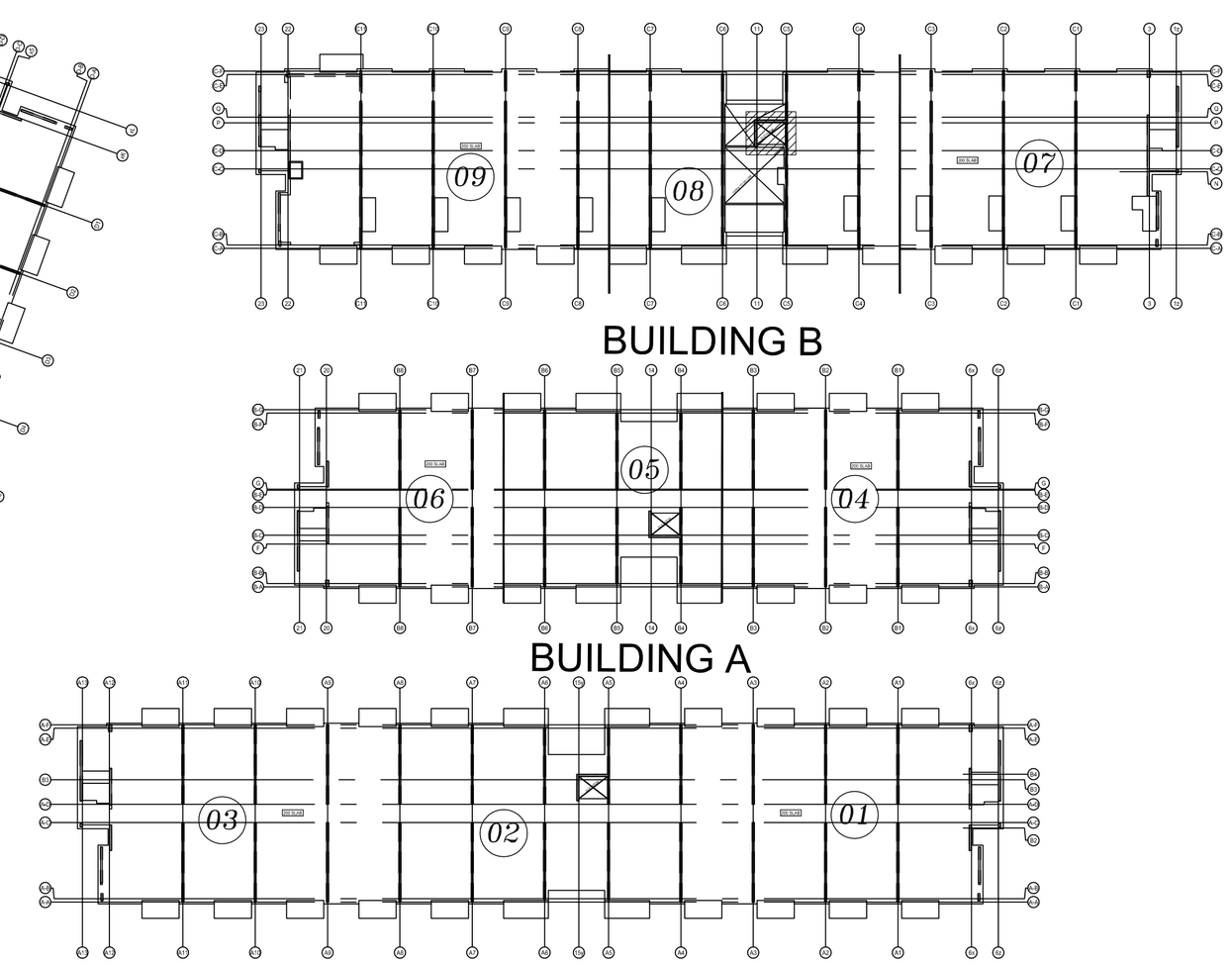

DRAWING REVIEW

This review of this drawing does not in any way relieve the contractor of responsibility for its accuracy or for compliance with the contract documents.

✓	No comment		See comment
	Amend & Resubmit		Rejected See Remarks

Submission No.
Project No. 19066
By MB
Date 01 Dec 2021

JABLONSKY, AST AND PARTNERS
Consulting Engineers
1129 Leslie Street Don Mills, Ont. M3C 2K5

NOTES

1. ALL STEEL TO BE GRADE 400W
2. STRENGTH OF CONCRETE
   35MPa – INTERIOR COLUMNS & WALLS
3. CONCRETE COVER:
   VERTICALS –– 25mm
4. COMPRESSION LAP SPLICE

BAR SIZE	STANDARD LAP (mm)
10M	300
15M	440
20M	590
25M	730
30M	880
35M	1030

5. TENSION LAP SPLICE (L.S) & DEVELOPMENT LENGTH (Ld) (FOR WALL OR COL & Ld IN CAP OR FTG.)

BAR SIZE	fc=25		fc=30		fc=35	
	L.S	L.d	L.S	L.d	L.S	L.d
10M	490	380	450	350	420	320
15M	740	570	670	520	620	480
20M	980	750	890	690	830	640
25M	1530	1170	1390	1070	1290	990
30M	1830	1410	1670	1290	1550	1190
35M	2130	1640	1950	1500	1800	1390

* ELEVATIONS AND DIMENSIONS SHOWN ARE FOR VERIFICATION PURPOSES ONLY AND ARE NOT TO BE USED FOR CONSTRUCTION
* ALL CONFIRMS/VERIFIES WILL BE ASSUMED CORRECT AND APPROVED AS IS UNLESS COMMENTED ON THE APPROVAL DRWGS

LEGEND

ALT = ALTERNATE
BOT = BOTTOM
BIS = BEND INTO SLAB
CB = CONTINUOUS BAR
CJ = CONTROL JOINT
CTS = CUT TO SUIT SITE COND.
DWL = DOWELS
EE = EACH END
EF = EACH FACE
EJ = EXPANSION JOINT
ES = EACH SIDE
EW = EACH WAY
FF = FAR FACE
FS = FORM SAVER
GIO = GROUT IN DOWELS
H = HORIZONTAL
IF = INSIDE FACE
LL = LOWER LAYER
MID = MIDDLE
MIN = MINIMUM
NF = NEAR FACE
OC = ON CENTER
OF = OUTSIDE FACE
SC = SAW CUT END
STG = STAGGER
STIR = STIRRUPS
T = TOP
THR/1= THREAD 1END
THR/2= THREAD 2ENDS
UL = UPPER LAYER
u/n = UNLESS NOTED
V = VERTICAL
TT = TEMP. TIES

STRAIGHT BARS LABEL FORMAT
7 B15M X 3600
QUANTITY GRADE LENGTH

BENT BARS LABEL FORMAT
7 B15M B1501
QUANTITY GRADE SIZE BAR MARK

GRADES OF STEEL
B = GRADE 400R
E = EPOXY COATED
F = FRP
G = GALVANIZED
S = STAINLESS
W = WELDABLE

ISSUE	REMARKS	DATE	BY
0	FOR APPROVAL	NOV/29/21	JJ

MANSTEEL REBAR
MANSTEEL REBAR
105 Industrial Road, Richmond Hill,
Ontario L4C 2Y4 Canada
Phone: 905-737-9797
Fax: 905-737-9704
Email: info@mansteelrebar.com

PROJECT
FORESTSIDE TOWNHOUSES
–BRAMPTON, ON

PART OF STRUCTURE
ELEVATOR SHEAR WALLS -L2-L3 P#8

CUSTOMER :
ROYAL PINE HOMES

Project no. 2177
SCALE: AS SHOWN
DRAWING No. R10.9 0

DETAILED BY: JJ
CHECKED BY:
BAR LIST No.

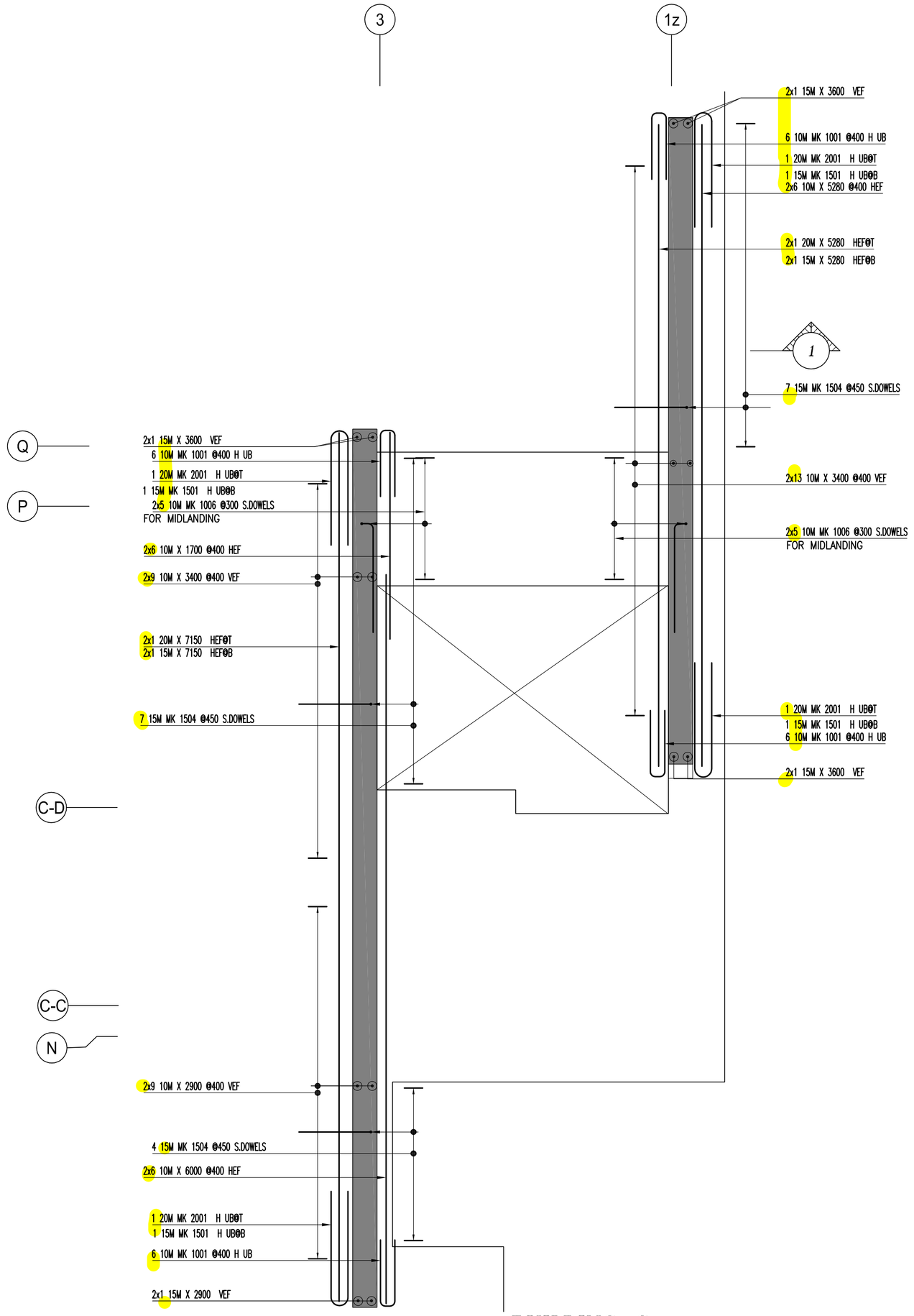

BUILDING-C
STAIR WALL PLAN L2-L3
SCALE: 1:25 (POUR-7)

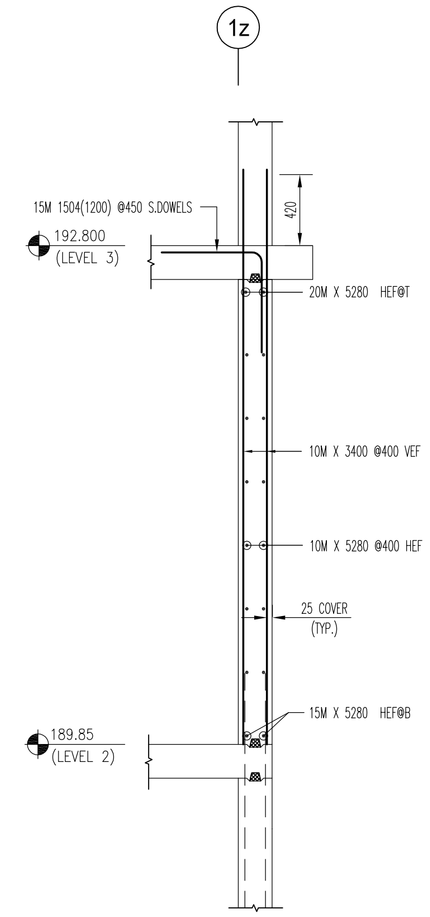

1 SECTION
SCALE: 1:25

Release Number: R10.10 Building-C SW L2-L3 P#7																BAR LIST
Bar Mark	Qty	Size	Total Length	Type	'A'	'B'	'C'	'D'	'E'	'F'	'G'	'H'	'J'	'K'	'O'	'R'
	44	10M	5400			3400										
	12	10M	6000			6000										
	12	10M	5280			5280										
	12	10M	1700			1700										
	18	10M	2900			2900										
1001	24	10M	1230	17		550	130	550								
1006	20	10M	1455	26		900	105	450								
	2	15M	2900			2900										
	6	15M	3600			3600										
	2	15M	7150			7150										
	2	15M	5280			5280										
1504	18	15M	1200	17		600	600									
1501	4	15M	1630	17		750	130	750								
	3	20M	7150			7150										
	3	20M	5280			5280										
2001	4	20M	2060	17		950	160	950								

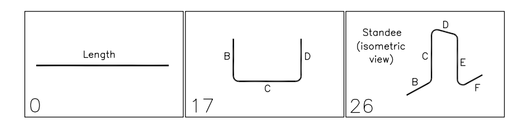

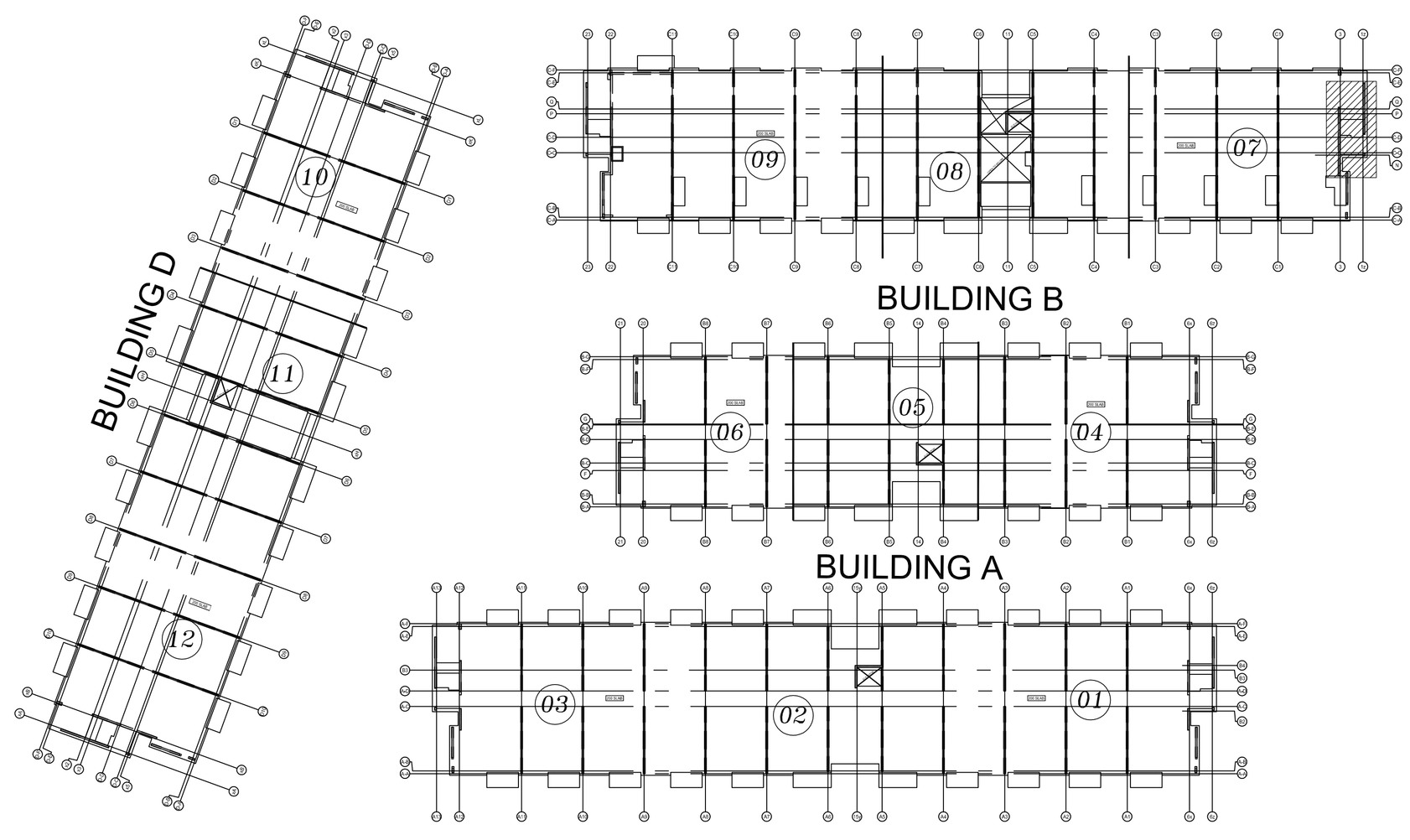

NOTES

1. ALL STEEL TO BE GRADE 400W
2. STRENGTH OF CONCRETE
   35MPa – INTERIOR COLUMNS & WALLS
3. CONCRETE COVER:
   VERTICALS -- 25mm
4. COMPRESSION LAP SPLICE

BAR SIZE	STANDARD LAP (mm)
10M	300
15M	440
20M	590
25M	730
30M	880
35M	1030

5. TENSION LAP SPLICE (L.S) & DEVELOPMENT LENGTH (Ld)
   (FOR WALL OR COL & Ld IN CAP OR FTG.)

BAR SIZE	fc=25		fc=30		fc=35	
	L.S	L.d	L.S	L.d	L.S	L.d
10M	490	380	450	350	420	320
15M	740	570	670	520	620	480
20M	980	750	890	690	830	640
25M	1530	1170	1390	1070	1290	990
30M	1830	1410	1670	1290	1550	1190
35M	2130	1640	1950	1500	1800	1390

DRAWING REVIEW

This review of this drawing does not in any way relieve the contractor of responsibility for its accuracy or for compliance with the contract documents.

✓	No comment	See comment
	Amend & Resubmit	Rejected See Remarks

Submission No.
Project No. 19066
By MB
Date 01 Dec 2021

JABLONSKY, AST AND PARTNERS
Consulting Engineers
1129 Leslie Street Don Mills, Ont. M3C 2K5

- ELEVATIONS AND DIMENSIONS SHOWN ARE FOR VERIFICATION PURPOSES ONLY AND ARE NOT TO BE USED FOR CONSTRUCTION
- ALL CONFIRMS/VERIFIES WILL BE ASSUMED CORRECT AND APPROVED AS IS UNLESS COMMENTED ON THE APPROVAL DRWGS

LEGEND

ALT = ALTERNATE
BOT = BOTTOM
B/S = BEND INTO SLAB
CB = CORNER BAR
C.J = CONTROL JOINT
CTS = CUT TO SUIT SITE COND.
DWL = DOWELS
EE = EACH END
EF = EACH FACE
EJ = EXPANSION JOINT
ES = EACH SIDE
EW = EACH WAY
FF = FAR FACE
FS = FORM SAVER
GD = GROUT IN DOWELS
H = HORIZONTAL
IF = INSIDE FACE
LL = LOWER LAYER
MID = MIDDLE
MIN = MINIMUM
NF = NEAR FACE
OC = ON CENTER
OF = OUTSIDE FACE
SC = SAW CUT END
STG = STAGGER
STIR = STIRRUPS
T = TOP
THR/1= THREAD 1END
THR/2= THREAD 2ENDS
UL = UPPER LAYER
u/n = UNLESS NOTED
V = VERTICAL
TT = TEMP. TIES

STRAIGHT BARS LABEL FORMAT
7 B15M X 3600
QUANTITY SPACE LENGTH

BENT BARS LABEL FORMAT
7 B15M B1501
QUANTITY SPACE SIZE BAR MARK

GRADES OF STEEL
G = GRADE 400R
E = EPOXY COATED
S = SPIRP
G = GALVANIZED
SS = STAINLESS
W = WELDABLE

ISSUE	REMARKS	DATE	BY
0	FOR APPROVAL	NOV/29/21	JJ

MANSTEEL REBAR

MANSTEEL REBAR
105 Industrial Road, Richmond Hill,
Ontario L4C 2Y4 Canada
Phone: 905-737-9797
Fax: 905-737-9704
Email: info@mansteelrebar.com

PROJECT
FORESTSIDE TOWNHOUSES
-BRAMPTON, ON

PART OF STRUCTURE
STAIR SHEAR WALLS -L2-L3 P#7

CUSTOMER :
ROYAL PINE HOMES

Project no. 2177
SCALE: AS SHOWN
DRAWING No. R10.10

DETAILED BY: JJ
CHECKED BY:
BAR LIST No.

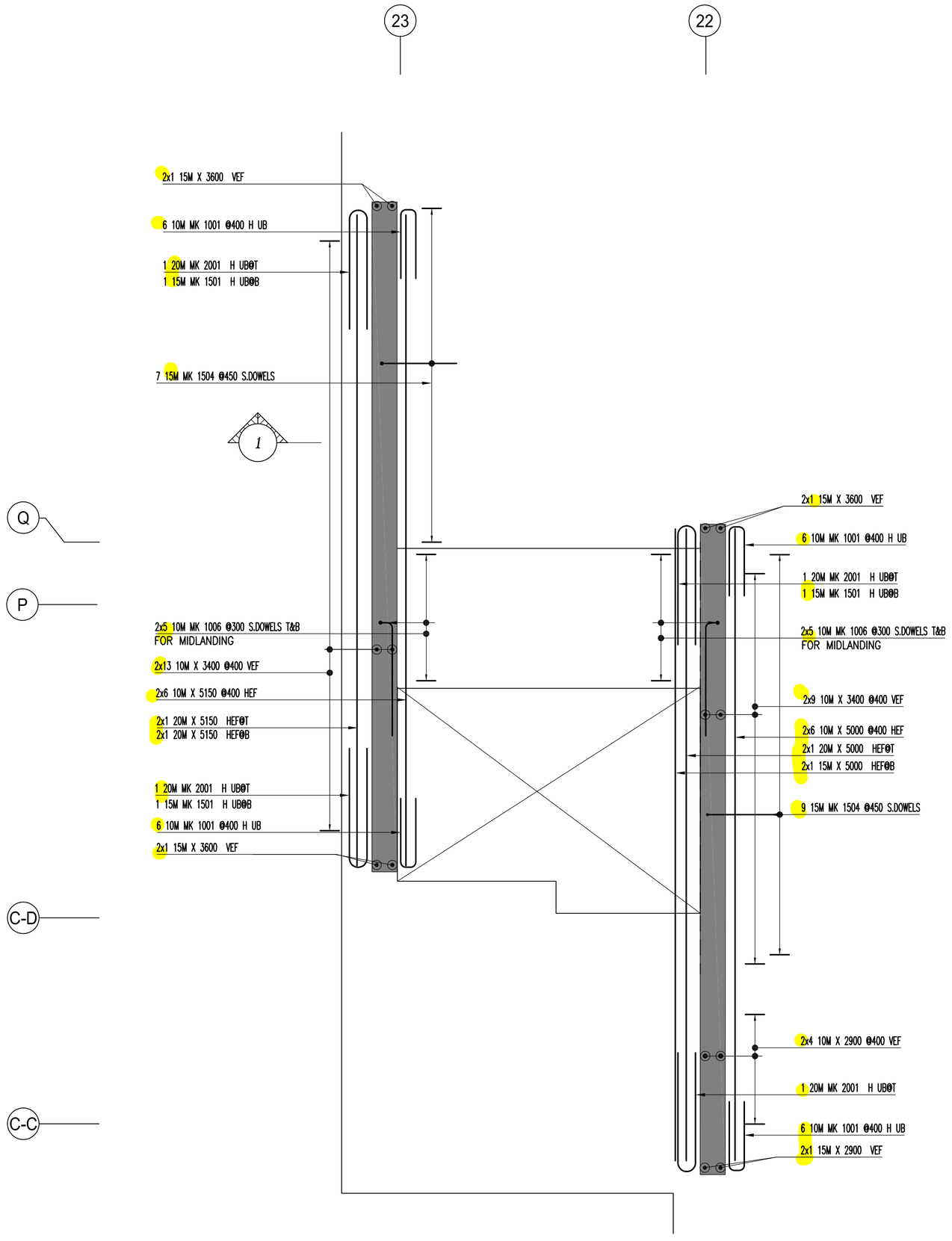

BUILDING-C

STAIR WALL PLAN L2-L3

SCALE: 1:25 (POUR-9)

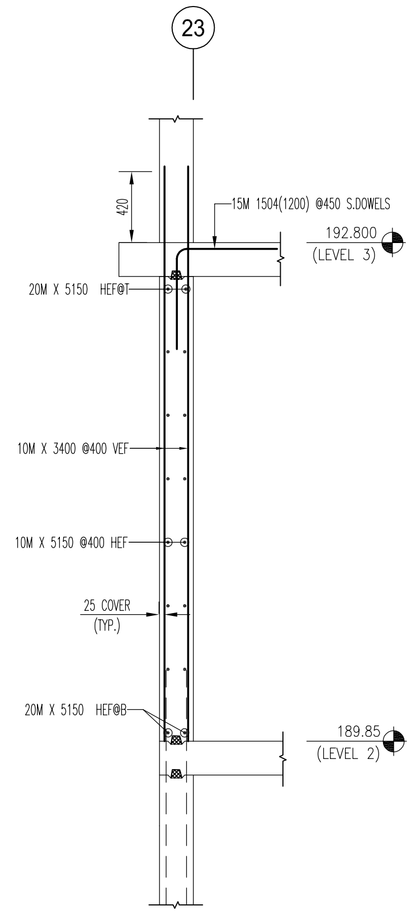

1 SECTION

SCALE: 1:25

Release Number: R10.11 Building-C SW L2-L3 P#9															BAR LIST
Bar Mark	Qty	Size	Total Length	Type	'A'	'B'	'C'	'D'	'E'	'F'	'G'	'H'	'J'	'K'	'O'	'R'
	6	15M	3600			3600										
	2	15M	2900			2900										
	8	10M	2900			2900										
	44	10M	3400			3400										
	2	15M	5000			5000										
	2	20M	5000			5000										
	12	10M	5000			5000										
	12	10M	5150			5150										
	4	20M	5150			5150										
2001	4	20M	2060	17		950	160	950								
1001	24	10M	1230	17		550	130	550								
1501	3	15M	1630	17		750	130	750								
1504	16	15M	1200	17		600	600									
1006	20	10M	1455	26		900	105	450								

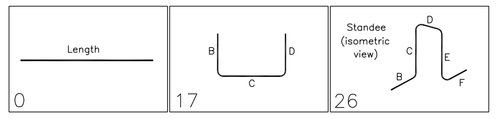

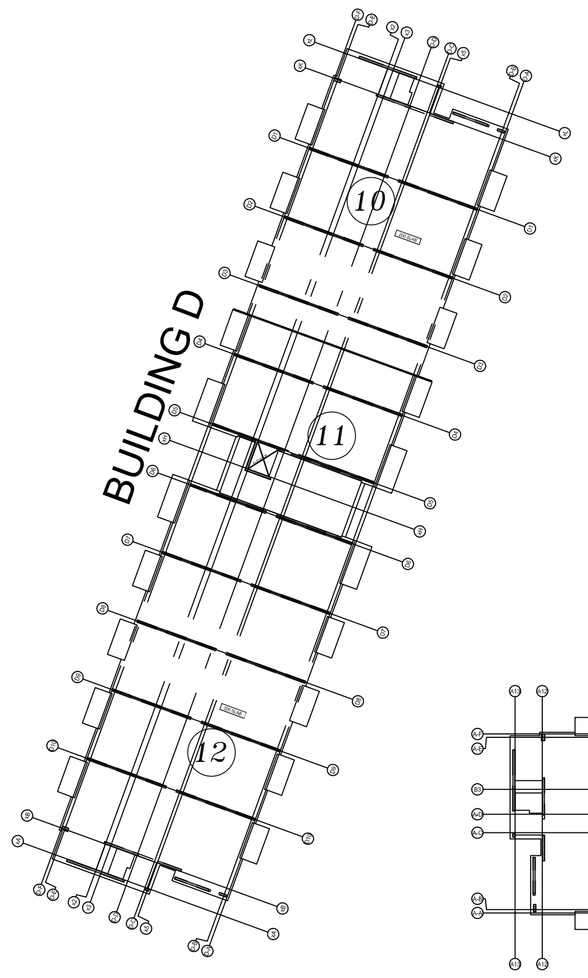

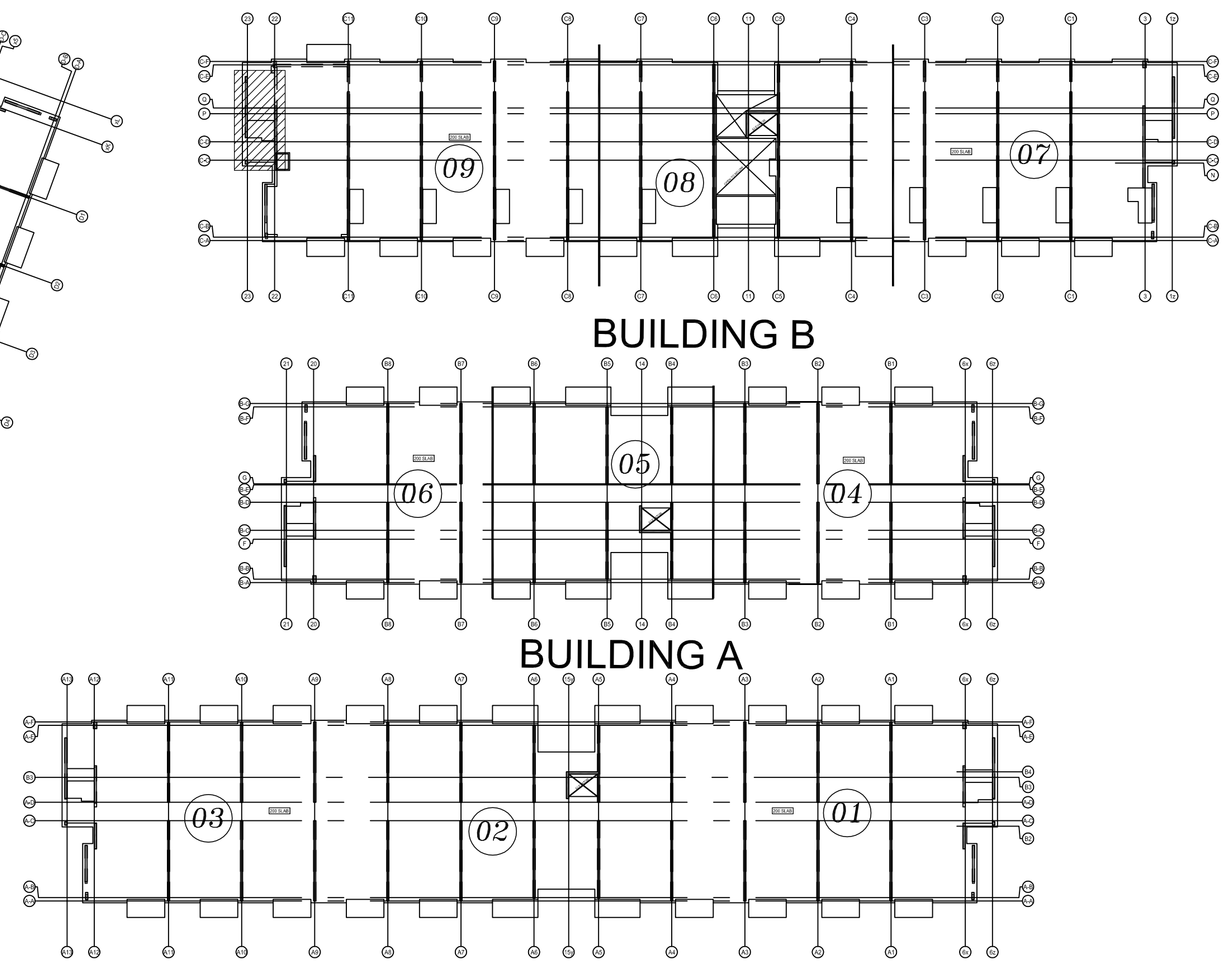

DRAWING REVIEW

This review of this drawing does not in any way relieve the contractor of responsibility for its accuracy or for compliance with the contract documents.

✓	No comment		See comment
	Amend & Resubmit		Rejected See Remarks

Submission No.
Project No. 19066
By MB
Date 01 Dec 2021

JABLONSKY, AST AND PARTNERS
Consulting Engineers
1129 Leslie Street Don Mills, Ont. M3C 2K5

NOTES

1. ALL STEEL TO BE GRADE 400W
2. STRENGTH OF CONCRETE
   35MPa – INTERIOR COLUMNS & WALLS
3. CONCRETE COVER:
   VERTICALS -- 25mm
4. COMPRESSION LAP SPLICE

BAR SIZE	STANDARD LAP (mm)
10M	300
15M	440
20M	590
25M	730
30M	880
35M	1030

5. TENSION LAP SPLICE (L.S) & DEVELOPMENT LENGTH (Ld) (FOR WALL OR COL & Ld IN CAP OR FTG.)

BAR SIZE	fc=25		fc=30		fc=35	
	L.S	L.d	L.S	L.d	L.S	L.d
10M	490	380	450	350	420	320
15M	740	570	670	520	620	480
20M	980	750	890	690	830	640
25M	1530	1170	1390	1070	1290	990
30M	1830	1410	1670	1290	1550	1190
35M	2130	1640	1950	1500	1800	1390

* ELEVATIONS AND DIMENSIONS SHOWN ARE FOR VERIFICATION PURPOSES ONLY AND ARE NOT TO BE USED FOR CONSTRUCTION
* ALL CONFIRMS/VERIFIES WILL BE ASSUMED CORRECT AND APPROVED AS IS UNLESS COMMENTED ON THE APPROVAL DRWGS

LEGEND

ALT = ALTERNATE
BOT = BOTTOM
BIS = BEND INTO SLAB
CB = CORNER BAR
CJ = CONTROL JOINT
CTS = CUT TO SUIT SITE COND.
DWL = DOWELS
EE = EACH END
EF = EACH FACE
EJ = EXPANSION JOINT
ES = EACH SIDE
EW = EACH WAY
FF = FAR FACE
FS = FORM SAVER
GID = GROUT IN DOWELS
H = HORIZONTAL
IF = INSIDE FACE
LL = LOWER LAYER
MID = MIDDLE
MIN = MINIMUM
NF = NEAR FACE
OC = ON CENTER
OF = OUTSIDE FACE
SC = SAW CUT END
STG = STAGGER
STIR = STIRRUPS
T = TOP
THR/1= THREAD 1END
THR/2= THREAD 2ENDS
UL = UPPER LAYER
U/N = UNLESS NOTED
V = VERTICAL
TT = TEMP. TIES

STRAIGHT BARS LABEL FORMAT: 7 B15M X 3600 (QUANTITY, GRADE, LENGTH)

BENT BARS LABEL FORMAT: 7 B15M B1501 (QUANTITY, GRADE, SIZE, BAR MARK)

GRADES OF STEEL
B = GRADE 400R
E = EPOXY COATED
G = GRADE
Z = GALVANIZED
S = STAINLESS
W = WELDABLE

ISSUE	REMARKS	DATE	BY
0	FOR APPROVAL	NOV/29/21	JU

MANSTEEL REBAR

MANSTEEL REBAR
105 Industrial Road, Richmond Hill,
Ontario L4C 2Y4 Canada
Phone: 905-737-9797
Fax: 905-737-9704
Email: info@mansteelrebar.com

PROJECT
FORESTSIDE TOWNHOUSES
-BRAMPTON, ON

PART OF STRUCTURE
STAIR SHEAR WALLS -L2-L3 P#9

CUSTOMER :
ROYAL PINE HOMES

Project no. 2177
SCALE: AS SHOWN
DRAWING No. R10.11 0

DETAILED BY: JU
CHECKED BY:
BAR LIST No.

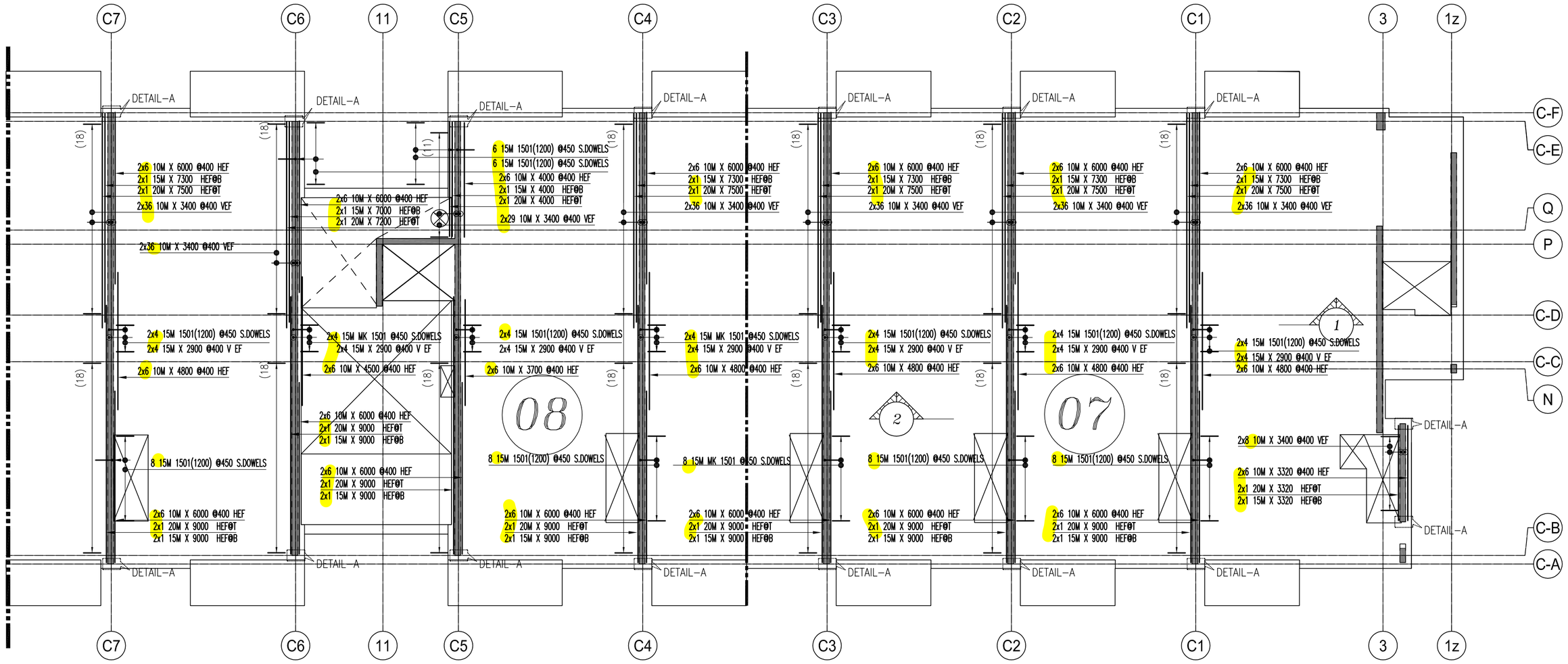

BUILDING-C WALL PLAN

SCALE: 1:100
(POUR-7&8)

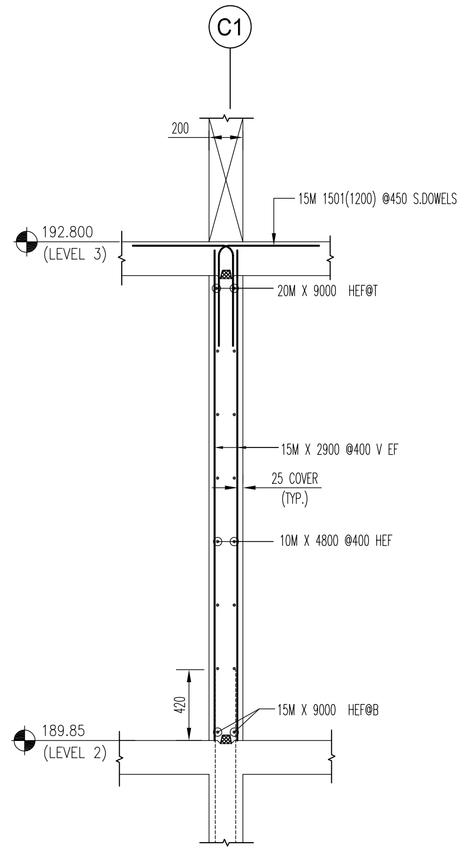

1 SECTION

SCALE: 1:25

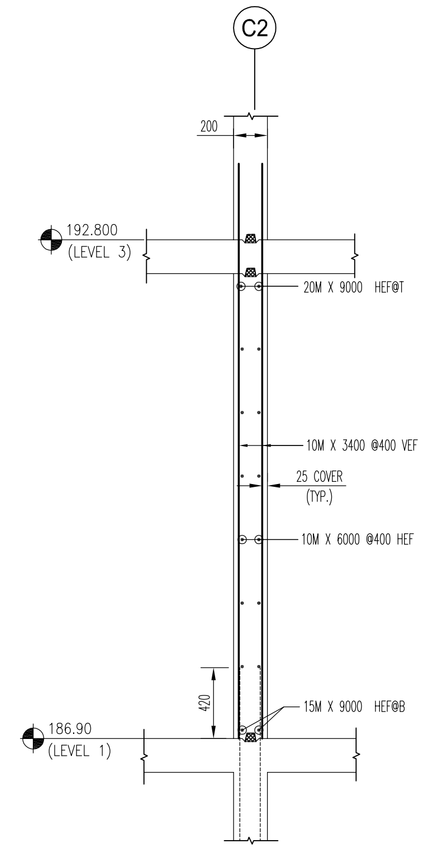

2 SECTION

SCALE: 1:25

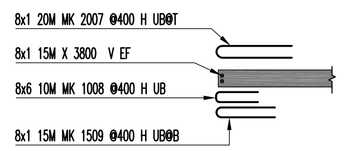

DETAIL-A

SCALE: 1:50
(POUR-7)
(8 NO'S REQUIRED)

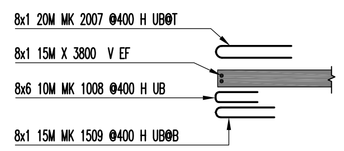

DETAIL-A

SCALE: 1:50
(POUR-8)
(8 NO'S REQUIRED)

Release Number: R10.12 Building-C SW L2-L3 P#7 — BAR LIST

Bar Mark	Qty	Size	Total Length	Type	'A'	'B'	'C'	'D'	'E'	'F'	'G'	'H'	'J'	'K'	'O'	'R'
	12	10M	3320	0		3320										
	232	10M	3400			3400										
	72	10M	6000			6000										
	36	10M	4800			4800										
1008	48	10M	1130	17		500	130	500								
	2	15M	3320	0		3320										
	6	15M	9000			9000										
	16	15M	3800			3800										
	6	15M	7300			7300										
	24	15M	2900			2900										
1509	8	15M	1530	17		700	130	700								
1501	48	15M	1200	17		600	600									
	2	20M	3320	0		3320										
	6	20M	9000			9000										
	6	20M	7500			7500										
2007	8	20M	1960	17		900	160	900								

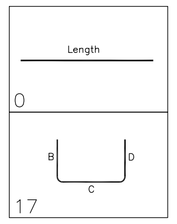

Release Number: R10.12 Building-C SW L2-L3 P#8 — BAR LIST

Bar Mark	Qty	Size	Total Length	Type	'A'	'B'	'C'	'D'	'E'	'F'	'G'	'H'	'J'	'K'	'O'	'R'
	12	10M	4000			4000										
	12	10M	4500			4500										
	12	10M	3700			3700										
	84	10M	6000			6000										
	274	10M	3400			3400										
	24	10M	4800			4800										
1008	48	10M	1130	17		500	130	500								
	2	15M	4000			4000										
	2	15M	7000			7000										
	8	15M	9000			9000										
	32	15M	2900			2900										
	4	15M	7300			7300										
	16	15M	3800			3800										
1509	8	15M	1530	17		700	130	700								
1501	60	15M	1200	17		600	600									
	2	20M	4000			4000										
	2	20M	7200			7200										
	8	20M	9000			9000										
	4	20M	7500			7500										
2007	8	20M	1960	17		900	160	900								

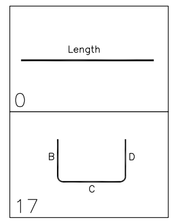

DRAWING REVIEW

This review of this drawing does not in any way relieve the contractor of responsibility for its accuracy or for compliance with the contract documents.

✓	No comment		See comment
	Amend & Resubmit		Rejected See Remarks

Submission No.
Project No. 19066
By MB
Date 01 Dec 2021

JABLONSKY, AST AND PARTNERS
Consulting Engineers
1129 Leslie Street Don Mills, Ont. M3C 2K5

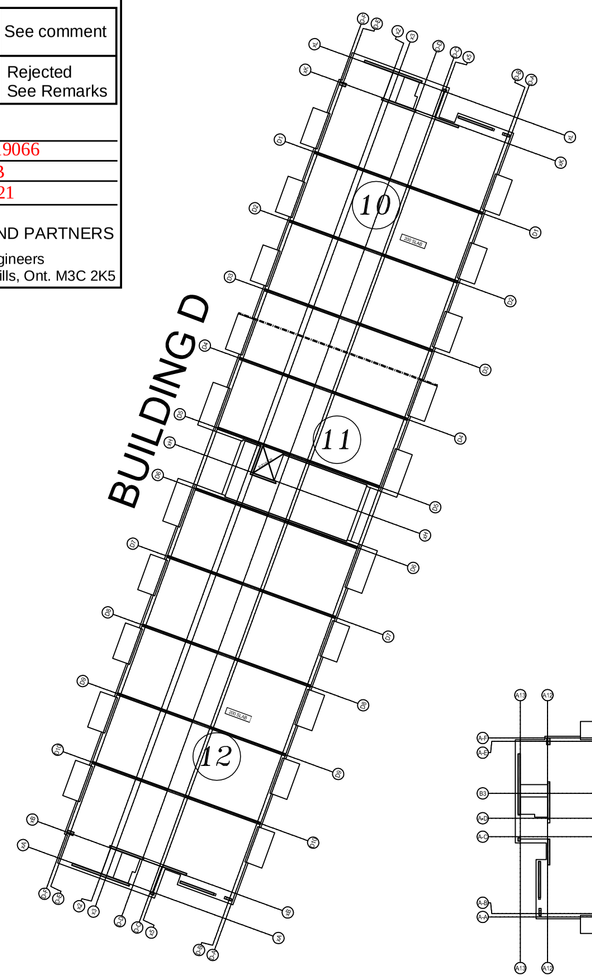

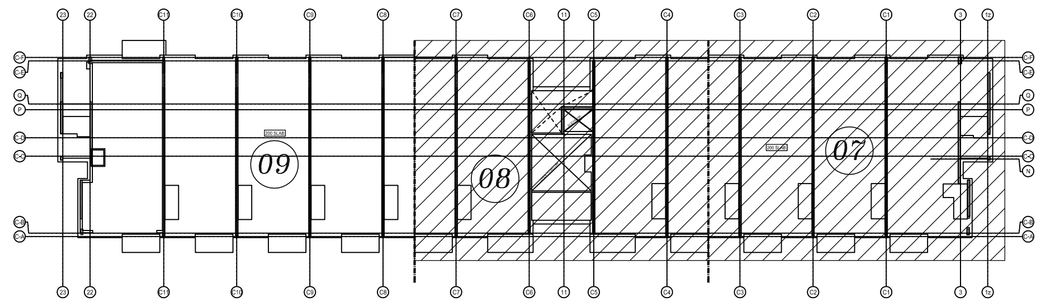

BUILDING B

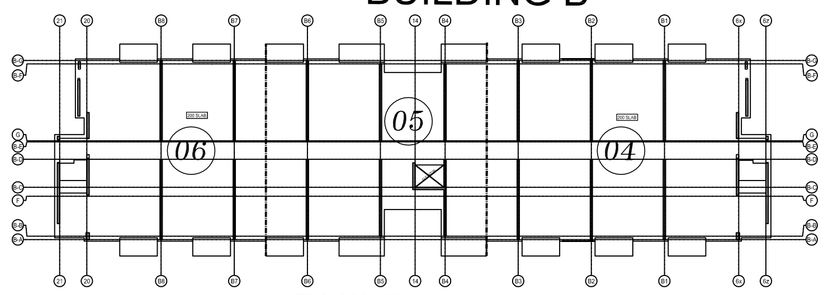

BUILDING A

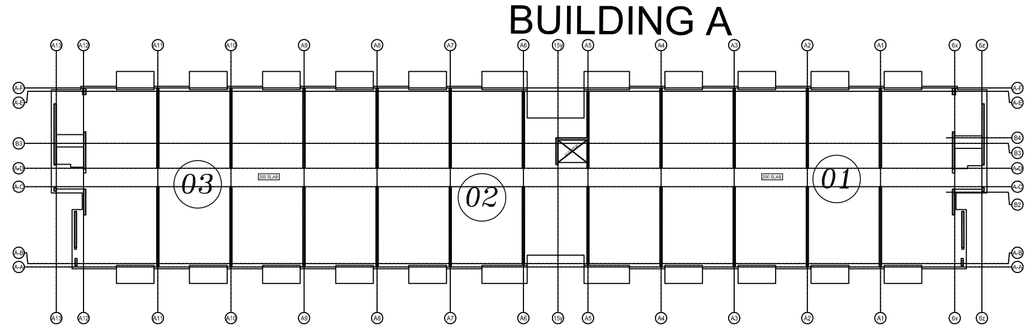

- ELEVATIONS AND DIMENSIONS SHOWN ARE FOR VERIFICATION PURPOSES ONLY AND ARE NOT TO BE USED FOR CONSTRUCTION
- ALL CONFIRMS/VERIFIES WILL BE ASSUMED CORRECT AND APPROVED AS IS UNLESS COMMENTED ON THE APPROVAL DRWGS

LEGEND

ALT	= ALTERNATE	FF	= FAR FACE	OF	= OUTSIDE FACE
BOT	= BOTTOM	FS	= FORM SAVER	SC	= SAW CUT END
BIS	= BEND INTO SLAB	GID	= GROUT IN DOWELS	STG	= STAGGER
CB	= CORNER BAR	H	= HORIZONTAL	STIR	= STIRRUPS
CJ	= CONTROL JOINT	IF	= INSIDE FACE	T	= TOP
CTS	= CUT TO SUIT SITE COND.	LL	= LOWER LAYER	THR/1	= THREAD 1END
DWL	= DOWELS	MID	= MIDDLE	THR/2	= THREAD 2ENDS
EE	= EACH END	MIN	= MINIMUM	UL	= UPPER LAYER
EF	= EACH FACE	NF	= NEAR FACE	u/n	= UNLESS NOTED
EJ	= EXPANSION JOINT	OC	= ON CENTER	V	= VERTICAL
ES	= EACH SIDE			TT	= TEMP. TIES
EW	= EACH WAY				

STRAIGHT BARS LABEL FORMAT: 7 B15M X 3600 (QUANTITY, GRADE, SIZE, LENGTH)

BENT BARS LABEL FORMAT: 7 B15M B1501 (QUANTITY, GRADE, SIZE, BAR MARK)

GRADES OF STEEL

B =	GRADE 400R
E =	EPOXY COATED
G =	GRADE 400
Z =	GALVANIZED
S =	STAINLESS
W =	WELDABLE

ISSUE	REMARKS	DATE	BY
0	FOR APPROVAL	NOV/29/21	JJ

MANSTEEL REBAR

MANSTEEL REBAR
105 Industrial Road, Richmond Hill,
Ontario L4C 2T4 Canada
Phone: 905-737-9797
Fax: 905-737-9704
Email: info@mansteelrebar.com

PROJECT
FORESTSIDE TOWNHOUSES
-BRAMPTON, ON

PART OF STRUCTURE
SHEAR WALLS -L2-L3 P#7&8

CUSTOMER :
ROYAL PINE HOMES

Project no. 2177
SCALE: AS SHOWN
DRAWING No. R10.12 0

DETAILED BY: JJ
CHECKED BY:
BAR LIST No.

NOTES

1. ALL STEEL TO BE GRADE 400W
2. STRENGTH OF CONCRETE
   35MPa – INTERIOR COLUMNS & WALLS
3. CONCRETE COVER:
   VERTICALS -- 25mm
4. COMPRESSION LAP SPLICE

BAR SIZE	STANDARD LAP (mm)
10M	300
15M	440
20M	590
25M	730
30M	880
35M	1030

5. TENSION LAP SPLICE (L.S) & DEVELOPMENT LENGTH (Ld) (FOR WALL OR COL & Ld IN CAP OR FTG.)

BAR SIZE	fc=25		fc=30		fc=35	
	L.S	L.d	L.S	L.d	L.S	L.d
10M	490	380	450	350	420	320
15M	740	570	670	520	620	480
20M	980	750	890	690	830	640
25M	1530	1170	1390	1070	1290	990
30M	1830	1410	1670	1290	1550	1190
35M	2130	1640	1950	1500	1800	1390

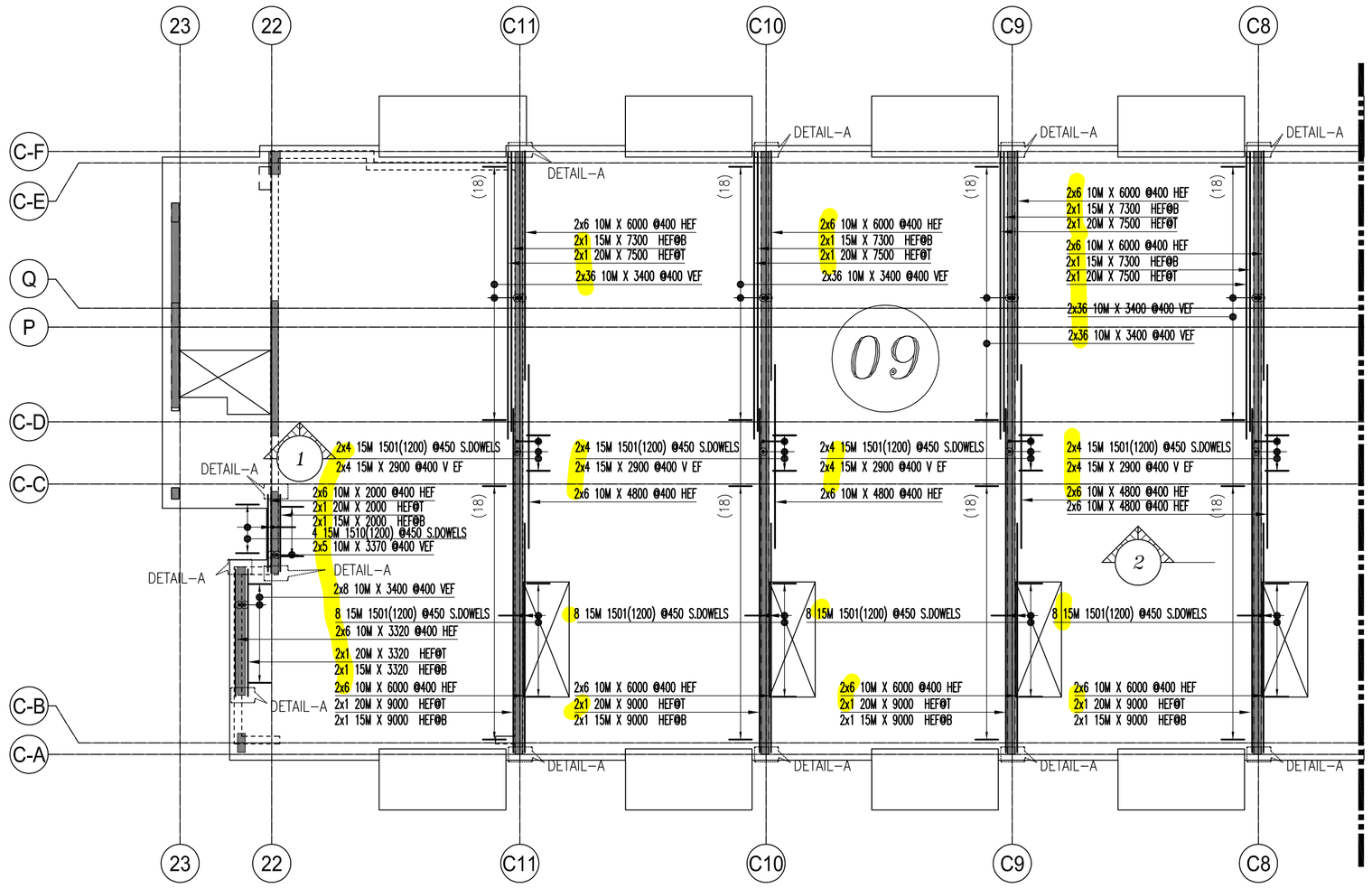

1 BUILDING-C WALL PLAN
SCALE: 1:100
(POUR-9)

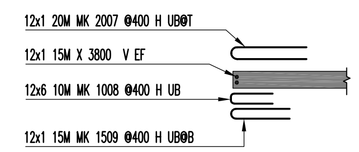

1 DETAIL-A
SCALE: 1:50
(POUR-9)
(12 NO'S REQUIRED)

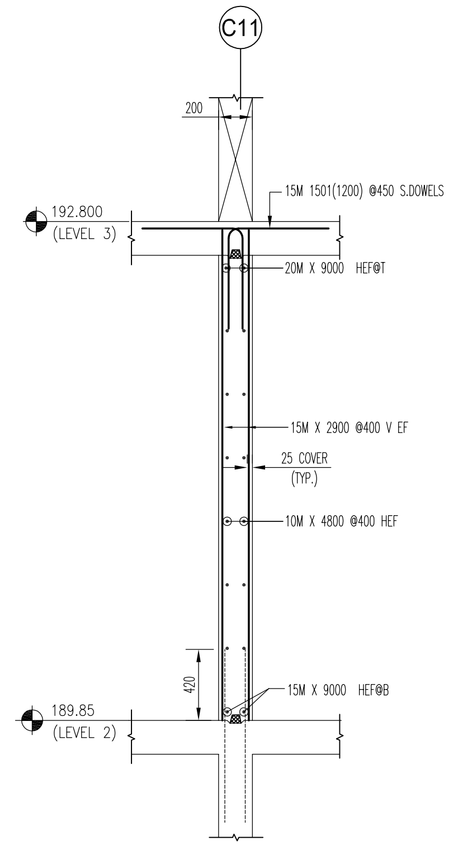

1 SECTION
SCALE: 1:25

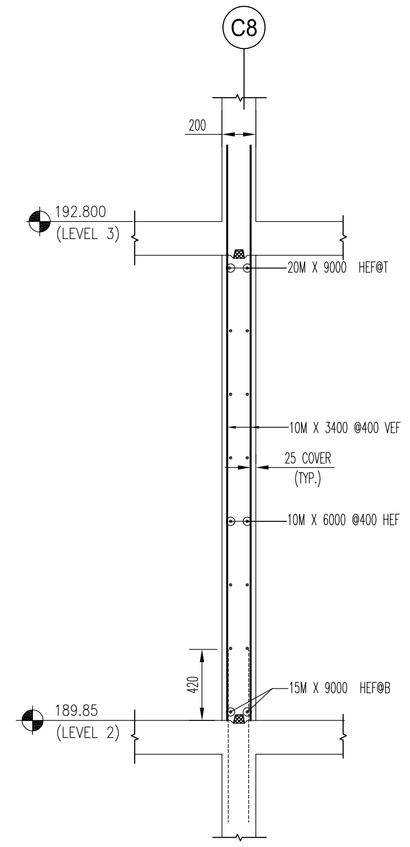

2 SECTION
SCALE: 1:25

Release Number: R10.13 Building-C SW L2-L3 P#9

BAR LIST

Bar Mark	Qty	Size	Total Length	Type	'A'	'B'	'C'	'D'	'E'	'F'	'G'	'H'	'J'	'K'	'O'	'R'
	12	10M	6000			6000										
	304	10M	3400			3400										
	72	10M	6000			6000										
	48	10M	4800			4800										
	12	10M	3320	0		3320										
	10	10M	3370	0		3370										
	12	10M	2000	0		2000										
	12	10M	6000			6000										
1008	72	10M	1130	17		500	130	500								
	2	15M	9000			9000										
	24	15M	3800			3800										
	8	15M	7300			7300										
	4	15M	9000			9000										
	2	15M	3320	0		3320										
	2	15M	2000	0		2000										
	32	15M	2900			2900										
	2	15M	9000			9000										
1509	12	15M	1530	17		700	130	700								
1501	64	15M	1200	17		600	600									
1510	4	15M	1200	17		600	600									
	2	20M	9000			9000										
	8	20M	7500			7500										
	4	20M	9000			9000										
	2	20M	3320	0		3320										
	2	20M	2000	0		2000										
	2	20M	9000			9000										
2007	12	20M	1960	17		900	160	900								

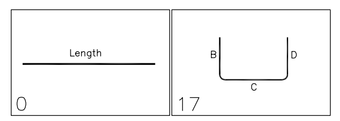

DRAWING REVIEW

This review of this drawing does not in any way relieve the contractor of responsibility for its accuracy or for compliance with the contract documents.

✓	No comment	See comment
	Amend & Resubmit	Rejected See Remarks

Submission No.
Project No. 19066
By MB
Date 01 Dec 2021

JABLONSKY, AST AND PARTNERS
Consulting Engineers
1129 Leslie Street Don Mills, Ont. M3C 2K5

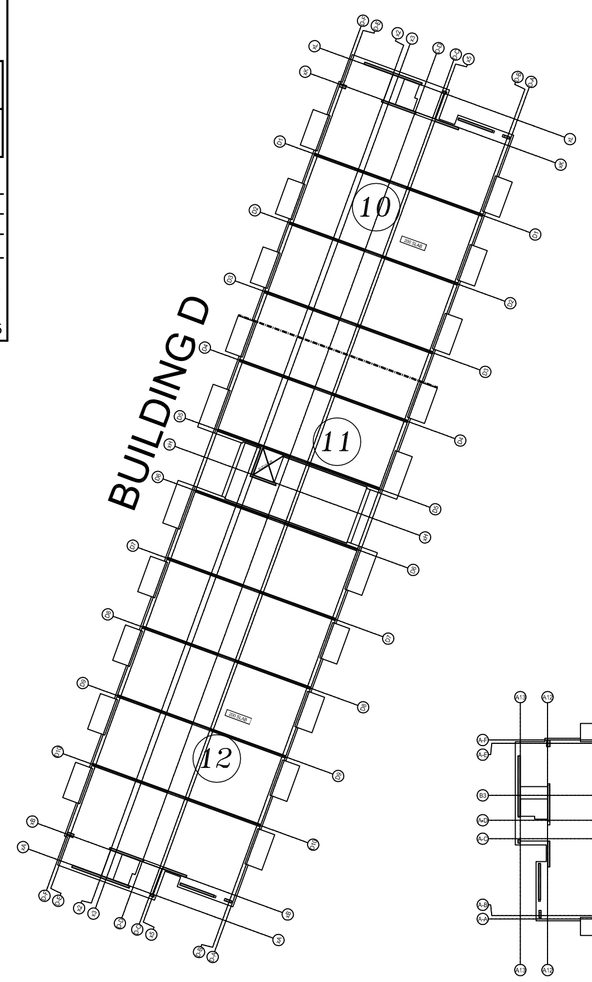

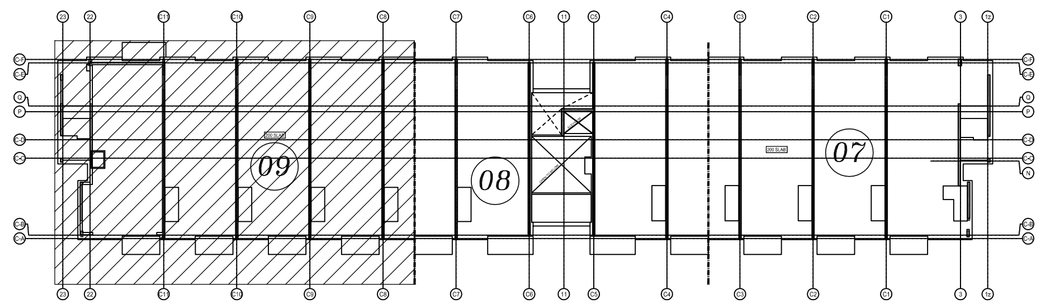

BUILDING B

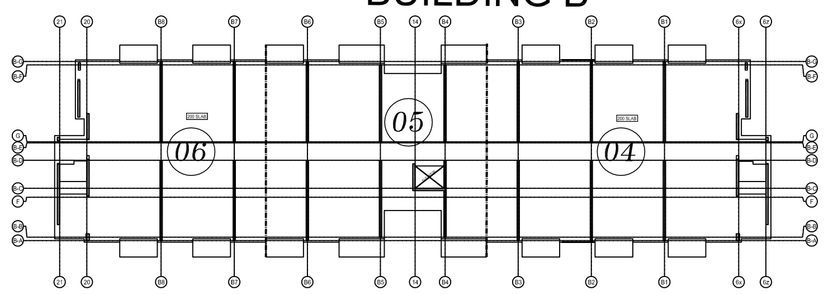

BUILDING A

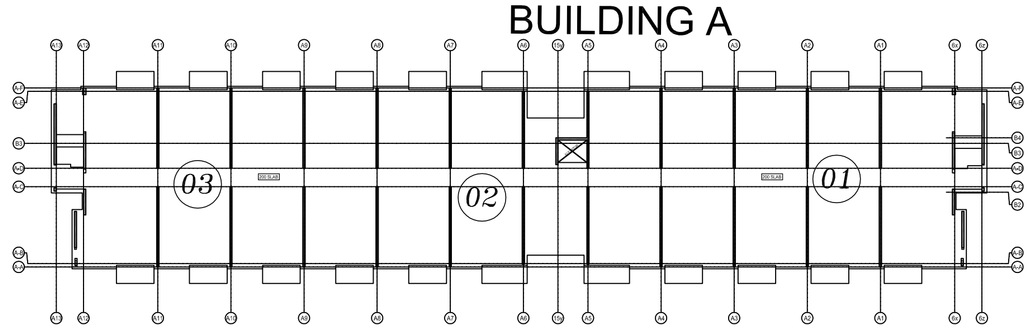

NOTES

1. ALL STEEL TO BE GRADE 400W
2. STRENGTH OF CONCRETE
   35MPa – INTERIOR COLUMNS & WALLS
3. CONCRETE COVER:
   VERTICALS -- 25mm
4. COMPRESSION LAP SPLICE

BAR SIZE	STANDARD LAP (mm)
10M	300
15M	440
20M	590
25M	730
30M	880
35M	1030

5. TENSION LAP SPLICE (L.S) & DEVELOPMENT LENGTH (Ld)
   (FOR WALL OR COL & Ld IN CAP OR FTG.)

BAR SIZE	fc=25		fc=30		fc=35	
	L.S	L.d	L.S	L.d	L.S	L.d
10M	490	380	450	350	420	320
15M	740	570	670	520	620	480
20M	980	750	890	690	830	640
25M	1530	1170	1390	1070	1290	990
30M	1830	1410	1670	1290	1550	1190
35M	2130	1640	1950	1500	1800	1390

- ELEVATIONS AND DIMENSIONS SHOWN ARE FOR VERIFICATION PURPOSES ONLY AND ARE NOT TO BE USED FOR CONSTRUCTION
- ALL CONFIRMS/VERIFIES WILL BE ASSUMED CORRECT AND APPROVED AS IS UNLESS COMMENTED ON THE APPROVAL DRWGS

LEGEND

ALT	= ALTERNATE	FF	= FAR FACE	OF	= OUTSIDE FACE
BOT	= BOTTOM	FS	= FORM SAVER	SC	= SAW CUT END
BIS	= BEND INTO SLAB	GID	= GROUT IN DOWELS	STG	= STAGGER
CB	= CORNER BAR	H	= HORIZONTAL	STIR	= STIRRUPS
CJ	= CONTROL JOINT	IF	= INSIDE FACE	T	= TOP
CTS	= CUT TO SUIT SITE COND.	LL	= LOWER LAYER	THR/1=	THREAD 1END
DWL	= DOWELS	MID	= MIDDLE	THR/2=	THREAD 2ENDS
EE	= EACH END	MIN	= MINIMUM	UL	= UPPER LAYER
EF	= EACH FACE	NF	= NEAR FACE	u/n	= UNLESS NOTED
EJ	= EXPANSION JOINT	OC	= ON CENTER	V	= VERTICAL
ES	= EACH SIDE			TT	= TEMP. TIES
EW	= EACH WAY				

STRAIGHT BARS LABEL FORMAT: 7 B15M X 3600 (QUANTITY, GRADE, LENGTH)

BENT BARS LABEL FORMAT: 7 B15M B1501 (QUANTITY, GRADE, SIZE, BAR MARK)

GRADES OF STEEL

R =	GRADE 400R
E =	EPOXY COATED
G =	GALVANIZED
S =	STAINLESS
W =	WELDABLE

ISSUE	REMARKS	DATE	BY
0	FOR APPROVAL	NOV/29/21	JJ

MANSTEEL REBAR

MANSTEEL REBAR
105 Industrial Road, Richmond Hill,
Ontario L4C 2T4 Canada
Phone: 905-737-9797
Fax: 905-737-9704
Email: info@mansteelrebar.com

PROJECT
FORESTSIDE TOWNHOUSES
-BRAMPTON, ON

PART OF STRUCTURE
SHEAR WALLS -L2-L3 P#9

CUSTOMER :
ROYAL PINE HOMES

Project no. 2177
SCALE: AS SHOWN
DRAWING No. R10.13

DETAILED BY: JJ
CHECKED BY:
BAR LIST No.

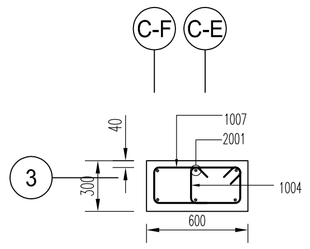

SECTION 1
SCALE: 1:25

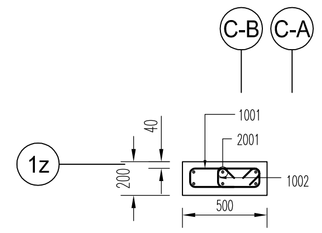

SECTION 2
SCALE: 1:25

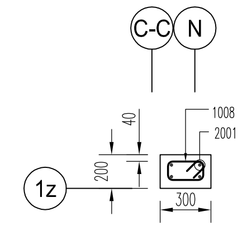

SECTION 3
SCALE: 1:25

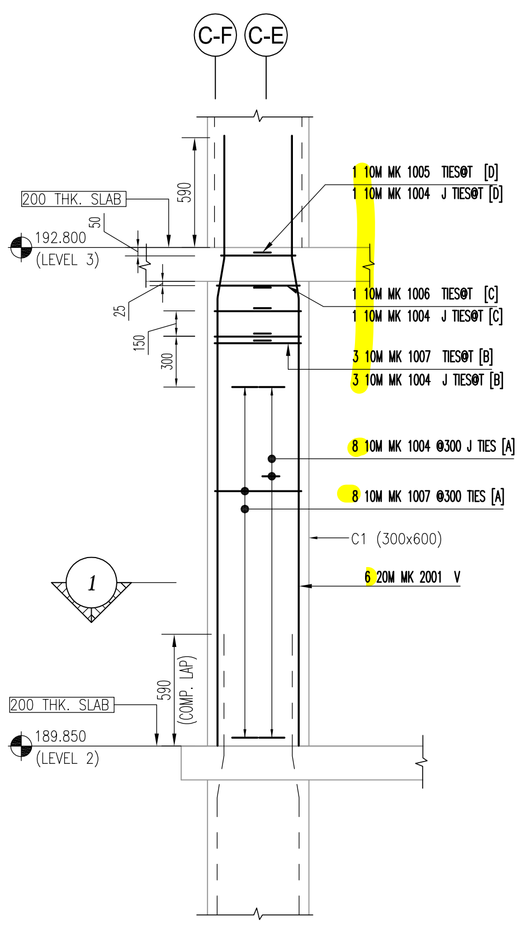

COL (C1)
SCALE: 1:25

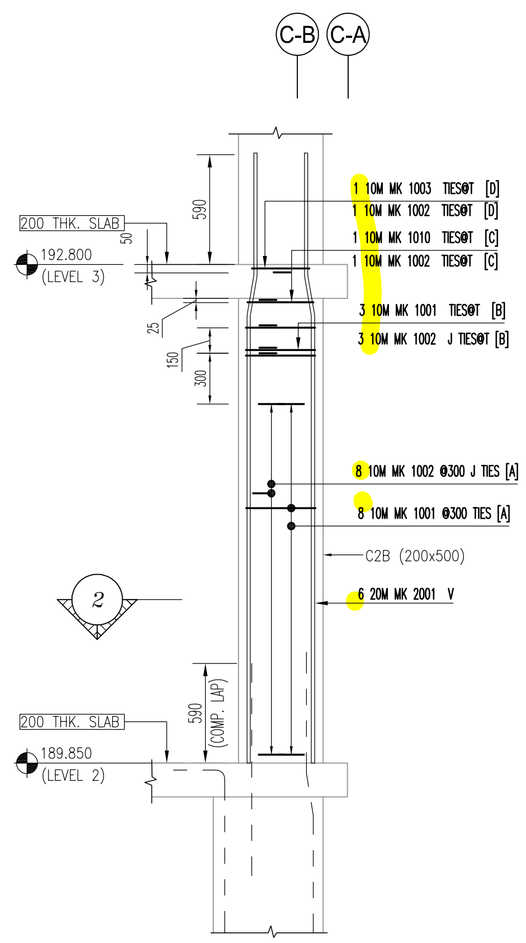

COL (C2B)
SCALE: 1:25

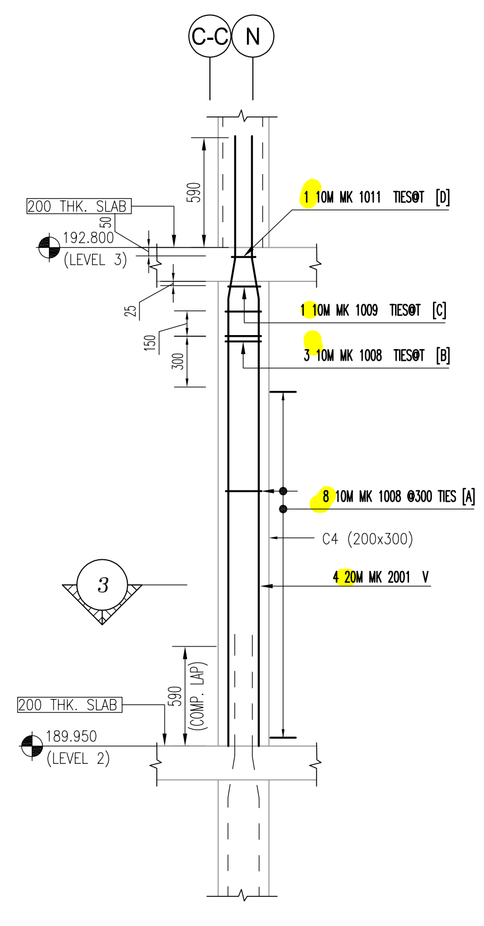

COL (C4)
SCALE: 1:25

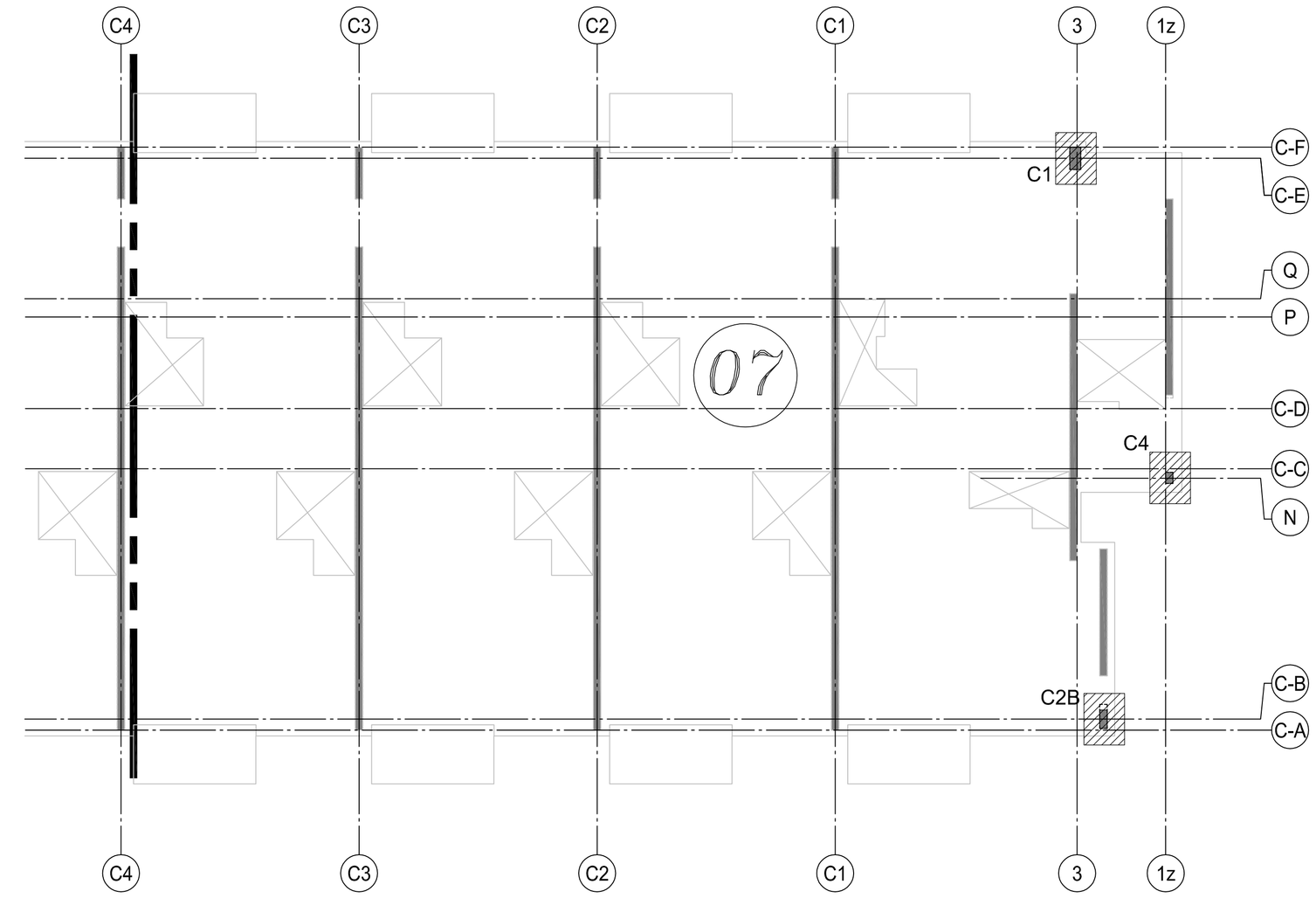

BUILDING-C L2 PLAN
SCALE: 1:100
POUR-7

Release Number: R11.4 Building-C COL L2-L3 P#7 — BAR LIST

Bar Mark	Qty	Size	Total Length	Type	'A'	'B'	'C'	'D'	'E'	'F'	'G'	'H'	'J'	'K'	'O'	'R'
1002	13	10M	320	T9	100	120					100					
1004	13	10M	420	T9	100	220					100					
1011	1	10M	740	T1	100	150	120	150	120		100					
1009	1	10M	840	T1	100	200	120	200	120		100					
1008	11	10M	880	T1	100	220	120	220	120		100					
1003	1	10M	1140	T1	100	350	120	350	120		100					
1010	1	10M	1240	T1	100	400	120	400	120		100					
1001	11	10M	1280	T1	100	420	120	420	120		100					
1005	1	10M	1540	T1	100	450	220	450	220		100					
1006	1	10M	1640	T1	100	500	220	500	220		100					
1007	11	10M	1680	T1	100	520	220	520	220		100					
2001	16	20M	3620	3		725	245	2650				60		235	3610	

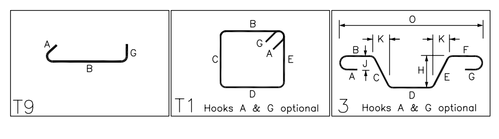

NOTES

1. ALL STEEL TO BE GRADE 400W
2. STRENGTH OF CONCRETE
   35MPa – INTERIOR COLUMNS & WALLS
3. CONCRETE COVER:
   TIES -- 40mm
4. COMPRESSION LAP SPLICE

BAR SIZE	STANDARD LAP (mm)
10M	300
15M	440
20M	590
25M	730
30M	880
35M	1030

5. TENSION LAP SPLICE (L.S) & DEVELOPMENT LENGTH (Ld) (FOR WALL OR COL & Ld IN CAP OR FTG.)

BAR SIZE	fc=25		fc=30		fc=35	
	L.S	L.d	L.S	L.d	L.S	L.d
10M	490	380	450	350	420	320
15M	740	570	670	520	620	480
20M	980	750	890	690	830	640
25M	1530	1170	1390	1070	1290	990
30M	1830	1410	1670	1290	1550	1190
35M	2130	1640	1950	1500	1800	1390

* ELEVATIONS AND DIMENSIONS SHOWN ARE FOR VERIFICATION PURPOSES ONLY AND ARE NOT TO BE USED FOR CONSTRUCTION .
* ALL CONFIRMS/VERIFIES WILL BE ASSUMED CORRECT AND APPROVED AS IS UNLESS COMMENTED ON THE APPROVAL DRWGS

LEGEND

ALT = ALTERNATE
BOT = BOTTOM
BS = BEND INTO SLAB
CB = CORNER BAR
CJ = CONTROL JOINT
CTS = CUT TO SUIT SITE COND.
DWL = DOWELS
EE = EACH END
EF = EACH FACE
EJ = EXPANSION JOINT
ES = EACH SIDE
EW = EACH WAY
FF = FAR FACE
FS = FORM SAVER
GID = GROUT IN DOWELS
H = HORIZONTAL
IF = INSIDE FACE
LL = LOWER LAYER
MID = MIDDLE
MIN = MINIMUM
NF = NEAR FACE
OC = ON CENTER
OF = OUTSIDE FACE
SC = SAW CUT END
STG = STAGGER
STIR = STIRRUPS
T = TOP
THR/1= THREAD 1END
THR/2= THREAD 2ENDS
UL = UPPER LAYER
U/n = UNLESS NOTED
V = VERTICAL
TT = TEMP. TIES

STRAIGHT BARS LABEL FORMAT: 7 B15M X 3600 (QUANTITY, GRADE, LENGTH)

BENT BARS LABEL FORMAT: 7 B15M R1501 (QUANTITY, GRADE, SIZE, BAR MARK)

GRADES OF STEEL
R = GRADE 400R
E = EPOXY COATED
C = CRS
G = GALVANIZED
S = STAINLESS
W= WELDABLE

DRAWING REVIEW

This review of this drawing does not in any way relieve the contractor of responsibility for its accuracy or for compliance with the contract documents.

✓	No comment	See comment
	Amend & Resubmit	Rejected See Remarks

Submission No.
Project No. 19066
By MB
Date 01 Dec 2021

JABLONSKY, AST AND PARTNERS
Consulting Engineers
1129 Leslie Street Don Mills, Ont. M3C 2K5

ISSUE	REMARKS	DATE	BY
0	FOR APPROVAL	NOV/29/21	JJ

MANSTEEL REBAR
105 Industrial Road, Richmond Hill,
Ontario L4C 2Y4 Canada
Phone: 905-737-9797
Fax: 905-737-9704
Email: info@mansteelrebar.com

PROJECT
FORESTSIDE TOWNHOUSES
-BRAMPTON, ON

PART OF STRUCTURE
COLUMNS L2-L3- P#7

CUSTOMER :
ROYAL PINE HOMES

Project no. 2177
SCALE: AS SHOWN

DETAILED BY: JJ
CHECKED BY:
BAR LIST No.
DRAWING No. R11.4 0

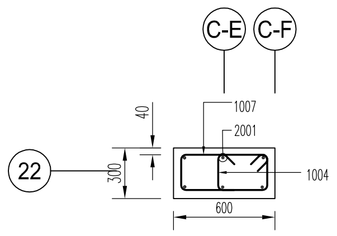

SECTION 1
SCALE: 1:25

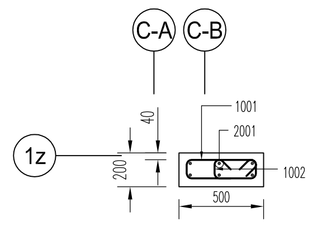

SECTION 2
SCALE: 1:25

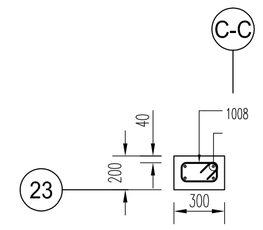

SECTION 3
SCALE: 1:25

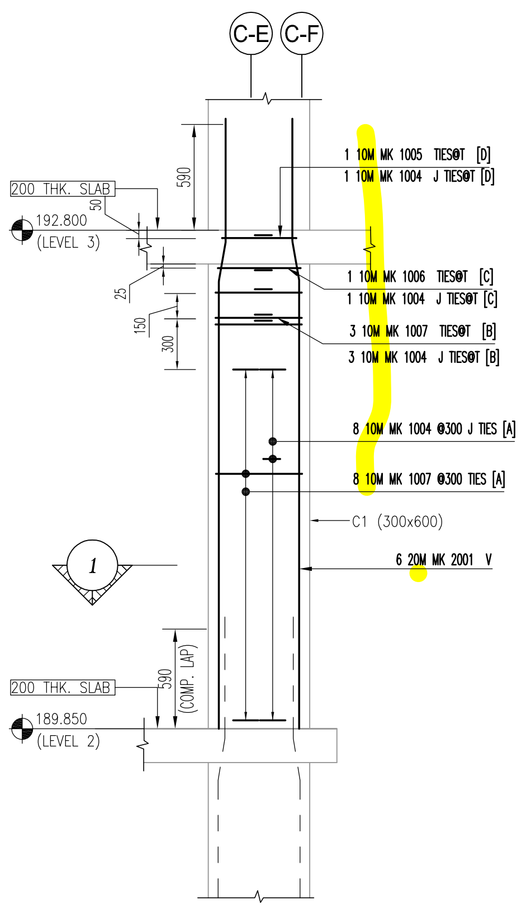

COL (C1)
SCALE: 1:25

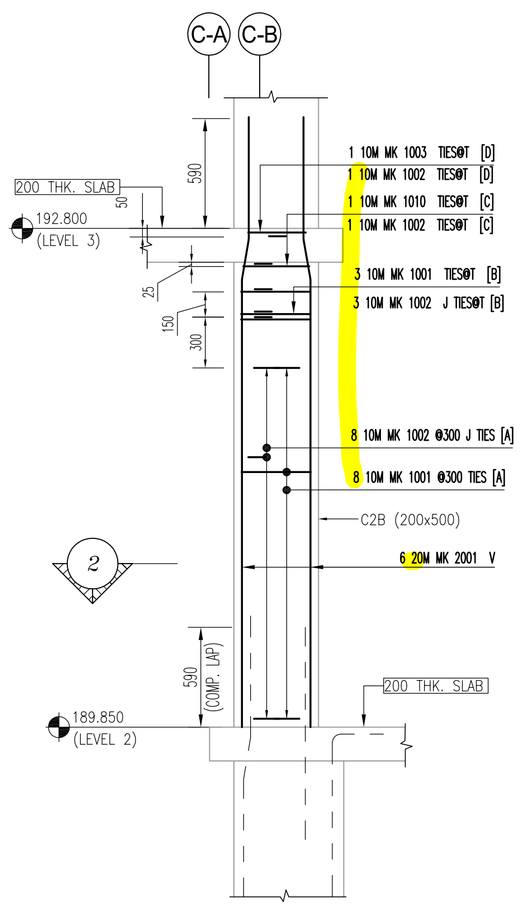

COL (C2B)
SCALE: 1:25

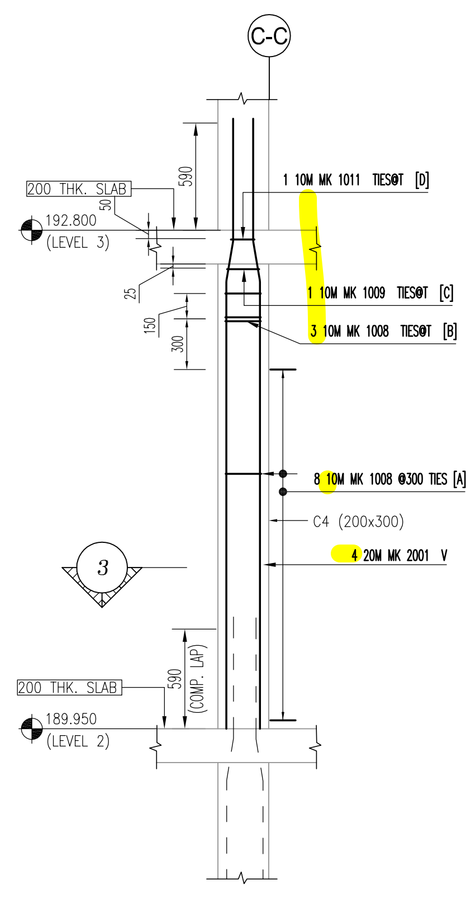

COL (C4)
SCALE: 1:25

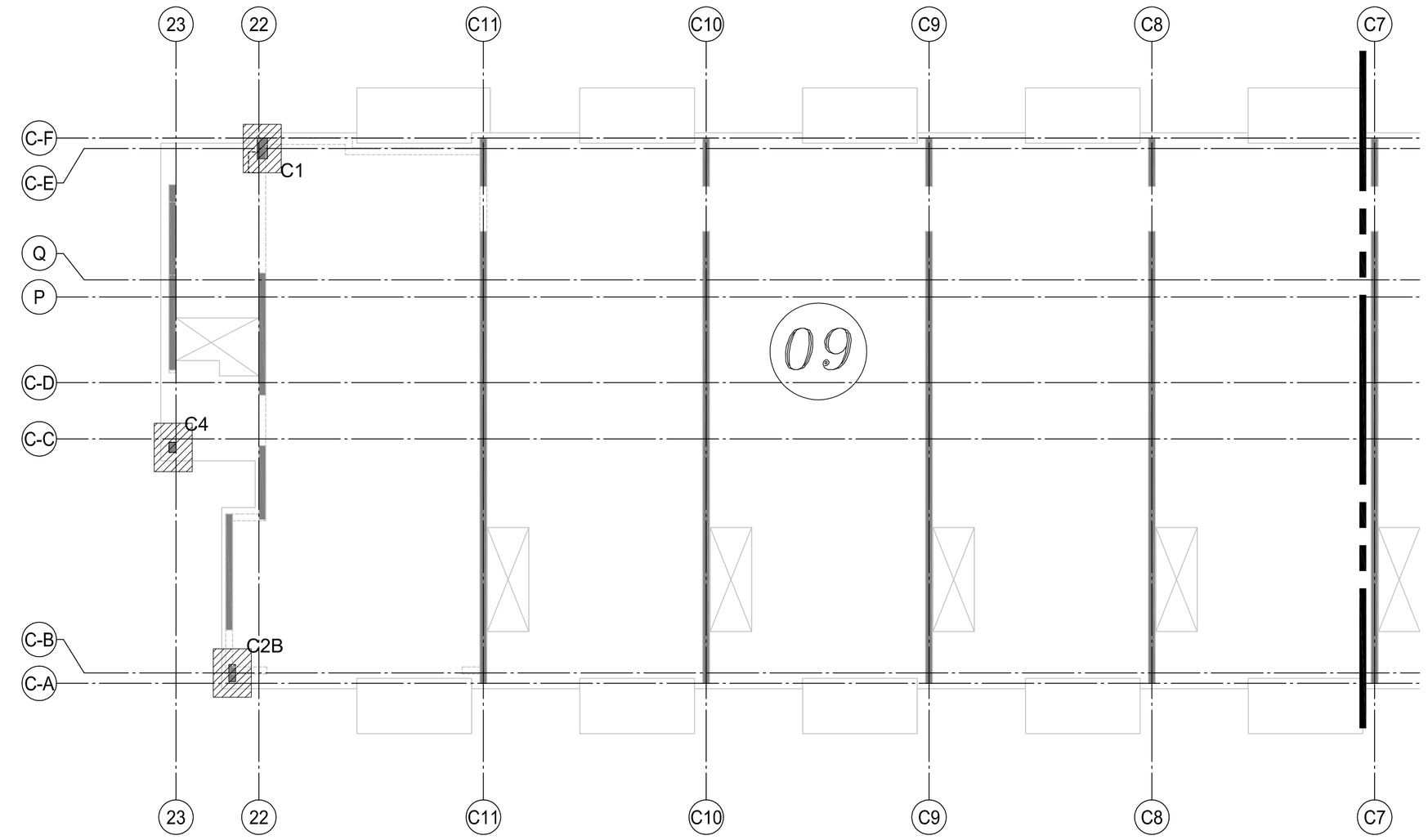

BUILDING-C L2 PLAN
SCALE: 1:100
POUR-9

Release Number: R11.5 Building-C COL L2-L3 P#9																	BAR LIST
Bar Mark	Qty	Size	Total Length	Type	'A'	'B'	'C'	'D'	'E'	'F'	'G'	'H'	'J'	'K'	'O'	'X'	
1002	13	10M	320	T9	100	120					100						
1004	13	10M	420	T9	100	220					100						
1011	1	10M	740	T1	100	150	120	150	120		100						
1009	1	10M	840	T1	100	200	120	200	120		100						
1008	11	10M	880	T1	100	220	120	220	120		100						
1003	1	10M	1140	T1	100	350	120	350	120		100						
1010	1	10M	1240	T1	100	400	120	400	120		100						
1001	11	10M	1280	T1	100	420	120	420	120		100						
1005	1	10M	1540	T1	100	450	220	450	220		100						
1006	1	10M	1640	T1	100	500	220	500	220		100						
1007	11	10M	1680	T1	100	520	220	520	220		100						
2001	16	20M	3620	3		725	245	2650				60		235	3610		

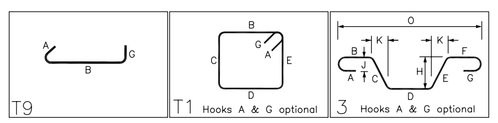

NOTES

1. ALL STEEL TO BE GRADE 400W
2. STRENGTH OF CONCRETE
   35MPa – INTERIOR COLUMNS & WALLS
3. CONCRETE COVER:
   TIES -- 40mm
4. COMPRESSION LAP SPLICE

BAR SIZE	STANDARD LAP (mm)
10M	300
15M	440
20M	590
25M	730
30M	880
35M	1030

5. TENSION LAP SPLICE (L.S) & DEVELOPMENT LENGTH (Ld)
   (FOR WALL OR COL & Ld IN CAP OR FTG.)

BAR SIZE	fc=25		fc=30		fc=35	
	L.S	L.d	L.S	L.d	L.S	L.d
10M	490	380	450	350	420	320
15M	740	570	670	520	620	480
20M	980	750	890	690	830	640
25M	1530	1170	1390	1070	1290	990
30M	1830	1410	1670	1290	1550	1190
35M	2130	1640	1950	1500	1800	1390

DRAWING REVIEW

This review of this drawing does not in any way relieve the contractor of responsibility for its accuracy or for compliance with the contract documents.

✓	No comment		See comment
	Amend & Resubmit		Rejected See Remarks

Submission No.
Project No. 19066
By MB
Date 01 Dec 2021

JABLONSKY, AST AND PARTNERS
Consulting Engineers
1129 Leslie Street Don Mills, Ont. M3C 2K5

- ELEVATIONS AND DIMENSIONS SHOWN ARE FOR VERIFICATION PURPOSES ONLY AND ARE NOT TO BE USED FOR CONSTRUCTION
- ALL CONFIRMS/VERIFIES WILL BE ASSUMED CORRECT AND APPROVED AS IS UNLESS COMMENTED ON THE APPROVAL DRWGS

LEGEND

ALT	= ALTERNATE	FF	= FAR FACE	OF	= OUTSIDE FACE
BOT	= BOTTOM	FS	= FORM SAVER	SC	= SAW CUT END
BIS	= BEND INTO SLAB	GID	= GROUT IN DOWELS	STG	= STAGGER
CB	= CORNER BAR	H	= HORIZONTAL	STIR	= STIRRUPS
CJ	= CONTROL JOINT	IF	= INSIDE FACE	T	= TOP
CTS	= CUT TO SUIT SITE COND.	LL	= LOWER LAYER	THR/1=	THREAD 1END
DWL	= DOWELS	MID	= MIDDLE	THR/2=	THREAD 2ENDS
EE	= EACH END	MIN	= MINIMUM	UL	= UPPER LAYER
EF	= EACH FACE	NF	= NEAR FACE	u/n	= UNLESS NOTED
EJ	= EXPANSION JOINT	OC	= ON CENTER	V	= VERTICAL
ES	= EACH SIDE			TT	= TEMP. TIES
EW	= EACH WAY				

STRAIGHT BARS LABEL FORMAT: 7 B15M X 3600 (QUANTITY, GRADE, LENGTH)

BENT BARS LABEL FORMAT: 7 B15M B1501 (QUANTITY, GRADE, SIZE, BAR MARK)

GRADES OF STEEL

R =	GRADE 400R
E =	EPOXY COATED
C =	CAN
G =	GALVANIZED
S =	STAINLESS
W =	WELDABLE

ISSUE	REMARKS	DATE	BY
0	FOR APPROVAL	NOV/29/21	JJ

MANSTEEL REBAR

MANSTEEL REBAR
105 Industrial Road, Richmond Hill,
Ontario L4C 2T4 Canada
Phone: 905-737-9797
Fax: 905-737-9704
Email: info@mansteelrebar.com

PROJECT
FORESTSIDE TOWNHOUSES
-BRAMPTON, ON

PART OF STRUCTURE
COLUMNS L2-L3- P#9

CUSTOMER :
ROYAL PINE HOMES

Project no. 2177
SCALE: AS SHOWN

DETAILED BY: JJ
CHECKED BY:
BAR LIST No.
DRAWING No. R11.5 0