It is the builder's complete responsibility to ensure that all plans submitted for approval fully comply with the Architectural Guidelines and all applicable regulations and requirements including zoning provisions and any provisions in the subdivision agreement. The Control Architect is not responsible in any way for examining or approving site (lotting) plans or working drawings with respect to any zoning or building code or permit matter or that any house can be properly built or located on its lot.

This is to certify that these plans comply with the applicable Architectural Design Guidelines approved by the Township of KING.

ARCHITECTURAL REVIEW & APPROVAL
JUN 27 2012
Ian G. Williams Limited, Architect

LOT GRADING NOTES:
1) All dimensions and grade elevations are expressed in SI units.
2) The contractor shall check and verify all given grade elevations and drainage prior to commencement of construction.
3) Underside of footing shown is taken from architectural plans and may not represent actual footing depth.
4) Footings must bear on native, undisturbed soil or rock, and be a minimum of 1.22 m below finished grade.
5) Exterior cladding, thresholds, and window sills shall be a minimum of 150 mm above finished grade
6) Driveways must be clear of light standards by a MIN of 1.5m and other above ground services or other obstructions (hydro transformers) bell pedestals, etc.) by a minimum of 3.0m no deflection in driveway alignments is permitted to achieve the clearance.
7) Any above ground utilities not meeting the above noted minimum clearances from proposed driveway are to be relocated at the applicants expense.
8) SWALES:
I) Swales providing internal drainage from each lot shall have a minimum slope of 2%.
II) Swales must be 1.0 m from lot line to higher property.
III) Minimum swale depth to be 250mm.
IV) Maximum swale side slope to be 3H/1V.
V) Maximum depth of rear yard swale to be 750 mm.
VI) Maximum depth of side yard swale to be 450 mm.
9) Eave downspouts must discharge onto splash-pads. Connections to weeping tiles or sewers are not permitted.
10) EMBANKMENTS:
Maximum 3H: 1V slope if < 1M high.
Maximum 4H: 1V slope if > 1M high.
Terraces minimum 1.5m wide.
11) All lot surfaces to be constructed with a minimum grade of 2.0 % and a maximum grade of 5.0 % .
12) Where rear lot catchbasins are provided, house footing adjacent to the RLCB lead must be lower than the lead.

NOTE: BUILDER TO VERIFY LOCATION OF ALL HYDRANTS, STREET LIGHTS, TRANSFORMERS AND OTHER SERVICES. IF MIN. DIMENSIONS ARE NOT MAINTAINED BUILDER IS TO RELOCATE AT HIS OWN EXPENSE.

CLIENT
ZANCOR HOMES

PROJECT/LOCATION
KING CITY
KING CITY, ONTARIO

DRAWING
SITE GRADING PLAN

BUILDING STATISTICS

REG. PLAN No.	65M-4295
ZONE	R4
LOT NUMBER	78
LOT AREA(m)^2	N/A
BLDG AREA(m)^2	N/A
LOT COVERAGE(%)	N/A
No. OF STOREYS	2
MEAN HEIGHT(m)	8.56
PEAK HEIGHT(m)	N/A
DECK LINE(m)	N/A

UPGRADE EXPOSED ELEVATION(S)
(See Approved Streetscape / Unit Working Dwgs)

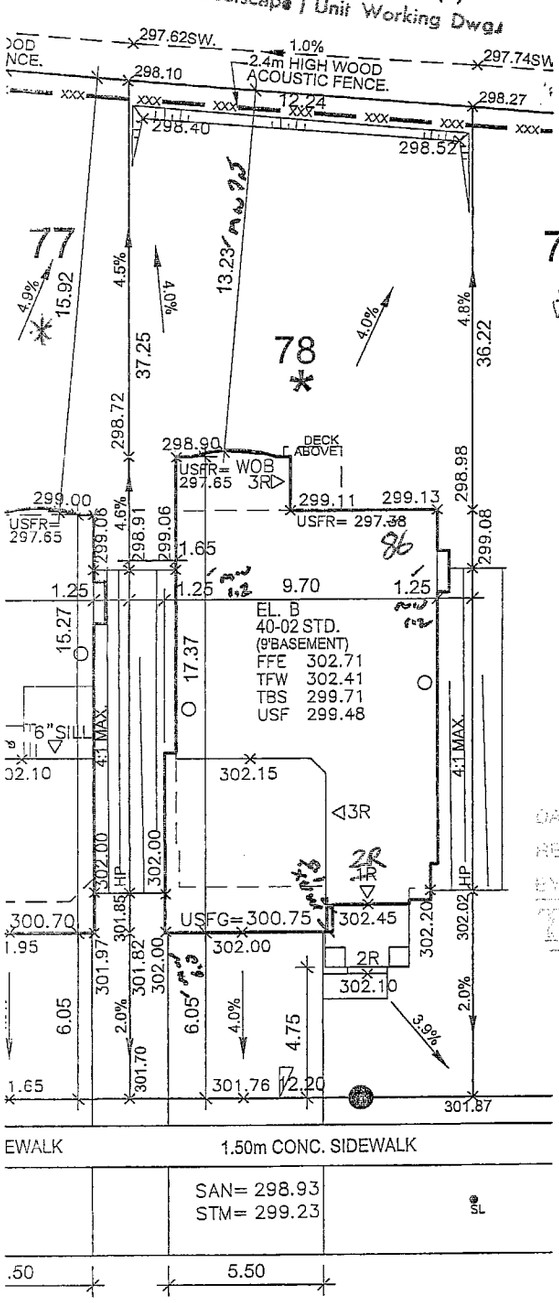

BURNSIDE
This plan has been reviewed, on behalf of the Township of King, and is satisfactory with respect to general conformance with the overall lot grading plan. Approval of this plan is for no other purpose.
We do not accept responsibility for the accuracy of elevations and dimensions provided by others.
☒ Accepted without changes
☐ Reviewed as noted
Reviewed by R.J. Burnside & Associates Limited
Date JUL 18 2012

REVIEWED AS NOTED
ZONING BYLAW PERMITS AMENDED
DATE: July 12/12
REF. APPL. No. 2012-0747
BY
TOWNSHIP OF KING

LEGEND

FFE	FINISHED FLOOR ELEVATION
TFW	TOP OF FOUNDATION WALL
TBS	TOP OF BASEMENT SLAB
USF	UNDER SIDE FOOTING
USFR	UNDER SIDE FOOTING @ REAR
USFG	UNDER SIDE FOOTING @ GARAGE
TEF	TOP OF ENGINEERED FILL
R	NUMBER OF RISERS TO GRADE
WOD	WALKOUT DECK
LOB	LOOKOUT BASEMENT
WOB	WALK OUT BASEMENT
REV	REVERSE PLAN
STD	STANDARD PLAN
△	DOOR
○	WINDOW
⊠	BELL PEDISTAL
◩	CABLE PEDISTAL
□	CATCH BASIN
□□	DBL. CATCH BASIN
*	ENGINEERED FILL
⊹	HYDRO CONNECTION
◇	FIRE HYDRANT
SL	STREET LIGHT
☒	MAIL BOX
▼	TRANSFORMER
⊖	WATER VALVE
♦	WATER CONNECTION
▽	SEWER CONNECTIONS 2 LOTS
▽	SEWER CONNECTIONS 1 LOT
AC	AIR CONDITIONING
⊕→	DOWN SPOUT TO SPLASH PAD
→	SWALE DIRECTION
———	CHAINLINK FENCE
———	PRIVACY FENCE
———	SOUND BARRIER
— —	FOOTING TO BE EXTENDED TO 1.25 (MIN) BELOW GRADE

ISSUED OR REVISION COMMENTS

NO.	DESCRIPTION	DATE	DWN	CHK
1	ISSUED FOR REVIEW (SITED)	MAY 07/12	NC	NC
2	~~ISSUED FOR REVIEW~~	~~JUNE 05/12~~	~~NC~~	~~NC~~

NOTES:
ALL STAIRS ACCESSING FRONT ENTRY TO BE POURED-IN-PLACE PER SEC. 4.4 FOUND IN KING NORTH / KING DUFFERIN / KINGSHIRE ESTATES.

LICENSED PROFESSIONAL ENGINEER
K. CHEN
100136982
JUN 20 2012
PROVINCE OF ONTARIO

I, NELSON CUNHA DECLARE THAT I HAVE REVIEWED AND TAKE DESIGN RESPONSIBILITY FOR THE DESIGN WORK ON BEHALF OF RN DESIGN LIMITED UNDER SUBSECTION 2.17.4 OF THE BUILDING CODE. I AM QUALIFIED, AND THE FIRM IS REGISTERED, IN THE APPROPRIATE CLASSES/CATEGORIES.

QUALIFIED DESIGNER BCIN 21032
FIRM BCIN 26995
JUNE 19, 2012
DATE SIGNATURE

NOTES:
- Builder to verify storm and sanitary service lateral elevations prior to pouring footings
- Extend footings at front to ensure 1.25M cover (Min)
- Garage footings to extend to original ground or as directed by soils engineer.

APPROVED FOR GRADING
I have reviewed the site and grading plan for the proposed building(s) to be constructed on Lot(s) 78 and hereby certify that:
1. The proposed grading and appurtenant drainage works comply with sound engineer principles.
2. The proposed grading is in conformity with the grading plan approved for the subdivision and will not adversely affect adjacent lands.
3. The proposed building is compatible with the proposed grading.
VALDOR ENGINEERING INC.
Date: .....

N

DRAWN BY NC
SCALE 1:250
PROJECT No. 09011
LOT NUMBER 78

RN design
Imagine • Inspire • Create
TEL.(905)738-3177
FAX.(905)738-5449
DWG@RNDESIGN.CO